ARL-TR-9395 ● FEB 2022

High-Fidelity Simulation of Shock/Surface Interactions over Blunt Bodies at Hypersonic Flow Conditions

by Jacob Gamertsfelder, Luis Bravo, Prashant Khare, and Muthuvel Murugan

Approved for public release: distribution unlimited.

NOTICES

Disclaimers

The findings in this report are not to be construed as an official Department of the Army position unless so designated by other authorized documents.

Citation of manufacturer's or trade names does not constitute an official endorsement or approval of the use thereof.

Destroy this report when it is no longer needed. Do not return it to the originator.

ARL-TR-9395 ● FEB 2022

High-Fidelity Simulation of Shock/Surface Interactions over Blunt Bodies at Hypersonic Flow Conditions

Jacob Gamertsfelder
Oak Ridge Associated Universities Fellow

Prashant Khare
Department of Aerospace Engineering, University of Cincinnati

Luis Bravo and Muthuvel Murugan
Weapons and Materials Research Directorate,
DEVCOM Army Research Laboratory

Approved for public release: distribution unlimited.

REPORT DOCUMENTATION PAGE

Form Approved
OMB No. 0704-0188

Public reporting burden for this collection of information is estimated to average 1 hour per response, including the time for reviewing instructions, searching existing data sources, gathering and maintaining the data needed, and completing and reviewing the collection information. Send comments regarding this burden estimate or any other aspect of this collection of information, including suggestions for reducing the burden, to Department of Defense, Washington Headquarters Services, Directorate for Information Operations and Reports (0704-0188), 1215 Jefferson Davis Highway, Suite 1204, Arlington, VA 22202-4302. Respondents should be aware that notwithstanding any other provision of law, no person shall be subject to any penalty for failing to comply with a collection of information if it does not display a currently valid OMB control number.
PLEASE DO NOT RETURN YOUR FORM TO THE ABOVE ADDRESS.

1. REPORT DATE *(DD-MM-YYYY)*	2. REPORT TYPE	3. DATES COVERED (From - To)
February 2022	Technical Report	July–November 2021

4. TITLE AND SUBTITLE
High-Fidelity Simulation of Shock/Surface Interactions over Blunt Bodies at Hypersonic Flow Conditions

5a. CONTRACT NUMBER

5b. GRANT NUMBER

5c. PROGRAM ELEMENT NUMBER

6. AUTHOR(S)
Jacob Gamertsfelder, Luis Bravo, Prashant Khare, and Muthuvel Murugan

5d. PROJECT NUMBER

5e. TASK NUMBER

5f. WORK UNIT NUMBER

7. PERFORMING ORGANIZATION NAME(S) AND ADDRESS(ES)
DEVCOM Army Research Laboratory
ATTN: FCDD-RLW-VA
Aberdeen Proving Ground, MD 21005

8. PERFORMING ORGANIZATION REPORT NUMBER
ARL-TR-9395

9. SPONSORING/MONITORING AGENCY NAME(S) AND ADDRESS(ES)

10. SPONSOR/MONITOR'S ACRONYM(S)

11. SPONSOR/MONITOR'S REPORT NUMBER(S)

12. DISTRIBUTION/AVAILABILITY STATEMENT
Approved for public release: distribution unlimited.

13. SUPPLEMENTARY NOTES
ORCID ID: Luis Bravo, 0000-0003-1604-9303

14. ABSTRACT
The objective of this research is to investigate the effects of compressibility on the interaction of bow shocks with a blunt body at a wide range of hypersonic flow conditions. The nonlinear hydrodynamic flow over a sphere was modeled by using a fully compressible solver, called FLASH, based on the 3D solution of the unsteady Euler hydrodynamic equations and executed on US Army Combat Capabilities Development Command Army Research Laboratory supercomputers. The study was conducted using argon at 13.3 kPa to eliminate the effects of dissociation and ionization, and compared with the experimental benchmark results for validation purposes. The results were parameterized to understand the effects of compressibility on the shock standoff distance at a range of supersonic to hypersonic conditions including Mach number 2–12. The theoretical models reported were also used for comparison and analysis. The simulated results yielded excellent correlations with both experiments and theory in terms of the shock standoff distance. The simulations were able to describe the mechanism leading to a rapid onset of shock detachment distance, shock cone angle, and vorticity production at higher Mach numbers. Future works will involve extending this analysis by introducing chemical kinetics dissociation to move toward more-complex hypersonic operational environments.

15. SUBJECT TERMS
computational fluid dynamics, CFD, hypersonics, shockwaves, chemical kinetics, vorticity

16. SECURITY CLASSIFICATION OF:			17. LIMITATION OF ABSTRACT	18. NUMBER OF PAGES	19a. NAME OF RESPONSIBLE PERSON
					Luis Bravo
a. REPORT	b. ABSTRACT	c. THIS PAGE			19b. TELEPHONE NUMBER (Include area code)
Unclassified	Unclassified	Unclassified	UU	18	(410) 278-9719

Standard Form 298 (Rev. 8/98)
Prescribed by ANSI Std. Z39.18

Contents

List of Figures iv

List of Tables iv

Acknowledgments v

1. Introduction 1

2. Methodology and Simulation Setup 2

3. Simulation Results and Validation 4

4. Conclusions and Future Work 8

5. References 9

List of Symbols, Abbreviations, and Acronyms 10

Distribution List 11

List of Figures

Fig. 1 Schematic of the quad/octree grid method and data hierarchy for AMR 3

Fig. 2 Diagram of a 2D slice of the simulation space, showing the measurement distance for shock standoff 4

Fig. 3 Diagram of the experimental setup from Schwartz and Eckerman 5

Fig. 4 Plot of the experimental data, theoretical curve, and simulation data .. 6

Fig. 5 Images of a 2D slice of the sphere showing the density gradient taken once the shock hydrodynamics reaches steady state, Mach 2–12 7

Fig. 6 Images of a 2D slice of the sphere showing the density gradient at different times. From left to right, the time steps are 20, 60, 100, 140, and 180. The top row is Mach 3, the middle Mach 6, and the bottom Mach 12. 8

List of Tables

Table 1 Summary of the physical properties for the simulation and the validation..... 5

Acknowledgments

I thank my mentors from DEVCOM ARL, Dr Luis Bravo and Dr Muthuvel Murugan, and my advisor from the University of Cincinnati, Dr Prashant Khare. I also thank the High-Performance Computing Modernization Program, the High-Performance Computing Internship Program, and the Oak Ridge Associated Universities for this opportunity. Additionally, the authors acknowledge ARL 6.1 mission funding support for this work.

1. Introduction

The US Army is interested in designing next-generation hypersonic flight vehicles with enhanced speed, reach, and lethality, addressing Army and Department of Defense Priorities in Long-Range Precision Fires and Hypersonics. Future systems must meet new operational and tactical requirements for performance, reach, and maneuverability, while simultaneously meeting demanding program schedules and budget constraints. The field of hypersonics is inherently interdisciplinary, requiring a broad range of expertise including fluid dynamics, material science, and applied engineering. To date, one of the primary challenges facing hypersonic vehicle design is the excessive temperatures and extreme surface heating. The understanding of near-body flow physics (e.g., shock/wall interactions) is thus of great importance in developing new concepts to mitigate entropy production and reduce the rates of material surface heating. Historically, computational fluid dynamics (CFD) has played a key role in the design of hypersonic vehicles, largely due to the prohibitive cost associated with experimentation and testing. However, the advancement of hypersonic modeling has been hindered in part by the well-known difficulties in measuring the near-body aerothermodynamics under realistic flight conditions. Variations in atmospheric conditions, chemical kinetics, vibrational excitation, ablation products, and gas–surface interactions further complicate the modeling of a high-enthalpy plasma system.[1] Although experimentalists have had success with modern methods, extraction of full 4D information with sufficient spatial and temporal resolution for a detailed analysis is still infeasible.[2]

Remarkable progress has been made in recent years in the development of high-fidelity computational methods for handling aerothermodynamics at super to hypersonic conditions. For example, Fu et al.[3] investigated boundary layer transition in hypersonic flow due to incident shocks. This was accomplished by using a computational technique called direct numerical simulation (DNS) that fully resolves all spatiotemporal scales. To create the incident shocks, they disturbed the flow field by using an upstream wedge. Provided the wedge had an angle of at least 6° and there was an incoming flow of Mach 6 or greater, transition to turbulence was achieved. Heat transfer in hypersonic boundary layers was investigated in Priebe and Martín,[4] wherein they used a setup similar to Fu et al., employing an 8° ramp and a DNS method. The researchers demonstrated that the Reynolds Analogy, relating the skin friction to the heat transfer, is not valid at the reported hypersonic conditions. Instead, they found heat transfer coefficient correlates with pressure gradient rather than skin friction. While these studies allow for the physics of hypersonic flow to be researched with a high level of fidelity on

a micro scale, the detailed physics interactions over a larger and more complex area have not yet been fully investigated.

Larger and more-complex surface interfaces in hypersonic flow were studied heavily in the 1950s and early 1960s. These experimental studies were groundbreaking at the time but do not provide the level of spatiotemporal resolution needed to investigate the physics or accurately predict the heat transfer. In recent years, Thakur and Jagadeesh,[5] who investigated the aerodynamic response of a sphere at hypersonic speeds and compared it with experimental results. While this step was important, the scope of the simulation was limited and the results did not consider aerodynamic heating rates. To meet the demanding requirements of the design of hypersonic flight vehicle, CFD solvers must be scalable to handle a wide range of spatiotemporal scales. To address this, a near-DNS level (or other high-fidelity methods) of resolution is required to provide the aerothermal flow physics over a large and complex geometry. The research in this report is the first step toward that goal.

The objective of this research is to investigate the interaction of bow shocks with blunt bodies canonically by using a noble gas, argon, to eliminate the effects of dissociation and ionization. A fully compressible hydrodynamic solver, based on the solution of the 3D unsteady Euler equations, was used to conduct the analysis. The problem was parameterized in terms of the Mach number to understand the effect of compressibility on the bow-shock standoff distance for a sphere. The results were then compared with a benchmark experimental database to validate the results with good comparison.

2. Methodology and Simulation Setup

In this work, the FLASH CFD solver was used, specifically the FLASH Unsplit Hydrodynamics unit. It solves Euler's equations for compressible gas dynamics in three spatial dimensions.[6] The Euler equations can be written in conservative form as

$$\frac{\partial \rho}{\partial t} + \nabla \cdot (\rho \mathbf{v}) = 0$$

$$\frac{\partial \rho \mathbf{v}}{\partial t} + \nabla \cdot (\rho \mathbf{v}\mathbf{v}) + \nabla P = \rho g$$

$$\frac{\partial \rho E}{\partial t} + \nabla \cdot [(\rho E + P)\, \mathbf{v}] = \rho \mathbf{v} \cdot g$$

For this simulation, gravity was not included, and E was the sum of the internal energy ϵ and kinetic energy per unit mass:

$$E = \epsilon + \frac{1}{2}|\mathbf{v}^2|$$

The pressure is obtained from the energy and density using the equation of state. For this simulation using noble gases, the equation of state is that of an ideal gas where the pressure is given by

$$P = (\gamma - 1)\rho\epsilon$$

In regions where the kinetic energy greatly dominates the total energy, computing the internal energy can lead to errors. This results in inaccurate pressures and temperatures. To avoid this problem, we can separately evolve the internal energy as follows:

$$\frac{\partial \rho\epsilon}{\partial t} + \nabla \cdot [(\rho E + P)\,\mathbf{v}] - \mathbf{v} \cdot \nabla P = 0$$

To accurately capture the downstream flow field while also resolving the near-body surfaces, adaptive mesh refinement (AMR) technique[7] was used. AMR allows the solid and shock interface to be a very fine grid while not refining areas upstream and out of the shock cone. The AMR technique refines by looking at the pressure and density gradients in the cells. If the value is indicating there is a high gradient like that across a shock or at the solid boundary, the cell splits it in eight (Fig. 1). It then reevaluates the eight cells and splits again if necessary. This process is repeated up to three times in the simulation per time step. AMR is used at each time step to account for spatial changes in the fluid.

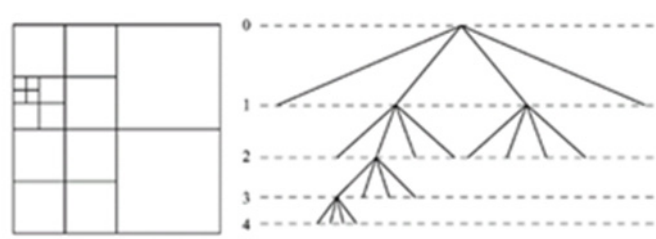

Fig. 1 Schematic of the quad/octree grid method and data hierarchy for AMR

Given the constantly evolving grid from the AMR, a Quad/Octree is used to efficiently collect and organize the data for the simulation. The Octree method classifies all the cells by size. The level of the biggest cell is zero. After each splitting, the grid level will increase by one level. The information of a child cell can transfer to a parent cell, level by level. Using AMR refinement with the Octree method, the code can sufficiently resolve the shock interface while maintaining reasonable computational efficiency.

The shock detachment distance is the distance from the body surface to the shock location, measured along the stagnation streamline. The diagram for the simulation

is given in Fig. 2. These simulations at varying Mach numbers were run on Onyx, a Department of Defense high-performance computing platform, using 1000 cores and with a total of 35,000 central processing unit hours per simulation. The resulting AMR grid had a minimum cell size of 230 µm. The simulation was run until the shock detachment distance reached a stable point: approximately 180 time steps or 1.2 ms.

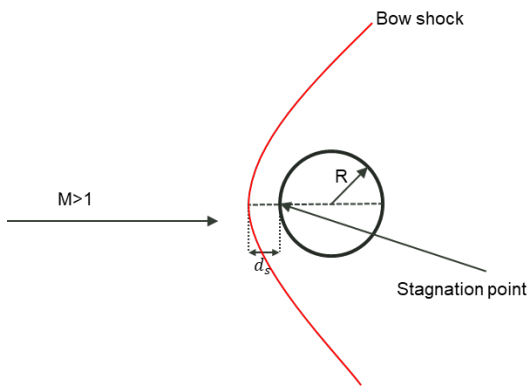

Fig. 2 Diagram of a 2D slice of the simulation space, showing the measurement distance for shock standoff

3. Simulation Results and Validation

To increase the confidence in the FLASH Unsplit Hydrodynamics module for solving hypersonic flow simulations, a detailed validation study was conducted. The validation was conducted using the experimental results from Schwartz and Eckerman.[8] In this paper, a metal sphere 7.94 mm in diameter was fired into still chamber gas composed of a monoatomic noble gas (Fig. 3). The noble gas pressure was set to about 13 kPa and rotated between argon, krypton, and xenon to further avoid the effects of ionization (Table 1). For simplicity, and because the simulation can explicitly prevent ionization, argon was used for all the case studies. This report and the validation of it explore Mach numbers between 2 and 12. This validation correlates to a Reynolds number between Re = 51,000 at Mach 2 and Re = 309,000 at Mach 12.

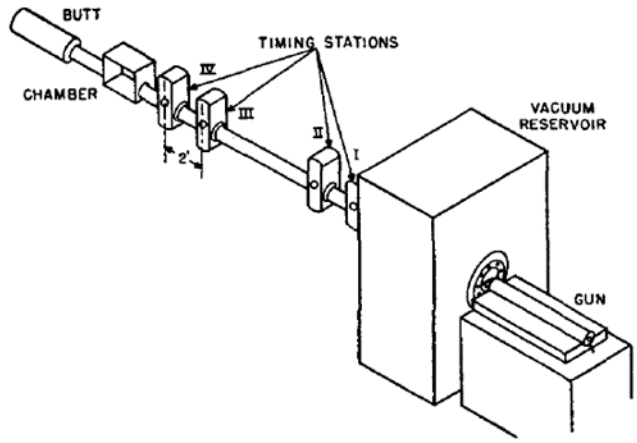

Fig. 3 Diagram of the experimental setup from Schwartz and Eckerman[8]

Table 1 Summary of the physical properties for the simulation and the validation

Physical properties	
Gas	Argon
Gamma	1.67
Pressure	13,332.2 Pa or 0.132 atm
Density	0.23298 kg/m^3
Mach number	2–12
Radius	3.97 mm
Reynolds number	51,000–309,000

The results of the shock standoff distance, made non-dimensional by dividing by radius, were plotted against both the experimental results and the theoretical values for a sphere given by Heybey.[9] In Fig. 4, the points from the validation are shown in red, taken at each whole Mach number between 2 and 12. The experiment data collected included shadowgraph and schlieren pictures. In Schwartz and Eckerman,[8] attention was given to minimizing optical distortion in the pictures. Due to the complexities, out of about 50 shots photographed in monatomic gases, only 18 were analyzed.

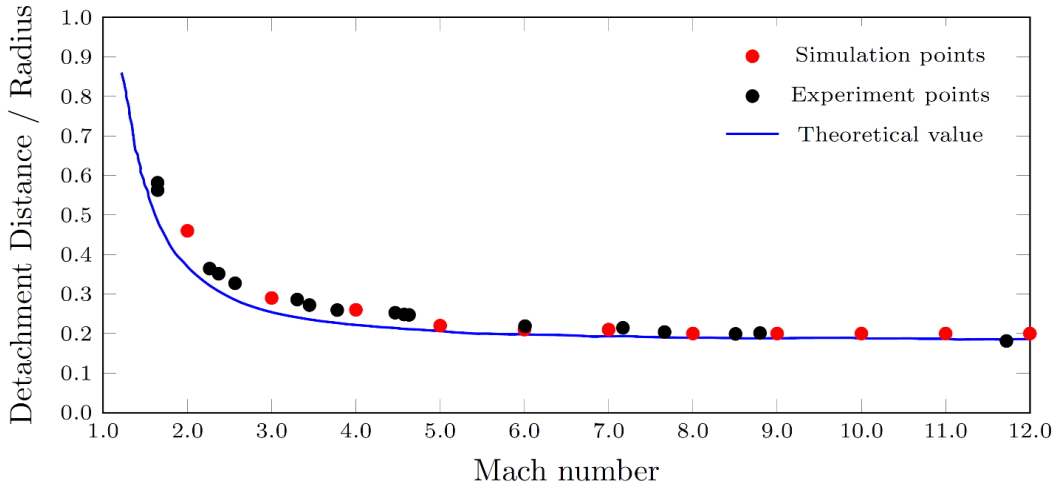

Fig. 4 Plot of the experimental data, theoretical curve, and simulation data

To effectively analyze the shock standoff distance in the simulations, the 3D domain was sliced along the centerline of the sphere. The slice was analyzed on a log scale of the density gradient to clearly show the shock and easily measure the shock distance along the stagnation line.

Figure 5 shows the stable shock standoff distance taken at the last time step, approximately 1.2 ms after initiation. The density contours clearly show the shock position as well as some of the surrounding flow-field characteristics. Clearly, the intensity of the density gradient across the shock increases with Mach number. It can also be seen in the resulting flow field that as the Mach number increases, the instabilities in the wake behind the sphere increase, thus leading to an increase in vorticity magnitude.

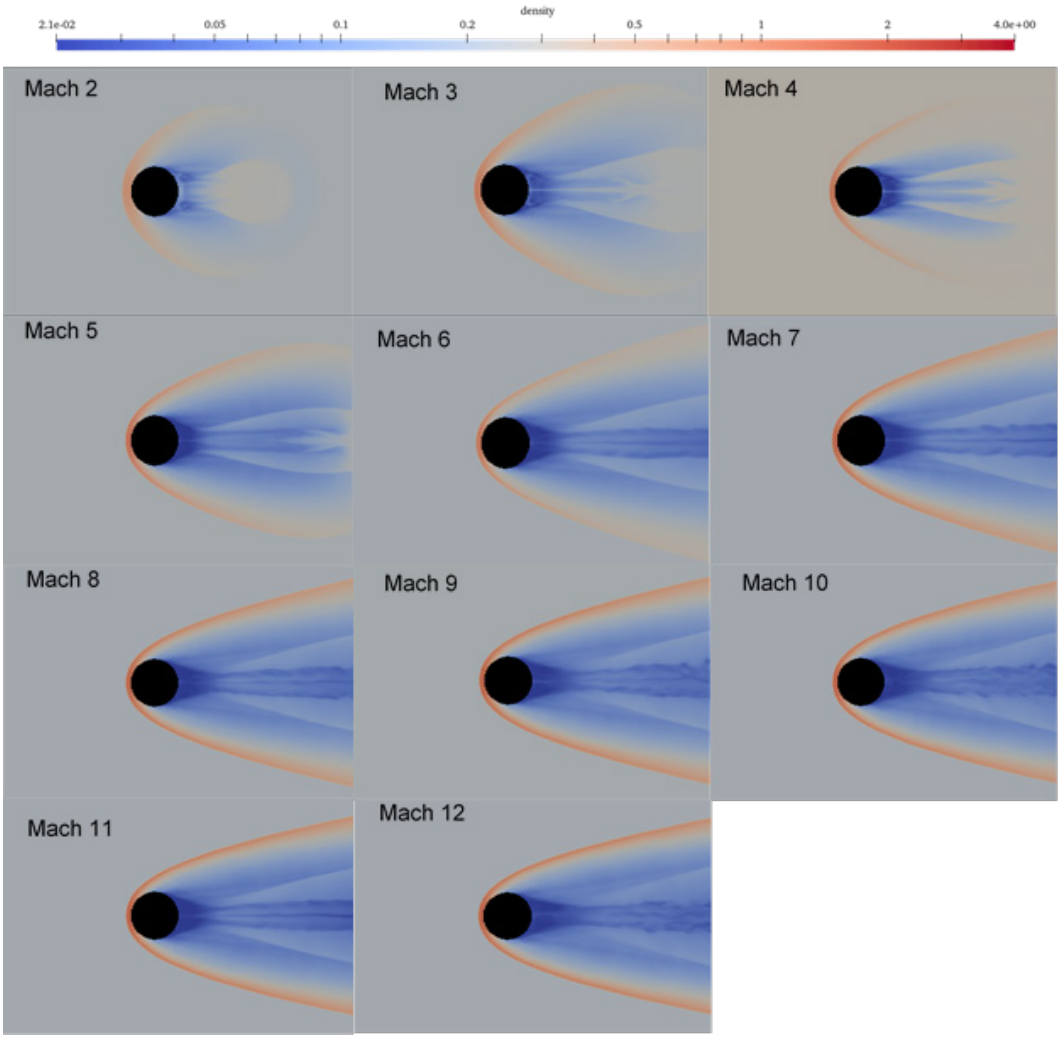

Fig. 5 Images of a 2D slice of the sphere showing the density gradient taken once the shock hydrodynamics reaches steady state, Mach 2–12

To better show the progression over time, snapshots from different time steps are analyzed. To show the temporal effects investigated in this research, three Mach numbers are shown: 3, 6, and 12. Shown in Fig. 6 are the same 2D slices of the density gradient taken at five time steps (20, 60, 100, 140, and 180). Figure 6 clearly shows that the higher Mach number simulations develop faster. At low Mach, simulations take almost the full 180 time steps to reach a consistent shock standoff distance, while the Mach 12 simulation reaches a steady shock standoff almost instantly. Furthermore, the shock cone coming off the sphere reaches a steady angle much faster.

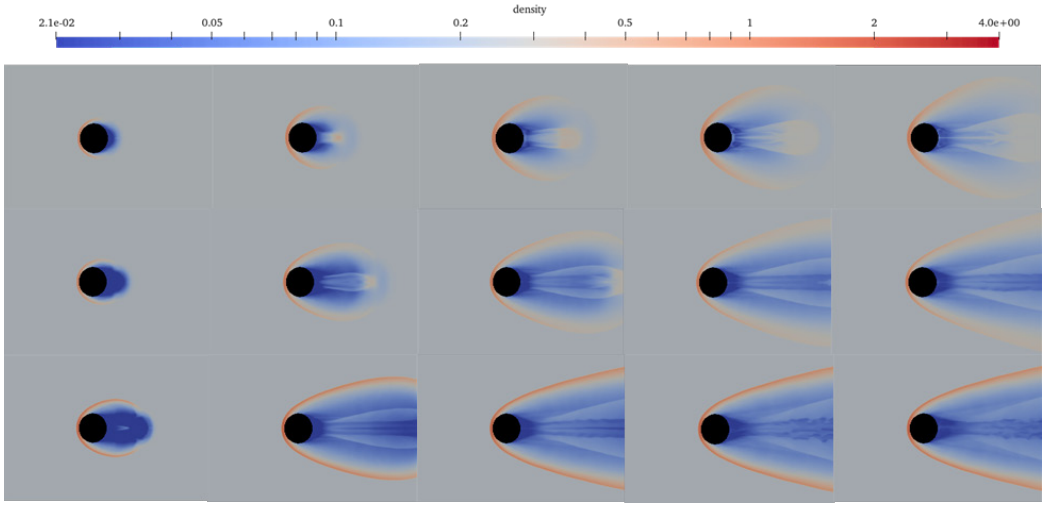

Fig. 6 Images of a 2D slice of the sphere showing the density gradient at different times. From left to right, the time steps are 20, 60, 100, 140, and 180. The top row is Mach 3, the middle Mach 6, and the bottom Mach 12.

One interesting property of the flow field is that at higher Mach numbers, a wave-like distortion occurs in the wake behind the sphere. At Mach numbers 7+, this wave distortion evolves into turbulent eddies. This shows that as the Mach number increases, so does the vorticity production in the wake region

4. Conclusions and Future Work

This investigation shows that the FLASH solver provides a reliable model to simulate hypersonic flow over a sphere without ionization or dissociation. This can be seen by the results analyzing the shock detachment distance versus Mach number. The comparison of the theoretical and experimental show very good agreement. Beyond the validation, it is seen that at higher Mach numbers the shock detachment distance reaches a steady state faster. This means both the shock detachment distance and the shock cone angle reach a constant value faster in higher Mach simulations. In the wake region it was shown that the increase in Mach number also increased the vorticity production.

The result presented in this report based on a canonical geometry sets the foundation for the morphing hypersonics work we have planned using FLASH supporting our mission projects. Now that this basic model is validated for non-ionizing, non-dissociated hypersonic flow, the next step will be to introduce non-equilibrium chemistry models and investigate the impact on the shock development. Another interesting avenue is to investigate the effect of surface morphology, such as ballistic projectiles (e.g., varying the nose tip bluntness), to understand its influence on transition to turbulence and other transport properties.

5. References

1. Candler GV. Rate effects in hypersonic flows. Ann Rev Fluid Mech. 2019;51:379–402.
2. Qiu H, Min F, Yang Y. Fiber optic sensing technologies potentially applicable for hypersonic wind tunnel harsh environments. Adv Aerodynamics. 2020;2(1):1–22.
3. Fu L, Karp M, Bose ST, Moin P, Urzay J. Shock-induced heating and transition to turbulence in a hypersonic boundary layer. J Fluid Mech. 2021 Feb;909.
4. Priebe S, Martín MP. Turbulence in a hypersonic compression ramp flow. Phys Rev Fluids. 2021;6(3):034601.
5. Thakur R, Jagadeesh G. Experimental analysis of shock stand-off distance over spherical bodies in high-enthalpy flows. Proc Inst Mech Eng G J Aerosp Eng. 2017;231(14):2666–2676.
6. Center AF. Flash user's guide. University of Chicago; 2005.
7. Popinet S. Gerris: a tree-based adaptive solver for the incompressible Euler equations in complex geometries. J Comput Phys. 2003;190(2):572–600.
8. Schwartz R, Eckerman J. Shock location in front of a sphere as a measure of real gas effects. J Appl Phys. 1956;27(2):169–174.
9. Heybey WH. Shock distances in front of symmetrical bodies. US Naval Ordnance Laboratory; 1953.

List of Symbols, Abbreviations, and Acronyms

2D	two-dimensional
3D	three-dimensional
4D	four-dimensional
AMR	adaptive mesh refinement
CFD	computational fluid dynamics
DNS	direct numerical simulation

1 (PDF)	DEFENSE TECHNICAL INFORMATION CTR DTIC OCA
1 (PDF)	DEVCOM ARL FCDD RLD DCI TECH LIB
4 (PDF)	DEVCOM ARL FCDD RLW VA L BRAVO M MURUGAN A GHOSHAL R MCGOWAN
1 (PDF)	UNIV OF CINCINNATI P KHARE
1 (PDF)	UNIV OF MARYLAND A FLATAU
1 (PDF)	NATIONAL INST OF SCIENCE AND TECHNOLOGY SM SU