(1

F-TS-9741/V

AD616916

TRANSLATION

LIQUID-FUEL ROCKET ENGINES THEORY AND DESIGNING

~~(Part 1 of 2 Parts)~~

By G. B. Sinyaryev and M. V. Dobrovol'skiyi

March 1960

790 Pages

COPY 1 OF 1 803-p
HARD COPY $. 11,00
MICROFICHE $. 3,25

MASTER

DDC
RECEIVED
JUL 1 1965
DDC-IRA E

PREPARED BY
LIAISON OFFICE
TECHNICAL INFORMATION CENTER
MCLTD
WRIGHT-PATTERSON AIR FORCE BASE, OHIO

PROCESSING COPY ARCHIVE COPY EVALUATION COPY

This translation was prepared under the auspices of the Liaison Office, Technical Information Center, Wright-Patterson AFB, Ohio. The fact of translation does not guarantee editorial accuracy, nor does it indicate USAF approval or disapproval of the material translated.

Comments pertaining to this translation should be addressed to:

Liaison Office
Technical Information Center
MCLTD
Wright-Patterson Air Force Base, Ohio

ZHIDKOSTNYYE RAKETNYYE DVIGATELI

TEORIYA I PROYEKTIROVANIYE

Gosudarstvennoye Izdatel'stvo Oboronnoy Promyshlennosti

Moscow 1957

Foreign Pages: 580

This book explains the principles of the theory of liquid-fuel rocket engines and the methods of designing their basic parts and assemblies. It gives the necessary data for calculation of the thrust and determination of the basic dimensions of all the components and assemblies of liquid-fuel rocket engines.

Examples illustrating the application of the methods of calculation are given.

This book is a textbook for technical schools, but it may be useful too for students of higher educational institutions as well as workers specializing in the field of rocket engineering.

Reviewer: Doctor of Technical Sciences, Professor I. A. Panichkin

Editor: Engineer G. V. Senichkin

Chief Editor: Engineer A. I. Sokolov

TABLE OF CONTENTS

PART ONE

THE THEORY AND THERMAL COMPUTATION OF LIQUID-FUEL ROCKET ENGINES

PART TWO

THE DESIGNING OF LIQUID-FUEL ROCKET ENGINES

PREFACE TO THE SECOND EDITION

The first edition of this book caused many comments. A large number of organizations and individuals submitted valuable observations and expressed their desires concerning the material treated.

Since the time of the publication of the first edition, rocket engineering has made great progress. At the present time the first problems of interplanetary flights have been solved - on 4 October 1957 the Soviet earth satellite - the first in the world - was launched. In addition to this, a more thorough study of the complicated processes taking place in the liquid-fuel rocket engine necessarily has led to a reconsideration of some of our former concepts. All this has obliged the authors to revise a considerable part of the first edition.

The authors wish to express their deep gratitude to all the organizations and persons who took upon themselves the task of a careful examination of this book and for the expression of their critical opinions. Thanks also to Professor I. A. Panichkin, who made a number of valuable suggestions during the checking and reviewing of the manuscript.

PREFACE TO THE FIRST EDITION

In the postwar years rocket engines and rockets have undergone extensive development.

Rocket engines not only have made possible flights at speeds never before attainable within the limits of the earth but also have opened up entirely new possibilities for the conquest of interplanetary space.

In spite of the seeming simplicity of the liquid-fuel rocket engine, the idea of which was set forth by K. E. Tsiolkovskiy more than 50 years ago, the practical realization of such engines has required knowledge and experience commensurate with the present-day level of the development of science and technology.

An effort has been made in this book to present in a systematic manner the theoretical principles and methods for the designing of liquid-fuel rocket engines which are adapted to the programs of the technical institutes.

In preparing the book, the authors have considered it absolutely necessary first of all to explain the physical processes which exist and take place in liquid-fuel rocket engines and thus to provide the simplest and most easily assimilated explanation possible.

The peculiarities of the sequence of processes taking place in the liquid-fuel rocket engine obliged the authors to set forth certain problems of thermodynamics and gas dynamics applicable to the phenomena being considered.

The methods used for thermal calculations that are given in the book are illustrated by examples of the calculation of the operating process of engines operating on the most widely used fuels. These methods can also easily be employed for the design of other types of engines.

In the calculations we have introduced a minimum number of coefficients, those which have a simple physical meaning and are determined by experimental studies of engines.

In view of the limited scope of this book, we have in certain cases given only the general principles of designing--which, however, one can employ in the actual designing of assemblies of liquid-fuel rocket engines.

This textbook is based on lectures delivered by one of the authors from 1946 to 1953. During the process of the joint efforts of the authors the outlines of these lectures were subjected to considerable revision. Chapters I to VI, inclusively, Chapter X and Sections 59-63 of Chapter IX were written by G. B. Sinyarev, and Chapters VII, VIII and IX were written by M. V. Dobrovol'skiy.

The authors wish to express their gratitude to Professor Yu. A. Pobedonostsev, to engineers B. A. Gusev, V. S. Inyushin and [illegible]. I. Sidel'nikov, who made a number of valuable suggestions while reviewing the manuscript, and also to candidate of technical sciences, A. L. Kvanikov, who took the work of the scientific editing of the book upon himself.

The accounts of the principles of the theory and designing of liquid-fuel rocket engines are given in the book in a simplified form, and it is possible that there have been some omissions. Hence the authors will be grateful to all who send in their comments and statements concerning the substance and the methods of presenting the material.

PART I

THE THEORY AND THERMAL COMPUTATION OF LIQUID-FUEL ROCKET ENGINES

CHAPTER I

GENERAL INFORMATION ON REACTION ENGINES

SECTION 1. LIQUID-FUEL ROCKET ENGINES

Liquid fuel rocket engine is the term used to define a reaction engine which produces a tractive force [thrust] by discharging the combustion products of a liquid fuel from its nozzle.

The liquid fuel and liquid oxidizer are delivered under pressure by one means or another (for example by pumps) from the tanks to the combustion chamber (Fig. 1) where, as a result of the combustion of the fuel, gaseous combustion products are formed which are heated to a high temperature.

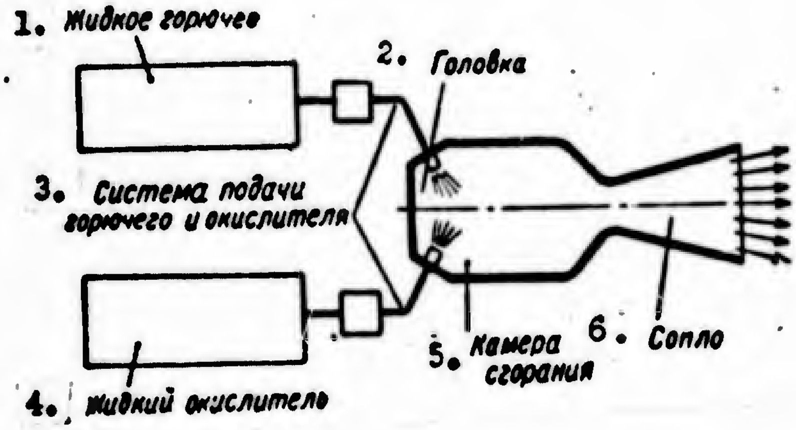

Fig. 1. Sketch of the engine components of a liquid-fuel rocket engine.

1. Liquid fuel; 2. Head; 3. Injection system for fuel and oxidizer; 4. Liquid oxidizer; 5. Combustion chamber; 6. Nozzle.

These combustion products expand in the nozzle duct from the pressure in the combustion chamber to the pressure in the nozzle exit and escape into the surrounding atmosphere at high speed.

The discharge of gases from the nozzle is the source of the reaction force (thrust) of the engine.

A liquid fuel rocket engine is composed of the following basic parts: a tank section with tanks which hold a liquid oxidizer and a liquid fuel; an injection system for the fuel and oxidizer and an engine combustion chamber. The latter (combustion chamber) is divided into a chamber head, through which the fuel from the injection system enters the chamber; a combustion chamber and a nozzle.

SECTION 2. REACTION FORCES

We encounter the action of reaction forces daily in our natural surroundings as well as in many machines and mechanisms. Let us cite several examples.

At the moment a shell leaves the barrel when firing a gun, a force acts upon the gun in a direction opposite to the direction of the flight of the shell. This is the force of recoil. It causes the recoil of the barrel or the weapon. In order to clarify how this force originates, let us glance at the phenomenon which takes place in the relationship between the bodies of the gun and the shell. In doing so, we will consider that no other forces (for example the force of friction) are active in the system in question, i.e., the system is closed.

Then only the internal force (for the system in question) of the pressure from the gun powder gases will act upon the gun and shell at the moment of discharge.

In accordance with the basic laws of mechanics, the center of gravity (c.g.) in our system (if it was immobile prior to firing) will not shift inasmuch as no external forces are exerted upon the system (Figure 2). Since

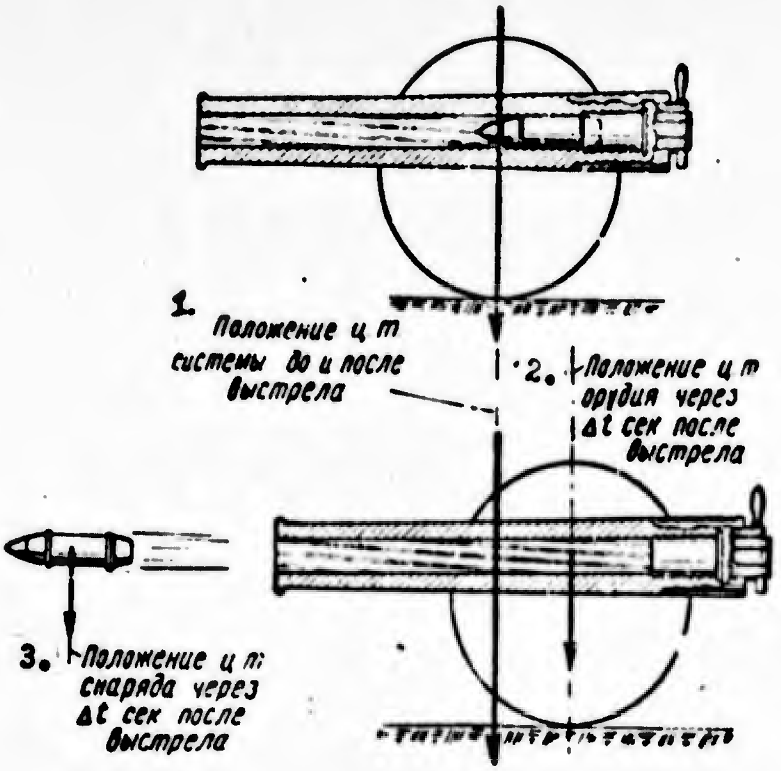

Fig. 2. Illustrating the force of recoil.

1. Location of the center of gravity in the system before and after firing; 2. Location of the center of gravity at Δt seconds after firing; 3. Location of the center of gravity of the shell Δt seconds after firing.

the shell is moving away from the gun, in order to preserve an invariable center of gravity position of the shell-gun system, the gun must move in a direction opposite to the direction of flight of the shell.

However, in order that the gun will be displaced in the direction indicated, a certain force must act upon it at the instant of firing. Let us determine its value.

For this purpose let us write Newton's equation in the form

$$P_{sh} = m\frac{\Delta v}{\Delta t} \qquad (I.1)$$

In this equation P_{sh} is the force acting upon the shell and imparting an acceleration of $\frac{\Delta v}{\Delta t}$ to the mass of the shell (ejected mass). But inasmuch as our system possesses only two bodies: the shell and the gun, that force accelerating the shell must act in the opposite direction on the gun as a force of reaction from the direction of the ejected mass to the ejector. In value, these forces must be equal, i.e.

$$P_{gun} = -P_{sh} = -m\frac{\Delta v}{\Delta t} \qquad (I.2)$$

If, in the time Δt, the velocity of the shell changes from v_1 to v_2, the equation (I.2) assumes this form:

$$P_{gun}\,\Delta t = -m(v_2 - v_1)$$

or

$$P_{gun}\,\Delta t = -(mv_2 - mv_1) \qquad (I.3)$$

The product of force and time is called the impulse. The formula (I.3) is the expression of a very important law of mechanics, that is, the so-called impulse theorem. We may formulate this theorem in the following manner:

In a closed system, the impulse of the force generated as a result of the acceleration of an ejected mass is equal to the change in the momentum of the ejected mass. The direction of this force is always opposite to the acceleration imparted to the ejected mass.

The force which we have investigated is a reaction force (the recoil force) which always appears in a system of bodies when there is an accelerated ejection of a certain mass.

Another example of the occurrence of a reaction force is in the operation of the propeller of an aircraft engine or in the operation of the screw of a ship's power plant (Figure 3).

When a propeller operates on the energy which the engine expends in turning it, the air (or water) striking the propeller at the same velocity as that of the propeller and the craft together, v_1, is accelerated and thrown off with a velocity v_2 that is greater than the velocity v_1. When this happens, a recoil force of the ejected mass of air (or water) is produced. That is to say, a reaction force acts upon the propeller. By applying the equation (I.3) to this case, we obtain:

$$P_{propeller}\,\Delta t = -m\,(v_2 - v_1) \qquad (I.4)$$

The equation (I.4) can be rewritten by omitting the minus sign indicating the direction of the force:

$$P_{propeller} = \frac{m}{\Delta t}\,(v_2 - v_1) \qquad (I.5)$$

The value $\frac{m}{\Delta t}$ is the mass flow rate of air per unit of time. The value $(v_2 - v_1)$ is the change in velocity which this mass received from interaction by the propeller. The reaction force acting on the propeller, in the case in question, is directed against the incident flow. It represents a tractive effort moving the airplane or the ship.

In a like manner, a reaction force appears in the flow of a stream of liquid from a Segner wheel, in the movement of an automobile, a rowboat or a motor launch, etc.

In all these cases, the reaction force is a recoil force arising out of the ejection of a certain mass. The value of this force is the greater, the greater the ejected mass and the velocity at which it is ejected. Let us consider how this reaction force comes about in a liquid-fuel rocket engine.

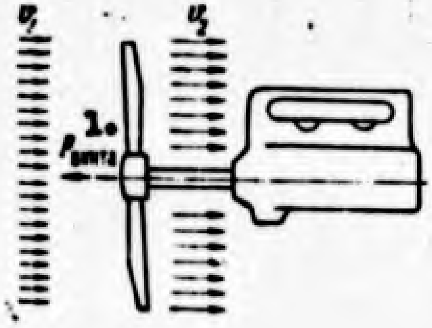

1. Propeller

Fig. 3. The development of a reaction force by a propeller.

Returning to Figure 1, we see that during the operating process of a closed liquid-fuel rocket engine-combustion products system, there is continuous ejeection of the products. In this connection a rocket engine is similar to a gun; the only difference being that in the engine the ejection of particles of gases and not of a projectile takes place. Besides, the ejection of gas in a rocket engine takes place without interruption, just as an operating propeller produces an uninterrupted wash of air or water. Therefore, the reaction force developed by a liquid-fuel rocket engine may be expressed by the equation (I.5). This force is directed in a direction opposite to that of the ejected particles. The value of the reaction force will be greater, the greater the flow of combustion products per unit of time (flow rate per second) and the greater their speed as they leave the engine.

It is very important that the reaction force developed by the engine constitutes a force originating within the isolated system of the engine and combustion products. Therefore, the reaction force may be created by a liquid-fuel rocket engine both in the atmosphere and outside it, in the field of gravity and outside it.

The formation of a reaction force in a liquid-fuel rocket engine can also be explained in another manner. We may consider this force as the resulting force of the pressure acting on the engine walls. If we close the exit nozzle with a cover (Figure 4a) and fill the engine with gas under excessive pressure p, then, naturally, no reaction force will be generated. This is because the component forces of the internal pressure on the engine walls will be equalized in every direction.

If the cover is opened, there is a discharge of gas from the engine. Now the forces acting on the engine walls and along the engine axis will not be balanced because the pressure on the walls will be a variable one as shown in Figure 4b. The resulting force in the direction of the axis of the open nozzle will be a reaction force of thrust P generated by the engine.

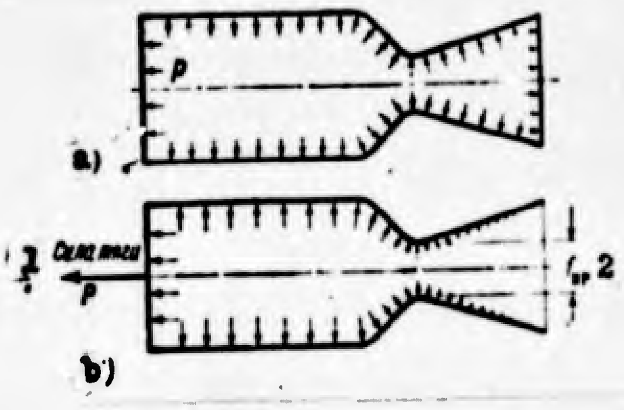

Figure 4. Generation of the reactive force in the liquid-fuel rocket engine.
1 -- thrust; 2 -- f_{cr} [throat section].

The main portion of the force P is composed of the product of the pressure in the combustion chamber p and the value of the smallest so-called critical cross section of the nozzle f_{cr}.

SECTION 3. THRUST OF A LIQUID-FUEL ROCKET ENGINE

Derivation of the Equation of Thrust.

In the preceding paragraphs we considered the origin of the reaction forces as a whole and the thrust of a rocket engine in particular. Now, we must obtain a working formula for calculating the thrust of a liquid-fuel rocket engine.

When arriving at an equation for the thrust of a liquid-fuel rocket engine, it is necessary to make the following assumptions: we shall calculate the thrust of a liquid-fuel rocket engine disregarding the forces originating as a result of the airflow on the engine's exterior. Mathematically, this means that the pressure on the entire outside surface of the walls of a liquid-fuel rocket engine (with the exception of the nozzle exit) is regarded as being constant and equal to the pressure in an undisturbed medium surrounding the engine. In other words, the pressure on all the outside surfaces of the engine is assumed to be equal to the atmospheric pressure p_H at an altitude at which the engine operates at a given moment (Figure 5).

The flow of gas through the engine nozzle is assumed to be uniform; i.e., at each point of any cross section of the gas flow in the combustion chamber and nozzle, and also at the nozzle exit, the velocities of the gas in the section are equal and are directed along the axis of the nozzle (Figure 6).

The movement of the combustion products through the combustion chamber and the engine nozzle is regarded as steady; i.e., it is assumed that their velocity and pressure in each given section do not change with time.

Now, it is necessary to bear in mind that the liquid fuel which is fed into a liquid-fuel rocket engine is transported in tanks on the rocket together with the engine. Therefore, its initial velocity relative to the rocket and the engine is very small and close to zero. The injection of the liquid fuel component into the engine combustion chamber takes place in a disorderly manner (in different directions) at a very low velocity. As a result of this, the momentum imparted to the engine by the liquid fuel (in the direction of the axis of the engine) may be regarded as being insignificantly small.

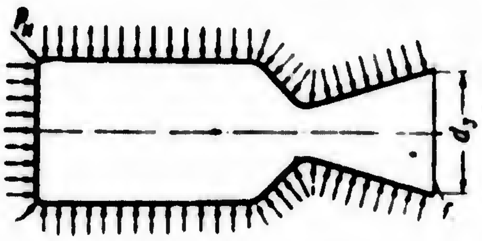

Figure 5. Distribution of pressure on the outside surface of a liquid-fuel rocket engine.

In the derivation of the thrust formula, we will consider the general case when the pressure in the flow of gas at the nozzle exit p_3 is not equal to the outside pressure p_H. Our problem is to determine all the forces acting on the engine walls and to find the product of these forces, i.e., the thrust. The force we seek is made up of the forces acting on the inner walls of the engine P_1, and the forces acting on the outer walls P_2.

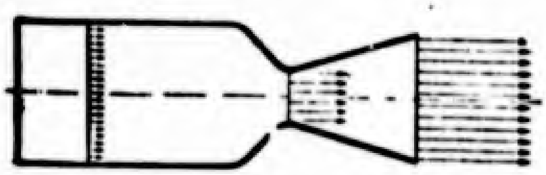

Figure 6. Conventional diagram of a uniform flow of gas used in designing a liquid-fuel rocket engine.

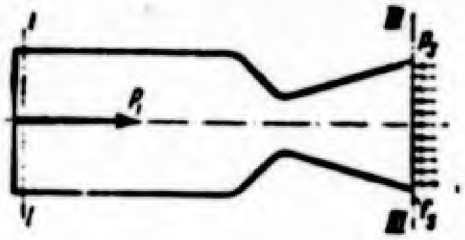

Figure 7. The forces acting on the gas flow in the combustion chamber. P_1 -- resultant force acting on the flow of gas from the direction of the walls. P_3 -- the pressure exerted on the gas flow by gases located outside the exit nozzle f_3.

The forces from the rigid engine walls and from the gases which are beyond the nozzle exit (Figure 7), act on the flow of gas present in the engine at any given time (up to the nozzle exit). Let us direct our attention to the fact that the force acting on the gas flow from the direction of the engine walls is equal in value and opposite in direction to the force with which we are concerned -- the force of the gas flow acting on the engine walls. Thus a force $-P_1$ will be exerted from the wall to the gas flow. Besides, the "minus" sign which we have before the force P_1 indicates that the forces considered are opposite in direction.

We will consider the engine to be an axially symmetric body. All the component forces of pressure on the gas from the walls, directed radially, mutually balance each other. The only forces not balanced are the axial forces; the total of these forces gives the force $-P_1$. The direction of this force coincides with the axis of the engine.

In order to determine the effective direction of thrust, let us assume that the positive direction of the axis of the engine is opposite to the movement of the gases.

In this instance, the force acting on the gas flow by the gases beyond the nozzle exit will be equal to $+p_3f_3$ and the total force P_Σ , acting on that portion of the gas flow in the engine, will be equal to the algebraic sum of the forces

$$P_\Sigma = -P_1 + p_3f_3. \qquad (I.6)$$

In the positive direction that we have selected, the velocity of the movement of the gas discharging from the engine has a negative sign. The magnitude of the increase in velocity of the gas between sections I and III is $-w_3 - (-w_1)$. Since, in accordance with our assumption, the velocity of the entrance of a liquid into the engine is insignificantly small, we may assume that $w_1 = 0$. Then the magnitude of the increase in the velocity will be equal to $-w_3$.

During a time interval of Δt, the mass of gas (or fuel) Δm, entering the engine during this same period, receives this increase in velocity.

In accordance with the impulse theorem (cf page 7), it is possible to write

$$P_\Sigma \ \Delta t = \Delta m \, (-w_3). \tag{I.7}$$

The mass of fuel injected into the engine during the time Δt is equal to

$$\Delta m = \frac{G}{g} \Delta t,$$

where G is the flow rate of fuel per second;

g is the acceleration of gravity.

By substituting this expression for Δm in the relationship of (I.7) and after cancelling Δt we obtain

$$P_\Sigma = -\frac{G}{g} w_3 = -P_1 + p_3 f_3. \tag{I.8}$$

Now, from the relationship (I.8) we find the value of the force P_1 acting upon the rigid inner walls of the engine because of the change in momentum of the accelerating gas flow; i.e., the reactive force

$$P_1 = \frac{G}{g} w_3 + p_3 f_3.$$

Now, let us find the force P_2 acting upon the outer walls of the engine. This force is produced as a result of the fact that a pressure p_H is exerted on the outer engine walls.

The resultant of these forces of outside pressure P_2, as we can easily see from Figure 5, is $P_2 = -f_3 p_H$ and is directed along the engine axis. There are no other forces acting on the rigid engine walls. The radial forces mutually balance each other; therefore, the total force acting on the engine is

$$P = P_1 + P_2 = \frac{G}{g} w_3 + f_3 p_3 - f_3 p_H$$

or finally

$$P = \frac{G}{g} w_3 + f_3 (p_3 - p_H). \tag{I.9}$$

The force P is the thrust of a liquid-fuel rocket engine.

The formula (I.9) is the basic formula for the determination of the thrust of a liquid-fuel rocket engine.

With a pressure on the nozzle exit p_3, equal to the pressure of the surrounding medium p_H, the term $f_3(p_3-p_H)$ is evidently equal to zero, and the formula for determining the thrust assumes the form:

$$P = \frac{G}{g} w_3 \qquad (I.10)$$

The thrust of the rocket engine, as one can see from the expression (I.9), depends on the altitude at which the engine is operating. Besides, with an increase in the altitude and a reduction of the atmospheric pressure p_H, the thrust increases due to a decrease of an unbalanced force of pressure on the walls of the engine by the surrounding atmosphere $P_2 = f_3 p_H$.

At altitudes where the pressure p_H is insignificantly small, the thrust of the engine, called thrust in a vacuum P_{vac} [vac = vacuum] will be equal only to the reaction force P_1,

$$P_{vac} = P_1 = G \frac{w_3}{g} + f_3 p_3 \qquad (I.11)$$

The thrust, in the metric system of measurement we have adopted, is expressed in kilograms, and the values given in equation (I.9) are: flow rate of gas in kg/sec; discharge velocity w_3 in m/sec; pressure p in absolute atmospheres; area f_3 in cm^2; and acceleration of the force of gravity g in m/sec^2.

Let us note several circumstances which make it possible to evaluate the accuracy of the equation obtained for determining thrust.

Disregarding the velocity w_1 of the liquid entering the engine is justified by the fact that the feed system itself creates an additional thrust. This thrust is produced by the fuel accelerating from a velocity of $w_0 = 0$ in the tank to a velocity of w_1 when it enters the engine combustion chamber. We will also take this into account by assuming that the velocity of the liquid entering the combustion chamber of the engine to be equal to zero.

As we know, when gas flows around any body, a force of resistance directed against the movement of that body is generated. Such a force would naturally also occur around the engine from the outside incident flow of air; however, in actual rockets the engine is, as a rule, inside the shell of the rocket or its nose cone, which together with the shell constitutes a single unit. Therefore, the force of resistance in relation to the displacement of the engine in the atmosphere is never considered independently, but is included in the aerodynamic forces acting on a flying object as a whole.

We should note, however, that the character of the airflow around the rocket and, consequently, also the value of its aerodynamic resistance change considerably, depending upon whether or not the engine is operating. If the engine is not operating, a rarefied area is formed behind the nozzle, i.e., an area of negative pressures which create considerable resistance to the movement of the rocket. This additional resistance is called "base drag." When the engine is operating, the rarefied area is eliminated, because it is filled by the combustion products discharging from the nozzle and resistance to the movement of the rocket is reduced.

The influence of the engine on the resistance to the rocket decreases in proportion to the density of the atmosphere. It decreases with altitude because at high altitudes, where the density of the air has less significance, the influence of the aerodynamic forces on the flight of the rocket and the attraction of gravity are practically non-existant.

While gases are flowing through the nozzle, the basic volumes of gas, especially those flowing along the walls of the nozzle, acquire not only an axial velocity but also a radial velocity. Actually, we should take into account the divergence from the engine axis of the direction of the velocity of the flow discharging from the nozzle. These deviations, however, are very small and thus may be disregarded in the majority of cases. If they become significant, we employ special contoured nozzles which equalize the flow and discharge the combustion products in a direction that is very close to an axial direction.

As we can see, the operating conditions for an actual liquid-fuel rocket engine are, for the most part, very close to those adopted in our assumptions. Therefore, the formula (I.9) gives a value for thrust that is sufficiently accurate.

Specific Thrust.

The formula (I.9) determines the absolute value of jet thrust for the engine. However, the absolute value of thrust developed does not characterize the degree of perfection of the operation of a liquid-fuel rocket engine. The qualitative index of the operation of a liquid-fuel rocket engine is the specific thrust. By specific thrust p_{sp} /sp = specific/ we mean the thrust corresponding to 1 kg/sec of fuel consumed.

To calculate specific thrust, we must divide the total thrust of the engine by the total fuel flow rate per second:

$$P_{sp} = \frac{P}{G}$$

or

$$P_{sp} = \frac{w_3}{g} + \frac{f_3}{G}(p_3 - p_H) \qquad (I.12)$$

The specific thrust is expressed in kg sec/kg. Specific thrust is sometimes called specific impulse. If we consider that the pressure of the gas at the nozzle exit is equal to the ambient pressure, i.e., $p_3 = p_H$, then it seems that the specific thrust depends only on the discharge velocity

$$P_{sp} = \frac{w_3}{g} \approx 0.1\, w_3 \qquad (I.13)$$

Since $P = P_{sp}G$, then, evidently, the greater the specific thrust, the smaller the flow rate of fuel necessary to obtain a given thrust. Therefore, we must always strive to obtain as great a specific thrust as possible. The specific thrust depends to a considerable extent on the kind of fuel, and, for each given fuel, on how the operating process in the engine combustion chamber is organized. Since the specific thrust is approximately proportional to the discharge velocity, the engine and the fuel are often times characterized not by the value of the specific thrust but by the value of the discharge velocity.

The discharge velocity in present-day liquid-fuel rocket engines is 2,200-2,700 m/sec.

The presence of two different types of values in the complete equation for specific thrust (I.12) -- the velocity and the forces of static pressure -- is not always convenient for calculations. Therefore, we sometimes introduce the effective discharge velocity w_e which is determined from the following ratio:

$$P_{sp} = \frac{w_e}{g} = \frac{w_3}{g} + \frac{f_3 (p_3 - p_H)}{G}$$

whence

$$w_e = w_3 + \frac{g}{G} f_3 (p_3 - p_H) \qquad (I.14)$$

Thrust, and especially specific thrust in a vacuum, are values which do not depend on the ambient pressure, i.e., they are values characterizing only the engine. Therefore, thrust and specific thrust in a vacuum are often times used to evaluate a rocket engine.

Specific thrust in a vacuum P_{stv} /stv = specific thrust in a vacuum/ for modern engines is equal to 220-250 kg sec/kg. We may expect an increase in the near future to 260-300 kg sec/kg.

Reaction engines are often characterized by the value of their specific fuel consumption C_{sp}.

Specific fuel consumption is the term used to denote the fuel consumption required in one hour of engine operation for the engine to develop a thrust of 1 kg continuously during that hour. Therefore

$$C_{sp} = \frac{C}{P}$$

where C is the total fuel consumption required for the engine to operate one hour and develop a thrust of P kg.

Since P equals $P_{sp}G$, and C equals $G \cdot 3{,}600$, then

$$C_{sp} = \frac{C}{P} = \frac{3{,}600}{P_{sp}} \text{ kg/hr-kg} \tag{I.15}$$

Sometimes, especially for the evaluation of fuel consumption for liquid-fuel rocket engines operating for short periods of time, the value of C_{sp} is expressed as a value of fuel flow rate per second necessary to develop a continuous thrust of one ton, that is, kg/sec. ton. It is obvious that in this instance

$$C_{sp} = \frac{1{,}000}{P_{sp}} \text{ kg/sec.ton.} \tag{I.16}$$

Due to the fact that a liquid-fuel rocket engine uses an oxidizer which is carried in a rocket or in another flying device, the specific fuel consumption by a liquid-fuel rocket engine is rather large. For example, in a liquid-fuel rocket engine having a specific thrust of 250 kg sec/kg, the specific fuel consumption amounts to 14.4 kg/hr kg or 4 kg/sec ton.

SECTION 4. THE JET ENGINE -- A DIRECT REACTION ENGINE

Direct and Indirect Reaction Engines.

We know that the reaction force of a liquid-fuel rocket engine is produced as a result of an increase in the momentum of the mass of the combustion product flowing through the engine. In this connection, a liquid-fuel rocket engine operates just as other engines: as for example, the propeller of an airplane or of a ship. However, there is an essential difference between these apparatuses.

The propeller, the driver of an aircraft power plant, must receive its mechanical energy from another machine -- the engine -- to accelerate the air flow and produce thrust. Since the reaction force which is produced by the driver from the work of the engine is not applied to the engine but to the driver and is created because of the acceleration and increase in momentum of a mass foreign to the engine, then such a power plant may be called an indirect reaction engine. In contrast to this, in a liquid-fuel rocket engine the mass carrier of the engine and the driver are one and the same -- the combustion products of the fuel. The thrust is obtained directly without any intermediate systems.

Therefore, the liquid-fuel rocket engine is a machine combining an internal combustion heat engine and a driver. Such machines are called direct reaction engines.

Various Forms of Direct Reaction Engines.

In addition to liquid-fuel engines, direct reaction engines also include air-breathing reaction engines of various systems and solid-fuel rocket engines.

Let us discuss briefly the operation and use of these types of reaction engines.

Air-breathing reaction engines differ from liquid-fuel rocket engines in the fact that they do not use a liquid oxidizer to ignite the fuel, but the air taken into the engine from the surrounding atmosphere.

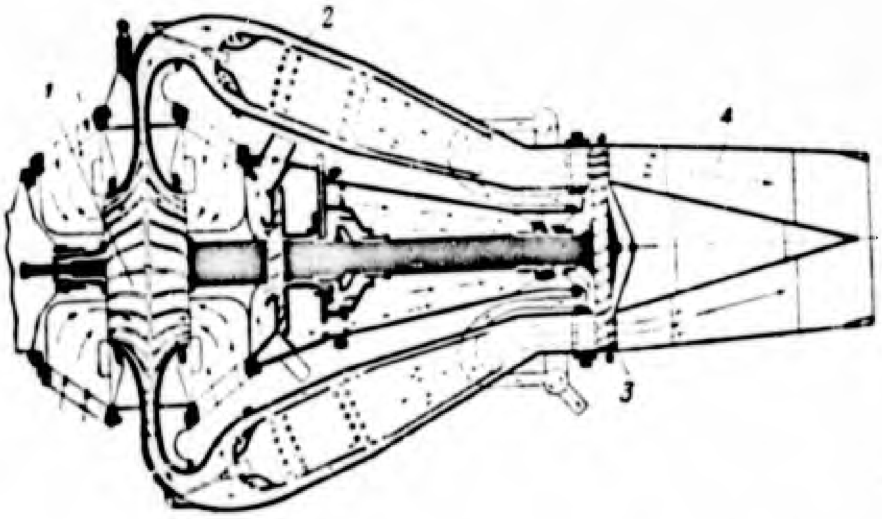

Figure 8. Diagram of a turbojet engine.

1 -- Centrifugal compressor; 2 -- Combustion chamber; 3 -- turbine; 4 -- jet nozzle.

Figures 8 and 9 show the diagram and an external view of a turbojet engine.

The precompression of the air entering the engine occurs as a result of a partial deceleration of the incident flow due to the pressure created by the

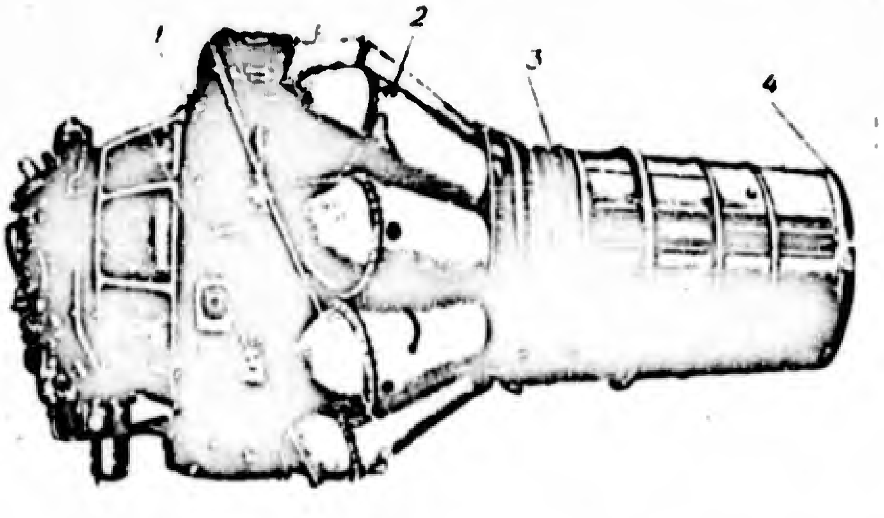

Figure 9. Outside view of a turbojet engine. The numbered items are the same as in Figure 8.

pressure head. Following this the air passes through the intake ports into the centrifugal compressor (1) where its pressure is increased to a value 4 to 5 times greater than the pressure of the surrounding atmosphere. The compressed air is directed into the combustion chamber (2) (there may be several of them in the engine) into which the fuel (usually kerosene) is injected and where combustion takes place. The heated gases pass through the turbine (3) where they are partially expanded (to a pressure greater than the pressure in the surrounding atmosphere) and act upon the turbine wheel which is mounted on the same shaft as the compressor wheel. The turbine serves only to drive the compressor, and all of the turbine power, less small mechanical losses and the relatively small amount of power used for operating auxiliary units, is used for the compression of air.

The subsequent expansion of the combustion products takes place in the jet nozzle (4). The velocity of the gas at the exit of the nozzle increases considerably. The thrust of the engine is determined by the difference of momentum at the nozzle entrance and exit.

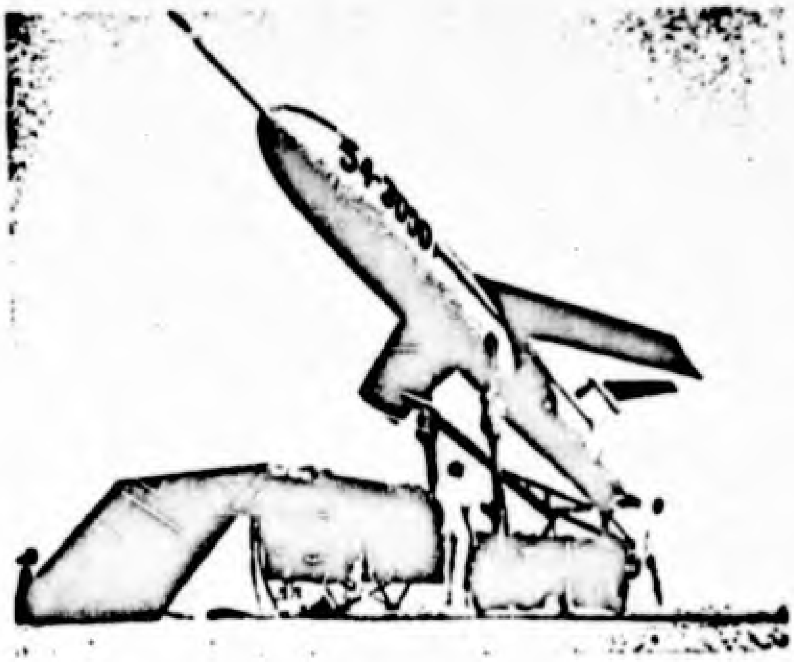

Figure 10. A pilotless missile on a launcher.

In addition to centrifugal compressors, axial compressors, in which a much greater increase in air pressure is achieved, are also employed in the turbojet engine.

Because of the fact that the air of the atmosphere is used as an oxidizer in a turbojet engine, only the fuel, the consumption of which is much less than the fuel consumption in a liquid-fuel rocket engine, is carried on board an aircraft. The specific fuel consumption in modern turbojet engines is 0.8 - 1.2 kg/hr kg.

Turbojet engines are used extensively at the present time; they are installed on high-speed aircraft and also on pilotless missiles.

Figure 10 shows the outer view of a pilotless missile which has a range of 800-900 km and a flight speed of about 1,100 km/hr.

At very high flight speeds an air-breathing reaction engine can function without a compressor for compressing the air and without a turbine for turning the compressor.

The necessary compression of air is obtained solely by the pressure head of the air flow striking the engine. Such engines are called compressorless air-breathing reaction engines. We distinguish two types of compressorless air-breathing reaction engines: the ramjet engine and the pulsejet engine.

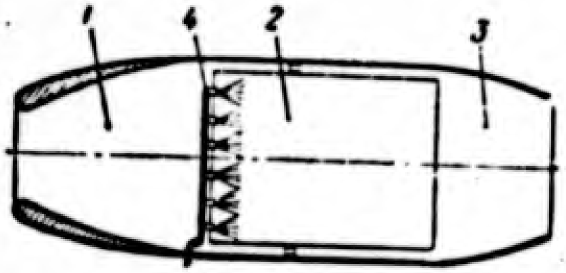

Figure 11. A diagram of a subsonic ramjet engine.

1 -- diffuser; 2 -- combustion chamber; 3 -- nozzle; 4 -- fuel atomizers

A diagram of a subsonic ramjet engine is portrayed in Figure 11. The air from the atmosphere is partially decelerated in the incident flow outside the engine, and then enters the engine diffuser (1), where a further deceleration of the air takes place. The static pressure of the air is raised. The compressed air is directed into the combustion chamber (2), where fuel is injected. From the combustion chamber, the combustion products enter the nozzle (3), where they expand and acquire a higher velocity and produce the thrust of the engine. The fuel pump and the other accessory mechanisms necessary for operation are driven either by separate engines or they are replaced by systems operating on compressed air.

A ramjet engine can operate at high subsonic flight speeds. However, it offers the best results at supersonic speeds, namely at speeds of 2,000 - 4,000 km/hr.

The supersonic ramjet engine has a diffuser with a more complicated design; one which insures the best utilization of the pressure head at supersonic flight speeds.

The design of ramjet engines is relatively simple, but the engine must first be boosted to a high speed to start operating, since the compression will be insufficient at low speeds and the engine will not develop thrust without any special additional units. Therefore, on ramjet equipped aircraft some other type of engine is also installed (for example, a liquid-fuel rocket engine or a solid-fuel rocket engine), to furnish thrust on take-off and at low speeds. As a result of the operation of this engine, the aircraft is accelerated to a speed at which the ramjet engine will furnish sufficient thrust.

Figure 12 shows a diagram of an aircraft which contains a liquid-fuel rocket engine in the fuselage and two supersonic ramjet engines suspended under the wings. In this figure we can clearly see the diffuser (6) of the engine, which has a sharp body, a so-called spike, in the center; this spike insures better utilization of the pressure head at supersonic flight speeds.

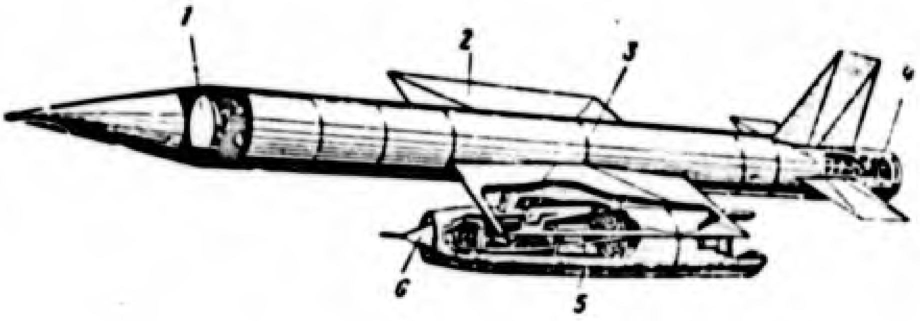

Figure 12. Diagram of an aircraft with ramjet engines.

1 -- warhead; 2 -- wing; 3 -- fuel tanks; 4 -- liquid-fuel rocket engine; 5 -- supersonic ramjet engine; 6 -- engine diffuser with a spike.

A diagram of a pulsejet engine is shown in Figure 13.

The air flowing towards the engine passes through a diffuser, formed by a streamlined fairing (1), and a valve grid (2) into the combustion chamber (3). After the combustion chamber is filled with air, a light liquid fuel, gasoline, for example, is fed into it, the fumes of which are ignited from a spark plug (4) or the burning gases still filling the tapering nozzle ("konfuzor")

(5) and the exhaust tube of the engine (6). When the gasoline fumes are ignited in the combustion chamber, the pressure is raised, the valves of the valve grid are closed, and the combustion products flow through the tapering nozzle and the exhaust tube into the atmosphere, acquiring a high velocity as a result of expansion. The length of the tube is chosen in such a manner that the inertia of the column of gases discharging from the tube creates a partial vacuum in the combustion chamber after a certain period of time, the valves open, fresh air enters the engine and the operating cycle of the engine starts over again.

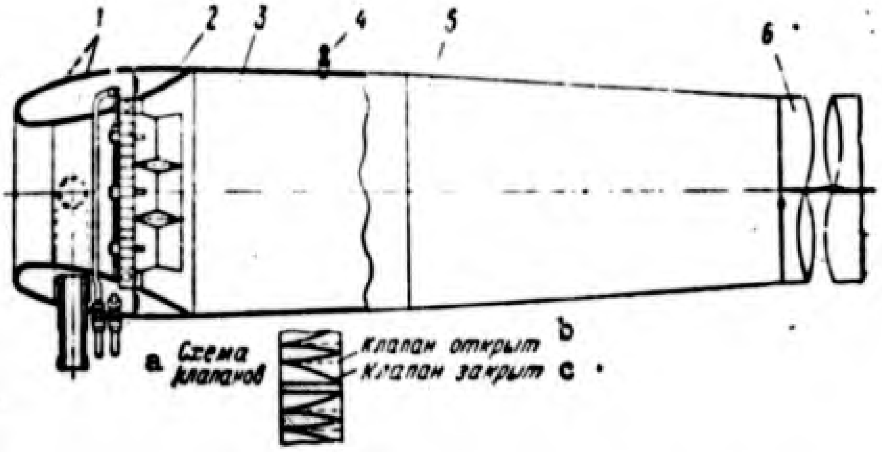

Figure 13. Diagram of a pulsejet engine.

1 -- streamlined nose; 2 -- valve grid; 3 -- combustion chamber; 4 -- spark plug; 5 -- tapering nozzle ("konfuzor"); 6 -- exhaust tube.

a -- valve diagram;
b -- valves open;
c -- valves closed.

The frequency of the operating cycles is determined by the geometric dimensions and length of the tube; usually it is about 4,000 cycles per minute. Such an engine can operate and create thrust even when stationary.

Figure 14 shows the diagram of a direct reaction engine of still another type, namely, a solid-fuel rocket engine:

A charge of slow burning powder (1), consisting usually of several grains, is placed in the engine combustion chamber. When the engine starts, the igniter (2) sets off the powder charge. The combustion products that are formed

(5) and the exhaust tube of the engine (6). When the gasoline fumes are ignited in the combustion chamber, the pressure is raised, the valves of the valve grid are closed, and the combustion products flow through the tapering nozzle and the exhaust tube into the atmosphere, acquiring a high velocity as a result of expansion. The length of the tube is chosen in such a manner that the inertia of the column of gases discharging from the tube creates a partial vacuum in the combustion chamber after a certain period of time, the valves open, fresh air enters the engine and the operating cycle of the engine starts over again.

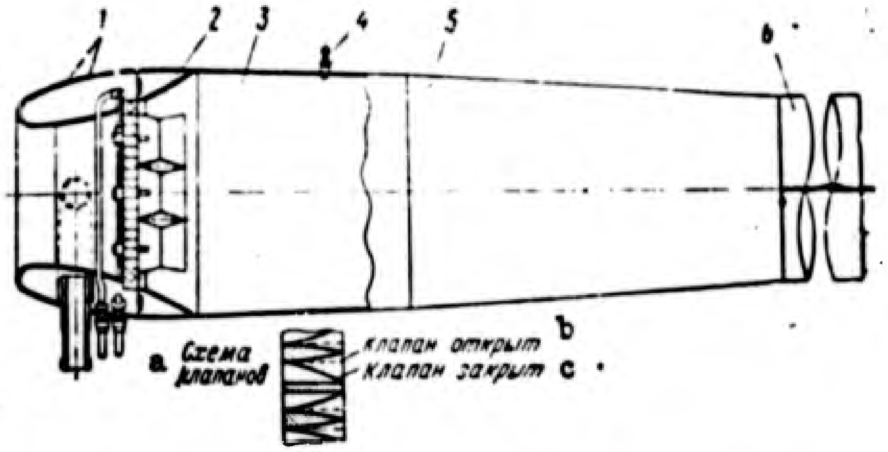

Figure 13. Diagram of a pulsejet engine.

1 -- streamlined nose; 2 -- valve grid; 3 -- combustion chamber; 4 -- spark plug; 5 -- tapering nozzle ("konfuzor"); 6 -- exhaust tube.

a -- valve diagram;
b -- valves open;
c -- valves closed.

The frequency of the operating cycles is determined by the geometric dimensions and length of the tube; usually it is about 4,000 cycles per minute. Such an engine can operate and create thrust even when stationary.

Figure 14 shows the diagram of a direct reaction engine of still another type, namely, a solid-fuel rocket engine:

A charge of slow burning powder (1), consisting usually of several grains, is placed in the engine combustion chamber. When the engine starts, the igniter (2) sets off the powder charge. The combustion products that are formed

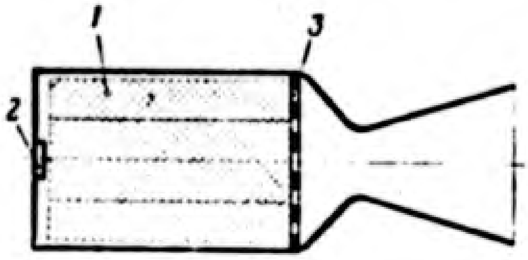

Figure 14. Diagram of a solid-fuel rocket engine.

1 -- powder charge; 2 -- igniter; 3 -- diaphragm.

are discharged out through the nozzle into the atmosphere and create a jet thrust. A diaphragm (3) is used to keep the powder charge in the engine combustion chamber and to prevent its being ejected without being burned.

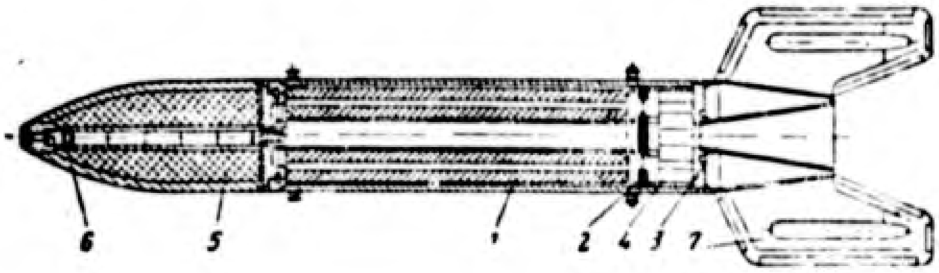

Figure 15. A solid-fuel rocket missile.

1 -- powder charge of the solid-fuel rocket engine; 2 -- igniter; 3 -- nozzle; 4 -- diaphragm; 5 -- warhead; 6 -- detonator; 7 -- stabilizer.

As we can see from the description of the solid-fuel rocket engine, its design is very simple. Hence the solid-fuel rocket engine is widely used in many kinds of rocket missiles, especially in missiles with relatively small dimensions. Figure 15 shows an example of such a missile, a solid-fuel rocket missile intended for firing against ground targets.

Some large missiles, based on the principle of solid-fuel rocket engines and having a rocket powder charge of hundreds of kilograms, have also been created. Figure 16 shows such a missile with an initial weight of 2,700 kg at the moment of launch. It has a length of about 8 m and a diameter of 0.762 m. Its flight range is 24 to 32 km.

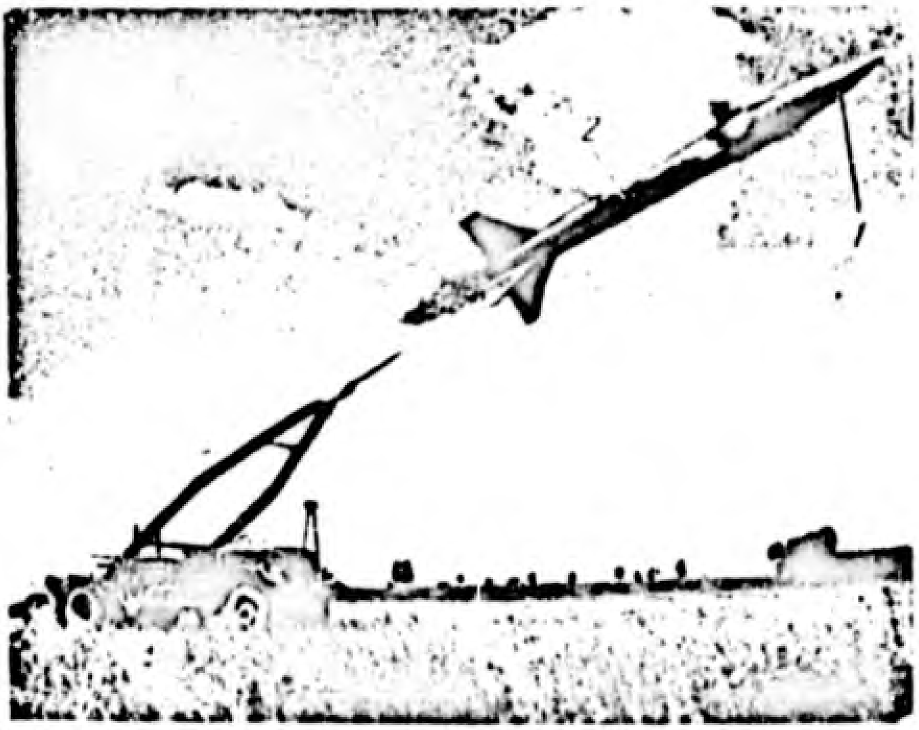

Figure 16. A large solid-fuel rocket missile at the moment of launch.
1 -- warhead; 2 -- solid-fuel rocket engine.

Recently, large solid-fuel rocket engines have also been used as engines in one of the stages of multistage rockets (cf page 39).

The Characteristics of Jet and Rocket Engines.

The basic characteristic of all types of reaction engines (i.e. direct reaction engines) is the fact that their use becomes advantageous only at high speeds of the craft in which such engines are installed.

In order to explain this, we will introduce the concept of an external, or, as it is more often called, flight efficiency coefficient η_f (f = flight).

Flight efficiency expresses the degree that the gas stream, being discharged from the nozzle, is used to produce useful work which is then spent in propelling the reaction vehicle. This useful work, which is applied to a reaction vehicle per second, is equal to the product of the thrust P times the velocity of the vehicle u. If we disregard the relatively small value of $f_3(p_3-p_H)$, the thrust of a rocket engine is equal to $P = \frac{w_3}{g} G$, while the useful work per second, produced because of the thrust of the rocket engine, is:

$$\frac{w_3}{g} Gu. \tag{I.17}$$

The stream of gas flowing from the engine possesses two forms of energy: the first is the kinetic energy possessed by the liquid propellant in the reaction vehicle which is moving at a speed of u; and the second is the kinetic energy acquired by the combustion products when they are driven into the nozzle up to a speed of w_3. Thus, the total energy of G kg of fuel, consumed per second by the engine, and in the form of a stream of combustion products discharging from the nozzle, is equal to

$$G\left(\frac{u^2}{2g} + \frac{w_3^2}{2g}\right). \tag{I.18}$$

The flight coefficient, according to its determination, is equal to the ratio of the values shown in (I.17) and (I.18)

$$\eta_{\text{flight}} = \frac{\frac{w_3}{g} Gu}{G\left(\frac{u^2}{2g} + \frac{w_3^2}{2g}\right)}. \tag{I.19}$$

By dividing equation (I.19) by u^2 and introducing the relationship $\beta = \frac{u}{w_3}$ we obtain the final formula for calculating η_f

$$\eta_{\text{flight}} = \frac{2\beta}{1+\beta^2}. \tag{I.20}$$

As we can see from the equation (I.20), the value of the flight efficiency is determined solely by the ratio of the flight speed to the nozzle discharge velocity. The dependence of the change of η_f on β is shown in Figure 17. The flight efficiency has its maximum value, being equal to 1, when $\beta = 1$; i.e., when the exhaust velocity is equal to the flight speed. This condition can be easily explained. In reality, when $w_3 = u$, the velocity of the combustion products leaving the nozzle is, in relation to the earth, equal to zero. The combustion products ejected from the nozzle do not have any kinetic energy, and consequently, in accordance with the law of conservation of energy, all the energy of the stream is communicated to the reaction vehicle.

In any other case, both when the flight speed is greater than the exhaust velocity of the gases (i.e., when $u > w_3$) and when $u < w_3$, the combustion products carry the kinetic energy of the stream with them, reducing that portion which is transmitted to the reaction vehicle. The kinetic energy of the combustion products is gradually dispersed in space because of friction and the disorderly movement of the gas particles.

The exhaust velocity in reaction engines is very great. In the case of an air-breathing reaction engine it amounts to 600-700 m/sec; i.e., about 2,500 km/hr, and in a liquid-fuel rocket engine it reaches 2,500 m/sec; i.e. about 9,000 km/hr. It is at just such speeds that we must employ reaction engines. Numerous attempts to install jet and particularly rocket engines on craft for ground or water transport which could not develop high speeds invariably ended in failure. Such a vehicle always has a very high fuel consumption and the duration of its active operation is very insignificant.

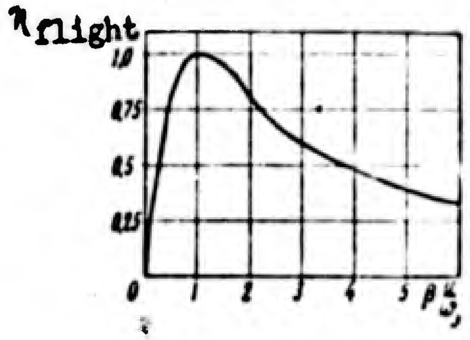

Figure 17. The change in the flight efficiency coefficient of a rocket engine η_f as a function of the value of the ratio of the flight speed to the exhaust velocity β.

We should note that when the velocities of a rocket are greater than the exhaust velocity, the flight efficiency also decreases. However, in this case, it is necessary to content ourselves with a worsening of the flight efficiency because the problem of accelerating the rocket to velocities approximating cosmic velocities may be solved at the present time only with the aid of a rocket engine which has still a limited exhaust velocity.

Thus, reaction engines, and especially rocket engines, are specifically suited for high speed aircraft.

If a comparison is made between reaction and rocket engines, it is not difficult to see the special characteristics of the latter, which consist of the following:

1. Rocket engines by not using air as an oxidizer can operate at any altitude and even in outer space. The use of air-breathing reaction engines is limited to altitudes of 25-30 km, since at higher altitudes the air becomes extremely rarefied and it is necessary to pass enormous volumes of air through the engine to obtain the necessary thrust.

2. The thrust of a rocket engine increases with an increase in flight altitude because of the decrease in outside pressure. The same thrust of an air-breathing reaction engine drops steadily because the density (mass) of the air entering the engine decreases with an increase in altitude.

Thus, a liquid-fuel rocket engine is particularly well suited for installation on aircraft intended for flights at very high altitudes and in airless space.

3. The thrust of the liquid-fuel rocket engine does not depend on the flight speed. At the same time, the thrust of an air-breathing reaction engine decreases with an increase of flight speed and becomes equal to zero if the flight speed is equal to the exhaust velocity. Thus, an aircraft can reach a very high speed only with the aid of rocket engines.

4. Liquid-fuel and especially solid-fuel rocket engines are very simple from the standpoint of their mechanical construction. They have a minimum number of moving and rotating parts. Thanks to this, rocket engines have become much lighter than, for example, turbojet engines. In this respect only the ramjet engines can compete with them.

5. The air used in an air-breathing reaction engine and the liquid oxidizers used in the liquid-fuel rocket engine differ a great deal from each other. The oxygen of the air which is necessary for the combustion of fuel in an air-breathing reaction engine is diluted to a large degree with nitrogen, an element which does not take part in combustion, i.e., it is a ballast. Therefore, the concentration of chemical energy per unit weight of propellant for an air-breathing reaction engine, including the fuel and the oxidizer necessary for its combustion, is small and amounts to 680-700 calories per kilogram of mixture.

In liquid oxidizers we can increase the percentage of oxygen to 75-100% so that the concentration of chemical energy in the propellant of a liquid-fuel rocket engine increases to 1,400 - 2,250 calories per kilogram. Therefore, a very intensive liberation of heat takes place in the combustion chamber of a liquid-fuel rocket engine, and the temperatures of combustion are much higher in comparison with those in air-breathing reaction engines. For this same reason the velocity of the gas in the combustion chamber and in the nozzle is very great. On the one hand, the high thermal and velocity loads of the operating process of a liquid-fuel rocket engine makes it possible for engines of this type to have minimum dimensions. A liquid-fuel rocket engine in comparison with any type of an air-breathing reaction engine, both with the same thrust, has much smaller dimensions. As a result of this, a liquid-fuel rocket engine can be easily placed on any type of aircraft. However, on the other hand the high load of the operating process of a liquid-fuel rocket engine also causes a number of difficulties. The problems of cooling the engine, of making it explosion-proof, and of securing an operational potential for the proper length of time etc., are very complex. Therefore, in spite of the relative simplicity of the construction of the liquid-fuel rocket engine mentioned above, the creation of a reliable engine is a complicated engineering task requiring a great amount of experience in the designing and manufacture of an engine of this type.

6. A great weakness of rocket engines is their very high specific fuel consumption. However, in a number of cases the increased fuel consumption is compensated for by the low weight of the engine. In a number of cases the rocket engine is the only suitable engine for the solution of the problems set forth.

In making a further comparison between liquid-fuel and solid-fuel rocket engines, we should note the following characteristics of solid-fuel engines.

The solid-fuel engine usually does not have artificially cooled walls. For this reason, the operating time of a solid-fuel rocket engine is very limited and as a rule does not exceed several seconds during which the material of the combustion chamber walls does not have time to heat up and to lose its stability.

Solid-fuel rocket engines operating for 20-25 seconds have appeared only very recently. The combustion chambers of such engines are covered with a special coating which protects the material of the combustion chamber walls against burnout.

The combustion chamber of a solid-fuel rocket engine is at the same time a unique tank in which fuel is kept. Therefore, the combustion chamber by necessity has large dimensions which increase with the thrust and operating time of the engine.

We must take into account that as a rule, a very high pressure is produced in the combustion chamber of a solid-fuel engine. Therefore, to insure the stability of the chamber which is operating under severe temperature conditions, it is necessary to increase the wall thickness, which renders the construction of the engine much more difficult while preventing an increase in its dimensions.

We should, however, note that recently atable burning powders have been developed which burns at low pressures (30-50 atm), making it possible to create rather large solid-fuel rocket engines. The extensive use of large solid-fuel rocket engines has also been hindered by the high cost of solid rocket fuel; however, cheaper solid fuels created in recent years have removed even this obstacle.

The Transformation of Energy in a Rocket Engine.

The transformation of the chemical energy of the fuel into the work imparted to the aircraft by the engine is the result of the individual processes taking place in the engine and its parts.

The carrier of the chemical energy going into the engine is the propellant which as a rule consists of a fuel and an oxidizer. The conversion of the chemical energy of the propellant into thermal energy usually takes place as a result of a chemical process -- the reaction of the combustion of the propellant. However, the process of combustion must be preceded by a whole series of preliminary processes which are necessary for the creation of the best conditions of converting both the chemical energy into thermal energy and the heat into the work of expansion.

These processes include the following: compression (i.e., raising the pressure of the propellant, which is necessary to effect a subsequent expansion of the combustion products), feeding of the components into the combustion chamber, atomizing the fuel components, and then igniting them.

The thermal energy released as a result of combustion is converted partially into the work of expanding the combustion products. The work of expansion is spent on increasing the exhaust velocity of the combustion products and, therefore, in producing thrust.

A diagram of the processes of the transformation of energy is depicted in Figure 18.

1 -- oxidizer;
2 -- fuel;
3 -- compression and feeding;
4 -- atomizing;
5 -- chemical energy;
6 -- ignition and combustion;
7 -- thermal energy;
8 -- expansion;
9 -- work of expansion;
10 -- work of thrust.

Figure 18. A flow chart of the processes of the transformation of energy in the reaction engines.

SECTION 5. THE CLASSIFICATION OF LIQUID-FUEL ROCKET ENGINES

We can classify liquid-fuel rocket engines by various characteristics:

-- by the characteristics of the propellants used;

-- by the method of carrying out the basic processes of the transformation of energy;

-- by the purpose of the engine.

In keeping with this, we will classify engines in the following manner:

-- by the type of propellant used;

-- by the method of compressing and feeding the propellant components;

-- by their purpose.

A diagram of this classification is presented in Figure 19.

The Classification of Liquid-fuel Rocket Engines by the Types of Propellants Used.

In liquid-fuel rocket engines it is possible to employ two basic types of propellants: liquid monopropellants, consisting of a single substance (or a solution of several substances) which is in a form prepared for combustion (or decomposition)(such mixtures may be called liquid powders) and seperately-fed propellants, which consist of a fuel and an oxidizer that are fed separately into the combustion chamber and mix only in the combustion chamber itself.

The problems of the atomization and carburetion processes in engines of these types differ considerably from each other.

In engines operating on monopropellants, the mixing of the components participating in the combustion reaction is done beforehand, and in the process of atomizing the propellant it is only necessary to distribute it as uniformly as possible over the combustion chamber cross section.

In engines with separate feed systems (of propellant components), a careful mixing of the fuel particles and oxidizer should take place in the atomizing process in order to create the best possible conditions for combustion and the fullest possible release of chemical energy from the propellant.

In engines operating on monopropellants, the system of feeding is much more simple since it only uses one and not two tanks, and there is also only one fuel supply line between the tank and the combustion chamber. However, the development of an adequate monopropellant is limited by the danger of explosion. As a result of this, engines using a monopropellant have not yet been extensively employed.

Engines with separate feed systems (of propellant components) are classified in more detail by the type of oxidizer employed, since the characteristics

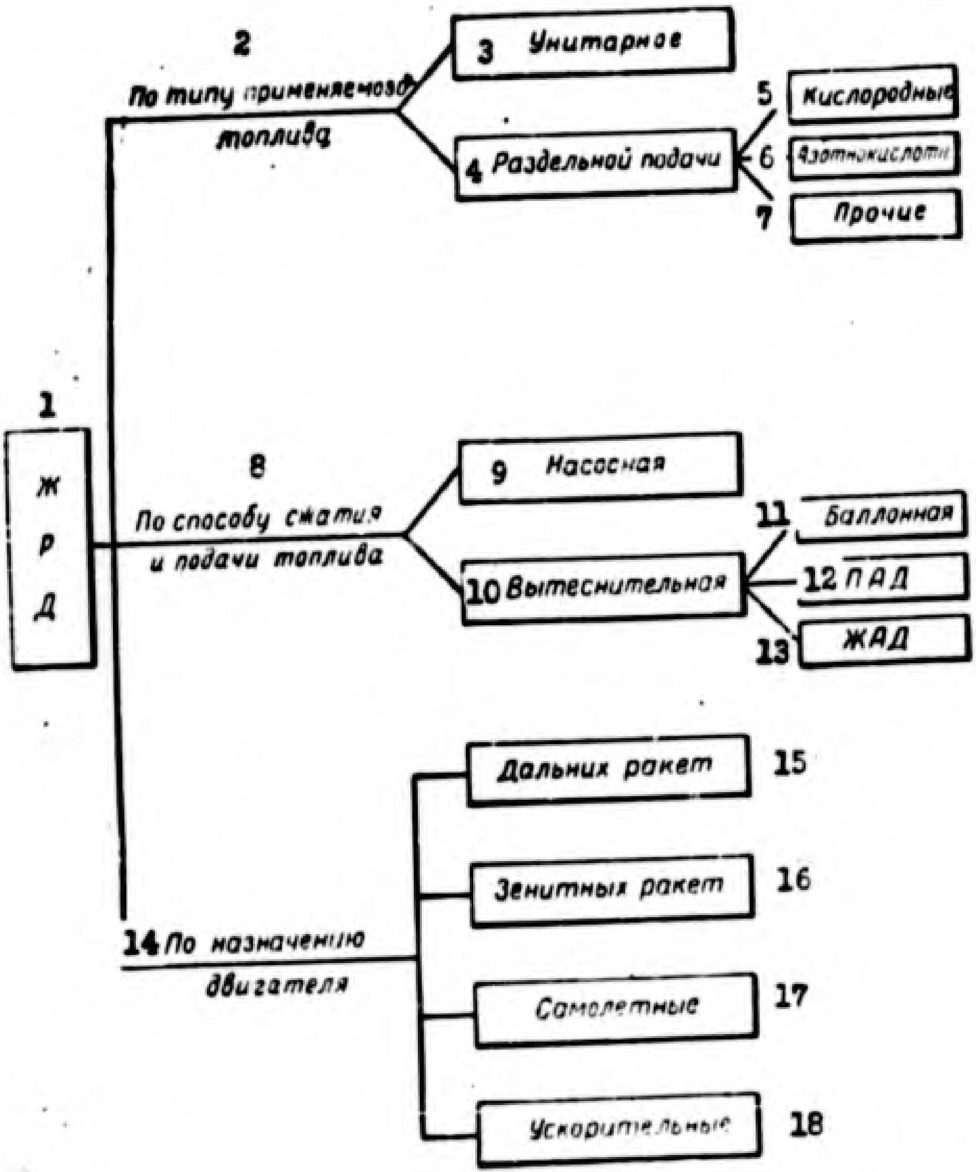

Figure 19. Diagram of the classifications of liquid-fuel rocket engines.

1 -- liquid-fuel rocket engines; 2 -- by type of propellant employed; 3 -- monopropellant; 4 -- separate feed system (of propellant components); 5 -- oxygen; 6 -- nitric acid; 7 -- other substances; 8 -- by means of compressing and feeding the propellant; 9 -- pump; 10 -- displacement; 11 -- canister; 12 -- cartridge pressure accumulator; 13 -- liquid pressure accumulator; 14 -- by the purpose of the engine; 15 -- long range rockets; 16 -- antiaircraft rockets; 17 -- aircraft-type; 18 -- boosters.

of a given oxidizer determine the structural characteristics of the engine to a considerable degree, and often also the possibility of using the engine for a certain purpose. In a classification based on the type of oxidizer employed, the engines are usually designated by the name of the oxidizer; for example, oxygen, nitric acid, etc. At the present time, the most extensively used types are the oxygen and nitric acid engines.

The Classification of Liquid-Fuel Rocket Engines by the Method of Compressing and Feeding the Propellant Components.

The process of compressing and feeding components into liquid-fuel rocket engines is usually accomplished by one of two methods: either by forcing the components from the tanks by creating an excess pressure in them, or by using pumps to compress and feed the components. The first type of injection system will be called forced feeding, and the second type pump feeding.

In pump feeding, the components from the tanks are forced into the combustion chamber by pumps which require some source of energy to turn them. Turbines which operate on the products of the decomposition of hydrogen peroxide or some other substance, are most often used to drive the pumps.

Increasing the pressure in the tanks for forced feeding may be achieved by several means. Extensive use is made of a feed system in which the displacement of the components is accomplished by gas under high pressure.

This gas passes from the canister through a reducer which lowers the pressure of the gas to the operating pressure in the tanks. The gas then enters the tanks with the propellant components, forcing them into the combustion chamber. This feed system is called canister feeding. The disadvantage of it is the great weight of the gas which forces the components from the tanks and especially the weight of the canister which stores the gas under high pressure.

To decrease the weights of these canisters, the combustion products of a solid propellant are used to expel the propellant components; this is the so-called solid propellant hot gas generator feed. When the combustion products of a liquid propellant are used, this is then the so-called liquid-propellant hot gas generator feed.

The heavy canister with compressed gas in these forced feed systems is replaced by the lighter solid-propellant or liquid-propellant gas generator; the weight of the gas, which expels the components, is reduced because of the higher temperature at which it enters the propellant tanks.

In forced feeding of any type, the tanks containing the components operate under a pressure somewhat exceeding the pressure in the combustion chamber; because of this, the tanks should be sufficiently strong. In high-thrust engines or in engines designed for comparatively prolonged operation, the use of forced feeding would give rise to a prohibitive increase in the weight of the tanks. Pump feeding of the propellant components is employed in these engines.

The ignition process in starting the engine is important in relation to safety and reliability of operation since a short delay in ignition leads to an accumulation in the combustion chamber of a large quantity of propellant having an enormous supply of energy, the sudden release of which could lead to an explosion and the destruction of the engine.

The ignition of the propellant in the engine may be effected in the following ways: by feeding hypergolic components into the chamber at the moment of the start (chemical ignition); by ignition of the operating mixture with a powder cartridge (pyrotechnic ignition); and, lastly, by ignition of the components with the aid of an electric spark plug (electrical ignition).

The Classification of Liquid-Fuel Rocket Engines by Purpose.

Modern liquid-fuel rocket engines are used on many reaction vehicles. The design of liquid-fuel rocket engines depends, to a great degree, on their function; hence engines are classified by their use, for example: engines for long-range rockets, antiaircraft rocket engines, engines for airplanes, boosters, etc.

SECTION 6. AREAS OF APPLICATION OF LIQUID-FUEL ROCKET ENGINES

Cosmic Rockets and Artificial Earth Satellites.

The liquid-fuel rocket engine possesses two principally new characteristics which distinguish it from other reaction engines; it can operate outside the earth's atmosphere and impart very high speeds to an aircraft.

K. E. Tsiolkovskiy was the first to appraise the colossal possibilities opened up by these characteristics of liquid-fuel rocket engines. In his works he set forth the idea of using a liquid-fuel rocket engine for space flights and to open new places in the universe for the settlement of human beings. In one of his first works in 1903, K. E. Tsiolkovskiy wrote: "In the distant future we can already see perspectives through the haze which are so attractive and important that we can hardly dream of them at the present time."[1]

In his subsequent works, Tsiolkovskiy stated these perspectives in a specific manner; he wrote:

"But, on the other hand, how beautiful the achievement will be. The conquest of the solar system will give not only energy and life which will be two billion times more abundant than the energy and life of the earth, but even a space still more abundant. Man on earth masters, so to speak, only two dimensions. The third, however, he masters only to a limited extent; as yet he cannot spread out at pleasure upward and downward. Then, however, man will have three dimensions."

The development of cosmic rockets is a difficult scientific and technical task.

---

[1] K. E. Tsiolkovskiy, "Raketa v kosmicheskoye prostranstvo" /The Rocket to Cosmic Space/, Sb. "Trudy po raketnoy tekhnike" /from the Symposium "Works on Rocketry"/, Oborongiz, 1947.

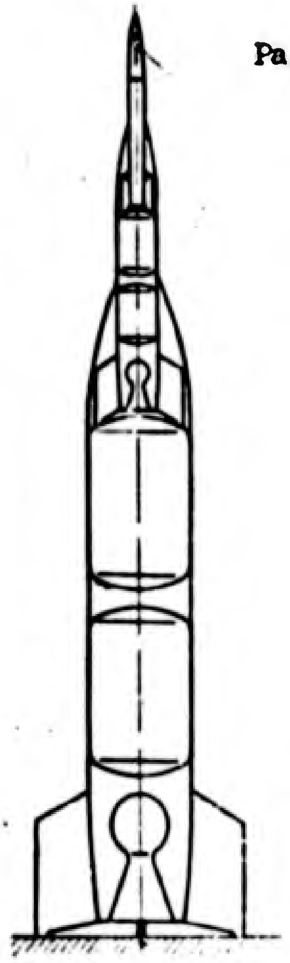

Figure 20. Diagram of a three-stage rocket.

In order to develop the high flight speed necessary to overcome the earth's force of gravity and for a flight into outer space, it is necessary to use composite [multi-stage] rockets which were first proposed by K. E. Tsiolkovskiy.

By a composite rocket we mean one consisting of several rockets joined together as shown in Figure 20, where a diagram of a three-stage rocket is depicted. At the moment of launch and during the first period of its flight only the engine of the first stage is in operation. The first stage engine is the one with the maximum thrust. In addition, the first stage of the rocket, besides engine and fuel, carries only instruments and equipment which will insure the operation of the engine. The other two stages constitute the payload for the first stage. After the propellant of the rocket's first stage is consumed, the empty first stage is jettisoned, which considerably reduces the weight of the rocket. At this same moment, the second stage engine starts, the thrust of which is not spent on accelerating and lifting the mass of the first stage of the rocket which has by now become useless, but is used in lifting and accelerating the remaining stages. The remaining third stage is the payload. After the second stage engine has consumed its propellant, it will also be jettisoned and the third stage engine starts to operate.

Thus, the use of composite rockets reduces the mass of the device, which, together with the mass of the payload located in the third stage, must be given the necessary velocity, while the mass of the first and second stages is accelerated to significantly lower velocities. Thanks to this, the amount of propellant which must be spent to accelerate the payload to a given velocity is sharply reduced. With the specific thrusts of modern liquid-fuel rocket engines, a one-stage rocket would generally not be able to reach escape velocity.

The greater the number of stages in a composite rocket, the more significant is the reduction of the weight of its construction. However, the number of stages is limited by the purpose of the rocket and the rapid increase in the constructional difficulties arising with an increase in the number of stages of the rocket.

In order to characterize the difficulties which must be overcome in the construction of cosmic rockets, it can be pointed out on the basis of certain theoretical calculations that to deliver a payload (of instruments) with a weight of 45 kg to the moon, it is necessary to have a three-stage rocket with an initial weight of 480 tons, which is more than 10 tons of initial weight per kilogram of payload to be delivered to the moon. The liquid-fuel rocket engine of such a rocket must have a thrust of about 1,000 tons.

To solve the very interesting problem of a flight around the moon and a return to the earth, it is necessary to have rockets and engines of still larger dimensions.

A more modest task, the solution of which will be the first step towards the mastery of outer space, is the creation of an artificial earth satellite. The artificial satellite would be a body revolving about the earth for a certain period of time. In order that the satellite not fall back to earth, it must revolve about the earth at such a velocity that the centrifugal force would be equal to the force of gravity. This velocity is called the first escape velocity and is about 8 km/sec.

So that the speed of the satellite does not decrease (or decreases very slowly), its flight should take place, as is now established, at altitudes of more than 300 km.

Sending a satellite to such an altitude and imparting a first escape velocity to it is possible by using a three-stage rocket. In addition, it is necessary to have approximately 1,000 kg of initial weight of the rocket per kilogram of weight of small size satellites. Therefore, earth satellites should have small dimensions and weights, which are sufficient, however, to place instruments in the satellite which make it possible to observe the movement of the satellite from the earth or to transmit the most important physical data characterizing the condition of the surrounding medium at great altitudes to earth.

Thus the diagram of a rocket for launching an artificial earth satellite, according to one project, has the form shown in Figure 21.

The satellite itself is a sphere (1) with a diameter of 500 mm and a weight of about 10 kg. The satellite is enclosed during the time of the flight in a protective jacket (2). The composite rocket launching the satellite has three stages; its initial weight is about 10 tons. The engine of the first stage (15) operates on liquid oxygen and a fuel consisting of a mixture of alcohol (75%) and gasoline (25%) which are placed in the tanks (13 and 11).

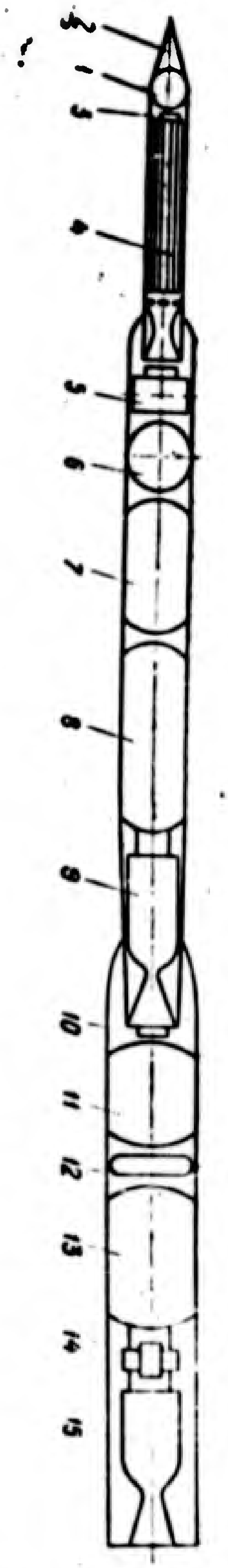

1 -- earth satellite;

2 -- protective jacket;

3 -- mechanism for releasing the earth satellite;

4 -- solid-fuel rocket engine;

5 -- guidance instruments;

6 -- canister with compressed helium;

7 -- fuel tank;

8 -- oxidizer tank;

9 -- combustion chamber of second stage engine;

10 -- mechanism for separation of the first stage;

11 -- fuel tank;

12 -- hydrogen peroxide tank;

13 -- oxidizer tank;

14 -- turbo pump;

15 -- combustion chamber of first stage engine.

Figure 21. Diagram of a three-stage rocket - an artificial earth satellite.

Feeding the propellant components into the first stage engine is accomplished by a turbopump (14) which operates on hydrogen peroxide stored in tank (12). The first stage engine provides for the vertical start of the rocket and its movement along a trajectory having a constantly decreasing inclination to the horizon. At the moment the first stage engine ceases to function and separates from the rocket, the rocket will be at an altitude of 58 km. The second stage engine (9) operates on nitric acid and dimethyl hydrazine (a hydrocarbon fuel) contained in tanks (6) and (7). The feeding of the fuel components is by the canister method. Helium, contained in a canister (6), is used as a pressure gas. The second stage engine lifts the rocket to an altitude of 255 km, after which, because of inertia, it reaches a height of 480 km.

The third stage of the rocket has a solid-fuel rocket engine (4) which starts upon reaching a set altitude, and imparts a first escape velocity to the rocket. After the third stage engine shuts off, the release mechanism separates the satellite, if necessary, from the third stage rocket body, and the satellite begins its independent movement about the earth at an altitude of 480 km, and a velocity of 28,800 km/hr. The satellite makes one revolution about the earth in 1.4 hours.

It is assumed that at an altitude of 480 km an earth satellite can revolve around the earth for several months, gradually, however, the velocity of its revolution will be reduced because of friction with the traces of atmosphere existing at such an altitude and the satellite will gradually descend lower and lower. After falling, finally, into the denser layers of the atmosphere, it will burn, just as fragments of meteorites in the earth's atmosphere.

As we can see, the problem of making even a small cosmic rocket is very complicated and requires a high level of development of rocket engineering.

Rockets for the Exploration of Upper Layers of the Atmosphere

(Meteorological Rockets)

The liquid-fuel rocket engine is also very important for use as an engine for the exploration of the upper layers of the atmosphere.

Even K. E. Tsiolkovskiy pointed out that solely with the aid of a rocket it is possible to study the extremely high layers of the atmosphere and also areas much further from the earth. This problem can be solved and is being solved at the present time.

Meteorological rockets, as we generally call rockets used for the exploration of the upper layers of the atmosphere, are built in the form of one- or two-stage rockets of the most varied weights and dimensions depending upon the purpose of the tests and the weight of the instruments necessary for research (for further details, see Table 1).

According to information which has been published, a single rocket with an initial weight of 7.5 tons, equipped with a liquid-fuel rocket engine having a thrust of 9.070 kg, reached a maximum altitude of 254 km. Figure 22 shows this rocket at the moment of launching. A still greater altitude -- 390 km -- was reached by a two-stage rocket which had a first stage weighing 13 tons and containing a liquid-fuel rocket engine having a thrust of 25 tons, while the second stage of the rocket weighed 300 kg and had a liquid-fuel rocket engine with a thrust of 680 kg and an operating time of 45 seconds.

This rocket is shown in Figure 23, at the moment it became airborne; when its first stage had not yet been jettisoned. In Figure 24, the second stage of the rocket is shown separately. Flights have been made in many meteorological rockets to high altitudes by living creatures -- monkeys, dogs, etc. -- for the purpose of studying the effect of rapid and prolonged accelerations, characteristic of space flight, on a living organism, and also to study the effects of intensive cosmic radiation which occurs at high altitudes.

Figure 25 shows a cut-away of a two-stage meteorological rocket in which animals were sent aloft. The first stage (the booster) of the rocket is a solid-fuel rocket engine with a weight of 265 kg (117 kg of these is solid fuel) which operates for 2.5 seconds and imparts an acceleration equal to 14 g (where $g = 9.81\ m/sec^2$ -- the acceleration of gravity) to the rocket. The second stage is a liquid-fuel engine. It operates on a hypergolic fuel (an oxidizer with a nitric acid base and a fuel with an aniline base). The

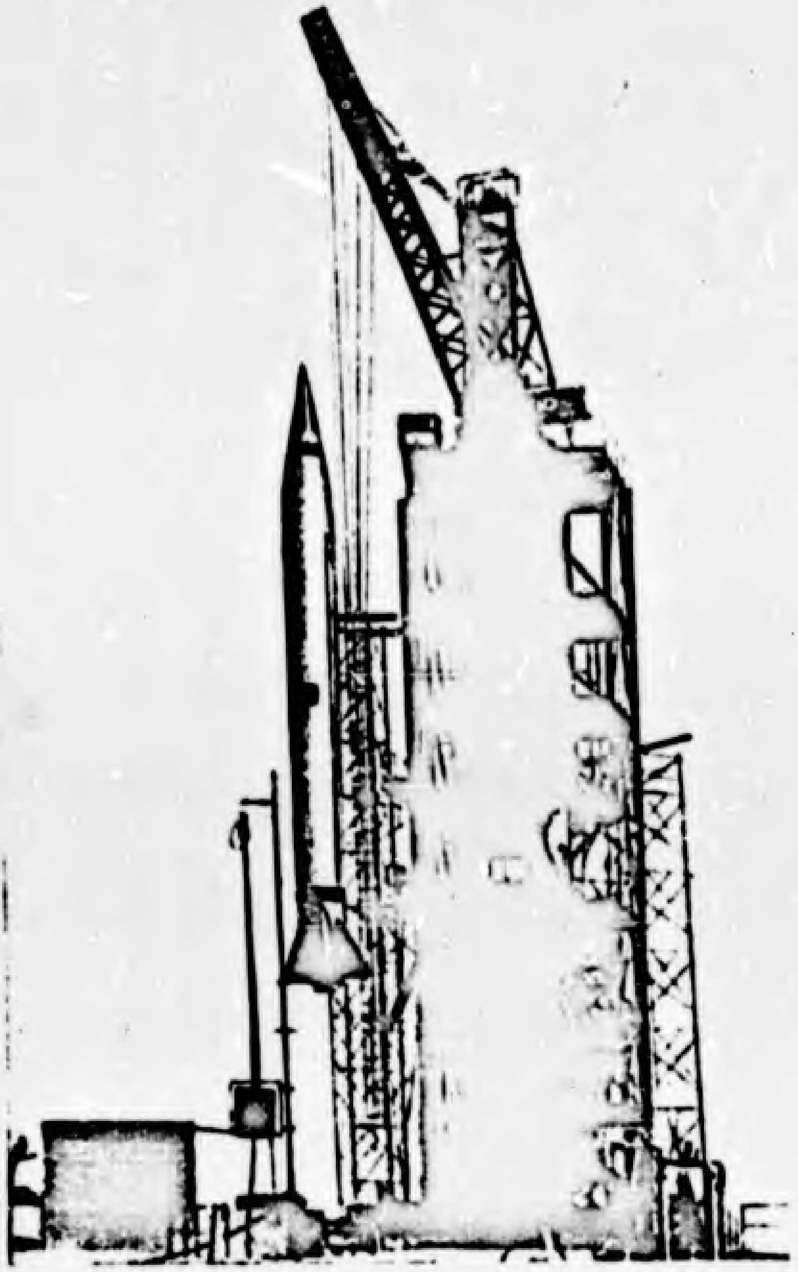

Figure 22. Launching a single-stage meteorological rocket.

Figure 23. The beginning of flight of a two-stage meteorological rocket.

1 -- first stage; 2 -- second stage.

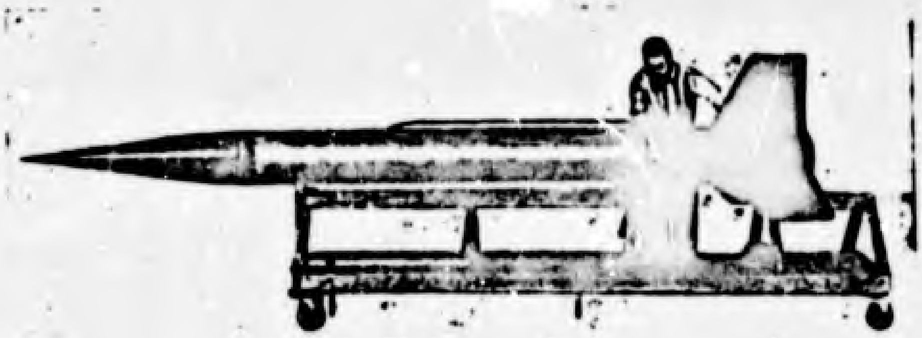

Figure 24. Second stage of a two-stage meteorological rocket which reached an altitude of 390 km.

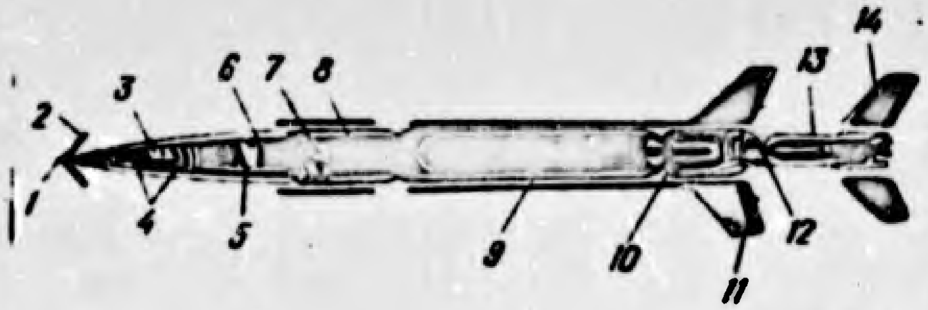

Figure 25. A two-stage meteorological rocket on which animals were sent to high altitudes.

1 -- nose cone; 2 -- antenna; 3 -- radio transmitter; 4 -- telemetry equipment; 5 -- animal compartment; 6 -- recording instruments; 7 -- radio beacon; 8 -- parachute; 9 -- tank for propellant components; 10 -- engine; 11 -- stabilizer of the second stage; 12 -- fastening of the first stage (booster); 13 -- solid-fuel rocket engine; 14 -- stabilizer of the first stage.

feed system is a canister system, which uses compressed helium to expel the propellant components. The thrust of the engine is 1,140 kg (1,800 kg in recent models), the operating time is 45 seconds. The payload of 68 kg includes: a hermetically sealed compartment for the animals which is equipped with a movie apparatus and a system for supplying the compartment with oxygen; instruments for the observation of the physiological condition of the animals and a system for transmitting the readings of these instruments to the earth by radio (the so-called telemetry system), and a system for recording the data on a film; the "marker" of the position of the rocket in space (a radio beacon); and a parachute for the safe return of the animals and the instruments. According to existing data this rocket reached a maximum height of 288 km.

The maximum altitude reached at the present time by rockets is 1,200 km.

Long Range Rockets.

Along with their use in space rockets, the classic area of application of liquid-fuel rocket engines is that of long-range and "super-long-range" ballistic missiles, which accomplish flights over great distances and at a very high altitude. The small resistance vanishing, during flight at these altitudes, gives us reason to suppose that, under the conditions known, such flights will be economically advantageous.

The solution of this problem is today's and tomorrow's task of rocketry, and, even though we are on the path to attaining the necessary velocities and ranges, many difficulties still remain. There are no grounds to doubt that these will not be overcome.

The particular qualities of a liquid-fuel rocket engine mentioned above, among them its small dimensions and weight, insure wide application in military engineering as an engine for the most varied kinds of military equipment.

One of the first weapons in which liquid-fuel rocket engines were installed was the long range rocket. An example of such a rocket is the German A-4 (V2) rocket which had a firing range of 250-300 km.[1] A diagram and cutaway of this rocket are given in Figures 26 and 27.

In the nose section of the rocket there is a cone shaped warhead (1) weighing 1,000 kg; 730 kg of this are explosives. Behind the nose section there is the compartment for the guidance instruments (2), containing all the control instruments for guiding the rocket. One section of these instruments controls the position of the rocket in space and the other controls the operation of the power plant. This same compartment contains the power sources for the instruments. The weight of the compartment with the instruments is 475 kg.

The mid-section (3) of the rocket contains the fuel tank (alcohol) and the oxidizer tank (liquid oxygen).

The total dry weight of the mid-section without the fuel and the oxidizer

---

[1] D. Satton, Raketnyye dvigateli /Rocket Engines/, 1952, Foreign Literature Publishing House. I. Kooy i I. Yutenbogart, Dinamika raket /Dynamics of Rockets/, Oborongiz, 1950.

is 820 kg; 420 kg of this represents the jacket. The fuel tank has a capacity of 4,600 liters and weighs 63 kg. The tank contains about 3,900 kg of alcohol. The oxidizer tank has a capacity of 4,470 liters and weighs 107 kg; it contains about 5,000 kg of liquid oxygen.

The engine is in the tail section (4) on which the stabilizers and rudders are located. The weight of the tail section is 620 kg; the weight of the engine is 920 kg. The tail section carries four stationary wing-stabilizers arranged in pairs in two mutually perpendicular planes. At the end of the stabilizers are the air rudders (5). In addition to this, gas rudders (6), in the same planes, are located in the flow of combustion products.

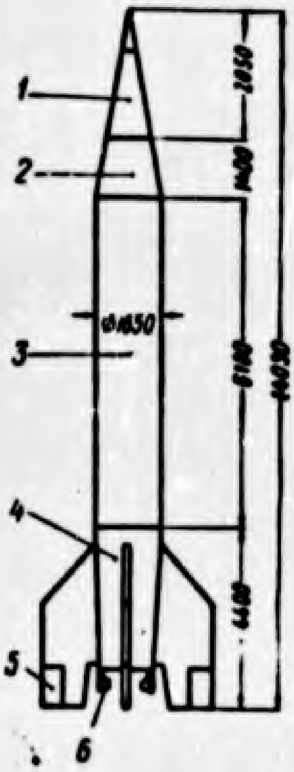

Figure 26. Diagram of the A-4 rocket.

1 -- warhead; 2 -- guidance instruments; 3 -- mid-section; 4 -- tail section; 5 -- air rudders; 6 -- gas rudders.

The gas and air rudders together with the guidance instruments of the rocket perform three functions. One pair of rudders keeps the rocket in the firing plane which coincides with the plane set by this pair of rudders and stabilizers; the other pair of rudders serves for guiding the rocket along an inclined angle to the horizon. In addition to this, the first pair of rudders prevents the rotation of the rocket around its longitudinal axis.

The total length of the rocket is 14 m; its weight dry without propellant is about 3,800 kg, and its initial flight weight is about 13,000 kg. The power plant develops a thrust of 26,000 kg in 60-70 seconds and consumes 125 kg of propellant per second.

The A-4 rockets were designed in 1940-1942. They were first employed for military purposes in September 1944, when they were fired at London from territory of Holland. From September 1944 to March 1945, more than 1,000 A-4 rockets were fired. Figure 28 shows the A-4 rocket during preparation for launching.

A detailed description of the A-4 rocket engine is given in Chapter 10.

The A-4 rocket did not produce the expected military effect. However, thanks to the successful solution of many difficult problems of rocket construction, it gave a powerful impulse to the further development of the liquid-fuel rocket engine in many countries.

Since the A-4 rocket was built until now, many new models of long-range rockets have been developed (see Table 1).

The main results of work on the development of such rockets can be summarized as follows:

The initial weight of a rocket for a range of 300 km and with a warhead weight of about one ton has now been reduced to 6-7 tons. Figure 29 shows one such rocket.

Rockets have been developed with a maximum range of over 1,000 km. Such rockets have an initial weight of about 20 tons and an engine with a thrust up to 40 tons.

At the end of August 1957, an intercontinental ballistic missile was

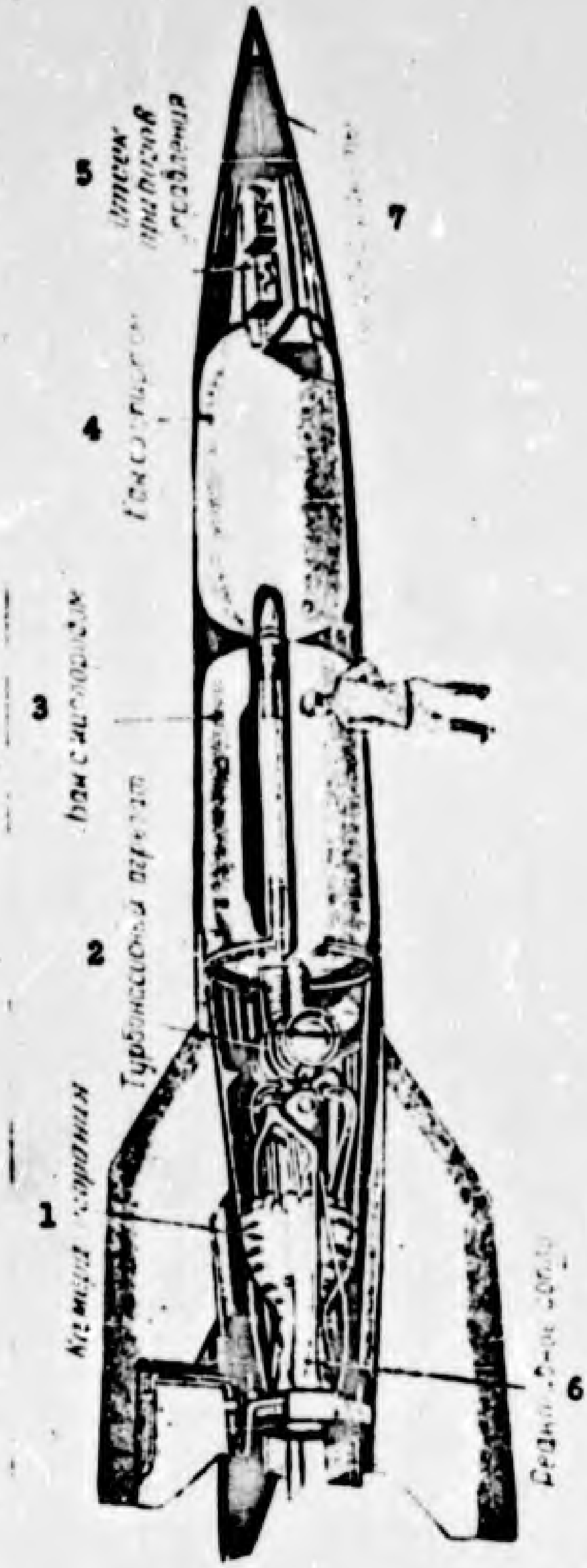

Figure 27. A cut-away view of the A-4 long-range rocket.

1 -- combustion chamber; 2 -- turbopump; 3 -- oxygen tank; 4 -- alcohol tank; 5 -- compartment for guidance instruments; 6 -- jet nozzle; 7 -- nose of the rocket.

Figure 28. Preparation for the launching of a long-range rocket.

launched in the USSR. The flight range of this missile makes it possible to send it to any place on earth.

According to data published, American firms are now also developing intercontinental missiles. However, they have not yet succeeded in successfully launching such a missile. One of the missiles designed for a flight range up to 8,000 km was to have been constructed as a two-stage rocket having an initial weight of about 100 tons. Powerful liquid-fuel rocket engines are installed in the missile. It is proposed to install multiple (a group of) engines with a thrust of 54 tons each on the first stage. At the present time, according to published reports, the maximum flight range obtained abroad with the aid of rockets is about 4,800 km.

We should bear in mind that the development of cosmic and long-range rockets, and also of large earth satellites, requires the construction of very large liquid-fuel rocket engines having a thrust of hundreds of tons. For tests and final preparations, test stands have now been built which make it possible to fire an engine with a thrust of 250 tons. Figure 30 shows a stand for testing a large liquid-fuel rocket engine.

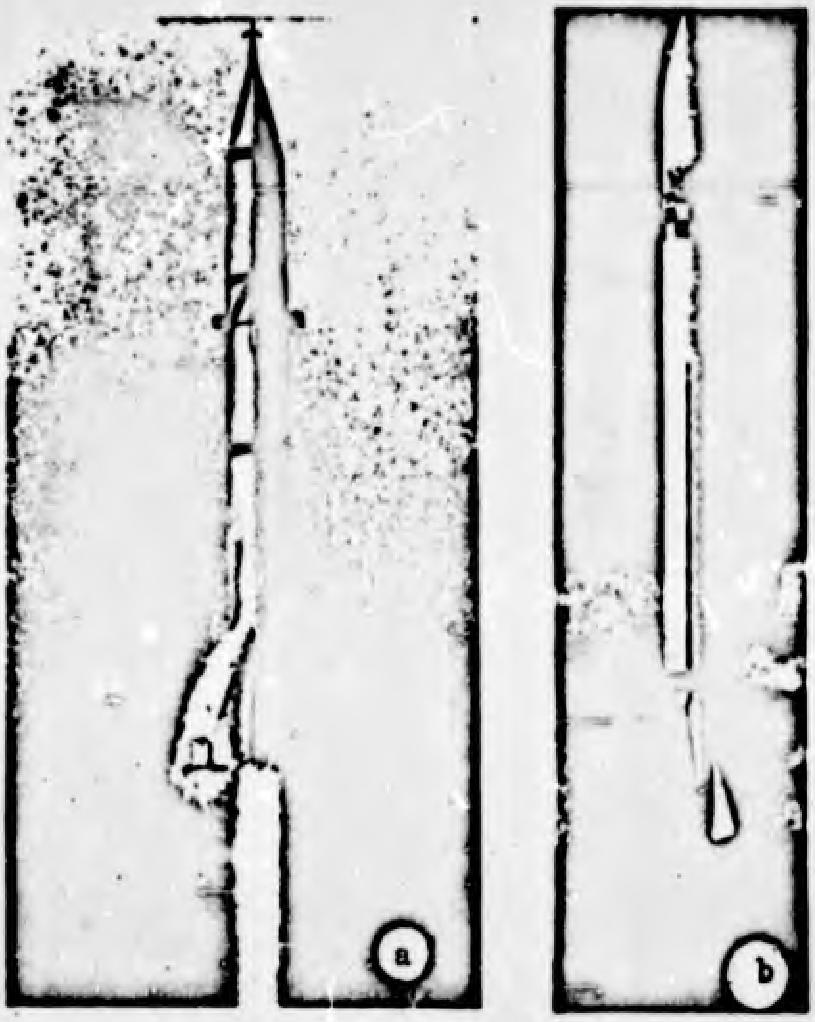

Figure 29. Modern long-range rockets.

a -- a rocket having an initial weight of about 30 tons at a range of 800 km;
b -- a rocket with an initial weight of 6 tons at a range of 200 km.

Liquid-fuel rocket engines for long-range rockets will obviously be developed in the future along the lines of increasing absolute thrusts, increasing operating time, and also along the line of increasing the exhaust velocity of the gases and specific thrust by using new propellants with great reserves of chemical energy.

In the future it is possible that nuclear fuel will be used in such engines

Figure 30. A stand for testing large liquid-fuel rocket engines.

1 -- pump compartment; 2 -- frame for the liquid-fuel rocket engine; 3 -- observation window; 4 -- propellant reservoirs with a capacity of 56.7 tons; 5 -- pump compartment; 6 -- propellant supply pipe; 7 -- gangway; 8 -- gas exit stream.

Antiaircraft Rockets with Liquid-Fuel Rocket Engines.

Antiaircraft rockets serve as a means of defense for combating enemy airplanes. In the future they will, of course, also be a means of combating enemy rockets.

There are quite a number of types of antiaircraft rockets with liquid-fuel rocket engines. The engine data of some of these rockets are given in Table 1. The largest of them are the antiaircraft rockets controlled from the ground by radio.

The power plants of antiaircraft guided missiles have a thrust up to

8-10 tons with an operating time of 40-45 seconds. Kerosene or some other hydrocarbon fuel in combination with nitric acid is usually used as a propellant for the engines of such rockets. The feeding in antiaircraft rockets is usually done by the forced feeding method.

As examples of such rockets we can mention the "Wasserfall," the "Schmetterling" (see Chapter 10), and the NIKE antiaircraft guided missile shown in Figure 31.

Another variety of antiaircraft rockets are the relatively small caliber unguided antiaircraft missiles that are launched in large numbers. To enable them to reach the necessary altitude, they are equipped with liquid-fuel rocket engines of the simplest construction operating with forced feed. The thrust of such an engine amounts to 1-2 tons and the operating time to 4-6 seconds.

Figure 31. The NIKE antiaircraft guided missile.

Liquid-Fuel Rocket Engines for Aircraft.

The use of the liquid-fuel rocket engine as the primary engine of a fighter plane (interceptor) is well known.

The advantage of a liquid-fuel rocket engine is its ability to obtain great thrust in an engine of small dimensions placed within a small airplane.

In addition, a liquid-fuel rocket engine, in contrast to all other types of aircraft engines, increases its thrust with altitude. All this makes possible a fast rate of climb for the airplane. For example, the Me-163 fighter-interceptor (Figure 32) climbed to an altitude of 12 km in 4 minutes, whereas the rate of climb of a conventional fighter plane with an air-breathing jet engine is one km/min.

Aircraft liquid-fuel rocket engines must be able to vary their thrust in flight. Therefore, they are made with several combustion chambers. The starting and cutting off of the individual chambers can easily change the thrust of the engine. Figure 33 shows a two-chambered aircraft liquid-fuel rocket engine with a maximum thrust of 6,000 kg.

Turbine driven pumps are used for the feed system in these aircraft engines. The liquid-fuel rocket engine has, as we know, a high specific fuel consumption. Consequently, the flight time of an aircraft with a liquid-fuel rocket engine is very short. In order to eliminate this inadequacy, a combined power plant consisting of a turbo-jet engine and a liquid-fuel rocket engine has been installed on fighter-interceptors. The latter are used when it is necessary to gain altitude quickly, when accelerating the airplane to a supersonic speed, when it is necessary to have very large thrust, and lastly, for carrying out a maneuver -- for example, the pursuit of an enemy airplane. Figure 34 shows an airplane with a combined power plant. Below we see the three-chambered liquid-fuel rocket engine of this airplane by itself.

Liquid-fuel rocket engines are used on airplanes not only as the primary engines but also as boosters in combination with a primary engine of some other type (for example, a turbojet engine). The pumps of such an engine are operated from the shaft of the main turbojet engine.

Figure 35 shows a booster installed on a turbojet engine.

The pumps of the oxidizer (nitric acid) and of the fuel, a special substance called Tonka-250 which is hypergolic with nitric acid, are driven from the shaft of the main turbojet engine. The pumps are started and stopped by a hydraulic coupling. The booster is described in detail in Chapter X.

Figure 32. Outer view of a fighter-interceptor with a liquid-fuel rocket engine.

1 -- location of the liquid-fuel rocket engine installation.

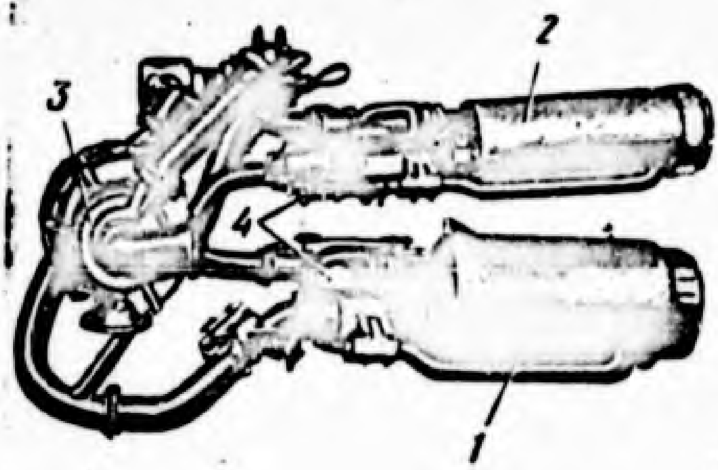

Figure 33. A two-chambered liquid-fuel aircraft rocket engine.

1 -- large combustion chamber with a thrust of 6,000 kg; 2 -- small combustion chamber with a thrust of 600 kg; 3 -- turbopump; 4 -- equipment for starting and stopping the combustion chamber of the engine.

Take-Off Boosters with a Liquid-Fuel Rocket Engine.

Liquid-fuel rocket engines, together with solid-fuel rocket engines, are used extensively also as engines for various kinds of guided and unguided

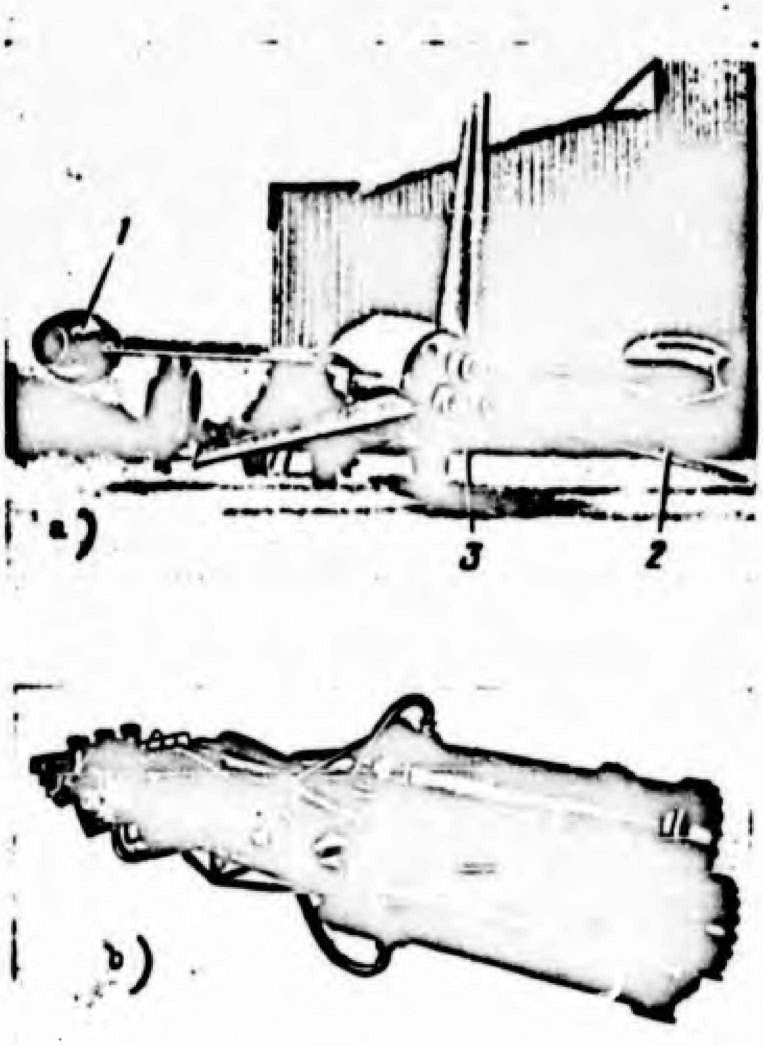

Figure 34. An airplane with a combined power plant.

a -- general view of the airplane.1 and 2 -- turbojet engines on the wings of the airplane; 3 -- three-chambered liquid-fuel rocket engine installed in the aircraft's tail section.

b -- outside view of the three-chambered liquid-fuel rocket engine.

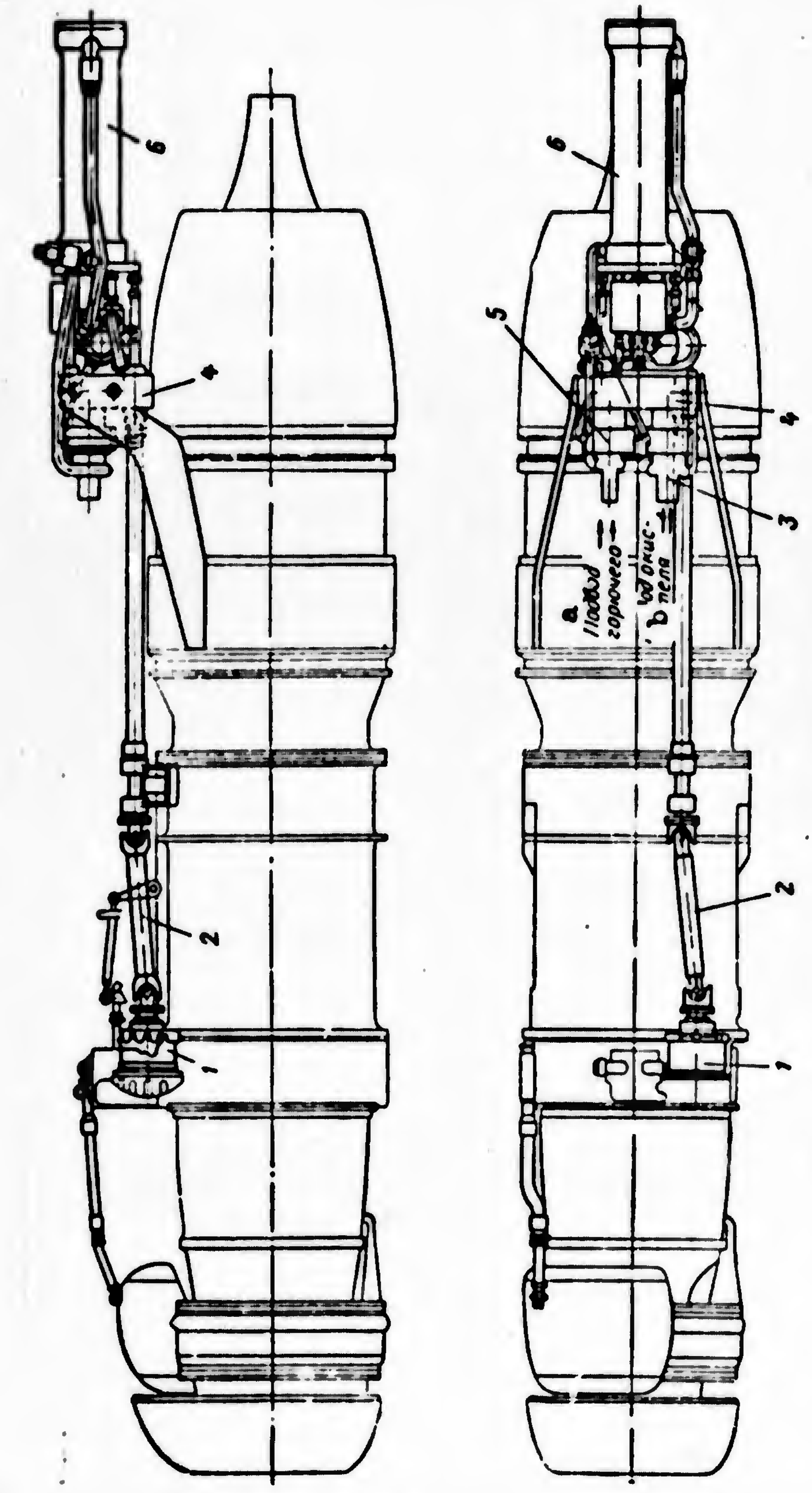

Figure 35. Mounting of an auxiliary liquid-fuel booster on a turbojet engine.

1 -- hydraulic coupling; 2 -- Cardan shaft; 3 -- oxidizer pump; 4 -- reduction gear for the pump drive; 5 -- fuel pump; 6 -- engine combustion chamber.

a -- fuel feed; b -- oxidizer feed.

missiles -- for example, missiles to be fired from planes at enemy planes and missiles for use against targets on the ground and on the water. The thrusts of engines of this type differ widely (including some with very small thrust), and they usually employ the simplest kind of gas-canister feed. In addition, liquid-fuel rocket engines are often times employed as take-off boosters for different types of aircraft. We are well acquainted with the boosters for starting heavy bombers, pilotless aircraft missiles with turbojet engines, and boosters for other purposes. Such engines have a thrust of several tons and a duration of operation of 5-30 sec. Usually they are constructed with a forced feed system.

In this manner, liquid-fuel rocket engines are employed at the present time for many purposes. In classifying engines according to purpose we can divide them into the following groups combining engines of approximately the same purpose and construction form: engines for long-range and large meteorological rockets; and engines for antiaircraft rockets, airplanes and boosters.

SECTION 7. A BRIEF HISTORICAL SURVEY OF THE DEVELOPMENT OF LIQUID-FUEL ROCKET ENGINES

Rocket engineering, in the broad sense of the term, has a very long history.

Following the invention and mastery of the use of gunpowder, numerous attempts with more or less success were made to create gunpowder rockets, which naturally included an elementary solid-fuel rocket engine. There are references to gunpowder rockets even in the most ancient Chinese chronicles -- for example, those chronicles pertaining to the eighth century before our era.

The Soviet investigator N. G. Chernyshev, a specialist in the field of rocket engineering, has found that Greek fire, which is well known in history, had been employed by the Russians in the 10th century during the siege of Constantinople. Such fire is nothing more than the simplest kind of rocket missile with a solid-fuel rocket engine.

Military rockets were widely employed by the Hindus in the war against the English during the 18th century.

From the beginning of the 19th century, gunpowder rockets and, consequently, also solid-fuel rocket engines were extensively employed. They were employed in the armament of the Russian, English, French, Prussian, Austrian, and other armies. The rockets of the Russian army were of a high quality for their time.

Gunpowder rockets were extensively employed in the wars of the first half of the 19th century -- in the Napoleonic wars, the Russo-Turkish War, and in the Crimean War. During the period of the Crimean War, 5,000 military rockets were produced annually in Russia.

The weakness of the powder rockets of that time was their lack of accuracy and poor grouping of the shots, and their weak armor penetrating power. For these reasons, gunpowder rockets proved to be much poorer missiles than the rifled artillery, and by 1870, they disappeared entirely from military armament.

Attempts were made to employ gunpowder rockets on airplanes for air battle both in foreign armies and in the Russian armies during the period of the First World War.

The further development of gunpowder rockets was associated in the main with Soviet work in this field. Some rocket mortars (Katyushi -- as they were called by our soldiers) were created and included in the armament of the Soviet Army during World War II. This weapon inflicted heavy losses upon the enemy, destroying his personnel and equipment.

Later on, this weapon also appeared in other armies. In Germany, in particular, the army employed a six-barreled rocket mortar, and also designed some solid propellant antiaircraft missiles ("Typhoon") and a long-range rocket known as "Rheinboten."

The history of the development of liquid-fuel rocket engines is much shorter than that of the development of solid propellant rocket engines.

Due to the rigid requirements for the design of a liquid-fuel rocket engine

-- the high concentration of energy in the fuels employed; the complicated physical-chemical processes taking place in the liquid-fuel rocket engines; and the difficulties of controlling them -- liquid-fuel rocket engines were not developed until the last 15 or 20 years, when the general development of technology reached such a high level that it was possible to successfully solve the afore-mentioned problems.

The basic characteristics of the liquid-fuel rocket engine, the fuel requirements and even the actual structural form of the engine were predicted more than 50 years ago by the gifted Russian scientist K. E. Tsiolkovskiy (1857-1935).

The first work of K. E. Tsiolkovskiy in the field of rocket engineering, "Investigation of Outer Space by Rocket Systems," was published in 1903 in No. 5 of the Petersburg monthly journal, Nauchnoye Obozrenie [Scientific Review]. However, we have information showing that the work in this field by K. E. Tsiolkovskiy began much earlier, in 1883.

In his works dealing with jet propulsion, K. E. Tsiolkovskiy considered in detail all the problems of rocket flight. He set forth the scientific theory of interplanetary and cosmic flights and derived the principal laws forming their basis. He arrived at the conclusion that the only means for reaching the interplanetary spaces was the rocket and that the only engine suitable for such a rocket was the liquid-fuel rocket engine.

Making use of the formula for the terminal velocity reached by the rocket, which he had deduced himself, Tsiolkovskiy showed that a missile with a liquid-fuel rocket engine and a limited velocity of discharge of combustion products from the rocket engine (that is, with a limited specific thrust) could attain very high velocities of flight. Moreover, the rocket does not experience any extraordinary overloading, and its acceleration could remain within limits that were permissible for a human organism.

Figure 36 shows the world's first diagram of a rocket equipped with a

K. E. Tsiolkovskiy

liquid-fuel rocket engine. It was made by K. E. Tsiolkovskiy more than 50 years ago. This diagram shows all the basic elements necessary for the operation of a liquid-fuel rocket engine.

K. E. Tsiolkovskiy studied the fuel problem of the liquid-fuel rocket engine in detail. For this purpose he investigated the values of the thermal effects of the combustion reactions of different elements and was the first one to point out the connection between the value of the thermal effect and the atomic weight of the reacting elements.[1]

On the basis of these investigations, K. E. Tsiolkovskiy became the first to propose the employment of hydrocarbons, liquid hydrogen, and liquid oxygen as components of fuels.

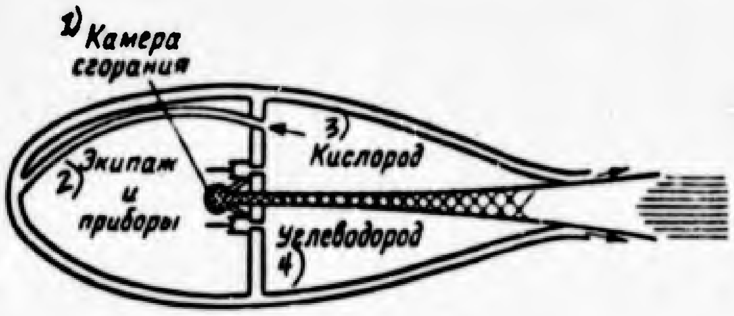

Figure 36. A drawing of a cosmic rocket ship of K. E. Tsiolkovskiy.
1 -- combustion chamber; 2 -- crew and instruments; 3 -- oxygen; 4 -- hydrocarbon.

In 1911, K. E. Tsiolkovskiy, in the new edition of his book, *Issledovaniya mirovykh prostranstv reaktivnymi priborami* [Investigation of Outer Space with Rocket Systems], evaluated for the first time the possibilities offered by the use of atomic energy in rocket engines and calculated the possible exhaust velocities and the speed of flight of rockets equipped with such an engine.[2] In later works, Tsiolkovskiy pointed to the expediency of employing nitric acid and turpentine as components of the fuel for the liquid-fuel rocket engine.[3]

---

[1] K. E. Tsiolkovskiy, [A Rocket to Outer Space], St. *Trudy po raketnoy tekhnike*, [from the symposium "Works on Rocketry"], Oborongiz, 1947.

[2] K. E. Tsiolkovskiy, *Issledovaniye mirovykh prostranstv reaktivnymi priborami*, [Investigation of Outer Space by Rocket Systems] ibid.

[3] K. E. Tsiolkovskiy, [Cosmic Rockets], *Kosmicheskaya raketa*, Sb. *Trudy po raketnoy tekhnike*, Oborongiz, 1947.

K. E. Tsiolkovskiy worked out the principles for the construction of a rocket engine with a large thrust: pump feeding of components and their partial evaporation for pressure charging in the tanks; a system of external cooling of the walls by one of the components of the fuel; the arrangement of the combustion chambers and the nozzle. He also proposed the use of the reaction of the gas flow of the rocket engine to control the rocket and to give it stability during the time of flight by placing gas rudders or a hinged fastening on the engine in the flow of the gas reaction. The principles of construction for the liquid-fuel rocket engine, as worked out by K. E. Tsiolkovskiy 50 years ago, still retain their importance at the present time.

The works of K. E. Tsiolkovskiy, who labored under difficult material conditions and published his articles in journals with a small circulation, first became known only to a limited number of readers.

In 1915, the works of Tsiolkovskiy were discussed in detail in the popular book of Ya. I. Perel'man, Mezhplanetnyye puteshestviya /Interplanetary Voyages/. This excellent book became widely known, both in Russia and abroad. As a result of this, foreign works often times erroneously give 1915 as the date for the beginning of the activity of K. E. Tsiolkovskiy in the field of rocket engineering.

The works of K. E. Tsiolkovskiy aroused great interest in scientific and engineering circles and led to the appearance, both in Russia and abroad, of quite a number of works marking the beginning of the practical solution of the problem of creating a liquid-fuel rocket engine.

In Russia, in 1898, Prof. Meshcherskiy developed a new field of mechanics. He laid the basis for the mechanics of bodies of a variable mass which found wide application in the theory of the flight of rockets.

Many problems of jet propulsion and also the phenomena appearing in flights at high speeds were solved in the works of N. E. Zhukovskiy, S. A. Chaplygin, B. S. Stechkin, and many others.

A number of works were published in Germany by G. Oberth. One of these works which became widely known was Puti k zvezdoplavaniyu /Methods of Space Navigation/, in which the author considered a large number of theoretical and practical questions of space navigation. A detailed mathematical investigation of rocket flight was made in a book by V. Goman, Dosyagayemost' nebesnykh tel /Reaching the Heavenly Bodies/, and in subsequent collected works of G. Oberth, V. Goman, and others.

E. Zenger (worked in Austria and Germany) is well known for his experimental and theoretical works in the field of rocket engines and the analysis of the conditions and dynamics of the flight of a rocket airplane.

In 1913 there appeared in the press the first works of the French scientist R. Eno-Pel'tri, in which he considered the problem of cosmic rocket flight, and also the peculiarities of flight at extraordinarily high speeds close to the speed of light.

The American scientist, professor of physics R. Goddard, began the practical study of gunpowder rockets in 1914. He improved their qualities considerably through use of a supersonic nozzle, the practical stabilization of rockets in flight by the rotation of their nose part, and the employment of the idea of composite rockets. In 1919 R. Goddard published a work entitled Method of Reaching Great Heights, in which he set forth, in particular, the basic problems of the development and use of rocket engines. In 1929 he became the first to launch rockets with liquid fuel.

The practical work of putting the ideas of K. E. Tsiolkovskiy and other scientists into effect in the field of rocket engineering and also the further development of ideas did not start in our country until the years of Soviet power. Moreover, the creation of a liquid-fuel rocket engine and the development of rocket aircraft moved along together with work in the one field closely connected with work in the other.

In this work there was very active participation by V. P. Vetchinkin,

V. P. Glushko, L. S. Dushkin, A. M. Isayev, Yu. V. Kondratyuk, S. P. Korolev, Yu. A. Pobedonostsev, A. I. Polyarnyy, M. K. Tikhonravov, N. D. Chernyshev, F. A. Tsander, and many other persons who were enthusiastic workers in rocket engineering. Their efforts in the first period were combined in so-called "Groups for the Study of Jet Propulsion"(GIRD), created in the Volunteer Society for Cooperation in the Development of Aviation in Moscow and Leningrad.

Engineer F. A. Tsander carried out great theoretical and experimental work in the investigation of rockets and liquid-fuel rocket engines in the Soviet Union. He participated actively in the publication of the works of K. E. Tsiolkovskiy and in the spreading of his ideas. In 1924 he published his own special investigation, Perelety na drugiye planety /Flights to Other Planets/.[1]

F. A. Tsander worked out some thermal calculations on the operational process of a liquid-fuel rocket engine (that is, calculation of the combustion and discharge, taking into account the dissociation), and also a method for evaluating the economy of a liquid-fuel rocket engine. On this basis he proposed to employ new cycles for increasing the economy. F. A. Tsander also proposed a method for calculating the temperature of the walls of the liquid-fuel rocket engine and a method for calculating their cooling. F. A. Tsander devoted a great deal of attention to the investigation of the problems of the use of metals as fuel since they generate much more heat than ordinary fuels during combustion. He combined ideas concerning the use of metals as fuels with the idea of burning engine parts of the rocket that became unnecessary after the consumption of a given quantity of fuel.

F. A. Tsander constructed two engines: The OR-1 and the OR-2, with which experimental attempts on the processes and construction of the liquid-fuel rocket engine were made. The OR-1 engine was constructed in 1930-1931. It used gasoline and "gaseous air" and developed a thrust of 5 kg. In 1932

---

[1] F. A. Tsander, Problema poleta pri pomoshchi raketnykh apparatov /Problem of Flight by Means of Rocket Devices/. Oborongiz, 1947.

F. A. Tsander participated in the design of the OR-2 engine, but the testing of the engine took place during his illness and after his death.

The OR-2 engine was constructed on the basis of the design given in Figure 37. It burned gasoline and liquid oxygen. The injection of the fuel and the liquid oxygen into the combustion chamber of the engine was done through pressure of a nitrogen gas in the tanks which was caused by the heating of the tank and the evaporating of the liquid nitrogen. A special system -- nitrogen compensator -- was worked out for the maintenance of a constant pressure in the tank. The pressure in the system was regulated by the degree to which the tank with liquid nitrogen was immersed in a vessel of hot water. This system proved to be too complicated and was soon replaced by a system of valves. Oxygen entering the engine was first vaporized in two vaporizers and then directed into the jacket of the engine for cooling the combustion chamber. From the cooling jacket, through slits in the walls of the combustion chamber, it was fed into the chamber. The fuel was atomized by the injectors placed in the head of the engine.

The regulation of the quantity and relative proportions of the components going into the chamber of the engine was achieved by a set of jet tubes on the lines carrying the fuel and the oxidizer. The OR-2 engine developed a thrust of 50 kg and was one of the first engines in the world to use liquid oxygen and a petroleum fuel, Figure 37 gives an external view of the engine and the stand for testing it.

Yu. V. Kondratyuk made detailed investigations of the possibilities of cosmic flights. In his work, Zavoyevaniye mezhplanetnykh prostranstv, published in 1928, he devoted a great deal of attention to the selection of fuel for the liquid-fuel rocket engine, and he was the first to suggest lithium, boron, and their compounds with hydrogen, and even metals as fuels.[1]

---

[1] Yu. V. Kondratyuk, Zavoyevaniye mezhplanetnykh prostranstv /The Conquest of Interplanetary Space/, Oborongiz, 1947.

In this work Yu. V. Kondratyuk points out the importance of the molecular weight of the fuel combustion products of the liquid-fuel rocket engine and explains the characteristics of the expansion of these products in the nozzle in the presence of vigorous dissociation in the chamber. He is also the author of the idea of the complete burning of the combustion products along the nozzle by the gradual addition of an oxidizer. By accomplishing this, Yu.V. Kondratyuk proposed to limit the extremely high increase of temperature in the combustion chamber.

A great contribution to the development of the liquid-fuel rocket engine was made by V. P. Glushko (now a corresponding member of the Academy of Sciences of the USSR) and the collective working under his guidance. The work of V. P. Glushko in this field started in 1929 in a special laboratory set up for the study of liquid-fuel rocket engines. V. P. Glushko directed special attention to the selection of fuels that could be used in the liquid-fuel rocket engines. He proved in particular the possibility, in principle, of the employment of electric energy in the liquid-fuel rocket engine. In this case, the liquid or solid "conductors" would be exploded by the electrical current, and their volatilized and heated mass would constitute the mass carrier to receive the energy of the explosion.

On the basis of theoretical and experimental investigations, V. P. Glushko in 1930 proposed many substances as oxidizers and fuels: nitric acid, tetranitromethane, hydrogen peroxide, perchlorate, collodial fuels with beryllium, etc.

Such oxidizers as nitric acid and tetroxide of nitrogen have been widely employed in rocket engineering and have proved to be irreplaceable even at the present time. Later on V. P. Glushko made a number of proposals aimed at increasing the effectiveness of the fuels of liquid-fuel rocket engines. The work dealing with fuels was generalized and systematized in his book published not only in the USSR but also abroad.[1]

---

[1] V. P. Glushko, Zhidkoye toplivo dlya reaktivnykh dvigateley /Liquid Fuel for Reaction Engines/, Part 1, VVIA im. N.YE. Zhukovskiy, 1936.

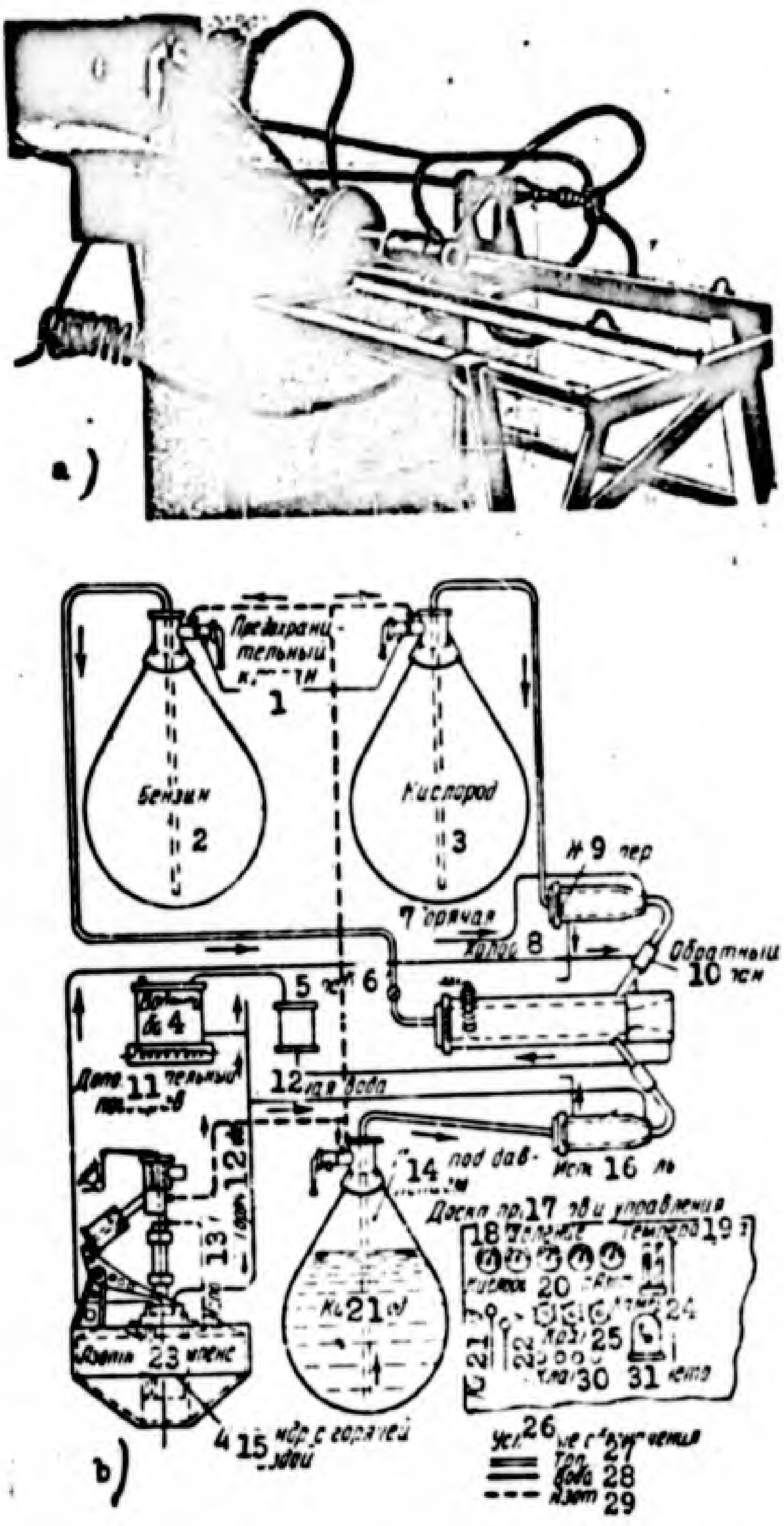

Figure 37. The OR-2 rocket engine of F. A. Tsanler.

a -- installation of the engine on the test stand; b -- diagram of the installation.

1 -- safety valve; 2 -- gasoline; 3 -- oxygen; 4 -- water tank; 5 -- pump; 6 -- cock; 7 -- hot; 8 -- cold; 9 -- jet tube; 10 -- nonreturn valve; 11 -- additional heating; 12 -- hot water; 13 -- evaporation of nitrogen; 14 -- nitrogen under pressure; 15 -- cylinder for hot water; 16 -- vaporizer; 17 -- instrument and control panel; 18 -- pressure; 19 -- temperature; 20 -- oxygen gasoline nitrogen; 21 -- oxygen; 22 -- gasoline; 23 -- nitrogen compensator; 24 -- chambers; 25 -- cocks, 26 -- legend of symbols; 27 -- fuel; 28 -- water; 29 -- nitrogen; 30 -- valves; 31 -- magneto.

The ORM-1 liquid-fuel rocket engine was constructed in 1930 and tested later. This engine used as an oxidizer tetroxide of nitrogen, and as a fuel it used toluol.

Figure 38 shows the external view and a section of this engine. It consisted of a combustion chamber (2) lined on the inside with a thin sheet of copper; a cylindrical nozzle (5); a feed line (4) for the oxidizer and a feed line for the fuel (7). For measurement of the pressure in the combustion chamber a jet tube (6) was used. The entire engine was placed in a water bath (1) which served to cool it. The fuel was ignited by ignition of cotton introduced into the combustion chamber through the nozzle. On this engine and on many other ORM engines /ORM = experimental rocket engines/, many kinds of fuels and also the basic elements of the liquid-fuel rocket engine were tested with the result that there was constant improvement in its construction and reliability of its operation.

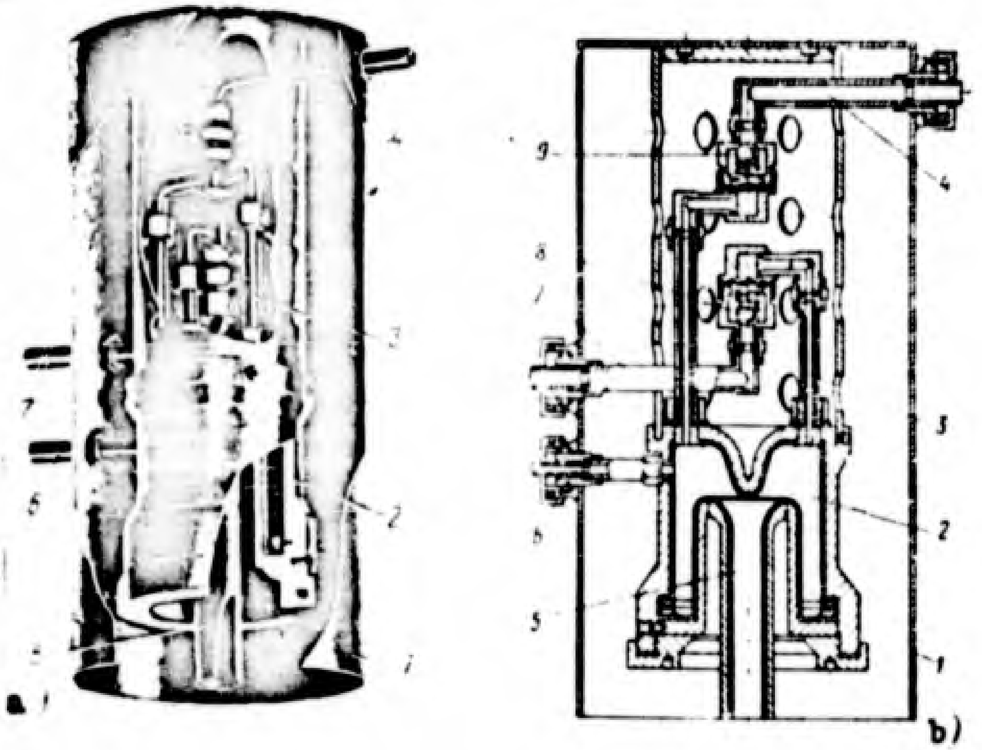

Figure 38. The ORM-1 engine designed by V. P. Glushko (1931).

a -- external view; b -- cross section.

1 -- jacket of the water bath; 2 -- combustion chamber; 3 -- fuel line to the injector; 4 -- tube for carrying the oxidizer; 5 -- nozzle; 6 -- tube for measuring the pressure in the chamber; 7 -- fuel line; 8 -- nonreturn fuel valve; 9 -- nonreturn oxidizer valve.

Figure 39 shows different moments in the testing of the ORM engine and also the diagram of one of the first stands for the testing of liquid-fuel rocket engines. The work done made it possible to construct in 1953 an ORM-52 engine which had a thrust of 300 kg (a large engine for this time) and operated on nitric acid and kerosene. The ORM-52 engine passed the official tests on the stand.

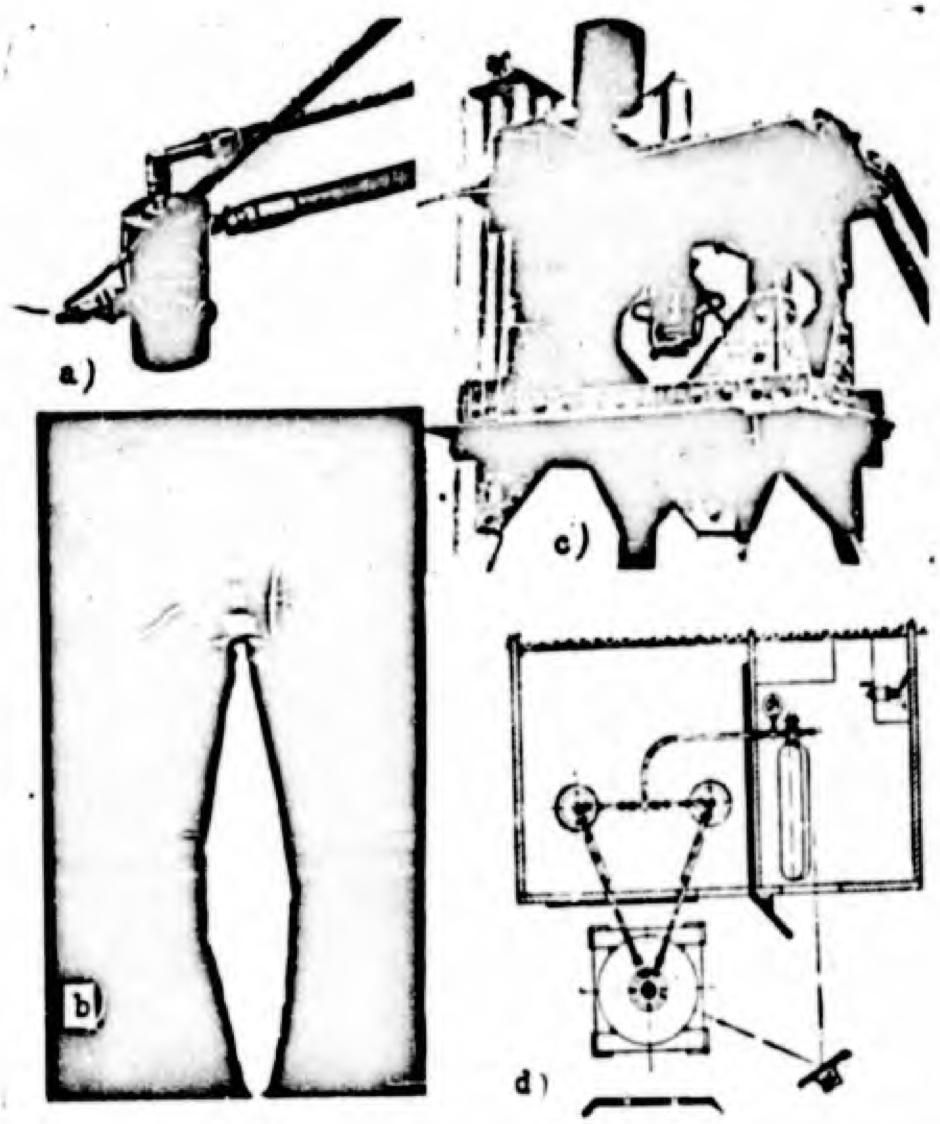

Figure 39. Different moments in the testing of the ORM engine and a diagram of the stand.

a -- ORM-5 engine (1932); b -- ORM-12 engine (1932); c -- ORM-50 engine on a stand where the thrust is measured (1933); d -- diagram of the stand for the testing of these engines (1930-1932).

Figure 39 shows different moments in the testing of the ORM engine and also the diagram of one of the first stands for the testing of liquid-fuel rocket engines. The work done made it possible to construct in 1953 an ORM-52 engine which had a thrust of 300 kg (a large engine for this time) and operated on nitric acid and kerosene. The ORM-52 engine passed the official tests on the stand.

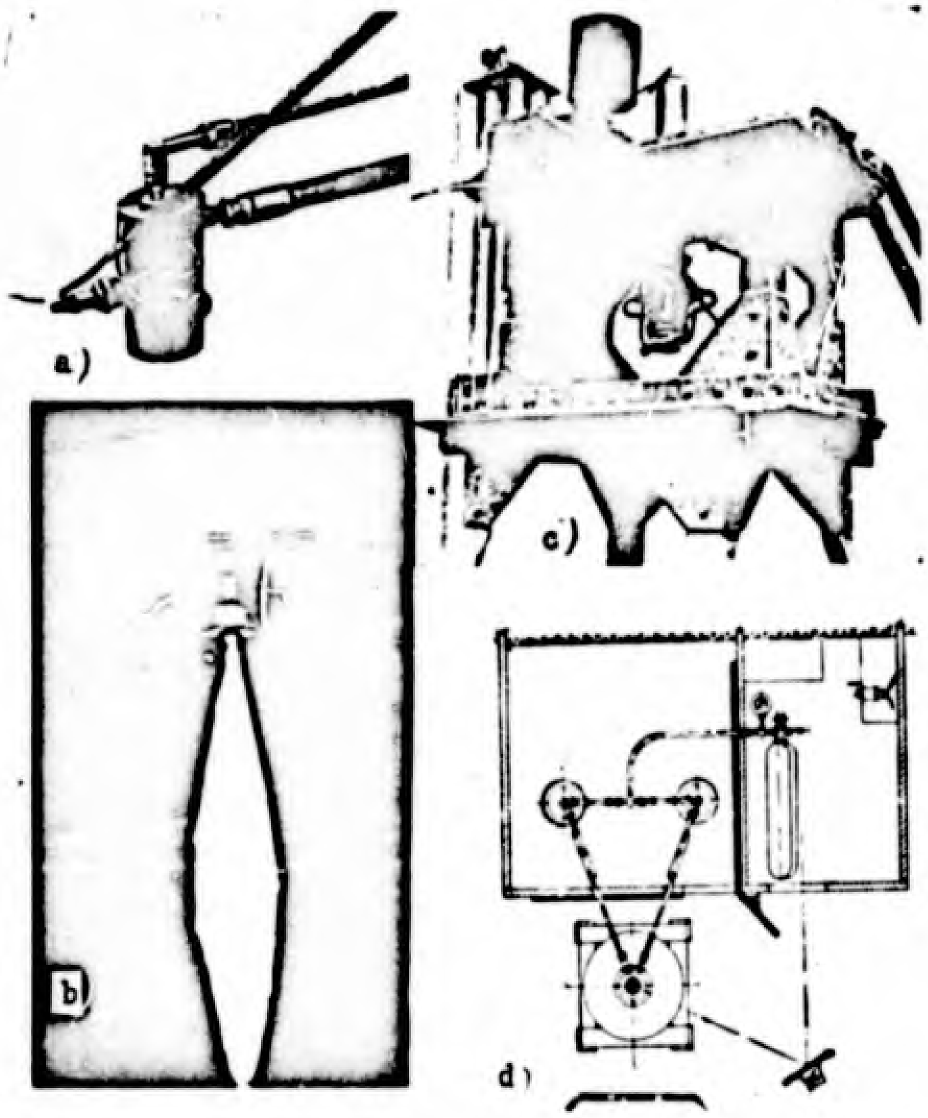

Figure 39. Different moments in the testing of the ORM engine and a diagram of the stand.

a -- ORM-5 engine (1932); b -- ORM-12 engine (1932); c -- ORM-50 engine on a stand where the thrust is measured (1933); d -- diagram of the stand for the testing of these engines (1930-1932).

In 1936 V. P. Glushko created the ORM-65 engine using a fuel which consisted of nitric acid and kerosene. The engine had pyrotechnic ignition. The nominal thrust of the engine was 155 kg, the maximum 175. The engine had a specific thrust of 210 kg/sec/kg, which we must regard as a very good result. This engine was capable of withstanding multiple starts. During a ground test of an engine of this type on the rocket glider by S. P. Korolev (Figure 40), it operated continuously for 230 seconds. The total time of operation in tests of another ORM-65 unit amounted to 30.7 minutes.

Figure 41 presents a general view of the engine and also a general view and longitudinal cross section of the 212 winged rocket (1937-1939), on which it was installed and on which it made test flights.

A large number of liquid-fuel engines of different types were created under the direction of L. S. Dushkin. In working for further improvement of engines which used liquid oxygen as an oxidizer, he created a liquid-fuel rocket engine which was excellent for the time and which was installed on various rockets including the AviaVNITO rocket. On 11 December 1933, one of these rockets made the first successful flight. Subsequently, L. S. Dushkin also designed engines operating on nitric acid and kerosene. One of them was installed on a rocket glider (a small rocket airplane, which was towed in the air by an airplane), designed by S. P. Korolev. The first successful flight of the rocket glider took place on 11 February 1939, under the direction of the aviator, F. A. Fedorov.

Figure 40. The rocket glider of S. P. Korolev (variant with an ORM-65 engine designed by V. P. Glushko).

L. S. Dushkin also designed engines with much greater thrust for rocket craft for various purposes. For example, the liquid-fuel rocket engine of L. S. Dushkin and A. M. Isayev was installed on a rocket airplane designed by Bolkhovitinov. This airplane, under the direction of aviator G. Ya. Bakhchivandzhi, made some successful flights as early as 1942.

A very interesting liquid-fuel rocket engine was installed on the rocket of M. K. Tikhonravov which was first launched in August 1933. This engine burned liquid oxygen and solid gasoline which was in the combustion chamber itself. The evaporation of the oxygen was achieved by heating it with the fuel combustion products and at the moment the engine started it was achieved by the combustion of a special pyro-cartridge which served simultaneously to ignite the fuel in the chamber.

The rockets of M. K. Tikhonravov, with liquid-fuel rocket engines, made a number of successful flights in 1934; and in 1935, one of them reached a height of several kilometers.

Yu. A. Pobedonostsev did a great deal of work on ram-jet engines and especially on solid fuel rocket engines. In 1934 he also constructed the first supersonic wind tunnel in which some important investigations of the hydrodynamics of engines and the conditions of supersonic flight of rockets and airplanes were made.

N. G. Chernyshev and the collective directed by him did some important work in the field of research on the physical-chemical characteristics of the fuels for liquid-fuel rocket engines; in the working out of methods for the industrial production of these fuels; and also in the study of the combustion conditions for the burning of fuel in the chamber of these engines.

The works of V. P. Glushko, S. P. Korolev, Yu. A. Pobedonostsev, and L. S. Dushkin dealing with the construction and principle of operation of

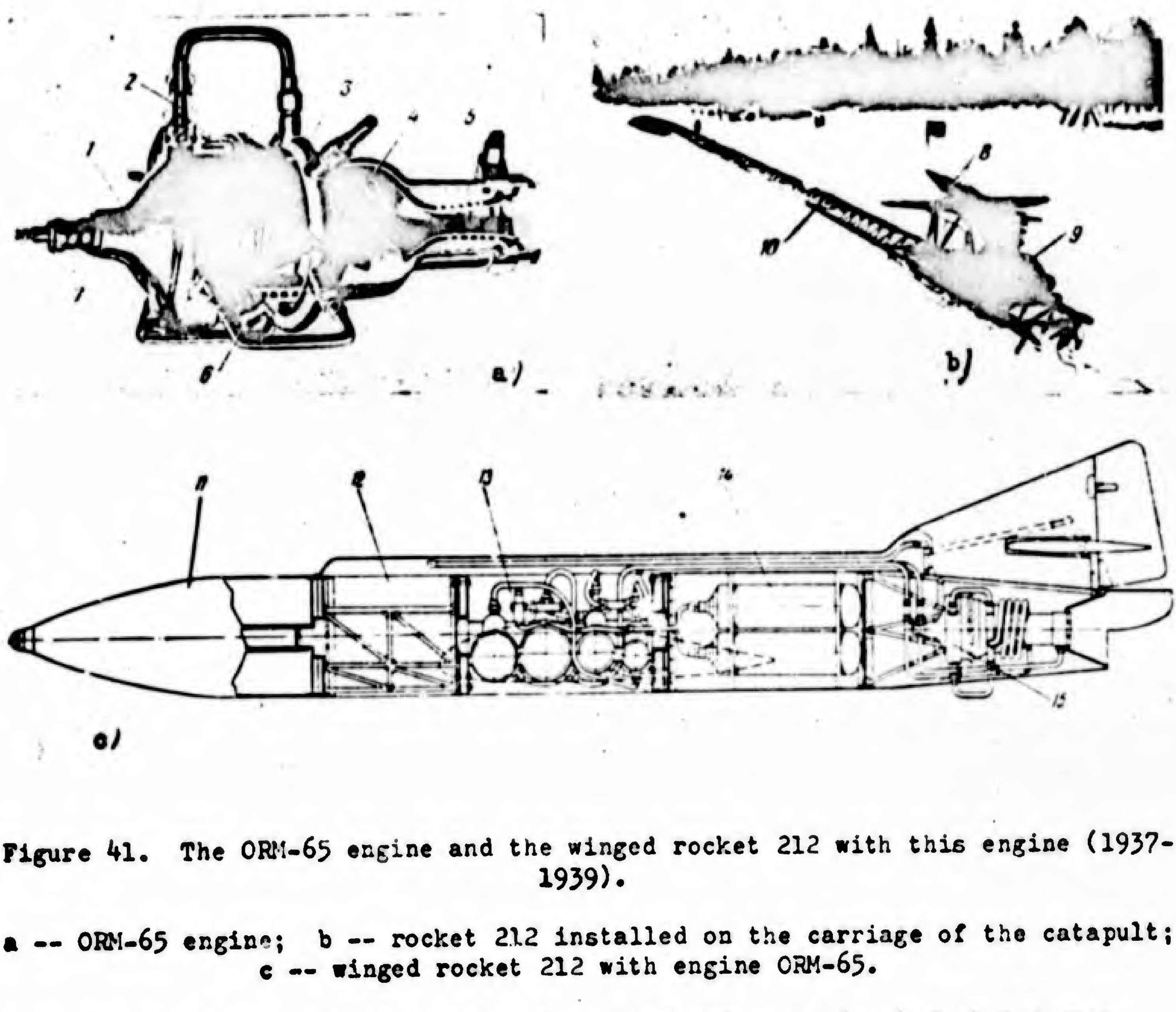

Figure 41. The ORM-65 engine and the winged rocket 212 with this engine (1937-1939).

a -- ORM-65 engine; b -- rocket 212 installed on the carriage of the catapult; c -- winged rocket 212 with engine ORM-65.

1 -- noncooled head of the engine; 2 -- line and centrifugal fuel injector; 3 -- collector of fuel; 4 -- ribbed-cooled combustion chamber; 5 -- ribbed-cooled nozzle; 6 -- centrifugal injector of oxidizer; 7 -- electrical spark plug for ignition of the pyrotechnic ignition charge; 8 -- winged rocket 212 on the trolley of the catapult; 9 -- solid-fuel booster of the trolley; 10 -- rail track of the catapult; 11 -- payload; 12 -- compartment for the guidance instruments; 13 -- compartment for the fuel tank, compressed air, and accessories; 14 -- compartment for the oxidizer tanks; 15 -- liquid-fuel rocket engine ORM-65.

rocket engines were published in 1934-1935.[1]

In 1934 the All-Union Conference for the study of the stratosphere was held. At this conference reports were made on the possibility of the employment of jet devices for exploring the stratosphere and on the achievements of jet engineering. The conference heard reports dealing with the use of rockets in starting airplanes, reports on winged rockets for the flight of man, etc.

The brief survey given above of Soviet work in the field of rocket engineering shows the extensive scope of the work done in the development and employment of liquid-fuel rocket engines, making possible further development of Soviet rocket engineering.

Beginning in 1927 in Germany, work on liquid-fuel and solid fuel rockets was carried out by many persons interested in rocket engineering (G. Oberth, F. Opel, M. Valye, and others). The Society for Interplanetary Communications was formed in Germany in 1927. On the test stand of this society, liquid-fuel rockets were launched and experiments with liquid-fuel rocket engines were conducted. Beginning in 1932, the Ministry of War took over control of work in the field of rocket engineering, and in the period 1936-1942 it created the A-4 (V-2) rocket; the final elaboration of which was carried out under the direction of W. Braun. The Germans also constructed some models of antiaircraft guided missiles. They built a pursuit-interceptor plane with a liquid-fuel rocket engine and also certain other models of rocket armament. For the conduct of scientific research and experimental work in the field of rocket engineering, a large center was established in Peenemuende (on the shore of the Baltic Sea), which had at its disposal the necessary production capabilities,

---

[1] S. P. Korolev, Raketnyy polet v stratosfere [A Rocket Flight in the Stratosphere], Voenizdat, 1934.

L. S. Dushkin, Osnovnyye polozheniya obshchey teorii reaktivnogo dvizheniya [Basic Principles of the General Theory of the Jet Propulsion] Sb. Reaktivnoye dvizheniye [Jet Propulsion], No. 1, ONTI, 1935.

G. E. Langemak and V. P. Glushko, Rakety, ikh ustroystvo i primeneniye [Rockets, Their Construction and Employment], ONTI, 1935.

numerous stands for the testing of engines, rockets, and instrument equipment, a large supersonic wind tunnel, etc. The presence of such a research center made it possible to conduct work in rocket engineering at a fast rate.

In spite of the fact that the military value of the rocket weapon developed in Germany during World War II proved to be insignificant, the models of liquid-fuel rocket engines constructed for this weapon showed the possibility of constructing engines of different types and gave a new stimulus to the further development of liquid-fuel rocket engines in many countries.

After the end of World War II many models of captured German liquid-fuel rocket engines -- for example, the A-4 (V-2) long-range rocket, the "Wasserfall" antiaircraft rocket, and others -- were tested in different countries, and according to published reports work on these models was continued.

In the USA, work in the field of rocket engineering was conducted in the main by Prof. Goddard (see above) and also by members of the American Rocket Society. In the period preceding World War II, the Americans successfully launched quite a number of liquid-fuel and solid fuel rockets. What they did, however, did not serve as a basis for the development of industrial models of liquid-fuel rocket engines and rockets. The rapid development of rocket engineering observed in the USA in the last few years did not start until after the study and mastery of the captured German models.

In the early stage of the development of rocket engineering in England, France, Italy, and other countries there were some persons here and there who had considerable enthusiasm for this field of engineering. Their work, however, did not exercise any perceptible influence upon the practical development of the liquid-fuel rocket engine and rocket construction.

From the brief survey given above of the employment of the liquid-fuel rocket engine, we can see that the practical utilization of the liquid-fuel rocket engine requires engines of varying thrusts and construction designs.

Some idea, though far from a complete one, of the scope of use of the

TABLE 1

SOME DATA ON FOREIGN ROCKETS WITH LIQUID-FUEL ROCKET ENGINES. DRAWN UP ON THE BASIS OF DATA FOUND IN THE LITERATURE

Name of Rocket and Country	Fuel	Injection System	Thrust on ground in kg	Time of operation sec	Length m	Diam m	Total weight kg	Weight of fuel, kg	Payload kg	Maximum speed m/sec	Max altitude on trajec km	Range km	Stage of Production	Remarks
							Surface-to-Surface Long-Range Rockets							
"V-2 (A-4)" Germany	Liquid oxygen + 75% Ethyl alcohol	Pump	25,000	65	14	1.65	3,000	9,000	1,000	1,500	80	to 300	Turned out in series	Obsolete. Has served as a prototype of many rockets.
"Corporal" USA	Nitric acid and aniline	Pressure	9,070	--	12.2	0.762	5,440	--	600 – 800	1,000 – 1,450	80	120 – 240	Series production	The different ranges and speeds are obtained by installing warheads of different weights
"Redstone" USA	Liquid oxygen + alcohol	Pump	31,880	--	18.3	1.52	20,000	--	--	1,800	--	320 (800)	Prepared for series	Prototype of a rocket with a range up to 2,400 km recently redesigned
"Atlas" USA First stage	Liquid oxygen dimethyl hydrazine	Pump	2x45,360 (2x54,000)	--	--	--	100 – 110 tons	--	--	6,700	1,280	8,000	Being developed	At the start all three engines operate
Second stage	Liquid oxygen	--	61,000	--	24 – 30	2.4 – 3	(225)	--						

Continued

Name of Rocket and Country		Fuel	Injection System	Thrust on ground in kg	Time of operation sec	Length m	Diam m	Total weight kg	Weight of fuel, kg	Payload kg	Maximum speed m/sec	Max altitude on trajec km	Range km	Stage of Produc-tion	Remarks
Rockets for the exploration of the upper layers of the atmosphere ([illegible])															
"Bumper" USA	First stage of type A-4	(See the data on the A-4 rocket)								26 kg (wt of appa-ratus)	3,000	420	--	Several models prepared	Has been used for research purposes
	Second stage WAC - Corpo-ral	nitric acid + aniline	Pres-sure	680	45	5.8	0.3	300	--						
"Viking" USA	No. 11	Liqu. oxygen and alcohol	Pump	9,070	--	12.7	1.2	7,500	--	420	1,920	254	--	12 units turned out in differ-ent models	Special re-search mis-sile. It has a nose which separates
	No. 12		Pump	9,225	105	12.7	1.14	6,800	2,950 -2,500	450	1,800	232	--		
"Aerobee" USA	First stage	Powder	--	--	2.5	1.9	--	265	117	68.4	1,380	100-145	--	About 100 differ-ent mo-dels turned out	
	Second stage	Nitric acid + aniline	Canist-er	1,140	45	6.1	0.38	485	283						
"Aerobee" USA	First stage	Powder	--	--	--	--	--	265	--	55-91	2,150	325-270	--	It is proposed to turn out a large series	
	Second Stage	Nitric acid + (ani-line + alcohol)	Liquid fuel gas gener-ator	800	53	6.37	0.38	--	500						
"Veronica" France		Nitric acid + kero-sene	Liquid fuel gas gener-ator	4,000	32 35	6.0	0.55	1,000	700	57	1,400	120	240	Test models	

Continued

Name of Rocket and Country	Fuel	Injection System	Thrust on Ground in kg	Time of operation sec	Length m	Diam m	Total weight kg	Weight of fuel, kg	Payload kg	Maximum speed m/sec	Max alti-tude on trajec km	Range km	Stage of Produc-tion	Remarks
							Antiaircraft guided missiles							
"Wasserfall" Germany	Nitric acid + visol	Canister	8,000	40	7.835	0.88	3,800	1,815	60—100	750	20	40	Was not completed.	
"NIKE" USA First stage	Powder	--	--	--	3.9	--	550	--	to 140 kg	670	18	30	In series produc-tion	Adopted in the air de-fense sys-tem of the USA.
Second stage	Nitric acid + aniline	Canister	1,180 (at an alti-tude of 3,000 m)	35	6.1	0.300	450	136						
"Matra" France	---	Canister	1,250	14	4.6	0.400	400	110	--	500	4.0	—	Experi-mental models	
"Oerlikon" Switzer-land	Nitric acid + kerosene	Canister	500	52	4.88	0.37	250	130	20	750	15	20	**Prepara-tion for series produc-tion**	

NOTE: Contradictory information concerning a large number of rockets in the process of being constructed has been published in foreign literature; the absence of much necessary data prevents us from listing them in this table.

liquid-fuel rocket engine in present-day rocket engineering is given in Table 1. In this table we have assembled data for the basic parameters and the fields of employment of present-day liquid-fuel rocket engines. In view of the extensive employment of the liquid-fuel rocket engine on models of armament of the most varied types (though this is by no means a specific characteristic of the liquid-fuel rocket engine), these data are necessarily based on the military use of these engines. For this reason the table does not embrace all the present-day liquid-fuel rocket engines. It does not give data for the engines concerning which very little information has been published, and even for the models given many important parameters are absent. Besides, one should note that even though the extensive practical construction of liquid-fuel rocket engines started a short time ago, relatively speaking (the first operating models passing the experimental stage did not appear until 15 or 18 years ago), there have already been created engines developing thrusts from several dozen kilograms up to several dozen tons. The constructional design of propulsion systems as a whole differs widely. There are arrangements with different injection systems; sharp differences in the complexity of layout, and lastly, engine designs burning various kinds of fuel.

We should point out in particular that during the last few years many models of liquid-fuel rocket engines have been put in mass production and are being manufactured in large numbers. This shows as a result of the efforts of designers, experimenters, and technicians, that liquid-fuel rocket engines, in spite of the intensity of their thermal process, have become sufficiently reliable thermal machines with successful constructional solutions for engines and assemblies. In addition, the necessary technological methods for their manufacture have been devised.

In the next few years, taking into account the fact that rocket engineering is being more widely employed and will begin to replace, in certain fields, aircraft with turbojet engines; we must expect an intensive increase in the production of these engines, further improvement of them along the line of greater thrust, the employment of new fuels insuring a high specific thrust, and also further improvement in the construction of the engine with a raising of its qualitative indexes and the degree of its reliability.

QUESTIONS FOR REVIEW

1. What assumptions are made in the derivation of the equation of thrust for a liquid-fuel rocket engine?

2. Of what forces is the thrust composed?

3. Derive the equation of thrust, in the case when it is impossible to disregard the momentum of the fuel injected.

4. What is the specific thrust? What does it characterize?

5. Determine the specific thrust of an engine having a thrust of 8,000 kg and a fuel consumption of 42.3 kg-sec/kg.

6. Find the effective discharge velocity of gases for an engine the specific thrust of which amounts to 215 kg-sec/kg.

7. What is meant by the specific fuel consumption? In what units is it expressed?

8. Calculate the specific fuel consumption of a liquid-fuel rocket engine having a thrust of 6,720 kg and a fuel consumption of 29.8 kg/sec.

9. What is useful flight (external) efficiency? On what does the value of flight efficiency of a liquid-fuel rocket engine depend?

10. Determine the useful flight of an engine having a velocity of discharge of 2,250 m/sec and on a rocket flying at a speed of 18,000 km/hr; a rocket flying at a speed of 8,000 km/hr; a pursuit-interceptor plane flying at a speed of 2,160 km/hr; an automobile running at a speed of 200 km/hr.

11. What basic characteristics are possessed by liquid-fuel rocket engines when compared with air-breathing reaction engines?

12. Give some of the advantages and disadvantages of solid fuel rocket engines.

13. On what kind of aircraft do we employ liquid-fuel rocket engines?

14. Does the specific thrust depend upon the value of acceleration of the force of gravity?

15. How does the thrust of a liquid-fuel rocket engine develop?

16. How does a direct reaction differ from an indirect reaction engine?

CHAPTER II

ESSENTIALS OF THERMODYNAMICS

The operation of the liquid-fuel rocket engine depends on the change in pressure, temperature, velocity of the movement of the gases, and the supply of energy in them. Consequently, the study of the operating process of the liquid-fuel rocket engine requires the use of the basic laws and principles of thermodynamics

In this chapter we give only the material which is necessary for the application of certain thermodynamic principles to the operating procedure of the liquid-fuel rocket engine. These principles are used later on in the calculation of a liquid-fuel rocket engine.[1]

SECTION 8. THE BASIC CHARACTERISTICS OF GASES

The state of a gas is characterized entirely by certain physical values (parameters), the main of which are: absolute pressure p, absolute temperature T, density ρ (or specific weight γ), and finally the gas constant R.

As is known for ideal gases or for their mixtures, a connection in the form of an equation of state has been established between the basic parameters (the equation of Clapeyron):

$$\frac{p}{\rho} = gRT \qquad (II.1)$$

The combustion products of a liquid-fuel rocket engine, in the engine

---

[1] For further details see V. V. Sushkov, Tekhnicheskaya termodinamika [Technical Thermodynamics], Gosenergoizdat, 1953, and N. D. Fedulov and V. A. Kireyev, Uchebnik Fizicheskoy khimii [Textbook of Physical Chemistry], Goskhimizdat, 1952.

occur at very high temperatures and under relatively low pressures. Under these conditions their characteristics may be described in a sufficiently precise manner by the equation for an ideal gas.

When we employ the equation of the state of the gas, the pressure p is expressed in kg/m^2, that is, 10^4 at (at = atmospheres); the density ρ in kg-sec^2/m^4, the temperature in degrees expressed in the absolute scale g = 9.81 m/sec; the gas constant R in kg-m/kg degrees C.

The density of the gas is related to the specific volume by the relationship

$$\rho vg = 1 \tag{II.2}$$

where v is the specific volume of the gas; it is expressed in m^3/kg.

Therefore, the equation of state can be written in the form:

$$pv = RT. \tag{II.3}$$

The value of the gas constant is determined by the composition of the gas. For its calculation in the usual case -- when the gas is a mixture of several gases (a case most frequently encountered in the liquid-fuel rocket engine) -- we employ the relationship

$$R = \frac{848}{\mu_\Sigma} \text{ kg-m/kg}^\circ \text{ C} \tag{II.4}$$

where 848 kg-m/kg-mol C is the value of the universal gas constant for one kilogram of any gas and is expressed in kg-m per degree of Centigrade; μ_Σ is the apparent molecular weight of the mixture. It is calculated by the equation

$$\mu_\Sigma = \sum_i \mu_i r_i, \tag{II.5}$$

where μ_i is the molecular weight of the gas composing the mixture; r_i is the volumetric portion of the gas.

The latter is expressed by the relationship of partial pressure p_i of the given gas to the total pressure p_{Σ} under which the mixture is:

$$r_i = \frac{p_i}{p_{\Sigma}}. \qquad (II.6)$$

In connection with the relationship (II.6) formula (II.5) becomes:

$$\mu_{\Sigma} = \frac{1}{p_{\Sigma}} \sum_i \mu_i p_i. \qquad (II.7)$$

In gases where the composition is constant, the value R is invariable; if the composition of the gas is changed (that is, if r_i changes), the gas constant of the mixture of gases also changes its value.

SECTION 9. ENERGY CHARACTERISTICS OF GASES

A gas in a given state (for example, with a given pressure p and a given temperature T) possesses a clearly defined store of energy.

When a gas changes its composition, the store of energy in it also changes as a rule. For the calculation of technical apparatus, devices, and systems, the operation of which is based on a change in the state of gas, the absolute value of the energy which the gas possesses is of no practical interest, but a value which is very essential is that of the change in the store of energy which accompanies the transition of the gas from one state to another.

In the study of liquid-fuel rocket engines powered by chemical fuels, it is necessary to bear in mind that as a general rule a gas flowing through the chamber of the engine changes its state in such a manner that there occurs a change in the store of the three forms of energy which the gas possesses. These forms of energy are the following: internal energy of the heat of motion of the particles making up the gas, the potential energy of pressure and the chemical energy or, as it is often called, the energy of chemical bonds.

Internal Energy and Heat Content of a Gas.

The internal energy is, as we said above, one of the energy characteristics of the gas. It is the energy of the thermal motion of the molecules and atoms of the gas. Depending upon the structure of the gas molecules, it may be characterized by different forms of motion or degrees of freedom.

The simplest gas molecule, consisting of one atom (H, O, N), is capable of movement as a solid point in three directions mutually perpendicular to each other; in other words, it possesses three degrees of freedom of translational motion.

In the monoatomic molecule, and also within the atoms of the multiatomic gases, it is possible to have other forms of motion: for example, the rotation of the atom around the axis passing through its center of gravity, and the motion of electrons within the atom. In absolute value, the energy of these forms of motion may be very large, but the change in the energy under ordinary technical temperatures is extremely small. Therefore, in the designing of present-day liquid-fuel rocket engines, the energy of these movements is assumed to be unchanged and is not taken into account in the total supply of energy of the gas.

The more complicated diatomic molecules (CO, H_2, N_2, O_2, NO and CH) possess a larger number of degrees of freedom. In addition to the three degrees of freedom of translational motion, they also possess two degrees of rotational freedom of movement around two axes not passing through the center of gravity of both atoms (Figure 42). The rotation around the axis passing through the center of gravity of both atoms is not considered, because the moment of inertia of the molecule relative to this axis and, consequently, also the energy of rotation relative to the given axis are very small. In addition to the rotational movement, there may appear in the diatomic molecule a vibrational movement of the atoms relative to their position of equilibrium or neutral position in the molecule.

In all, the diatomic molecule has six degrees of freedom.

The triatomic molecule has a still larger number of degrees of freedom, namely, nine. It has, of course, three degrees of freedom of translational motion, but the number of degrees of freedom for rotational and vibrating movement depends upon the arrangement of the atoms in the molecule.

The linear triatomic molecule is a molecule in which all three atoms are arranged on one line.

An example of such a molecule is a molecule of carbon dioxide gas (CO_2). The linear triatomic molecule, just as the diatomic, possesses only two degrees of freedom of rotational movement; (the moment of inertia around the axis, passing through the center of gravity of the atoms, is equal to zero), but on the other hand it has four degrees of freedom of vibrating movement.

The possible directions of vibration are shown in Figure 43a. One of the vibrations (2 and 3) takes place in the plane of the drawing, and the other vibrations takes place in the plane perpendicular to the drawing.

Certain other molecules of triatomic gases, for example, the molecule of water vapor (see Figure 43 b), have a nonlinear structure. Such a molecule possesses not two but three degrees of freedom of rotational motion (because relative to each of any three mutually perpendicular axes, the moment of inertia will not be equal to zero) and three degrees of freedom of oscillatory motion.

The internal energy of a gas is the sum of the energy of the motion of the molecules in the directions of the different degrees of freedom. The value of the internal energy depends upon the number of degrees of freedom and the store of energy of motion of the molecules in the direction of the given degree of freedom.

It has been found that the measure of the energy possessed by a molecule in motion along any of its inherent degrees of freedom is exclusively temperature.

The internal energy of a gas is made up of the energy of motion of the molecules based on the degrees of freedom; and, consequently, internal energy also depends on the temperature. The connection between internal energy and the temperature can be determined easiest of all by the introduction of the concept of specific heat [thermal or heat capacity].

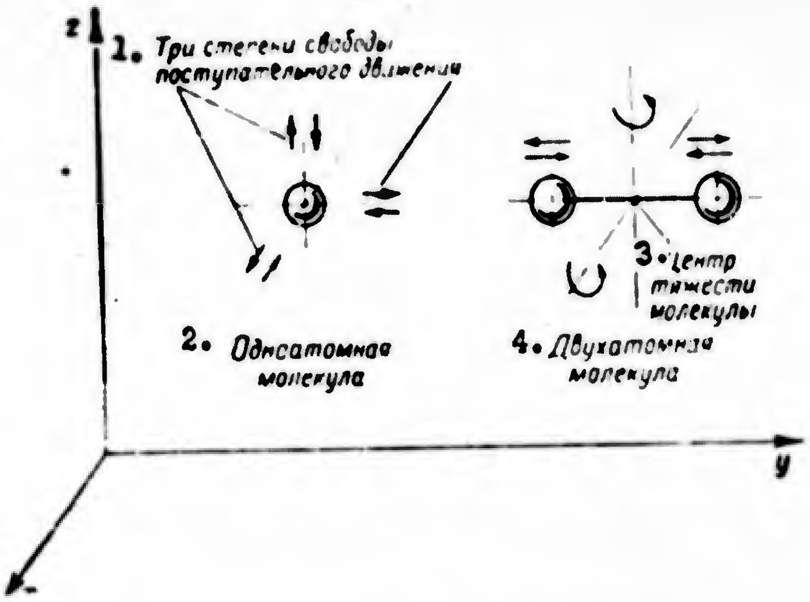

Figure 42. The possible motions of monoatomic and diatomic molecules.

1 -- three degrees of freedom of translational motion; 2 -- monoatomic molecule; 3 -- center of gravity of the molecule; 4 -- diatomic molecule.

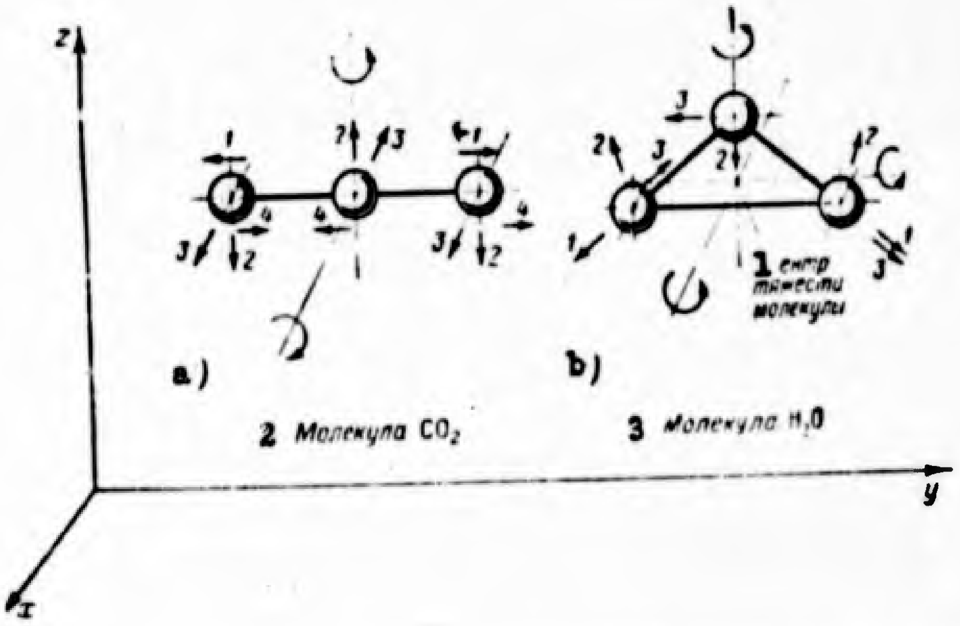

Figure 43. The rotational and oscillatory motions of triatomic molecules.

1 -- center of gravity of the molecule; 2 -- molecule of CO_2; 3 -- molecule of H_2O.

The thermal heat capacity of a given body is its ability to absorb or give off heat with a change in temperature. The thermal heat capacity is determined by the quantity of heat necessary for a change in the temperature per unit weight of substance by one degree C. As a unit of weight we use either a kilogram or gram-molecule. On the basis of this, measurement of the specific heat may be by kilo-calorie/kg°C or kilo-cal/gram-molecule C.

The total thermal capacity given a gas or received from a gas, if the thermal capacity depends on the temperature, amounts to:

$$Q=\int_{T_1}^{T_2} c\,dT, \qquad (II.8)$$

and with a constant thermal capacity:

$$Q=c(T_2-T_1). \qquad (II.9)$$

The value of the thermal capacity c depends to a considerable degree on the conditions under which the change in the temperature of the gas takes place and what forms of energy of the gas change this value.

If the absorption or radiation of heat by the gas takes place with a constant volume of gas, the heat is only expended for changing the internal energy of the gas. The specific heat with a constant volume is designated by c_v. It may be considered as the sum of the thermal capacity of the gas depending upon the degree of freedom. A change in the energy of the molecular motion of a unit weight of a gas with a given degree of freedom at a temperature change of one degree C is called the thermal capacity according to the degree of freedom.

In addition, for each degree of freedom a characteristic fact is that its thermal capacity increases with an increase in temperature, but upon reaching a certain temperature the thermal capacity of a given degree of freedom becomes constant. In this case we say that a saturation of the degree of freedom of the given type has taken place.

With saturation, the specific heat of each of the translational and rotational degrees of freedom is equal to $\frac{AR}{2}$, and that of each of the vibration degrees of freedom is equal to AR.

The value A, the thermal equivalent of work, serves to convert work from mechanical units into heat units. The necessity of strict correspondence between heat and work follows from the first law of thermodynamics establishing the relationship between the change in internal energy and work done by the gas in the change of its state. For the most widely used units of work -- kg-m, and heat -- kilo-cal, the value of the thermal equivalent of work is $A = \frac{1}{427}$ kilo-cal/kg-m.

It should be noted that the value

$$AR = \frac{848}{427} = 1.986 \text{ kilo-cal/kg-mole } ^{\circ}C = 1.986 \text{ kilo-cal/grammole } ^{\circ}C$$

is called the universal gas constant, expressed in heat units. (Here R is the universal gas constant expressed in units of work.) This value is the same for the mole of any gas.

The temperature at which the saturation of a given degree of freedom takes place depends upon the type of motion and also on the characteristics of the given molecule.

The saturation of the translational degrees of freedom for all molecules without exception takes place at very low temperatures. Therefore, the practical thermal capacity of each of the translational degrees of freedom is always constant and equal to $\frac{AR}{2}$ cal/gram molecules $^{\circ}C$.

At a relatively higher temperature, amounting to about 10-30° on the absolute scale, a saturation of the rotational degrees of freedom takes place, and the thermal capacity of each of these degrees will also amount to $\frac{AR}{2}$ cal/gram molecules $^{\circ}C$.

Regarding the vibrating degrees of freedom, we can state that their saturation, for the majority of diatomic and triatomic gases entering into the composition of the combustion products of liquid-fuel rocket engines, takes place only at very high temperatures, as a rule exceeding the temperature of combustion. Hence, the heat capacity of the vibrating degrees of freedom is variable and changes so that it depends only on the temperature of the gas and rises with an increase in this temperature.

By adding the thermal capacities of the degrees of freedom, we obtain the value of the thermal capacity with a constant volume C_v of gases of different structure.

For example, the thermal capacity C_v of monoatomic gases is practically constant and is equal to 3/2 AR. The internal energy of these gases is directly proportional to the temperature and amounts to 3/2 ART.

At low temperatures the diatomic gases (when used in liquid-fuel rocket engines) have a thermal capacity of three translational and two rotational degrees of freedom, i.e., 5/2 AR, and at high temperatures their thermal capacity increases as a result of the excitation of the vibrating degrees of freedom and moves towards the value 7/2 AR.

The thermal capacity of triatomic gases at low temperatures is also equal to 5/2 AR, and at high temperatures tends to move as follows: for CO_2 towards 13/2 AR, and for H_2O towards 6 AR.

As we have pointed out above, both the thermal capacity of the degree of freedom and the energy of the given degree of freedom depend solely upon the temperature; because of this, the internal energy also depends solely upon the temperature of the gas and the energy is determined entirely by the temperature of the gas.

The change in the internal energy is usually estimated by the formula

$$\Delta U = \int_{T_1}^{T_2} c_v \, dT \qquad \text{(II.10)}$$

or, if the thermal capacity C_v is taken as a constant, then

$$\Delta U = c_v (T_2 - T_1). \qquad \text{(II.11)}$$

Hence the potential energy of the pressure which a gas has is like the potential energy of a compressed spring. The value of the potential energy of a unit weight of gas is determined by the product of the pressure p multiplied by the specific volume v, that is, by the value pv.

Consequently, the potential energy of the gas depends only on the state of the gas because in accordance with the equation for the state of the gas (II.2) pv = RT, and the store of potential energy is determined entirely by the temperature of the gas.

In the transition of a gas from one state to another, its store of potential energy changes by the value $\Delta(pv)$.

In the technical calculations of heat machines, a value designated as heat content or enthalpy has acquired great importance.

The concept of "heat content" may be illustrated by an example: A compressed spring at a temperature T has two forms of energy: the internal heat energy of the substance or material of the spring, heated up to a temperature T, and a potential energy, that is, the work expended in the compression of the spring. The heat content of a gas is likewise the sum of these two forms of energy, which the compressed spring has. As we can see, the designation, heat content, does not correspond fully with the physical sense of this value.

The heat content and the internal energy are related to one another by the following equation:

$$I = U + Apv \tag{II.12}$$

or, in accordance with (II.3) and (II.11),

$$I = U + ART = c_v T + ART = (c_v + AR) T = c_p T. \tag{II.13}$$

The value c_p forming a part of the expression for the heat content, is called thermal capacity under constant pressure. The numerical thermal content is equal to the product of the thermal capacity at a constant pressure and temperature.

The change in the heat content, just as the change in the internal energy, does not depend on the processes taking place in the gas but depends only on its initial and final temperature.

It should be noted that the thermal capacity c_p for all gases and at all temperatures is greater than thermal capacity times value of AR.

In thermo-dynamics the value of the relationship of the thermal heat capacity at a constant pressure to the specific heat at a constant volume is of great importance. This value is called the adiabatic index and is designated by k:

$$k=\frac{c_p}{c_v}=\frac{c_v+AR}{c_v}=1+\frac{AR}{c_v}. \qquad (II.14)$$

As we can see, the value k depends on the thermal capacity of the gas at a constant volume, that is, on the structure and temperature of the gas. For technical gases forming a part of the combustion products, the value k changes within the limits shown in Table 2.

Table 2

HEAT CAPACITY AND ADIABATIC INDEXES FOR DIFFERENT GASES AT LOW (300° ABSOLUTE) AND AT VERY HIGH (6,000° ABSOLUTE) TEMPERATURE

Characteristics of the Gas		Monoatomic gases	Diatomic gases	Triatomic gases	
		O; H; N	O_2; H_2; N_2; CO; OH; NO	CO_2	H_2O
Thermal Capacity c_v cal/gram-mole	Low temperatures	3/2 AR	5/2 AR	5/2 AR	6/2 AR
	Very high temperatures	3/2 AR	7/2 AR	13/2 AR	12/2 AR
Adiabatic Index $k=\frac{c_p}{c_v}$	Low temperatures	$\frac{5}{3}=1.67$	$\frac{7}{5}=1.40$	$\frac{7}{5}=1.40$	$\frac{7}{5}=1.40$
	Very high temperatures	$\frac{5}{3}=1.67$	$\frac{9}{7}=1.29$	$\frac{15}{13}=1.15$	$\frac{14}{12}=1.17$

Let us employ the following relationship:

$$c_p = c_v + AR$$

and express the thermal capacity by the value of the adiabatic index k:

$$c_p = \frac{k}{k-1} AR. \qquad (II.15)$$

In accordance with this, we can express the thermal capacity at a constant volume by the value of the adiabatic index:

$$c_v = \frac{c_p}{k} = \frac{AR}{k-1}. \qquad (II.16)$$

The thermal capacity of a mixture of gases C_Σ is determined by proceeding from the fact that in a mixture gases do not change the value of the specific heat which they have taken separately. For estimating the thermal capacity of a mixture of gases we employ the formula:

$$c_{v\Sigma} = \sum_i r_i c_{vi}. \qquad (II.17)$$

By employing the formula $r_i = \frac{p_i}{p_\Sigma}$, we obtain:

$$c_{v\Sigma} = \frac{1}{p_\Sigma} \sum_i c_{vi} p_i. \qquad (II.18)$$

For the conversion of thermal capacity expressed in kilo-cal/gram mole °C into thermal capacity relative to a kilogram of gas we employ the relationship:

$$c_{v\Sigma}\ \text{kilo-cal/kg}\ ^\circ\text{C} = c_v\ \text{kilo-cal/grammole}\ ^\circ\text{C}\ \frac{1{,}000}{\mu_\Sigma}, \qquad (II.19)$$

where $\frac{1{,}000}{\mu_\Sigma}$ represents the number of gram molecules in 1 kg of gas.

For gases of the same composition, the value μ_Σ in formula (II.19) should be replaced by the molecular weight of the given gas μ_i.

The Chemical Energy and the Total Heat Content.

A gas which is but a single chemical substance possesses internal energy which is determined by the thermal motion of its molecules. If the gas is made up of several chemical substances between which there can take place a chemical reaction accompanied by the liberation of heat, then this mixture, in addition to the thermal internal energy it possesses, also has chemical energy.

For example, oxygen and hydrogen taken separately possess only thermal energy, but a mixture of them, in which a chemical combustion reaction can take place possesses chemical energy in addition to thermal energy.

By chemical energy we understand energy which can be given off by a chemical reaction between substances which make up the system [compound]. From this point of view, the widely employed value -- calorific value of fuel -- is chemical energy which the fuel loses during the time of the reaction of the fuel with the oxygen. Let us emphasize here the important fact that chemical energy may be liberated or absorbed only by a reaction; that is, only when there are several substances capable of entering into the reaction, and also when conditions are favorable for such reactions. Consequently, it is incorrect to speak of the chemical energy (calorific value or heating capacity) of a fuel. We must speak of the chemical energy of a fuel (for example, a mixture of carbon plus air, kerosene plus oxygen, or any other mixture). To ascribe a chemical energy value to a fuel or oxidizer is an entirely conventional practice which is sometimes convenient in calculations.

Certain substances which are employed as a fuel or oxidizer may possess a definite store of chemical energy in addition to the energy liberated in the process of their joint combustion. This chemical energy appears as a result of the heat spent during the process of the formation of a given substance from the elements.

At low temperatures (up to 2,000° absolute) the change in the state of the gas does not lead to any perceptible change in the form of the chemical bonds between the atoms of the gases forming the combustion products of the fuel. The supply of chemical energy remains unchanged and the chemical energy is excluded from this consideration.

At higher temperatures the change in state leads as a rule to a considerable change in the form of the chemical bonds, and, consequently, also to a corresponding change in the store of chemical energy which it is necessary to take into consideration.

At still higher temperatures, not yet reached in the existing liquid-fuel rocket engines, a thermal ionization of the gas may take place. This is accompanied by a loss of energy and a change in the internal energy of the gas so that its store will be increased.

Hence, with an increase in temperature, one must take a still larger number of components of the internal energies of the gas into account.

By limiting ourselves to the temperatures which we have today in the liquid-fuel rocket engine, we shall have to deal only with the internal energy of the thermal motion (or simply the internal energy), the chemical energy, and the potential energy of pressure. We shall call the sum of the internal energy of thermal motion and the chemical energy the complete internal energy U_p. The sum of the internal energy and the potential energy of pressure is called the heat content or enthalpy of gas I. Similarly, we shall call the sum of the complete internal energy and the potential energy of the gas the complete or full thermal content or the complete enthalpy I_p.

$$U_p = c_v T + U_{chem}$$

$$I_p = c_p T + U_{chem} \qquad [chem = chemical]$$

SECTION 10. THERMODYNAMIC PROCESSES IN GASES

The process of change in the state of a gas may take place under conditions that differ a great deal: for example, with a constant volume or a constant pressure or temperature. The character of a process is described by its equation giving the relationship between the parameters of its state at any point of the given process. The most general equation of a process in gases is the equation of the polytropic process which we may write in the form

$$\frac{p}{\rho^{n}}=\mathrm{const} \quad \text{or} \quad pv^{n}=\mathrm{const}. \tag{II.20}$$

Below we shall consider such processes, the index of which, n, remains constant for the entire process.

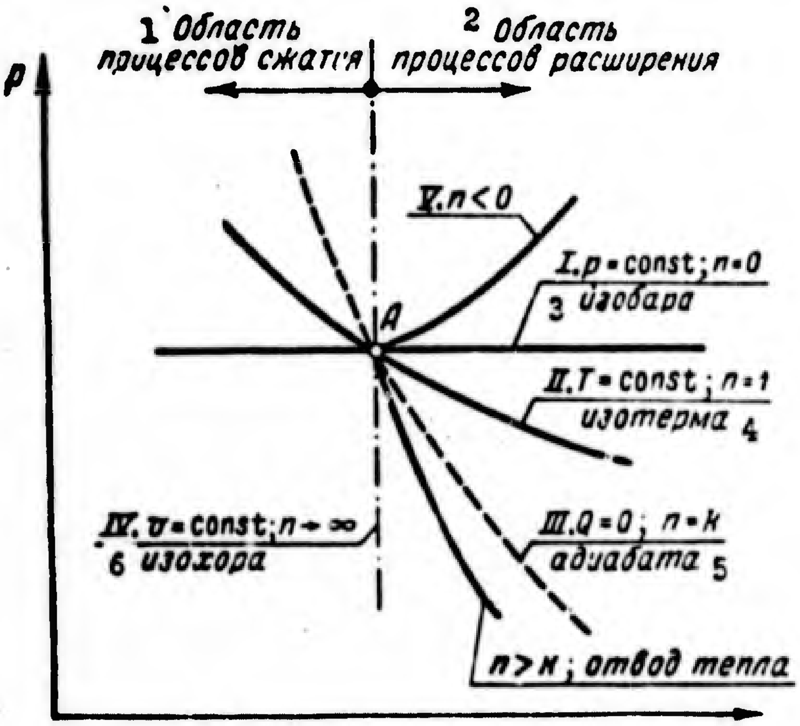

Figure 44. Diagram showing the different polytropic processes.

1 -- compression processes; 2 -- expansion processes; 3 -- isobar; 4 -- isotherm; 5 -- adiabatic curve; 6 -- isochore; 7 -- withdrawal of heat.

By changing the value of the index n, we can describe a number of basic thermodynamic processes which can take place in gases. For example, by taking the value $n = 0$, we obtain $v^{0} = 1$. Consequently the equation (II.20) will be expressed as the equation of the isobaric process $p = \mathrm{const}$ represented in the coordinates of pv of the line I (Figure 44). If in the course of the process n assumes a value equal to 1, we obtain the equation:

$$pv=\mathrm{const}, \tag{II.21}$$

and since $pv = RT$, then, for a gas of constant composition and temperature, it will be constant in the course of the entire process, that is, the given process will be an isothermic process.

If we take the value $n \to \infty$, we obtain the equation of an isochoric process $v = \text{const}$. We can easily prove the latter by raising the equation (II.20) to the power of $\frac{1}{n}$; then:

$$p^{\frac{1}{n}} v = \text{const}$$

and with $n \to \infty$ the value $p^{\frac{1}{n}} \to 1$ hence,

$$v = \text{const}.$$

The line IV shows how this process takes place in the coordinates of pv; it delimits two fields in this system of coordinates. On the right are the expansion processes (increases in the specific volume v), and on the left are the compression processes (a reduction in the specific volume v).

Change in the Parameters of the State of the Gas with Polytropic Processes.

Making use of the equation of the polytropic process with constant n, and also of the equation of the state of the gas, we can easily find the connection between the parameters of the state of the gas at two different points of the process.

As the basic parameter determining the state of the gas, it is most convenient to select the pressure of the gas. Let us express the ratio of the pressure p at any point in the process to the initial pressure p_1 by δ.

$$\delta = \frac{p}{p_1}.$$

We shall express change of all the rest of the parameters by the ratio of the pressures, that is, by δ.

We convert the basic equation of the polytrope (II.20):

$$\rho^n = \rho_1^n \frac{p}{p_1};$$

$$\rho = \rho_1 \left(\frac{p}{p_1}\right)^{\frac{1}{n}} = \rho_1 \delta^{\frac{1}{n}}. \quad \text{(II.22)}$$

Substituting in (II.22) the value ρ by $\rho = \frac{1}{vg}$ from (II.2) we obtain:

$$v = v_1\left(\frac{p_1}{p}\right)^{\frac{1}{n}} = v_1\left(\frac{1}{\delta}\right)^{\frac{1}{n}}. \tag{II.23}$$

Substituting in (II.22) ρ in accordance with the equation of the state $\rho = \frac{p}{gRT}$, we obtain:

$$\frac{p}{gRT} = \frac{p_1}{gRT_1}\left(\frac{p}{p_1}\right)^{\frac{1}{n}}. \tag{II.24}$$

If in the thermodynamic process we can consider R = const, that is, if the composition of the gas is constant, then after transformation we obtain:

$$T = T_1\left(\frac{p}{p_1}\right)\left(\frac{p}{p_1}\right)^{-\frac{1}{n}} = T_1\left(\frac{p}{p_1}\right)^{\frac{n-1}{n}} = T_1\delta^{\frac{n-1}{n}}. \tag{II.25}$$

The Work Performed in the Thermodynamic Processes.

The elementary work ΔL, performed by a unit weight of gas under a pressure p, with an increase in the specific volume by Δv, is, as we know,

$$\Delta L = p\Delta v,$$

and the total work of this gas with a change in the state from point 1 to point 2,

$$L = \int_{v_1}^{v_2} p\,dv.$$

Graphically the work done during the thermodynamic process may be represented as an area lying under a curve representing the process in coordinates of pv (Figure 45), that is, the area a12b.

In the thermodynamic processes, work may be expended by some external source of energy and transmitted to the gas, or it may be done by the gas system itself and drawn off the gas system. In the latter instance, it may be used to perform mechanical work or to create kinetic energy in the directed gas flow, etc.

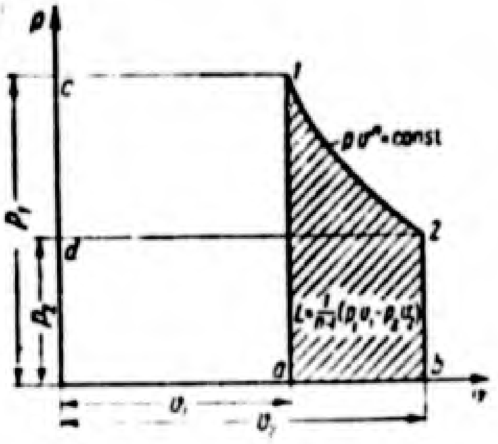

Figure 45. Work done by the gas in the thermodynamic processes.

Let us assume that the work of expansion done by the gas system and drawn off is positive work.

The area lying under the polytrope between the points 1 and 2 with the index n is determined by the expression:

$$L=\frac{1}{n-1}(p_1v_1-p_2v_2). \tag{II.26}$$

The formula (II.26) is valid for all the values of n, except n = 1, in which the value L becomes indeterminate. For this case of isothermic change in the state we may derive the formula:

$$L=p_1v_1\ln\frac{p_1}{p_2}=p_1v_1\ln\frac{v_2}{v_1}. \tag{II.27}$$

Later on we shall be interested in the value of the area included between the curve of the process and the axis of the ordinates, that is, the value $\int_{p_2}^{p_1} v\,dp$, which we shall designate by L'. The value of this area is n times greater than the area of L and is equal to:

$$L'=\frac{n}{n-1}(p_1v_1-p_2v_2). \tag{II.28}$$

In Figure 45, this area is included in the contour c12d.

The Application of the First Law of Thermodynamics to Processes in Gases.

In thermodynamic processes there is a change in the state of the gas; consequently, a change in the store of energy which the gas possesses may also take place. In addition, the change of state process may be accompanied by a removal of heat from the gas or the supplying of heat to it from the outside and an expenditure or loss of work (mechanical energy).

The change in the supply of energy of the gas in thermodynamic processes cannot be arbitrary; it corresponds directly to the quantity of heat brought in or drawn off and to the work done by or on the gas. The necessity of such a precise correspondence follows naturally from the law of the conservation of energy. Thus the first law of thermodynamics determines the quantitative connection between the change in the quantity of internal energy, work, and heat taking place during the change in the state of the gas. Consequently it is the application of the universal law of the conservation of energy to the thermodynamic processes.

For example, if in the thermodynamic process the gas is isolated from the action of outside media, then in accordance with the law of the conservation of energy, the total store of energy of such a gas should remain unchanged. However, the form in which the energy exists may change. In the given instance the internal energy U of the gas may be changed into work of expansion L. In this case the change in the store of internal thermal energy of the gas should correspond directly to the quantity of work received or work performed. This relationship also determines the thermal equivalent of work A.

If in the thermodynamic process we introduce or remove a quantity of heat ΔQ, then this quantity of heat should balance the change in the internal heat energy of the gas and the work process.

For example, the heat ΔQ supplied to the gas from the outside is expended only in the change of the internal energy ΔU and the performance of work ΔL, that is:

$$\Delta Q = \Delta U + A\Delta L. \quad \text{(II.29)}$$

This expression is also the analytical statement of the first law of thermodynamics.

Taking into account the fact that $\Delta L = p\,\Delta v$, the expression (II.29) can be reduced to the form:

$$\Delta Q = \Delta U + Ap\Delta v. \quad \text{(II.30)}$$

As we know, in thermodynamic processes, as a result of the change in the state of the gas, there is always a change not only in its internal heat energy but also in its potential energy pv. Making use of the diagram p - v, we can express the change in the potential energy $\Delta(pv)$ by the change in the parameters of the gas. In the transition of the gas from state 1 to state 2 (Figure 46) the change in the store of potential energy of the gas will be equivalent to the value of the area 1cd2ba. This area may be replaced approximately by the sum of the areas 1cde and 1fba. The area 1cde is equal, as we can see from the drawing, to the product $v\,\Delta p$, and the area 1fba to $p\,\Delta v$. Hence:

$$\Delta(pv) = v\Delta p + p\Delta v.$$

and the change in the thermal content in the process leading to the transition of the gas from state 1 to state 2 will be equal to:

$$\Delta I = \Delta U + A\Delta(pv) = \\ = \Delta U + Av\Delta p + Ap\Delta v. \quad \text{(II.31)}$$

Let us express the value ΔU by ΔI:

$$\Delta U = \Delta I - Av\Delta p - Ap\Delta v$$

and, substituting this value in the equation of the first law of thermodynamics, we obtain:

$$\Delta Q = \Delta I - Av\Delta p - Ap\Delta v + Ap\Delta v$$

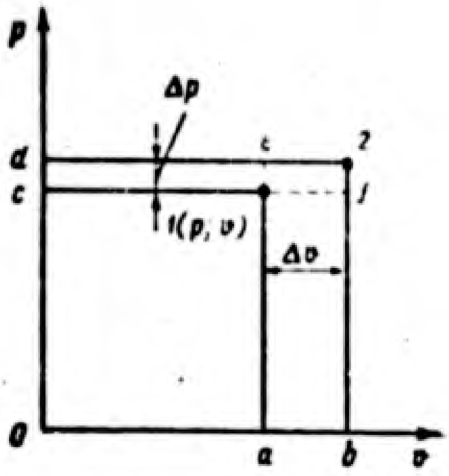

Figure 46. The change in the potential energy of the gas.

or finally:

$$\Delta Q = \Delta I - Av\Delta p. \tag{II.32}$$

The expression (II.32) is the second analytical expression of the first law of thermodynamics. It is often times used in the design of thermal engines because with a change in the state of gas there is always a change in its heat content; and, therefore also, a change in the total store of energy of the gas which should enter into the equation of the balance of energy. In chemically active gases during a thermodynamic process a change in the store of the chemical energy takes place, which should also be taken into account in the application of the law of the conservation of energy. In the most common case the equation of the first law of thermodynamics takes the form:

$$\Delta Q = \Delta I_n - Av\Delta p. \tag{II.33}$$

The Conversion of Energy in Polytropic Processes.

Of the infinite number of polytropic processes, let us consider only certain ones in more detail.

The isochoric process is characterized by the fact that the volume of gas remains unchanged, with the result that the work of the process is equal to zero (dv = 0). Hence in this process, in accordance with the first law of thermodynamics:

$$\Delta Q = \Delta U, \qquad (II.34)$$

that is, all of the heat brought in is expended only in changing the internal energy of the gas. Since for the process v = const, the value $Q = c_v \Delta T$, then from (II.34) we can again obtain the well-known formula:

$$\Delta U = c_v \Delta T. \qquad (II.35)$$

In the isobaric process (p = const), the equation of the first law of thermodynamics:

$$\Delta Q = \Delta U + Ap\Delta v$$

may be transformed by making use of the fact that in accordance with the equation of state, pv = RT, the value $p \Delta v$ (with unchanged pressure) is equal to $R \Delta T$. Therefore:

$$\Delta Q = \Delta U + AR\Delta T = c_v \Delta T + AR\Delta T = (c_v + AR)T = c_p \Delta T = \Delta I, \qquad (II.36)$$

i.e., in the isobaric process, all the heat supplied is expended in changing the thermal content of the gas.

In the isothermic process (n = 1), the temperature of the process remains constant; consequently $\Delta U = 0$. Therefore:

$$\Delta Q = A\Delta L. \qquad (II.37)$$

In other words, in the isothermic expansion process, all the heat supplied ΔQ is converted entirely into positive work of expansion. In the isothermic expansion process it is necessary to supply heat to the gas to maintain a constant temperature.

Precisely as in the isobaric expansion process (p = const), heat must be supplied even more intensively than in the case of the isothermic process since in this case the temperature of the gas increases and, consequently, additional heat must be expended for increasing the internal energy ($\Delta U > 0$). In addition, as we can see from Figure 44, with the same increase in volume Δ_v, the work of isobaric expansion will be greater than the work of isothermic expansion.

A still greater supply of heat is required by the expansion process with an increase in pressure (curve V in Figure 44).

A process with constant volume c with a decrease in pressure $n \to \infty$, requires the removal of heat, because the decrease in pressure can take place only because of a reduction in temperature, that is, due to a decrease in the internal energy of the gas, the excess quantity of heat must be withdrawn.

The Adiabatic Process.

A comparison of the processes considered above indicates the following. With a decrease in the intensity of the heat supply, the lines of expansion, beginning at an initial point in the coordinates of pv, run more and more steeply; and the less heat applied, the greater the index n of the polytrope of expansion.

Between the processes $n = 1$ and $n \to \infty$, there should obviously be a process in which $\Delta Q = 0$, that is, a process in which no heat is supplied to the gas or carried away from it.

Processes of such a nature are called adiabatic. They are widespread in nature and technology, especially because of the fact that many processes in gases take place so quickly that the heat exchange between the gas and the walls, and through the walls with the surrounding medium, is negligibly small.

The theoretical research of this process gives:

$$n = k = \frac{c_p}{c_v},$$

Therefore, the value k is called the adiabatic index.

In case of an adiabatic process $\Delta Q = 0$ and on the basis of the first law of thermodynamics:

$$AL = -\Delta U, \tag{II.38}$$

that is, the work of the adiabatic expansion is done entirely by a change in the internal energy of the gas. Of course, in this case the temperature of the gas is lowered.

Making use of formulas (II.26), (II.3), and (II.16), we obtain:

$$AL = \frac{A}{k-1}(p_1v_1 - p_2v_2) = \frac{AR}{k-1}(T_1 - T_2) = c_v(T_1 - T_2) = -\Delta U,$$

that is, complete agreement with the expression (II.38).

The value of the change in the heat content taking place in the adiabatic process is of still greater importance for technical applications.

If we assume n = k, then in accordance with the expression (II.28), we have:

$$AL' = \frac{Ak}{k-1}(p_1v_1 - p_2v_2) = \frac{ARk}{k-1}(T_1 - T_2) = c_p(T_1 - T_2) = I_1 - I_2 = -\Delta I.$$

Consequently, the drop in the heat content of the gas in the expansion process which may be employed for useful work is represented graphically by the area el2d (Figure 47). For a chemically active gas, in the adiabatic process, the heat equivalent of the work of expansion would be equal to the drop of the total heat content, that is ΔI_p.

To make use of the formula (II.25), we replace the current pressure p with the pressure p_2 at the point 2:

$$T_2 = T_1\left(\frac{p_2}{p_1}\right)^{\frac{k-1}{k}}.$$

For the adiabatic expansion of the chemically inert gas we obtain:

$$L' = \frac{k}{k-1}RT_1\left[1 - \left(\frac{p_2}{p_1}\right)^{\frac{k-1}{k}}\right]. \tag{II.39}$$

With a nonadiabatic process, the work of expansion AL and the work AL' will not be equal to ΔU and ΔI respectively.

For example, in the heat supply $\Delta Q > 0$ the heat supplied is partially expended for a change in the internal energy or heat content and partially converted into work.

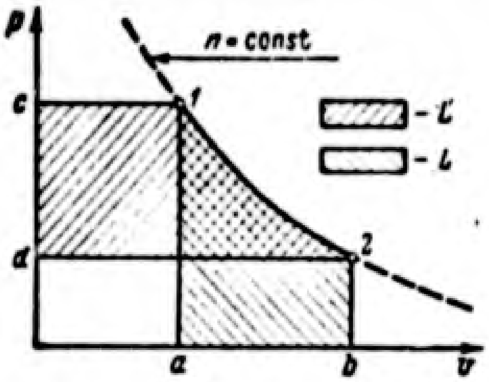

Figure 47. The work of the process L and work of L'.

al2b -- work of the process L; cl2d -- work of L'.

SECTION 11. SECOND LAW OF THERMODYNAMICS

Determination of the Law.

In considering the thermodynamic processes in gases, we have been interested up until now in the quantitative side of the problem: the value of the change in the parameters of state, the amount of heat or work received or expended. However, in giving quantitative relationships, this section of thermodynamics cannot state precisely how and in what direction the processes in the gases will take place.

In many cases, however, it will be interesting to solve the problem as to precisely what processes are possible in gases and how they take place qualitatively.

An answer to the question as to what processes are possible in an isolated system (that is, in a system that is not subjected to external action) is given in the second law of thermodynamics, the simplest formulation of which reads:

Heat alone cannot pass of its own accord from a body with a lower temperature to a body with a higher temperature.

Entropy.

On the basis of this statement it is quite obvious to us that we can also show the quantitative measure which is used with the second law for the determination of the possible direction of the thermodynamic processes.

We define our isolated system as a combination of two bodies having the same store of heat $Q_1 = Q_2 = Q$. However, the first body has a temperature of T_1 which is greater than the temperature of the second body T_2.

In keeping with the obvious principle stated previously, heat can only be transmitted from the first body to the second and not in the reverse direction. We may assume that the first body possesses a more valuable store of heat in the sense that a part of this store can be transmitted to the other body. Hence, the value of a given store of heat is determined by the temperature at which it is accumulated.

Of course, provided that $T_1 > T_2$ we can write:

$$\frac{Q}{T_1} < \frac{Q}{T_2}.$$

By comparing this with the fact that the store of heat of the first body has a greater value, we can say that the value $\frac{Q}{T}$ determines the value of the store of heat and that the smaller $\frac{Q}{T}$ is, the greater the value of the store of heat in the manner mentioned previously.

This basic reasoning must be complicated by the fact that the transmission of heat Q changes the temperature of the body (excepting cases of phase transitions: melting, boiling, etc.). The transmission of very small quantities of heat can take place at a very slightly changing or practically constant temperature T. Therefore, for the determination of the value of the heat of any body, including the gases, it would be more correct to employ the following value:

$$\sum \frac{\Delta Q}{T},$$

or in the limit:

$$\int \frac{dQ}{T}.$$

where T is the temperature at which the gas receives an infinitely small quantity of heat dQ.

The value $\int \frac{dQ}{T}$ determines the change of a certain function in the state of the gas called entropy.

Entropy is usually designated by the letter S. Its change with any change in the state of the gas amounts to:

$$S_2 - S_1 = \int_1^2 \frac{dQ}{T}. \tag{II.40}$$

The adiabatic processes, during which no heat is supplied to the gas, take place without any change in entropy.

Let us consider the change of entropy upon transfer of heat from one body to another in our very simple system consisting of two bodies.

In the initial moment the entropy of the first body S_1 and the second S_2 amounts to:

$$S_1 = \frac{Q}{T_1} \text{ and } S_2 = \frac{Q}{T_2}.$$

Let us consider the change of entropy of a system of bodies in the case of a spontaneous transition of a small quantity of heat ΔQ from the first body to the second. This quantity of heat is so small that we can neglect the change of temperature T and T_2. According to the second law of thermodynamics, the spontaneous transition of heat can take place only from the first body to the second.

For the first body the change of entropy amounts to:

$$\Delta S_1 = -\frac{\Delta Q}{T_1},$$

and for the second:

$$\Delta S_2 = +\frac{\Delta Q}{T_2}.$$

The total change in entropy of the system amounts to:

$$\Delta S = \Delta S_1 + \Delta S_2 = -\frac{\Delta Q}{T_1} + \frac{\Delta Q}{T_2} = \Delta Q \frac{T_1 - T_2}{T_1 T_2}.$$

Since $T_1 > T_2$, the value $\Delta S > 0$.

Hence, with a spontaneous process of transmission of heat, the entropy of the system is increased.

Because of this, we can also give another formula for the second law of thermodynamics:

In an isolated system the processes can only take place spontaneously provided that the entropy of the system is increased or remains constant in given limits.

In order to reduce the entropy of the given system, it must be subjected to external action. An example of such a process is the transmission of heat from a body with a lower temperature to a body with a higher temperature, which is a process that takes place in any refrigeration machine. We should remember that the second law is applied only to processes taking place in an isolated gas system. By exerting an outside influence on the gas system, we can produce any process, including the process of a reduction of entropy.

Entropy and the Probability of the State of the Gas.

Another consequence of the second law of thermodynamics is the principle that mechanical work can always be converted into heat, but that the reverse process of the conversion of heat into mechanical work is not spontaneous. For the conversion of heat into mechanical work to take place, it is necessary to meet specific requirements -- in particular, the presence of a drop of pressure or temperature.

This consequence of the second law of thermodynamics is also quite obvious because the internal energy of gas, for example, the energy of the translational degrees of freedom, is the energy of a disorderly chaotic movement of molecules. The work of the gas can appear only in the form of an orderly movement of the molecules of the gas in a definite direction (for example, in the nozzle of the liquid-fuel rocket engine or in the cylinder of piston machines). Then too, one can easily imagine that the restricted movement of molecules can easily be converted into a chaotic, disorganized movement (for example, as a result of the presence of viscosity forces which cause gas friction and under certain conditions create powerful vortices interfering with and breaking up orderly movement of the gas molecules). This leads to the conversion of work into heat. The reverse process of conversion of the disorderly movement into a directed movement without reaction from the outside or the creation of special conditions is not very probable.

In converting work into heat $\Delta U > 0$ and entropy S in this process is increased.

A chaotic movement of the molecules is, under the given circumstance, always more probable than an organized movement; and, therefore, the value of the entropy can be represented as a measure of the probability of the given state. The more probable the given state of the gas, the greater the value of the entropy. Since with spontaneous processes the gas always changes from the less probable to the more probable state, the spontaneous processes take place with an increase in the entropy.

In certain instances, as with any process, the system always remains in the most probable state. It is then that the process takes place with a constant entropy.

Reversibility in Thermodynamic Processes.

The last problem which we shall consider from the point of view of the second law of thermodynamics is the concept of the equilibrium and reversible processes.

Let us observe, for example, the process of compression of a gas. If we apply the load ΔG, and increase the pressure of the gas by Δp kg/cm^2, to a piston which is moving freely in a cylinder with non-conducting walls then each time a new load is applied the equilibrium of the gas piston system is upset and the piston moves until it reaches a new position of equilibrium.

Let us follow this compression process in the coordinates of pv (Figure 48). At the moment the load is placed, the pressure corresponding to it increases abruptly to the value Ab, a'b', etc. The new state of equilibrium is not established until after the gas is compressed to a new pressure b, b', etc., along the lines ba', b'a", etc. We shall describe the process of compression by the step-like broken line Aba'b' a" b" a"' b'" B, and the work done by the loads in the compression of the gas from state A to the state B will be determined by the area under this broken line.

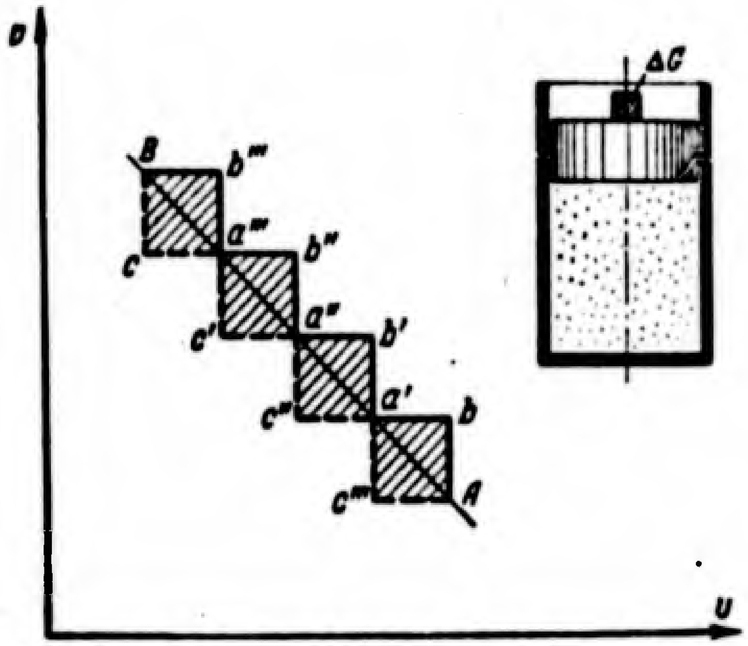

Figure 48. Irreversible and reversible processes of the compression and expansion of a gas.

If now we carry out the reverse expansion process of the gas from the state B to the state A, removing these same loads ΔG, the process of reducing pressures doing the work will be represented by the line Bc a"' c' a" c" a' c"'A.

The work of expansion, given the system by the gas and determined by the area under the line Bca"' c' a" c" a' c"' A, will be less than the work performe by this same system during compression.

From this it follows that the closed system, embracing in itself the source of work for the compression of the gas, during the compression and expansion processes by the method described above cannot be returned to its original state because the store of energy in the source of work, upon the return of the system to point A, will be less than before the beginning of compression and by the repetition of such processes can be exhausted entirely.

The processes taking place in such a way that the isolated system, after the direct and reversible processes, cannot return to the initial state are called irreversible processes.

In the case of the irreversible compression and expansion of the gas considered by us, the value of the losses of work is determined by the area between the broken lines of the compression and expansion processes (shaded in Figure 48). Such is the nature of these losses.

At the moment the equilibrium with the irreversible process is upset, the piston and, consequently, also the particles of gas alongside it acquire kinetic energy which is then expended in the heating of the gas. Consequently, the temperature of the gas after each cycle of irreversible compression and expansion will be progressively increased due to a loss of work. This also increases the deviation of the system from the original state, that is, the irreversibility of the process.

We have considered the problem of the reversibility of the processes, using as an example the compression and expansion of a gas when work is applied to it. However, the concept of reversibility may also be applied to other processes. For example, heat supply may also take place in a reversible manner and in an irreversible manner. In order that a reversible process with an exchange of heat can take place, the difference between the temperature of the gas and the source of heat should be infinitely small just as the difference between the pressures of the reversible compression process.

It is not difficult to see (Figure 48) that the loss of work during the compression and expansion cycles depends upon the degree to which the equilibrium is disturbed in the induced process. The greater the disturbance of equilibrium, the greater the shortage in the work of expansion and the greater the loss. With a reduction in the variation in the state of equilibrium, the loss of work will also be decreased. In the limits within which the compression and expansion processes take place, though infinitely large in the number of phases of equilibrium, there is an infinitely small difference in one phase of equilibrium from the other; that is, when the processes AB and BA are represented by coincident smooth curves, the loss of work becomes equal to zero. In this case the isolated system, with any given number of completed cycles of expansion and compression, will be returned to its initial state.

Processes which occur in such a manner that the isolated system can complete the direct and reversible processes and return to its original state are called reversible processes.

A characteristic of reversible processes is the fact that they occur during an infinite series of phases in equilibrium. The state of equilibrium is the most probable for a given system and corresponds to the maximum entropy. The adiabatic reversible processes, proceeding without the removal or the introduction of heat ($\Delta Q = 0$), take place with constant entropy ($\Delta S = 0$). Such processes are called isoentropic.

Calculation of the Numerical Value of Entropy.

In many cases the real adiabatic processes which take place in thermal machines, and in particular in liquid-fuel rocket engines, closely resemble the reversible processes and a deviation from them may be taken into account by experimental coefficients. For the calculation of such processes it is necessary to compute the value of entropy. Without giving here the complicated dependent conditions for the theoretical determination of entropy (the absolute value of which depends on the structure of the gas, that is, on its chemical nature), we shall give only certain formulas for the calculation of the entropy, necessary in the subsequent calculations.

In the tables of thermodynamic values we usually give the values of the entropy of the given individual chemical substance (hydrogen, oxygen, water vapor, etc.) depending on the temperature at the standard pressure equal to one physical atmosphere. We designate this value by S_0. Usually it is given in small calories for one gram molecule of substance and at 1° C.

For the calculation of entropy for this same gas at any pressure p we use the formula

$$S_p = S_0 - AR \ln p \qquad \text{(II.41)}$$

or, taking into account the fact that $AR = \frac{1}{427} \times 848 = 1.986$ cal/gram molecule °C:

$$\ln p = 2{,}303 \lg p,$$
$$S_p = S_0 - 1{,}986 \cdot 2{,}303 \lg p = S_0 - 4{,}57 \lg p. \qquad \text{(II.42)}$$

For the mixture of gases of different composition such as the combustion products in the liquid-fuel rocket engine, the entropy of the mixture at temperature T and at a total pressure of the mixture p_Σ expressed in kilocal/kg°C or in cal/kg°C is equal to:

$$S_{p_\Sigma} = \sum_i S_{p_i} M_i, \qquad \text{(II.43)}$$

where M_i is the number of gram molecules of the i gas in 1 kg of mixture, or, since:

$$M_i = M_\Sigma \frac{p_i}{p_\Sigma}, \qquad \text{(II.44)}$$

where M_Σ is the total number of gram molecules of gas in 1 kg of mixture:

$$M_\Sigma = \frac{1000}{\mu_\Sigma},$$

then

$$S_{p_\Sigma} = \sum_i S_{pi} M_\Sigma \frac{p_i}{p_\Sigma}. \qquad \text{(II.45)}$$

where S_{pi} is the entropy of the individual i gas with its partial pressure P_i.

By introducing in (II.45) the correlation (II.42), we obtain:

$$S_{p_\Sigma} = \sum_i (S_{0i} - 4{,}57 \lg p_i) M_\Sigma \frac{p_i}{p_\Sigma}$$

or

$$S_{p_\Sigma} = \frac{M_\Sigma}{p_\Sigma} \sum (S_{0i} p_i - 4{,}57 p_i \lg p_i). \qquad \text{(II.46)}$$

As we can se , this formula must often times be employed in the thermal calculations of the liquid-fuel rocket engine.

SECTION 12. THE THERMODYNAMIC PROCESSES IN THE CHEMICALLY ACTIVE GASES

Dissociation of the Combustion Products.

Up until now, we have considered chiefly processes in gases of constant composition with an unchanged store of chemical energy. The combustion products of the fuel of the liquid-fuel rocket engine are a mixture of chemical substances between which chemical reactions can take place.

As a result of the great quantity of heat which is liberated in the combustion chamber of the liquid-fuel rocket engine, the combustion products in the chamber occur at a very high temperature (3,000 - 3,500° absolute). In their turn, the high temperatures cause a high degree of dissociation of the combustion products, which is emphasized by the fact that even with free oxygen present, the combustion products are composed not only of completely combusted products, but also of incompletely combusted products (CO; OH) and the original fuel element (H_2). In mixtures with insufficient oxygen free O_2 appears in the combustion products as a result of their dissociation.

At still higher temperatures, the content in combustion products of the atomic gases O, H, N, as well as the NO content becomes noticeable. For the formation of all the products of dissociation listed above (CO, OH, O, H, N, NO) a certain amount of energy is expended by the corresponding molecular gases. Hence the dissociation of the combustion products leads to the incomplete release of the chemical energy in the combustion chamber, the result of which is a negative effect on the degree of conversion of chemical energy of the fuel in the work of expansion. Dissociation is an undesired phenomenon in the operation of the liquid-fuel rocket engine. Moreover, the value of the chemical energy remaining in the combustion products as a result of dissociation may prove to be considerable and it must be considered in thermal calculation of a liquid-fuel rocket engine and in determining design combustion temperature.

The expansion process in a liquid-fuel rocket engine occurs at high temperatures of the combustion products which are in the gaseous state, that is, under conditions insuring the possibility of occurrence of a chemical reaction among the gases which constitute the combustion products. The high temperatures also insure very high chemical reaction speeds.

Under these conditions, the change in the composition of combustion products may be successful after their change in temperature and pressure. Hence, in the expansion process, a change in the composition of the gas may take place which is accompanied by a change in the store of chemical energy in the gas and a conversion of chemical energy into thermal energy.

In thermal calculation of a liquid-fuel rocket engine, it is necessary to take into account the dissociation of the combustion products in the chamber and the change in the degree of dissociation during their expansion in the nozzle section.

Reversibility of Chemical Reactions.

Every reaction in which there is participation by gaseous substances alone can take place both as a straight [simple] reaction and as a reversible reaction.

Let us consider, for example, the gaseous reaction of the type $A + B = AB$. The straight [or simple] reaction of the compound of substances A and B is possible only after the collision of the molecules A and B. If the molecules have a sufficient store of energy in them, the collision leads to the formation of a new molecule AB. In this same gaseous mixture there may also be collisions among molecules representing the reaction product (AB) or the original molecules. These collisions, with a sufficient store of energy, lead to a splitting of the molecules (AB) into molecules of the original substances. Consequently, in a reacting gaseous mixture, a simple reaction between the molecules of original matter and a reverse action in which there is a splitting up of the simple reaction products into the original substance occurs simultaneously. Hence the actual reaction, for example, the reaction of carbon monoxide combustion is written as follows:

$$CO+\frac{1}{2}O_2\rightleftarrows CO_2,$$

or in the general form:

$$A+B\rightleftarrows AB.$$

The latter formula shows that in a gaseous mixture a simple and a reverse reaction (for example, the combustion of carbon monoxide (CO) and the splitting up of CO_2) occur simultaneously.

These reactions are given the name of reversible chemical reactions. In considering these processes, we should not confuse the concept reversible chemical reaction with the reversibility of the thermodynamic process. The thermodynamic process, which is accompanied by a chemically reversible reaction, may be irreversible, if we do not observe the conditions for the taking place of this process by an infinite number of states of equilibrium differing from each other by infinitely small amounts.

The probability of a simple and a reversible reaction taking place is determined by the number of effective collisions which actually lead either to the formation of reaction product molecules or to their dissociation. The first factor determining the number of effective collisions is the total number of collisions between the molecules.

The total number of collisions between given molecules depends on the quantity of these molecules in the mixture. For example, the intensive straight reaction leads to a decrease of the content in the gas of molecules in their original form. Because of this fact, there is a decrease in the number of collisions which may lead to the formation of molecules of the kind AB. Then, too, in the mixture there is an increase in content of molecules of the reaction product which leads to an increase in the number of collisions which can bring about the dissociation of the reaction product molecules AB into the original substances A and B.

Another factor determining the number of effective collisions is the store of energy in the colliding particles necessary for a reaction to take place. This store of energy is called the activation energy.

For a simple reaction (combustion reaction) which occurs with a liberation of heat due to the formation of new chemical compounds, the activation energy needed is relatively small because it is needed only to give a stimulus to the regrouping of the atoms in the molecules of the reacting substances.

For the reverse reaction (the reaction of dissociation of the combustion products), the store of energy necessary for a collision that causes a break-up of the molecules should be at least greater than the energy of the chemical compound released during the simple combustion reaction.

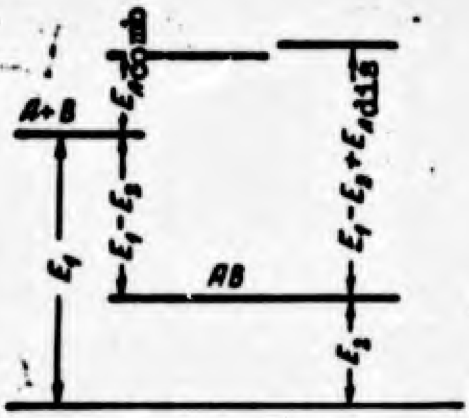

Figure 49. A diagram of the energy levels in simple and reversible reactions.

A diagram of the energy levels in a combustion reaction (a simple reaction) and dissociation (a reversible reaction) is given in Figure 49. The mixture of original molecules (A + B) possesses a certain store of energy which we designate by E_1.

To permit a simple combustion reaction to occur, the colliding molecules should possess an energy of activation $E_{A\ comb}$ [comb = combustion]. After the reaction its product (AB) has a smaller supply of energy E_2. The quantity of energy during the reaction amounts to $E_1 - E_2$. In order for a dissociation reaction of the substance AB to take place, the colliding molecules should possess a store of energy equal at least to $E_1 - E_2$. In addition, the reverse reaction also requires its corresponding energy of activation $E_{A\ dis}$ [dis = dissociation], because the total store of energy which the colliding molecules should possess is $E_1 - E_2 + E_{A\ dis}$. The value $E_1 - E_2 + E_{A\ dis}$ is always greater than the value $E_{A\ comb}$.

Chemical Equilibrium in a Gaseous Mixture.

The source of activation energy and energy necessary for the decomposition of the combustion products is the thermal motion energy of the particles making up the gas.

The thermal motion is characterized by a very uneven distribution of the energy among the particles. The quantity of particles possessing a given store of energy is determined by means of the equation of Maxwell and has the following form:

$$N_1 = AN_0 e^{-\frac{\varepsilon_1}{kT}} \varepsilon_1^2,$$

where N_1 is the number of particles having a supply of energy ε_1;

N_0 is the total number of all the particles;

A is a certain constant;

T is the absolute temperature which is the measure of the total store of energy in the gas;

k is the Boltzmann constant.

The distribution curves of the particles based on energy are given in Figure 50. The number of particles possessing a given store of energy is at a maximum at a certain energy ε_{max}. Even though the quantity of particles having a store of energy $\varepsilon_i > \varepsilon_{max}$ decreases with an increase in ε, the gas always has particles with a relatively large store of energy.

In such a distribution of energy among the particles of gas, there is the possibility of a dissociation reaction because in such a gas there are always particles whose store of energy is sufficient for such a reaction.

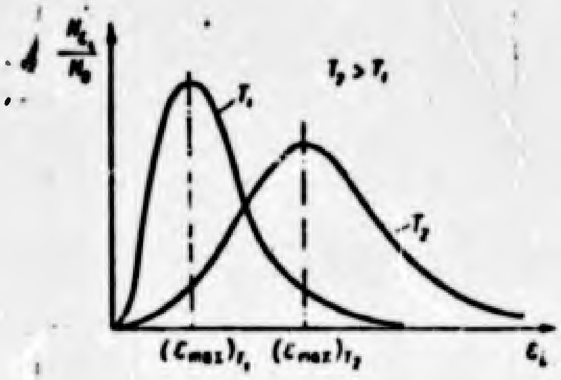

Figure 50. Distribution of the particles on the basis of the energy levels at different temperatures.

With an increase in the temperature of the gas, the relative quantity of particles having a large store of energy is increased $(\varepsilon_{max})T_2 > (\varepsilon_{max})T_1$, and consequently there is an increase in the probability of the reverse reaction.

As the simple reaction of combustion takes place the velocity of its reaction (that is, the number of combined molecules A and B in a unit of time) is proportionately decreased as a result of the decrease in the total number of collisions among the molecules of the initial substances. The velocity of the reverse reaction at the given temperature of the mixture is simultaneously increased as a result of the increase in the number of collisions in which there is participation by the molecules of the products of reaction.

As a result of this, an instant arrives when the velocity of the simple and the reverse reactions are exactly equal to each other. Then the average chemical composition of the gas will not change even though the simple and reversible reactions take place in it with equal velocity. The gas mixture in this case is in chemical equilibrium. This equilibrium is a dynamic equilibrium resulting from the presence in the gas of two opposite processes taking place with equal velocity.

If we increase the temperature T of the gas mixture, the number of molecules having a large store of energy is increased, leading to an increase in the velocity of the reverse reaction of decomposition of the combustion products and a destruction of the equilibrium established with the previous temperature. In the gas mixture there will be an increase in the number of initial molecules causing an increase in the velocity of the simple reaction because of an increase in the total number of collisions between the molecules A and B. Finally, with an increase in the temperature of the gas, a state of equilibrium characterized by equality in the velocity of the simple and reverse reactions is re-established but with a higher content in the gas mixture of the dissociation products. Hence the temperature of the gas mixture exercises an influence upon the composition of this mixture; and in such a way that with an increase of temperature there is an increase in the mixture of the content of the dissociation products, the formation of which requires the expenditure of heat.

The Constant of Equilibrium of a Chemical Reaction.

The above qualitative picture of the establishment of equilibrium in gaseous mixtures can also be presented quantitatively.

Let us consider the reversible chemical reaction in its general form as it takes place in a mixture of gases. Its equation may be written as follows:

$$aA+bB+\ldots\rightleftarrows cC+dD+\ldots, \qquad (II.47)$$

where a, b, c, d are the coefficients of the reaction;

A, B, the designation of the gases, the initial products;

C, D, the designation of the gases, products of the reaction.

Since below we shall apply the theory of chemical equilibrium to the phenomenon of dissociation of the combustion products, we agree to write each of the reactions so that in the simple [straight] form it is a reaction of dissociation and is accompanied by the transformation of thermal energy into chemical energy.

For example, the reaction of dissociation of carbon monoxide gas is written in the following form:

$$CO_2 \rightleftarrows CO+\frac{1}{2}O_2+94 \text{ kilo-cal/gram-mole} \tag{II 48}$$

$$\left(a=1;\ c=1;\ d=\frac{1}{2}\right).$$

The reaction for the formation of nitric oxide (NO) is also accompanied by a loss of heat; that is, from our point of view, it is a reaction of dissociation. It is written in the form:

$$N_2+O_2 \rightleftarrows 2NO+21 \text{ kilo-cal/gram-mole} \tag{II.49}$$

$$(a=1;\ b=1;\ c=2).$$

We must know the velocity of the simple and reverse reactions. By velocity of reaction we mean the ratio of the change in the concentration of the substance ΔC to the time Δp, in the course of which this change of concentration takes place. Hence the velocity of the reaction is:

$$u=\frac{\Delta C}{\Delta t}.$$

In this case the sign of the velocity has no importance, because we may speak both of the velocity of formation of new products and of the velocity of the destruction of the original substances.

The value of the concentration C which enters into the equation of reaction velocity represents the amount of substance in a unit of volume and is usually determined as the number of gram-molecules h_i of a given substance in a cubic meter of content:

$$C_i = \frac{n_i}{V} \text{ gram-mole/m}^3$$

For the determination of the velocity of the reaction we must employ the law of reacting masses in accordance with which the velocity of a chemical reaction is proportional to the concentrations of the reacting substances taken in degrees determined by the coefficients of reaction (a, b, c, d). For example, in the general form the velocity u_1 of the reaction of dissociation (II.47) may be written as follows:

$$u_1 = K_1 C_A^a C_B^b \ldots \tag{II.50}$$

C_A, C_B are the concentrations of the substances A, B, etc., expressed in moles per unit of volume;

K_1 is the coefficient of the proportionality, called the constant of the velocity of reaction. This value is characteristic of each reaction. It depends on the temperature and increases with the temperature.

For example, the velocity of the dissociation reaction of CO_2 (II.48) can be written in the form:

$$u_1 = K_1 C_{CO_2}. \tag{II.51}$$

The velocity of the reverse reaction (II.47) is determined by the equality.

$$u_2 = K_2 C_C^c C_D^d \ldots \tag{II.52}$$

In the application to reaction (II.48) the velocity of the reverse combustion reaction of CO is written in the form:

$$u_2 = K_2 C_{CO} C_{O_2}^{\frac{1}{2}}.$$

In chemical equilibrium of a gas mixture, the velocity of the simple reaction u_2 is equal to the velocity of the reverse action, i.e.,

$$K_1 C_A^a C_B^b \ldots, = K_2 C_C^c C_D^d \ldots \tag{II.53}$$

or

$$\frac{K_1}{K_2} = \frac{C_C^c C_D^d \ldots}{C_A^a C_B^b \ldots}. \tag{II.54}$$

In the application to reaction (II.48) we have:

$$\frac{K_1}{K_2} = \frac{C_{CO} C_{O_2}^{\frac{1}{2}}}{C_{CO_2}}. \tag{II.55}$$

This expression indicates that under the conditions of equilibrium the concentrations of all the reacting substances should be in a definite relationship to each other. Thus the value of the ratio $\frac{K_1}{K_2}$ is called the constant of equilibrium, expressed by the concentration, and is designated by K_c. Just as is the case with values K_1 and K_2, the value K_c depends only on the temperature and the type of chemical reaction.

The constant of equilibrium is a value tying together the equilibrium of the concentration of substances in their mixture. By means of this value we can find the composition of the mixture and also determine the change in composition with the change in external conditions.

In the study of the dissociation of gas mixtures it is more convenient to employ not the value of the concentration C_i but the values of the partial pressures p_i.

The concentration C_i can be expressed by a partial pressure of the gas. For this purpose we replace the number of moles h_i of the gas by the partial pressure of the gas making use of the equation for the state of the gas which, in accordance with Dalton's law, can be applied to any gas entering into the gas mixture.

$$p_i V = h_i RT, \tag{II.56}$$

where R is the universal gaseous constant.

V is the volume occupied by the gaseous mixture; hence:

$$h_i = \frac{p_i V}{RT},$$

consequently,

$$C_i = \frac{h_i}{V} = \frac{p_i V}{RTV} = \frac{p_i}{RT}. \qquad \text{(II.57)}$$

Let us now substitute this expression in the equation of the constant of equilibrium (II.54)

$$K_C = \frac{K_1}{K_2} = \frac{p_C^c p_D^d \cdots}{p_A^a p_B^b \cdots} (RT)^{[a+b+\ldots-(c+d+\ldots)]}. \qquad \text{(II.58)}$$

The ratio:

$$\frac{p_C^c p_D^d \cdots}{p_A^a p_B^b \cdots}$$

is called the constant of equilibrium, expressed by partial pressures, and is designated by K_p. The difference [c + d + ... - (a + b + ...)] determines the change in the number of moles of gas with a reaction of the type considered and is designated by $\Delta\nu$.

We can express the value of the constant of equilibrium K_p in the form:

$$K_p = \frac{K_1}{K_2} (RT)^{-\Delta\nu}; \qquad \text{(II.59)}$$

It determines the partial pressures of the gases in the gaseous mixture, which is in chemical equilibrium. Below we shall employ only this constant, and hence we shall drop the symbol p in the designation of the constant. For the reactions considered above, resulting in the formation of nitric oxide and the dissociation of carbon monoxide the constants of equilibrium are written in the form:

$$K = \frac{p_{NO}^2}{p_{N_2} p_{O_2}} \text{ and } K = \frac{p_{CO} p_{O_2}^{\frac{1}{2}}}{p_{CO_2}}.$$

or in the general form for the reaction (II.47):

$$K=\frac{p_C^c p_D^d\cdots}{p_A^a p_B^b\cdots}. \qquad (II.60)$$

The constant of equilibrium for an ideal mixture of gases depends only on the temperature. This dependence is extremely complicated and for the constant of the equilibrium of gases -- the combustion products of liquid-fuel rocket engines -- it is impossible to give an analytical expression tying up the constant of equilibrium and the temperature. Hence in the calculations we shall see the tables of the values of the constants of equilibrium at different temperatures.

The constants of equilibrium of the basic reactions taking place in the chamber of the engine are given in Appendices 1 and 2.

In addition to the tables cited, we may also encounter in practical work tables with other values for the same constants of equilibrium. This takes place as a result of the fact that in computing the constants of equilibrium it is necessary to know many values characterizing molecules, and, chiefly, the value of the change in energy during the reaction. For many gases these values are precisely determined all the time, and with them there is a change in the values of the constants of equilibrium.

In the employment of the tables of constants of equilibrium, we should notice the form in which the reaction is presented for which the value of the constant is given.

Sometimes the constants are written not as constants of the reaction of dissociation but as constants of the reactions of combustion.

For example, reaction (II.48) may be written in the form:

$$CO+\frac{1}{2}O_2\rightleftarrows CO_2$$

and the value of the constant will be:

$$K'=\frac{p_{CO_2}}{p_{CO}p_{O_2}^{\frac{1}{2}}},$$

that is, it is the reverse value of the constant K_1, given in Appendix 2.

In addition, chemical equations are sometimes written so as to avoid fractional coefficients.

For example, we may write the reaction (II.48) as follows:

$$2CO_2 \rightleftarrows 2CO + O_2.$$

For the reaction written in this form:

$$K'' = \frac{p_{CO}^2 p_{O_2}}{p_{CO_2}^2},$$

that is, $K'' = K_1^2$.

Influence of Temperature and Pressure on the Composition of the Combustion Products.

If nothing prevents a chemical reaction, the composition of the combustion products is determined entirely by the temperature and total pressure of the gas mixture, and the weight proportions of the chemical elements entering into the compounds making up the combustion products.

The combustion products composition of a given fuel (with given weight proportions of chemical elements) is determined by the temperature and to a lesser degree by the pressure.

An accepted formula of reaction, when the straight reaction is one of dissociation, is that the value of the constant of equilibrium increases with an increase in temperature. This dependence is very pronounced and the degree of dissociation rapidly increases with an increase in temperature and decreases with a decrease in temperature.

A reduction in the temperature leads to an increase in the content of the gaseous mixture of the combustion products; that is, the release of chemical energy and the conversion of that energy into heat energy takes place more frequently at low temperatures than at high temperatures.

Pressure has less influence on the composition of the combustion products. With a decrease in the total pressure on the gas mixture of the combustion products of liquid-fuel rocket engines, there is an increase in the gas mixture of the relative content of the incompletely combusted products and, in general, of all the products whose formation is accompanied by a loss of heat and an increase in chemical energy. This means that the degree of dissociation of the combustion products increases. An increase in pressure, however, somewhat reduces the dissociation.

This rule, however, is not valid for those gas mixtures in which the chemical reaction takes place without a change in the number of moles; that is, when $\Delta\nu = 0$. As an example of such a reaction we can cite the reaction for the formation of nitric oxide (II.49). In this case the pressure under which the gas mixture exists does not influence its composition at all.

If the composition of the combustion products and, consequently, also the degree of their dissociation corresponds precisely to external conditions (temperature and pressure), the gas system can remain for any length of time in this state -- that is, in equilibrium.

In the order of thermodynamic processes for gas mixtures, there may also be another instance. If as a result of certain conditions the chemical reactions necessary for a change in the composition of a mixture (in relation to the change in temperature and pressure) are interfered with, the composition of the gas mixture will not correspond to the temperature and pressure; that is, the combustion products will not be in a state of equilibrium. After the elimination of the conditions interfering with the required reactions (or if they take place slowly, after the passing of a certain length of time), the gas mixture reaches a state of equilibrium.

Below we shall consider only one process -- the most essential one for the study of a liquid-fuel rocket engine, namely, the adiabatic process (without an exchange of heat with the surrounding medium) of expansion of a chemically-active gas mixture of combustion products.

In the adiabatic expansion process of such a gas mixture, its pressure and temperature decrease and, consequently, there should also be a change in the composition of the gases.

In accordance with what we said above (taking into account the predominant importance of temperature), approaching the expansion equilibrium the degree of dissociation of the gas must decrease and the expansion process occurring in the nozzle will be the reverse of the reactions of dissociation -- reactions of compounds of previously dissociated atoms and molecules. This phenomenon is called recombination of the combustion products. Likewise, in the recombination process some completely combusted products are formed and chemical energy is released. This energy transforms into thermal energy of gas even though the heat imparted to the gas comes from the outside.

SECTION 13. EQUILIBRIUM AND NONEQUILIBRIUM IN THE COMBUSTION PRODUCTS EXPANSION

Equilibrium Expansion.

The equilibrium expansion of a chemically active gas mixture is that process of expansion in which, at each given moment of time in the course of the process, the composition of the gas mixture will be determined by the conditions of chemical equilibrium. This means that with a change in temperature and pressure there will be a change in the composition of the gas mixture corresponding to the conditions of equilibrium.

If the expansion process takes place when there is equilibrium, the adiabatic expansion process will take place in a reverse order thermodynamically. Consequently, the entropy of the gas mixture will remain constant because of which we shall call this process isoentropic.

The index of an isoentropic process is determined in a manner analogous to the determination of the index for the adiabatic expansion process of a mixture of constant composition with its relationship to specific heat with a constant pressure and with a constant volume. However, in the particular instance, to determine the value of the thermal heat capacity, the chemical energy of the gas mixture should be included in the internal energy and its heat content. As a result, the thermal capacities given above, designated by C_p' and C_v', should take into account the total change of energy of the gas mixture including also the change in the chemical energy dependent on temperature change.

These thermal capacities C_p' and C_v' differ from the usual thermal capacities C_p and C_v, which are determined only by the change in the heat forming the internal energy of the system. Therefore:

$$c_p' = \frac{\Delta I_p}{\Delta T} \text{ and } c_v' = \frac{\Delta U_p}{\Delta T}, \qquad (II.61)$$

where ΔI_p and ΔU_p represent the change in the total thermal capacities and internal energy corresponding to the temperature interval ΔT, or

$$c_p' = \frac{\Delta I + \Delta U_{chem}}{\Delta T} = c_p + \frac{\Delta U_{chem}}{\Delta T} \qquad (II.62)$$

and

$$c_v' = \frac{\Delta U + \Delta U_{chem}}{\Delta T} = c_v + \frac{\Delta U_{chem}}{\Delta T}. \qquad (II.63)$$

In view of the relatively small influence of pressure on the equilibrium of the composition, we may consider the value ΔU_{chem} in the expressions (II.62) and (II.63) as the same. The ratio $\frac{C_p}{C_v}$, determining the value of the index for the isoentropic process n_{is}, amounts to n_{is} [is = isoentropic].

$$n_{is} = \frac{c_p + \frac{\Delta U_{chem}}{\Delta T}}{c_v + \frac{\Delta U_{chem}}{\Delta T}} = 1 + \frac{AR}{c_v + \frac{\Delta U_{chem}}{\Delta T}}. \qquad (II.64)$$

Comparing the equation obtained (II.64) with the index of the adiabatic process for gases of constant composition;

$$k = 1 + \frac{AR}{c_v},$$

we can establish the following.

The index of the isoentropic process is always smaller than the index of the adiabatic curve for the combustion products when their composition remains unchanged. This of course is obvious, since the process of equilibrium expansion of the reacting combustion products is accompanied by a conversion of chemical energy into thermal energy. This is something which is equivalent to the supplying of heat to a gas of constant composition.

The adiabatic process with an index of the adiabatic curve k is a particular instance of an isoentropic process in chemically inert gas.

For determining n_{is} to calculate the process of equilibrium expansion, the change in the composition of the combustion products under given conditions must be known; that is, the calculation of the isoentropic discharge should be made taking into account the change in the composition of the gas in the expansion process. The concrete methods for calculating the index of isoentropic expansion will be given in Chapter VI, dealing with the thermal calculation of the liquid-fuel rocket engine.

Just as for an inert gas, in the case of the thermodynamic process taking place in a chemically active gaseous mixture, we may write:

$$c'_p = \frac{n_{is}}{n_{is}-1} AR \text{ and } c'_v = \frac{1}{n_{is}-1} AR. \qquad \text{(II.65)}$$

In the process of isoentropic expansion, a change will take place in the total heat content of the gas. It can be determined by the equation:

$$\Delta I_p = c'_p \Delta T = c'_p (T_2 - T_1).$$

Considering further that:

$$-\Delta I_p = c'_p (T_1 - T_2)$$

and

$$T_2 = T_1 \left(\frac{p_2}{p_1}\right)^{\frac{n_{is}-1}{n_{is}}},$$

(II.66)

and also the first of the correlations (II.65), we obtain:

$$I_1 - I_2 = -\Delta I_p = \frac{n_{is}}{n_{is}-1} ART_1 \left[1 - \left(\frac{p_2}{p_1}\right)^{\frac{n_{is}-1}{n_{is}}}\right]. \qquad \text{(II.67)}$$

Below we shall omit the minus sign.

The equalized expansion of chemically active mixtures of combustion products is a highly advantageous process accompanied by the maximum liberationof useful work by expansion because there is transfer into this work of a part of the chemical energy converted into thermal energy as a result of the recombination of the combustion products.

Nonequalized Expansion.

If for any reason the chemical reactions of recombination necessary for the establishment of equilibrium in the process of expansion are deacelerated, and the composition of the gas is not able to change in keeping with T and P, then the process of expansion does not pass through a state of equilibrium. Such a process is irreversible, and the amount of work performed in this case will be less.

If in the expansion of a gaseous mixture its composition in general does not change even though according to conditions of equilibrium it should change, this process of expansion is called a chemically limited nonequalized expansion.

Relative to a liquid-fuel rocket engine, this would mean that the reaction of recombination in the nozzle does not take place, and that a gas of constant composition flows along the nozzle just as in the combustion chamber. The index of this process, just as the index of the adiabatic process which takes place in inert gas, is determined by the index of the adiabatic curve k which is calculated on the basis of the composition of the products in the chamber. Since $k > n_{is}$, the work of expansion in this same interval of pressure will be less than with the isoentropic discharge (Figure 51).

In this case the combustion products coming from the engine carry away with them the excess supply of chemical energy which is contained in the mixture of gases having an excessively high content of products of dissociation. The liberation of this energy is possible even after the termination of the expansion process in the engine, but for the performance of useful work of expansion in the engine it is useless.

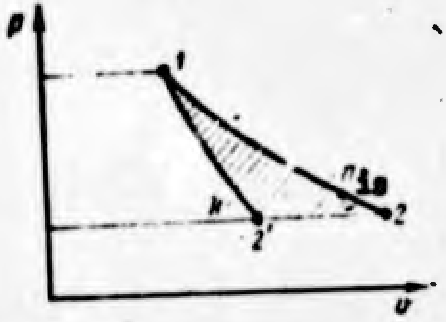

Figure 51. The maximum equilibrium and maximum nonequilibrium expansion of the products of combustion.

1 2 -- limiting equilibrium; 1 2' -- limiting nonequilibrium.

QUESTIONS FOR REVIEW

1. By what values is the state of a gas characterized? What is the measure of these values?

2. Write the mathematical expression of the first law of thermodynamics. Explain its meaning.

3. What is meant by the internal thermal energy of a gas?

4. What movements are possible for a monoatomic molecule and for a diatomic molecule?

5. What is meant by the saturation of the degree of freedom?

6. What is the dependence of the specific heat content on [illegible] temperature?

7. What does heat content of gas mean?

8. What determines the internal energy and the heat content of a gas?

9. What is the chemical energy of a gas called?

10. What does total heat content mean?

11. Write the general equation of a polytropic process.

12. How is heat converted into work in isothermic expansion?

13. Give a definition of the adiabatic process.

14. To what is the work of the adiabatic process equal?

15. What is the simplest formulation of the second law of thermodynamics?

16. How does the entropy of a system change during the transmission of heat from one body to another?

17. Explain the values entering the formula (II.46) for the calculation of the entropy of a mixture.

18. What is meant by the dissociation of combustion products?

19. What is meant by reversibility of chemical reactions?

20. Why does a reaction of dissociation become possible in a gaseous mixture?

21. How is the equilibrium of the composition of a gaseous mixture established?

22. What determines the constant of equilibrium?

23. Write the constant for equilibrium, expressed in partial pressures, for the dissociation reaction of molecular hydrogen to atomic hydrogen.

24. How does the process of equalized expansion take place in a chemically active gaseous mixture?

25. What is the relationship between the isoentropy index n_{is} and the adiabetic curve index k?

26. How does the process of chemically limited nonequalized expansion take place?

27. Of what do the losses of chemically limited nonequalized expansion consist when compared with equalized expansions?

CHAPTER III

PERTINENT INFORMATION ON GAS DYNAMICS[1]

SECTION 14. THE BASIC LAWS OF THE GAS FLOW

In considering the basic laws of the gas flow we shall make the same assumption we made previously in the derivation of the thrust equation: the gas flow is assumed to be steady and uniform. Furthermore, in this section we shall not take into account the influence of viscosity and the corresponding forces of friction on the flow.

Equation of the Law of Conservation of Mass.

Let us consider the gas flow along a duct of variable area between sections I and II, situated perpendicularly to the axis of the flow (Figure 52). Given the conditions of a stationary course of gas, its parameters at any point of the volume between sections I and II remain unchanged with the passage of time; and consequently, the mass of the gas between these sections is also the same at any moment of time.

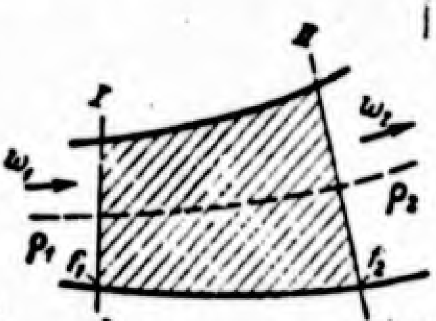

Figure 52. For the derivation of the equation of the law of conservation of energy.

---

[1] In this chapter, just as in Chapter II, we present only the material which will be needed later in the calculation of the liquid-fuel rocket engine.

In the flow of gas along the duct, this situation may exist only on condition that the mass of gas m_1 flowing in a unit of time through section I is equal to the mass of gas m_2 flowing through section II, that is,

$$m_1 = m_2$$

Since sections I and II were selected in an entirely arbitrary manner, these equalities may refer to any section of the flow considered, and consequently the mass flow rate per second of gas through any section of the flow f remains constant:

$$m = \text{const}$$

The mass flow rate of gas with uniform flow in a section perpendicular to the direction of the velocity of flow is expressed as $m = \rho f w$; consequently for the flow:

$$\rho f w = \text{const} \qquad \text{(III.1)}$$

that is, the mass flow rate of gas per second in any section of the duct remains constant.

Equation (III.1) expresses the law for conservation of mass relative to a gas flow. It is also often times called the equation of continuity.

For a noncompressible liquid ρ = const, in connection with which the equation of the law for conservation of mass is simplified and leads to the simple correlation:

$$f w = \text{const} \qquad \text{(III.2)}$$

or

$$f = \frac{\text{const}}{w}$$

The equation of the law for the conservation of mass expressed in this form indicates that for an increase in the velocity of a noncompressible liquid it is always necessary to reduce the cross section of the flow if the flow rate is to remain unchanged.

The Equation for the Law of Conservation of Energy.

In a gas flow a transformation from one form of energy into another may occur. Of course we should then observe the law for conservation of energy. Let us give the derivation of the equation for the law of conservation of energy in the simplest case of a uniform adiabatic flow of a chemically active reacting gas without friction against the walls. Inasmuch as no heat is added or removed, the total energy of the flow E remains constant:

$$E = \text{const} \tag{III.3}$$

In the case considered the net energy of the gas flow consists of the following:

-- internal heat energy $c_v T$;

-- chemical energy U_{chem};

-- kinetic energy of the directed movement of the gas flow $\frac{w^2}{2g}$;

-- potential energy of pressure $p \cdot v$ (see Section 9).

We neglected only the potential energy of weight because in the flow of gas its influence on the net store of energy is very small.

By substituting in expression (III.3) the components for the net energy of the gas flow, measured in heat units, we obtain:

$$c_v T + Apv + U_{chem} + A\frac{w^2}{2g} = E = \text{const.} \tag{III.4}$$

This is also the equation of the law for the conservation of energy of a gas flow.

Let us simplify the expression of the equation (III.4). The sum $c_v T$ + U_{chem} + Apv is the total heat content of the gas mixture I_p. Consequently, the equation (III.4) may be written in the form:

$$I_p + A\frac{w^2}{2g} = \text{const}, \tag{III.5}$$

that is, in the adiabatic flow of a chemically active gas, in any section of the duct, the sum of the total heat content and the kinetic energy of the gas remains constant.

The equation of the law for the conservation of energy is applicable also to the movement of noncompressible true liquids. And it can be simplified to a considerable extent because in the flow process of the noncompressible liquid no change in the internal heat and chemical energy takes place. Hence, in the case considered (without taking into account the change in the potential energy of the liquid's weight, that is, the height of the duct), in accordance with equation (III.4):

$$Apv + A\frac{w^2}{2g} = \text{const.}$$

By taking into account the fact that $gv = \frac{1}{\gamma}$ and cancelling A, we obtain:

$$\frac{p}{\gamma} + \frac{w^2}{2} = \text{const.} \tag{III.6}$$

The equation of the law for the conservation of energy for noncompressible liquids (III.6) is called the theorem of Bernoulli and is often times employed in calculating the most diverse instances of the flow of drop liquids.

The equation (III.5) is employed for calculation of the velocity of the gas flow along the nozzle of the liquid-fuel rocket engine.

Let us consider two sections of the nozzle: I-I and the flow section and then apply the equation for the law of the conservation of energy.

$$i_{p1} + A\frac{w_1^2}{2g} = i_p + A\frac{w^2}{2g}.$$

whence,

$$\frac{A}{2g}(w^2 - w_1^2) = i_{p1} - i_p \tag{III.7}$$

Equation (III.7) shows that an increase of kinetic energy in the flow between the two sections of the duct is equal to the drop in the total heat content of the gas between these two sections.

Let us convert equation (III.7) so that it will serve for the calculation of the velocity

$$w=\sqrt{w_1^2+\frac{2g}{A}(I_{p1}-I_p)}. \qquad \text{(III.8)}$$

In the design of the liquid-fuel rocket engine, the initial section of the gas flow is the combustion products inlet section to the nozzle; consequently, the velocity w_1 is relatively small. Hence its value in formula (III.8) may be disregarded ($w_1 = 0$); let us also designate the difference of the heat contents $I_{p1} - I_p$ by ΔT and reduce the equation (III.8) to the form

$$w=\sqrt{\frac{2g}{A}\Delta I_p} \qquad \text{(III.9)}$$

or, substituting the value of the constants g and A, we obtain:

$$w=91{,}5\sqrt{\Delta I_p} \qquad \text{(III.10)}$$

We can determine the value of the change in the total heat content ΔI_p by knowing the isoentropy of expansion index n_{is}. Then, in following formula (II.67), the drop in the total heat content during the gas expansion from the initial pressure p_1 up to the flow pressure p is equal to:

$$\Delta I_p=AR\frac{n_{is}}{n_{is}-1}T_1\left[1-\left(\frac{p}{p_1}\right)^{\frac{n_{is}-1}{n_{is}}}\right]. \qquad \text{(III.11)}$$

It should be emphasized that an increase in the kinetic energy of a directed movement of gas flow takes place as a result of a change in all the forms of energy possessed by the gas: internal heat, potential pressure energy, and chemical energy. It is precisely for this reason that the value of the heat content for chemically inert gases and the total heat content for chemically active gases is of special importance in the design of liquid-fuel rocket engines.

The flow velocity attained during gas expansion from pressure p_1 to pressur p can be obtained by substitution of the value ΔI_p from formula (III.11) in formula (III.9)

$$w=\sqrt{2g\frac{n_{is}}{n_{is}-1}RT_1\left[1-\left(\frac{p}{p_1}\right)^{\frac{n_{is}-1}{n_{is}}}\right]}. \tag{III.12}$$

The equation (III.12), as well as all the preceding formulas pertain to the flow of a chemically active gas. If there is a gas flow of constant composition, the adiabatic process in the gas flow is characterized by an adiabatic index k and the exhaust velocity should be calculated by the formula:

$$w=\sqrt{2g\frac{k}{k-1}RT_1\left[1-\left(\frac{p}{p_1}\right)^{\frac{k-1}{k}}\right]}. \tag{III.13}$$

To find the velocity of the gas flow in accordance with formulas (III.12) or (III.13), we must know the temperature and composition of the combustion products upon entrance into the nozzle; the index of the process (n_{is} or k) and also the value of the pressure at the entrance of the nozzle and in that section where the velocity is being determined.

SECTION 15. VELOCITY OF SOUND IN GAS

Velocity of Sound.

The equations which describe the gas flow, including the equation for the determination of velocity, were obtained by us without any limitation with respect to the value of the velocity of movement of the gas flow. However, theory and also experience have shown that the characteristics of the gas flow change sharply, depending on whether or not the gas has a high or low velocity. The limit between the low and high velocities is the velocity of sound in a gas. The characteristics of supersonic flow (flow at a high velocity) differ sharply from the characteristics of a subsonic flow (a flow of low velocity).

Sound occurs as a result of the fact that the sounding object causes small periodic changes in pressure and density in the surrounding gas. This occurs with a clearly defined frequency; that is, disturbances are caused which are propagated in the gas with a definite velocity. Consequently the velocity of sound is the velocity of propagation of the small disturbances in the gas.

In technical application of the concept of the velocity of sound, the most essential thing is that the velocity of sound is the velocity of propagation of small disturbances occurring in the gas regardless of whether or not these disturbances are perceived as sound or not.

Derivation of the Formula for the Calculation of the Velocity of Sound[1].

For the determination of the value of the velocity of sound let us consider the following example.

Let us suppose that in a cylindrical tube we enclose a motionless mass of gas with a pressure p, a density ρ, and a temperature T (Figure 53). With the corresponding movement of the piston in the tube, we create a small increase in pressure in the layers of gas adjacent to it, up to a certain value p_1. The density in this case has the value ρ_1 We shall consider the change in pressure $\Delta p = p_1 - p$ as very small in comparison to the initial pressure p_1. The change in density $\Delta \rho = \rho_1 - \rho$ correspondingly will be small.

As a result of the characteristic resiliency of the gas, the local increase in pressure (and together with this the local compression caused by it), in striving to equalize itself, will be propagated along the tube [duct]. The portion of the gas in the presence of the pressure wave acquires a velocity $\Delta \omega$ in a direction from which the particles of gas receive the impulse from the movement of the piston.

Let us suppose that at any given moment of time t_1 the wave of increased pressure reaches the section of the tubes I-I, and at the moment of time t_2, the section II-II.

We select an interval of time $t_2 - t_1$ so small that the distance between sections I-I and II-II will not be greater than the width of the layer of

---

[1] The derivation of the equation of the velocity of sound is taken from the book of Ya. I. Levinson, Aerodinamika bol'shikh skorostey [High Speed Aerodynamics], Oborongiz, 1950.

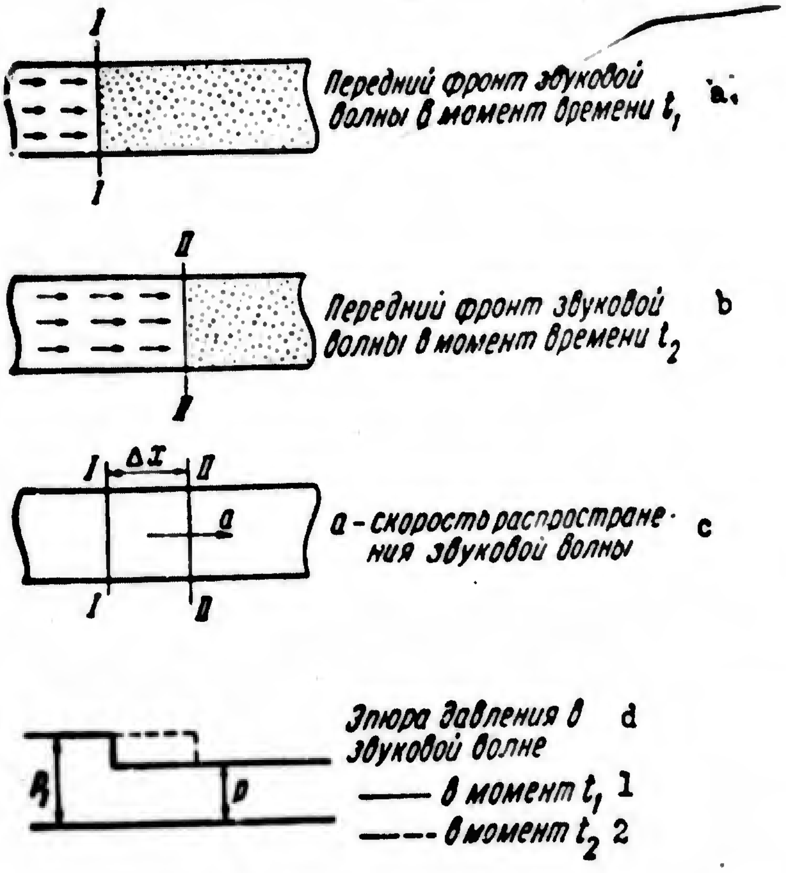

Figure 53. For the derivation of the formula for the velocity of sound.

a -- the front of the sound wave at the moment of time t_1; b -- the front of the sound wave at the moment of time t_2; c -- velocity of propagation of the sound wave; d -- diagram of pressure in the sound wave; 1 -- the moment t_1; 2 -- the moment t_2.

compression. In Figure 53 the diagram for distribution of the pressure along the tube during the moment of time t_1 is represented by a solid line, and its change up to the moment of time t_2 is represented by a dotted line. We designate the distance between sections I-I and II-II by Δx, and the time during which the wave travels this distance, that is, $t_2 - t$, by Δt. Of course the velocity of propagation of the pressure wave (that is, the velocity of sound) can be expressed as the ratio of the path Δx traversed by the wave to the time Δt, during which this path was traversed by it. Let us designate the velocity of sound by a and write:

$$a = \frac{\Delta x}{\Delta t}. \qquad \text{(III.14)}$$

Let us set up an equation for the determination of the value of the velocity of sound.

The increase in the volume of the gas mass between sections I-I and II-II is the result of an additional gas mass flowing into the volume as a result of an acquired velocity Δw.

Let us estimate the increase in the volume of the gas mass between sections I-I and II-II. If we designate the area of the tube section by f, the indicated volume is expressed by $f\Delta x$ (the area of the base by the height), and the increase of the mass in it is expressed by $\Delta\rho f\Delta x$ (the product of the volume by the change in density).

Let us calculate now the flow of the volume of the additional gas mass considered during the time Δt. During one second a mass $\rho_1 f\Delta w$ passes through sections I-I; consequently, flowing after Δt (that is, after the time during which an increase in the mass of the volume calculated above has taken place) is the mass $\rho_1 f\Delta w\Delta t$.

By equating the increase in the gas mass between sections I-I and II-II which occurs during the time Δt, during which time the additional mass enters through sections I-I, we find that:

$$\Delta\rho f\Delta x=\rho_1 f\Delta w\Delta t \qquad \text{(III.15)}$$

or, by dividing both parts of the equality by $f\Delta t$,

$$\Delta\rho\frac{\Delta x}{\Delta t}=\rho_1\Delta w.$$

In accordance with the preceding equation, by substituting the speed of sound a for $\frac{\Delta x}{\Delta t}$, we finally obtain the first equation which we sought:

$$\Delta\rho a=\rho_1\Delta w. \qquad \text{(III.16)}$$

By applying Newton's law, we obtain the second equation necessary for cancellation of the unknown value Δw -- force equals mass multiplied by acceleration.

The force under the action of which the particles of gas between sections I-I and II-II are set in movement is multiplied by the area f and the difference of pressure Δp, that is, $f\Delta p$. The velocity of these particles increases during the time Δt from 0 to Δw; hence the average acceleration is equal to $\frac{\Delta w}{\Delta t}$. The mass receiving the acceleration is equal to:

$$\rho_{av} f \Delta x. \quad [av = average]$$

Hence, the law of Newton gives us the equality:

$$\rho_{av} f \Delta x \frac{\Delta w}{\Delta t} = f \Delta p \qquad (III.17)$$

or, after dividing by f and substituting $\frac{\Delta x}{\Delta t}$ by a, we have the equality:

$$\rho_{av} a \Delta w = \Delta p.$$

Since ρ differs from ρ_1 by the small amount $\Delta\rho$, the difference between ρ_{av} and ρ_1 will be equally small. Hence, in replacing ρ_{av} by ρ_1 in the equation we wrote above, we allow an error which is not greater than that already introduced by the previous assumptions. Then the second equation sought takes on the form

$$\rho_1 a \Delta w = \Delta p. \qquad (III.18)$$

Multiplying the equation (III.18) by equation (III.16), we obtain

$$a^2 = \frac{\Delta p}{\Delta \rho}.$$

The value $\frac{\Delta p}{\Delta \rho}$, necessary for calculation of the speed of sound depends on the law for compression of gases; that is, on the character of the thermodynamic process which takes place in it. If we assume that the compression of a gas in a sound wave takes place isothermically, then, based on the equation for isothermic process, we should note the equality:

$$\frac{p_1}{\rho_1} = \frac{p}{\rho}. \qquad (III.19)$$

But, $p_1 = p + \Delta p$ and $\rho_1 = \rho + \Delta\rho$; hence the preceding relationship may be rewritten in the form:

$$\frac{p+\Delta p}{\rho+\Delta\rho}=\frac{p}{\rho}$$

or in the form:

$$\frac{p}{\rho}\,\frac{1+\frac{\Delta p}{p}}{1+\frac{\Delta\rho}{\rho}}=\frac{p}{\rho}. \qquad \text{(III.20)}$$

By dividing both parts of the equality by $\frac{p}{\rho}$, we obtain:

$$\frac{1+\frac{\Delta p}{p}}{1+\frac{\Delta\rho}{\rho}}=1, \quad \text{or} \quad \frac{\Delta p}{p}=\frac{\Delta\rho}{\rho},$$

whence,

$$\frac{\Delta p}{\Delta\rho}=\frac{p}{\rho}. \qquad \text{(III.21)}$$

Thus, with the isothermic law of compression in a sound wave, we obtain

$$a^2=\frac{p}{\rho}, \qquad \text{(III.22)}$$

or

$$a=\sqrt{\frac{p}{\rho}}. \qquad \text{(III.23)}$$

This formula was obtained in 1687 by Newton. Soon, however, it was found by experiments that this theoretical formula of Newton, with normal atmospheric conditions, gives a value which is approximately 20% less than the speed of sound. In 1810, Laplace succeeded in explaining this deviation. He suggested that sound vibrations are propagated in gas not according to an isothermic law but according to an adiabatic law. The fact is that only very slow vibrations can be isothermic, vibrations in which an equalization of temperatures in the compression fields can take place. Hence Newton's formula can be applied only for those sound waves, the frequency of which is close to 0. With rapid vibrations (with high frequency), a perceptible heat exchange does not have time to occur and the adiabatic agrees more with experience. Direct measurements have clearly confirmed Laplace's assumption.

Let us calculate $\frac{\Delta p}{\Delta \rho}$, according to Laplace's theory. In the adiabatic process we should note the equality:

$$\frac{p_1}{\rho_1^k} = \frac{p}{\rho^k} \tag{III.24}$$

or,

$$\frac{p+\Delta p}{(\rho+\Delta\rho)^k} = \frac{p}{\rho^k}.$$

We can give this equation the following form:

$$\frac{p}{\rho^k} = \frac{1+\frac{\Delta p}{p}}{\left(1+\frac{\Delta\rho}{\rho}\right)^k}\,\frac{p}{\rho^k}$$

or,

$$1+\frac{\Delta p}{p} = \left(1+\frac{\Delta\rho}{\rho}\right)^k. \tag{III.25}$$

By expanding the right part of the equality into a series we obtain:

$$\left(1+\frac{\Delta\rho}{\rho}\right)^k = 1 + k\frac{\Delta\rho}{\rho} + \frac{k(k-1)}{1\cdot 2}\left(\frac{\Delta\rho}{\rho}\right)^2 + \dots \tag{III.26}$$

The change in density in the sound wave $\Delta\rho$ is extremely small when compared to initial density ρ. Even for very strong sound waves the ratio $\frac{\Delta\rho}{\rho}$ has a value of about 0.004. Hence we shall not make a big error if we leave only the first two terms in the expansion -- the one and k $\frac{\Delta\rho}{\rho}$ (in case of infinitely small vibrations, this error is equal to 0).

Thus, rejecting (in view of its small value) all the terms of the series beginning with the term containing the square of the value $\frac{\Delta\rho}{\rho}$, we find that:

$$1+\frac{\Delta p}{p}=1+k\frac{\Delta\rho}{\rho}$$

or,

$$\frac{\Delta p}{\Delta\rho}=k\frac{p}{\rho}. \qquad \text{(III.27)}$$

Consequently, in the adiabatic process of the sound propagation:

$$\left.\begin{aligned} a^2&=k\frac{p}{\rho} \\ a&=\sqrt{k\frac{p}{\rho}}. \end{aligned}\right\} \qquad \text{(III.28)}$$

or

Laplace's formula gives values for the speed of sound under normal atmospheric conditions (760 mm mercury and 15 degrees C) 18.5% greater than Newton's formula, and, as we have already pointed out, it is well confirmed by direct measurements.

The Speed of Sound in a Reacting Gas.

Let us now apply the results obtained as a value of the speed of sound to a case of a chemically active gas mixture. We know that in this mixture the relationship between pressure and density is determined by the relation

$$\frac{p}{\rho^{n_{is}}}=\text{const} \text{ or } \frac{p_1}{\rho_1^{n_{is}}}=\frac{p}{\rho^{n_{is}}}. \qquad \text{(III.29)}$$

Consequently the speed of sound in the reacting mixture of gases, in accordance with (III.28), amounts to:

$$a^2=n_{is}\frac{p}{\rho}. \qquad \text{(III.30)}$$

The given value for the speed of sound will be valid only so long as the chemical reactions leading to a change in the composition of the mixture and the transformation of the chemical energy into heat energy (or inversely) occurs so that it takes place completely within the short period of time that the disturbance passes through the gas. Consequently the process in the sound wave is determined by the isoentropy index n_{is}.

If, for any reason, the speed of the chemical reactions is slowed up and the gas does not change its composition completely during the change in pressure and temperature in the sound wave, the process in the gas will be determined by the adiabatic index k, and the speed of sound in such a gas mixture should be calculated on the basis of formula (III.28)

$$a^2 = k\frac{p}{\rho}.$$

The Dependence of the Speed of Sound on the Temperature.

Formula (III.30) can be given more conveniently in another form. By making use of the equation of the state $\frac{p}{\rho} = gRT$, we obtain

$$a^2 = n_{is} gRT$$

or

$$a = \sqrt{n_{is} gRT}, \qquad \text{(III.31)}$$

and for the adiabatic process with the adiabatic index k:

$$a = \sqrt{kgRT}. \qquad \text{(III.32)}$$

As we can see from these formulas, the speed of sound depends on the temperature of the gas mixture, its composition, the insoentropic or adiabatic index.

For a given mixture, regardless of the change in its composition, we can, with a small error, regard the values R and n_{is} as constants.

Then the speed of sound depends only on the temperature and increases with it.

The speed of sound in the combustion chamber of the liquid-fuel rocket engine reaches very high values. For example, with $n_{1s} = 1.18$; $R=30$ kg-m/kg °C and T = 3,000 degrees absolute temperature (these figures correspond approximately to the composition and temperature of the combustion products of a nitric acid and kerosene propellant), the speed of sound amounts to:

$$a=\sqrt{1{,}18\cdot 9.81\cdot 30\cdot 3000}=1020 \text{ m/sec}$$

The Speed of Sound in Moving Gas.

The square of the speed of sound in a reacting gas is determined by the formula (III.31):

$$a^2=n_{1s}gRT.$$

On the other hand, the value of the total heat content of a reacting gas mixture is equal to:

$$I_p=c_p T=\frac{n_{1s}}{n_{1s}-1}ART.$$

By comparing these two formulas we obtain a connection between a^2 and I_p:

$$I_p=\frac{a^2}{n_{1s}-1}\frac{A}{g}. \qquad \text{(III.33)}$$

Hence the square of the speed of sound in a reacting gas mixture is a measure of its total heat content.

For a gas of constant composition, correspondingly, it will be:

$$I=\frac{a^2}{k-1}\frac{A}{g}. \qquad \text{(III.34)}$$

By making use of the equation (III.33) we can transform the equation for the law of conservation of energy (III.5), giving in it the total heat content according to formula (III.33). By making this substitution, we obtain:

$$\frac{Aw^2}{2g}+\frac{a^2}{n_{1s}-1}\frac{A}{g}=\text{const} \qquad \text{(III.35)}$$

or, cancelling the value $\frac{A}{g}$,

$$\frac{w^2}{2}+\frac{a^2}{n_{1s}-1}=\text{const.} \qquad \text{(III.36)}$$

By expressing the value of the constant in the equation (III.36) in terms of the speed of sound in a motionless gas a_0, that is, when $w = 0$, we obtain

$$\text{const} = \frac{a_0^2}{n_{is} - 1}. \qquad \text{(III.37)}$$

Substituting this expression in formula (III.36), we shall have:

$$\frac{w^2}{2} + \frac{a^2}{n_{is} - 1} = \frac{a_0^2}{n_{is} - 1}. \qquad \text{(III.38)}$$

Since the value a_0 for a gas of given initial conditions is constant and does not depend upon a change in the velocity of flow, then from a consideration of the equation (III.38) we can see that with an increase in w with adiabatic flow of gas the speed of sound drops.

With other processes of discharge, the change in the speed of sound may be determined by the equations (III.31), (III.32); it will depend upon the character of the change in the process of flow of gas having a temperature T.

The Maximum Velocity of Gas.

If the expansion process of gas could be reduced to the absolute pressure in the gas flow, equal to 0, then according to formula (II.30), the temperature of the gas would also be equal to 0; and consequently the total heat content of the gas would also be equal to 0.

This state of the gas flow would be characterized by the total transformation of all the heat content of the gas into kinetic energy. It is evident, of course, that the velocity of the gas obtained in this expansion is the maximum possible for the given initial state of the gas.

In accordance with this, the difference in heat content $\Delta I_p = I_{p_1} - I_{p_2}$ in formula (III.9) going into the increase in velocity will be equal to the following under the conditions of our problem:

$$\Delta I_p = I_{p1} = I_{p0}$$

where $I_{p1} = I_{p0}$ is the heat content of stationary gas.

The value of the maximum velocity w_{max} of gas is determined by the formula

$$w_{max} = \sqrt{\frac{2g}{A} i_{p0}}. \tag{III.39}$$

The value of the maximum velocity of gas can also be estimated by formula (III.38).

In reality, if the temperature of the gas becomes equal to 0, the velocity of sound in it will evidently also become equal to 0, that is, a = 0.

Consequently,

$$\frac{w_{max}^2}{2} = \frac{a_0^2}{n_{is} - 1}$$

or,

$$w_{max} = \sqrt{\frac{2}{n_{is} - 1}} a_0. \tag{III.40}$$

In case of the discharge of gas from a liquid-fuel rocket engine, with parameters indicated in the preceding example, the maximum velocity of discharge which we could obtain would amount to

$$w_{max} = \sqrt{\frac{2}{1,18 - 1}} 1020 = 3410 \text{ m/sec.}$$

In a flow of gas of constant composition, the index of the process becomes equal to k and the maximum velocity must be calculated by the formula

$$w_{max} = \sqrt{\frac{2}{k - 1}} a_0. \tag{III.41}$$

SECTION 16. THE CRITICAL VELOCITY OF GASES AND SPECIAL CHARACTERISTICS OF SUPERSONIC FLOW

Critical Velocity.

By solving equation (III.38) relative to the value of the speed of sound a, we obtain the mathematical connection between the velocity of sound and the velocity of the flow of gases:

$$a^2 = a_0^2 - \frac{\varkappa - 1}{2} w^2. \tag{III.42}$$

Let us employ formula (III.42) in order to determine the limits of the change in the speed of sound in moving gases. If we set $w = 0$ (stationary gas), the velocity of sound will be equal to a_0. In this case, when the velocity of the gas reaches the maximum value w_{max}, the velocity of sound will be 0.

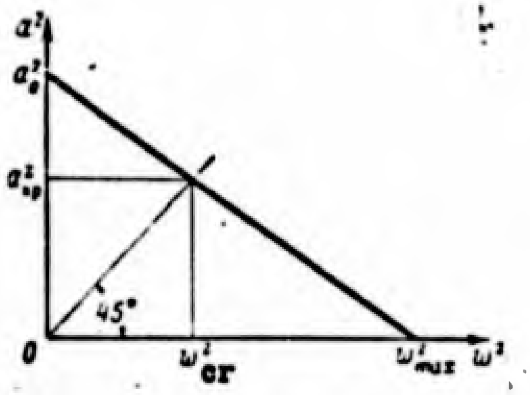

Figure 54. The change in the square of the speed of sound depending on the square of the velocity of the flow of a gas.

a -- speed of sound; a_0 -- speed of sound in stationary gas; $a_{cr} = w_{cr}$ -- critical velocity; w -- velocity of the movement of gas; w_{max} -- the maximum velocity of the flow of a gas.

Hence, with an increase in the velocity of gas from 0 to the maximum w_{max}, the speed of sound decreases from a maximum value a_0 to zero.

The change in the speed of sound as a function of the square of the velocity of the flow of a gas is given in Figure 54.

With this character of change in the velocity of gas and sound, it is possible to have a case in which the velocity of flow of a gas in any section of the flow will be equal to the local speed of sound. Such a state of flow is called the critical flow.

Correspondingly, the velocity of the movement of a gas is called the critical velocity when it is equal to the local speed of sound at a given point. It is designated by w_{cr}. The section of the nozzle in which the velocity of the gas is equal to the local speed of sound is called the critical section.

Hence, in the critical section

$$w_{cr}=a_{cr}. \quad [cr = critical]$$

By applying equation (III.38) to the critical state of the gas we obtain

$$\frac{w_{cr}^2}{2}+\frac{w_{cr}^2}{n_{is}-1}=\frac{a_0^2}{n_{is}-1}, \tag{III.43}$$

whence, the value of the critical velocity will be equal to

$$w_{cr}^2=\frac{2}{n_{is}+1}a_0^2$$

or

$$w_{cr}=\sqrt{\frac{2}{n_{is}+1}}a_0. \tag{III.44}$$

The critical velocity is determined by the initial state of the gas and the index of the isoentropic expansion process and this becomes very clear if we substitute in formula (III.44) the value of the speed of sound a_0:

$$w_{cr}=\sqrt{\frac{2n_{is}}{n_{is}+1}gRT_0}. \tag{III.45}$$

The value of the critical velocity is somewhat less than the speed of sound in stationary gas. In our example the value of the critical velocity amounts to

$$w_{cr}=\sqrt{\frac{2}{1.18+1}}1020=980 \text{ m/sec.}$$

For the chemically inert gas the value w_{cr} amounts to

$$w_{cr}=\sqrt{\frac{2}{k+1}}a_0=\sqrt{\frac{2k}{k+1}gRT_0}. \qquad (III.46)$$

The Mach Number.

The critical speed of sound depends on the initial temperature of the stationary gas and changes its value within wide limits in the flow of gases of different initial states. It is small for cold gases and reaches high values for heated gases. Hence one and the same absolute velocity of gas flow may be subsonic in hot gases and supersonic in cold gases.

The value of the critical velocity also depends on the composition of the gas. It is connected with the composition by the value of the gas constant R and the index n_{is}. Hence in gases of different compositions, which have the same temperature under the initial conditions, one and the same velocity may be subsonic and supersonic. For this reason it is better to characterize the velocity of the gas flow not by the absolute value of its velocity but by the ratio of the speed of flow W to the velocity of sound at the given point a. This ratio is called the Mach number.

$$M = \frac{w}{a} \qquad (III.47)$$

Using the Mach Number as a basis we can draw a conclusion concerning the hydrodynamic characteristics of the gas flow. Then with small Mach numbers, we may neglect compressibility and assume that the gas has a constant density. In this case the gas flow may be calculated by the law of flow for an incompressible liquid.

With the Mach number close to unity we cannot neglect the compressibility of the gas.

The gas flow for which the Mach number is equal to unity differs by reason of the fact that the velocity of its flow is equal to the velocity of sound, that is, it has a critical velocity.

When $M > 1$, the velocity of the gas is greater than the velocity of sound in the gas at a given point.

The Concept of Shock Waves.

The transition of the gas velocity through the speed of sound and the attainment of a Mach number > 1 leads to a sharp qualitative change in the gas flow.

This change consists in fact that small disturbances caused, for example, by some object placed in the flow, are propagated through the gas at the speed of sound only and cannot exercise any influence on the supersonic flow of gas before the object causing the disturbance.

Consequently, the supersonic velocity renders the whole expanse of flow located before the obstacle insensitive to external change. If any object is placed in the subsonic flow, the latter changes its course gradually, without reaching the obstacle. The change in the course takes place as a result of disturbances propagated by the object with the speed of sound against the flow.

Placing an obstacle in the supersonic flow does not lead to a change in the flow before the object. The supersonic flow becomes "blind" -- insensitive to the external reaction against it.

At the same time, with a supersonic flow the former undisturbed flow of gas is impossible in the immediate vicinity of the obstacle; consequently, the parameters of the gas should change sharply. This change takes place because near the obstacle its disturbing effect upon the flow will be very strong. A strong turbulence wave with a high velocity will be propagated at a velocity greater than the speed of sound. However, as it moves away from the obstacle, the intensity of the strong turbulence wave and its velocity will change. The subsequent propagation of this wave will cease and it will remain in this section where its velocity is still supersonic, but now it becomes equal to the velocity of the incident flow. Consequently, a smooth change of the flow parameters will not take place in this section, but a sudden jump-like change will occur. As a matter of fact with a deceleration of the supersonic flow, the so-called shock waves, characterized by a sudden change in the velocity, pressure, and temperature of the gas, occur.

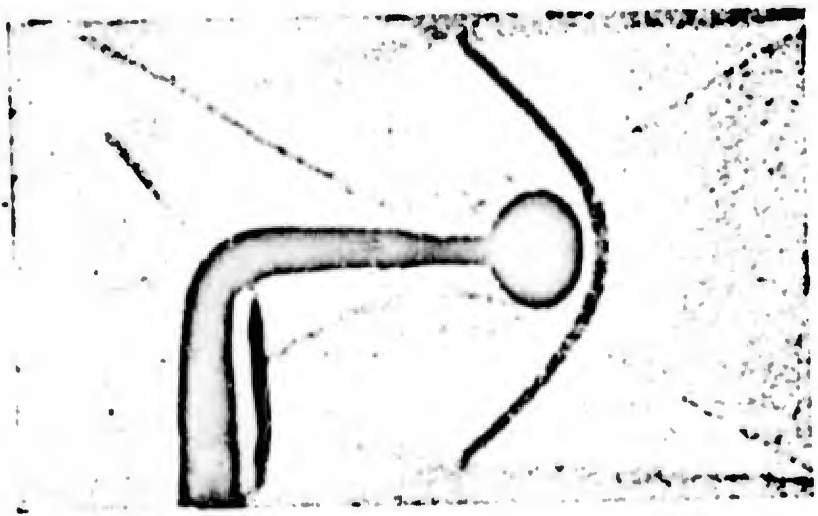

Figure 55. Photograph of a shock wave occurring in a supersonic flow (M=2) around a sphere.

Shock waves are observed in the movement of a gas at supersonic speeds and in the discharge of gases from supersonic nozzles.

A photograph of a shock wave is given in Figure 55.

Stagnation Temperature.

If, after a certain speed has been imparted to a gas as a result of an adiabatic expansion process, a gas is again decelerated adiabatically, a corresponding portion of the gas' total energy which forms the kinetic energy of the gas will be reconverted into internal heat, kinetic energy and pressure energy. The total heat content and temperature of the adiabatically decelerated gas flow which is called stagnation temperature, will be equal to the original total heat content of the gas and the original temperature. Hence, in any part of the adiabatic flow, the stagnation temperature will be the same. For example, with an adiabatic expansion of the combustion products in the nozzle of the liquid-fuel rocket engine the stagnation temperature will be equal to the temperature of the gases in the combustion chamber, and the composition of the combustion products of the decelerated gas will be the same as the composition of the combustion products in the chamber.

SECTION 17. THE ELEMENTARY THEORY OF THE VENTURI-TYPE (LAVAL) EXPANSION NOZZLE

The Form of the Laval Nozzle.

In the acceleration of a gas flow as a result of the gas expansion we may have a transition of the flow speed through the speed of sound. A nozzle insuring a supersonic flow is called a supersonic or Laval nozzle.

To accelerate the flow of a noncompressible liquid, according to formula (III.2), it is necessary to have a continuous decrease in the transversal section of the flow, but in the acceleration of the flow of a compressible gas, the nozzle must have a more complicated form.

To determine the form of a Laval nozzle, let us consider the equation for the law of conservation of mass (III.1), writing it for 1 kg of gas in the form

$$\rho w f_{sp} = \frac{1}{g}, \quad [sp = specific] \qquad (III.48)$$

where f_{sp} is the passage section of the nozzle carrying 1 kg of gas.

Making use also of the correlation $\rho vg = 1$, we obtain

$$f_{sp} = \frac{v}{w}. \qquad (III.49)$$

There occurs in the nozzle an expansion process during which there is a change both in the specific volume v and in the velocity of the gas w.

The most convenient parameter for the calculation of velocity and specific volume is the pressure p. Then, too, with a decrease in p, the velocity of the gas increases and the temperature and speed of sound are decreased. Consequently, with a change of p in the necessary limits, the velocity of the gas may be higher than critical (supersonic).

Let us consider also the changes in the specific volume and velocity, depending upon the ratio of the flow pressure p to the initial pressure at the entrance to the nozzle, which we shall designate by p_2. Let us write the corresponding formula:

$$v = v_2 \left(\frac{p_2}{p}\right)^{\frac{1}{n}} \text{ is}$$

and

$$w=\sqrt{2g\frac{n_{is}}{n_{is}-1}RT_1\left[1-\left(\frac{p}{p_1}\right)^{\frac{n_{is}-1}{n_{is}}}\right]} \qquad (III.50)$$

and let us construct the relation of v and w from the flow pressure p (Figure 56).

The specific volume v will change from the initial specific volume of the gas at the nozzle entrance to v_2 with a pressure p_2 up to the specific volume $v \rightarrow \infty$ with a pressure $p \rightarrow 0$.

The velocity of the flow of the gas changes from 0 at a pressure p_2 (no expansion) up to a maximum velocity w_{max} at $p \rightarrow 0$, because in the latter case we also have $T \rightarrow 0$.

Now, it is not difficult to determine the dependence of f_{sp} on the pressure p, and consequently also on the velocity w.

With $p = p_2$, that is $\frac{p}{p_2} = 1$,

$$v=v_2, \text{ a } w=0,$$

hence, in keeping with (III.49)

$$f_{sp}=\frac{v}{w}\rightarrow\infty.$$

With $p \rightarrow 0$, that is, $\frac{p}{p_2} \rightarrow 0$, the specific volume tends toward infinity, and the velocity of the gas tends towards a finite value w_{max}, and hence, we again have $f_{sp} \rightarrow \infty$.

With intermediate values of pressure p, lying between p = 0 and $p = p_2$, the value of the specific passage section of the nozzle f_{sp} has a finite value and changes as shown in the graph of Figure 56 (curve $f_{sp} = \frac{v}{w}$).

With a pressure equal to p_{cr}, we have the minimum value of the necessary passage section f_{sp}. This section is called the critical throat or sometimes the choke section of the nozzle.

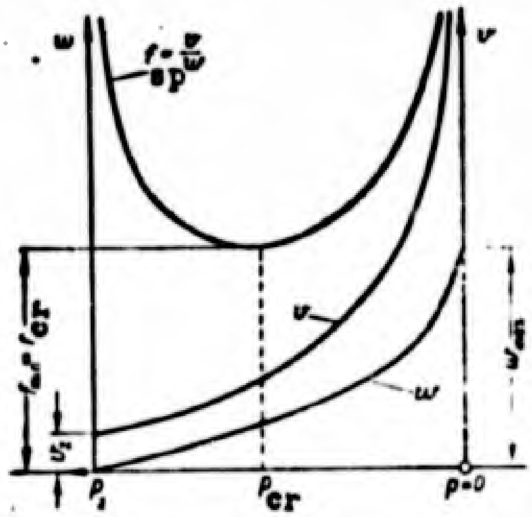

Figure 56. For the determination of the forms of a supersonic (Laval) nozzle.

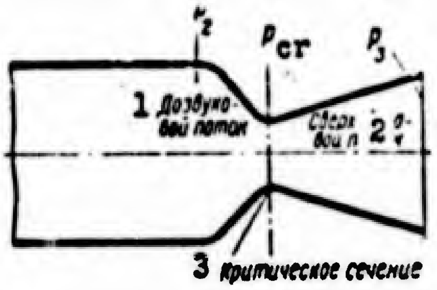

Figure 57. The form of the Laval nozzle.

1 -- subsonic flow; 2 -- supersonic flow; 3 -- throat section.

If we define the value of the speed of sound in the nozzle throat section and the gas flow velocity in it, it appears that these velocities are equal. Hence, in the choke section of the nozzle there is established a critical or local sound velocity of gas. Hence it follows that for an increase in the velocity of a subsonic gas flow, it is necessary to have a decrease in the passage area in the nozzle; and for an increase in the velocity of the supersonic flow, it is necessary to have an increase in the passage area in the nozzle. This is a result of the fact that in the subsonic flow the velocity increases quicker than the increase in the specific volume of the gas while in the supersonic flow the reverse is true. The velocity of the gas increases much slower than the increase in its specific volume.

Hence the supersonic nozzle (the Laval nozzle) always has a narrowing section (subcritical) and a widening section (supercritical). The shape of such a nozzle is shown in Figure 57.

The Critical Pressure Differential.

A critical velocity is established in the minimal section of the nozzle as a result of which this section is also called the critical section, and the difference in pressure at which the critical velocity is reached is called the critical differential.

$$\delta_{cr} = \frac{p_{cr}}{p_1}.$$

In thermodynamics the critical differential is often times designated by the symbol β_{cr}.

To determine the numerical value of the critical differential, we find the critical velocity w_{cr} and the speed of sound in the critical section and equate their values.

According to (III.31) and taking into account (II.25):

$$a^2_{cr} = n_{is} gRT_{cr} = n_{is} gRT_1 (\delta_{cr})^{\frac{n_{is}-1}{n_{is}}}.$$

According to formula (III.12)

$$w^2_{cr} = 2gRT_1 \frac{n_{is}}{n_{is}-1}\left(1 - \delta_{cr}^{\frac{n_{is}-1}{n_{is}}}\right).$$

According to the concept of critical velocity

$$a^2_{cr} = w^2_{cr},$$

that is:

$$n_{is} gRT_1 \delta_{cr}^{\frac{n_{is}-1}{n_{is}}} = 2gRT_1 \left(1 - \delta_{cr}^{\frac{n_{is}-1}{n_{is}}}\right) \frac{n_{is}}{n_{is}-1}, \qquad \text{(III.51)}$$

whence, after cancelling the value $n_{is}gRT_2$, we obtain:

$$\delta_{cr}^{\frac{n_{is}-1}{n_{is}}} = \frac{2}{n_{is}-1} - \frac{2}{n_{is}-1}\delta_{cr}^{\frac{n_{is}-1}{n_{is}}}.$$

or after transformation:

$$\frac{p_{cr}}{p_2}=\beta_{cr}=\left(\frac{2}{n_{is}+1}\right)^{\frac{n_{is}}{n_{is}-1}}. \qquad (III.52)$$

For the adiabatic expansion of a chemically inert gas, the formula for the critical differential takes on the form:

$$\beta_{cr}=\left(\frac{2}{k+1}\right)^{\frac{k}{k-1}}. \qquad (III.53)$$

For example, for air at low temperatures, k = 1.41, and the critical pressure differential is equal to

$$\frac{p_{cr}}{p_2}=\left(\frac{2}{1.41+1}\right)^{\frac{1.41}{1.41-1}}=0{,}528,$$

Consequently, for air, the pressure in the nozzle throat section is

$$p_{cr}=0{,}528p_2.$$

<u>The Relationship between the Measurements of the Nozzle Throat Section and the Gas Parameters at the Entrance of the Nozzle</u>.

The measurement of the throat section is a necessary design value for designing an engine nozzle; hence it is necessary to find the relationship between the value of the throat section and the gas parameters at the entrance of the nozzle and flow rate G per second.

Let us write the flow rate equation for the nozzle throat section:

$$G=f_{cr}w_{cr}\rho_{cr}g. \qquad (III.54)$$

We express the velocity w_{cr} and the density ρ_{cr} by parameters of a motionless gas which is under a pressure p_2 and has a temperature T_2 at the entrance of the nozzle. The expansion process is determined by the index n_{is}; then,

$$w_{cr}=\sqrt{\frac{2n_{is}}{n_{is}+1}gkT_2}. \qquad (III.55)$$

According to the equation of isoentropy (III.29):

$$\frac{p_{cr}}{\rho_{cr}^{n_{is}}}=\frac{p_2}{\rho_2^{n_{is}}},$$

whence,

$$\rho_{cr}=\rho_2\left(\frac{p_{cr}}{p_2}\right)^{\frac{1}{n_{is}}}. \qquad (III.56)$$

Since according to the equation of state (II.1):

$$\rho_2=\frac{p_2}{gRT_2}$$

and according to the expression (III.52)

$$\frac{p_{cr}}{p_2}=\left(\frac{2}{n_{is}+1}\right)^{\frac{n_{is}}{n_{is}-1}},$$

then, substituting these values in (III.56), we obtain:

$$\rho_{cr}=\frac{p_2}{gRT_2}\left(\frac{2}{n_{is}+1}\right)^{\frac{n_{is}}{n_{is}-1}\frac{1}{n_{is}}}=\frac{p_2}{gRT_2}\left(\frac{2}{n_{is}+1}\right)^{\frac{1}{n_{is}-1}}. \qquad (III.57)$$

By substituting w_{cr} from (III.55) and ρ_{cr} from (III.57) in (III.54), we obtain

$$G=f_{cr}\sqrt{\frac{2n_{is}}{n_{is}+1}\,gRT_2}\,\frac{p_2}{gRT_2}\left(\frac{2}{n_{is}+1}\right)^{\frac{1}{n_{is}-1}}g. \qquad (III.58)$$

After cancellation and the elementary transformations we obtain:

$$G=\frac{f_{cr}p_2}{\sqrt{RT_2}}\sqrt{g}\sqrt{n_{is}}\left(\frac{2}{n_{is}+1}\right)^{\frac{n_{is}+1}{2(n_{is}-1)}}.$$

If in this formula we combine all the terms having the index n_{is} and the constant value g into one term A_n, then:

$$G=\frac{f_{cr}p_2}{\sqrt{RT_2}}A_n, \qquad (III.59)$$

or:

$$\frac{f_{cr}p_2}{G}=\frac{\sqrt{RT_2}}{A_n}=\beta, \qquad (III.60)$$

where:

$$A_n = \sqrt{g}\sqrt{n_{1s}}\left(\frac{2}{n_{1s}+1}\right)^{\frac{n_{1s}+1}{2(n_{1s}-1)}}. \qquad (III.61)$$

For the study of the liquid-fuel rocket engine, the expression (III.60) is of great importance. Let us consider it more in detail. The value $\beta = \frac{f_{cr}p_2}{G}$ represents a combination or complex of basic parameters of the liquid-fuel rocket engine. Hence it may be called simply a "complex." This value, as we can easily see, has the measure of kg-sec/kg; that is, a measure for the specific thrust; and, therefore, it is sometimes also called the pressure impulse in the chamber.

The numerical value of β depends, as we can see from the equation (III.60) on the gas constant and the temperature of the combustion products of the fuel and also on the value of the index of the isoentropy of expansion.

All these values depend a great deal on the kind of fuel and depend scarcely at all on other parameters of the operation of the engine. Hence, by way of approximation, we may consider that the value of β is determined only by the kind of fuel.

For the majority of present-day fuels, the value of the complex $\beta = \frac{f_{cr}p_2}{G}$ is within the limits of 145-170 kg-sec/kg. And fuels with a higher calorific value have a higher value for β. (For further details see Table 7.)

We must emphasize that the value β can be not only calculated theoretically but can also be obtained experimentally by testing the engine.

After solving equation (III.60) for f_{cr}, we find

$$f_{cr} = \frac{G\sqrt{RT_2}}{A_n p_2} = \frac{\beta G}{p_2}. \qquad (III.62)$$

As we can see from formula (III.62), the value of the throat section is proportionate to the fuel flow rate per second, and changes proportionally to the square root of the product RT_2.

The value of the pressure which it is necessary to have at the entrance to the nozzle exercises an influence upon the required dimensions of the throat section. With an increase in pressure, the area of the throat section required to pass a given mass weight flow of combustion products of a certain fuel per second decreases in a manner inversely proportionate to the pressure.

The index of the discharge process also influences the value of the critical throat section. This influence is determined by the dependence of coefficient A_n on n_{is} (Figure 58).

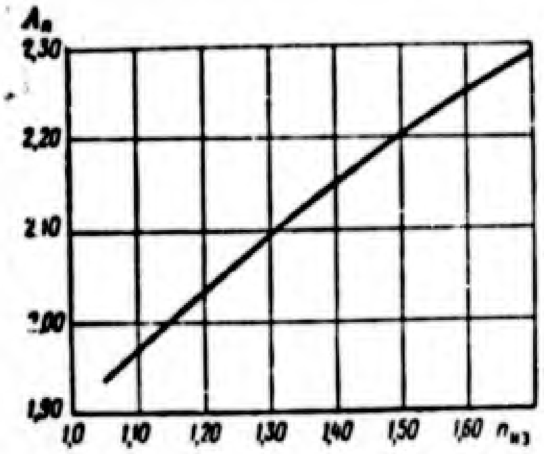

Figure 58. Dependence of coefficient A_n on the index n_{is}.

Since with an increase in n_{is} there is an increase in A_n, then, according to formula (III.62) the value of the required throat section is decreased.

If we solve the equation (III.60) for the pressure in the chamber p_2, then:

$$p_2 = \frac{G}{f_{cr}} \frac{\sqrt{RT_2}}{A_n} = \frac{\beta G}{f_{cr}}. \tag{III.63}$$

This equation gives the dependence of pressure in front of the nozzle entrance on the flow rate per second, the value of the throat section, the parameters of the combustion products in the chamber, and the index of the expansion process.

Equation (III.63) shows that in the given engine, with an increase in the fuel flow rate G per second, the pressure in the combustion chamber increases directly proportional to the increase of G.

<u>The Change in the Parameters of the Gas Flow along the Length of the Nozzle.</u>

In the calculation and designing of the liquid-fuel rocket engine, it is often times necessary to determine the change in the parameters of the gas flow along the length of the nozzle.

Since in the calculations of liquid-fuel rocket engine we considered an unidimensional flow, then, regardless of the nozzle profile, the only change characterizing the nozzle is the passage section area f.

We shall consider the pressure p as the basic parameter of the gas flow. For the pressure we must solve the equation from which one determines all the other parameters. First of all, we find the change in pressure along the length of the nozzle which depends upon the value f.

To find the afore-mentioned relationship, we write the mass weight flow of gas twice: once, by the parameter of the critical area, and again by the parameters of any section of the nozzle f.

$$G = f_{cr}\rho_{cr}w_{cr}g,$$
$$G = f\rho w g.$$

By dividing the first expression by the second, we obtain:

$$\frac{f}{f_{cr}} = \frac{\rho_{cr}w_{cr}}{\rho w}. \qquad \text{(III.64)}$$

By substituting in (III.64) the values ρ_{cr}, ρ, w_{cr}, and w, known to us from (III.57), (III.29), (III.55), and (III.12), we obtain:

$$\frac{f}{f_{cr}} = \frac{\rho_2\left(\frac{2}{n_{is}+1}\right)^{\frac{1}{n_{is}-1}}\sqrt{2\frac{n_{is}}{n_{is}+1}gRT_2}}{\rho_2\left(\frac{p}{p_2}\right)^{\frac{1}{n_{is}}}\sqrt{2g\frac{n_{is}}{n_{is}-1}RT_2\left[1-\left(\frac{p}{p_2}\right)^{\frac{n_{is}-1}{n_{is}}}\right]}}.$$

After cancelling, we obtain:

$$\frac{f}{f_{cr}} = \frac{\left(\frac{2}{n_{is}+1}\right)^{\frac{1}{n_{is}-1}}\sqrt{\frac{n_{is}-1}{n_{is}+1}}}{\sqrt{\left(\frac{p}{p_2}\right)^{\frac{2}{n_{is}}}-\left(\frac{p}{p_2}\right)^{\frac{n_{is}+1}{n_{is}}}}}. \qquad \text{(III.65)}$$

As we can see, equation (III.65) gives the necessary relationship between the value for the passage section of the nozzle f (in the form of the ratio to f_{cr}) and the ratio of the pressure upon entering the nozzle and in a given section of it. This relationship is not direct, but, with the necessary relationship of pressure $\frac{p}{p_2}$, we can in accordance with formula (III.65) find the desired ratio of the areas $\frac{f}{f_{cr}}$.

The equation (III.65) is equally suitable for the calculation of the passage sector of the nozzle in front of the critical area and behind it.

The relationship derived shows that the ratio of pressure in a given section to pressure at the entrance depends only on the ratio of the nozzle area in the given section to the critical section and on the value of the index of the expansion process, but it is not dependent upon the pressure and temperature going into the gas nozzle or its consumption per second.

The data illustrating formula (III.65) are given in the graph in Figure 59. On the axis of abscissas of this graph we have laid off the inverse ratio of the pressure p_2 upon entrance into the nozzle to the flow pressure p.

Equation (III.65) can also be employed for the calculation of the exit section of the nozzle f_3, insuring the obtaining of the given pressure on the nozzle section p_3.

In this case, instead of the flow pressure p in the formula (III.65), it is necessary to substitute the required pressure on the section. The ratio $\frac{f_3}{f_{cr}}$ is given the designation of nozzle area ratio.

A glance at the graphs on the dependence of differential pressure on the nozzle area ratio shows that the reduction of pressure in a section can be obtained by a considerable increase in the exhaust section area of the nozzle. If we employ a conical nozzle with a constant angle of opening 2α, the effort to obtain small pressures on the nozzle section (large ratios of pressure in the chamber to the pressure in the nozzle section) leads to a considerable increase in the length of the nozzle, its surface and weight.

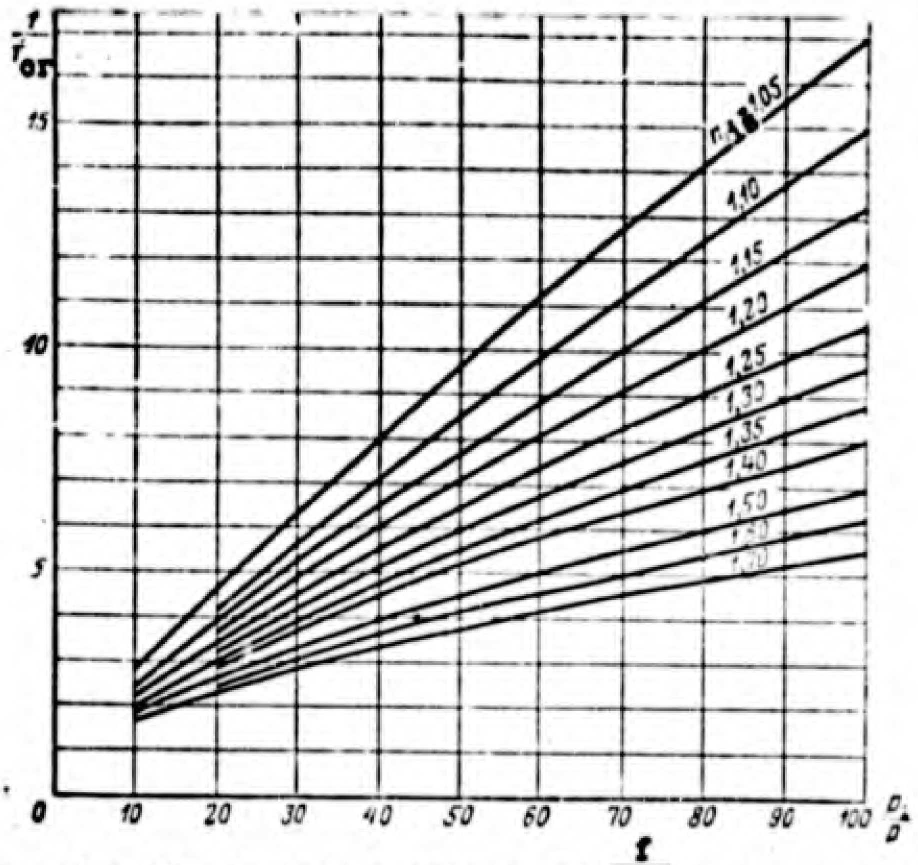

Figure 59. The value of the nozzle area ratio $\frac{f}{f_{cr}}$, necessary for obtaining the required ratio $\frac{p_2}{p}$, and the index of isoentropy of expansion n_{is}.

For the given ratio of the pressures there is a definite dependence of the necessary nozzle area ratio on the isoentropic index of expansion of the products of combustion, namely, with an increase in the isoentropic index of the expansion of the products of combustion, the ratio $\frac{f_3}{f_{cr}}$, which is necessary to achieve a certain degree of expansion in the nozzle, is decreased. Hence we must draw the conclusion that the employment as a fuel for liquid-fuel rocket engines of substances which give products of combustion with a high isoentropic index is rational from the point of view of a reduction in the dimensions and weight of the nozzle.

The majority of present-day liquid-fuel rocket engines have a ratio of pressures of $\frac{p_3}{p_2}$, changing within the limits of 0.02-0.075 (a differential pressure $\frac{p_2}{p_3} = 50 - 13.5$). The isoentropic indexes of the products of expansion are within the limits 1.10 - 1.25. Hence the ratio of the areas of the exhaust and critical sections of the nozzle is within the limits 8 - 3.5, and consequently the ratio of the diameter of the exhaust d_3 and the critical d_{cr} section lies between 3 and 2.

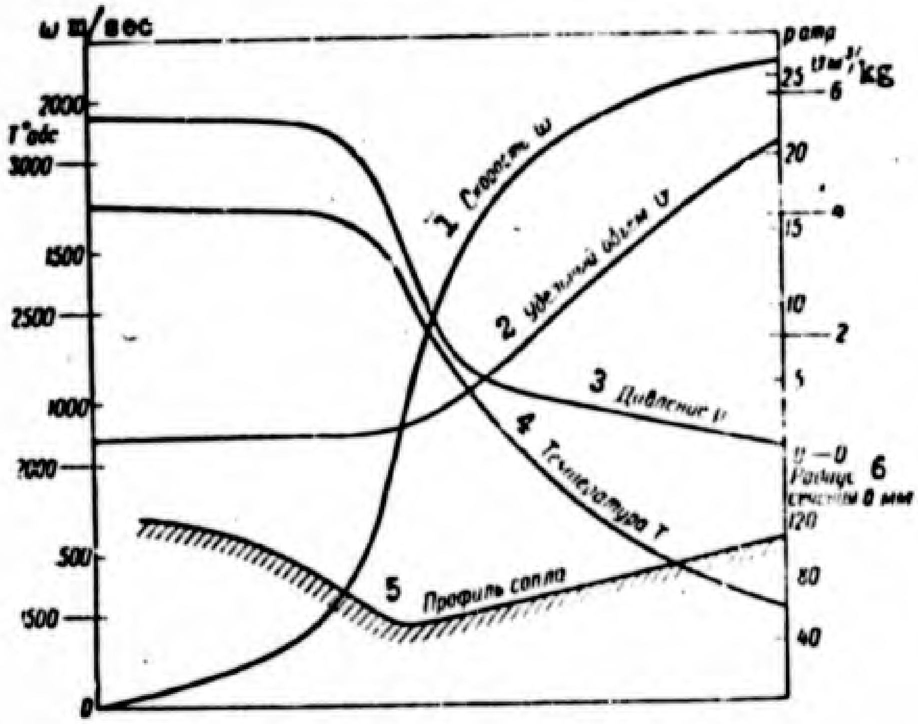

Figure 60. The change in parameters of the gas flow p, T, v and w on the basis of the length of the chamber of the engine.

1 -- velocity w; 2 -- specific volume v; 3 -- pressure p; 4 -- temperature T; 5 -- nozzle profile; 6 -- section radius in mm.

Knowing the distribution of pressure p along the length of the nozzle (that is, the distribution of the ratio $\frac{p}{p_2}$) depending on $\frac{f}{f_{cr}}$, we can, on the basis of what we know from Chapter II formulas, determine the distribution of all the remaining parameters (T, ρ, v, γ, and w) along the length of the nozzle.

We give these formulas:

$$T=T_2\left(\frac{p}{p_2}\right)^{\frac{n_{is}-1}{n_{is}}}; \qquad (III.66)$$

$$\rho=\rho_2\left(\frac{p}{p_2}\right)^{\frac{1}{n_{is}}}; \qquad (III.67)$$

$$\gamma=\gamma_2\left(\frac{p}{p_2}\right)^{\frac{1}{n_{is}}}; \qquad (III.68)$$

$$v=v_2\left(\frac{p_2}{p}\right)^{\frac{1}{n_{is}}}; \qquad (III.69)$$

$$w=\sqrt{2g\frac{n_{is}}{n_{is}-1}RT_{1}\left[1-\left(\frac{p}{p_{1}}\right)^{\frac{n_{is}-1}{n_{is}}}\right]}. \tag{III.70}$$

If the process of discharge in the nozzle is not isoentropic but adiabatic (with a constant composition of the gas), then, evidently, all the parameters of the gas may be computed on the basis of the same formulas, substituting in them the index of isoentropy n_{is} by the adiabatic curve k.

The distribution of the parameters of the gas flow along the length of the nozzle for the products of combustion of nitric acid and kerosene is given in Figure 60.

QUESTIONS FOR REVIEW AND PROBLEMS

1. How do we write the equation of the law of conservation of mass for a gas flow and for a flow of incompressible liquid?

2. How do we employ the law for the conservation of energy to the adiabatic flow of a reacting mixture of gases without taking into account the friction?

3. What is the velocity of sound?

4. How does the velocity of sound depend on the temperature and composition of a gas?

5. How is the velocity of sound in a motionless gas related to its velocity in a gas flow?

6. What is meant by the critical and the maximum velocity of the gas?

7. What does the Mach number designate?

8. What is meant by the stagnation temperature?

9. What shape does the Laval nozzle have?

10. What section of the nozzle is called the throat section?

11. Determine the velocity of sound in air at T = 300 degrees absolute temperature.

12. Find the flow rate of gas with an adiabatic flow through a nozzle

if its temperature at the entrance is 450°C; the entrance pressure at the nozzle is 20 atm, and the throat section area 2 cm^2, R = 30 and n_{is} = 1.22.

CHAPTER IV

THE THERMODYNAMIC CYCLE OF A LIQUID-FUEL ROCKET ENGINE

An analysis of the operating process of heat engines, of which the liquid-fuel rocket engine is a type, makes extensive use of the thermodynamic cycles system. In the USSR the general acceptance of this system has been based on the work of the Thermo-technical School of the Bauman Higher Technical University of Moscow. The thermodynamic cycles give a graphic idea of the method of operation and the basic characteristics of a given heat engine.

By cycle we mean the continuity of thermodynamic processes taking place in the mass carrier of the engine as a result of which there is a transformation of heat into work. The mass carrier in the liquid-fuel rocket engines is liquid fuel and its gaseous combustion products. After the completion of the cycle, the mass carrier should be returned to its initial state at the beginning of the preceding cycle. This can take place only with the reversal of all the processes making up the cycle, i.e., under conditions which cannot be realized in a rocket engine. As a result, the cycle always schematizes and simplifies the real processes.

We can define different cycles depending upon how precisely the processes from which we designate the cycle describe the real processes taking place in the engine. We shall call the real cycle the one closest to the real engine; and we shall designate the most schematic as the ideal cycle. In addition, we shall designate as the rated cycle the one made up of processes which can at the present time be theoretically calculated.

SECTION 18. THE CYCLE OF THE LIQUID-FUEL ROCKET ENGINE.

The Ideal Cycle of the Liquid-Fuel Rocket Engine.

The ideal cycle simplifies to the highest degree the actual processes taking place in the engine, but it does not consider some processes at all, because of which the ideal cycle differs greatly from the real processes taking place in the rocket engine. However, assuming simple design relationships, the ideal cycle makes it possible to disclose most precisely the basic factors exercising an influence on the operation of the engine and especially as to the degree of use of the energy reserves imparted to the engine. It also makes it possible to determine the influence of the mass carrier characteristics on the operation of the engine.

Let us consider the ideal cycle of the liquid-fuel rocket engine (Figure 61). Let us suppose that 1 kg of liquid mass carrier or fuel enters the engine at the pressure and temperature of the surrounding medium. This kilogram of liquid mass carrier has a volume v_{liq}; consequently the initial point of our cycle will be point e'.

But since the volume v_{liq} is negligibly small, we replace the point e' by the point e lying on the axis of pressures. Hence we neglect the volume v_{liq} /liq = liquid/.

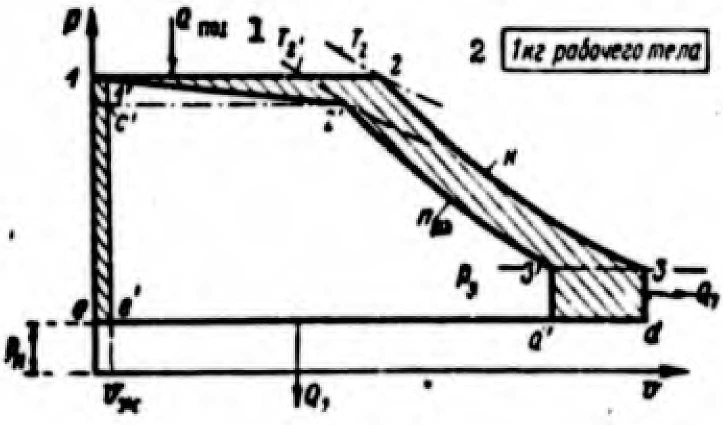

Figure 61. The ideal and the design (rated) cycles of a liquid-fuel rocket engine.

1 -- supply (sup); 2 -- 1 kg of mass carrier; e123d -- ideal cycle; e'1'2'3'd -- rated cycle /sup = supply added/.

For injection into the combustion chamber, the liquid components should be compressed to the pressure equal that in the chamber and forced into the chamber under this pressure. Since the liquid components are practically incompressible, the work of compression is equal to 0. The work of forcing will also be equal to 0 because we have already assumed $v_{liq} = 0$. The state of the liquid mass carrier going into the combustion chamber under a pressure of p_1 is characterized by the point 1, lying on the axis of pressures.

To the mass carrier entering the combustion chamber there is supplied, under a constant pressure p, a quantity of heat equal to the calorific value of the fuel. As a result, the temperature of the mass carrier increases to the value T_2 and the specific volume up to v_2.

At point 2, characterizing the state of the mass carrier upon conclusion of addition of the heat, there starts an adiabatic expansion of the mass carrier of constant composition from the pressure p_2 up to the pressure p_3, which is established on the section of the nozzle.

In order that the mass carrier may be turned back into its initial state e', it must be cooled and condensed to the volume v_{liq} at a pressure of the surrounding medium. Since in the general case the engine can operate or not operate at the rated regimen, the pressure on the nozzle section may not be equal to the surrounding pressure p_H. Hence in the general case the cooling and condensation of the mass carrier to the initial state will be carried out in two stages from point 3 to point d along the isochore line 3d, and from point d up to point e along isobar de.

Hence the closed cycle e123d obtained will be the ideal cycle of the rocket engine.

The operation of an ideal cycle, just as every other cycle, is determined by the area limited by the lines of the processes forming the cycle; in the given case it is the area e123d. Let us designate this work by L_{cyc} [cyc = cycle].

The work of the cycle is smaller than the quantity of energy H_u which is supplied to the mass carrier, because upon leaving the engine the mass carrier still possesses a determined temperature and, consequently, a heat content. The carrying away of energy by the mass carrier which constitutes the loss during the operation of the engine in the ideal cycle, is replaced by the rated processes of cooling and condensation of the mass carrier.

The Relationship between the Ideal Cycle and the Real Processes in the Liquid-Fuel Rocket Engine.

Let us consider the difference between the real processes in the liquid-fuel rocket engines and the processes making up the ideal cycle.

In the ideal cycle, it is assumed that the mass carrier is periodically transformed into its initial state, and consequently does not require replacement, whereas in the rocket engine there takes place a replacement of the mass carrier for which it is necessary to have pumps or other arrangements for feeding the components of the fuel.

The work performed in the compression and feeding of the liquid is determined (without taking into account the efficiency of the injection system components) by the area ee' 1'1 (see Figure 61).

In the rocket engine the work performed in feeding the components into the chamber will be still greater because the feeding pressure should exceed the pressure in the chamber by the value of the hydraulic resistance in the injection system, that is, the tube conductors, injector, and cooling jackets. The work performed in the compression process and feeding of the components correspondingly reduces the useful output of the ideal cycle.

The ideal cycle does not consider the actual combustion process but replaces it with a process by adding heat in the amount H_u cal/kg without taking into account the loss of energy in the combustion process.

The heat losses taking place in the combustion chamber, due both to the dissociation of the combustion products and to the physically incomplete combustion of fuel, reduce the temperature reached to T_2', making it less than T_2.

In addition, the combustion process is accompanied by the flow of the mass carrier through the chamber. In the course of its flow there losses in pressure take place for two reasons. In the first place, the mass carrier, as a result of evaporation, and also as a result of heating up in the combustion process, increases its specific volume and consequently its velocity; that is, it acquires a type of kinetic energy. In a manner of speaking, a thermal acceleration of the gas occurs in the chamber. This acceleration of the mass carrier in accordance with the equation for the law of conservation of energy should be accompanied by a certain loss of output. The source of this output may be the expansion of the gas with a drop in its pressure. The work of expansion in the combustion chamber is determined by the area of the triangle 1'2'c' (Figure 61).

Hence the acceleration of the gas must be accompanied by a drop in pressure in the chamber. The value of the drop in pressure is determined by the velocity of the gas, which the gas acquires at the end of the combustion chamber.

In the type of chambers usually employed, where the cross section is large in comparison to the nozzle throat, the velocity at the end of the chamber is comparatively small, and consequently the loss of output in the acceleration of the gas and the reduction of pressure in the chamber are also small. In special types of chambers, the so-called high velocity chambers, the drop in pressure may amount to almost one-half the initial pressure.

The other cause of drop in pressure in the combustion chamber is its hydraulic resistance. For this reason the pressure loss in the ordinary chambers is insignificant.

For the usual combustion chambers of present-day liquid-fuel rocket engines, the total loss of pressure between the initial stages and entrance into the nozzle amounts to 1-2% of the initial pressure in the combustion chamber.

The expansion process in a real engine takes place not in accordance with the adiabatic expansion of a gas of invariable composition but in accordance with the isoentropy of a balanced expansion of the reacting combustion products.

This leads to a partial conversion of the chemical energy expended on dissociation, as a result of which $n_{is} < k$ and the work of expansion will be greater in comparison with the work of adiabatic expansion from temperature T_2'. In addition, in the expansion process incidental phenomena occur: the diversion of heat to the cooled walls of the engine and the friction of the gas in its course along the nozzle. These processes reduce the output of the cycle, because they lead to a loss of kinetic energy by the combustion products.

The escape of the combustion products from the nozzle and the energy carried away by them, corresponding to their temperature in the section, are replaced in the ideal cycle by "fictitious" cooling processes. Such a substitution, however, does not introduce errors in the determination of the cycle output because the quantity of energy carried away by the combustion products is equal to the quantity of heat which must be removed from the combustion products in order to cool and condense them back to the original state.

The ideal cycle, as we can see by comparing it with the real processes of the liquid-fuel rocket engine, is highly schematic. It can be employed for the qualitative analysis of the operation of the liquid-fuel rocket engine, but it is not suitable for the quantitative calculations and determination of the parameters of the gas in the chamber. At the present time, all the basic processes taking place in the liquid-fuel rocket engine, namely, compression of the liquid fuel and its injection into the chamber, combustion with calculation of dissociation, isoentropic expansion of the combustion products in the nozzle with calculation of the recombination and thermal acceleration process of the gas in the combustion chamber may be estimated theoretically. From these processes we also draw up the rated cycle of the engine. Just as in the case of an ideal cycle, in the rated cycle the process of changing the mass carrier is replaced by conventional processes of the cooling and condensation of the combustion products in the liquid fuel. The rated cycle formed by the processes described above is much closer to the real phenomena in the chamber and can be made the basis of quantitative calculations of specific thrust and parameters of gas in the chamber of the liquid-fuel rocket engine. This cycle in Figure 61 limits the area e'1'2'3'd'.

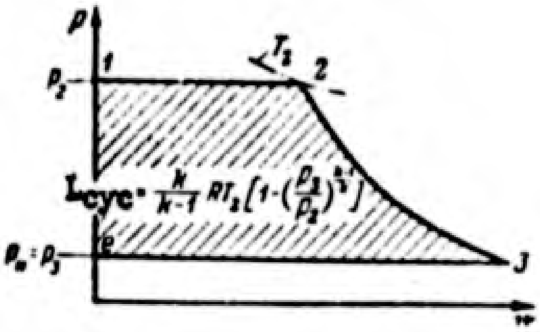

Figure 62. The ideal cycle of the liquid-fuel rocket engine operating at the rated regimen.

The real cycle of the liquid-fuel rocket engine is determined by the real combustion and expansion processes taking into account, in addition to the phenomena of dissociation, recombination, and thermal acceleration of the gas, all the losses occurring in the real processes (physically incomplete combustion, friction of the gas in the chamber and nozzle, removal of heat from the cooling system, losses in the injection system, etc.). The determination of these losses is done on the basis of experiments, not theoretically.

Relation between the Operation of the Cycle and the Specific Thrust of the Liquid-Fuel Rocket Engine.

The output of the cycle, that is, the quantity of work which may be obtained as a result of the cycle, is determined, as we know, by the area of the diagram of the cycle, that is, in the case of an ideal cycle, by the area e123d. This area, on a suitable scale, expresses the output of the cycle in kg-m.

However, in the study of the liquid-fuel rocket engine, the most important thing in the calculations is not the output of the cycle but the specific thrust of the engine. Hence we should find the relation between them.

Let us consider this relation in the simplest case, when the engine operates at the rated regimen, that is, when the pressure on the section of the nozzle

p_3 is equal to the pressure p_H in the surrounding medium (Figure 62). The specific thrust P_{sp}, according to formula (I.14), is equal to

$$P_{sp} = \frac{w_3}{g}. \qquad \text{(IV.1)}$$

The output of the cycle in this case is determined by the area e123 (see Figure 62) and corresponds, in the adiabatic expansion process between the states determined by the points 2 and 3 of the cycle, to output L'. This output is numerically equal to the reduction in the heat content of the gas in the adiabatic process 2 -- 3.

The velocity of discharge in accordance with (III.13) and (II.39) may be written in this form[1]

$$w_3 = \sqrt{2g\frac{k}{k-1}RT_2\left[1-\left(\frac{p_3}{p_2}\right)^{\frac{k-1}{k}}\right]} = \sqrt{2gL'} = \sqrt{2gL_{cyc}}. \qquad \text{(IV.2)}$$

By combining the relations (IV.1) and (IV.2), we obtain:

$$P_{sp} = \frac{1}{g}\sqrt{2gL_{cyc}},$$

or

$$P_{sp} = \sqrt{\frac{2}{g}L_{cyc}}. \qquad \text{(IV.3)}$$

The relation obtained gives the precise relationship between the specific thrust and the cycle output only when the engine is operated at the rated regime (rated operating conditions). However, with a very small error, we can also extend it to the other conditions of operation of the engine, all the more so since we shall use the concept of the cycle of the engine only for the

---

[1] Applying formulas (III.13) and (II.39), it must be borne in mind that the initial point of the expansion process in the nozzle of the liquid-fuel rocket engine is the termination point of the combustion process; that is, point 2. The state of the gas in the nozzle section; that is, point 3 (see Figure 62), corresponds to the termination of the expansion process. Consequently, the indices of the formulas (III.13) and (II.39) are changed correspondingly.

qualitative analysis of its operation. Hence, even for nonrated regimens we shall employ the relation (IV.3), understanding in these cases by cycle output the total area in the pv diagram limited by the lines of the processes forming the cycle, for example, the area e123d in Figure 61.

SECTION 19. USEFUL ACTION [EFFICIENCY] COEFFICIENTS OF THE ROCKET ENGINE

Efficiency of the Cycle.

The cycle output of the rocket engine is a value determining the specific thrust of the engine. The greater the output of the cycle, the greater the specific thrust of the engine.

The source of the energy from which the cycle output is derived, and consequently also the thrust of the engine, is the chemical energy of the fuel, which is evaluated by the calorific value H_u. The degree of utilization of the energy of the fuel is determined by the ratio of the cycle output AL_{cyc} (in heat units) to the calorific value H_u

$$\eta_{cyc} = \frac{AL_{cyc}}{H_{cyc}}. \qquad \text{(IV.4)}$$

This ratio is called the efficiency of the cycle.

As we can see from the cycle of the liquid-fuel rocket engine, the value of the cycle output, AL_{cyc} is determined by the quality of the combustion and expansion processes. The more nearly complete these processes, the greater will be the value of cycle output AL_{cyc}, and consequently also the value of the efficiency of the cycle η_{cyc}. Hence, the efficiency of the cycle depends on the completeness of the process, that is, on the efficiency of the combustion and expansion processes.

$$\eta_{cyc} = \eta_{comb}\,\eta_{exp} \qquad \text{(IV.5)}$$

where η_{comb} and η_{exp} are the combustion and expansion efficiencies.

Let us consider separately each of these coefficients.

Combustion Efficiency.

By the value η_{comb} we mean the degree to which the conversion of the energy of 1 kg of fuel into thermal energy Q is completed.

$$\eta_{comb}=\frac{Q}{H_u}. \qquad (IV.6)$$

In the liquid-fuel rocket engine, the incomplete conversion of the fuel energy into thermal energy is caused by two determinates basically different from each other in their characteristics.

One of them, physically incomplete combustion, takes place as a result of poor mixing and nonuniform distribution of the fuel components in the combustion chamber and also as a result of insufficient time for culmination of the combustion process. These phenomena are caused by imperfect construction in the combustion chamber of the liquid-fuel rocket engine and can be remedied by improving the design of the engine.

Another thing causing incomplete combustion, and of particular importance in the liquid-fuel rocket engine, is the dissociation of the combustion products.

The high temperatures generated in the liquid-fuel rocket engine lead to a very strong dissociation of combustion products. The loss of heat by dissociation can amount from 25 to 30% of H_u. The greater the calorific value of the fuel and the higher the temperature in the combustion chamber, the greater the dissociation.

The dissociation processes are determined by the thermodynamic laws; and consequently there are very few ways to counteract them. As a rule the best way is to select fuels whose combustion products are difficult to dissociate. The degree of dissociation for a specific fuel may be reduced to a considerable extent by increasing the pressure p_2 in the combustion chamber.

Since incomplete combustion is due to two causes, η_{comb} can be represented as the product of two coefficients:

$$\eta_{comb}=\eta_{ch}\eta_{dis} \qquad (IV.7)$$

[dis = dissociation]

where η_{ch} is the coefficient representing physically incomplete combustion;

we shall call it the chamber efficiency because it is determined for the most part by the construction of the combustion chamber;

η_{dis} is the coefficient representing losses due to dissociation.

The value of the combustion coefficients in the liquid-fuel rocket engine amounts to $\eta_{ch} = 0.90 - 0.98$;

$\eta_{dis} = 0.7\text{-}0.9$ (depending upon the kind of fuel).

Expansion Efficiency.

The expansion efficiency η_{exp} is the degree to which heat energy Q liberated in the combustion chamber is converted into work of expansion L_{cyc} (for the design cycle without calculation of the losses of work in the feeding of the components).

$$\eta_{exp} = \frac{AL_{cyc}}{Q}. \qquad (IV.8)$$

The expansion efficiency η_{exp} represents the losses which occur in the expansion process. These losses also have two different causes.

The first cause of loss in the expansion process is that, as a result of the terminal confines of the exhaust section of the nozzle, it is impossible for the combustion products to expand up to a pressure equal to 0, and consequently, to a temperature equal to 0.

Consequently, the combustion products at the exhaust nozzle have a high temperature and carry away with them a certain amount of heat. This loss is an unavoidable thermodynamic loss and is evaluated by the thermal efficiency η_t [t = thermal]. It takes place both in the actual cycle and in the ideal cycle (for further details concerning η_t see Section 20).

The second cause of loss in the expansion process is loss resulting from friction, loss due to heat transmission, etc. In the main, these occur in the nozzle of the engine and they are calculated by means of the nozzle efficiency η_{noz} [noz = nozzle].

Therefore, the expansion efficiency may also be represented as the product of two coefficients

$$\eta_{exp} = \eta_t \eta_{noz} \qquad \text{(IV.9)}$$

Let us consider the fact that the expansion efficiency also takes into account the return of a part of the chemical energy during recombination of the combustion products in the nozzle. The calculation of this phenomenon distinguishing the design cycle from the ideal cycle is done by replacing the adiabatic index of the expansion process on which the value η_t depends, by the isoentropic index η_{ic}.

The value of the thermal efficiency η_t amounts to 0.4 - 0.6 and the value of the nozzle efficiency η_{noz} is 0.90 - 0.98.

Estimating Mass Carrier Losses in the Operation of the Fuel Supply System.

The product of the coefficients η_{comb} η_{exp} represents the amount of fuel energy expended in the performance of the cycle work without taking into account the work performed in the injecting of fuel into the combustion chamber.

$$AL_{cyc} = H_u \eta_{comb} \eta_{exp}$$

This output is used for the creation of the specific thrust

$$P_{sp} = \sqrt{\frac{2}{g} L_{cyc}} = \sqrt{\frac{2}{gA} H_u \eta_{comb} \eta_{exp}} \qquad \text{(IV.10)}$$

The calculation of the loss of mass carrier in performing work in the injection system is done by determining the specific thrust P_{sp}, which pertains to the consumption of both the basic fuel and of the mass carrier employed in the injection system. This method is particularly convenient in a large number of instances when we employ an auxiliary fuel in the injection system for use only in the injection system and which is not the basic fuel used by the engine.

Let us designate by q the quantity of mass carrier, in kilograms, needed in the injection system to inject 1 kg of fuel into the combustion chamber.

In this case the total quantity of the basic and auxiliary mass carrier which must be expended to obtain a thrust P_{sp} amounts to 1 + q and the thrust P_{sp} for 1 kg of all the components expended in one second amounts to:

$$P'_{sp}=\frac{P_{sp}}{1+q}. \qquad (IV.11)$$

The value q depends on the design of the injection systems, which are considered in Chapter IX.

Energetic and Impulse Systems of Efficiency.

The system of engine efficiency considered by us is an energetic system, because all its coefficients take into account the loss of work, that is, energy.

In the calculation of the liquid-fuel rocket engine, wider use has been made of those efficiencies which at the same time take into account the decrease in specific thrust taking place as a result of the corresponding losses of work than has been made of the energetic systems.

These coefficients refer to specific thrust, that is, to the impulse, and we shall call them impulse coefficients and designate them, in contradistinction to the energetic coefficients, by φ. The specific thrust and the work of the cycle are connected with each other by the relation (IV.10):

$$P_{sp}=\sqrt{\frac{2}{gA}H_u\eta_{comb}\eta_{exp}}$$

On the other hand, the specific thrust can be expressed by impulse coefficients:

$$P_{sp}=\varphi_{comb}\varphi_{exp}\sqrt{\frac{2}{gA}H_u}. \qquad (IV.12)$$

where φ_{comb} and φ_{exp} are the coefficients of the efficiency of the combustion and expansion processes relating to the specific thrust.

By comparing expressions (IV.10) and (IV.12) we can draw the conclusion that any impulse coefficient is connected with the corresponding energetic coefficient by the relation:

$$\varphi = \sqrt{\eta}. \qquad (IV.13)$$

For the efficiency of the chamber and nozzle in particular, we may write:

$$\varphi_{ch} = \sqrt{\eta_{ch}} \qquad (IV.14)$$

$$\varphi_{noz} = \sqrt{\eta_{noz}} \qquad (IV.15)$$

In the calculation and analysis of the work of the rocket engine it is necessary to make use of various coefficients. The most important for the analysis of the work of the engine is that of thermal efficiency η_t. For the calculation of the specific thrust, we use the coefficient of the chamber φ_{ch} and the coefficient of the nozzle φ_{noz}, which under the present-day status of the theory of rocket engines it is impossible to calculate; thus they are determined experimentally. Such coefficients as that of thermal efficiency η_t, efficiency of the cycle, or loss by dissociation η_{dis} are practically never employed in calculations in a direct manner. However, they are convenient in the analysis of the distribution of energy in the engine and make it possible to explain clearly the causes and physical meaning of the loss of energy during the cycle of the engine. In an implicit manner the aforementioned coefficients enter into the theoretical calculation of the combustion and discharge processes.

SECTION 20. THE THERMAL EFFICIENCY OF THE IDEAL CYCLE

Derivation of the Equation of Thermal Efficiency of the Ideal Cycle.

The basic value characterizing the ideal cycle of the engine is the thermal efficiency. As we can see from the description of the ideal cycle, it does not take into account any losses except those of heat carried away by the heated combustion products as a result of their incomplete expansion. Hence the efficiency of the ideal cycle coincides with the thermal efficiency η_t

-- one of the coefficients of the system of the efficiency of the engine considered earlier.

For the ideal cycle, the value of the efficiency may be written in the form of the ratio of the work of the cycle to the quantity of heat expended in doing this work, that is, to all the heat added to the mass carrier:

$$\eta_t = \frac{AL_{cyc}}{Q_{sup}}. \quad [sup = supply\ added] \tag{IV.16}$$

In accordance with the law for the conservation of energy:

$$AL_{cyc} = Q_{add} - Q_{rem} \quad \begin{matrix} [add = added] \\ [rem = removed] \end{matrix} \tag{IV.17}$$

where Q_{rem} is the quantity of heat tapped from the gas during the cycle process.

Then the expression for the thermal efficiency takes the form:

$$\eta_t = \frac{Q_{add} - Q_{rem}}{Q_{add}} = 1 - \frac{Q_{rem}}{Q_{add}}. \tag{IV.18}$$

Let us express the quantity of heat added and removed by the temperature of the characteristic points of the ideal cycle (see Figure 61) and the heat capacity of the mass carrier; we shall regard the latter as constants not depending on the temperature.

The heat from the mass carrier in the ideal cycle is removed in two processes 3d and de.

The process 3d takes place with a constant volume, and the heat Q_1, tapped in this case, will be equal to c_v $(T_3 - T_d)$. Another part of the heat -- Q_2 -- is removed at constant pressure and amounts to c_p $(T_d - T_e)$.

Then,

$$\left.\begin{matrix} Q_{rem} = Q_1 + Q_2 = c_v (T_3 - T_d) + c_p (T_d - T_e); \\ Q_{add} = c_p (T_2 - T_1). \end{matrix}\right\} \tag{IV.19}$$

Since in the ideal cycle T_e and T_1 are equal to 0, then:

$$Q_{rem} = c_v(T_3 - T_4) + c_p T_4$$
$$Q_{add} = c_p T_2. \qquad (IV.20)$$

We shall express the temperatures entering into these relations by the temperature in the chamber T_2 on the basis of the equations of the adiabatic and isochoric processes:

$$T_3 = T_2\left(\frac{p_3}{p_2}\right)^{\frac{k-1}{k}}$$

and

$$T_4 = \frac{p_H}{p_3} T_3 = \frac{p_H}{p_3} T_2\left(\frac{p_3}{p_2}\right)^{\frac{k-1}{k}}. \qquad (IV.21)$$

By substituting the afore-mentioned values of the temperatures in the expression for thermal efficiency (IV.18), we obtain:

$$\eta_t = 1 - \frac{T_2\left[c_v\left(\frac{p_3}{p_2}\right)^{\frac{k-1}{k}} - c_v\frac{p_H}{p_3}\left(\frac{p_3}{p_2}\right)^{\frac{k-1}{k}} + c_p\frac{p_H}{p_3}\left(\frac{p_3}{p_2}\right)^{\frac{k-1}{k}}\right]}{c_p T_2}. \qquad (IV.22)$$

By introducing the ratio $\frac{c_p}{c_v} = k$ and setting

$$\frac{p_3}{p_2} = \delta \text{ and } \frac{p_H}{p_2} = \varepsilon, \qquad (IV.23)$$

after cancelling T_2 and carrying out a simple transposing, we obtain:

$$\eta_t = 1 - \frac{1}{k}\delta^{\frac{k-1}{k}}\left[(k-1)\frac{\varepsilon}{\delta} + 1\right]. \qquad (IV.24)$$

We shall call the $\frac{p_3}{p_2} = \delta$ the degree of expansion of the gas in the nozzle, because it characterizes quantitatively the differential pressure in the expansion process. The value $\frac{p_H}{p_2} = \varepsilon$ determines the limit of the possible expansion of the gas in the engine; we call it the degree of possible expansion.

The expression obtained for the thermal efficiency shows that the value of it depends on three parameters: the degrees of expansion in the nozzle δ, the degree of possible expansion ε, and the index of the adiabatic combustion products k.

Thermal Efficiency of the Cycle of the Engine Operating under Design Operating Conditions.

The design operating conditions of the engines is that rate of operation in which the pressure on the section of the nozzle p_3 is equal to the pressure in the atmosphere p_H.

$$p_3 = p_H.$$

In accordance with formulas (IV.23) the degree of a possible expansion ε is equal to the degree of expansion in the nozzle δ, and the expression for thermal efficiency at the design operating conditions $\eta_{t\ \text{design}}$ as a result of which $\varepsilon = \delta$, takes on a simpler form:

$$\eta_{t\ \text{design}} = 1 - \delta^{\frac{k-1}{k}} = 1 - \varepsilon^{\frac{k-1}{k}}. \qquad \text{(IV.25)}$$

The change in the thermal efficiency of the engine operating under the design operating conditions, depending upon the value δ or its inverse value, the ratio of pressure $\frac{p_2}{p_3} = \frac{1}{\delta}$, and also upon the value of the adiabatic expansion index k, is given in Figure 63.

The data of this graph show that the thermal efficiency can change in wide limits from 0 to unity, increase quickly with small values of the ratio $\frac{p_2}{p_3}$, and then all the more slowly approach the value $\eta_t = 1$ with a further increase of this ratio.

The thermal efficiency also depends on the value of the index of the adiabatic curve of the combustion products k. Large values of k give large values for the thermal efficiency of the engine, especially with fairly large ratios of pressure in the chamber to the pressure on the nozzle section (Figure 63).

As we know, the value k depends on the composition of the combustion products and its value increases with an increase in the content of monoatomic and light gases in the combustion products. Hence the employment in liquid-fuel rocket engines of fuels whose combustion products consist of light gases increases the thermal efficiency, other conditions remaining the same.

As shown by the relation (III.65) and the graphs of Figure 59, the value of the expansion degree δ in the nozzle depends in the main on the ratio of the area of the exhaust section of the nozzle to the critical throat (nozzle area ratio) of the nozzle. Hence the effort to obtain high values for the thermal efficiency and the specific thrust of the engine by reducing the value $\delta = \frac{p_3}{p_2}$ leads to an increase in the ratio $\frac{f_3}{f_{cr}}$. The making of nozzles with a large nozzle area ratio leads to an increase in their dimensions, that is, in their weight, and also renders more difficult the planning for reliable cooling of the engine.

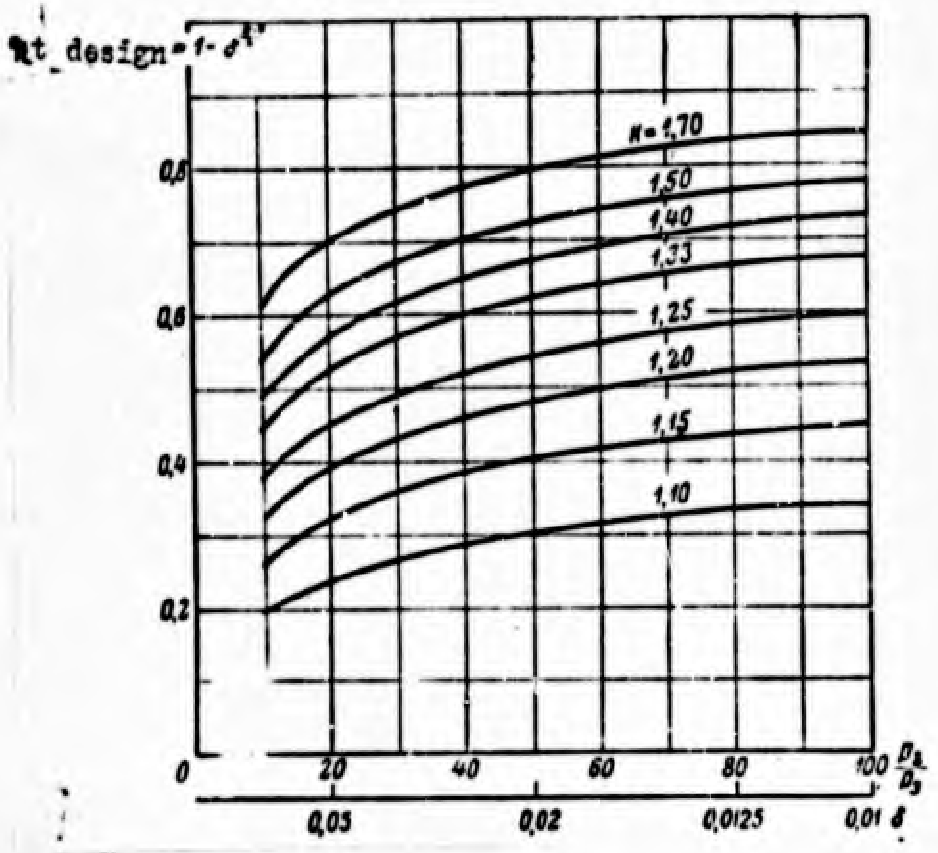

Figure 63. Dependence of the thermal efficiency of the engine operating at design conditions $\eta_{t\ design}$ on the ratio $\frac{p_2}{p_3}$ and k.

Hence the construction of the nozzle of the chamber of an engine renders difficult the obtaining of small values of δ.

In spite of this, by analyzing the development of liquid-fuel rocket engines, we see an effort to employ in engines (in the necessary cases) nozzles with larger and larger nozzle area ratios. For example, in the engines of the World War II period, the ratio of the pressures $\frac{p_2}{p_3}$ rarely exceeded the values 20 - 25 (δ = 0.05), while at the present time extensive use is being made of engines in which this ratio amounts to 40 - 50 (δ = 0.02). In the near future we can expect the appearance of engines in which the pressure ratio $\frac{p_2}{p_3}$ will reach the value of about 100 (δ = 0.01).

Before we can pass to the analysis of the change of η_t at off-design operating conditions, let us consider how these operating conditions occur.

SECTION 21. OFF-DESIGN OPERATING CONDITIONS OF THE LIQUID-FUEL ROCKET ENGINE

The Possibility of Off-Design Operating Conditions of the Engine.

All liquid-fuel rocket engines known at the present time have the so-called constant nozzle, that is, a nozzle with constant values of the critical area and the exhaust section, and consequently also with constant ratios $\frac{f_3}{f_{cr}}$. For such nozzles the following basic features are characteristic.

From formula (III.65) we can see that with $\frac{f_3}{f_{cr}}$ = const and with an unchanged adiabatic expansion index k (that is, with an unchanged fuel) the degree of expansion in the nozzle $\delta = \frac{p_3}{p_2}$ remains unchanged.

Thus, regardless of the fuel consumption, regardless of the pressures in the combustion chamber (p_2) and in the surrounding medium (p_H), and regardless of the temperature at the entrance to the nozzle (T_2), the ratio $\frac{p_3}{p_2}$ remains constant.

In accordance with equations (III.13) and (IV.23), the exhaust velocity at the nozzle is:

$$w_3 = \sqrt{2g\frac{k}{k-1}RT_2\left(1-\delta^{\frac{k-1}{k}}\right)}. \qquad (IV.26)$$

Thus, with unchanged conditions in the combustion chamber (that is, with constant temperature and composition of the combustion products) the exhaust velocity at the nozzle remains unchanged regardless of the pressure in the combustion chamber, the consumption of fuel, or the pressure of the surrounding medium (that is, the altitudes of operation of the liquid-fuel rocket engine).

Therefore, when operating a liquid-fuel rocket engine which has a constant nozzle, the degree of expansion $\delta = \frac{p_3}{p_2}$ remains unchanged. The pressure on the nozzle section p_3 depends only upon the pressure in the combustion chamber p_2 and does not depend on the pressure of the surrounding medium p_H.

Depending upon the pressure in the combustion chamber p_2 and on the pressure of the surrounding medium p_H (that is, on the flight altitude), it is possible to have three types of operation of the rocket engine nozzle.

1) $p_3 = p_H$, that is, the pressure on the nozzle section is equal to the pressure of the surrounding medium. This is the design operating condition for the engine. The altitude to which the design operating conditions reach is called the service ceiling H_p.

2) $p_3 > p_H$, that is, the combustion products expanding in the nozzle do not reach the pressure of the surrounding medium p_H, but reach only to the pressure p_3, greater than the pressure p_H. These operating conditions are called sub-expansion conditions. They occur, for example, when the engine operates at altitudes greater than the design altitude (service ceiling).

3) $p_3 < p_H$, that is, the combustion products expand in the nozzle to a pressure less than the pressure of the surrounding medium. Such operating conditions are called super-expansion conditions.

As will be seen below, these operating conditions are most often observed in the operation of liquid-fuel rocket engines. The super-expansion conditions and the sub-expansion occur with changes in the altitude at which the engine operates and when its thrust is regulated. Let us examine both cases.

<u>Off-Design Operating Conditions with a Change in the Altitude at which the Engine is Operating.</u>

Let us consider how the off-design operating conditions arise when the engine is operating with a constant nozzle; the fuel flow rate G and its composition (that is, tne value H_u) remain constant; and there is a change only in the altitude at which the engine operates.

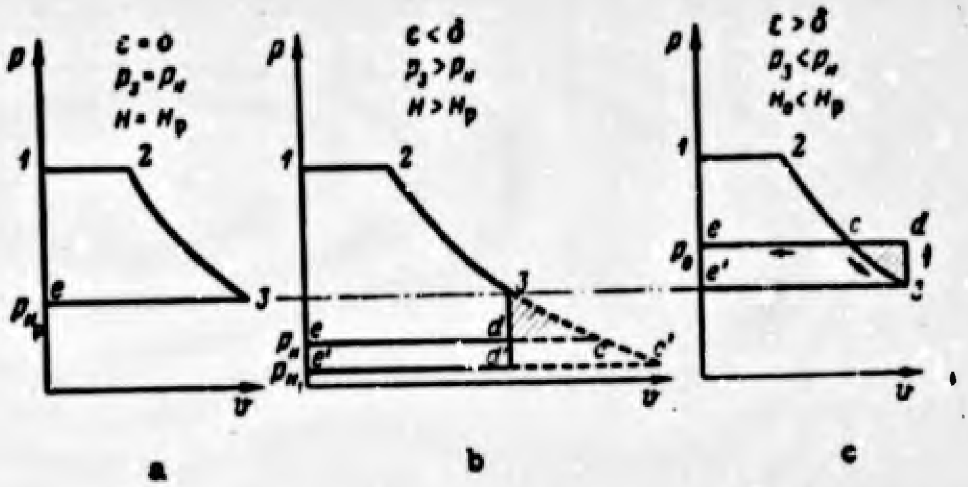

Figure 64. Cycle of an engine operating at different altitudes.

a -- design altitude; b -- altitude greater than the design (conditions of sub-expansion); c -- altitude less than the design (conditions of super-expansion).

In this case the pressure in the combustion chamber p_2, regardless of the change in the pressure of the surrounding medium, will remain constant. This can be shown easily by employing the equation (III.63).

$$p_2 = \frac{G}{f_{cr}} \frac{\sqrt{RT_2}}{A_n} = \text{const.}$$

Because for a mixture of constant composition (H_u = const) the temperature T_2 and the composition of the combustion products R remain unchanged, the pressure p_2 in this case also remains unchanged.

Thus δ = const, the pressure on the section of the nozzle $p_3 = \delta\ p_2$ = const. Hence the pressure on the nozzle section does not depend on the altitude at which the engine operates, and may be greater or less than the pressure in the surrounding medium depending upon how we select the design operating conditions of the engine.

Figure 64 shows the cycles of an engine operating under design and off-design conditions. The design altitude of the engine is greater than 0 and amounts to H_p.

In operation on the ground the engine will operate with super-expansion and at altitudes greater than the off-design it will operate with sub-expansion.

An increase in the altitude of operation of an engine leads in this case to a constant increase in the absolute thrust due to the increase in its static component $f_3 (p_3 - p_H)$. As we can see from Figure 64 b, the work of the cycle also increases.

But at altitudes less than the design and at altitudes greater than the design, the engine with a constant nozzle does not generate the maximum thrust possible under the given conditions of its operation. A detailed analysis of the losses in this case is made in the following section.

The limits of change in the degree of possible expansion of the engine with constant flow rate change from the maximum value, which is the degree of possible expansion it has on the ground, that is $\varepsilon_{max} = \frac{p_0}{p_2}$, to 0, with operation in a vacuum where $p_H \rightarrow 0$ and consequently $\varepsilon \rightarrow 0$.

The Appearance of Off-Design Operating Conditions with a Change in the Thrust of the Liquid-Fuel Rocket Engine.

The conditions of operation of an engine on certain aircraft, for example, on airplanes and antiaircraft rockets, require a change of thrust in the engine in flight. For example, for the liquid-fuel rocket engines of airplanes, it is necessary to change the value of the thrust of the engine eight to tenfold.

By making use of the equations (IV.10) and (IV.5), connecting the specific thrust with the cycle output, we may express the total thrust of the engine as follows (in case of an ideal cycle $\eta_{cyc} = \eta_t$):

$$P = P_{sp}G = G\sqrt{\frac{2}{gA}H_u\eta_{cyc}}. \qquad \text{(IV.27)}$$

This expression shows that to obtain a given thrust of an engine (existing or redesigned) we can proceed by two methods: by a change in the calorific value of the fuel H_u and by a change in the fuel flow rate G.

A change in the calorific value H_u of a given fuel used by an engine can be brought about by a change in the relation of the components. In this case the change in the calorific value of the fuel takes place only in the direction of its decrease as a result of the deviation from the relation of the components which is necessary for the complete combustion of the fuel.

This method of changing the calorific values is not rational because it leads to a decrease in the specific thrust of the engine due to a poorer transformation of chemical energy into thermal energy. We can change the thrust of the liquid-fuel rocket engine by changing the fuel flow rate by constant H_u. When we take into account the change in the value of H_u, we must consider the engine operating on various fuels.

The simplest method for determining the influence of a change in flow rate on the operation of a liquid-fuel rocket engine is by using formula (III.63)

$$p_s = \frac{G}{f_{er}} \frac{\sqrt{RT_s}}{A_s}.$$

Since the combustion temperature of a given fuel and the composition of the combustion products which determine the value of the gas constant R remain unchanged, the pressure in the combustion chamber is directly proportional to the fuel flow rate.

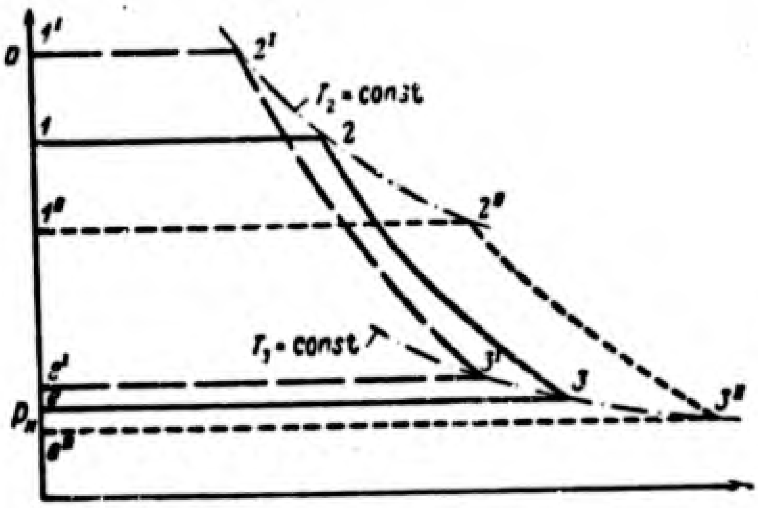

Figure 65. Change in the ideal cycle of a constant nozzle liquid-fuel rocket engine during a change in fuel flow rate.

123e -- the initial cycle $1^I 2^I 3^I e^I$ -- the cycle with increased fuel flow rate $1^{II} 2^{II} 3^{II} e^{II}$-- the cycle with reduced fuel flow rate.

For example, by decreasing the thrust P of an aviation liquid-fuel rocket engine to one-tenth of what it was, the fuel flow rate G also is decreased to approximately one-tenth; and consequently, in accordance with formula (III.63) the pressure in the chamber p_2 is also reduced to one-tenth.

In an engine with a constant nozzle (δ = const), the pressure on the nozzle section equal to $p_3 = \delta p_2$ will be decreased just as the pressure in the chamber, that is, directly proportional to the decrease in the flow rate; and in our example it also decreases to one-tenth.

Consequently, with a change in the flow rate G if the altitude of operation of the engine remains constant, it is possible to have a condition of operation with super-expansion $p_3 < p_H$ with a decrease in the fuel flow rate and a condition of sub-expansion $p_3 > p_H$ with its increase.

With a change in the flow rate, there is also a change in the form of the ideal cycle of the liquid-fuel rocket engine.

In Figure 65 we have given the change in the basic cycle 123e with an increase in the flow rate by 25% -- cycle $1^1 2^1 3^1 e^1$, with a decrease in the flow rate by 25% -- cycle $1^{11} 2^{11} 3^{11} e^{11}$. Since the temperature $T_2 = \frac{H_u}{c_p}$ in the ideal cycle does not depend on the pressure, points 2 for all the cycles lie on the same isotherm T_2.

With a constant nozzle δ = const, and consequently the temperature on the section $T_3 = T_2 \frac{k-1}{k}$ remains constant and all the points 3, 3^{11} and 3^1 also lie on the same isotherm T_3.

The discharge velocity in all cases remains unchanged because the engine has a constant nozzle, and the specific thrust of the engine changes only because of a change in the pressure p_3 in the nozzle section.

Simultaneous with the change of pressure p_2 in the chamber, there is also a change in the degree of possible expansion. The value of the maximum degree of possible expansion $\varepsilon = \frac{p_H}{p_2}$ is obtained with a minimum fuel flow rate the pressure in the chamber p_2 has the minimum value.

The minimum value of the degree of possible expansion is present with a maximum possible fuel flow rate for a given engine. The difference between the maximum and the minimum values of ε is determined by the control limits of the flow rate.

Possibility of Over-Expansion Operation.

The possibility of the operation of an engine under conditions of under-expansion $p_3 > p_H$ is obvious. However, the possibility of the discharge of gas from the nozzle into a medium with a pressure greater than the pressure in the flow on the nozzle section is not obvious.

As a matter of fact, in the first period of the employment in technology of supersonic nozzles, it was assumed that under off-design operating conditions, when the pressure on the section of the nozzle is less than the pressure in the surrounding medium, the flow of gas breaks away from the walls of the nozzle in the section of it where the pressure in the flow becomes equal to the atmospheric pressure. The remaining part of the nozzle ceases to function and may exercise an influence on the flow only in the sense that it favors the formation of vortices. Hence it was considered that a nozzle under conditions of over-expansion is, so to speak, self-regulating.

However, as proved by later experiments on turbine nozzles and rocket engine nozzles, the flow along a supersonic nozzle in reality continues to expand without breaking away from the walls up to pressures less than the pressure of the surrounding medium. It is only after coming into the atmosphere with increased pressure that the supersonic flow by a shock or a system of shocks passes into a subsonic flow with corresponding change in pressure. In this there appear the characteristics of a supersonic stream described in Section 16.

The possibility of engine operation under conditions of over-expansion can be determined not only experimentally, but also by starting with the basic characteristics of supersonic flow.

Let us present the following imaginary experiment. The gas from the nozzle flows into a cavity where a rarefaction is created by a pump. With a reduction in the delivery of the pump, the pressure in the cavity behind the nozzle will be increased. However, the change in the pressure behind the nozzle cannot lead to a change in the character of the gas flow in the supersonic nozzle. The disturbance (increase in pressure) behind the nozzle can be propagated in the gas flowing along the nozzle only with a speed of sound, but the gas itself moves with a supersonic velocity. Consequently the increase in pressure behind the nozzle cannot exercise an influence on the flow of gas in the nozzle or on its state in the combustion chamber.

The conditions of the imaginary experiment considered by us above is entirely analogous to the conditions arising with a change in the altitude at which the engine operates. It also explains that which at first sight is a somewhat strange phenomenon, namely, the pressure in the combustion chamber does not depend on the pressure in the surrounding medium. But let us note that this is valid for sonic and supersonic nozzles exclusively.

The experimental work on the function of a nozzle with over-expansion conditions has shown, however, that the operation of the nozzle under these conditions without separation of the flow from the walls is possible only up to certain minimum pressures on the nozzle section. It is assumed that, with a drop in pressure in the nozzle section to a value less than 0.4 - 0.2 (depending upon the nozzle profile) as compared to the pressure of the surrounding media, the normal conditions of over-expansion are disturbed. This results in a separation of the flow from the nozzle walls and a part of the nozzle ceases to function. It is obvious that all our formulas based on the assumption that the entire nozzle functions cease to be valid. This is true because instead of the nozzle exhaust section the formulas should include the area of that cross section where the flow separates from the walls.

SECTION 22. THERMAL EFFICIENCY OF THE LIQUID-FUEL ROCKET ENGINE WITH A CONSTANT NOZZLE AT NON-DESIGN OPERATING CONDITIONS

Losses of Work of the Cycle with Off-Design Operating Conditions.

As we have shown above, the engine can operate under off-design operating conditions of two types: conditions of under-expansion, when the pressure on the nozzle section is greater than the pressure in the surrounding medium, that is, $p_3 > p_H$, and conditions of over-expansion, when the pressure on the nozzle section is less than the pressure in the surrounding medium, that is, $p_3 < p_H$.

The operation of the engine at off-design operating conditions is illustrated by the drawings in Figure 64 pertaining to the operation of the engine under the same basic conditions at the entrance of the nozzle.

In the case of under-expansion because of a small exhaust section of the nozzle, we do not utilize the possibility of the combustion products expanding from the pressure in the combustion chamber to the pressure in the atmosphere, and the cycle corresponding to this instance takes the form represented in Figure 64 b. The work of the cycle with under-expansion will be less than it was with expansion up to the pressure equal to that of the surrounding medium by the value of the area 3 cd, which also expresses the loss of under-expansion.

In this case there is a worsening of the thermal efficiency of the ideal cycle η_t, equal to $\frac{AL_{cyc}}{H_u}$.

With an increase of under-expansion, for example, with a reduction in the pressure of the surrounding medium to p_H, the work of the cycle is increased and the loss due to the under-expansion is also increased, being determined by the area 3c'd'.

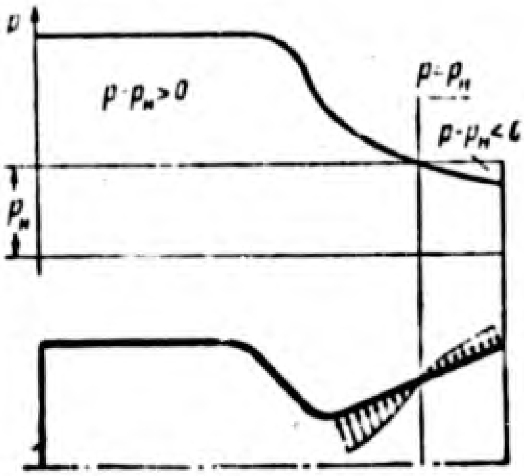

Figure 66. Influence of over-expansion on the thrust of the engine.

In addition, the thermal efficiency of the ideal cycle η_t^{II} increases in comparison with η_t^I but will be less than it would have been with a total expansion to $p = p_H$.

This cycle during over-expansion conditions is depicted in Figure 64c. As we see from the diagram of this cycle, a negative output of the cycle appears in the case of over-expansion. This output is expressed by the area ee'3d which is subtracted from the positive area of the cycle 123e'. In addition, the output of the cycle in a case of over-expansion is less than the output of the cycle in a design regime by the value of the area c3d.

The negative influence of over-expansion on the operation of a rocket engine which leads to a decrease in the specific thrust, can easily be shown in the following manner.

Figure 66 shows a graph of the distribution of the difference between the internal pressure P and the external (constant) pressure P_H on the basis of the length of the engine nozzle.

As we can easily see, when we have over-expansion operating conditions, the difference of pressure behind the section, where $P = P_H$, becomes negative, that is, it gives a component directed against the thrust. This also leads to a decrease in the thrust considered and also the specific thrust.

The thermal efficiency of the ideal cycle, equal to $\frac{AL_{cyc}}{H_u}$ will be less in this case than it would be with expansion to the pressure in the surrounding medium.

Since the work of the cycle both with under-expansion and with over-expansion is less than its work on the corresponding design operating conditions, it will always be more advantageous to have the engine operate at the design operating conditions.

The thermal efficiency, which is the ratio of AL_{cyc} to one and the same H_u for all the cases considered, will also have the maximum value in the operation of the engine at the corresponding design operating conditions. Hence, for obtaining the maximum value of the specific thrust, the engine should always operate at the design conditions.

Change in the η_t of an Engine with a Constant Nozzle with a Change in ε.

We pointed out earlier that with a change in altitude and with a change in the fuel consumption a change in the degree of the possible expansion ε takes place without a change in the degree of expansion δ in the nozzle. Hence we must consider the change of η_t of the engine precisely under these conditions. For this purpose we transform the formula (IV.24)

$$\eta_t = 1 - \frac{1}{k}\delta^{\frac{k-1}{k}}\left[(k-1)\frac{\varepsilon}{\delta}+1\right]$$

to the following form:

$$\eta_t = 1 - \frac{1}{k}\delta^{\frac{k-1}{k}} - \delta^{-\frac{1}{k}}\frac{k-1}{k}\varepsilon = A - B\varepsilon, \tag{IV.28}$$

where

$$\left.\begin{aligned} A &= 1 - \frac{1}{k}\delta^{\frac{k-1}{k}}; \\ B &= \delta^{-\frac{1}{k}}\frac{k-1}{k}. \end{aligned}\right| \tag{IV.29}$$

The relation obtained indicates that the dependence of η_t on ε for an engine with a constant nozzle is linear. The maximum value of efficiency will be present with $\varepsilon \to 0$, that is, at high altitudes. This maximum value of efficiency increases with a reduction of the degree of expansion in the nozzle. However, a decrease of δ leads to more abrupt dependence of thermal efficiency on the value of ε, because in this case there is an increase in the value of the coefficient B. This nozzle will of course be more sensitive to a change in the value ε (the altitude or consumption of fuel).

As an example of the influence of the degree of expansion of the nozzle on the dependence of the thermal efficiency on ε let us consider two cases. Suppose that nozzle I has $\delta^{I} = 0.02$; nozzle II has $\delta^{II} = 0.10$; the corresponding formulas for thermal efficiency with k - 1.25 take the form:

$$\eta_t^{I} = 0{,}635 - 4{,}5\varepsilon;$$

$$\eta_t^{II} = 0{,}495 - 1{,}26\varepsilon.$$

The values of η_t, calculated on the basis of these formulas, are given in the graph (Figure 67).

From Figure 67 we see that the line $\eta_t = f(\varepsilon)$ of the nozzle with $\delta = 0.02$ runs more steeply than η_t of the nozzle with $\delta = 0.10$, that is, the nozzle I, having a smaller degree of expansion, is more sensitive to change of ε.

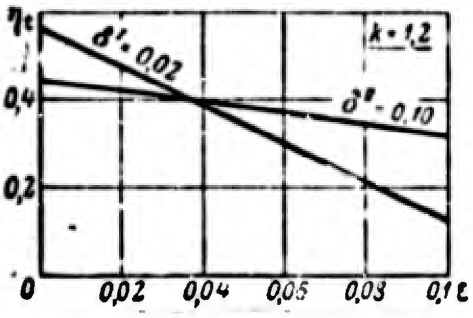

Figure 67. Change in thermal efficiency (η_t) depending on the change in the degree of possible expansion ε in the nozzle for an engine having different values for the degree of expansion δ in the nozzle.

The dependency shown here of η_t on the parameters of the oporation of the engine proves the necessity of a careful selection of the degree of expansion of the nozzle, if the parameters of the operation of the engine (consumption, altitude of operation) are to be variable.

Nozzles with a small degree of expansion δ, that is, with a large ratio $\frac{f_3}{f_{cr}}$, are more sensitive to changes in the conditions of operation of the engines, and the selection of the dimensions of such nozzles in accordance with the conditions of operation must be done more carefully. Since the period of operation under the different operating conditions of thrust and altitude depends chiefly on the flight trajectory of the given jet aircraft, the selection of the dimensions of a constant nozzle can be done only for the actual jet aircraft.

SECTION 23. REGULATION OF THE NOZZLE OF THE LIQUID-FUEL ROCKET ENGINE

We pointed out earlier that the liquid-fuel rocket engine can easily pass into off-design operating conditions leading to a worsening of the utilization of energy in the engine. Due to this, a problem arises concerning methods of regulating the nozzle of the engine so that it will operate at all times under design conditions, or at any rate, so as to ensure an effective functioning of the nozzle that is as close as possible to the design operating conditions.

Various methods must be employed for regulating the nozzle in case of a change in altitude or a change in the thrust of the engine due to a change in the fuel consumption.

Regulation of the Nozzle with a Change in Altitude.

If an engine operates with a constant fuel consumption, but at different altitudes, regulation is limited to the discharge section of the nozzle for the purpose of conserving at all altitudes a pressure on the nozzle section equal to the pressure of the surrounding atmosphere. As the engine gains altitude, the discharge section should be increased. However, such regulation of the nozzle of the liquid-fuel rocket engine is extremely difficult, because with the high temperatures of the walls of the nozzle it is difficult to ensure the reliable operation of the moving mechanical parts needed for changing the dimensions of the discharge section.

It is much simpler to make a nozzle having two degrees of expansion, in accordance with the diagram given in Figure 68.

With operation at low altitudes, the flow of gas is thrown out through a cylindrical insert with an area of $f_3^{1} < f_3^{11}$, which insures a relatively small differential pressure, corresponding to the high pressure in the surrounding medium. As the engine with the insert gains in altitude, it will operate under conditions of continually increasing under-expansion, and, finally, when this under-expansion becomes unfavorable, the insert is thrown out and the nozzle begins to operate with the total discharge section f_3^{11}. The altitude at which it is necessary to throw out the insert can easily be found if we employ the graph of the dependence of the thermal efficiency on the altitude. With a given pressure in the chamber, the increase in altitude corresponds to the decrease of ε. The altitude at which the insert should be thrown out is determined by the altitude at which there is an intersection of the curves of the change η_t for the engines with two values of δ^{I} and δ^{II} corresponding to f_3^{I} and f_3^{II}.

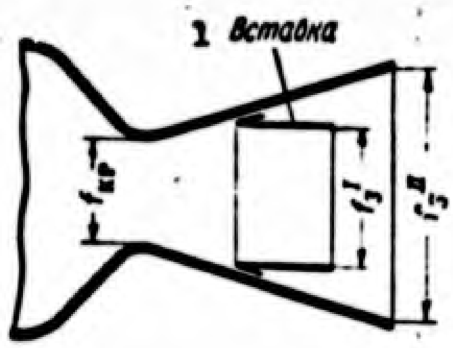

Figure 68. Diagram of the nozzle with the insert insuring two degrees of expansion.

1 -- insert.

Regulation of the Nozzle when there is a Change in the Thrust of the Engine due to a Change in Consumption.

An engine operating with a variable thrust at the same altitude of flight requires another method of regulation. The first problem in the regulation of such engines consists in maintaining a more or less constant pressure in the chamber because a considerable reduction of the pressure in it leads to a worsening of the combustion process and the possibility of the appearance of unstable combustion conditions and even a damping of the combustion in the chamber.

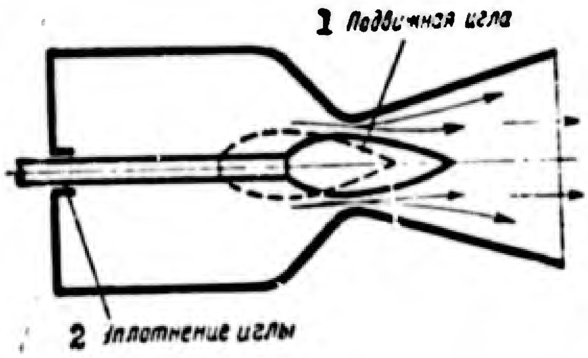

Figure 69. Diagram of the regulation of the area of the critical section by means of a profiled bullet.

1 -- the movable bullet; 2 -- bullet seal.

Thus, if an engine operates with a variable consumption of fuel, then, for the maintenance of a constant pressure in the chamber, it is necessary to change the value of the throat area in accordance with the consumption. The change in the throat area can be made by means of a profiled bullet moving in the nozzle along the axis of the engine (Figure 69).

If the regulating bullet does not reach the exhaust section, we change only the value of the throat area and the exhaust section remains as before as a result of which the degree of expansion in the nozzle is subjected to an abrupt fluctuation. With operation of the engine at a constant altitude, this leads to over-expansion in the nozzle.

Thus we now have a second problem, namely, the regulation of the engine nozzle in such a way that simultaneous to a change in the throat area there will also be a change in the exhaust section. They are changed in such a way that the expansion of the nozzle remains constant.

For a simultaneous change in the throat area and the exhaust section of the nozzle it is necessary to make the bullet longer but even in this instance it is difficult to obtain a constant ratio $\frac{f_3}{f_{cr}}$ by profiling the bullet.

To make a nozzle with a throat area that can be regulated is a very complicated task because much of the difficulty arises out of the need for intensive cooling of the bullet and its controls. When the bullet is thrust through the head of the chamber, it is difficult to seal the chamber reliably.

At the present time the regulation of the nozzle throat area is done by using multi-chambered engines. These engines have several combustion chambers which can be shut down when it is necessary to reduce the thrust and fuel consumption. In many aviation engines the two-chamber design is used. There are also some three- and four-chamber engines. The employment of a large number of chambers, however, is difficult because it results in a complex design of the engine. In addition, with a large number of chambers it is difficult to obtain reliable operation of the engine at the moment the combustion chambers are cut on or cut off.

SECTION 24. CHARACTERISTICS OF THE LIQUID-FUEL ROCKET ENGINE

By characteristic of any machine we understand the dependence of its operation index on the conditions under which it works. Usually there is a change in only one of its parameters. The other values characterizing the operating conditions of the machine remain constant.

For a liquid-fuel rocket engine the most important characteristics are those indicating the dependence of thrust, specific thrust, and pressure in the chamber on the fuel consumption with constant operational altitude and on the altitude with a constant consumption.

The dependence of thrust and specific thrust of the engine on the fuel consumption with a constant operational altitude is called consumption or throttle characteristics.

The dependence of thrust and specific thrust of the engine on altitude with a constant fuel consumption is called the altitude characteristic.

For the ideal engine this exhausts the list of possible characteristics, but in the real engine we can find certain characteristics, for example, the dependence of the above values (P; P_{sp}; P_2) on the composition of the fuel, the type of head, etc. In addition, as a result of the difficulties involved in a precise determination and maintenance of a constant consumption by engine tests, we often times take an alternate value, not the consumption but the value of the pressure in the chamber, which is proportional to consumption.

Consumption Characteristics.

The consumption (throttle) equation of a liquid-fuel rocket engine can be obtained from the equation for thrust if we assume that the velocity at the nozzle section does not depend on the value of consumption. This assumption for the ideal engine is entirely justified. In the real engine the velocity of discharge may depend upon the consumption principally because of the change in pressure in the chamber and other factors connected with this change -- the quality of atomization, the degree of dissociation and other less substantial causes.

Under this assumption the formula for thrust (I.9)

$$P=G\frac{w_3}{g}+f_3(p_3-p_H) \tag{IV.30}$$

can be transformed by making use of the fact that

$$p_3=\delta p_1 \text{ and } p_1=\frac{G\sqrt{RT_1}}{f_{cr}A_n}=\frac{G\beta}{f_{cr}}.$$

For the given nozzle the pressure on its section is proportional to the gas flow rate

$$p_3=\delta\frac{G\sqrt{RT_1}}{f_{cr}A_n}=\delta\frac{G\beta}{f_{cr}}. \tag{IV.31}$$

By substituting (IV.31) in (IV.30) and combining the coefficients in front of G, we obtain:

$$P=G\left(\frac{w_3}{g}+\frac{f_3}{f_{cr}}\delta\beta\right)-f_3p_H. \tag{IV.32}$$

The value enclosed in parentheses does not depend on the consumption per second, just as in the case of the product f_3p_H. Hence the equation of the characteristic has the form:

$$P=AG-\text{Б}. \tag{IV.33}$$

This equation is the equation of a straight line the slope of which toward the axis of the abscissas is determined by the coefficient:

$$A=\frac{w_3}{g}+\frac{f_3}{f_{cr}}\delta\beta=\frac{w_3}{g}+f_3B, \tag{IV.34}$$

where

$$B=\frac{1}{f_{cr}}\delta\beta=\text{const.}$$

The value A of the given fuel increases with the increase in the value of w_3 and the ratio $\frac{f_3}{f_{cr}}$.

This line intersects the axis G = 0 at a distance $f_3 p_H$ from the origin of the coordinates (Figure 70).

With a change in the nozzle, for example, with an increase in its expansion $\frac{f_3}{f_{cr}}$, there is an increase in the value w_3 and also of $\frac{f_3}{f_{cr}}\delta$, so that the coefficient A increases and the line of the characteristics runs more steeply, cutting off on the axis G = 0 a large segment -- $f_3 p_H$.

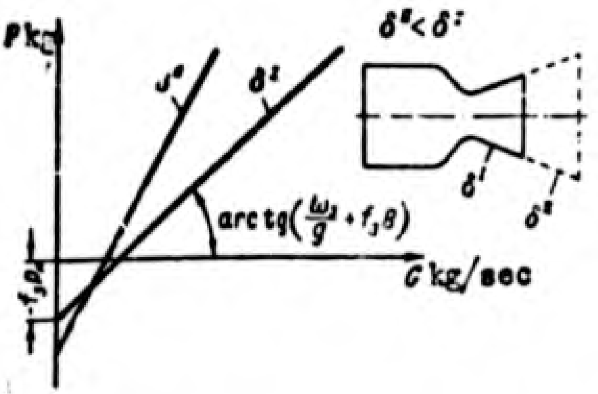

Figure 70. Consumption characteristics of a liquid-fuel rocket engine with different degrees of expansion.

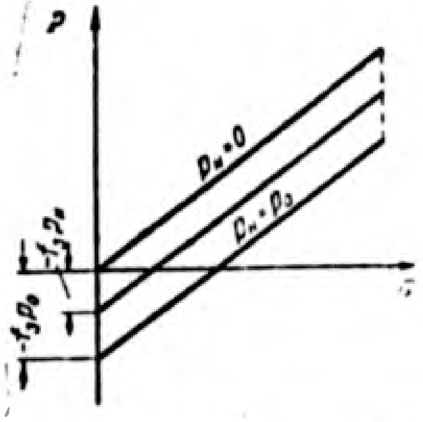

Figure 71. Consumption characteristics of a liquid-fuel rocket engine operating at different altitudes.

The consumption characteristics of an engine with a constant nozzle at different altitudes will represent a family of parallel straight lines cutting off negative segments $f_3 p_H$ on the axis G = 0.

The consumption characteristic of an engine operating in a vacuum will pass through the origin of the coordinates (Figure 71).

The consumption characteristic of the engine operating on the ground cuts off on axis G = 0 a segment $f_3 p_0$ in which p_0 is the pressure of the atmosphere on the ground.

We should remember that the design formula which constitutes the basis of the equation for the consumption characteristic is valid within certain limits because with a considerable decrease in consumption, compared to the consumption at the design operating conditions of the engine, the nozzle will start to operate under conditions characterized by an internal shock and then the formulas employed will cease to be valid.

The consumption characteristics, as we pointed out, may be determined on the basis of the value of the pressure in the chamber.

Altitude Characteristic.

The altitude characteristic is described by the thrust equation in which the pressure of the surrounding medium p_H will be variable, and consequently the engine thrust also varies with altitude.

Since the change in the external conditions exercises no influence in the supersonic flow, the velocity of discharge w_3 remains invariable and the only change in the thrust equation:

$$P=G\frac{w_3}{g}+f_3(p_3-p_H)$$

will be the value p_H.

At high altitudes the thrust (and the specific thrust) moves to its upper limit, namely, thrust in a vacuum P_{vac}, which is equal to:

$$P_{vac}=G\frac{w_3}{g}+f_3p_3. \qquad [vac = vacuum]$$

The complete thrust can be represented in the form:

$$P=P_{vac}-f_3p_H. \qquad (IV.35)$$

On the other hand, the thrust at any altitude can be expressed by the thrust on the ground P_0, which is always measured on the test stands of the engine. For this purpose, in the thrust equation we add and subtract the member f_3p_0, where P_0 is the pressure of the atmosphere on the surface of the earth. Then:

$$P=G\frac{w_3}{g}+f_3p_3-f_3p_0+f_3p_0-f_3p_H;$$

since the thrust on the ground will be equal to:

$$P_0=G\frac{w_3}{g}+f_3(p_3-p_0),$$

the thrust equation will take the form:

$$P=P_0+f_3(p_0-p_H). \qquad (IV.36)$$

The equations (IV.35) and (IV.36) constitute two forms of the equation for altitude characteristic.

The altitude characteristic of the liquid-fuel rocket engine with a constant nozzle is shown in Figure 72.

The difference between thrust on the ground and thrust in a vacuum is determined by the value $f_3 p_0$. This difference will increase with an increase in the exhaust section of the nozzle; that is, greater in engines having smaller δ, all other conditions remaining the same. The numerical value of the change in thrust from the ground to a vacuum amounts to 10% to 20% of the thrust on the ground.

It will be interesting to consider the behavior of the altitude characteristics of two engines differing only by a different degree of expansion δ. Let us compare two such engines, the second of which has a smaller degree of expansion than the first, and consequently a greater design altitude ($H_p^{II} > H_p^{I}$). If all the other conditions remain unchanged; that is, fuel consumption and dimension of the throat area of the nozzle are the same for both engines, the discharge velocity of the second engine will be greater than that of the first. However, the characteristic equation does not allow us to draw a conclusion as to how the legs of the altitude characteristics of these engines will run at altitudes less than the design altitude because we do not know whether the increase in the static component of thrust of the second engine will be compensated by the increase in its kinetic component.

For the solution of this problem let us consider Figure 73 in which the ideal cycles of these engines have been represented.

In the figure we can see that the second engine at altitudes less than the design will have a great loss of work due to over-expansion (for the second engine it is determined by the area of $33^{II}d^{II}$; for the first, $33^{I}d^{I}$). This same result can easily be obtained by considering the figure in which we have given the change η_t from the value ε (see Figure 67). Thus the thrust of the second engine on the ground will be less than the thrust of the first engine.

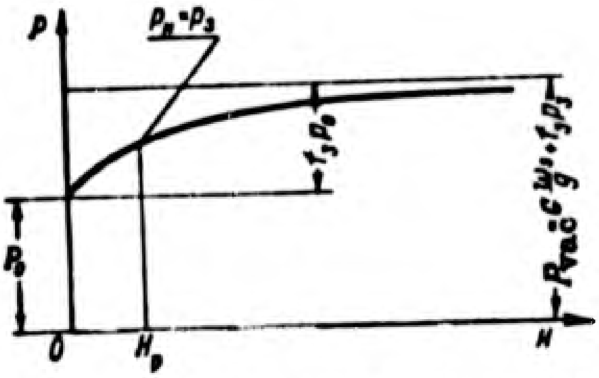

Figure 72. Altitude characteristics of the liquid-fuel rocket engine with a constant nozzle.

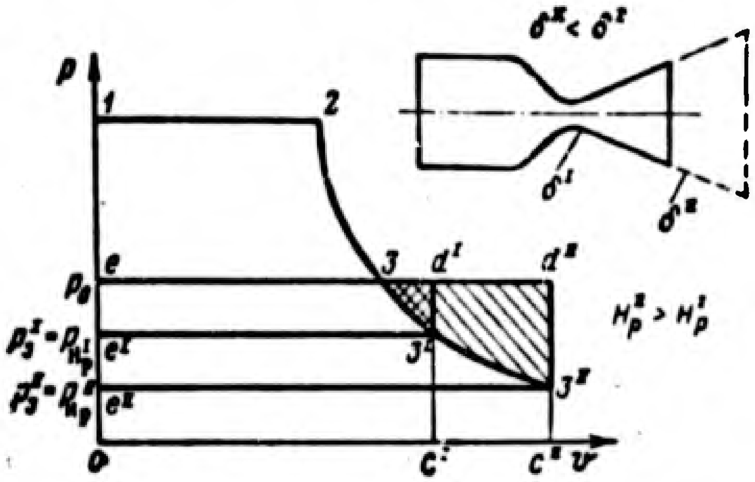

Figure 73. The ideal cycles of two liquid-fuel rocket engines, differing only by the values of the degree of expansion in the nozzle and operating at different altitudes.

In accordance with the statements made above, the characteristics of these engines run just as represented in Figure 74.

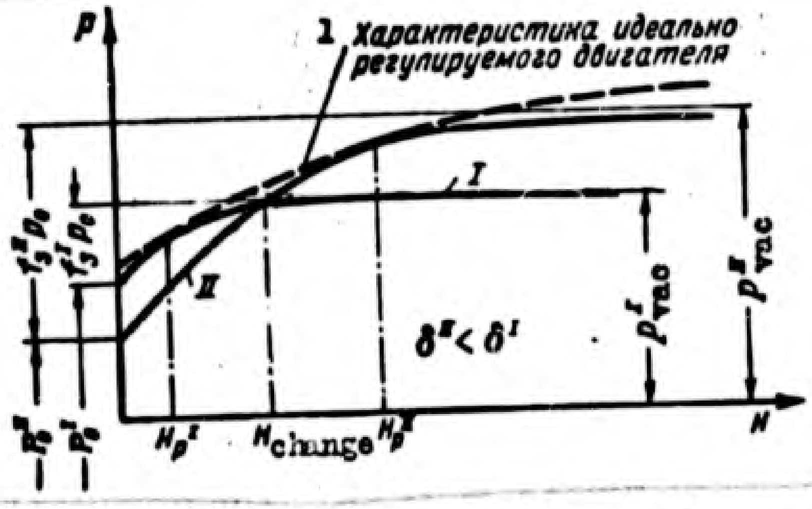

Figure 74. The altitude characteristics of two engines with different values of the nozzle area ratio.

1 -- characteristic of the ideal engine capable of being regulated.

At rated altitudes each of the engines will have the maximum possible thrust corresponding to the complete expansion of the combustion products. Through these points there will run the altitude characteristic of the ideal engine in which the nozzle is regulated so that the pressure on the section remains equal to the pressure in the surrounding medium.

The characteristic of such an engine with an ideal nozzle capable of being regulated in shown in Figure 74 by the broken line.

If we were able to change the discharge section of the nozzle during the time of the flight of the rocket, for example, by the construction of an insert, then the altitude $H_{changes}$, at which it is necessary to change from one discharge section to another, would be determined by the point of intersection of the altitude characteristics in Figure 74. This point corresponds to the point of intersection of the line of change η_t in Figure 67.

QUESTIONS AND PROBLEMS FOR REVIEW

1. What is meant by a thermodynamic cycle?

2. What are the processes which constitute the ideal cycle of a liquid-fuel rocket engine?

3. What are the characteristics of the compression of fuel in a liquid-fuel rocket engine?

4. Explain how the expansion process in a liquid-fuel rocket engine would take place with total combustion of the fuel in the chamber.

5. What is the ratio between the cycle output with recombination of the combustion products in the nozzle and without recombination of combustion products?

6. Write the formula connecting specific thrust with cycle output and explain it.

7. Into what parts should we divide the combustion process losses? How are they calculated?

8. What coefficients account for losses in the nozzle?

9. What is the relation between the energy coefficient and the impulse coefficient which corresponds to it?

10. What losses are accounted for by the thermal coefficient of an ideal cycle?

11. Derive the equation for η_t.

12. How does the specific thrust of an engine with a constant nozzle change with a change in the altitude at which the engine operates? What is the thrust of an engine equal to in a vacuum?

13. How does the operation of an engine with a constant nozzle change with a change in the fuel consumption?

14. In what instance is it necessary to regulate the nozzle by changing the value of the discharge section?

15. In what case is it necessary to regulate the nozzle by changing the value of the throat area? How is such a change actually carried out?

16. What do we call the engine consumption characteristic?

17. What do we call the engine altitude characteristic?

18. What are the dispositions of the consumption characteristics of two engines having different degrees of nozzle expansion?

19. What are the dispositions of the altitude characteristics of two engines having different degrees of nozzle expansion?

CHAPTER V

LIQUID-FUEL ROCKET ENGINE PROPELLANTS

As fuel we shall designate a substance (or a system of substances) possessing a supply of energy, a considerable part of which can be transformed in the combustion chamber, first into heat energy and then into the kinetic energy of the products discharged from the nozzle.

At the present time, chemical propellants, which possess a store of chemical energy that is transformed into heat energy during a chemical reaction of the products formed from the propellants during such a reaction, are used exclusively in liquid-fuel rocket engines. The most extensively employed reaction, leading to a conversion of chemical energy into thermal and used in the liquid-fuel rocket engine, is the reaction of combustion, and the part of the liquid-fuel rocket engine in which this reaction takes place is usually called the combustion chamber. The products of reaction are called combustion products.

We also employ in rocket engines fuels which liberate chemical energy in the process of a decomposition reaction (for example, the reaction of decomposition of hydrogen peroxide). It is also conceivable that one might also employ fuels in which chemical energy is liberated and converted into thermal energy in a reaction recombination process, for example, the reaction of recombination of atomic substances into molecular. These reactions take place with the liberation of large quantities of heat.

As a result of the unusually rapid development of atomic energy, we are considering the problem of employing atomic fuels in rocket engines; fuels which, in the process of nuclear reactions, release nuclear energy which is then used in the combustion chamber.

Chemical fuels which liberate energy during combustion usually consist of two substances or, as we call them, fuel components -- the combustible substance and the oxidizer.

We designate as a combustible a substance consisting in the main of combustible elements, oxidizable in the process of the combustion reaction. The oxidizer is the substance consisting in the main of the oxidizing elements, which are employed for the oxidation of the combustible.

The majority of chemical fuels do not permit preliminary mixing of the components; they must go into the combustion chamber separately. Hence such fuels are called separately fed, two-component fuels.

The components of certain fuels permit preliminary mixing. The previously mixed two-component fuel which is called a mono-fuel is then fed into the engine.

There are, however, monofuels of another type, consisting of one substance in the molecule of which there are both oxidizing and combustible elements.

When such a fuel undergoes decomposition, these elements separate and burn in the chamber of the engine. Such a fuel may be called a one-component or mono-fuel. The mono-fuels of the liquid-fuel rocket engine are similar to powder and are sometimes called "liquid powders."

SECTION 25. REQUIREMENTS WHICH FUELS SHOULD MEET

The construction of a liquid-fuel rocket engine depends a great deal on the characteristics of the fuel it burns. For the employment of liquid-fuel rocket engines in rocket aircraft, the fuel should possess certain characteristics. First of all, the fuel should give to the rocket the required range and altitude of flight with a minimum weight, and should also ensure the reliable operation of the rocket under the most varied conditions.

As a result, the fuels for rocket engines must meet various requirements.

For the systemization of these requirements, they may be conveniently divided into the following groups:

1. The basic requirement to be met by fuels for rocket engines.
2. The constructional requirements.
3. The operational requirements.

The Basic Requirements to be met by Fuels for Rocket Engines.

The rocket engine should give the rocket the required range and altitude of flight. The range of the rocket (as well as its altitude) depends upon its final velocity u_k, the velocity which the rocket has at the moment the engine ceases to operate. The formula for the determination of the final velocity of the rocket in the simplest case, when we do not take into account the force of gravity and the resistance of the air, has the form:

$$u_k = 2.303\, w_3 \lg \frac{M_o}{M_k} \qquad (V.1)$$

where M_o is the initial mass of the rocket; M_k, the final mass of the rocket.

From formula (V.1) we can see that u_k is directly proportional to the velocity of discharge, that is, to the specific thrust of the engine. Thus the first basic requirement to be met by a fuel is that during combustion in the engine it ensures the maximum possible specific thrust.

For an explanation of the second basic requirement to be met by a fuel for a rocket engine, let us consider the fact that:

$$M_o = M_{const} + M_{PL} + M_{fuel}$$ [const = construction] [PL = Payload]

and

$$M_k = M_{const} + M_{PL},$$

where M_{const} is the mass of the rocket construction;

M_{PL}, the mass of the payload.

With a given weight (or mass) of the payload, an increase in the ratio

$\frac{M_o}{M_k}$, which exercises an influence on the final velocity of the rocket, is possible only by means of a reduction in the weight of the rocket, or, to be more exact, by a reduction in the ratio of the weight of the rocket to the weight of the fuel placed in it.

The building of a rocket with a small relative weight requires high quality in construction. But the relative weight of the rocket depends also on the characteristics of the fuel. If we employ fuel of high specific weight, we can use fuel tanks of smaller capacity. Consequently the dimensions and relative weight of the rocket in this case will be less. Thus the second basic requirement for fuel is that its specific weight be as high as possible.

Let us return now to the first basic requirement and consider in more detail the conditions under which it can be met.

The specific thrust of a rocket engine, in accordance with formula (IV.10), is determined by the following:

$$P_{sp}=\sqrt{\frac{2}{gA}H_u\eta_{dis}\eta_{comb}\eta_t\eta_k}.$$

For obtaining large values of the specific thrust, in accordance with this formula, it is necessary to have fuel with a large supply of chemical energy, which is evaluated, as we know, by the calorific value of the fuel H_u. Thus the first requirement for obtaining a high specific thrust is to have a fuel with high calorific value.

Let us note that in conventional thermotechnical power plants, in which we employ as an oxidizer air taken from the atmosphere, the supply of chemical energy (or the calorific value) refers only to the weight of the combustible.

In the rocket engine both the combustible and the oxidizer have the same value because both are placed on board the jet aircraft. Thus the supply of chemical energy in rocket fuels refers to the weight of all the fuel.

Numerous recent calculations of specific thrust and also experiments in the employment of new fuels have shown, however, that meeting only the requiremen for high calorific value of the fuel, even though it is obligatory, is still far from being sufficient to ensure the maximum specific thrust in the engine.

As shown by equation (IV.10), the value of the specific thrust is determined by not only the calorific value but also the coefficients η_{dis} and η_t, depending, as we shall see below, on the characteristics of the fuel.

The dissociation of the combustion products takes place with a loss of thermal energy (the conversion of it into chemical energy), and this reduces the quantity of thermal energy liberated in the combustion chamber of the rocket engine.

Even though a part of the energy expended in dissociation in the combustion chamber is returned and converted into thermal energy, due to the reaction of recombination in the nozzle (see page 349), this heat goes into the work of expansion and generation of the kinetic energy of the combustion products, but is much less effective than the heat liberated in the combustion chamber. Thus for obtaining a high specific thrust, the combustion products of the fuel should be stable against dissociation.

Let us state more precisely this second requirement for obtaining a high specific thrust. The degree of dissociation of the combustion products determining the coefficient η_{dis}, depends closely on the temperature. Also, especially in the range of high temperatures, the coefficient of dissociation decreases sharply with an increase in temperature. Thus, for a reduction in the losses resulting from dissociation of the combustion products it is necessary first of all to have the temperature T_2 in the combustion chamber as low as possible.

We can express the value T_2 simplest of all as: $T_2 = \frac{H_u}{c_p}$.

We can easily see that with the same calorific value of the fuel H_u kcal/kg that is, with the same supply of energy in it, the temperature in the combustion chamber, and consequently also the dissociation of the combustion products will decrease with an increase in their thermal capacity, expressed in kcal/kg °C.

From Chapter II we know that the thermal capacity of the combustion products having the same number of atoms in a molecule, referred to 1 gram-mole, changes within rather narrow limits.

For a conversion of the thermal capacity of the combustion products from kcal/g-mole °C to kcal/kg °C, we make use of a ratio analogous to (II.21):

$$C_p \text{ kcal/kg °C} = C_p \text{ kcal/g-mole °C} \frac{1,000}{\mu}.$$

From this we can see that the decrease in the molecular weight of the combustion products will lead to an increase in their thermal capacity weight and to a decrease in the combustion temperature. Consequently, for obtaining low temperatures in the chamber with the large supply of energy which the fuel has, its combustion products must have as small a molecular weight as possible.

In addition, since the gas constant R is connected with the molecular weight by the ratio $R = 2\frac{848}{\mu}$, the value of the gas constant will increase with a decrease in the molecular weight of the combustion products. Hence we may also say that the combustion products of rocket fuels should possess as large a gas constant as possible.

Sometimes this is formulated in a different way. For the combustion products the equation of state has the form

$$pv = RT$$

or

$$v = \frac{T}{p} R, \tag{V.2}$$

that is, we see that with an unchanging pressure p and temperature T the value of the specific volume of the combustion products is proportional to the gas constant R.

The value of the specific volume v of the fuel combustion products under normal conditions (p = 1 physical atmosphere, T = 293° absolute) is called gasification and is designated by V_g. It is usually expressed in normal liters per kg (n.l/kg). The larger the gas constant, the larger of course the gasification.

In order to obtain low temperatures and a reduction in the intensity of dissociation in the combustion chamber, it is necessary that the combustion products of rocket fuels possess the maximum thermal weight capacity. In principle, this will be obtained if the combustion products have either a small molecular weight or a large value for the gas constant R, or a large value for gasification V_g. The last three characteristics of the combustion products are entirely analogous and in the evaluation of fuels they can readily replace each other.

It is necessary to note that a more precise requirement for obtaining low temperatures in the combustion chamber; and, consequently, also reduced losses in the combustion chamber due to dissociation, is precisely a high-thermal weight capacity of the combustion products but not a small molecular weight.

As we can see, for example, from the data of Table 3 pertaining to combustion of the fuels, oxygen plus hydrogen and oxygen plus fluorine, in spite of the approximately equal molecular weight H_2O and HF, the thermal weight capacity of the latter is less, and as a result the temperature of the combustion of fluorine fuel plus hydrogen is much higher even though the store of chemical energy in both fuels is the same.

Let us show how the thermal weight capacity (or the molecular weight of the combustion products) influences the quality of the rocket fuel by using the data for the combustion of two fuels in the rocket engine: hydrogen plus oxygen and carbon plus oxygen.

The data for these fuels and their combustion, with and without taking into account the dissociation, are given in Table 3.

The thermal weight capacity of non-dissociated combustion products of the first fuel (H_2O; $\mu = 18$) was more than two times greater than for the second fuel (CO_2; $\mu = 44$). On the basis of the molecular weights we also find the values of R and V_g of the combustion products of these fuels, calculated without taking into account dissociation. The influence of dissociation reduces somewhat the difference in the molecular weights of the combustion products but it still remains considerable.

In considering the data given in Table 3, it is easy to see that even though the fuel hydrogen plus oxygen has a calorific value of H_u 1.5 times greater than the fuel carbon plus oxygen, the combustion temperature of the first fuel of 345° is less than the combustion temperature of the second fuel. As a result, the heat losses due to dissociation Q_{dis}, even when based on the absolute value of the first fuel, are less than for the second (865 as compared to 935 kilo-cal). The difference in the relative heat loss by dissociation is particularly noticeable. The loss is equal to $1 - \eta_{dis}$, and for the fuel of hydrogen plus oxygen it constitutes 27% of H_u. For the fuel of carbon plus oxygen it constitutes 44%. As a result, the liberation of heat in the chamber $H_u \eta_{dis}$ for the second fuel is almost one-half of that for the first. Thus the specific thrust with expansion from 100 to 1 atmosphere P_{sp} 100:1 in the first case is much greater than in the second. Hence from this example we can see clearly the superiority of a fuel with a high thermal weight capacity (or with a small molecular weight) of the combustion products.

A factor exerting an influence on the degree of dissociation of the combustion products is the number of atoms in the molecule. As theory and calculations show, the molecules of the combustion products with a small number of atoms (for example, diatomic) are much more resistant to dissociation than molecules with a large number of atoms (for example, triatomic).

The combustion of hydrogen with oxygen and fluorine (see Table 3) can be given as an example. In the first case chiefly a triatomic molecule H_2O is formed, but in the second a diatomic molecule HF. In spite of the much higher temperature of combustion of the fuel fluorine plus hydrogen (4,980 in comparison with 3,650° absolute), the losses in its dissociation are approximately the same as for fuel consisting of oxygen plus hydrogen (29.6 and 27%).

Table 3

Fuel	H_u kilo-cal/kg	Combustion without calculation of dissociation					Combustion with calculation of dissociation						
		Gas	μ	C_p kilo-cal/kg °C	R, kg-m/kg °C	V_g, n.l/kg	T_{comb} °absolute	μ_Σ	R, kg-m/kg °C	Q_{dis}, kilo-cal/kg	η_{dis}	$H_{u\,dis}$, kilo-cal/kg	P_{sp} 100:1 kg-sec/kg
Oxygen hydrogen	3,210	H_2O	18	0.640	47.1	1,380	3,660	16.0	53.0	865	0.73	2,345	376
Oxygen carbon	2,140	CO_2	44	0.318	19.3	565	3,995	33.6	25.2	935	0.56	1,205	278
Fluorine hydrogen	3,210	HF	20	0.350	42.4	1,230	4,980	18.0	47.0	950	0.704	2,260	411

Thus the second requirement for obtaining a high specific thrust, namely, small losses due to dissociation of the combustion products is met when the fuel combustion products have a large thermal weight capacity and a small number of atoms in the molecule.

The third requirement for obtaining a high specific thrust in a liquid-fuel rocket engine is that the expansion process take place smoothly. The quality of this process is determined in the main by the value of thermal efficiency η_t.

As we can see from Table 3, the gases having a small number of atoms in the molecules, especially at high temperatures which are characteristic of liquid-fuel rocket engine combustion chambers, have large values of the adiabatic index k. This in its turn, as follows from the graph showing the changes in the thermal efficiency η_t, given in Figure 63, makes possible (with the given value of the pressure differential) a more complete conversion of thermal energy into work of expansion. Consequently, with the same supply of thermal energy in the combustion products the specific thrust of the fuel having a combustion product with a small number of atoms in the molecule, in accordance with formula (IV.10), will be large.

In addition to the above-considered influence of the number of atoms in a molecule, a great influence is exerted on the character of the process of expansion by the physical state of the combustion products in the combustion chamber of the rocket engine.

The expansion process leading to a rapid conversion of thermal energy into mechanical work, takes place only in gases.

The employment of the thermal energy of liquid and solid substances and the conversion of thermal energy into work of expansion is possible only by the giving off of this energy by the expanding gas. However, the heat exchange processes necessary for this method of using of thermal energy take place much slower. Thus the best physical state of the combustion products in the combustion chamber and in the nozzle is the gaseous state. At any rate, at least a portion of the combustion products in the engine should be in a gaseous state without which an expansion process would be entirely impossible. Thus we can meet the third requirement for obtaining a large specific thrust when the combustion products (or in the worst case at least a part of them) have a relatively low boiling point -- lower than the minimum temperature of the combustion products in the chamber engine.

The small losses due to dissociation and the favorable course of the expansion process in the chamber of the rocket engine, as we saw above, are obtained in this case if the combustion products of the fuel have definite characteristics. These characteristics (small molecular weight, a small number of atoms in the molecule, and low boiling point) may be called thermodynamic characteristics of the combustion products. The influence of the latter upon the increase of specific thrust is at least equal to that of the value of a large store of chemical energy in the fuel.

Thus we can finally formulate the basic requirements to be met by fuels, namely, a large supply of chemical energy, good thermodynamic characteristics of the combustion products, and a high specific weight.

It should be mentioned that the determination of the degree of suitability of a given rocket fuel is very difficult, especially because of the fact that the specific thrust and the specific weight of the fuel exercise a different kind of influence upon the final velocity of the rocket. Sometimes, for estimating the joint influence on the character of the fuel of the calorific value and the specific weight, we employ the value of their product

$$K_{t} = H_{s}\gamma_{t} \text{ kilocal}/l, \qquad [l = \text{liter}]$$

where γ_t is the specific weight of the fuel.

We call the value K_v the thermal density[1]. In its physical sense it represents a concentration of energy in a liter volume of the tanks. Since the calorific value is still far from characterizing the specific thrust, it will be more logical to regard as a parameter that can be calculated the product $P'_{sp} = P'_{sp}\gamma$ kg-sec/l, which in a physical sense represents the impulse present in a unit volume of fuel taken from the tanks. However, even this value is poorly suited for the definitive evaluation of the fuel, and all the more so since the values of specific thrust and of specific weight have a widely different effect upon the characteristics of rockets for different purposes (long range, short range, antiaircraft, etc). We can also say that other more complicated combined methods of rating the parameters have not been used to any great extent. In important cases preference has been given to direct ballistic calculations of the more important output parameters of rockets (for example, range or altitude of flight) with different fuels for the purpose of finding out the best fuel for the given conditions. This method gives more precise results, but it is very cumbersome and is not lacking in weaknesses, especially in view of the fact that in ballistic calculations it is

---

[1] G. F. Knorre, Topochnyye protsessy [Combustion processes], Gosenerzoizdat, 1951.

necessary to take approximate values of many parameters as, for example, the value of the weight of the various assemblies of the rocket and the engine which could not be calculated theoretically beforehand.

Constructional Requirements to be met by Fuels.

In addition to the basic requirements listed above, the components of fuels for liquid-fuel rocket engines must meet a number of requirements necessary for the simplification of construction and the assurance of reliable operation of the engine. Let us list the most important of them.

1. Requirements rising out of the need to cool the engine.

In order to insure a reliable cooling of the engine at least one of the fuel components must have the following characteristics:

a) A high boiling point t_{boil} °C [boil = boiling point].

b) A high value for the thermal capacity c kilo-cal/kg °C.

In meeting these requirements there is an increase in the amount of heat which must be received before one kilogram of component begins to boil. This quantity of heat is called the thermal receptivity of the fuel component and is equal to $c\ (t_{boil} = t_o)$, where t_o is the temperature of the component on entering the cooling jacket of the engine.

In addition, the component employed for cooling should not decompose when overheated or produce any carbon deposit because otherwise there will be a deterioration of the conditions for heat transfer to the liquid and the walls of the chamber and nozzle may burn out.

2) Requirements resulting from the system by which the components are mixed and fed into the chamber.

a) The viscosity of the components should be as low as possible because in this case there is a decrease in the hydraulic resistance of the injection system and less energy is required for injection.

b) The change in the viscosity of the components with the temperature should be a minimum and if possible the same for both components.

An increase in the viscosity (thickening) of the components at low temperatures is particularly undesirable.

When we meet this requirement, we improve the operation of the engine injection system and ensure the operation of the engine under different temperature conditions;

c) The volumetric flow rates of both components should be as close as possible to each other. In this case the number of injectors of combustibles and oxidizers is approximately the same making possible a more uniform distribution of the fuel components; that is, facilitating the mixing arrangement in the engine. (See Chapter VIII.)

3. Requirements resulting from the ignition and combustion systems:

a) In order to ensure rapid combustion in the chamber of the rocket engine, the fuel should burn quickly. At the same time, a high rate of fuel combustion should not lead to an explosive type combustion -- the so-called detonation -- because this would destroy the engine. In addition, the fuel should not cause a vibration type combustion in the chamber of the rocket engine, that is, combustion during which the pressure in the chamber changes periodically (see below, Chapter VIII);

b) The fuel of the liquid-fuel rocket engine may be hypergolic, that is, igniting upon contact and hypergolic, that is, requiring an outside source of ignition.

The needs of these two types of fuel are somewhat different.

For non-hypergolic fuels the following are necessary: a short period of delay in ignition, that is, a short pause from the moment of application of ignition up to the actual ignition; and as low an ignition temperature as possible.

For hypergolic fuels: a short delay in self-ignition, that is, a short period of time from the moment of contact of the liquid components until they are self-ignited.

The satisfaction of this requirement makes starting the engine easier, and preventing the accumulation of well prepared mixtures of fuel components in the combustion chamber capable of causing an explosion.

Operating Requirements to Be Met by Fuels.

The conditions of operation of the liquid-fuel rocket engine also require that the fuel components meet a number of requirements:

The main requirements are enumerated below:

1. Chemical and physical stability of the components, making it possible to store them for a long time without any special precautions.

2. The absence of the danger of explosion.

It is precisely because of the great danger of explosion that monocomponent fuels have not been used very much up to the present time in liquid-fuel rocket engines.

3. The absence of poisonous characteristics. The employment of fuels in engines which have a harmful effect upon the human organism greatly complicates the operation of the liquid-fuel rocket engine. When we employ poisonous components, we must have strict observance of all the rules for safety techniques because the least failure to observe these rules could lead to serious consequences.

4. Weakening effects on construction materials. The use of corrosive components in liquid-fuel rocket engines makes necessary the employment of costly materials and metals not subject to corrosion. This greatly increases the cost of the entire power plant. In addition, the employment of corrosive components creates additional difficulties in transporting and storing them.

5. Low freezing point and high boiling point, facilitating storage without special measures as well as employment of the rocket and the fuel in the necessary range of temperatures of the surrounding medium.

In addition, the fuel components should be cheap; their manufacture should be based on abundant raw materials and an adequate industrial base.

As we can see, fuels and their components must meet numerous and varied requirements. We have not yet succeeded in producing components which will meet simultaneously and in a satisfactory manner all the requirements, even though in an effort to do this many research workers have conducted analyses of almost all the elements of the periodic system of Mendeleev and a considerable number of their compounds with a view to the possibility of their employment as fuels or oxidizers in rocket engines.

In present-day rocket engines we employ oxygen oxidizers exclusively in combination with hydrocarbon and partly with nitro-hydrogen combustibles.

As oxygen oxidizers we employ, in addition to liquid oxygen, substances which are liquids at normal temperatures in which oxygen is combined by means of nitrogen and sometimes also by means of hydrogen and carbon.

By hydrocarbon combustibles we shall understand not only substances consisting exclusively of C and H but also substances in which there are a relatively small number of other elements (in the main, N and O). The designation nitro-hydrogen combustible has a similar meaning. Hence present-day rocket engine fuels consist of practically only four elements: hydrogen H, carbon C, oxygen O, and nitrogen N. In the future we may expect the employment of fluorine as an oxidizer, or its oxide compound monoxide of fluorine OF_2. Then it will be necessary to take into account the presence in the fuel of a fifth element, fluorine, and the presence of an oxidizer consisting of two oxidizing elements.

SECTION 26. THERMO-CHEMICAL CHARACTERISTICS OF THE FUEL, OXIDIZER, AND PROPELLANT

For calculation of the operating process of a liquid-fuel rocket engine, it is necessary to know a number of values characterizing the fuel going into the engine. Among these values are the weight composition of the fuel and the store of chemical and thermal energy in the fuel -- the so-called thermo-chemical characteristics.

The thermo-chemical characteristics of fuel in their turn are determined by the thermochemical characteristics of the combustible and the oxidizer. Thus the calculation of the thermodynamic characteristics of a fuel must begin with a calculation of these values for the combustible and the oxidizer.

The Weight Composition of the Combustible and the Oxidizer.

We will define the composition of the combustible and the oxidizer in weight proportions of the given element.

Let us define the weight proportion of an i-element in the combustible or oxidizer by g_i. For a given element, we shall define the weight proportions with the symbol of the element and an index indicating precisely what components make up the content of this element. For example, H_g and H_o are the weight proportions of hydrogen in the combustible and oxidizer respectively. We should note that the total of the weight proportions for all the elements existing in the component is equal to one

$$\sum_i g_i = 1. \qquad (V.3)$$

This ratio should be used for checking calculations.

To determine the weight composition of a combustible and the oxidizer it is necessary to recognize two facts.

If the combustible or the oxidizer is a separate chemical substance, then, to calculate the weight proportions of the corresponding elements in the given compound we use the formula

$$g_i = \frac{A_i z_i}{\sum_i A_i z_i} = \frac{A_i z_i}{\mu}, \qquad (V.4)$$

where g_i is the weight proportion of the i-element;

A_i, the atomic weight of the i-element;

z_i, the number of atoms of the i-element in the molecule of the separate chemical substance;

$\mu = \sum_i A_i z_i$, the molecular weight of a given compound.

The thermo-chemical characteristics of fuel in their turn are determined by the thermochemical characteristics of the combustible and the oxidizer. Thus the calculation of the thermodynamic characteristics of a fuel must begin with a calculation of these values for the combustible and the oxidizer.

The Weight Composition of the Combustible and the Oxidizer.

We will define the composition of the combustible and the oxidizer in weight proportions of the given element.

Let us define the weight proportion of an i-element in the combustible or oxidizer by g_i. For a given element, we shall define the weight proportions with the symbol of the element and an index indicating precisely what components make up the content of this element. For example, H_g and H_o are the weight proportions of hydrogen in the combustible and oxidizer respectively. We should note that the total of the weight proportions for all the elements existing in the component is equal to one

$$\sum_i g_i = 1. \qquad (V.3)$$

This ratio should be used for checking calculations.

To determine the weight composition of a combustible and the oxidizer it is necessary to recognize two facts.

If the combustible or the oxidizer is a separate chemical substance, then, to calculate the weight proportions of the corresponding elements in the given compound we use the formula

$$g_i = \frac{A_i z_i}{\sum_i A_i z_i} = \frac{A_i z_i}{\mu}, \qquad (V.4)$$

where g_i is the weight proportion of the i-element;

A_i, the atomic weight of the i-element;

z_i, the number of atoms of the i-element in the molecule of the separate chemical substance;

$\mu = \sum_i A_i z_i$, the molecular weight of a given compound.

The thermo-chemical characteristics of fuel in their turn are determined by the thermochemical characteristics of the combustible and the oxidizer. Thus the calculation of the thermodynamic characteristics of a fuel must begin with a calculation of these values for the combustible and the oxidizer.

The Weight Composition of the Combustible and the Oxidizer.

We will define the composition of the combustible and the oxidizer in weight proportions of the given element.

Let us define the weight proportion of an i-element in the combustible or oxidizer by g_i. For a given element, we shall define the weight proportions with the symbol of the element and an index indicating precisely what components make up the content of this element. For example, H_g and H_o are the weight proportions of hydrogen in the combustible and oxidizer respectively. We should note that the total of the weight proportions for all the elements existing in the component is equal to one

$$\sum_i g_i = 1. \qquad (V.3)$$

This ratio should be used for checking calculations.

To determine the weight composition of a combustible and the oxidizer it is necessary to recognize two facts.

If the combustible or the oxidizer is a separate chemical substance, then, to calculate the weight proportions of the corresponding elements in the given compound we use the formula

$$g_i = \frac{A_i z_i}{\sum_i A_i z_i} = \frac{A_i z_i}{\mu}, \qquad (V.4)$$

where g_i is the weight proportion of the i-element;

A_i, the atomic weight of the i-element;

z_i, the number of atoms of the i-element in the molecule of the separate chemical substance;

$\mu = \sum_i A_i z_i$, the molecular weight of a given compound.

If a given combustible or oxidizer is a mixture of different separate chemical substances, their elementary weight composition may be computed either on the basis of a conventional chemical formula sometimes cited for multicomponent mixtures. These mixtures consist of a large number of individual substances (for example, kerosene), based on a ratio (V.4) already given or based on the weight proportion of a given separate substance entering into the composition of the combustible or the oxidizer.

In the latter instance the calculation is made according to the formula

$$g_i = \sum_k g_{ik} g_k. \qquad (V.5)$$

where g_i is the weight proportion of the i-element in the fuel or oxidizer;

g_k, the weight proportion of the k-component (of the individual chemical substance) in the combustible or oxidizer;

g_{ik}, the weight proportion of the i-element in the k-component; it is calculated by formula (V.4).

Example 1. To calculate the elementary composition of a combustible consisting of 60% trimethylamine $(CH_3)_3N$ and 40% xylidine $(CH_3)_2C_6H_3NH_2$.

Solution:

According to formula (V.4) we find the weight composition of trimethylamine and xylidine.

For trimethylamine:

$$\mu = \sum_i A_i z_i = 12 \times 3 + 1 \times 9 + 14 \times 1 = 59.$$

According to formula (V.4), the weight proportions of C, H, and N of trimethylamine are equal respectively to:

$$C = \frac{12 \times 3}{59} = 0{,}610;$$

$$H = \frac{9 \times 1}{59} = 0{,}153;$$

$$N = \frac{14 \times 1}{59} = 0{,}237.$$

For xylidine

$$\mu = \sum_i A_i s_i = 12\times 8 + 1\times 11 + 14\times 1 = 121.$$

Based on the formula (V.4) we determine the weight proportions of the elements in xylidine

$$C = \frac{12\times 8}{121} = 0{,}793;\quad H = \frac{1\times 11}{121} = 0{,}091;$$
$$N = \frac{14\times 1}{121} = 0{,}116.$$

Knowing the weight proportions of the elements of each of the constituent components and knowing the proportion of each component g_k, based on formula (V.5) we find;

$$C_{comb} = 0{,}6\cdot 0{,}61 + 0{,}4\cdot 0{,}793 = 0{,}683;$$
$$H_{comb} = 0{,}6\cdot 0{,}153 + 0{,}4\cdot 0{,}091 = 0{,}128;$$
$$N_{comb} = 0{,}6\cdot 0{,}237 + 0{,}4\cdot 0{,}116 = 0{,}189.$$

Proof: We prove this by formula (V.3). In applying this formula to our combustible;

$$C_{comb} + H_{comb} + N_{comb} = 1$$

After substitution:

$$\sum_i g_i = 0{,}683 + 0{,}128 + 0{,}189 = 1{,}000.$$

The composition of the combustible was determined correctly.

<u>Example 2.</u> To calculate the elementary composition of the oxidizer of pure monoxide of fluorine OF_2.

Solution:

The molecular weight of monoxide of fluorine

$$\mu = \sum_i A_i s_i = 16\cdot 1 + 19\cdot 2 = 54.$$

The weight proportions of O_0 and F_0 in accordance with formula (V.4) amount to;

$$O_0 = \frac{16 \cdot 1}{54} = 0{,}295; \quad F_0 = \frac{19 \cdot 2}{54} = 0{,}705.$$

We do the proof with formula (V.5)

$$\sum g_i = O_0 + F_0 = 0{,}295 + 0{,}705 = 1{,}000.$$

The composition of the oxidizer was determined correctly.

In certain fuels and oxidizers it is possible to have as ballast some additional substances most often water (for example, water added to nitric acid, hydrogen peroxide or alcohol). For all subsequent calculations it will be expedient at the same time to take into account the elements forming the ballast by introducing them in the weight proportions of the corresponding components. In the usual calculations, an insignificant content of some elements in the fuel excepting the basic ones (for example, iron or sulfur in various nitric acid oxidizers, copper in combustibles for engines based on hydrogen peroxide, etc.), is disregarded.

Example 3. To calculate the weight composition of an oxidizer containing 96% HNO_3 and 4% H_2O.

Solution:

Let us determine the weight composition of HNO_3 by formula (V.4)

$$\mu_{HNO_3} = \sum A_i z_i = 1 \cdot 1 + 14 \cdot 1 + 16 \cdot 3 = 63.$$

$$H = \frac{1}{63} = 0{,}016;$$

$$O = \frac{16 \cdot 3}{63} = 0{,}762;$$

$$N = \frac{14 \cdot 1}{63} = 0{,}222$$

Let us determine the weight composition of water by formula (V.4)

$$\mu_{H_2O} = \sum A_i z_i = 1 \cdot 2 + 16 \cdot 1 = 18;$$

$$H = \frac{2}{18} = 0{,}111;$$

$$O = \frac{16}{18} = 0{,}889.$$

Let us determine the weight composition of the oxidizer by formula (V.5)

$$H_{.}=0{,}96\cdot 0{,}016+0{,}04\cdot 0{,}11=0{,}020;$$
$$O_{.}=0{,}96\cdot 0{,}762+0{,}04\cdot 0{,}889=0{,}767;$$
$$N_{.}=0{,}96\cdot 0{,}222=0{,}213.$$

Proof: Formula (V.3) for proving in the instance of a given oxidizer has the form:

$$H_{.}+O_{.}+N_{.}=0{,}020+0{,}767+0{,}213=1{,}000.$$

The composition of the oxidizer was determined correctly.

The Quantity of Oxidizer Theoretically Required.

On the basis of the known weight composition of combustible and oxidizer, we can calculate the minimum quantity of oxidizer needed for a complete oxidation of one kilogram of combustible. This value is called the theoretical quantity of oxidizer required and is designated by ν_0. For correct use of a method of calculating this value, let us consider the reaction of total oxidation of the combustible elements.

The formula for the total oxidation reaction of carbon has the form;

$$C+O_2=CO_2. \tag{V.6}$$

Let us write now the quantitative ratio determining the given reaction.

From the reaction formula written, we can determine at once that for the oxidation of 1 kg-atom of carbon into the total combustion product -- carbon dioxide gas CO_2 -- it is necessary to expend 1 kg-mole of oxygen.

1 kg-atom C + 1 kg-mole O_2 = 1 kg/mole CO_2

Passing now to the weight units and taking into account the fact that 1 kg-atom of carbon C weighs 12 kg, and a kg-mole of oxygen O_2 weighs 32 kg, we obtain

$$12 \text{ kg C} + 32 \text{ kg } O_2 = 44 \text{ kg } CO_2 \tag{V.7}$$

Let us now calculate the weight ratios between the elements if there is participation in the reaction not of 12 kg of carbon but 1 kg. For this purpose we should divide the equation (V.7) by 12. As a result we obtain

$$1 \text{ kg C} + \frac{8}{3} \text{ kg } O_2 = \frac{11}{3} \text{ kg } CO_2 \qquad (V.8)$$

Since in the combustible there is not 1 kg of carbon but C_{comb} [comb = combustible] of it, then for 1 kg of combustible the equation for carbon combustion takes on the form:

$$C_{comb} \text{ kg C} + \frac{8}{3} C_{comb} \text{ kg } O_2 = \frac{11}{3} C_{comb} \text{ kg } CO_2 \qquad (V.9)$$

Consequently, for the combustion of C_{comb} kilograms of carbon contained in 1 kg of combustible we need $\frac{8}{3} C_{comb}$ kg of oxygen.

In a similar manner we can write also the total oxidation reaction of another fuel element, namely, hydrogen

$$2H_2 + O_2 = 2H_2O;$$
$$2 \text{ kg/mole } H_2 + 1 \text{ kg/mole } O_2 = 2 \text{ kg/mole } H_2O;$$
$$4 \text{ kg } H_2 + 32 \text{ kg } O_2 = 36 \text{ kg } H_2O;$$
$$1 \text{ kg } H_2 + 8 \text{ kg } O_2 = 9 \text{ kg } H_2O;$$
$$H_{comb} \text{ kg } H_2 + 8 H_{comb} \text{ kg } O_2 = 9 H_{comb} \text{ kg } H_2O. \qquad (V.10)$$

Hence, it follows that for total oxidation of H_{comb} kilograms of hydrogen it is necessary to have $8 H_{comb}$ kilograms of oxygen.

In computing the quantity of oxygen necessary for the complete oxidation of 1 kg of combustible consisting of carbon, hydrogen, nitrogen, and oxygen, we must also take into account the oxygen contained in the combustible itself. We must also bear in mind that nitrogen does not participate at all in the oxidation reaction. Then, to 1 kg of combustible we must supply from the oxidizer the following number of kilograms of oxygen:

$$\frac{8}{3} C_{comb} + 8 H_{comb} - O_{comb} \qquad (V.11)$$

Let us now estimate the quantity of oxygen in the oxidizer which can be used for burning the combustible. To generalize, let us suppose that in the composition of the oxidizer there is also some hydrogen, nitrogen, and carbon in addition to the oxygen, because this very often happens in actual practice.

The quantity of oxygen in 1 kg of oxidizer is determined by the weight proportion of O_o oxygen in the oxidizer, but from it we must subtract the oxygen required for the oxidation of the hydrogen and the carbon contained in the oxidizer. This quantity of oxygen is determined just as is the oxygen necessary for the oxidation of the carbon and hydrogen in the combustible. Thus the quantity of oxygen necessary for oxidation of carbon in the oxidizer amounts to

$$\frac{8}{3} C_o,$$

and for oxidation of the hydrogen in the oxidizer the quantity necessary is

$$8H_o.$$

Thus the quantity of free oxygen in 1 kg of oxidizer amounts to

$$O_o - \frac{8}{3} C_o - 8H_o. \qquad (V.12)$$

Let us further determine the minimum number of kilograms of oxidizer necessary for complete oxidation of 1 kg of combustible, that is, the value of ν_o.

Since for the oxidation of 1 kg of combustible we need $\frac{8}{3} C_{comb} + 8 H_{comb} - O_{comb}$ of oxygen, and in 1 kg of oxidizer there are $O_o - \frac{8}{3} C_o - 8 H_o$ kilograms of free oxygen; then, for the total oxidation of 1 kg of combustible we need

$$\frac{\frac{8}{3} C_{comb} + 8 H_{comb} - O_{comb}}{O_o - \frac{8}{3} C_o - 8 H_o}$$

kilograms of oxidizer[1].

---

[1] A.P. Vanichev and G.F. Knorre, Obobshchennyye Raschetnyye Formuly Gazovogo Analiza /Generalized Calculation Formulas for Gas Analysis/, Izd. BNT, 1946.

This is the amount of oxidizer theoretically required ν_o.

Hence,

$$\nu_o = \frac{\frac{8}{3} C_{comb} + 8 H_{comb} - O_{comb}}{O_o - \frac{8}{3} C_o - 8 H_o} \qquad (V.13,$$

Example 4. To determine the theoretical required amount of oxidizer, of 96% HNO_3 (96% HNO_3 + 4% H_2O) for burning kerosene with a composition

$$C_{comb} = 0.86; \quad H_{comb} = 0.13; \quad O_{comb} = 0.01$$

Solution:

We take the composition for the oxidizer from Example 3.

$$H_o = 0.020; \quad O_o = 0.767; \quad N_o = 0.213$$

The theoretical required amount of oxidizer amounts to

$$\nu_o = \frac{\frac{8}{3}\,0,86 + 8\cdot 0,13 - 0,01}{0,767 - 8\cdot 0,020} = \frac{3,23}{0,607} = 5,45 \text{ kg } HNO_3/\text{kg kerosene}$$

Hence, for complete combustion of 1 kg of kerosene, the minimum necessary is 5.45 kg of 96% nitric acid.

To determine the theoretical required amount of oxidizer, if the oxidizing element is fluorine, we apply the same method used above. Let us consider the application of this method to a given case in the following example.

Example 5. To calculate the theoretical required amount of oxidizer -- pure fluorine F_2 for burning with the combustible dimethylhydrazine $(CH_3)\,N_2H_2$.

Solution:

Since dimethylhydrazine contains carbon and hydrogen as combustible elements (nitrogen does not participate in the combustion process), then for the determination of the number of kilograms F necessary for the oxidation of 1 kg C and H, the equation for complete combustion of C and H with fluorine must be used;

$$C + 2F_2 = CF_4$$

$$1\ \text{kg/mol}\ C + 2\ \text{kg/mol}\ F = 1\ \text{kg/mol}\ CF_4;$$

$$12\ \text{kg}\ C + 76\ \text{kg}\ F = 88\ \text{kg}\ CF_4;$$

$$1\ \text{kg}\ C + 6.33\ F = 7.33\ \text{kg}\ CF_4;$$

$$H_2 + F_2 = 2HF;$$

$$1\ \text{kg/mol}\ H + 1\ \text{kg/mol}\ F = 2\ \text{kg/mol}\ HF;$$

$$2\ \text{kg}\ H + 38\ \text{kg}\ F = 40\ \text{kg}\ HF;$$

$$1\ \text{kg}\ H + 19\ \text{kg}\ F = 20\ \text{kg}\ HF.$$

From the combustion equation it follows that for 1 kg of carbon we need 6.33 of fluorine for complete combustion and for 1 kg of hydrogen, 19 kg.

Dimethylhydrazine has the following weight composition:

$$C_{comb} = 0.400; \quad H_{comb} = 0.134; \quad N_{comb} = 0.466$$

Thus in the oxidation of 1 kg of combustible with pure fluorine, bearing in mind that nitrogen does not participate in the reaction, the theoretical required amount of this oxidizer ν_0 amounts to $\nu_0 = 6.33\ C_{comb} + 19\ H_{comb} = 6.33 \cdot 0.400 + 19 \cdot 0.134 = 2.53 + 2.55 = 5.08$ kg of fluorine/kg dimethylhydrazine.

If we employ oxidizers composed of two oxidizing elements in the fuels of rocket engines (for example, monoxide of fluorine), the concept of the theoretical required amount of oxidizer is not so precise as in the examples considered above. The fact is that in this case it is necessary to adopt some method of expending the oxidizing elements in the oxidation of the combustible elements. Usually it is assumed that fluorine has a greater affinity for hydrogen, and is thus expended first in oxidation. The residue of fluorine (if it is present) and oxygen of monoxides is used for the oxidation of carbon. However, this assumption is not always correct, and the selection of the ratio between the combustible and the oxidizer in such a fuel is at first by approximation only.

Coefficient of Excess Oxidizer.

During the operation of a liquid-fuel rocket engine an exact ratio of the quantity of oxidizer to the quantity of combustible injected is not always maintained. For each kilogram of combustible injected, there may be more or less oxidizer than that which is theoretically required for combustion. In these instances we say that the engine operates with an excess or with a shortage of oxidizer.

Fuel in which there is a theoretical ratio between the combustible and the oxidizer is called a stoichiometric fuel.

Fuel in which there is an excess of combustible is called a rich fuel; and a fuel in which there is a shortage of combustible and an excess of oxidizer is called a lean fuel. Let us define by ν the actual ratio of the oxidizer to the combustible in the fuel. This may be expressed as the ratio of amounts consumed:

$$\nu=\frac{G_o}{G_{comb}}, \qquad (V.14)$$

where G_o is the consumption of oxidizer in kg/sec;

G_{comb}, the consumption of combustible in kg/sec.

By making use of the equation (V.14) for the actual ratio of the amounts of oxidizer and combustible consumed, we can determine the flow rate of each of the components, if we have only the total consumption G

$$G = G_{comb} + G_o = G_{comb} + \nu G_{comb}$$

whence

$$\left.\begin{aligned} G_{comb}&=\frac{G}{1+\nu};\\ G_o&=\frac{\nu}{1+\nu}G. \end{aligned}\right\} \qquad (V.14')$$

If we divide the actual ratio of the components by the theoretical required

ν_0, the value $\frac{\nu}{\nu_0}$ will characterize the excess or the shortage of oxygen in the fuel.

For example, if the real ratio of the components $\nu = 4$, and the theoretical required amount is $\nu_0 = 6$, this means that $\frac{\nu}{\nu_0} < 1$ and we have a shortage of oxidizer or an excess of combustible -- a rich fuel.

Reasoning in a similar manner, we can show that with $\frac{\nu}{\nu_0} > 1$ we have an excess of oxidizer -- a lean fuel, and, with $\frac{\nu}{\nu_0} = 1$, we have exactly the theoretical required amount of oxidizer, that is, a stoichiometric fuel.

The ratio $\frac{\nu}{\nu_0}$ is designated by α and is called the excess oxidizer coefficient.

$$\alpha = \frac{\nu}{\nu_0}. \tag{V.15}$$

We should note as a rule that rocket engines using conventional fuels at the present time usually operate at $\alpha < 1$, that is, on rich fuels.

Example 6. To determine the excess oxidizer coefficient for a fuel of 96% nitric acid and kerosene, if the consumption of nitric acid $G_o = 12.4$ kg/sec, and the consumption of kerosene $G_{comb} = 2.6$ kg/sec.

The theoretical required amount of oxidizer for this fuel is equal to (see Example 4) $\nu_0 = 5.45$.

Solution:

We find the real ratio of the components. By formula (V.14)

$$\nu = \frac{G_o}{G_{comb}} = \frac{12.6}{2.6} = 4.8$$

The excess oxidizer coefficient α is equal to:

$$\alpha = \frac{\nu}{\nu_0} = \frac{4.8}{5.45} = 0.88$$

Hence in a given fuel there is an excess of combustible (a rich fuel).

The Weight Composition of Fuel.

Knowing the composition of a combustible, the oxidizer, and the actual weight ratio of the component $\nu = \alpha \nu_0$, it is easy to calculate the weight composition of fuel. For this purpose we make use of the following formula:

$$g_{iT} = \frac{g_{i\,comb} + \alpha\nu_0 g_{io}}{1 + \alpha\nu_0} = \frac{g_{i\,comb} + \nu g_{io}}{1 + \nu}, \qquad (V.16)$$

where g_{iT} is the weight proportion of the i-element in the fuel;

g_{ig}, g_{io}, the weight proportion of the i-element in the combustible and oxidizer;

$1 + \alpha \nu_0$, the number of kilograms of fuel necessary for 1 kg of combustible.

Hence in 1 kg of fuel there will be the following amounts of carbon, hydrogen, oxygen, and nitrogen.

$$\left.\begin{aligned} C_T &= \frac{C_{comb} + \nu C_o}{1+\nu}; & H_T &= \frac{H_{comb} + \nu H_o}{1+\nu}; \\ O_T &= \frac{O_{comb} + \nu O_o}{1+\nu}; & N_T &= \frac{N_{comb} + \nu N_o}{1+\nu}. \end{aligned}\right\} \qquad (V.17)$$

Consequently, for the determination of the composition of a fuel, it is necessary to know the composition of the combustible, the oxidizer, and the excess of oxidizer coefficient α or the actual weight ratio of the components in the fuel ν.

<u>Example 7</u>. To determine the composition of fuel: oxidizer -- 96% nitric acid (96% HNO_3 + 4% H_2O); combustible -- kerosene (for composition see Example 4).

The excess oxidizer coefficient is $\alpha = 0.8$.

Solution:

Let us find the actual ratio of the oxidizer to the combustible ν (we take ν_0 from Example 4):

$$\nu = \alpha\nu_0 = 0{,}8 \cdot 5{,}45 = 4{,}36.$$

According to formula (V.17), we find the composition of the fuel (we take the composition of the oxidizer from Example 4).

$$C_T = \frac{C_{comb} + \nu C_o}{1+\nu} = \frac{0,86}{5,36} = 0,161;$$

$$H_T = \frac{H_{comb} + \nu H_o}{1+\nu} = \frac{0,13 + 4,36 \cdot 0,02}{5,36} = 0,039;$$

$$O_T = \frac{O_{comb} + \nu O_o}{1+\nu} = \frac{0,01 + 4,36 \cdot 0,767}{5,36} = 0,626;$$

$$N_{comb} = \frac{N_T + \nu N_o}{1+\nu} = \frac{4,36 \cdot 0,213}{5,36} = 0,174.$$

Proof: For proving we use the equation $\sum g_i = 1$. In our example:

$$C_T + H_T + O_T + N_T = 0,161 + 0,039 + 0,626 + 0,174 = 1,000.$$

Thus the composition of the fuel was correctly determined.

SECTION 27. THE ENTHALPY OF FUEL AND COMBUSTION PRODUCTS

The total store of energy of the substances which can enter into a chemical reaction is determined, as we know from Chapter II, by the total heat content -- the sum of the enthalpies and the chemical energy.

The Physical Enthalpy of a Substance.

The physical heat content is the amount of heat which is expended in heating a given (chemically invariable) substance from absolute zero up to temperature T, at which it is employed in the engine. In the usual case, as we know, the physical heat content of a weight unit of gaseous substance (for example, the combustion products) having a temperature T, when calculating the dependence of the heat capacity on the temperature, amounts to

$$\int_{T_0}^{T} c_p \, dT.$$

Since in thermodynamic calculations the important thing is not the absolute value of the heat content but its change, the temperature at the beginning of the reading of the physical heat content may be selected arbitrarily. If we designate it by T_0, the conventional value of the physical heat content will amount to $\int_{T_0}^{T} c_p \, dT$.

For liquid components of fuel which are practically incompressible, the heat capacities at constant pressure and volume are equal to each other and may be regarded as not depending upon the temperature. They are designated by the letter c. Then, for a weight unit of liquid components of fuel, the value of the physical heat content will be equal to:

$$I = c(T - T_0). \tag{V.18}$$

The expression (V.18) shows that:

1. The numerical value of the physical heat content of a given substance depends upon the selected initial temperature T_0.

2. With an increase in the temperature T, at which the substance enters the chamber of the engine or is in it, the physical heat content increases.

3. The physical heat content of a substance may be negative, if its temperature is lower than the selected initial temperature T_0.

If in the heating or cooling of a given component from the initial temperature T_0 to the temperature T when employing a given component in the engine, a phase conversion occurs (for example, condensation or evaporation of the component), the heat of the transformation phase should be included in the physical value of heat content of a component with the corresponding sign. For example if kerosene, the initial state of which is assumed to be liquid, enters the chamber after evaporation, then we should add its evaporation heat to the physical heat content, because in this case the heat is supplied to the substanc from the outside and increases the store of its physical heat content.

Heat of Formation of a Substance.

The total heat content of the fuel components and of the combustion product depends to a considerable degree upon the stores of chemical energy in them. Thus let us consider more in detail the nature and the methods of determining the stores of chemical energy.

Chemical reactions take place between atoms of elements so that the atom and the elementary particles forming a part of it are not changed. However, in the chemical reaction processes the atoms of elements enter into a reaction or, inversely, break up the connection existing between themselves previously. In addition, a redistribution of the electrons forming a part of the atom takes place, and as a result of this a change in the store of energy in the atoms or, as we say, a change in the energy levels of these atoms occurs.

The chemical energy liberated or absorbed during a reaction also represents the difference between the energy levels of the initial and final substances of a reaction.

One and the same substance obtained as a result of a chemical reaction may be formed from different initial substances. For example, water may be formed from hydrogen and oxygen found in the molecular or atomic state. As a result, the chemical energy liberated or expended in the formation of a given substance will have a different value. Thus in order to avoid uncertainty as to the value of the chemical energy in fuel components and their combustion products, the initial substances required for component formation are always taken in a definite, so-called standard form. By standard form of an element we mean a state in which this element is most widely distributed in nature.

The following are accepted as standard states of those elements used in liquid-fuel rocket engine fuels: carbon in the form of solid graphite, oxygen, hydrogen, and nitrogen in the form of molecular gases O_2, H_2, and N_2.

Let us consider several examples. In the formation of nitric oxide NO from the standard nitrogen and oxygen, that is, from gaseous N_2 and O_2, in accordance with the equation $N_2 + O_2 = 2\ NO$, it is necessary to expend a certain energy.

Thus nitric oxide possesses a certain supply of energy in comparison with the energy of the simple mechanical mixture of standard elements N_2 and O_2. This energy is the chemical energy.

The diagram of the energy levels of substance participating in this reaction is represented in Figure 75.

If we assume, as we shall do later, that standard elements and of course their mechanical mixtures, do not possess a store of chemical energy, the energy expended in the formation of nitric oxide, that is, its chemical energy, will be positive. In addition, it is easy to see that the value of the store of chemical energy does not depend on the selection of an 0 reading for the chemical energy. For example, if we take 0 as the reading of chemical energy of a random energy level (see Figure 75), the chemical energy of the initial and final substances (mechanical mixtures of N_2 and O_2 and nitric oxide NO) will be equal to Q_1 and Q_2 respectively. However, the chemical energy of nitric oxide will be equal to the difference $Q_2 - Q_1$, as can be seen from the drawing, and will not depend upon the energy levels taken as the 0 reading of the amounts of chemical energy.

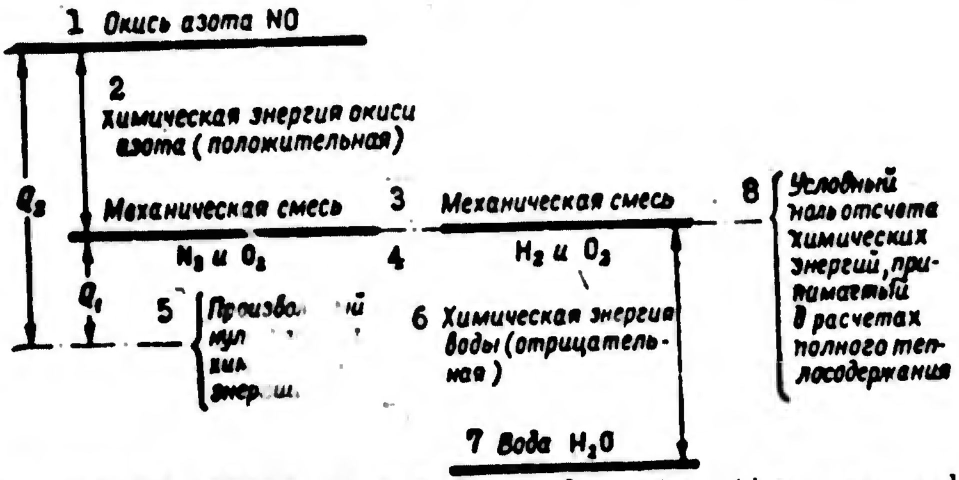

Figure 75. The energy levels of standard elements, the compounds from these elements, and the chemical energy of the substances.

Q_1 -- chemical energy of the mechanical mixture N_2 and O_2 with random selection of an 0 reading of the chemical energies; Q_2 -- the chemical energy of nitric oxide (NO) with a random selection of an 0 reading of the chemical energies.

1 -- nitric oxide; 2 -- chemical energy of nitric oxide (positive); 3 -- mechanical mixture; 4 -- N_2 and O_2; 5 -- random 0 reading of chemical energy; 6 -- chemical energy of water (negative); 7 -- water H_2O; 8 -- conditional 0 reading of the chemical energy employed in the calculations of complete or total heat content.

The chemical energy of a substance may also be negative. For example, in the formation of water according to the equation

$$H_2 + \frac{1}{2} O_2 = H_2O$$

a liberation of energy occurs. In the given instance (if we take into account our assumed value of the chemical energy of a standard element) water possesses a smaller supply of energy than the mechanical mixture H_2 and O_2, that is, it possesses negative chemical energy. This energy is liberated in the formation of water.

In the examples given above, the absorption or liberation of energy takes place because of the rearrangement of the molecules and the atoms of the initial standard elements. To obtain molecules of a given substance (NO or H_2O), the store of energy in them is increased or decreased.

This change in the store of energy depends only on the structure of the electronic shells of the atoms, the initial and the final molecules, and therefore it does not depend on either the pressure or temperature at which the transformation required for the obtaining of the new molecule occurs.

The chemical energy liberated or expended in the carrying out of the formative reactions of a substance may be determined in two ways.

The first method consists in the calculation of the energy levels possessed by the atoms of the elements before and after the reaction, based on a study of the spectra of the particles (atoms and molecules). On the basis of their differences, we find the value of the chemical energy corresponding to the given transformation of a substance.

The second method is based on experimental determination of the thermal effects of the reactions, that is, the quantity of heat absorbed or liberated during the given reaction. The value of this heat effect, referred to the substances formed, is called the heat of formation. The method given is employed mostly when determining the thermal effect of combustion reactions. In this case, in a special vessel isolated from the surrounding medium (in a calorimeter), we carry out the needed reaction during which the chemical energy is transformed into thermal energy. This energy is expended in the heating of the combustion products. After the termination of the reaction its products are cooled to a temperature which the initial substances had before the beginning of the reaction, whereupon we measure the quantity of heat which is drawn off from the reaction products. The quantity of heat determined in this manner is called the heat of formation of a substance, as contrasted to the chemical energy found by the first method. The thermal effect of the combustion reaction is sometimes also called combustion heat.

The heat of formation stands in a definite relationship to the chemical energy even though it is not equal to chemical energy. The difference between the values of the heat of formation and the chemical energy consists of the fact that with a change in a substance during a reaction process, a change in its store of physical heat occurs.

This change in physical heat ΔQ amounts to:

$$\Delta Q = \int_0^T c_{\text{prod}}\, dT - \int_0^T c_{\text{initial}}\, dT.$$

where c_{prod} is the thermal capacity or specific heat of the reaction products (substances formed);

c_{initial} is the thermal capacity of the initial substances.

If we assume that the thermal heat capacity does not depend upon the temperature, then

$$\Delta Q = (c_{\text{prod}} - c_{\text{initial}})\, T$$

The difference between the thermal heat capacity of the reaction products and the thermal heat capacity of the original substances is explained by the fact that the substances formed have a structure and characteristics different from the structure and characteristics of the original substances. In addition, the thermal heat capacity of the gaseous substances depends on the conditions under which the reactions take place (with constant pressure or constant volume).

Thus ΔQ depends on the type of reaction, the conditions under which it takes place, and the temperature T. The latter exercises the greatest influence on the value ΔQ.

The heat of formation of the fuel components and their combustion products used in designing rocket engines usually meet the following conditions: constant pressure equal to 1 atmosphere and to room temperatures (15-25° C). In this case the heat of formation is equal to the change in the total heat content of the substances active in the reaction, and is designated by ΔH_T. The subscript "T" designates the temperature at which the heat of formation is obtained. If the heat of formation of the substance refers to the instance in which the initial and the final substances are in a standard form at a temperature T, then we add the superscript 0 to the designation, and the heat of formation ΔH_T^o is called standard.

Let us find the relationship between the heat of formation and the chemical energy. Let us suppose that for the formation of a substance in a calorimeter at a temperature T there is expended a quantity of heat equal to ΔH_T^o, which is supplied to the substance system or lost by the substance system. The heat is lost in a change of the chemical energy I_{chem} of a substance and in a change in the store of heat ΔQ, which, for the supposed conditions will be equal to $(c_{prod} - c_{initial})\,T$.

Consequently,

$$\Delta H_T = I_{chem} + (c_{prod} - c_{initial})\,T$$

or

$$I_{chem} = \Delta H_T - (c_{prod} - c_{initial})\,T \tag{V.19}$$

With T = 0, disregarding the value of the difference $(c_{prod} - c_{initial})$, $\Delta Q = 0$, and consequently $I_{chem} = \Delta H_o$. In other words the chemical energy of a substance is equal to its heat of formation at absolute 0.

We shall determine the sign for the heat of formation and for the chemical energy by starting with the following rule. If the system undergoing a reaction lost heat and consequently had its store of energy reduced by the corresponding value, the heat of formation and also the chemical energy are negative. Thus the heat of formation and the chemical energy of the combustion products are always negative. The heat of formation and consequently also the chemical energy of such substances as OH, NO or the atomic gases are positive because for their formation from standard gases in molecular form it is necessary to use heat.

We should note that in certain text, especially in chemical text, the sign for heat formation is determined from considerations that are exactly opposite. If in the formation of a given product heat is consumed, its heat of formation is regarded as negative, and, inversely, if heat is liberated, the heat of formation is considered to be positive. Hence in using handbook data for heat formation, we must direct our attention to the way in which the sign for heat of formation is employed.

The value of the heat of formation is usually given in kilo-cal/g-mole.

Method for Reading the Total Heat Content.

The numerical value of the total heat content depends on the method adopted for reading the heat content.

In text devoted to the design of rocket engines and in general to the calculations of temperature and composition of combustion products, we find a large number of different methods for reading heat content. The methods for reading the total heat content differ in two basic characteristics.

1. We employ a different initial temperature for reading the physical heat content T_o.

2. In the different methods chemical energy is related to different substances. It may be related either to combustible elements or to oxidizing elements or to substances formed. In addition, the chemical energy may, as we have already said, be given a different sign.

Let us explain this by an example.

The formation of water takes place according to a well-known equation:

$$H_2+\frac{1}{2}O_2=H_2O.$$

In this case there is a liberation of energy equal to 57.8 kilo-cal/g-mole, and the equation is written as follows:

$$H_2+\frac{1}{2}O_2=H_2O-57.8 \text{ kilo-cal/g-mole}$$

The energy liberated may be referred to a combustible element, that is, to the hydrogen, and if we give to it a positive sign, we obtain the so-called calorific value of hydrogen[1]. In this case the chemical energy of oxygen O_2 and water H_2O will be equal to 0.

In precisely the same manner, the energy liberated may be related to the oxidizing element -- O_2 or to a substance formed H_2O, the chemical energy of the other two respective components considered equal to 0. It would be most logical to refer the energy liberated or expended during a reaction to the substance formed.

In the thermal calculations cited, the selection of a given system of heat content is not an essential matter. The only thing necessary is that the entire calculation, that is, the calculation of the total heat of a combustible, oxidizer, fuel and combustion products, be brought into one method for calculating the total heat content. Below we shall use a method of calculating heat content proposed by A. P. Vanichev[2].

Using this method of calculation:

1. The chemical energy liberated or lost during a reaction is related to the substance formed as a result of the reaction. The chemical energy of the basic element in this case is equal to 0.

---

[1] Ya.B. Zel'dovich and A. I. Polyarnyy, Raschet Teplovykh Protsessov Pri Vysokoy Temperature /Calculation of Thermal Processes at High Temperatures/, Izd. BNT, 1949.

[2] A. P. Vanichev, Termodinamicheskiy Raschet Goreniya i Istecheniya v Oblasti Vysokikh Temperatur /Thermodynamic Calculation of Combustion and Discharge under High Temperature/, Izd. BNT, 1947.

2. The chemical energy of the substance is calculated by introduction into the total heat content of the value of its heat of formation at 20° C; that is, the value $\Delta H_{293.16}$, or in round numbers, ΔH_{293}.

This method of determining the value of chemical energy does not involve any errors in calculation (if it is done according to one method), and it is convenient because the heats of formation of the substance are most often determined precisely at this temperature.

3. The chemical energy is regarded as positive if it is expended in formation of a substance and negative if it is liberated during such a formation.

4. For the 0 reading of the physical heat content, we take the temperature 20° C; that is 293.16° absolute (or conventionally 293° absolute).

Thus under the method used for calculation of the total heat content, the value I_T for a substance having a temperature T will be determined by the relation

$$I_T = \Delta H^0_{293} + \int_{293}^{T} c_p\, dT, \qquad [T = \text{Total}] \qquad (V.20)$$

and for liquid substances

$$I_T = \Delta H^0_{293} + c(T - 293). \qquad (V.21)$$

As a result of the conditions given above, the total heat content of the fuel components at the temperature of 20° C, which is taken most often for the initial temperature of fuel components going into an engine, is equal to its heat of formation ΔH^0_{293}.

Inasmuch as in the majority of cases the temperature at which the fuel components are employed in the engine is equal or close to 20° C, the value of the total heat content of the fuel components expresses for the most part the store of the chemical energy in them.

The values of the chemical energy and the total heat content by the method of A. P. Vanichev (the heat of formation ΔH_{293}) of standard combustibles and oxidizing elements and also the products which can be formed in the chamber of the liquid-fuel rocket engine are given in Table 4. The total heat content of the standard elements at 20° C is equal to 0. At this same temperature the total heat content of the products which can be formed in the chamber of the rocket engine (CO_2; H_2O, HF; CO; OH; NO; H; O; F; N) is equal to their heat of formation. As the data of Table 4 show, the total heat content at 20° C is very close to the value of the chemical energy. In addition, for the products of combustion (CO_2, H_2O, HF, and CO) at 20° C the value I_{total} is negative and for the other gases it is positive.

Table 4

The chemical energy (ΔH_0) and the total heat content by the method of A. P. Vanichev at 20° C (the heat of formation at 293° absolute -- ΔH_{293}) of standard combustibles and oxidizing elements and also the combustion products and dissociation products of rocket engine fuel

Substance	Form of Substance	Chemical Formula	Chemical energy kilo-cal/g-mole	Total heat content I_T at 20° C (or ΔH_{293})	
				kilo-cal/g-mole	kilo-cal/kg
Carbon	Hard graphite	C	0	0	0
Hydrogen	Gas	H_2	0	0	0
Oxygen	"	O_2	0	0	0
Fluorine	"	F_2	0	0	0
Nitrogen	"	N_2	0	0	0
Carbon dioxide	"	CO_2	-93.64	-94.05	-2140
Water	"	H_2O	-57.10	-57.79	-3210
Hydrogen fluoride	"	HF	-64.17	-64.15	-3210
Carbon monoxide	"	CO	-26.80	-26.42	- 945
Hydroxyl	"	OH	+10.00	+10.06	+ 595
Nitric oxide	"	NO	+21.47	+21.60	+ 720
Atomic hydrogen	"	H	+51.63	+52.08	+51700
Atomic oxygen	"	O	+58.59	+59.15	+3690
Atomic fluoride	"	F	+17.80	+18.29	+ 962
Atomic nitrogen	"	N	+85.12	+85.56	+6100

Computing the Total Heat Content of a Combustible, Oxidizer and Fuel.

To use an example, following the concept set forth above in computing the total heat content of combustibles or oxidizers, it is necessary to take their chemical energy and physical heat content into account. By the method of computation applied, the total heat content of the individual chemical substance (combustible or oxidizer) is made up of the following:

1. The heat of formation of a substance of standard elements determined at 20° C. This takes into account the chemical energy of a substance.

2. The heat of warming up or cooling a substance from 20° C to the temperature T at which it is used in the engine.

3. The heat of transition from one aggregate form to another, assigned a corresponding sign if the heat of formation of the substance is not given for the aggregate form in which it is used in the engine.

Since the heat of formation is usually expressed in kilo-cal/g-mole, we carry out the calculation of total heat content in this measurement. For the conversion of the total heat content in kilo-cal/kg, it is necessary to bear in mind the fact that 1 kg of substance contains $\frac{1,000}{\mu}$ g-mole of substance (where μ is the molecular weight of the given individual chemical substance). Then the formula for the conversion will take the form:

$$I_T \text{ kilo-cal/kg} = I_T \text{ kilo-cal/g-mole} \frac{1000}{\mu}. \qquad (V.22)$$

Let us consider several examples concerning the most important cases of the calculation of the total heat content of rocket engine fuels. The calculations are made by A. P. Vanichev's method.

Example 9. To calculate the total heat content of a liquid consisting of 100% nitric acid at 20° C.

The heat of formation of liquid nitric acid at 20° C and the pressure at 1 atmosphere, from standard elements H_2, O_2, and N_2 (molecular gases) amount to:

$$\Delta H_{293} = -41{,}66 \text{ kilo-cal/g-mole}$$

The negative sign of the heat of formation indicates that in the formation of HNO_3 from the standard substances H_2, O_2, and N_2 the heat liberated and the store of energy in the nitric acid is less than the store of energy in the mechanical mixture of standard elements.

Solution:

In the given system the chemical energy of the standard elements is equal to zero and the total heat content of the liquid nitric acid at 20° C $[I_{T_{HNO_3}}]^{20^\circ C}_{L}$ [T = total, L = liquid], amounts to only its heat of formation.

$$[I_{T_{HNO_3}}]^{20^\circ C}_{L} = \Delta H_{293} = -41{,}66 \text{ kilo-cal/g-mole}$$

Let us convert the heat content into kilo-cal/kg according to the formula (V.22)

$$[I_{T_{HNO_3}}]^{20^\circ C}_{L} = -41{,}66\frac{1000}{\mu_{HNO_3}} = -41{,}66\frac{1000}{63} = -660 \text{ kilo-cal/kg}$$

Example 10. To calculate the total heat content of an oxidizer consisting of liquid tetranitromethane $C(NO_2)_4$, if it is delivered to the combustion chamber heated to 85° C. The heat of formation of tetranitromethane

$$\Delta H_{293} = +8.80 \text{ kilo-cal/g-mole}$$

and its specific heat amounts to 0.12 kilo-cal/g-mole °C.

Solution:

According to formula (V.21)

$$[I_{T_{C(NO_2)_4}}]^{85^\circ C}_{L} = \Delta H^0_{293} + C_{C(NO_2)_4\,L}(85-20) = 8{,}80 + 0{,}12\cdot 65 = $$
$$= 16{,}5 \text{ kilo-cal/g-mole}$$

The molecular weight of tetranitromethane $\mu_{C(NO_2)_4} = 196.3$. Hence

$$[I_{T_{C(NO_2)_4}}]^{85^\circ C}_{L} = 16{,}5\frac{1000}{196{,}3} = 84 \text{ kilo-cal/kg}$$

Example 11. To calculate the total heat content of water at a temperature of 20° C.

Solution:

The total heat content of water is made up of:

a) The heat of formation of gaseous water from standard elements taking into account its chemical energy:

$$\Delta H^0_{298} = -57{,}79 \text{ kilo-cal/g-mole}$$

b) The heat of transition ΔH_{trans} [trans = transition] from gaseous state to liquid; at 1 atmosphere and 20° it is equal to 10.56 kilo-cal/g-mole.

Hence the total heat content of water at 20° C amounts to

$$[I_{H_2O}]_L^{20^\circ C} = -\Delta H_{298} + \Delta H_{trans} = -57{,}79 - 10{,}56 = -68{,}35 \text{ kilo-cal/g mole}$$

or in kilo-cal/kg ($\mu H_2O = 18$):

$$[I_{H_2O}]_L^{20^\circ C} = -68{,}35\cdot\frac{1000}{18} = -3795 \text{ kilo-cal/kg}$$

Example 12. To calculate the total heat content of liquid oxygen at the boiling point (90° absolute).

Solution:

The total heat content of liquid oxygen, following what was said above, will consist of:

1) The quantity of heat that must be drawn off gaseous oxygen in order to cool it at a constant pressure from temperature 293° absolute to 90° absolute. This will be equal to:

$$\Delta I_{cool} = c_p(90 - 293),$$

where C_p is the specific heat of the gaseous oxygen. For the diatomic gases at low temperatures, the specific heat C_p is equal to (see Section 9):

$$c_p = \frac{7}{2}AR = \frac{7}{2}1{,}986 \approx 7 \text{ kilo-cal/g mole}$$

The specific heat related to 1 g-mole will evidently be 1/1,000th of this.

$$c_p = 0{,}007 \text{ kilo-cal/g-mole}$$

Then:

$$\Delta i_{\text{cool}} = 0{,}007(90-293) = -1{,}42 \text{ kilo-cal/g-mole}$$

The minus sign indicates that the heat is drawn off the oxygen.

2) The heat of transformation of a gaseous oxygen into the liquid state. This transformation heat is equal to 1.63 kilo-cal/g-mole, at a temperature of 90° absolute and the atmospheric pressure.

Let us suppose that this heat remains constant at all pressures, even under the pressures at which liquid oxygen is fed into the combustion chamber. This assumption of course is not exact. Assuming dependence of the heat of transformation on the pressure would lead us to the conclusion that the fuel characteristics would depend upon the design parameters of the engine. This loss of generality in computation of the thermo-chemical parameters of the fuel components is not compensated for by the insignificant increase in the accuracy of the calculations.

Hence, for liquid oxygen at 90° absolute, the total heat content amounts to:

$$[I_{O_2}]_{L}^{90^\circ \text{abs}} = \Delta i_{\text{cool}} + \Delta H_{\text{trans}} = -1{,}42 - 1{,}63 = -3{,}05 \text{ kilo-cal/g-mole}$$

or in kilo-cal/kg:

$$[I_{O_2}]_{L}^{90^\circ \text{abs}} = -3{,}05 \frac{1000}{\mu_{O_2}} = \frac{1000}{32}(-3{,}05) = -96 \text{ kilo-cal/kg}$$

In computing the total heat content it is sometimes necessary to employ heat of formation determined not at 20° C but at other temperatures. Let us consider a relative example.

Example 13. To determine the total heat content of liquid ethyl alcohol C_2H_5OH, cooled to a temperature of -50° C, if its heat of formation is given as 50° C:

$$\Delta H_{50} = -66,45 \text{ kilo-cal/g-mole}$$

Solution:

The total heat content of the alcohol in this case will amount to the following:

1) The heat ΔQ_{warm} [warm = warming] necessary for the warming of the standard elements forming the alcohol from 20° to 50° C.

2) The formation heat of ethyl alcohol at 50° C.

$$\Delta H_{50} = -66,45 \text{ kilo-cal/g-mole}$$

3) The heat ΔQ_{cool} which must be drawn off the alcohol in order to cool it down to -50° C.

For the formation of 1 g-mole of liquid alcohol (C_2H_5OH) it is necessary to have the following quantities of standard elements: 2 g-atoms of solid carbon in the form of β-graphite, 3 g-moles of gaseous molecular hydrogen H_2 and ½ g-mole of gaseous molecular oxygen O_2.

The respective specific heat quantities amount to the following: For carbon 0.0021 kilo-cal/g-mole; hydrogen H_2 and oxygen O_2 (diatomic gases) C_p = 0.007 kilo-cal/g-mole. Then:

$$\Delta Q_{warm} = 2 \cdot 0,0021\,(50-20) + 3 \cdot 0,007\,(50-20) + 0,5 \cdot 0,007\,(50-20) = \\ = 0,86 \text{ kilo-cal/g-mole}$$

The specific heat of liquid alcohol amounts to 0.027 kilo-cal/g-mole. Then:

$$\Delta Q_{cool} = 0,027\,(-50-20) = -1,89 \text{ kilo-cal/g-mole}$$

The total heat content of liquid ethyl alcohol at -50° C amounts to

$$[I_{C_2H_5OH}]_{L}^{-80^\circ C} = \Delta Q_{\text{warm}} + \Delta H_{m} + \Delta Q_{\text{cool}} = 0{,}86 - 66{,}45 - 1{,}83 =$$
$$= -67{,}40 \text{ kilo-cal/g-mole} = -1460 \text{ kilo-cal/kg}$$

The heat content of a combustible or oxidizer made up of several separate chemical substances is calculated by the formula:

$$I_k = \sum_k I_k g_k + \Delta I_{\text{sol}}, \qquad \text{(V.23)}$$

where I_k is the heat content of the k-component in the fuel or oxidizer in kilo-cal/kg;

g_k, the weight proportion of the k-component in the fuel or oxidizer;

ΔI_{sol}, the heat of solution of one substance in another [sol = solution].

The solution heat is usually given in kilo-cal per unit of weight or per 1 g-mole of solute.

For compound fuels consisting of numerous separate chemical compounds we, as a rule, do not have weight proportions of the components but of the basic composition of the fuel, and instead of taking their heat of formation and solution, we simply take combustion heat of the given fuel determined in the calorimeter. In this instance, the determination of the total heat content is done on the basis of the combustion equation according to the following example:

Example 14. To determine the total heat content of 96% nitric acid with the addition of 4% water at 20° C.

The solution heat of water in nitric acid amounts to 280 kilo-cal/kg H_2O.

Solution:

By using the formula (V.23) and the values calculated above for the total heat content of water and nitric acid, we obtain:

$$[I_{HNO_3}]_{96\%}^{20^\circ C} = 0{,}96 I_{HNO_3} + 0{,}04 I_{H_2O} + 0{,}04 \Delta I_{\text{sol}} = 0{,}96(-660) +$$
$$+ 0{,}04(-3795) + 0{,}04(-280) = -795 \text{ kilo-cal/kg}$$

Example 15. To determine the total heat content of kerosene if it is completely combusted with gaseous oxygen into carbon dioxide gas and water H_2O (liquid) at 20° C, 10,870 kilo-cal/kg are liberated.

The composition of kerosene is $C_{comb} = 0.858$; $H_{comb} = 0.135$; $O_{comb} = 0.007$.

Solution:

In order to set up an equation for combustion of kerosene, let us determine the theoretically required amount of oxygen for the combustion of kerosene with a given composition.

According to formula (V.13)

$$v_0 = \frac{\frac{8}{3}0{,}858+8\cdot 0{,}135-0{,}007}{1{,}0} = 3{,}35.$$

With the complete combustion of kerosene in oxygen its combustion products will be only carbon dioxide gas and water.

Making use of the equations for combustion (V.9) and (V.10), we find that in the combustion of kerosene the quantity of carbon dioxide gas formed amounts to the following: $\frac{11}{3}\,0.858 = 3.14$ kg; the quantity of water formed: $9 \times 0.135 = 1.21$ kg.

Thus the equation for the combustion of kerosene takes the form:

$$1\,\text{kg kerosene} + 3{,}35\,\text{kg}\,O_2 = 3{,}14\,\text{kg}\,CO_2 + 1{,}21\,\text{kg}\,H_2O + 10\,870\ \text{kilo-cal}$$

Knowing the equation for the combustion of kerosene according to the law for the conservation of energy (the equation for the balance of energy) we shall have:

$$I_{T\,\text{kerosene}} + 3{,}35 I_{T\,O_2} = 3{,}14\,\text{kg}\,I_{T\,CO_2} + 1{,}21 I_{T\,H_2O_L} + 10\,870. \tag{V.24}$$

The total heat content of gaseous oxygen at 20° C by the method adopted is equal to zero.

The total heat content $I_{total\ CO_2}$ and $I_{total\ H_2O_{liq}}$ at 20° C is equal to

(see Table 3 and Example 11)

$$i_{CO_2} = -94{,}05 \frac{1000}{44} = -2140 \text{ kilo-cal/kg}$$

$$i_{H_2O_L} = -68{,}35 \frac{1000}{18} = -3795 \text{ kilo-cal/kg}$$

By substituting the value of the heat content in the equation for balance (VI.24), we obtain:

$$I_{\text{total kerosene}} = 3.14\ (-2{,}140) + 1.21\ (-3{,}795) + 10{,}870 = -440 \text{ kilo-cal/kg.}$$

The total heat content of a fuel is made up of the heat content of the combustible and of the oxidizer which form the fuel.

For 1 kg of combustible it is necessary to have 1 + ν kg of fuel.

To this quantity of fuel the combustible adds a total heat content equal to I_{t_c}; the oxidizer, however, adds νI_{t_o}. Thus, the total heat content of 1 kg of fuel I_{t_f} [t_f = total fuel] amounts in kilo-cal/kg to:

$$I_{t_e} = \frac{I_{t_e} + I_{t_o}}{1 + \nu} \qquad \text{[t = total]} \quad \text{[c = comb]} \qquad (V.25)$$

Example 16. To determine the total heat content of fuel: 96% nitric acid + kerosene at 20° C, ν = 4.2.

Solution:

In Examples 14 and 15 we found the total heat content of nitric acid and kerosene.

They are equal to:

$$i_{T_o} = [i_{T_{HNO_3}}]^{20^\circ C}_{96\%} = -795 \text{ kilo-cal/kg}$$

$$i_{T_{comb}} = [i_{T.\,ker}] = -440 \text{ kilo-cal/kg}$$

According to formula (VI.25) we find the total heat content of the fuel:

$$I_{T\,\mathrm{comb}} = \frac{I_{T\,\mathrm{comb}} + I_{T_o}}{1+\nu} = \frac{-440+4.2(-795)}{1+4.2} = -727 \text{ kilo-cal/kg}$$

The Total Heat Content of Fuel Combustion Products.

In calculations of heat in rocket engines it is also necessary to determine the total heat content of the fuel combustion products at different temperatures.

As we have already pointed out, the combustion products of hydrocarbon fuels at high temperatures are made up of a mixture of gaseous components: CO_2, H_2O, CO, OH, NO, H_2, O_2, N_2, H, O, and N.

The ratio of these components depends on the combustion temperature. The higher the combustion temperature, the greater the mixture of the dissociation products in the fuel.

The total heat content of each of these components I_{total_i} at a given temperature is equal to the sum of the physical heat content at the same temperature and the chemical energy is evaluated by the heat of formation of a given component.

The values of the total heat content of each of the components I_{total_i}, depending upon the temperature given in the method of computation adopted, are given in Appendix 3.

An estimate of the total heat content of the mixture of the combustion products for 1 kg of fuel is done by the formula:

$$I_{T\,\mathrm{prod\ comb}} = \sum_i M_i I_{T_i}, \qquad \text{(V.26)}$$

where M_i is the number cf g-moles of the i-gas needed for 1 kg of combustion products mixture.

The number of g-moles M_i is usually expressed by the total number of g-moles of the combustion products needed for 1 kg of fuel $M\Sigma$ and the volumetric proportion of gases making up the combustion products r_i:

$$M_i = M_\Sigma r_i. \tag{V.27}$$

As we know,

$$r_i = \frac{p_i}{p_\Sigma}, \tag{V.28}$$

where p_i is the partial pressure of the i-gas in the mixture;

p_Σ is the total pressure of the mixture of gases;

$$M_\Sigma = \frac{1000}{\mu_\Sigma}; \tag{V.29}$$

here μ_Σ is the apparent molecular weight of the combustion products.

According to formula (II.5)

$$\mu_\Sigma = \sum_i \mu_i r_i \tag{V.30}$$

or by calculation of (V.28)

$$\mu_\Sigma = \sum_i \mu_i \frac{p_i}{p_\Sigma} = \frac{1}{p_\Sigma} \sum_i \mu_i p_i, \tag{V.31}$$

whence

$$M_\Sigma = \frac{1000}{\mu_\Sigma} = \frac{1000 p_\Sigma}{\sum_i \mu_i p_i}. \tag{V.32}$$

Let us substitute (V.32) and (V.28) in the formula (V.27); after cancellation of p_Σ we obtain:

$$M_i = M_\Sigma \frac{p_i}{p_\Sigma} = \frac{1000 p_i}{\sum_i \mu_i p_i}. \tag{V.33}$$

After the substitution of (V.33) in (V.26), we obtain the design formula for the determination of the total heat content of the combustion products.

$$I_{\text{prod comb}} = \frac{M_\Sigma}{p_\Sigma} \sum I_{n_i} p_i = 1000 \frac{\sum_i I_{n_i} p_i}{\sum_i \mu_i p_i}. \tag{V.34}$$

In making the heat calculations (see Chapter VI), it is necessary to estimate the total heat content of the fuel and of the combustion products in one and the same method of calculation.

The Relation between Total Heat Content and the Thermal Value of Fuel.

The value for total heat content is used in computing liquid-fuel rocket engines and characterizes the energy store in the fuel.

This same characteristic of fuel is its calorific value H_u. Hence one should find the definite relationship between the calorific value and the value of the total heat content.

By the amount of the calorific value we mean the amount of heat liberated in the combustion of a unit weight of fuel. In this case the original fuel and the combustion products should remain (just as in determining heat of formation) under the same pressure and at the same temperature.

Since according to the law for the conservation of energy heat liberated under the same pressure at the beginning and the end of combustion can be obtained only by a change in the heat content of the fuel by its conversion into combustion products, the amount of the calorific value will be equal to the difference between the total heat content of the fuel and the combustion products taken at the same temperature T_0, equal to the temperature of the fuel before the beginning of combustion.

$$H_u = [I_{T_T} - I_{T\,\text{prod comb}}]_{T_0}, \qquad (V.35)$$

or

$$\begin{aligned} H_u &= I_{\text{phys}_T} + I_{\text{chem}_T} - I_{\text{phys}_{\text{prod comb}}} - I_{\text{chem}_{\text{prod comb}}} = \\ &= (I_{\text{phys}_T} - I_{\text{phys}_{\text{prod comb}}}) + (I_{\text{chem}_T} - I_{\text{chem}_{\text{prod comb}}}). \end{aligned}$$

Hence the calorific value is the sum of the differences between the physical and the chemical heat contents of fuel and combustion products.

The calorific value is usually determined at low temperatures so that T_0 amounts to $\sim 300^\circ$ absolute (18° - 27° C). In addition, under this condition the change in the physical heat content during the combustion of fuel and the conversion of fuel into combustion products is relatively small. The basic part of the calorific value is made up of a change in chemical energy. Hence we may assume that:

$$H_u \approx (I_{chem\,T} - I_{chem_{prod\,comb}}) = \Delta H. \qquad (V.36)$$

By considering the values of this difference, we see that the calorific value increases with a decrease in the chemical energy of the combustion products $I_{chem_{prod\,comb}}$ and with an increase in the chemical energy of the fuel $I_{chem\,T}$.

First of all, let us note that the calorific value of fuels composed of a given combustible and a given oxidizer depends to a large degree on the mixture ratios of the fuels, that is, on the value ν or α. Moreover, for a given fuel the maximum calorific value will be present with the stoichiometric ratio of the components ν_0, that is, with $\alpha = 1$. With $\alpha < 1$ there cannot be total combustion, as a result of which the chemical energy of the combustion products $I_{chem_{prod\,comb}}$ will not be the minimum. With $\alpha > 1$, complete combustion products will be formed, but as a total mass the combustion products will be less than when $\alpha = 1$ because in the combustion products there will also be some unused oxidizing elements. Hence the average chemical energy of all the combustion products will not reach the minimum value again.

Thus in the determination of the calorific values we shall always relate them to the instance $\alpha = 1$, so that

$$H_u \approx (I_{chem\,T} - I_{prod\,comb})_{\alpha=1}. \qquad (V.37)$$

In the technical calculations we usually compute the calorific value by assuming that the combustion products which may be condensed at low temperatures (for example, water vapor) leave the heat machine in an evaporated state and carry with them corresponding heat reducing the calorific value of the fuel. The symbol "u" in the subscript for calorific value also designates this assumption, and the value H_u is called the "lowest calorific value."

Example 17. To determine the lowest calorific value of a fuel of diethylamine + liquid oxygen at 20° C = 293° absolute.

Solution:

For the determination of the value H_u according to formula (V.35) it is necessary to know the total heat content at 20° C and $\alpha = 1$ of the fuel and of the combustion products.

According to the data of Table 6, the composition of diethylamine ($C_4N_{11}N$) is the following:

$$C_{comb} = 0{,}657;\ H_{comb} = 0{,}152;\ O_{comb} = 0;\ N_{comb} = 0{,}191.$$

The theoretical required amount of oxidizer ($O_o = 1$) according to formula (V.13) amounts to:

$$\nu_0 = \frac{8}{3} C_{comb} + 8 H_{comb} = \frac{8}{3} \cdot 0{,}657 + 8 \cdot 0{,}152 = 2{,}97.$$

It is necessary for us to know the heat content of the fuel at 20° C, but at this temperature the oxidizer (liquid oxygen) cannot be utilized in the engine. Hence, in the determination of $I_{total}^{20°\,C}$, the heat content of the liquid oxygen must be taken at its boiling point - 183° C. Then the total heat content of the fuel at 20° C and $\alpha = 1$, according to formula (V.25) and considering what has been said above, will be equal to:

$$I_{\tau}^{20°\,C} = \frac{I_{\tau\,comb}^{20°\,C} + \nu_0 I_{\tau_0}^{-183°\,C}}{1 + \nu_0}.$$

$I_{\tau\,comb}^{20°\,C} = -400$ kilo-cal/kg (See Table 6); $I_{\tau_0}^{-183°\,C} = -96$ kilo-cal/kg (See Table 5).

Then

$$I_{\tau}^{20°\,C} = \frac{-400 + 2{,}97(-96)}{1 + 2{,}97} = -170 \text{ kilo-cal/kg}$$

For the calculation of the total heat content of the combustion products it is necessary to determine their composition. Among the products of total combustion with $\alpha = 1$, we shall have in a given instance CO_2, H_2O, and N_2. According to the equations for total combustion of carbon and hydrogen, the weight quantities of these gases will be equal to:

$$g_{CO_2} = \frac{11}{3} C_T;\quad g_{H_2O} = 9H_T;\quad g_{N_2} = N_T$$

(because nitrogen does not participate in the combustion).

The weight proportions of carbon, hydrogen, and nitrogen in the fuel C_T, H_T, and N_T according to formula (V.17), taking $\alpha = 1$ and $O_0 = 1$, amount to:

$$C_T = \frac{C_{comb}}{1+v_0} = \frac{0,657}{1+2,97} = 0,166\,\text{kg};\quad H_T = \frac{H_{comb}}{1+v_0} = \frac{0,152}{1+2,97} = 0,038;$$
$$N_T = \frac{N_{comb}}{1+v_0} = \frac{0,191}{1+2,97} = 0,049;$$

Then

$$g_{CO_2} = \frac{11}{3} \cdot 0,166 = 0,608;\quad g_{H_2O} = 9 \cdot 0,038 = 0,343;$$
$$g_{N_2} = 0,049.$$

Proof: The total weight of all the combustion products should amount to 1 kg.

$$g_{CO_2} + g_{H_2O} + g_{N_2} = 0,608 + 0,343 + 0,049 = 1,000.$$

The composition of the complete combustion products has been determined correctly.

The total heat content of the combustion products $I_{T_{pc}}^{20^\circ C}$ [T = total, pc = prod comb] amounts to:

$$I_{T_{pc}}^{20^\circ C} = I_{T_{CO_2}}^{20^\circ C} g_{CO_2} + I_{T_{H_2O}}^{20^\circ C} g_{H_2O} + I_{T_{N_2}}^{20^\circ C} g_{N_2}.$$

In this instance the total heat content of H_2O should be taken for water vapor because we determine the lowest calorific value and the total heat content of molecular nitrogen (the standard element) to be equal to zero.

We shall take the values of the total heat content of the combustion products $I_{T_i}^{20^\circ C}$ from Table 4. Then:

$$I_{T_{pc}}^{20^\circ C} = -2140 \cdot 0,608 + (-3120) \cdot 0,343 = -2370 \text{ kilo-cal/kg prod comb}$$

By using formula (V.35) we receive:

$$H_u^{20^\circ C} = I_{T_T}^{20^\circ C} - I_{T_{pc}}^{20^\circ C} = -170 - (-2370) = 2200 \text{ kilo-cal/kg}$$

Let us pass on to determine the value of H_u for different fuels. From the equation (V.38) we may conclude that the increase in the calorific value of a fuel may be obtained by lowering the chemical energy of the complete combustion products or by increasing the chemical energy of the fuel.

The chemical energy of the total combustion products depends on the type of molecules formed; that is, of those elements which form the fuel. Hence an increase in the calorific value of a fuel is possible by using elements which furnish combustion products with a large negative chemical energy. This is the main reason for the attempts to use metals (aluminum, magnesium, boron) and other elements as combustibles in liquid-fuel rocket engines, and also it is the reason for the use of the element fluorine as an oxidizer. As a result of the combustion of these substances, we often obtain compounds with a large negative chemical energy.

For fuels which contain carbon and hydrogen and which use oxygen as an element, the value of the chemical energy in the completely combusted products decreases with an increase in the hydrogen of the fuel which has a lower chemical energy per 1 kg of combusted products (conventional heat of formation ΔH_{293}) (-3,210 kilo-cal/kg) as compared with carbon (-2,140 kilo-cal/kg).

For this same reason it is possible to use liquid hydrogen as a combustible in liquid-fuel rocket engines. However, an obstacle to this is the very small specific weight of liquid hydrogen (γ = 0.07 kg/liter) which is considerably lower than in other combustibles.

For the usual hydrocarbon fuels coming from petroleum the hydrogen content is approximately constant and amounts to 12-15%. The chemical energy of the completely combusted products of such combustibles with oxygen changes very little. The fuel components for liquid-fuel rocket engines also contain at times a binder - nitrogen - which does not participate in the combustion and constitutes a ballast.

The chemical energy of all the completely combusted products of such a fuel with $\alpha = 1$ also depends on the content of its ballast; that is, in the usual case, on the nitrogen content.

With an increase in the ballast content, there is an increase in the chemical energy of 1 kg of completely combusted products. Hence, according to formula (V.37), the calorific value of fuel containing nitrogen will be less.

We saw that by increasing the calorific value of a fuel we can also proceed to increasing its chemical energy $I_{chem\ T}$. Since $I_{chem\ T}$ is determined by the heat of formation of the combustible and oxidizer, the greater the value of the heat of formation for the components, the higher the calorific value of the fuel H_u.

As we have already pointed out, the heat of formation of different substances changes within wide limits and may be negative or positive. It is evident that it would be most advantageous for all fuel components to have the greatest possible positive heat of formation. For example, in the formation of 1 kg of ozone from molecular oxygen, one must expend about 730 kilo-cal/kg or 34 kilo-cal/g-mole.

If we use as an oxidizer in the liquid-fuel rocket engine - not oxygen but ozone - each kilogram of the latter, when burned with a combustible, liberates an additional 730 kilo-cal/kg. The calorific value of such a fuel as H_u^I (see Figure 76 a), when compared with the calorific value of a fuel using oxygen as an oxidizer will be greater by the value of the heat of formation of the ozone participating in the reaction; that is, by 1/3 x 34 kilo-cal/g-mole.

Hence, in the combustion of hydrogen with ozone, the quantity of heat liberated H_u^I amounts to:

$$H_s^{I} = 0 + \frac{1}{3} 34 - (-57{,}79) = 69{,}12 \text{ kilo-cal/g-mole } H_2O = 3840 \text{ kilo-cal/kg}$$

that is, it will be much greater than the calorific value of the fuel oxygen plus hydrogen.

On the other hand, hydrogen peroxide H_2O_2 has a negative heat of formation equal to 44.84 kilo-cal/g-mole.

Oxygen and water are formed in a reaction of decomposition in hydrogen peroxide; water is formed in the amount of one g-mole to one g-mole of hydrogen peroxide. Since the heat of formation of oxygen is equal to zero, the total heat content of the combustion products is determined by the value of the heat of formation of water which is equal to -57.39 kilo-cal/g-mole. The calorific value H_u^{II} of hydrogen peroxide (see Figure 76 b) will be equal to

$$H_s^{II} = -44{,}84 - (-57{,}79) = 12{,}95 \text{ kilo-cal/g-mole } H_2O = 380 \text{ kilo-cal/kg}$$

That is, H_u^{II} has a very small value. It is due precisely to the negative heat of formation of hydrogen peroxide in its reaction of decomposition that a very small amount of energy is liberated.

Such is the influence of the heat of formation on the components of the calorific value of the fuel. Substances having a positive heat of formation may serve as a foundation for very powerful rocket engine fuels. The majority of present-day combustibles and oxidizers have a small negative heat of formation.

Due to the numerous requirements which fuels for rocket engines must meet and also the need for fuels developing the largest possible specific thrust, research workers have investigated (and are still investigating) a large number of substances to determine their suitability for use as fuel components for rocket engines.

However, up to the present time, a rather restricted number of chemical substances has been used as fuel components in rocket engines.

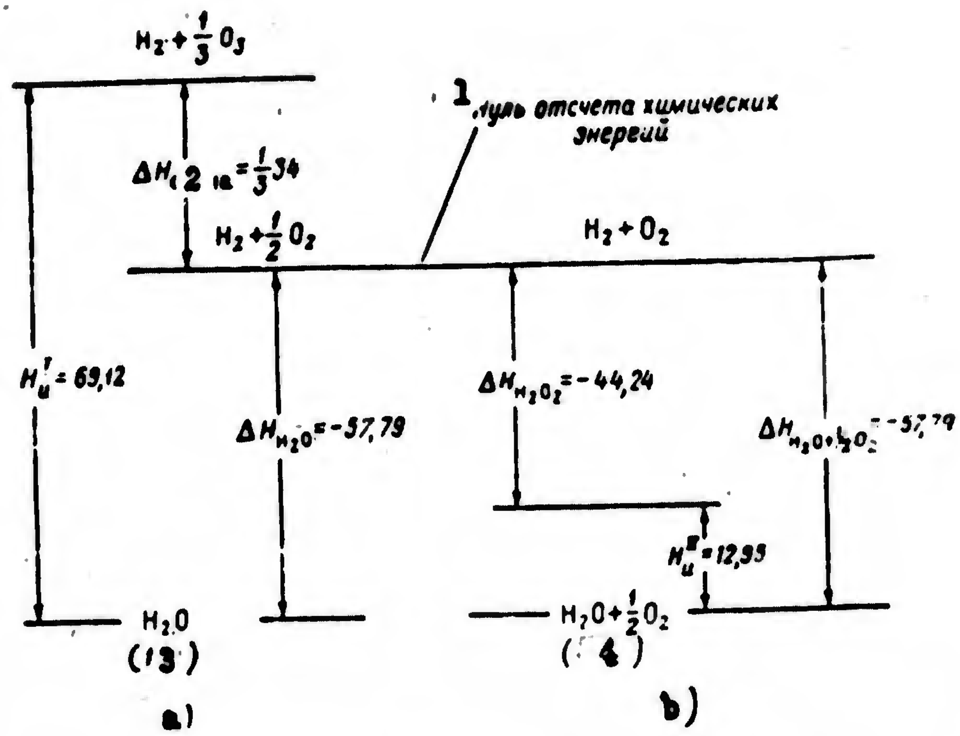

Figure 76. The influence of the positive and negative heat of formation of the components on the calorific value of the fuel.

a -- combustion of hydrogen with oxygen; b -- decomposition of hydrogen peroxide. The thermal effect in kilo-cal/g-mole.

1 -- zero reading of the chemical energies; 2 -- ozone; 3 -- (18 g); 4 -- (34 g).

Since the characteristics of a fuel are determined for the most part by the oxidizer, we shall divide the fuels discussed below into groups based on the type of the oxidizer employed with them.

In present-day liquid-fuel rocket engines the following fuels have actually been used:

1. Fuels based on nitric acid and other oxygen compounds of nitrogen.
2. Fuels based on oxygen.
3. Fuels based on hydrogen peroxide.

Data which show the characteristics of certain oxidizers, combustibles, and fuels are given in Tables 5, 6 and 7.[1]

---

[1] Certain data concerning the characteristics of the fuel components of liquid-fuel rocket engines are given in the book Motornyye Topliva, Masla i Zhidkosti /Motor Fuels, Oils, and Liquids/, Vol I, Gostoptekhizdat, 1953.

Table 5

BASIC PHYSICAL-CHEMICAL CHARACTERISTICS OF CERTAIN PURE OXIDIZERS FOR LIQUID FUEL ROCKET ENGINES

Oxidizer	Chemical Formula	Molecular Weight	Elementary Composition in kg/kg				Heat of Formation ΔH_{293} in kilo-cal/g-mol	Total Heat Content I_T in kilo-cal/kg at 20° C	Specific Weight at t 15° C	$t_{melting}$ in °C at 1 atm	$t_{boiling}$ in °C at 1 atm
			O_0	C_0	H_0	N_0					
Nitric Acid	HNO_3	63,02	0,762	0	0,016	0,222	−41,40	−660	1,52	−41,6	+86
Nitrogen Tetroxide	N_2O_4	92,01	0,696	0	0	0,304	−6,80	−74	1,47	−11,2	+21
Tetranitromethane	$C(NO_2)_4$	196,03	0,653	0,061	0	0,286	+8,80	+45	1,65	+13	+126
Liquid Oxygen	O_2	32,00	1,000	0	0	0	0,00 (Gas)	−96	1,14 (at −183° C)	−227	−183
Hydrogen Peroxide	H_2O_2	32,02	0,940	0	0,060	0	−44,84	−1315	1,46	−2	+151
Fluorine	F_2	38,00	$F_0 = 1,000$				0,00 (Gas)	−80	1,51 (at −188° C)	−218	−188
Florine Monoxide	OF_2	54,00	0,457	$F_0 = 0,543$			+5,50 (Gas)	+25	1,53 (at −145° C)	−224	−145
Water in Liquid Form	H_2O	18,02	0,889	0	0,111	0	−68,35	−3790	1,00	0	+100

• Water is included in the given table because of the fact it often forms a part of the oxidizer and fuel.

Table 6

BASIC PHYSICAL-CHEMICAL CHARACTERISTICS OF CERTAIN FUELS FOR LIQUID-FUEL ROCKET ENGINES

Combustible	Chemical Formula	Molecular Weight	Basic Composition in kg/kg				Heat of Formation ΔH_{293} in kilo-cal/g-mol	Total Heat Content I_T in kilo-cal/kg at g-mol	Specific Weight in I_T kg/liter at 15° C	$t_{boiling}$ at °C at 1 atm	$t_{melting}$ in °C at 1 atm
			C_r	H_r	O_r	N_r					
Tractor Kerosene	Mixture of Hydrocarbons	—	0,858	0,135	0,007	0	—	—440 (—430 ÷ —470)	0,79 ÷ 0,84	170 (150–315) Boiling Point	(—70 ÷ —50)
Ethyl Alcohol	C_2H_5OH	46,04	0,522	0,131	0,347	0	—66,36	—1440	0,789	78,3	—117,3
Methyl Alcohol	CH_3OH	32,03	0,375	0,125	0,500	0	—57,02	—1780	0,791	64,6	—94,9
Aniline	$C_6H_5NH_2$	93,08	0,774	0,076	0	0,150	+7,09	+76	1,022	184,4	—6,2
Furfuryl Spirits	$C_4H_3OCH_2OH$	98,06	0,614	0,061	0,325	0	—63,1	—644	—	171	—32
Triethylamine	$(C_2H_5)_3N$	101,07	0,712	0,149	0	0,139	—42,33	—416	0,728	89,5	—114,8
Kylidine	$(CH_3)_2C_6H_3NH_2$	121,12	0,793	0,091	0	0,116	—46,2	—382	0,98	210	—54
Diethylamine	$C_4H_{11}N$	73,14	0,657	0,152	0	0,191	—29,3	—400	0,70	+56	—50
Dimethylhydrazine	$(CH_3)_2N_2H_2$	62,12	0,400	0,134	0	0,466	+11,28	+81	0,83	63	—58
Hydrazinehydrate	$(NH_2)_2\cdot H_2O$	50,06	0	0,122	0,318	0,560	—63,15	—1260	1,03	118,5	—40
Hydrazine	N_2H_4	32,03	0	0,125	0	0,875	+12,05	+40	1,01	113,5	—2
Ammonia	NH_3	17,03	0	0,177	0	0,823	—16,60	—975	0,68	—33	—77

BASIC CHARACTERISTICS OF CERTAIN

Oxidizer	Combustible	ν_0 kg/oxidizer/ kg Combustible	H_u kilo-cal/kg
Nitric Acid 98% concentration (2% water)	Kerosene	5,50	1400
	Tonka-250	4,6	1490
	Analine (80%) + Furfuril Alcohol (20%)	3,9	1420
Nitrogen Tetroxide	Kerosene	4,9	1550
Tetranitromethane	Kerosene	6,9	1590
Hydrogen Peroxide 80% Concentration (20% water)	—	—	190
Hydrogen Peroxide 80% Concentration (20% water)	Methyl Alcohol (50%) + Hydrazinhydrate (50%)	2,72	1020
Liquid Oxygen	Kerosene	3,37	2200
	Ethyl Alcohol 93.5% Concentration (6.5% water)	1,95	2020
	Diethylamine	2,97	2230
	Diethylhydrazine	2,13	2200
	Ammonia	1,41	1650
Liquid Fluorine	Hydrazine	2,38	2230
	Ammonia	3,36	2315

Note 1. The values of the specific thrust P_{sp} T_2, μ_2 and n_{is} are (δ = 0.02) and the value α, taken in the field of the optimal

Note 2. For kerosene in the calculation we take I_T = —440 kilo-

Table 7

FUELS FOR LIQUID-FUEL ROCKET ENGINES

γ_T kg/liter when α=1	T_2 abs.	μ_z	n_{is}	P_{sp} kg-sec/kg	$P_{sp}\gamma_T$ kg-sec/liter	$\beta = \frac{f_{cr} p_2}{G}$ kg-sec/kg
1,36	2950+3000	26÷27	1,14÷1,22	225÷235	306÷315	155÷157
1,32	3000	26÷27	1,13÷1,19	230÷240	305÷370	155÷158
1,39	3050	26÷27	1,15+1,18	210÷230	295÷315	155÷158
1,38	3200	25+26	1,13÷1,19	235÷245	325÷340	160÷165
1,47	3200÷3380	26÷27	1,12÷1,15	240÷250	355÷370	160÷165
1,34	780	23÷24	1,35	90	120	72
1,30	2600	20÷21	1,20	210÷220	275÷285	148÷150
1,00	3550+3650	23÷25	1,11÷1,14	270÷280	270÷280	175+180
0,99	3250÷3350	23÷24	1,12+1,18	250÷260	250÷260	170÷175
0,99	3550÷3650	26÷28	1,15	270÷280	270÷280	180÷185
1,02	3300÷3400	22	1,15	280÷290	280÷290	182÷184
0,89	3000÷3050	19÷20	1,175	280÷290	250÷258	165÷170
1,32	4600÷4700	20÷21	1,19	340÷350	450÷455	185÷190
1,18	4500+4600	20÷21	1,20	340÷350	400÷415	195÷200

determined by the calculation at a pressure differential 50:1

for the given fuel relationship of components.

cal/kg.

SECTION 26. FUEL BASED ON NITRIC ACID AND OTHER OXYGEN COMPOUNDS OF NITROGEN

Nitric Acid.

Nitric acid HNO_3, in chemically pure form, is a colorless liquid. Commercial nitric acid is never a chemically pure product but always contains a certain quantity of water and oxides of nitrogen which give the nitric acid a reddish-brown color.

The addition of water to nitric acid is not desirable because water lowers heat content. Consequently, nitric acid with a water content of not more than 2-4% is used in rocket engines, that is, a concentration of 98-96%. Each excess percent of water in nitric acid reduces by approximately one unit the specific thrust developed by the engine.

Since we employ a highly concentrated nitric acid in liquid-fuel rocket engines, the physical-chemical indexes given below are based on a nitric acid of a concentration of 100%.

Nitric acid contains 76% oxygen and has a small negative heat of formation which makes it a relatively strong oxidizer. Of the most extensively used oxidizers at the present time, it has the smallest specific weight (1.52 kg/ltr) which makes it possible to achieve a high thermal density.

For utilization in rocket engines nitric acid has a very favorable boiling point (+ 86° C) and a very favorable freezing point (- 42° C). The addition of water reduces somewhat the freezing point.

The boiling point of nitric acid increases with an increase in pressure so that with pressures present in the cooling duct of the rocket engine the boiling point reaches 200° C.

The thermal heat capacity (specific heat) of HNO_3 amounts to about 0.5 kilo-cal/kg, which, with its high boiling point and its large content in the fuel ($\nu_0 \approx 5.5$) makes nitric acid a convenient cooling liquid having a large capacity for absorbing heat.

The dynamic viscosity of nitric acid at 20° C amounts to about 1×10^{-4}

$kg\text{-}sec/m^2$, which is approximately equal to the dynamic viscosity of water. With an increase in the temperature, the dynamic viscosity decreases somewhat.

Nitric acid is widely used in our national economy for making fertilizers and explosives. Its cost is relatively low.

However, nitric acid possesses a number of shortcomings. The vapors of HNO_3 are poisonous; if nitric acid gets on the skin, it causes serious burns. Therefore, in working with it one must take great care and this creates difficulties in its use in engines.

Nitric acid is also a very strong corrosive of many metals and other construction materials. The acid dissolved in water is a very active corrosive of metals. Hence, the washing of engines and parts after nitric acid comes in contact with them should be done very carefully. The materials which resist the action of nitric acid are certain stainless steels, aluminum, and many of its alloys, especially those which do not contain large amounts of copper.

The pressure of saturated vapors of nitric acid at a normal temperature is considerable. That is, nitric acid evaporates easily. Thus, to store nitric acid one must take precautionary measures.

<u>Additives in Nitric Acid</u>.

To improve the characteristics of nitric acid as an oxidizer, we add different substances to it. By this means we increase the power of the oxidizer and the calorific value of the fuel, the specific weight of the oxidizer, decrease the corrosive effect upon construction materials, increase the activity of the oxidizer in the combustible, and, especially in the case of hypergolic combustibles with nitric acid, lower the freezing point.

Many additives change not one but several characteristics of nitric acid, that is, they have combined reactions. Let us consider the basic additives for nitric acid and their effects.

Tetroxide of nitrogen N_2O_4 is nitric oxide rich in oxygen with a very small (in absolute value) negative heat of formation which increases the heat content of the oxidizer. This oxidizer uses N_2O_4 as opposed to pure HNO_3 and it increases the calorific value of the fuel (see Tables 5 and 7). However, it is impossible to employ tetroxide as an oxidizer because of its high freezing point (- 11.2° C), and low boiling point (+ 21° C). Hence N_2O_4 is also used as an additive to HNO_3 for increasing the calorific value of the fuel. In addition, the addition of N_2O_4 to HNO_3 gives a solution with a higher specific weight than N_2O_4 and HNO_3 taken separately. The maximum specific weight of such a solution (with a content in the HNO_3 of 40% N_2O_4) amounts to 1.63 kg/ltr (liter). The addition of N_2O_4 also increases the activity of the oxidizer, and thus facilitates conditions for the starting of the rocket engine. Such addition also lowers the freezing point of the oxidizer. The minimum freezing point of the solutions of N_2O_4 in HNO_3 is obtained with an addition of 38% N_2O_4 and amounts to about - 70° C.

Concentrated sulfuric acid H_2SO_4 is employed as an additive; it lowers the corrosive action of nitric acid on contact with metals. It improves the starting of the engine especially when we employ hypergolic fuels with nitric acid oxidizers.

Mixtures of nitric and sulfuric acids are called melanges (designated by M-10). The H_2SO_4 content in the melange usually amounts to 10% (by weight). The disadvantage of adding sulfuric acid to nitric acid is the reduction in the heat content of the oxidizer.

Ferric chloride $FeCl_3$ is added to nitric acid in order to lower the freezing point, and also as an additive increasing the activity of the oxidizer. However, the addition of ferric chloride reduces the calorific value of the fuel.

Tetranitromethane as an Oxidizer.

Among the oxygen compounds of nitrogen, we can use, as an oxidizer, besides nitric acid and nitrogen tetroxide, tetranitromethane $C(NO_2)_4$. It has a positive heat of formation which increases its heat content. The great advantage of tetranitromethane as an oxidizer for rocket engines is its high specific weight (1.65 kg/ltr) which is greater than nitric acid and its relatively weak corrosive effect on construction materials.

The employment of tetranitromethane is limited by its explosive character which is due to the fact that in a molecule of tetranitromethane there is also an oxidizing substance, and a fuel element (carbon). Therefore, the molecule of tetranitromethane resembles a molecule of powder or an explosive substance. We know, however, that a very pure tetranitromethane does not possess any explosive characteristics.[1] In addition, tetranitromethane is a very poisonous substance which attacks the mucous membrane of man.

The freezing point of tetranitromethane is + 13.8° C. However, a mixture of it with N_2O_4 has a freezing point of about -25° C, making it possible to use such mixtures as oxidizers for fuels of rocket engines.

Combustible Fuels using Nitric Acid and Hypergolic Fuels.

Among the fuel combustibles based on HNO_3 and other oxygen compounds of nitrogen, kerosene is the most widely used. The basic physical-chemical characteristics of kerosene are given in Table 6, and the data for a fuel of nitric acid plus kerosene are given in Table 7.

Kerosene possesses a number of advantageous characteristics, making its successful use in rocket engines possible. It produces a fuel with a high calorific value. Kerosene remains a liquid in a wide range of temperatures. Kerosene may be employed as a cooler for an engine. Its thermal heat capacity amounts to approximately 0.45 kilo-cal/kg, and the boiling point approaches 250°C when temperatures are increased.

The transport and storage of kerosene does not involve any great difficulties. The production of kerosene is assured both by the availability of raw materials and by the extensive development of the petroleum processing

---

[1] N.G. Chernyshev, Svoystva i Metody Polucheniya Tetranitrometana /Characteristics and Methods for Obtaining Tetranitromethane/, Izd. MVTU, Im. Baumana, 1949.

industries. In addition to kerosene, other combustible petroleum by-products which improve the operation characteristics of fuels are used in rocket engine fuels.

Kerosene may be employed as a combustible with all oxidizers based on oxygen compounds of nitrogen.

The calorific value of fuel HNO_3 plus kerosene amounts to 1,460 kilo-cal/kg. For other oxygen compounds of nitrogen, it is somewhat larger (up to 1,500 kilo-cal/kg) because of the improved characteristics of the oxidizer. A shortcoming of kerosene is its relatively small specific weight (0.8 - 0.85 kg/ltr).

Fuel HNO_3 plus kerosene plus other fuels based on oxygen compounds of nitrogen, when using kerosene as a combustible, are not hypergolic and require induced ignition.

Other hydrocarbons which produce fuels which are not hypergolic with nitric acid or with other oxygen compounds of nitrogen (for example, methyl and ethyl alcohol) have not been practically employed in nitric acid rocket engines.

Using KNO_3 and other oxygen compounds of nitrogen, some hypergolic fuels have also been produced. To obtain reliable hypergolic fuels we use mixtures of hydrocarbons as the corresponding combustibles. As hydrocarbons furnishing hypergolic combustibles with HNO_3 we also use aniline, furfuryl alcohol, xylidine, triethylamine, vinylethyl ether, and others. Their composition and basic physical-chemical characteristics are given in Table 6. Among the special characteristics of these hydrocarbons, we need point out only the somewhat higher specific weight of aniline.

The basic value characterizing the quality of hypergolic fuels is the ignition delay (period of induction). In order to insure the reliable starting of the engine, the ignition delay should not exceed 0.03 sec. In order to obtain such values for ignition delay, we select mixtures of combustibles which are sufficiently active in self-ignition and employ activation of oxidizing agents.

There are a large number of hypergolic fuels of various composition. A common weakness of them is their high cost and scarcity. Hence, in spite of a number of advantageous characteristics of hypergolic fuels (simplification of the engine design not requiring a special system of combustion; less tendency of the fuel to detonate and vibrate during combustion and others), we try in so far as is possible to avoid their use as basic fuels in rocket engines. At the same time, hypergolic fuels are extensively employed as a means of ignition in chemical ignition systems. We can also employ them as fuels in liquid-fuel gas generators.

The most widely used hypergolic fuels are the following:

1) Fuels using HNO_3 and other oxygen compounds of nitrogen as an oxidizer, and, as a combustible, a mixture of 50% triethylamine and 50% xylidine (the so-called "Tonka"-250). Such fuels were employed extensively in German rocket engines. The best qualities, from the point of view of self-ignition, are possessed by similar fuels with a high content of sulfuric acid (up to 50%) in the nitric acid. They are especially suitable for use in chemical ignition systems and in liquid-fuel rocket engines.

2) Nitric acid (or other oxidizers based on oxides of nitrogen) and combustibles consisting of 80% aniline and 20% furfuryl alcohol. Combustibles based on aniline are employed in many American rocket engines.

The characteristics of these fuels are given in Table 7.

Hypergolic combustibles based on aniline were employed in the German rocket engines during the Second World War. One of these was called "Tonka-841." In addition to aniline, it had in it a complicated chemical substance called "optol" which improved its quality.

A fuel based on vinylethyl ether also ignites well with nitric acid.

The fuel hydrazine hydrate ignites fairly well with hydrogen peroxide.

SECTION 29. FUELS USING LIQUID OXYGEN AND HYDROGEN PEROXIDE

Liquid Oxygen.

Liquid oxygen O_2 is still a more concentrated oxidizer than nitric acid because it contains 100% oxidizing element. Of all the present-day oxidizers, liquid oxygen produces a fuel possessing the highest calorific value. Liquid oxygen is a transparent liquid of a bluish color boiling at -183° C. Its specific weight is much less than the specific weight of HNO_3, amounting to 1.14 kg/ltr at the boiling point.

The basic physical-chemical properties of oxygen are given in Table 5.

The low boiling point prevents the use of liquid oxygen as a cooling agent, and it cannot be used in engines requiring its storage in tanks for a long time. The filling of the engine tanks with liquid oxygen is done just before the start. Even in this case there is a large loss of liquid oxygen as a result of its evaporation.

To store liquid oxygen outside the engine, we employ tanks with double walls. In order to provide insulation against heat from the space between the two walls of the tank, we pump out the air from this space, or fill it with heat insulating substances to reduce the heat transfer from one wall to the other, and, consequently, the heating and evaporation of the oxygen.

As a material for making the oxygen tanks of the engine we can employ rust-proof steel or aluminum alloys. The packing used for sealing is made from soft metals (copper, lead) or special plastics.

Liquid oxygen is practically harmless for man. If a small quantity falls on the skin, it begins to boil and the layer of gaseous oxygen formed protects the skin against freezing.

In the last few years liquid oxygen has been widely employed in various fields of technology. There are facilities for manufacturing it on a large scale, and satisfactory solutions have also been found for storing and transporting it. In spite of the unavoidable losses due to evaporation (when used in the rocket engine, about 50% of the initial quantity of liquid oxygen is lost), the cost of the utilization of liquid oxygen in rockets is not great.

Fuel Combustibles with a Liquid Oxygen Base.

As a combustible for liquid oxygen we can use any of the hydrocarbons. With liquid oxygen all hydrocarbons produce non-hypergolic fuels

The highest calorific value (2,200 kilo-cal/kg), when using the universally employed hydrocarbons, is possessed by the liquid oxygen fuel plus kerosene. It is on the whole the most powerful fuel of present-day fuels for rocket engines. Research work on the use of oxygen plus kerosene fuel was started at the beginning of the development of rocket engineering. The difficulty of employing it in rocket engines is due to its high combustion temperature, and also to the very small quantity of kerosene in the fuel (~ 20%) which complicates the cooling of the engine. Up until now these causes have limited the extent of employment of the oxygen plus kerosene fuel.

Fuels using liquid oxygen, in which one uses ethyl and methyl alcohol or their mixtures as combustibles, are widely used at the present time. In technology ethyl alcohol are employed with a maximum concentration of alcohol at 93.5% by weight (6.5% water).

The basic characteristics of ethyl and methyl alcohol are given in Table 6.

The calorific value of alcohols is lower than in the case of kerosene because they have a large negative heat of formation, but on the other hand the temperature of the combustion of alcohol in oxygen is lower thus facilitating the design of the engine. The specific weight of the alcohol is small (about 0.8 kg/l). The boiling point is rather high, making it possible to employ alcohol as a cooling liquid.

As a result of the fact that the alcohol itself contains a considerable amount of oxygen, the relative content of alcohol in fuel is large (it amounts to 40-45%). Hence, achieving satisfactory cooling for oxygen-alcohol engines is much easier than in the case of oxygen-kerosene engines. Besides, the specific heat of alcohol is somewhat higher than that of kerosene and amounts to approximately 0.6 kilo-cal/kg.

Ethyl and methyl alcohols in any proportion are mixed with water. Therefore based on them it is easy to obtain fuel with a lowered calorific value; that is, one can lower the temperature in the combustion chamber and increase the capacity of the combustible for absorbing heat to any desired degree necessary for the reliable operation of the engine. This is precisely the method used by the designers of the A-4 (V-2) rocket engine when they employed a combustible of a water solution of alcohol -- 75% concentration (by weight) -- even though in doing so they reduced the specific thrust of the engine considerably (to 200 kg-sec/kg).

The low congealing point of alcohol makes it possible to employ it in a wide range of temperatures in the surrounding medium.

The alcohol is produced on a large scale, so that it is not in short supply. Alcohol has no corrosive action against construction materials, so that containers for alcohol can be made from rather cheap materials.

As a substitute for ethyl alcohol we can use methyl alcohol, producing with oxygen a fuel of somewhat poorer quality. Methyl alcohol is mixed with ethyl in any desired proportions; hence it can be used in case of a shortage of ethyl alcohol, by adding a certain proportion of it to the fuel.

Fuels based on liquid oxygen are employed almost exclusively in long-range rockets.

For some time the use of some complicated hydrocarbons with liquid oxygen for example, diethylamine and dimethylhydrazine, in rocket engines has been discussed. Such fuels can give somewhat higher specific thrusts than the liquid hydrogen fuel plus kerosene with a lower temperature of combustion (see Table 7).

Hydrogen Peroxide.

Hydrogen peroxide (H_2O_2) in a pure form (that is, 100% concentration) is not used in technology because in this form it is an extremely unstable product capable of spontaneous decomposition, exploding easily under the influence of any kind of insignificant external action -- a blow, illumination, the smallest contamination with organic substances, and with certain metals.

In rocket engineering we use a more stable product, a highly concentrated solution of hydrogen peroxide in water. Hydrogen peroxide is used most extensively in the form of an 80% concentration. For increasing the stability of hydrogen peroxide we add to it small quantities of a stabilizer (for example, phosphoric acid). The use of 80% hydrogen peroxide at the present time requires only the usual measures of precaution necessary in handling strong oxidizers.

Hydrogen peroxide of 80% concentration, in the presence of a catalyzer, quickly decomposes with the liberation of heat in the amount of $H_u = 190$ kilocal/kg and free oxygen in the amount of 0.377 kg to 1 kg of H_2C_2. This oxygen can be employed for the oxidation of the combustible.

Hydrogen peroxide has a fairly large specific weight -- 1.34 kg/l for 80% hydrogen peroxide at 20° C.

There has been no success in using hydrogen peroxide as a cooling liquid because when it is heated to +151° C it does not boil but decomposes.

The freezing point of a water solution of hydrogen peroxide depends on its concentration. This dependency is shown in Figure 77.

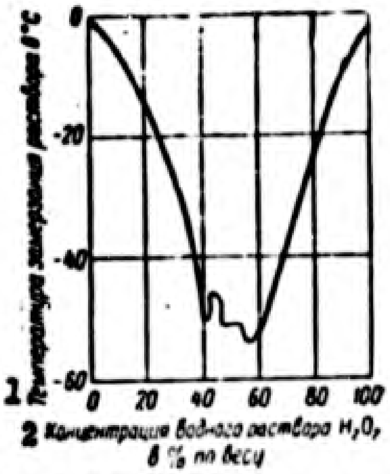

Figure 77. Dependence of the freezing point (or melting point) of a water solution of peroxide on its concentration.

1 -- freezing point of a solution in degrees C; 2 -- concentration of a water solution of H_2O 6% by weight.

The freezing point of the normally used 80% hydrogen peroxide amounts to -25° C.

Materials for the tanks and the pipes of engines operating on peroxide can be stainless steel and a very pure aluminum,(99.5%). It is absolutely impossible to employ copper and other heavy metals because copper is a strong catalyzer, capable of decomposing hydrogen peroxide. For packing and sealing we can employ certain kinds of plastics.

If concentrated hydrogen peroxide gets on the skin, it causes a serious burn. If H_2O_2 falls on organic substances, they will be burned.

The Basic Fuels of Rocket Engines with Hydrogen Peroxide Base.

Using hydrogen peroxide we can make fuels of two types: seperately injected fuels and monocomponent fuels. Also, in fuels based on H_2O_2, we can use both the heat of decomposition of peroxide and the oxygen given off during its decomposition.

The fuel used in the Walter liquid-fuel rocket engine is known. An oxidizer of 80% hydrogen peroxide was used in that engine. As a combustible, methyl alcohol (50%) and hydrazine hydrate (50%) were used (see Table 7).

Hydrazine hydrate $(NH_2)_2 \times H_2O$ has a small supply of energy, but it insures self-ignition of the combustible with hydrogen peroxide.

The small calorific value of such a fuel and its high gas formation (small value of μ_Σ) cause a low temperature in the chamber, making it possible to create a reliable engine operation. However, this engine has a low specific thrust, about 185 kg-sec/kg.

Hydrogen peroxide is also used as a fuel generating heat during decomposition with the help of a catalyst.

However, in this case much less heat is given off than with the use of any other two-component fuels. The temperature in the combustion chamber for the highly concentrated hydrogen peroxide does not exceed 850° C, and is lower for the more diluted solutions. As a result of this low temperature, rocket engines using the decomposition reaction of hydrogen peroxide with a catalyst are called "cold" engines. The combustion chambers of these engines are usually not even cooled. The basic weakness of "cold" engines is that because of the small amount of heat given off, they have a very low specific thrust (about 90 kg-sec/kg).

The use of a catalyst in the "cold" engines is done by two methods.

The first method consists in placing a liquid catalyst (just as the hydrogen peroxide) in the combustion chamber by means of injectors.

In the second method the catalyst is placed directly in the combustion chamber. This method is used when we use solid catalysts. In this case hydrogen peroxide is a monocomponent fuel.

Due to the low specific thrust developed by engines operating on hydrogen peroxide fuels, we could hardly utilize these fuels in the future as basic ones for rocket engines. At the same time, however, hydrogen peroxide fuels are employed extensively for the purpose of obtaining a steam gas used in turning the turbines of turbo pump sets of liquid-fuel rocket engines.

The Use of Hydrogen Peroxide in Making Steam Gas.

Hydrogen peroxide is well suited for generating steam gas used in driving turbines. The temperature of steam gas obtained by the decomposition of 80% hydrogen peroxide, depending upon the type of catalyst, amounts to 450-500° C. This makes it possible to use the gas directly in the turbine of the turbo pump assembly.

Fuels composed of a solution of alcohol in hydrogen peroxide have a high calorific value and, consequently, also furnish a steam gas with a high temperature. If we add a certain amount of water to these fuels, it will not create an explosive risk -- an addition which makes possible joint storage and injection into the gas generator through one pipe. The "area" of the explosive risk in tetra-mixtures -- alcohol plus hydrogen peroxide plus water --

is shown in Figure 78.[1]

A mixture of a 50% concentration of hydrogen peroxide and 8% alcohol will have the maximum calorific value. This mixture is a stoichiometric mixture without explosive risk.

Steam gas obtained by the combustion of this mixture has a temperature of 800° C, making possible a smaller mass flow rate needed to obtain a given power in the turbine when compared with the flow rate of 80% hydrogen peroxide.

Figure 78. The area of explosive risk in three-component mixtures.

1 -- concentration of water solution of H_2O_2 by percent of weight; 2 -- line of the stoichiometric mixtures ($\alpha = 1$); 3 -- area of explosive risk in three-component mixtures; 4 -- content of alcohol in three-component mixtures by percent of weight.

SECTION 30. NEW FUELS FOR LIQUID FUEL ROCKET ENGINES

In the preceding section we considered present-day fuels of rocket engines. None of them, with the exception of the oxygen fuel plus kerosene, give specific thrusts greater than 250-260 units. At the same time, for the further improvement of rocket aircraft, it is first of all necessary to increase the specific thrust of the engine.

This being the case, we have been and still are working continuously to find new fuels having better qualities than those we now have.

Of course when we seek new sources of fuels, we consider only the basic

---

[1] Raketnyye dvigateli /Rocket Engines/, Materials of the German Academy for Aeronautical Research, Izd. BTN, 1948.

fuel requirements. In addition, in the first stages, beginning with the work of Sanders and Kondratyuk, special attention was given to the value of the store of chemical energy (calorific value) and the specific weight of the fuel. As a rule, sufficient attention was not given to the thermodynamic characteristics of the combustion products.

Fuels with Increased Calorific Value and High Specific Weight.

In searching for fuels with a high calorific value, all of the periodic table of Mendeleev was first studied, the analysis of which made it possible to select elements having the maximum store of chemical energy. The results of this analysis are summarized as follows. The most suitable oxidizing elements from the point of view of value of store of chemical energy are oxygen and fluorine; as combustibles, the elements hydrogen, lithium, beryllium, boron, carbon, magnesium, aluminum and silicon.

The basic characteristics of fuel made up of these elements are given in Table 8. By considering these data we can draw the following conclusions.

1. Present-day fuels composed of oxygen, hydrogen, and carbon employ elements having a very low store of chemical energy. There are pairs (for example: Be + O and Li + F) which have high calorific values, 2.5 - 3 times greater than the calorific values of present-day fuels. This has served as a basis for numerous hypotheses to obtain very high specific thrust -- 400-500 units -- using metallic fuels. Metallic fuels are arbitrarily understood to mean all fuels using a combustible of nonorganic origin, including boron and silicon.

2. The specific weight, and, consequently, also the thermal density of almost all metallic fuels are very great. For example, for fuel Be + O -- 8,850 kilo-cal/l; for Mg + F -- 5,550 kilo-cal/l. This circumstance also called attention to the problem of using metallic fuels in rockets.

3. A great disadvantage of almost all metallic fuels is the high molecular weight of the combustion products and, consequently, the low heat capacity per

unit of weight. Along with a high calorific value they also have high temperatures of combustion and, consequently, heavy losses as a result of dissociation. Several years ago we did not have at our disposal the necessary thermodynamic data for the combustion products of metals, but at the present time these data have been widely published and make possible a sufficiently precise calculation of the combustion process of metallic fuels.

For example, in the case of a fuel of oxygen + aluminum, the combustion temperature reaches 5,000° absolute. Here the losses of energy due to dissociation and evaporation of the combustion products amount to about 2,600 kilo-cal/kg, that is, 67% of the calorific value. The molecular weight of the gaseous products is high ($\mu_\Sigma = 48$), as a result of which the index of the adiabatic expansion is very small ($k = 1.2$) and the effectiveness of the process of expansion is small ($\eta_t = 0.534$ with a ratio of pressure of 100 : 1). As a result, the theoretical specific thrust of the fuel O + Al is equal to a total of 230 units which is considerably less than a fuel of oxygen + kerosene.

4. The values of the store of chemical energy K_G kilo-cal/kg of metallic fuels given in Table 8 pertain chiefly to the solid state of the combustion products. They are not the lowest calorific values H_u which are computed assuming that the combustion products are gaseous. This has been done of necessity because the heat of evaporation of many products is either not known or not very accurate. In addition, under metallic fuel combustion conditions in the rocket engines, the combustion products may be partially found in a condensed state (solid or liquid phase). In this instance the store of chemical energy relates more correctly to the solid state of the combustion products. One must bear in mind, however, that the evaporation heat of the combustion products of metallic fuels, especially the oxygen compounds of metals, is very great. For example, based on certain data the evaporation heat of the oxide of beryllium increases its heat of formation. This means that in the combustion of beryllium heat is not liberated in the gaseous products (oxide of beryllium)

but must be supplied from the outside. On the other hand, the boiling point of the combustion products of metallic fuels (and especially of the oxides) is as a rule very high. The relative figures in Table 8 are sometimes absent, and often they are not sufficiently precise, for which reason they are enclosed in parentheses. However, the data given are sufficient to enable us to evaluate the state of the combustion products in the chamber. Of course, to obtain high temperatures a part of the combustion products should be in a solid or liquid state and a part in a gaseous state.

The relative quantities of substances present in the condensed and gaseous phases are determined by the law for the change of pressure of saturated vapors from temperature. In the case of combustion of aluminum with oxygen in the liquid state, the amount is close to 21% (by weight) of all the combustion products. Consequently a part of the combustion products of metallic fuels is present in a state not suitable for expansion. This reduces the specific thrust.

Hence an analysis of the characteristics of metallic fuels shows that their use is not expedient for the purpose of obtaining a high specific thrust.

The method of burning metallic fuels in liquid-fuel rocket engines also involves certain difficulties. It has been proposed, for example, to feed them into the chamber either in a liquid melted form or in the form of suspensions; that is, suspensions of finely-ground metallic powders in liquid fuels or in the form of compounds of metals with organic substances -- the so-called metallo-organic compounds.

Some of the metallo-organic compounds, even though they contain a large percent of metal, are under ordinary conditions liquid. For an example of such metallo-organic compounds see Table 9.

Suspensions and colloidal solutions of metals in combustibles may also be of interest.

A fuel employing such a colloidal solution of beryllium in the combustible was proposed by V. P. Glushko in 1930. If the metal content in the fuel is

---

Fizika i khimiya reaktivnogo dvizheniya /The Physics and Chemistry of Jet Propulsion/, No. 2, Publishing House of Foreign Literature, 1948.

Table 8

THE BASIC CHARACTERISTICS OF THE ELEMENTARY FUELS HAVING THE HIGHEST CALORIC VALUE[1]

Combustible Element	Oxygen Fuel					Fluorine Fuel				
	Combustion Product and Phase	Store of Chemical Energy K_G kilo-cal/kg	$K_{\text{об}}$ kilo-cal/1	μ Combustion Products	Boiling Point of the Combustion Products °C	Combustion Products and Phase	Store of Energy K_G kilo-cal/kg	$K_{\text{об}}$ kilo-cal/1	μ Combustion of the Products	Boiling Point of the Combustion Products °C
Hydrogen	H_2O gas	3210	1350	18,02	100	HF gas	3210	1475	20,01	—
Lithium	Li_2O solid	4760	3570	29,88	1300	LiF solid	5650	4930	25,94	(1960)
Beryllium	BeO solid	5830	8850	25,01	(3900)	BeF_2 solid	4830	5950	47,01	(850)
Boron	B_2O_3 solid	4350	5570	69,94	—	BF_3 gas	3910	4750	67,82	—
Carbon	CO_2 gas	2140	2830	44,01	—78	CF_4 gas	1850	2250	88,01	—
Magnesium	MgO solid	3530	5050	40,32	(2250)	MgF_2 solid	4210	5550	62,32	(1110)
Aluminum	Al_2O_3 solid	3900	6460	101,94	2700	AlF_3 solid	3710	5220	83,97	(1110)
Silicon	SiO_2 solid	3350	5050	60,06	1900	SiF_4 gas	3470	4600	104,06	—

---

[1] Selected values of the chemical-thermodynamic data. The National Bureau of Standards of the Department of Commerce of the USA, Circular No 500 of 1 February 1952.

small, its combustion product will be present in the condensed phase and will give off a large quantity of heat which is taken up by the gaseous combustion products. The small content of the condensed phase in the combustion products does not worsen the expansion process too much.

Table 9

Substance	Chemical Formula	Content of the metal in % by weight	t° melting °C	t° boiling °C	Specific weight kg/l
Pentaboran	B_5H_9	84.8	-47	58	0.72
Diboranimine	B_2H_7N	50.7	-66	76	0.70
Diethylberyllium	$Be(C_2H_5)_2$	13.4	12	200	0.20
Trisilan	Si_3H_8	91.2	-117	53	0.88
Trisylalamine	$(SiH_3)_3N$	78.5	-106	52	0.895

The use of suspensions and colloidal solutions of metals in combustibles makes it necessary, however, to create special kinds of injection systems.

The delivery of a liquid metal into the chamber of the liquid-fuel rocket engine is possible, in principle, because the apparatus for this (for example, pumps) has already been worked out and employed in other branches of engineering. It is more difficult to plan the heating and the melting of the metal in designs which are small in dimensions and light. It is also more difficult to provide for good atomization and combustion of metal fuel in the chamber.

At the present time there are no engines burning metallic fuels.

The second possible method of increasing the calorific value of fuels for rocket engines is the employment of substances as fuel components which have large positive heats of formation.

As an oxidizer of this kind we can point to ozone which in its formation from oxygen accumulates 730 kilo-cal/kg which is given off during combustion. A well-known combustible from the standpoint of a large positive heat of formation is acetylene which requires an expenditure of 2,120 kilo-cal/kg for its formation.

The use of such fuels is rendered very difficult because of the high explosive risk in the components.

A considerable increase in the calorific value of fuels can be obtained if we were able to employ ordinary elements, not in the molecular form but in the atomic form, as fuels and oxidizers.

For example, the heat of formation of atomic hydrogen amounts to 51,700 kilo-cal/kg. If we employ it as a combustible, the heat effect of an oxygen + hydrogen fuel increases up to 8,690 kilo-cal/kg. If we burn atomic hydrogen with atomic oxygen, the heat effect amounts to 12,200 kilo-cal/kg.

We can also consider the use of substances in atomic form as monocomponent fuels, if the energy is liberated only by recombination of the atomic element to form the molecular.

The actual use of the elements in the atomic form cannot be judged until we find a method of conserving the elements in the atomic state.

Fuels Possessing the Best Thermodynamic Characteristics of their Combustion Products.

As we saw, the creation of new fuels through use of components with increased calorific value has met certain difficulties arising for the most part out of the high combustion temperatures. Therefore, attention has, naturally, been turned to those fuels which, though not having such a large store of energy, would still ensure high specific thrusts due to the improved thermodynamic characteristics of the combustion products.

Earlier we pointed out how the thermodynamic characteristics of the combustion products exercise an influence upon the combustion and expansion process in the liquid-fuel rocket engine. A good example characterizing the importance of the thermodynamic characteristics of the combustion products is a fuel of oxygen + ammonia. This fuel has a calorific value (due to the large content of nitrogen and the large negative heat of formation of ammonia) equal in all to 1,640 kilo-cal/kg. This fuel can give a specific thrust of 280-290 kg-sec/kg which is equal to or somewhat exceeds the specific thrust of a fuel of oxygen + kerosene. At the same time, the combustion temperature of the first fuel is much lower than that of the second (3,000° absolute as opposed to 3,650° absolute).

We should remember that this development is due to the small molecular weight of the combustion products (N_2 and H_2O) which give low temperature in the chamber; and a fairly large content of diatomic gases (N_2) which leads to a higher value for the adiabatic index of the expansion of the combustion products.

For some time the periodical press has devoted a great deal of space to a discussion of the possibility of using nitrogen-hydrogen fuels in liquid-fuel rocket engines: ammonia, hydrazine and its derivatives. The increased content of nitrogen in hydrocarbon fuels (for example, triethylamine and dimethyl hydrazine) though it somewhat lowers the calorific value of the fuel, does not cause a reduction in the specific thrust. In addition, even the temperature in the chamber will be somewhat less, thus providing a solution to the problem of efficiently cooling the engine.

The further improvement of the thermodynamic characteristics of the combustion products may be expected as a result of using fluorine oxidizers with nitro-hydrogen combustibles. As we have already pointed out (see page 223) the products of the total combustion of this fuel is a diatomic gas (HF) which makes greater stability in the combustion products against dissociation and higher efficiency of expansion (η_t) possible. In addition, fuels of fluorine + hydrazine and fluorine + ammonia (see Table 7) give the highest values for the designed specific thrusts (360-370 units). At the same time, the use of fluorine with the usual hydrocarbon combustibles could scarcely be expedient because the combustion of fluorine with carbon leads to the formation of an easily dissociated pentomic molecule of CF_4 and is accompanied by a relatively small liberation of heat -- 1,850 kilo-cal to 1 kg CF_4.

The further search for future fuels is facilitated by the fact that at the present time we have prepared tables of thermodynamic characteristics of the combustion products of all the basic elements which can be used as rocket engine fuel. This renders it possible, with a sufficient degree of accuracy, to make a preliminary calculation of the specific thrusts of the most varied fuels and to find the best combination of fuel and oxidizer without having to resort to costly experiments.

The careful calculation of specific thrust enables us to find more possible fuels. However, both theoretical research and experience with thermodynamic calculations convince us that the specific thrust of chemical fuels has a very definite limit amounting to about 380 kg-sec/kg.

Possibilities Opened as a Result of the Use of Nuclear Energy in Rocket Engines.

A further increase in the specific thrusts of rocket engines can be obtained by using energy of nuclear reactions -- so-called atomic energy.

Nuclear reactions in contrast to chemical reactions take place in such a manner as to change the structure of the nuclei of atoms.

Based on present-day concepts, the nucleus of an atom consists of heavy elementary particles of two kinds: protons and neutrons, which have a (relatively) large mass.

The proton is a positively charged particle with a mass equal to the mass of the nucleus of a hydrogen atom. The neutron, as indicated by its name, has no charge at all. The mass of the neutron is also close to the mass of the hydrogen atom.

The properties of the atom depend on the number of protons and neutrons in the nucleus. Therefore, the number of protons Z in the nucleus of each element is always strictly limited and numerically equal to the atomic number of the element in the periodic table of Mendeleev. As a result, the positive charge of the nucleus amounts to Z x e (e is the value of the charge of the electron).

Normally the atom is electrically neutral, the number of electrons in the electron shell of the atom, which determine the chemical characteristics of the element are always constant.

The number of neutrons in the nucleus may differ. The number of neutrons without charge in the nucleus does not change the number of electrons or the structure of the electron shell. The chemical characteristics of atoms with a different number of neutrons remain unchanged in spite of the fact that these atoms have different atomic weights or a mass number A which represents the sum of the protons and neutrons in the nucleus.

This characteristic of the nuclei of atoms explains the existence of isotopes of elements encountered in nature. The presence of isotopes leads to the fractional atomic weights of many elements. For example, chlorine which has an atomic weight of 35.46, is, in reality, a mixture of three isotopes with a mass value A equal to 34, 35 and 37. The number of protons Z is equal to the atomic number of chlorine which is 17, and this number is invariable in all isotopes. The structure of the nucleus of the atom is indicated by indexes with the symbol of the element. The upper symbol designates the mass number A representing the sum of the protons and the neutrons; the lower index represents the number of protons Z, that is, the atomic number N. The number of the neutrons is equal to A - Z.

For example, Li_3^8 indicates that the given isotope of lithium possesses a mass number 8. In the nucleus of this atom there are three protons and five neutrons.

In the formation of the nucleus of an atom from free protons and neutrons, just as in the case of the formation of molecules from atoms, energy is given off. The liberation of energy is based on a condition: the nuclei of the elements represent a stable structure connected by intranuclear forces, the appearance of which, at the time when the nucleus is formed, should be followed by a decrease in the potential energy of the system.

The calculation of the energy of formation of the nucleus can be done most conveniently by applying the principle of the energy and mass equivalence according to which these values are interrelated by the ratio:

$$E = mc^2, \qquad (V.38)$$

where E is the energy in kg-m;

m, the mass expressed in kilograms of mass;

c, the velocity of light which is equal to 3×10^8 in m/sec.

The energy equivalent to 1 kg of mass amounts to

$$\sim 9 \cdot 10^{16} \text{ kg-m/kg mass}$$

and in kilo-calories for 1 kg of weight

$$\frac{9 \cdot 10^{16}}{9{,}81 \cdot 427} = 2{,}15 \cdot 10^{13} \text{ kilo-cal/kg}$$

According to equivalence of mass and energy, it follows that the mutual attraction of the particles of a nucleus forming a stable atom (with negative potential energy) is accompanied by a decrease in their mass as compared to the mass of those same particles when moved to a distance which excludes any interaction between them. This reduction in mass during nuclear reactions is called mass defect and is designated by Δm and can be determined experimentally.

According to the ratio (V.38), the loss of energy in the system (this means the value of the energy liberated in the formation of the nucleus of the atom) is equal to:

$$E = \Delta mc^2.$$

As an example, let us find the energy of formation from the elementary particles of the nucleus of the atom of helium He_2^4, having two neutrons and two protons, and, consequently, also two electrons.

For a unit of mass in nuclear reactions, we take 1/16 of the mass of an oxygen atom O^{16} which is equal to

$$1{,}649 \cdot 10^{-27} \text{ kg mass.}$$

The masses of the particles expressed in nuclear units amount to the following:

Mass of the free neutron	1.00845
Mass of the free proton	1.007522
Mass of the electron	0.000548
Mass of the helium atom He_2^4	4.00336

The mass of the nucleus of helium is equal to the mass of a helium atom minus the mass of two electrons:

$$\text{The mass of the nucleus of helium} = 4.00336 - 2 \cdot 0.000548 = 4.002264$$

The mass defect in the formation of the nucleus of helium amounts to $\Delta m = (2 \cdot 1.00845 + 2 \cdot 1.007522) - 4.002264 = 0.02968$ of nuclear units of mass.

In the formation of one helium atom from elementary particles, the following quantity of heat is liberated:

$$0{,}02968 \cdot 1{,}649 \cdot 10^{-27} \cdot 9{,}81 \cdot 2{,}15 \cdot 10^{13} = 1{,}02 \cdot 10^{-14} \text{ kilo-cal/atom.}$$

For 1 gram of helium it is necessary to have ¼ gram-mole of helium, and since in a gram-mole of any substance there are 6.06×10^{23} atoms, the total quantity of heat liberated during the formation of 1 gram of helium amounts to

$$\frac{1}{4} \cdot 6{,}06 \cdot 10^{23} \cdot 1{,}02 \cdot 10^{-14} \text{ kilo-cal/g} = 1{,}55 \cdot 10^{9} \text{ kilo-cal/g;}$$

This quantity of heat corresponds approximately to that which is liberated during the formation of 50 T of water from standard elements.

The energy of formation, and also the mass defect of the different nuclei, just as in the case of the energy of formation of the different chemical compounds, is different. Consequently, in principle it is possible to have nuclear reactions which lead to the formation of nuclei with larger mass defects than the initial nuclei. Also, the formation of the nuclei will be more stable. The energy liberated in the formation of a new nucleus will be equivalent to the difference of the mass defects of the newly formed nuclei and the initial nuclei.

The nuclear reactions of different elements take place in different ways. The easiest are the nuclear reactions of heavy elements with a large mass number. It has been found that the larger the mass number of the nucleus, the less stable the nucleus and the greater tendency it will have to disintegrate. The disintegration expresses itself in the fission of the heavy nucleus into lighter ones with the liberation of energy in the form of radiation of different types. It is precisely the heavy nuclei of the elements which possess the quality of radioactivity characterized by powerful radiation taking place during the fission of the nucleus.

It has also been known for a long time that there are artificial nuclear reactions connected with the conversion of light elements.

However, in order to obtain a large and constant yield of energy in nuclear reactions, it is necessary to have artificial excitation of the nuclei, increasing their energy to such an extent that they will become unstable and disintegrate with the formation of new nuclei. This energy of excitation of the nuclei is analogous to the energy of activation of chemical reactions.

The value of the energy of excitation in itself should be considerable, because the exciting particles which carry the necessary energy must penetrate into the nucleus.

For the intensive excitation of the nuclei, charged particles have been found unsuitable because they lose a large part of their energy before reaching the nucleus in overcoming the force of the electric field surrounding the nucleus. The most suitable particle for excitation of the nucleus is the neutron which does not have a charge.

In addition, for the continuity of the nuclear reaction, it is necessary to have either a flow of neutrons corresponding to the energy or the nuclear reaction itself should be the source of the formation of the neutrons necessary for excitation of more and more new nuclei. It was not until after the creation of such conditions that the practical utilization of the nuclear energy of heavy elements became possible.

For the excitation of light elements we need still more energy. In practice, this is achieved by using energy from nuclear reaction of heavy elements.

Let us now consider the quantitative side of the problem and appraise the possibilities arising out of the use of nuclear reactions.

Each nuclear reaction is characterized by its energy effect. As a measure of energy effect we take the mass defect which is expressed in fractions δ of the initial mass of the active substance.

The value of δ is very small. Of course it is less than the relative mass defect in the formation of the nuclei of the elements because it is determined by the difference of the mass defects for the two nuclei.

For the reaction of the fission of a uranium nucleus U^{235}_{92} $\delta = 0.000731$, in reactions with light atoms, the value δ is much higher.

For the reaction of the formation of helium from lithium and hydrogen $Li^7_3 + He^1_1 \rightarrow 2He^2_4$, the value $\delta = 0.00232$.

In the reaction of transformation of hydrogen into helium $4H^1 \rightarrow He^4$, the value $\delta = 0.00715$.

However, even with such insignificant mass defects, as a result of the enormous value of the energy corresponding to the unit of mass, the yield of energy K_a in kilo-cal to 1 kg of nuclear fuel, with the afore-mentioned nuclear reactions, will be very large. The data for the yield of energy are given in the following table:

Type of Nuclear Reaction	Yield of energy in kilo-cal/kg
Reaction of uranium fission U_{92}^{235}	$1.57 \cdot 10^{10}$
$Li_3^7 + H_1^1 \rightarrow 2He_2^4$	$2.67 \cdot 10^{10}$
$4H^1 \rightarrow He^4$	$1.54 \cdot 10^{11}$

The very large quantity of energy liberated when using nuclear reactions in engineering designs should be absorbed by another mass carrier in the form of thermal or chemical energy which in turn, as in an ordinary engine, can be used for the creation of thrust.

This method of employing the energy of nuclear reactions opens up great possibilities in the choice of a mass carrier -- a carrier of the energy in the engine. As a mass carrier absorbing nuclear reaction energy and transforming it into heat, we can select a substance with the best thermodynamic characteristics; that is, with a small number of atoms in the molecule and as low a molecular weight as possible.

As a possible material for use as a mass carrier, we have diatomic hydrogen which possesses excellent characteristics because its molecular weight is equal to 2. After this material come ammonia NH_3 and water H_2O, the heat capacity weight of which is comparatively high. If the temperatures in the atomic rocket engine chamber are sufficiently high, the ammonia will be decomposed into N_2 and H_2, and the water to O_2 and H_2. With still higher temperatures a considerable quantity of atomic gases N, H, and O, will go into the compound of the mass carrier, and this leads to a further improvement in the thermodynamic characteristics of the mass carrier.

We should note that the phenomenon of dissociation, harmful when using chemical energy, can prove to be useful in using nuclear energy because with dissociation nuclear energy can be accumulated in the form of chemical energy; for example, in the form of positive energy of formation of atomic gases. In the expansion process chemical energy which results from the recombination reaction can be liberated and transformed into kinetic gas energy.

The maximum temperature of the mass carrier is determined by the possibility of construction of a reliably operating design for an atomic engine.

Data for the quantity of heat K_G in kilo-cal/kg, which accumulates in 1 kg of mass carrier composed of different elements at a temperature of 4,000 and 6,000° absolute (without taking into account dissociation), are given in Table 10. This table gives the quantities of active substance G_a (uranium U_{92}^{235} or plutonium Pu_{94}^{230}) necessary for heating 1 kg of mass carrier to corresponding temperatures.

Data for specific thrust which can be obtained by using atomic energy indicate that a greater thrust than with the usual fuels can be obtained only with high temperatures in the chamber or, if we are limited to relatively low temperatures, only with the use of hydrogen as a mass carrier in the engine. However, hydrogen is not suitable because its specific weight in the liquid state is small. Consequently, the gain in specific thrust obtained by the use of hydrogen is considerably reduced by worsening the weight qualities of the rocket. An increase in the temperature in the engine presents new problems in its cooling system.

The expenditure of active mass for heating the mass carrier to the required temperature is extremely small. However, the actual quantity of active mass in the engine is determined by the fact that for nuclear reaction to take place it is necessary to have a certain minimum or critical mass.

The requirement is explained by the fact that the dimensions of the atomic nucleus are small (the cross section is about 10^{-24} cm^2), and to insure a sufficiently high probability of collision between the neutrons and the nucleus of the atom it is necessary to have a very large value for the path which the neutron must travel in the active substance. That is to say, the mass of the active substance should be larger than a certain minimum value.

The value of the critical mass depends on the form of the active substance

Table 10

Substance of the Mass Carrier	4000° abs.				6000° abs.			
	K_0 Kilo-Cal/Kg	G_a Kg/Kg	P_{sp}^{*} Kg-Sec/Kg	P_{sp}^{*} Kg-Sec/Ltr	K_0 Kilo-Cal/kg	G_a Kg/Kg	P_{sp}^{*} Kg-sec/Kg	P_{sp}^{*} Kg-sec/Ltr
Molecular Hydrogen (without dissociation)	15 500	$7,2 \cdot 10^{-10}$	822	57,6	25 000	$1,2 \cdot 10^{-9}$	1045	78,2
Water (without dissociation)	2450	$1,14 \cdot 10^{-10}$	330	330	4 700	$2,18 \cdot 10^{-10}$	453	453
Ammonia with Dissociation into Molecular Hydrogen and Nitrogen	1940	$0,9 \cdot 10^{-10}$	293	200	3 000	$1,39 \cdot 10^{-10}$	366	250
Atomic Hydrogen (without recombination)	71 500	$3,34 \cdot 10^{-9}$	1105	—	81 400	$3,78 \cdot 10^{-9}$	1350	—
Atomic Oxygen (without recombination)	4900	$2,28 \cdot 10^{-10}$	275	—	5 500	$2,56 \cdot 10^{-10}$	337	—
Atomic Nitrogen (without recombination)	9500	$4,42 \cdot 10^{-10}$	298	—	10 200	$4,75 \cdot 10^{-10}$	360	—

* The specific thrusts calculated during expansion of the mass carrier from the pressure 100 atm to 1 atm.

and the conditions under which the nuclear reactions take place.

For example, for a pure substance U^{238}, U^{235}, or Pu^{239}, the critical mass amounts to a sphere having a radius of several centimeters and a weight of 20-30 kg.[1] However, one could hardly employ active substances in such a form in a rocket engine because under these conditions the area of heat radiation is very small. In addition, the nuclear reactions take place very quickly. For increasing the area of heat transfer, retarding the velocity of nuclear reaction and providing a means to control it, we must add a so-called inhibitor to the fissionable substance. The inhibitor should possess a small capacity for absorbing neutrons, but it should greatly reduce their velocity. As an inhibitor we employ graphite or heavy water.

This scheme for using an active substance constitutes the basis of all the existing projects for the use of atomic energy for industrial purposes.

The value of the critical mass when using an inhibitor greatly increases and reaches hundreds of kilograms.

The basic difficulty arising from placing the packet of active mass and inhibitor in the chamber of the engine is that the temperature of the active substance which insures the heat transfer to the mass carrier should be greater than the temperature of the mass carrier itself. That is, the temperature should be very high. A solution to this problem is very difficult because we do not know materials which remain solid at temperatures of 4,000-6,000° absolute. Uranium melts at T = 1,150° absolute. A higher melting substance, uranium oxide, melts at T = 2,100° absolute. Even graphite evaporates at temperatures of about 4,000° absolute.

For these reasons we must find a design solution in which all parts of the packet of active substance can be subjected to intensive heating and such that the cooler sectors will insure the necessary mechanical stability of the packet as a whole.

---

[1] Sovremennaya Tekhnika [Present-day Technology], Collection of Essays, No. 6, Publishing House of Foreign Literature, 1949.

The dimensions of the packet, if possible, should also be made larger, in order to obtain the necessary value for the surface transmitting heat to the mass carrier.

This difficulty is not encountered in another method of applying nuclear energy in the engine -- namely, a method by which the active substance is sprayed into the chamber in the form of a solution or a suspension in liquid. In this instance the nuclear reaction takes place in the vapor mass of the mass carrier, that is, in the homogeneous gaseous phase. This system for using atomic energy is very attractive because it insures the best conditions for heat transfer in the turbulent gas flow. At the same time, in the gaseous mass carrier we can obtain the necessary very high temperatures needed for high specific thrusts. In addition, the walls of the engine can be insulated from the effects of the high temperature gas flows by a layer of relatively cold gas.

A great difficulty in the application of such a system is that the dimensions of the chamber must be very large.

The value of the critical mass in this case is replaced by the critical product of the pressure in the chamber p_2 by radius R_k. Based on certain estimates for the use of hydrogen as a mass carrier at a temperature in the chamber equal to 5,000° absolute, the necessary product p_2R_k amounts to 12,000 m atm (the product of meters by kg/cm^2). Hence, with a pressure in the chamber of 100 kg/cm^2, the chamber should have a minimum diameter of 240 m. It is useless even to speak of making chambers of such dimensions.

These same estimates for other mass carriers give still greater values for the critical dimension of the chamber.

We have already had thermonuclear reactions not connected with the value of the critical mass. However, for the excitation of these reactions, we must have outside sources of high temperature. The only source of this kind up until now is the atomic explosion, but, of course, we cannot employ it for excitation of thermonuclear reactions for relatively slow release of energy necessary for nuclear reaction in the rocket engine.

Another source of excitation might be the powerful highly concentrated gaseous electrical discharge which, as proposed, makes it possible to control the velocity of thermonuclear reactions. However, the practical employment of this or a similar initiator of thermonuclear reactions in engineering designs must be preceded, of course, by a long period of research work in this field.

The brief statements concerning the possibilities of the utilization of the energy of nuclear reactions in rocket engines given above show that this problem is very complicated and that a great amount of work still remains to be done before we can employ atomic energy for a rocket engine in actual practice.

QUESTIONS FOR REVIEW AND PROBLEMS

1. What are the basic requirements to be met by fuels for liquid-fuel rocket engines?

2. What is the importance for the qualities of rocket engine fuels of the large thermal capacity by weight for the fuel combustion products?

3. Explain why in liquid-fuel rocket engines it is more advantageous to employ fuels whose combustion products have a small number of atoms in the molecule. Illustrate this problem by an example of the combustion of fuels consisting of oxygen plus hydrogen and oxygen plus carbon.

4. Determine the gasification of a fuel whose combustion products have a molecular weight equal to 26.2.

5. Name and give the basis of the design requirements made of fuels for liquid-fuel rocket engines.

6. Name and give the basis of the operating requirements to be met by fuels for liquid-fuel rocket engines.

7. Find the weight composition of a fuel consisting of a mixture of 40%

dimethylhydrazine and 60% diethylamine (data shown in Table 6).

8. What is meant by the theoretical required quantity of oxidizer?

9. Find the value ν_0 for fuel consisting of 75% ethyl alcohol plus oxygen. Determine the elementary composition of this fuel with $\alpha = 0.9$.

10. What characterizes the total heat content of a component and of what component parts is it composed?

11. Describe the system for reading the total heat contents proposed by A. P. Vanichev.

12. What is the difference between the value of the chemical energy and the heat content I_{total} at 20° C in the system of A. P. Vanichev?

13. Determine the total heat content of methyl alcohol of 90% concentration by weight, if the heat of its complete combustion with oxygen to form liquid H_2O and CO_2 amounts to 6,920 kilo-cal/kg.

14. Determine the total heat content of a 98% solution of nitric acid with water at 20° C, if the heat of solution of water in nitric acid amounts to -280 kilo-cal/kg of water.

15. Determine the total heat content of a 75% solution of ethyl alcohol with water at 20° C, if the heat of solution of the alcohol in water amounts to -170 kilo-cal/kg of water.

16. Give the basic characteristics of nitric acid and the purpose of an additive in it.

17. Name the combustibles employed in fuels based on oxygen. Give their characteristics.

18. What hypergolic fuels do you know? What are their advantages and their weaknesses?

19. What advantages and disadvantages do metallic fuels possess?

20. What are the possible methods of utilizing the energy of nuclear reactions in rocket engines?

CHAPTER VI

THE THERMAL CALCULATIONS OF AN ENGINE CHAMBER

The thermal calculation is made to determine specific thrust and the basic dimensions of the nozzle of the liquid-fuel rocket engine. It includes the calculation of combustion and discharge.

The calculation of combustion and discharge is based on calculation of the composition and temperature of the combustion products in the engine chamber and on the nozzle exit at the prescribed pressures.

This calculation must of necessity take into account dissociation because there is a large quantity of chemical energy left in the combustion products.

SECTION 31. DETERMINATION OF THE COMPOSITION OF COMBUSTION PRODUCTS OF THE SIMPLEST FUEL

Setting up the Equation System to Determine the Composition of the Combustion Products at a given Temperature.

The calculation of the composition and the temperature of the combustion products is a rather cumbersome operation in which one must clearly present the significance of the equations applied and the methods of solving them. Hence, before proceeding directly to the desired calculation of combustion and discharge in rocket engines, we should study a simpler example based on methods for drawing up and solving equation systems which determine the temperature and composition of the combustion products.

Let us determine the composition of the combustion products of hydrogen and oxygen at a temperature equal to 3,200° absolute, and at a set pressure of $P_{\Sigma} = 1$ atm with the initial mixture containing 1 gram-mole of hydrogen H_2 and 1 gram-mole of oxygen O_2. We can assume that the dissociation of the complete combustion products, that is, water vapor, takes place only with molecular hydrogen and oxygen according to the equation:

$$H_2O \rightleftarrows H_2 + \frac{1}{2} O_2.$$

In this case the combustion products will consist of three gases: hydrogen, oxygen, and water vapors. The number of moles of these gases, which we shall designate by M_{H_2}; M_{O_2} and M_{H_2O}, will be three unknown quantities, the value of which we must determine. For the determination of these three unknowns it is necessary to set up a system of three equations. In conformity with the dissociation reaction in question:

$$H_2O \rightleftarrows H_2 + \frac{1}{2} O_2 \tag{VI.1}$$

the constant of equilibrium (see Section 12) of this reaction is written in the form:

$$K = \frac{p_{H_2} p_{O_2}^{\frac{1}{2}}}{p_{H_2O}}. \tag{VI.2}$$

This value as a general rule depends on the temperature, but since in our example the temperature is given, it has a definite numerical value which amounts to 0.0877.

It is necessary to set up two additional equations for the determination of the composition of the combustion products. They can be found if we employ the law of the conservation of matter. Since no change in elements takes place in chemical reactions, we can say that the quantity of elements -- that is, of hydrogen and oxygen -- computed before combustion reaction, is equal to the quantity of these elements present in the combustion products.

The equations for conservation of matter, written in this form, are called the <u>equations for element balance</u>. Since the quantity of this or that element is determined entirely by the number of its gram-moles, we should set up the balance equation in gram-moles. This in the given instance gives us the simplest form of the balance equation.

Let us set up the equation for the hydrogen balance.

Before combustion according to the conditions of the problem, we have 1 gram-mole of hydrogen. After combustion and dissociation, the hydrogen will change into water vapor H_2O and into molecular hydrogen H_2. Let us direct our attention to the fact that for the formation of 1 gram-mole of water vapor it is necessary to expend one gram-mole of molecular hydrogen.

Since some H_2O and H_2 are formed in the combustion products, the number of gram-moles of water vapor H_2O formed during the combustion of 1 gram-mole of H_2 with dissociation will be less than unity.

We designate the number of gram-moles of water vapor in the combustion products by x, that is, $M_{H_2O} = x$. Then the quantity of gram-moles of hydrogen present in the combustion products is determined by the sum x gram-moles of H_2 which are part of H_2O and M_{H_2} gram-moles of free molecular hydrogen. Since in accordance with the law for the conservation of matter, the total number of gram-moles of hydrogen does not change in combustion, this sum will obviously be equal to the number of gram-moles in the initial mixture, that is 1. Consequently:

$$1 = x + M_{H_2} \tag{VI.3}$$

or, solving for M_{H_2}, we obtain:

$$M_{H_2} = 1 - x. \tag{VI.4}$$

These same considerations also enable us to set up an equation for oxygen balance. In the initial mixture before combustion, there is one gram-mole of O_2. After combustion the oxygen is in the water vapor H_2O and in the form of free molecular oxygen O_2. The amount of oxygen going into the water vapor amounts to ½ gram-mole to one gram-mole of H_2O. Since the number of gram-moles of water = x, then, designating the number of gram-moles of free oxygen by M_{O_2}, we may write:

$$1=\frac{1}{2}x+M_{O_2} \qquad (VI.5)$$

or

$$M_{O_2}=1-0{,}5x. \qquad (VI.6)$$

Hence we have obtained two additional equations for the determination of combustion products. Let us notice that the number of balance equations is always equal to the number of elements forming a part of the initial fuel. Now we have three equations for finding three unknowns.

The Solution of the Equation System to Determine the Composition of Combustion Products.

To solve the equation system received in (VI.2), (VI.4), and (VI.6), we express the composition of the gases in partial pressures. For this purpose it is necessary to use a relationship of partial pressures p_{H_2O}, p_{H_2} and p_{O_2} to the number of moles of these gases.

$$p_{H_2O}=r_{H_2O}p_{\Sigma};\quad p_{H_2}=r_{H_2}p_{\Sigma};\quad p_{O_2}=r_{O_2}p_{\Sigma}, \qquad (VI.7)$$

where p_{Σ} is the total pressure of the gas mixture;

r_{H_2O}, r_{H_2} and r_{O_2}, the volume proportion of the corresponding gases in the mixture.

Since the mole of any gas under the given conditions occupies a strictly determined volume not dependent upon the type of gas, the volume proportion of any gas is determined by the ratio of the number of gram-moles of the gas to the total number of gram-moles M_{Σ} of all the gases constituting the mixture. In the given instance:

$$r_{H_2O}=\frac{M_{H_2O}}{M_\Sigma};\quad r_{H_2}=\frac{M_{H_2}}{M_\Sigma};\quad r_{O_2}=\frac{M_{O_2}}{M_\Sigma}. \tag{VI.8}$$

The total number of moles M_Σ amounts to:

$$M_\Sigma=M_{H_2O}+M_{H_2}+M_{O_2}. \tag{VI.9}$$

Making use of the equations (VI.4) and (VI.6), we obtain:

$$M_\Sigma=x+1-x+1-0{,}5x=2-0{,}5x. \tag{VI.10}$$

In accordance with (VI.8) and (VI.7) the volume proportions and the partial pressures will be equal to the following:

$$\left.\begin{aligned} r_{H_2O}&=\frac{x}{2-0{,}5x}; & p_{H_2O}&=\frac{x}{2-0{,}5x}p_\Sigma;\\ r_{H_2}&=\frac{1-x}{2-0{,}5x}; & p_{H_2}&=\frac{1-x}{2-0{,}5x}p_\Sigma;\\ r_{O_2}&=\frac{1-0{,}5x}{2-0{,}5x}; & p_{O_2}&=\frac{1-0{,}5x}{2-0{,}5x}p_\Sigma. \end{aligned}\right\} \tag{VI.11}$$

Let us substitute the values of partial pressures and the value of the equilibrium constant in the equation (VI.2) and after cancelling p_Σ and (2-0.5 x), we obtain:

$$K=0{,}0877=\frac{(1-x)(1-0{,}5x)^{\frac{1}{2}}}{(2-0{,}5x)^{\frac{1}{2}}x}p_\Sigma^{\frac{1}{2}} \tag{VI.12}$$

or

$$\frac{K}{p_\Sigma^{\frac{1}{2}}}=\frac{0{,}0877}{p_\Sigma^{\frac{1}{2}}}=\frac{(1-x)(1-0{,}5x)^{\frac{1}{2}}}{(2-0{,}5x)^{\frac{1}{2}}x}. \tag{VI.13}$$

Hence, if the given value of the total pressure of the gaseous mixture is p_Σ, then, from our system, we receive an equation with one unknown.

Let us solve the equation received with the pressure p_Σ, equal to one physical atmosphere (in the value of equilibrium constants we usually do not have technical but physical atmospheres).

In this case the equation (VI.13) takes the form:

$$0,0877=\frac{(1-x)(1-0,5x)^{\frac{1}{2}}}{(2-0,5x)^{\frac{1}{2}}x}. \qquad \text{(VI.14)}$$

This equation is one of the third degree, the analytical solution of which is possible but rather cumbersome.

We can solve the equation by the trial-and-error method. Let us note the "area" of the expected values of x. If the combustion takes place without dissociation, then there will be 1 gram-mole of H_2O in the combustion products because the oxygen for the oxidation of all the hydrogen in the water is sufficient (we need ½ gram-mole, and there is 1 gram-mole) and the value $M_{H_2O} = x$ would be equal to unity. As a result of the dissociation, the water vapor content will be somewhat less, that is, $x < 1$.

Having given the different values $x < 1$, let us calculate the value G, which enters the equation (VI.14):

$$G=\left(\frac{1-x}{x}\right)\left(\frac{1-0,5x}{2-0,5x}\right)^{\frac{1}{2}}.$$

We graphically carry out the solution of equation (VI.14) (Figure 79). For this we plot on the graph the relation:

$$G = f(x)$$

We find the solution of the equation (VI.14) as the point of intersection of the curve G with the straight line which marks off the value of the right-hand member of equation (VI.14) on the G axis. In the case considered here with $p_{\Sigma} = 1$ and $T = 3{,}000°$ absolute:

$$G = K = 0.0877$$

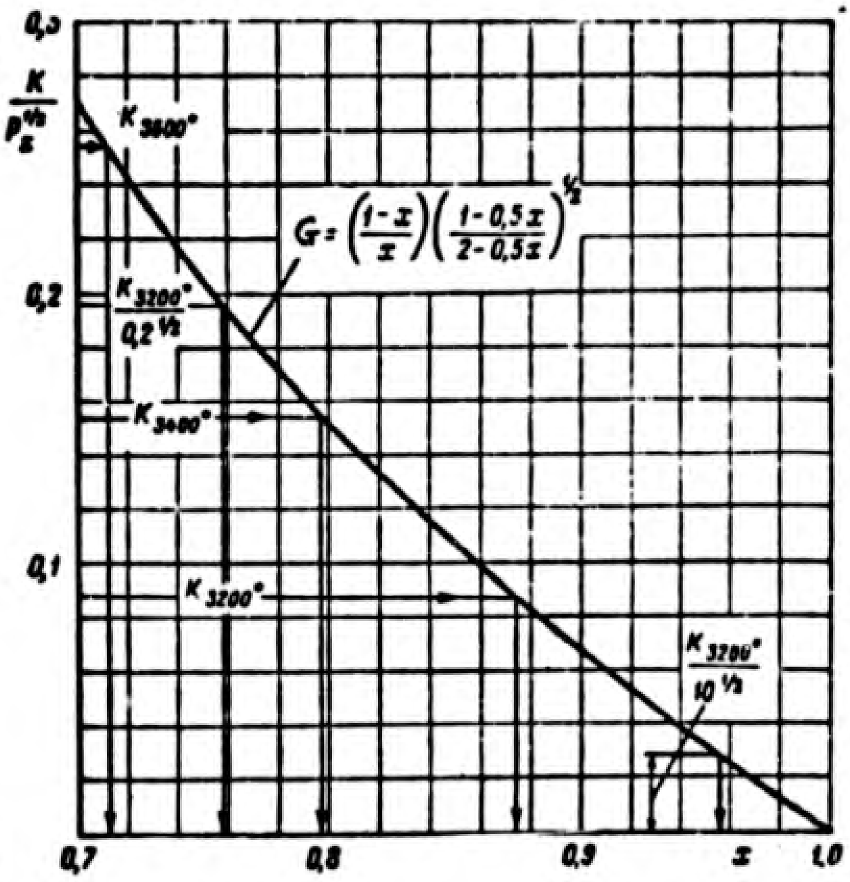

Figure 79. The graphical solution of equation (VI.14) to determine the composition of the mixture of dissociated combustion products.

As we can see, x = 0.874.

Thus, the quantity of water vapor moles that exist in the dissociated mixture is equal to

$$M_{H_2O} = 0.874$$

This means also that as a result of dissociation 1 - 0.875 = 0.126 gram-mole of water vapor was decomposed in spite of the fact that there was fully enough oxygen for the complete oxidation of hydrogen.

Making use of equations (VI.4) and (VI.6), we find:

$$M_{H_2} = 1 - 0.874 = 0.126;$$
$$M_{O_2} = 1 - 0.5 \cdot 0.874 = 0.563.$$

The total number of moles of combustion products M_Σ amounts to:

$$M_\Sigma = 2 - 0.5x = 1.563,$$

and the partial pressures with p_Σ = 1.0, in accordance with (VI.11), are equal to:

$$p_{H_2} = \frac{0.126}{1.563} \cdot 1 = 0.08;$$
$$p_{O_2} = \frac{0.563}{1.563} \cdot 1 = 0.36;$$
$$p_{H_2O} = \frac{0.874}{1.563} \cdot 1 = 0.56.$$

Thus we determine the composition of the dissociated combustion products at p_Σ = 1 atm and T = 3,000° C.

The Influence of Pressure and Temperature on the Composition of Combustion Products.

The equation according to which the dissociation of water vapor takes place:

$$H_2O \rightleftarrows H_2 + \frac{1}{2} O_2,$$

shows that dissociation of water vapor is accompanied by an increase in the number of moles or of the total volume of the gas mixture. Consequently the course of the dissociation reaction depends upon the pressure (see Section 12). An increase in the pressure should lead to a decrease in the dissociation of the water vapor and a reduction in pressure should lead to an increase in dissociation.

In addition, the intensity of the dissociation reaction of combustion products depends on the temperature. With an increase in the temperature there should be an increase in the content of the dissociation products in the combustion products.

In order to follow the influence of pressure on the composition of the gases, let us solve the equation (VI.13) with the temperature 3,200° absolute and with two mixture pressures: p_Σ = 10 atm and p_Σ = 0.2 atm, as a result of which the left side of the equation (VI.13) $\frac{0.0877}{p_\Sigma^{1/2}}$ will be equal respectively to 0.0259 with p_Σ = 10 atm, and 0.196 with p_Σ = 0.2 atm. The graphical solutions, shown in Figure 79, give respectively

$$x_{p_\Sigma=10} = 0.956 \text{ and } x_{p_\Sigma=0.2} = 0.760.$$

The composition of the combustion products, calculated with a pressure of 0.2, 1 and 10 atm, are given in Table 11.

The data of this table show that with a decrease in the total pressure in the mixture of gases, the content of the dissociation products, that is, M_{H_2} and M_{O_2}, will actually increase.

Table 11

COMPOSITION OF COMBUSTION PRODUCTS AT A TEMPERATURE T = 3,200° ABSOLUTE AT THREE DIFFERENT PRESSURES
(Initial mixture: 1 gram-mole H_2 + 1 gram-mole O_2)

Pressure p_Σ in atm	M_{H_2O}	M_{H_2}	M_{O_2}	M_Σ	p_{H_2O}	p_{H_2}	p_{O_2}
0.2	0.760	0.240	0.620	1.620	0.094	0.030	0.076
1.0	0.874	0.126	0.563	1.563	0.560	0.080	0.360
10.0	0.956	0.044	0.522	1.522	6.280	0.290	3.430

Let us evaluate the influence of temperature on the composition of combustion products. For this purpose let us also calculate the composition of the combustion products at the pressure p_Σ = 1 atm with two additional values for temperature: at 3,400° absolute and 3,600° absolute.

The left parts of the equation (VI.13) will be equal respectively to the values of the equilibrium constants. By carrying out a graphical solution analogous to the preceding, we obtain the data given in Table 12.

Table 12

THE COMPOSITION OF COMBUSTION PRODUCTS AT A PRESSURE OF 1 ATMOSPHERE AND THREE DIFFERENT TEMPERATURES
(Initial mixture: 1 gram-mole H_2 + 1 gram-mole O_2)

T° abs	K_2	M_{H_2O}	M_{H_2}	M_{O_2}	M_Σ	p_{H_2O}	p_{H_2}	p_{O_2}
3,200	0.0877	0.874	0.126	0.563	1.563	0.560	0.080	0.360
3,400	0.1544	0.796	0.204	0.602	1.602	0.498	0.126	0.376
3,600	0.2556	0.712	0.288	0.644	1.644	0.434	0.175	0.391

As we can see from the comparison of the data of Tables 11 and 12, the temperature exercises a sharper influence than pressure upon the composition of the combustion products. For example, a change of temperature from 3,200 to 3,600° absolute, that is, by 12.5%, led to a greater change in the composition than the change of pressure from 1 to 0.2 atm, that is, a fivefold change.

SECTION 32. SETTING UP AN EQUATION SYSTEM TO DETERMINE THE COMPOSITION AND TEMPERATURE OF COMBUSTION PRODUCTS IN THE ENGINE CHAMBER

An example of the determination of the composition of combustion products at a given temperature, analyzed by us above, enables us to explain the types of equations entering into the equations system needed to determine the composition of combustion products.

The first type of equation is that for equilibrium constants of dissociation reactions which are considered in the calculations; the second type of equation is for the balance of elements which form the fuel. In addition, in the calculation we use the equation for the total pressure of the combustion products $p_\Sigma = \Sigma p_i$.

The equations of the two types mentioned furnish a sufficient number of equations necessary for finding the composition of the combustion products. As supplementary equations for determining the composition we use equations relating the gas composition expressed in gram-moles to gas composition expressed in partial pressures. If we set ourselves the additional task of also determining the temperature in the combustion chamber, we find a new unknown, namely, the temperature of the combustion products. For the determination of this temperature we must draw up an additional equation.

Since the temperature determines the store of energy in a gas we must use an equation relating the store of energy in the fuel to the store of energy in the combustion products, in order to compute temperature. During fuel combustion a transformation of chemical energy into thermal energy takes place. However, if we do not take into account the loss of heat to the external medium, the total store of energy in the fuel and in the products of combustion according to the law for the conservation of energy, remains unchanged.

The total supply of energy in the event of combustion at a constant pressure is characterized by a total heat content I_{total}. Consequently the total heat content of the combustion products $I_{total\ prod\ comb}$ (including chemical energy) at the combustion temperature T_2 at the end of the combustion chamber should be equal to the total heat content of the initial fuel $I_{total\ T}$

$$I_{T_1} = [I_{p.c}]_{T_2}. \qquad (VI.15)$$

This equation, inasmuch as it does not deal with calorific values but rather with total heat content values, is applicable both for complete combustion and for incomplete combustion. Incomplete combustion may take place because of a lack of oxygen and also as a result of dissociation.

Let us consider setting up a system of equations for a situation in which a fuel has four elements: carbon, hydrogen, oxygen, and nitrogen. This case is the most typical of liquid rocket engine fuels used at the present time.

Setting Up Equations for Dissociation Reactions.

Let us begin by setting up a system of equations of the first type, that is, equations for dissociation reactions possible in the combustion products of the fuel considered.

Such reactions are:

1. The dissociation reaction of carbon dioxide

$$CO_2 \rightleftarrows CO + \frac{1}{2} O_2 + 93{,}64 \text{ kilo-cal/g-mol}$$

$$K_1 = \frac{p_{CO} p_{O_2}^{\frac{1}{2}}}{p_{CO_2}} = f_1(T). \qquad (VI.16)$$

2. Dissociation reaction of water vapor to form molecular hydrogen and oxygen

$$H_2O \rightleftarrows H_2 + \frac{1}{2} O_2 + 57{,}10 \text{ kilo-cal/g-mol},$$

$$K_2 = \frac{p_{H_2} p_{O_2}^{\frac{1}{2}}}{p_{H_2O}} = f_2(T). \qquad \text{(VI.17)}$$

At the same temperature these reactions (VI.16) and (VI.17) take place with different intensities.

With the presence of hydrogen and oxygen in the mixture of combustion products, these dissociation reactions can exercise a mutual influence upon each other.

For example: oxygen generated during dissociation of carbon dioxide can serve in the oxidation of hydrogen discharged during the dissociation of water vapor.

The occurrence of the first two reactions at one time can be followed easiest of all if we set up the total reaction combining them. In cases where there is a shortage of oxidizer ($\alpha < 1$)especially characteristic of reaction is the formation of water gas received by the subtraction of the second reaction from the first.

$$CO_2 + H_2 \rightleftarrows CO + H_2O + 36{,}54 \text{ kilo-cal/g-mol}$$

The equation for the equilibrium constant in this reaction has the form:

$$K_{2a} = \frac{p_{CO} p_{H_2O}}{p_{CO_2} p_{H_2}} = f_{2a}(T). \qquad \text{(VI.17')}$$

This reaction occurs during production of generated gas by the injection of water vapor into an atmosphere of carbon monoxide which is over a layer of heated carbon. This discharges the necessary heat for the formation of hydrogen and is called the water gas formation reaction. This reaction also has a tremendous significance in the processes which occur in the combustion chamber of rocket engines. A characteristic of the reaction for the formation of water gas is that, in contradistinction to the reaction of its components, it occurs without a change in the number of moles (volume). Consequently the composition of the combustion products, if they are formed according to this reaction, does not depend on the pressure in the combustion chamber. The circumstance mentioned reduces the effect of pressure increase as an item interfering in the chamber of the rocket engine with dissociation of the combustion products of hydrocarbon fuels.

The equilibrium constant K_{2a}, just as the equilibrium constants of all the other reactions taking place with a heat loss increases with an increase in the temperature. Consequently, with an increase in temperature in the gas mixture there will be an increase in the content of carbon monoxide in the water vapor. On the other hand, at low temperatures in an equalized mixture, there will be a predominance of carbon dioxide and molecular hydrogen.

The equation for the reaction in water vapor is often times used to make calculations of states of equilibrium.

3. Reaction of dissociation of water vapor to form hydrogen and the hydroxyl group:

$$H_2O \rightleftarrows OH + \frac{1}{2} H_2 + 10,00;$$

$$K_3 = \frac{p_{OH} p_{H_2}^{\frac{1}{2}}}{p_{H_2O}} = f_3(T). \qquad (VI.18)$$

4. The reaction for the formation of nitric oxide;

$$N_2 + O_2 \rightleftarrows 2NO + 21,47;$$

$$K_4 = \frac{p_{NO}^2}{p_N p_{O_2}} = f_4(T), \qquad (VI.19)$$

occurring with a loss of heat and without a change in the number of moles.

5. The dissociation reaction of molecular hydrogen to form atomic hydrogen;

$$H_2 \rightleftarrows 2H + 51,63;$$

$$K_5 = \frac{p_H^2}{p_{H_2}} = f_5(T). \qquad (VI.20)$$

6. Dissociation reaction of molecular oxygen to form atomic oxygen;

$$O_2 \rightleftarrows 2O + 58{,}59;$$

$$K_6 = \frac{p_O^2}{p_{O_2}} = f_6(T). \qquad \text{(VI.21)}$$

7. Dissociation reaction of molecular nitrogen to form atomic nitrogen;

$$N_2 \rightleftarrows 2N + 85{,}12;$$

$$K_7 = \frac{p_N^2}{p_{N_2}} = f_7(T). \qquad \text{(VI.22)}$$

The seven reactions cited are the most probable ones that take place in the combustion chamber. The rest of the reactions, for example, the reactions for the formation of hydrocarbons (of the type of methane CH_4), at temperatures present in the combustion chamber, should not be taken into account because at high temperatures the hydrocarbons are not stable and cannot be contained in the combustion chamber of liquid-propellant rocket engines.

The seven equations cited for the equilibrium constants of th dissociation reactions contain eleven unknown partial pressures of gases constituting the combustion products, namely:

$$p_{CO_2};\ p_{H_2O};\ p_{CO};\ p_{N_2};\ p_{H_2};\ p_{O_2};\ p_{NO};\ p_{OH};\ p_H;\ p_O \text{ and } p_N.$$

In addition, we do not know the value of the temperature in the combustion chamber which determines the temperature of equilibrium constants. Hence there is a total of 12 unknown values in the dissociation reaction equations.

Setting up Element Balance Equations.

As we found above, the balance equations for elements are set up by equating the number of elements contained in the fuel to the number of these same elements forming part of the combustion products. In setting up the balance equation for the combustion chamber of the rocket engine we shall express the number of elements contained in the fuel composition in kilograms per kg of fuel or, what is the same, per kg of combustion products.

Let us consider in detail a method for setting up balance equations for elements, using the setup of a balance equation for nitrogen as an example.

The number of kilograms of nitrogen necessary for 1 kg of fuel, according to equation (V.17) amounts to

$$N_T = \frac{N_{comb} + \nu N_o}{1+\nu}. \qquad \text{(VI.23)}$$

For a rough estimate of the amount of oxygen in the combustion products we should bear in mind that the following three gases enter into the fuel composition: molecular nitrogen N_2, atomic nitrogen N, and nitric oxide NO. Let us designate by M_{n_2}, M_n, M_{n_o}. the number of gram-moles of these gases needed for 1 kg of combustion products.

1 gram-mole of molecular nitrogen N_2 contains 2 x 14 = 28 g of nitrogen; and 1 gram-mole of atomic nitrogen N and nitric oxide NO contains 1 x 14 = 14 g of nitrogen. Consequently the amount of nitrogen contained in the combustion products in grams per 1 kg of combustion products amounts to:

$$2\cdot 14M_{N_2} + 1\cdot 14M_N + 1\cdot 14M_{NO}$$

and in kilograms per 1 kg:

$$\frac{1}{1000}(2\cdot 14M_{N_2} + 1\cdot 14M_N + 1\cdot 14M_{NO}) = \frac{14}{1000}(2M_{N_2} + M_N + M_{NO}).$$

In the produced ratio let us substitute the gas gram-moles by their values in partial pressures. For this purpose let us consider two values: the total pressure p_Σ under which the combustion products are present total number of gram-moles of all the combustion products M_Σ needed per kg of propellant (kg of the combustion products).

Then (see Section 31) the number of moles of nitrogen-containing gases is written in the form:

$$M_{N_2} = M_\Sigma \frac{p_{N_2}}{p_\Sigma}; \quad M_N = M_\Sigma \frac{p_N}{p_\Sigma}; \quad M_{NO} = M_\Sigma \frac{p_{NO}}{p_\Sigma}. \qquad \text{(VI.24)}$$

and the amount of nitrogen in 1 kg of the combustion products may be written as follows:

$$\frac{14}{1000}\frac{M_\Sigma}{p_\Sigma}(2p_{N_2}+p_N+p_{NO}). \tag{VI.25}$$

According to the meaning of the balance equations of the elements, we must equate this quantity of nitrogen with the quantity of it which is present in the fuel. The final balance equation for nitrogen assumes the form:

$$N_{\text{т}}=\frac{N_{\text{comb}}+\nu N_0}{1+\nu}=\frac{14}{1000}\frac{M_\Sigma}{p_\Sigma}(2p_{N_2}+p_N+p_{NO}). \tag{VI.26}$$

The outline for construction of balance equations, as shown in the example analyzed above, as follows. The common coefficient before the parentheses which contains the sum of the partial pressures, is the ratio $\frac{M_\Sigma}{1,000\,p_\Sigma}$ multiplied by the atomic weight of the element for which the balance equation is written. The partial pressures contained in the balance equation are taken with the coefficient and are equal to the number of atoms of a given element found in a molecule of a given gas. Based on this, the rest of the balance equations for carbon, hydrogen, and oxygen are written in the following form:

$$C_{\text{т}}=\frac{C_{\text{comb}}+\nu C_0}{1+\nu}=\frac{12M_\Sigma}{1000p_\Sigma}(p_{CO_2}+p_{CO}); \tag{VI.27}$$

$$H_{\text{т}}=\frac{H_{\text{comb}}+\nu H_0}{1+\nu}=\frac{1M_\Sigma}{1000p_\Sigma}(2p_{H_2O}+2p_{H_2}+p_{OH}+p_H); \tag{VI.28}$$

$$O_{\text{т}}=\frac{O_{\text{comb}}+\nu O_0}{1+\nu}=\frac{16M_\Sigma}{1000p_\Sigma}(2p_{O_2}+2p_{CO_2}+p_{H_2O}+p_{CO}+p_{OH}+p_{NO}+p_O). \tag{VI.29}$$

Additional Equations for Determining the Composition and Temperature of Combustion Products.

In the four balance equations produced above, two additional unknowns appeared -- the number of gram-moles of combustion products needed for 1 kg of propellant M_Σ, and the total pressure p_Σ.

The total pressure is determined as the sum of partial pressures in the combustion products.

$$p_\Sigma = p_{CO_2} + p_{H_2O} + p_{CO} + p_{N_2} + p_{O_2} + p_{H_2} + p_{OH} + p_{NO} + p_H + \\ + p_O + p_N = \Sigma p_i. \qquad \text{(VI.30)}$$

We can express the value M_Σ by the partial pressures of the gases making up the combustion products. Let us designate the apparent molecular weight of the mixture of combustion products by μ_Σ.

On the basis of formula (II.7):

$$\mu_\Sigma = \frac{1}{p_\Sigma} \sum_i \mu_i p_i \qquad \text{(VI.31)}$$

1 kg of gas mixture with an apparent molecular weight of μ_Σ amounts to $\frac{1}{\mu_\Sigma}$ part of a kg-mole or $\frac{1,000}{\mu_\Sigma}$ gram-moles.

Consequently the number of gram-moles in 1 kg is equal to:

$$M_\Sigma = \frac{1000}{\mu_\Sigma} = \frac{1000 p_\Sigma}{\sum_i \mu_i p_i}, \qquad \text{(VI.32)}$$

from which we can see that the ratio $\frac{M_\Sigma}{p_\Sigma}$ contained in the balance equations (VI.26), (VI.27), (VI.28), and (VI.29), can be written in the form:

$$\frac{M_\Sigma}{p_\Sigma} = \frac{1000 p_\Sigma}{p_\Sigma \sum_i \mu_i p_i} = \frac{1000}{\sum_i \mu_i p_i}. \qquad \text{(VI.33)}$$

The last equation in the system considered will be the equation for the conservation of energy, which, for combustion in the absence of discharge of heat from the chamber, has the form (VI.15):

$$I_{T_T} = [I_{T_{p\,c}}]_{T_1}.$$

For the solution of this equation it is necessary to be able to find the total heat content of the combustion products at a given temperature. If the composition of the combustion products is determined (that is, p_i has been found), it is easy to estimate their total heat content at a given temperature (see Section 27) by making use of the table for total heat contents given in Appendix 3.

$$I_{T_{p\,c}} = \frac{M_\Sigma}{p_\Sigma} \sum_i I_{T_i} p_i \qquad \text{(VI.34)}$$

or considering (VI.33)

$$I_{p\,c}=\frac{\sum_i I_{n_i} p_i}{\sum_i \mu_i p_i}\,1000. \qquad \text{(VI.35)}$$

The Final Form of the System of Equations and Solution.

Let us reduce the equations which describe the state of the gas in the chamber of the engine into a single system, omitting the intermediate formulas. This system takes on the following form:

$$1.\quad K_1=\frac{p_{CO}\,p_{O_2}^{\frac{1}{2}}}{p_{CO_2}}=f_1(T).$$

$$2.\quad K_2=\frac{p_{H_2}\,p_{O_2}^{\frac{1}{2}}}{p_{H_2O}}=f_2(T)$$

or

$$K_{2a}=\frac{p_{CO}\,p_{H_2O}}{p_{CO_2}\,p_{H_2}}=f_{2a}(T).$$

$$3.\quad K_3=\frac{p_{OH}\,p_{H_2}^{\frac{1}{2}}}{p_{H_2O}}=f_3(T).$$

$$4.\quad K_4=\frac{p_{NO}^2}{p_{N_2}\,p_{O_2}}=f_4(T).$$

$$5.\quad K_5=\frac{p_H^2}{p_{H_2}}=f_5(T).$$

$$6.\quad K_6=\frac{p_O^2}{p_{O_2}}=f_6(T).$$

$$7.\quad K_7=\frac{p_N^2}{p_{N_2}}=f_7(T).$$

$$8^*.\quad C_T=\frac{12}{\sum_i \mu_i p_i}(p_{CO_2}+p_{CO}).$$

$$9.\quad H_T=\frac{1}{\sum_i \mu_i p_i}(2p_{H_2O}+2p_{H_2}+p_{OH}+p_H).$$

(VI.36)

---

* The balance equations of the elements written by considering (VI.33).

$$
\left.
\begin{aligned}
&10.\quad N_1 = \frac{14}{\sum\limits_i \mu_i p_i}(2p_{N_2} + p_{NO} + p_N).\\
&11.\quad O_1 = \frac{16}{\sum\limits_i \mu_i p_i}(2p_{O_2} + 2p_{CO_2} + p_{H_2O} + p_{CO} + p_{OH} +\\
&\qquad + p_{NO} + p_O).\\
&12.\quad i_{t_1} = [I/t_{t_c}]_{T_1}.\\
&13.\quad \mu_\Sigma = \frac{\sum\limits_i \mu_i p_i}{p_\Sigma}.\\
&14.\quad p_\Sigma = \sum p_i = p_2.
\end{aligned}
\right|
\qquad (VI.36)
$$

In this system of 14 equations there are 14 unknown values, namely, 11 partial pressures of the gas mixture components μ_Σ, $p_\Sigma = P_2$ and T_2. Therefore, in theory the system may be solved.

If the equation system produced were reduced to a single equation (as was done in the example analyzed above), one would have a highly complex equation. With only three unknown partial pressures above, it was necessary to solve a cubic equation.

Every highly complex equation has, as we know, not one solution but several systems of roots the number of which is equal to the degree of the equation. In the solution of technical and physical problems, the selection of the necessary values of the root is made by a consideration of the physical sense of the expected solution. Since the roots of the equation system involved represent the partial pressure of gases in their mixture, all the roots in the correct solution should be positive and real. It has been proved that an equation system of equilibrium constants and balance equations, similar to ours, has only one unique system of roots in which each root has a positive and real value.

Consequently the problem of solving the equation system involved boils down to finding precisely this single system of roots. As we have already stated, the solution can be obtained by a reduction of the equation system to a single highly complex equation with subsequent solution by a method of trial and error or by the method of successive approximations. Such a method of solution is excessively cumbersome and very time consuming. Every change in the equation system or in the initial data requires additional work by way of change in the general equation.

Methods of successive approximation are more practical for the system being considered.

In order to facilitate the solution by a method of successive approximations of this cumbersome system of equations, it is necessary to work out a strict sequence of solutions so that the working equations will be simple (of low degree) and provide a scheme of solution which makes possible a verification of the results obtained.

The scheme of solution of the system by the method of successive approximation is as follows.

Assuming a temperature T in the realm of expected temperatures in the combustion chamber, based on tables of Appendix 2 or some other data, we determine the numerical values of all the equilibrium constants. After this, in definite sequence (and this also constitutes a peculiarity of this or any other method of solution) we can solve the equations of the constants and the balance when given the value of one or several partial pressures (the method of selecting the values of these partial pressures which were assumed initially also constitutes a peculiarity of this or any other method of calculation). Since in this case, if we require one or several partial pressures, and a corresponding number of equations from our system (VI.36) are cleared and not used, then these cleared equations become proof equations or may be used to find the subsequent approximations of the partial pressures selected arbitrarily beforehand.

By substituting all the values obtained in the proof equation, we can verify the correctness of the initially selected partial pressure. If the proof equation checks out, then all the partial pressures have been determined correctly. If, however, they do not check out, then we introduce corrections in the selected partial pressure until the proof equation checks out with the degree of precision required in the calculation. In technical calculations, the partial pressures of the combustion products are carried out to the third or fourth decimal place. Usually the proof equation is an equation of the equality of the sum of all the partial pressures to the pressure in the chamber (VI.30). The partial pressures found give us the equilibrium composition of the combustion products at a selected temperature.

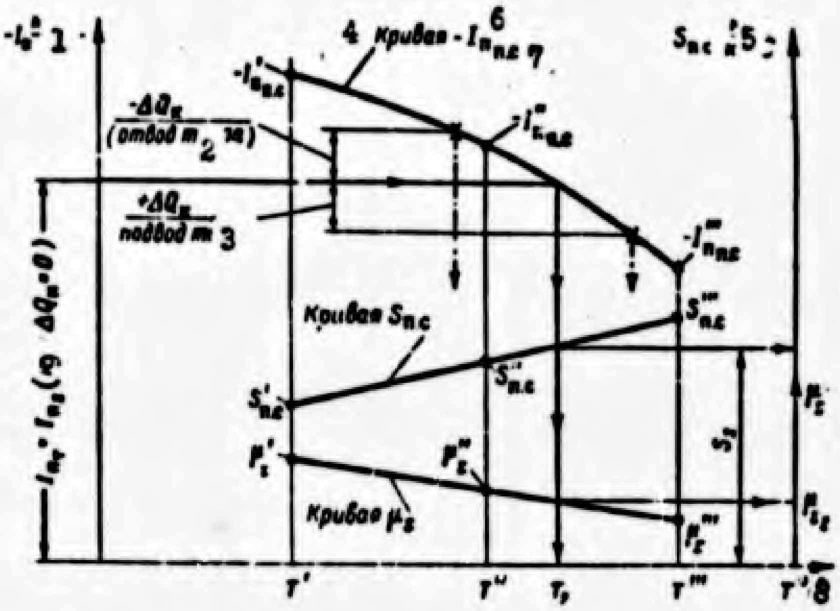

Figure 80. Determination of the state of combustion products in the combustion chamber (at the entrance of the nozzle).

1 -- kilo-cal/kg; 2 -- heat loss; 3 -- heat absorbed; 4 -- curve; 5 -- cal/kg °C; 6 -- total; 7 -- comb prod; 8 -- abs; 9 -- when

To check the accuracy of the selected temperature, we use equation (VI.15), which must be precisely followed when heat losses are absent. If the equation does not check out, we designate a new temperature, taking into account in this case the sign of the error in heat content balance. In practice it would be advantageous to carry the calculations out with three temperatures, T', T", and T‴ in such a way that the design temperature T_2 will be between T' and T".

The temperatures T', T", and T‴ are taken in multiples of hundred of degrees and at an interval of 100° C because the tables for thermodynamic functions are usually set up in precisely this method.

After calculating the composition of the combustion products at these temperatures, we construct a graph for the dependence of combustion products heat content on temperature, and on this basis we find the design combustion temperature.

A diagram of this solution is shown in Figure 80.

SECTION 33. SOLVING THE EQUATION SYSTEM TO DETERMINE THE COMPOSITION OF THE COMBUSTION PRODUCTS OF PROPELLANTS NOT CONTAINING NITROGEN

We offer a concrete method of solving the system of equations for determining the composition of the combustion products at a prescribed temperature for fuels containing no nitrogen.

The Equation System for Determining the Composition of Combustion Products.

In this instance the system of equations is simplified because the equation for balance of nitrogen (VI.26) cancels out, as do also the equations for equilibrium constants (VI.19) and (VI.22). In addition, to simplify the solution of the system of equations, we use not the absolute balance equations but their ratios. In this case, in the balance equations the values μ_Σ and p_Σ cancel out by division.

Let us consider the ratios $\frac{O_T}{C_T}$ and $\frac{O_T}{H_T}$.

The ratio $\frac{O_T}{C_T}$ is written in the form:

$$\frac{O_T}{C_T}=\frac{16}{12}\,\frac{2p_{O_2}+2p_{CO_2}+p_{H_2O}+p_{CO}+p_{OH}+p_O}{p_{CO_2}+p_{CO}}. \qquad (VI.37)$$

or

$$\frac{2p_{O_2}+2p_{CO_2}+p_{H_2O}+p_{CO}+p_{OH}+p_O}{p_{CO_2}+p_{CO}}=\frac{3}{4}\,\frac{O_T}{C_T}=A. \qquad (VI.38)$$

The balance equation ratio $\frac{O_T}{H_T}$ assumes the form:

$$\frac{2p_{O_2}+2p_{CO_2}+p_{H_2O}+p_{CO}+p_{OH}+p_O}{2p_{H_2O}+2p_{H_2}+p_{OH}+p_H}=\frac{1}{16}\frac{O_T}{H_T}=B, \tag{VI.39}$$

where A and B are the calculated coefficients based on the composition of the fuel.

In addition to these two equations, in the calculation we use the remaining equations for constants of equilibrium (VI.16), (VI.17), (VI.18), (VI.20), (VI.21) and the equation for total pressure in the combustion products (VI.30).

$$K_1=\frac{p_{CO}p_{O_2}^{\frac{1}{2}}}{p_{CO_2}};\quad K_2=\frac{p_{H_2}p_{O_2}^{\frac{1}{2}}}{p_{H_2O}};\quad K_3=\frac{p_{OH}p_{H_2}^{\frac{1}{2}}}{p_{H_2O}};$$

$$K_5=\frac{p_H^2}{p_{H_2}};\quad K_6=\frac{p_O^2}{p_{O_2}};\quad p_\Sigma=\sum_i p_i.$$

Procedure for Solving the Equation System Used to Determine the Composition of Combustion Products.

Let us consider the method of solving the system of equations used to determine the composition of combustion products of a propellant not containing nitrogen.

I. Initial Data

The initial data for the calculation are:

a) The basic composition of the propellant (See Section 26)

b) The temperature T at which the calculation is made and the numerical values of the equilibrium constants K_1; K_2; K_3; K_5; K_6 at this temperature (the temperature prescribed).

c) The pressure in the combustion chamber $P_2 = P_\Sigma$ or the pressure at the nozzle exit P_3.

d) The constant coefficients for the entire calculation

$$A=\frac{3}{4}\frac{O_T}{C_T};\quad B=\frac{1}{16}\frac{O_T}{H_T}. \tag{VI.40}$$

We shall solve the equation system using a method of successive approximations, prescribing the partial pressure of the oxygen.

II. The First Approximation in Determining Composition

1. We select a value of partial pressure in the oxygen for the first approximation $P_{O_2} = \alpha^2$. The selection of this partial pressure should be done on the basis of the result of the preceding calculations.

2. We find the equations for partial pressures of all the combustion product component of gases in terms of the partial pressures of CO_2 and H_2O:

a) Using the constant $K_1 = \frac{p_{CO} p_{O_2}^{\frac{1}{2}}}{p_{CO_2}}$, we obtain:

$$p_{CO} = K_1 \frac{p_{CO_2}}{a} = b p_{CO_2}; \quad b = \frac{K_1}{a}. \tag{VI.41}$$

b) Using the constant $K_2 = \frac{p_{H_2} p_{O_2}^{\frac{1}{2}}}{p_{H_2O}}$, we obtain:

$$p_{H_2} = K_2 \frac{p_{H_2O}}{a} = c p_{H_2O}; \quad c = \frac{K_2}{a}. \tag{VI.42}$$

c) Using the constant $K_3 = \frac{p_{OH} p_{H_2}^{\frac{1}{2}}}{p_{H_2O}}$, we obtain:

$$p_{OH} = K_3 \frac{p_{H_2O}}{p_{H_2}^{\frac{1}{2}}} = \frac{K_3 p_{H_2O}}{\sqrt{c p_{H_2O}}} = d\sqrt{p_{H_2O}}; \quad d = \frac{K_3}{\sqrt{c}}. \tag{VI.43}$$

d) Using the constant $K_5 = \frac{p_H^2}{p_{H_2}}$, we obtain:

$$p_H = \sqrt{K_5}\sqrt{p_{H_2}} = \sqrt{K_5}\sqrt{c p_{H_2O}} = e\sqrt{p_{H_2O}}; \quad e = \sqrt{K_5}\sqrt{c}. \tag{VI.44}$$

e) Using the constant $K_6 = \frac{p_O^2}{p_{O_2}}$, we obtain:

$$p_O = \sqrt{K_6}a = f.$$

All the partial pressures are expressed in terms of P_{CO_2} and P_{H_2O}.

3. We solve the system of ratios of balance equations (VI.38) and (VI.39). For this we do the following:

a) In equation (VI.38) we substitute the values p_{CO}; p_{O_2}; p_O and p_{OH} determined by formulas (VI.41) - (VI.44). The equation takes the form:

$$\frac{2a^2+2p_{CO_2}+p_{H_2O}+bp_{CO_2}+d\sqrt{p_{H_2O}}+f}{p_{CO_2}+bp_{CO_2}}=A. \qquad \text{(VI.45)}$$

b) In equation (VI.45) we cancel like terms and compute the coefficients with p_{H_2O}; $\sqrt{p_{H_2O}}$ and p_{CO_2}, after which it assumes the form

$$X_1p_{CO_2}+Y_1p_{H_2O}+Z_1\sqrt{p_{H_2O}}+\Phi_1=0, \qquad \text{(VI.46)}$$

where X_1, Y_1, Z_1 and Φ_1 are numerical values for the equation coefficients (VI.46).

c) In equation (VI.39) we substitute the values of:

p_{H_2}; p_{OH}; p_H; p_{O_2}; p_O; p_{CO}

determined earlier. The equation assumes the form:

$$\frac{2a^2+2p_{CO_2}+p_{H_2O}+bp_{CO_2}+d\sqrt{p_{H_2O}}+f}{2p_{H_2O}+2cp_{H_2O}+d\sqrt{p_{H_2O}}+e\sqrt{p_{H_2O}}}=B. \qquad \text{(VI.47)}$$

d) In equation (VI.47) we cancel like terms and find the coefficients with p_{CO_2}, p_{H_2O} and $\sqrt{p_{H_2O}}$; it then assumes the form:

$$X_2p_{CO_2}+Y_2p_{H_2O}+Z_2\sqrt{p_{H_2O}}+\Phi_2=0, \qquad \text{(VI.48)}$$

where X_2; Y_2; Z_2 and Φ_2 are the numerical values of the coefficients of the equation (VI.48).

e) From the remaining two equations (VI.46) and (VI.48) we exclude the partial pressure p_{CO_2} of carbonic acid gas. To exclude this partial pressure, the equation (VI.46) is multiplied by the absolute value of the coefficient X_1, and the equation (VI.48) is multiplied by the absolute value of the coefficient X_2. After this, the equations are added or subtracted, depending upon the signs of the coefficients X_1 and X_2, so that p_{CO_2} no longer enters into the total equation.

The equation obtained has quadratic form relative to $\sqrt{p_{H_2O}}$:

$$Y p_{H_2O} + Z\sqrt{p_{H_2O}} + \Phi = 0. \qquad \text{(VI.49)}$$

4. The quadratic equation (VI.49) is solved for $\sqrt{p_{H_2O}}$.

If $\sqrt{p_{H_2O}}$ has positive and negative signs, we discard the solution with a negative sign because it gives negative values for p_{OH} and p_H, which we cannot have.

If both roots of the equation $\sqrt{p_{H_2O}}$ have positive values, the cancellation of the unnecessary product is done later when it is found that one of the roots produces a negative value of partial pressure for a given gas. Usually we encounter different signs for value $\sqrt{p_{H_2O}}$ as cited in the first instance.

5. We find the partial pressures in the first approximation of the gases making up the combustion products:

a) We find $p_{H_2O} = (\sqrt{p_{H_2O}})^2$;

b) We find $p_{H_2} = c p_{H_2O}$;

c) We find $p_{OH} = d\sqrt{p_{H_2O}}$;

d) We find $p_H = e\sqrt{p_{H_2O}}$;

e) By making use of the equation (VI.46) or (VI.48) and on the basis of the known values of p_{H_2O} and $\sqrt{p_{H_2O}}$ we determine p_{CO_2}:

$$p_{CO_2} = -\frac{Y_1 p_{H_2O} + Z_1\sqrt{p_{H_2O}} + \Phi_1}{X_1}; \qquad \text{(VI.50)}$$

f) We find $p_{CO} = b p_{CO_2}$.

6 We check to see that there are no errors in the calculation of partial pressures:

a) We check the values of the equilibrium constants. Using the values found for the partial pressures as a base, we find values for the constants and compare them with the true values found in the calculations.

b) We check the accuracy of the solution by seeing if it satisfies the absolute equations for balance of the elements (VI.27), (VI.28), and (VI.29). For this purpose we first determine the value $\frac{M_\Sigma}{p} = \frac{1,000}{\Sigma \mu_i p_i}$.

If all these equations are satisfied, then in the solution there are no errors of calculation.

7. We check the accuracy of the value taken for the partial pressure of oxygen.

In order to do this we subtract the total pressure of the combustion products

$$p_\Sigma = p_{CO_2} + p_{CO} + p_{H_2O} + p_{H_2} + p_{O_2}' + p_O + p_{OH} + p_H .$$

If the sum of p_Σ received agrees to a sufficient degree with the prescribed pressure p_2 in the combustion chamber, the calculation is completed. If the pressure p_Σ differs from the pressure p_2 by more than can be allowed in the calculation, we then determine the composition of the second method of approximation.

III. The Second and Subsequent Approximations for Determining Composition.

1. We select a value for partial pressure of oxygen in the second approximation $p_{O_2} = \alpha^2$. If in the first approximation we received $p_\Sigma < p_2$, we must increase p_{O_2} in the second approximation as compared to p_{O_2} in the first approximation; and, vice versa, if $p_\Sigma > p_2$, then p_{O_2} in the second approximation must decrease as compared to p_{O_2} in the first approximation.

2. We repeat all of the calculations that were made in the determining of composition in the first approximation.

3. If necessary we introduce the necessary correction in the value $p_{O_2} = a^2$ for the following approximations.

IV. The Final Determination of Composition.

When finally, as a result of the approximations, we find the composition of the combustion products and p_Σ equals p_2 with the accuracy prescribed, we make the final correction in the value for partial pressures of the combustion products. This correction is made on the assumption that small changes in pressure do not exercise any influence upon the composition of the combustion products; and, hence, to determine a precise value for the pressure p_2 of the composition, the partial pressures of the components are evaluated in direct proportion to the pressure, that is, we determine them by linear interpolation (for example see Section 38).

SECTION 34. SOLVING THE EQUATION SYSTEM FOR DETERMINING THE COMPOSITION OF COMBUSTION PRODUCTS FOR PROPELLANTS CONTAINING NITROGEN

The Equation System for Determining the Composition of Combustion Products.

In the case considered, we must solve all the equation systems given in Section 32. For the concrete solution with the method given below we convert this system.

We reduce the balance equations to the following ratios:

1. We take the ratio $\frac{C_\text{T}}{N_\text{T}}$; it will be equal to:

$$\frac{C_\text{T}}{N_\text{T}} = \frac{12}{14} \cdot \frac{p_{CO_2} + p_{CO}}{2p_{N_2} + p_{NO} + p_N},$$

or

$$\frac{p_{CO_2} + p_{CO}}{2p_{N_2} + A} = \frac{7}{6}\frac{C_\text{T}}{N_\text{T}} = Q, \qquad (VI.51)$$

where

$$A = p_{NO} + p_N;$$
$$Q = \frac{7}{6}\frac{C_\text{T}}{N_\text{T}}.$$

2. We take the ratio $\frac{H_\text{T}}{N_\text{T}}$; it will be equal to:

$$\frac{H_\text{T}}{N_\text{T}} = \frac{1}{14}\,\frac{2p_{H_2O} + 2p_{H_2} + p_{OH} + p_H}{2p_{N_2} + p_{NO} + p_N}$$

or

$$\frac{2p_{H_2O} + 2p_{H_2} + B}{2p_{N_2} + A} = 14\frac{H_\text{T}}{N_\text{T}} = R, \qquad (VI.52)$$

where

$$B = p_{OH} + p_H;\quad R = 14\,\frac{H_T}{N_T}.$$

3. We take the ratio $\frac{O_T}{C_T}$; it will be equal to:

$$\frac{O_T}{C_T} = \frac{16}{12}\,\frac{2p_{CO_2} + p_{CO} + p_{H_2O} + 2p_{O_2} + p_O + p_{OH} + p_{NO}}{p_{CO_2} + p_{CO}},$$

or

$$\frac{2p_{CO_2} + p_{H_2O} + p_{CO} + D}{p_{CO_2} + p_{CO}} = \frac{3}{4}\,\frac{O_T}{C_T} = S, \qquad \text{(VI.53)}$$

where

$$D = 2p_{O_2} + p_{OH} + p_{NO} + p_O;$$

$$S = \frac{3}{4}\,\frac{O_T}{C_T}.$$

4. Let us make use of the equation of total pressure:

$$p_\Sigma = p_{CO_2} + p_{H_2O} + p_{CO} + p_{N_2} + p_{H_2} + p_{O_2} + p_{OH} + p_{NO} + p_H + p_O + p_N.$$

or

$$p_\Sigma = p_{CO_2} + p_{H_2O} + p_{CO} + p_{N_2} + p_{H_2} + E, \qquad \text{(VI.54)}$$

where

$$E = p_{O_2} + p_{OH} + p_{NO} + p_H + p_O + p_N.$$

5. Let us use the constant of equilibrium of the reaction of water gas in the form:

$$K_{:a} = \frac{p_{CO}\,p_{H_2O}}{p_{CO_2}\,p_{H_2}}. \qquad \text{(VI.55)}$$

The five equations obtained,(VI.51) - (VI.55),are the basic ones for the following solution.

In addition to these, we use the equations for constants of equilibrium, which we write in this form:

6. The equation for constant K_1:

$$p_{O_2} = \left(K_1 \frac{p_{CO_2}}{p_{CO}}\right)^2.$$

7. The equation for constant K_3:

$$p_{OH} = K_3 \frac{p_{H_2O}}{p_{H_2}^{\frac{1}{2}}}.$$

8. The equation for constant K_4:

$$p_{NO} = \sqrt{K_4 p_{N_2} p_{O_2}}.$$

9. The equation for constant K_5:

$$p_H = \sqrt{K_5 p_{H_2}}.$$

10. The equation for constant K_6:

$$p_O = \sqrt{K_6 p_{O_2}}.$$

11. The equation for constant K_7:

$$p_N = \sqrt{K_7 p_{N_2}}.$$

(VI.56)

We shall solve the equation system given above by a method of successive approximations, assuming that in the first approximation the partial pressures of the six gases and the products of dissociation are equal to 0.

$$p_{O_2} = 0; \; p_{OH} = 0; \; p_{NO} = 0; \; p_H = 0; \; p_O = 0; \; p_N = 0.$$

Then, in the equation system there remains a total of five unknown partial pressures of basic gases:

$$p_{CO_2}; \; p_{H_2O}; \; p_{CO}; \; p_{N_2} \text{ and } p_{H_2}.$$

To find these unknowns we have the first five equations (VI.51) - (VI.55), in which the values A, B, D, and E in the first approximation are equal to 0.

In solving this equation system of the first approximation we find the partial pressures for five basic gases:

$$p_{CO_2};\ p_{H_2O};\ p_{CO};\ p_{N_2};\ p_{H_2}.$$

In the second approximation,having the partial pressures of the five basic gases from the first approximation, with equations (VI.56)we find the partial pressures for the six gases in the second approximation which were taken earlier to be equal to 0.

$$p_{O_2};\ p_{OH};\ p_{NO};\ p_{H};\ p_{O};\ p_{N}.$$

Using the values of these six partial pressures as a base, we find the values A, B, D, and E. Then the system for the first five equations again becomes solvable, and we can find the partial pressures for the first five gases in the second approximation.

$$p_{CO_2};\ p_{H_2O};\ p_{CO};\ p_{H_2};\ p_{N_2}.$$

If the differencesbetween the partial pressures in the first and second approximation prove to be larger than those permitted by the accuracy of the calculation,we make a third approximation, etc.

Reducing the Equation System Received to Working Formulas.

Before explaining the method of solving the system, let us reduce the equations obtained to more convenient working formulas.

1. The derivation of a formula for the determination of the partial pressure of molecular nitrogen p_{N_2}:

a) Using the equation (VI.51)

$$\frac{p_{CO_2}+p_{CO}}{2p_{N_2}+A}=Q,$$

whence

$$p_{CO_2}+p_{CO}=Q(2p_{N_2}+A);$$

b) Using equation (VI.52)

$$\frac{2p_{H_2O}+2p_{H_2}+B}{2p_{N_2}+A}=R,$$

whence

$$p_{H_2O}+p_{H_2}=\frac{R}{2}(2p_{N_2}+A)-\frac{B}{2};$$

c) Using equation (VI.54)

$$p_s=p_{CO_2}+p_{H_2O}+p_{CO}+p_{H_2}+p_{N_2}+E.$$

In this equation we substitute the sum of P_{CO_2} + P_{CO} and P_{H_2O} + P_{H_2} taking as our basis the relationships obtained above

$$p_s=Q(2p_{N_2}+A)+\frac{R}{2}(2p_{N_2}+A)-\frac{B}{2}+p_{N_2}+E.$$

From this we obtain a formula for determining P_{N_2}

$$p_{N_2}=\frac{p_s-E+\frac{B}{2}-A\left(Q+\frac{R}{2}\right)}{2Q+R+1}. \qquad \text{(VI.57)}$$

2. The derivation of formulas expressing the partial pressures of CO H_2O and H_2 in partial pressures of CO_2.

a) Using equation (VI.51)

$$\frac{p_{CO_2}+p_{CO}}{2p_{N_2}+A}=Q,$$

whence

$$p_{CO}=Q(2p_{N_2}+A)-p_{CO_2}, \qquad \text{(VI.58)}$$

or

$$p_{CO}=a-p_{CO_2},$$

where

$$a=Q(2p_{N_2}+A). \qquad \text{(VI.59)}$$

b) Making use of equation (VI.53)

$$\frac{2p_{CO_2}+p_{H_2O}+p_{CO}+D}{p_{CO_2}+p_{CO}}=S.$$

In the numerator and denominator we substitute the values of the sums of $p_{CO_2} + p_{CO}$, found in example 1. Then we obtain

$$\frac{p_{CO_2}+Q(2p_{N_2}+A)+p_{H_2O}+D}{Q(2p_{N_2}+A)}=S,$$

whence

$$p_{H_2O}=Q(2p_{N_2}+A)(S-1)-D-p_{CO_2}, \qquad \text{(VI.60)}$$

or

$$p_{H_2O}=b-p_{CO_2},$$

where

$$b=Q(2p_{N_2}+A)(S-1)-D. \qquad \text{(VI.61)}$$

c) Using the equation (VI.52)

$$\frac{2p_{H_2O}+2p_{H_2}+B}{2p_{N_2}+A}=R,$$

whence

$$p_{H_2}=\frac{R}{2}(2p_{N_2}+A)-\frac{B}{2}-p_{H_2O}.$$

Let us take the value p_{H_2O} according to (VI.60). Then

$$p_{H_2}=\frac{R}{2}(2p_{N_2}+A)-\frac{B}{2}-Q(2p_{N_2}+A)(S-1)+D+p_{CO_2}.$$

In the final form

$$p_{H_2}=(2p_{N_2}+A)\left[\frac{R}{2}-Q(S-1)\right]-\frac{B}{2}+D+p_{CO_2}, \qquad \text{(VI.62)}$$

or

$$p_{H_2}=c+p_{CO_2}.$$

where

$$c=(2p_{N_2}+A)\left[\frac{R}{2}-Q(S-1)\right]-\frac{B}{2}+D. \qquad (VI.63)$$

In calculating the composition of the combustion products in the first approximation, the coefficients A, B, D, and E are equal to zero. As a result of this, the formulas (VI.57), (VI.58), (VI.60), and (VI.62) for the first approximation can be simplified and take the form:

$$p_{N_2}=\frac{p_2}{2Q+R+1}; \qquad (VI.64)$$

$$p_{CO}=2Qp_{N_2}-p_{CO_2}; \qquad (VI.65)$$

$$p_{H_2O}=2Qp_{N_2}(S-1)-p_{CO_2}; \qquad (VI.66)$$

$$p_{H_2}=2p_{N_2}\left[\frac{R}{2}-Q(S-1)\right]+p_{CO_2}. \qquad (VI.67)$$

Procedure for Solving the Equation System for Determining the Composition of Combustion Products.

Based on the working formulas received we determine the composition of the combustion products in the following manner.

I. The Initial Data.

a) The elementary composition of propellant C_T; H_T; N_T; O_T;

b) The heat content of propellant I_{total_T}.

c) The temperature T at which we make the calculation and the numerical values of the equilibrium constants K_1, K_{2a}, K_3, K_4, K_5, K_6 and K_7, at this temperature;

d) The pressure p_2 in the combustion chamber.

II. Preliminary Calculations.

On the basis of known elementary composition of the propellant, we find the coefficients Q, R and S.

$$Q=\frac{7}{6}\frac{C_T}{N_T};\quad R=14\frac{H_T}{N_T};\quad S=\frac{3}{4}\frac{O_T}{C_T}.$$

III. Determining the Composition of the Combustion Products by the First Approximation.

1. In the first approximation, we take the partial pressures equal to

$$p_{O_2}=0;\ p_{OH}=0;\ p_{NO}=0;\ p_H=0;\ p_O=0;\ p_N=0.$$

2. As a result of this, the coefficients A, B, D, and E are equal to

$$A = 0;\quad B = 0;\quad D = 0;\quad E = 0.$$

3. We find the partial pressure p_{N_2} of nitrogen, according to formula (VI.64).

4. We find the equation for p_{CO}; p_{H_2O} and p_{H_2} through p_{CO_2}; and the known value p_{N_2} according to formulas (VI.65) - (VI.67).

These equations have the form:

$$p_{CO}=a-p_{CO_2};\ p_{H_2O}=b-p_{CO_2};\ p_{H_2}=c+p_{CO_2}$$

where a, b, and c are the numerical coefficients.

An error or lack of accuracy in determining coefficients a, b, c renders further calculation very difficult; and for this reason it is recommended that we check the calculation of these coefficients by the following relation:

$$a + b + c = p_2 - p_{N_2}$$

5. We solve the equation (VI.55) for equilibrium constants of water gas K_{2a}, in which we substitute the expression for partial equations p_{CO}; p_{H_2O} and p_{H_2} which we obtained earlier

$$K_{2a}=\frac{(a-p_{CO_2})(b-p_{CO_2})}{p_{CO_2}(c+p_{CO_2})}. \qquad \text{(VI.68)}$$

The equation (VI.68) is a quadratic equation with relation to p_{CO_2}.

By solving this equation we find the partial pressure p_{CO_2}. From the two roots of the solution of the equation we select the one which gives positive values for all the rest of the partial pressures.

6. Based on equations (VI.65) - (VI.67) we find the partial pressures p_{CO}; p_{H_2O} and p_{H_2}.

7. We check for errors in the solution by making a rough estimate of K_{2a} based on the composition found and by comparing the composition with the tabular value of this constant. In addition, we determine the total pressure p_{Σ}, which should be equal to the prescribed pressure in the chamber.

IV. Determining the Composition of the Combustion Products of the Second and Subsequent Approximations.

1. We find the partial pressures of six gases of the second (or subsequent) approximations according to formula (VI.56), in which we substitute the partial pressures for five main gases found in the first (or in the preceding) approximations:

$$\left.\begin{aligned}p_{O_2}&=\left(K_1\frac{p_{CO_2}}{p_{CO}}\right)^2;\\ p_{OH}&=K_3\frac{p_{H_2O}}{p_{H_2}^{\frac{1}{2}}};\\ p_{NO}&=\sqrt{K_4p_{N_2}p_{O_2}};\\ p_{H}&=\sqrt{K_5p_{H_2}};\\ p_{O}&=\sqrt{K_6p_{O_2}};\\ p_{N}&=\sqrt{K_7p_{N_2}}.\end{aligned}\right\} \quad (VI.69)$$

2. We find the coefficients of the second (or following) approximations [see (VI.51) - (VI.54)]:

$$\left.\begin{aligned}&a)\ A=p_{NO}+p_{N};\\ &b)\ B=p_{OH}+p_{H};\\ &c)\ D=2p_{O_2}+p_{OH}+p_{NO}+p_{O};\\ &d)\ E=p_{O_2}+p_{OH}+p_{NO}+p_{H}+p_{O}+p_{N}.\end{aligned}\right\} \quad (VI.70)$$

The further solution of the equation system is carried out in the same manner as determining composition by the first approximation, but in the second and successive approximations we use the formulas (VI.57), (VI.58), (VI.60), and (VI.62), and not the partial formulas (VI.64) - (VI.67) which relate only to the first approximation. The number of necessary approximations is determined by the precision required in calculating the composition of the combustion products.

In the process of calculation it would be advantageous to check to determine the accuracy of the determination of the coefficients a, b, and c on the basis of the relation (for the second and subsequent approximation)

$$a + b + c = p_2 - p_{N_2} - E$$

and also to check the results obtained in any given approximation by values p_{Σ} and K_{2a}.

We should also note in the absence of errors in the solution, that the values for the partial pressures of each gas, depending on the number of the approximation, should be arranged in a definite sequence. If we construct, for example, a graph for distribution of the values for partial pressures in accordance with the increase in the serial number of the approximation (see Figure 89); the curve obtained should have the form of a curve for damping vibrations which (with large values of the serial number of the approximation) tends towards the true value of the partial pressure of the given gas.

We have explained two methods of calculating, by successive approximation, the composition of the combustion products at a prescribed temperature. In this case the calculations are, as we said above, a necessary and rather laborious stage in the thermal calculation of a liquid-fuel rocket engine. It should be mentioned that the two methods considered above far from exhaust all the possible methods of calculating the composition of combustion products even for the simplest fuels which contain all four elements C, H, O, and N. With a large number of calculations it would be advantageous to apply specialized methods which make it possible to carry out calculations of the compositions at a required temperature by the simplest means.

For example, there are special methods suited for high or for relatively low temperatures; for small values of the excess oxidizer coefficient α; for calculations with variable pressure or variable ratio of the several components; etc. The complexity and laborious character of calculations increase abruptly if there is an increase in the number of elements in the fuel. However, methods of calculation have been worked out even for these cases. The large number of indispensable calculations for example, in the drawing up of the I_{total} - S-diagrams (see page 354), can be made with electronic computers.

SECTION 35. THERMAL CALCULATION OF THE ENGINE CHAMBER

We perform the thermal calculation of a liquid-fuel rocket engine chamber according to the current concept of the design cycle described in Section 18. Let us recall that thermal calculation includes the following:

1. The determination of composition and the temperature of the combustion products in the combustion chamber (at the entrance to the nozzle), taking dissociation into account, but without calculating the incomplete physical combustion of the fuel. We can also take into account the heat added to or removed from the fuel before its entrance into the chamber or the heat added to or removed from the combustion products before their entrance into the nozzle. In the calculation we can also take the change in the parameters of the combustion products into account, with reference to their acceleration in the chamber. However, only one rocket engine known to us has a combustion chamber with a substantial acceleration of the gases, as a result of which this calculation is not made.

2. Calculation of the isentropic flow of the combustion products along the nozzle without taking heat exchange, losses due to friction, etc., into account. To carry out this calculation it is necessary to determine the

following:

a) Entropy of the combustion products in the chamber (at the entrance into the nozzle);

b) Composition, temperature, and entropy of the combustion products at the exit.

3. Determination of the total heat content of the combustion products at the exit and the theoretical velocity of discharge.

4. Determination of the theoretical specific thrust, consumption of fuel, index of isentropy N_{is}, and the geometrical dimensions of the nozzle.

The processes and the losses related to them, distinguish the real cycle from the design cycle, and are taken into account by introducing experimental coefficients into the calculation.

Determining Composition and Temperature of the Combustion Products in the Combustion Chamber (at the Entrance into the Nozzle).

Making use of the above explanation (or, in case of necessity, of any other methods of calculation), we determine the composition of the combustion products at three temperatures (T', T", and T"') which are selected in such a manner that the expected temperature in the chamber T_2 will be in the interval of temperatures encompassed by the calculation. Knowing the partial pressures of the components of the combustion products and making use of the tabular values of total heat content I_{total} at the respective temperatures we determine the total heat content according to formula (V.34) in kilo-cal/kg at temperatures T', T", and T"'. The calculation of total heat content can be performed conveniently by making use of a table, the form of which is given in the example of Section 38 (see Table 14). Such tables are of course drawn up for each of the three temperatures.

By making a rough estimate for the value $I_{total\ prod\ comb}$, we can construct a graph for the changes in value $I_{total\ prod\ comb}$ based on temperature (see Figure 80). (Considering the fact that for the majority of fuels the total heat contents are negative, it will be more convenient to construct a graph for the value $I_{\text{total prod comb}}$, as was done in Figure 80). On this same graph we plot a line for total heat content $I_{\text{total prod comb}}$ of the fuel. It is estimated by formula (V.25). The point of intersection of the straight line $I_{\text{total T}}$ and the curve $I_{\text{total prod comb}}$ gives the value for the temperature T_2 in the chamber.

By the value $I_{\text{total T}}$ we generally understand the heat content of the fuel at its temperature in the tanks. If we heat the components of the fuel in the cooling jacket, heat exchanger (including the atomic reactor), etc., then to calculate the total heat content of the products in the combustion chamber I_{total_2} we must add the value of preheating ΔQ_K kilo-cal/kg, referred to 1 kg of fuel or combustion products to the total heat content of the fuel. This should be done in those special cases where we observe a considerable preheating of the fuel components. There may also be a loss of heat from the fuel components enroute to the chamber or from the combustion products in the chamber itself (before entrance into the nozzle) for example, due to intensive cooling of the combustion chamber. In this case the corresponding quantity of heat -- ΔQ_K kilo-cal/kg -- should be subtracted from the heat content of the fuel. Thus we can obtain a value for the temperature in the combustion chamber by noting the heat added or removed (see Figure 80). It is obvious that the heat added to or removed from the combustion products of the fuel in the nozzle cannot be taken into account by the method described above.

In normal calculations for specific thrust, it is not necessary to know the composition of the combustion products at the temperature T_2. If, however, we need it for any reason, it can be determined to a sufficient degree of accuracy by a method of linear interpolation of values for partial pressures computed for two adjacent temperatures between which we find T_2.

Just as in the case of the temperature, we can determine graphically the apparent molecular weight of the combustion products in the chamber $\mu_2 = \mu_{\Sigma 2}$

(see Figure 80) which is needed to calculate the value for the gas constant of combustion products in the chamber R_2. The values μ'_{Σ}, μ''_{Σ} and μ'''_{Σ} are found by the formula (II.7). In these calculations it will also be convenient to use the tabular composition (see Table 14).

Determining the Entropy of Combustion Products in the Combustion Chamber. In calculating the process of expansion it is necessary to know the value of the entropy of the combustion products in the chamber. All preceding calculations of temperature and composition of combustion products are actually needed only for this purpose.

We determine the entropy $S_{\text{prod comb}}$ of the combustion products for a given temperature and at the over-all pressure of the combustion products as equal to p_{Σ} (or p_2), by using the relations (II.46) and (VI.33), which produce:

$$S_{p\,c} = \frac{1000}{\sum_i \mu_i p_i} \sum_i (S_{0_i} p_i - 4{,}57 p_i \lg p_i). \tag{VI.71}$$

The values for standard entropy S_{0_i} of different gases and of different tables are taken from corresponding tables. The table in Appendix 4 is an example of such a table. In that table the standard entropies are expressed in kilo-cal/gram-moles °C.

The easiest way to determine the entropy values $S'_{\text{prod comb}}$, $S''_{\text{prod comb}}$ and $S'''_{\text{prod comb}}$ is by using the tabular compositions and continuing it by the corresponding method (see Table 14 in the example in Section 38).

The calculation of the entropy for the products in the combustion chamber may be performed by two methods.

By the first method -- by linear interpolation -- we find the values of entropy S_{0_i} for the component combustion products at a temperature T_2 found earlier in the combustion chamber. Then, on the basis of formula (VI.71), we carry out directly the determination of entropy S_2 in the combustion chamber. In this case we use the values for partial pressures in the combustion products at the temperature T_2 and a pressure p_2 in the chamber.

By the second method we find the entropies $S'_{prod\ comb}$, $S''_{prod\ comb}$ and $S'''_{prod\ comb}$ of the combustion products at the three temperatures T', T", and T'", which were used to determine the composition and temperature of the combustion products. In this instance, in formula (VI.71) we substitute the values for partial pressures found at these temperatures.

The entropy value sought, S_2, is found as the point of intersection of the entropy lines $S'_{prod\ comb}$, $S''_{prod\ comb}$ and $S'''_{prod\ comb}$ and the temperature line T_2 (see Figure 80).

In the thermal calculation of the liquid-fuel rocket engine it is often necessary to introduce a correction in the earlier entropy value for combustion products. This necessity arises, for example, upon correction of calculation errors, additional calculation of heating or cooling of components or in rendering more precise values for total heat content of the fuel, etc. The above-mentioned correction can be performed with a very high degree of accuracy and in a very simple manner on the basis of the following considerations.[1]

Let us suppose that a change in conditions for engine operation leads to a change in the total heat content of the fuel injected into the chamber by the value ΔI_{total_2}. Then, according to equqtion $\Delta S = \frac{\Delta Q}{T}$ (see page 110), this will result in a change in the entropy of the combustion products by a value:

$$\Delta S = \frac{\Delta I_{T_2}}{T_2},$$

since $\Delta Q = \Delta I_{total_2}$ in the isobaric combustion process. A certain error is introduced due to the fact that the temperature at which additional energy is added to the combustion products is regarded as constant and equal to T_2. This error, however, is small because with a large value of T_2 ($T_2 > 3{,}000^\circ$ absolute) the temperature change when adding heat even by 100° results in an error in

---

[1] The method of introducing a correction for the value of entropy was proposed by V. A. Il'inskiy, Candidate in Technical Sciences.

determining correction equal to only 3.3%. Knowing the previously calculated value of S_2, the entropy in the chamber, and the value of the correction ΔS, we can obtain a new value for entropy S'_2 by making use of the natural relation:

$$S'_2 = S_2 \pm \Delta S.$$

This value (S'_2) can be used to calculate the discharge without determining the composition and temperature of the combustion products under new conditions. Since the value of ΔS amounts to a small part of S'_2, the relative error in the determination of S'_2 will be insignificantly small.

Calculating the Composition and Temperature of the Combustion Products at the Nozzle Exit.

A comparison of design and experimental data based on the specific thrust values of the rocket engine permits us to confirm that with expansion of the combustion products in the nozzle recombination reactions can take place very successfully. Consequently in each nozzle section a chemical equilibrium of the combustion products' composition is established. Hence, the composition of the combustion products in the nozzle section is governed by equations for equilibrium constants used in calculating combustion. Such a discharge process may be regarded as reversible, and consequently the entropy of the gases in any section of the nozzle is equal to the entropy S_2 in the combustion chamber.

To calculate the composition and temperature of the combustion products at the nozzle exit we use exactly the same system of equations, with the exception of the balance equations of heat content (VI.15), which we set up to determine the composition and temperature of the combustion products in the chamber (see Section 33 or 34).

In this case this equation must be replaced by an equation for the isentropic expansion process:

$$S_2 = S_a.$$

The deviation of the real expansion process from the adopted theoretical isoentropic expansion scheme must be accounted for by an experimental nozzle coefficient.

In solving the equations system to calculate the state of the combustion products at the nozzle exit we must bear the fact in mind that the temperature at the nozzle exit is much lower than in the combustion chamber. Under these conditions we can often disregard the content in combustion products of atomic gases (H, O, and N), and also nitric oxide (NO) when $\alpha < 1$. This accordingly simplifies calculation. Just as in the case of the combustion chamber, the calculation of composition is made at three temperatures in the anticipated range. This temperature can be approximately determined by the equation:

$$T_{2\,\mathrm{exp}} \approx T_{k}\left(\frac{p_{2}}{p_{k}}\right)^{\frac{n-1}{n}}, \qquad \text{(VI.72)}$$

in which we can recommend the following tentative values of N: for kerosene + oxygen fuel n = 1.08 - 1.10; for oxygen + alcohol fuel n = 1.10 - 1.12; for nitric acid + kerosene fuel n = 1.14 - 1.16. Smaller values of n should be taken for higher temperatures T_2. For more detailed data see Table 7.

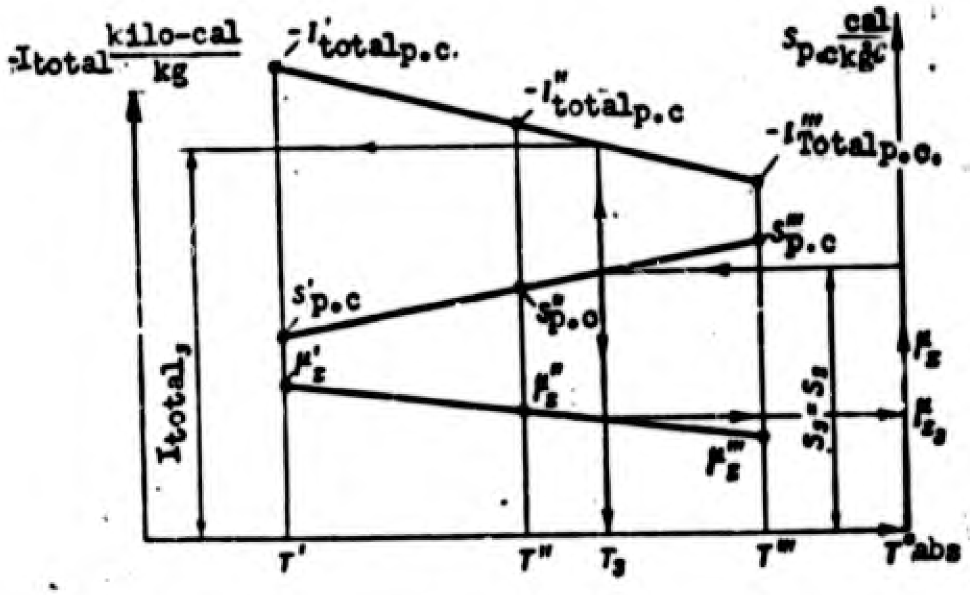

Figure 81. The graphic determination of the state of combustion products at the nozzle exit.

After selecting the three temperature values T', T", and T'" we calculate the composition of the combustion products at these temperatures at a pressure $p_{\Sigma} = p_3$. The method of calculating the composition of the gas remains the same as in the case of determining composition of combustion products in the combustion chamber. For composition of the combustion products found at the nozzle exit at temperatures T', T", and T'", we determine the entropy of the combustion products $S'_{prod\ comb}$, $S''_{prod\ comb}$, and $S'''_{prod\ comb}$ by using formula (VI.71) and construct a graph for the dependence of entropy on temperature (Figure 81). The design value of temperature T_3 at the nozzle exit is found on the basis of the value for entropy S_2 in the chamber which was already determined earlier (see Figure 80). For this purpose we solve the equation (VI.73) graphically:

$$S_3 = S_2. \qquad (VI.73)$$

The molecular weight $\mu_3 = \mu_{\Sigma 3}$ of the combustion products at the exit of the nozzle is necessary to determine R_3, and is found by the μ_{Σ} versus temperature curve. The method of finding values characterizing the state of the combustion products at the nozzle exit is shown in Figure 81. Calculation of values necessary for the construction of a graph is also done by using the tables of composition.

Determining the total Heat Content of the Combustion Products at the Exit and determining the Theoretical Velocity of Exhaust.

Making use of the fact that the composition of the combustion products at temperatures T', T", and T'" and at pressure $p_{\Sigma} = p_2$ has already been found, we determine the value of the total heat content of the products of combustion at the indicated temperatures. We then construct a graph for the dependence of heat content on temperature. The total heat content T_{total_3} of the combustion products in the section at temperature T_3 is usually found graphically as shown in Figure 81.

We can now determine the drop in the total heat content ΔI_{total} which goes to create velocity w_3. This drop is determined by the difference in the total heat content of the combustion products in the chamber and at the nozzle exit. It amounts to:

$$\Delta I_{total} = I_{total_2} - I_{total_3}$$

If there is no heating or cooling of the fuel components in the engine or of the combustion products in the chamber, $I_{total_2} = I_{total_T}$, and then

$$\Delta I_{total} = I_{total_T} - I_{total_3}$$

Since the discharge is accepted as being adiabatic, the theoretical velocity of discharge can be calculated by equation (III.10), in which the exhause velocity w is equal to the velocity sought at the nozzle exit w_3,

$$w_3 = 91{,}5\sqrt{\Delta I_{total}} \qquad (VI.74)$$

Determining Theoretical Specific Thrust, Isoentropic Index of Expansion, and Nozzle Dimensions.

We find the specific weight of the gas on the basis of the data of calculation of the state of the gas at the nozzle exit.

$$\gamma_3 = \frac{p_3}{R_3 T_3}. \qquad (VI.75)$$

We also set up an equation for the consumption of 1 kg of combustion products by the discharge section:

$$1 = f'_3 \gamma_3 w_3, \qquad (VI.76)$$

where f'_3 is the specific passage section at the exit of the nozzle necessary for the passage of 1 kg of gas per second, that is, $f'_3 = \frac{f_3}{G}$.

We use this equation to determine f'_3

$$f'_3 = \frac{1}{\gamma_3 w_3}. \qquad (VI.77)$$

Knowing f'_3 and w_3, we can find the theoretical specific thrust for the engine through formula (I.13)

[theo sp = theoretical specific]

$$P_{theo\ sp} = \frac{w_3}{g} + f'_3 (p_3 - p_H) \qquad (VI.78)$$

According to the required absolute thrust P, we find the necessary theoretical consumption of fuel per second G_{theo}

$$G_{theo} = \frac{P}{P_{theo\ sp}} \qquad (VI.79)$$

Then we determine the theoretical dimensions of the nozzle at the exit

$$f_{3\ theo} = Gf'_3 \qquad (VI.80)$$

To determine the dimensions of the critical section, the isoentropic index n_{is} must be known.

In addition, the change of the gas constant (or the molecular weight) in the combustion products during the expansion process must be taken into account especially in the case of high temperatures with strong dissociation in the engine chamber. For this purpose we derive the equation of the isoentropic process under the prescribed conditions.

The isoentropic equation takes the form $p\,\theta^{n_{is}} = const$. In this expression we replace the specific volume value in accordance with the equation of state $p\,\theta = RT$.

Then

$$\frac{p(RT)^{n_{is}}}{p^{n_{is}}} = \frac{(RT)^{n_{is}}}{p^{n_{is}-1}} = const.$$

We apply this equation to the expansion process in the rocket engine, that is, the process 2 - 3:

$$\frac{(P_2T_2)^{n_{is}}}{p_2^{n_{is}-1}} = \frac{(R_3T_3)^{n_{is}}}{p_3^{n_{is}-1}},$$

whence

$$\frac{R_2T_2}{R_3T_3}=\left(\frac{p_2}{p_3}\right)^{\frac{n_{is}-1}{n_{is}}}.$$

By treating this equation logarithmically and solving it for n_{is} we obtain

$$n_{is}=\frac{\lg\frac{p_3}{p_2}}{\lg\frac{R_2T_2}{R_3T_3}\frac{p_3}{p_2}}. \qquad \text{(VI.81)}$$

Since $R = \frac{848}{\mu}$,

the equation (VI.81) can also be written in the form:

$$n_{is}=\frac{\lg\frac{p_2}{p_3}}{\lg\frac{\mu_3}{\mu_2}\frac{p_2}{p_3}\frac{T_2}{T_3}}.$$

To determine the theoretical dimension of the critical section we make use of the condition that the degree of nozzle expansion required in the calculation depends on the pressure ratios at the nozzle exit and in the combustion chamber, and on the isoentropic expansion index.

Consequently by determining the value of the index n_{is} by theoretical calculation we can calculate the ratio of the passage sections $\frac{f_{3\,theo}}{f_{cr\,theo}}$ by using formula (III.65) and substituting in it the required value $\delta = \frac{p_3}{p_2}$ and the value n_{is} which was found by equation (VI.81). After this we find the theoretical value for the critical section $f_{cr\,theo}$.

Thermal Calculation of a Liquid Propellant Rocket Engine by Total Heat Content-Entropy Diagrams.

In the calculation of thermodynamic processes we often employ the total heat content-entropy diagrams ($I_{total}S$-diagrams). They are called entropic diagrams for short. For certain rocket engine fuels there are $I_{total}S$-diagrams calculated by taking into account dissociation. A scheme for the entropic diagram is represented in Figure 82. The entropic diagram is designed for a completely specified fuel, that is, for a given combustible, oxidizer, and their ratio ν in the fuel, and is used only for the design of an engine operating on a given fuel. Plotted on the diagram are a minimum of three networks of curves: isotherms, isobars, and isochores with the aid of which it is easy to calculate all the necessary parameters of the engine thermal process. An example of calculating thermal process by means of an entropic diagram is shown in Figure 83.

The intersection of the line for total heat content (which refers to total heat content of a given fuel I_{total_T}) with the isobar p_2 (which refers to the required pressure in the combustion chamber) locates the point which determines the state of the products in the chamber (point 2 in Figure 83), and determine values of T_2 and and by it the values of T_2 and S_2 can be found.

The line for isoentropic expansion in this diagram is the vertical line S_2 = const. The intersection of this vertical line with the isobar for required pressure p_3 at the nozzle exit produces point 3, which determines the state of the combustion products at the nozzle exit, that is, their temperature T_3, the specific volume v_3, and heat content I_{total_3}.

Continuing, we calculate the theoretical specific thrust, the fuel consumption per second, and nozzle passage section in exactly the same manner as is done in the analytical calculation after the temperature and composition of the combustion products in the chamber and at the nozzle exit have been determined.

The passage sections are calculated with values for specific volumes of the combustion products that are taken from the I_{total}S-diagram. In this case we use an equation for a specific passage section

$$f' = \frac{v}{w}$$

obtained from the consumption equation. The velocity w is found from the corresponding drop $\Delta\ I_{total}$.

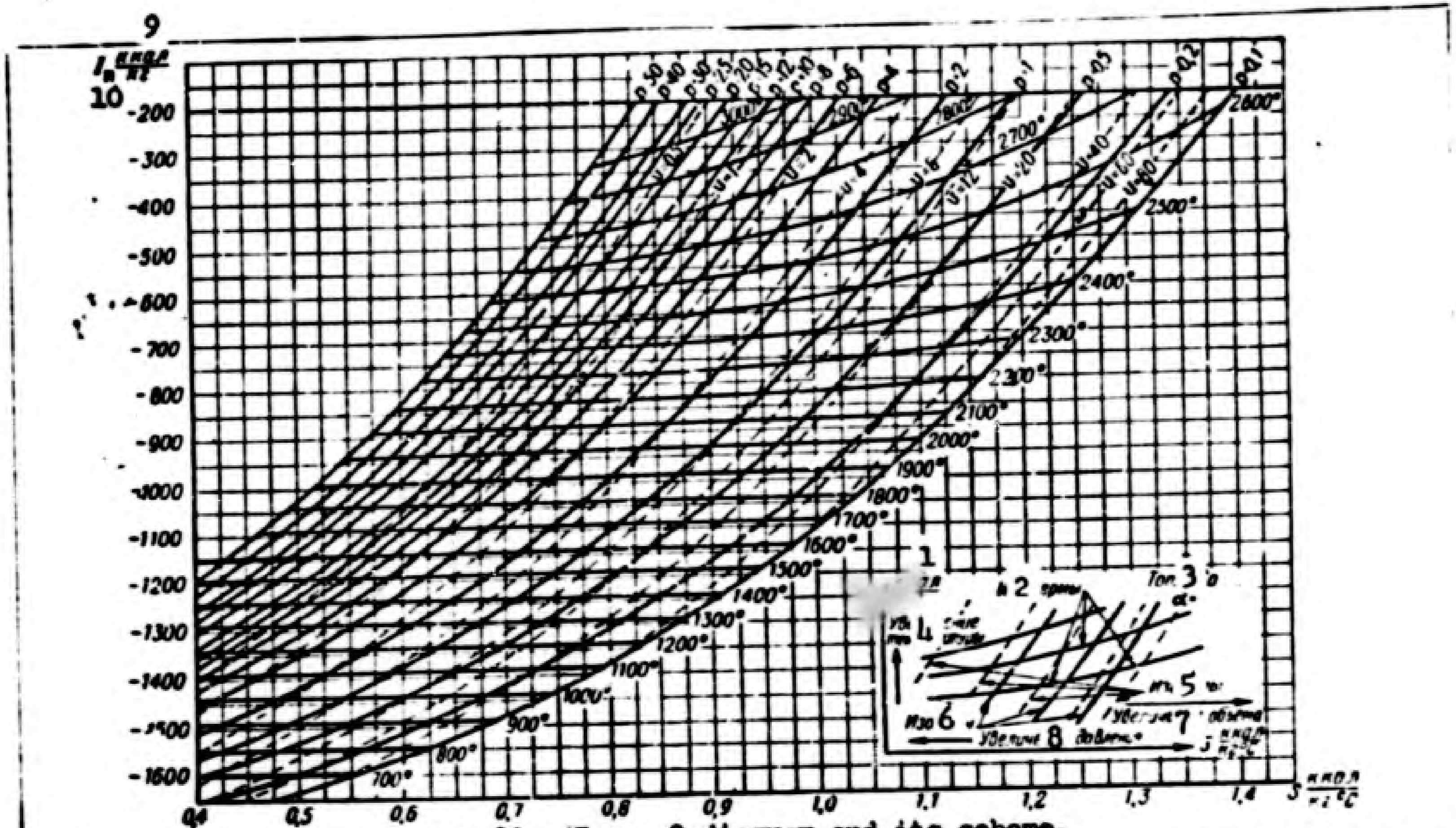

Figure 82. $I_{total}S$-diagram and its scheme.

Diagram drawn up for the products of combustion of liquid oxygen and ethyl alcohol with $\alpha = 0.7$.

1. kilo-cal/kg; 2. isotherms; 3. fuel;
4. increase of temperature; 5. isochores;
6. isobars; 7. increase in volume; 8. increase in pressure; 9. kilo-cal/kg °C; 10. total.

The gas state in the critical section is determined by the point of intersection of the line S_2 = const and the isobar of the critical pressure p_{cr}, which is found by formula (III.52).

$$p_{cr} = p_2 \left(\frac{2}{n_{is}+1} \right)^{\frac{n_{is}}{n_{is}-1}}.$$

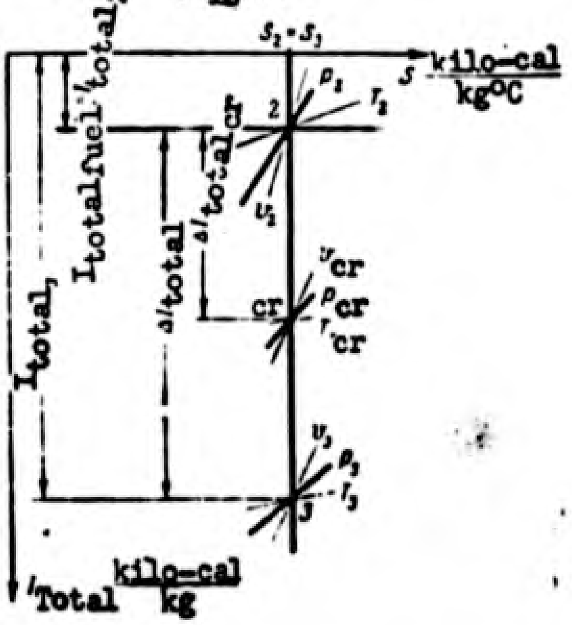

Figure 83. Scheme of the thermal calculation of the rocket engine by the $I_{total}S$ - diagram.

On certain $I_{total}S$ - diagrams we plot additional lines, facilitating the finding of the geometrical dimensions of the nozzle.

SECTION 36. INFLUENCE OF TEMPERATURE AND PRESSURE IN THE ENGINE COMBUSTION CHAMBER AND THE CORRELATION OF FUEL COMPONENTS ON THE PARAMETERS OF THE ROCKET ENGINE

Influence of Temperature

At the present time a large number of calculations have been made to determine composition and temperature of combustion products and theoretical specific thrust. Let us look at the primary results of these calculations.

Given in Figure 84 is the design graph for change, dependent on temperature, in the volumetric content of gases in the combustion products of kerosene (C_{comb}=0.87, H_{comb}=0.13) and oxygen with α=0.86 and pressure p_Σ = 10 atm.

In the range of relatively low temperatures (300-2,500° absolute), the composition of combustion products follows, in principle, the equation for the equilibrium constant of a water gas reaction which does not form a considerable quantity of any other kind of dissociation products except carbon monoxide CO and molecular hydrogen H2. With an increase in temperature there is a rapid rise in the content of carbon monoxide and water vapor H_2O in the products of combustion.

With an increase of temperatures to above 3,000° absolute there takes place a rapid decrease in the content of complete combustion products (triatomic gases) as a result of a rise in the content of diatomic gases and above all of carbon monoxide CO. The increase in the content of other diatomic gases, H_2, O_2, and OH, in the products of combustion is not as great. Being dissociation products, these diatomic gases have in them a chemical energy, and in this manner reduce the total amount of heat generated in the chamber. A further increase in combustion temperature to above 3,700° absolute causes dissociation of even the diatomic gases (above all H_2 and O_2) into atomic gases. At very high temperatures, the combustion products would be composed of atomic gases H and O and also vapors of carbon C.

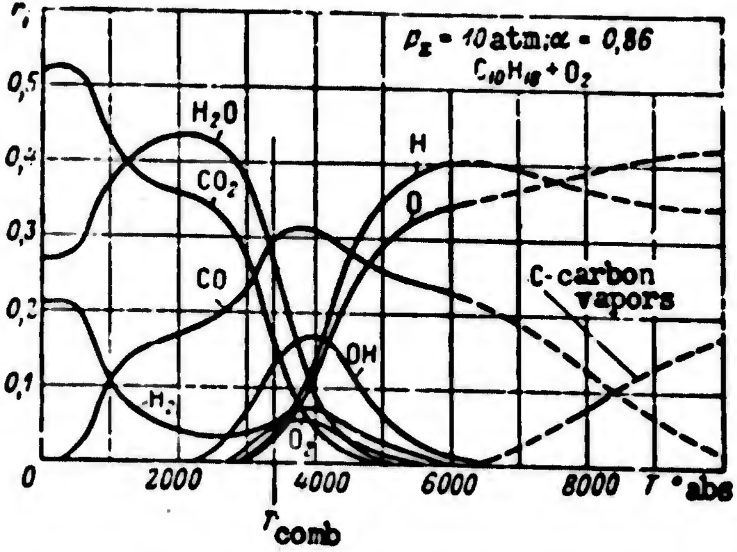

Figure 84. The influence of temperature on the composition of combustion products.

The design combustion temperature for this mixture amounts to 3,360° absolute, that is, the actual temperatures in the combustion chamber are in this zone when there is already a great deal of dissociation.

The Influence of Pressure in the Combustion Chamber

In the graph Figure 85 we give the change in the combustion products' temperature T_2 in the combustion chamber and in temperature T_3 at the nozzle exit in relation to pressure P_2. This is for combustion products of fuel that are composed of kerosene + liquid oxygen at $a = 0.8$. The pressure at the nozzle exit remains constant and equal to one atmosphere.

From the graph we see that with an increase in pressure the combustion temperature T_2 also rises somewhat. This occurs because an increase in pressure lowers the degree of dissociation (see Section 12). The temperature T_3 at the nozzle exit drops with an increase in p_2, so that with $p_3 = \text{const} = 1$, the degree of expansion in the nozzle $\delta = \frac{p_3}{p_2}$ decreases, and as we know;

$$T_3 = T_2\left(\frac{p_3}{p_2}\right)^{\frac{n_{is}-1}{n_{is}}}.$$

The influence, however, on temperature T_3 of an increase in T_2 with a rise in pressure p_2 is small by comparison with the influence of ratio $\frac{p_3}{p_2}$. Hence we see that with a rise in pressure in the chamber, there is also an increase in the temperature difference $(T_2 - T_3)$, and consequently there is also an increase in the discharge velocity of the combustion products from the nozzle, since (see Section 13)

$$w_3 = \sqrt{\frac{2g}{A}\Delta i_{\text{total}}} = \sqrt{\frac{2g}{A}c_p'(T_2 - T_3)}.$$

With an increase in discharge velocity, there is also an increase in the specific thrust of the rocket engine. Consequently, with an increase in the pressure in the combustion chamber there will also be an increase in the specific thrust of the rocket engine.

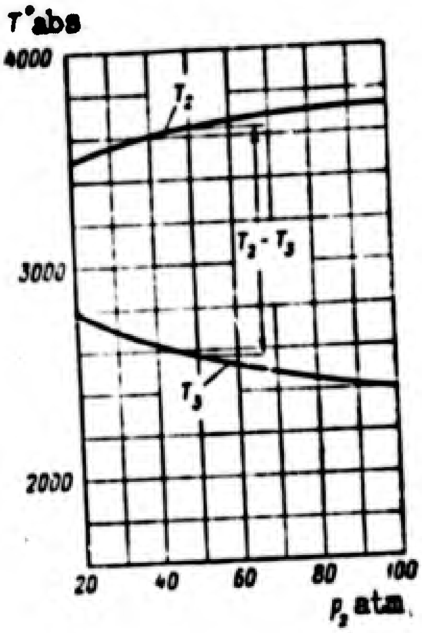

Figure 85. Dependence of temperature T_2 in the combustion chamber and of temperature T_3 at the nozzle exit upon pressure p_2 in the combustion chamber. (Fuel consists of oxygen + kerosene, p_3 = const = 1 atm).

The dependence of specific thrust or pressure in the combustion chamber of a rocket engine with constant pressure p_3 at the nozzle exit for various fuels is shown in Figure 86. With an increase of pressure in the chamber, the specific thrust increases, for two reasons: The first and main reason in the case at hand is that with an increase in p_2 there is a decrease in the value of δ and the thermal efficiency of the engine $\eta_t = 1 - \delta^{\frac{k-1}{k}}$ increases. The second reason for an increase in P_{sp} consists of the fact that with an increase in p_2 there is an increase in the generation of heat in the chamber and a rise in temperature T_2. The influence of the second instance is all the more perceptible, the higher the temperature in the chamber and the stronger the dissociation of the combustion products. For this reason the pressure shows itself more perceptibly in the value P_{sp} in the instance of fuels with a higher calorific value (compare the curve in Figure 86 for fuels consisting of oxygen + kerosene and oxygen + alcohol).

Another matter of interest is the character of dependence of the value of the complex of parameters $\beta = \frac{f_{cr} p_2}{G_t}$ on pressure. This dependence is also shown (for these same fuels) in Figure 86. As follows from the graphs, the value of the complex of parameters β rises very slowly with an increase in pressure. The increase in the value $\beta = \frac{f_{cr}p_2}{G_s}$ also characterizes an increase in the generation of heat in the chamber (see below, Section 37). This is due to a certain degree of suppression of dissociation.

A change in pressure in the chamber also leads to a change in the geometrical dimensions of the engine nozzle. This influence is characterized by the graph in Figure 87, on which we have plotted the dependence of the critical section areas (F_{cr}) and the exhaust section (F_3) of an engine nozzle developing a thrust of 1,000 kg. Then, too, the pressure in the nozzle section remains constant and equal to 1 atm. As we can see from the graph, the critical section area of the nozzle decreases sharply with an increase in pressure -- approximately in accordance with the hyperbolic law. The basis of this is the well-known relation

$$f_{cr} = \frac{\beta G_s}{p_2}.$$

Since β changes little with a change of p_2 (see Figure 86), F_{cr} drops sharply with an increase in p_2. In the case being considered, the additional decrease in F_{cr}, needed to obtain the required thrust in the engine, occurs because of a reduction in fuel consumption G which is needed for this purpose. The decrease in a given fuel consumption is the result of a rise in the specific thrust of the engine with an increase of p_2.

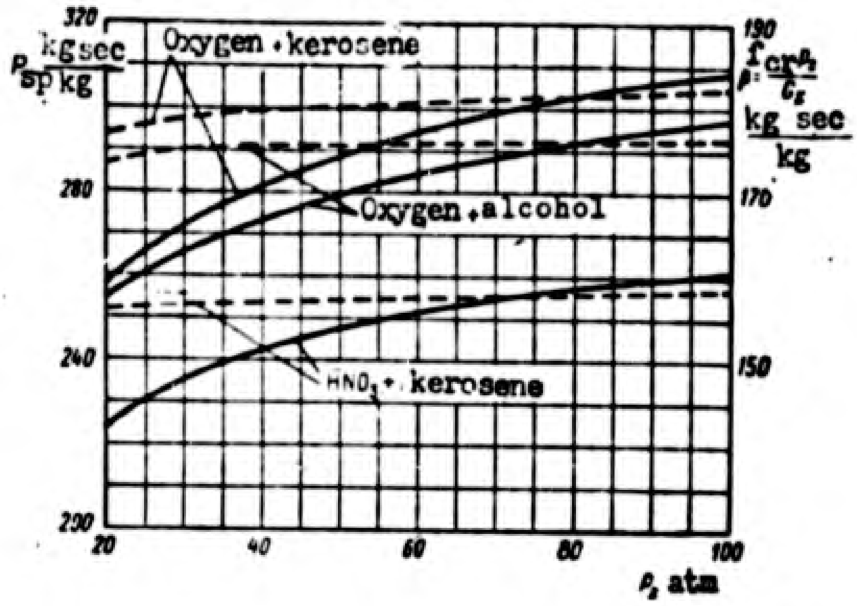

Figure 86. The dependence of specific thrust P_{sp} and the parameter complex $\beta = \frac{f_{cr} p_1}{G_s}$ on the combustion chamber pressure for different fuels (p_3 = const = 1 atm). The dotted lines are the graph of β.

The decrease in the required critical section area is so considerable that in spite of the need for a constant increase in the ratio $\frac{F_3}{F_{cr}}$ (in order to preserve a pressure in the at the exit equal to one atmosphere when there is an increase in chamber pressure) the absolute value of F_3 also increases considerably.

Hence the pressure increase in the chamber leads to a decrease in all the nozzle dimensions. Oftentimes this also leads to a reduction in nozzle weight.

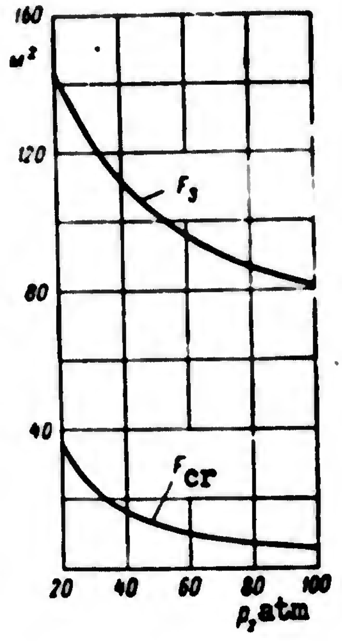

Figure 87. Change in the critical section area of the nozzle F_{cr} and the exhaust section F_3 in relation to the pressure in the chamber. (fuel: oxygen + kerosene, p_3 = const = 1 atm.)

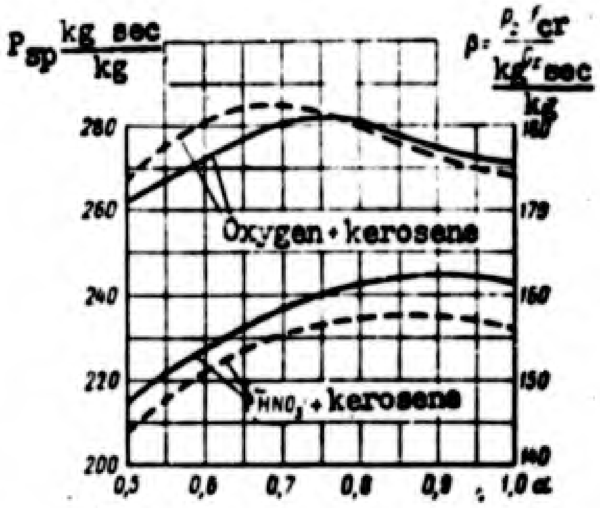

Figure 88. Dependence of specific thrust P_{sp} and parameter complex $\beta = \frac{p_2 \cdot f_{cr}}{G_s}$ on the excess oxidant ratio α (with p_3 = const. = 1.) The dotted lines are graphs of β.

The Influence of the Fuel Component Ratios

The value of the actual ratio of fuel components ν or of the excess oxidant ratio α also exercise an influence upon the temperature in the combustion chamber and upon the specific thrust of the engine.

With the usual oxygen-hydrocarbon fuels for rocket engines, the specific thrust P_{sp} and the temperature in the combustion chamber T_2 have maximum values (other conditions remaining the same) not in the case of a stoichiometric ratio of the components ($\alpha = 1$), but an insufficiency of oxidizer $\alpha < 1$ or $\nu < \nu_0$. This is explained by the fact that the combustion products of hydrocarbon fuels with $\alpha < 1$, contain a greater quantity of carbon monoxide, which, even though a product of incomplete combustion, is at the same time comparatively stable against further dissociation (see Figure 84). As a result of this, with $\alpha < 1$ the loss of heat due to dissociation is somewhat reduced, which leads to an increase in the temperature in the chamber. In addition, an increase in the relative content of carbon monoxide causes an increase in the gas constant R, and this improves the thermal efficiency of the engine. For these two reasons the specific thrust has a maximum value with $\alpha < 1$. As an example, we have shown in Figure 88 graphs of the changes in specific thrust for two fuels: oxygen + kerosene and nitric acid + kerosene. All the rest of the parameters of the engine remain unchanged. These graphs show that with high temperatures in the chamber (fuel consisting of oxygen + kerosene) the influence of α on the specific thrust shows itself in a more pronounced manner and that the maximum specific thrust corresponds to smaller values of α. In this same figure we have shown the dependence of the value complex $\beta = \frac{F_{cr} p_2}{G_s}$ on α. These graphs show that the change in the specific thrust in the instance being considered takes place chiefly as a result of a change in the quantity of heat generated in the chamber.

SECTION 37. THE EXPERIMENTAL ENGINE COEFFICIENTS AND CALCULATION OF THE ACTUAL SPECIFIC THRUST

Coefficient of Specific Thrust

The calculation of theoretical specific thrust takes into account only the thermodynamic losses of energy occurring during the operating process in the engine. These losses include the following:

-- loss of heat carried off by the combustion products. These are taken into account by the thermal efficiency;

-- loss of heat related to dissociation of combustion products in the chamber; these are taken into account directly in the calculation of the theoretical temperature in the combustion chamber with allowance for dissociation. A partial restoration of chemical energy in the nozzle due to the recombination reaction is accounted for because the expansion process is described by an isoentropic expansion index n_{is}.

However at the present time other energy losses (incomplete physical combustion in the chamber; heat exchange; friction in the nozzle; deviation of the expansion process from the limit equilibrium scheme of isoentropic expansion; presence of radial velocities of gas in the nozzle, etc.), are not calculated theoretically but are accounted for by introducing two coefficients φ_{ch} and φ_{noz} (later on in the calculations we shall employ a system of impulse coefficients)(ch = chamber; noz = nozzle). It should be noted that due to the high concentration of energy in the engine and the large value for the thermal efficiency of the rocket engine, the role of the additional processes mentioned above is small and the coefficients φ_{ch} and φ_{noz} are close to unity.

The experimental coefficients are obtained as a result of comparison of the actual engine indexes with the theoretically calculated ones.

For example: An overall decrease in specific thrust, both as a result of loss in the chamber and as a result of loss in the nozzle, can be determined by comparing the actual specific thrust P_{sp} with the theoretical specific thrust $P_{theo\ sp}$, which is estimated theoretically in the thermal design of the engine.

It is obvious that the ratio of these specific thrusts

$$\frac{P_{sp}}{P_{theo\ sp}} = \varphi \qquad (VI.82)$$

is an overall coefficient which accounts for both kinds of losses.

This coefficient is called the specific thrust coefficient φ. It is evident that the specific thrust coefficient is equal to

$$\varphi = \varphi_{ch} \varphi_{noz} \qquad (VI.83)$$

For an experimental determination of φ it is necessary to perform the measurement of three values: the absolute thrust of the engine P, consumption of fuel G_{comb}, and consumption of oxidizing agent G_o. On the basis of these values we find Psp.

In order to calculate theoretical specific thrust, it is necessary, in addition to this, to know the pressure in the combustion chamber p_2 and the pressure at the nozzle exit p_3. All the measurements connected with the rocket engine tests are rather complicated because they are made under test conditions that are of very short duration and must be made, because of the requirements of technical safety, by remote control from a distance. However, the measurement of component consumption and of thrust and pressure in the chamber, may be made at the present time with reasonable accuracy. It is only the measurement of pressure at the nozzle exit that we have not been able to make with any degree of success.

Hence all the data for calculation of P theo sp can be obtained. In practice, the calculation of theoretical specific thrust must not be made until after testing the engine with the measured pressure in the chamber and the actual consumption ratio of fuel components

$$\nu = \frac{G_o}{G_{comb}},$$

taking place in the testing of the engine. This must be done because in the tests it is very difficult simultaneously to maintain both the required pressure in the chamber and the required consumption ratio. The pressure at the nozzle exit (if its value is not determined experimentally) is assumed to be equal to the pressure in the surrounding medium, or it is assumed to be equal to the pressure determined by calculation with formula (III.65), with an index of isoentropy n_{is} selected tentatively beforehand.

Hence, based on the results of the test, we find the coefficient of specific thrust φ.

<u>Experimental Determination of the Coefficient of the Chamber and the Coefficient of the Nozzle</u> (φ_{ch} and φ_{noz}).

The calculations and measurements necessary for the experimental determination of the specific thrust coefficient make it possible to separate the losses in the chamber and in the nozzle. Such a separation of losses is useful because it can show ways for improving engine construction and makes possible a more deliberate selection of the coefficient values.

To clarify the possibility of separating losses in the combustion chamber, we employ the expression (III.60)

$$\beta = p_2 \frac{f_{cr}}{G_2} = \frac{\sqrt{RT_2}}{A_n}. \qquad \text{(VI.84)}$$

In this expression we replace the value RT_2, bearing in mind that;

$$T_2 = \frac{H_s}{c_p} \text{and} c_p = \frac{k}{k-1} AR,$$

whence

$$RT_2 = \frac{k-1}{k} \frac{H_s}{A}.$$

By introducing the obtained value RT_2 in (VI.84) and representing the constant terms by B_n, we obtain

$$\beta = p_2 \frac{f_{cr}'}{G_2} = B_n \sqrt{H_s}. \qquad \text{(VI.85)}$$

The parameter complex $p_2 \frac{f_{cr}}{G_2}$ possesses the dimension of specific thrust kg-sec/kg and, just as the specific thrust, is proportional to the square root of the value of the energy expended in creating it.

Since the value $\frac{p_2 f_{cr}}{G_2}$ includes the engine parameters which characterize the combustion chamber (up to the critical section of the nozzle), the decrease in its value when compared to the theoretical design value will be caused by energy losses in the chamber which are not considered in the calculation.

The losses in the combustion chamber consist chiefly of losses in the combustion process; hence the value of the parameter complex obtained from the experiment may be written in the form

[exp = experiment]

$$\beta_{exp}=\left[\frac{p_2 f_{cr}}{G_\Sigma}\right]_{exp}=B_a\sqrt{H_u\eta_{dis}\eta_k}. \qquad (VI.86)$$

As we already know, the losses due to dissociation are taken into account in theoretical calculation of fuel combustion in the combustion chamber. Therefore, the value of the parameter complex obtained from the calculation may be represented in the form

$$\beta_{theo}=\left[\frac{p_2 f_{cr}}{G_\Sigma}\right]_{theo}=B_a\sqrt{H_u\eta_{dis}}. \qquad (VI.87)$$

The value of β_{theo} for the given fuel has a very definite value H_u and characterizes the amount of energy generated in the combustion chamber. The graphs for the change of β, in relation to the pressure p_2 and α in the chamber (see Figures 86 and 88), show the character of change in the magnitude of heat generated in the chamber due to losses from dissociation as shown by the equation (VI.87), with the value $\sqrt{\eta_{dis}}$.

If we compare the equations (VI.86) and (VI.87), then, from them, by division we can easily obtain the value

$$\varphi_{ch}=\sqrt{\eta_{ch}}=\frac{\left[\frac{p_2 f_{cr}}{G_\Sigma}\right]_{exp}}{\left[\frac{p_2 f_{cr}}{G_\Sigma}\right]_{theo}}, \qquad (VI.88)$$

where φ_{ch} is the chamber impulse coefficient.

The value φ_{ch}, according to the efficiency system (see Section 19) introduced earlier, will account for only the losses connected with physically incomplete combustion and friction in the combustion chamber.

Hence value φ_{ch} can be determined from the comparison of thermal calculation and engine test data. Besides, experimental determination of $\beta_{exp}=\left[\frac{p_2 f_{cr}}{G_\Sigma}\right]_{exp}$ does not require setting up any additional measurements except those which are necessary to determine Psp.

It would be advantageous to theoretically calculate the value β theo with experimentally determined p_2, G and $\nu = \frac{G_o}{G_{comb}}$, in connection with which values p_2 and G_Σ in formula (VI.88) can be cancelled and φ_{ch} will acquire the simple form:

$$\varphi_{ch} = \frac{f_{cr.\ exp.}}{f_{theo\ cr}} \tag{VI.89}$$

that is, it is determined by the ratio of the actual area of the critical section of the tested engine to the area of the section calculated theoretically with pressure p_2, fuel consumption G_Σ and the ratio of the components ν.

If we keep the specified operating conditions while testing the rocket engine on the stand; that is, if $G_{exp} = G_{theo}$, and calculation for the value of the critical section of the engine tested is also made, the coefficient of the chamber is expressed in the following manner:

$$\varphi_{ch} = \frac{p_{2\,exp}}{p_{2\,theo}}, \tag{VI.90}$$

that is, in this case the chamber coefficient represents the ratio of actual pressure reached in the combustion chamber to the theoretical pressure which should be available with the specified component consumptions and the value of the critical section of the nozzle.

If in testing the engine we keep the prescribed pressure, then $p_{2\,theo} = p_{2\,exp}$ and for φ_{ch} we obtain the formula:

$$\varphi_{ch} = \frac{G_{theo}}{G_{exp}}. \tag{VI.91}$$

The chamber coefficient assumes the form of a consumption coefficient and is the ratio of theoretical consumption needed to create the specified pressure in the combustion chamber (with the prescribed f_{cr}) to the actual consumption obtained in the tests.

Knowing the chamber coefficient and the specific thrust coefficient, we can also obtain the value for the nozzle coefficient:

$$\varphi_{noz}=\frac{\varphi}{\varphi_{ch}}. \qquad (VI.92)$$

In selecting values for chamber coefficient and the nozzle coefficient we must direct our attention to conformity of the constructional data of the designed engine with the constructional data of the engine from which we obtained the experimental coefficients φ_{ch} and φ_{noz}.

The Thermal Calculation of an Engine, Allowing for the Experimental Coefficients.

Having prescribed the value φ_{ch} and φ_{nos}, we can determine the value of the actual specific thrust according to formula:

$$P_{sp}=\varphi_{ch}\varphi_{noz}P_{theo\ sp} \qquad (VI.93)$$

and find the actual required per second consumption of components:

$$G_{\Sigma}=\frac{P}{P_{sp}}=\frac{G_{theo}}{\varphi_{ch}\varphi_{nos}}. \qquad (VI.94)$$

We can also make adjustment in the dimensions of the critical section of the nozzle so as to obtain (with the new consumption and allowing for the losses in the chamber and nozzle) the assigned pressure in the chamber p_2.

Between the actual and the theoretical parameter complexes there will be a ratio analogous to (VI.87) $\frac{f_{cr}p_2}{G_{\Sigma}}=\varphi_{ch}\frac{f_{theo\ cr}p_{2theo}}{G_{theo}}$.

The pressure p_2 in the chamber should equal the assigned value for pressure $p_2$theo, and the actual consumption is connected to theoretical consumption by the value of the relation (VI.94). Consequently:

$$\frac{f_{cr}}{f_{theo\ cr}}=\varphi_{ch}\frac{G_{\Sigma}}{G_{theo}}=\frac{\varphi_{ch}}{\varphi_{ch}\varphi_{nos}}$$

or:

$$f_{cr}=f_{theo\,cr}\frac{1}{\varphi_{nos}}. \qquad (VI.95)$$

The relationship (VI.95) shows that we should increase the critical section area solely for the purpose of the passage through it of an additional fuel consumption which compensates for the losses in the nozzle. The additional fuel consumption used to replace losses in the chamber does not require an increase in the critical section area of the nozzle.

The losses taken into account by the experimental coefficients should exercise an influence on the value of the isoentropic index N_{is}; however, in actual practice we have not yet been able to determine this influence. Hence we shall assume that N_{is} in the real expansion process taking into account the losses, will be equal to N_{is} of the theoretical expansion process. Then, too, the ratio $\frac{f_3}{f_{cr}}$ needed to obtain the required pressure in the nozzle section will not differ from the theoretical nozzle expansion $\frac{f_{3\ theo}}{f_{theo\ cr}}$ calculated earlier.

As a result of this,

$$f_3 = \frac{f_{3\,theo}}{\varphi_{noz}}. \qquad (VI.96)$$

Consequently, as a result of the calculation, we determine the actual specific thrust of the engine, the component consumption per second and the dimensions of the critical and exhaust sections of the nozzle.

SECTION 38. EXAMPLES OF COMBUSTION AND DISCHARGE CALCULATION

Thermal Design of the Rocket Engine Operating on Fuel Containing Nitrogen.

Carry out the thermal design of a liquid-fuel rocket engine with a thrust on the ground of 12,000 kg. Fuel: Oxidizer -- 98% nitric acid; combustible -- kerosene having a composition of G_{comb} = 0.865; H_{comb} = 0.135; O_{comb} = 0. The excess oxidant ratio is α = 0.8. The pressure in the combustion chamber is p_2 = 30 atm; the pressure at the nozzle exit is p_3 = 0.9 atm. The experimental coefficients are: φ_{ch} = 0.95; φ_{noz} = 0.97.

The thermal design of the rocket engine is divided into the following steps:

I. Determination of composition and temperature of the gases in the combustion chamber.

II. Determination of composition and temperature of the gases at the nozzle exit.

III. Determination of specific thrust and the critical and exhaust dimensions of the nozzle.

I. Determination of Composition and Temperature in the Combustion Chamber

1. Composition 100% nitric acid (see Table 5) O = 0.762; H = 0.016; N = 0.222; Composition of water: O = 0.889; H = 0.111.

2. Composition of the oxidizer according to formula (V.5)

$$O_o = 0{,}98 \cdot 0{,}762 + 0{,}02 \cdot 0{,}889 = 0{,}764;$$

$$H_o = 0{,}98 \cdot 0{,}016 + 0{,}02 \cdot 0{,}111 = 0{,}018;$$

$$N_o = 0{,}98 \cdot 0{,}222 = 0{,}218;$$

$$C_o = 0.$$

Proof: $O_o + H_o + N_o = 0.764 + 0.018 + 0.218 = 1.000.$

3. We determine the theoretically necessary quantity of oxidizer ν_o. According to formula (V.13)

$$\nu_o = \frac{\frac{8}{3} C_{comb} + 8H_{comb} - O_{comb}}{O_o - \frac{8}{3} C_o - 8H_o} = \frac{\frac{8}{3} 0{,}865 + 8 \cdot 0{,}135}{0{,}764 - 8 \cdot 0{,}018} = 5{,}47.$$

4. We determine the actual consumption of oxidizer for 1 kg of combustible. According to formula (V.15)

$$\nu = \alpha\, \nu_o = 0{,}8 \cdot 5{,}47 = 4{,}37.$$

5. We determine the composition of the fuel. According to formulas (V.17)

$$C_{fuel} = \frac{C_{comb} + \nu C_o}{1+\nu} = \frac{0{,}865}{1+4{,}37} = 0{,}161;$$

$$H_{fuel} = \frac{H_{comb} + \nu H_o}{1+\nu} = \frac{0{,}135 + 4{,}37 \cdot 0{,}018}{5{,}37} = 0{,}040;$$

$$O_{fuel} = \frac{O_{comb} + \nu O_o}{1+\nu} = \frac{4{,}37 \cdot 0{,}764}{5{,}37} = 0{,}622;$$

$$N_{fuel} = \frac{N_{comb} + \nu N_o}{1+\nu} = \frac{4{,}37 \cdot 0{,}218}{5{,}37} = 0{,}177.$$

Proof:

$$C_{fuel} + H_{fuel} + O_{fuel} + N_{fuel} = 0{,}161 + 0{,}040 + 0{,}622 + 0{,}177 = 1{,}000.$$

6. We determine the heat content of the fuel.

On the basis of the data in Table 5, the heat content of HNO_3 is equal to -660 kilo-cal/kg; the heat content of water amounts to -3790 kilo-cal/kg; the heat of solution of water in nitric acid is equal to -280 kilo-cal/kg H_2O.

The heat content of the oxidizer according to formula (V.23) is

$$I_{total_o} = -660\cdot 0{,}98 - 3790\cdot 0{,}02 - 0{,}02\cdot 280 = -729 \text{ kilo-cal/kg}.$$

In accordance with the data in Table 6, the heat content of kerosene is taken to be equal to

$$I_{total_{comb}} = -440 \text{ kilo-cal/kg}.$$

The heat content of the fuel according to formula (V.25) is

$$I_{total_{fuel}} = \frac{I_{total_{comb}} + \nu I_{total_o}}{1+\nu} = \frac{-440 + 4{,}37(-729)}{5{,}37} = -677 \text{ kilo-cal/kg}.$$

7. According to the data in Table 7, the temperature in the combustion chamber will be within the limits of 3,000° absolute. Hence the calculation of the composition of the combustion products will be done for three temperatures: $T' = 2900°$ absolute, $T'' = 3000°$ absolute, and $T''' = 3100°$ absolute.

8. The pressure is expressed in physical atmospheres, within the dimensions of which we have given values for the equilibrium constants:

$$p_k = \frac{30}{1{,}033} = 29 \text{ atm}.$$

9. We now determine the constant values Q, R, and S for the given design. According to formulas (VI.51), (VI.52), and (VI.53)

$$Q = \frac{7}{6}\,\frac{C_{fuel}}{N_{fuel}} = \frac{7}{6}\,\frac{0{,}161}{0{,}177} = 1{,}06;$$

$$R = 14\,\frac{H_{fuel}}{N_{fuel}} = 14\,\frac{0{,}04}{0{,}177} = 3{,}16;$$

$$S = \frac{3}{4}\,\frac{O_{fuel}}{C_{fuel}} = \frac{3}{4}\,\frac{0{,}622}{0{,}161} = 2{,}90.$$

In addition, we make a determination of the composition of the combustion products at the temperature 3000° absolute, making use of the method of successive approximations described in Section 34.

The First Approximation

10. Let us determine the composition of the combustion products in the first approximation by the formulas (VI.64) and (VI.67)

$$p_{N_2}=\frac{p_z}{2Q+R+1}=\frac{29}{2\cdot 1{,}06+3{,}16+1}=4{,}62;$$

$$p_{CO}=2Qp_{N_2}-p_{CO_2}=2\cdot 1{,}06\cdot 4{,}62-p_{CO_2}=9{,}80-p_{CO_2};$$

$$p_{H_2O}=2Qp_{N_2}(S-1)-p_{CO_2}=9{,}80\,(2{,}90-1)-p_{CO_2}=18{,}60-p_{CO_2};$$

$$p_{H_2}=2p_{N_2}\left[\frac{R}{2}-Q\,(S-1)\right]+p_{CO_2}=2\cdot 4{,}62\left[\frac{3{,}16}{2}-1{,}06\,(2{,}90-1)\right]+$$

$$+p_{CO_2}=p_{CO_2}-4{,}07.$$

We check the accuracy of determination of the coefficients:

$a+b+c=9{,}80-18{,}60--4{,}07=24{,}33;$

$p_z-p_{N_2}=29{,}00-4{,}62=24{,}38.$

The coefficients a, b, and c, have been determined without any substantial errors.

11. The quadratic equation (VI.68) takes the form

$$K_{2a}=\frac{(9{,}80-p_{CO_2})(18{,}60-p_{CO_2})}{p_{CO_2}(p_{CO_2}-4{,}07)}.$$

Let us take the value of K_{2a} at $T = 3000°$ abs.

$$K_{2a}=7{,}38.$$

The quadratic equation takes the form

$$6{,}38p_{CO_2}^2-1{,}60p_{CO_2}-182{,}3=0,$$

whence

$$p_{CO_2}=\frac{1{,}60+\sqrt{1{,}60^2+4\cdot 182{,}3\cdot 6{,}38}}{2\cdot 6{,}38}=5{,}48;$$

$$p_{CO}=9{,}80-5{,}48=4{,}32;$$

$$p_{H_2O}=18{,}60-5{,}48=13{,}12;$$

$$p_{H_2}=5{,}48-4{,}07=1{,}41.$$

Proof:

a) According to the overall pressure

$$p_z=\sum p_i=4{,}62+5{,}48+4{,}32+13{,}12+1{,}41=$$

$$=28{,}95;\quad (p_z=29);$$

b) On the basis of the equilibrium constant

$$K_{2a}=\frac{p_{CO}p_{H_2O}}{p_{H_2}p_{CO_2}}=\frac{4,32\cdot 13,12}{1,41\cdot 5,48}=7,36\ (7,38).$$

The tabular value of K_{2a} used in calculation is given in parenthesis. The partial pressures of the first estimate have been found without any substantial errors.

The Second Approximation

12. We take the values for the equilibrium constants for 3000° abs. from the table of Appendix 2. These are rounded to the third decimal point.

$$K_1=0,342;\quad K_3=0,0484;\quad K_4=0,0147;\quad K_5=0,0248;$$
$$K_6=0,0144;\quad K_7=1,88\cdot 10^{-6}.$$

According to formulas (VI.69)

$$p_{O_2}=\left(K_1\frac{p_{CO_2}}{p_{CO}}\right)^2=\left(0,342\cdot\frac{5,48}{4,32}\right)^2=0,188;$$

$$p_{OH}=K_3\frac{p_{H_2O}}{p_{H_2}^{\frac{1}{2}}}=0,0484\cdot\frac{13,12}{1,41}=0,534$$

$$p_{NO}=\sqrt{K_4p_{N_2}p_{O_2}}=\sqrt{0,0147\cdot 4,62\cdot 0,188}=0,113;$$

$$p_H=\sqrt{K_5p_{H_2}}=\sqrt{0,0248\cdot 1,41}=0,187;$$

$$p_O=\sqrt{K_6p_{O_2}}=\sqrt{0,0144\cdot 0,188}=0,052;$$

$$p_N=\sqrt{K_7p_{N_2}}=\sqrt{1,88\cdot 10^{-6}\cdot 4,62}=0,003.$$

13. We determine the coefficients A, B, D and E by formulas (VI.70)

$$A=p_{NO}+p_N=0,113+0,003=0,116;$$

$$B=p_{OH}+p_H=0,534+0,187=0,721;\quad\frac{B}{2}=0,360;$$

$$D=2p_{O_2}+p_{OH}+p_{NO}+p_O=2\cdot 0,188+0,534+0,113+$$
$$+0,052=1,075;$$

$$E=p_{O_2}+p_{OH}+p_{NO}+p_H+p_O+p_N=$$
$$=0,188+0,534+0,113+0,187+0,052+0,003=1,077.$$

14. We now determine the partial pressures of the five basic gases in the second approximation. According to formulas (VI.57), (VI.58), (VI.60), (VI.62)

$$p_{N_2} = \frac{p_2 - E + \frac{R}{2} - A\left(Q + \frac{R}{2}\right)}{2Q + R + 1} =$$

$$= \frac{29 - 1,077 + \frac{0,721}{2} - 0,116\left(1,05 + \frac{3,16}{2}\right)}{2\cdot 1,06 + 3,16 + 1} =$$

$$= \frac{29 - 1,077 + 0,360 - 0,116\cdot 2,64}{6,28} = 4,46.$$

$$p_{CO} = Q(2p_{N_2} + A) - p_{CO_2} = 1,06(2\cdot 4,46 + 0,116) - p_{CO_2} =$$

$$= 9,58 - p_{CO_2};$$

$$p_{H_2O} = Q(2p_{N_2} + A)(S - 1) - D - p_{CO_2} =$$

$$= 9,58(2,90 - 1) - 1,075 - p_{CO_2} = 17,12 - p_{CO_2};$$

$$p_{H_2} = (2p_{N_2} + A)\left[\frac{R}{2} - Q(S - 1)\right] - \frac{B}{2} + D + p_{CO_2} =$$

$$= (2\cdot 4,46 + 0,116)\left[\frac{3,16}{2} - 1,06(2,90 - 1)\right] -$$

$$- 0,360 + 1,075 + p_{CO_2} = p_{CO_2} - 3,27.$$

Proof of accuracy in determining coefficients a, b, and c:

$$a + b + c = 9,58 + 17,12 - 3,27 = 23,43;$$

$$p_2 - p_{N_2} - E = 29,00 - 4,46 - 1,077 = 23,463.$$

The coefficients have been determined without significant errors.

The quadratic equation (VI.66) takes the form;

$$K_{2a} = \frac{(9,58 - p_{CO_2})(17,12 - p_{CO_2})}{p_{CO_2}(p_{CO_2} - 3,27)} = 7,38.$$

After cancellation we receive

$$6,38p_{CO_2}^2 + 2,58p_{CO_2} - 164 = 0,$$

whence

$$p_{CO_2} = \frac{-2,58 + \sqrt{2,58^2 + 4\cdot 6,38\cdot 164}}{2\cdot 6,38} = 4,87;$$

$$p_{CO} = 9,58 - 4,87 = 4,71;$$

$$p_{H_2O} = 17,12 - 4,87 = 12,25;$$

$$p_{H_2} = 4,87 - 3,27 = 1,60.$$

<u>Proof</u>:

$$p_2 = 4,87 + 4,71 + 12,25 + 1,60 + 4,46 + 1,077 = 28,967\ (p_2 = 29,00);$$

$$K_{2a} = \frac{4,71\cdot 12,25}{1,60\cdot 4,87} = 7,40\ (K_{2a} = 7,38).$$

The Third Approximation

15. We determine the partial pressures of the six gases.

We use the formulas and constants from the second approximation

$$p_{O_2} = \left(0{,}342\frac{4{,}87}{4{,}71}\right)^2 = 0{,}124;$$

$$p_{OH} = 0{,}0184\,\frac{12{,}25}{1{,}60} = 0{,}468;$$

$$p_{NO} = \sqrt{0{,}0147\cdot 4{,}46\cdot 0{,}124} = 0{,}091;$$

$$p_{H} = \sqrt{0{,}0248\cdot 1{,}60} = 0{,}199;$$

$$p_{O} = \sqrt{0{,}0144\cdot 0{,}124} = 0{,}042;$$

$$p_{N} = \sqrt{1{,}88\cdot 10^{-6}\, 4{,}46} = 0{,}003.$$

16. We determine the coefficients

$$A = 0{,}091 + 0{,}003 = 0{,}094;$$

$$B = 0{,}468 + 0{,}199 = 0{,}667;\quad \frac{B}{2} = 0{,}333;$$

$$D = 2\cdot 0{,}124 + 0{,}468 + 0{,}091 + 0{,}042 = 0{,}849;$$

$$\Sigma = 0{,}124 + 0{,}468 + 0{,}091 + 0{,}199 + 0{,}042 + 0{,}003 = 0{,}927.$$

17. We determine the partial pressures of five basic gases:

$$p_{N_2} = \frac{29 - 0{,}927 + 0{,}333 - 0{,}094\cdot 2{,}61}{6{,}28} = 4{,}49;$$

$$p_{CO} = 1{,}06\,(2\cdot 4{,}49 + 0{,}094) - p_{CO_2} = 9{,}64 - p_{CO_2};$$

$$p_{H_2O} = 9{,}64\cdot 1{,}90 - 0{,}849 - p_{CO_2} = 17{,}47 - p_{CO_2};$$

$$p_{H_2} = (2\cdot 4{,}49 + 0{,}094)(-0{,}44) - 0{,}333 + 0{,}849 + p_{CO_2} = \\ = p_{CO_2} - 3{,}48.$$

The quadratic equation takes the form

$$7{,}28 = \frac{(9{,}64 - p_{CO_2})(17{,}47 - p_{CO_2})}{p_{CO_2}(p_{CO_2} - 3{,}48)};$$

$$6{,}38p^2_{CO_2} + 1{,}43p_{CO_2} - 168{,}5 = 0;$$

$$p_{CO_2} = \frac{-1{,}43 + \sqrt{1{,}43 + 4\cdot 6{,}38\cdot 168{,}5}}{2\cdot 6{,}38} = 5{,}03;$$

$$p_{CO_2} = 9{,}64 - 5{,}03 = 4{,}61;$$

$$p_{H_2O} = 17{,}47 - 5{,}03 = 12{,}44;$$

$$p_{H_2} = 5{,}03 - 3{,}48 = 1{,}55.$$

Proof:

$$p_1 = 4{,}49 + 5{,}03 + 4{,}60 + 12{,}44 + 1{,}55 + 0{,}927 = 29{,}027; \quad (p_2 = 29{,}00);$$

$$K_{2_a} = \frac{4{,}61 \cdot 12{,}44}{1{,}55 \cdot 5{,}03} = 7{,}39\,(K_{2_a} = 7{,}38).$$

By comparing the values for partial pressures in the second and third estimates (Table 13), we see that the difference in the partial pressures is still large: for CO_2 and H_2O it amounts to about 0.2 atm. Hence we must make yet another, fourth, approximation.

TABLE 13

Approximation Number	Partial pressures of gases										
	N_2	CO_2	CO	H_2O	H_2	O_2	OH	NO	H	O	N
1	4,62	5,48	4,32	13,12	1,41	0	0	0	0	0	0
2	4,46	4,87	4,71	12,25	1,60	0,188	0,534	0,113	0,187	0,052	0,003
3	4,49	5,03	4,61	12,44	1,55	0,124	0,468	0,091	0,199	0,042	0,003
4	4,48	5,00	4,60	12,38	1,54	0,139	0,480	0,196	0,196	0,045	0,003

The Fourth Approximation

18. We determine the partial pressures of the gases;

$$p_{O_2} = \left(0{,}342\,\frac{5{,}03}{4{,}61}\right)^2 = 0{,}139;$$

$$p_{OH} = 0{,}0484\,\frac{12{,}44}{1{,}55} = 0{,}480;$$

$$p_{NO} = \sqrt{0{,}0147 \cdot 4{,}49 \cdot 0{,}139} = 0{,}096;$$

$$p_H = \sqrt{0{,}0248 \cdot 1{,}55} = 0{,}196;$$

$$p_O = \sqrt{0{,}0144 \cdot 0{,}139} = 0{,}045;$$

$$p_N = 0{,}003.$$

19. We determine the coefficients A, B, D, and E.

$$A = 0{,}096 + 0{,}003 = 0{,}099;$$

$$B = 0{,}480 + 0{,}196 = 0{,}676; \quad \frac{B}{2} = 0{,}338;$$

$$D = 2 \cdot 0{,}139 + 0{,}480 + 0{,}096 + 0{,}045 = 0{,}899;$$

$$E = 0{,}139 + 0{,}480 + 0{,}096 + 0{,}196 + 0{,}045 + 0{,}003 = 0{,}959;$$

20. We determine the partial pressures of the five basic gases:

$$p_{N_2} = \frac{29 - 0,959 + 0,338 - 0,099 \cdot 2,64}{6,28} = 4,48;$$

$$p_{CO} = 1,06(2 \cdot 4,49 + 0,099) - p_{CO_2} = 9,60 - p_{CO_2};$$

$$p_{H_2O} = 9,60 \cdot 1,90 - 0,899 - p_{CO_2} = 17,38 - p_{CO_2};$$

$$p_{H_2} = (2 \cdot 4,49 - 0,099)(-0,44) - 0,338 + 0,899 + p_{CO_2} = p_{CO_2} - 3,46.$$

The quadratic equation is

$$7,38 = \frac{(9,60 - p_{CO_2})(17,38 - p_{CO_2})}{p_{CO_2}(p_{CO_2} - 3,46)};$$

$$6,38p_{CO_2}^2 + 1,46p_{CO_2} - 166,4 = 0;$$

$$p_{CO_2} = \frac{-1,46 \pm \sqrt{1,46^2 + 4 \cdot 6,38 \cdot 166,4}}{2 \cdot 6,38} = 5,00;$$

$$p_{CO} = 9,60 - 5,00 = 4,60;$$

$$p_{H_2O} = 17,38 - 5,00 = 12,38;$$

$$p_{H_2} = 5,00 - 3,46 = 1,54.$$

Proof:

$$p_\Sigma = 4,48 + 5,00 + 4,60 + 12,38 + 1,54 + 0,96 = 29,07;$$

$$(p_\Sigma = 29,00); \quad K_{2a} = \frac{4,60 \cdot 12,938}{1,54 \cdot 5,03} = 7,37 \; (K_{2a} = 7,38).$$

By comparing the partial pressures of the gases which make up the combustion products and which were obtained in the third and fourth estimates, we can see that the maximum difference between them is 0.06 atm (for pH_2O). Further estimates are not required. Hence we accept the composition of combustion products obtained in the fourth estimate as final. We round off the values of the partial pressures to the second decimal place. We shall not consider the content of the atomic nitrogen because its partial pressure amounts to only 0.003 atm. In Figure 89 we show the nature of convergence in the partial pressures calculated in the different approximations with the exact values. Plotting this type of graph is convenient for checking of the process of calculation. The graph in Figure 89 shows, in particular, that in the case involved we could have limited the calculation to three estimates. For higher temperatures the convergence is not as rapid and it is necessary to make additional estimates.

Figure 89. Convergence of the solutions obtained by the method of successive approximation. 1 -- approximation curve; 2 -- exact value of p_{H_2O}; 3 -- number of approximation.

21. On the basis of the given calculation we draw up a table for composition and determination of the state of combustion products at a prescribed temperature (Table 14). The method of filling in the table is evident from its construction. The values for total heat content $I_{total\ i}$ and for standard entropies S_{oi} of the combustion products' components are taken from the appropriate tables for temperature at which the calculation is made. On the lowest line of the table we have given the required values for calculation of the sum of the products:

$$\sum_i p_i;\quad \sum_i \mu_i p_i;\quad \sum_i I_{total\,i} p_i;\quad \sum_i (S_{0_i} p_i - 4{,}57\, p_i \lg p_i).$$

After placing the values found for partial pressures of combustion products components in the table it is necessary to check at once to see if there are any errors in the calculation. For this purpose we make use of absolute balance equations

$$H_{fuel} = \frac{1}{\sum_i \mu_i p_i}(2p_{H_2O} + 2p_{H_2} + p_{OH} + p_H) =$$
$$= \frac{1}{716{,}8}(2\cdot 12{,}38 + 2\cdot 1{,}54 + 0{,}48 + 0{,}20) = 0{,}0398;\ (0{,}040);$$

Table 14

TABLE FOR COMPOSITION AND DETERMINATION OF COMBUSTION PRODUCTS AT A PRESCRIBED TEMPERATURE (COMBUSTION CHAMBER)

T = 3,000° abs.

Gas	p_i, atm	μ_i	$\mu_i p_i$	$I_{total\,i}$ kilo-cal/g-mole	$I_{total\,i} p_i$	S_{0i} cal/g-mole °C	$S_{0i} p_i$	$\lg p_i$	$4,57 p_i \lg p_i$	$S_{0i} p_i - 4,57 p_i \lg p_i$ cal/g-mole °C
N_2	4,48	28	125,5	22,20	99,6	63,77	286,0	0,651	13,3	272,7
CO_2	5,00	44	220,0	−57,31	−286,5	79,91	399,0	0,698	15,9	383,1
CO	4,60	28	128,5	−4,03	−16,5	65,46	312,0	0,673	14,1	297,9
H_2O	12,38	18	223,0	−27,92	−346,0	68,27	845,0	1,093	61,8	783,2
H_2	1,54	2	3,1	21,24	32,7	48,47	74,5	0,187	1,3	73,2
O_2	0,14	32	4,5	23,48	3,3	67,98	9,5	−0,854	−0,5	10,0
OH	0,48	17	8,2	31,55	15,2	61,38	29,4	−0,318	−0,7	30,1
NO	0,10	30	3,0	44,36	4,4	68,85	6,9	−1,000	−0,5	7,4
H	0,20	1	0,2	65,53	14,1	38,86	7,8	−0,698	−0,6	8,4
O	0,05	16	0,8	72,69	3,6	50,09	2,5	−0,302	−0,3	2,8
Total	29,07	—	716,8	—	−476,1		—	—	—	1868,8

$$C_{fuel} = \frac{12}{\sum_i \mu_i p_i}(p_{CO_2} + p_{CO}) = \frac{12}{716,8}(5,00 + 4,60) = 0,1605;\ (0,161);$$

$$O_{fuel} = \frac{16}{\sum_i \mu_i p_i}(2p_{CO_2} + p_{CO} + p_{H_2O} + 2p_{O_2} + p_{OH} + p_{NO} + p_O) =$$

$$= \frac{16}{716,8}(2\cdot 5,00 + 4,60 + 12,38 + 2\cdot 0,14 + 0,48 + 0,10 + 0,05) =$$

$$= 0,6215;\ (0,622);$$

$$N_{fuel} = \frac{14}{\sum_i \mu_i p_i}(2p_{N_2} + p_{NO}) =$$

$$= \frac{14}{716,8}(2{:}4,48 + 0,10) = 0,177;\ (0,177).$$

In parenthesis we give the values H_{fuel}; C_{fuel}; O_{fuel} = N_{fuel} found in the calculation of fuel composition. As a check shows, the composition of the combustion products has been determined without significant errors.

After this we can find the rest of the values which characterize the state of the combustion products. The required values are taken from the composition table.

We determine the total heat content of the combustion products

$$I_{total_{p.c.}} = 1000 \frac{\sum_i I_{n_i} p_i}{\sum_i \mu_i p_i} = 1000 \frac{-476,1}{716,8} = -665 \text{ kilo-cal/kg}.$$

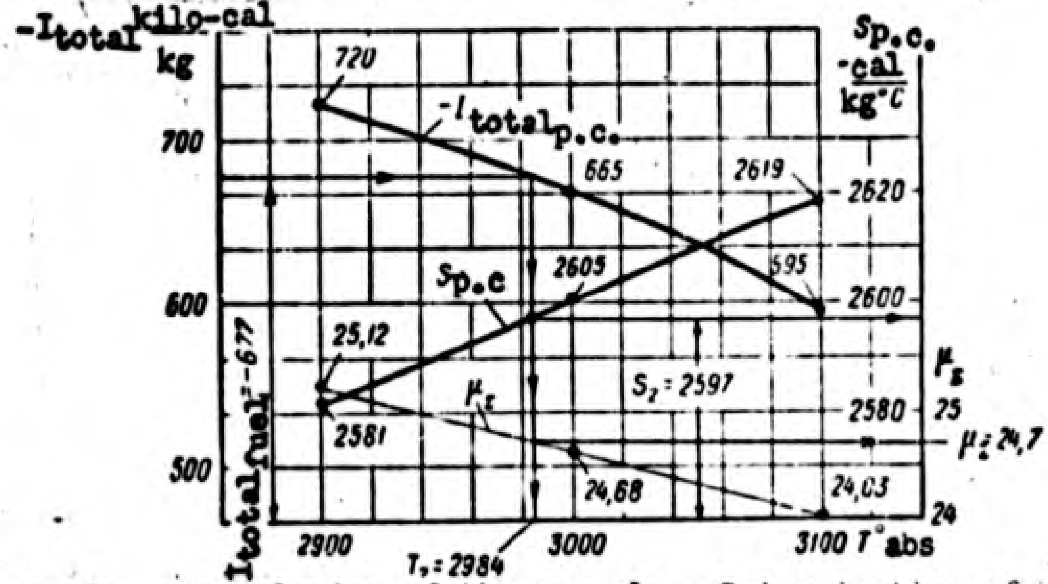

Figure 90. The solution of the example. Determination of I_2; S_2 and μ_2.

We determine the apparent molecular weight of the combustion products

$$\mu_2 = \frac{1}{p_2} \sum_i \mu_i p_i = \frac{716,8}{29,07} = 24,68.$$

The gas constant of the combustion products is equal to $R_2 = \frac{848}{\mu_2} = 34,3$ kg-m/kg°C.

We determine the entropy of the products of combustion

$$S_{p.c} = \frac{1000}{\sum_i \mu_i p_i} \sum_i (S_{0_i} p_i - 4,57 p_i \lg p_i) =$$

$$= 1000 \frac{1868,8}{716,8} = 2605 \text{ cal/kg°C} = 2,605 \text{ kilo-cal/kg°C}.$$

22. In making similar calculations for the temperatures 2,900 and 3,100° absolute we obtain the results given in Table 15.

By constructing a graph (Figure 90) we find:

$$T_2 = 2984° \text{ abs.}; \ S_2 = 2597 \text{ cal/kg°C}; \ \mu_2 = 24,7; \ R_2 = 34,35 \text{ kg-m/kg°C}.$$

TABLE 15

T abs.	I_{total} c.p. kilo-cal/kg	μ_2	R kg-m/kg°C	$S_{c.p}$, cal/kg°C
2900	−720	25,12	33,75	2581
3000	−665	24,68	34,3	2605
3100	−595	24,03	35,3	2619

With this we have completed calculation for the state of combustion products in the combustion chamber.

II. Determination of Composition and Temperature of Combustion Products in the Nozzle Exit.

23. Let us prescribe a reference (guide) value for the isoentropic expansion index. According to data in figure 7, for this instance we may assume the index to be equal to 0.17. We determine the anticipated temperature of the combustion products in the nozzle exit.

$$T_{exp}=T_2\left(\frac{p_3}{p_2}\right)^{\frac{n_{is}-1}{n_{is}}}=2984\left(\frac{0,9}{30}\right)^{\frac{1,17-1}{1,17}}=1670^{\circ}\text{ abs}$$

To calculate the composition and combustion temperature in the nozzle exit we assume three temperature values: 1600°, 1700°, and 1800° absolute.

24. We perform the calculation of the combustion products composition at these temperatures and under a pressure $p_3 = \frac{0.9}{1.033} = 0.87$ atm.

For example, let us consider calculation at T = 1,700° absolute. Since the temperature in the nozzle exit is expected to be relatively low and $\alpha < 1$, we can assume that the content of O_2, OH, NO, H, O, and N in the combustion products will be so small that we can disregard them. Then the combustion products will consist of five basic gases the partial pressures of which are determined from the first approximation by formulas (VI.64), (VI.67):

$$p_{N_2}=\frac{p_\Sigma}{2Q+R+1}=\frac{0,87}{2\cdot 1,06+3,16+1}=0,139;$$

$$p_{CO}=2Qp_{N_2}-p_{CO_2}=2\cdot 1,06\cdot 0,139-p_{CO_2}=0,294-p_{CO_2};$$

$$p_{H_2O}=2Qp_{N_2}(S-1)-p_{CO_2}=0,294\,(2,90-1)-p_{CO_2}=0,554-p_{CO_2};$$

$$p_{H_2}=2p_{N_2}\left[\frac{R}{2}-Q\,(S-1)\right]=2\cdot 0,139\left[\frac{3,16}{2}-1,06\,(2,90-1)\right]+$$

$$+p_{CO_2}=p_{CO_2}-0,122.$$

We take value K_{2a} at 1,700° absolute from the table of Appendix 2.

$$K_{2a}=3,56.$$

The quadratic equation (VI.68) takes on the form

$$3,56=\frac{(0.294-p_{CO})(0.554-p_{CO_2})}{p_{CO_2}(p_{CO_2}-0.122)}$$

or

$$2,56p^2_{CO_2}+0,414p_{CO_2}-0,164=0,$$

whence

$$p_{CO_2}=\frac{-0,414+\sqrt{0,414^2+4\cdot 2,56\cdot 0,164}}{2\cdot 2,56}=0,184;$$

$$p_{CO}=0,294-0,184=0,110;\quad p_{H_2O}=0,554-0,184=0,370;$$

$$p_{H_2}=0,184-0,122=0,062.$$

Proof:

a) According to overall pressure:

$$p_\Sigma=0,139+0,184+0,110+0,370+0,062=0,865;\ (0,87);$$

b) In accordance with the constant of equilibrium

$$K_{2a}=\frac{0,110\cdot 0,370}{0,184\cdot 0,062}=3,57;\quad (K_{2a}=3,56).$$

The first approximation composition has been found correctly.

We check further to determine whether or not we can really disregard the partial pressures of the six gases in this calculation. From Table 14 showing composition, we can see that of the six gases, OH contains the maximum quantity of dissociation products. It would be expedient to check its content at the nozzle exit. For this purpose we take the value for constant $K_3 = 0.625 \times 10^{-5}$. Then:

$$p_{OH} = K_3 \frac{p_{H_2O}}{\sqrt{p_{H_2}}} = 0{,}625 \cdot 10^{-5} \frac{0{,}370}{\sqrt{0{,}062}} = 0{,}925 \cdot 10^{-5} \approx 0{,}00001 \text{ atm.}$$

As we can see from the calculation of OH, we can actually completely disregard partial pressures for dissociation products. Hence we can consider the composition obtained in the first estimate as final.

25. We draw up a table for composition and determination of the state of combustion products at the prescribed temperature (Table 16). We check for absence of errors in calculating by the balance equations, and we find the state of the combustion products at 1,700° absolute temperature.

$$H_{fuel} = \frac{1}{\sum_i \mu_i p_i}(2p_{H_2O} + 2p_{H_2}) =$$

$$= \frac{1}{21{,}74}(2 \cdot 0{,}370 + 2 \cdot 0{,}062) = 0{,}039; \ (0{,}040);$$

TABLE 16

Table for composition of combustion products at the prescribed temperature

(nozzle exit)

T = 1,700° absolute

Gas	p_i, atm.	μ_i	$\mu_i p_i$	$I_{total\,i}$, kilo-cal/kg-mole°C	$I_{total\,i} p_i$	S_{0i} cal/kg-mole°C	$S_{0i} p_i$	$\lg p_i$	$4{,}57 p_i \lg p_i$	$S_{0i} p_i - 4{,}57 p_i \lg p_i$ cal/kg-mole°C
N_2	0,139	28	3,89	10,89	1,52	58,81	8,18	−0,857	−0,55	8,73
CO_2	0,184	44	8,10	−76,42	−14,02	71,58	13,17	−0,735	−0,62	13,79
CO	0,110	28	3,08	−15,41	−1,70	60,50	6,66	−0,958	−0,49	7,15
H_2O	0,370	18	6,65	−43,97	−16,25	61,29	22,68	−0,432	−0,73	23,41
H_2	0,062	2	0,12	10,27	0,64	43,70	2,71	−1,207	−0,34	3,05
Total	0,865	—	21,74	—	−29,81	—	—	—	—	56,13

$$C_{fuel}=\frac{1}{\sum\limits_i \mu_i p_i}(p_{CO_2}+p_{CO})=\frac{12}{21,74}\ (0,184+0,110)=0,162;\quad (0,161);$$

$$O_{fuel}=\frac{16}{\sum\limits_i \mu_i p_i}(2p_{CO_2}+p_{CO}+p_{H_2O})=$$

$$=\frac{16}{21,74}(2\cdot 0,184+0,110+0,370)=0,623;\ (0,622);$$

$$N_{fuel}=\frac{14}{\sum\limits_i \mu_i p_i}\ 2p_{N_2}=\frac{14}{21,74}\cdot 2\cdot 0,139=0,179;\quad (0,177);$$

$$I_{total\,p.c.}=1000\ \frac{\sum\limits_i I_{n_i}p_i}{\sum\limits_i \mu_i p_i}=1000\ \frac{-29,81}{21,74}=-1370\ \text{kilo-cal/kg};$$

$$\mu_z=\frac{1}{p_z}\sum_i \mu_i p_i=\frac{1}{0,865}\cdot 21,74=25,12;$$

$$R=\frac{848}{25,12}=33,8\text{kg-m/kg}^\circ\text{C};$$

$$S_{p.c}=\frac{1000}{\sum\limits_i \mu_i p_i}\sum_i (S_{0_i}p_i-4,57p_i\lg p_i)=$$

$$=1000\ \frac{56,13}{21,74}=2582\ \text{cal/kg}^\circ\text{C}.$$

On the basis of the calculation given above and others we obtain the results given in Table 17.

Table 17

T abs.	$I_{total\,p.c.}$ kilo-cal/kg	$S_{p.c}$ cal/kg $^\circ$C	μ_z	R kg-m/kg $^\circ$C
1600	−1440	2532	25,32	33,5
1700	−1370	2582	25,12	33,7
1800	−1312	2640	24,9	34,1

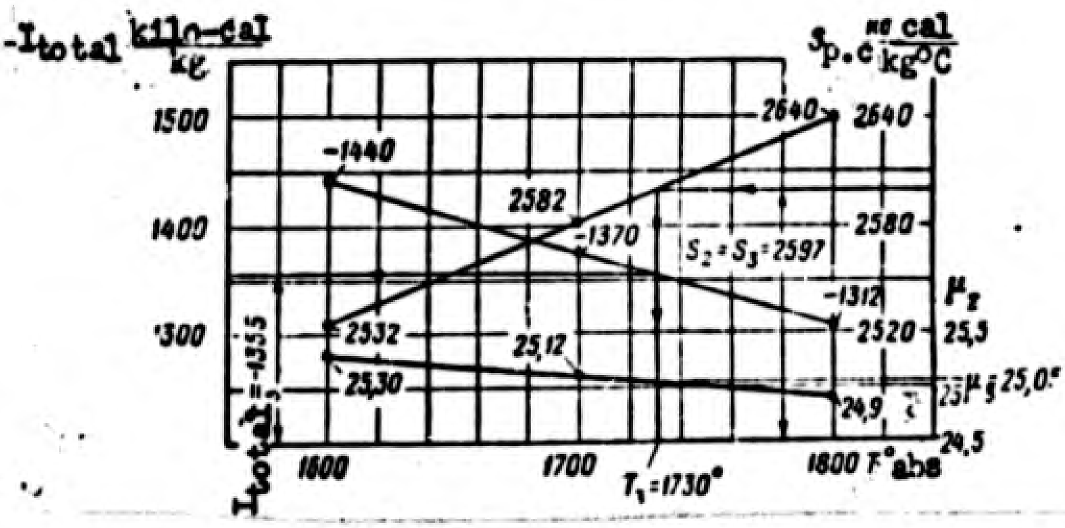

Figure 91. The solution of the example. Determination of T_3; S_3 and μ_3.

26. According to the data in Table 17 we determine graphically in Figure 91 (with the value of the entropy found earlier in the combustion chamber S_2 = 2,597 cal/kg °C):

$$T_3 = 1730^\circ \text{ abs}; I_{total_3} - 1355 \text{ kilo-cal/kg};$$

$$\mu_3 = 25{,}05;\ R_3 = \frac{848}{25{,}05} = 33.9 \text{ kg-m/kg}^\circ\text{C}.$$

Hence we have found the state of the combustion products at the nozzle exit.

III. Determination of Specific Thrust and Dimensions of the Critical and Exhaust Sections of the Nozzle.

27. We determine the drop in total heat content;

$$\Delta I_{total} = I_{total\,comb} - I_{total_3} = -677 - 1355 = 678 \text{ kilo-cal/kg}.$$

28. We determine the velocity of discharge;

$$w_3 = 91{,}5\sqrt{\Delta I_{total}} = 91{,}5\sqrt{678} = 2380 \text{ m/sec}.$$

29. We determine the specific weight of the combustion products at the nozzle exit. According to formula (VI.75);

$$\gamma_3 = \frac{p_3}{R_3 T_3} = \frac{0{,}9 \cdot 10^4}{33{,}9 \cdot 1730} = 0{,}1535 \text{ kg/m}^3.$$

30. We determine the specific passage section of the nozzle according to formula (VI.77);

$$f'_3 = \frac{1}{\gamma_3 w_3} = \frac{1}{0{,}1535 \cdot 2380}\ 26{,}4 \cdot 10^{-4} \text{ m}^2\text{/kg} = 26{,}4 \text{ cm}^2\text{/kg}.$$

31. We determine the theoretical specific thrust. Based on formula (VI.78);

$$P_{theo\ sp} = \frac{w_3}{g} + f'_3(p_3 - p_H) = \frac{2380}{9{,}81} + 26{,}4\,(0{,}9 - 1{,}0) = 239{,}6 \text{ kg sec/kg}.$$

32. We determine the specific thrust according to formula (VI.93);

$$P_{sp} = P_{theo\ sp} \cdot \varphi_{ch} \cdot \varphi_{noz} = 239{,}6 \cdot 0{,}95 \cdot 0{,}97 = 221 \text{ kg sec/kg}.$$

33. We determine fuel consumption and individual component consumption;

$$G_\Sigma = \frac{P}{P_{sp}} = \frac{1200}{221} = 54{,}3 \text{ kg/sec};$$

$$G_{comb} = G_\Sigma \frac{1}{1+\nu} = \frac{54{,}3}{5{,}37} = 10{,}1 \text{ kg/sec};$$

$$G_o = G_\Sigma \frac{\nu}{1+\nu} = \frac{4{,}37}{5{,}37} 54{,}3 = 43{,}2 \text{ kg/sec}.$$

34. We determine the dimensions of the exhaust nozzle section according to formula (VI.96);

$$f_3 = \frac{f_{3\,theo}}{\varphi_{noz}},$$

where

$$f_{3theo} = f'_3\, G_{theo} = f'_3 \frac{P}{P_{theo\,sp}} = 26{,}4\, \frac{12\,000}{239{,}6} = 1321 \text{ cm}^2;$$

$$f_3 = \frac{1321}{0{,}97} = 1363 \text{ cm}^2.$$

35. We determine the isoentropic index according to formulas (VI.81);

$$n_{is} = \frac{\lg \frac{p_3}{p_2}}{\lg \frac{R_2T_2}{R_3T_3} \frac{p_3}{p_2}} = \frac{\lg \frac{0{,}9}{30}}{\lg \frac{34{,}3 \cdot 2984}{33{,}9 \cdot 1730} \frac{0{,}9}{30}} = 1{,}19.$$

36. Making use of the graph in Figure 59 or the formula (III.65) for the pressure ratios $\frac{30}{0.9} = 33.3$ and $n_{is} = 1.19$, we find the required nozzle expansion $\frac{f_3}{f_{cr}}$, which is equal to 5.8. Consequently

$$f_{cr} = \frac{1363}{5{,}08} = 268 \text{ cm}^2.$$

Hence the task of calculating heat has been accomplished. We have found the fuel consumption and the dimensions of the critical and exhaust section of the nozzle.

37. The accuracy of determination of the critical section area must be checked by finding the actual value of the parameter complexes β and equating it with β_{theo}, estimated roughly for a given fuel. Let us note that this check concerns not only one critical section but the entire thermal calculation

$$\beta = \frac{F_{cr}p_2}{G_\Sigma} = \frac{268\cdot 30}{54,3} = 148 \text{ kg sec/kg};$$

$$\beta_{theo} = \frac{\beta}{\varphi_{ch}} = \frac{148}{0,95} = 156 \text{ kg sec/kg}.$$

The value found for β_{theo} differs very little from the data calculated for this same fuel (see, for example, Figure 86). Hence we consider that the heat calculation was made without any substantial error.

Calculation of the Combustion Products' Composition for Fuel Containing No Nitrogen

Find the composition of the combustion products of fuel with the following composition: combustible -- 96% ethyl alcohol, oxidizer -- liquid oxygen at $\alpha = 1$; $C_{fuel} = 0.167$; $H_{fuel} = 0.043$; $O_{fuel} = 0.790$; the pressure 36 atm and temperature 3,400° absolute.

1. We calculate the pressure in physical atmospheres

$$p_k = \frac{36}{1,033} = 34,80 \text{ atm}.$$

2. We take the values of the required constants at a temperature of 3,400° absolute equal to

$$K_1 = 1,226;\quad K_2 = 0,154;\quad K_3 = 0,193;\quad K_4 = 0,217;\quad K_6 = 0,160.$$

3. We determine the values of the constants for the complete calculation of the coefficients

$$A = \frac{3}{4}\frac{O_{fuel}}{C_{fuel}} = \frac{3}{4}\frac{0,790}{0,167} = 3,55;\quad B = \frac{1}{16}\frac{C_{fuel}}{H_{fuel}} = \frac{1}{16}\frac{0,790}{0,043} = 1,15.$$

The First Approximation

4. We take the value of the partial pressure for oxygen from the first estimate, $p_{O_2} = a^2 = 2.50$; $a = 1.58$.

5. According to formulas (VI.41-VI.44) we calculate the value of the coefficients

$$b = \frac{K_1}{a} = \frac{1,226}{1,58} = 0,777; \quad p_{CO} = 0,777 p_{CO_2};$$

$$c = \frac{K_2}{a} = \frac{0,154}{1,58} = 0,097; \quad p_{H_2} = 0,097 p_{H_2O};$$

$$d = \frac{K_3}{\sqrt{c}} = \frac{0,193}{\sqrt{0,097}} = 0,620; \quad p_{OH} = 0,620 \sqrt{p_{H_2O}};$$

$$e = \sqrt{K_4}\sqrt{c} = \sqrt{0,217 \cdot 0097} = 0,145; \quad p_H = 0,145 \sqrt{p_{H_2O}};$$

$$f = \sqrt{K_5 a} = \sqrt{0,16 \cdot 1,58} = 0,632; \quad p_O = f = 0,632.$$

6. We find the first quadratic equation. For this purpose we use equation (VI.45)

$$\frac{2a^2 + 2p_{CO_2} + bp_{CO_2} + p_{H_2O} + d\sqrt{p_{H_2O}} + f}{p_{CO_2} + bp_{CO_2}} = A.$$

After substitution of values found for partial pressures, this equation has the form

$$\frac{2 \cdot 2,50 + 2p_{CO_2} + 0,777 p_{CO_2} + p_{H_2O} + 0,620\sqrt{p_{H_2O}} + 0,632}{p_{CO_2} + 0,777 p_{CO_2}} = 3,55.$$

After cancelling like terms, we obtain the first quadratic equation

$$-3,540 p_{CO_2} + p_{H_2O} + 0,620 \sqrt{p_{H_2O}} + 5,632 = 0.$$

7. [illegible] the [illegible]

$$\frac{[illegible]\, p_{CO_2} + bp_{CO_2} + p_{H_2O} + d\sqrt{p_{H_2O}} + f}{2cp_{H_2O} + 2p_{H_2O} + d\sqrt{p_{H_2O}} + e\sqrt{p_{H_2O}}} = B$$

we substitute the values found for the partial pressures;

$$\frac{2 \cdot 2,50 + 2p_{CO_2} + 0,777 p_{CO_2} + p_{H_2O} + 0,620\sqrt{p_{H_2O}} + 0,632}{2 \cdot 0,097 p_{H_2O} + 2p_{H_2O} + 0,620\sqrt{p_{H_2O}} + 0,145\sqrt{p_{H_2O}}} = 1,15.$$

Cancelling like terms, we obtain

$$-2,777 p_{CO_2} - 1,52 p_{H_2O} - 0,261 \sqrt{p_{H_2O}} + 5,632 = 0.$$

8. We multiply the second quadratic equation by the ratio $\frac{3.540}{2.777}$ and add the result to the first equation. We thus obtain

$$0{,}888p_{H_2O}-0{,}296\sqrt{p_{H_2O}}+12{,}632=0.$$

9. We solve the equation obtained for p_{H_2O}:

$$\sqrt{p_{H_2O}}=\frac{0{,}296\pm\sqrt{0{,}296^2+4\cdot 0{,}888\cdot 12{,}632}}{2\cdot 0{,}888}=3{,}93.$$

Of the two solutions we take only the positive because with a negative $\sqrt{p_{H_2O}}$, even though p_{H_2O} will have a positive value, still, for example, $p_{OH} = d\sqrt{p_{H_2O}}$ becomes negative, which is impossible.

10. We find the partial pressures of the hydrogen-containing gases:

$$p_{H_2O}=(\sqrt{p_{H_2O}})^2=15{,}50;\quad p_{H_2}=cp_{H_2O}=0{,}097\cdot p_{H_2O}=$$
$$=0{,}097\cdot 15{,}50=1{,}51;$$
$$p_{OH}=d\sqrt{p_{H_2O}}=0{,}620\sqrt{p_{H_2O}}=0{,}620\cdot 3{,}93=2{,}45;$$
$$p_{H}=e\sqrt{p_{H_2O}}=0{,}145\cdot 3{,}93=0{,}57.$$

11. We find the partial pressures of the hydrocarbon gases. For this purpose, we substitute the value found for p_{H_2O} in the first quadratic equation:

$$-3{,}54p_{CO_2}+15{,}50+2{,}45+12{,}632=0,$$

whence

$$p_{CO_2}=6{,}65 \text{ and } p_{CO}=bp_{CO_2}=0{,}777\cdot 6{,}65=5{,}13.$$

12. We place the results of the calculation in the table for composition (Table 18).

Table 18

T = 3,400° abs

Gas	O_2	O	H_2O	H_2	OH	H	CO_2	CO	Total
p_i	2,50	0,63	15,50	1,51	2,45	0,57	6,65	5,13	34,94
μ_i	32	16	18	2	17	1	44	28	—
$\mu_i p_i$	80,0	10,1	278,8	3,0	41,6	0,6	293,0	143,5	850,6

13. We check to see whether there are errors in the solution by making use of the absolute balance equations (VI.27), (VI.28), and (VI.29), taking account of (VI.33)

$$H_{fuel}=\frac{1}{\sum_i \nu_i p_i}(2p_{H_2}+2p_{H_2O}+p_{OH}+p_H)=$$

$$=\frac{1}{850{,}6}(2\cdot 1{,}51+2\cdot 15{,}5+2{,}45+0{,}57)=0{,}0433;\quad (H_{fuel}=0{,}043);$$

$$C_{fuel}=\frac{12}{\sum_i \nu_i p_i}(p_{CO_2}+p_{CO})=\frac{1}{850{,}6}(6{,}65+5{,}13)=0{,}166;\quad (C_{fuel}=0{,}167);$$

$$O_{fuel}=\frac{16}{\sum_i \nu_i p_i}(2p_{CO_2}+2p_{O_2}+p_{H_2O}+p_{CO}+p_{OH}+p_O)=$$

$$=\frac{1}{850{,}6}(2\cdot 6{,}65+2\cdot 2{,}5+15{,}50+5{,}13+2{,}45+0{,}63)=0{,}790;$$

$$(O_{fuel}=0{,}790).$$

In the parentheses are indicated the values of H_{fuel}, C_{fuel}, and D_{fuel} used in the calculation. As can be seen, no errors have been made in the determination of composition.

14. Since the value p_Σ = 34.94 obtained in the calculation is greater than the specified pressure in the combustion chamber p_2 = 34.30 atm, we introduce a second calculation, specifying a smaller value for p_{O_2}.

15. We select a new value $a^2 = p_{O_2} = 2.45$ and make calculation just as we did before. After the checking, we place the values obtained for partial pressures in a table of composition (Table 19).

Table 19

p_{O_2}	p_O	p_{H_2O}	p_{H_2}	p_{OH}	p_H	p_{CO_2}	p_{CO}	p_Σ
2,45	0,63	14,70	1,45	2,35	0,56	6,43	5,04	33,62

As we can see, the pressure p_Σ, obtained as a result of the second calculation, is less than the specified pressure p_2.

16. We recalculate composition at a specified pressure of 34.80 physical atmospheres, assuming that, in the narrow interval of pressure between 34.94 and 33.62 atm, the partial pressures change in accordance with the linear law, that is,

$$p_{i\,34{,}80}=p_{i\,34{,}94}-\Delta p_i\,\frac{34{,}94-34{,}80}{34{,}94-33{,}62}=p_{i\,34{,}94}-0{,}106\,\Delta p_i,$$

where

$$\Delta p_i = p_{i,4,94} - p_{i\,33,62}.$$

A recalculation of the partial pressures is given in Table 20. In giving them, we round the values obtained.

Table 20

Gas	O_2	O	H_2O	H_2	OH	H	CO_2	CO	Total
$p_{i\,34,94}$	2,50	0,63	15,50	1,51	2,45	0,57	6,65	5,13	34,94
$p_{i\,33,62}$	2,45	0,63	14,70	1,45	2,36	0,56	6,43	5,04	33,62
Δp_i	0,05	0,00	0,80	0,06	0,09	0,01	0,22	0,09	1,32
$0,106\,\Delta p_i$	0,005	0,00	0,085	0,0064	0,0095	0,0010	0,023	0,0095	—
$p_{i\,34,80}$	2,50	0,63	14,41	1,50	2,44	0,57	6,63	5,12	34,80

Hence the composition of the combustion products at the temperature 3,400° absolute and $p_2 = 36$ kg/cm^2 has been found.

QUESTIONS FOR REVIEW

1. Into what groups do we divide the equation systems which determine the composition of combustion products at a prescribed temperature?

2. What influence does pressure have on the composition of the combustion products of hydrogen and oxygen?

3. What influence does temperature have on the composition of the combustion products?

4. State the equation for nitrogen balance and explain how it is obtained.

5. How can we determine the apparent molecular weight of the combustion products μ_Σ?

6. How can we determine the total number of grammolecules of the combustion products M_Σ per kg of fuel?

7. Find the volumetric content (r_i) of the gas components obtained in the heating of hydrogen up to T = 4,000° absolute, at p_Σ = 10 atm; at p_Σ = 100 atm. Explain the result obtained.

8. State the equation for the conservation of energy in fuel combustion in the chamber with an absence of heat losses.

9. Explain the method for calculating temperature and composition of the combustion products in the engine chamber.

10. Explain how to calculate temperature at the nozzle exit.

11. How can we determine the theoretical velocity of nozzle discharge?

12. How can we determine the theoretical nozzle dimensions?

13. How can we complete the calculation of heat according to the $I_{total}S$ diagram?

14. Explain the influence of temperature on composition of the combustion products.

15. What influence does the pressure in the combustion chamber have on the specific thrust of a rocket engine and the geometrical dimensions of the nozzle?

16. How can the coefficient of the chamber φ_{ch} be determined experimentally?

17. How can the experimental coefficients in calculating actual specific thrust and the geometrical dimensions of the nozzle be accounted for?

8. State the equation for the conservation of energy in fuel combustion in the chamber with an absence of heat losses.

9. Explain the method for calculating temperature and composition of the combustion products in the engine chamber.

10. Explain how to calculate temperature at the nozzle exit.

11. How can we determine the theoretical velocity of nozzle discharge?

12. How can we determine the theoretical nozzle dimensions?

13. How can we complete the calculation of heat according to the $I_{total}S$ diagram?

14. Explain the influence of temperature on composition of the combustion products.

15. What influence does the pressure in the combustion chamber have on the specific thrust of a rocket engine and the geometrical dimensions of the nozzle?

16. How can the coefficient of the chamber φ_{ch} be determined experimentally?

17. How can the experimental coefficients in calculating actual specific thrust and the geometrical dimensions of the nozzle be accounted for?

F-TS-9741/V

LIQUID-FUEL ROCKET ENGINES THEORY AND DESIGNING [Part II of II Parts]

BY: G. B. Sinyaryev and M. V. Dobrovol'skiy

March 1960, 790 Pages

MASTER

F-TS-9741/V

ZHIDKOSTNYYE RAKETNYYE DVIGATELI

TEORIYA I PROYEKTIROVANIYE

Gosudarstvennoye Izdatel'stvo Oboronnoy Promyshlennosti

Moscow 1957

Foreign Pages: 580

CHAPTER VII

COOLING LIQUID-FUEL ROCKET ENGINES

Section 39. Basic Information from the Heat Transfer Course.

The Transmission of Heat.

Before proceeding to consider the special characteristics of cooling liquid-fuel rocket engines, we shall briefly review some of the basic information presented as part of the course on heat transfer.[1]

In the heat transfer process heat is always transmitted from a body having a higher temperature to a body having a lower temperature, i.e., from a warmer to a cooler body.

The heat flow, which we shall designate here by a symbol Q, is the total quantity of heat transmitted by the body during a unit of time. Here, we shall express these magnitudes in terms of kilocalories per hour or kilocalories per second.

The intensity of heat exchange is determined by the magnitude of the specific heat flow q, i.e., the quantity of heat that passes through a unit of surface of a body per unit of time. Thus the value for the specific heat flow is expressed in terms of kilocalories/m^2 per second.

The transfer of heat from one body to another body and to the interior of a given body may take place in a number of different ways depending upon the structure of the bodies in question, their physical state, and various other factors.

---

[1] M. A. Mikheyev, Osnovy telploperedachi /Heat Transfer Principles7, Gosenergoizdat, 1949.

In the heat transfer process we distinguish three basic forms of heat transmission: heat conduction, heat exchange by means of convection, and heat radiation.

Heat transfer by means of heat conduction occurs only when there is direct contact between particles of the bodies. Where such is the case, the transfer of energy in liquid and solid bodies (dielectrica) is effected by propagation of elastic waves; in gases the transfer is effected by the diffusion of atoms or molecules; and in metals the transfer is effected through the diffusion of free electrons.

Heat exchange by means of convection occurs only in liquids and gases. In this type of exchange heat is transferred directly by a shifting of particles (volumes) of gas.

Heat radiation is the process of propagation of energy in the form of electromagnetic waves. The radiation of heat is accompanied by a conversion of heat energy into radiant energy, and vice versa.

In technical devices and heat engines heat usually is transmitted by two or three of the above-mentioned methods at the same time. Under these circumstances it will at times be very difficult to determine precisely by what method the greater part of the heat is being transferred.

Heat Exchange by Means of Heat Conduction.

Where heat conduction alone is involved, the transfer of heat can occur only through solid, opaque bodies.

In liquid-fuel rocket engines, heat exchange by conduction in its pure form occurs upon transfer of heat through the solid (nonporous) wall of the combustion chamber toward the cooling liquid. The quantity of heat transferred by conduction can be determined as follows:

Let us assume that the wall in question has a thickness of m and an area of F m^2 (Figure 92).

Suppose the temperature of the heated surface is equal to $T_1\,^{\circ}C$, and the

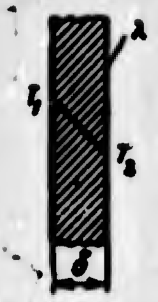

Figure 92. Determination of heat exchange by conduction of heat.

temperature of the cold surface is equal to T_2° C. The flow of heat passing through the wall per unit of time from the heated surface to the cool surface, i.e., Q kilocalories per hour, can be determined by the formula;

$$Q = \frac{\lambda}{\delta} F(T_1 - T_2), \tag{VII.1}$$

whence the specific heat flow is;

$$q = \frac{Q}{F} = \frac{\lambda}{\delta}(T_1 - T_2).$$

where λ is the <u>heat conduction coefficient</u>. It characterizes the capacity of a given body for conducting heat.

According to formula (VII.1)

$$\lambda = \frac{Q\delta}{F(T_1 - T_2)} \text{ kilo-cal/m/m}^2 \text{ per hour per °C (or kilo-cal/m per hour °C.} \tag{VII.2}$$

Sometimes the magnitude of the heat conduction coefficient λ is expressed in terms of cal/m sec °C.

The heat conduction coefficient is determined by the quantity of heat that passes through a unit of surface per unit of time with a temperature difference of one degree per unit of thickness of the wall. The higher the heat conduction coefficient, the easier it will be for the heat to pass through the wall, and the difference in temperatures arising in a wall of given thickness will be correspondingly smaller.

The value of the heat conduction coefficient varies from one substance and one body to another. The heat conduction coefficient is dependent in each instance on the temperature, on the density, on the humidity, and on the structure.

For gases the heat conduction coefficient ranges somewhere from λ = 0.005 kilo-cal/m hour °C to λ = 0.5 kilo-cal/m hour °C. As the temperature rises, the value of λ increases. This coefficient is practically independent of gas pressure.

For liquids in drop form, the heat conduction coefficient lies somewhere between 0.08 and 0.60 kilo-cal/m hour °C. For most liquids (other than water and glycerine) the value of λ drops as the temperature rises.

For various types of structural and heat-insulating materials (brick, wood, leather, mineral wool, etc.), the heat conduction coefficient lies somewhere between λ = 0.02 and λ = 2.5 kilo-cal/m hour °C.

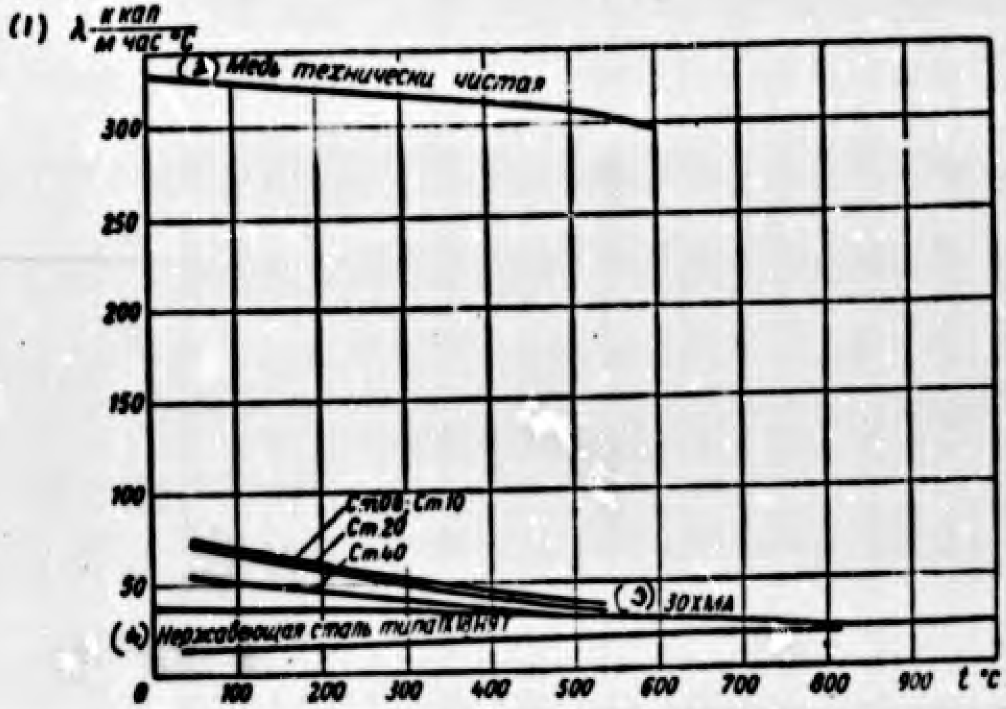

Figure 93. The relation between temperatures and the heat conductance coefficient for some metals.

1 -- $\lambda \frac{\text{kilo-cal}}{\text{m hour °C}}$; 2 -- technically-pure copper; 3 -- 30KhMA steel; 4 -- stainless steel of the 1Kh18N9T type.

For metals the heat conduction coefficient lies somewhere between λ = 2 and λ = 360 kilo-cal/m hour °C. For most metals the heat conduction coefficient declines as the temperatures increases. If there are any impurities present in the metal, the heat conduction coefficient declines sharply. For this reason alloys usually have a low heat conduction coefficient.

Figure 93 shows the relation between the temperatures and the coefficient of heat conduction for several metals.

Heat Exchange by Means of Convection.

Heat exchange by means of convection (convectional heat exchange) occurs in the transmission of heat through liquids and gases, and also in the transfer of heat from a liquid or gas to a wall, or vice versa, from a wall to a liquid or gas. A heat exchange by means of convection is always accompanied by heat exchange through conduction.

In convectional heat exchanges the transfer of heat is inseperably linked with the movement of the moving particles of the liquid or gas; and for this reason, the exchange of heat by convection is a very complicated process and is dependent upon a large number of different factors.

As regards liquid-fuel rocket engines, heat is transferred by convection from the heated combustion products that move about through the combustion chamber and the jet nozzle to the walls, or away from the walls toward the cooling liquid. The flow of heat transmitted from the gas to the wall by means of convection can be determined by the following formula:

$$Q = \alpha \cdot F (T_1 - T_2), \tag{VII.3}$$

where F is the area of the surface (in m^2) through which the heat is exchanged;

T_1 is the temperature of the gas, in °C;

T_2 is the temperature of the wall in °C; and

α is the heat transfer coefficient.

The heat transfer coefficient is dependent upon the conditions of heat exchange between the liquid or gas and the wall. As indicated by equation (VII.3) above,

$$\alpha = \frac{Q}{F(T_1 - T_2)} \text{ kilo-cal/m}^2 \text{ hour } {}^\circ\text{C} \tag{VII.4}$$

Consequently the heat transfer coefficient is determined by the quantity of heat transmitted per unit of time through a unit of surface, with a temperature difference of one degree between the surface and the liquid or gas.

In a convectional heat exchange the transfer of heat from a gas or liquid to a wall, or vice versa, from a wall to a liquid or gas, is inseperably connected with the motion of the particles of the liquid or gas themselves. It is precisely from these particles, as they get close to the wall, that the energy in the form of heat is given out or carried away into the mass of the liquid.

It will therefore be clear that the greater the number of particles that transmit their energy (as determined by temperature T_1) to the wall, the higher will be the value of the heat transfer coefficient. The number of particles reaching the wall, and therefore in a position to exchange energy with it, will be proportional to the speed of their movement and (for gases) to the number of particles per unit of volume, i.e., to the density.

Consequently the quantity of heat transmitted to the wall will be proportional to the product of the density of the flow multiplied by its speed, i.e., ρw. This product is known as the mass velocity. The greater the mass velocity, the greater will be the heat transfer. Thus for liquid-fuel rocket engines, for instance, the mass velocity for the movement through the jet nozzle will, according to the continuity equation, be expressed by the following equation:

$$\rho w = \frac{G}{gf}. \tag{VII.5}$$

Since the values of G and g are constant for the length of the jet nozzle, the mass velocity obviously must reach its maximum value in the critical section of the nozzle, where f has its smallest value.

Experiments have shown that the greatest heat convection currents do in fact occur in the cirtical section of the nozzle.

The mass velocity, and consequently also the heat transfer coefficient from the gas to the wall, is dependent upon pressure. With increasing pressure, the density ρ is increased, and the mass velocity likewise increases. There is an increase also in the heat transfer from gas to wall.

For the movement of an incomprensible liquid ρ =const, and the heat transfer coefficient α is dependent for the most part on velocity w. Such is the situation that prevails in the cooling jacket of a liquid-fuel rocket engine.

Aside from the mass velocity, the magnitude of the heat transfer coefficient also shows the influence of a number of other factors: heat conduction, specific heat of the gas, the shape of the channel, etc.

In computing heat flows for heat exchanges by convection, many difficulties are encountered in determining the heat transfer coefficient α. It is a very difficult matter to determine the theoretical heat transfer coefficient and sometimes it is quite impossible. For this reason the heat transfer coefficient usually is computed with the aid of formulae based on the results of a large number of experimental determinations made on similar installations. These formulae show the relation between the heat transfer coefficient and that of heat conductance, the mass velocity of the gas flow, and gas temperature.

Formulae for Computation of the Heat Transfer Coefficient.

Two formulae will be found in the following for computing the heat transfer coefficient for conditions of heat exchange that are closely similar to the conditions that prevail in the liquid-fuel rocket engine.

If one wishes to compute the heat transfer coefficient from the heated gas to the wall, if the gas is flowing through a smooth cylindrical tube, the formula that must at present be considered the most reliable is the semiempirical formula devised by Gukhman-Ilyukhin, which has been experimentally proven for numbers $M \leqslant 1$.*

---

* A. A. Gukhman and N. V. Ilyukhin, Osnovy ucheniya o teploobmene pri techenii gaza s bol'shoy skorost'yu /Principles of Heat Exchange in High-velocity Gas flow/, Mashgiz, 1951.

This equation takes the form:

$$\frac{\alpha_{gas} d}{\lambda_{gw}} = 0{,}0162 \left(\frac{\gamma w c_{p\,gw}\, d}{\lambda_{gw}} \right)^{0,82} \left(\frac{T^*}{T_{gw}} \right)^{0,35}. \quad \text{[g.w. = gas wall]} \tag{VII.6}$$

where α_{gas} is the heat transfer coefficient from gas to wall, in kilo-cal/m^2 sec °C;

C_p g.w. and λ g.w. are the specific heat in kilo-cal/kg °C; the heat conduction coefficient in kilo-cal/m sec °C of the gas and the combustion products at the temperature of the gas chamber wall;

w is the speed of movement of the gases in m/sec;

d is the internal diameter of the tube in m;

γ is the specific gravity of the flowing gas in kg/m^3;

Tgw is the temperature of the wall to which the gas transmits its heat - the heat of the hot wall in ° abs;

T^* is the deceleration temperature of the gas flow in ° abs. For the purpose of computing heat exchange in the liquid-fuel rocket engine we assume $T^* = T_2$, throughout the entire length of the combustion chamber and the jet nozzle.

Since we shall make use of this relationship later on, we shall present it here, in this connection, in a simpler form.

From the formula (VII.6) we get:

$$\alpha_{gas} = 0{,}0162 \frac{\lambda_{r.cr}^{0,18}}{d^{0,18}} (\gamma w c_{p\,gw})^{0,82} \left(\frac{T_2}{T_{gw}} \right)^{0,35}. \tag{VII.7}$$

We multiply and divide the right half of equation (VII.7), by the complex:

$$(c_{p\,gw}\, g \mu_{gw})^{0,18},$$

where μgw is the dynamic viscosity of the heated gases, at the temperature of the gas chamber wall in kg-sec/m^2.

Thus we have:

$$\alpha_{gas} = 0{,}0162 \frac{\lambda_{gw}^{0.18}}{(c_{p\,gw}\, g\mu_{gw})^{0.18}} \frac{(c_{p\,gw}\, g\mu_{gw})^{0.18}}{d^{0.18}} \times$$

$$\times (\gamma w c_{p\,gw})^{0.82} \left(\frac{T_1}{T_{gw}}\right)^{0.35}. \qquad \text{(VII.8)}$$

The value for $\frac{\lambda_{gw}}{c_{p\,gw}\, g\mu_{gw}}$ is dependent only upon the composition of the gases and is not dependent upon temperature and pressure. So far as the liquid-fuel rocket engines operating on ordinary fuels are concerned, this value varies within a small range, and can be assumed to be equal to 1.25, i.e.,

$$\frac{\lambda_{gw}}{c_{p\,gw}\, g\mu_{gw}} = 1{,}25. \qquad \text{(VII.9)}$$

From the continuity equation we get:

$$G = \gamma w F, \qquad \text{(VII.10)}$$

where G is the consumption, per second, of the gas mixture in kg/sec;

F is the cross section area in m^2.

From formula (VII.10) we have

$$\gamma w = \frac{G}{F} = \frac{4G}{\pi d^2}. \qquad \text{(VII.11)}$$

Substituting (VII.9) and (VII.11) in the equation (VII.8) we get:

$$\alpha_{gas} = 0{,}0162\,(1{,}25)^{0.18} \frac{(c_{p\,gw}\, g\mu_{gw})^{0.18}}{d^{0.18}} \left(c_{p\,gw} \frac{4G}{\pi d^2}\right)^{0.82} \left(\frac{T_2}{T_{gw}}\right)^{0.35}$$

or

$$\alpha_{gas} = 0{,}0162\,(1{,}25)^{0.18} \left(\frac{4}{\pi}\right)^{0.82} c_{p\,gw}\,(g\mu_{gw})^{0.18} \frac{G^{0.82}}{d^{1.82}} \left(\frac{T_2}{T_{gw}}\right)^{0.35},$$

so that after computing the numerical value for the constant coefficient we get the following equation:

$$\alpha_{gas} = 0{,}0206\, c_{p\,gw}\,(g\mu_{gw})^{0.18} \frac{G^{0.82}}{d^{1.82}} \left(\frac{T_2}{T_{gw}}\right)^{0.35}. \qquad \text{(VII.12)}$$

In this equation α_{gas} is expressed in terms of cal/m^2 sec °C. Ordinarily, however, the heat transfer coefficient is expressed in terms of kilo-cal/m^2 hour °C; and the formula (VII.12) then reads as follows:

$$\alpha_{gas} = 74{,}3\, c_{p,gw} (g\mu_{gw})^{0.18} \frac{G^{0.82}}{d^{1.82}} \left(\frac{T_2}{T_{gw}}\right)^{0.35}. \qquad \text{(VII.13)}$$

This is the formula used in computing heat exchange in the liquid-fuel rocket engines.

The following empirical relationship is given for computation of the heat transfer coefficient in the case of flow of an incompressible liquid through channels of different shape:[1]

$$\frac{\alpha_{liq} d_{eq}}{\lambda_{liq}} = 0{,}021 \left(\frac{\gamma_{liq} w d_{eq}}{g\mu_{liq}}\right)^{0.8} \left(\frac{g\mu_{liq} c_{p\,liq}}{\lambda_{liq}}\right)^{0.43} \beta. \qquad \text{[eq = equivalent]} \qquad \text{(VII.14)}$$

where α_{liq} is the heat transfer coefficient from wall to liquid, expressed in cal/m^2 sec °C;

λ_{liq} -- in cal/m sec °C;

μ_{liq} -- in cal-sec/m^2;

Cp_{liq} -- in cal/kg °C;

γ_{liq} -- in kg/m^3;

are respectively the: heat conductivity, viscosity, specific heat, and specific gravity of the cooling liquid, all taken at the average temperature in the relevant section;

d_{eq} is the equivalent diameter of the cross section of the duct in m. This is computed by using the equation:

$$d_{eq} = \frac{4F_{liq}}{\Pi},$$

where F_{liq} is the cross section area of the duct in m^2;

T is the total ("wet") perimeter of the cross section, irrespective of whatever part of this perimeter may be involved in the heat exchange.

---

[1] M. A. Mikhayev, Osnovy Teploperedachi [Heat Exchange Principles], Gosenergoizdat, 1956.

The determination of equivalent diameters for various shapes of the duct used in the cooling jackets of liquid-fuel rocket engines will be explained later (see paragraph 42).

β is the coefficient which allows for the direction of the heat flow.

Experience has shown that when a liquid is being heated, i.e., when the flow of heat is directed from the wall toward the liquid, the intensity of the heat exchange is greater than in circumstances where the flow of heat is in the opposite direction, i.e., in the process of cooling the liquid. Apart from that, the intensity of the heat exchange is dependent also upon the temperature head, i.e., upon the value of $(t_{wall} - t_{liq})$. As the temperature head increases, the heat transfer coefficient α_{liq} increases during the heating of the liquid, but decreases when the liquid is being cooled.

The dependence of heat transfer on the direction of the flow of heat and the temperature head must be explained as due to differences of temperature fields and viscosity in the boundary layer and the thickness of the boundary layer itself during the process of heating and cooling a liquid. This relationship likewise is indicated by the coefficient β, the latter being expressed as follows:

$$\beta=\left(\frac{\dfrac{g\mu_{liq}c_{p\,liq}}{\lambda_{liq}}}{\dfrac{g\mu_{liq\,w}c_{p\,liq\,w}}{\lambda_{liq\,w}}}\right)^{0.25}.$$

[liq w = liquid wall]

where $\mu_{liq\ w}$, $c_{p\ liq\ w}$, and $\lambda_{liq\ w}$ are respectively and viscosity, specific heat, and the heat conductivity of the cooling liquid at the temperature of the liquid chamber wall.

For the conditions that prevail in the cooling of liquid-fuel rocket engines, the value of β ranges from 1 to 2.

We shall now put equation (VII.14) into a form that is more convenient for purposes of computation. From (VII.14) we get:

$$\alpha_{liq}=0{,}021\lambda_{liq}^{0.57}\frac{c_{p\,liq}^{0.43}(\gamma_{liq}w)^{0.8}}{(g\mu_{liq})^{0.37}d_{eq}^{0.2}}\beta. \qquad \text{(VII.15)}$$

According to the continuity equation,

$$F_{liq}\cdot\gamma_{liq}\cdot w = G_{cool},$$

where G_{cool} is the flow rate of cooling liquid through the cooling jacket kg-sec;

F_{liq} is the cross section area of the cooling tract in m^2.

From the foregoing we get:

$$\gamma_{liq} w = \frac{G_{cool}}{F_{liq}}. \qquad \text{(VII.16)}$$

Substituting the equation (VII.16) in (VII.15) and specifying,

$$\lambda^{0.57}_{liq}\frac{c^{0.43}_{p\,\text{ж}}}{(g\mu_{\text{ж}})^{0.4}} = Z,$$

we get:

$$\alpha_{liq} = \frac{0.021}{d^{0.2}_{eq}} Z\left(\frac{G_{cool}}{F_{liq}}\right)^{0.8}\beta. \qquad \text{(VII.17)}$$

In formula (VII.17) α_{liq} is expressed in terms of kilo-cal/m^2 sec °C. But we always express α_{liq} in terms of kilo-cal/m^2 hour °C. In this modified form the equation (VII.17) reads as follows:

$$\alpha_{liq} = 75.6Z\frac{1}{d^{0.2}_{eq}}\left(\frac{G_{cool}}{F_{liq}}\right)^{0.8}\beta. \qquad \text{(VII.18)}$$

In this form the same equation can also be used in computing heat exchange in liquid-fuel rocket engines.

The physical constants of liquids used in cooling liquid-fuel rocket engines are presented in the diagrams in Figures 116-119[1] (see page 466).

The values of Z for the various components that may be used as cooling liquids are given in the diagrams in Figure 120, where they are computed in

---

[1] M. P. Malkov and K. F. Pavlov, Spravochnik po glubokomu okhlazhdeniyu [Handbook on Deep-Freezing], Gostekhizdat, 1947; Spravochnik khimika [Chemical Handbook], Goskhimizdat, 1951; Tekhnicheskaya entsiklopediya [Technical Encyclopedia], Handbook of Physical, Chemical and Technological Numerical Data, Sovetskaya Entsiklopediya Publishing House, 1927.

terms which correspond to those used in equation (VII.18).

Heat Exchange by Radiation.

The carriers of radiant energy consist of electromagnetic oscillations whose wavelength varies from fractions of a micron to a length of many kilometers. These oscillations are known under the name of Xrays, ultraviolet rays, visible light rays, infrared rays, and electromagnetic waves.

Of special interest for our purposes are those rays which are capable of transmitting heat energy. This capability is possessed in the greatest measure especially by light rays and infrared radiation, i.e., rays with a wavelength of about $0.4\,\mu$ to $40\,\mu$ ($1\,\mu = 0.001$ mm). These rays are also spoken of as heat rays, and the process of their propagation is referred to as heat emission or radiation. The laws of propagation, reflection, and refraction which have been established for visible light rays are applicable also to the radiation of heat rays.

Any body possessing a temperature always radiates energy. When coming into contact with another body, this energy is partly absorbed, partly reflected, and to some extent passes through the body. That portion of radiant energy which is absorbed by the body in question is reconverted into heat energy. That portion of the energy which is reflected falls upon other (surrounding) bodies and is absorbed by them. This is also precisely what happens to the portion of the energy which passes completely through the body.

In this manner, after being absorbed a number of times, the radiated energy is completely distributed among the surrounding bodies. Thus every body not only at all times gives off radiation, but also without interruption absorbs energy. Consequently the quantity of energy given off and received by a body is determined by the difference between the absorbed and the absorbed radiating energy.

In liquid-fuel rocket engines, the exchange of radiant heat takes place upon heat transfer from the heated combustion products in the engine chamber to the terms which correspond to those used in equation (VII.18).

Heat Exchange by Radiation.

The carriers of radiant energy consist of electromagnetic oscillations whose wavelength varies from fractions of a micron to a length of many kilometers. These oscillations are known under the name of Xrays, ultraviolet rays, visible light rays, infrared rays, and electromagnetic waves.

Of special interest for our purposes are those rays which are capable of transmitting heat energy. This capability is possessed in the greatest measure especially by light rays and infrared radiation, i.e., rays with a wavelength of about $0.4\,\mu$ to $40\,\mu$ ($1\,\mu = 0.001$ mm). These rays are also spoken of as heat rays, and the process of their propagation is referred to as heat emission or radiation. The laws of propagation, reflection, and refraction which have been established for visible light rays are applicable also to the radiation of heat rays.

Any body possessing a temperature always radiates energy. When coming into contact with another body, this energy is partly absorbed, partly reflected, and to some extent passes through the body. That portion of radiant energy which is absorbed by the body in question is reconverted into heat energy. That portion of the energy which is reflected falls upon other (surrounding) bodies and is absorbed by them. This is also precisely what happens to the portion of the energy which passes completely through the body.

In this manner, after being absorbed a number of times, the radiated energy is completely distributed among the surrounding bodies. Thus every body not only at all times gives off radiation, but also without interruption absorbs energy. Consequently the quantity of energy given off and received by a body is determined by the difference between the absorbed and the absorbed radiating energy.

In liquid-fuel rocket engines, the exchange of radiant heat takes place upon heat transfer from the heated combustion products in the engine chamber to the walls of the latter.

The heat energy Q_{rad} radiated by the body (the flow of radiated heat) is expressed in terms of kilo-cal/hour. [illegible] quantity of energy radiated per unit of surface per unit of time is known as the body's emissivity, and is usually represented by the letter E. Thus we have

$$E = \frac{Q_{rad}}{F} \text{ kilo-cal/m}^2 \text{ hour} \quad [rad = radiated] \tag{VII.19}$$

If, out of the total quantity of energy Q_{rad} that falls upon a body, the portion Q_A is absorbed, Q_R is reflected, and Q_D passes through the body (Figure 94), then obviously:

$$Q_{rad} = Q_A + Q_R + Q_D \tag{VII.20}$$

Dividing both sides by Q_{rad}, in (VII.20), we get:

$$\frac{Q_A}{Q_{rad}} + \frac{Q_R}{Q_{rad}} + \frac{Q_D}{Q_{rad}} = 1$$

or

$$A+R+D=1. \tag{VII.21}$$

The first member of the equation (VII.21) characterizes the absorption capacity of body A; the second, its reflecting capacity R; and the third, its diathermancy D. These values indicate the relative proportion of energy that is reflected, absorbed, or passed on by the body, and they are variable only within a range of 0 to 1. If all of the impinging radiated energy is absorbed by the body, then A = 1. A body of this type is called an ideal black body.

If all of the impinging energy is reflected in its entirety, then R = 1. If in that event the reflection is normal, i.e., follows the laws of optical geometry, the body is called specular; if the reflection is diffused, it is called ideal white body.

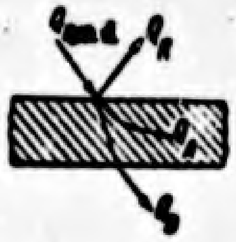

Figure 94. The distribution of radiant energy.

If all of the impinging energy passes, in its entirety, through the body, then D = 1. A body of this type is called an ideal transparent body.

Ideal black, white, or transparent bodies do not exist in nature. Solid bodies and liquids are practically nontransparent so far as heat rays are concerned (i.e., for them D = 0). The absorption capacity A and the reflection capacity R vary according to the nature of the body, the temperature, and the wavelength of the radiation, and are in a large measure dependent also upon the nature of the surface of the body.

An ideal black body emits rays in all wavelengths from $\lambda = 0$ to $\lambda = \infty$, at all temperatures excluding 0.

At any given temperature the intensity of radiation of an ideal black body is greater than the intensity of radiation of any other type of real body under the same conditions.

If a body radiates rays of all wavelengths from $\lambda = 0$ to $\lambda = \infty$ at all temperatures other than 0, and the intensity of radiation of this body for each wavelength is proportionately lower than for an ideal black body, such a body is called a gray body.

In thermotechnical calculations it is usually necessary to compute the amount of heat exchange between bodies whose surface properties, dimensions, and temperature are known quantities.

On the basis of these data it is always possible to determine the energy of radiation of both bodies with the aid of the Stefan-Boltzmann law.

The Stefan-Boltzmann law is usually formulated as follows: The energy of radiation of an ideal black body is proportional to the fourth power of the absolute temperature.[1]

$$E_0 = c_0 \left(\frac{T}{100}\right)^4. \qquad \text{(VII.22)}$$

where E_0 is the emissivity of the ideal black body;

C_0 is the radiation coefficient of an ideal black body; /abs = absolute temperature/

C_0 is 4.96, in terms of kilo-cal m^2 hour $^\circ abs^4$.

In its application to gray bodies the Stefan-Boltzmann law takes the following form:

$$E = c\left(\frac{T}{100}\right)^4, \qquad \text{(VII.23)}$$

where C is the radiation coefficient of a gray body in terms of kilo-cal/m^2 $^\circ abs^4$;

E is the gray body's emissivity.

The ratio between the emissivity of a gray body and that of an ideal black body at a given temperature is known as the relative emissivity, or the degree of blackness of the body ε

$$\varepsilon = \frac{E}{E_0} = \frac{c\left(\frac{T}{100}\right)^4}{c_0\left(\frac{T}{100}\right)^4} = \frac{c}{c_0}. \qquad \text{(VII.24)}$$

Obviously the value for ε must be somewhere between 0 and 1.

Since the quantity of heat given out by a body is equal to the difference between the quantity of radiated energy absorbed and given off by a body, the computation formula for the exchange of radiated heat between two parallel plane surfaces takes the following form:

$$q_{1-2} = c_p\left[\left(\frac{T_1}{100}\right)^4 - \left(\frac{T_2}{100}\right)^4\right]. \qquad \text{(VII.25)}$$

---

[1] Here and in the following, in the review part dealing with the fundamentals of heat transmission, the derivation of the formulae is not indicated. For details see M. A. Mikheyev, Osnovy teploperedachi /Heat Transfer Principles/, Gosenergoizdat, 1949.

where q_{1-2} is the quantity of heat passed on from wall 1 to wall 2, in terms of kilo-cal/m^2 hour;

T_1 is the temperature of wall 1 in °abs;

T_2 is the temperature of wall 2 in °abs.

$$C_p = \frac{1}{\frac{1}{C_1} + \frac{1}{C_2} + \frac{1}{C_0}} - \qquad \text{(VII.26)}$$

the indicated radiation coefficient of a system of bodies in terms of kilo-calories/m^2 hour $°abs^4$. Here C_1, C_2 and C_0 are the radiation coefficients of body 1, body 2, and of an ideal black body.

Radiative Heat Exchange in Gases.

Gases likewise possess a capacity to emit and absorb energy, but this capacity varies from one gas to another. A considerable emissivity and absorptivity is possessed by polyatomic gases, and in particular by carbon dioxide CO_2, water vapor H_2O, and sulfur dioxide SO_2.

In gases the radiation and absorption of energy distinguishes itself in the following manner from that of solid bodies: solid bodies radiate and absorb radiant energy of all wavelengths from $\lambda = 0$ to $\lambda = \infty$, while gases radiate and absorb energy only within certain ranges of wavelengths which differ from different gases. Such radiation and absorption is called selective.

Most solid bodies are nontransparent for heat rays and it may be assumed that radiation and absorption in the case of solid bodies takes place on the surface layer.

In gases radiation and absorption of energy occurs in volume. As the rays pass through the gas, radiant energy is lost due to partial absorption. The amount of energy loss is determined by the number of molecules encountered in its path, which is proportional to the length of the path traveled by a ray l and partial pressure of the gas p. Consequently the absorptivity and emissivity of a gas depend on the whole on the product of pl. In addition, they further depend on the temperature.

Experimental data have indicated that the radiation and absorption of carbon dioxide is proportional to $T^{3.5}$, while the radiation and absorption of water vapor is proportional to T^3. However, as a matter of convenience, most practical computations of the radiation of gases are likewise based on the Stefan-Boltzmann law. The radiation and absorption of gases in terms of unit of surface of the volume they occupy is taken as proportional to the fourth power of the absolute temperature of the gas.

Thus the quantity of heat radiated by a gas is determined by the formula:

$$q_{gas} = \varepsilon_{gas} c_0 \left(\frac{T_{gas}}{100}\right)^4 \text{ kilo-cal/m}^2\text{hr.}, \qquad \text{(VII.27)}$$

where q_{gas} represents the flow of heat for each unit of surface of the mass of the gas; and ε_{gas} represents the degree of blackness of the gas.

The magnitude ε_{gas} depends for a given mass upon the composition of the gas and the form which the radiating mass has, i.e., upon the product pl, and also upon the temperature of the gas T_{gas}.

So far as the products of combustion of most of the usual fuels are concerned, the most important of the radiating components of the gas mixture are carbon dioxide and water vapor.

The average length of the path traveled by radiation for the different forms of volume taken up by a gas can be determined from the data given in Table 21.

However, the quantity of heat given off by the gas wall will not be equal to the quantity of heat given off by the gas. This is due to the fact that--just as in the previously considered case of heat exchange between two surfaces--part of the heat radiated from the gas onto the wall will be reflected from the latter back into the gas and will thus be absorbed.

A flow of radiant heat q_{rad} onto the wall is in this connection determined according to the formula

$$q_{rad} = \varepsilon'_{wall} c_0 \left[\varepsilon_{gas} \left(\frac{T_{gas}}{100} \right)^4 - A_{gas} \left(\frac{T_{wall}}{100} \right)^4 \right], \qquad \text{(VII.28)}$$

where $\varepsilon'_{wall} \approx 0.5(\varepsilon_{wall}+1)$ is effective degree of blackness of the wall, with due allowance for the presence of the radiating gas;

ε_{gas} is the degree of blackness of the gas at the temperature of the gas;

A_{gas} is the absorption capacity of the gas at the temperature of the wall T_{wall}.

Table 21

Average Length of Path Traveled by Radiation in Gaseous Bodies of Various Form

Form of Gaseous Body	Length of Path of Radiation
A Sphere having a diameter d	0.6 d
A Cylinder having diameter d, of infinite length, with radiation upon the lateral surface	0.9 d
A Cylinder having height h = d, with radiation upon the lateral surface	0.6 d

Section 40. Heat Exchange in a Liquid-Fuel Rocket Engine.

The Process of Heat Exchange in the Liquid-Fuel Rocket Engine, as Considered From the Point of View of Physics.

From the point of view of physics, the process of heat exchange in the liquid-fuel rocket engine can be represented as follows (Figure 95).

Heat is given off by convection and radiation from the products of combustion to the wall of the combustion chamber. Thus it may be said that the total heat flow from the heated gases to the wall q_2 is composed of two currents of heat: a convection current q_{conv} and a radiation current q_{rad}, i.e.,

$$q_2 = q_{conv} + q_{rad}, \qquad \text{(VII.29)}$$

where

$$q_{conv} = \alpha_{gas}(T_2 - T_{gw}). \qquad \text{(VII.30)}$$

From there the heat is passed on farther by conductivity, through the wall of the combustion chamber. From the wall of the chamber the heat is passed on by convection to the cooling liquid that passes through the cooling jacket. In the event that there is no external cooling (as is the case where there is internal cooling or accumulation of heat), the heat is given off by the wall to the surrounding atmosphere.

At the moment when the engine begins to function, when the walls of the chamber and of the nozzle are still cool, the entire flow of heat does not pass through the wall to be given off to the cooling liquid. Part of this heat will be consumed in heating the walls of the chamber of the engine. This type of cooling of the liquid-fuel rocket engine, where the temperature of the wall and the flow of heat into the cooling liquid are subject to change with the passage of time, is called an <u>unsteady cooling process</u>.

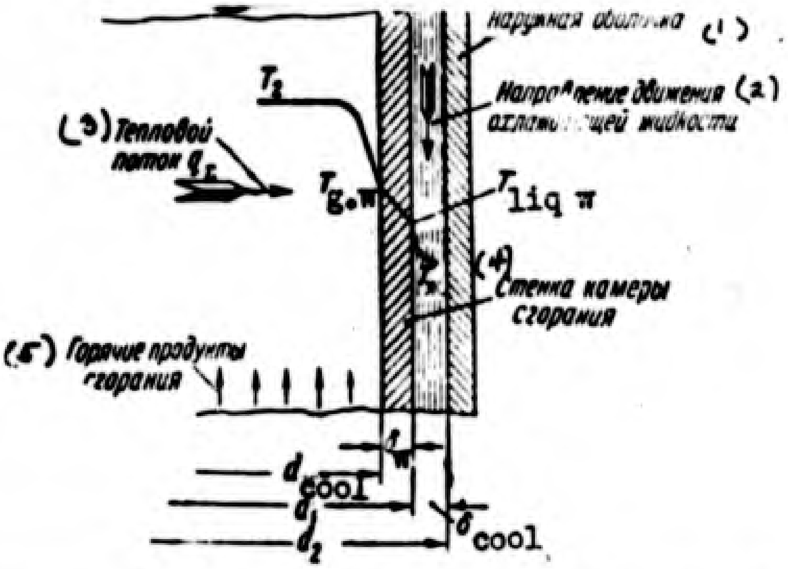

Figure 95. Explanation of the process of heat exchange in the liquid-fuel rocket engine.

T_2 -- temperature of gases in combustion chamber; $T_{g.w.}$ -- temperature of the "gaseous wall," i.e., that wall of the engine's combustion chamber which is on the side of the heated gases; $T_{liq\ w}$ -- temperature of the "liquid wall," i.e., temperature of that wall of the chamber which is on the side of the cooling agent; T_{cool} -- temperature of the cooling liquid, i.e., the cooling agent.

1 -- Outer covering; 2 -- direction of movement of cooling liquid; 3 -- heat flow; 4 -- wall of combustion chamber; 5 -- heated products of combustion.

In due course of time a balance is established when the cooling liquid takes up all of the flow of heat that is passed from the heat products of combustion to the wall of the engine's combustion chamber. At this, there begins and continues a constant (i.e., constant for the process of the engine prevailing at the time) temperature for the gas-side and liquid-side walls of the engine's combustion chamber and for the flow of heat through the well. This process is know as the <u>stable process of cooling</u>.

In the following we shall devote attention only to the stable processes of cooling.

<u>Characteristics of Heat Exchange in the Liquid-Fuel Rocket Engine</u>.

One of the foremost problems encountered in creating a liquid-fuel rocket engine is that of cooling the combustion chamber and nozzle of the engine. As compared with the cooling of other types of heat engines, the construction of the cooling system of the combustion chamber of a liquid-fuel rocket engine is a rather complicated process due to the special characteristics of the combustion process and the flow of gases in the chamber of the engine, and also due to operating conditions of the liquid-fuel rocket engine as a propulsion system. The process of combustion in the liquid-fuel rocket engine occurs at high temperatures and high pressures. Both of these factors result in an increase of heat currents toward the walls of the combustion chamber.

The heated gases move through the combustion chamber and nozzle at an extremely high speed. Consequently, high mass velocities of the flow of heat are characteristic for the liquid-fuel rocket engine. As a result, there occurs an abrupt increase of the coefficient of heat transfer by convection from the heated products of combustion to the walls of the engine chamber α_{gas}; and there prevail convectional heat currents toward the walls of the chamber that are very much in excess of the heat currents ordinarily encountered in heat engines.

The high combustion temperatures of the fuel in the liquid-fuel rocket engine also determine another special feature of its cooling system, since there is a strong flow of heat occasioned by heat transfer in the form of heat radiation.

It is a well-known fact that the heat-radiation capacity of gases is in proportion to the 3-3.5 power; consequently, at the temperatures of 2,700-3,500° C that prevail in the combustion chamber and nozzle of the liquid-fuel rocket engine, there arise very strong heat currents, due to radiation. For ordinary fuels these attain 20-30% of the total heat flow in the wall of the combustion chamber. The relative proportion of radiant heat flow decreases in proportion to decrease in the temperature of the gas in the nozzle.

The total heat currents in the walls of the combustion chamber and nozzle reach in the critical cross section extremely high values (Q max up to $20 \cdot 10^6$ kilo-cal/m^2 hour). Great difficulty is encountered in removing such a powerful flow of heat.

A third special characteristic encountered in creating a cooling system for a liquid-fuel rocket engine arises from the unusual manner in which these engines are used. In the overwhelming majority of instances these engines are used in projectiles or in aircraft of various kinds. For this reason it would not be a rational procedure to make use of a special liquid to be carried for cooling these engines. Usually the liquid-fuel rocket engine is cooled by using the components of its fuel mixture, conducting them into the combustion chamber of the liquid-fuel rocket engine through a cooling jacket (the so-called regenerative system of cooling). This, however, creates new difficulties and involves additional requirements to be made of the fuel components and also of the system of cooling, since the quantity of fuel components that can be used for cooling purposes as they pass through the cooling jacket is limited.

A fourth special characteristic of the liquid-fuel rocket engine cooling system consists in the fact that the powerful heat currents in the chamber wall and the nozzle cause the material of the walls themselves to be raised to a very high temperature. This makes it necessary to resort to the use of heat-resistant metals with the highest possible coefficient of heat conduction.

Thus a proper solution of the cooling problem in the liquid-fuel rocket engine makes it necessary to meet the following requirements for the given operating conditions of the engine (pressure in the chamber p_2, consumption G_{cool}, and temperature T_2 of the products of combustion):

1) The temperature of the gaseous wall of the chamber $T_{g.w.}$ must be such that it will permit the required strength of the wall. A decreasing $T_{g.w.}$ will improve the functioning of the engine.

2) The temperature of the liquid T_{liq} as it issues from the cooling jacket must not be above the boiling temperature. This requirement can be regarded as satisfied if the total heat flow over the entire cooling surface of the chamber Q_{total} is less than the heat receptivity of the cooling liquid.

[ent = entering]

$$Q_{tot} < G_{cool}c(T_s - T_{ent}), \qquad \text{(VII.31)}$$

where G_{cool} is the consumption of cooling liquid in kg/hour;

C is the specific heat of the liquid;

T_s is the boiling temperature of the cooling liquid at the pressure that prevails in the cooling jacket;

T_{ent} is the temperature of the liquid as it enters the cooling jacket.

Let us now consider the manner in which the cooling conditions and the operating conditions of the engine influence the temperature of the gaseous wall of the chamber of the liquid-fuel rocket engine.

The Relation Between $T_{g.w.}$ and the Speed of Movement of the Cooling Liquid.

The speed of movement of the cooling liquid affects the coefficient of heat transfer from the wall to the liquid α_{liq}; and as this speed increases, α_{liq} likewise grows larger.

For a given specific flow of heat q_{Σ} and temperature of the liquid T_{liq} the temperature of the wall on the side of the liquid $T_{liq\ w}$ can be determined from an expression derived from a formula that is analogous (VII.30),

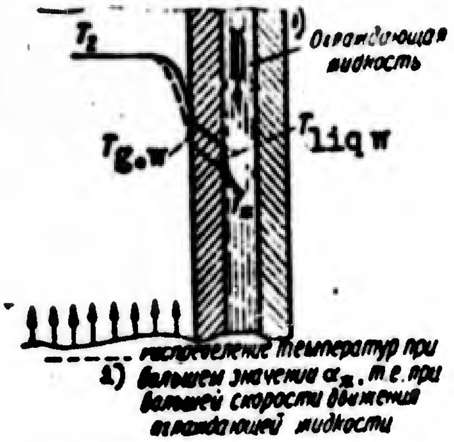

Figure 96. The effect of the speed of the cooling liquid upon $T_{g.w.}$

1 -- cooling liquid; 2 -- distribution of temperatures when the value for α_{liq} is large, i.e., when the cooling liquid moves at great speed.

$$q_{\Sigma} = \alpha_{liq}(T_{liq\,w} - T_{liq}), \tag{VII.32}$$

which upon being converted takes the following form:

$$T_{liq\,w} = T_{liq} + \frac{q_{\Sigma}}{\alpha_{liq}},$$

that is, upon the increase of α_{liq}, the temperature $T_{liq\,w}$ decreases.

In its turn, the heat flow through the chamber wall is conveyed by means of heat conductivity and follows the law expressed in formula (VII.1), which takes the following form:

$$q_{\Sigma} = \frac{\lambda}{\delta_{wall}}(T_{gw} - T_{liqw}). \tag{VII.33}$$

whence

$$T_{gw} = q_{\Sigma}\frac{\delta_{wall}}{\lambda} + T_{liqw}. \tag{VII.34}$$

Consequently, for a given metal, a given thickness of the wall δ_{wall} and a given specific flow of heat q_{Σ}, the temperature of the gaseous wall $T_{g.w.}$ will be the lower, the lower the temperature of the wall on the side of the liquid $T_{liq\,w}$.

However, as $T_{liq\,w}$ gets lower, the total flow of heat into the wall of the engine's combustion chamber will increase to some extent, due to the decrease of $T_{g.w.}$ (see formula (VII.30)), and this once more results in a rise of $T_{g.w.}$, $T_{liq.w.}$, and so forth.

In the final analysis the stable process will, as the speed of the cooling liquid increases, establish itself at lower $T_{g.w.}$ and $T_{liq.w.}$ than was the case before the increase of speed (Figure 96). Thus the temperature of the gaseous wall $T_{g.w.}$ is in a large measure dependent upon the speed of movement of the cooling liquid: the greater this speed, the lower will be $T_{g.w.}$ Consequently, in order to maintain the required $T_{g.w.}$ one may increase the speed of the cooling liquid (for example, by reducing the cross section of the tract through which the cooling liquid must move).

Effect of the Surface Boiling of the Cooling Liquid on the Value of $T_{g.w.}$

In the process of heat transfer from the wall of the combustion chamber to the liquid there are two possible relative proportions between $T_{liq.w.}$ and the boiling temperature of liquid T_s for a given pressure in the cooling jacket:

$$\left.\begin{array}{l} T_{liqw} < T_s; \\ T_{liqw} > T_s. \end{array}\right\} \qquad \text{(VII.35)}$$

In the first case it is impossible to bring the liquid in the cooling jacket to its boiling point. In the second case it is possible to bring the surface of the cooling liquid to a boiling point along the surface of the liquid side of the chamber wall. If in this event the mass of the liquid has a temperature that is lower than T_s, then the bubbles of steam forming on the surface of the liquid side of the wall will be washed away by the current of the liquid and will then be condensed at a cooler point of the stream. In this manner the bubbles, acting as a "stirring rod" for the liquid, will increase the heat transfer from the wall to the liquid, i.e., α_{liq} will increase at the same rate of movement of the cooling liquid.

The increase of α_{liq} as a result of surface boiling leads to the same final result as an increase of α_{liq} resulting from an increase of speed, i.e., it will lead to a decrease of $T_{g.w.}$ for some increase of the total flow q_{Σ}.

The improvement of cooling conditions for the wall in this instance will not result in the necessity of increasing the pressure of the cooling liquid, such as would be required for increasing its speed of movement. However, intensive boiling on the surface may lead to an excessively energetic formation of steam, so that the bubbles will no longer be washed away by the flow of the liquid, and will, to the contrary, form a solid film of steam on the wall surface. Since steam is a poor conductor of heat, there will in that event occur an abrupt decline of the coefficient of heat emission α_{liq}, and the end result will be the opposite, i.e., there will be an increase of $T_{g.w.}$ and, possibly, a burning out of the wall.

The Relation Between $T_{g.w.}$ and the Heat Conductivity λ of the Material of the Combustion Chamber of the Engine.

According to Formula (VII.1) the flow of heat through the wall of the combustion chamber and the nozzle will follow the law expressed by the equation

$$q_{\Sigma}=\frac{\lambda}{\delta_{wall}}(T_{gw}-T_{liq\,w}), \qquad \text{(VII.36)}$$

whence

$$T_{gw}=\frac{\delta_{wall}}{\lambda}q_{\Sigma}+T_{liqw}. \qquad \text{(VII.37)}$$

As indicated by this equation, for a given set of values for $T_{liq.w.}$, δ_{wall}, and q_{Σ} the temperature of the gaseous wall $T_{g.w.}$ will decrease in proportion to the increase of the coefficient of heat conductivity of the metal λ. Here again, however, as $T_{g.w.}$ decreases, in accordance with equation (VII.30), there will be an increase of the total flow of heat q_{Σ}, thus causing $T_{g.w.}$ to rise again to some extent. But even under these circumstances (the same as happens in the event of a decline of $T_{liq.w.}$ when there is an increase of α_{liq}), the stable process of cooling will be established at a lower $T_{g.w.}$ than was the case for the wall whose material had a lower value for λ.

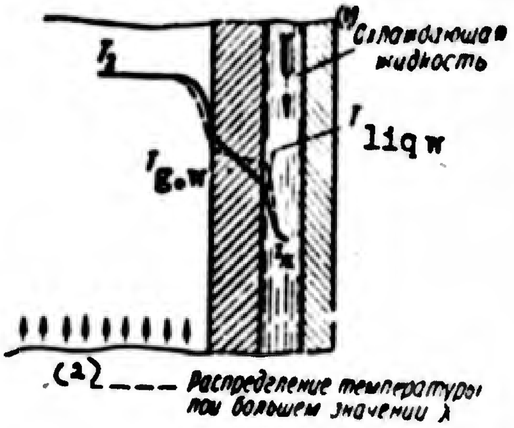

Figure 97. The effect of the heat conductivity λ of the metal of the chamber upon $T_{g.w.}$

1 -- cooling liquid; 2 -- distribution of temperatures for a high value of λ

As indicated by equation (VII.36), the decline of temperature through the width of the engine's wall as the value of λ increases will follow a more sloping curve. Since q_{Σ} increases slightly, the heating up of the liquid will likewise progress more speedily, and the value for $T_{liq.w.}$ will become higher.

Thus the curve for the change of temperature through the width of the wall will, for a metal that has a high value for λ, proceed as shown in Figure 97, intersecting with the earlier curve for changes of temperature through the width of the wall (where the value for λ was lower). In designing a chamber for the liquid-fuel rocket engine it is therefore advisable to make use of a material that has the highest possible coefficient of heat conductivity λ. It is necessary, however, to keep in mind that, as a rule, the metals that have a high coefficient of heat conductivity quickly lose their strength as the temperature increases.

<u>The Relation Between $T_{g.w.}$ and the Thickness of the Engine Chamber Wall δ_{wall}.</u>

From equation (VII.37) it is apparent that when $T_{liq.w.}$ and q_{Σ} remain constant, the temperature of the gaseous wall $T_{g.w.}$ will decline in proportion to the decline of the thickness of the wall δ_{wall}:

Although according to equation (VII.30) the flow of heat q_Σ increases slightly even though $T_{g.w.}$ drops lower, the stable process of cooling becomes established at a lower $T_{g.w.}$. It is therefore desirable to have the chamber of a liquid-fuel rocket engine made with the least possible thickness of wall δ_{wall}.

<u>The Effect of the Combustion Chamber Pressure upon $T_{g.w.}$ and q_Σ.</u>

As the pressure rises in the chamber of the engine, the density of the moving gas increases throughout the chamber, as does the mass speed of the gas. At the same time, there must be (see Section 39) an increase in the value of the coefficient of heat transmission from the gas to the walls α_{gas}. At the same time, there occurs also an increase of the convection flow q_{conv}. According to both experimental and theoretical data, q_{conv} increases with an increase in pressure, according to the ratio $(\frac{p'}{p''})^{0.8}$.

An increase of pressure in the engine chamber also results in an increase of the partial pressure p_{CO_2} and p_{H_2O}, of whose radiation is composed, in the main, the radiative flow of heat into the wall q_{rad}.

Thus the increase of pressure results in an increase of the total flow of heat into the wall of the chamber of the engine q_Σ. The increase of q proceeds in keeping with the formula

$$T_{liq\,w} = T_{liq} + \frac{q_\Sigma}{\alpha_{liq}}$$

and produces a higher temperature of the liquid wall $T_{liq.w.}$. There is also a rise of $T_{g.w.}$, as will be obvious from the formula

$$T_{gw} = T_{liq\,w} + \frac{q_\Sigma}{\lambda}\delta_{wall}.$$

It is true that at the same time the flow of heat q_Σ declines to some extent due to the increase of $T_{g.w.}$, but a new stable condition is established at a higher $T_{g.w.}$ and with a higher flow of heat q_Σ than would have been the case at lower pressure in the chamber.

Thus the increased pressure in the chamber of the engine leads to a higher $T_{g.w.}$ and q_{Σ}, and this renders the problem of cooling the chamber of the engine more difficult.

The Effect of the Temperature of the Combustion Chamber upon $T_{g.w.}$.

As T_2 rises higher, the convectional and radiated flow of heat increases. Consequently a rise in the temperature of the products of combustion leads to the same result as does an increase of pressure in the chamber, i.e., to a higher $T_{g.w.}$ and a higher q_{Σ}.

This relationship between the conditions for cooling the engine on the one hand and the temperature of the products of combustion on the other occasions great difficulties in the construction of engines that operate with a high calorific capacity H_u. Thus, in the present literature on the subject, a completed liquid-fuel rocket engine using kerosene + oxygen as a fuel is quite unknown. The use of other, more highly heat-producing fuels requires even more intensive cooling of the engine chamber.

The Effect of the Engine's Operating conditions upon $T_{g.w.}$.

It frequently happens that in operating a liquid-fuel rocket engine there arises the need for operating the chamber which is cooled by one of the fuel components, under a variety of conditions. In this case the maximum thrust constitutes the rated chamber operating conditions.

When the engine changes over to operation at minimum thrust, there occurs a decrease of the pressure p_2, and the temperature T_2 in the chamber decreases somewhat. Both of these factors contribute toward a decrease of the flow of heat q_{Σ} into the wall of the engine's chamber. However, when the thrust diminishes, there occurs also a decrease at the same time of the consumption of the cooling component. Since the dimensions of the cooling tract remain unchanged, the speed of movement of the cooling agent through the tract w decreases in proportion to the decline of the cooling-agent consumption. With the decline of the speed w there occurs also a reduction of the coefficient of heat emission from the wall into the liquid α_{liq}.

For this reason, since the surface of the cooling area for the chamber remains unchanged, the extent of the heating of the cooling agent in the cooling tract may, when its consumption is lowered, become quite considerable, which will lead to a rise of the temperature T_{liq}.

When a considerable increase of T_{liq} occurs, the cooling agent may in some instances be unable to overcome it, since the total flow of heat into the wall Q_{total} may be greater than the heat receptivity of the liquid.

A decline of α_{liq} and an increase of T_{liq} may also produce the result that, irrespective of the decrease of the flow of heat q_{Σ}, the temperature of the gaseous wall $T_{g.w.}$ will increase as the thrust declines. For this reason, if the engine is to operate with a variable thrust, it will be necessary to make computations to check on the cooling also for smaller thrust.

From our consideration of the effects of the basic parameters upon $T_{g.w.}$ we may draw the following conclusion. In order to reduce $T_{g.w.}$ in the case of external cooling, it will be necessary to increase the speed of the cooling liquid, which will result in raising the value for α_{liq}. It is desirable to have the engine's chamber constructed of the most highly heat-conducting metals available.

If it proves impossible to obtain a satisfactory value for $T_{g.w.}$ merely by external cooling, the heat currents in the wall will have to be artificially reduced by creating in the layer of gas closest to the wall a somewhat lower temperature by enriching this wall-side layer with one of the components of the fuel. This method is known as <u>internal cooling of the engine chamber</u>. Ordinarily a combustible is used for this purpose. It may be fed into the wall-side layer, either by means of special jets located at the head of the engine, or through a series of openings in the engine's wall (the so-called cooling belt).

In order to keep $T_{g.w.}$ at a satisfactory level, recourse is frequently made to the simultaneous use of an internal and external cooling system. This type of cooling is known as mixed cooling.

Section 41. Computations for External Cooling.

The Systems of External Cooling.

The simplest method of external cooling is shown in Figure 98.

The cooling liquid flows into collector 1, and from there into the cooling jacket (cooling tract). As it passes through the jacket, the liquid cools the walls 3 and becomes heated in doing so. The heated liquid passes out of the cooling jacket through the collector 4. As was pointed out above, for purposes of external cooling the engine chamber is usually cooled with one of the fuel components themselves. Either a fuel or an oxidizing agent may be used as cooling liquid.

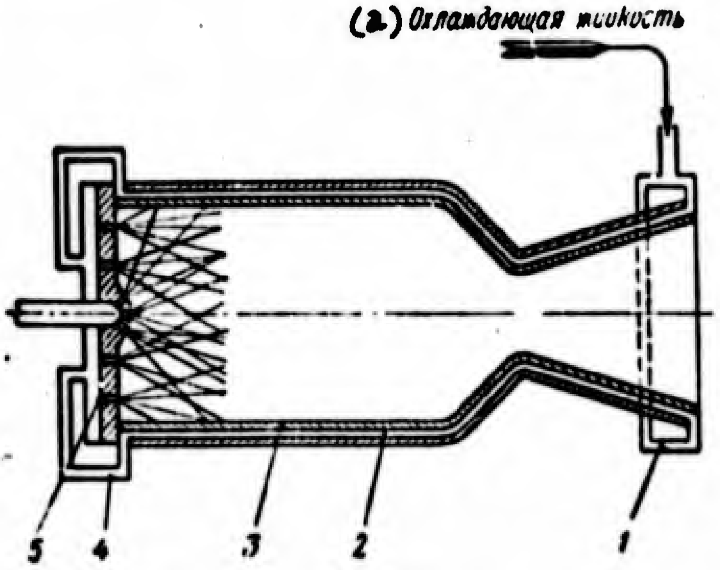

Figure 98. Diagram of external cooling.

1 -- input collector of cooling liquid; 2 -- cooling tract; 3 -- wall of chamber; 4 -- output collector of cooling liquid; 5 -- head of engine chamber

a -- cooling liquid

Sometimes when the quantities of fuel and oxidizing agent are limited, both components are used for cooling purposes. Since a mixture of the two components cannot be effected outside the combustion chamber, one of them ordinarily is used to cool the engine's nozzle, and the other to cool the combustion chamber. The system for this type of cooling is shown in Figure 99.

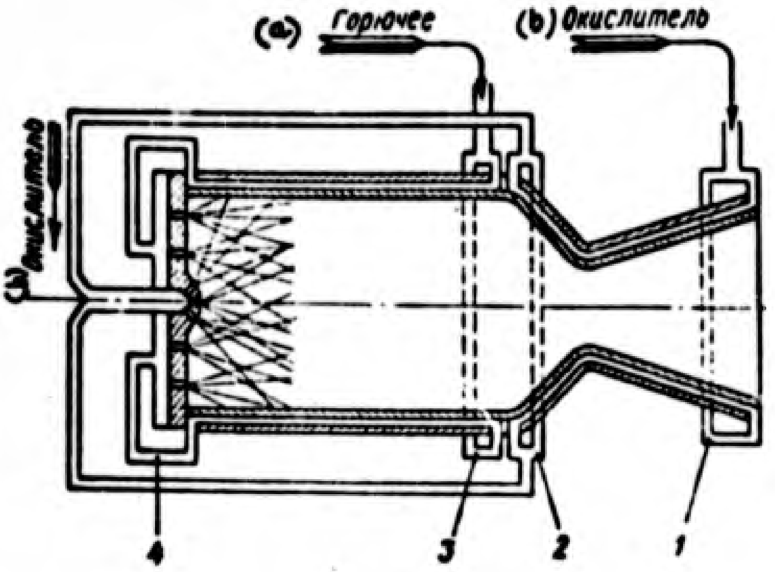

Figure 99. Diagram of external cooling of the engine chamber by using two components.

1 -- input collector of oxidizing agent; 2 -- output collector of oxidizing agent; 3 -- input collector of fuel; 4 -- output collector of fuel.

a -- fuel; b -- oxidizing agent.

Apart from that, there are also a number of projects aimed at cooling the high thrust liquid-fuel rocket engine by means of a flow of water arranged in such manner that the water is heated to boiling temperature in the cooling tract.

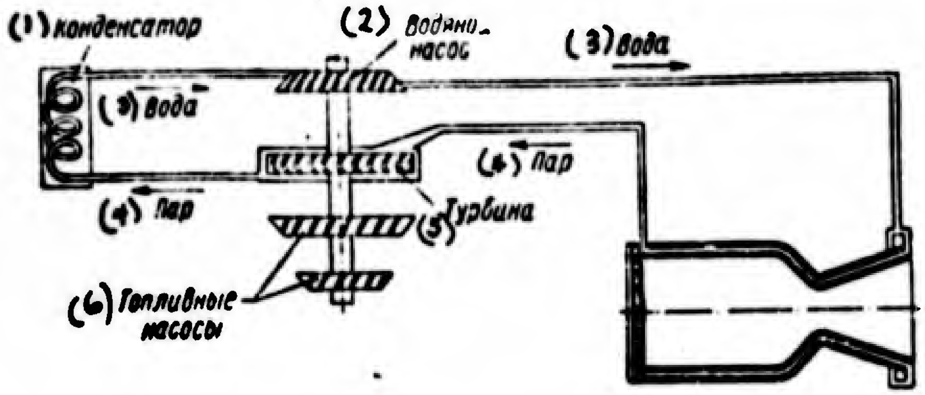

Figure 100. Diagram of cooling the engine chamber with water and subsequently using the stream that has formed to drive a turbine.

1 -- condenser; 2 -- water pump; 3 -- water; 4 -- stream; 5 -- turbine; 6 -- fuel pumps.

The steam formed in this process reaches the turbine and is used to drive the pumps that bring in the components. A system of this kind is shown in Figure 100.

The simplest system of external cooling from the point of view of construction, is the system shown in Figure 98. The great majority of completed liquid-fuel rocket engines are cooled by only one of the components, as shown in Figure 98.

Method of Computing the External Cooling of the Engine Chamber.

As we know, structural calculations are subdivided into two types, planning computations and verifying computations.

In connection with planning computations we must, proceeding from the given working conditions of the liquid-fuel rocket engine in each case (T_2, G_{comb}, G_o, p_2, the material of the walls), compute the shape and dimensions of the cooling tract of the chamber as required for satisfactory cooling of the walls.

In making verifying computations, we first choose the type of structure and determine its dimensions. Then we must verify, by means of computations, whether or not the chosen type of structure will be adequate for the working conditions that exist in the case under consideration.

At the present time, the second of these methods is used in solving problems that have to do with the cooling of liquid-fuel rocket engines.

The general scheme of heat exchange at the basis of these verifying computations is shown in Figure 95.

Utilizing this scheme we proceed in the following order to make computations for an external cooling system.

1. Making use of already-existing data on cooling, we specify the temperature of the gaseous wall of the combustion chamber and nozzle $T_{g.w.}$, determine the coefficient of convectional heat emission from the heated products of com-

bustion to wall α_{gas} and determine the specific convectional flows of heat q_{conv}.

2. We determine the specific flows of radiated heat q_{rad}.

3. We determine the total specific flows of heat into the walls of the engine chamber q_{Σ}.

4. We verify the presence of the required quantity of cooling liquid, so that the latter will suffice to remove the specific flows of heat q_{Σ}; and then determine the degree of heating of the cooling agent.

5. Knowing the value for the specific flow of heat q_{Σ} and the speed of flow of the cooling liquid through the cooling tract, we determine the coefficient of heat emission from the liquid wall into the cooling liquid α_{liq} and ascertain the temperature of the "liquid wall" $T_{liq.w.}$ that will result under these conditions.

6. Knowing the value for the coefficient of heat conductivity for the metal in question, we determine $T_{g.w.}$ and check whether it is appropriate for the given flows of heat q_{Σ} and the resulting $T_{liq.w.}$, at the temperature of the gaseous wall $T_{g.w.}$ specified under No. 1 above.

7. If the $T_{g.w.}$ obtained as a result of the computations differs by more than 5% from the indicated temperature, the computation is repeated from the beginning, allowing a new value for $T_{g.w.}$, intermediate between the one originally given and the one that was found by computation.

Determining the Specific Convectional Flows of Heat into the Wall of the Engine's Combustion Chamber.

The value for the specific convectional flow of heat is determined from equation (VII.30)

$$q_{conv} = \alpha_{gas}(T_{\Sigma} - T_{gw}).$$

where α_{gas} is the coefficient of heat transfer from gas to wall in cal/m^2 hour $^{\circ}$C;

T_2 is the temperature of the impeded flow of gas in °abs, this value being constant through the length of the chamber;

$T_{g.w.}$ is the temperature of the gaseous wall in °abs.

The temperature of the gas T_2 is known to us from the thermal computations bearing on the process of combustion in the chamber of the engine (see Chapter VI).

The coefficient of heat transfer from gas to wall α_{gas} we then determine from equation (VII.13):

$$\alpha_{gas}=74.3c_{p\,gw}(g\lambda)^{0.18}\frac{G^{0.82}}{d^{1.82}}\left(\frac{T_2}{T_{gw}}\right)^{0.35}.$$

It should be pointed out that the result obtained from the use of this formula in computing heat exchange in the liquid-fuel rocket engine is not quite accurate, since it was computed for subsonic speeds and presupposes a flow of gas through a cylindrical tube. In the supercritical part of the nozzle of a liquid-fuel rocket engine we have speeds higher than sonic speed and a cone-shaped duct. In order to adapt the formula to computation of the cooling of a liquid-fuel rocket engine it is necessary to divide the engine chamber into a series of cylindrical sectors, the diameter of which will be equal to the average diameter of the corresponding cone-shaped part of this sector.

Making use of formula (VII.13), computation of the specific heat flow from gas to wall q_{con} proceeds through the following stages.

1. We set a temperature for the gaseous wall of the combustion chamber. For this purpose the temperature of a steel wall in the critical part of the nozzle may be taken as equal to 700-850°C; and for a copper wall, as equal to 300-350° C. The temperature of the wall at the output from the nozzle we place at 350-500° C for steel, and 150-200° for copper. The temperature of the wall at the nozzle input is set at 50-100° C higher than for the nozzle output. The temperature for the gaseous wall of the cylindrical part of the

chamber is taken as constant and as equal to the temperature of the gaseous wall at the input of the nozzle sector.

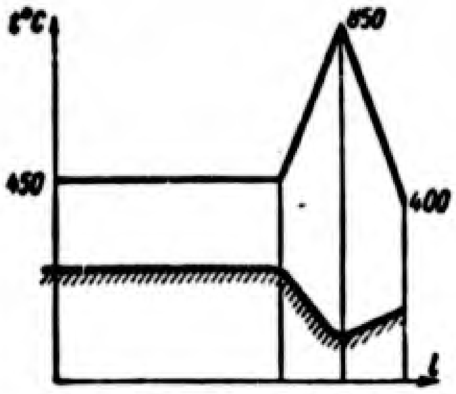

Figure 101. Approximate distribution of $T_{g.w.}$ through the length of the chamber for a steel wall.

The distribution of temperature along the length of the engine chamber we assume to be linear in the first approximation (Figure 101).

2. We estimate the specific heat $Cp_{g.w.}$ and the viscosity $\mu_{g.w.}$ of the products of combustion at the temperature of the gaseous wall at the input into the nozzle sector, and take these values as constant for the entire length of the engine.

Generally speaking, the two above-mentioned values vary according to the temperature of the products of combustion near the gaseous wall, i.e., according to $T_{g.w.}$; but since the computation is merely approximative, we may assume that the two values are constant for the entire length of the chamber. Ordinarily the values for $Cp_{g.w.}$ and $\mu_{g.w.}$ are taken at the temperature of the gaseous wall at the nozzle input.

In computing $Cp_{g.w.}$ and $\mu_{g.w.}$ the specific heat and viscosity of those components of the products of combustion which form only a small part of the gas mixture are disregarded. Such components are usually O, OH, H, NO. The value for $Cp_{g.w.}$ is computed according to the formula, known from thermodynamics, for the specific heat of a gas mixture:

$$c_{p\,gw} = \sum g c_{p_i\,gw} \qquad \text{(VII.38)}$$

where $C_{pi\ g.w.}$ is the specific heat of a given component of the gas mixture of the products of combustion, in kilo-cal/kg °C. The value for C_{pi} for the different gases is shown in Table 22.[1]

g_i is the gravimetric portion of the component of the gas mixture.

$$g_i = \frac{r_i m_i}{\sum r_i m_i}; \qquad (VII.39)$$

Here r_i and m_i are the volumetric portion and the molecular weight of the i-component of the gas mixture;

$$r_i = \frac{p_i}{p_2}, \qquad (VII.40)$$

where p_i is the partial pressure of the component of the gas mixture. Its value is known from the thermal calculation.

p_2 is the pressure in the combustion chamber.

Substituting (VII.40) in (VII.39) we get

$$g_i = \frac{\frac{p_i}{p_2} m_i}{\sum \frac{p_i}{p_2} m_i} = \frac{p_i m_i}{\sum p_i m_i}. \qquad (VII.41)$$

The coefficient of dynamic viscosity $\mu_{i\ g.w.}$ is computed according to the known formula for a mixture of gases

$$\frac{1}{\mu_{gw}} = \sum \frac{g_i}{\mu_{i\,wall}}, \qquad (VII.42)$$

where $\mu_{i\ wall}$ is the coefficient of dynamic viscosity of the i-component at a given $T_{g.w.}$.

For the purposes of our computations it is more convenient to make use of formula (VII.42), dividing both sides of the equation by the value of the acceleration of the earth g. The equation then takes the form

$$\frac{1}{g\mu_{gw}} = \sum \frac{g_i}{g\mu_{i\,wall}}, \qquad (VII.42')$$

---

[1] M. P. Vukalovich and others, Termodinamicheskiye svoystva gazov [Thermodynamic Properties of Gases], Mashgiz, 1953.

Table 22

The Specific Heat of Gases in Kilo-cal/kg·°C

Name of Gas	Chemical Formula	Temperature in °C												
		0	100	200	300	400	500	600	700	800	900	1000	1100	1200
Oxygen	O_2	0,218	0,223	0,230	0,2376	0,2445	0,2504	0,2553	0,2593	0,2627	0,2656	0,2682	0,2703	0,2723
Nitrogen	N_2	0,248	0,2489	0,2512	0,2554	0,2607	0,2664	0,2721	0,2774	0,2822	0,2864	0,2902	0,2935	0,2964
Hydrogen	H_2	3,390	3,4509	3,4643	3,4712	3,4826	3,5020	3,5298	3,5660	3,6101	3,6572	3,7063	3,7584	3,8095
Carbon Monoxide	CO	0,248	0,2495	0,2528	0,2580	0,2641	0,2704	0,2763	0,2816	0,2863	0,2904	0,2939	0,2970	0,2996
Nitric Oxide	NO	0,238	0,2381	0,2414	0,2472	0,2534	0,2594	0,2648	0,2695	0,2736	0,2770	0,2799	0,2824	0,2845
Carbon Dioxide	CO_2	0,194	0,2182	0,2371	0,2524	0,2652	0,2758	0,2847	0,2921	0,2984	0,3037	0,3081	0,3119	0,3152
Water Vapor	H_2O	0,444	0,4515	0,4635	0,4778	0,4931	0,5092	0,5258	0,5429	0,5601	0,5769	0,5929	0,6080	0,6220

(At this point one must not confuse g_1 -- the weight quantity -- with g -- acceleration of the earth.)

The values for $g \cdot \mu_{1\ wall}$ versus temperature for various gases are shown in Table 23. Into all of the equations used by us in computations of the cooling process enters the product $g\mu$, which has the following dimensions:

$$\frac{m\ kg\ sec}{sec^2\ m^2} = \frac{kg}{m\ sec}$$

Reference works frequently construe viscosity as meaning the product $g \cdot \mu$, and term this magnitude dynamic viscosity.

The values for $g \cdot \mu$ in kg/m sec for some of the liquids are shown in Figures 116-119.

In Table 23 and in the diagrams in Figures 116-119 are shown the products $g \cdot \mu$. When reference materials are used, it will be necessary to direct attention to the dimensions in which the viscosity is shown; and when substituting it in formulas, one must change this viscosity value to the corresponding dimension.

3. We subdivide the engine chamber lengthwise into 10-20 sectors (depending on the desired degree of accuracy of the computation); and for each section we compute the value for α_{gas} by using the formula (VII.13) in the same manner as for the cylindrical tube, adopting its diameter d and the gas wall temperature $T_{g.w.}$ as the average values for a given section.

4. Having determined α_{gas} we compute for each section the specific convectional flow of heat q_{conv} according to the formula

$$q_{conv} = \alpha_{gas}(T_1 - T_{gw}). \qquad (VII.43)$$

Determining the Specific Radiant Flows of Heat and the Total Flow of Heat into the Walls of the Engine Chamber.

The heat flows in the engine chamber proceed from the heated products

Table 23

Values for the Coefficient of Dynamic Viscosity ($g\mu$) 10^5 in kg/m sec versus [illegible] temperature[1]

Name of Gas	Chemical Formula	Temperature in °C												
		0	100	200	300	400	500	600	700	800	900	1000	1100	1200
Oxygen	O_2	1,943	2,460	2,910	3,312	3,677	4,014	4,327	4,622	4,900	5,164	5,416	5,657	5,889
Nitrogen	N_2	1,667	2,101	2,478	2,815	3,121	3,402	3,664	3,911	4,143	4,364	4,575	4,777	4,97
Hydrogen	H_2	0,850	1,052	1,226	1,381	1,521	1,651	1,771	1,884	1,991	2,093	2,190	2,283	2,373
Carbon Monoxide	CO	1,656	2,087	2,462	2,797	3,100	3,380	3,640	3,885	4,116	4,336	4,545	4,746	4,939
Nitric Oxide	NO	1,352	1,825	2,257	2,653	3,020	3,362	3,683	3,986	4,272	5,546	4,807	5,057	5,298
Carbon Dioxide	CO_2	1,384	1,846	2,262	2,642	2,991	3,316	3,620	3,906	4,177	4,435	4,681	4,917	5,143
Water Vapor	H_2O	0,818	1,208	1,605	2,000	2,390	2,772	3,145	3,510	3,864	4,21	4,447	4,874	5,194

---

[1] Entsiklopedicheskiy Spravochnik "Mashinostroeniye" [Encyclopedic Manual "Mechanical Engineering"], Vol. 1, Mashgiz, 1950.

of combustion into the walls of the chamber. As was shown elsewhere (see Section 39), the main portion of the heat radiation is given off by CO_2 and H_2O.

Experimental determination of the radiating heat currents in the chamber of a liquid-fuel rocket engine is a very difficult matter. For this reason these flows are computed with the aid of the empirical formulae used to compute radiating heat exchange in other types of structures and engines.[1]

$$q_{CO_2} = 3{,}5\sqrt[3]{p_{CO_2} l}\left[\left(\frac{T_г}{100}\right)^{3,5} - \left(\frac{T_{г.ст}}{100}\right)^{3,5}\right] \text{kilo-cal/m}^2\text{hour}; \qquad (VII.44)$$

$$q_{H_2O} = 3{,}5 p_{H_2O}^{0,8} l^{0,6}\left[\left(\frac{T_г}{100}\right)^{3} - \left(\frac{T_{г.ст}}{100}\right)^{3}\right] \text{kilo-cal/m}^2\text{hour}, \qquad (VII.45)$$

where p_{CO_2} and p_{H_2O} are the partial pressures of the gases in kg/cm^2;

l is the reduced average length of the path of the ray (as determined from Table 21).

The total flow of radiated heat q_{rad} we assume to be equal to the sum of these currents

$$q_{rad} = q_{CO_2} + q_{H_2O}. \qquad (VII.46)$$

In liquid-fuel rocket engines the radiated heat flows will not be uniform throughout the length of the engine chamber, since the temperatures of the hot products of combustion are not the same in the chamber itself as in the nozzle.

For this reason we first determine the radiated heat flows for three cross sections:

1. The section of the chamber at the entrance into the tapering part;
2. The critical section of the nozzle; and
3. The section as the nozzle exit.

---

[1] A. V. Bolgarskiy and V. K. Shchukin, Rabochiye protsessy v zhidkostno-reaktivnykh dvigatelyakh [Operating Processes in Rocket Engines], Oborongiz, 1953.

For each section q_{rad} the computation is customarily made as for a cylinder of infinite length and of a diameter equal to respectively the diameter of the combustion chamber, the diameter of the narrow section of the nozzle, and the diameter of the exhaust section of the nozzle. The section of the chamber is taken as uniform throughout and equal to q_{rad} at the exit end of the chamber.

For the intervening sections of nozzle we determine these values by combining in a curve the q_{rad} values for the afore-mentioned three sections.

Having determined q_{rad}, and knowing the value for the convectional heat flow q_{conv}, we compute for each section the total specific heat flow into the walls of the combustion chamber of the liquid-fuel rocket engine, using the formula

$$q_\Sigma = q_{rad} + q_{conv}. \tag{VII.47}$$

The manner in which the heat flows are distributed along the length of the engine chamber is shown in Figure 102.

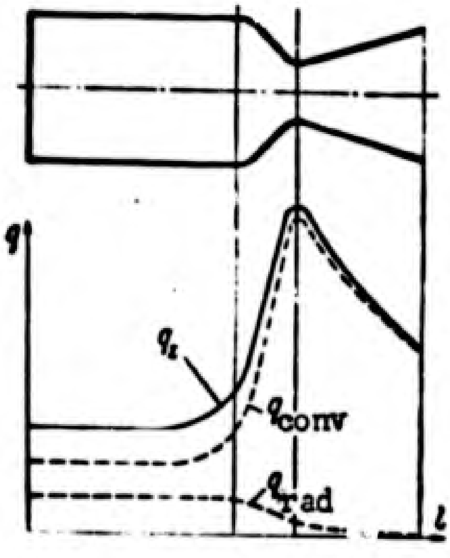

Figure 102. The nature of the distribution of heat flows along the length of the engine chamber.

<u>Method of Ensuring the Presence of the Required Quantity of Cooling Liquid, and Determining the Degree to which it is Heated in Each Section.</u>

Knowing the magnitude of the heat flows into the wall of the combustion chamber, we also know the amount of heat that must be absorbed by the cooling liquid.

The maximum quantity of heat that the cooling liquid is capable of absorbing is determined by bringing this liquid to its boiling point T_s at a given pressure in the cooling jacket.

The entire quantity of heat that enters the walls of the chamber goes for heating the cooling liquid, i.e., we may write

$$\sum_{i=1}^{i=n} q_{\Sigma i} f_i = cG_{\text{cool}}(T_{\text{out}} - T_{\text{ent}}), \quad \text{(VII.48)}$$

where c is the specific heat of the cooling liquid in kilo-cal/kg °C, taken at an average temperature

$$T_{\text{av}} = \frac{T_{\text{ent}} + T_{\text{out}}}{2};$$

G_{cool} is the consumption of cooling component in kg/hour;

$q_{\Sigma i}$, f_i is the total flow of heat in kilo-cal/m^2 hour and the area of surface in m^2 of the i-section of the combustion chamber;

T_{ent} and T_{out} are the inlet and outlet temperatures of the cooling liquid.

According to formula (VII.48) the outlet temperature of the cooling liquid from the cooling jacket is determined as follows:

$$T_{\text{out}} = \frac{\sum_{i=1}^{i=n} q_{\Sigma i} f_i}{cG_{\text{cool}}} + T_{\text{ent}}. \quad \text{(VII.49)}$$

As previously mentioned, the liquid-fuel rocket engine is in most instances cooled by its own components. If the outlet temperature of the cooling liquid from the jacket T_{out} is higher than its boiling point at the pressure obtaining in any given case, this means that use of only one of the components for cooling purposes will not suffice for the chamber of this engine. In that event it will be necessary to arrange, within the interior of the chamber, for a protective internal cooling curtain (see below). In some instances it will be necessary, in order to remove all the incoming heat, to use both components for cooling in the manner indicated in Figure 99.

After the cooling liquid has been chosen, it is possible to compute its temperature for each individual section. In doing so, the temperature of the cooling component, as it enters the cooling jacket, is taken as equal to the highest temperature of the surrounding medium, i.e., the temperature at which the liquid-fuel rocket engine is expected to function according to the specifications (e.g., +50° C). Once the input temperature of the cooling agent is known, the amount of its heating for the section can be determined from the equation

$$q_{\Sigma i} f_i = cG_{\text{cool}} (T_{\text{out}\,i} - T_{\text{ent}\,i}), \qquad \text{(VII.50)}$$

and from this expression, the outlet temperature of the liquid as it leaves the section (equal to the input temperature for the section next following, i.e., $T_{\text{ent}\ i+1} = T_{\text{out}\ i}$) is found by using the equation

$$T_{\text{out}\,i} = \frac{q_{\Sigma i} f_i}{cG} + T_{\text{ent}\,i}, \qquad \text{(VII.51)}$$

The specific heat in kilo-cal/kg °C can be taken for the temperature equal to $T_{\text{ent}\ i}$.

Determination of the Coefficient of Heat Transfer from the Liquid Wall to the Cooling Liquid $\alpha_{\text{liq.w.}}$ and of the Temperature of the "Liquid Wall" of the Engine Chamber $T_{\text{liq.w.}}$.

The temperature of the "liquid wall" depends not only on the heat conductivity λ and the thickness δ_{wall} of the wall of the engine chamber, but likewise on the manner in which this wall is bathed by the cooling liquid.

Obviously, the more intensively the chamber wall is bathed by the cooling liquid, the more adequately the latter will remove the heat flows and the lower will be the temperature of the "liquid wall." A lowering of $T_{\text{liq.w.}}$ will, in turn, result in reducing the temperature of the gaseous wall $T_{\text{g.w.}}$; this will subsequently lead to an exchange of the entire heat flow, the latter being imparted to the wall.

In this manner we deal here with a highly complicated relationship between the temperature of the walls and the flows of heat.

Knowing the constructional dimensions of the cooling jacket and taking into account that the entire flow of heat q_{Σ} must be removed by the cooling liquid, we obtain $T_{liq.w.}$ from the equation

$$q_{\Sigma}=\alpha_{liq}(T_{liqw}-T_{liq}), \qquad (VII.52)$$

where the coefficient of heat emission from the wall to the cooling liquid α_{liq} can be found from the previously-obtained formula (VII.18)

$$\alpha_{liq}=Z\frac{75,6}{d_{eq}^{0,2}}\left(\frac{G_{cool}}{f_{liq}}\right)^{0,8}\beta.$$

Using this formula we compute α_{liq} for each section, and having found α_{liq} we determine $T_{liq.w.}$ for each section.

From the equation (VII.52)

$$T_{liqw}=\frac{q_{\Sigma}}{\alpha_{liq}}+T_{liq}. \qquad (VII.53)$$

The temperature of the liquid T_{liq} we take as equal to the average temperature of the liquid in each section.

<u>Checking the Correspondence of the Assumed with the Computed Distribution of Temperature of the Gas Wall $T_{g.w.}$</u>.

The computed value for $T_{g.w.}$ we determine by proceeding from the equation for heat conductivity through a solid wall

$$q_{\Sigma}=\frac{\lambda}{\delta_{wall}}(T_{gw}-T_{liqw}), \qquad (VII.54)$$

where δ_{wall} is the thickness of the wall of the combustion chamber in m;

λ is the heat conductivity of the material of the liquid-fuel rocket engine in kilo-cal/m hour °C, taken for the average temperature of the wall

$$T_{av} = \frac{T_{gw} + T_{liq\,w}}{2}.$$

From equation (VII.54) we get

$$T_{gw} = q_{\Sigma} \frac{\delta_w}{\lambda} + T_{liq\,w}. \qquad \text{(VII.55)}$$

If the magnitude obtained for $T_{g.w.}$ is expended at the given value for $T_{g.w.}$ it will be necessary to assign new values for $T_{g.w.}$, values that will be intermediate between the values earlier assigned and those obtained; and the computation is then started anew.

If the magnitude obtained for $T_{g.w.}$ is higher than the limits permissible for the metal in question, it will be necessary to reduce it to the admissible value, or to reduce the cross section allowed for passage of the liquid, or to reduce the thickness of the wall of the engine chamber.

If the above-mentioned measures prove to be insufficient, it will be necessary to have recourse to internal cooling.

Section 42. Different Forms of a Cooling Tract for the Engine Chamber.

In making the computations for external cooling it is necessary to know both the dimensions and the shape of the cooling tract of the engine chamber. It is an indispensable preliminary requirement in designing the cooling tract that one must obtain, in the region of the critical cross section, speeds of movement of the cooling liquid somewhere near 5-10 m/sec.

Depending on the required rigidity of the structure and on the available quantities of the cooling liquid, use will be made of one or another of the following basic types of cooling tracts.

The Slot-Type Duct.

The cooling tract in the shape of a smooth slotted (circular) duct (see Figure 103 a) is the simplest to produce, and is the one that has been most widely used in the actual construction of liquid-fuel rocket engines.

Its basic shortcoming consists in the fact that combustion chambers with

This type of tract possess only a small degree of rigidity. In order to increase the rigidity of the internal lining when the slotted duct is used, recourse is made to various ways of bracing the internal lining of the engine chamber against the outer lining. Moreover, in order to increase the rigidity and to ensure a more even flow of the liquid through the crosswise section of the slotted duct and along its generatrix, use is sometimes made of built-in reinforcing ribs about 1 mm in thickness, with a pitch of several millimeters.

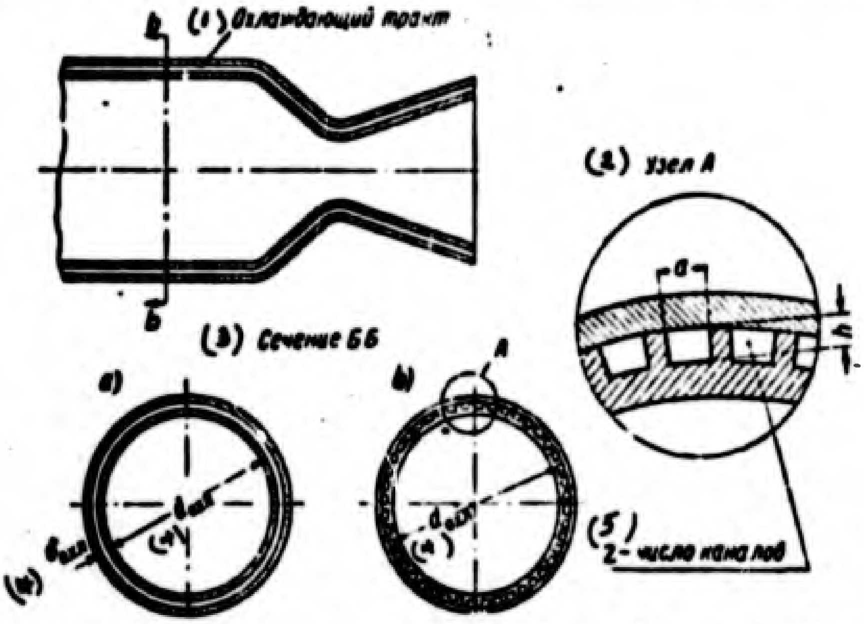

Figure 103. The cooling tract in the form of a slotted duct

a -- cross section of a smooth slotted duct; b -- cross section of a slotted duct with lengthwise reinforcement ribbing.

1 -- cooling tract; 2 -- assembly A; 3-- cross section BB; 4 -- d_{cool}; 5 -- number of ducts;

A second shortcoming of this type of cooling tract can be seen in the fact that when the quantity of cooling liquid is small, it is necessary to make use of very small slot dimensions so as to obtain a sufficient speed of flow of the liquid through the cooling tract. Technologically it is difficult to produce a uniform slot of a height of less than 0.8 mm by machining, and one of less than 1.5 mm if the engine chamber is of welded construction. This is a fact that should be borne in mind in making computation for the cooling of the chamber.

The equivalent diameter for the computation of cooling when use is to be made of a smooth slotted cooling tract (see Figure 103 a) is obtained from the equation

$$d_{eq}=\frac{4F_{liq}}{P}=\frac{4\pi d_{cool}\delta_{cool}}{2\pi d_{cool}}=2\delta_{cool} \qquad (VII.56)$$

If the slotted duct has lengthwise reinforcing ribs (see Figure 103 b) then,

$$d_{eq}=\frac{4F_{liq}}{P}=\frac{4zah}{2(a+h)z}=\frac{2ah}{a+h}, \qquad (VII.57)$$

where h is the magnitude of the open space in the slotted duct;

z is the number of ducts; and

a is the width of the duct between each two ribs.

The thickness of the inner lining of the engine chamber is usually set at 1.5-4 mm.

The Cooling Tract in the Form of a Spiral Slotted Duct.

The cooling tract in the form of a spiral slotted duct (one or more than one) is chosen for the purpose of increasing the speed of flow of the liquid through the tract, with a view to increasing the heat exchange, and also for the purpose of increasing the rigidity of the internal chamber lining of the engine. Apart from that, as a result of the ribbed surface of the combustion chamber wall obtained in this manner, conditions are obtained that are more favorable to the exchange of heat, since there is an increase of the heat-transferring surface.

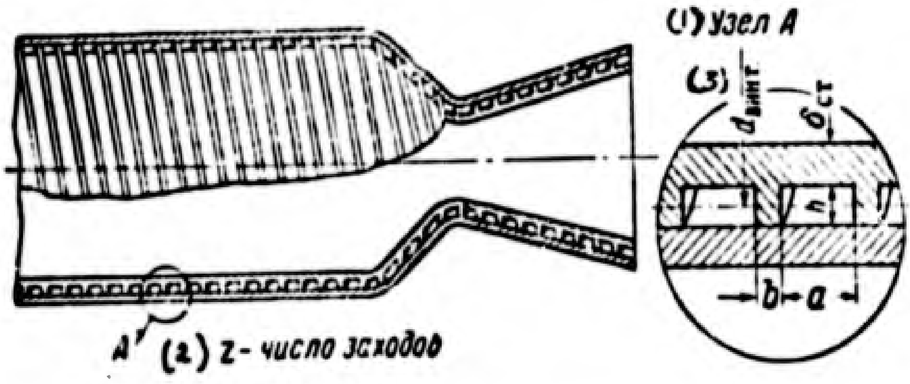

Figure 104. Cooling tract in the form of a spiral duct.

1 -- Assembly A; 2 -- Z - number of turns; 3 -- d_{spir}.

The passage section of the spiral duct is selected on the basis of the required speed of flow of the liquid. The height of the open space h (Figure 104) is chosen at 2-3 mm. The thickness of the spiral ribbing b is chosen at about 1 mm.

As an example of a liquid-fuel rocket engine with a spiral cooling tract one might cite the ORM-65 engine (Figure 127).

The basic shortcoming of this system of cooling can be seen in the difficulty of producing an adequate threading, especially on the cone-shaped part of the chamber.

A second shortcoming can be seen in the large amount of hydraulic loss in the spiral duct. This makes it necessary to increase the pressure upon the cooling component at its point of entry, and, consequently, the pressure of the feed (see below, Section 54).

Inasmuch as the strongest heat flows are to be found around the critical cross section of the chamber, it is necessary to provide a great speed of flow for the cooling liquid to carry the heat away, spiral ducts are often used only around the critical section, while in the remaining part of the chamber the cooling tract is left in the form of a slotted duct.

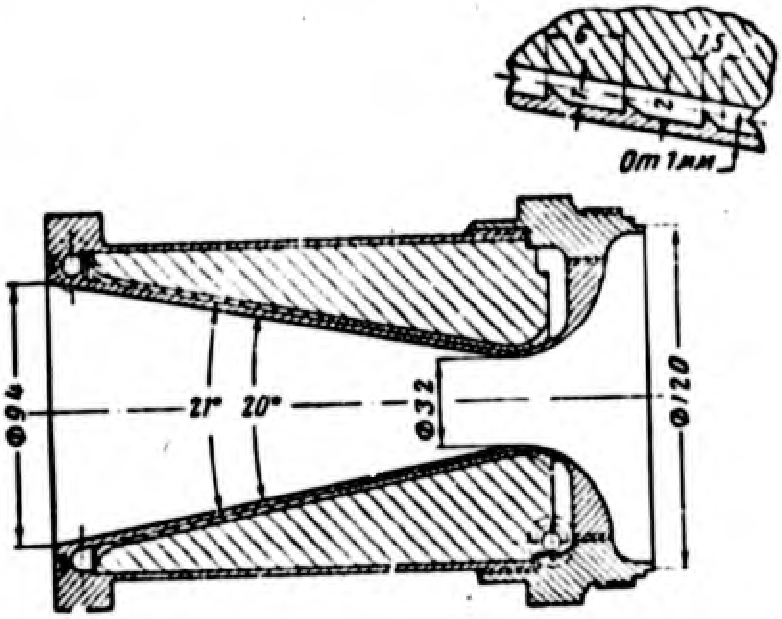

Figure 105. Cooling tract of the nozzle part of the ORM-45 engine.

The cooling tract of the "Walter" engine (Figure 125) has this design.

required speed of flow of the liquid. The height of the open space h (Figure 104) is chosen at 2-3 mm. The thickness of the spiral ribbing b is chosen at about 1 mm.

As an example of a liquid-fuel rocket engine with a spiral cooling tract one might cite the ORM-65 engine (Figure 127).

The basic shortcoming of this system of cooling can be seen in the difficulty of producing an adequate threading, especially on the cone-shaped part of the chamber.

A second shortcoming can be seen in the large amount of hydraulic loss in the spiral duct. This makes it necessary to increase the pressure upon the cooling component at its point of entry, and, consequently, the pressure of the feed (see below, Section 54).

Inasmuch as the strongest heat flows are to be found around the critical cross section of the chamber, it is necessary to provide a great speed of flow for the cooling liquid to carry the heat away, spiral ducts are often used only around the critical section, while in the remaining part of the chamber the cooling tract is left in the form of a slotted duct.

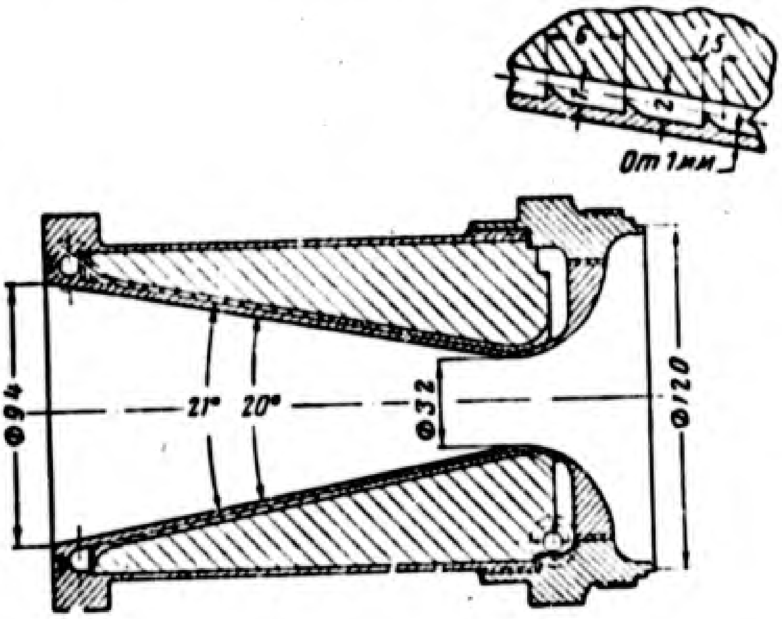

Figure 105. Cooling tract of the nozzle part of the ORM-45 engine.

The cooling tract of the "Walter" engine (Figure 125) has this design.

Figure 106. Engine chamber made of spiral tubes.

The equivalent diameter of a cooling tract in the form of a spiral duct is, for the purposes of computing heat exchange, derived from the equation

$$d_e = \frac{4F_{liq}}{P} = \frac{4ahz}{2(a+h)z} = \frac{2ah}{a+h}. \qquad (VII.58)$$

Figure 105 shows the nozzle part of the ORM-45 engine designed by V. P. Glushko. Here the cooling tract is also formed after the manner of a spiral threading. It is interesting to note that here the height of the threading is equal to one-half the height of the slot of the cooling tract of the engine.

As a variant form of the spiral cooling tract we may regard the cooling tract made of tubes. In this case the walls of the engine chamber are made of copper or steel tubes tightly fitted one against the other. The cooling liquid flows through the inside of these tubes (see Figure 106).

Section 43. Example Showing the Method of Calculating an External Cooling Tract for an Engine Chamber.

The problem is to make a test calculation of the cooling system for an engine chamber that uses as fuel 96% nitric acid + kerosene. The consumption of fuel is $G_{comb} = 2.7$ kg/sec; and the consumption of oxidizer is $G_o = 11.2$ kg/sec.

As a result of the thermic computations the following results were obtained: temperature of combustion $T_2 = 2{,}853^\circ$ abs; pressure in the combustion chamber $p_2 = 23$ kg/cm^2; isoentropic index for the discharge $n_{1s} = 1.18$.

The engine installation must function at temperatures of the ambient medium varying from +50° C to -50° C.

The composition of the products of combustion in the chamber is shown in Table 24.

Table 24

Component	CO_2	H_2O	CO	H_2	O_2	N_2
p_i	3,63	9,77	4,13	1,68	0,30	3,40

Note: The share of other components of the products of combustion in the mixture is so small that in this computation they may be disregarded.

The cooling tract has the form of a slotted gap.

The height of the slot is constant throughout the length of the cooling tract and is 2 mm. The thickness of the inner lining of the engine chamber is likewise constant throughout the length and is 2 mm.

The basic dimensions of the cooling tract and the basic dimensions of the engine chamber are shown in Figure 107.

The material of the chamber wall is stainless steel.

In solving the problem we follow the procedure discussed in Section 41.

We take the following for the temperature of the gaseous wall:

In the chamber and at the inlet of the nozzle..................$T_{g.w.} = 450^\circ$ C $= 723^\circ$ abs

In the critical cross section.....$T_{g.w.} = 825^\circ$ C $= 1{,}098^\circ$ abs

At the exit of the nozzle.........$T_{g.w.} = 350^\circ$ C $= 623^\circ$ abs

For the purposes of a first approximation we assume the variation of $T_{g.w.}$ along the length of the chamber to be rectilinear.

A diagram showing the given distribution of $T_{g.w.}$ is shown in Figure 107.

We now compute the specific heat $C_{p\ g.w.}$ and the viscosity at the temperature of the gaseous wall at the inlet of the nozzle.

The data of this computation are shown in Table 25.

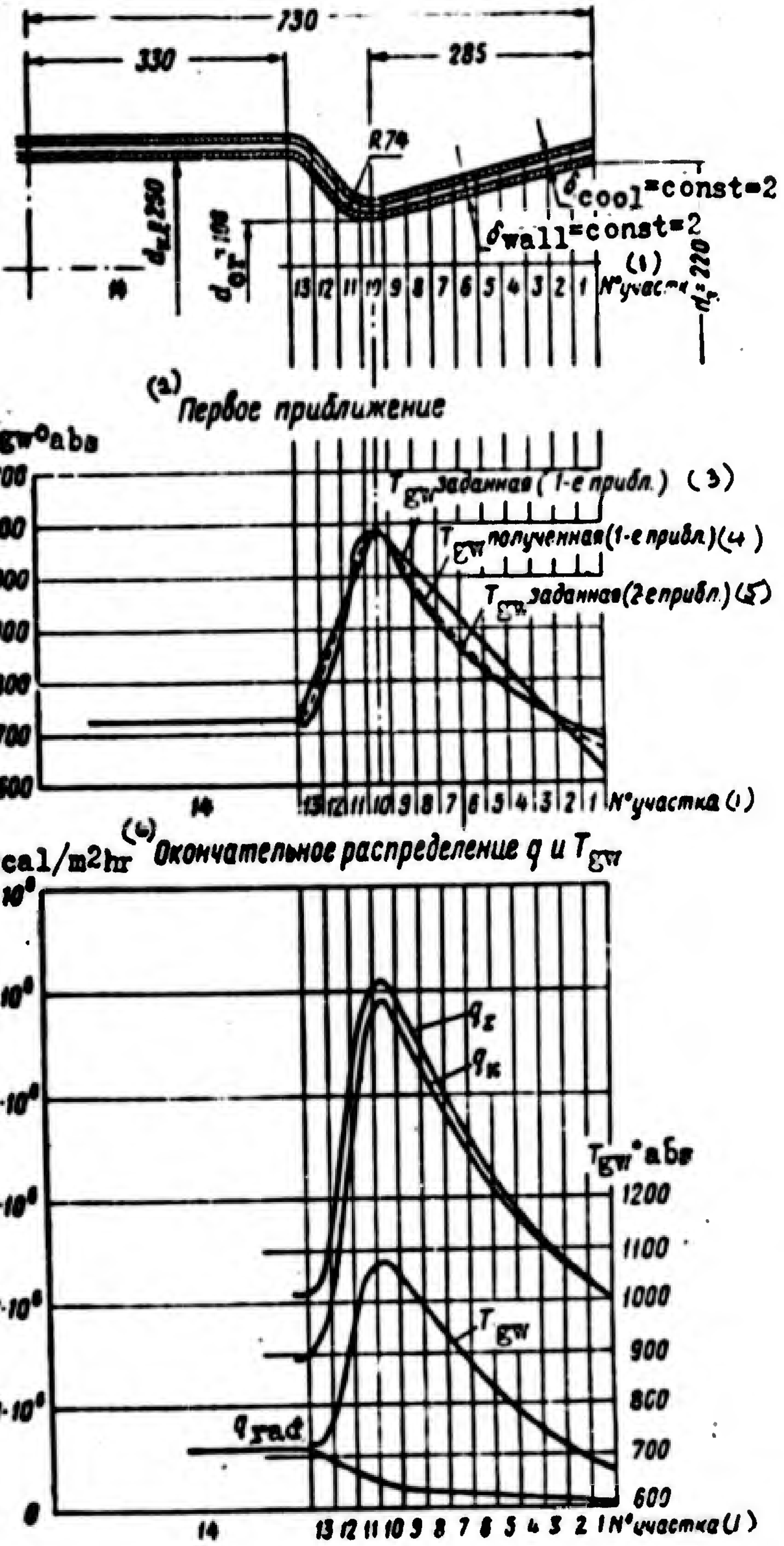

Figure 107. Illustrating the example of calculation of the cooling of an engine chamber.

1 -- section; 2 -- first approximation; 3 -- given first approximation; 4 -- found first approximation; 5 -- given second approximation; 6 -- final distribution of q and $T_{g.w.}$.

As result of this computation we get:

$$C_{p\ g.w.} = 0.3535 \text{ kilo-cal/kg } ^{\circ}C; \qquad g\,\mu_{g.w.} = 2.98 \cdot 10^{-5} \text{ kg/m/sec}$$

After substitution of these values and the values for $G^{0.82}$ in equation (VII.13), the latter assumes the following form:

$$\alpha_{gas} = 34{,}8\,\frac{1}{d^{1,82}}\left(\frac{T_2}{T_{gw}}\right)^{0,35}. \tag{VII.59}$$

We call attention to the fact that, owing to the small power to which the temperature ratio is raised, the value for $\left(\frac{T_2}{T_{g.w.}}\right)^{0.35}$ varies only within narrow limits. For this reason the value for the coefficient of heat transfer α_{gas} varies throughout the length of the engine chamber mostly in proportion to the value for $\frac{1}{d_{cp}^{1.82}}$.

We subdivide the engine chamber into 14 sections and in accordance with the previously-derived formula (VII.59) we compute the coefficient of heat transfer α_{gas} from the heated products of combustion to the gaseous wall for each of the sections.

(In working out these computations and those that follow we round off all the numerical values to the limit of the accuracy of the slide rule.)

Knowing α_{gas}, by formula (VII.43) we determine the specific convectional flow of heat into the wall q_{conv}. The computation of values for α_{gas} and q_{conv} is shown under lines 1-9, Table 26.

We now proceed to determine the radiated heat flows q_{rad}.

We determine its constituents for three sections according to formulae (VII.44) and VII.45).

In the combustion chamber $T_2 = 2{,}853^{\circ}$ abs; $T_{g.w.} = 773^{\circ}$ abs.

The reduced length of the path of a ray $l = 0.9\ d = 0.9 \cdot 0.250 = 0.225$ m.

$$p_{CO_2} = 3{,}63 \text{ kg/cm}^2;\ p_{H_2O} = 9{,}77 \text{ kg/cm}^2.$$

$$q_{CO_2} = 3{,}5\sqrt[3]{3{,}63 \cdot 0{,}225}\left[\left(\frac{2853}{100}\right)^{3,5} - \left(\frac{773}{100}\right)^{3,5}\right] = 388\,000 \text{ kilo-cal/M}^2\text{hr};$$

$$q_{H_2O} = 3{,}5 \cdot 9{,}77^{0,8} \cdot 0{,}225^{0,6}\left[\left(\frac{2853}{100}\right)^{3} - \left(\frac{773}{100}\right)^{3}\right] = 193\,000 \text{ kilo-cal/M}^2\text{hr}.$$

Table 25

Component of the products of combustion	CO_2	CO	H_2O	H_2	N_2	O_2	Observations and supplementary computations
p_i = kg/cm^2	3,63	4,13	9,77	1,68	3,40	0,30	Obtained from the results of thermal calculations
m_i	44	28	18	2	28	32	
$p_i m_i$	160	115,6	176	3,36	95,2	9,6	$\sum p_i m_i = 559{,}76$
$g_i = \frac{p_i m_i}{\sum p_i m_i}$	0,286	0,206	0,315	0,006	0,170	0,0172	$\sum g_i = 0{,}9992 \approx 1$
$c_{p_i\,gw}$	0,270	0,267	0,501	3,49	0,263	0,247	
$g_i c_{p_i\,gw}$	0,0745	0,0550	0,158	0,0209	0,0447	0,0042	$c_{p\,gw} = \sum g_i c_{p_i\,gw} = 0{,}3535$
$(g\mu_{i\,wall}) \cdot 10^6$ in kg/m sec.	3,15	3,24	2,58	1,60	3,28	3,85	
$\left(\frac{g_i}{g\mu_{i\,wall}}\right) \cdot 10^{-6}$	0,0909	0,0636	0,122	0,00375	0,0518	0,00447	$\left(\frac{1}{g\mu_{gw}}\right) \cdot 10^{-6} = \sum\left(\frac{g_i}{g\mu_{i\,gw}}\right) \cdot 10^{-6} = 0{,}3365$

According to formula (VII.46)

$$q_{rad} = 388{,}000 + 193{,}000 = 581{,}300 \approx 0.581 \cdot 10^6 \text{ kilo-cal/m}^2 \text{ hour}$$

In the critical cross section

$$T_{cr} = \frac{2T_2}{n_{in}+1} = \frac{2 \cdot 2853}{1{,}18+1} = 2620° \text{ abs.};$$

$$T_{gw} = 1073° \text{ abs.}$$

For the purposes of approximation we assume that the partial pressures of the individual products of combustion vary in proportion to the total pressure of the gaseous mixture (this assumption is permissible in view of the small variations of temperature).

The pressure in the critical section p_{cr} is equal to

$$p_{cr} = \left(\frac{2}{n_{in}+1}\right)^{\frac{n_{in}}{n_{in}-1}} p_2 = \left(\frac{2}{1{,}18+1}\right)^{\frac{1{,}18}{1{,}18-1}} \cdot 23 = 13{,}1 \text{ kg/cm}^2.$$

Consequently:

$$p_{CO_2} = 3{,}63\,\frac{13{,}1}{23} = 2{,}07 \text{ kg/cm}^2;$$

$$p_{H_2O} = 9{,}77\,\frac{13{,}1}{23} = 5{,}56 \text{ kg/cm}^2;$$

$$l = 0{,}9d_{cr} = 0{,}9 \cdot 0{,}108 = 0{,}0972 \text{ m};$$

$$q_{CO_2} = 3{,}5\sqrt[3]{2{,}07 \cdot 0{,}0972}\left[\left(\frac{2620}{100}\right)^{3{,}5} - \left(\frac{1073}{100}\right)^{3{,}5}\right] = 181\,000 \text{ kilo-cal/M}^2\text{hr};$$

$$q_{H_2O} = 3{,}5 \cdot 5{,}56^{0{,}8} \cdot 0{,}0972^{0{,}6}\left[\left(\frac{2620}{100}\right)^{3} - \left(\frac{1073}{100}\right)^{3}\right] = 32\,600 \text{ kilo-cal/M}^2\text{hr};$$

$$q_a = 181\,000 + 32\,600 = 213\,600 \text{ kilo-cal/M}^2\text{hr}.$$

At the exit of the nozzle, the pressure $p_3 = 1$ atm. Consequently,

$$p_{CO_2} = \frac{3{,}63}{23} = 0{,}168 \text{ kg/cm}^2;$$

$$p_{H_2O} = 0{,}425 \text{ kg/cm}^2;$$

$$l = 0{,}9d_3 = 0{,}9 \cdot 0{,}22 = 0{,}198 \text{ m}.$$

The temperature at the exit of the nozzle T_3 is found from the well-known relation

$$T_3 = T_2\left(\frac{p_3}{p_2}\right)^{\frac{n_{in}-1}{n_{in}}} = 2853\left(\frac{1}{23}\right)^{\frac{1{,}18-1}{1{,}18}} = 1770° \text{ abs.};$$

Data on Calculation of the Cooling

No. of Line	Designation of Value	Symbol and Dimensionality	Number of		
			1	2	3
1	Average diameter of section	d_{av} in m	0,214	0,202	0,190
2		$\frac{1}{d_{av}}$	4,67	4,95	5,26
3		$\left(\frac{1}{d_{av}}\right)^{1.82}$	16,5	18,3	20,5
4	Given temperature of gaseous wall (first approximation)	T_{gw} in° abs.	635	684	735
5		$\frac{T_g}{T_{gw}}$	4,49	4,17	3,88
6		$\left(\frac{T_g}{T_{gw}}\right)^{0.35}$	1,692	1,649	1,608
7	Coefficient of heat transfer from gas to wall	α_{gas} in kilo-cal/M²hr°C	972	1050	1148
8		$T_g - T_{gw}$	2218	2168	2118
9	Specific convectional flow of heat	$q_{conv.} \cdot 10^{-6}$ kilo-cal/M²hr	2,15	2,28	2,43
10	Specific radiated heat current	$q_{rad} 10^{-6}$ kilo-cal/M²hr	0,040	0,060	0,080
11	Total specific heat flow	$q_{\Sigma} \cdot 10^{-6}$ kilo-cal/M²hr	2,19	2,34	2,51
12	Area of surface through which the heat exchange takes place	$f_i = \pi d_{av} l$ in m²	0,0207	0,0196	0,0184
13	Flow of heat within the section	$q_{\Sigma_i} f_i \cdot 10^{-6}$	0,0453	0,0458	0,0462
14	Temperature of the cooling liquid at the exit of the section	t_{out}°C	52,5	55,0	57,5

Tablo 26

System for the Engine Chamber

Section of Cooling Tract										
4	5	6	7	8	9	10	11	12	13	14
0,178	0,166	0,154	0,142	0,130	0,118	0,108	0,120	0,166	0,236	0,250
5,62	6,02	6,50	7,04	7,70	8,48	9,26	8,34	6,02	4,24	4,00
23,2	26,2	30,3	35,0	41,0	49,0	57,5	47,5	26,2	13,8	12,4
785	835	886	940	992	1045	1098	988	885	780	723
3,63	3,42	3,22	3,04	2,88	2,73	2,60	2,89	3,22	3,63	3,95
1,597	1,539	1,506	1,476	1,447	1,421	1,398	1,450	1,506	1,570	1,616
1290	1410	1587	1798	2065	2425	2790	2390	1373	754	697
2068	2018	1967	1913	1861	1808	1755	1865	1968	2073	2130
2,67	2,84	3,12	3,44	3,84	4,38	4,90	4,46	2,70	1,56	1,48
0,100	0,120	0,140	0,160	0,180	0,200	0,214	0,319	0,424	0,529	0,581
2,77	2,96	3,26	3,60	4,02	4,58	5,114	4,779	3,124	2,089	2,061
0,0172	0,0161	0,0149	0,0137	0,0126	0,0114	0,0102	0,0124	0,0230	0,0297	0,267
0,0476	0,0477	0,0486	0,0493	0,0505	0,0522	0,0522	0,0593	0,0719	0,0621	0,551
60,1	62,7	65,4	68,0	70,7	73,5	76,4	79,6	83,4	86,7	116,0

No. of Line	Designation of Value	Symbol and Dimensionality	Number of		
			1	2	3
15	Average temperature of the cooling liquid in the section	t_{av} °C	51,2	53,7	56,2
16	Drop of temperature through the thickness of the wall at a given temperature $T_{g.w.}$	$\Delta t_{wall} = \frac{\delta_{wall}}{\lambda} q_{\Sigma}$	243	260	279
17	The temperature of the "liquid wall" at a given $T_{g.w.}$	$T_{liq\,w} = T_{gw} - \Delta t_{wall}$	392	424	456
18		β	1,17	1,195	1,225
19		z	0,0482	0,0486	0,0492
20	Average diameter of the cooling slot in the section	d_{cool} in m	0,221	0,209	0,197
21		$\left(\frac{1}{d_{cool}}\right)^{0,8}$	3,34	3,50	3,67
22	Coefficient of heat transfer from the wall to the cooling liquid	α_{liq} kkal/m²hr°C	17150	18550	20200
23		$\frac{q_{\Sigma}}{\alpha_{liq}}$	128	126	124
24	The obtained temperature for the "liquid wall"	$t_{liq\,w} = t_{av} + \frac{q_{\Sigma}}{\alpha_{liq}}$	179,2	179,7	180,2
25	The obtained temperature for the gaseous wall (first approximation) in °C	$t_{gw} = t_{liq\,w} + \Delta t_{wall}$	422,2	439,7	459,2
26	The obtained temperature for the gaseous wall (first approximation) in °abs	T_{gw} in° abs.	695,2	712,7	732,2
27	The given temperature for the gaseous wall (second approximation)	T_{gw} in° abs.	673	698	732
28	The obtained temperature for the gaseous wall (second approximation)	T_{gw} in° abs.	675	706	734
29	The specific convectional heat flow (second approximation)	$q_{rad}\cdot 10^{-6}$ kcal/m²hr	2,07	2,25	2,44
30	The total specific flow of heat (second approximation)	$q_{\Sigma}\cdot 10^{-6}$ kcal/m²hr	2,11	2,31	2,52

Table 26 (continued)

Section of Cooling Tract										
4	5	6	7	8	9	10	11	12	13	14
58,8	61,4	64,0	66,7	69,4	72,1	75,0	77,9	81,0	85,1	101,4
308	329	362	400	445	509	568	531	347	232	229
477	506	524	540	547	536	530	457	538	548	494
1,218	1,21	1,203	1,195	1,183	1,180	1,174	1,166	1,156	1,146	1,108
0,0498	0,0500	0,0506	0,0511	0,0516	0,0521	0,0528	0,0534	0,0540	0,0515	0,0575
0,185	0,173	0,161	0,149	0,137	0,125	0,114	0,128	0,176	0,214	0,258
3,85	4,07	4,33	4,59	4,90	5,28	5,67	5,19	4,01	3,09	2,955
21300	22400	24000	25500	27200	29600	32000	29400	22800	17600	17200
130	132	136	.141	147	155	160	162	127	119	120
188,8	193,4	200	207,7	216,4	227,1	235	239,9	208	204,1	221,4
496,8	522,4	562	607,7	661,4	736,1	803	770,9	555	436,1	450,4
769,8	795,4	835	880,7	934,4	1009,1	1076	1043,9	828	709,1	723,4
767	807	847	893	955	1030	1098	1015	868	730	723
770	802	851	900	966	1019	1076	1041	845	721	724
2,67	2,90	3,23	3,58	3,97	4,45	4,90	4,36	2,742	1,636	1,485
2,77	3,02	3,37	3,74	4,15	4,65	5,114	4,679	3,166	2,165	2,066

$$q_{CO_2} = 3{,}5\sqrt[3]{0{,}168\cdot 0{,}198}\left[\left(\frac{1770}{100}\right)^{3,5} - \left(\frac{723}{100}\right)^{3,5}\right] = 24\,500 \text{ kilo-cal/m}^2\text{hr};$$

$$q_{H_2O} = 3{,}5\cdot 0{,}425^{0,8}\cdot 0{,}198^{0,6}\left[\left(\frac{1770}{100}\right)^{3} - \left(\frac{723}{100}\right)^{3}\right] = 3300 \text{ kilo-cal/m}^2\text{hr};$$

$$q_{rad} = 24\,500 + 3300 = 27\,800 \text{ kilo-cal/m}^2\text{hr}.$$

The values of q_{rad} in the intermediate sections are determined on the basis of the assumption made concerning the linear distribution of q_{rad} between the inlet sections to the nozzle and the critical section, as well as between the critical and exit sections.

A graph of the distribution of q_{rad} lengthwise in the chamber is given in Figure 107. Knowing q_{rad} in each section, we find the total specific thermal flux in each section

$$q_{\Sigma} = q_{rad} + q_{conv}.$$

The estimated data for q_{rad} and q_{Σ} are given in lines 10 and 11 of Table 26.

Knowing q_{Σ} in each section, we find the total thermal flux to the wall of the engine chamber

$$\sum q_{\Sigma_i} f_i = 1{,}2297\cdot 10^4 \text{ kilo-cal/hr}.$$

As a cooling liquid, we select the oxidizer which is 96% nitric acid. Its consumption, as assigned, is

$$G_o = 11{,}2 \text{ kg/sec}.$$

We determine roughly the exit temperature of the cooling liquid, nitric acid. Its inlet temperature T_{in}, in conformity with the assigned operating conditions of the engine, we assume to equal 50° C.

The heat capacity of the cooling liquid we consider roughly to equal 0.47. Then, in accordance with formula (VII.49)

$$T_{out}=\frac{1{,}2297\cdot 10^{6}}{0{,}47\cdot 11{,}2\cdot 3600}+50=65+50=115^{\circ}\,C.$$

The output pressure of the cooling liquid as it leaves the cooling tract p_{cool} we take as being approximately equal to the sum of the pressure in the engine chamber and the drop of pressure in the jets Δp_j. If we assume that Δp_j is equal to 6 kg/cm^2 (Δp_j is usually known from computations for the jets), we then have

$$p_{cool}=p_1+\Delta p_j=23+6=29\ kg/cm^2.$$

With p_{out} = 29 kg/cm^2 the boiling temperature of the nitric acid T_3 equals approximately 230-250° C, i.e.

$$T_{out}<T_s.$$

Consequently the nitric acid is fully sufficient for cooling the chamber of the engine.

In accordance with formula (VII.51) we compute the extent of heating of the cooling agent and its temperature T_{liq} for each of the sections. Data for the computation of T_{liq} are provided on lines 14 and 15 in Table 26.

We now proceed to determine the coefficient of heat emission from the wall to the liquid α_{liq} and the temperature of the "liquid wall" of the engine chamber $T_{liq.w.}$. The value for α_{liq} is determined according to formula (VII.18)

$$\alpha_{liq}=75{,}6Z\frac{1}{d_e^{0{,}2}}\left(\frac{G_{cool}}{F_{liq}}\right)^{0{,}8}\beta.$$

For the slotted cooling tract we have for each section

$$d_{e\,i}=\frac{4F_{liq}}{\Pi}=\frac{4F_{liq\,i}}{2\pi d_{cool\,i}},$$

where $d_{cool\ i}$ is the average diameter of the cooling slot in the i-section in m;

$F_{liq\ i}$ equal $d_{cool\ i}\,\delta_{cool}$ is the passage cross section of the slot in the i-section, in m^2.

After substitution of the value of d_e, appropriate simplification, and computation of the constant, formula (VIII.18) assumes the following form for the case of a slotted cooling tract:

$$\alpha_{liq} = 26.4 Z \frac{G^{0.8}_{cool}}{d^{0.8}_{cool\,i}\,\delta_{cool}} \beta. \qquad (VII.60)$$

For the given example, after substituting the value

$$G^{0.8}_{cool} = 11.2^{0.8} = 6.9 \text{ and } \delta_{cool} = 0.002 \text{ m},$$

we get

$$\alpha_{liq} = 91\,100 Z \frac{\beta}{d^{0.8}_{cool\,i}}. \qquad (VII.61)$$

For the case under consideration the value of Z is known, since the temperature of the liquid is known for each section. For the purpose of computing the coefficient β we ascertain the temperature of the "liquid wall" $T_{liq.w.}$ according to the formula

$$T_{liq\,w} = T_{gw} - \frac{\delta_{wall}}{\lambda} q_g \qquad (VII.62)$$

The heat conductivity of the stainless steel, as shown in the diagram in Figure 93, depends but slightly on the temperature; and for this reason we assume the coefficient of heat conductivity λ to be constant throughout the length of the engine chamber and equal to 18 $\frac{\text{kilo-cal}}{\text{m/hr/}^{\circ}\text{C}}$.

Knowing the value for $T_{liq.w.}$, we determine β, and then compute α_{liq} in accordance with formula (VII.61). The data for this computation are provided in lines 16-22, Table 26.

Having determined α_{liq} for each section, we use formula (VII.53) to find the temperature of the "liquid wall" for each section

$$T_{gw} = T_{liq} + \frac{q_g}{\alpha_{liq}}. \qquad (VII.63)$$

It is obvious that $T_{liq.w.}$ as obtained from formula (VII.62) may differ from $T_{liq.w.}$ as obtained from formula (VII.63), since in formula (VII.62) $T_{g.w.}$ was a given value.

We make a check upon the assumed and computed distribution of temperatures $T_{g.w.}$. Knowing $T_{liq.w.}$ from formula (VII.55), we determine $T_{liq.w.}$ for each section. Data for the computation of $T_{liq.w.}$ and $T_{g.w.}$ are shown in lines 23-26 of Table 26. Figure 107 shows the curve for the first approximation obtained for values of $T_{g.w.}$ for the entire length of the engine chamber. As indicated by Table 26 and the diagrams in Figure 107, the discrepancy of the given and the obtained values for $T_{g.w.}$ ranges in some sections as high as 9.5%. Ordinarily it is desirable that the discrepancy between the given and the obtained $T_{g.w.}$ whould not exceed 5%. For this reason we assign a new distribution of $T_{g.w.}$, intermediate between the given and the obtained values in the first approximation, for the distributions of $T_{g.w.}$. The newly-assigned values for $T_{g.w.}$ are shown in line 27 of Table 26 and in Figure 107.

As shown in the diagram of Figure 107, a curvilinear distribution of $T_{g.w.}$ along the length of the chamber has been adopted in the second approximation.

Upon going through all the computations a second time we get the value for q_{conv}, q_{Σ} and $T_{g.w.}$. The results of the computation are shown in lines 28-30 of Table 26 and in Figure 107.

Comparison of the given and the obtained values for $T_{g.w.}$ reveals a discrepancy of not more than 2%; and for this reason the results obtained from this second computation can be accepted as final.

Section 44. Other Types of Cooling Systems for the Liquid-Fuel Rocket Engine.

If the pressure in the engine chamber is increased and use is made of fuels of a high heat-producing capacity, the total flows flowing into the walls of the engine chamber will be greatly increased (Figure 108), and may attain values where it is impossible for the external cooling to remove all of the flow of heat (the limiting value for q_Σ is in each case determined by conditions and processes inside the engine chamber, the type of cooling liquid used, and the nature of the material of which the engine walls are made). Under such conditions use is made of other methods of cooling the walls of the engine chamber or protecting them against premature burnout.

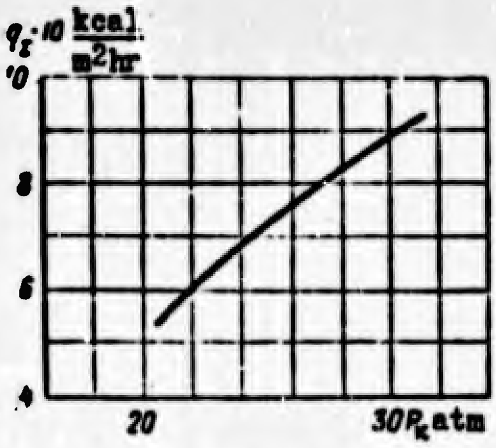

Figure 108. Total heat flow versus combustion chamber pressure.

As we showed earlier, most commonly use is made of the following methods of protecting the walls of the engine chamber:

1. Internal cooling of the liquid-fuel rocket engine.
2. Mixed cooling of the liquid-fuel rocket engine.

Apart from this, a number of experiments have been made to cool the walls of the engine chamber to keep them from burnout by using coatings or by means of heat accumulation.

Internal Cooling.

For purposes of internal cooling of the chamber of the engine the latter is protected from burnout by using the method of creating around the wall a layer of gas of a temperature that is relatively low compared with the temperatures at the core of the flow of heat. This layer usually is called the wall-side layer.

While the external cooling problem amounts to removing as efficiently as possible the heat entering a wall not protected against the action of gases heated to a high temperature, the internal cooling problem consists of reducing the heat flows to the walls of the engine combustion chamber by creating a wall-side layer of lower temperature.

The reduction of the temperature of the gas in the wall-side layer is obtained by artificially enriching this layer with one of the components, which in this instance functions at the same time as a cooling agent. As a rule, this component is the combustible.

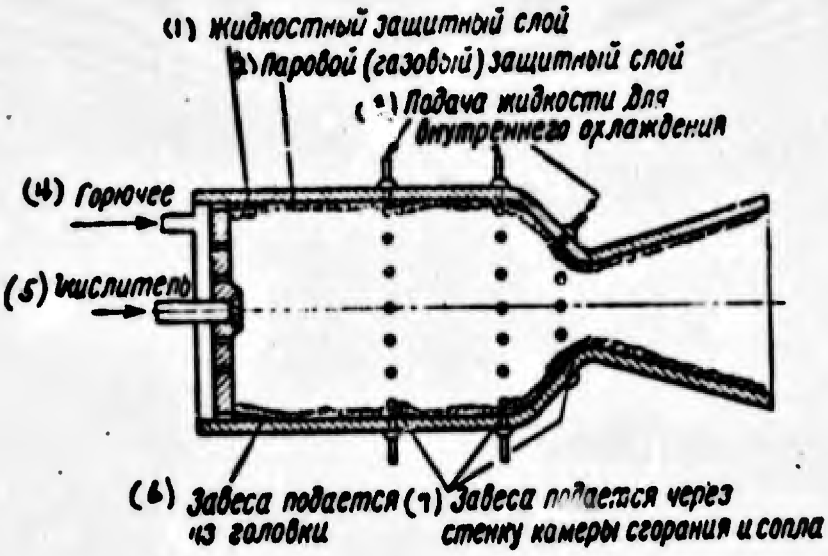

Figure 109. Internal cooling of the engine chamber.

1 -- liquid protective layer; 2 -- vaporous (gaseous) protective layer; 3 -- feed inlet for fuel for internal cooling; 4 -- combustible; 5 -- oxidizer; 6 -- curtain is fed from the head; 7 -- curtain is fed through the wall of the combustion chamber and nozzle.

Feeding of the excess fuel into the wall-side layer is effected either by suitable placing of jets at the head of the combustion chamber (see below, Section 50), or by providing special zones for feeding liquid into the internal cooling. These zones may be placed either directly at the head of the engine chamber, or else in the cylindrical and nozzle parts of the chamber.

In some instances it will be possible to feed water or gas for the purpose of internal cooling. If a liquid is used for the internal cooling, it will be turned into vapor under the action of strong heat currents, and there will be created above the liquid layer a protective layer consisting of vapors of the liquid in question (Figure 110). In this manner one obtains, so to speak, two distinct protective layers: one of vapor and one of liquid. The incoming liquid will spread very quickly along the chamber wall in a very thin layer under the action of the stream of the combustion products.

As a result of the vaporization of the liquid, the thickness of the vaporous layer upon the liquid will increase in the direction of movement of the current and that of the products of combustion. The enlargement of the vaporous layer will continue up to the section where the liquid is completely vaporized. Beyond this section there occurs a gradual decrease of the thickness of the vaporous layer, due to the fact that it becomes mingled with the general flow, i.e., due to the washing away of the vaporous curtain. However, the intensity of this washing-away process is relatively slight, and for this reason the protective effect of the vaporous layer is preserved for a considerable distance (of the order of dozens of centimeters).

Since the specific gravity of the vapor is many times less than that of the liquid, the vaporous layer has greater thickness than the liquid layer. Apart from that, since the heat conductivity of the vapor is many times less than that of the liquid, the thermic resistance of the vaporous layer is several times as great as the thermic resistance of the liquid layer.

As a result of the simultaneous influence of these two factors, the protective action of the liquid layer is relatively slight as compared with that of the vaporous layer; and one may thus consider that the vaporous layer is the principal protective layer.

Figure 110. Diagram to show the action of internal cooling.

1 -- liquid layer; 2 -- vaporous protective layer; 3 -- cooling agent.

created above the liquid layer a protective layer consisting of vapors of the liquid in question (Figure 110). In this manner one obtains, so to speak, two distinct protective layers: one of vapor and one of liquid. The incoming liquid will spread very quickly along the chamber wall in a very thin layer under the action of the stream of the combustion products.

As a result of the vaporization of the liquid, the thickness of the vaporous layer upon the liquid will increase in the direction of movement of the current and that of the products of combustion. The enlargement of the vaporous layer will continue up to the section where the liquid is completely vaporized. Beyond this section there occurs a gradual decrease of the thickness of the vaporous layer, due to the fact that it becomes mingled with the general flow, i.e., due to the washing away of the vaporous curtain. However, the intensity of this washing-away process is relatively slight, and for this reason the protective effect of the vaporous layer is preserved for a considerable distance (of the order of dozens of centimeters).

Since the specific gravity of the vapor is many times less than that of the liquid, the vaporous layer has greater thickness than the liquid layer. Apart from that, since the heat conductivity of the vapor is many times less than that of the liquid, the thermic resistance of the vaporous layer is several times as great as the thermic resistance of the liquid layer.

As a result of the simultaneous influence of these two factors, the protective action of the liquid layer is relatively slight as compared with that of the vaporous layer; and one may thus consider that the vaporous layer is the principal protective layer.

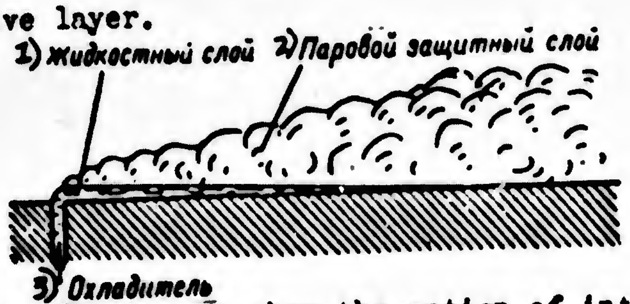

Figure 110. Diagram to show the action of internal cooling.

1 — liquid layer; 2 — vaporous protective layer; 3 — cooling agent.

In Figure 111 are shown data obtained from experiments conducted by the author on variation of heat flows along the length of the chamber of a liquid-fuel rocket engine when water was injected for internal cooling purposes.

Let us consider the variation of the heat flows in any one of the sections of the chamber, let us say in section 8 (Figure 111), in relation to the consumption of water per second. We find that when only a small quantity of water is expended for internal cooling (up to 1 g/sec) there is no considerable decrease of heat emission into the wall of the engine chamber in section 8 (the critical section of the nozzle), since all of the vapor formed in this connection is washed away by the flow of gas. When the amount of water used in the section under consideration is increased, a vaporous curtain is formed and the flow of heat currents into the wall of the chamber is reduced. Moreover, as shown in the diagrams of Figure 111, the decrease of heat flow into the wall is directly proportional to the expenditure of cooling agent for this curtain. However, when this expenditure is increased to more than 18 g/sec, no further decline of the heat flows is observable. The reason for this phenomenon can be seen in the fact that the liquid film reached the section under consideration here, so that the entire surface of the nozzle from the feed zone to section 8 was covered with a film of liquid. Obviously, with further increase in the consumption of the cooling agent, there is no longer an increase in the surface of the liquid from which is formed the vapor which protects the wall section in question; hence the thickness of the protective layer in that section remains unchanged. An increase in the expenditure of water leads in this instance to an increase of the thickness of the liquid layer, which, for reasons previously indicated (relatively low thermic resistance of the liquid as compared with the vaporous layer), does not exert any substantial influence upon the exchange of heat. For this reason the first problem in arranging for internal cooling is to create a stable curtain of vapor along the wall.

One modification of internal cooling is the so-called "porous cooling system." With this system the walls of the chamber are made of a porous material. The cooling agent passes through very small openings equally distributed over the entire surface of the chamber (Figure 112). Either liquids or gases can be used as cooling agents in the porous cooling system.

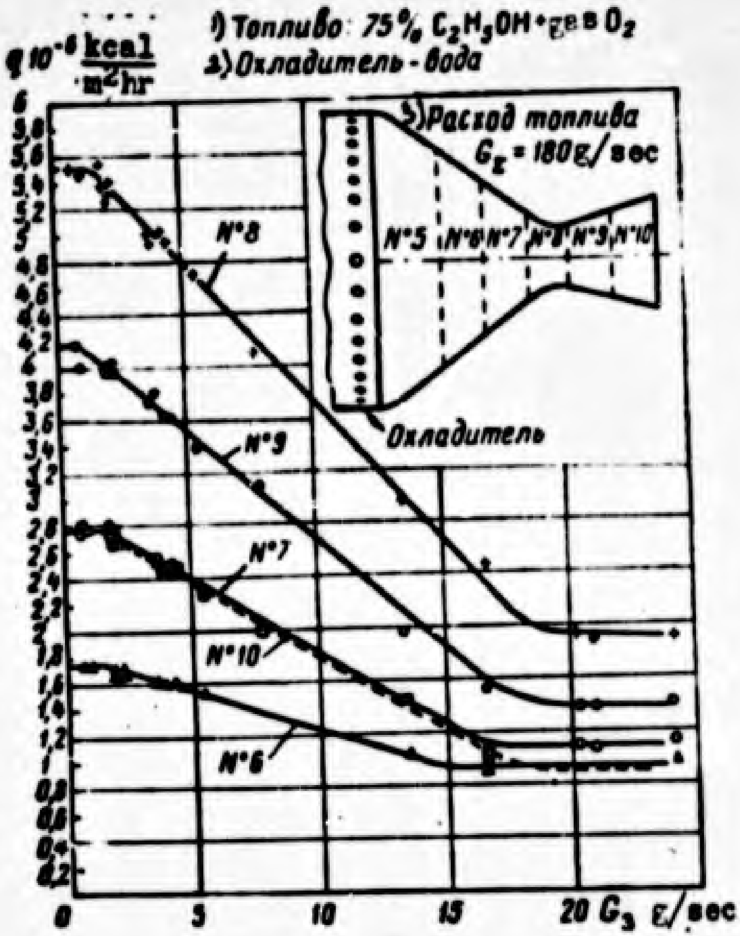

Figure 111. Effect of internal cooling on magnitude of heat flow.

1 -- fuel; 2 -- cooling agent: water; 3 -- fuel consumption

In Figure 113 are shown experimental data on the cooling of a porous wall by passing cold air through the openings. These data serve to indicate that only negligible quantities of the gas are required to create a satisfactory curtain, if the cooling system using porous material is properly designed.

It is not advisable, however, to have the entire wall of the chamber built of porous material, since a stable vaporous curtain can be created also with the aid of a feed zone to introduce liquid for internal cooling.

Apart from that, one of the main disadvantages of the porous materials is that they possess only a low degree of durability. Due to this fact, it would be necessary to build thick and heavy chamber walls. The second disadvantage consists in the fact that when the engine is functioning, the pores of the material may quickly become obstructed; thus it is very difficult to create a porous material that would maintain a constant rate of flow-resistance throughout the entire surface of the material.
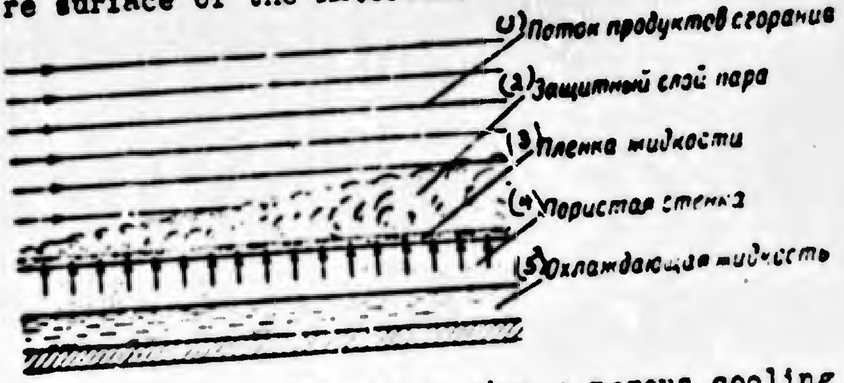
Figure 112. Diagram to show a porous cooling system.

1 -- flow of products of combustion; 2 -- protective layer of vapor; 3 -- liquid film; 4 -- porous wall; 5 -- cooling liquid.

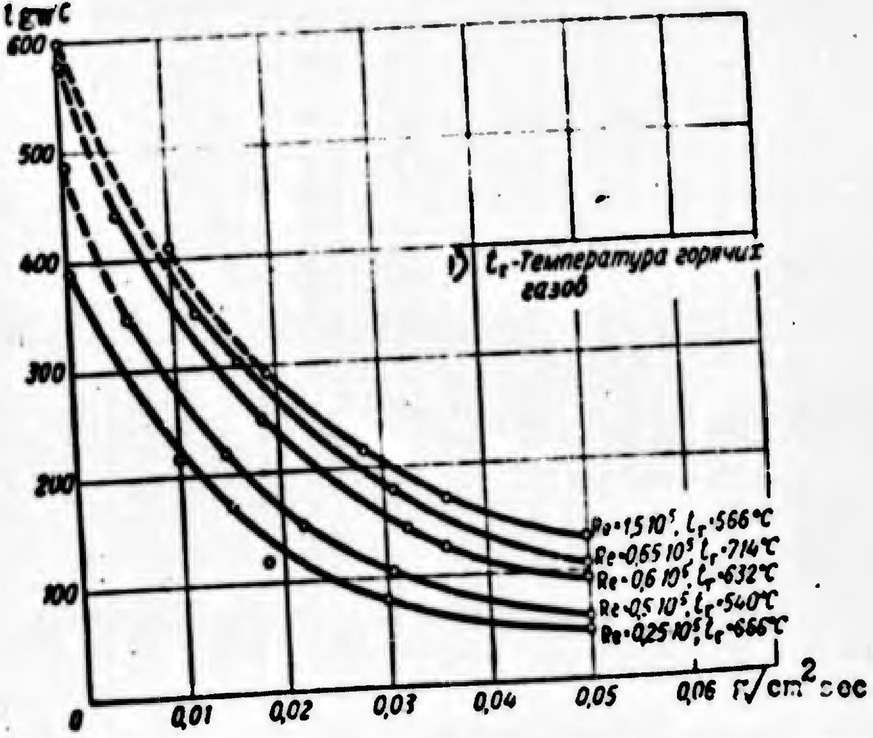

1 — t_{gas} temperature of hot gases.

Figure 113. Experimental data concerning heat transfer intc the porous wall.

In all known designs of the liquid-fuel rocket engine with an internal cooling system the vaporous curtain is created with the aid of cooling zones in the form of a ring-shaped slot or a number of openings.

It is evidently possible to design the internal cooling system so that the engine chamber will be able to function the required length of time without burnout, by using only an internal cooling system. But all cooling systems of this type possess the great disadvantage that the cooling agent, which performs a supplementary function in the chamber, does not fully take part in the combustion process, so that the total specific thrust of the liquid-fuel rocket engine with internal cooling will be less than that of a liquid-fuel rocket engine with external cooling. For this reason it is most common at the present time to protect the walls from burnout by the use of the so-called mixed cooling system.

The Mixed System of Cooling.

Mixed cooling is the term applied to a system of cooling that makes use simultaneously of the method of removing heat flows by the use of a cooling liquid that flows through a cooling jacket, and of the method of feeding in a protective curtain, either throughout the entire length of the chamber of only at the most dangerous points. Usually the most dangerous zones are those of the inlet of the nozzle and the nozzle throat.

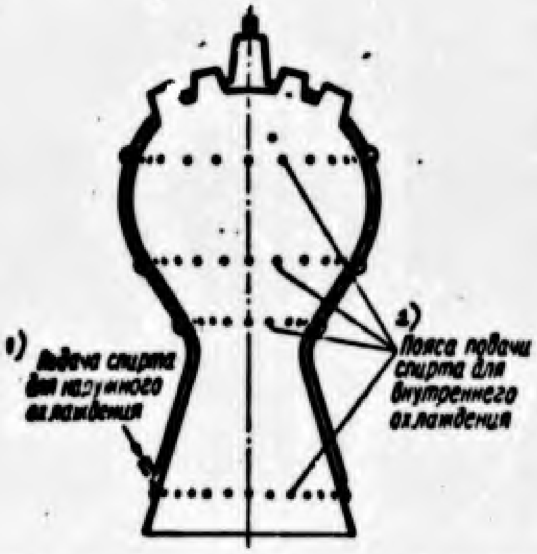

Figure 114. Cooling zones in the chamber of the engine of the A-4 rocket. 1 -- alcohol feed for external cooling; 2 -- alcohol feed zones for internal cooling.

As an example of a liquid-fuel rocket engine with mixed cooling we may cite the chamber of the A-4 rocket engine (Figure 114).

The liquid-fuel rocket engines with mixed cooling include also those liquid-fuel rocket engines in which a fuel feed zone for protecting the walls from heated products of combustion is located along the periphery of the head, as, for instance, in the chamber of the BMV and R-3395 engines.

Strictly speaking, the liquid-fuel rocket engines with mixed cooling include also those in which the lowering of temperatures in the wall-side layer is effected by means of a group of appropriately-distributed jets of combustible and oxidizer in the head of the engine chamber.

Protection of Combustion Chamber Walls against Burnout by Means of Coatings or by Accumulation of Heat.

Protective wall coatings of heat-resistance ceramics on the hot side of the wall may be found to be a highly effective means of protecting the walls of the liquid-fuel rocket engine from burnout. K. E. Tsiolkovskiy, for instance, suggested covering the interior walls of the engine chamber with graphite, tungsten, or other heat-resistance materials.

Figure 115 shows the combustion chamber of the ORM-9, which was designed in 1930 by V. P. Glushko. On the walls of this chamber use was made of a heat-insulating ceramic preparation based on zirconium oxides and magnesium. The nozzle part of the chamber was given a copper insert for the accumulation of heat.

However, notwithstanding the fact that the work on the use of ceramics for protecting the walls of the combustion chamber has long been in progress, this method has not been widely applied up to this time, since all of the existing ceramic substances readily crack under thermal stresses.

In liquid-fuel rocket engines that have to function only for a very short period of time (up to 7 sec) the walls of the chamber are made very thick to provide protection against burnout, with a highly heat-conducting material for this purpose. The flow of heat that reaches the walls of the chamber is quickly absorbed, owing to the good heat conductivity, and is distributed over the entire mass of the metal, thus being, so to speak, accumulated in the walls of the chamber.

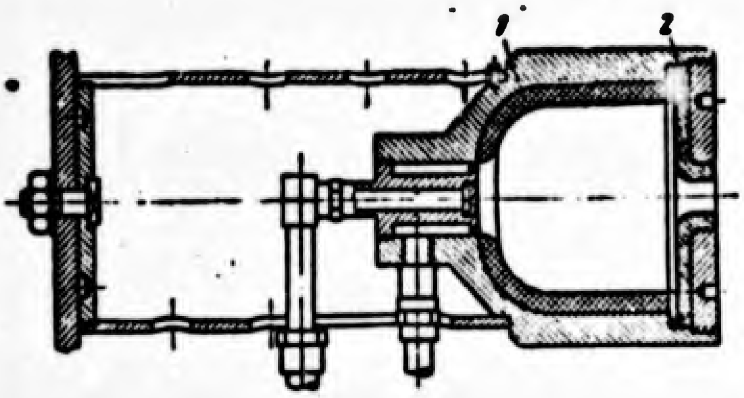

Figure 115. Combustion chamber of the ORM-9 engine.

1 -- ceramic covering; 2 -- copper insert for accumulation of heat.

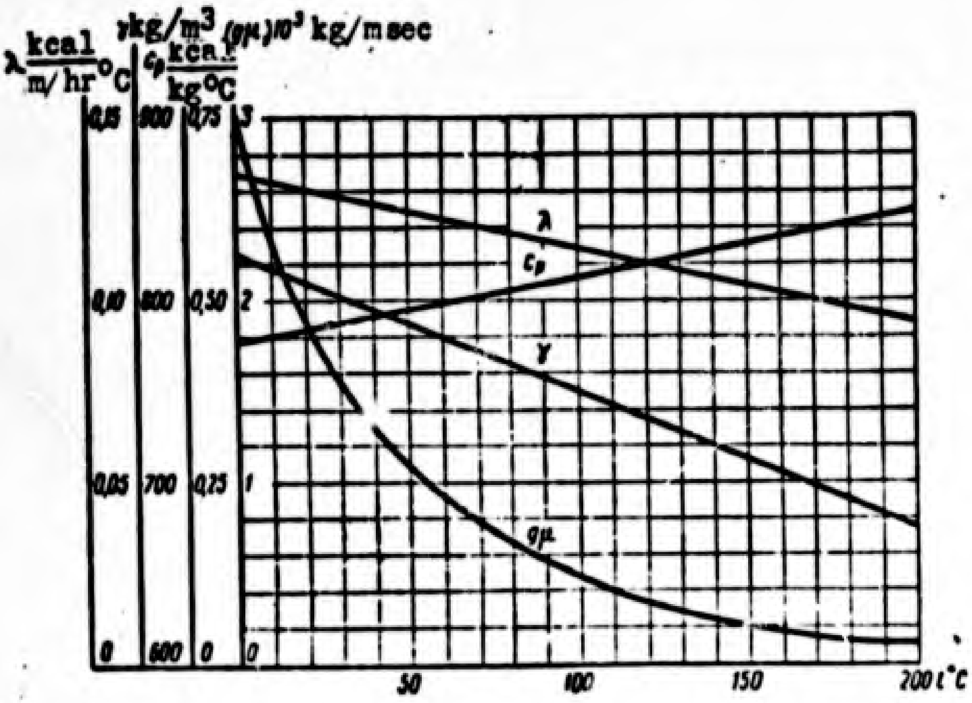

Figure 116. The physical constants of kerosene.

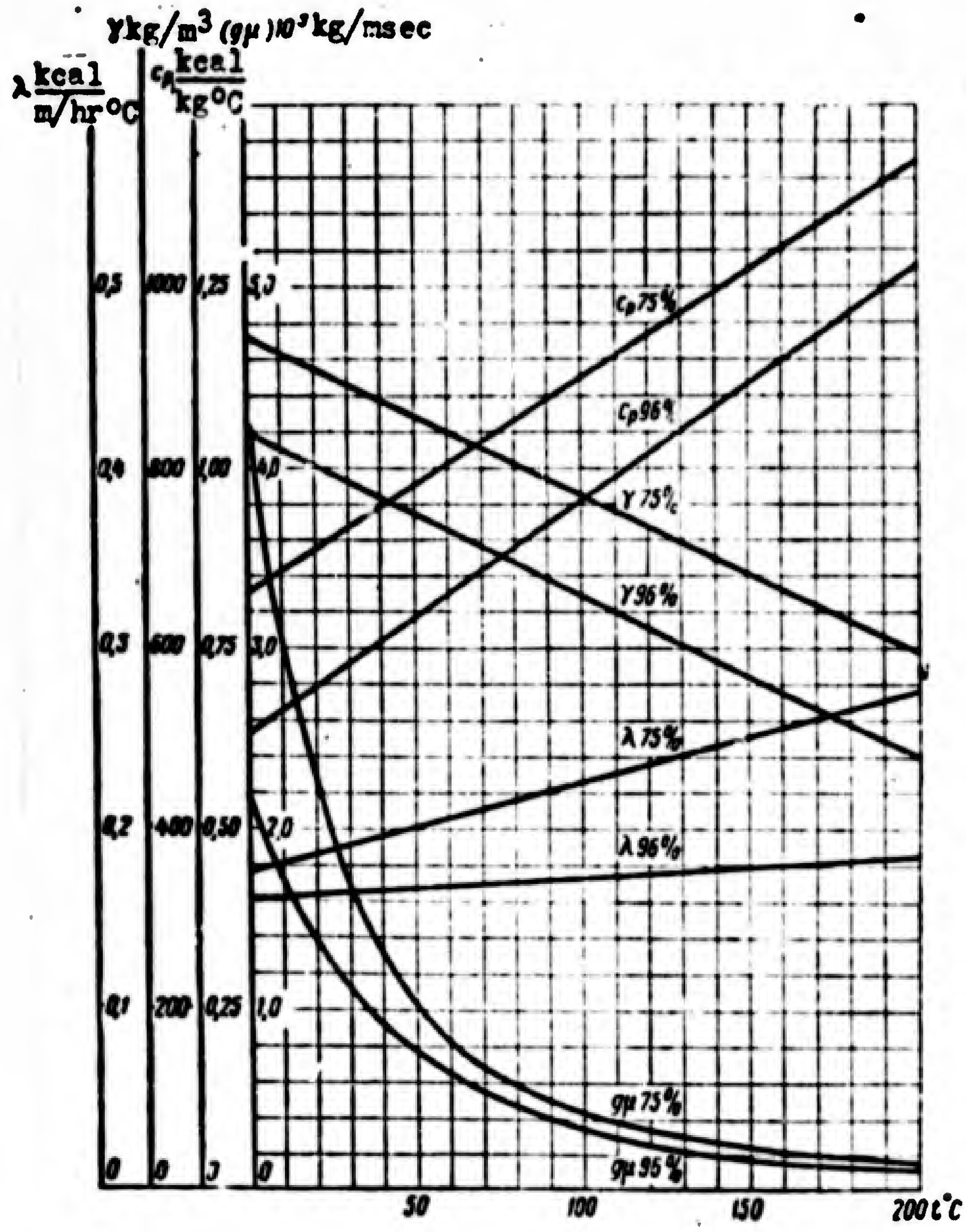

Figure 117. Physical constants for alcohol.

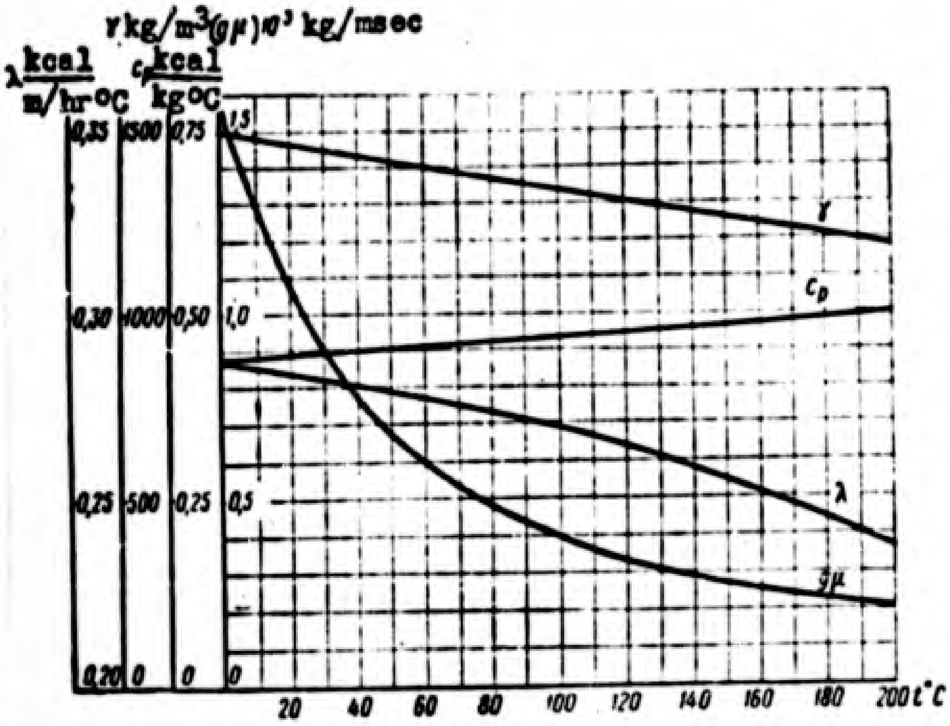

Figure 118. Physical constants for nitric acid.

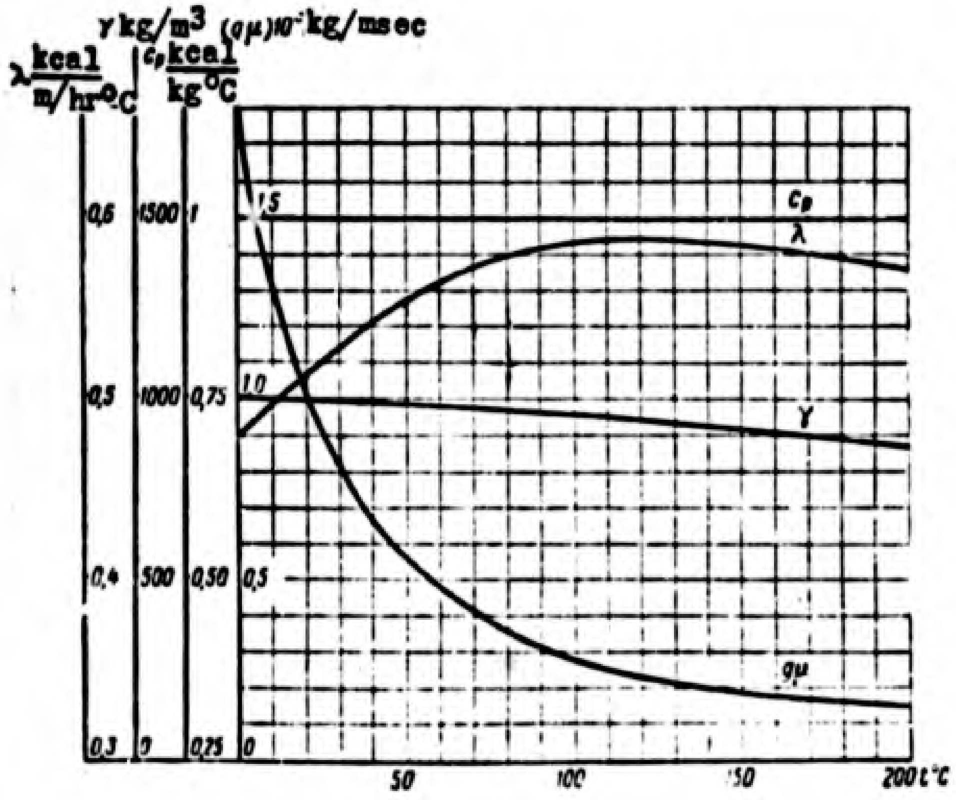

Figure 119. Physical constants for water.

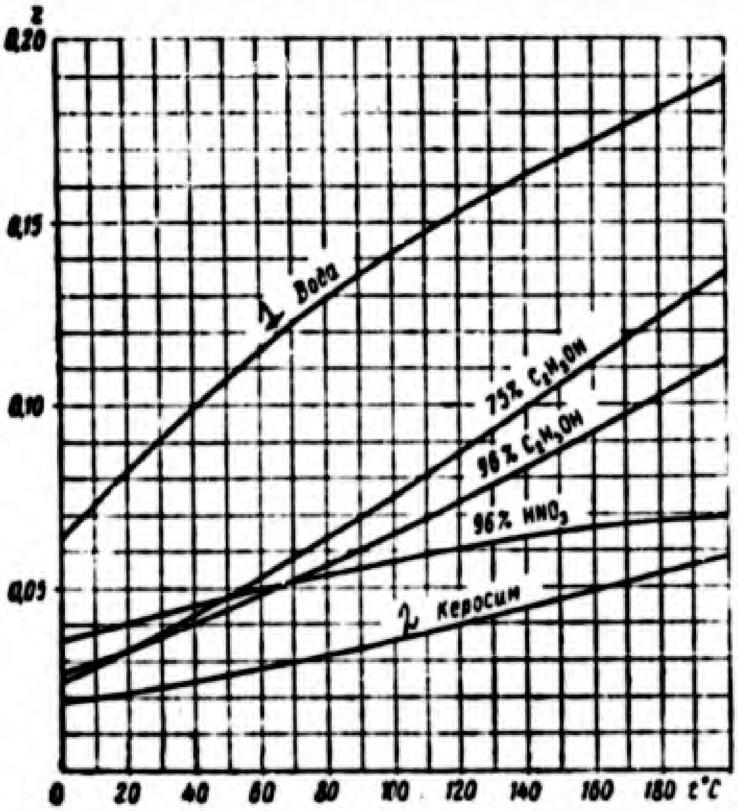

1 -- Water
2 -- Kerosene

Figure 120. The relation of coefficient Z to temperature.

REVIEW QUESTIONS

1. What basic forms of transfer of heat do you know?

2. What is meant by "specific flow of heat?"

3. How is the transfer of heat effected in convection?

4. What is the "mass speed?"

5. Explain the determination of the coefficient of heat conductivity and of the coefficient of heat transfer.

6. Point out the basic characteristics of heat radiation in gases.

7. How does the transfer of heat occur in the chamber of the liquid-fuel rocket engine?

8. Point out basic characteristics of heat exchange in a liquid-fuel rocket engine.

9. How do $T_{g.w.}$ and $T_{liq.w.}$ change in relation to the speed of flow of the cooling liquid in external cooling?

10. How do $T_{g.w.}$ and $T_{liq.w.}$ change in relation to the coefficient of heat

conductivity of the material of the wall of the engine chamber?

11. How do pressure and temperature in the combustion chamber influence the flow of heat in the wall of the engine chamber?

12. Describe the most important systems of external cooling.

13. What forms of cooling tracts do you know?

14. What types of cooling systems for the liquid-fuel rocket engine do you know?

15. What is meant by internal cooling?

16. What methods of internal cooling do you know?

17. What are the disadvantages connected with the use of porous walls for an internal cooling system?

18. Point out the most important disadvantages of internal cooling.

19. What is the type of cooling system for liquid-fuel rocket engines that is known as "mixed cooling?"

20. Cite examples of the use of mixed cooling.

PART TWO

THE DESIGNING OF LIQUID-FUEL ROCKET ENGINES

According to its structural elements, the liquid-fuel rocket engine is subdivided into the engine chamber and the feed system together with tanks. Some of the engines also have a separate thrust frame.

The engine chamber is the basic assembly of the liquid-fuel rocket engine, and in it is effected the combustion of the fuel and the conversion of the heat energy, the latter resulting from the conversion of gases into kinetic energy, for direct production of the reaction force.

The feed system consists of the aggregate of the devices and mechanisms required to store and feed fuel into the engine chamber. This system comprises also the equipment needed for the starting, cut-off, and proper functioning of the engine while it is in operation.

The thrust frame is required for transmitting the power of thrust to the body of the rocket, and to keep the engine in proper position with regard to the body of the rocket.

Calculation of combustion and discharge in the engine makes it possible to determine only the basic dimensions of the nozzle, the specific thrust, and the consumption of fuel. All other dimensions, as well as the structural forms of the engine chamber and the feed system, are ascertained in the process of designing a liquid-fuel rocket engine.

The following basic requirements are the most important that one must seek to meet in the process of designing.

1. Provision for efficient performance of the thermic process within the engine chamber.

2. A high degree of efficiency in the matter of the weight of the liquid-fuel rocket engine.

3. Reliable functioning of the liquid-fuel rocket engine.

4. Technological adequacy of the structural details, so as to make possible mass or large-scale production of the engine.

CHAPTER VIII

DESIGNING THE ENGINE CHAMBER

According to its structural elements, the engine chamber is subdivided into the head, the combustion chamber, and the nozzle.

The head of the engine chamber is that part of the chamber of the liquid-fuel rocket engine which contains the structures required for introduction of the fuel components into the combustion chamber, their atomization, and sometimes also their ignition for starting the engine.

Within the combustion chamber occur the vaporization, mixture, and combustion of the fuel components.

The nozzle of the engine chamber is the name applied to that part of the chamber of a liquid-fuel rocket engine where the heat energy of the gases is converted into kinetic energy.

The distinction between the combustion chamber and the nozzle is a conventional one. We may assume that the combustion chamber ends at that cross section where the speed of the products of combustion attains a high numerical value. We may consider that such a cross section is one whose area is equal to three times the area of the critical cross section.

Section 45. The Process of Combustion in the Combustion Chamber of the Liquid-Fuel Rocket Engine.

The process of combustion in the combustion chamber of the liquid-fuel rocket engine differs considerably from that which occurs in the chambers and furnaces of other types of heat engines.

The most important characteristics that distinguish the combustion chamber of a liquid-fuel rocket engine from that of other heat engines are the following:

The first characteristic of the process of combustion in the liquid-fuel rocket engine chamber is the high calorific intensity of the volume of the combustion chamber. The calorific intensity of the volume of a combustion chamber or furnace is measured by the quantity of heat given off per unit space per unit time. The calorific intensity is usually designated by the letter U, and is expressed in terms of kilo-cal/m³/hr. In the liquid-fuel rocket engine it is preferable to express it in terms of kilo-cal/l/sec.

It is obvious that

$$U \text{ kilo-cal/l/sec} = \frac{1}{3{,}6} \cdot 10^{-6} U \text{ kilo-cal/m}^3\text{/hr} \qquad \text{(VIII.1)}$$

In Table 27 are shown the calorific intensities and pressures for the furnaces and combustion chambers of various types of heat engines. From the table it is apparent that the calorific intensity in the combustion chamber of a liquid-fuel rocket engine is hundreds of times greater than in other heat engines. Such a great release of heat per unit of volume occasions particularly high requirements for planning the process of combustion and formation of mixtures in the liquid-fuel rocket engine.

Table 27

Calorific Intensity in the Combustion Space of Various Heat Engines

Name of Heat Engine	Calorific Intensity U kilo-cal/m³/hr	Calorific Intensity U kilo-cal/l/sec	Pressure p kg/cm²
Furnace of a stationary boiler installation	(0.3-0.6) 10^6	0.0835-0.167	1
Forced draft tube boiler	(1-3.5) 10^6	0.278-0.045	1-4.5
Combustion chamber of an air feed jet engine	(80-120) 10^6	22.2-33.3	3-4
Combustion chamber of a liquid-fuel rocket engine	(1.3-7) 10^8	500-4700	15-50

The second characteristic of the combustion chamber functioning of the liquid-fuel rocket engine consists in the fact that in this chamber combustion takes place at high pressures.

From Table 27 it is apparent that in the combustion chamber of a modern liquid-fuel rocket engine the pressure attains very high values: something of the order of 15-50 kg/cm^2 and more, such as are not to be found in air feed jet engines. The high temperatures and pressures in the engine chamber raise special requirements as regards the heat resistance of the construction material, and the cooling of this material, since under the conditions indicated very strong heat flows will impinge upon the walls of the chamber.

The third characteristic of operation of the liquid-fuel rocket engine combustion chamber is the short time of stay τ of the fuel in the chamber. By the term "time of stay of the fuel in the engine chamber" is meant the average duration of time during which the fuel and the products of its combustion remain in the chamber. In the liquid-fuel rocket engine the time of stay of the fuel in the combustion chamber is extremely short as compared with other heat engines. It is only natural, therefore, that to ensure the most complete combustion during such a short period of time one must assure a very good mixing of the fuel components.

Diagram to Show the Progress of the Combustion Process.

According to the process of combustion, the combustion chamber of the liquid-fuel rocket engine can be longitudinally subdivided into three distinct zones (Figure 121).

The first zone (0-1) is the zone of atomization of the fuel components. It is located in the immediate vicinity of the injectors. The length of this zone is determined by the structural characteristics of the head of the combustion chamber and by the type of injector used (see Section 49). For simple stream injectors this zone is of greater length than it is for centrifugal [swirl] injectors.

The second zone (1-2) is the heating zone, and also the vaporization and mixing zone for the fuel mixture. Within it there occurs the heating, vaporization, and mixture of the fuel components, and the combustion process is to some extent started.

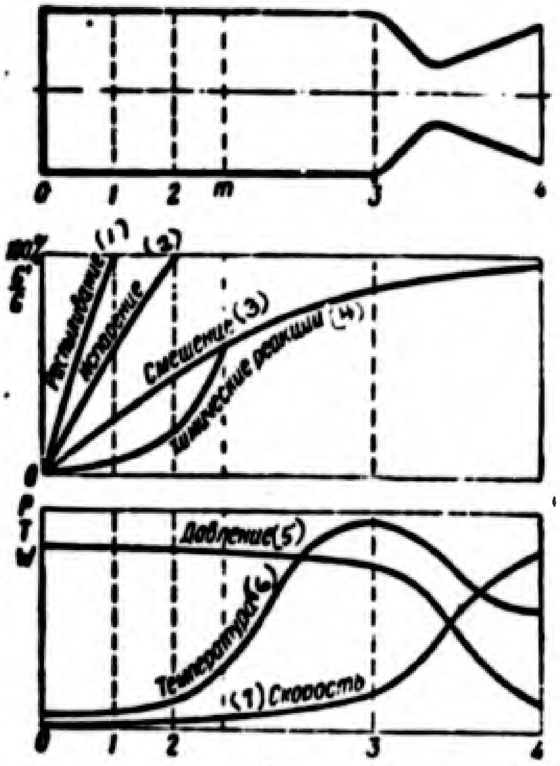

Figure 121. Diagram showing the progress of the combustion process in the engine chamber.

$\frac{G_1}{G}$ is the relative quantity of atomized or vaporized or mixed or partly reacted fuel.

1 -- atomization; 2 -- vaporization; 3 -- mixing; 4 -- chemical reactions; 5 -- pressure; 6 -- temperature; 7 -- speed

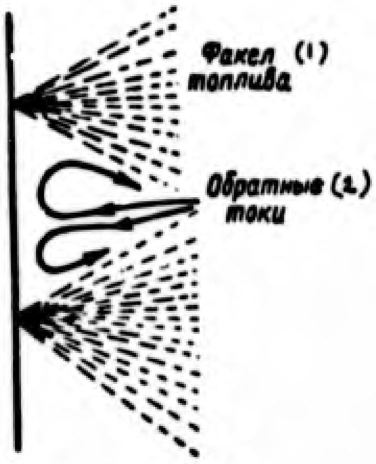

Figure 122. Eddy currents of gas at the head of the chamber

1 -- Fuel cone; 2 -- Reverse currents.

The heat required for heating and vaporizing the fuel in the first and second zone is brought to the droplets of fuel by three different means; as a result of the powerful radiation from the core of flow, directly in the form of heat that is released in the reaction and as a result of the reverse eddy currents of gas that occur near the head (Figure 122). These reverse currents of gas bring with them the greater part of the heat.

The third zone (2-3, see Figure 121) is the zone of combustion. It is in the zone that the process of combustion takes place. At the end of this zone a thermodynamic balance is established in the gas mixture of the products of combustion. Section (3-4) belongs to the nozzle of the engine.

In the first part of this zone (up to the cross section m-m) the rate of the chemical reactions is still slow, and for this reason the burning up of the fuel is determined by the speed of these reactions. This part of the zone is called the area of kinetic combustion.

The rise of temperature leads to a quick increase in the rate of the chemical reactions; and above a certain temperature all the fuel that is already in mixed condition will burn up almost instantly. At this point the speed of combustion depends on the speed at which the components are being mixed, a speed that is dependent upon the speed of turbulent diffusion. For this reason this part of the zone is known as the area of diffusion combustion. In the liquid-fuel rocket engine the process of combustion takes place primarily in the diffusion area, so that the time required for complete combustion of the fuel is dependent in the main upon the rate of mixing the components.

The efficiency of a combustion chamber is measured by the chamber coefficient φ_{ch}, which evaluates the physical incompleteness of the burning process. The most important of the factors that exert an influence upon the completeness of combustion are the following:

First of all, the quality of the atomization and mixing of the fuel. This depends on the type of location of the injectors at the head of the chamber, and also upon the shape of the head and of the combustion chamber. The more inadequate the atomization and mixing of the fuel, the greater will be the amount of time required for completion of the chemical reaction, i.e., for complete burning.

Secondly, the amount of time that can be allowed for the process of the chemical reactions of combustion. This will depend on the speed of the gas within the combustion chamber, on the volume of the combustion chamber available for the process of combustion, and the pressure and temperature.

A certain influence upon the completeness of the combustion is exerted also by the physical and chemical properties of the fuel.

Section 46. Determining the Volume of the Combustion Chamber for a Liquid-Fuel Rocket Engine.

At the present time we still have no method for computing the volume of a combustion chamber, one that accounts for the physical and chemical phenomena actually occurring in it. For this reason the volume of the combustion chamber is determined by reference to the following criteria:

1) the time of stay of the fuel in the combustion chamber;
2) the chamber volume-to-throat area ratio;
3) the calorific intensity of the volume of the combustion chamber;
4) the thrust of the engine in terms of liters.

We shall in the following consider computation of the combustion chamber from the point of view of each of the above-mentioned criteria.

Determining Combustion Chamber Volume by the Time of Stay of the Fuel in the Chamber.

In Section 45 it was shown that the principal factor influencing the completeness of the combustion of the fuel in a given mixing process is the time that the fuel remains in the combustion chamber. For this reason computation of the volume of the combustion chamber is conducted the most properly by using this value.

The actual time during which the fuel and its products of combustion remain in the chamber can be computed from the following equation:

$$\tau' = \frac{V_{ch}}{G v_{av}} \text{ sec.,} \qquad \text{(VIII.2)}$$

where G is the consumption of fuel in kg/sec;

v_{av} is the certain average specific volume of the products in the combustion chamber, in terms of m^3/kg.

Obviously, $G\ v_{av}$ is the volume of gas formed in the combustion chamber per unit of time V_{sec}.

The average specific volume v_{av} is greater than the specific volume of the liquid fuel, and less than the specific volume of the products of combustion.

Since at the present time it is not possible to make an accurate determination of the average specific volume v_{av}, the actual time of stay τ' is replaced, in computing the volume of a combustion chamber, by the conventional value of τ as computed from formula (VIII.2), but substituting in that formula for the average specific volume v_{av} the value for the specific volume of the products of combustion v_2, which is determined from the thermal calculation of the engine.

Since the value of v_2 is greater than v_{av}, the τ computed in this manner will be less than the actual time of the presence of the fuel and products of combustion in the chamber. However, the values for τ and the actual time of presence bear a definite relation to each other. And it is for this reason that we can use the value for τ in computing the volume for the combustion chamber.

We find the expression for the time of stay τ by replacing the value for v_{av} by v_2. Applying the equation of state to the gas formed in the combustion chamber, we get

$$p_2 V_{sec} = GR_2T_2. \tag{VIII.3}$$

whence

$$V_{sec} = Gv_2 = \frac{GR_2T_2}{p_2}\ m^3 sec, \tag{VIII.4}$$

where R_2 (in kg m/kg °C) and T_2 in °abs represent the gas constant and temperature of the products of combustion in the chamber; they are determined from the thermal calculation;

p_2 is the pressure in the combustion chamber, in terms of kg/m^2.

If we substitute the value for Gv_2 from equation (VIII.4) in equation (VIII.2), we get

$$\tau = \frac{V_{ch}}{GR_2T_2} p_2, \qquad \text{(VIII.5)}$$

whence

$$V_{ch} = \frac{\tau G R_2 T_2}{p_2} \text{ m}^3. \qquad \text{(VIII.6)}$$

It is a known fact that the complex of parameters $\frac{f_{cr}}{G}$ for any given fuel is a constant magnitude. Consequently, for a given liquid-fuel rocket engine with invariable f_{cr} the value for $\frac{p_2}{G}$ is also practically a constant.

If we take into consideration equation (VIII.5) and disregard the variation of the product of R_2T_2 due to the pressure, we find that for a given fuel and for an engine of a given type of construction the time of stay τ is not dependent upon the rate of consumption of fuel, since for a constant critical cross section the pressure in the chamber p_2 is proportional to the consumption per second, while the ratio $\frac{G}{p_2}$ remains constant. In that event τ is dependent only upon the type of fuel used. For different fuels the required τ has different numerical values and must be determined experimentally.

For purposes of computation one may assume a value of $\tau = 0.003-0.005$ sec.

<u>Determining the Volume of the Combustion Chamber by the Chamber Volume-to-Throat Area Ratio</u>.

Chamber volume-to-throat area ratio is the name applied to the quantity.

$$l_{red} = \frac{V_{ch}}{f_{cr}} \text{ m}, \qquad \text{[red = reduced]} \qquad \text{(VIII.7)}$$

where f_{cr} is the area of the critical throat section of the combustion chamber in m^2.

From formula (VIII.7) we get

$$V_{ch} = f_{cr} \cdot l_{red} \text{ m}^3 \qquad \text{(VIII.8)}$$

or, in terms of liters,

$$V_{ch} = 10^3 \cdot f_{cr} \, l_{red} \, l. \qquad \text{(VIII.9)}$$

The value for l_{red} for a liquid-fuel rocket engine will vary according to the type of fuel used, ranging anywhere from 1,100 to 4,000 mm.

In Table 28 are shown the values for the chamber volume-to-throat area ratio of certain engines.

Table 28

Chamber Volume-to-throat Area Ratio l_{red} Values of Certain Liquid-Fuel Rocket Engines

Name of Engine	Fuel	l_{red} in mm
A-4	Liquid oxygen + alcohol (non-hypergolic)	2,990
"Schmetterling"	Nitric acid + tonka-250 (hypergolic)	1,860
"Wasserfall"	Melange M-10 (90% HNO_3 + 10% H_2SO_4) optolene 841	2,640
"Tayfun" ["Typhoon"?]	Same as above	935
"Schmidding"	Gaseous oxygen methyl alcohol (non-hypergolic)	2,320

The value for f_{cr} is obtained from the thermodynamic calculation.

It is not difficult to show that the chamber volume-to-throat area ratio l and the time of stay τ are mutually proportional parameters.

In fact it is known that (see Section 37)

$$\frac{f_{cr}}{G} p_1 = B_n \sqrt{H_n} \, \eta_{ch}, \qquad \text{(VIII.10)}$$

whence

$$p_2 = \frac{B_n \sqrt{H_u \eta_{ch}}}{f_{cr}} G. \qquad \text{(VIII.11)}$$

We substitute this value for p_2 in equation (VIII.5) and get

$$\tau = \frac{V_{ch}}{R_2 T_2} \frac{B_n \sqrt{H_u \eta_{ch}}}{f_{cr}} \qquad \text{(VIII.12)}$$

or, since

$$\frac{V_{ch}}{f_{cr}} = l_{red},$$

we have

$$\tau = l_{red} \frac{B_n \sqrt{H_u \eta_{ch}}}{R_2 T_2}. \qquad \text{(VIII.13)}$$

For any given fuel we may in practice assume that

$$\frac{B_n \sqrt{H_u \eta_{ch}}}{R_2 T_2} = \text{const.} \qquad \text{(VIII.14)}$$

Thus we see that τ and l_{red} are proportional magnitudes.

Computation of the volume for the combustion chamber of a liquid-fuel rocket engine is sometimes effected also according to the calorific intensity and according to the thrust, in liters, of the liquid-fuel rocket engine.

Determining the Volume of the Combustion Chamber by the Calorific Intensity.

According to the definition given in Section 45, the calorific intensity is given by the expression

$$U = \frac{G H_u \eta_{comb}}{V_{ch}} \text{ kcal}/l \text{ sec.} \qquad \text{(VIII.15)}$$

where G is the fuel consumption per second, in kg/sec;

H_u is the calorific value of the fuel in kilo-cal/kg/

η_{comb} is the coefficient of combustion completeness;

V_{ch} is the volume of the liquid-fuel rocket engine's combustion chamber in liters.

For preliminary computations it may be assumed that $\eta_{comb}=1$.

The value for the calorific intensity U for actually-completed liquid-fuel rocket engines is of the order of 500-4,700 kilo-cal/l/sec (see Table 33). Assigning a value for U and taking η_{comb} as equal to 1, we can determine the volume of the chamber from the formula

$$V_{ch}=\frac{GH_u}{U}\ l. \tag{VIII.16}$$

<u>Determining the Volume of the Combustion Chamber According to the Thrust in Liters</u>.

The thrust in liters P_l is the thrust of the liquid-fuel rocket engine for one liter of volume of the combustion chamber

$$P_l=\frac{P}{V_{ch}}\ \mathrm{kg}/l, \tag{VIII.17}$$

where P is the total thrust of the engine in kg.

Hence

$$V_{ch}=\frac{P}{P_l}\ l. \tag{VIII.18}$$

The value of P_l in the case of the liquid-fuel rocket engine varies within a range of

$$P_l = 60\text{-}300\ \mathrm{kg}/l.$$

The values for the calorific intensity and the thrust in liters are related to each other. We express the specific thrust of the engine in terms of the calorific value of the fuel according to formulae (IV.20), (I.12), and (VIII.16).

Therefore,

$$P_l = \frac{G\sqrt{\frac{2}{gA}H_u\eta_{\text{comb}}\eta_{\text{exp}}}}{V_{\text{ch}}} = \sqrt{\frac{2}{gA}\eta_{\text{comb}}\eta_{\text{exp}}}\,\frac{G\sqrt{H_u}}{V_{\text{ch}}} = \sqrt{\frac{2}{gA}\eta_{\text{comb}}\eta_{\text{exp}}}\,\frac{U}{\sqrt{H_u}}.$$

Consequently the liter thrust is proportional to the value for $\frac{U}{\sqrt{H_u}}$, and for a given engine the relation between them is invariable.

If now we analyze the four criteria mentioned in the foregoing for determining the volume of the combustion chamber, we are in a position to draw the following conclusions. None of these criteria takes account of the influence of the shape of the combustion chamber upon V_{ch}, although such influence, of course, actually does exist. Moreover, in computing the volume of the combustion chamber according to these criteria we fail to take into account the nature of the progress of the combustion process, as determined by a number of structural and physicochemical factors. Therein lies the shortcoming of all of the above-cited criteria.

When the volume of the combustion chamber is computed on the basis of the calorific intensity, the value found for V_{ch} will be greater the greater is the fuel consumption per second, and consequently the greater is the pressure in the combustion chamber (see formula (VIII.16). In an earlier context we showed that where the dimensions of the critical throat section are constant, the time of stay in the combustion chamber will, if the fuel consumption is increased -- and thus also the pressure -- retain a constant value. Consequently it will in that event be unnecessary to increase the volume of the chamber.

The calorific intensity U is thus a criterion that fails to take into account the influence of the pressure on the required volume of the combustion chamber. The calorific intensity U and the liter thrust P_l fail to express a basic factor that determines the combustion completeness of the mixture, namely, the amount of time available for the progress of the process of combustion. Consequently these criteria cannot be used for determining the volume V_{ch}

without indicating the value for the pressure in the chamber.

Actually, if we examine the data for existing engines shown in Table 33, we notice that there is a great disparity between the values for U and those for p_l.

It will be better to determine the volume of the combustion chamber by the chamber volume-to-throat area ratio l_{red} or according to the time of stay τ, i.e., according to formulae (VIII.6) and (VIII.8). It whould be pointed out that even at the present time the volume of the combustion chamber of air-feed engines is commonly determined by the ratio of the calorific intensity of the chamber to the pressure in the latter, i.e., according to a magnitude proportional to τ.

Example 18. Determine the volume for a combustion chamber of an engine that uses the following fuel: 96% nitric acid + kerosene, assuming that the pressure in the combustion chamber is $p_2 = 23$ kg/cm^2; the fuel consumption $G = 10$ kg/sec; and the excess oxidizer ratio $\alpha = 0.75$.

Solution:

We determine the volume of the combustion chamber by the time of stay of the fuel in the combustion chamber.

According to the data of the thermal calculation, if $\alpha = 0.75$ and $p_2 = 23$ kg/cm^2, the temperature of combustion T_2 in the chamber will be equal to

$$T_2 = 2{,}853^\circ \text{ abs}$$

The gas constant for the products of combustion will be

$$R_2 = 35.2 \text{ kg-m/kg } ^\circ\text{C}$$

We assume τ to be equal to 0.0033 sec.

We then find the volume of the combustion chamber according to (VIII.6), i.e.

$$V_{ch} = \frac{0{,}0033 \cdot 10 \cdot 35{,}2 \cdot 2853}{23 \cdot 10^4} = 0{,}0142 \text{ m}3.$$

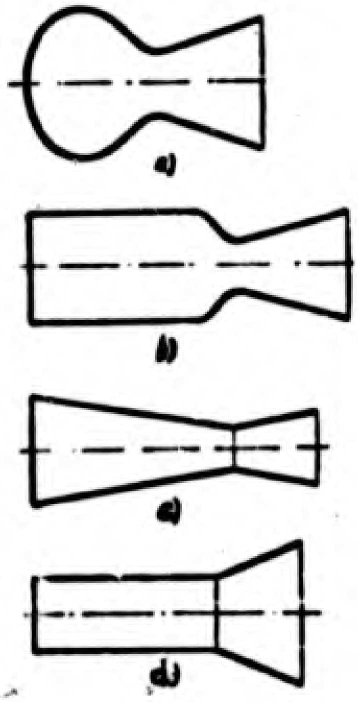

Figure 123. Different shapes of the combustion chamber.

a -- ball-shaped; b -- cylindrical; c -- cone-shaped; d -- semi-thermal nozzle.

Section 47. Shapes of the Combustion Chamber.

The known basic shapes of the combustion chamber for liquid-fuel rocket engines are as follows (Figure 123):

1. Ball-shaped.
2. Cylindrical.
3. Cone-shaped.

We shall now consider the advantages and disadvantages of each of these types of the chamber.

The Ball-Shaped Combustion Chamber.

Ball-shaped and nearly ball-shaped, i.e., pear-shaped, combustion chambers offer the following advantages:

1) A large surface area of the combustion chamber for a given volume, a factor which keeps down the weight of the chamber and facilitates arrangements for cooling.

2) From the point of view of strength, this type of combustion chamber

requires only a very limited thickness of wall, for, as we know from the course on strength of materials, for a ball-shaped chamber the thickness of the wall, as determined by the permissible stresses σ_{per} within them, is equal to

$$\delta = \frac{pd}{4\sigma_{per}},$$

while for a cylindrical chamber it is

$$\delta = \frac{pd}{2\sigma_{per}}.$$

A disadvantage of the ball-shaped combustion chamber can be seen in the fact that its production involves technological complications. Apart from that, a ball-shaped combustion chamber leaves little space for placing injectors, so that it is necessary to place cups at the head of the chamber, a fact which complicates even more the technology of production.

The above-mentioned advantages and disadvantages of the ball-shaped combustion chamber account for its common use for liquid-fuel rocket engines of very powerful thrust, where the volume of the chamber is sufficiently large and the use of cups is not unsuitable, and where the relatively small weight of the chamber resulting from the use of the ball shape is quite a considerable gain, although cases are known also where the ball-shaped chamber was used for engines of small thrust (the "Walter" engine, as shown in Figure 125). As examples of liquid-fuel rocket engines with ball-shaped and pear-shaped combustion chambers we can also cite those of the A-4 rocket engine (Figure 124), and the "Wasserfall" (Figure 126).

The chamber of the engine of the A-4 rocket has large dimensions. The chamber is pear-shaped with a spherical head. It is technologically difficult to place the injectors on a spherical head; for that reason the fuel feed into the chamber is effected through the 18 cups (4), which are placed on the head in two concentric rows: six in the first row, and 12 cups in the second row (see diagrammatic view of the head).

The engine chamber has mixed (internal and external) cooling. The external cooling is effected by the combustible, alcohol, which is fed by way of six nozzles (6) into a ring-shaped belt (7), from where the alcohol flows uniformly into a cooling jacket formed by the outer lining (10) and the inner lining (9) of the chamber. The open space in the cooling jacket is not large (8 mm in all), and the alcohol flows rapidly into the head of the engine, thus cooling the walls of the chamber intensively. The combustible, after passing through the cooling jacket, reaches the main combustible valve (2), which in its closed position prevents the flow of the combustible from the head's lower cavity (3) into the head's upper cavity (1). From cavity (1) the alcohol can flow into the cups (4).

The internal cooling of the engine is effected by feeding the combustible onto the flame-side surface of the inner lining, through four basic cooling belts (8, 11, 12, and 14). Each of the three upper cooling belts constitutes a ring of steel, the combustible being conducted to its outer cavity. Through a large number of fine radial borings the combustible reaches the internal cooling system. For the passage of the alcohol flowing along the jacket to the head, longitudinal bored openings are provided in the internal cooling belts, these openings being located between the small radial openings.

Similarly, the combustible for the internal cooling is fed into the chamber through a supplementary cooling belt (13). The latter consists of openings made directly in the internal lining (9). The openings are placed in 12 groups of three openings. The conbustible that passes through them protects the chamber walls from the powerful sprays of heated fuel that comes out of the 12 cups of the outside row.

The principal belts for the internal cooling receive fuel through four parallel tubes from the upper cavity of head (1) only at the time when the main valve (2) for the combustible is open.

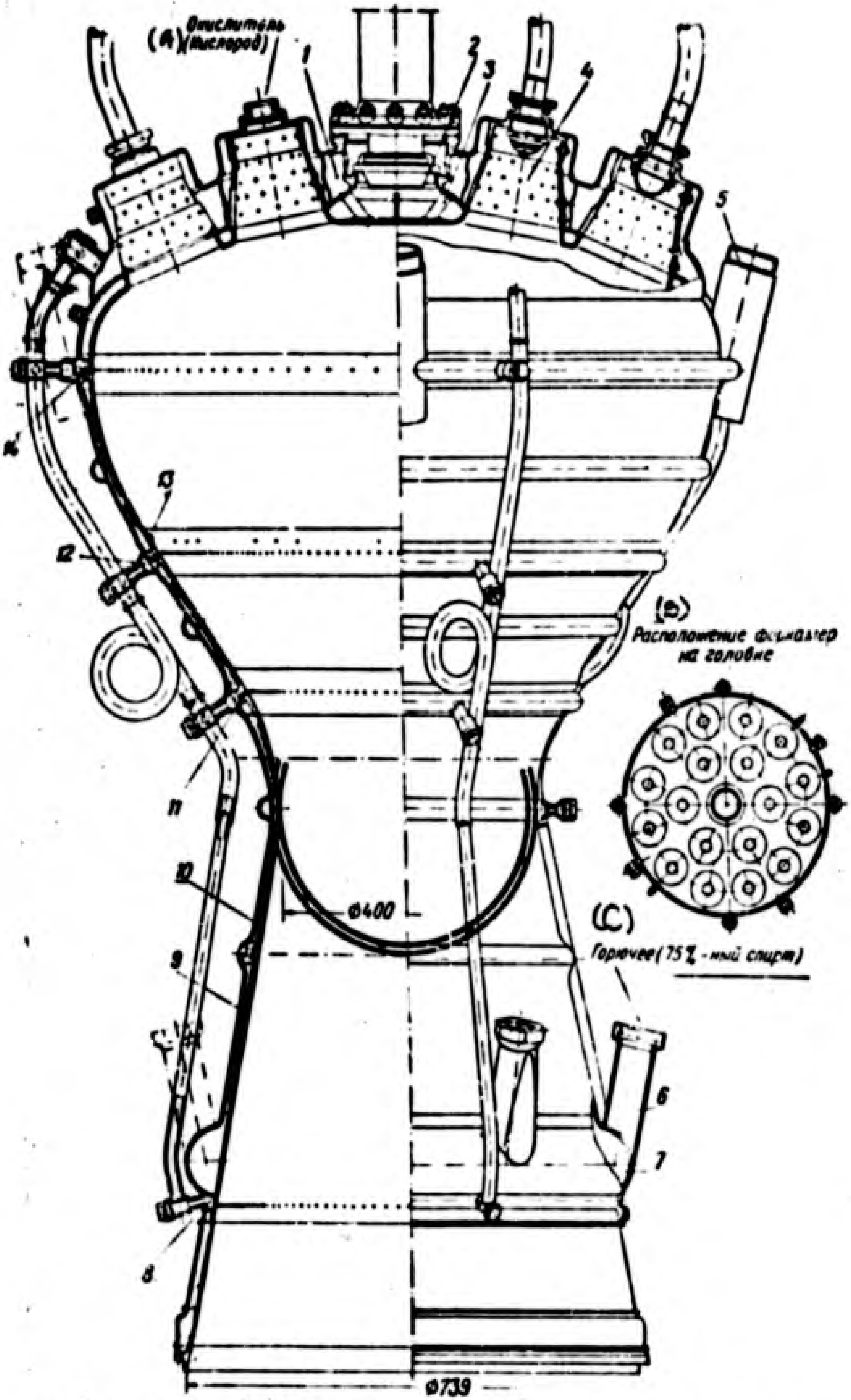

Figure 124. The combustion chamber of the A-4 rocket.

1 -- upper cavity; 2 -- main valve for combustible; 3 -- lower cavity for combustible; 4 -- cups; 5 -- supports for transmission of thrust to the frame; 6 -- nozzle for conveyance of combustible; 7 -- ring-shaped belt; 8 -- lower belt for internal cooling; 9 -- internal lining of chamber; 10 -- outer lining of chamber; 11-12 -- internal cooling belts; 13-- supplementary belt for internal cooling; 14 -- upper belt for internal cooling.

(A) -- oxidizer (oxygen); (B) -- location of antechambers on head;
(C) -- fuel (75% - alcohol).

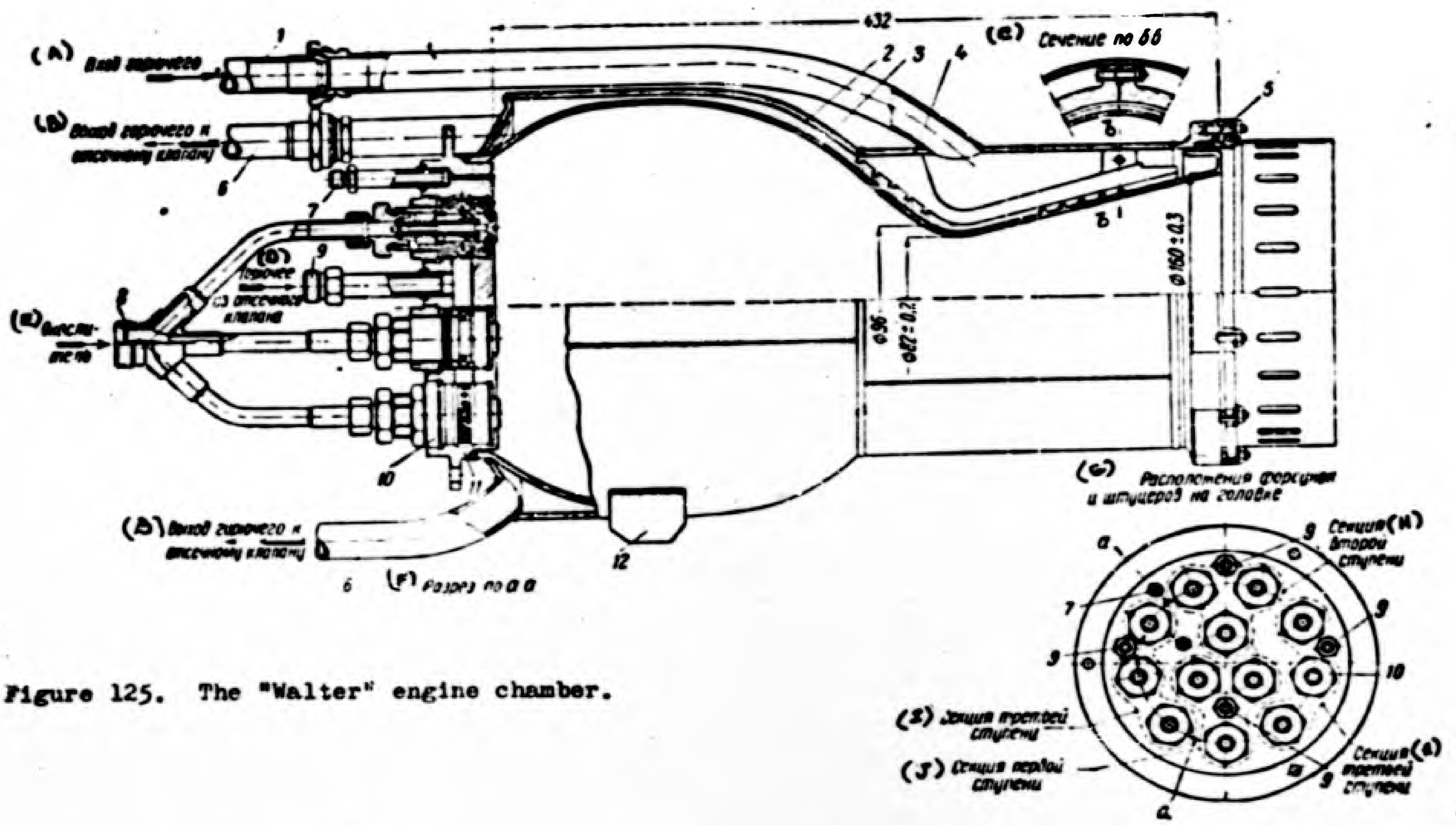

Figure 125. The "Walter" engine chamber.

1 -- combustible line to chamber; 2 -- internal lining of chamber; 3 -- external lining of chamber; 4 -- split insert; 5 -- packing gasket; 6 -- combustible exit line; 7 -- connection for measuring pressure in chamber; 8 -- T-joint for admission of oxidizer; 9 -- connecting pipe for feeding fuel; 10 -- duplex fuel nozzle; 11 -- head of chamber; 12 -- plate.

(A) -- combustible inlet; (B) -- combustible exit to cut-off valve; (C) -- cross section along bb; (D) -- combustible from cut-off valve; (E) -- oxidizer; (F) -- cross section along aa; (G) -- arrangement of injectors and connecting pipes on head; (H) -- cross section of second stage; (I) -- cross section of third stage; (J) -- cross section of first stage.

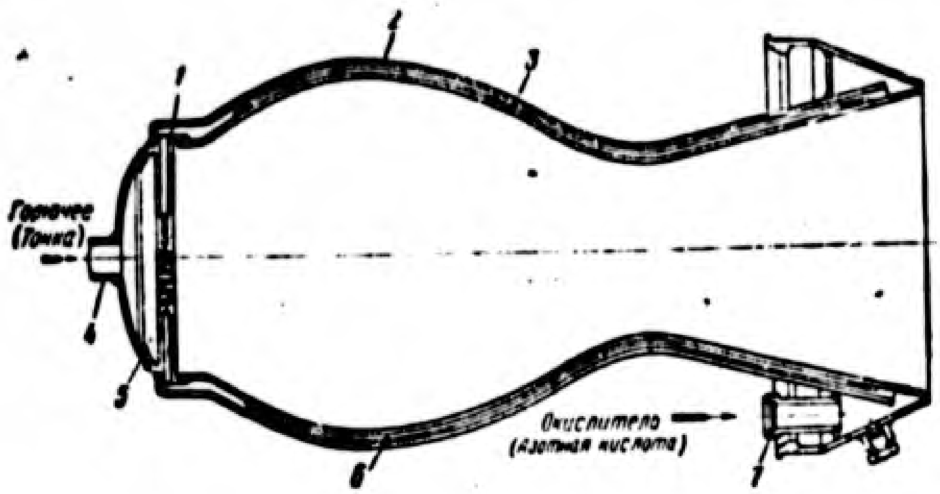

Legend:

A) Fuel ("Tonka")
B) Oxidizer
(nitric acid)

Figure 126. Engine chamber of the "Wasserfall" rocket.

1 -- head; 2 -- outer lining; 3 -- inner lining; 4 -- combustible line; 5 -- combustible space; 6 -- spacing strips; 7 -- connecting pipe for input of nitric acid.

The openings of the supplementary cooling belt (13) have stoppers made of a readily-fusible material. After the engine is started and the chamber has become heated, these stoppers become fused and the supplementary belt of internal cooling begins to function.

The lower external cooling belt (8) is sufficiently effective to make it possible to get along without the external cooling, and the nozzle section below it does not have external cooling. The chamber is welded together from a large number of stamped individual elements.

The power of thrust generated by the chamber is passed on to the frame of the engine by means of four cylindrical supports (5) that are welded to the external body of the chamber.

The "Walter" engine chamber (see Figure 125) is of welded construction. It has a flat-shaped head (11) with twelve duplex fuel nozzles.

The cooling of the chamber is effected by means of the combustible that reaches the cooling tract from the direction of the nozzle along line (1). In order to improve the cooling of the nozzle end, the cooling tract is provided with spiral ducts on the internal lining (2) and on the split insert (4).

From the cooling trace the combustible passes through tubes (6) to the cut-off valve, and from there through a connecting pipe (9) into the head of the chamber (11), proceeding from there into the duplex fuel nozzles (10) (for a description of the duplex fuel nozzles see below).

The oxidizer passes through T-section (8) into injectors (10), and from these injectors it is fed into the combustion chamber.

The lower part of the diagram shows the position of the injectors on the head. The injector sections of the three stages of engine operation are set off by dotted lines.

In order to provide compensation for the heat expansion of inner lining (2) in the nozzle end of the chamber, a mobile joint between the inner and outer lining is provided with a packing gland (5). The plates (12) serve the purpose of strengthening the chamber.

The "Wasserfall" engine chamber (see Figure 126) has external cooling, the latter being effected by feeding an oxidizer ("melange" M-10) through connecting pipe (7) into the chamber's cooling jacket.

The oxidizer passes through a cooling tract that is made in the form of a slot-opening between the chamber's outer (2) and inner (3) lining. In order to ensure a constant size for the open space, lengthwise spacing strips (6) are welded through the entire length of the chamber to the inner lining (3), to ensure the maintenance of a minimum open space.

From the cooling jacket the oxidizer passes into the flat-shaped head (1), and through slanted borings it reaches the combustion chamber.

The combustible (Tonka-841) is conducted through tube (4) into cavity (5), and from there through inclined borings it also reaches the combustion chamber. Inclined borings for the combustible and the oxidizer are so arranged that the axes intersect at a certain distance from the head.

Thus the "Wasserfall" engine has a flat-shaped head provided with impinging hole injectors.

Cylindrical Combustion Chambers.

Except for the nozzle inlet, the cylindrical combustion chamber has through its entire length the shape of a cylinder of constant diameter D (see Figure 123 b). The principal advantage of the cylindrical type of combustion chamber is the simplicity of its construction. Engines that have a detachable nozzle end and head are usually constructed with a cylindrical combustion chamber.

Cylindrical combustion chambers are widely used for engines of small thrust. In connection with the more extensive use of flat-shaped heads, cylindrical combustion chambers have taken the place of ball-shaped chambers also in medium-thrust engines. Notwithstanding the disadvantages to be mentioned later, cylindrical combustion chambers are beginning to be used even in large-thrust engines.

Cylindrical combustion chambers are also used in multi-chamber engine installations, made in the form of clusters of engines, because of the facility of arrangement.

A shortcoming of the cylindrical combustion chambers can be seen in the fact that their strength is less than that of the ball-shaped chambers, and that they have a relatively large surface requiring cooling, a fact which makes it more difficult to provide an adequate cooling system.

As examples of liquid-fuel rocket engines with cylindrical combustion chambers we may mention the chambers ofthe ORM-65 engine (Figure 127) designed by V. P. Glushko, the German R-3395 (Figure 128), and the German "Schmetterling" (Figure 129).

The chamber of the ORM-65 engine consists of a turned steel inner lining (1), made in one piece with the nozzle end. To improve cooling it has a spiral ribbing in its nozzle and cylindrical portions, and an external hull (2). The cooling of the engine chamber is effected by the use of nitric acid fed in through connecting pipe (4). The oxidizer passes into the combustion chamber from the cooling jacket through three helical injectors (5).

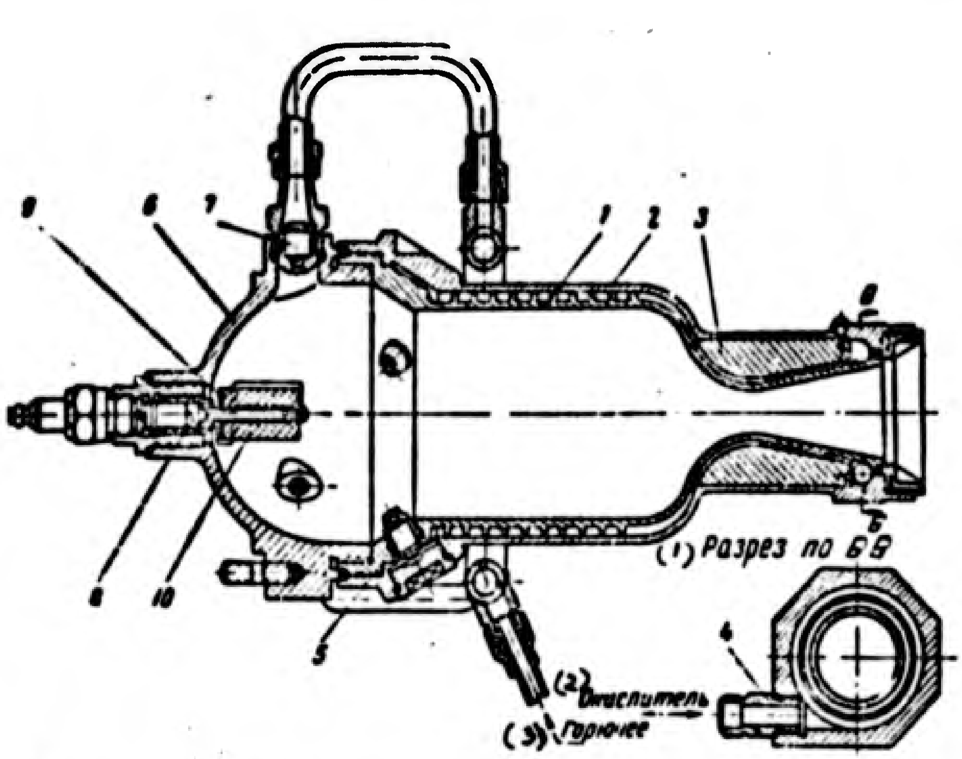

Figure 127. The chamber of the ORM-65 engine (1936).

1 -- inner lining of chamber; 2 -- body of chamber; 3 -- insert; 4 -- connecting pipe for feeding oxidizer; 5 -- oxidizer injector; 6 -- head of chamber; 7 -- fuel injector; 8 - filament; 9 -- igniting mixture; 10 -- ignition pin.

(1) -- cross section along bb; (2) -- oxidizer; (3) -- combustible.

The head (6) of the engine has a spherical shape and is uncooled. Within it are located the three helical injectors (7) for feeding the combustible -- kerosene. The head also contains an incendiary device. When current is fed, resistance (8) burns through, and from the spark obtained in this manner igniter composition (9) is ignited. The latter ignites the incendiary mixture (10), which in turn ignites the fuel components.

The chamber of engine R-3395 (Figure 128) consists of an external machined body (3) and an inner lining (8), the latter being made as seamless-turned piece from an aluminum alloy. The head of the engine (2) is flat-shaped, with stream injectors. The inner lining and the body are joined together by bolts. The calking between the chamber and the body is effected by means of ring-shaped packing (1) and (7). The engine makes use of mixed (internal and external) cooling.

The internal cooling of the engine is effected by using an oxidizer, nitric acid, which is fed into opening a and thus reaches the engine's cooling jacket.

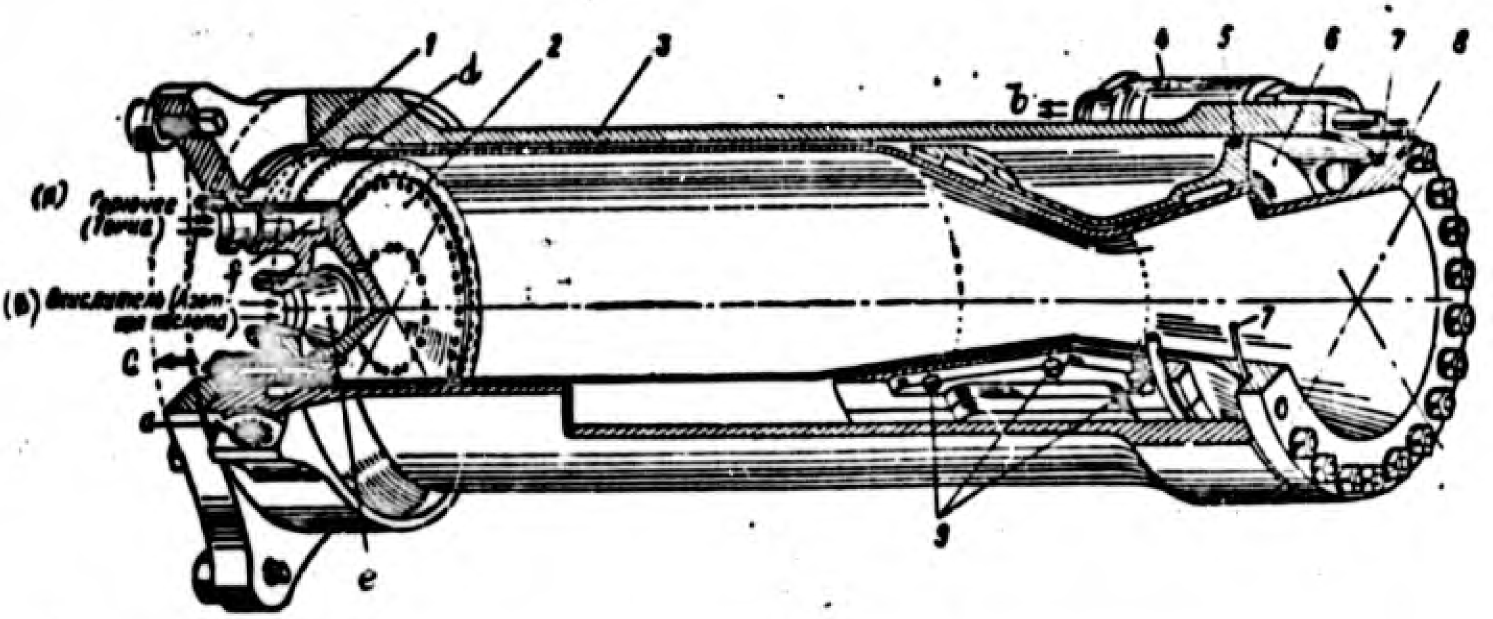

Figure 128. The chamber of the R-3395 engine.

1 -- packing ring; 2 -- head of engine; 3 -- external hull; 4 -- connecting pipe for output of oxidizer from cooling jacket; 5 -- packing ring; 6 -- split slide block; 7 -- packing ring; 8 -- inner lining of chamber; 9 -- bolts for packing.

a -- inlet for oxidizer into jacket; b -- exit for oxidizer from cooling jacket; c -- measurement of pressure in chamber; 3 -- opening to feed fuel for internal cooling; 3 -- oxidizer cavity; f -- fuel cavity.

(A) -- fuel (tonka); (B) -- oxidizer (nitric acid).

Since the engine's thrust is only slight, and since consequently the consumption of oxidizer is small, a very small open space must be provided in the cooling jacket so as to obtain the required speed of flow. This is done by installing a split packing (6), which is fastened with bolts (9). The open space between the packing and the body of the chamber is made more rigid by packing ring (5). As it passes through the cooling jacket, the nitric acid is directed through connecting pipe (4) and through exit b into the main valve, whereupon it is fed into the cavity of the head.

The fuel reaches cavity f likewise from the main valve.

For the purposes of internal cooling, part of the fuel from cavity f is fed through lateral opening d into the empty space between the head and the

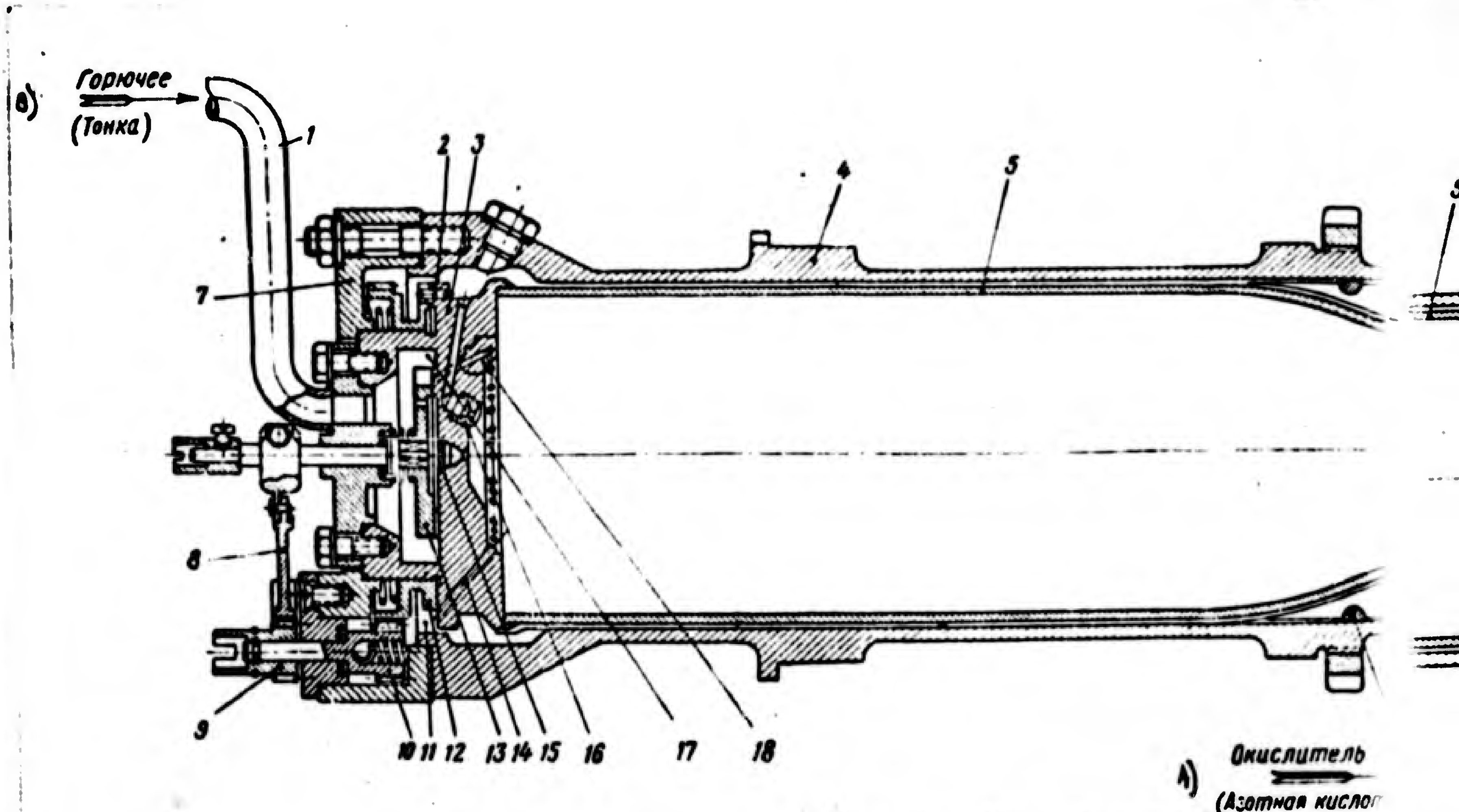

Fig. 129. The engine chamber of the "S
1--combustible line; 2--lockpin; 3--body of head; 4-- Th
6--joint packing; 7--head cover; 8--toothed sector; 9 --loc
izer cavity; 12 and 13--regulator discs; 14--borings d c
injector for combustible; 16--ignition injector for o -reg
18-- feed injectors for combustible; 19--packing ring : 1
22--packing gland. A) oxidizer--nitric acid; com

A

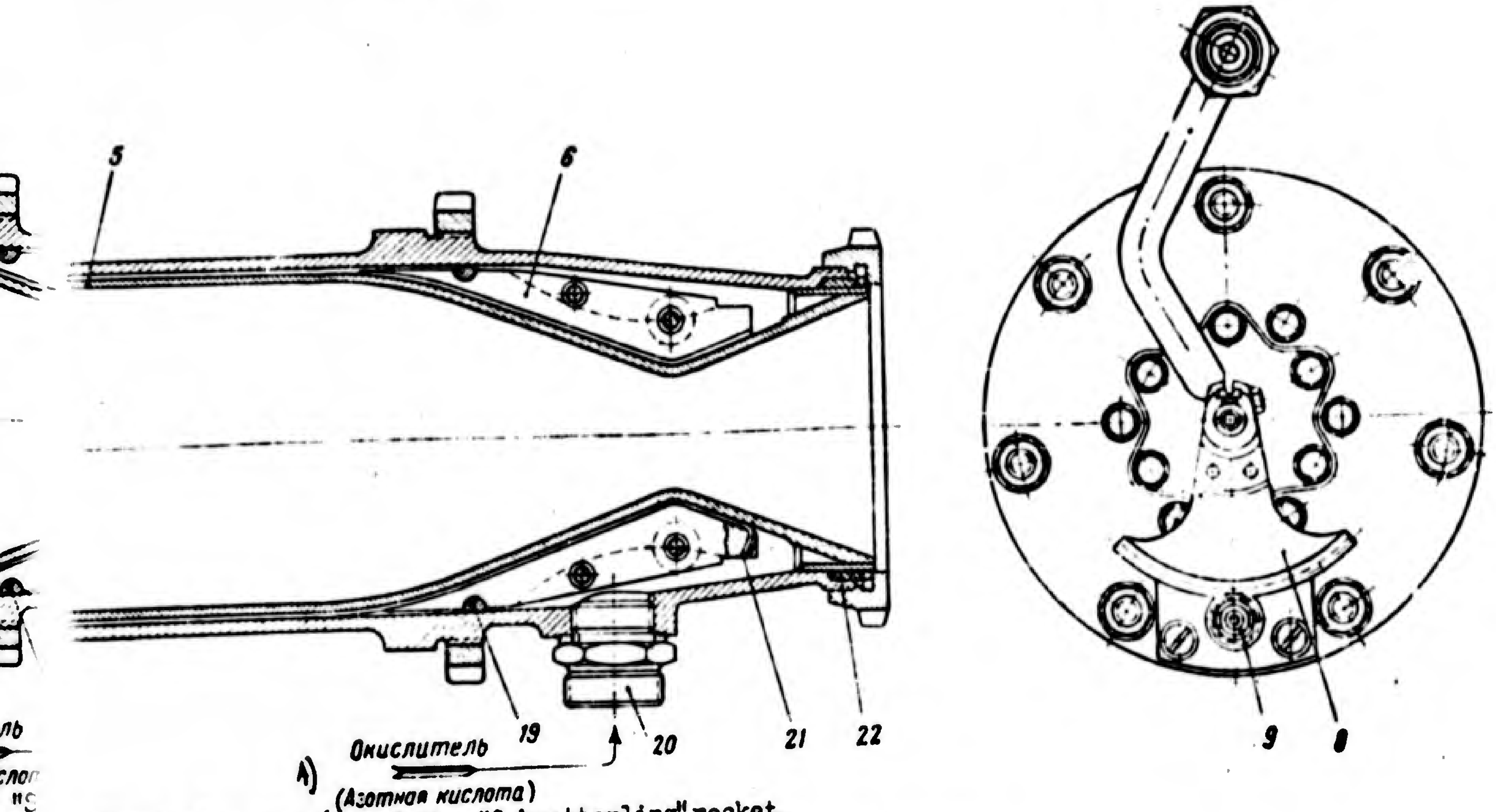

The engine chamber of the "Schmetterling" rocket.
--lockpin; 3--body of head; 4-- external lining; 5--inner lining;
d cover; 8--toothed sector; 9 and 10-- toothed wheels; 11--oxid-
-regulator discs; 14--borings of oxidizer injectors; 15--ignition
; 16--ignition injector for oxidizer; 17--combustible cavity;
combustible; 19--packing ring; 20- connecting tube; 21--wire;
A) oxidizer--nitric acid; B) fuel (tonka).

B

inner lining of the chamber, flowing in a film of even thickness into the narrow slot between these two structural elements.

The chamber of the "Schmetterling" engine (see Figure 129) is also constructed in the form of a sectional structure.

The head (3) of the chamber is flat-shaped, with stream injectors whose ducts are bored into the body of the head. The combustion chamber is of cylindrical shape. The inner lining (5) is welded to head (3).

The chamber has external cooling, effected with the aid of an oxidizer that is fed in through connecting pipe (20). The cooling tract is given the structure of a slot-shaped open space. A split packing (6) is placed in the nozzle end of the chamber to create a narrow slot.

In order to keep the dimensions of the open space constant at 0.8 mm, a calibrated wire (21) is inserted between the packing and the inner lining of the chamber. To prevent a flow of oxidizer between the external lining and the packing, a packing ring (19) is inserted.

From the cooling tract the oxidizer flows into the head and is from there directed through a bored opening into the starting jet (16) and into the oxidizer cavity (11), whence, through bored opening (14), it reaches the combustion chamber.

The combustible is fed to the head of the chamber through pipe (1) and passes into the combustible cavity (17). From there the combustible reaches the ignition jet (15) and, through bored openings, the stream injectors (18).

The head of the chamber also contains a device for regulating the consumption of fuel components in proportion to the Mach number. This device functions in the following manner. When the Mach number changes, rotary motion is passed on from a regulator to gear wheels (9) and (10). When these wheels turn, their rotary motion is passed on to a regulating disc with lugs (12) and through sector 8 to regulating disc (13). When this happens, the lugs of discs (12) and (13) close or open part of the openings through which the fuel components are fed to injectors (14) and (18), with the result that the amount of components fed into these injectors is either decreased or increased.

To prevent sector (8) from coming off gear wheel (9), on disc (12) a recess is provided for the insertion of a lockpin (2). The passage for fuel components to ignition jets (15) and (16) is always kept open, regardless of the position of the regulating discs. In order to compensate for the heat expansion of the inner lining (5), a movable joint with packing gland (22) is provided.

One of the parameters characterizing the combustion chamber is the consumption intensity r. The consumption intensity value is especially convenient for characterizing cylindrical combustion chambers.

The term consumption intensity is applied to the consumption per second of fuel or products of combustion passing through a given unit of area of the section of the chamber. The average consumption intensity for a given cross section of the combustion chamber is determined by the formula

$$r = \frac{1000G}{F_{ch}} \text{ g/sec cm}^2, \qquad \text{(VIII.19)}$$

where F_{ch} is the area of the cross section of the combustion chamber.

We express the consumption G in terms of complex β (see Section 17)

$$G = \frac{f_{cr} p_2}{\beta},$$

so that

$$r = \frac{f_{cr}}{F_{ch}} \beta \cdot 10^3 p_2,$$

where p_2 is the pressure in the combustion chamber in kg/cm^2.

Since the value for β is essentially constant for a given fuel, the value for the consumption intensity is directly proportional to the pressure in the chamber, i.e.

$$r = K \cdot p_2$$

where K is a constant coefficient depending only on the type of fuel and the ratio $\frac{F_{ch}}{f_{cr}}$.

For modern fuels the value for complex β is 155-180 kg/sec- kg. If we assume $\frac{F_{ch}}{f_{cr}} \approx 6$, then the value for the coefficient K will be approximately equal to one, and one may consider that for a chamber of this type the consumption intensity of g/sec/cm^2 is numerically equal to the pressure in the combustion chamber, expressed in kg/cm^2.

Chambers of combustion with nearly constant lengthwise pressure are sometimes referred to as isobaric chambers. Under this term we must include those chambers in which the ratio between the area of the cross section of the combustion chamber F_{ch} and the cross section area of the critical throat section f_{cr} is greater than three.

This ratio usually is referred to as the "dimensionless" area of the combustion chamber. If the value for $\frac{F_{ch}}{f_{cr}} < 3$, there will occur during the combustion in the chamber a considerable increase of speed in its lengthwise direction. The pressure along the length of the combustion chamber will drop, according to the law of the conservation of energy, so that a chamber of this sort cannot be included among the isobaric chambers. Chambers in which the value of the ratio is less than 3 are spoken of as "speed" chambers. Chambers in which this ratio equals 1 bear the name "semithermal" nozzle (see Figure 123 d).

Cone-Shaped Combustion Chambers.

In a cone-shaped combustion chamber (see Figure 123 c) the entire chamber essentially constitutes a nozzle inlet. This type offers the convenience of maximum simplicity of construction.

The disadvantage of a cone-shaped combustion chamber consists in the fact that, as compared with a ball-shaped or cylindrical combustion chamber, the chamber has a low specific thrust R_{sp}. For this reason this type of chamber has recently gone out of use.

The low specific thrust of a cone-shaped chamber is due to the following reasons:

1) In a cone-shaped chamber there is acceleration of the products of combustion lengthwise through the chamber, and consequently also a drop of pressure along the length of the chamber. Thus the conversion of heat energy into the work of expansion remains less complete.

2) In a cone-shaped chamber the zone of atomization and mixture of the components and the zone of fuel vaporization take up a larger space out of the total volume of the combustion chamber than is the case with ball-shaped and cylindrical combustion chambers. Consequently the zone of combustion occupies less space, and the process of combustion cannot be fully completed, so that the cone-shaped chamber usually has a lower chamber coefficient φ_{ch}. Cone-shaped chambers are used where simplicity of construction is a prime requisite.

Having examined the different basic forms of combustion chambers, we can now reach the conclusion that at the present time ball-shaped and cone-shaped combustion chambers are used for heavy-thrust engines. For engines of small or medium thrust cylindrical chambers are widely used.

Section 48. Designing the Nozzle of an Engine Chamber.

Basic Requirements for Construction of the Nozzle.

In the nozzle of the combustion chamber there takes place the expansion and acceleration of the products of combustion. The type of construction of the nozzle will determine the nozzle coefficient φ_{noz} and, consequently, the exhaust velocity from the nozzle w_3 and the specific thrust of the engine.

From the thermal calculation of the engine we determine only the size of the critical throat section f_{cr} and of the exit section f_3 of the nozzle. In designing the combustion chamber the mouth of the entrance f_{ent} is also determined (see Figure 130).

But other important dimensions of the nozzle — dimensions that determine the shape and constructional dimensions (such as the length of the nozzle and the angles of its inlet and exit sections) -- cannot be established by means of thermodynamic calculation.

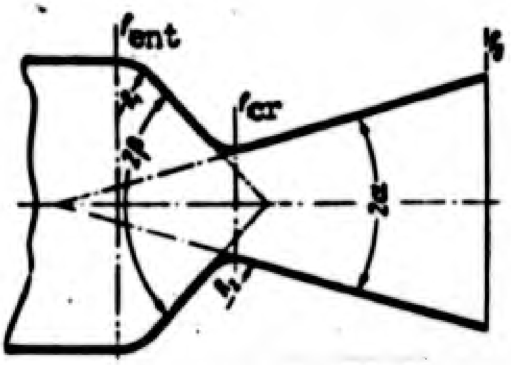

Figure 130. The nozzle of a liquid-fuel rocket engine's combustion chamber.

These nozzle dimensions are so chosen in the process of designing that the following requirements made of the nozzle will be met to the fullest possible extent:

1) It must have the highest possible nozzle coefficient φ_{noz}.

2) For given dimensions of f_{cr} and f_3 the surface of the nozzle walls must have the smallest dimensions possible. Just as in designing the combustion chamber, fulfillment of the requisite facilitates arrangements for cooling the nozzle and keeps down its weight.

3) The construction and technology of the nozzle must be kept as simple as possible.

As is so often the case in technology, the above-mentioned requisites are mutually exclusive; the complete satisfaction of one of them often entails impairing other properties of the nozzle. For this reason it will be necessary to arrive at a compromise solution while planning the nozzle according to the use for which the engine is intended.

Losses in the Nozzle, and Means of Reducing Them.

The losses in the nozzle are of four distinct types:

1) Losses due to friction of the gases against the nozzle wall. To

reduce such losses, the nozzle surface must be made as smooth as possible. It will also be obvious that the smaller the nozzle surface (i.e., its length) for given dimensions of f_{cr} and f_3, the smaller will be the losses due to friction.

2) Losses at the inlet, depending on the shape of the inlet section of the nozzle. These losses can be reduced if the inlet is made smooth. Compared with the other types of nozzle loss, these losses are small.

3) Losses due to dispersion of velocity at the nozzle exit.

The velocity vector changes its direction along the cross section of the nozzle. At the edge of the nozzle the velocity w_3 is directed along the wall, i.e., it diverges from the direction of the axis of the engine.

As we know from derivation of the engine's thrust equation, the reaction force arises only as a result of a change in the momentum of the gas stream along the axis of the engine, i.e., only due to those components of velocity which are parallel to the engine's axis w_3' (Figure 131).

The dispersion component of the velocity w_{disp}, being of radial direction, does not give any added thrust of the engine. Therefore the energy expended upon establishing the velocity w_{disp} is wasted energy. And this is what constitutes the loss due to dispersion of velocity.

Legend:

A) Dispersion velocity vector.

Figure 131. Nozzle losses resulting from velocity dispersion.

The magnitude of dispersion losses is determined by the magnitude of the angle of the nozzle cone at the exit 2α. In order to keep down the losses due to dispersion, it is necessary to reduce the angle of the opening of the nozzle at the exit 2α, in this manner decreasing the velocity component w_{disp}.

Allowance for the dispersion can be made by introducing a correction factor into the exhaust velocity φ_{disp}. The average exhaust velocity w_3, will then take the form

$$w_3' = w_3 \varphi_{disp}.$$

The correction is constituted by the ratio of the momentum of the gas flow along the engine's axis in a nozzle that is widened at an angle 2α to the momentum of the gases in an ideal nozzle, i.e., one where the gases would have only axial speed. The value for the coefficient of correction is shown by the following equation[1]

$$\varphi_{disp} = \frac{1}{2}(1 + \cos\alpha_{exit}).$$

Table 29 shows the relation of the coefficient φ_{disp} to the angle 2α.

Table 29

Value of the Coefficient φ_{disp} in Relation to Angle 2α

2α	0	4	8	12	16	20	24	28	32	36	40
φ_{disp}	1,000	0,9997	0,9988	0,9972	0,9951	0,9924	0,9890	0,9851	0,9806	0,9755	0,9698

The Table shows that for a nozzle with opening $2\alpha = 28^0$ the velocity of discharge w_3', and consequently the specific thrust p_{sp} will constitute 98.5% of the velocity as determined according to formula (III.10).

However, in the case of a nozzle that has the shape of a simple cone the length of the cone will be increased if the angle 2α is reduced, thus increasing the area of the surface. In order to avoid increasing the surface area of the nozzle the so-called profiled nozzles are used, where the angle of the opening, decreasing evenly along the length of the nozzle (Figure 132), is small in value at the exit. A nozzle obtained in this manner is considerably shorter than a simple cone-shaped nozzle (with the same f_{cr} and f_3). The surface of such a nozzle and, consequently its weight are considerably less than those of

---

[1] D. Satton - Raketnyye dvigateli. Izdatel'stvo inostrannoy literary [Rocket Engines. Foreign Literature Publishing Office], 1952.

a simple cone-shaped nozzle.

The profiled nozzles offer greater complications of production than do the cone-shaped nozzles.

4) Losses originating from the separation of flow from the walls. It is possible for a vortex to be formed in the widening part of the nozzle, due to the separation of flow from the walls. Such a separation can be ascribable to two different causes.

The first of these causes is an excessively large angle of opening in the nozzle, such that the flow would not have time to expand in a radial direction. As a result of the separation of flow from the walls, zones of low pressure are formed around them, filling up of which forms vortices in the direction opposite to that of the flow of the gas, and consequently to the losses of energy expanded in creating the velocity of the eddy and reverse currents of the gases. For that reason it is inexpedient to have wide angles of opening for the trans-critical section of the nozzle.

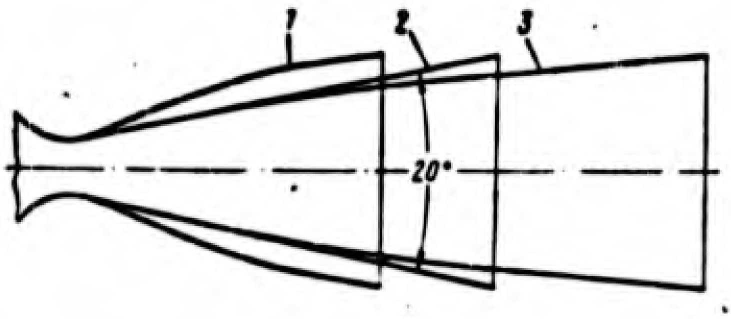

Figure 132. Contours of the nozzle with equal f_{cr} and f_3.

1 -- nozzle with profiled, arc-shaped circumference; 2 -- common cone-shaped nozzle; 3 -- conventional type of gasodynamically profiled nozzle.

The second cause occasioning a separation of the stream in the nozzle is displacement of shock waves into the nozzle under conditions of overexpansion. In the event of extreme overexpansion, the shock waves shift into the nozzle and bring about a separation of flow from the walls. As in the preceding case, this brings about an intensive formation of vorticity.

An abrupt change of the contours of the walls of the nozzle can also cause the formation of shock waves within the nozzle and therefore the profile of the nozzle must be made smooth. In order that shock waves may not be formed, it is essential to make use of nozzles that are shaped in accordance with the dynamics of gases, where the generatrix of the nozzle is the line of flow of the gases within the nozzle.

One must remember in this connection that -- in contrast with the usual types of gasodynamically designed nozzles, where the angles of opening past the critical section are equal to 12-20°; the liquid-fuel rocket engines may, in the zone nearest the critical section, have angles of opening as large as 45-50°. This is possible because in the nozzle of liquid-fuel rocket engines there occurs a liberation of heat due to the recombination reactions, thus helping the radial spreading of the current. Figure 132 shows the contours of nozzles of different shapes having equal values for f_{cr} and f_3; 1 -- nozzle, profiled with arc-shaped circumference; 2 — cone-shaped nozzle; 3 -- the conventional type of gasodynamically profiled nozzle.

Nozzles with arc-shaped circumference also give satisfactory results.

The exit of the nozzle (that of the cone-shaped as well as that of the profiled nozzle) must have a sharp exhaust edge, since a rounded edge would cause overexpansion and a breaking away of the current.

Calculation of the Geometric Dimensions of Various Types of Nozzles.

In the liquid-fuel rocket engines the cone-shaped nozzles are used for the small-thrust engines, but sometimes also for those of intermediate thrust. Their advantage consists in the simplicity of manufacture.

For the cone-shaped nozzles one may recommend the following values for the fundamental geometric dimensions (see Figure 130).

Angle of entry to nozzle end:

$$2\beta = 60 \div 90^\circ.$$

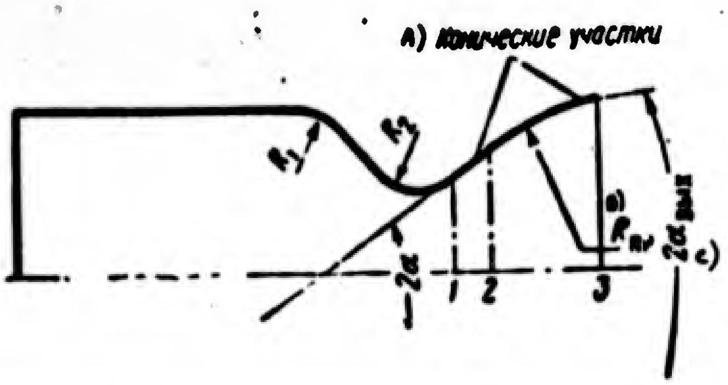

Legend:

A) Cone-shaped sections
B) R_{profiled}
C) $2\alpha_{\text{exit}}$

Figure 133. Diagram of profiled nozzle.

Exit angle of the nozzle:

$$2\alpha = 20 \div 25°.$$

Radius of curvature of the critical section of the nozzle:

$$R_2 = (0{,}7 \div 1)d_{\text{cr}}.$$

The radius of curvature at the point of transition from the cylindrical part of the combustion chamber to the nozzle part R_1 is chosen with a view to give the nozzle a smooth contour.

Profiled nozzles are used for intermediate and heavy thrust engines, and also for engines that have extensive overexpansion. If a cone-shaped nozzle is used with engines of these types the losses due to dispersion will be considerable, and the length of the nozzle is sharply increased. For that reason the gain as to weight, in the case of the larger engines, is considerable if profiled nozzles are used. Rigid gasodynamic profiling of the nozzle, where the nozzle generatrix coincides with the stream line, requires rather painstaking and tedious calculation, and also very accurate execution of the designed profile. It is very much easier to produce a nozzle with a profile formed by straight lines and arcs.

Figure 133 shows a diagram of a profiled nozzle.

The cone-shaped section 1-2 consists of straight lines. Section 2-3 has a spherical surface of radius R_{profiled} and may terminate in a cone-shaped surface.

In recent times, the liquid-fuel rocket engines with profiled nozzles have been very extensively used.

The engine proposed by Zenger (Saenger) (Figure 134) can serve as an example of this type.

Section 49. Injectors for Atomizing the Fuel.

In liquid-fuel rocket engines the following types of injectors are used for atomizing the fuel in the chamber (Figure 135): impinging stream injectors (a and b) and centrifugal injectors (swirl injectors) (c, d, and e).

From the point of view of manufacture the injectors can be made in the form of simple, fine borings in the head of the engine's chamber itself, or else in form of separate, independent assemblies for feeding the component which are fastened to the head of the chamber.

The injector may be a single-component or a duplex (integral) injector.

The diagram of a duplex injector is shown in Figure 135 e. There the mixture of the components begins in the liquid phase while still in the pocket II, and this helps to produce a better mixture.

Figure 136 shows the injector of a "Walter" liquid-fuel rocket engine. It is integral and is used to feed both oxidizer and combustible.

The combustible passes from the ring channel (8) in the injector assembly (9) through openings (7) and (6) into a narrow ring slit formed by insert (5) and the body of atomizer (4). In this manner the combustible flows from the injector in the form of a thin cylindrical film.

The oxidizer, upon entering the injector through the upper connecting pipe (1), passes along the injector's axis and flows through the helical ducts of swirler (2). Coming out of the latter, the oxidizer jets pass into a cone-shaped slit formed by the valve of the nozzle (3) and the seat of atomizer (4). The oxidizer flows out of the injector in the form of a thin cone-shaped film, which intersects with the cylindrical film of fuel. This impinging favors better mixing and the atomizing of the fuel. The spin imparted to

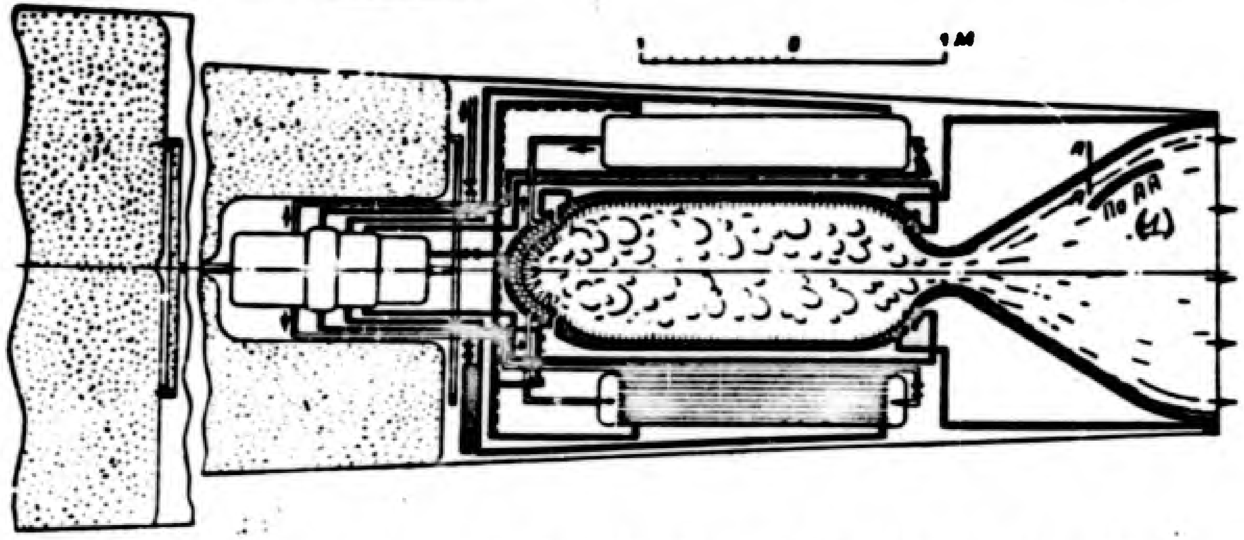

Figure 134. Diagram of the chamber of the "Zenger" enging.

(1) cross section along AA.

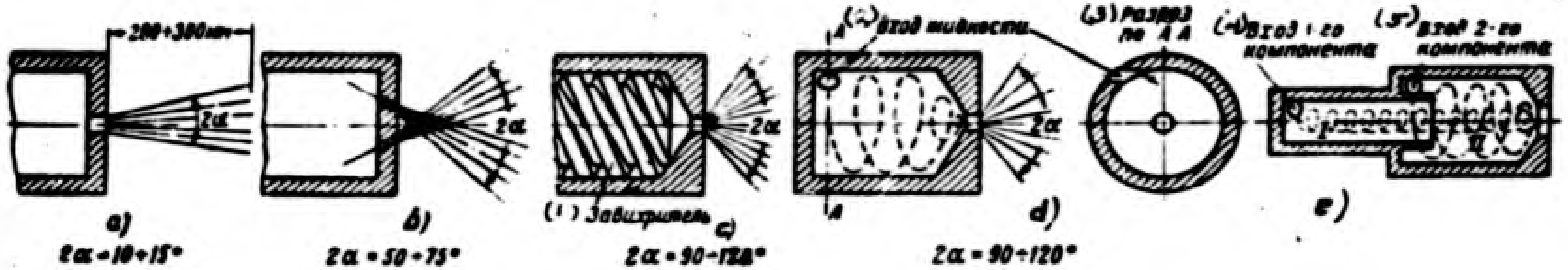

Figure 135. Varicus types of injectors.

a -- stream; b -- with impinging streams; c -- centrifugal with swirl jets; d -- centrifugal with tangential inlet holes; e -- centrifugal two-component (duplex) injector.

1 -- swirler; 2 -- liquid inlet; 3 -- cross section along AA; 4 -- inlet of first component; 5 — inlet of second component.

the oxidizer contributes the formation of a symmetrical cone-shaped film. The valve (3) of the oxidizer swirler is connected by means of rod (10) with a spring (11), which causes the valve to close when the feeding of oxidizer is stopped. During variable flow of oxidizer, this device brings about smaller change in pressure drop in the injector orifice.

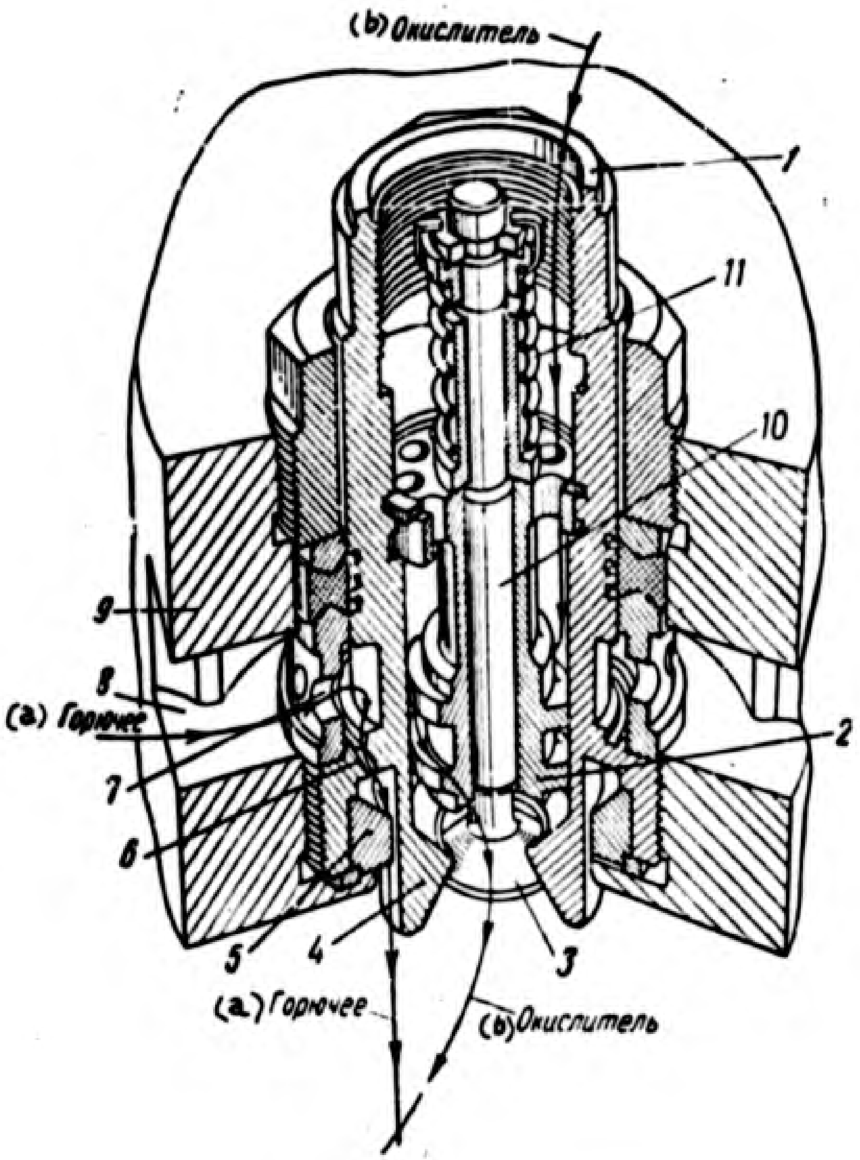

Figure 136. "Walter" type combined injector (two-stage injector).

1 -- connecting pipe for oxidizer feed; 2 -- helical swirler; 3 -- valve; 4 -- body of the atomizer; 5 -- insert; 6 and 7 -- openings of passage of combustible; 8 -- ring channel; 9 -- assembly; 10 -- rod; 11 -- spring.

a -- combustible; 5 -- oxidizer.

The calculation of single-component injectors will be discussed later. The two-component injectors can be regarded as an assembly consisting of two single-component injectors.

In order to obtain better mixing in the engine's chamber the injector must atomize the component into the smallest droplets possible, and must ensure that they will fill the chamber as evenly as possible.

Stream Injectors.

The stream injectors of the usual types are the easiest to manufacture. As shown in Figure 135 a, they consist of bored openings in the head of the chamber or in fuel-feeding cups. The stream injectors have, however, certain disadvantages that make it difficult to organize the mixing process properly. These disadvantages are the following.

In the stream injectors the breaking up of the fuel into separate droplets is brought about by friction of this stream with gases located in the chamber, and partly by variation of pressure within the stream itself. Since in injectors of this type the fuel flows in the form of a stream, the atomizer cone angle 2a is small for these injectors (10-15°). The zones where the fuel stream breaks up into separate droplets are remote from the head. Consequently one has to deal with a zone of atomization of considerable length.

In order to improve the atomization, the stream injectors are often made with impinging streams (Figure 135 b). In this case the streams of components, striking against each other, break up more quickly, and consequently one obtains in this manner a better atomization and a shorter fuel flame. The cone of the atomization flame of such an atomizer is larger than for ordinary injectors of the type and measures up to 50-75°.

As an example of an injector assembly with a stream injector one might cite the head of engine R-3395 (Figure 128) and that of the "Wasserfall" engine (Figure 126). In the "Wasserfall" engine fuel stream intersects several oxidizer streams. This improves also the uniformity of mixing of the fuel components.

As a variety of stream injectors, one can also consider ringslot injectors, which are used in the "Walter" engine (see Figure 136).

<u>Calculation of Stream Injectors.</u>

In making computations for the stream injectors one proceeds on the basis of the following considerations. As is well known, the theoretical exhaust velocity of an incompressible liquid through an orifice is expressed by formula

$$w=\sqrt{2g\frac{\Delta p}{\gamma}}\ \text{m/sec}, \qquad \text{(VIII.20)}$$

where $\Delta p = (p_1 - p_2)$ is the drop of pressure in kg/m^2;

g is the acceleration of gravity in m/sec^2; and

γ is the specific weight of the liquid in kg/m^3.

The flow of liquid through an injector orifice whose opening has the area f is determined by the equation of flow:

$$G_{inj}=\mu w f \gamma\ \text{kg/sec}, \qquad \text{(VIII.21)}$$

where f is the cross section area of the orifice in m^2;

μ is the discharge coefficient which takes into account the contraction of the jet and the decrease of the actual speed of flow as compared with the theoretical speed.

Substituting in (VIII.21) the value for w as given in (VIII.20), we get

$$G_{inj}=\mu f\sqrt{2g\Delta p\gamma}. \qquad \text{(VII.22)}$$

The flow of liquid through all orifices for a given component is

$$G=\sum G_{inj}=\mu F\sqrt{2g\Delta p\gamma}, \qquad \text{(VII.23)}$$

where F is the total area of the holes of all injection orifices;

$$F=\sum f.$$

The flow of component G through all injection orifices is known from the thermal calculation of the liquid-fuel rocket engine. The component specific gravity γ is likewise known. The discharge coefficient is determined according to the dimensions of the borings in the stream injector (Figure 137).

If $\frac{l}{d}$ equals 0.5 - 1 there occurs a decrease of flow due to constriction of the stream (see Figure 137 a). The discharge coefficient in that instance is

$$\mu = 0{,}60 \div 0{,}65.$$

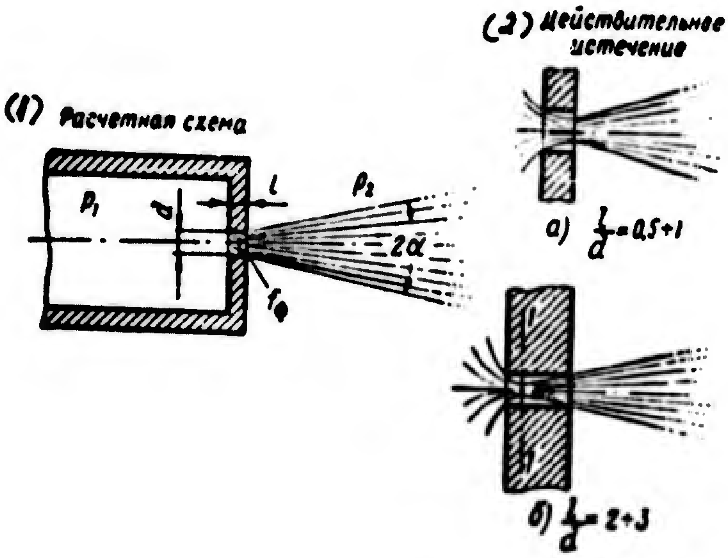

Figure 137. Discharge of the component from a stream injector.

1 - theoretical diagram; 2 -- actual discharge.

If $\frac{l}{d}$ equals 2 - 3 there occurs again a constriction of the stream; but since in this instance the pressure in the narrow cross section 1-1 (see Figure 137 b) is less, due to rarefaction, than in the first instance, the speed through the narrow cross section will be higher. Thus the flow of the liquid increases notwithstanding the constriction of the stream. For that reason, if $\frac{l}{d}$ equals 2 - 3 the value for the discharge coefficient is higher than if $\frac{l}{d}$ equals 0.5 - 1, and amounts to $\mu = 0.75 - 0.85$.

Assuming that the drop of pressure on the injection orifices is

$$\Delta p = 3 \div 8 \text{ kg/cm}^2 = (3 \div 8)\,10^4 \text{ kg/m}^2,$$

as shown in (VIII.23), the average necessary total area of the injection orifices is determined as follows:

$$F = \frac{G}{\mu\sqrt{2g\Delta p\gamma}} \text{ m}^2.$$

(VIII.24)

The number of injection orifices to be used on the injector head must be determined in the designing of the head (see Section 50). Once we know the number of injection orifices z, we can determine the area of the cross section of each orifice f

$$f = \frac{F}{z}.$$

(VIII.25)

The diameter of the orifices for the stream injector, depending on the overall dimensions of the liquid-fuel rocket engine, is taken as equal to

$$d = 0.8 \div 2.5 \text{ mm}.$$

It is not advisable to make an injection orifice with diameter less than 0.8 mm, so as to avoid clogging. Moreover, bored openings of such small dimensions would present some technological difficulties. In order to facilitate the boring of holes of small diameter, an effort is made to keep them at minimum length, boring a large diameter through the main thickness of the material. Any considerable increase of the diameter of the injection orifices (more than 2.5 mm) deteriorates the atomization of the component fed, since the stream of component becomes too powerful and would not readily break up into droplets.

If the diameter obtained in computing of an injection orifice is not suited to the type of engine in question, it will become necessary to adopt a different pressure drop for the injection orifice Δp or else change the number of orifices z.

If it becomes necessary to make use of several belts of injection orifices with openings of different diameters it will be necessary, strictly speaking, to take into account the fact that the discharge coefficient μ varies according to the diameter of the hole d. To simplify calculation, however, one may use for all injection orifices the average value for the discharge coefficient μ.

The above-mentioned design scheme is also maintained for the ringslot injectors, for which it is necessary to take only the appropriate value of the discharge coefficient.

Centrifugal Injectors (Swirl Injectors).

Centrifugal injector is the term applied to those injectors where the liquid is fed through an artificially created swirl. As it passes out of the nozzle of the centrifugal injector, the liquid is subjected to the action of centrifugal forces and comes to form a thin film, which very quickly breaks up into droplets.

The centrifugal injectors provide a very wide atomizer cone (up to 120°) and a short fuel spurt. This makes it possible to decrease the length of the atomizing zone of the fuel components.

Thus the centrifugal injectors provide better atomization than the impinging stream injectors; but there is more difficulty involved in manufacturing the former and putting them in the head of the engine.

According to the manner in which the swirl is imparted to the liquid, the centrifugal injectors are of the following types; tangential injectors (see Figure 135 d) and swirl injectors ("helical injectors") (see Figure 135 c).

In the tangential type of centrifugal injectors the liquid enters into the open space of the injector through an opening the axis of which is perpendicular to the axis of the injector, but does not intersect with the latter. As a result, the liquid is given a twist with respect to the axis of the injector.

In the swirl type of centrifugal injector the twist is created by means of a special swirler that has a helical grooving on its outer surface. Moving along this helical groove, the liquid is put into swirl with respect to the injector axis.

Flow of the Liquid Through the Centrifugal Injector.

In the tangential type of centrifugal injector (Figure 138) the liquid reaches the open space in the injector through an inlet opening that has a radius r_{ent} and the velocity w_{ent}. This opening is placed in such manner that its axis is tangent to a circumference of radius r_{ent} with a center which is located on the axis of the throat of the swirl jet. Owing to this type of inlet the liquid passes through the cavity to the injector nozzle, swirling. Let us now consider the stream of liquid which, in moving through the injector, would enter the nozzle of the swirl jet as a distance r from the latter's axis.

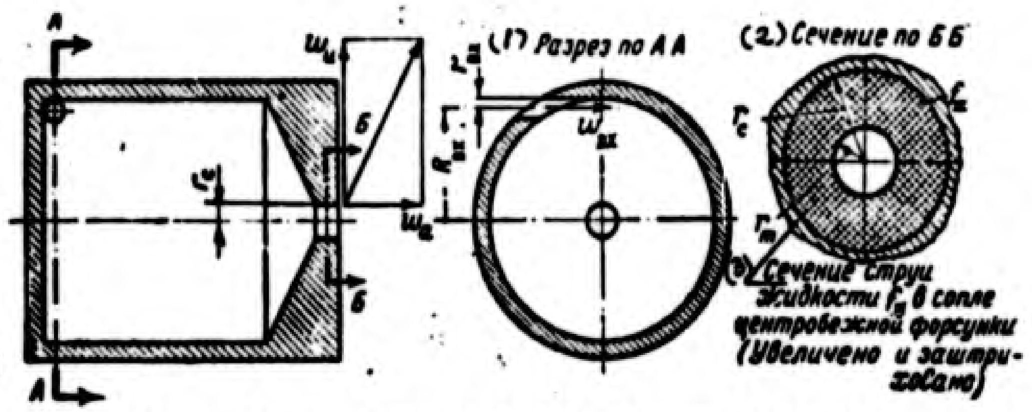

Figure 138. Flow of liquid along swirl jet.

1 -- cross section along AA; 2 -- cross section along BB; 3 -- cross section of the liquid stream f_{liq} in the nozzle of the swirl jet (swirler). (Magnified and cross-hatched.)

If we disregard the action of the forces of friction, the momentum of any liquid particle with respect to the axis of the injector is bound to retain a constant value throughout the entire passage from the entrance of the swirl jet to the exit from the swirl jet's nozzle.

$$w_{ent} \cdot R_{ent} = w_u \cdot r, \tag{VIII.26}$$

where w_u is the circumferential speed of movement of the particle of liquid in the nozzle at a distance r from the axis of the nozzle.

Since we may assume that as an average for any stream (allowing merely for a minor error due to changes in the value of R) the momentum of the liquid received by it at the inlet opening is uniform and equal to $w_{ent} \cdot R_{ent}$, the velocity w_u varies according to radius r on which the stream impinges in the nozzle.

$$w_u = \frac{w_{ent} R_{ent}}{r}. \tag{VIII.27}$$

If we disregard the negligible theoretical difference of level between the inlet opening and the nozzle opening, the pressure in the stream of liquid can be determined by means of the Bernoulli equation

$$\frac{p_{ent}}{\gamma} + \frac{w_{ent}^2}{2g} = \frac{p}{\gamma} + \frac{w_a^2}{2g} + \frac{w_u^2}{2g} = \text{const}, \tag{VIII.28}$$

where p_{ent} is the pressure of the liquid at the inlet opening;

w_{ent} is the velocity of the liquid as it enters the injector;

w_u is the tangential component of the velocity of the liquid as it leaves the injector; and

w_a is the axial component of the velocity of the liquid as it leaves the injector.

Giving the value for the entire pressure drop on the swirl jet by the symbol Δp and expressing it in terms of head H, we get:

$$\frac{\Delta p}{\gamma} = H = \frac{p_{ent}}{\gamma} + \frac{w_{ent}^2}{2g} = \text{const}. \tag{VIII.29}$$

We then get from equation (VIII.28):

$$\frac{p}{\gamma} = H - \left(\frac{w_a^2}{2g} + \frac{w_u^2}{2g}\right). \tag{VIII.30}$$

From equation (VIII.27) it will be obvious that when

$$r \to 0$$
$$w_u \to \infty.$$

It follows from equation (VIII.30) that the pressure of the liquid on the axis of the jet must have an infinitely great negative value. This, however, is not possible for a liquid, since a liquid is quite incapable of taking negative stresses; that is, it is not capable of expansion.

What actually happens in the injector is as follows: as the liquid gets closer to the injector's axis the velocity w_u will be increasing and the pressure p dropping, but only until pressure p becomes equal to the pressure of the surrounding medium into which the discharge takes place (during the spraying into the chamber that would be the pressure of the chamber).

Any further decrease in the pressure in the central part of flow would be impossible, since only the base of this part penetrates through the nozzle into the surrounding medium, and consequently the central part of the injector will not be filled up with liquid. In that space there will exist a gaseous swirling with a pressure equal to that of the surrounding medium (pressure in the chamber). The flow of liquid along the nozzle of the injector will not take place throughout its entire cross section but only through the annular cross section, the inner radius of which is equal to the radius of the gaseous swirl r_m, while the outer radius is equal to the radius of the nozzle r_c (see Figure 138).

In a centrifugal injector the full drop of pressure Δp is expended in creating a velocity w_{ent} of the liquid at the inlet opening, and an axial component of the velocity w_a in the swirl jet's nozzle.

The greater the velocity w_{ent} as compared with the velocity w_a, the greater will be the ratio of the tangential velocity of liquid and the greater the part of the pressure drop spent in creating the input velocity.

The greater the intensity of the twist of the liquid, i.e., the greater the relation of tangential velocity to the axial velocity, the smaller will be the annular cross section of the nozzle f_{liq} that is used by the passing liquid. The before-mentioned circumstance is a consequence of the fact that as the intensity of the constriction increases there will be an increase of the radius of the gaseous swirl r_m.

In the theory of swirlers, the distribution of the pressure drop between the inlet cross section and the nozzle, and also the magnitude of the annular corss section of the nozzle, are accounted for only by the discharge coefficient μ that is introduced into the formula for discharge of the liquid flowing through a swirler, while the entire pressure drop is conventionally referred to the nozzle opening. This formula takes the following form:

$$G_\phi = f_c \mu \sqrt{2g \Delta p \gamma}. \tag{VIII.31}$$

From the foregoing it follows that the coefficient μ varies according to the intensity of the swirl of the liquid, since in this case there occurs a reduction of the circular area of the flow, and also a crop of pressure in the swirler's nozzle.

As was pointed out by G. N. Abramovich,[1] the coefficient μ is a function of the dimensionless magnitude A known as the geometric characteristic of the centrifugal injector.

The formula for the geometric characteristic of the jet takes the following form

$$A = \frac{R_{ent} r_c}{r^2_{ent}}. \tag{VIII.32}$$

The angle of the atomizer cone of the centrifugal injector 2a, also varies according to the geometric characteristic A; and for ordinary centrifugal injectors its value is as follows:

$$2\alpha = 60 + 120^\circ.$$

The discharge coefficient μ and the value of the angle 2α, the values for which are indicated in Figure 139 and 140, have reference to an ideally perfect liquid. For any ideal liquid possessed of visoosity the discharge

---

[1] G. N. Abramovich, Gazovaya dinamika vozdushno-reaktivnykh dvigateley [Gas Dynamics of Air Feed Jet Engines], Izd. BNT, 1947.

coefficient is variable for two reasons: on one hand, the discharger of liquid is diminished due to losses of pressure through friction, i.e. μ becomes samller; and on the other hand, the friction decreases the momentum of the liquid as it enters the nozzle. The loss of part of this momenutm brings about an increase in μ, due to the fact that there is a loss of intensity of twist. The influence of the loss of swirl intensity is more pronounced than the influence of increased losses due to friction. Consequently the discharge coefficient for any real liquid flowing through a centrifugal injector will be higher than its value for an ideally perfect liquid.

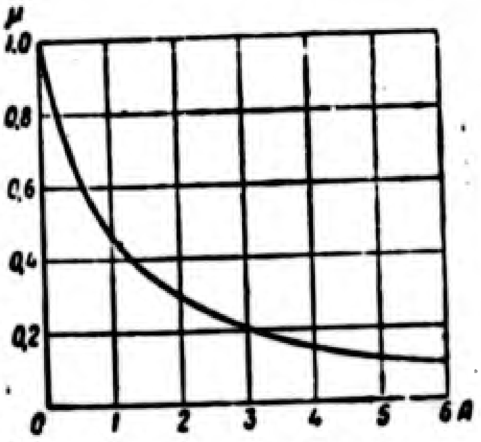

Figure 139. The relation between the discharge coefficient μ and the geometric characteristic of the injector A (formula).

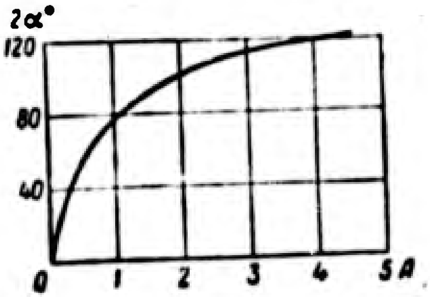

Figure 140. The relation between the angle of the atomizer cone 2α and the geometric characteristic of the injector A.

The flow of liquid through a centrifugal injector with a swirler does not in any manner differ from the picture given above of this movement through an injector with tangential input. All of the conclusions reached in the foregoing are applicable also to this other type of injector.

Calculation of Centrifugal Injectors.

The calculation of centrifugal injectors (those with swirl and also the tangential type) is to be made in the following manner. Knowing the approximate dimensions of the injectors one can, when designing the head (see Section 50), determine the number of injection orifices z that it will be possible to accommodate in a given injector head.

Having determined the number of orifices, and knowing the flow of component G passing through all orifices, we now determine the flow of the component through one orifice G_{inj}.

$$G_{inj}=\frac{G}{s}. \tag{VIII.33}$$

The flow of the component passing through one injector can be determined by the expression (VIII.31)

$$G_{inj}=\mu f_c \sqrt{2g\Delta p_T},$$

where μ equals f(A).

Starting out from the desired value for the angle of the atomizer cone, we assign a value for A and determine μ according to the graph of Figure 139.

Ordinarily the value assigned for A is 1.5 - 4. Knowing μ we can determine f_c from equation (VIII.31).

After determining f_c and d_c it will be necessary to make a drawing of the entire injector selecting its dimensions in such a manner that the injector obtained will have the given geometric characteristic A.

The geometric characteristic A for different types of injectors is determined from the following formulae:

<u>For a tangential centrifugal injector with one inlet hole</u>

$$A=\frac{R_{ent}r_c}{r_{ent}^2}. \tag{VIII.34}$$

<u>For a tangential centrifugal injector with several inlet holes</u>

$$A=\frac{R_{ent}r_c}{ir_{ent}^2}, \tag{VIII.35}$$

where i is the number of tangential holes.

<u>For a centrifugal injector with a swirler</u>

$$A=\frac{\pi R_{ent}r_c}{f_s}; \tag{VIII.36}$$

Here the value for R_{ent} is equal to the average radius of the helical passage (Figure 141);

f_Σ is the area of the cross section of helical passage of the swirler in mm^2, equal to

$$f_\Sigma = i f_1. \qquad (VIII.37)$$

where i is the number of turns of the swirler threading; and

f_1 is the area of the cross section of passage of one convolution of the swirler in mm^2.

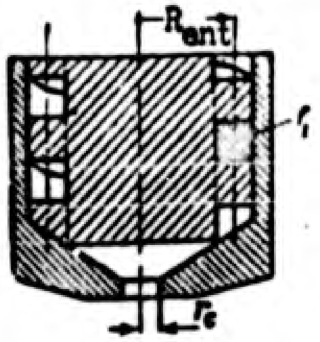

Figure 141. Centrifugal injector with a swirler.

The values for R_{ent} and r_c must be given in mm when substituting in formula (VIII.36).

The swirler must be chosen of such length that the liquid will make about 1/4 to 1/3 turn in the injector. If the length of the swirler is greater there will be unnecessary losses of pressure without improvement of the quality of atomization.

If, when designing an injector, one finds that it is hard to adhere to the selected value for A and the dimensions of the injector, the computation will have to be repeated, using new values for the dimensions and for the geometric characteristic A.

Section 50. The Mixing Process in the Liquid-Fuel Rocket Engine and the Designing of Heads /Injection Assemblies/.

The Mixing Process and its Requirements.

The mixing process is the process of preparing the combustible and the oxidizer for combustion. In the mixing process the fuel components are broken up into small particles that mingle with each other and are partly vaporized. The efficiency with which the fuel is prepared for the combustion process determines to a large extent the efficiency of the combustion process itself, which is determined by the chamber coefficient φ_{ch}, and hence the specific thrust of the engine as well.

In order to ensure complete combustion within the engine chamber, the mixing process must satisfy the following basic requirements:

1. It must ensure uniform concentration of fuel throughout the cross section of the combustion chamber. In other words, it is essential that throughout the entire cross section of the combustion chamber the coefficient of excess oxidizer a (or the mixture ratio γ) should be uniform and should if possible, be equal to the coefficient of excess oxidizer applicable to the entire engine as a whole. It is obvious that the less satisfactorily this requirement is met, the less efficient will be the combustion process and the greater the losses due to physical combustion inefficiency, i.e., the smaller will be the chamber coefficient.

2. The mixing process must ensure throughout the entire cross section of the combustion chamber a uniform field of consumption intensity, i.e., a uniform field of fuel flow speeds.

Where this intensity (i.e., speed) is greater than was anticipated in determining upon the volume of the combustion chamber, the process of combustion will not be fully completed and combustion will be incomplete.

In places where the intensity of flow is lower than that called for by the designer, incomplete utilization of the space of the chamber will be the result.

3. It is essential that the process of mixing should ensure considerable fineness of atomization of the components and adequate intermingling of the

components with each other. The uniformity of the combustion and the rate of completion of the combustion process greatly depend on the fineness of atomization and the intensity of the mixing.

Fulfillment of all these requirements can be achieved by proper construction of the injector assemblies, i.e. choice of the proper type of injector, shape of the heads, and distribution of the injector nozzles on the face of an injector.

Types of Heads (Injector Assemblies) for the Liquid-Fuel Rocket Engines.

The following are the different types of heads that are used for the liquid-fuel rocket engines: plate, "tent-shaped", and spherical heads with cups.

The plate type of head is used for light and intermediate thrust engines. It is best suited for cylindrical and cone-shaped combustion chambers, but is to some extent used also for other types of combustion chamber.

The plate type of head offers the following advantages:

— it is of very simple construction and offers no problems in manufacture;

— its use on engines with cylindrical combustion chamber makes it possible to attain uniformity of the field of speeds and concentrations of fuel over the cross section of the chamber.

A disadvantage of the simplest plate heads is their low strength and rigidity; for that reason they have been widely used only for liquid-fuel rocket engines of small or intermediate thrust.

The plate heads for heavy thrust engines, where the chambers have large cross sections, have to be of special construction, so as to ensure their strength and rigidity.

The second disadvantage of the plate heads is that when they are used in the engine difficulties often arise in connection with the position of the starting assembly. For that reason the plate heads are best suited for use in connection with chemical ignition of the fuel.

As examples of liquid-fuel rocket engines with plate heads might be cited the engines shown in Figures 128-129.

The tent-shaped heads resemble a tent in shape (Figure 142). They are used on light and intermediate thrust engines.

The advantages of the tent-shaped heads are as follows: 1 -- they have a larger surface than the plate heads have, and this makes it possible to place a larger number of injectors and thereby improve the atomization; 2 -- they permit relatively easy organization of combustion by means of a sparkplug or an explosive charge; 3 -- they have satisfactory strength properties.

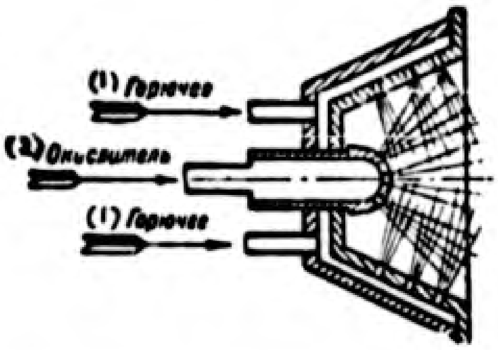

Figure 142. Diagrammatic view of the tent-shaped head.

1 -- fuel; 2 -- oxidizer.

The disadvantages of the tent-shaped heads consist in the difficulty of manufacturing them, and in the uneven distribution of the velocity of flow of the fuel along the cross section of the chamber. There is formed, along the axis of the combustion chamber, a "braid" of atomized fuel moving with great speed.

As may be seen from the diagram and description of the A-4 cup given below, evenness of concentration of the fuel components along the cross section of the head can be attained by providing in the head a large number of injectors of varying range. In that case the streams of combustible and oxidizer can penetrate into various different depths of the combustion chamber, and provide for even distribution of the components. It is quite a difficult problem in practice, however, to organize efficient mixing in this manner.

Spherical heads with cups are used in engines with spherical or pear-shaped combustion chambers, i.e. only in heavy-thrust engines.

The advantage of the spherical head consists to a large degree in the strength and the rigidity of its construction.

The disadvantage consists in the complicated nature of the manufacturing process.

All the known types of spherical heads were constructed with cups, so as to make it possible to place the required number of injection orifices on the head and to achieve satisfactory ignition of the fuel mixture at starting.

Putting a large number of cups on heavy-thrust engines helps to facilitate completion of the engine's design, since in this manner it becomes possible to do preliminary experimental finishing merely with one cup. This is much easier than completion of the entire combustion chamber as a whole.

Like the engine's head, the cups must have the effect of ensuring even mixture of the fuel components and even fuel distribution across the cross section of the chamber.

An example of the spherical head is the head with cup of the engine of rocket A-4 (see Figure 124).

Figure 143 shows the cup of rocket engine A-4. The oxidizer, liquid oxygen, is fed along line 1 into a central stream injector 2. The combustible, alcohol, passes through injectors 3, 4, 5, and 6 located on the sloping side wall of the cup 7.

When the components are brought in in this manner, it is very difficult to effect even distribution of the fuel over the cross section of the cup. In order to improve the mixing process under these conditions, six belts of openings are placed on the oxidizer jet, and are arranged at different angles with respect to the axis of the cup. Under this arrangement more uniform penetration of the streams of oxidizer into the cup space is achieved.

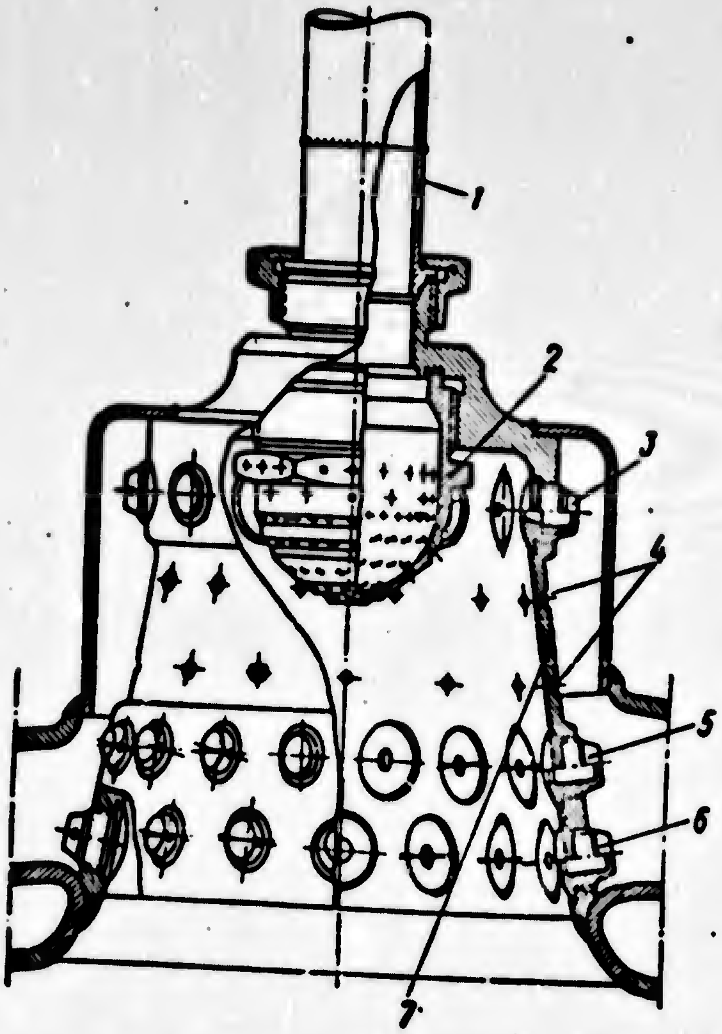

Figure 143. Engine cup of A-4 rocket.

1 -- oxidizer feed line; 2 -- central injector for oxidizer; 3 -- upper belt of centrifugal swirl jets; 4 -- lateral stream injection orifices; 5 and 6 -- combined stream and centrifugal orifices; 7 -- internal lining of the antechamber.

The fuel orifices are arranged in five belts. The upper row, 3, consists of centrifugal tangential holes of short projection range. They ensure mixture formation along the wall of the cup. The next two rows of orifices, 4, are stream injectors. They ensure penetration of the combustible to the central part of the cup. The two lower rows, 5 and 6, consist of combined stream holes and swirl jets that are so designed they will ensure the best possible distribution of the combustible and its mixture with the oxidizer.

Arrangement of Injectors and Other Devices on the Engine Head.

The modern theory of combustion and mixture-formation does not yet make it possible for us to compute these processes for the liquid-fuel rocket engine chambers. In planning the engine head, therefore, one takes as a basis the possibility of satisfying the basic requirements of mixture formation by taking advantage of the results of research and experimentation in the operation of engines.

In planning the head it is important above all to choose the type best suited to the design of the chamber in question and its parameters, and to take account at the same time of the types of injectors to be used.

In determining upon the arrangement of the injectors there are three bacic considerations to be takon into account:

1. The arrangement of the injectors must satisfy the requirements made of the mixing process.

For this purpose the head must be given the largest possible number of injectors, and they must be as evenly distributed as possible.

If a mono-fuel is to be used, or if integral injectors are to be placed on the head, then the uniform distribution of the jets will guarantee the uniform distribution of the fuel and oxidizer over the cross section of the combustion chamber. An effort must be made, in this connection, only to place the largest possible number of injectors on the head in order to ensure satisfactory atomization of the fuel.

In engines operated with bipropellant fuels it will be necessary in addition, if a good mixing process is to be ensured, to have a regular alternation of fuel and oxidizer jets. One can easily conceive of several methods of distributing the fuel and oxidizer jets on the head of the engine.

Checkerboard arrangement of the orifices. Under this arrangement the fuel and oxidizer jets are placed in the order of the squares of a checkerboard, alternating with one another (Figure 144 a). The disadvantage of this method consists in the fact that the number of fuel jets would come out very nearly equal to the number of oxidizer jets. Since the mass flow rate of the oxidizer is ordinarily 2-4 times as great as that of the fuel, the oxidizer jets have a much greater flow under this arrangement; this may have an unfavorable effect on the mixing process, since the powerful stream of oxidizer mixes poorly with a relatively feeble stream of combustible, and deflects the latter to one side.

Honey-comb positioning of the orifices. Under this arrangement one gets a larger number of oxidizer jets than of combustible jets (see Figure 144 b). As shown in the figure, under the honey-comb arrangement each combustible jet is surrounded by a group of oxidizer jets, and the flow of the oxidizer jets is nearly equal in quantity to the flow of the combustible jets. This favors a good atomization of the fuel.

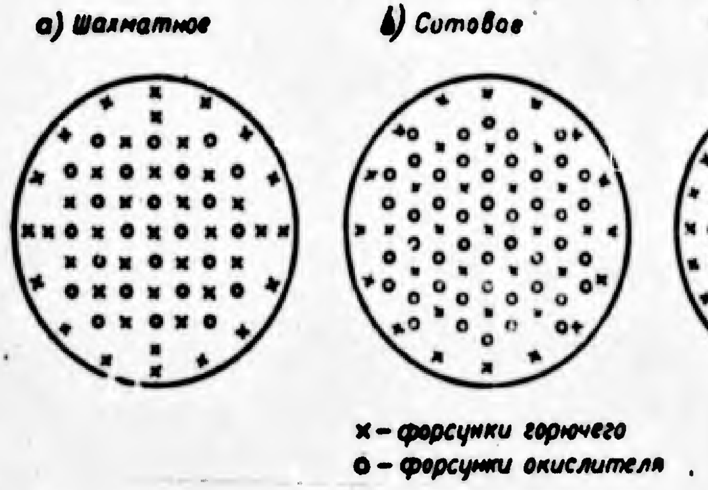

Figure 144. Approximate diagram of distributing the orifices.

x -- combustible jets; o -- oxidizer jets

a -- checkerboard; b -- honey-comb; c -- concentric.

The distribution of orifices in concentric belts. Under this method there is an alternation of belts of combustible and oxidizer orifices (see Figure 144 c). The convenience of this method consists in the fact that the procedure of feeding the fuel to the orifices is simplified (see below).

2. <u>The arrangement of the orifices must make it possible to protect the chamber walls from burning through when touched by a stream of oxidizer.</u>

The orifices must be placed on the head in such manner that it would be impossible for a stream of fuel with excess oxidizer to hit the wall of the combustion chamber. If the excess oxidizer should strike the wall, the latter might easily burn through as result of oxidation of the metal.

In order to protect the walls from being burned through by excess oxidizer, the jets must be placed in such manner that the resultant direction of the stream of fuel, after encountering all of the other streams, will be parallel to the axis of the chamber. This remark has reference especially to impinging stream injectors. It is desirable that the streams of oxidizer should not strike against the walls of the combustion chamber.

By proper arrangement of the fuel and oxidizer orifices of a bipropellant fuel engine one may also make arrangements for the internal cooling of the engine, providing for an excess of fuel around the surface of the chamber walls. In this instance it will be necessary to infringe upon the principle selected for alternation of the jets, and to place along the periphery of the head a number of extra fuel jets designed to create a fuel curtain around the walls.

In order to keep down the expenditure of fuel in creating such a curtain the peripheral orifices discharge less as compared with the principal orifices. As an example of a head with this type of construction may be cited the head of engine R-3395 (see Figure 107). In this instance there are 30 peripheral injection orifices of 0.6 mm diameter which deliver 30-40% of the total fuel flow.

3. <u>The distribution of injectors must be such as to provide convenient and independent flow of the respective components to the injectors</u>.

This problem has to be solved in a number of different ways (see Figure 145), according to the type of chamber and the various types of injectors employed for the head. On liquid-fuel rocket engines with cup heads and on engines with tent-shaped main heads a powerful stream injector (Figure 145 a) with a large number of openings is provided to feed oxidizer. A number of fuel injectors are placed around it; and these are made in the form of stream and centrifugal jets. The cup of the A-4 rocket engine, for instance, is made in this form. With this arrangement of jets it is easy to make provision for bringing in separately the fuel and the oxidizer, without thereby complicating the structure of the head.

In the German engines of 1943-1945 use was made of massive heads with a large number of stream injectors (Figure 145 b and see also Figure 126), i.e. narrow borings in the head, provided to feed components to the chamber. With this type of head structure one can attain even distribution and alternation of the atomization borings; and that is precisely their merit.

At the same time it is difficult to provide proper feeding of components to the respective jets, since it is not an easy matter to have a large number of feed openings with uniform hydraulic resistance. The evenness of fuel dispersion is made to suffer thereby, since there will be differences as to the actual drop of pressure in the injector, and thus as to the amount of component discharged. Apart from that, heads of the type in question are difficult to manufacture, and because of their massive size they are poor removers of heat.

When the concentric arrangement of injection orifices is adopted, the supply of component is taken into a collector which leads to all of the orifices of the same belt (see Figure 145 c). In this manner a fairly even pressure drop is maintained on all orifices of one and the same concentric belt.

The honey-comb or checkerboard arrangement of injection orifices can be applied by using a head with two cavities located one above the other (see Figure 145 d). This type of head permits a fairly even distribution of pressure on all orifices for one and the same component. In view of certain structural considerations it is customary to feed to the lower cavity the component that is used to cool the entire engine. Since these are heads of the plate type, they are used for medium and light-thrust engines, since their qualities regarding durability and especially rigidity are small.

In cases where it becomes necessary to place ignition devices on the head, or exhausts, or any other devices, it will be necessary, of course, to use as little space for these devices as possible; because, in the first place, they take up room that is needed for additional injectors, and, secondly, they interfere with the even distribution of fuel over the cross section of the chamber, impairing the utilization of the volume of the combustion chamber.

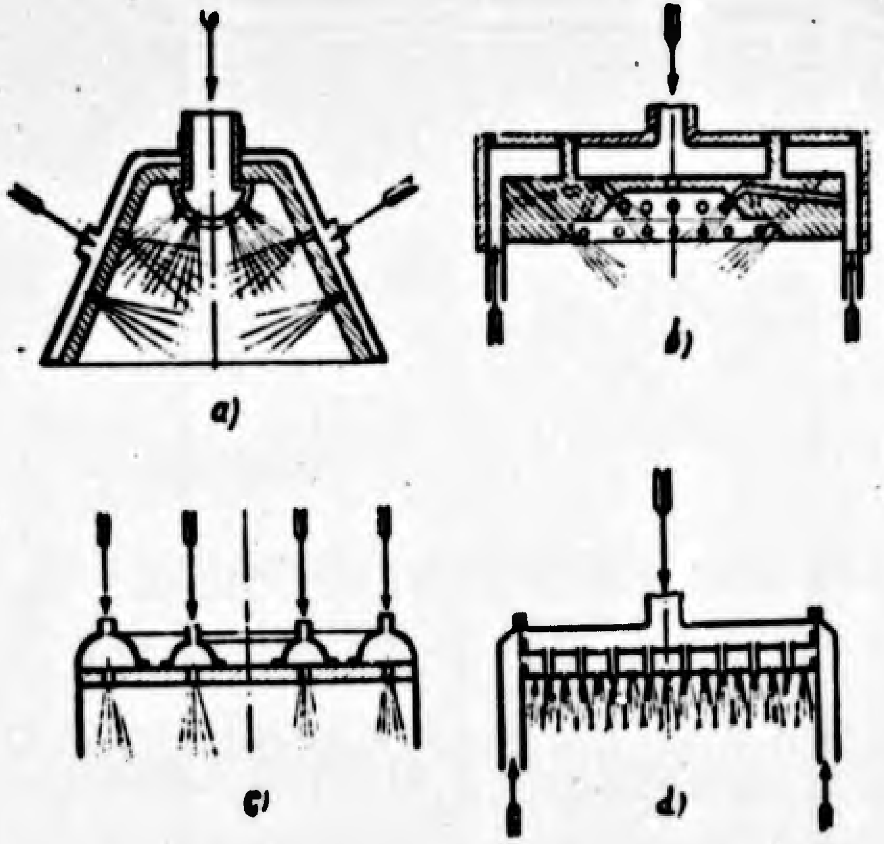

Figure 145. Methods of feeding fuel components in the different types of injector assembly.

a -- tent-shaped injector with central oxidizer conduit; b -- injector with narrow borings for admitting components; c -- injector with concentric orifice belts for fuel and oxidizer feed; d -- double-bottom injector with honey-comb or checkerboard arrangement of injection orifices.

Moreover, the components coming from the injection orifices form a cooling zone in front of the injector. This zone protects the injector assembly from highly seated streams. If the surface of the head has large areas not protected by the component, a burnout of the head might easily occur at that point, since the external cooling of the head is not very effective, due to the low speed of the cooling liquid.

Procedure for Designing the Injector Assembly.

We have discussed the types of injector heads and orifices, provided a method of calculating the injectors, and pointed out how the injectors should be arranged on the head. On the basis of this information we design the injector assembly in accordance with the following procedure:

1) we choose the shape of the injector design according to the engine's thrust and the parameters of its combustion chamber;

2) in keeping with the method of starting the engine (multiple or single action, method of ignition) we decide what devices will have to be accommodated on the head of the engine, and we also choose the type of injectors to be used;

3) we decide upon a system for distributing the injection orifices on the head, and we determine the general geometric layout of the head;

4) we determine in advance the number of injection orifices and the flow of components through each;

Figure 146. Spray injector during water tests.

5) we perform the computations for the injection orifices; and

6) we make a check on the dimensions of the injection orifices (this applies especially to the centrifugal injectors), and the possibility of the

distribution of the needed number of injection orifices over the injector face.

We should now emphasize once more that there is as yet no accurate calculation of an injector assembly and of the mixing elements; and for that reason it is particularly important that in designing the injector one should make fullest use of experience gained in the operation of already existing engines; and experimental finishing using water should be employed, to test the properties of atomization, with subsequent tests on the engine. Figure 145 shows experimental operation of the head by use of water, to determine the efficiency of atomization.

Section 51. General Problems in Designing Combustion Chambers.

In the actual work of designing the chamber of an engine it becomes necessary to solve a great variety of problems connected with the choice of material for the chamber, the structural form and dimensions of its various parts, the conjugation of these parts, and so forth.

In the great majority of cases the preliminary calculation of elements of the chamber turns out to be impossible or insufficiently substantiated. Thus when designing a chamber, one should select the material, as well as the structure of the chamber and its components, on the basis of general considerations, and then make test calculations of its individual components. An example of test calculation is the calculation of cooling discussed in Chapter VII.

We shall now take up a number of the basic problems that arise in the designing of the engine chamber.

The Materials Used in Manufacture of the Combustion Chamber.

Differences as to the working conditions and use for a given liquid-fuel rocket engine impose a great variety of conflicting requirements upon the building material, especially that of its inner walls. Most important among these requirements are the following:

1. The building materials used for the liquid-fuel rocket engine chambers

must provide for:

a) good weldability and pliability;

b) good machinability, since the head and the chamber itself present complex forms;

c) high resistance to corrosion. This requirement applies particularly to engines for repeated action which would require a large number of startings.

2. The material used for construction of the inner walls of the liquid-fuel rocket engine chamber must provide for:

a) thermal conducting. The better the material's thermal conductivity, the lower will be the temperature of the gas wall of the engine chamber (see Section 40), and the higher the strength of the wall.

b) a high degree of heat resistance,[1] since the chamber functions at high temperatures, irrespective of any measures that might be taken to lower the temperatures.

c) a high degree of resistance to wear and tear (erosion) at high gas speeds and in the midst of an oxidizing environment -- i.e. the material must be heat-resistant ("heat-stable" [zharostoykiy]).

3. The materials chosen for the construction of a liquid-fuel rocket engine must so far as possible be of light weight, i.e. possess the lowest specific gravity possible under the circumstances. Under a given stress, determined by the pressure p_2 acting upon the structure, the weight of the latter will vary according to the thickness of the material and the latter's specific gravity.

The thickness of the material is, in its turn, dependent upon the maximum safe stress σ_{safe}. Consequently the properties of the material as to weight will vary according to the ratio $\frac{\sigma_{\text{safe}}}{\gamma}$.

---

[1] Heat resistance (zharoprochnost') is the ability of a material to retain its mechanical properties at high temperatures.

Heat stability (zharostoykost') is the ability of a metal to resist for a long time the action of high temperatures.

At the present time there does not exist a single material that would meet at one and the same time all of the requirements set forth above.

The basic materials used for the liquid-fuel rocket engine can be classified into the following groups, according to their heat conductivity.

High Conductivity Materials. Among these are copper and aluminum, and likewise alloys of other metals. As compared with steel, these materials have low safe stress (tension), and also a low degree of heat resistance. Aluminum alloys lend themselves readily to machining.

There have been engine chambers made, e.g. that of Engine R-3395 (see Figure 128) with an internal lining of aluminum. Copper has a higher degree of heat conductivity, but, like aluminum, it can be used only in those combustion chamber constructions where the inner walls, as a result of reinforcement, are partly exempt from mechanical loads.

Medium Conductivity Materials. Among these belong, in the first place, the steels of low carbon content that have a heat conductivity coefficient $\lambda = 40\text{-}50$ kilo-cal/m hour °C. These steels are easily stamped and welded. As compared with copper and aluminum alloys, they have a high degree of heat resistance; and that compensates for their low degree of heat conductivity. Steels of low carbon content that have a satisfactory value for $\frac{\sigma_{safe}}{\gamma}$ are relatively inexpensive and widely used in technology. These are the materials chiefly used for liquid-fuel rocket engine combustion chambers, notwithstanding the disadvantages connected with them: their ready oxidation and low resistance to erosion. The combustion chambers of the A-4, "Wasserfall" and "Rheintochter" particularly, are made from these steels.

Among the medium heat-conductivity materials with high chemical resistance and heat resistance can be mentioned nickel; but the latter is very costly, and is not used for engine chambers that function with the usual types of fuel.

Low Heat Conductivity Materials. To these belong the heat resistant alloys of the types 1X18H9; 1X18H9T; and others. They function well at high temperatures and are corrosion resistant. As a rule, however, they do not lend themselves readily to stamping and welding. Moreover, they are expensive critical materials. In the chambers of the liquid-fuel rocket engines they are used only for the construction of engines intended for repeated use that are fueled with aggressive components. As an example of this type of liquid-fuel rocket engine might be cited the chamber of the "Walter" engine (see Figure 125).

By way of conclusion it may be said that the materials best suited for liquid-fuel rocket engines that are intended for repeated use and are fueled with aggressive and non-aggressive components are the steels of low carbon content. As an example for this might be mentioned the A-4 rocket engine (see Figure 124), which is made of steel of low carbon content.

Table 31 shows the properties of some of the construction materials.

Operating Conditions of Materials in the Walls of Engine Chambers.

Operating conditions are greatly different for the materials of different parts of the engine chamber.

The material of the outer chamber wall, and also that of the bottoms of the head, functions practically at low (normal) temperatures, and consequently no special demands need to be made for this material.

The load upon these parts is determined by the pressure active in the cooling jackets. Aside from mechanical resistance these parts and also their points of junction have to possess a certain amount of rigidity in view of the fact that a certain amount of heat vibration may arise in the chamber of a liquid-fuel rocket engine when the pressure is changed at brief intervals. This vibration effect may cause destruction of the engine assemblies if they do not possess sufficient rigidity.

The outer engine walls and the heads are usually designed as thin-walled containers loaded with internal pressures.

Considerably more complex and variable are the conditions of functioning for the inner lining of the chamber. In the course of the engine's work the materials of the inner lining are exposed to a load from drops of pressure in the cooling jacket, due to differences in pressure between the cooling sleeve and the chamber (Figure 147). These loads differ from different periods in the work of the motor. When starting, while there is no pressure in the engine chamber, the pressure on all cross sections is nearly constant and varies only due to changes in pressure along the cooling jacket as a result of its hydraulic resistance. The maximum pressure drop will be upon that section where the cooling component enters the cooling jacket.

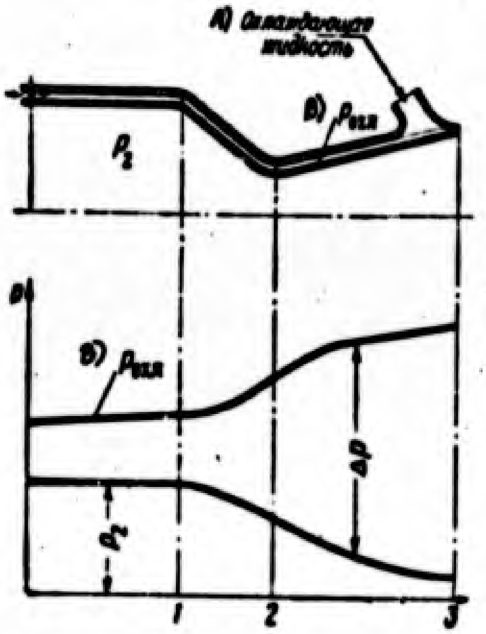

Legend:

A) Cooling liquid

B) P_{cool}

Figure 147. Pressure distribution in an engine chamber with external cooling.

When the engine is in operation the pressure drop Δp, which causes loading of the inner jacket of the chamber, varies from one point to another along its length.

It changes due to the fact that the internal pressure in the chamber and the pressure in the cooling jacket vary over the length of the engine chamber. With the usual method of feeding the cooling component from the direction of the nozzle end, the maximum pressure drop will occur at the exit section of the nozzle.

Apart from that, operating conditions for the inner lining of the chamber are complicated also by its high temperature.

It is a well known fact that the durability of a material is in a large measure dependent upon its temperature; and for that reason the durability of the walls of the engine chamber will vary both over the different cross-sections of the engine and during different periods of engine operation.

The rigidity is greatly important for proper functioning of the inner lining because the lining is always under external pressure while the engine is functioning. At high temperatures the inner lining can easily lose its rigidity, and that might quickly result in its burning out.

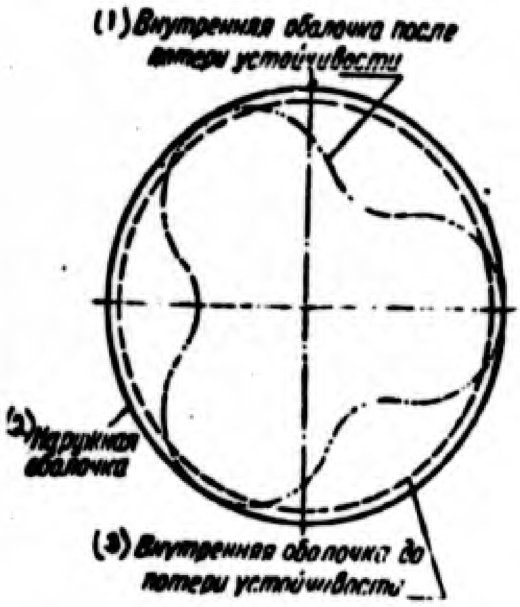

Figure 148. Loss of stability in the engine chamber.

1 -- inner lining after a loss of stability; 2 -- outer lining; 3 -- inner lining before loss of stability.

Figure 148 shows diagrammatically the manner in which the lining of an engine chamber may lose its stability.

In order to protect the inner lining of the engine chamber from loss of stability under the action of pressure in the cooling tract, use is made of so-called reinforced linings, where in some way or other the inner lining is fastened to the outer lining.

Starting out from the above-described operating conditions for the chamber we may now cite the two most characteristic operating conditions for which a test calculation should be made:

1. The Starting of the Engine. During this condition the greatest pressure drop upon the inner lining can be noted. A check is to be made of the cross section where the greatest pressure drop occurs (cross section 3, Figure 147), and also of the cross section that has the largest diameter. In doing so, the strength properties of the metal are chosen for normal temperatures. Calculation is made for the durability and for the stability of the lining.

2. Engine Operation. During these conditions the pressure drops in all sections, except the exit, are somewhat reduced; but there occurs also a great rise of temperatures, and the strength of the walls declines sharply. In this case it is necessary to take into account the dependence of the admissible resistance and the modulus of resiliency (tension) of the material E on the temperature. For purposes of calculation one may assume that the mechanical properties of the material are determined by the mean temperature of the wall, i.e.

$$\frac{T_{gw} + T_{liq\,w}}{2}.$$

Sections to be checked on are the nozzle exit, the critical throat section, and the cylindrical part of the engine chamber. The calculation is made for durability of the lining, and for the loss of stability.

Remarks on the Construction of Engine Chambers.

It is customary to put the final arrangement of head and combustion chamber on one and the same sketch. In doing so, a solution is found concerning the following questions: the method of connecting the head with the combustion chamber; the method of bringing the components into the chamber; and also the method of taking the cooling component from the cooling jacket into the head of the liquid-fuel rocket engine. At the same time a decision is made also concerning the method and place of fastening the whole engine to the frame, the centering of the engine, and so forth.

The joints between the head and combustion chamber of the liquid-fuel rocket engine, as well as the head and combustion chamber structure as a whole, may be welded or split. Preference should be given to welded constructions, since they are simpler, easier to produce, and less expensive. To use split joints for the construction is advisable only for engines of long operation life intended for frequently repeated use.

Different methods for joining the head and the chamber of combustion are shown in Figures 124-129.

In small liquid-fuel rocket engines the components are conducted into the head through a single tube. Several tubes are used for large quantities of components, and these tubes are evenly distributed on the head. Aside from reducing the diameter of the tubes, this method results in better distribution of the drop of pressure in the injectors.

The component used to cool the engine chamber has to be brought in through three or four conduits. This ensures a more even flow of the cooling liquid. Besides, it is customary in laying out the engine, always to leave only very little free space; and to bring the component to the nozzle part of the chamber through only one tube is almost impossible.

The component is fed from the cooling tract into the head of the liquid-fuel rocket engine either directly (e.g. in the A-4) or else through several conduits (in split structures).

The engine is fastened to the frame always in the head region. In fastening the engine one must provide for the possibility of slight displacement of the engine or its turning through a certain angle. This is essential in order to get the engine properly centered with respect to the installation as a whole.

In designing the outer envelope one must allow for a great amount of expansion of the inner lining as a result of high temperatures. Thus the chamber of engine A-4 is lengthened by 4.75 mm while in operation.

In order to prevent damage to the engine chamber due to thermal expansion compensators must be provided on the outer envelope of the chamber. In Figure 124 one can discern very clearly the compensation rings placed in the outer envelope of the engine chamber of rocket A-4.

Example for Designing the Engine Chamber.

Since a great many different problems have to be solved in planning the chamber, it is well to map out a model procedure for planning the engine chamber, as follows:

1. Determine the volume required for the combustion chamber.
2. Starting out from an analysis of the working conditions for the engine as planned make a choice of the shape to be given the chamber.
3. On the basis of the principal dimensions of the nozzle as determined in the thermal calculation, profile the nozzle of the shape selected (cone-shaped or otherwise profiled).
4. Make a choice of the shape of the head and the type of injector to be used.
5. Prepare a design of the engine head.
6. Prepare a general geometrical layout of the engine chamber.
7. Choose the method of cooling, the shape and dimensions of the cooling tract, and make a test calculation of the cooling.
8. Make the hydraulic calculation for the cooling jacket.
9. Make a test calculation of the chamber for strength and stability.
10. Prepare the final arrangement of the engine chamber.

Section 52. Starting and Stopping the Liquid-Fuel Rocket Engine.

Basic Requirements for Starting and Stopping the Liquid-Fuel Rocket Engine.

The starting and stopping of the engine are particularly complicated phases of its operation. The principal requirement for starting and stopping the engine is a smooth transition of the engine to its basic operating conditions and then to flawless cessation of its functioning. In order to achieve these purposes the following conditions must be satisfied:

1. When the engine is being started, the combustion chamber must be free of any accumulation of one or the other of the fuel components. Especially dangerous is a piling up, in the combustion chamber, of both fuel components, since the mixtures of combustibles and oxidizers used in the liquid-fuel rocket engine partake of a powerfully explosive character.

If a large quantity of components is piled up in the combustion chamber by the first moment of ignition, the increase of pressure during the launching operation will be extremely sudden (Figure 149). The pressure will rise above the rated pressure (the so-called "starting bang"), and this might result in destruction of the chamber.

In order that a large amount of the components cannot accumulate in the combustion chamber, the start ignition system must ensure ignition of the latter no later than 0.3 second after they enter the chamber.

To prevent any large accumulation of components in the chamber of engines having large thrust the starting flow of fuel is kept much lower than the operating flow, i.e. a so-called preliminary functioning stage is introduced (e.g. in rocket A-4 the preliminary stage).

The starting of an engine where the first ignition is effected with a small fuel flow, and the principal flow of fuel is not given until the chamber is in operation is called a <u>self-piloting start</u>.

Engine starting in which the full working flow of fuel is supplied all at once is known as "<u>cannon</u>" starting [pushechnaya zapuska].

2. In starting an engine it is necessary to follow very closely the order in which the different components enter into play. It is desirable that the components should reach the combustion chamber all at the same time. But since

in actual practice this is all but impossible, one of the components usually is allowed to arrive in the combustion chamber fractions of a second ahead of the other.

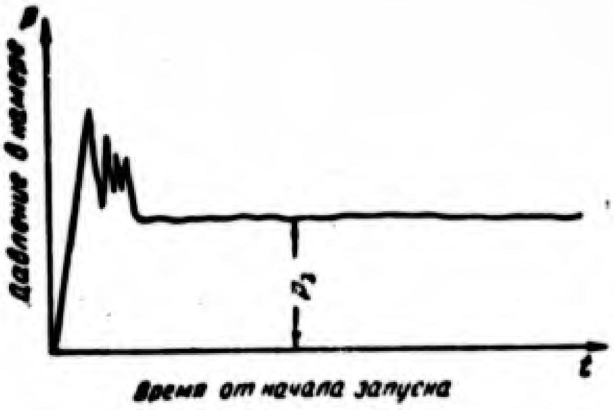

Figure 149. Change of pressure in starting a liquid-fuel rocket engine. p -- pressure in the chamber; t -- time elapsed since the beginning of the start.

3. The ignition device must furnish energy sufficient to ignite the fuel, since initial evaporation and intermingling of fuels in the cold chamber of combustion proceed much more unsatisfactorily than in the process of burning. Quite obviously, the greater the flow of components coming in, the more difficult it will be to provide for the ignition. Depending on the type of fuel used, therefore, as well as on the type of engine and the operating conditions of the liquid-fuel rocket engine, different ignition systems will have to be used.

Classification of the Liquid-Fuel Rocket Engines According to Their Conditions of Operation.

According to their respective conditions of operation the liquid-fuel rocket engine can be classified in the following groups:

1. Engines used once. These engines are started and operate only on one single occasion. The engines of the various rockets and rocket bombs consist, in the main, of engines for one-time operation.

2. Engines of repeated operation, but started only once. An engine of this type may be used on any type of vehicle, and used many times; but during the period of flight of this vehicle it is not restarted. An example of this

type of engine are the assisted take-off units of heavy bombers.

3. Repeated Operation Engines. An engine of this type may be started and stopped a large number of times in the course of the flight of the craft.

All of the liquid-fuel rocket engines used for aircraft, functioning as sustainer engines or boosters for maneuvering of the plane, are engines of repeated operation but started only once (e.g. the "Walter" installed on plane Me-163).

<u>Ignition Methods</u>.

According to the operating conditions, the type of fuel components used, and the type of engine, different types of ignition systems are used.

1. Pyrotechnic Ignition. This type of ignition functions by means of a special powder charge, which burns for several seconds and furnishes a high-temperature flame ($t \approx 2{,}000^\circ$ C). The charge may be installed either in the head -- as for instance in motors type ORM 65 (see Figure 127) and "Schmidding" (see Chapter X), or else is introduced from the nozzle end on a special support.

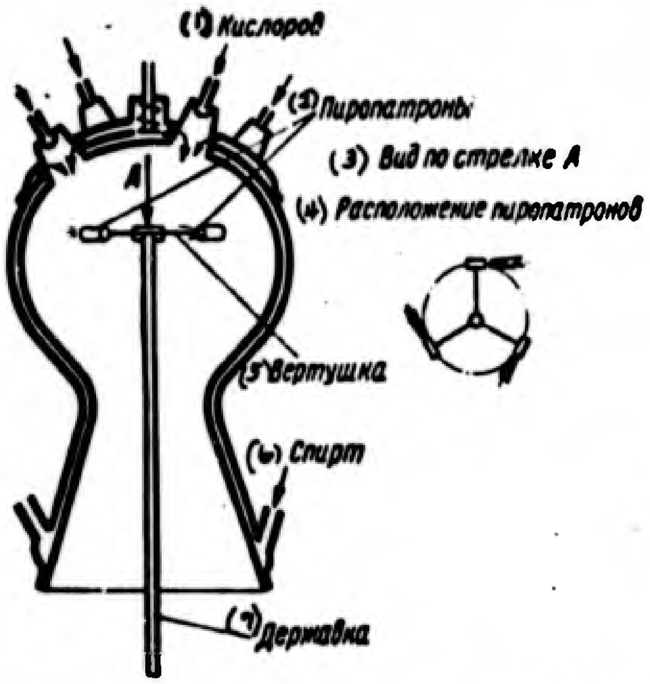

Figure 150. Diagram showing the ignition of rocket engine A-4.

1 -- oxygen; 2 - powder charges; 3 -- view along arrow A; 4 -- arrangement of charges; 5 -- vane; 6 -- alcohol; 7 -- support.

On rocket A-4 ignition was ensured by introducing into the chamber, through the nozzle, of a vane with three charges located around the circumference (Figure 150). When the charges were ignited the vane began to turn and the entire chamber was filled with gases of a high temperature; after that a small flow of fuel was fed into the chamber and the fuel then ignited; the supply of fuel was then increased.

The charges usually are ignited with the aid of an electrical incandescent filament. The pyrotechnic type of ignition can be used in engines of any thrust and used once and those used repeatedly but started only once.

2. Chemical Ignition. With this method of ignition use is made of a hypergolic fuel (see Chapter VI). This type of ignition is very easy to effect in engines operated with hypergolic components. Usually these engines are those of repeated operation and repeated starting.

Chemical ignition is used also in engines that function with fuels that are not hypergolic. For this purpose there is mounted in the feed system of the liquid-fuel rocket engine a special starter system, through which, at the time of the start, the hypergolic components first reach the combustion chamber; and the basic components are not fed in until a powerful igniting torch has been formed in the chamber.

This type of engine is less dangerous in operation than the liquid-fuel rocket engine that functions with hypergolic components exclusively. The operation of this type of engine is less expensive, since the hypergolic components are usually very costly.

The chemical type of ignition can be used in engines of any thrust, either of the single or multiple start type.

As an example of the engine with chemical ignition, the combustion chamber of the "Walter" engine (see Figure 125) may be cited.

3. Ignition by Means of an Electric Spark Plug. This type of ignition

is used for engines of small thrust and for small experimental engines that are intended for stand tests. The shortcoming of this type of ignition consists in the fact that, in the first place, the spark plug possesses only a low degree of heating power and, in the second place, that a source of electric energy is required for this type of ignition, which cannot always be accommodated on the vehicle.

Ignition by means of an electric spark plug is suitable for use in the self-piloting start of a liquid-fuel rocket engine for igniting the starting torch.

The Stopping of the Engine.

Depending upon the operating conditions and the structure of the liquid-fuel rocket engine, the engine is stopped either by means of closing cutoff valves on the feed conduits for the component, or else by complete exhaustion of the supply of components in the fuel tank.

In some instances a multistage stop of the engine is resorted to, i.e., the engine is at first reduced to a smaller thrust, and not until then is the engine shut off completely (see, for instance, the account given of rocket engine A-4).

In stopping the engine, just as in starting it, one must not permit a piling up of fuel components in the combustion chamber.

A piling up of fuel after the engine has been stopped could occur for a number of reasons. If the engine is stopped by closing of fuel feed cutoff valves (see Chapter IX), an accumulation of components in the chamber may occur as a result of a slow "leak" of fuel components into the chamber, quantities of the components present in various cavities of the feed line and cutoff valves, as well as imperfect closure of the cutoff valves.

In order to cut down on the piling up of fuel components it is necessary to put the cutoff valves as close as possible to the injectors. The construction of the cutoff valves must be such as to ensure complete cutting off of the flow of the component.

In systems operated without cutoff valves, i.e. that are operated with complete exhaustion of the fuel supply in the tank, it is desirable that the first of the components to be exhausted should be the component used for cooling the chamber of the engine.

It is a great danger in these systems that there might occur a "supplementary" flow of one or another of the components after the feed is cut off; and this situation could easily arise as result of inadequate construction of the intake devices in the tank. If such supplementary flow of fuel reaches the combustion chamber, the other component may pile up after combustion has discontinued. But since the chamber is still at a high temperature, a "bang" occurs which frequently results in an explosion.

In order to effect a reliable stopping of the engine one can resort also to scavenging of the combustion chamber and the conduits after the flow of components has been stopped. When an engine is being tested on the stand, this scavenging usually is effected by a blow of air from the supplementary air feed lines available on the stand. When a rocket engine is to be stopped, in order to avoid adding extra weight, the scavenging may be effected by using one of the components or, if pressure system of feeding is used, by using the gas employed to drive the fuel components from the tank.

Vibrational Combustion of the Liquid-Fuel Rocket Engine.

As liquid-fuel rocket engines have come to be produced and operated in increasing numbers, there has been encountered in the course of their operation and experimental tests the phenomenon of so-called vibrational or pulsating combustion in the chambers.

This phenomenon consists in the fact that under certain operating conditions of the engine the pressure in the combustion chamber begins to change, periodically, without the action of any external causes (Figure 151). Under these circumstances the amplitude of vibrations of the pressure in the chamber reaches quite considerable proportions. In keeping with the changes of pressure in the chamber, there occur likewise considerable changes in the power of thrust delivered by the engine. Such variations of the power of thrust do not only exert an unfavorable influence upon the engine's operating conditions, but naturally also are passed on to the structure of the engine, thus complicating the work of its parts and assemblies under stress. Moreover, these variations in the power of thrust produce vibrations in the structure of the rocket and -- what is particularly dangerous -- disrupt the normal functioning of the control devices. Thus the occurrence of vibrational combustion is a liquid-fuel rocket engine has damaging consequences; and since there is extreme difficulty in eliminating a condition of vibrational combustion, at least the intensity of the vibrations must be reduced to the absolute minimum.

In the more detailed study of the phenomena of vibrational combustion it was established that the total curve for the periodic changes of pressure in the chamber breaks up into a number of separate curves that indicate different frequencies and amplitudes. In this manner there results a distinction between low-frequency and high-frequency vibrations (vibrations of pressure).

Let us now consider first of all the mechanism that produces the low-frequency vibrations, the frequency of these vibrations amounts to 30-200 c.p.s., i.e. 80-200 vibrations per second; but the absolute magnitude of these vibrations (especially in comparison with the amplitude of the high-frequency vibrations) is very high.

The reason for the occurrence of low-frequency vibrations -- as was established both experimentally and on theoretical grounds -- is that a liquid fuel is converted into gaseous products of combustion not instantly, but over a certain period of time -- the so-called period of conversion $\tau_{\text{conversion}}$. The lapse of time required for conversion is nearly the same as the time of presence in the chamber, since, in the main, the process of combustion of the fuel occurs during that period of time.

For further analysis we shall assume that the law of conversion of

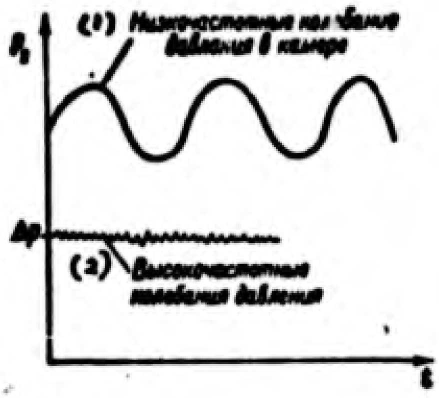

Figure 151. Change of pressure in the chamber during vibrational combustion. 1 -- low-frequency vibrations of pressure in the chamber; 2 -- high-frequency vibrations of pressure.

liquid fuels, i.e. the law of the increase of specific volume v of the products of combustion (from the specific volume of the liquid fuel, v_{liquid}, to that of the products of combustion v_2) exhibits the characteristics of a broken curve, as shown in Figure 152. Consequently we conditionally assume that the combustion proceeds in an instant, but only after a certain lapse of time $\tau_{conversion}$, counting from the instant of the arrival of the fuel in the combustion chamber. As a second condition we shall assume that the pressure of the fuel as it enters injector $p_{injector}$, i.e. the pressure in the feed system, is maintained strictly constant.

Let us suppose that at an instant of time T it happens, due to the action of any accidental cause (and there is always an ample supply of these), that the pressure in the combustion chamber drops to a magnitude lower than the original pressure $p_{2\ orig}$. In consequence of this the drop of pressure on the injectors increases to a magnitude $\Delta p_{inj\ I} > \Delta p_{inj\ orig}$.

In conformity with equation (VIII.22) the lengthening of this period results also in an increase of the quantity of fuel components reaching the combustion chamber, and consequently also in forcing through the orifices all fuel up to an amount $G_I > G_{orig}$. The increase of fuel consumption in keeping with equation (III.60) is bound to result in an increase of pressure in the chamber. However, this does not happen all at once, but only after the period τ_{con} elapses, when the liquid fuel arriving in larger quantity begins to be converted into the larger volume quantity of gaseous combustion products. Consequently the pressure in the chamber increases only during the time τ_{con}; i.e. at the moment T plus τ_{con}. At that moment $p_{2\ II}$ becomes greater than $p_{2\ orig}$, and the pressure drop on the injectors $\Delta p_{inj\ II}$ becomes less than the normal pressure. There is a corresponding decrease also in the fuel flow, to $G_{II} < G_{orig}$. But, just as in the preceding cycle, the decline of the amount of gaseous products of combustion takes place only through the succeeding interval of time τ_{con}, i.e. at the moment $T + 2\tau_{con}$. From then on the values indicative of the functioning of the chamber will continue to undergo change and consequently the pressure vibrations which have arisen in the chamber will also be preserved.

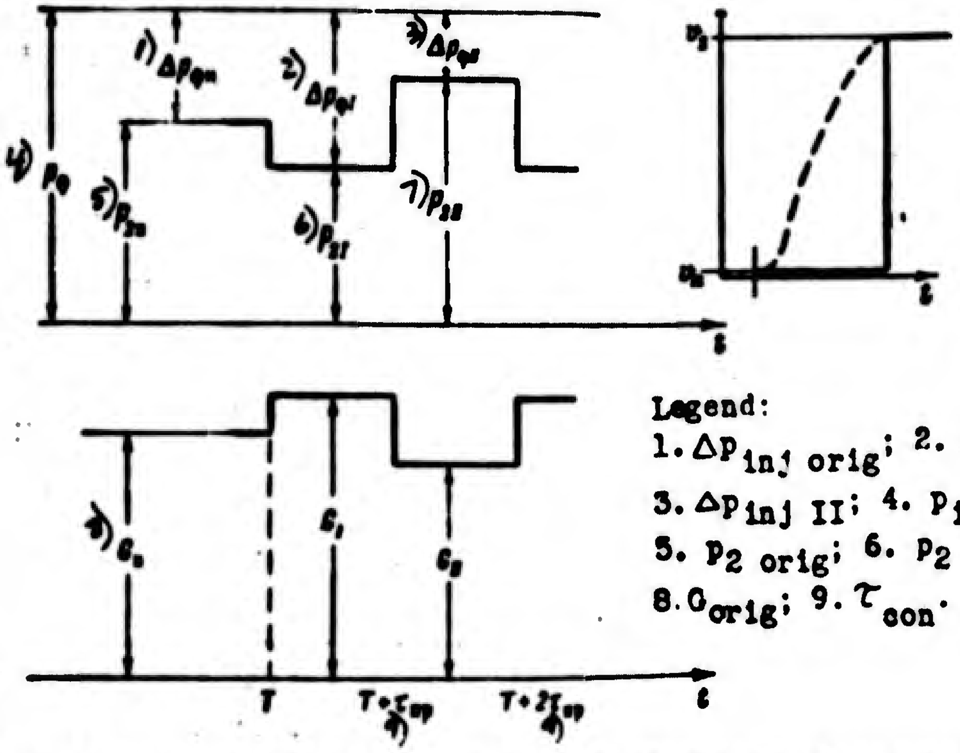

Legend:
1. $\Delta p_{inj\ orig}$; 2. $\Delta p_{inj\ I}$;
3. $\Delta p_{inj\ II}$; 4. p_{inj};
5. $p_{2\ orig}$; 6. $p_{2\ I}$; 7. $p_{2\ II}$;
8. G_{orig}; 9. τ_{con}.

Figure 152. Illustrating the explanation of the mechanism of vibrational combustion formation.

The scheme of occurrence of pressure vibrations in the chamber is highly approximate. In actual fact the vibrations occurring will be smoother, due to the effect of the volume of the combustion chamber and other factors.

Fluctuations of the pressure of the liquid in the feed system may intensify the pressure variations. It may therefore happen that under certain circumstances the accidental vibrations that arise may be damped off entirely or their amplitude may remain more or less negligible. Such conditions make for a steady functioning of the chamber. Under different conditions the vibrations are not damped, but reinforced; and then the chamber will function unsteadily.

An important factor determining the steadiness of functioning of the engine, apart from the volume of the chamber, is the magnitude of the rated pressure drop on the injectors Δp_{inj}. The greater this drop, the less the effect that variations of chamber pressure will exercise on the flow of the fuel through the injection orifices, and the steadier will be the functioning of the engine. For that reason it would not do to reduce excessively the rated pressure drop on the injectors. This has reference particularly to engines where a decrease of thrust is accomplished by a decre se of fuel flow. At the same time the pressure on the injector orifices decreases abruptly, and the engine operation easily becomes unstable.

An excessive decrease of the volume of the chamber also favors the occurrence of vibrational combustion in the engine. Apart from that, the properties of the fuel also exert an influence upon the steadiness of functioning of the engine. Especially such fuels as nitric acid plus tonka-250 bring about a more steady functioning of the engine than a fuel consisting of nitric acid plus kerosene.

High frequency vibrations of the pressure in the chamber are brought about also if there is a period of conversion. However, such occurrence is not due to the flow of the entire mass of products of combustion through the nozzle, but only the flow of individual streams of gas through the chamber. The frequency of these vibrations is very high, of the order of the vibrations of sound. Irrespective of the small amplitude of the high frequency vibrations, the latter, as has been shown by experiments, constitute a danger since they may result in a local overheating or burnout of the combustion chamber walls.

QUESTIONS FOR REVIEW

1. What are the special characteristics of the combustion process in the combustion chamber of a liquid-fuel rocket engine?

2. Explain the progress of the process of mixture formation and combustion in the liquid-fuel rocket engine. What are the different zones that can be distinguished in the combustion chamber? What processes are typical of each of these zones?

3. Into what two regions can the combustion zone be divided?

4. What is it that we call the time of stay of the fuel in the combustion chamber: How is the length of this period determined?

5. What is the chamber volume-to-throat area ratio? In what way is it related to the length of the time of stay?

6. What is the calorific intensity of the chamber of combustion? In what terms is this magnitude expressed? What is its importance for conventional furnaces and the combustion chambers of the liquid-fuel rocket engine?

7. What thrust value, in liters, is typical of liquid-fuel rocket?

8. What basic value characterizing engine operation is not allowed for in calculating the combustion chamber volume on the basis of the calorific intensity value and the thrust in liters?

9. What are the different shapes that may be given to the combustion chamber? Enumerate the respective advantages and disadvantages.

10. What is called the consumption intensity of the combustion chamber?

11. What different shapes can be given to the nozzle? What are the principal dimensions characteristic of the liquid-fuel rocket engine nozzles of the various possible shapes?

12. What are the types of losses that occur in the nozzle of the liquid-fuel rocket engines? How can these losses be kept down?

13. What is the purpose of the injectors? What are the types of injectors used in the liquid-fuel rocket engine?

14. Which injectors are known as integral injectors?

15. How are stream injectors calculated?

16. What are the characteristics of movement of the liquid in a centrifugal injector?

17. What principal magnitude characterizes the centrifugal injector, and how is this value used in calculations?

18. Explain the procedure for calculating centrifugal injectors.

19. What requirements are made of the mixing process in liquid-fuel rocket engines?

20. What shapes of engine chamber heads do you know?

21. Explain the procedure of designing the head of a chamber.

22. How does the presence of large heat flows influence the functioning of the walls of the chamber?

23. What are the different materials that are used for the liquid-fuel rocket engine chambers? Enumerate their advantages and disadvantages.

24.. Describe the approximate procedure in designing an engine chamber.

25. How is the start of a liquid-fuel rocket engine effected?

26. By what methods is ignition effected in liquid-fuel rocket engines?

27. Why is it dangerous to have a "supplementary" quantity of fuel reaching the combustion chamber after the engine is stopped?

28. How do low-frequency vibrations arise in the liquid-fuel rocket engine chamber?

29. Why does a decrease of the flow of fuel increase the danger of vibrations?

CHAPTER IX

FEED SYSTEMS FOR LIQUID-FUEL ROCKET ENGINES

Section 53. Types of Feed Systems.

The Basic Elements of Feed Systems.

Liquid-fuel rocket engines are being widely used at the present time. Depending on the purpose they are to serve, they have a greater or lesser power of thrust and longer or shorter life. The great variety of engine designs makes it necessary to have recourse to a great variety of different feed systems, using in each case the one that is best suited to the conditions under which the engine is to be used.

Each one of these feed systems includes three basic parts:

1. Fuel tanks.
2. An assembly to create pressure for feeding the fuel components.
3. A hydropneumatic system.

The hydropneumatic system consists of fittings, a system of tube conduits and, in most of the engine installations actually in use, also a system of electric control of the operation of the various individual assemblies.

The most important part of the feed system -- and a part which in a large measure determines the nature of the remaining elements -- is the system that creates the required feed pressure.

According to the type of system used to create the feed pressure, one distinguishes between the following feed systems:

1. Pump system.

2. Gas cylinder system.

3. System with solid propellant gas generators.

4. System with liquid propellant gas generators.

The last three of these feed systems have one trait in common: the fuel tanks in these systems are under pressure greater than the pressure in the chamber; and consequently the fuel is forced from the tank by gas pressure, so to speak, so that these systems are called "pressure" systems.

Let us now have a look at each of these types of systems.

Feed System with Pump.

A skeleton diagram of the pump type of feed system is shown in Figure 153. From Tanks 1 the components pass into pump 2 and from there are fed by the pump into the combustion chamber 4.

The pump feed system may in turn be further classified according to the type of pumps used and according to the method of actuating the pump. For the liquid-fuel rocket engine use is made chiefly of two types of pump: centrifugal pumps and gear pumps.

Most widely in use for the liquid-fuel rocket engine are the centrifugal pumps which insure the feeding of large quantities of components with the requisite pressure -- pumps of small weight and dimensions. Centrifugal pumps always are used where there is occasion for pump feeding of liquid oxygen and other liquified gases. The pumps of rocket engine A-4 (see Section 62) may be cited as an example of centrifugal pumps.

The gear pumps are used where only small quantities of the component are to be fed into the engine (not more than 3-5 kg/sec). They are well suited for use in those instances where the components are being fed under very high pressure.

For the purpose of driving the pump, use is made of turbines or of mechanical drive by any type of motor. The mechanical type of drive is used exclusively for pump-feeding of components in supplementary combat thrust boosters on planes, since in those instances there exists the possibility of deriving power from the shaft of the main engine of the plane.

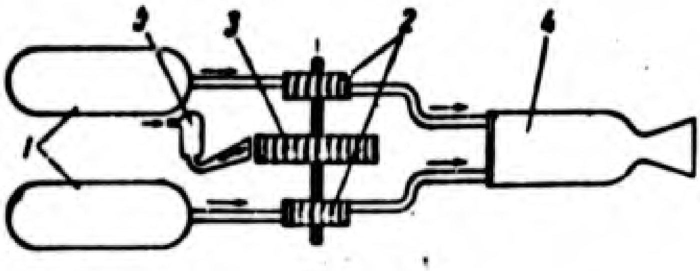

Figure 153. Diagram of feeding by pump.

1 -- fuel tanks; 2 -- pumps; 3 -- turbine; 4 -- engine chamber; 5 -- steam generator.

As an example of pump feeding with mechanical drive may be cited the I-3395 booster which is installed in the BMW-003 turbojet engine.

In an autonomous liquid-fuel rocket engine with pump-feeding the driving power of the pump is derived from a turbine. Usually the turbine and pumps for both components are mounted on the same shaft, and the entire assembly as a whole is known as a turbo-pump system (abbreviated TNA), and the system of feeding through a turbo-pump system is known as turbo-pump feeding.

In order to actuate the turbo-pump system, it is necessary to make use of a working substance -- steam or gas -- heated to a high temperature and kept under pressure. For the purpose of obtaining such steam or gas, a steam/gas generator of one type of construction or another is installed (see Figure 62).

The most widely used type of steam/gas generators are those where as a result of the chemical reaction of hydrogen peroxide a steam/gas mixture of the required temperature is formed and then passes on into the turbine.

Use can be made, for the turbo-pump system drive, also of other types of steam/gas generators, where the steam/gas is obtained by the following methods:

1) products of combustion brought directly out of the combustion chamber;

2) products of combustion formed as result of a slow burning powder charge; and

3) products of combustion formed through burning of the fuel that is used to operate the main engine.

The most important distinguishing characteristic of the pump system of feeding, and the one that constitutes its principal advantage over the others, is that under this system there is no need to keep the fuel tanks under pressure.

Therefore in this type of pump system there is no need to have tanks of very strong construction, thus making it possible to keep down their weight. Thus in rocket engine A-4 the weight of the tank designed to hold 3920 l. of O_2 has a total weight of only 126 kg.

The disadvantage of pump feeding consists in the fact that it requires the relative complexity of the turbo-pump assembly.

The pump systems of feeding are well adapted for use in engines of heavy thrust designed for a long period of functioning, i.e. engines that have fuel tanks of large dimensions. The weight economy effected on such engines will be found quite noticeable.

As an example of liquid-fuel rocket engines with turbo-pump feeding, the A-4 engine, "Walter" (for detailed description of these liquid-fuel rocket engines see Chapter X), can be cited.

Gas Pressure and Other Pressurized Feed Systems.

With regard to its mode of action, the gas pressure type of feeding is the simplest. See Figure 154.

The gas under high pressure (250-300 at) enclosed in cylinder 1 passes into gas pressure reducer 2, where the pressure of the gas is brought down to the required point; and from there it passes on into fuel tanks 3. Under the gas pressure, the fuel is expelled from the tanks and is passed on through a system of conduits to engine chamber 5, breaking through diaphragms 4 on the tube conduit.

The main disadvantage of the cylinder type of feeding consists in the fact that under this system the tanks are under the feeding pressure of the components, so that the weight of the tanks, which have to be very durable, is quite heavy. Apart from that, the cylinder containing the compressed gas, having been charged at a very high pressure, also has a considerable weight of its own. A considerable amount of weight is attributable also to the gas that is used to expel the fuel components. In the "Wasserfall" engine, for instance, the weight of the compressed gas used is equal to nearly 100 kg.

If the volume kept available for fuel components is great, the combined weight of tanks, gas cylinder, and gas supply reaches up, for the cylinder type of feeding, to such large figures that it becomes impossible to make use of this system. For that reason the method of cylinder feeding is used only in liquid-fuel rocket engines of small total impulses.[1]

In order to keep down the supply of gas required for the cylinder system of feeding one can have recourse to the method of heating the gas before it enters the fuel tanks. At constant pressure the volume occupied by a gas is directly proportional to its absolute temperature. Therefore, if the absolute temperature of the gas is raised to twice that of the chamber (288° abs), i.e. if the gas is brought to a temperature of 303° C (576° abs), the weight of the gas supply required will be cut in half. At the same time there is also a corresponding decrease in the weight of the gas cylinder.

In order to keep down the weight of the entire system, along with that of the compressed gas cylinder, use is made sometimes of the so-called solid propellant gas generator. The chamber of the gas generator which is relatively small contains a charge of slow-burning powder. From the combustion of the powder a large quantity of heated gas is formed, which enters the tanks for the displacement of the components.

---

[1] The term "total impulse" designates the product of the thrust P developed by an engine times the period of the latter's operation.

As an example of an engine with solid propellant gas generator may be cited the liquid-fuel rocket engine of the "Typhoon" rocket (see Chapter X).

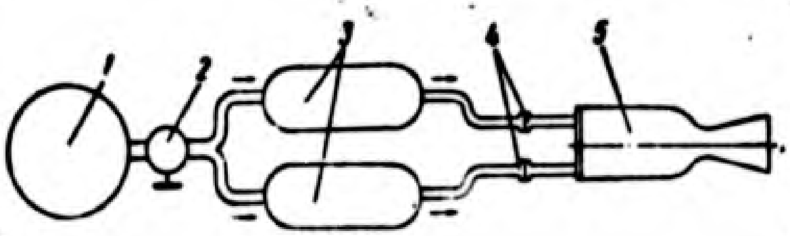

Figure 154. Diagram to show the cylinder feed system.

1 -- high pressure gas cylinder (gas generator); 2 -- pressure reducer; 3 -- fuel tanks; 4 -- diaphragms; 5 -- combustion chamber.

Instead of using the solid propellant gas generator to get a heated gas, one can make use, instead, of a generator in which some mixture or other of liquid components is burned. The products of combustion of these components are used, just like the powder gases, to drive out the fuel components. In this case we get a feed system with a liquid propellant gas generator.

Section 54. Designing the Fuel Tanks.

Types of Fuel Tanks, and the Demands Made Upon Them.

In designing the engine and the entire vehicle with a liquid-fuel rocket engine it is very important to design the fuel tanks properly, since they constitute a basic part of the rocket; and in many instances the entire missile consists of a series of "flying tanks."

According to the method of feeding the components one distinguishes two principal types of fuel tanks:

1. High pressure tanks, i.e. tanks that are kept under high pressure when the liquid-fuel rocket engine is functioning. These can be used with any

type of pressurized feed system.

2. Low pressure tanks, i.e. tanks that are not kept under high pressure when the liquid-fuel rocket engine is functioning. They are used with pump systems for feeding the components.

Since in view of their dimensions the tanks constitute a very large portion of the entire rocket, they frequently are used as power elements in the structure of the rocket, receiving stresses that are active upon the rocket. Such tanks are called load-carrying tanks.

In designing the tanks an effort must be made to meet the following requirements:

1. The tanks, whatever their type of construction, must be of light weight. As the weight of the tanks is kept down, the weight of the rocket as a whole is also kept down and its characteristics improved (e.g. range of flight for a given set of dimensions).

It is particularly important to pay attention to this requirement in planning a liquid-fuel rocket engine with high pressure tanks, since the weight of the latter always constitutes a large part of the weight of the rocket structure as a whole.

Light weight of the tank structure is achieved by the use of light but highly resistant materials, capable of functioning on a small margin of safety and also by choice of the most suitably adapted shape of the tanks.

2. Tanks must possess resistance to corrosion. This requirement is important especially in the case of liquid-fuel rocket engines that are operated with aggressive components, and in cases where it becomes necessary to keep the components stored in the tanks for a long period of time.

3. The tanks must be simple and easy to construct, and must be well adapted to the operational conditions.

4. The tanks, especially the load-carrying type, must possess a smooth contour, in keeping with the contour of the rocket as a whole. As they are

installed on the rocket, they must be placed on one and the same axis.

Geometric Shape and Relative Position of the Tanks.

Figure 155 shows tanks of the various types of construction used in liquid-fuel rocket engines.

The most widely used design (Figure 155 a) is that of the separate positions of the tanks for fuel and oxidizer. These tanks are the simplest and easiest to produce. But since for reasons of resistance the bottoms of the tanks have an elliptical shape, there remains a vacant space between them (shown by cross-hatching). In order to have smaller rockets, this area is usually occupied by other devices and assemblies.

In order to keep down the overall dimensions of the tank in the engine, and also the weight of the tanks, the design may be such that both tanks will have the same structural elements (see Figure 155 b). Such tanks are said to be of unified structure.

The principal shortcoming of this type of construction, as also of the tanks in concentric position, see Figure 155 c, is the danger of having different components get together as result of the slightest damage to the hermatic sealing of the partitions between the two tanks.

The concentric position of the tanks can be justified only by the necessity of satisfying certain flying requirements, since these tanks are more difficult to produce than those of types a and b.

Advantages in the way of lessened weight are not obtained by the use of these two types. Sometimes on the contrary -- the weight of the structure is greater. As a result of the above-mentioned disadvantages the tanks of unified structure or concentric position have not been widely adopted for actual use.

Figure 156 shows spiral-shaped tanks for the liquid-fuel rocket engine. Fuel tank 1 is made in the shape of a spiral tube. Above it is located another spiral tube 2, of larger diameter, which serves as the tank for the oxidizer.

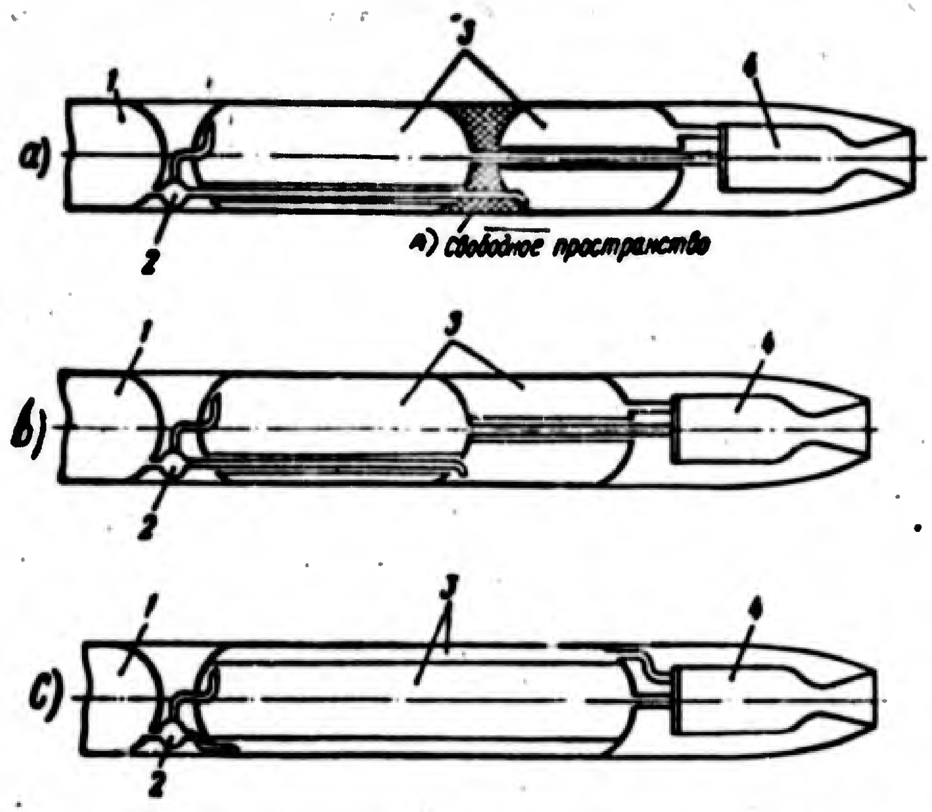

Legend:

A) Unused area

Figure 155. Diagrams of tank designs.

a -- separate position of the tanks; b -- tanks of unified structure; c -- concentric position of the tanks; 1 -- gas generator; 2 -- pressure reducer; 3 -- tanks; 4 -- combustion chamber.

This engine is operated with cylinder-type feeding. The compressed air is contained in cylinders 3. In order to maintain an uninterrupted flow of fuel components in tanks (tubes) 1 and 2, flexible pistons 5 and 7 are placed in them. These are on one side acted upon by the displaced air fed through tubes 6 and 4. Moving through the spiral tubes these pistons force the fuel into the combustion chamber.

Using this type of construction the weight of the tanks can be kept lower, since the required thickness of the outer casing becomes less in proportion to the diameter. For that reason, irrespective of the greater length of a tank of this form considerably lighter weight can be maintained.

For engines with pressure feeding the relative position of the tanks is immaterial. For engines with pump feeding it is desirable, according to the mode of functioning of the pumps (see Section 61), to have the oxidizer

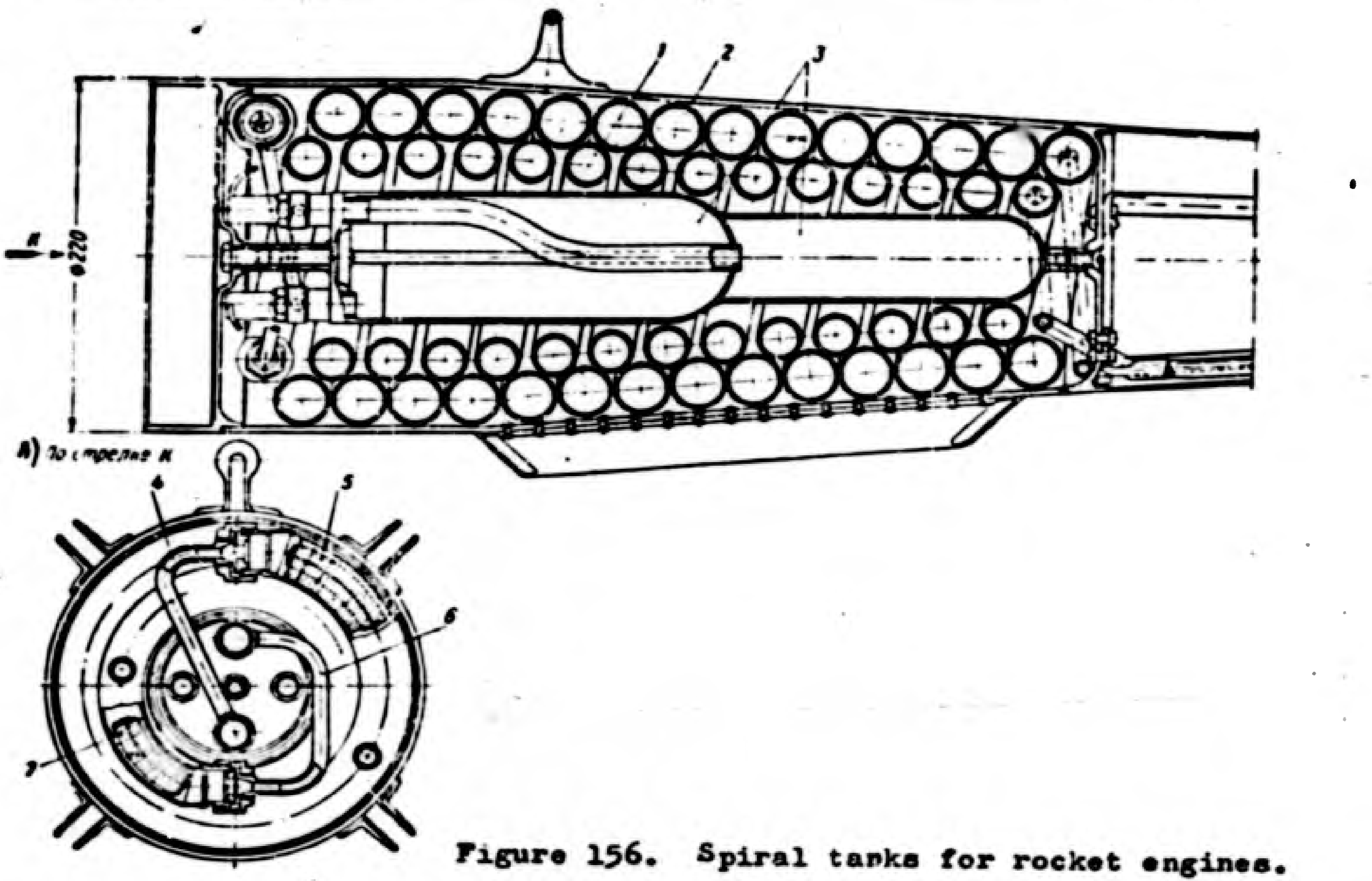

Figure 156. Spiral tanks for rocket engines.

1 -- spiral tank for fuel; 2 -- spiral tank for oxidizer; 3 -- cylinders containing compressed gas; 4 -- air conduit; 5 -- flexible piston; 6 -- air conduit; 7 -- flexible piston.

Legend: A) Along arrow K.

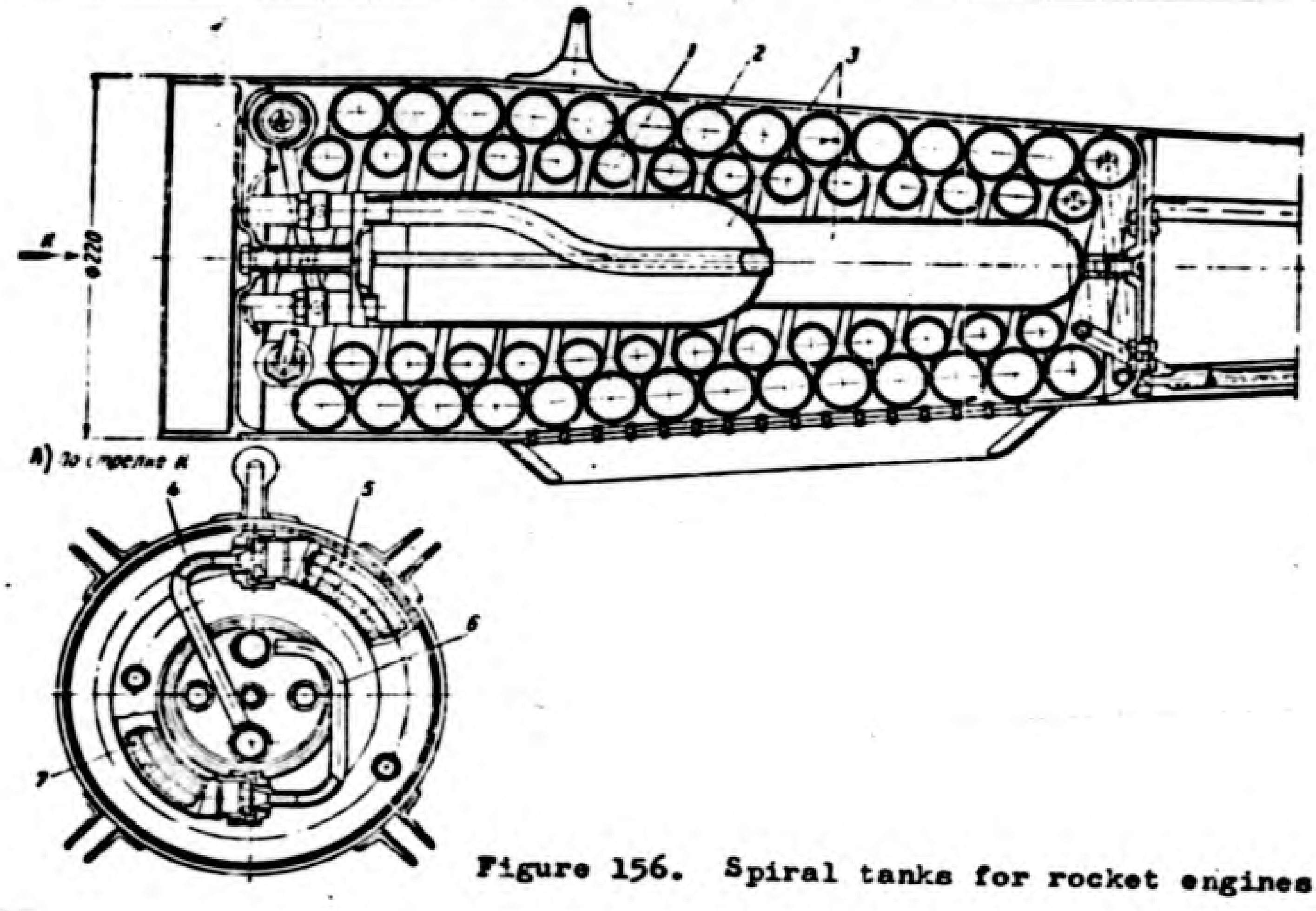

Figure 156. Spiral tanks for rocket engines.

1 -- spiral tank for fuel; 2 -- spiral tank for oxidizer; 3 -- cylinders containing compressed gas; 4 -- air conduit; 5 -- flexible piston; 6 -- air conduit; 7 -- flexible piston.

Legend: A) Along arrow K.

tank placed forward. However, in designing a rocket the position of the tanks usually is chosen with a view to attaining static stability of the rocket in flight.

In the course of planning a tank there arises always the question of the shape to be given to the tank, relative to stability and light weight. The best type of tank is the spherical tank. In this case, however, the tanks would have to have very large cross-sectional dimensions, and that would make it necessary to enlarge the entire midship section of the vehicle. For that reason the tanks usually are given a cylindrical shape, or something close to it, with spherical bottoms.

The largest admissible diameter for the tank is determined according to the structure of the rocket taken as a whole. But with a view to obtaining the best aerodynamic characteristics there has been a notable effort in recent years to increase the length of the tank in relation to its diameter. Thus, while in liquid-fuel rocket engines of models 1944-47 the ratio $\frac{l}{d}$ of the tanks was kept something like 5-7 (A-4, "Wasserfall," and others), the corresponding ratio in later models was something like 10-12 (the rockets "Aerobee," "Nike," "Corporal," and others).

The Interior Structure of the Tanks.

In constructing the tank one must take into account above all the following details, which are of primary importance for the functioning of the tank: the filling devices, and the bleeder and the safety valves. In liquid-fuel rocket engines of the pressure feeding type for repeated action one must at times take account of the possibility of a drop in the pressure from the tank. In some tanks (e.g. that of rocket A-4) special ports are provided to permit inspection and repair of the tanks.

Much difficulty is occasioned, in planning the tanks, by providing for an uninterrupted flow of fuel components from the tank into the engine's chamber. This is due to the fact that while in flight the liquid-fuel rocket engine may undergo accelerations in any direction, so that there might easily occur a temporary baring of the intake device of the tanks (especially when the liquid-fuel rocket engine is about to cease functioning). An explosion of the chamber might occur as result of an interruption of the feed flow of components.

In Figure 157 are shown some of the most common types of devices employed to obtain uninterrupted feed of components from the tanks into the engine chamber.

An interruption in the feed flow might be brought on by the formation of an eddy on the surface of the component, at the point where it enters the intake device.

The cause of the formation of such eddy is the increased speed of movement of the component as it enters into the intake device, as compared with its speed of flow along the periphery. Apart from that, in view of the unevenness of speeds of motion of the components along the axis of the tank (as result of clogging of the tank's inner space by various fittings) there may occur a circling movement of the component around the inlet axis; and this would contribute to the formation of an intensive eddy.

In the pressurized feeding type of feed system the formation of eddies on the surface of the component and formation of froth may occur as a result of the stream of outflowing gas.

In the effort to prevent eddy formation and froth formation on the component a variety of diaphragms and whirl-dampers have been employed.

In the "Schmidding" engine (see Chapter X) the gas was fed into a specially designed bag of elastic rubber, so that there was no contact between gas and component.

In the rocket engine "Schmetterling" the components were displaced by means of a piston that was itself put in motion by the pressure of the inflowing gas.

During the pressurized feeding with solid propellant gas generator or solid propellant gas generator, it is necessary to limit the temperature of the gases entering the tank, within the range of admissible temperatures (usually 800-900° C), so that when the temperature of the tank walls is increased, their strength would not be impaired.

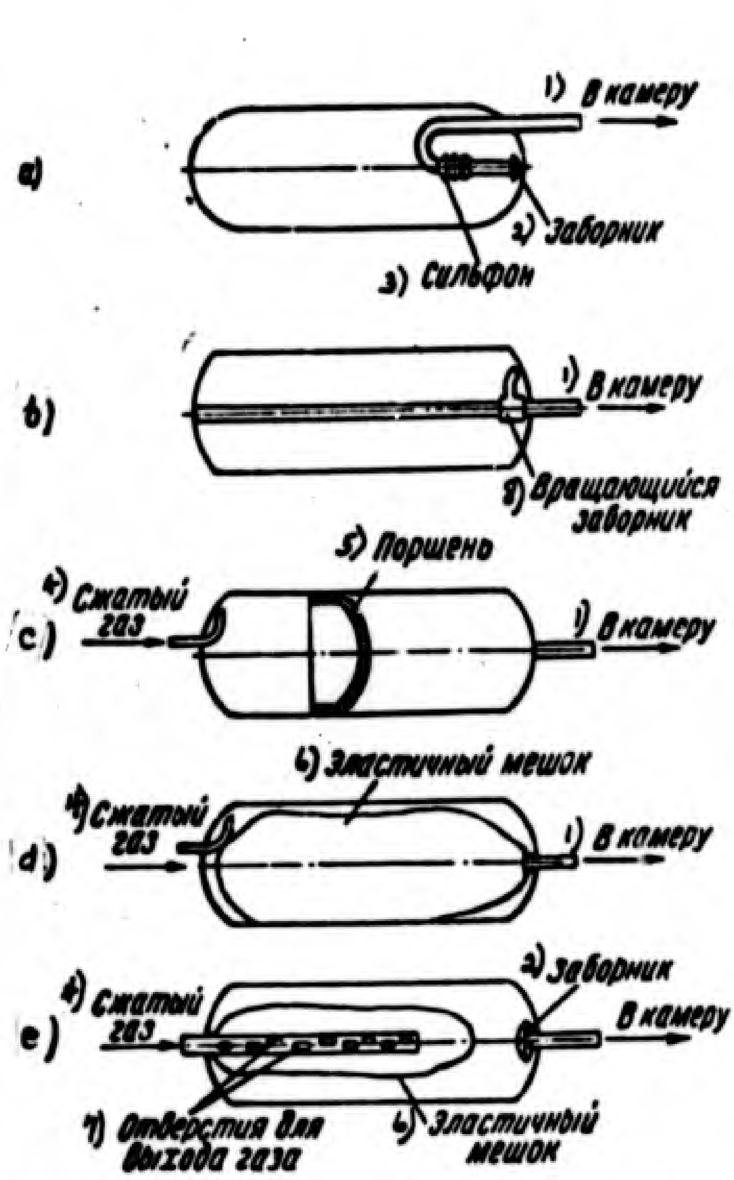

Figure 157. Diagrams of feed structures for feed components from the tanks.

1 -- to the chamber; 2 -- partition; 3 -- bellows type thermostat; 4 -- compressed gas; 5 -- piston; 6 -- elastic bag; 7 -- opening for gas outlet; 8 -- revolving intake.

In the liquid propellant gas generator type of system, the reduction of gas temperatures is effected by ballasting the fuel with one of its components. The hot gases entering the tank can be cooled off by spraying them with water or bringing in a tube conduit where the gas is fed through a sleeve that contains one of the components.

Calculating Tankage Volume.

The total volume of a tank V is composed of the following constituent volumes:

$$V = V_{rat} + V_{guar} + V_{a.c.} \qquad (IX.1)$$

where V_{rated} - the rated volume of the tank;

V_{guar} - the volume of the guaranteed supply of components;

$V_{air\ cush}$ - the volume of the air cushion.

In determining the geometrical dimensions of a tank of volume V one must take into account the clogging of the tank from within by the tube conduits, and the intake and connecting pipes. The volume of the tank is computed for normal conditions (t equal 15-20° C).

1. The Rated Volume of the Quantity of Component Required, V_{rated}. Since the amount of flow per second G_{comp} and the operating time t of the liquid-fuel rocket engines are known quantities, we have

$$V_{rat} = \frac{G_{comp} t}{\gamma}, \qquad (IX.2)$$

where γ is the specific gravity of the component in kg/m^3;

t is the engine's operating time from the instant of the rocket's blast-off from the starting platform until the moment when the engine comes to a stop.

2. The Volume of the Guaranteed Supply of Components, V_{guar}. The guaranteed supply includes that quantity of component which is expended upon the work of the engine at the starting or launching site, from the moment of the beginning of operation until the moment of the rocket's take-off, plus the quantity of component required for satisfactory functioning of the liquid-fuel rocket engine during its final period of operation.

The operating time of the liquid-fuel rocket engine on the launching platform depends chiefly upon the system used in starting the engine. When the charge start is used, this time is short, amounting to about 0.2 sec; if the starting is self-piloting, this time is lengthened to 2-3 sec; and for that reason a large supply V_{guar} is required in a self-piloting start.

When the functioning of the liquid-fuel rocket engine comes to a close, no intake device (except a system with bag or piston) can completely displace the component from the tank. Depending on the structure of the intake opening a certain portion of the component will be left behind in the tank, unused. The smaller the amount of fuel left in the tank, the smaller will be the quantity V_{guar} that is required. The guaranteed supply reduces, while the rocket is maneuvering, the chances of a baring of the fuel intake structure and a consequent cutting off of component supply in the engine. Apart from that, the guaranteed supply is needed to compensate for possible departures from the computed fuel consumption per second.

In allowing, according to the engine's starting method, for the factors mentioned in the foregoing, and the efficiency of the intake device, and the maneuverability of the rocket, the value of V_{guar} may be taken as equal to 2-5% of V_{rated}.

3. The Volume of the Air Cushion, $V_{air\ cush}$. The air cushion is required in order that when or if the temperature of the component should rise while the fuelled rocket is being stored there should not occur an excessive increase of pressure in the tanks. Under the pressurized feeding system the air cushion also acts as a damping agent that smoothes off the abruptness of the process of starting the engine.

In determining the volume of the air cushion, one must start out from the consideration that at the highest operating temperature T_{max} assigned by the specifications the pressure in the tnaks must not exceed the fixed allowable pressure $p_{tank\ max}$.

The value for the pressure $p_{tank\ max}$ will vary according to the structure of the rocket tank and the special characteristics of the hydraulic feeding system. For a pressurized feeding system the value for $p_{tank\ max}$ must not be higher than the pressure that would rupture the diaphragms, since if the diaphragms are ruptured a spontaneous starting of the rocket might occur.

Ordinarily, for this type of feeding system, this value of tank pressure $p_{tank\ max}$ is assumed to equal 5 - 6 at. Once the value for $p_{tank\ max}$ is known, the volume of the air cushion $V_{air\ cushion}$ is determined on the basis of the following considerations.

When the tank is being filled the equation for the condition of the gases in the air cushion takes the following form:

$$p_0V_{a.c.}=GRT_0, \tag{IX.3}$$

where p_0 and T_0 are the pressure and temperature of the surrounding medium when the filling takes place.

As the temperature rises to T_{max} the pressure in the gaseous cushion of the tank increases, and at the same time the volume of the gaseous cushion goes down to a value $\Delta V_{air\ cushion}$ due to the temperature increase in volume of the component in the tank.

$$\Delta V_{a.c.}=V_{comp}\beta\ (T_{max}-T_0), \tag{IX.4}$$

where β is the coefficient of the component's volume expansion.

The equation for the condition of the gases in the cushion will then take on the form

$$p_{t\ max}(V_{a.c.}-\Delta V_{a.c.})=GRT_{max}. \tag{IX.5}$$

Substituting in this expression the values G and $\Delta V_{air\ cushion}$ from equations (IX.3) and (IX.4) we get

$$p_{t\ max}(V_{a.c.}-V\quad \beta(T_{max}-T_0)=\frac{p_0V}{RT_0}RT_{max};$$

so that after reduction and conversion we get

$$V_{a.c.}=\frac{V_{\text{comp}}\beta(T_{max}-T_0)}{1-\frac{p_0T_{max}}{p_{\text{б}\,max}T_0}}. \qquad (IX.6)$$

Example 19. Determine the volume of the air cushion in tanks containing kerosene as the combustible and nitric acid as the oxidizer, if the rated volumes of the tanks are

$$V_{rat\,ker}=0.19\ m^3;$$
$$V_{rat\,HNO_3}=0.45\ m^3.$$

The tanks are filled at the temperature of the surrounding medium T_0 = 15° C and a pressure p_0 = 1 at. The pressurized feed system is used; according to the specifications of operation of the engine installation, the feeding is carried out in a temperature range of ± 50° C.

Solution:

Since the feeding is pressurized, the maximum admissible pressure in the tanks $p_{tank\ max}$ is taken as 6 at. The coefficient of volume expansion for kerosene and nitric acid are equal to (see Table 30)

$$\beta_{ker}=10\cdot10^{-4};\quad \beta_{HNO_3}=12.4\cdot10^{-4}.$$

Table 30

Values for the Coefficient of Volume Expansion β For Various Liquids at Room Temperature

No.	Liquid	$\beta\cdot10^4$	No.	Liquid	$\beta\cdot10^4$
1	Nitric Acid	12.4	7	Sulfuric Acid	5
2	Aniline	2.58	8	Turpentine	9.4
3	Benzine	12.4	9	100% Ethyl Alcohol	10.4
4	Kerosene	9-10	10	50% Ethyl Alcohol	7.4
5	Methyl Alcohol	12.2			
6	Hydrogen Peroxide	10.7			

The highest temperature T_{max} in the given case is 323° abs. With the aid of equation (IX.6) we determine the volume of the air cushions:

for the kerosene tank

$$V_{a.c.}=\frac{V_{comb}\beta(T_{max}-T_0)}{1-\frac{p_0T_{max}}{p_{max}T_0}}=\frac{0,19\cdot 10\cdot 10^{-4}(323-288)}{1-\frac{1\cdot 10^4\cdot 323}{6\cdot 10^4\cdot 288}}=0,00818\ \mathrm{m}^3;$$

for the nitric acid tank

$$V_{a.c.}=\frac{0,45\cdot 12,4\cdot 10^{-4}(323-288)}{1-\frac{1\cdot 10^4\cdot 323}{6\cdot 10^4\cdot 288}}=0,0240\ \mathrm{m}^3.$$

Example 20.

Compute the volume of the combustible and oxidizer tanks of a liquid-fuel rocket engine operated with the fuel: kerosene (γ_{fuel} = 820 kg/m^3) and 96% nitric acid (γ_{HNO_3} = 1560 kg/m^3) assuming that the thrust of the engine is P = 3,000 kg, the specific thrust P_{sp} = 210 kg-sec/kg, the running time of the liquid-fuel rocket engine t = 60 sec, and the actual ratio of oxidizer expenditure to fuel consumption ν = 4.5.

Solution:

We determine the required fuel consumption

$$G=\frac{P}{P_{sp}}=\frac{3000}{210}=14,3\ \text{kg/sec}.$$

We find the fuel consumption G_{fuel} and that of oxidizer G_{oxid}. According to equation (V.14')

$$G_f=\frac{G}{1+\nu}=\frac{14,3}{1+4,5}=2,6\ \text{kg/sec};\quad G_o=G-G_f=14,3-2,6=11,7\ \text{kg/sec}.$$

We find the design volumes of the tanks. The design volume of the tank for fuel (combustible) is

$$V_{tat.c}=\frac{G_f t}{\gamma_f}=\frac{2,6\cdot 60}{820}=0,19\ \mathrm{m}^3.$$

The design volume for the oxidizer tank is

$$V_{rat.o}=\frac{G_o t}{\gamma_{HNO_3}}=\frac{11{,}7\cdot 60}{1560}=0{,}45\ m^3.$$

We determine the guaranteed supply volume for the tanks. For the fuel tank we set the guaranteed supply volume at 5% of the design volume of the tank. We make a smaller allowance for the oxidizer tank (smaller than V_{guar}) than for the fuel tank, since the design volume for the oxidizer tank is greater.

We take it as equal to 2% of V_{rated}. The volumes for the air cushion of this example are found computed in Example 19.

Knowing the values for V_{rated}, V_{guar} and $V_{air\ cushion}$, we determine the full volume of the tanks. The full volume for the fuel tank (kerosene) is as follows:

$$V=0{,}19+0{,}05\cdot 0{,}19+0{,}00818=0{,}20768\approx 0{,}208\ m^3.$$

The full volume for the oxidizer tank (nitric acid) is as follows:

$$V=0{,}45+0{,}02\cdot 0{,}45+0{,}024=0{,}483\ m^3.$$

<u>Calculation of the Strength of the Tanks.</u>

Calculation of the strength of the tanks is made after the manner of calculations for thin-walled containers.

If the pump system of feeding is used, the rated pressure in the tanks, p_{rated}, can be taken, by way of first approximation, as equal to 2-3.4 kg/cm^2.

In cases where, in a rocket with pump feeding, the tanks are load-carrying tanks, the strength calculation of the tanks is based on the strength conditions of the tanks and the rocket as a whole. If there is gas cylinder feeding the rated feeding pressure of the tank p_{tank} is not determined until all the details of the hydraulic system have been completely worked out. It will be obvious that the required feed pressure p_{tank} is equal to the pressure in the combustion chamber plus all losses of pressure along the route followed by the component from the tank to the combustion chamber, i.e.

$$p_t = p_2 + \Delta p_{inj} + \Delta p_{cool} + \Delta p_{tube} + \Delta p_v + \Delta p_{th} \qquad (IX.7)$$

where p_2 is the pressure in the combustion chamber;

Δp_{inj} is losses of pressure in the injection orifice;

Δp_{cool} is losses in the cooling jacket;

Δp_{tube} is losses in the pipelines;

Δp_{valves} is losses in the valves;

$\Delta p_{throttle}$ is losses at the throttle plate.

All of the losses along the way followed by the component from the tanks to the combustion chamber usually are computed by the hydraulic formulae (see below, Section 64).

The hydraulic system of the engine is usually designed in such manner that the pressure in the tanks would be uniform. This greatly simplifies the entire feed system. Difference of hydraulic resistance in the fuel tract and the oxidizer tract are eliminated by installation of special throttle plates (i.e. change of $\Delta p_{throttle}$). These plates are used to ensure the required flow of components in their proper proportion.

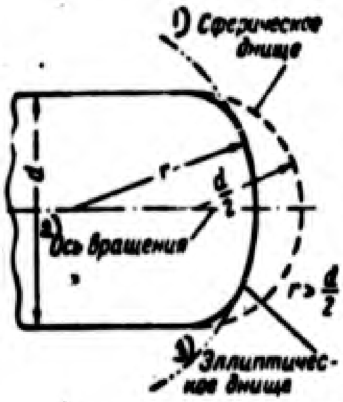

Figure 158. Elliptical and Spherical Shape of the Bottoms.

1 -- spherical bottom; 2 -- axis of rotation; 3 -- elliptical bottom.

Knowing the value for p_{rated} for tanks of cylindrical shape, one can find the required thickness of the wall of the tank δ by using the formula

$$\delta = k\frac{p_{rat}d}{2\sigma}\ \text{cm}, \qquad (IX.8)$$

where d is the internal diameter of the tank, in cm;

σ is the admissible tensile stress of the material chosen for the tanks, in kg/cm^2;

k is the safety factor.

For liquid-fuel rocket engine tanks with pressurized feeding the value for k is taken as equal 1.5-2.

For pressurized feeding tanks with solid propellant gas generator or liquid propellant gas generator the walls of a tank are heated to temperatures of 300-350° C. One must therefore take into consideration here the decreased strength of the material at the higher temperatures. Computation for the bottoms of the tank has to be made according to the shape.

The most widely used shape is the elliptical or something near it. The surface of an elliptical bottom is formed by revolution of a semi-ellipse around its minor axis (see Figure 158).

The thickness of the bottom is in this case computed from the formula:

$$\delta = k\frac{p_{rat}r}{2\sigma}, \qquad (IX.9)$$

where r is the radius of the sphere of the bottom.

Materials Used for the Tanks.

In selecting the material for the tanks, one must start out from the above-mentioned demands that are made upon the tanks.

Minimum weight of the structure can be attained by using materials with high-quality mechanical properties or low specific gravity.

Many of the special steels offer very high mechanical properties. With appropriate heat treatment these steels are capable of with-standing a stress of up to 120 kg/mm^2.

However, there are difficulties arising in the use of these steels,

Table 31

Basic Data for Various Construction Materials

Characteristics of the Material	Brand of Material								
	Steel 08	Steel 10	Steel 20	Steel 45	Stainless Steel of the 1Kh18N9T Type	Steel Type 30KhGSA	Steel Type 30KhMA	Commercially Pure Copper	Aluminum Alloy
Ultimate Strength σ_b in kg/mm^2 according to temperature	300° C—46 400° C—36 500° C—25 600° C—16	100° C—30,6 200° C—40,3 300° C—38,5 500° C—20,1	100° C—38 200° C—48 300° C—44 400° C—36 500° C—25	100° C—60,5 200° C—70,2 300° C—72,8 500° C—38,3	25° C—65 95° C—58 205° C—52,8 315° C—53,4 425° C—51 535° C—46 650° C—36,4 760° C—22,2 870° C—11 1090° C—3,29 1200° C—1,75 1260° C—1,61	25° C—100	25° C—68,8 205° C—66 315° C—67,8 425° C—58,8 480° C—51 535° C—45,5	25° C—23	25° C—47,6 100° C—43,4 150° C—40,6 205° C—37,1 260° C—18,2 315° C—10,5 370° C—5,25
Yield Point $\sigma_{0.2}$ in kg/mm^2 according to temperature	300° C—14 400° C—12 500° C—11 600° C—6	100° C—20,4 200° C—20,9 300° C—10,6 500° C—8,6	100° C—22 200° C—24 300° C—16 400° C—13,5 500° C—10	100° C—33,8 200° C—35,7 300° C—26,3 500° C—17,9	25° C—25,9 95° C—20,8 205° C—16,4 315° C—15,4 425° C—13,65 535° C—12,0 650° C—10,85 760° C—10,4	25° C—80	25° C—51,7 205° C—51,5 315° C—49,2 425° C—46,1 480° C—41,5 535° C—37,3	25° C—7	25° C—31,5 100° C—29,1 150° C—27,3 205° C—24,5 260° C—16,1 315° C—9,1 370° C—4,55
Modulus of Elasticity E in kg/mm^2 according to temperature	25° C—19000	25° C—19800	25° C—20000	—	30° C—19300 705° C—13700 815° C—9300	—	20° C—20600 425° C—12900 650° C—8750	11200	25° C—7200 150° C—6800 260° C—5760
Specific Gravity in gr/cm^3	7,83	7,83	7,82	7,814	7,9	7,75	—	8,93	—

because where there is welding required one has difficulty in obtaining sufficient strength of the welded seams, i.e. a strength equal to that of the steel itself. Aside from that, after the welding it is necessary to submit the whole tank to heat treatment, which is a rather complicated process in view of the tank's large dimensions. Moreover, these steels are very expensive.

In designing single-operation liquid-fuel rocket engines one must, as far as possible, make use of non-critical materials, so as to reduce considerably the cost of the entire structure.

Most of the fuels used do not require high corrosion resistance for the tank; and hence, use is made, for these tanks, of high-strength, but not necessarily corrosion-resisting materials, such as steel type 30KhGSA.

In chosing material for the oxidizer tank one has to bear the following considerations in mind: tanks for aggressive oxidizers (HNO_3, H_2O_2, and the like) must possess a high degree of corrosion resistance. Moreover, materials used for an H_2O_2 tank must not contain any elements that are catalysts for the dissociation of hydrogen peroxide (especially copper).

So far as the gas cylinder feed systems are concerned, the tanks for aggressive oxidizer are made of rust-proof steels of type 1Kh18N9T (EYA1T). Steel 1Kh18N9T is satisfactory for welding, that is, a scale is not formed when it is welded. But this steel requires precise execution of the welding and heat treatment processes; and otherwise the required mechanical properties of the welded seams are not obtainable.

A disadvantage of materials type 1Kh18N9T consists in the fact that they are relatively expensive, due to their large nickel content.

With a pump feeding system the tanks for HNO_3 can be made of aluminum alloys types AK or AMg.

Sometimes tanks for aggressive components also are made of high-strength materials that are, however, not corrosion-resisting. In that case the interior of the tank is covered over with some sort of protective film: lacquer, wax, or an oxide film. An example of this kind of tank are the hydrogen peroxide tanks of rocket A-4.

The material composing the tanks for liquid oxygen has to possess high strength at low temperatures. The oxygen tanks usually are made of aluminum alloys of the type AMg or of non-rusting steels of the austenite class, which do not lose their resilience at low temperatures.

Table 31 shows characteristics of metals used in the manufacture of tanks.

Section 55. Computing the Dimensions of the Gas Cylinder and the Gas Supply Required in Cylinder Feeding.

In making computations for gas cylinder feeding one has to determine the volume of the cylinder and the supply of compressed gas that is used to expel the component from the tanks.

In the usual systems of cylinder feeding for the displacement of fuel use is made either of air or of nitrogen. In some rockets helium has been used (e.g. the feeding system of the "Aerobee" rocket, and the steam/gas generator of the "Neptune" rocket). The advantage of helium over air or nitrogen is that the molecular weight is lower and, consequently, other things being equal, also the specific gravity. Thus the weight of helium required for displacing 1 m^3, other things being equal, will be one-seventh the weight of the nitrogen.

And besides, unlike air or nitrogen, the temperature of the helium rises when it is being throttled in the reducer; and this contributes to an additional saving of weight for displacing the gas.

Change of Temperature of the Displacing Gas During the Feed Process.

Let us analyze the processes that occur in the progress of feeding with the aid of a compressed gas cylinder, (see Figure 154).

Gas under high pressure flows from the cylinder and is throttled in reducer 2 until it has the proper feeding pressure, at which pressure it enters the tanks. As the gas flows from cylinder 1, the gas remaining there will expand, and its temperature will drop to a lower level. As a result of this drop of temperature, the gas will receive heat from the warm walls of the cylinder. But since this influx of heat is negligible in quantity, the temperature of the gas in the cylinder will after all be lowered, i.e. there will occur in cylinder 1 a polytropic expansion with a polytropy index n that will be lower than would be the case during adiabatic expansion, i.e.

$$1 < n < k$$

Using the equation for the polytropic process, we are able to compute the final temperature of the gas in the cylinder by using the equation

$$T_{g.fin} = T_{g.st.} \left(\frac{p_{g.fin}}{p_{g.st.}} \right)^{\frac{n-1}{n}}. \qquad (IX.10)$$

Designating the value of $\frac{P_{g\ fin}}{P_{g\ st}}^{\frac{n-1}{n}}$ by coefficient c_1, we get

$$T_{g.st.} = T_{g.st.} c_1. \qquad (IX.11)$$

The value for coefficient c_1 will depend on the pressure drop $\frac{P_{g\ fin}}{P_{g\ st}}$ and the index of polytropy n, determined by the intensity of transmission of heat from the wall to the gas. One may accept the value for n as equal to 1.15-1.33. Table 32 shows values for coefficient c_1 that were computed assuming that n = 1.33.

In the course of the outflow of gas from the cylinder the gas temperature will gradually decline from $T_{g\ st}$ to $T_{g\ fin}$.

When the gas is being throttled in a reducing valve the temperature of real gases does not remain constant. For air and nitrogen, in particular, the temperature goes down; but for helium it rises slightly. Aside from that, as it reaches the tank, the gas will be heated by the walls of the tank.

It is very difficult to allow for all these temperature changes theoretically. By way of simplification, we shall leave out of account the changes of gas temperature due to throttling and those due to heating by the walls of the tanks. We then find that each portion of gas reaching tank 3 has a temperature that is equal to the temperature of the gas in cylinder 1 at a given moment. Consequently the first portion of gas, when the engine is being started, will reach the tank at a temperature $T_{g\ st}$ while the very last portion, at the moment the engine ceases to function, will have a temperature $T_{g\ fin}$. All these portions of gas will become intermingled inside the tank so that the average temperature of the gas will be midway between $T_{g\ st}$ and $T_{g\ fin}$, i.e.

$$T_{g\,fin} < T_{t.fin} < T_{g.st}.$$

It may be provisionally noted that the temperature of the gas in the tanks at the end of the feeding process will be

$$T_{t.fin} = c_2 T_{g.st}. \qquad (IX.12)$$

The value for coefficient c_2 is lower than unity, but higher than the value for c_1; their values at $n = 1.33$ are shown in Table 32.

If we take into account the change of gas temperature incident to the process of throttling, the c_2 value for nitrogen and air will be lower than shown in the Table (32), but for helium it will be higher. For helium the value c_2 would have to be taken 10% higher than shown in Table 32.

Table 32

Values for Coefficient c_1 and c_2 as dependent on the Ratio $\frac{P_{g\ st}}{P_{g\ fin}}$ when $n = 1.33$

$\frac{P_{g\ st}}{P_{g\ fin}}$	10	7	4	2
c_1	0.55	0.60	0.70	0.82
c_2	0.75	0.80	0.87	0.90

Computing the Volume of the Cylinder and the Gas Supply.

In computing the volume of the cylinder and gas supply one makes use of the following initial data: the total volume of fuel and oxidizer tank, v_{tank};

the pressure used in feeding the components p_{tank}; and also the properties of the outflowing gas, i.e. the gas constant R in kgm/kg °C, and the initial temperature of the gas $T_{g\ st}$.

The initial pressure of the gas in the cylinder is determined by the conditions under which the cylinder was filled. The final pressure in the cylinder is bound to be slightly higher than the feeding pressure p_{tank} -- to the extent of the drop of pressure in the reducer Δp_{red} -- as required to ensure normal functioning of the reducer.

Usually the value for Δp_{red} is taken as (0.25-0.50) p_{exit}.

Let us now consider the condition of the outflowing gas before the beginning and at the close of the feeding process. Before the beginning of the feeding process the gas is enclosed in a cylinder, and according to the equation of state we may write:

$$p_{g.st}V_{gas}=G_{gas}RT_{g.st}. \qquad \text{(IX.13)}$$

where G_{gas} is the quantity of gas in the cylinder, in kg; and

R is the gas constant in kgm/kg °C.

At the end of feeding, the gas is partly in the cylinder, partly in the tanks.

The condition of the gas at this time is expressed by the equation

$$p_{g.fin}V_{gas}=G_{g.fin}RT_{g.fin}, \qquad \text{(IX.14)}$$

where $P_{g\ fin}$, $T_{g\ fin}$, $G_{g\ fin}$ are the pressure, temperature, and weight of the gas that is still remaining in the cylinder at the close of the feeding process. The final pressure in the cylinder is as follows:

$$p_{g\,fin}=p_t+\Delta p_{red}.$$

The condition of the gas in the tanks at the close of the feeding process is expressed by the equation

$$p_tV_t=G_tRT_{t.fin}. \qquad \text{(IX.15)}$$

where G_{tank} is the quantity of gas entering the tanks at the close of the feeding process, in kg.

From formula (IX.13) we get

$$G_{gas}=\frac{p_{g.st}V_{gas}}{RT_{g.st}}. \qquad \text{(IX.16)}$$

From formula (IX.15) we get

$$G_t=\frac{p_tV_t}{RT_{t.fin}}.$$

The weight of the gas in the cylinder and in the tanks at the close of the engine's operating period is the same as its initial weight:

$$G_{gas}=G_{g.fin}+G_t,$$

and hence we have

$$G_{g.fin}=G_{gas}-G_t=\frac{p_{g.st}V_{gas}}{RT_{g.st}}-\frac{p_tV_t}{RT_{t.fin}}. \qquad \text{(IX.17)}$$

Substituting the values $P_{g\ fin}$ and $G_{g\ fin}$ in equation (IX.14) we get

$$(p_t+\Delta p_{red})V_{gas}=\left(\frac{p_{g.st}V_{gas}}{RT_{g.st}}-\frac{p_tV_t}{RT_{t.st}}\right)RT_{t.fin} \qquad \text{(IX.18)}$$

Introducing the above-mentioned relations between the initial and final temperatures (IX.11) and (IX.12), and substituting these expressions in (IX.18) we get

$$(p_t+\Delta p_{red})V_{gas}=\left(\frac{p_{g.st}V_{gas}}{RT_{g.st}}-\frac{p_tV_t}{Rc_1T_{t.st}}\right)Rc_1T_{t.fin} \qquad \text{(IX.19)}$$

By conversion and reduction we now get

$$V_{gas}=\frac{p_tV_t\frac{c_1}{c_2}}{c_1p_{g.st}-(p_t+\Delta p_{red})} \qquad \text{(IX.20)}$$

The volume of the cylinder is directly proportional to the feeding pressure and the volume of the tanks. It varies inversely as the initial pressure, and is independent of the gas constant of the gas used. Knowing from (IX.16) the volume V_{gas} of the cylinder, we now find the weight of the supply of gas required

$$G_{gas}=V_{gas}\frac{p_{g.st}}{RT_{g.st}}. \qquad (IX.21)$$

The weight of a gas varies according to its properties. It varies inversely as the gas constant.

Example 21. Determine the volume of a compressed air cylinder and the weight of air in the cylinder for a liquid-fuel rocket engine with cylinder feeding, assuming that the complete volume of the tank with combustible V_g = 0.209 m^3, and the volume of the oxidizer tank V_{ox} = 0.472 m^3. The feeding pressure of the components from the tank is to be taken as equal p_{tank} = 30 kg/cm^2. The initial temperature of the gas T_g = 20° C. The pressure in the cylinder is to be taken as equal 250 kg/cm^2.

Solution:

We first determine the total volume of the combustible and oxidizer tanks:

$$V_t=V_g+V_o=0{,}209+0{,}472=0{,}681 \text{ m}^3.$$

We assume that the reducer provides for normal feeding, with a difference of pressure in the cylinder and the tank Δp_{red} = 7 kg/cm^2.

We find the pressure in the cylinder at the close of the operation $p_{g\ fin}$

$$p_{g.st}=p_t+\Delta p_{red}=30+7=37 \text{ kg/cm}^2.$$

The ratio between initial and final pressure in the cylinder equals

$$\frac{p_{g.st}}{p_{g.fin}}=\frac{250}{37}=6{,}75.$$

According to Table 32 we find that the coefficients c_1 and c_2 for this ratio $\frac{p_{g\ st}}{p_{g\ fin}}$ are

$$c_1 = 0.61; \qquad c_2 = 0.81.$$

According to equation (IX.20) we find the volume of the cylinder

$$V_{gas}=\frac{p_t V_t \frac{c_1}{c_2}}{c_1 p_{g.st.}-(p_t+\Delta p_{red})}=\frac{30\cdot 10^4\cdot 0{,}681\cdot\frac{0{,}61}{0{,}81}}{0{,}61\cdot 250\cdot 10^4-(30\cdot 10^4+7\cdot 10^4)}=0{,}156\ \text{m}^3.$$

The weight of the gas enclosed in the cylinder is determined from the equation of state

$$p_{g.st}V_{gas}=G_{gas}RT_{g.st}$$

so that

$$G_{gas}=\frac{p_{g.st}V_{gas}}{RT_{g.st.}}=\frac{250\cdot 10^4\cdot 0{,}156}{29{,}3\cdot 293}=45{,}4\ \text{kg}.$$

Calculation of the Strength of the Cylinders.

In order to keep down the weight of the compressed gas cylinder it is best to give the cylinder a spherical shape. In that event the thickness of the walls of the cylinder δ can be computed by the formula

$$\delta=k\frac{pd}{4\sigma}\ \text{cm}, \qquad \text{(IX.22)}$$

where p is the rated pressure in the cylinder, in kg/cm^2;

d is the internal diameter of the cylinder, in cm;

σ is the admissible ultimate strength in kg/cm^2;

k is the safety factor.

The internal diameter d is found from the known volume of the cylinder V_{gas}. Since

$$V_{gas}=\frac{1}{6}\pi d^3, \qquad \text{(IX.23)}$$

therefore

$$d=\sqrt[3]{\frac{6V_{gas}}{\pi}}. \qquad \text{(IX.24)}$$

Instead of (IX.22) we now get

$$\delta=k\frac{p}{4\sigma}\sqrt{\frac{6V_{gas}}{\pi}}. \qquad \text{(IX.25)}$$

If the size of a spherical cylinder is such that it cannot be accommodated in the midship region of the rocket, it will be necessary to give this container the cylindrical shape with spherical bottoms. In this case the wall thickness of the cylindrical part of the cylinder is determined by the formula

$$\delta = k\frac{pd}{2\sigma}. \qquad (IX.26)$$

The thickness of the bottoms is determined according to (IX.22). The weight of this type of container will be considerably heavier than that of a sphere-shaped container.

The compressed gas cylinders are frequently made of high-strength steels type 25KhGSA and 30KhGSA, even though, as is known, these metals have a tendency to form cracks after welding.

<u>Selection of the Initial Pressure in the Gas Cylinder.</u>

The initial pressure in the cylinder $p_{g\ st}$ is chosen by starting out from the following considerations: Obviously, the greater the value for $p_{g\ st}$ the smaller will be the amount of space occupied by this container; and this is quite important especially if it becomes necessary to accommodate a spherical container in a rocket of small dimensions.

It is possible to show that the weight of a spherical container is not very much dependent upon the initial pressure of the gas contained in it. In fact, the weight of a spherical container Q_{tank} with an average diameter d, with a specific gravity of the material γ_m, will be

$$Q_t = \pi d^2 \delta \gamma_m. \qquad (IX.27)$$

Since

$$\delta = k\frac{p_{g\,st}d}{4\sigma}, \qquad (IX.28)$$

therefore

$$Q_t=\frac{\pi d^3 k p_{g.st}\gamma_{\text{м}}}{4\sigma}. \qquad (IX.29)$$

Substituting the value for d from (IX.24) we get

$$Q_t=\frac{6kp_{g.st}\gamma_{\text{м}}V_{gas}}{4\sigma}=1{,}50k\frac{p_{g.st}\gamma_{\text{м}}V_{gas}}{\sigma}. \qquad (IX.30)$$

Substituting V_g from (IX.20) we get

$$Q_t=1{,}50\frac{\gamma_{\text{м}}kp_tV_t\frac{c_1}{c_2}p_{g\,st}}{\sigma[c_1p_{g.st.}-(p_t+\Delta p_{red})]},$$

or

$$Q_t=1{,}50\frac{kp_tV_t\frac{c_1}{c_2}}{\left[c_1-\frac{p_t+\Delta p_{red}}{p_{g\,st}}\right]}\frac{\gamma_{\text{м}}}{\sigma}. \qquad (IX.31)$$

From equation (IX.31) it appears that for a given pressure and volume of the fuel tanks p_{tank} and V_{tank} the weight of the gas container varies only according to the difference indicated here in parenthesis

$$\left(c_1-\frac{p_t+\Delta p_{red}}{p_{g\,st}}\right)$$

and the ratio $\frac{c_1}{c_2}$.

If $P_{g\,st}$ is increased, these values change only to a negligible extent. For instance, if

$$p_{g.fin}=p_t+\Delta p_{red}=33+7=40,$$

a change of $P_{tank\,st}$ from 280 to 320 will cause the value for Q_{tank} to increase by less than 1%.

Thus an increase of the initial pressure in the gas container $P_{g\,st}$ does not materially affect the weight of the container and favors a certain decrease of its dimensions.

But an upper limit for the initial pressure in the container is set by the capabilities of the filling equipment. If the container is filled with the aid of compressors, the highest pressure is taken at 250-300 atü, since any increase of pressure beyond that point would involve complications of the compressor.

If the container is filled with the aid of evaporation of a liquid gas, the foregoing consideration does not apply, and the initial pressure can be chosen much higher. It is then limited by the possibilities of manufacturing thick-walled containers and fittings for very high pressures.

Section 56. Calculation of Cartridge and Liquid Pressure Accumulators /Solid and Liquid Propellant Gas Generators7.

The basic advantages of the cartridge pressure accumulator is its simplicity of construction and operation. In addition to this, by reason of its weight characteristic, the cartridge pressure accumulator is more efficient than the air pressure accumulator and falls very little behind the liquid pressure accumulator.

For small rockets, where simplicity of construction is one of the chief requirements, the cartridge pressure accumulator system is the most rational system of feeding.

Characteristics of the Powders Employed in the Cartridge Pressure Accumulator.

In designing the cartridge pressure accumulator, the most difficult thing is to insure constancy in the time of the consumption of the powder gases at the prescribed pressure.

As we know, powder does not burn as a mass but in parallel layers, only from the surface. So then, in order to obtain a uniform combustion, in time, of the powder charge, and, consequently, also a constant generation of the powder gases, necessary for the uniform forcing of the fuel from the tanks, it is necessary to have a strictly constant surface of combustion. For this purpose, we employ the so-called restricted grain. A part of the surface of the restricted powder grain is covered with a substance preventing the combustion of the powder. The combustion of the restricted grain can take place only on the uncovered surface.

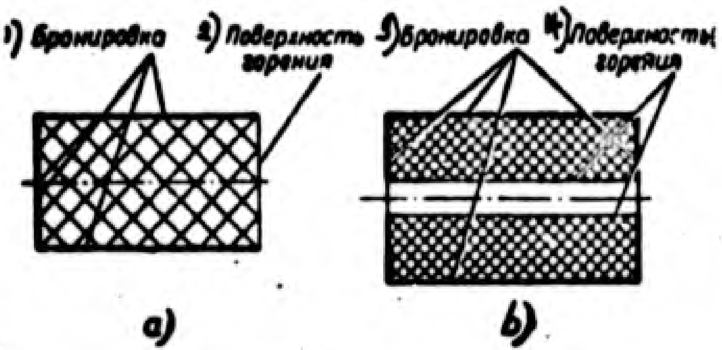

Figure 159. Armored powder charges.

a -- charge with a constant surface of combustion; b -- charge with a variable surface of combustion.

1 -- inhibiting surface; 2-- surface of combustion; 3 -- inhibiting surface; 4 -- surface of combustion.

If it is necessary to maintain a uniform time rate of combustion of the powder grain, the ends (face)(one or both) are left open (unrestricted). In such a grain the surface of combustion remains constant and equal to the area of the face (Figure 159 a). Consequently, the quantity by weight of G_p burning in a unit of time remains constant.

In Figure 159 b we also show a restricted grain with a non-uniform surface of combustion, increasing as a result of an increase in the diameter of the burning surface.

The burning rate of the powder is determined first of all by pressure at which combustion takes place. The higher the pressure, the more intensive the addition of heat to the powder grain and the greater the burning rate of the powder.

For the majority of powders employed, the dependence of the burning rate u on the pressure can be determined as follows:

$$u = u_1 p^{\nu} \text{ cm/sec}, \qquad (IX.32)$$

where p is the pressure in kg/cm^2;

u_1 is the burning rate of the powder in cm/sec at a pressure of 1 kg/cm^2, depending on the composition of the powder and the temperature of the initial combustion;

n is the exponent of burning rate at pressure p, depending upon the composition of the powder.

The average value of the exponent of burning rate n and of the burning rates of certain rocket powders are given in Table 33[1].

Table 33

Exponents of Burning Rate of Certain Powders

Type of Powder	Exponent of Burning Rate n	Burning Rate u_1 in cm/sec			Burning Temperature in Degrees Absolute
		- 18° C	21° C	60° C	
JP	0,71	0,0683	0,0832	0,1011	3170
JPN	0,69	0,0762	0,0879	0,1069	3170
A-2	0,65	0,0528	0,0608	0,0699	2470
German	0,71	0,0233	0,0270	0,0315	—
Japanese	0,42	0,1183	0,1324	0,1485	—
A-3	0,52	0,1993	0,2135	0,2283	—
A-1	0,69	0,0785	0,0913	0,1060	3270
Slow burning nitroglycerin	0,70	0,0323	0,0775	0,0436	2330

The burning rate of a powder also depends on its temperature. The higher the temperature of the powder, the easier the combustion reaction on the surface of the change and the greater the burning rate. As a result of the relatively high burning rate and the small heat conduction of the powder, there is no heating up of the powder charge in the process of

---

[1] R. N. Uimpress, Vnutrennyaya ballistika porokhovykh raket /Internal Ballistics of Powder Robkets/, Izdatel'stvo Inostrannoy Literatury /Publishing House of Foreign Literature/, 1952.

combustion, so that the temperature of the powder charge in the process of combustion remains practically constant and equal to its temperature at the beginning of combustion. Hence, the burning rate of a powder depends on the initial temperature of the powder.

The quantity of powder burnt in a unit of time is determined by the formula

$$G_p = F_p u \gamma_p \text{ kg/sec}, \tag{IX.33}$$

where F_p is the burning surface of the powder in m^2;

γ_p is the specific gravity of the powder in kg/m^3; $\gamma_p = 1.4\text{-}1.7\ g/cm^3$;

u is the burning rate of the powder in m/sec.

The Supercritical and the Subcritical Cartridge Pressure Accumulator.

In Figure 160 a, we show the diagram of the so-called "supercritical" cartridge pressure accumulator. In the solid body 1 there is the charge 2 (or the set of charges) of slow burning powder. When the engine starts, these charges are ignited by means of the igniter 3, consisting of black propellant powder or a thermite mixture. The ignition of the igniter is done by means of an electrical current. As a result of the burning of the powder there is formation of gases having a high temperature and pressure, which, passing through the throat of the nozzle 4 and, along the duct 5, go into the combustible and oxidizer tanks.

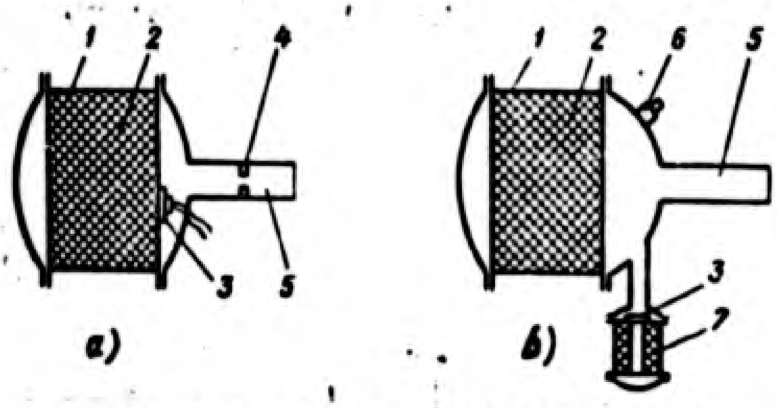

Figure 160. Diagram of the cartridge pressure accumulator.

a -- supercritical; b -- subcritical.

1 -- body; 2 -- powder; 3 -- igniter; 4 -- nozzle throttle; 5 -- duct for the discharge of the powder gases; 6 -- pressure release valve; 7 -- starting cartridge pressure accumulator.

The basic principle of the operation of such a cartridge pressure accumulator consists in the fact that the ratio of the feed pressure p_{tank} to the pressure p_{powder} in the chamber of the cartridge pressure accumulator is less or equal to the critical pressure, that is,

$$\frac{p_b}{p_p} < \beta = \left(\frac{2}{n+1}\right)^{\frac{n}{n-1}}.$$

With such a drop in pressure, in the throttle section of the nozzle there is set up a critical velocity of the flow of powder gases.

Proceeding from this, the pressure p_{powder} in the chamber of the cartridge pressure accumulator and the dimensions f_{dr} of the throttle section of the nozzle, are selected on the basis of certain ratios of gas dynamics (see Section 17) so that the consumption of the end products of powder combustion $G_{powder.dr}$ will ensure the feeding of the prescribed flow of the fuel components.

Let us consider the work of the supercritical cartridge pressure accumulator for the case when the lateral surface of the powder charge is inhibited and the burning takes place from the end (cigarette burning). With a change in the pressure in the chamber of the cartridge pressure accumulator, there is a change in the burning rate of the powder, and consequently, also in the quantity of powder gases forming per unit of time G_{powder}. There is also a change in the flow of the powder gases through the throat of the nozzle $G_{powder\ dr}$.

In this case, the change in the quantity G_{powder} of powder gases forming is expressed by the relation

$$G_p = G_{p_0} p_p^{\nu}$$

where G_{powder_0} is the quantity of powder gases forming at $p_{powder} = 1$;

$\nu = 0.45$-0.75.

The change in the flow of powder gases $G_{powder\ dr}$ through the throat of the nozzle in the first approximation is directly proportional to the pressure in the chamber of the cartridge pressure accumulator -- p_{powder}.

The character of the dependence of the change of G_{powder} and $G_{powder\ dr}$ on the pressure p_{powder} is given in Figure 161.

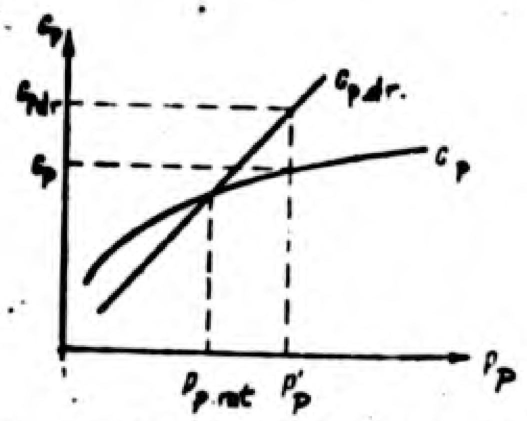

Figure 161. The dependence of the change of G_{powder} and $G_{powder\ dr}$ on the pressure in the supercritical cartridge pressure accumulator.

From these graphs we see that the characteristic of the change $G_{powder\ dr} = f'p_{powder})$ is more abrupt than the characteristic of the change of G_{powder}. Besides, in case of an accidental increase in the pressure p_{powder} higher than the rated and up to $p'_{powder} > p_{powder\ rated}$, the flow of powder gases $G'_{powder\ dr}$ becomes greater than the quantity G'_p [p = powder] of forming powder gases as a result of which the pressure in the chamber of the cartridge pressure accumulator is again lowered. This ensures stability of operation of the supercritical cartridge pressure accumulator and constitutes its advantage.

However, in view of the necessity of a great drop in pressure $\frac{p_{powder}}{p_{tank}}$ the pressure in the supercritical cartridge pressure accumulator reaches 200-250 atmospheres, resulting in an accumulator of great weight. In addition to this, with such pressures, there takes place an intensive heat transfer from the powder gases to the walls of the cartridge pressure accumulator, making it difficult to provide for cooling.

Hence, at the present time, the supercritical cartridge pressure accumulator is not used as a basic system and finds application only in launching systems.

In contrast to the supercritical cartridge pressure accumulator, the subcritical cartridge pressure accumulator (see Figure 160 b) does not have a throttle nozzle. In this case the difference in pressure in the cartridge pressure accumulator and in the tanks ($p_p - p_{tank}$) is small and is determined by the losses in the system of feed pipes. Hence, even the pressure p_p in the chamber of the subcritical cartridge pressure accumulator is small, thus improving its weight characteristics. In practice we may assume that the pressure in the chamber of the subcritical cartridge pressure accumulator is equal to the feed pressure p_{tank}.

In order to prevent the increase in pressure above that specified for the subcritical cartridge pressure accumulator, it is necessary to install a pressure discharge valve (6). This is necessary because in the subcritical cartridge pressure accumulator there is no throttle opening which assures the stability of operation of the supercritical cartridge pressure accumulator.

An effort is made, in the case of an engine system with pressure feeding, to reduce as far as possible the time required for the feed system to start functioning at the normal level, i.e., the time it takes the pressure in the tanks to reach the rated feed pressure p_{tank}.

The interval of time in the course of which the liquid-fuel rocket engine starts normal operation depends upon the free volume of the fuel tanks and the gas supply lines.

In accordance with the operating conditions of the engine system this time should not exceed 2-2.5 sec (depending upon the construction of the system).

The basic cartridge pressure accumulator functions on slow-burning powders and cannot ensure such rapid establishment of operating conditions. Hence, in the systems of feeding with the cartridge pressure accumulator, in addition to the basic one, there is installed an additional, starting cartridge pressure accumulator functioning on quick-burning powder. This starting cartridge pressure accumulator serves for the rapid filling with powder gases of the free volume of the fuel tanks and the gas supply lines and also for the ignition of the basic charge of the cartridge pressure accumulator.

The starting cartridge pressure accumulator is ignited by a special ignition charge by means of an electric spark.

Calculation of the Cartridge Pressure Accumulator.

In the functioning of the cartridge pressure accumulator the following phenomena occur in the pipes-tanks system.

1. Intensive cooling of the hot powder gases in the pipes and in the tanks themselves.

2. Evaporation of the liquid components and the partial solution in them of the powder gases.

3. Since for the end products of powder combustion $\alpha < 1$, then, in the oxidizer tank during the reaction with the vapors of the oxidizer there occurs an after-burning of CO and H_2, leading to an increase in the temperature of the gases in the oxidizer tank in comparison with their temperature in the combustible tank.

All these phenomena exert their influence on the displacement capacity of the powder gases, and, consequently, on the feeding of the components.

However, it is impossible to make exact allowance for their effect. Hence, in the calculation of the cartridge pressure accumulator, we proceed from the assumption that during the whole time the cartridge pressure accumulator operates, the gas volume of the system is filled only with powder gases. However, the processes of cooling, solution and after-burning of the powder gases, pointed out above, are taken into account by the introduction of experimental coefficients.

In the calculation of the dimensions of the charge of the cartridge pressure accumulator, we start from the following requirements:

1) The volume of powder gases entering the tanks per second should be equal to the necessary volumetric consumption of fuel (combustible and oxidizer) per second;

2) The time of combustion of the charge should be equal to the time of operation of the engine.

From the calculation of the engine, we know the volume of the tanks emptied per second:

$$V_{sec} = \frac{G_g}{\gamma_g} + \frac{G_o}{\gamma_o} \text{ m}^3/\text{sec}. \tag{IX.34}$$

On the other hand, the volume of the end products of powder combustion formed in one second is equal to

$$V_{sec\,p} = \frac{G_p}{\gamma_{p\,comb}} \text{ m}^3/\text{sec}, \tag{IX.35}$$

where G_{powder} is the quantity of powder burning in a unit of time in kg/sec;

$\gamma_{p\,comb}$ is the specific gravity of the products of combustion in kg/m^3 at the feeding pressure p_{tank}.

With the displacement feed system of the components by means of a cartridge pressure accumulator

$$V_{sec} = V_{sec\,p} = \frac{G_p}{\gamma_{p\,comb}}. \tag{IX.36}$$

In accordance with the equation for the state of the gases

$$\gamma_{p\,comb} = \frac{p_t}{RT} \text{ kg/m}^3, \tag{IX.37}$$

where R is the gas constant of the products of combustion of powder in kg m/kg °C;

T is the temperature of the products of powder combustion in degrees absolute, reached if the powder burns at a constant pressure;

p_{tank} is the feed pressure in kg/m^2.

The product RT is customarily referred to as the reduced force of the powder. It is designated by f_0. For the powders listed in Table 33, the value $f_0 = \sim 80{,}000 - 100{,}000$ kg m/kg.

By substituting (IX.33) and (IX.37) in equation (IX.36), we obtain

$$V_{sec} = \frac{F_p u \gamma_p RT}{p_t} = \frac{F_p u \gamma_p f_0}{p_t}, \qquad \text{(IX.38)}$$

from which we find the necessary burning surface of the powder

$$F_p = \frac{p V_{sec}}{u \gamma_p RT}. \qquad \text{(IX.39)}$$

The temperature of combustion of powder, depending upon the kind, is within the limits of 2,300-3,300° absolute.

In the tank, the powder gases have a lower temperature, amounting to about 700-900° C. The reason for this is the intense cooling of the powder gases during passage through the feed lines, and also as a result of the giving off of heat through the walls of the tanks and to the displaced liquid. In addition to this, the lowering of the temperature of the gas in the tanks can take place as a result of the spilling of a component into the gas volume and its evaporation. Since the temperature of the powder gases in the tanks is lower than the temperature of the combustion of powder, for obtaining the necessary consumption of fuel per second and the prescribed feeding pressure, it is necessary to burn in one second a larger quantity of powder than was determined in the theoretical calculation by formula (IX.39), that is, the quantity of powder burning in one second should be increased by the number of times that we decrease the absolute temperature of the gases.

In addition to this, the chamber of the cartridge pressure accumulator should generate a certain additional quantity of gas necessary for ensuring stable operation of the pressure release valve and for restoring the working pressure p_{tank} in the tanks in case it is reduced for some reason or other.

All these factors are taken into account by the introduction of the coefficient ψ. The value of the coefficient ψ is equal to 3-3.5. For the tank of oxidizer the value ψ, as a result of after-burning, will be less than for the combustible tank; for small engine systems, the value of ψ should be taken greater, because in this case the relative surfaces of heat transfer of the tanks and of the gas lines is larger.

The final formula for the determination of the necessary burning surface of the powder charge, taking into account the cooling of the powder gases, assumes the form

$$F_p = \frac{p_g V_{sec}}{u \gamma_p R T} \psi = \frac{p_g V_{sec}}{u \gamma_p f_6} \psi. \tag{IX.40}$$

For this purpose, in order to insure under all conditions the prescribed pressures of powder gases in the tank, the burning rate u of the powder in formula (IX.40) is taken at the lowest temperature of beginning of powder burning which is possible in operation.

If the temperature at the beginning of combustion is larger than the design temperature, the rate u will also be greater, as a result of which the flow and pressure of the gases will be larger than the design values.

The excess pressure in the chamber of the cartridge pressure accumulator will be drawn off, by the pressure release valve.

The length of the powder charge L is estimated by starting from the necessary time of operation τ of the liquid fuel rocket engine

$$L = u\tau \text{ cm}. \tag{IX.41}$$

In the calculation of the length of the powder charge, the rate u of combustion of the powder should be taken by starting with the maximum possible temperature of the beginning of combustion and, consequently, with the maximum burning rate of the powder. If we take the value u for the average or minimum temperature, the length of the charge L will be insufficient for insuring the necessary time of operation of the engine at the high temperature of the surrounding medium and the feeding of the components in the necessary amount will be stopped earlier than is permissible.

Example 22. Determine the dimensions of the powder charges of a cartridge pressure accumulator for any liquid fuel rocket engine with cylinder feeding, operating on 96% nitric acid (γ_o = 1560 kg/m^3) and kerosene (γ_g = 820 kg/m^3); the mixture ratio ν = 4.5.

Thrust P = 2000 kg. The specific thrust P_{spec} equals 211 kg-sec/kg. The time of operation τ = 30 sec. The pressure of feeding p_{tank} = 40 kg/cm^2.

Solution:

We determine the consumption of the components.

The total consumption of components is equal to

$$G=\frac{P}{P_{spec}}=\frac{2000}{211}=9{,}52 \text{ kg/sec.}$$

We find the combustible and oxidizer consumption by formula (V.14'):

$$G_g=\frac{G}{1+\nu}=\frac{9{,}52}{5{,}5}=1{,}73 \text{ kg/sec}; \quad G_o=\frac{\nu G}{1+\nu}=\frac{4{,}5\cdot 9{,}52}{1+4{,}5}=7{,}79 \text{ kg/sec.}$$

In accordance with formula (IX.34), we determine the volume of the tanks emptied per second

$$V_{sec}=\frac{G_g}{\gamma_g}+\frac{G_o}{\gamma_o}=\frac{1{,}73}{820}+\frac{7{,}79}{1560}=0{,}0071 \text{ m}^3\text{/sec.}$$

Let us take German powder; the specific weight (density of the charging) of the powder is γ_p = 1.5 g/cm^3 = 1500 kg/m^3, the strength of the powder is f_o = 80,000 kg-m/kg, the burning rate u of the powder at the pressure of 1 atmosphere and the lowest temperature of operation of the engine, which we assume to be equal to -40° C, amounts to $u_{-40^\circ C}$ = 0.0203 cm/sec (obtained by linear extrapolation of the data of Table 33); n = 0.71.

Then with p_{tank} = 40 at

$$u_{-40^\circ C;\, p_e=40\,at}=u_{-40^\circ C}\,p_e^{\nu}=0{,}0203\cdot 40^{0.71}=$$
$$=0{,}28\ cm/sec=0{,}28\cdot 10^{-2}\ m/sec.$$

Without taking into account the possible after-burning of the powder gases in the oxidizer tank and assuming for both tanks that $\psi = 3.3$, by means of formula (IX.40) we find the necessary turning surface of the powder

$$F_p=\frac{40\cdot 10^4\cdot 0{,}0071\cdot 3{,}3}{0{,}28\cdot 10^{-2}\cdot 1500\cdot 80000}=0{,}0278\ m^2.$$

We form the charge of the cartridge pressure accumulator with seven grams having armored lateral surfaces and burning from one end.

The necessary burning surface of the end of each charge f_p is equal to

$$f_p=\frac{F_p}{7}=\frac{0{,}0278}{7}=0{,}00397\ m^2.$$

The diameter of grain is equal to

$$d_p=\sqrt{\frac{4}{\pi}f_p}=\sqrt{\frac{4}{\pi}\,0{,}00397}=0{,}071\ \text{м}=7{,}1\ cm.$$

We determine the length of the powder charge L.

We assume that the maximum temperature at which we propose to operate the rocket engine is equal to +50° C. At such a temperature and given pressure the burning rate selected by us for the powder is equal to 0.415 cm/sec. Hence, the length of charge is

$$L=u_{+50^\circ}\tau=0{,}415\cdot 30=12{,}45\ cm.$$

Starting Cartridge Pressure Accumulator.

A starting cartridge pressure accumulator is necessary first of all for the rapid filling of the empty spaces of the tanks with powder gases.

Its gas output should ensure rapid rise of the working pressure in the tanks over the entire temperature range at which the liquid-fuel rocket engine operates.

The calculation of the weight of the starting charge is made by beginning from the value of the maximum empty spaces of the tanks and the lines at the minimum temperature of operation of the liquid-fuel rocket engine. In the operation of the starter cartridge pressure accumulator, the quantity of powder gases forming during the time of its operation should be such as to insure an increase in pressure in the volume V_{free} up to the prescribed feed pressure p_{tank}, that is,

$$G_{p.ch}=\frac{p_t V_{free}}{RT}.$$

It is obvious that the weight of the powder charge before combustion, $G_{p\ charge}$, is equal to the weight of the powder gases formed.

$$G_{p.ch}=G_{p.g}$$

In the functioning of the starting cartridge pressure accumulator, just as in the functioning of the basic one, there takes place a cooling of the powder gases entering the tank, due to the heat transfer through the walls of the system and to the liquid displaced.

The reduction in the temperature of the gases is taken into account by introducing the coefficient $\psi > 1$. The starting cartridge pressure accumulator functions at the initial moment of operation of the liquid-fuel rocket engine, and there takes place a heating of the tank system, causing a still greater reduction in the temperature of the powder gases. Hence, for the starting cartridge pressure accumulator, the value of ψ is greater than for the basic accumulator and equals 5-6.

Taking into account the above, the formula for the determination of the weight of the powder charge has the form

$$G_{pd}=\frac{p_t V_{free}}{RT}\varphi.$$

For insuring the rapid transition of the system to rated operating conditions, we use for the powder charge of the starter cartridge pressure accumulator a fast burning rocket powder.

In order to increase the burning rate of powder, the chamber of the starter cartridge pressure accumulator is made with a throttle nozzle and operates at pressures much higher than the feed pressure.

The thickness of the powder charge is determined from the condition

$$\delta=u\tau,$$

where u is the burning rate of the powder at average pressure in the chamber of the cartridge pressure accumulator and at the lowest temperature of operation;

τ is the prescribed time for the transition of the system to operating conditions.

In view of the short time of operation of the starting cartridge pressure accumulator, no provision is made for cooling it.

Calculation of the Liquid Pressure Accumulator.

The liquid pressure accumulator is an assembly which, by the burning of liquid fuels, produces gas for displacing the fuel from the tanks of the liquid-fuel rocket engine.

A feed system based on a liquid pressure accumulator is installed, for example, on the French one-stage meteorological rocket, the "Veronica."

On the basis of weight characteristics, feeding with the liquid pressure accumulator is superior to other forms of pressure feeding. However, a weakness of the system of feeding with a liquid pressure accumulator is its complexity in comparison with the air pressure accumulator or cartridge pressure accumulator systems.

Usually, the liquid pressure accumulator operates on self-igniting components. For the reduction of the temperature of the combustion products, the liquid pressure accumulator operates on an offset excess oxidizer ratio α. Besides, in order that there may not be any after-burning of gases in the oxidizer and fuel tanks, the reactor of the liquid pressure accumulator feeding the gases for displacing oxidizer operates with a large excess of oxidizer ($\alpha = 3$-6); the reactor feeding the gases for the displacement of fuel operates with a large excess of fuel ($\alpha = 0.3$-0.4).

The calculation of the liquid pressure accumulator is made in the following manner.

1. Knowing the components which will operate the liquid pressure accumulator and the feed pressure, the temperature of the gas generated by the liquid pressure accumulator is assigned.

2. We determine the excess oxidizer ratio with which we obtain the prescribed temperature of the gases in the reactor of the liquid pressure accumulator. Besides, as was pointed out, for a reactor generating the gas that forces out the oxidizer, we take $\alpha \gg 1$, and for the reactor feeding the gas into the fuel tank, we take $\alpha \ll 1$.

Usually, for the given fuel there are graphs for the change in temperature of combustion and of the value of RT depending upon α. If there are no such graphs, we prescribe a value for α tentatively, and calculate T and RT by the method given in Section 33 or 34.

3. Knowing RT and the pressure, we determine for each of the reactors the specific weight of the products of combustion obtained, using equation (IX.37)

$$\gamma_{c.pc}=\frac{p_c}{RT}.$$

4. Obviously, just as in the calculation of the cartridge pressure accumulator, equation (IX.36) is valid for each of the tanks

$$V_{sec}=\frac{G}{\gamma_{c.pr.}},$$

where V_{sec} is the volume of the tank emptied per second in m^3/sec;

G is the consumption per second of the components in the given reactor of the liquid pressure accumulator in kg/sec.

On the basis of formulas (IX.37) and (IX.36) we determine the necessary total combustion of the components in the liquid pressure accumulator

$$G=V_{sec}\gamma_{c.pr.}=V_{sec}\frac{p_t}{RT}\ \text{kg/sec.} \qquad (IX.42)$$

5. Just as in the case of feeding with the cartridge pressure accumulator, there takes place in the tank a cooling of the gases formed. Consequently, the consumption per second of the components must be increased by as many times as there takes place a decrease in the temperature of the gases forming. This increase in the consumption is taken into account by the coefficient $\psi > 1$.

The final design formulas have the form:

For the reactor of the liquid pressure accumulator of the oxidizer tank

$$G=\dot{V}_{sec.ox.}\frac{p_t}{(RT)_{ox1}},$$

For the reactor of the liquid pressure accumulator of the combustible tank

$$G=V_{sec1}\frac{p_t}{(RT)_{c1}}. \qquad (IX.43)$$

Section 57. Gas Pressure Reducer (Reducing Valve). Construction and Operation of the Reducer.

In the liquid-fuel rocket engine with cylinder feeding, the pressure reducers serve for lowering the pressure of the gases coming from the higher pressure cylinders into the tank with the components and constitute a basic element of this system of feeding.

In addition to this, in the liquid-fuel rocket engines, the pressure reducers are used in the feed systems for controlling the engine, for feeding automatic devices, for feeding the components to the steam generator and to the liquid pressure accumulator.

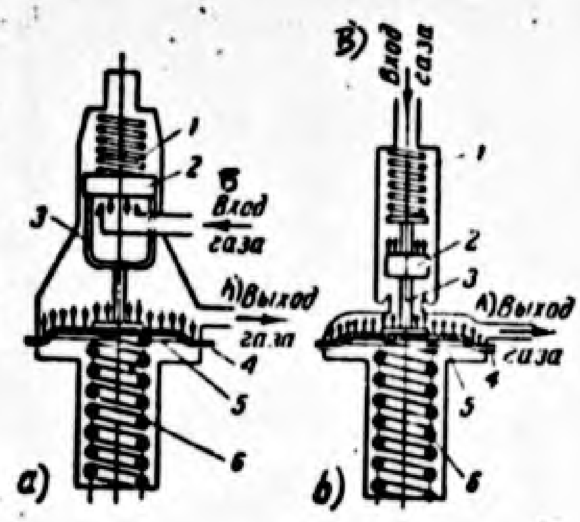

Figure 162. Diagram of the reducers of direct and reverse action.

a -- reducer of direct action; b -- reducer of reverse action.

1 -- locking spring; 2 -- valve; 3 -- pusher; 4 -- diaphragm; 5 -- disc; 6 -- mainspring. A) Gas exit; B)Gas inlet.

The pressure of the gas in the regulator is reduced as a result of the throttling of the gas when it flows from a cavity of high pressure into a cavity of low pressure through a passage section of small area. This section is formed by the valve and its seat. The essence of the process of throttling (braking) is this: in the narrow section formed by the valve and its seat, the gas develops a high speed due to a reduction in pressure, and the energy of the pressure is converted into kinetic gas energy. When it passes into the cavity of low pressure, the gas is braked; then its kinetic energy is lost in friction due to the numerous whirls accompanying the braking of the gas. Hence, with such a braking of the gas its pressure is not restored.

For the ideal gas, the temperature of braking over all the flow remains unchanged; consequently, the temperature of the gas in the cavity of low pressure, after braking of the gas, should be equal to the temperature of the gas before the beginning of the throttling.

But, since a real gas (especially at low temperatures) is not subject to the law of the ideal gas, there takes place a change in temperature with the throttling. For the majority of gases, including air and nitrogen, there takes place a reduction in the temperature of the gas; for hydrogen and helium there takes place an increase.

The amount of the reduction in pressure with throttling is determined by the dimensions of the throttle opening between the valve and the seat.

The characteristics of the reducer are determined to a considerable degree by the direction of the opening of the valve of the reducer. On this basis we distinguish reducers (regulators) of direct and reverse action.

In the reducer of direct action (Figure 162 a), the valve is opened in the direction of the effort exerted as a result of the action of the high pressure gas (along the flow of the gas).

In the reducer of reverse action (Figure 162 b), the valve is opened against the effort exerted by the action of the high pressure gas (against the flow of the gas).

Reverse Action Reducers.

When the reducer is not working, spring 5 (Figure 163 a and b, 164 a and b) is in a free state. Gas under high pressure enters the high pressure cavity 1 and presses the valve 2 against its seat 3, preventing the passage of gas through the valve. The valve is also sealed by the action of spring 7, which also presses the valve into its seat. In this case the reducer plays the part of a cut-off valve.

With compression by the regulator screw 4 of the mainspring of the reducer 5, there is exerted an effort which, through rod 6, is transmitted to valve 2. The compression of the spring lasts until the moment that the force of its pressure becomes greater than the total force of spring 7, the pressure

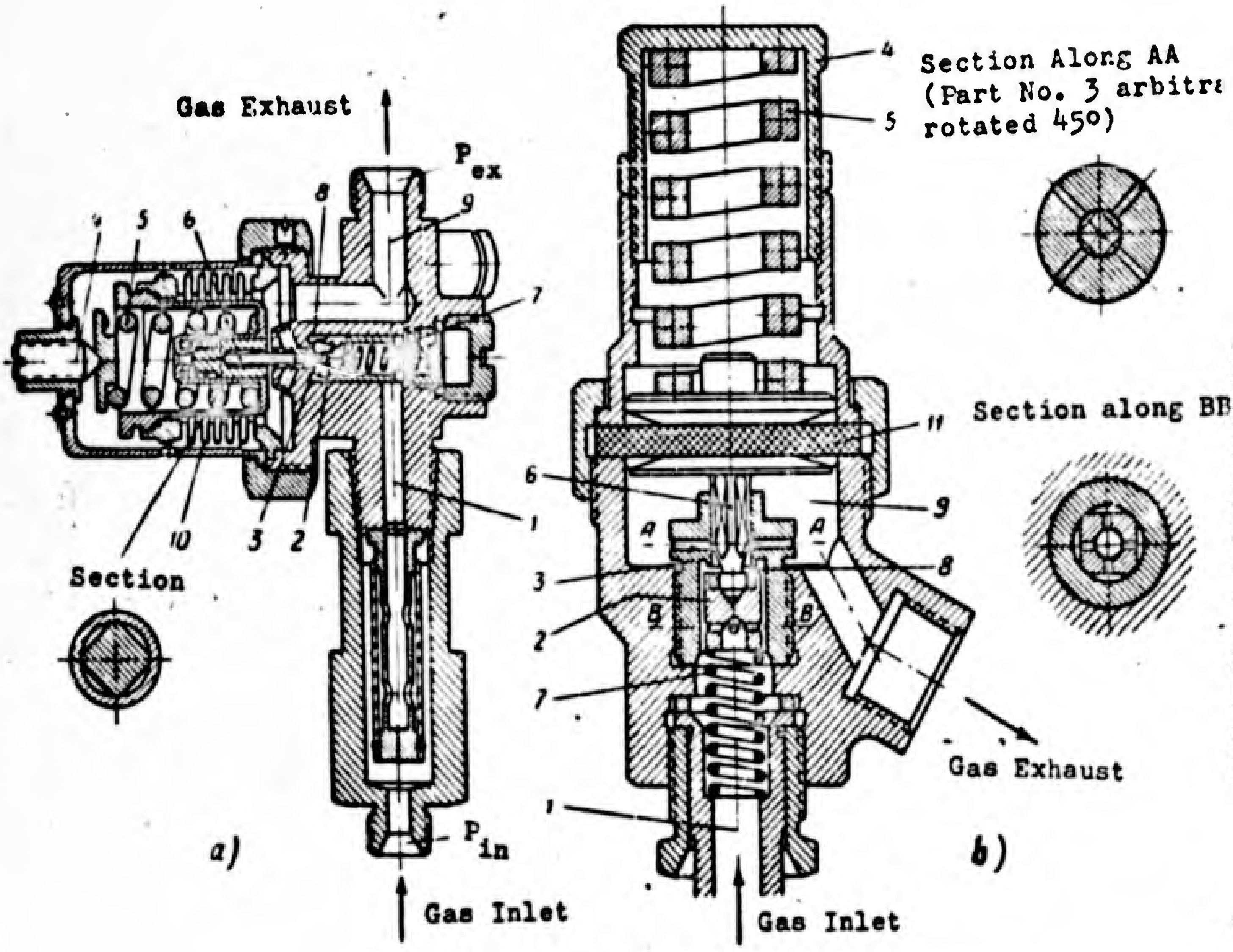

Figure 164. Reverse action reducers.

Legend the same as in Figure 163.

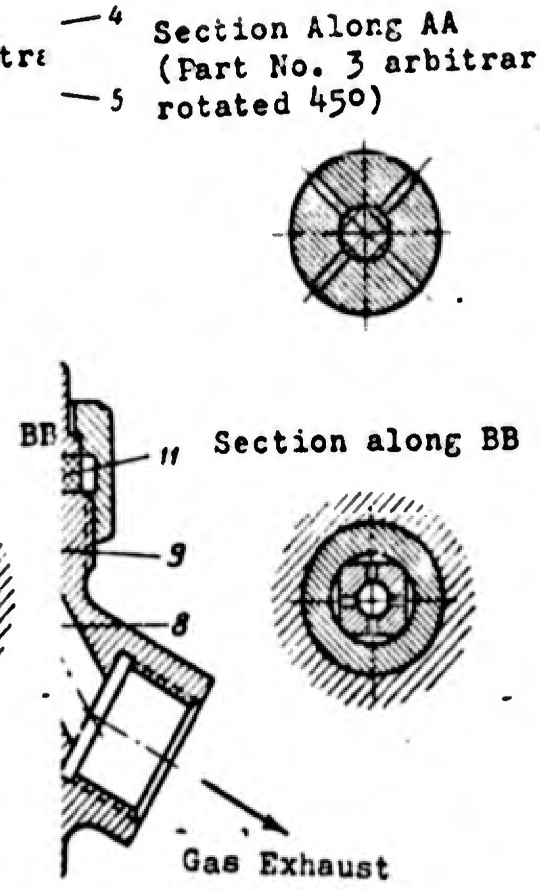

b)

let

educers.

e 163.

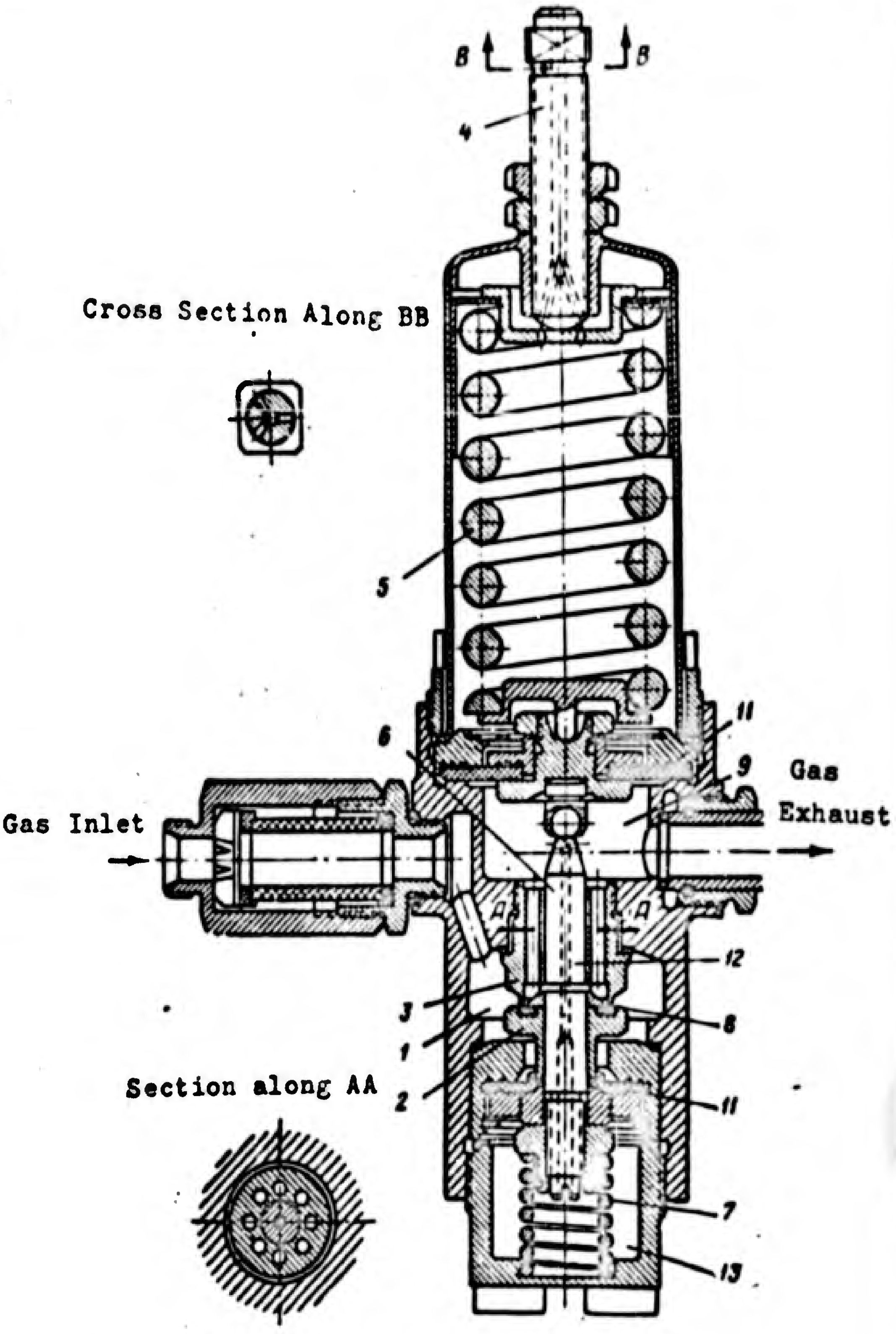

в)

B

of the high pressure gas pressing the valve 2 against its seat 3, and the pressure of the gas in the low pressure cavity on the surface F_m (bellows or diaphragm).

In addition, valve 2 is opened; the gas passes through the throttle section 8, its pressure drops and the gas goes into the low pressure cavity 9, from whence, through the exit opening, it flows into the feed system. The tighter spring 5 becomes, the greater the opening of the valve of the reducer, and the less the gas is throttled; that is, the greater will be the gas pressure behind the reducer.

In the reducer of the rocket A-4 (Figure 164 c), the low pressure cavity 9 communicates, by bore 12 in rod 6, with the cavity over the valve 13 which is separated from the cavity of high pressure by diaphragm 14. Hence, there is established an equilibrium of the forces of pressure of the exhaust gas acting on valve 2. The forces of pressure of the gas entering, acting on valve 2, are also equilibrated by the pressure on diaphragm 14; that is, valve 2 of the given reducer is released.

The reducer not only reduces the pressure of the gas down to the necessary value, but it is also a regulator, keeping a constant pressure in the tanks, in spite of the fact that the pressure at the entrance of the reducer (that is, the pressure in the cylinder) steadily drops.

If, for example, the pressure in the low pressure cavity 9 rises above the pressure prescribed and determined by the tightening of spring 5, the total force exerted on the surface F_m becomes so great that it overcomes the strength of the spring 5. Rod 6, together with valve 2, is shifted upwards and valve 2 reduces the passage section under the valve. In this case the flow of the gas into cavity 9 is reduced until the pressure in it again becomes equal to the pressure prescribed and fixed by the tightening of spring 5.

If the pressure in cavity 9 becomes lower than the prescribed pressure, there is a reduction in the pressure on surface F_m, acting against spring 5.

The spring, together with rod 6, moves downward. Together with it, valve 2 is also shifted. As a result of this the passage section, opened by the valve, is enlarged, the degree of throttling of the gas is decreased and the pressure of the gas in cavity 9 is again raised to that set by the tightening of spring 5.

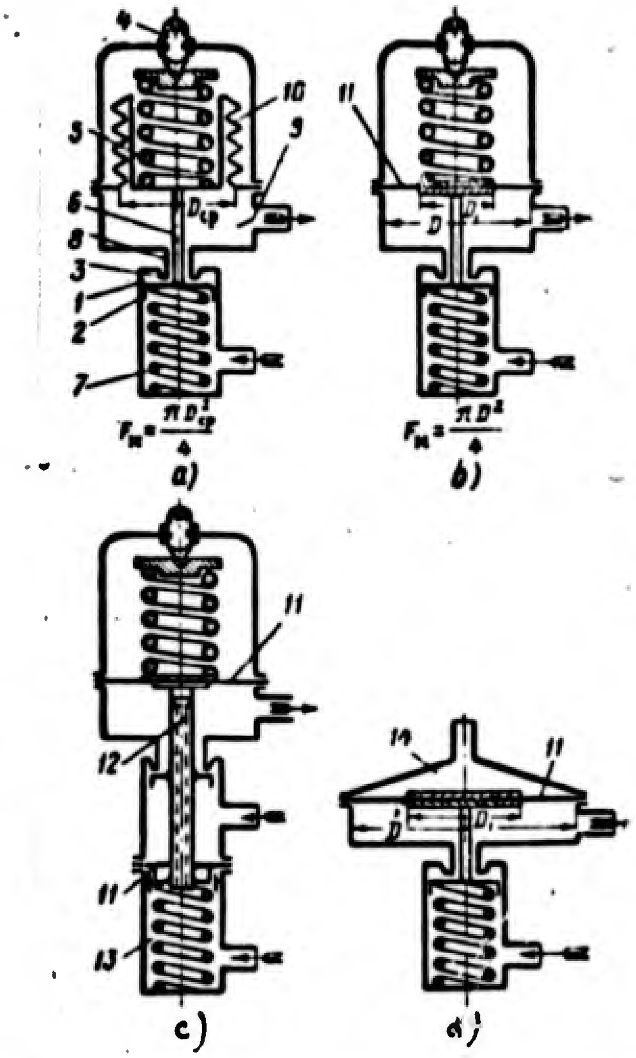

Figure 163. The various diagrams of reverse action reducers.

1 -- cavity of high pressure; 2 -- valve; 3 -- seat of valve; 4 -- regulating screw; 5 -- primary spring; 6 -- rod; 7 -- spring; 8 -- throttle section; 9 -- cavity of low pressure; 10 -- bellows; 11 -- diaphragm; 12 -- opening (passage); 13 -- low pressure cavity over the valve; 14 -- cavity of the gas of the pneumatic drive.

The Characteristic of the Reverse Action Reducer.

As we pointed out in the preceding section, the gas pressure reducer, if it is constructed properly, regulates the pressure of the gas at the exit. But, like the majority of regulators, it operates with some degree of irregularity. In other words, with a change in the pressure at the entrance into the reducer there is also a change in the pressure from its exit.

The dependence of the pressure P_{exit} at the exit on the pressure $P_{entrance}$ at the entrance to the reducer is called the characteristic of the reducer.

We distinguish two types of characteristics of the reducer.

The dependence of the pressure at the exit of the reducer on the pressure at the entrance, in the absence of a consumption of gas, is called its static characteristic.

This same dependence, with consumption of gas through the reducer, is called the dynamic characteristic.

In order to determine the characteristic of the reducer, that is, to find the dependence of $P_{entrance}$ on P_{exit}, we draw up the equation of equilibrium of moving parts of the reducer with the valve open (see Figures 163 and 164). The forces acting downward will be regarded as positive; those acting upward will be regarded as negative.

When the reducer functions downward, the only force acting is that of spring 5 which is equal to

$$P_{sp}=(Q_2-K_2h_x),$$

where Q_2 is the force of pressure in kg of spring 5 when the valve of the reducer is closed;

K_2 is the rigidity of spring 5 in kg/cm;

h_x is the lift of the valve in cm.

The following forces act upward:

1) The force arising from the difference of pressures on valve 2

$$-(p_{ent}-p_{ex})f_{valve}$$

where f_{valve} is the area of the feed opening passage section.

For the rocket A-4 reducer (see Figure 164 c), this force is equal to zero because valve 2 is in equilibrium.

2) The force of pressure on valve 2 of spring 7

$$-(Q_1+K_1h_x),$$

where Q_1 is the force of pressure in kg of spring 7 when the valve is closed (the force of precompression).

K_1 is the rigidity of spring 7 in kg/cm.

3) The force of gas pressure in the low pressure cavity on the diaphragm or bellows

$$-p_{ex}F_da_d,$$

where F_m is the area of surface of the diaphragm or bellows on which the low pressure gas acts;

a_m is a coefficient taking into account the natural rigidity of the diaphragm and depending upon the value of strain of the diaphragm (for further details concerning the value of a_m see below).

With equilibrium of the reducer, the sum of all these forces is equal to zero. The equation of equilibrium of the recoiling parts of the reducer will have the form

$$(Q_2-K_2h_x)-(p_{ex}-p_{ex})f_v-(Q_1+K_1h_x)-p_{ex}F_da_d=0. \tag{IX.44}$$

The value of the lift h_x of the valve is connected with the flow of gas taking place through the throttle section of the reducer.

The area of the throttle section of the reducer $f_{throttle}$ is determined by the lateral surface of the cylinder with a diameter equal to the diameter of the valve d_{valve}, and the height equal to its rise h_x. It amounts to

$$f_{th}=\pi d_v h_x.$$

The consumption of gas G through the reducer will be determined by the following equations.

With the subcritical drop in pressure,[1] that is, with

$$\frac{p_{ex}}{p_{ent}} > \beta_{cr} = 0{,}528 \text{ (for air)}$$

$$G = \mu\pi d_v h_s \sqrt{2g\frac{k}{k-1}\frac{p_{ent}}{v_{ent}}\left[\left(\frac{p_{ex}}{p_{ent}}\right)^{\frac{2}{k}} - \left(\frac{p_{ex}}{p_{ent}}\right)^{\frac{k+1}{k}}\right]}, \qquad (IX.45)$$

where μ is the coefficient of the consumption of the valve equal to 0.65-0.7.

In accordance with the equation of state

$$v_{ent} = \frac{RT_{ent}}{p_{ent}}.$$

Substituting in (IX.45) the expression of the specific volume we obtain

$$G = \mu\pi d_v h_s p_{ent}\sqrt{2g\frac{k}{k-1}\frac{1}{RT_{ent}}\left[\left(\frac{p_{ex}}{p_{ent}}\right)^{\frac{2}{k}} - \left(\frac{p_{ex}}{p_{ent}}\right)^{\frac{k+1}{k}}\right]}. \qquad (IX.46)$$

With the designation

$$A = \mu\pi\sqrt{2g\frac{k}{k-1}\frac{1}{RT_{ent}}\left[\left(\frac{p_{ex}}{p_{ent}}\right)^{\frac{2}{k}} - \left(\frac{p_{ex}}{p_{ent}}\right)^{\frac{k+1}{k}}\right]} \qquad (IX.47)$$

we obtain

$$G = Ad_v p_{ent} h_s, \qquad (IX.48)$$

whence,

$$h_s = \frac{G}{Ad_v p_{ent}}. \qquad (IX.49)$$

With a supercritical drop in pressure

$$\frac{p_{ex}}{p_{ent}} < \beta_{cr} = 0{,}528 \text{ (for air)}$$

and

$$G = \mu\pi d_v h_s \sqrt{2g\frac{k}{k+1}\left(\frac{2}{k+1}\right)^{\frac{2}{k-1}}\frac{p_{ent}}{v_{ent}}} \qquad (IX.50)$$

---

[1] In thermodynamics, the critical ratio of the pressure is usually designated by the character $\beta_{cr} = \frac{p_{cr}}{p_{ent}} = \left(\frac{2}{k+1}\right)^{\frac{k}{k-1}}$.

or analogous to the preceding

$$G = \mu\pi d_v h_x p_{ent}\sqrt{2g\frac{k}{k+1}\left(\frac{2}{k+1}\right)^{\frac{2}{k-1}}\frac{1}{RT_{ent}}}. \qquad (IX.51)$$

If again we designate

$$A = \mu\pi\sqrt{2g\frac{k}{k+1}\left(\frac{2}{k+1}\right)^{\frac{2}{k-1}}\frac{1}{RT_{ent}}}, \qquad (IX.52)$$

then

$$G = Ad_v h_x p_{ent}, \qquad (IX.53)$$

whence

$$h_x = \frac{G}{Ad_v p_{ent}}. \qquad (IX.54)$$

Hence, at any rate of flow of the gas through the valve (subcritical or supercritical), the shifting h_x of the valve can be determined by the formula

$$h_x = \frac{G}{Ad_v p_{ent}}. \qquad (IX.55)$$

However, the value A for the subcritical and the supercritical flow of the gas should be estimated roughly by the different formulas (IX.47) and (IX.52).

Having substituted the value h_x from (IX.55) in (IX.44), we obtain the equation for the characteristic

$$Q_2 - K_2\frac{G}{Ad_v p_{ent}} - (p_{ent} - p_{ex})f_v - \left(Q_1 + K_1\frac{G}{Ad_v p_{ent}}\right) - p_{ex}F_d a_d = 0. \qquad (IX.56)$$

Removing the parentheses and collecting the terms of the equation, we obtain

$$Q_2 - Q_1 - (K_2 + K_1)\frac{G}{Ad_v p_{ent}} - p_{ent}f_v - p_{ex}(F_d a_d - f_v) = 0. \qquad (IX.57)$$

whence

$$P_{ex}=\frac{1}{F_d a_d-f_V}\left(Q_2-Q_1-P_{ent}f_V-(K_2+K_1)\frac{G}{Ad_V P_{ent}}\right). \qquad (IX.58)$$

Hence, we have obtained an equation of the characteristic of the reducer; that is, the dependence of P_{exit} on $P_{entrance}$.

The product $F_{diaphragm}\,a_{diaphragm}$ is called the reduced area of the diaphragm and is designated as

$$F_{red}=F_d a_d \qquad (IX.59)$$

Then the equation (IX.14) is written in the form

$$P_{ex}=\frac{1}{F_{red}-f_V}\left(Q_2-Q_1-P_{ent}f_V-(K_2+K_1)\frac{G}{Ad_V P_{ent}}\right). \qquad (IX.60)$$

We now give an analysis of the equation of the characteristic of the reducer.

In the consumption of gas through the reducer G → 0, we obtain the equation of the static characteristic of the reducer of the form

$$P_{ex}=\frac{1}{F_d a_d-f_V}(Q_2-Q_1-P_{ent}f_V), \qquad (IX.61)$$

or

$$P_{ex}=\frac{1}{F_{red}-f_V}(Q_2-Q_1-P_{ent}f_V)=\frac{Q_2-Q_1}{F_{red}-f_V}-\frac{P_{ent}f_V}{F_{red}-f_V}. \qquad (IX.62)$$

This characteristic is given in Figure 165.

The static characteristic equation shows that with a decrease in pressure $P_{entrance}$ at the entrance the pressure at the exit P_{exit} rises somewhat. Such a dependence is characteristic for reverse action reducers. The steepness of the characteristic depends on the value of the ratio $\frac{f_V}{F_d a_d-f_V}$. Besides, the smaller this value, the more slanting the static characteristic of the reducer. We can reduce the ratio $\frac{f_V}{F_d a_d-f_V}$, either by increasing $F_{diaphragm}$ or by reducing f_{valve}.

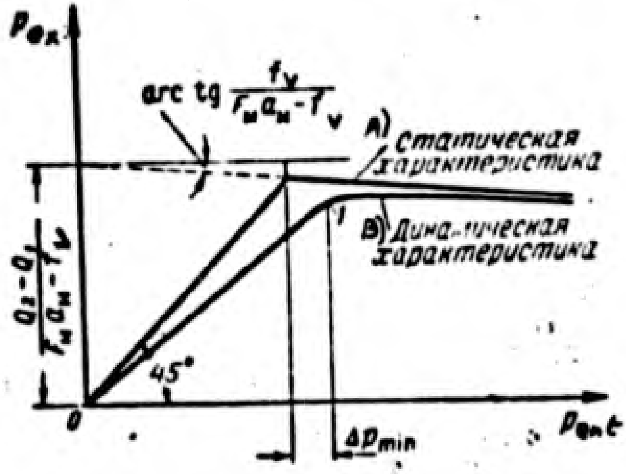

Legend:

A) Static characteristic
B) Dynamic characteristic

Figure 165. Characteristics of the reducer.

It is not expedient to reduce F_{valve} for a reducer designed for the prescribed consumption. Hence, for reduction of the slope of the characteristic it is necessary to increase the area of the membrane $F_{diaphragm}$.

From equations (IX.61) and (IX.62) we can also see that for obtaining the prescribed value of P_{exit}, with an increase in the value ($F_{diaphragm}$ $a_{diaphragm}$ f_{valve}), we must also increase the value (Q_2 - Q_1).

As we can see from the expression (IX.60), the third member of the equation also has an influence upon the dynamic characteristic. The influence of this member on the change of P_{exit} is the reverse of the influence of the second member of the equation forming a part of the equation of the static characteristic.

With the prescribed consumption of gas through the reducer and the pressure P_{exit}, it is necessary to select the rigidity of the spring and the diameter of the valve in such a way that the decrease in the value of the second member of the equation (IX.60), due to the drop in the pressure $P_{entrance}$, will be compensated by the increase in the third member of this equation. With very small differences in pressures ($P_{entrance}$ - P_{exit}), the degree of influence of the third member of the dynamic characteristic is determined to a considerable extent by the value of the coefficient A, the value of which, in accordance with formula (IX.47) tends towards zero with $\frac{P_{exit}}{P_{entrance}} \to 1$.

Normally (without a steep drop in the characteristic), the reducer can operate only up to a fixed difference in pressure

$$\Delta p_{min} = p_{ent} - p_{ex} \qquad (IX.63)$$

This minimum difference in pressure Δp_{min}, as we can see from (IX.60), depends upon the values $(K_2 + K_1)$ and G.

The smaller $(K_2 + K_1)$, that is, the more resilient the spring and the less the consumption through the reducer G, the less essential the influence of the third member and the smaller the difference Δp_{min} at which the reducer can operate.

Usually the value $\Delta p_{min} = (0.25-0.50) P_{exit}$.

In practice, with $P_{entrance} \to P_{exit}$ and with $P_{entrance}$ smaller than the prescribed P_{exit}, the opening of valve 2 will be the largest. Valve 2 then loses its regulating value and becomes a simple hydraulic resistance, as a result of which the pressure on the exit will drop just as the pressure at the entrance, differing from it only by the value of the losses from the hydraulic resistance; the curve $P_{exit} = f(P_{entrance})$ runs as shown on segment 0 - 1, Figure 165.

Just as for the rocket A-4 reducer (Figure 164 a)

$$(p_{ent} - p_{ex}) f_v = 0,$$

the equation of the dynamic characteristic (IX.60), after all the conversions for this reducer, will have the form

$$p_{ex} = \frac{1}{F_{red}} \left[Q_2 - Q_1 - (K_2 + K_1) \frac{G}{A d_{V} p_{ex}} \right].$$

with the consumption of gas G → 0, the pressure at the exit

$$p_{ex} = \frac{Q_2 - Q_1}{F_{red}} = \text{const},$$

that is, for the reducer of the given layout with G → 0, the pressure on the exit, theoretically, does not depend upon the pressure at the entrance to the reducer $p_{entrance}$.

The Direct Action Reducer.

Gas under high pressure goes into cavity 1 (Figures 166 and 167). The throttling of the gas takes place in the throttle opening 8 between valve 2 and the seat of valve 3. The gas of reduced pressure passes into the cavity of low pressure 9 and from there to the "consumer." In the reducer represented in Figure 167, operating in accordance with the diagram of Figure 166 a, we have illustrated the relief of the forces acting on valve 2 from spring 5 and the high pressure in cavity 1 by the setting of the two pistons 7. The gas enters cavities 1 and 9, over the pistons and along the ducts 10 and 12, and by the pressure of this gas the pistons 7 are relieved of their load.

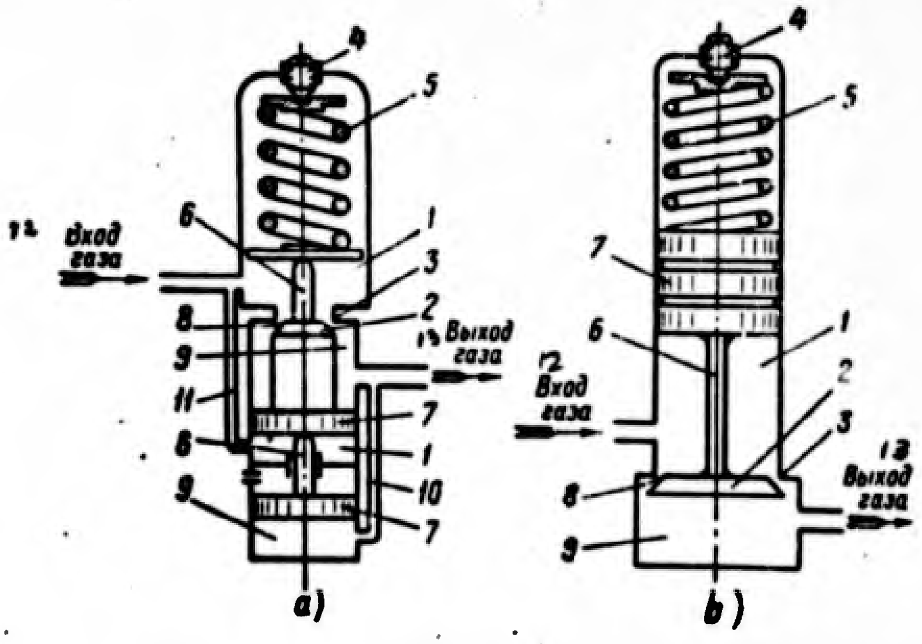

Figure 166. Diagrams of direct action reducers.

1 -- cavity of high pressure; 2 -- valve; 3 -- seat of the valve; 4 -- regulating screw; 5 -- mainspring; 6 -- stem; 7 -- piston (plunger); 8 -- throttle opening; 9 -- cavity of low pressure; 10 -- passage of low pressure; 11 -- passage of high pressure; 12 -- entrance of the gas; 13 -- exit of the gas.

In case of the reducer operating in accordance with the diagram of Figure 166 b, there is relief of the force acting on valve 2 from spring 5, and the pressure of the gas in cavity 1 because of the pressure on the plunger 7, which, with the stem 6, is rigidly connected with valve 2.

The difference between the reducer represented in diagram 166 a and reducer 166 b consists in the fact that in the first reducer the cavities of high and low pressure 1 and 9 consist of 2 parts, connected by the ducts 10 and 11. In the second reducer this connection is not present.

The operation of the direct action reducer takes place in the following manner.

In case of a rise in pressure in cavity 9 above that prescribed and fixed by the corresponding tightening of spring 5, the force exerted on valve 2, acting upward, increases. Valve 2 rises and the value of the throttle opening decreases, causing a reduction in the pressure, at the exit, to the prescribed value.

In case of a reduction of pressure in cavity 9, valve 2 drops down, the throttle opening 8 increases in size and the pressure again rises to that prescribed.

Characteristic of the Direct Action Reducer.

The equation of equilibrium of the recoiling parts of the reducer is drawn up in a manner analogous to equation (IX.44) and for reducers operating in accordance with the diagram of Figure 166 will have the form

$$p_{ent} f_v + Q - K \cdot h - p_{ex} (f_p - f_v) - p_{ex} f_e - p_{ent} f_p = 0. \tag{IX.64}$$

where f_{piston} is the area of the surface of the piston (plunger). After some simple transformations, taking into account equation (IX.55), the equation of the characteristic of the reducer will have the form

$$p_{ex} = \frac{1}{f_v} \left[Q - p_{ent} (f_p - f_v) - K \frac{G}{A d_v p_{ex}} \right]. \tag{IX.65}$$

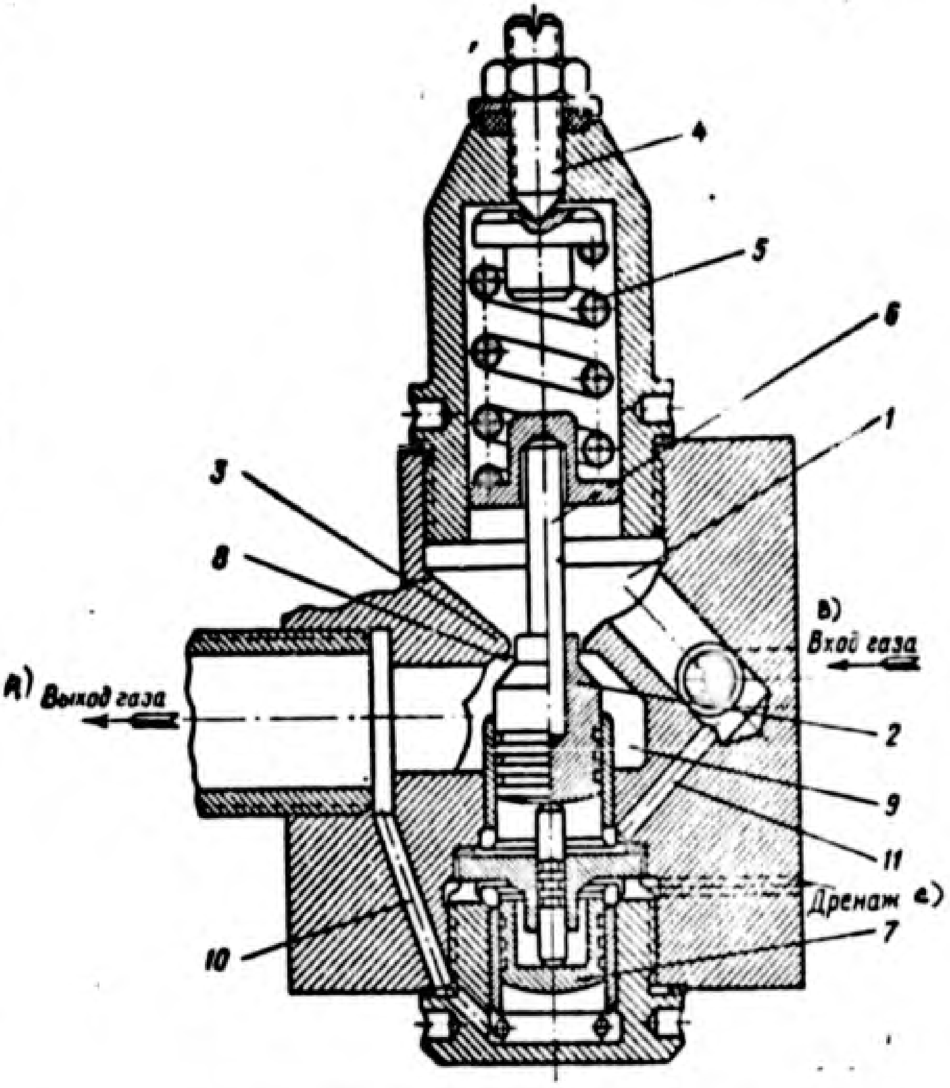

Legend:

A) Gas exit
B) Gas entrance
C) Drain

Figure 167. The direct action reducer.

The designations are the same as in Figure 166.

A comparison of the equation obtained with equation (IX.60) shows that they differ only in the constants. The influence of the second and third members of the equation obtained is analogous to their influence in equation (IX.60). Consequently, the characteristics of the reducer (static and dynamic) will have a form similar to the characteristic shown in Figure 165.

Method of Calculating the Reducer.

In liquid-fuel rocket engines with cylinder feeding, the reducer is the chief part ensuring, by regulation, the constant feeding of the components into the combustion chamber of the liquid-fuel rocket engine and, consequently, also the stability of the operating conditions. Hence, the chief requirement to be met by a reducer for a liquid-fuel rocket engine is that the pressure of the gas at the exit from the reducer should be constant and not depend on the pressure of the gas in the cylinder, that is, at the entrance of the reducer.

If the pressure at the exit from the reducer is changed, the feed pressure of the components, and, consequently, also the operating conditions of the liquid-fuel rocket engine will be variable.

In certain oleo-pneumatic systems, we require that the reducer provide for hermetical closing of the throttle section 8.

In the designing of reducers it is necessary to determine or select the following values.

1. Dimensions of the throttle section and the dimensions of the valve of the reducer.
2. The necessary strength of springs Q_1 and Q_2 and their rigidity K_1 and K_2.
3. The geometrical dimensions of the diaphragm or bellows and the reduced surface ($F_{reduced} = F_{diaphragm} \cdot \alpha_{diaphragm}$). If the reducer operates in accordance with the diagram of Figure 166, it is necessary to determine the dimensions of the piston or plunger. We calculate the reducer in the following manner:

1. We determine the dimension of the throttle section and prescribe the dimensions of the reducer valve.
2. With operation of the reducer in accordance with the diagram of Figure 163, we determine the force Q of the pressure of spring 7 on valve 2.
3. Having prescribed the dimensions of the diaphragm, bellows plunger or piston, we determine the effort force of the mainspring at the moment of the opening of the valve of the reducer.
4. Knowing the necessary forces of the springs, we determine its dimensions and rigidity.
5. On the basis of the equation of the dynamic characteristic, we check to see if the reducer meets the required conditions of operation.

For this purpose we prescribe a number of values of pressure at the entrance to the reducer, for example, with an interval of 20 atmospheres, and, in accordance with the equation of the dynamic characteristic, we determine the pressure at the exit from the reducer. If the value p_{exit} does not come within the prescribed limits, it is necessary to prescribe new dimensions for the elements of the reducer (the valve, diaphragm, bellows spring, etc). Then the task consists in selecting dimensions of the aforementioned elements such that the second and the third members of the equation of the characteristic of the reducer (IX.60), (IX.65) will mutually compensate each other to the maximum degree.

Determination of the Dimension of the Throttle Section.

The rated operating conditions for determining the dimensions of the throttle section will be those under which the maximum size of the throttle section opened by the valve is necessary.

Such conditions exist when the reducer stops functioning. In this interval, the pressure of the gas entering into the reducer p_{ent} will be minimum for the entire time in which reducer functions, and, consequently, the specific volume of gas coming up to the reducer will be maximum. At the same time, the velocity of flow of the gas through the throttle section at this stage will be minimum, because the drop in pressures which produces the velocity of the gas in the throttle section of the reducer will be minimum.

$$\Delta p_{min} = p_{ent} - p_{ex}.$$

The pressure at the exit from the reducer p_{exit} will be approximately equal (somewhat larger due to hydraulic losses) to the feed pressure p_{tank}.

With $\Delta p_{min} = (0.25\text{-}0.50)\ p_{exit}$ atmospheres, the ratio of the exit pressure of the gas from under the valve p_{exit} to the entrance pressure p_{ent} will be greater than the critical, that is,

$$\frac{p_{ex}}{p_{ent}} = 0{,}67 \div 0{,}8 > \delta_{cr} \text{ (for air } \delta_{cr} = 0{,}528).$$

Consequently, the velocity of the gas in the throttle section will be less than the velocity of sound.

We shall determine the area of the throttle section in accordance with the equation

$$f_{th} = \pi \cdot d_V \cdot h_x.$$

Substituting the value h_x from equation (IX.49), we obtain the desired equation for the determination of $f_{throttle}$:

$$f_{th} = \frac{\pi G}{A p_{ent\,min}}. \qquad \text{(IX.66)}$$

The value A is determined by equation (IX.47) and is equal to

$$A = \mu\pi \sqrt{2g \frac{k}{k-1} \frac{1}{RT_{ent}} \left[\left(\frac{p_{ex}}{p_{ent\,min}} \right)^{\frac{2}{k}} - \left(\frac{p_{ex}}{p_{ent\,min}} \right)^{\frac{k+1}{k}} \right]},$$

where μ is the coefficient of consumption equal to 0.65-0.7.

If the reducer reduces the gas in order to displace the fuel from the tanks and the freed volume of the tanks V_{sec}, and the pressure and temperature in the tanks p_{tank} and T_{tank} are known, then, obviously,

$$G = V_{sec} \frac{p_t}{RT_t}, \qquad \text{(IX.67)}$$

whence, substituting (IX.67) in (IX.66), we obtain

$$f_{th} = \frac{\pi V_{sec} p_t}{RT_t A p_{ent\,min}}. \qquad \text{(IX.68)}$$

Knowing $f_{throttle}$, the diameter for the valve d_{valve} is given. In the selection of d_{valve}, we usually take as a basis tests of existing reducer designs. For reducers of reverse action it is not expedient to prescribe large values for d_{valve} whereas for the reducers of direct action it is, on the contrary, sometimes expedient to prescribe values of the diameter of the valve close to the diameter of the piston or plunger.

Determination of the Tightening of the Springs Q_1 and Q_2 and the Area F_m.

The tightening of spring Q_1 is determined on the basis of the desired tightness of the reducer's valve. For this purpose we must press the valve to its seat with a force which will make the specific pressure of the valve on the surface of the seat greater or equal to the specific pressure which will assure a tightness $q_{tightness}$. The value of the specific pressure for tightness is determined by the material of the valve and the sealing band and also by the difference in pressures above and below the valve under which it is necessary to provide tightness.

In Figure 168, we show the necessary specific pressures of tightness for the different materials, the valve, and the sealing band.[1]

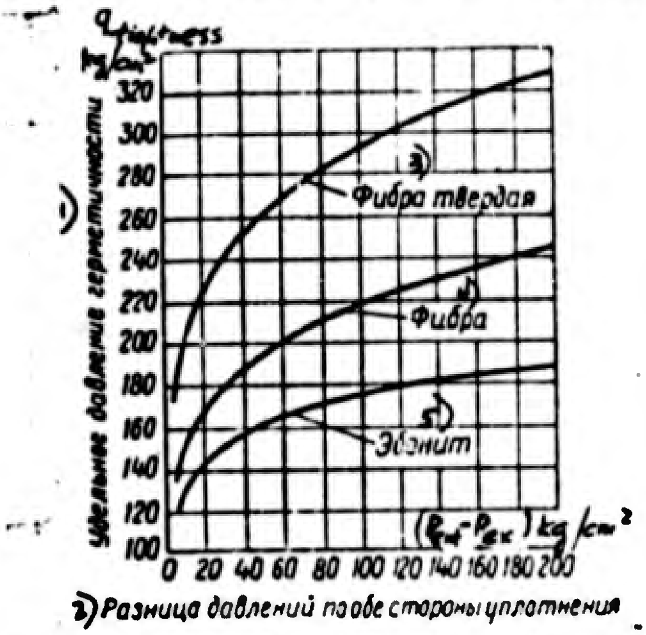

Legend:
1--specific pressure of tightness; 2--difference in pressure on both sides of packings; 3--hard fiber; 4--fiber; 5--edonite.

Figure 168. The minimum specific pressures for tightness for certain materials.

Having selected for the prescribed materials the necessary specific pressure for tightness $q_{tightness}$ in kg/cm^2, we can estimate the force of the spring Q_1.

The pressure of tightness

$$Q_{ti} = q_{ti} \cdot F_{seat}, \qquad (IX.69)$$

where F_{seat} is the area of the surface of contact of the valve seat with the valve in cm^2.

---

[1] Entsiklopedicheskiy Spravochnik "Mashinostroeniye" [Encyclopedic Handbook "Machine Construction"], Volume II, Mashgiz, 1948.

The force of the spring Q_1 is found from the equation

$$Q_{ti} = Q_1 + f_y (p_{ent.min} - p_{ex}).$$

whence, taking into account (IX.63) and (IX.69)

$$Q_1 = q_{ti} \quad F_{set} - f_y \Delta p_{min}. \tag{IX.70}$$

We prescribe a value for the area of the surface of the diaphragm (bellows piston or plunger). For the diaphragm, knowing $F_{\text{diaphragm}}$ and the dimensions of the protective discs, F_{reduced} is determined by the expression

$$F_{red} = F_d \cdot a_d.$$

The value $a_{\text{diaphragm}}$ for a diaphragm with protective discs or without them (see Figure 163 b, c) is determined by the formula

$$a_d = 0{,}33\left[1 + \frac{D_1}{D} + \left(\frac{D_1}{D}\right)^2\right]. \tag{IX.71}$$

For bellows we can assume $a_{\text{diaphragm}} = 1$.

The tightening force Q_2 of the primary spring of the reducer is determined from the equation of equilibrium of forces (IX.44) at the moment of the opening of the reducer, that is, at the time of the lifting of the valve $h_x = 0$.

Since the dynamic characteristic of the reducer is always lower than the static, sometimes after the calculation of the dynamic characteristic it is necessary to make a correction for the necessary tightening force of the mainspring and increase it by 5 - 10 kg. Hence, for spring calculations, the value of the design stress on the spring is taken somewhat larger than the tightening of the spring obtained from formulas (IX.60) and (IX.65) with $h_x = 0$.

After determining the values Q_2 and Q_1, starting from the constructional data, we find the diameter of the wire of the springs 7 and 5, the diameter of the coils, the pitch of the springs, the number of coils, and the rigidity of the springs.

Knowing all the dimensions of the reducer, we check to see if the reducer meets the prescribed conditions of operation, for which purpose, in accordance with the equation of the dynamic characteristic, that is, taking into account the consumption of gas through the reducer, we determine the pressure at the exit from the reducer p_{exit} for various values of pressure at the entrance p_{ent} (with an interval of 20-30 atmospheres).

The discrepancy in the value of p_{exit} should not exceed the prescribed limits.

Section 58. Example of the Calculation of the Reducer.

Let us calculate the reducer for the reduction of the air from the cylinder with an initial pressure of 200 atmospheres to p_{exit} = 30 atmospheres. The consumption of air through the reducer G = 80 grams/sec = 0.08 kg/sec.

When the pressure at the entrance is reduced to 40 atmospheres, the change in the pressure at the exit should not exceed 0.5 atmospheres. The reducer operates in accordance with the scheme of direct action (see Figure 166 b). At the beginning of the reduction, the temperature of the gas in the cylinders is equal to 18° C.

To determine the throttle section areas we find the temperature of the gas in the cylinder at the end of the reduction $T_{ent} = T_{g.end}$ and the value A. In accordance with equation (IX.10), assuming $n = 1.25$, we obtain

$$T_{g.end}=T_{g.st}\left(\frac{p_{g.end}}{p_{g.st}}\right)^{\frac{n-1}{n}}=291\left(\frac{40}{200}\right)^{\frac{1,25-1}{1,25}}=211^{\circ}\ \text{abs.}$$

According to formula (IX.47), assuming μ = 0.68, we find the value of A when the reducer stops functioning.

$$A=0,68\cdot 3,14\sqrt{2\cdot 9,81\,\frac{1,41}{1,41-1}\,\frac{1}{29,3\cdot 211}\left[\left(\frac{30}{40}\right)^{\frac{2}{1,41}}-\left(\frac{30}{40}\right)^{\frac{1,41+1}{1,41}}\right]}=$$

$$=0,0518.$$

Knowing A, we determine $f_{throttle}$

$$f_{th}=\frac{3,14\cdot 0,08}{0,0518\cdot 40\cdot 10^{4}}=0,121\cdot 10^{-4}\ m^{2}=0,121\ \mathrm{cm}^{2}.$$

We take d_{valve} = 18 mm.

We chose the diameter of the plunger to equal the diameter of the valve, that is, $f_{valve} = f_{plunger}$. According to the equation (IX.65) we determine the necessary force for the mainspring with G = 0:

$$Q=p_{ex}f_{v}=30\frac{3,14\cdot 1,8^{2}}{4}=76,4\ \mathrm{kg}.$$

We design the spring[1] for a force of P = 90 kg.

The spring is made of silicon steel 60C2. For it

$$\tau=75\ \mathrm{kg/mm^{2}};\quad G=8000\ \mathrm{kg/mm^{2}}.$$

We prescribe the following for the index of the spring

$$c=\frac{D}{d}=5.$$

For c = 5, the coefficient k_o = 1.3. The diameter of the coil of the spring

$$d=1,6\sqrt{\frac{k_{0}cP}{\tau}}=1,6\sqrt{\frac{1,3\cdot 5\cdot 90}{75}}=4,47\ \mathrm{mm}.$$

We take d = 4.5; D = c x d = 22.5 mm.

We set the rigidity of the spring K and determine the necessary number of coils i:

$$i=\frac{Gd^{4}}{8KD^{3}}=\frac{8000\cdot 4,5^{4}}{8\cdot 5\cdot 22,5^{3}}=7,2.$$

We take the working number of coils i = 7.

We determine the precise value of the rigidity of the spring.

$$K=\frac{Gd^{4}}{8D^{3}i}=\frac{8000\cdot 4,5^{4}}{8\cdot 22,5^{3}\cdot 7}=5,14\ \mathrm{kg/mm}.$$

---

[1] In determining the dimensions of the spring we employ the usual formulas used in the calculating of machine parts.

We construct the dynamic characteristic of the dependence of P_{exit} on P_{ent}.

Since in our reducer $f_{valve} = f_{plunger}$, the dynamic characteristic equation for it will have the form

$$p_{ex} = \frac{1}{f_v}\left(Q - K\frac{Q}{Ad_v p_{ent}}\right).$$

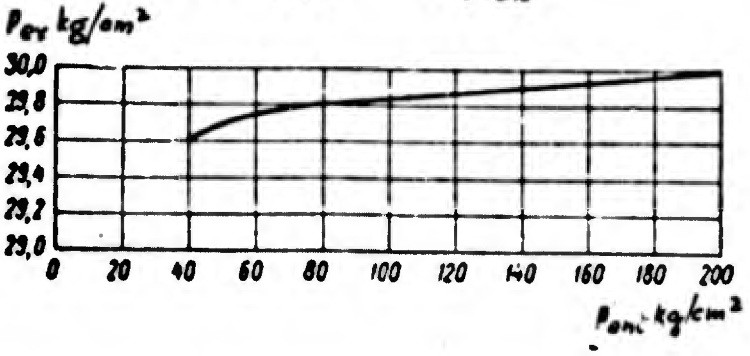

Figure 169. Estimated performance of the reducer.

The graphic characteristic of the dependence of P_{ent} on P_{exit} is represented in Figure 169. As we can see, the pressure at the exit is not outside the limit set by the conditions.

Section 59. Pumps for Feeding the Components.

In the mechanical pumping systems for propellant feed in liquid-fuel rocket engines, the pumps are used for ensuring the necessary feed pressure. In a pump of any type, the mechanical work expended in operating it is converted into the mechanical energy of transfered liquid. In principle, there are two types of pumps: the volumetric and the vane-type pumps.

Volumetric pumps feed the liquid by displacing it with a piston or with some other solid body. As an example of such pumps, there are the gear pumps and the rotary pumps, in addition to the ordinary piston and plunger type pumps.

In the vane-type pumps, the energy necessary for raising the pressure of the liquid is transmitted to the latter by vanes of a rotating wheel. The centrifugal and axial pumps belong in the class of vane-type pumps.

The most widely used in liquid-fuel rocket engines are the centrifugal blade pumps. The advantage of these consists in their small dimensions and weight. In addition to this, they can operate with a large number of revolutions and are convenient for connecting directly with the shaft of a turbine.

The Diagram of the Centrifugal Pump and the Basic Values Characterizing It. The Speed Coefficient.

The liquid is fed through the inlet nozzle 1 (Figure 170), the shape of which depends on the arrangement of the lines and the pump in the system, to a rotating wheel 2. In the wheel of the pump the liquid flows along the duct formed by the walls of the wheel and the vanes 3. The force acting from the vanes of the wheel on the liquid forces it to move so that the supply of energy for a unit weight of liquid is increased. Then there takes place an increase both in the potential energy of the pressure (of the static pressure), as well as of the kinetic energy of the liquid (its absolute velocity). After leaving the wheel the liquid goes into diffuser 4, where its absolute velocity is reduced and the pressure is increased. The simplest diffuser consists of smooth discs constituting its walls, and is called a vaneless diffuser. The vane diffuser has stationary vanes 5 (indicated in Figure 170 by dotted lines), which make possible a more rapid checking of the velocity of the flow. After passing the diffuser, the liquid goes into the spiral duct (spiral conveyor) 6, the purpose of which is to gather the liquid leaving the wheel and also to reduce its velocity. The liquid is fed along the pressure tube into the network.

In order to reduce the overflow of the liquid from the cavity of high pressure (diffuser, spiral conveyor) to the side of low pressure (suction nozzle), we make in the pump a sealing element 7, and in order that the liquid from the pump may not escape along the shaft and get into the bearing 8, there is a packing (stuffing box) 9.

For the calculation of the pump and the appraisal of its basic qualities, the most important values are the following:

1. The volumetric consumption of liquid through the pump Q in m^3/sec.

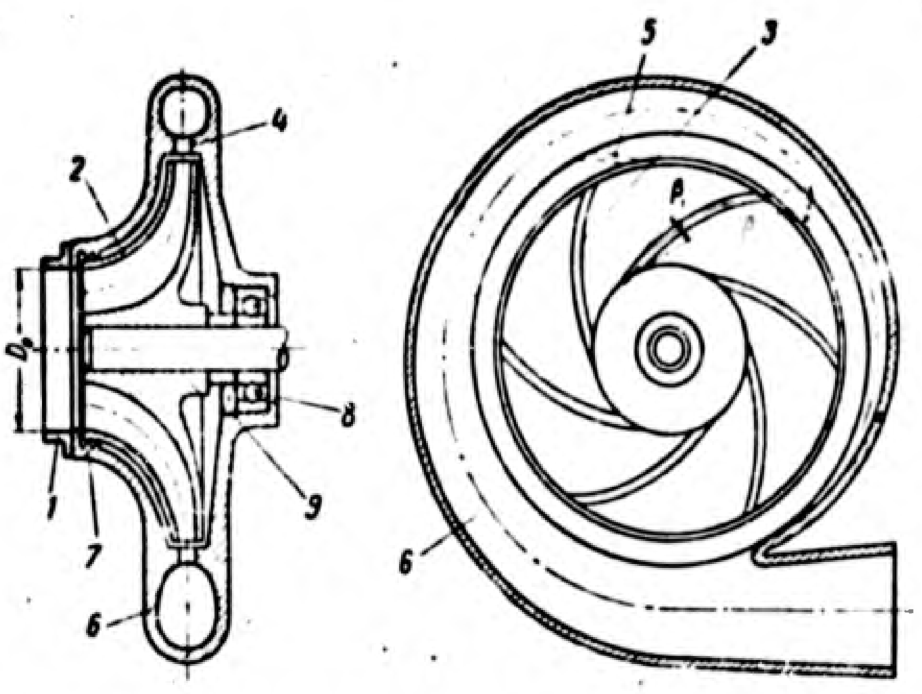

Figure 170. The diagram of the centrifugal pump.

1 -- inlet nozzle; 2 -- pump wheel; 3 -- vanes; 4 -- diffuser; 5 -- vanes of the diffuser; 6 -- collector for the spiral conveyor; 7 -- the front labyrinthic packing; 8 -- bearing of the shaft; 9 -- packing of the bearing (stuffing box).

It is determined from the consumption of the component (G or G_o) found in the thermal calculation in accordance with the relation

$$Q = \frac{G}{\gamma} \text{ m}^2/\text{sec}, \qquad (IX.72)$$

where γ is the specific weight of the component in kg/m^3.

2. Consumption of liquid through the pump wheel. The actual consumption through the pump wheel, on the basis of which it should be calculated, will be greater than the consumption through the pump for the following reasons.

In spite of the fact that the pump wheel is protected from overflowing and leakage by packing, still some flowing over takes place. The overflow is particularly large in pumps developing high pressures with small consumptions; that is, in pumps of liquid-fuel rocket aircraft engines.

In order that the pump may actually deliver the required consumption Q in the presence of a leak or overflow through the wheel, a greater amount of liquid should pass through. The increase in the consumption is equal to the sum of the overflow and leakage per second.

The value of the overflow and the leakage is characterized by the volumetric efficiency of the pump η_o, and the consumption of liquid through the pump wheel Q consists of

$$Q_o = \frac{Q}{\eta_o}. \qquad \text{(IX.73)}$$

3. The pressure head of the liquid. The value of the pressure head which is created by the pump of the liquid-fuel rocket engine is determined by the necessary feeding pressure P_{feed}, which includes the pressure in the chamber, and also the hydraulic losses in the feeding and the cooling systems. From this pressure it is necessary to subtract the pressure under which the liquid enters the pump P_{ent}. Consequently, the drop in pressure created by the pump ΔP_{pump} may be estimated roughly by the formula

$$\Delta p_p = p_f - p_{ent} \text{ kg/cm}^2. \qquad \text{(IX.74)}$$

The pressure created by the pump is usually expressed in meters of the column of liquid delivered and is designated by H. Its value amounts to

$$H = \frac{\Delta p_p}{\gamma} \text{ m}, \qquad \text{(IX.75)}$$

where ΔP_{pump} is expressed in kg/m^2 and γ in kg/m^3.

Since ΔP_{pump} is usually expressed in kg/cm^2 and γ in kg/l, then in this case

$$H = \frac{\Delta p_p 10^4}{\gamma \cdot 10^3} = \frac{10 \Delta p_p}{\gamma} \text{ m}. \qquad \text{(IX.76)}$$

4. The number of revolutions of the pump n per minute.

In designing a pump it is necessary to employ experimental data which characterize the different kinds of losses occurring in it. However, such data can be employed correctly only if the design pump and the pump model, the data of which are employed in the calculation, are similar. In addition to geometrical similarity, complete similarity of pumps must meet a number of conditions or so-called similarity criteria. One of such criteria of similarity is the coefficient of speed n_s. Its value is calculated by the formula

$$n_s = 3{,}65 \frac{\sqrt{Q}}{\sqrt[4]{H^3}} n, \tag{IX.77}$$

in which the value 3.65 is a conventional, historically established coefficient. As we shall show later on, the value of the coefficient of speed characterizes well the form of the pump wheel. Then, too, similar pumps must have the same number n_s, though the meeting of this requirement alone is insufficient for the pumps to be similar.

The creation of pressure head by the centrifugal pump takes place as a result of the forced movement of the liquid along the pump wheel and the corresponding velocities imparted to it.

The liquid flow through the pump is customarily characterized by the diagrams of velocities at the wheel's inlet and exit.

The Diagram of Velocities at the Inlet to the Wheel and the Arrangement of the Vanes.

The transferred liquid passes from the inlet nozzle to the wheel with an absolute velocity c_0, equal to

$$c_0 = \frac{Q_0}{\frac{\pi}{4}(D_{1.0}^2 - d_b^2)}. \tag{IX.78}$$

This velocity is directed along the axis of the pump because in the ordinary cases it is not permitted to have a rotation (twist) of the liquid at the entrance.

As a result of the suitable shape of the wheel duct, the liquid turns smoothly in the radial direction and approaches the vanes. Then, if we do not take into account the influence of friction, at the inlet part of the wheel (up to the edge of the vanes), the liquid does not have any rotation and the vectors of its velocity lie in the meridional sections of the wheel.

The vanes at the inlet part can be made in different ways. The simplest of all is to make the vanes with edges parallel to the axis of the pump and have the vanes start where the turn of the liquid has in the main already terminated (see Figure 171 a). The diameter of the disposition of the inlet edges of the vanes, which from now on we shall designate as D_1, is usually made equal to the diameter of the inlet to the wheel $D_{1,o}$, though it may be even larger than this diameter. Such a shape for the vanes, however, has a weakness due to the fact that the inlet part of the wheel of the pump is not used for imparting energy to the liquid. For this reason, sometimes the vanes are made longest and are placed in the inlet part of the wheel. Besides, the longer vane will have an edge lying in the plane perpendicular to the axis of the pump (see Figure 171 b). In such wheels the diameter P_1 of the inlet to the vane will be variable and the range of its value will be all the greater, the longer the vane. In this case we take for the design diameter of the entrance to the vane the diameter of the middle of the vane.

The meridional velocity at which the liquid moves to the vane is designated by c_{1m}. In the general case the value of this velocity amounts to

$$c_{1m} = \frac{Q_0}{F_1},$$

where F_1 is the passage section of the wheel at the edges of the vane.

The value of the passage section F_1 is determined in principle by the area of the surface of a frustum of a cone, the generatrix of which is the edge of the vane. If the edges of the vanes are parallel to the axis, the entrance of the liquid takes place through the cylindrical surface $\pi D_1 b_1$. From this area, however, it is necessary to subtract the area occupied by the edges of the vanes themselves.

The decrease (constriction) in the passage section for the liquid, due to the vane, is taken into account by the coefficient of constriction at the entrance $\psi_1 < 1$. Then,

$$c_{1m} = \frac{Q_0}{\pi D_1 b_1 \psi_1}. \qquad \text{(IX.79)}$$

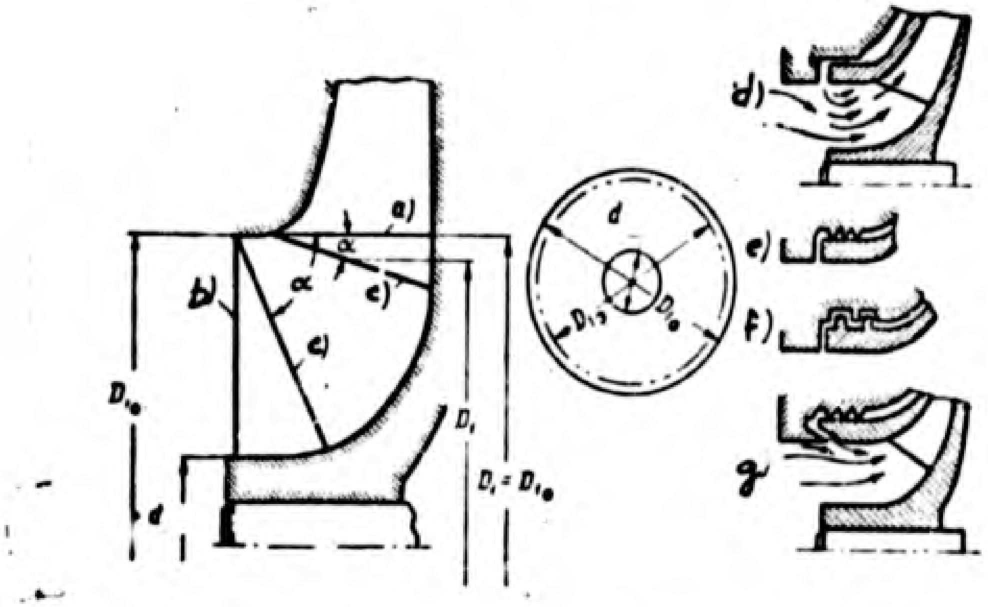

Figure 171. The inlet part of the pump and the kinds of packing.

a -- edge of the vane is parallel to the axis of the pump, $D_1 = D_{1,0}$; b -- the edge of the vane lies in the plane perpendicular to the axis of the pump (the longest vane; c -- vane edge is inclined at an angle α.

d, e, f and g -- the different types of front packing.

With small slope angles of the vanes' α edges we can also use the relation (IX.79), taking D_1 and b_1 as the dimensions given in Figure 171 c. With large angles α, it is necessary to use the relation taking into account the slope of the edges.

When the liquid strikes the wheel, the liquid gets a certain velocity in relation to the wheel, which is called the relative velocity w. The relative velocity at any point of the wheel is made up of the meridional velocity of the liquid C_m and the peripheral velocity of a given point of the wheel taken with the opposite sign, minus u. The peripheral velocity should be taken with the sign "minus" because if the wheel is stationary, it is necessary to impart to the liquid flowing to the wheel an angular velocity ω, equal to the angular velocity of the wheel rotation. Consequently, each point of the liquid in relative movement receives a peripheral velocity minus u. For example, at the entrance to the vanes the liquid acquires, relative to the wheel a velocity $-u_1 = -\frac{\pi D_1 n}{60}$.

For the determination of the law of the arrangement of the entrance edges of the vanes, it is necessary to know the relative velocity of the liquid at the entrance to the vanes w_1. The diagram of velocities in this section of the pump is shown in Figure 172.

The value of the relative velocity at the entrance may be estimated roughly by the equation

$$w_1 = \sqrt{c_{1m}^2 + u_1^2}. \qquad (IX.80)$$

Its direction is determined by the value of the angle β_1, which is subtracted from the negative direction of the peripheral velocity in the direction of the rotation of the wheel. In this case

$$\operatorname{tg} \beta_1 = \frac{c_{1m}}{u_1}. \qquad (IX.81)$$

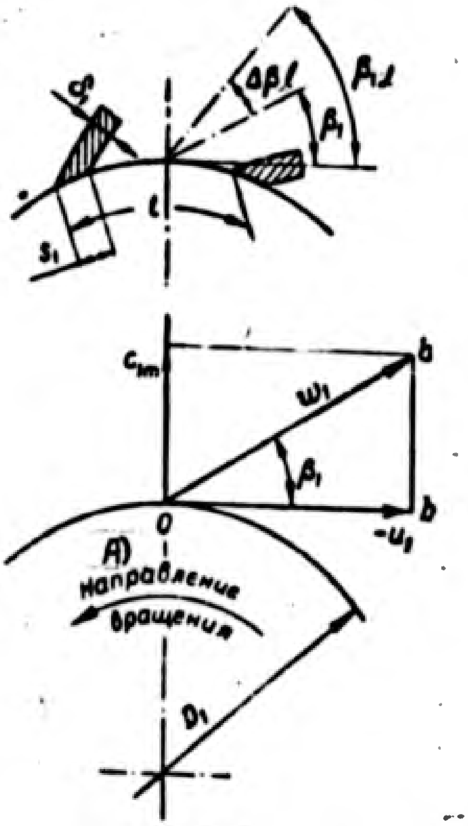

Legend:

A) Direction of rotation

Figure 172. Diagram of velocities at the entrance to the wheel.

In the designing of a pump, we strive to reduce the relative velocities of the liquid at the entrance to the wheel, including the relative velocity at the entrance to the vanes w_1.

We can easily show that for a pump calculated for a prescribed consumption Q and a number of revolutions n, we always find a diameter of entrance $D_{1,o}$ at which the relative velocities at the entrance will be a minimum. Let us now consider the change in relative velocity at the entrance to the wheel $w_{1,o}$ of the stream of liquid flowing at the greatest distance from the axis; that is, on the diameter $D_{1,o}$. Of all the streams of liquid flowing to the wheel, it will possess the maximum relative velocity, because for it the value $-u_{1,o}$ will be the maximum. With a decrease in $D_{1,o}$ the velocity at the entrance to the wheel $c_{1,o}$ (with the required Q) will increase, and the velocity $u_{1,o}=\frac{\pi D_{1,o}n}{60}$ at the required n will be decreased. If we increase the diameter $D_{1,o}$, the velocity $c_{1,o}$ will be decreased, but $u_{1,o}$ will increase. Consequently, we find the diameter at the entrance $D_{1,o}^{\text{optimum}}$ when $w_{1,o}=\sqrt{c_{1,o}^2+u_{1,o}^2}$ will be the minimum (Figure 173).

The theoretical calculation shows that if we neglect the dimensions of the collar (bushing), the diameter $D_{1,o}^{\text{optimum}}$ ensuring the minimum value of the relative velocities at the entrance to the pump amounts to

$$D_{1,o}^{\text{opt}}=3,25\cdot 10^3\sqrt[3]{\frac{Q}{n}}\ \text{mm}. \tag{IX.82}$$

In practice, when we calculate pumps, it is necessary to take into account the influence of the bushing. For this purpose, we introduce a concept of equivalent diameter of the entrance $D_{1\ \text{equivalent}}$, which is defined as the diameter of a continuous opening, not encumbered by the bushing, having an area equal to the actual area of the passage section at the entrance. In other words

$$\frac{\pi}{4}D_{1\text{экв}}^2=\frac{\pi}{4}(D_{1,o}^2-d_b^2) \tag{IX.83}$$

or

$$D_{1\text{экв}}^2=D_{1,o}^2-d_b^2;\ D_{1,o}=\sqrt{D_{1\text{экв}}^2+d_b^2}=$$
$$=k_0 10^3\sqrt{\frac{Q}{n}}\ \text{мм}=k_0\sqrt{\frac{Q}{n}}\ \text{м}.$$

The value $D_{1 \text{ equivalent}}$, ensuring the minimum relative velocities, is found by a relation analogous to (IX.82), in which the numerical coefficient k_o is increased up to 4.5-5; that is,

$$D_{1eq} = (4{,}5 \div 5{,}0)\, 10^3 \sqrt[3]{\frac{Q}{n}} \text{ mm.} \tag{IX.84}$$

We can easily see that in case of vanes having edges parallel to the axis, for which $D_1 = D_{1,o}$, the conditions considered above insure the minimum velocities w_1. It is also clear that to bring the edges of the vanes into the radial part of the wheel, that is, make $D_1 > D_{1,o}$, will not be advantageous, because in doing this we increase the value of the relative velocity at the entrance to the vanes.

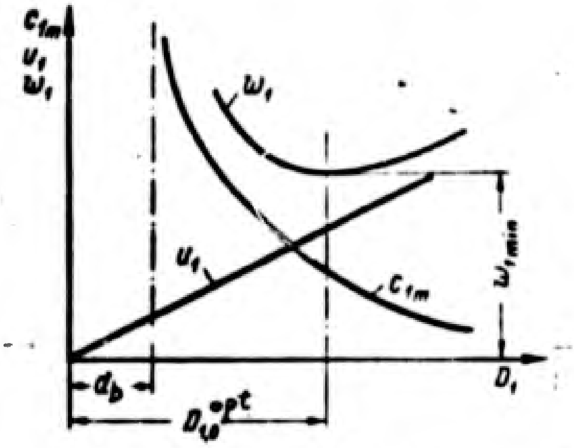

Figure 173. The change in velocity w_1 depending on the diameter of the entrance to the wheel.

On the contrary, vanes placed at the entrance are more suitable, because the maximum relative velocity, equal to the relative velocity at the entrance to the vanes, having edges parallel to the axis, appears only for diameter $D_{1,o}$. At all the other points of the vane edge the relative velocities will be smaller.

In order for the flow of the liquid to strike the wheel without a shock, that is, with minimum losses, it is necessary to have conformity of relative velocity of flow and shape of the duct, formed by the vanes of the wheel. As experience in the operation of pumps has shown, the wheel operates best and has less losses if the angle of setting of the vanes $\beta_{1 \text{ vane}}$ is somewhat greater than the angle β_1 (see Figure 172). Hence, at the entrance to the wheel, the blade should be bent against the direction of rotation at an angle of $\beta_{1\ \text{vane}}$ so that the angle of incidence of the entrance edges of the vane $\Delta\beta_{\text{vane}}$ will be positive.

$$\Delta\beta_v = \beta_{1v} - \beta_1 > 0,$$

and the value

$$\Delta\beta_v = (3 \div 8)^\circ.$$

If the edge of the blade is not set along the generatrix of the cylinder formed but sloped, the diameter of entrance D_1 is taken equal to the diameter of the disposition of the mid-point of the edge. In special cases, particularly when the edge of the vane is perpendicular to the axis of the pump, the calculation is made for several points; in this case angles β_1 and $\beta_{1\ \text{vane}}$ will vary along the length of the edge. Since the velocity c_{1m} remains constant, and u_1 at the transition to the points of the edge located on a larger radius is increased, the angle β_1 for points of the edge, farther away from the axis, will be less, and for points closer to the axis they will be larger.

The coefficient of constriction at the entrance ψ_1, entering the formula (IX.79), is determined by the ratio of the actual passage section for the flow of the liquid to the theoretical section without taking into account the vanes. The width of each duct, without allowing for the thickness of the blades, will be equal to the pitch of the vanes along the circumference t. In other words, it will be equal to

$$t = \frac{\pi D_1}{z}, \tag{IX.85}$$

where z is the number of vanes in the wheel.

Due to the fact that the vanes have a certain thickness, the width of each duct is decreased on the segment S_1 (see Figure 172). Substituting the segment of the arc by a straight line, we can assume that

$$s_1 = \frac{\delta_1}{\sin\beta_{1v}}, \qquad (IX.86)$$

where δ_1 is the thickness of the blade of the wheel at the entrance.

The relative decrease in width of the wheel, that is, the coefficient of constriction ψ_1, amounts to

$$\psi_1 = \frac{t - s_1}{t} = 1 - \frac{\delta_1 z}{\pi D_1 \sin\beta_{1v}}. \qquad (IX.87)$$

The value of the coefficient of constriction at the entrance depends to a great extent on its geometrical dimensions. For large pumps of long range rockets ψ_1 amounts to 0.85-0.90; for small pumps of liquid-fuel rocket aircraft engines ψ_1 decreases to 0.7.

The diagram of the velocities at the entrance is often represented in the form of a triangle of velocities Oab (see Figure 172). Hence, it is often called the triangle of velocities at the entrance to the wheel.

Having considered the conditions of operation of the entrance part of the wheel, it is still necessary to know the effect of overflow of the liquid on operation of the wheel. The harmful influence of excess flow shows itself not only in the fact that the wheel must pump over more liquid but also by reason of the fact that the excess flow disturbs the regular movement of the liquid to the entrance. In reality, the flow of the liquid coming from the clearance of the front packing (see Figure 171 d) in the radial direction, centrifuges the flow of the liquid moving towards the wheel. This leads to the formation of whirls, to irregular feeding of liquid to the wheel, to increase in the relative velocities at the entrance, and as a result of all these factors the efficiency of the pump is reduced. Hence, in order that the excess flow may be a minimum, we make the labyrinth sealing of a more complicated form (see Figure 171 e and f). In small pumps, where the clearances, with the same precision in manufacture, have a relatively large value, it is very difficult to decrease the excess flow. In these cases, an effort is made to have the flow of the liquid coming through the front packing to blend as smoothly as possible with the flow coming from the entrance nozzle (see Figure 171 g).

Diagram of Velocities at the Exit from the Wheel.

Let us consider the diagram of the velocities at the exit from the wheel.

At the exit from the wheel the flow of the liquid has a definite velocity of movement w_2 relative to the wheel, along the duct formed by the vanes. We can estimate this velocity by using the equation for the delivery of liquid along the duct of the wheel. The axis of the duct, and, consequently also the axis of the flow, if it coincides with the duct, has, relative to the wheel, a direction determined by the angle of the vanes at the exit from the wheel β_2. The angle β_2 is read from the negative direction of the peripheral velocity in the direction of the rotation of the wheel.

The area of the cross section of this duct (Figure 174) is equal to the product of the width of the wheel b_2 by the second dimension of the section of the duct, perpendicular to the axis of the flow and equalling $t \sin \beta_2$.

For the entire wheel the exit section amounts to

$$zb_2t \sin \beta_2,$$

but since $t_z = \pi D_2$ it will be equal to

$$\pi D_2 b_2 \sin \beta_2.$$

Hence, the value of the relative velocity, taking into account the obstruction of the flow by the blades at the exit will be equal to

$$w_2 = \frac{Q_0}{\pi D_2 b_2 \sin \beta_2 \psi_2}, \qquad \text{(IX.88)}$$

where ψ_2 is the coefficient of obstruction of the flow by the blades at the exit.

Just as in the case of the entrance to the wheel

$$\psi_2 = 1 - \frac{\delta_2 z}{\pi D_2 \sin \beta_2}, \qquad \text{(IX.89)}$$

where δ_2 is the thickness of the blade at the exit from the wheel.

The value of the coefficient of obstruction at the exit amounts to $\psi_2 =$ 0.93-0.97.

The direction of the velocity w_2 coincides approximately with the direction of the axis of the duct, that is, with the vane's slope angle at the exit β_2.

In addition to the relative velocity w_2, the flow at the exit from the wheel also has a transferable velocity equal to the peripheral velocity of the wheel at the exit u_2. The flow conserves this velocity by inertia, even after exit from the wheel. The absolute velocity of the flow at the exit C_2 will be equal to the geometrical sum of these two velocities.

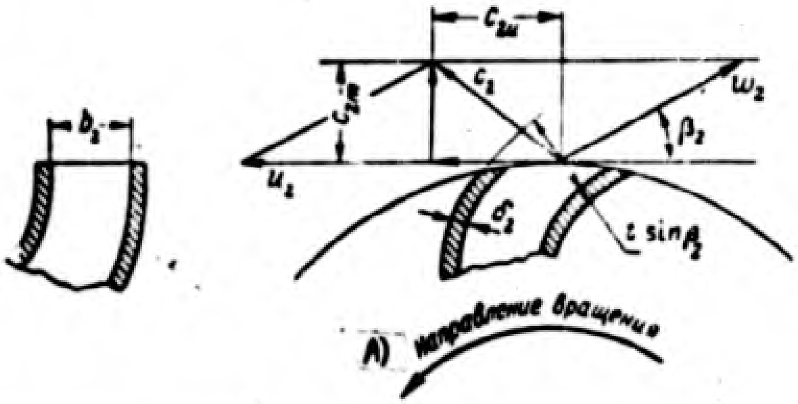

Legend:

A) Direction of rotation

Figure 174. The diagram of velocities at the exit from the wheel.

In the calculation of pumps, the essential role is played by the projection of the absolute velocity C_2 in the direction of the peripheral velocity, the so-called peripheral component of the absolute velocity C_{2m}, and in the direction of the radius of the wheel, the meridional component of the absolute velocity at the exit C_{2m}.

The meridional velocity, taking into account the obstruction of the flow by the vanes at the exit, will amount to (see diagram of velocities in Figure 174)

$$c_{2m} = w_2 \sin\beta_2 = \frac{Q_0}{\pi D_2 b_2 \psi_2}. \qquad \text{(IX.90)}$$

The wheels of the pumps are usually designed so that the velocity C_{2m} will be approximately equal to or somewhat less than the velocity C_{1m}.

The peripheral component of the absolute velocity C_{2m} can be calculated by starting from the fact that the projection of the resultant velocity in any direction is equal to the sum of the projections of the components in this same direction. The projection of the transferable velocity of flow u_2 in the direction of the tangent is equal to its proper value, and the projection of the relative velocity w_2 amounts to (see Figure 174)

$$-w_2\cos\beta_2 = -\frac{c_{2m}}{\operatorname{tg}\beta_2},$$

whence, in keeping with the diagram of velocities in Figure 174 we obtain the relation

$$c_{2u} = u_2 - \frac{c_{2m}}{\operatorname{tg}\beta_2}. \qquad (IX.91)$$

The Theoretical Pressure Head Created by the Pump.

The theoretical pressure head created by the centrifugal pump can be calculated by Euler's equation

$$H_T = \frac{u_2c_{2u} - u_1c_{1u}}{g}, \qquad (IX.92)$$

where H_{theor} is the pressure head in meters of the column of liquid created by the wheel; C_{1u}, the peripheral component of the absolute velocity of the flow at the entrance.

Since the presence of a twist in the flow at the entrance in the direction of the peripheral velocity (that is, the velocity C_{1u}), will, under all other conditions, reduce the pressure head created by the pump, in the designing of the ordinary wheels, we strive to insure the radial delivery of the liquid to the wheel so that C_{1u} will be equal to zero. Then the formula (IX.92) will be converted into the basic design equation of the pump

$$H_T = \frac{u_2c_{2u}}{g}. \qquad (IX.93)$$

This head is made up of the increased static pressure in the liquid and the increase in the dynamic head as a result of an increase in its absolute velocity. Since $u_2 = \frac{\pi D_2 n}{60}$, and the value C_{2u} is proportional to U_2, the theoretical head created by the pump will depend upon the square of the peripheral velocity, that is

$$H_{\text{т}} = k\frac{u_2^2}{g} = \frac{k}{g}\left(\frac{\pi D_2 n}{60}\right)^2, \qquad (IX.94)$$

where $k < 1$ is the coefficient determining the construction of the pump.

Formula (IX.94) shows that, with the dimensions of the wheel prescribed, the pressure head is proportional to the square of the number of revolutions and, with the revolutions prescribed, the pressure head is proportional to the square of the wheel's diameter.

In making use of Euler's formula in the form (IX.92) or in the form (IX.93), it is necessary to substitute in it the real values of the velocity C_{2u} which the streams of liquid have when they come from the wheel. In accordance with the diagram of velocity at the exit from the wheel, we assume that the flow moving along the wheel follows exactly the profile of the vanes. As a matter of fact, in formula (IX.91) the value C_{2u} is determined by angle β_2, representing the vane's setting angle which we also ascribe to the flow. However, we can have this condition only theoretically, when we place on the wheel an infinite number of infinitely thin blades. In this case all the streams of liquid would have imparted to them precisely those velocities which are determined by the position of the vane on the wheel and by the peripheral velocity of the wheel at the given place. With a finite number of vanes, only such streams can acquire this motion which are in direct contact with the forward (with respect to the travel of the wheel) vane surface. Farther away from the vane the streams have an angle of exit from the wheel less than angle β_2 by the angle of incomplete twist of the stream (Figure 175). For this reason (see Figure 174), with one and the same value for w_2, the velocities C_{2u} for these streams become less, and the pressure head, calculated by formula (IX.92), in the remote streams also decreases.

In the pump assembly a leveling of the pressure head of the separate streams takes place and the overall theoretical head which is created by the wheel with a finite number of vanes H_{theor}, will be less than the head which would have been created by a wheel with an infinitely large number of vanes $H_{theor\ \infty}$. The connection between these heads is determined by the relation

$$H_{\text{т}} = \frac{H_{\text{т}\infty}}{1+p}, \qquad \text{(IX.95)}$$

where the value p takes into account the reduction in the head due to the finite number of vanes; and the larger the reduction in head, the greater the value of p.

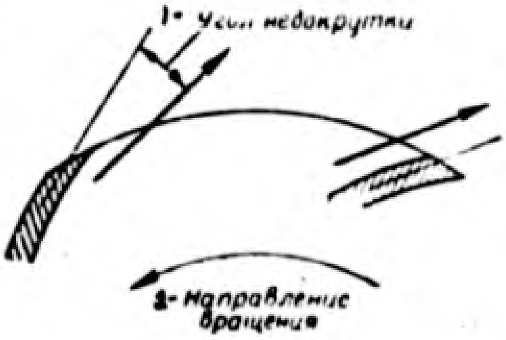

Figure 175. Angle of incomplete twist.

1 -- angle of incomplete twist; 2 -- direction of rotation.

We can calculate the value p by the approximate formula

$$p = 2\frac{\psi}{z}\,\frac{1}{1-\left(\frac{D_1}{D_2}\right)^2}. \qquad \text{(IX.96)}$$

The value p and, consequently, also the reduction in the head will increase with a decrease in the number of vanes z and with a shortening of the duct between the vanes (the greater the ratio $\frac{D_1}{D_2}$). The value ψ takes into account the quality of the manufacturing of the wheel and the value of the angle of the vane; it is calculated for the wheel of the centrifugal pump by the relation

$$\phi = 0{,}6 + 0{,}6 \sin \beta_2. \qquad (IX.97)$$

We should devote special attention to the fact that the reduction in the head created by the wheel due to the finite number of vanes, does not cause an increase in the necessary work or power expended in rotating the wheel. This is true because if the wheel does not twist the flow completely, the energy corresponding to the incomplete twist will not be taken up by the flow from the wheel. Hence, the decrease of the pressure head, as a result of the finite number of vanes, requires only a change in the wheel dimensions or an increase in the number of revolutions (an increase in u_2), but does not lead to a loss in performance and should not be taken into account in the efficiency coefficients of the wheel.

As we can see from formula (IX.95), the theoretical head of the wheel depends upon the form of diagram of velocities at the exit from the pump. The form of the diagram of velocities is determined to a considerable extent by the value of angle β_2.

Let us consider the diagrams of velocities of two wheels: with angles of vanes $\beta_2 < 90^\circ$ (Figure 176 a; the vanes of such a wheel will be bent backward with respect to the flow) and $\beta_2 > 90^\circ$ (Figure 176 b; the blades are bent forward with respect to the flow) with the same magnitudes of velocities u_2, w_2 and C_{2m}.

As we can see from Figure 176, the value C_{2u} for the second wheel will be greater than for the first, and, consequently, the head, in accordance with formula (IX.92), will be greater in the case of the wheel with vanes bent forward against the direction of rotation. Wheels with such vanes are called active wheels.

However, all the centrifugal pumps of liquid-fuel rocket engines have wheels with vanes bent backward. This is explained by the fact that as a result of the very high value for the absolute velocity of flow at the exit

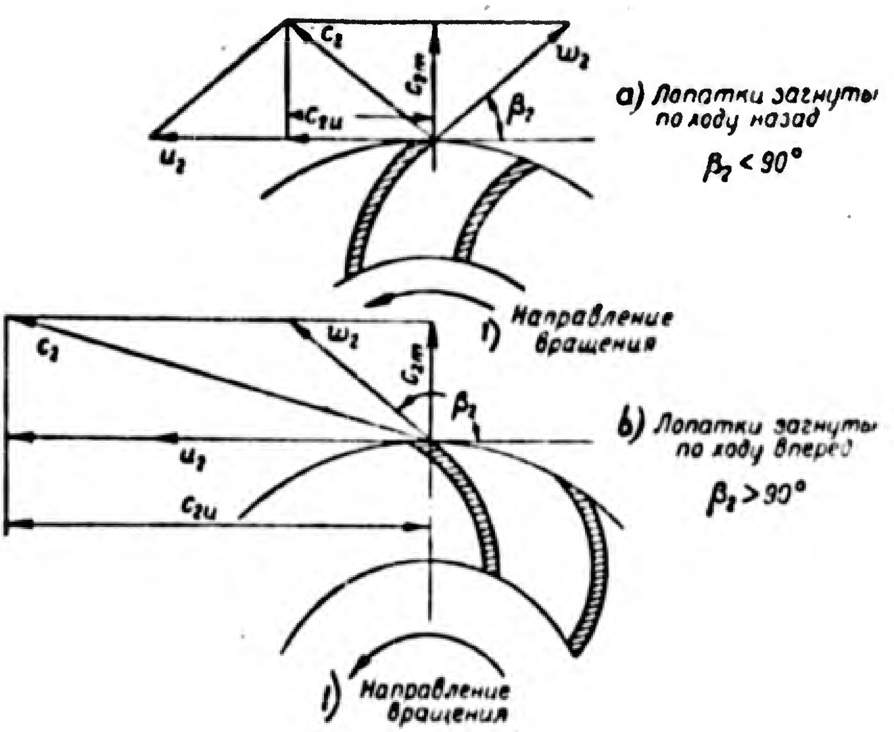

Figure 176. The layout of velocities for wheels with vanes bent forward and backward.

a -- vanes bent backward; b -- vanes bent forward.
1) Direction of rotation

from the wheel (see Figure 176) for active wheels a large part of the pressure consists of a dynamic head. The transformation of the dynamic head to static pressure takes place in the spiral conveyer and in the exit nozzle of the pump with large losses. Hence, there is practically no gain in the pressure at the expense of bending the vanes forward, and for centrifugal pumps angle β_2 lies within the limits 18÷35°.

The Hydraulic Losses and the Hydraulic Efficiency.

In the real wheel there are the hydraulic losses $\Delta_{h\ hydraulic}$. They consist of two kinds of losses: losses due to liquid friction against the surface of the walls of the pipes of the pump $\Delta_{h\ friction}$ and losses due to the breakaway and impact of the flow at the entrance to the wheel, and at the entrance to the diffuser, and to the spiral conveyer and to the pressure pipe $\Delta_{h\ impact}$.

$$\Delta h_{hy}=\Delta h_{fr}+\Delta h_{im} \qquad \text{(IX.98)}$$

Whereas the theoretical head H_{theor} of the pump is determined only by the peripheral velocity and does not depend upon the delivery, the losses $\Delta h_{\text{hydraulic}}$ depend on the delivery of liquid through the pump.

The hydraulic losses $\Delta h_{\text{friction}}$, due to friction in the pipes of the pump, as well as all the other hydraulic losses in any pipe, are proportional to the square of the velocity of the liquid relative to the walls (that is, to the square of the relative velocity w).

The relative velocity w is proportional to the delivery Q per second through the pump, and, hence, with a constant rpm of the pump n, the value $\Delta h_{\text{friction}}$ will increase proportionally to the square of the delivery

$$\Delta h_{fr} \equiv Q^2. \tag{IX.99}$$

The losses due to the impact and breakaway of the flow Δh_{impact} occur as a result of a lack of harmony between the direction of the flow and the direction of the pipes (between the vanes of the wheel, the vanes of the diffuser, etc). The minimum losses will occur when there is coincidence of the direction of flow and the direction of the pipes, for example, with agreement in the direction of the relative velocity w at the entrance with angle $\beta_{1\ \text{hydraulic}}$, that is, with an angle of incidence $\Delta\beta_{\text{hydraulic}}$ equal to zero. We designate the consumption of liquid at which all the losses Δh_{impact} will be the minimum, by Q' (Figure 177); in both cases: with $Q > Q'$ and with $Q < Q'$, the losses Δh_{impact} will be increasing, since with deviation of consumption from Q' the discrepancy of the direction of the pipes and the direction of the flow will be greater.

The actual head created by the pump will be

$$H = H_{T} - \Delta h_{fr} - \Delta h_{im} \tag{IX.100}$$

The change in it as a result of delivery (with n = const), and also the changes in the values $\Delta h_{\text{friction}}$ and Δh_{impact} are determined by the graph in Figure 177. The dependence of the head H on the delivery Q is called the characteristic of the pump.

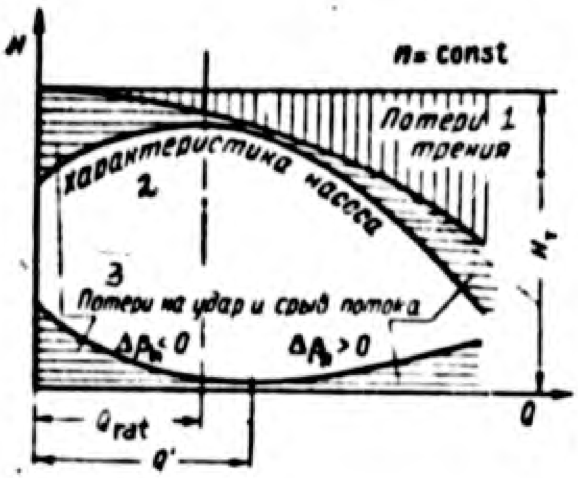

Figure 177. Characteristics of the pump.

1 -- losses from friction; 2 -- characteristic of the pump; 3 -- losses from impact and breakaway of the flow.

The value of the hydraulic losses in calculation of pumps is taken into account by the value of the hydraulic efficiency $\eta_{hydraulic}$, which is the ratio of the actual head created by the pump H to its theoretical value

$$\eta_h = \frac{H}{H_T} = \frac{H_T - \Delta h_b}{H_T}. \qquad (IX.101)$$

We can show that the value of the hydraulic efficiency depends first of all on the coefficient of speed of the pump n_s and decreases as it decreases.

As a matter of fact, the equation for the coefficient of speed (IX.77) has the form

$$n_s = 3{,}65 \frac{\sqrt{Q}}{\sqrt[4]{H^3}} n.$$

The value n_s determines to a considerable extent the form of the wheel of the pump. For a given number of revolutions n, we have a large value for n_s with large consumptions Q and with small heads H.

A large consumption Q, in accordance with formulas (IX.72) and (IX.73), requires large dimensions of the entrance, that is, $D_{1\,eq}$, $D_{1,o}$, and D_1. A small head (with n = const) leads, in keeping with formula (IX.94) to small dimensions for the diameter of the exit from the wheel D_2. Consequently, a pump with a large value n_s has a wheel with a small ratio $\frac{D_2}{D_1}$, -- that is, with short pipes. In the short pipes of the wheel, the losses due to friction will be less, and, consequently, the value of the hydraulic efficiency of such a pump will be greater.

The pumps of liquid-fuel rocket engines as a rule have relatively small deliveries Q and large heads H, that is, small values for n_s. Hence, their diameter D_1 of the entrance will be small, and the diameter of the exit D_2 will be large; the pipes of the wheel will be very long, and the losses $\Delta h_{friction}$ will be high. The hydraulic efficiency of such a pump will naturally be low.

For increasing the number n_s and improving the hydraulic efficiency, we try to give to the pumps of liquid-fuel rocket engines an increased number of revolutions. However, in certain cases, even this measure does not give satisfactory values for n_s; for example in aircraft liquid-fuel rocket engines of low thrust, and in pumps feeding hydrogen peroxide to steam gas generators. In general machine construction, we strive not to make pumps with $n_s < 50-70$, but in liquid-fuel rocket engines pumps with $n_s = 15-20$ are found. However, the low efficiency of the pump and the increased consumption of power to rotate it are, nevertheless, compensated by the small dimensions and weight of the centrifugal pumps.

The hydraulic losses also depend on the quality of the machining of the surfaces of the wheel. They result from loss of a part of the head of the liquid due to friction and separation of the flow. In other words, the hydraulic losses are accompanied by the conversion of the energy of the head into thermal energy, expended for increasing the temperature of the liquid. Hydraulic losses, thus require additional expenditure of energy for starting the pump and must be taken into account in the determination of the power expended in operating it.

In order to determine the hydraulic efficiency of the pump we employ the connection between the losses and the value of the coefficient of speed n_s. This connection is not given in the form of an analytical or tabular dependence. We determine the value η by starting from the fact that two geometrically similar pumps having the same n_s will have the same hydraulic efficiencies. Hence, in the determination of the hydraulic efficiency on the basis of the value n_s, we employ the method of simulation of pumps.

In the absence of data based on simulation of pumps, we can recommend for the estimate of the hydraulic efficiency the formula based on experiments

$$\eta_h = 1 - \frac{0,42}{(\lg D_{1\text{eq}} - 0,172)^2}, \qquad (\text{IX}.102)$$

where $D_{1\ \text{eq}}$ is the equivalent diameter of the entrance into the pump in mm, determined by the relation (IX.84).

The formula for the calculation of $\eta_{\text{hydraulic}}$ given above is useful, however, only for the relatively large pumps having $D_{1\ \text{eq}}$ = 130-150 mm. In addition to this, the $\eta_{\text{hydraulic}}$ of certain pumps made for rocket engines as a rule turn out to be smaller than the values of $\eta_{\text{hydraulic}}$ obtained by the formula (IX.102) and do not exceed the values of 0.72-0.80.

In addition to the hydraulic losses in the operation of a pump, there are also mechanical losses due to friction in the bearings, stuffing box and other packing and also the losses due to friction occurring during the turning of the wheel of the pump in the liquid (the so-called disc friction). All these losses in the centrifugal pump are relatively small and are taken into account by the mechanical efficiency, the value of which amounts to η_{mech} = 0.92-0.96. Larger values of η_{mech} refer to pumps of larger dimensions.

Operation, Power, and Efficiency of Pumps.

The power N_{liquid} transmitted by the liquid pump and expressed in horsepower can be determined by the formula

$$N_{\text{ж}} = \frac{QH_T 1000}{75} \text{ hp}. \qquad (\text{IX}.103)$$

The power expended in driving the pump will be greater than the power furnished by the liquid.

Since with a pump delivery P there will pass through the pump an actual delivery volume Q_{vol} and the expenditure of energy, taking into account the hydraulic losses in the pump, should correspond to the theoretical head $H_{theor} = \frac{H}{\eta_{hydraulic}}$ developed, the power N_{pump} expended in driving the pump will amount to

$$N_p = \frac{Q_0 H_T \gamma 1000}{75\eta_м} \text{ hp} \tag{IX.104}$$

Taking the ratio $\frac{N_{liquid}}{N_{pump}}$ and taking into account the fact that $Q_0 = \frac{Q}{\eta_0}$ and $H_T = \frac{H}{\eta_h}$, we obtain

$$\frac{N_{liq}}{N_p} = \eta_h \eta_0 \eta_м = \eta. \tag{IX.105}$$

where η is the total efficiency of the pump.

The total efficiency of the pumps of liquid-fuel rocket engines changes within wide limits: for pumps of small aviation engines, it is very low and amounts to η = 30-40%; for large pumps of long-range rockets it rises and for the pumps of the rocket A-4 it is about 70%.

The calculation of the power necessary for the driving of a pump is made by the formula

$$N_p = \frac{QH\gamma 1000}{75\eta} \text{ hp} \tag{IX.106}$$

The total pump efficiency can be determined by comparing the power N_{liquid} and N_{pump} which can easily be determined by pump tests. By making use of the relation $\eta = \eta_h \eta_0 \eta_м$ and with the small scope of the values η_{mech}, we can always determine $\eta_{hydraulic}$ or η_{vol}, if we know one of these coefficients.

Section 60. Cavitation and the Selection of the RPM of the Pump.

In considering the characteristics of the operation of the centrifugal pump, we have not touched upon the question of the rpm (n), the correct selection of which is a rather complicated task.

The increase in the rpm has a favorable effect upon the construction and coefficients of the pump and upon all the turbopump unit as a whole. This is due to the following:

1. An increase in rpm (while retaining the necessary head of the pump) makes it possible to decrease the diameter of the wheel at the exit D_2, and, consequently, makes it possible to decrease the dimensions and weight of the pump.

2. An increase in rpm of pumps of liquid-fuel rocket engines having a relatively small delivery Q and high heads H, leads to high values of n_s, to an improvement in the shape of the wheel due to a reduction of the ratio $\frac{D_2}{D_1}$, and, consequently, to a decrease in the hydraulic losses, to an increase in $\eta_{\text{hydraulic}}$ and a decrease in power expended in driving the pump.

3. An increase in the rpm of the pump leads to an improvement in the conditions of operation of the turbine (which improvement is reflected in its efficiency) or to a decrease in its dimensions (for further details, see below).

However, the appearance of cavitation in the pump prevents an increase in the number of revolutions.

The Essence of the Phenomenon of Cavitation.

Cavitation, or "cold boiling" of a liquid, means the appearance in the flow of the liquid of breaks or empty spaces filled with liquid vapors.

In order to explain the possibility of the appearance of cavitation, we consider the equation of Bernoulli for an incompressible liquid

$$\frac{p}{\gamma}+\frac{w^2}{2g}=\frac{p_0}{\gamma}. \qquad (IX.107)$$

If the total head which the liquid has is equal to p_0, then, in the absence of losses, the static pressure in the flow amounts to

$$p = p_0 - \frac{\gamma w^2}{2g}. \qquad \text{(IX.108)}$$

Hence, when there is reached in the flow of the liquid a velocity greater than $w_{max} = \sqrt{2g\frac{p_0}{\gamma}}$, the static pressure should be less than zero. But, since the liquid in the flow is not subject to expansion, which could absorb the negative static pressure, there appear in it separations or empty spaces which are immediately filled by vapors of the effervescing liquid. Hence, in the empty spaces there develops a pressure equal to the pressure of the saturated vapors at the temperature of the liquid p_s.

As we can see, the phenomenon of cavitation is analogous to the appearance of a gas whirl in the centrifugal injector, which also fills the cavities forming as a result of the decrease in the static pressure in the flow of the liquid.

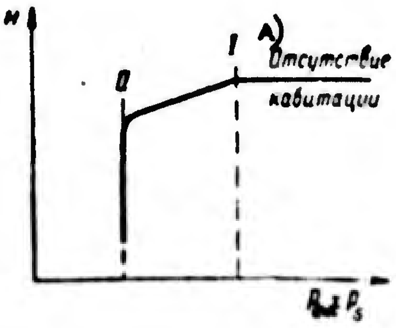

Figure 178. Cavitation curve of a pump.

I -- the first stage of cavitation; II -- the second stage of cavitation.

A -- absence of cavitation.

The appearance of cavitation, especially close to the walls, also makes possible an increase in the relative velocity of the flow at which it is possible to have the formation of cavities due to the separation of the flow from the walls.

Cavitation disturbs the normal operation of the pump for two reasons.

When the liquid, having in its mass some steam pockets, comes into the area of high pressures, the steam is condensed, the filling of the volume of the steam pockets with liquid takes place with high velocity, producing the phenomenon called hydraulic shock at the moment of the filling of all the volume.

In this case, the velocity of the liquid can amount to 1,500-1,800 m/sec. The semi-spherical shape of the cavities located on the surface of the vanes causes a directed hydraulic shock to the focus of the hemisphere. The local hydraulic shocks, embracing small areas on the wall, cause a chipping off (erosion) of the metal, a loss of strength and damage to the pump. A second result of the appearance of cavitation is a drop in the head and volume of pump delivery. These phenomena take place because upon the appearance of cavitation a part of the volume of the pump is filled with vapors of the liquid. The change in the head, upon the appearance of cavitation, is characterized by the so-called cavitation curves (Figure 178). The cavitation curve is the dependence of the change in head H, developed by the pump, upon the value of the difference $p_{entrance} - p_s$, where $p_{entrance}$ is the total pressure of the liquid at the entrance to the pump. The difference $p_{entrance\ 1} - p_s$ is the head which can be employed for increasing the velocity of the flow of the liquid without the appearance of cavitation and is called the cavitation reserve. With a decrease in the cavitation reserve, the intensity of the cavitation in the pump is increased. In addition, the cavitation curve has two characteristic points. The point I corresponds to that value of the cavitation reserve when there begins to appear in the pump separate foci of cavitation in those places where the velocity of the liquid is at the maximum. In the presence of volumes filled with liquid vapor, there takes place in the area of increased pressure a condensation of vapors while they are in the pump itself and cavitation on the whole has little influence upon the head developed by the pump. Such an operating condition of the pump is called the first cavitation characteristic. With further decrease in the cavitation reserve, the intensity of cavitation increases and there comes a moment when the formation of vapor becomes so great that there is not sufficient time for its condensation in the pump. At this moment the head and the liquid delivery of the pump drop sharply and there sets in the so-called second cavitation characteristic or disruption of feeding.

Since cavitation erosion develops gradually, over a certain period, then, as a result of the short duration of the operation of a liquid-fuel rocket engine, it is not a limitation (except for the pumps of the airplane liquid-fuel rocket engines) for the employment in the rocket engine of a pump operating under cavitational conditions.

It is entirely clear, however, that we cannot have the operation of pumps of liquid-fuel rocket engines under cavitation conditions, especially under conditions approximating the second characteristic of cavitation, when there may be a disruption in delivery. The disruption of delivery must lead to a disturbance in the proper course of the process of combustion in the chamber and could cause an explosion of the engine. Hence, the pump of the liquid-fuel rocket engine should be designed so as to make any intensive cavitation impossible.

For the development of cavitation the most dangerous sections are those on which the total pressure of the liquid is small, and on which the absolute and relative velocities of flow are large. This section in the centrifugal pump is the section of the entrance of the liquid to the vanes of the wheel, where the total pressure of the flow is minimum (the pump has not yet transmitted energy to the liquid) and the velocities (especially the relative) are great. It is precisely for this reason that the cavitation curve is plotted against the cavitation reserve at the entrance to the wheel.

The increase in the number of revolutions of the pump leads to an increase in the absolute velocity of the entrance of the liquid. The velocity C_1 in the absence of a twist at the entrance is equal to the meridional velocity C_{1m}. The latter, with an increase in the number of revolutions, increases as a result of decrease in the diameter of the entrance into the pump (D_1, see Formula IX.79).

The relative velocity w_1 increases both as a result of an increase in C_{1m}, and especially as a result of an increase in the peripheral velocity u_1.

Hence, an increase in the number of revolutions leads to an increase in the possibility of the appearance of cavitation. In order to prevent cavitation, it is necessary to limit the number of revolutions of the pump.

The appearance of cavitation can also be prevented by increasing the total pressure of the liquid at the entrance to the pump.

Calculation of a Pump for Cavitation.

When we calculate a pump for cavitation, we start, as we said above, from the requirement that the maximum rarefaction Δp_{max}, taking place when the stream of liquid flows around the vanes of the wheel, be less than the cavitation reserve. Consequently, the design requirement would be

$$\Delta p_{max} \leqslant p_{ent} - p_s,$$

or

$$p_{ent} - p_s \geqslant \Delta p_{max}. \qquad (IX.109)$$

The value Δp_{max}, as shown by experience, is made up of the velocity head $\frac{\gamma c_{1m}^2}{2g}$, corresponding to the absolute velocity of the movement of the flow, and a certain part λ of the velocity head $\frac{\gamma w_1^2}{2g}$, corresponding to the relative velocity of the flow at the entrance to the wheel, that is,

$$\Delta p_{max} = \frac{\gamma c_{1m}^2}{2g} + \lambda \frac{\gamma w_1^2}{2g} = \frac{\gamma}{2g}\left(c_{1m}^2 + \lambda w_1^2\right). \qquad (IX.110)$$

the value λ depends on the shape of the entrance part of the wheel leading the flow to the vanes (and also on the disturbance of the flow due to overflow), the angle of incidence $\Delta \beta_{vane}$, the restriction of the entrance by the vanes. It cannot be determined theoretically and for the pumps made it is equal to

$$\lambda = 0{,}2 \div 0{,}4.$$

The calculation of a pump for cavitation can be made after the calculation of the pump with the selected number of revolutions n, when the values C_{1m} and w_1 have already been determined. Bearing in mind that the cavitation reserve should exceed somewhat the maximum rarefaction on the blade, we may state formula (IX.109) in the form

$$p_{ent}-p_s=\varphi\frac{\gamma}{2g}(c_{1m}^2+\lambda w_1^2)$$

or

$$p_{ent}=\frac{\gamma\varphi}{2g}(c_{1m}^2+\lambda w_1^2)+p_s,$$

(IX.111)

where φ is the coefficient of the reserve, equal to 1.2-1.4.

However, we must consider formula (IX.111) rather as a formula for verifying the calculation, because the value of the total pressure at the entrance $p_{entrance}$ cannot be selected arbitrarily (see below, page 654).

In addition to this, the calculation for cavitation, carried out in accordance with formula (IX.111), does not serve the basic purpose, namely, the selection of the maximum permissible rpm of the pump. Hence, it will be more convenient to express the basic relationship of the calculation for cavitation (IX.109) by the basic parameters of the pump, namely, the rpm and the volume delivery of the pump.

First of all, let us bear in mind that

$$w_1^2=c_{1m}^2+u_1^2.$$

Then,

$$\Delta p_{max}=[c_{1m}^2(1+\lambda)+\lambda u_1^2]\frac{\gamma}{2g}.$$

(IX.112)

We express u_1 by the basic parameters of the pump

$$u_1 = \frac{\pi D_1 n}{60}.$$

Taking $D_1 = D_{1\ vol}$ and expressing $D_{1\ vol}$ in meters, we find in accordance with formula (IX.83)

$$D_1 = D_{1,o} = k_0 \sqrt[3]{\frac{Q}{n}},$$

after which

$$u_1 = \frac{\pi}{60} k_0 \sqrt[3]{\frac{Q}{n}}\, n = \frac{\pi k_0}{60} \sqrt[3]{Qn^2}$$

and

$$u_1^2 = \left(\frac{\pi k_0}{60}\right)^2 \sqrt[3]{(Qn^2)^2}.$$

(IX.113)

We now express $C_1 = C_{1m}$ by the basic parameters of the pump. Neglecting the diameter of the sleeve

$$c_1 = \frac{c_0}{\psi_1} = \frac{Q}{\psi_1 \frac{\pi}{4} D_0^2} = \frac{4}{\psi_1 \pi k_0^2} \sqrt[3]{Qn^2} \qquad \text{(IX.114)}$$

and

$$c_{1m}^2 = c_1^2 = \left(\frac{4}{\psi_1 \pi k_0^2}\right)^2 \sqrt[3]{(Qn^2)^2}.$$

(IX.115)

Substituting the expressions obtained for u_1^2 and C_1^2 in the formula (IX.112), we obtain

$$w_1^2 = (Qn^2)^{\frac{2}{3}} \left[\left(\frac{\pi k_0}{60}\right)^2 + \left(\frac{4}{\psi_1 \pi k_0^2}\right)^2\right]. \qquad \text{(IX.116)}$$

and

$$\Delta p_{max} = \sqrt[3]{(Qn^2)^2} \left[(1+\lambda)\left(\frac{4}{\psi_1 \pi k_0^2}\right)^2 + \lambda \left(\frac{\pi k_0^2}{60}\right)^2\right] \frac{\gamma}{2g} =$$

$$= \varepsilon \frac{\gamma}{2g} \sqrt[3]{(Qn^2)^2},$$

(IX.117)

where $\varepsilon = (1+\lambda)\left(\frac{4}{\psi_1 \pi k_0^2}\right)^2 + \lambda \left(\frac{\pi k_0}{60}\right)^2$. The value ε depends on the construction of the pump. Substituting the expression obtained for Δp_{max} (Formula IX.117) in the equation (IX.109)

$$p_{ent} - p_1 > \frac{\gamma}{2g}\,\varepsilon \sqrt[3]{(Qn^2)^2}$$

or

$$\frac{p_{ent}}{\gamma} - \frac{p_1}{\gamma} > \frac{\varepsilon}{2g} \sqrt[3]{(Qn^2)^2}.$$

We designate $\frac{p_{ent}}{\gamma} = H_{ent}$ and $\frac{p_1}{\gamma} = H_1$, expressing them in meters of the column of liquid. Then

$$H_{ent} - H_1 > \frac{\varepsilon}{2g} \sqrt[3]{(Qn^2)^2}. \tag{IX.118}$$

Usually, this equation is solved for the product $n\sqrt{Q}$, for which it is necessary to raise it to the 3/4 power.

In addition to this, the value of the difference in heads is traditionally expressed in the form

$$\frac{H_{ent} - H_1}{10}.$$

Carrying out the aforementioned conversions of formula (IX.118), we obtain

$$n\sqrt{Q} < \left(\frac{2g}{\varepsilon} \cdot 10\right)^{\frac{3}{4}} \left(\frac{H_{ent} - H_1}{10}\right)^{\frac{3}{4}}. \tag{IX.119}$$

The value $\left(\frac{2g}{\varepsilon} \cdot 10\right)^{\frac{3}{4}}$ is called the critical coefficient of cavitation $C_{critical}$. It is determined by experiment, because its value depends on the value of the experimental coefficient λ, and also the values k_0 and ψ_1, which differ with different pumps.

The higher the value of the coefficient of cavitation, the larger the permissible number of revolutions of the pump, all other conditions remaining the same.

The experimental values of the coefficient of cavitation $C_{critical}$ lie within the limits $C_{critical}$ = 800-1,100 and depend on the construction of the entrance into the pump. For pumps of the usual construction, this coefficient has the value $C_{critical} = 900$.

The equation (IX.119) is also used for the calculation of the maximum permissible rpm of the pump.

For this purpose we express it in the form

$$n_{max} = c_{cr} \frac{1}{\sqrt{Q}} \left(\frac{H_{ent} - H_s}{10} \right)^{\frac{3}{4}}. \qquad \text{(IX.120)}$$

It is easy to see that the maximum permissible rpm for pumps of liquid-fuel rocket engines will be less for the pump of the oxidizer, because its volume delivery is always greater than the volume delivery of the fuel, and the value of the critical coefficient of cavitation changes within narrow limits. In addition to this, for low boiling oxidizers H_s reaches a relatively high value. Hence, in one-shaft turbo-pump units (TNU), the rpm of the turbo-pump unit is determined on the basis of the cavitation calculation for the pump of the oxidizer.

The formula (IX.120) can also be used for the determination of the necessary head $H_{s\ necessary}$, or the pressure $p_{ent\ necessary}$ at the entrance to the pump to ensure the non-cavitational operation of the pump at the prescribed number of revolutions n.

$$H_{ent\ nec} = H_s + 10 \left(\frac{n\sqrt{Q}}{c_{cr}} \right)^{\frac{4}{3}} \qquad \text{(IX.121)}$$

and

$$p_{ent\ nec} = \gamma H_{ent\ nec} = p_s + \left(\frac{n\sqrt{Q}}{c_{cr}} \right)^{\frac{4}{3}} \gamma \ \text{atms.}$$

where γ is expressed in kg/l.

The Liquid Pressure at the Centrifugal Pump Entrance and the Determination of the Necessary Pressure in the Tank.

The pressure p_{ent} of the liquid at the entrance to the pump or the head at the entrance $H_{ent} = \frac{p_{ent}}{\gamma}$ is made up of the pressure of the column of liquid

P_{column} and the absolute pressure P_{tank} in the tank over the free surface of the liquid. Taking into account the pressure losses Δp_{losses} in the pipes and accessories located between the tank and the pump we obtain

$$p_{ent} = p_t + p_{col} - \Delta p_l; \quad H_{ent} = \frac{p_t}{\gamma} + H - \frac{\Delta p_l}{\gamma}.$$

For a fixed rocket $p_{col} = \gamma H_0$, where H_0 is the initial altitude of the column of liquid in meters.

For the rocket engines, a characteristic feature is the placing of the tanks and pumps (Figure 179 a) with respect to each other so that the tanks with the fuel components will be above the engine. For airplane liquid-fuel rocket engines the tanks may also be placed below the pumps. In this case, the value P_{col} will be negative.

For the different components the height of the column of liquid will also be different. During the flight of the rocket with an operating engine, the pressure of the liquid column will be variable. On the one hand, due to the using up of the components from the tanks, there will be a decrease in the height of column H, and, on the other hand, a rocket with an operating engine will always move with an axial acceleration j. Besides this, the axis of the rocket can be inclined toward the horizon at an angle φ (Figure 179 b).

Then the total force acting on the base of the column of liquid having a height H will be equal to

$$p_{col} = H\rho j + H\gamma \sin\varphi;$$

Substituting $\rho = \frac{\gamma}{g}$, we obtain

$$p_{col} = H\gamma\left(\frac{j}{g} + \sin\varphi\right) = H\gamma(k + \sin\varphi).$$

where the value k is equal to the ratio j/g and is designated as the axial overloading of the rocket.

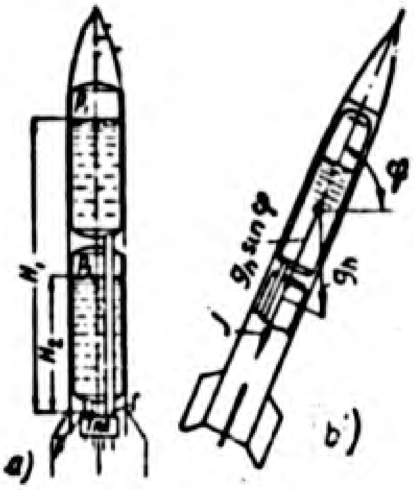

Figure 179. Determination of the pressure of a liquid column at the entrance to the TPU (turbo-prop unit) during the period of flight of the rocket.

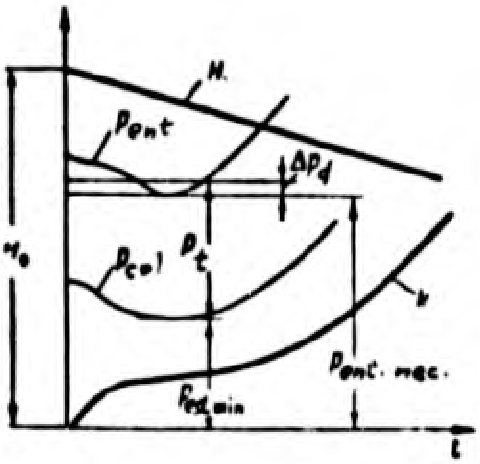

Figure 180. Change in the pressure of the column of liquid during the time of flight of the rocket and determination of the necessary pressure in the tank.

During the time of the rocket's flight, the values H and k change approximately as shown in Figure 180. If in addition, we take into account the change on the basis of time of the angle of slope φ of the rocket's axis, the law of change of p_{col} will have the form shown in the graph of Figure 180. The minimum pressure of the column of liquid will be present after the starting of the engine; it will be less than the pressure at the moment of the starting of the rocket. For the determination of $p_{col\ min}$, it is necessary to have some information concerning the law of movement of the rocket along its trajectory. If in the calculation of the pump for cavitation we determine the value $p_{ent\ necessary}$, the pressure necessary in the tank p_{tank} should be such that with the minimum pressure of the column of liquid we shall have the necessary pressure p_{ent}

$$p_t = p_{ent.nec} - p_{col\,min} + \Delta p_t. \tag{IX.122}$$

The pressure in the tanks of liquid-fuel rocket engines with pump feeding is created by the pressurization of their gases (see Chapter X). By an increase of pressure in the tank we can obtain a higher rpm of the pump. However,

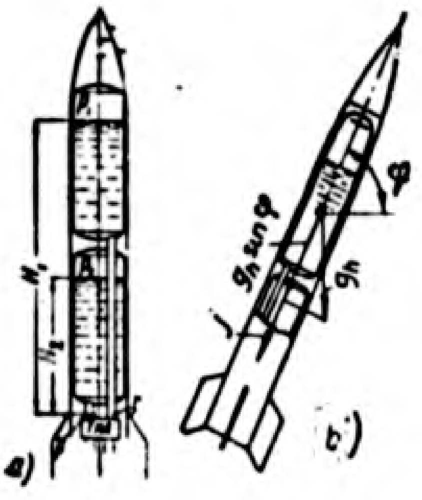

Figure 179. Determination of the pressure of a liquid column at the entrance to the TPU (turbo-prop unit) during the period of flight of the rocket.

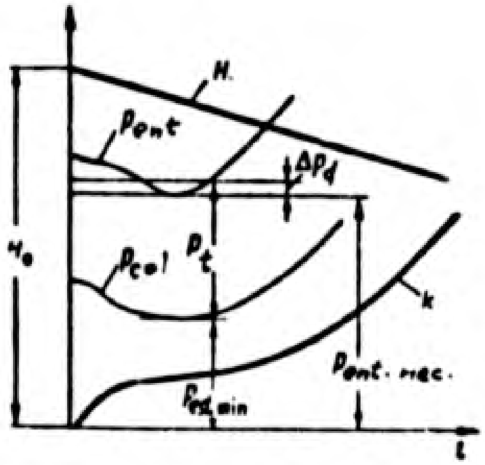

Figure 180. Change in the pressure of the column of liquid during the time of flight of the rocket and determination of the necessary pressure in the tank.

During the time of the rocket's flight, the values H and k change approximately as shown in Figure 180. If in addition, we take into account the change on the basis of time of the angle of slope φ of the rocket's axis, the law of change of p_{col} will have the form shown in the graph of Figure 180. The minimum pressure of the column of liquid will be present after the starting of the engine; it will be less than the pressure at the moment of the starting of the rocket. For the determination of $p_{col\ min}$, it is necessary to have some information concerning the law of movement of the rocket along its trajectory. If in the calculation of the pump for cavitation we determine the value $p_{ent\ necessary}$, the pressure necessary in the tank p_{tank} should be such that with the minimum pressure of the column of liquid we shall have the necessary pressure p_{ent}

$$p_t = p_{ent.nec} - p_{col\,min} + \Delta p_t. \tag{IX.122}$$

The pressure in the tanks of liquid-fuel rocket engines with pump feeding is created by the pressurization of their gases (see Chapter X). By an increase of pressure in the tank we can obtain a higher rpm of the pump. However,

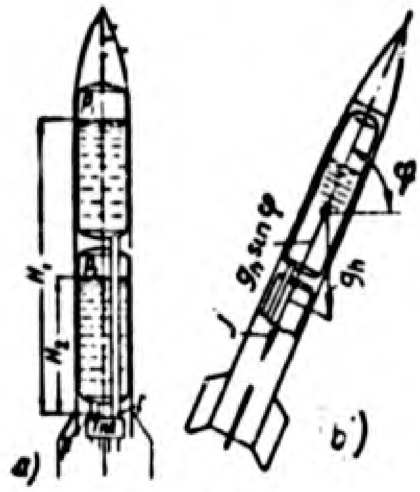

Figure 179. Determination of the pressure of a liquid column at the entrance to the TPU (turbo-prop unit) during the period of flight of the rocket.

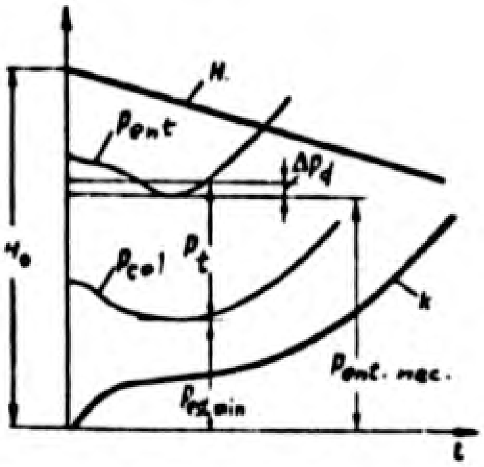

Figure 180. Change in the pressure of the column of liquid during the time of flight of the rocket and determination of the necessary pressure in the tank.

During the time of the rocket's flight, the values H and k change approximately as shown in Figure 180. If in addition, we take into account the change on the basis of time of the angle of slope φ of the rocket's axis, the law of change of p_{col} will have the form shown in the graph of Figure 180. The minimum pressure of the column of liquid will be present after the starting of the engine; it will be less than the pressure at the moment of the starting of the rocket. For the determination of $p_{col\ min}$, it is necessary to have some information concerning the law of movement of the rocket along its trajectory. If in the calculation of the pump for cavitation we determine the value $p_{ent\ necessary}$, the pressure necessary in the tank p_{tank} should be such that with the minimum pressure of the column of liquid we shall have the necessary pressure p_{ent}

$$p_t = p_{ent.nec} - p_{col\,min} + \Delta p_t. \tag{IX.122}$$

The pressure in the tanks of liquid-fuel rocket engines with pump feeding is created by the pressurization of their gases (see Chapter X). By an increase of pressure in the tank we can obtain a higher rpm of the pump. However,

with an increase in pressure, there is an increase in the weight of gas expended for this purpose and the weight of all the system of pressurization, analogous to the cylinder system of feeding. Hence, in striving to increase the rpm of the pump we should not go too far in increasing the pressure in the tanks. At any rate, the pressurization should not be so great that it makes necessary an increase in the thickness of the tank walls and thereby an increase in the total weight of the rocket engine.

Making use of the fact that the height of the liquid column is different for the different components (see Figure 179), we can arrange the tanks so that the component requiring a greater pressure at the entrance to the pump (this is usually the oxidizer) will be placed in the front tank. The determination of the losses in pressure in the main lines, from the tank to the pump, is done on the basis of the usual formulas of hydraulic resistance (see Section 64).

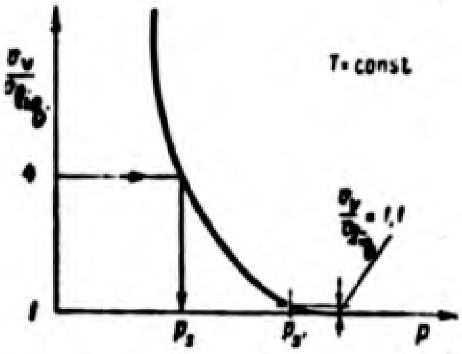

Figure 181. Dependence of the ratio $\frac{v_{vapor}}{v_{liquid}}$ for compound liquids (mixtures of liquids) with constant temperature.

In the calculation of the pump for cavitation, it is necessary to know the pressure of the saturated vapors of the liquid pumped, because the higher this pressure, the easier it is for cavitation to appear. The pressure of the saturated vapors depends on the kind of liquid and on its temperature. With an increase in the temperature, the pressure of the saturated vapors increases sharply, and this must be taken into account in the calculations for cavitation.

The dependence of the pressure of the saturated vapors on the temperature for the individual chemical substances can be found not only experimentally but also theoretically and has been ascertained in a precise manner. In these same cases, when the components of the fuel are mixtures of different substances (and this is what we most often have in rocket engines), the value of the pressure of the saturated vapors is not as precisely determined. As a matter of fact, if with a constant temperature T, we decrease the pressure p exerted upon the mixture of various liquids, there will be formed over the liquids a certain quantity of vapor. In this case the character of the change in the ratio of the volume occupied by the steam to the volume occupied by the liquid $\frac{v_{vapor}}{v_{liquid}}$ will change as indicated in the graph Figure 181. As the pressure of the saturated vapors P_s we usually take the pressure at which the volume of the vapors is four times the volume of the liquid. This ratio between the volumes of vapor and liquid in the pump leads to the development of intensive cavitation and disruption of delivery.

A study of the phenomenon of cavitation in pumps shows that the intensity of cavitation is permissible if the volume of vapor constitutes not more than 10% of the volume of the liquid -- that is, the ratio $\frac{v_{vapor}}{v_{liquid}}$ does not exceed 1.1. If in the determination of the pressure of the saturated vapors we adopt this requirement, then the value p_s', which it is necessary to employ in the calculation of pumps for cavitation, is much greater than the values which are usually given in reference tables and some of which are given in the graph of Figure 182.

For improving the operation of the pump and increasing the number of revolutions without an unnecessary increase in the pressure in the tanks, we employ various constructional measures. Since the maximum rpm permissible with cavitation is inversely proportional to $\sqrt{Q}$ for an increase in the permissible rpm we can employ wheels with parallel engagement. With two wheels the maximum permissible rpm increases 1.4 times in comparison with the rpm of a pump having one wheel.

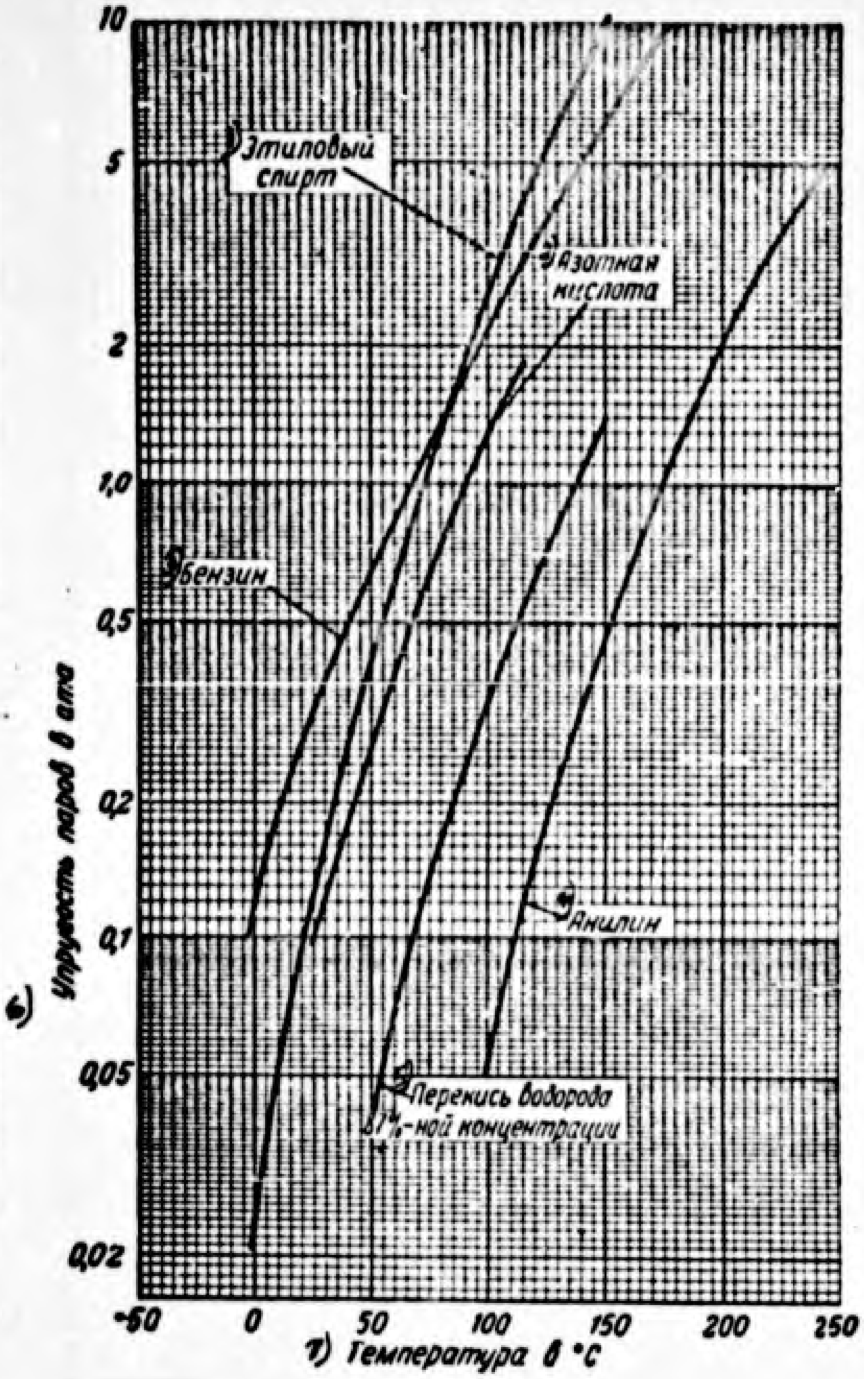

Figure 182. Dependence of the vapor pressure p_s of certain components of fuels on the temperature.

1 -- ethyl alcohol; 2 -- nitric acid; 3 -- gasoline; 4 -- aniline; 5 -- peroxide of hydrogen, 87% concentration; 6 -- pressure of vapors in atmosphere; 7 -- temperature in °C.

For reducing the danger of cavitation we also employ the following measures:

1. Placing the vanes of the wheel in the entrance part. This construction of the wheel makes it possible to reduce the relative velocity at the inlet.

2. The connecting of a screw or vane-type (axial) pump at the entrance to the centrifugal pump. This measure increases the liquid pressure at the entrance to the pump, and also creates a twist of the flow, reducing the relative velocity. The pumps of the turbo-pump unit of the Walter engine are organized in such a manner (see Figure 194).

Example 23. Make a check calculation of the liquid oxygen pump of rocket A-4 for cavitation, under the following conditions. The number of revolutions of the pump n = 3,800; the pressurization of the oxygen tank is P_{tank} = 2.5 atmospheres; the initial height of the level of the oxygen over the entrance to the pump is H = 3.5 m. The specific weight of the liquid oxygen $\gamma = 1.14 \times 10^3$ kg/m^3.

Solution:

Making use of formula (IX.120) for the calculation of the maximum number of rpm:

$$n_{max} = c_{cr}\frac{1}{\sqrt{Q}}\left(\frac{H_{ent} - H_s}{10}\right)^{\frac{3}{4}} \text{ rpm.}$$

We take for the pump $C_{critical}$ = 900 (for the pump there is no special anti-cavitation apparatus or arrangement).

In rocket A-4, the weight consumption of liquid oxygen amounts to G = 69.3 kg/sec; consequently, the volumetric consumption will be equal to

$$Q = \frac{G}{\gamma} = \frac{69,3}{1140} \approx 0,060 \text{ m}^3\text{/sec.}$$

We assume that the minimum effective head of the column of oxygen H_{min} amounts to 0.8 of the initial head, that is,

$$H_{min} = 0,8 \cdot 3,5 = 2,8 \text{ m.}$$

We determine the head due to the pressurization of the tank

$$H_t = \frac{p_t}{\gamma} = \frac{2,5 \cdot 10^4}{1,14 \cdot 10^3} = 21,9 \text{ m.}$$

The total head at the entrance H_{ent} amounts to

$$H_{ent} = H_{min} + H_{t} = 2{,}8 + 21{,}9 = 24{,}7 \text{ m.}$$

The pressure of the saturated vapors of liquid oxygen at the boiling point amounts to

$$p_s = 1 \text{ atm},$$

consequently,

$$H_s = \frac{p_s}{\gamma} = \frac{1 \cdot 10^4}{1{,}14 \cdot 10^3} = 8{,}8 \text{ m.}$$

We substitute the data obtained in (IX.120) and we find

$$n_{max} = \frac{900}{\sqrt{0{,}06}} \left(\frac{24{,}7 - 8{,}8}{10} \right)^{\frac{3}{4}} = 5800 \quad \text{rpm.}$$

As the calculation shows, the maximum permissible rpm obtained is greater than that of the pump; consequently, in accordance with the requirements for cavitation it is permissible.

Section 61. Calculation of Pumps Employed in Liquid-Fuel Rocket Engines. Method of Calculating the Centrifugal Pump.

The engineering calculation of the centrifugal pump should give the basic dimensions if we have the prescribed head of the pump H in meters and the discharge Q in m^3/sec.

In addition, the number of revolutions (rpm) may be prescribed. Then, from the calculation for cavitation we must find the pressure at the entrance ensuring non-cavitational operation of the pump. If, however, the rpm is to be determined, we must find it from the calculation for cavitation, first having estimated the pump operating conditions for the rocket as well as having selected a rational value of the pressure in the tanks.

It is necessary to determine the following dimensions of the pump: $d_{\text{вт}}$; D_0; D_1; b_1; β_1; D_2; β_2; b_2; $D_{\text{вых}}$ the shape of the wheel in the meridional section, the profile of the vanes, the dimensions of the pump shell, as also the power and efficiency of the pump.

The calculation of the pump is made in the following manner.[1]

1. We find the coefficient of speed N_s according to formula (IX.77).

2. We prescribe the value of the volumetric efficiency.

A. A. Lomakin recommends the following formula for the determination of η_o:

$$\eta_0 = \frac{1}{1+0.68n_s^{-\frac{2}{3}}}. \tag{IX.123}$$

However, this formula is not suitable for pumps of small dimensions (aircraft liquid-fuel rocket engines), which, in view of the high relative value of the clearances have a much larger overflow. Thus, for pumps of aircraft liquid-fuel rocket engines, the value of the volumetric efficiency amounts to $\eta_o = 0.4-0.6$. Hence, in the selection of the volumetric efficiency it is necessary either to use the data of a pump similar in design and dimensions or make special calculation of the leakage through the packing.

3. We find the reduced diameter D_{1e} in accordance with formula (IX.84) and find the designed hydraulic efficiency of the pump $\eta_{hydraulic}$ by formula (IX.102).

4. We take the value of the mechanical efficiency η_{mech}.

5. We determine the total efficiency of the pump, using formula (IX.105).

6. We estimate roughly the power used in driving the pump, using formula (IX.106).

7. We determine the torque on the shaft of the pump and the diameter of the shaft

$$M_{cr} = 71\,620\frac{N}{n} \text{ kg cm}, \tag{IX.124}$$

where N is expressed in horsepower and n in rpm.

---

[1] A. A. Lomakin, Tsentrobezhnye i propellernye nasosy /Centrifugal and Propeller Pumps/, Gonti, 1950.

On the basis of the value of the torque and the permissible stress σ_{critical} we find the diameter of the shaft of the pump

$$d_{sh}=\sqrt[3]{\frac{M_{cr}}{0,2\sigma_{cr}}}\ \text{cm.} \qquad (IX.125)$$

The permissible stress for torque σ_{critical} depends on the quality of the material of the shaft and for steel shafts it may be taken within the limits σ_{critical} = 350-450 kg/cm^2.

8. From the usual structural considerations we select the diameter of the packing collar. We may assume that

$$d_{col}=(1,25\div1,30)d_{sh} \qquad (IX.126)$$

9. The effective volumetric delivery of liquid through the wheel is determined by formula (IX.73)

$$Q_0=\frac{Q}{\eta_0}\ \text{m}^3/\text{sec.}$$

10. We determine the dimensions of the entrance to the pump D_0, entrance to the wheel D_1 and the width of the wheel b_1.

In the determination of these dimensions, we should bear in mind that in the entrance part of the wheel the velocity of movement of the liquid should remain constant or be increased somewhat at the entrance to the blades, and the duct turning the flow to the vanes should be smooth. Hence, the dimensions D_0; D_1; and b_1 are closely connected with each other and there is a definite relationship between them. Their exact values are found when the layout of the pump wheel is drawn up.

The value of the diameter of the entrance to the wheel is determined by formula (IX.83)

$$D_{1,0}=\sqrt{D^2_{1pr}+d^2_{col}}.$$

The velocity of movement of the liquid at the entrance amounts to

$$c_0 = \frac{Q_0}{\frac{\pi}{4}(D_{1,\text{в}}^2 - d_{\text{вт}}^2)} = \frac{Q_0}{\frac{\pi}{4} D_{1\text{eq}}^2} \text{ m/sec,}$$

where the values $D_{1\ eq}$, D_O, and D_{collar} are represented in meters.

After this, on the basis of the shape of wheel adopted, we determine the value D_1, which is either equal to $D_{1.v}$ (for vanes with straight edges), or somewhat less than $D_{1.v}$ (for vanes with sloped edges).

After selecting the value of D_1, we determine the width of the entrance to the wheel b_1 by the formula

$$b_1 = \frac{Q_0}{\pi D_1 \psi_1 c_1}. \tag{IX.127}$$

Since the coefficient ψ_1 cannot be determined by formula (IX.87), because angle β_1 is not yet known, the calculation is made approximately under the assumption that $\psi_1 c_1 = c_o$.

11. We calculate the angles made by the vanes at the entrance to the wheel β_1, taking the value of the velocity c_1 equal approximately to c_o. We determine the peripheral velocity u_1 by the formula

$$u_1 = \frac{\pi D_1 n}{60}.$$

We find the angle of slope of the vector of the relative velocity, without taking into account the obstruction by the vanes at the entrance $_1$'

$$\operatorname{tg} \beta_1' = \frac{c_0}{u_1}. \tag{IX.128}$$

For designation of the angle of slope of the vane, we determine the value of the supplementary angle of incidence $\Delta\beta' = 0.30\text{-}0.35\ \beta_1'$. This angle $\Delta\beta'$ should also allow for the increase in velocity c_1 in comparison with c_o due to the obstruction of the entrance by the vanes and the necessary increase of $\beta_{1\ vane}$ over the actual angle of entrance β_1.

After the determination of $\Delta\beta'$ we find $\beta_{1\ vane}'$

$$\beta_{1v} = \beta_1' + \Delta\beta'. \tag{IX.129}$$

After this, we check the fulfillment of the requirements for the designing of the entrance. For this purpose, on the basis of angle β_1 vane and the thickness of the vane δ_1 (it is equal to 3-5 mm), we find the coefficient of obstruction ψ_1 [and we should select the number of vanes beforehand, starting with the construction of similar pumps; the correctness of the selection should be checked later by the formula (IX.132)].

According to formula

$$c_1 = \frac{c_0}{\psi_1}$$

we find the actual velocity c_1 with a width of vane b_1 determined earlier. This velocity should be somewhat greater (by 10 to 15%) than the velocity c_0; then from the relations given in (IX.81), we find the real angle β_1. In this case it is necessary to bear in mind that $c_{1m} = c_1$ (radial entrance)

$$\mathrm{tg}\,\beta_1 = \frac{c_1}{u_1}$$

and we find the real difference $\Delta\beta$.

$$\Delta\beta = \beta_{1v} - \beta_1.$$

If it comes within the value 4-6°, usual for pumps that have been manufactured, the calculation of the basic dimensions of the entrance is complete. If this condition is not fulfilled, we prescribe a new angle β_1 vane and repeat the checking of the angle $\Delta\beta$.

12. We calculate the basic dimensions at the exit from the wheel.

This calculation is made in two stages. At first, we make a rough calculation of the dimensions of the exit, and after this we ascertain the dimensions in a more precise manner. For a rough determination of the diameter D_2, we use the relation

$$H = k\frac{(u_2')^2}{g}, \qquad \text{(IX.130)}$$

where u_2' is the approximate value of the peripheral velocity at the exit from the wheel u_2, necessary for obtaining the prescribed head.

For practically all cases of pump calculations the value k may be taken as equal to 0.5.

On the basis of the value found for u_2' and the prescribed rpm n, we find the approximate value of the diameter of the exit, which we designate by D_2'.

$$D_2' = \frac{60 u_2'}{\pi n} \text{ m}. \qquad \text{(IX.131)}$$

In addition, we fix the value of the angle of the exit of the flow from the wheel, that is, the angle of the vane β_2.

The angle of the vane at the exit for the common pumps changes within small limits and amounts to $\beta_2 \approx 18\text{-}35^\circ$. The value of the angle β_2 is smaller for pumps of greater specific speed n_s and vice versa.

The previously found diameter D_2 and the assumed value of β_2 are also used for checking the number of vanes z selected previously. For this purpose we use the formula

$$z = 13 \frac{D_2 + D_1}{2(D_2 - D_1)} \sin \frac{\beta_1 + \beta_2}{2}. \qquad \text{(IX.132)}$$

This formula is found on the basis of the requirement that we must insure the overlapping by each successive vane of one-half the length of the preceding one. This requirement is not clearly evident. Hence, the number of vanes is sometimes selected on the basis of the value n_s of the pump.

For the determination of the width of a vane at the exit b_2 we employ the rule determined by practice that the meridional velocity of the movement of the liquid over wheel C_{1m} should remain approximately constant. Hence, the meridional velocity at the exit C_{2m} should be approximately equal to the velocity c_{1m}, which is already known.

For the calculation of the meridional velocity we make use of formula (IX.90)

$$c_{2m} = \frac{Q_t}{\pi D_2 b_2 \psi_2}.$$

The value ψ_2 is determined beforehand by formula (IX.89).

The value b_2 should be such that the wheel may actually be constructed. For cast wheels, the value b_2 should be greater than 4-5 mm.

If the width of the wheel obtained for the exit in the calculation is less than this permissible limiting value, it is necessary to decrease the designed velocity C_{2m}. In this case it is permissible to reduce C_{2m} to the value $C_{2m} = 0.5\ C_{1m}$.

Having obtained all the preliminary dimensions of the exit we can now render their values more precise.

For this purpose we find the theoretical head of the pump with a finite number of blades, in accordance with the coefficient $\eta_{hydraulic}$ determined above [formula (IX.101)]

$$H_{\tau} = \frac{H}{\eta_h},$$

then, we determine the head $H_{theor\,\infty}$, which a wheel with an infinite number of vanes should have. For this purpose, on the basis of formula (IX.96), we determine the value p and then, by formula (IX.95), we find

$$H_{\tau\infty} = H_{\tau}(1+p).$$

We also use equation (IX.93) and transform it in the following manner (see Figure 174):

$$H_{\tau\infty} = \frac{u_2 c_{2u}}{g} = \frac{1}{g} u_2 \left(u_2 - \frac{c_{2m}}{\operatorname{tg}\beta_2}\right). \qquad \text{(IX.133)}$$

whence,

$$u_2 = \frac{c_{2m}}{2\operatorname{tg}\beta_2} + \sqrt{\left(\frac{c_{2m}}{2\operatorname{tg}\beta_2}\right)^2 + gH_{\tau\infty}}.$$

(IX.134)

After finding u_2 by this more accurate formula, we can determine the precise diameter D_2.

If the difference between the values D_2 and D_2' is small, we may regard the calculation as completed, without trying to determine the value D_2 more accurately. If the difference between the values D_2 and D_2' is large, it is necessary to calculate a new value for C_{2m} and ψ_2 and, again making use of formulas (IX.134) and (IX.131), determine the exit diameter of the wheel D_2.

13. We carry out profiling of the wheel in the meridional section.

Proceeding on the basis of the dimensions of the pump: D_1, b_1, $d_{\text{packing collar}}$, D_2 and b_2 obtained in the calculation, we lay out the meridional section of the wheel (analogous to the meridional section of the pump of the model), and after this we check the law for the change of meridional velocities which we shall have in the designed wheel. For this purpose we inscribe in the meridional section of the wheel a number of circles touching its front and rear walls (Figure 183). By joining the points of contact with a straight line, we determine the value of b, which is taken as equal to the width of the wheel on radius R. In this way we obtain the graph of the change of b depending upon R. Then, making use of the formula analogous to (IX.79),

$$c_{im} = \frac{Q_0}{2\pi R b_i},$$

we compute the meridional velocity C_{im} on the radius R and construct a graph of the change of this value on the radius. The velocity C_{im} should then decrease smoothly (if possible, linearly) from the value C_{1m} on the radius $R_1 = \frac{D_1}{2}$ to the value C_{2m} on the radius $R_2 = \frac{D_2}{2}$. If it is necessary, we make a correction in the meridional section and again check the change of C_{im} on the basis of the radius.

The profile of the curves limiting the wheel should be smooth; the line of centers of the circles inscribed in the profile is the median line of the meridional section of the wheel.

14. We carry out the profiling of the vanes of the wheel. The construction

of the profile of the vanes of the wheel is done on the basis of the values D_1, β_1, D_2, and β_2 obtained in the calculation.

There are many different methods for designing the vanes. First of all, let us note that the vanes, arranged in the radial part of the wheel, are made in the majority of cases cylindrical with the generatrices parallel to the axis of the pump. For the designing of such vanes we must draw their projection on a plane perpendicular to the axis of the pump (that is, in plan), which will be represented by a curved line.

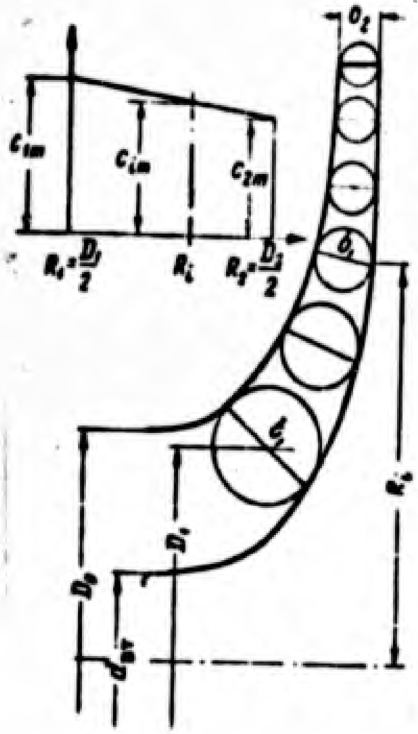

Figure 183. Plotting and checking of the meridional section of the wheel of a pump.

The vanes placed forward in the entrance part of the diffuser have a more complicated profile, because for better correspondence with the lines of the flow of the streams of liquid they are bent not only in plan but also in the direction of the width, that is, in the direction from the rear wall of the wheel to the front wall. Hence, their cylindrical sections will not be straight lines but curved ones. For example, if the entrance edges of the vanes lie in the plane perpendicular to the axis of the pump, a smooth vane with a variable angle $\beta_{1\ \text{vane}}$ can be provided, for the radius, only by a vane of double curvature. Let us note that vanes of double curvature are preferable in those cases when there is danger of the development of cavitation.

The basic problem in the profiling of vanes of any type consists in obtaining between the vanes a smooth channel in which the vector of the velocity w changes smoothly in value and direction from w_1 to w_2. Besides, the channel formed by the vanes should not have sharp changes in the passage sections or turns. For example, cylindrical vanes of the simplest shape may be formed by arcs of a circle of constant radius; however, in this case the channel between the blades is not satisfactory.

A more suitable profile of the cylindrical vanes can be obtained by constructing the vanes in such a way that the change in the angle, radially, of the wheel (from β_1 to β_2) takes place smoothly (Figure 184). Immediately before the departure from the wheel the angle β_r should remain constant over a certain sector and, of course, equal to β_2.

Having prescribed the law of change of the angle β_r, we divide the difference $R_2 - R_1$ into a certain number of equal distances ΔR and determine the angles β_{ri} on the corresponding circles R_i. On the drawing of the wheel in plan we select on the circle of radius R_1 an initial point A for plotting; from it we draw a radial line, forming with the tangent to the circle D_1 the angle β_1 and continue it until it intersects (point B) the auxiliary circle having a radius $R_1 + \Delta R$. From the point B, we draw another radial line at an angle β_r until it intersects (point C) with the auxiliary circle $R_1 + 2\Delta R$, etc.

We must take the value of the current angle β_r as a variable in accordance with the graph adopted for its change. The broken line obtained, A B C..., is replaced by a smooth curve which will be the profile of the cylindrical vane in plan. We obtain the rest of the vanes by dividing the auxiliary circles into the same sized parts, the number of which is equal to the number of vanes.

The profiling of the vanes of double curvatures is done by means of special geometrical methods.[1]

15. We select the type of diffuser (vane or vaneless).

16. We determine the dimensions and carry out the profiling of the shell (collectors) of the pump.

The shell of the pump is designed on the basis of the following assumptions:

1) The delivery of liquid Q_φ, passing through the section of the shell, increases proportionally to the increase of the central angle read from the so-called "tongue" of the shell (radius OA, Figure 185), that is,

$$Q_\varphi = Q\frac{\varphi}{360^\circ}. \qquad (IX.135)$$

The formula (IX.135) assumes a uniform approach of the liquid into the shell. Over the whole circumference, the shell should collect the total delivery of liquid Q.

2) In order for the shell to ensure the free flow of liquid, it is necessary that the angular momentum of the liquid R_2C_2u, received by it at the exit from the wheel, remain constant.

If for simplification we assume that the velocity of the liquid along the transversal section of the shell does not change and amounts to C_t and that the dimensions of the section of the shell in comparison with the radius on which we find the center of gravity of its section $r_{\text{center of gravity}}$ are small, then we may express the angular momentum of the liquid in this section as equal to $C_t\, r_{\text{center of gravity}}$. Then

$$c_t r_{c.g.} = R_2 c_{2u}. \qquad (IX.136)$$

---

[1] A. A. Lomakin, Tsentrobezhnye i propellernye nasosy /Centrifugal and Propeller Pumps/, Gonti, 1950.
V. N. Prokof'ev, Tsentrobezhnye nasosy /Centrifugal Pumps/, Publishing House of the MVTU imeni Bausman, 1949.

On the basis of expressions (IX.135) and (IX.136), we can use the following rough estimate method for profiling the shell.

We fix the form of the section of the shell. For example, in Figure 185, the section of the shell is taken in the form of a circle of radius ρ. We can also take some other form of section suitable for the contruction.

After constructing a numberof sections similar in geometrical shape, we can find for each section its area $F\varphi$, the radius of the circle $\rho\varphi$, the radius of the center of gravity of the section $r_{\text{center of gravity}\,\varphi}$, and the radius $R\varphi$ of the remotest point of the section from the axis of rotation of the wheel.

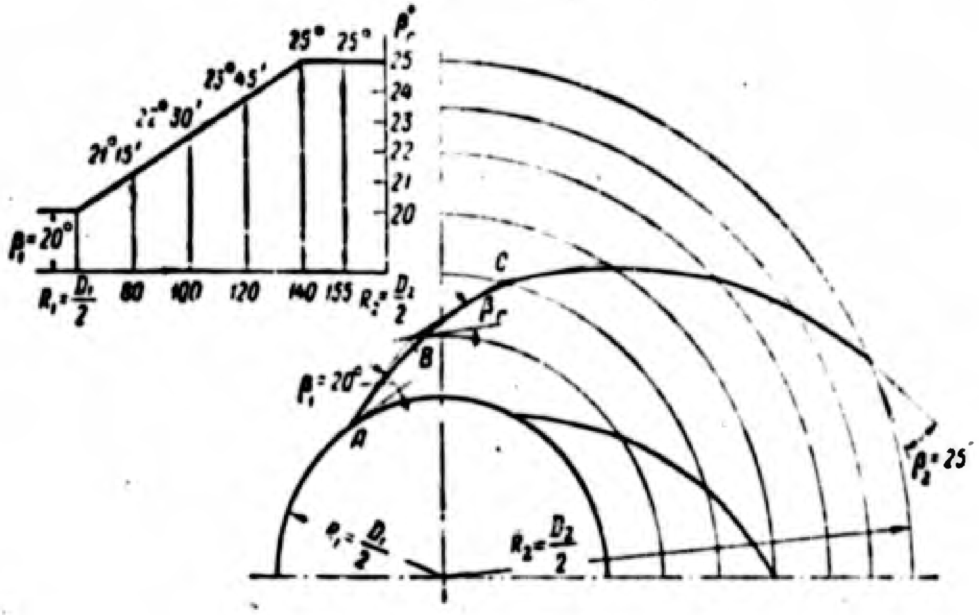

Figure 184. The profiling of the cylindrical vanes of the wheel of the pump in plan.

With observance of the law for the conservation of momentum, the tangential component of the absolute velocity at the center of gravity of the section will be equal to

$$c_{t\varphi} = \frac{R_\varphi c_{2u}}{r_{cg\varphi}}, \tag{IX.137}$$

and the delivery through the section in accordance with the equation of delivery amounts to

$$Q_\varphi = F_\varphi c_{t\varphi}, \tag{IX.138}$$

because the tangential component of velocity $C_{t\varphi}$ is normal to the section of the spiral shell.

The angle of arrangement of this section is determined from the expression (IX.135)(as the origin for the reading of the angles, we take the radius OA drawn through the point of origin of the spiral shell, corresponding to the end of the "tongue" of the spiral shell)

$$\varphi = 360\frac{Q_\varphi}{Q},$$

in which Q is the total delivery through the pump.

In Figure 186, for each constructed section, and, consequently, for the corresponding angle φ, we have plotted the values obtained for R_φ, ρ_φ. The sections constructed should be sufficient for the drawing of the appropriate curves for representing the law of change of R_φ and ρ.

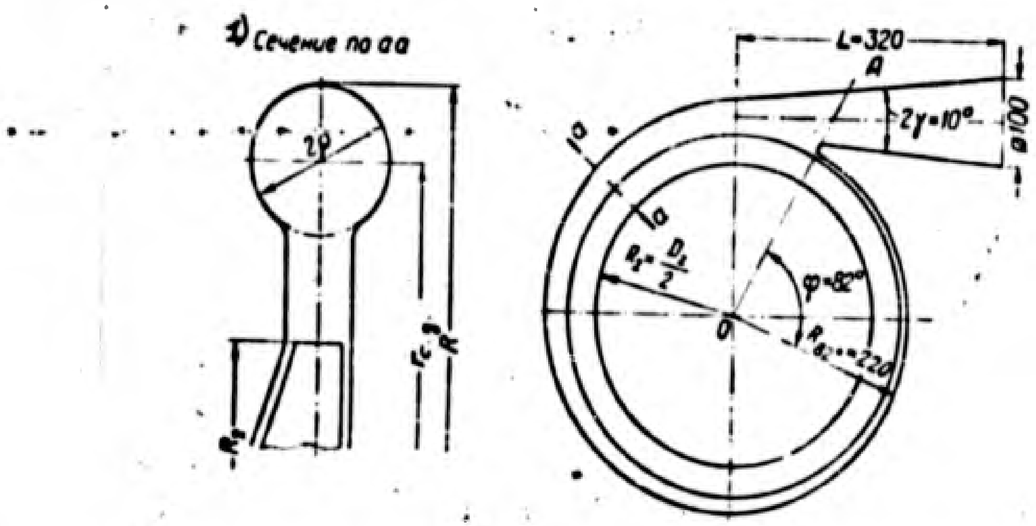

Figure 185. Profiling the spiral collector (spiral shell) of the pump.

1 -- section along aa.

After this, setting a number of values for angles φ_i, we construct on the basis of the corresponding values of R_{φ_i} the projection of the spiral shell in plan (see Figure 185), and on the basis of the corresponding values of ρ_{φ_i} and $r_{\text{center of gravity } \varphi_i}$, the necessary sections of the spiral shell.

For reducing the velocity of movement of the liquid in the spiral shell and for a better transformation of the velocity head in the pressure at the exit from the wheel, we often install a vane or a vaneless diffuser. In the vaneless diffuser, due to the increase in R, there is a decrease in the velocity of the movement of the liquid. In the vane diffuser, in addition to this, there is an artificial decrease in the peripheral velocity of the liquid, due to the action of the vanes on the flow.

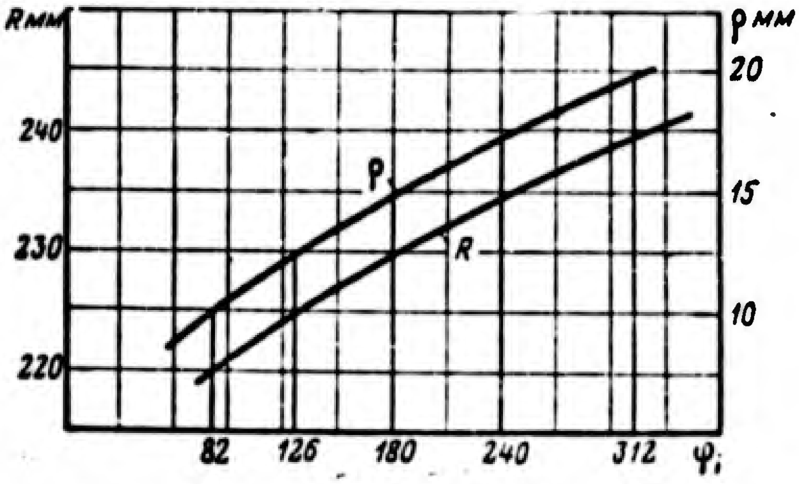

Figure 186. Illustrating profiling of spiral shell.

17. We carry out the profiling of the exit sleeve (nozzle) of the spiral shell. In designing the exit nozzle of the spiral shell, we take into account the fact that it should insure a smooth transition of the profile of the spiral shell into the section corresponding to the section of the branch ducts, and also a decrease in the velocity of movement of the liquid to a velocity permissible in the branch duct C_{duct}. The latter is permissible for the ducts of liquid-fuel rocket engines in limits of 5-10 m/sec. After setting this velocity, we determine the dimensions of the exit section of the exit nozzle F_{exit}:

$$F_{\text{ex.}} = \frac{Q}{c_{\text{duct}}}. \tag{IX.139}$$

We select its shape on the basis of structural considerations, that is, the selection will depend on the shape of the spiral shell and the shape and arrangement of the ducts leading off the liquid. Oftentimes, the outlet nozzle of the spiral shell is executed in the form of a divergent cone. In this case the angle of opening of the cone should not be greater than 8-11 degrees.

For clarification of the method given for the designing, let us consider an example of the calculation of a centrifugal pump.

Example of the Calculation of a Centrifugal Pump.

Calculate a centrifugal pump for a liquid-fuel rocket engine for feeding ethyl alcohol (93.5% by weight; $\gamma = 0.781$ g/cm) in the amount of 50 kg/sec at a feed pressure of 20 atü. Assume the rpm to equal 4,200. The pump should insure non-cavitational operation up to a temperature of the component of +50°C.

1. We calculate basic data for the pump.

The volume delivery in accordance with formula (IX.72) is

$$Q = \frac{G}{1000\gamma} = \frac{50}{1000 \cdot 0{,}781} = 0{,}064 \text{ m}^3/\text{sec}.$$

Since the number of revolutions of the pump is set, we must determine the necessary pressure at the entrance $P_{\text{necessary at ent}}$, to insure the operation of the pump without cavitation in accordance with the formula (IX.121)

$$p_{\text{nec. at ent}} = p_s + \gamma\left(\frac{n\sqrt{Q}}{c_{cr}}\right)^{4/3}.$$

We take the value of the critical coefficient of cavitation $C_{\text{critical}} = 850$ (without proposing to take any special measures for combating cavitation). On the basis of the tentative data in Figure 182, we take the pressure of the saturated alcohol vapors at t = + 50°C as $p_s = 0.4$ at. Then

$$p_{\text{nec. at ent}} = 0{,}4 + 0{,}781\left(\frac{4200\sqrt{0{,}064}}{850}\right)^{4/3} = 0{,}4 + 1{,}06 = 1{,}46 \text{ atm}$$

We take the pressure in round numbers at the entrance

$$p_{ent} = 1{,}5\ \text{ат} = 0{,}5\ \text{ати}.$$

The head of the pump in accordance with formula (IX.76)

$$H = 10\frac{\Delta p_p}{\gamma} = 10\frac{p_f - p_{ent}}{\gamma} = 10\frac{(20-0{,}5)}{0{,}781} = 250 \text{ m}.$$

2. We determine the speed coefficient of the pump by (IX.77)

$$n_s = 3{,}65\frac{\sqrt{Q}}{\sqrt[4]{H^3}}n = 3{,}65\frac{\sqrt{0{,}064}}{\sqrt[4]{250^3}}4200 = 61.$$

A pump with such a speed coefficient can be executed with a satisfactory efficiency index.

3. We set the value of the volumetric efficiency of the pump η_{volume} = 0.85.

4. We find the equivalent diameter $D_{1\ eq}$ by the formula (IX.84)

$$D_{1eq} = 4{,}5\cdot 10^3\sqrt[3]{\frac{Q}{n}} = 4{,}5\cdot 10^3\sqrt[3]{\frac{0{,}064}{4200}} = 111 \text{ mm}.$$

5. We determine the hydraulic efficiency by formula (IX.102)

$$\eta_h = 1 - \frac{0{,}42}{(\lg D_1 - 0{,}172)^2} = 1 - \frac{0{,}42}{(\lg 111 - 0{,}172)^2} = 0{,}878.$$

The formula gives with small value of $D_{1\ eq}$ an over-rated value of η_{hydr}; hence, from experimental data we take the value η_{hydr} = 0.775, obtained by testing a similar pump with the same speed coefficient.

6. We set the value of the mechanical efficiency η_{mech} = 0.95.

7. We determine the total efficiency of the pump

$$\eta = \eta_h\eta_v\eta_m = 0{,}775\cdot 0{,}850\cdot 0{,}950 = 0{,}625.$$

8. We determine the power of the pump

$$N_p = \frac{QH1000\gamma}{75\eta} = \frac{0{,}064\cdot 250\cdot 1000\cdot 0{,}781}{75\cdot 0{,}625} = 267 \text{ hp}.$$

9. We determine the torque on the shaft of the pump

$$M_{cr}=71\,620\frac{N_p}{n}=71\,620\frac{267}{4200}=4550 \text{ kg cm.}$$

10. We determine the diameter d_{shaft}, taking $\sigma_{critical}$ = 400 kg/cm^2

$$d_{sh}=\sqrt[3]{\frac{M_{cr}}{0{,}2\sigma_{cr}}}=\sqrt[3]{\frac{4550}{0{,}2\cdot 400}}=3{,}85 \text{ см}=38{,}5 \text{ mm.}$$

11. We assume that the diameter of the collar is equal to 1.25 from the diameter of the shaft

$$d_{col}=1{,}25d_{sh}=1{,}25\cdot 38{,}5=48{,}3 \text{ mm.}$$

We take d_{collar} = 50 mm.

12. We determine the actual delivery of liquid through the wheel

$$Q_0=\frac{Q}{\eta_0}=\frac{0{,}064}{0{,}85}=0{,}0753 \text{ m}^3\text{/sec.}$$

13. We determine the diameter of the entrance to the pump D_1 volume by formula (IX.83)

$$D_{1.0}=\sqrt{D_{1.q}^2+d_b^2}=\sqrt{111^2+50^2}=121 \text{ mm.}$$

We take

$$D_{1.0}=120 \text{ mm.}$$

14. We find the velocity of the entrance of the liquid to the wheel by formula (IX.78)

$$c_0=\frac{Q_0}{\frac{\pi}{4}(D_{1.0}^2-d_b^2)}=\frac{0{,}0753}{\frac{\pi}{4}(0{,}12^2-0{,}05^2)}=8{,}05 \text{ m/sec.}$$

15. Taking the sloped edge of the vane in accordance with the drawing in Figure 171, we select

$$D_1=0{,}95D_{1.0}$$

and determine

$$D_1=0{,}95\cdot 120=114 \text{ мм}=0{,}114 \text{ м.}$$

16. We find by formula (IX.127) the width of the wheel at the entrance taking at first $\psi_1 c_1 = 8.05$ m/sec

$$b_1 = \frac{Q_0}{\pi D_1 \psi_1 c_1} = \frac{0{,}0753}{\pi \cdot 0{,}114 \cdot 8{,}05} = 0{,}026 \text{ м} = 26 \text{ mm.}$$

17. We determine the peripheral velocity of the wheel on the designed diameter

$$u_1 = \frac{\pi D_1 n}{60} = \frac{\pi \cdot 0{,}114 \cdot 4200}{60} = 25{,}05 \text{ m/sec.}$$

18. We determine the angle of the entrance of the liquid to the vanes without taking into account an obstruction of the flow by the vanes

$$\operatorname{tg} \beta_1' = \frac{c_0}{u_1} = \frac{8{,}05}{25{,}05} = 0{,}321; \quad \beta_1' = 17^\circ 50'.$$

19. We determine the supplementary angle of incidence of the vane for finding the angle of slope of the vane

$$\Delta \beta' = 0{,}35 \cdot 17^\circ 50' = 6^\circ 10'.$$

20. We find the angle of the vane $\beta_{1 \text{ vane}}$

$$\beta_{1v} = 17^\circ 50' + 6^\circ 10' = 24^\circ.$$

We take $\beta_{1 \text{ vane}} = 24^\circ$.

21. From structural considerations we set the thickness of the vane at the entrance at $\delta_1 = 3$ mm, and also the provisional number of vanes $z = 6$.

22. We determine the coefficient of obstruction of the flow at the entrance to the wheel by the formula (IX.87)

$$\psi_1 = 1 - \frac{\delta_1 z}{\pi D_1 \sin \beta_{1v}} = 1 - \frac{0{,}003 \cdot 6}{\pi \cdot 0{,}114 \sin 24^\circ} = 0{,}88.$$

23. We determine the real velocity of the flow at the entrance

$$c_{1m}=\frac{c_0}{\psi_1}=\frac{8{,}05}{0{,}88}=9{,}15\text{ m/sec.}$$

24. We determine the real angle of the entrance of the liquid to the wheel β_1

$$\operatorname{tg}\beta_1=\frac{9{,}15}{25{,}05}=0{,}364;\quad \beta_1=20^\circ.$$

25. We determine the real angle $\Delta\beta$

$$\Delta\beta=\beta_{1v}-\beta_1=24^\circ-20^\circ=4^\circ.$$

Since the value $\Delta\beta$ is found within the limits recommended, the calculation for the entrance is considered to be completed.

26. We determine in the first approximation the necessary peripheral velocity of the wheel at the exit in accordance with formula (IX.130)

$$H=k\frac{(u_2')^2}{g};\quad u_2'=\sqrt{\frac{gH}{k}}=\sqrt{\frac{9{,}81\cdot 250}{0{,}5}}=70\text{ m/sec.}$$

27. We determine in the first approximation the diameter of the wheel at the exit

$$D_2'=\frac{60u_2'}{\pi n}=\frac{60\cdot 70}{\pi\cdot 4200}=0{,}319\text{ m}\approx 320\text{ mm.}$$

28. For the speed coefficient of the pump n_s = 61, we select the angle of discharge of the flow, equal to

$$\beta_2=25^\circ.$$

29. We verify the correctness of the number of vanes selected previously, using formula (IX.132)

$$z=13\frac{D_2+D_1}{2(D_2-D_1)}\sin\frac{\beta_1+\beta_2}{2}=13\frac{320+114}{2(320-114)}\sin\frac{20^\circ+25^\circ}{2}=5{,}3.$$

The number of vanes adopted previously, equal to 6, may be regarded as correctly selected.

30. We determine the angle of obstruction of the flow at the exit with a thickness of vane δ_2 equal to 3 mm, according to formula (IX.89)

$$\psi_2 = 1 - \frac{\delta_2 z}{\pi D_2 \sin \beta_2} = 1 - \frac{0,003 \cdot 6}{\pi \cdot 0,320 \cdot \sin 25^\circ} = 0,957.$$

31. We determine the necessary width of the wheel at the exit by equation

$$c_{2m} = \frac{Q_0}{\pi D_2 b_2 \psi_2}.$$

We take in this case $C_{2m} = C_{1m} = 9.15$ m/sec

$$b_2 = \frac{Q_0}{c_1 \pi D_2 \psi_2} = \frac{0,064}{9,15 \cdot \pi \cdot 0,32 \cdot 0,957} = 0,0073\ м = 7,3 \text{ mm}.$$

We take the width of the wheel at the exit equal to 8 mm, which may also be maintained from an engineering standpoint. In this case, the real velocity C_{2m} amounts to

$$c_{2m} = \frac{Q_0}{\pi D_2 b_2 \psi_2} = \frac{0,064}{\pi \cdot 0,32 \cdot 0,008 \cdot 0,957} = 8,32 \text{ m/sec}.$$

32. We determine the theoretical head of the wheel

$$H_т = \frac{H}{\eta_h} = \frac{250}{0,775} = 323 \text{ m}.$$

33. We determine the correction coefficient p by the formula (IX.96)

$$p = 2\frac{\psi}{z}\frac{1}{1 - \left(\frac{D_1}{D_2}\right)^2},$$

where $\psi = 0.6 + 0.6 \sin \beta_2$;

$$\psi = 0,6 + 0,6 \sin 25^\circ = 0,853;$$

$$p = 2\frac{0,853}{6}\frac{1}{1 - \left(\frac{114}{320}\right)^2} = 0,325.$$

34. We find the theoretical head with an infinite number of vanes by using the formula (IX.95)

$$H_{т\infty} = H_т(1 + p) = 323 \cdot 1,325 = 428 \text{ m}.$$

35. We find the peripheral velocity at the exit in the second approximation, using formula (IX.134)

$$u_2 = \frac{c_{2m}}{2\operatorname{tg}\beta_2} + \sqrt{\left(\frac{c_{2m}}{2\operatorname{tg}\beta_2}\right)^2 + gH_{T\infty}} =$$

$$= \frac{8{,}32}{2 \cdot 0{,}466} + \sqrt{\left(\frac{8{,}32}{2 \cdot 0{,}466}\right)^2 + 9{,}81 \cdot 423} = 74{,}5 \text{ m/sec.}$$

36. We find the diameter of the wheel at the exit in the second approximation

$$D_2 = \frac{60u_2}{\pi n} = \frac{60 \cdot 74{,}5}{\pi \cdot 4200} = 0{,}339 \text{ m} \approx 340 \text{ mm.}$$

Since the divergence in the value D_2 in comparison with the first approximation is comparatively small, we do not make any further recalculation of the diameter D_2.

37. We carry out the profiling of the wheel in the meridional section (see Figure 183).

38. We carry out the profiling of the cylindrical vane in ground plan (see Figure 184).

39. We determine momentum of the liquid at its exit from the wheel

$$c_{2u} = u_2 - \frac{c_{2m}}{\operatorname{tg}\beta_2} = 74{,}8 - \frac{8{,}32}{0{,}466} = 56{,}9 \text{ m/sec,}$$

$$c_{2u}R_2 = 56{,}9\frac{0{,}340}{2} = 9{,}67 \text{ m}^2\text{/sec.}$$

40. We carry out the profiling of the spiral shell (see Figure 185).

For decreasing the velocity of the liquid, we employ a vaneless diffuser having a height of 30 mm. As the form of the section of the spiral shell we choose a circle and draw up a Table of the characteristic dimensions.

On the basis of the data of the Table, we construct the graph of Figure 186, on the basis of which we find all the necessary dimensions of the

No. of Section	ρ in m	$r = r_{c.g.}$ in m	c_i in m/sec	f_i in m^2	Q_i in m^3/sec	φ_i	R_i in m
1	0,0100	0,2100	46,0	$3,14 \cdot 10^{-4}$	0,0144	82	0,220
2	0,0125	0,2125	45,5	$4,91 \cdot 10^{-4}$	0,0224	126	0,225
3	0,0150	0,2150	44,9	$7,10 \cdot 10^{-4}$	0,0320	180	0,230
4	0,0175	0,2175	44,4	$9,60 \cdot 10^{-4}$	0,0427	240	0,235
5	0,0200	0,2200	43,9	$12,60 \cdot 10^{-4}$	0,0554	312	0,240
6	0,0225	0,2225	43,4	$15,90 \cdot 10^{-4}$	0,0690	388	0,245

spiral shell in any of its sections. In the spiral shell designed there are very high velocities which may cause a deterioration of the hydraulic efficiency due to the very high hydraulic losses. For decreasing these losses it is sometimes expedient to employ vane diffusers.

41. We determine the dimensions of the cross-section of the discharge nozzle.

We assume the form of the section of the nozzle to be a circle. The velocity at the exit and in the pipe $C_{pipe} = 10$ m/sec

$$F_{ex} = \frac{Q}{c_{pipe}} = \frac{0,064}{10} = 0,0064 \text{ m}^2.$$

We take $D_{exit} = 100$ mm.

42. We determine the length of the conical exit nozzle.

We prescribe the angle $2\gamma = 10^\circ$; $\gamma = 5^\circ$, and obtain

$$L = \frac{D_{ex} - 2\rho_{ex}}{2 \operatorname{tg} \gamma};$$

$$L = \frac{0,100 - 0.045}{2 \cdot 0,086} = 0,320 \text{ m} = 320 \text{ mm}.$$

Calculation of Spur-Gear Pumps.

The transferred liquid goes into the entrance nozzle to the teeth of the two gear wheels which intermesh and rotate (Figure 187). It goes into the notches between the teeth and is drawn by the gears in the direction of delivery. In this cavity the teeth again begin to mesh and force the liquid from the notches. Flowing of the liquid toward the intake is prevented by the circumstance that the teeth of the gear wheels are meshed and the clearance between the body and the teeth is made small. Hence, the liquid is directed through the delivery nozzle into the feed system of the engine.

The spur-gear pump is one of the varieties of pumps of the volumetric type, in which the delivery of the liquid is effected by forcing it from the working volume of the pump. The pressure developed by a volumetric pump is determined by the hydraulic resistance of the delivery system and does not depend directly on the number of its revolutions.

Figure 187. Diagram of the spur-gear pump.

For the determination of the dimensions of the spur-gear pump we find the theoretical volume of liquid delivered in a unit of time by this pump. The theoretical volume of liquid delivered in one revolution of the spur-gear pump is equal to the volume of the recesses between the teeth of two gear wheels. By way of approximation we may say that the volume of the recesses between the teeth is equal to the volume of the teeth themselves.

In this case the theoretical delivery by the pump with double gear wheels during one revolution is equal to the volume of an empty cylinder embracing the teeth of one gear wheel.

Hence, the theoretical volumetric delivery of the pump Q_{theor} in 1 second amounts to

$$Q_{theor} = \pi D n \frac{1}{60} h b \cdot 10^{-9} \text{ m}^3/\text{sec.} \qquad (IX.140)$$

where D is the diameter of the initial circumference of the teeth in mm;

n, the number of revolutions of the pump per minute;

h, the height of the teeth in mm;

b, the length of the teeth in mm.

The initial diameter may be expressed by the number of teeth and their module m

$$D = zm$$

In addition to this, for the teeth of an evolute profile we can assume that

$$h = 2m$$

By making the corresponding substitutions in the initial equation (IX.140), we obtain

$$Q_{theor} = 2\pi z m^2 \frac{bn}{60} \cdot 10^{-9} \ m^3/sec. \qquad (IX.141)$$

As the equation obtained shows, in order to decrease the dimensions of the pump and its weight it is necessary to increase the module of the teeth m.

The increase in the module is limited by the minimum permissible number of teeth determined by the requirements for the making of a correct profile for the teeth. This minimum number of teeth amounts to 7-11. The width of the teeth should not be greater than 10 m; otherwise, it will be difficult to ensure close fitting of the teeth along the line of engagement.

In order to decrease the dimensions of the pump and drive it directly from a high speed turbine, it will be expedient to select the maximum possible rpm. It is limited by the peripheral velocity u on the initial circumference of the gear wheels, because, with an increase in it, the wear of the teeth increases sharply and there is an increase in the leakage of liquid between the teeth of the gear wheel and the body of the pump.

We may assume that the permissible velocity on the initial circumference of the wheel is limited to the value 80-100 m/sec

$$u = \pi D \frac{n}{60} 10^{-3} = 80 \div 100 \ m/sec. \qquad (IX.142)$$

The actual volumetric delivery Q which has been developed by the pump will be less than the theoretical, due to the leakages of the liquid. These leakages depend to a considerable extent upon the wear of the gear wheels and the pressure of the delivery of the liquid.

We can estimate roughly the value of the leakages by introducing the coefficient of delivery η

$$Q=Q_{\text{теор}}\eta. \tag{IX.143}$$

The value of this coefficient is 0.7-0.8.

By introducing into the equation (IX.141) the value η and solving it for the width of the gear wheels b we obtain

$$b=\frac{Q\cdot 10^{9}\cdot 60}{2\pi z m^{2}\eta n}=\frac{3\cdot Q\cdot 10^{10}}{\pi z m^{2}\eta n}\ \text{mm}. \tag{IX.144}$$

If the width of the teeth go beyond the permissible limit, the pump is divided into a number of sections of smaller width.

<u>Example 24</u>. Determine the dimensions of the spur-gear pump for delivery in a steam gas generator of hydrogen peroxide (γ = 1.350 kg/l) in the amount of 4 kg/sec. The speed of the turbine is 16,000 rpm.

Solution:

We take the following data for the pump: z = 12, m = 3, n = 16,000 rpm, η = 0.7.

The per second delivery Q of hydrogen peroxide amounts to

$$Q=\frac{4}{1350}=2{,}96\cdot 10^{-3}\ \text{m}^3/\text{sec}.$$

In accordance with formula (IX.144) we determine the width of the wheel of the pump

$$b=\frac{3Q\cdot 10^{10}}{\pi z m^{2}\eta n}=\frac{3\cdot 2{,}96\cdot 10^{-3}\, 10^{10}}{\pi\cdot 12\cdot 3^{2}\cdot 0{,}7\cdot 16\,000}=23{,}5\ \text{mm}.$$

We take the width of the gear wheels equal to 24 mm. Such a pump can be made in one section.

We check the value of the peripheral velocity

$$u=\frac{\pi D n}{60}\cdot 10^{-3}=\frac{\pi m z n}{60}\cdot 10^{-3}=\frac{\pi\cdot 3\cdot 12\cdot 16000\cdot 10^{-3}}{60}=30\text{ m/sec.}$$

The peripheral velocity is found to be within the permissible limits.

Section 62. Turbines, Turbo-Pump Units and Steam Gas Generators of Liquid-Fuel Rocket Engines.

In this section we shall not consider in detail the operation and calculation of turbines, because these questions are explained in the pertinent manuals. We shall consider only the special characteristics connected with the operation of the turbines in the turbo-pump unit of the liquid-fuel rocket engine.

The turbine used for driving the pumps of the liquid-fuel rocket engine operates and receives the necessary power from the force P generated on the circumference of the rotor wheel.

This is a reactive force, caused by the turn and acceleration of the flow of the operating substance between the vanes of the rotor wheel.

The operating substance of the turbine (for example, steam gas) under high pressure goes into the stationary nozzle chamber 1 (Figure 188), where, just as in the nozzle of the liquid-fuel rocket engine, it develops a high velocity due to a decrease in the pressure. Upon striking the vanes of the rotor wheel 2, the steam gas changes its direction, as a result of which it changes the value of its momentum and a reactive force causing rotation of the rotor is developed.

If the force on the rim of the wheel is due only to the turning of the flow of steam gas without its further acceleration in the ducts, formed by the vanes of the rotor wheel of the turbine, these turbines are called "velocity turbines." A characteristic feature of the velocity turbine is that the static pressure at the entrance to the rotor wheel and at the exit from it does not change, as a result of which there does not take place any further acceleration of the gas.

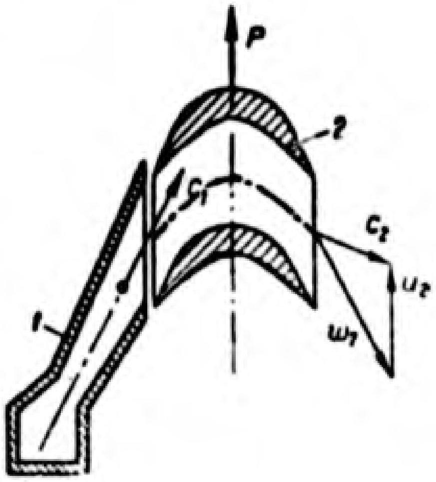

Figure 188. Diagram of the movement of the steam gas into the turbine.

1 -- nozzle chamber; 2 -- vane of the rotor wheel; C_1 -- absolute velocity of the steam gas leaving the nozzle; C_2 -- absolute velocity of the steam gas leaving the wheel of the turbine; w -- direction of the relative velocity of the steam gas at the exit from the wheel; u_2 -- peripheral velocity of the wheel; P -- reactive force rotating the wheel.

In construction the velocity turbine is the simplest type; it has a minimum weight for the unit of power, at least for a power up to 800 hp. For this reason velocity turbines have been employed most widely in liquid-fuel rocket engines.

The One-Stage Velocity Turbine.

We shall now consider the basic characteristics of the operation of the one-stage velocity turbine.

The total drop in pressure of the steam gas, generated in the turbine, is used to give velocity to the gas at the exit from stationary nozzles. Just as in the case of the nozzle of the liquid-fuel rocket engine, the velocity of discharge from the nozzle of the turbine with adiabatic expansion of the steam gas in accordance with the equation of the law for the conservation of energy is

$$c_1 = \sqrt{2g\frac{\Delta I_T}{A}}, \qquad \text{(IX.145)}$$

where ΔI_T is the decrease in the heat content of the steam gas in the turbine (the so-called heat drop) in kilo-cal/kg. This heat drop can be expressed in the form

$$\Delta I_{т} = c_p (T_1 - T_2) = c_p T_1 \left(1 - \frac{T_2}{T_1}\right). \qquad \text{(IX.146)}$$

Since $C_p T_1$ represents the heat content of steam gas at the entrance to the turbine I_{ent}, I_{ent} a $\frac{T_2}{T_1} = \left(\frac{p_2}{p_1}\right)^{\frac{k-1}{k}}$, then

$$c_1 = \sqrt{2g \frac{I_{ent}}{A}\left[1 - \left(\frac{p_2}{p_1}\right)^{\frac{k-1}{k}}\right]}. \qquad \text{(IX.147)}$$

As we can see from the expression (IX.147), the velocity C_1 increases with an increase in the heat content of the steam gas at the entrance and the drop in pressure down to and beyond the turbine; that is, in the ratio $\frac{P_2}{P_1}$.

The work of expansion of the gas in the turbine, L_p, in mechanical units amounts to

$$L_p = \frac{c_1^2}{2g} = \frac{\Delta I_{т}}{A}. \qquad \text{(IX.148)}$$

In the equation (IX.148) we have expressed the work of the ideal turbine. However, in the turbine there occur a number of losses. One of the basic losses in the turbine is the loss with the exit velocity. It represents the kinetic energy of the steam gas leaving the turbine and is equal to

$$L_{ent} = \frac{c_2^2}{2g}, \qquad \text{(IX.149)}$$

which is not utilized in the turbine.

For the effective utilization of the energy of the steam gas in the turbine, that is, for obtaining a high efficiency, it is necessary to decrease the absolute velocity of the gas at the exit from the wheel.

The absolute velocity at the exit from the wheel depends upon the ratio $\frac{u}{c_1}$, where c_1 is the exit velocity of the steam gas from the nozzle, and u, the peripheral velocity of the wheel

$$u = \frac{\pi D n}{60}. \qquad \text{(IX.150)}$$

In addition to this, the velocity c_2 depends also on the construction of the nozzle and vanes of the turbine wheel.

However, the greatest influence on the value of the exit velocity and losses in the turbine is exerted by the ratio $\frac{u}{c_1}$.

The graph of the change in the efficiency of the turbine $\eta_{turbine}$, depending upon the ratio $\frac{u}{c_1}$, for the simplest one-stage velocity turbine, is given in Figure 189.

The maximum value of the efficiency of the one-stage turbine will be at $\frac{u}{c_1} \approx 0.5$.

In the velocity turbines of liquid-fuel rocket engines c_1 has a high value: about 1,000 m/sec. Then, too, the increase in the temperature of the steam gas and the increase in the pressure drop on the turbine leads to an increase in the velocity c_1.

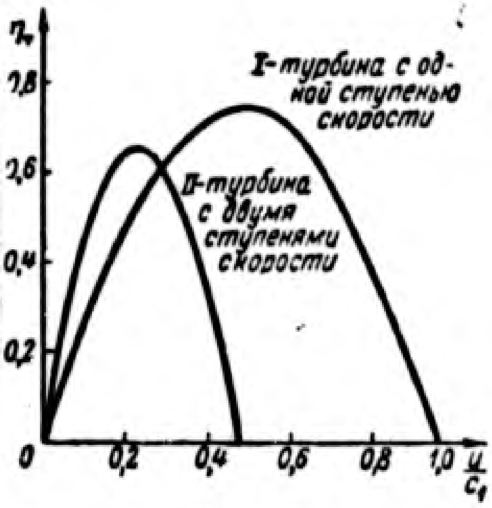

Figure 189. Change in the efficiency of the turbine depending upon the ratio $\frac{u}{c_1}$.

I -- turbine with one speed stage; II -- turbine with two speed stages.

The velocity u depends upon the diameter of the wheel of the turbine and its rpm. For high efficiency of the two stage active turbine, it is necessary to have a high peripheral velocity u (of the order of 500 m/sec). The increase in u, by an increase in the diameter of the wheel D, is an inexpedient measure, because this leads to an increase in the dimensions, and, consequently, also in the weight of the turbine. An increase in the weight of the turbine can increase the initial weight of the fueled turbo-pump unit, in spite of the smaller delivery of steam gas, and consequently, also a reduced total weight of the steam gas delivered.

Precisely for this reason an increase in the rpm of the turbo-pump unit is the most desirable measure for increasing the efficiency of the turbine. However, as we know, with a one-shaft design for the turbo-pump unit the increase in this rpm is limited by cavitation in the oxidizer pump. The employment of a gear drive for increasing the rpm of the turbine most often leads to an unjustified increase in the weight of the turbo-pump unit.

For this same reason it is not always expedient to increase the initial temperature of the steam gas, even though, theoretically, this should reduce the delivery of it per unit of power. The increase in c_1 without a corresponding increase in u leads to a reduction in the efficiency of the turbine and to loss in the expected economy in the delivery of steam gas.

The result of the effort, under the aforementioned conditions, to obtain minimum dimensions and weight for the turbine is that the ratio $\frac{u}{c_1}$ for the turbines actually made for liquid-fuel rocket engines is small; in many cases it has a value of about 0.1.

Then, too, the value $\frac{u}{c_1}$ of the one stage velocity turbine would have a very low efficiency: about 0.25. Hence, in liquid-fuel rocket engines we most often use velocity turbines with two speed stages.

The Active Turbine With Two Speed Stages.

In these turbines we have the steam gas to make a twofold turn, as a result of which, with small ratios $\frac{u}{c_1}$, we obtain a smaller absolute velocity c_2 for the exit of the steam gas. Curve II in Figure 189 shows the dependence of $\eta_{turbine}$ on $\frac{u}{c_1}$ for this construction of the turbine. With the ratio $\frac{u}{c_1} = 0.1$, the efficiency of such a turbine amounts to 0.45; that is, it is much higher than for the one stage turbine, and with the ratio $\frac{u}{c_1} = 0.23$ it has a maximum of $\eta_{turbine} \approx 0.65$.

The structural execution of the velocity turbine with a two speed stages can be accomplished in different ways.

In the turbine of the rocket A-4 the section of the turbine between the inlet and outlet valve through which steam passes is executed as shown in the diagram of Figure 190. Steam gas under high pressure expands in the stationary nozzles 1. After this, it passes through the vanes of the wheel 2 of the turbine and comes on to the stationary vanes of the guide apparatus 3, in which it changes its direction so that it strikes after this the second series of vanes of the wheel 4, and again exerts against them a reactive force in the direction of the rotation of the wheel.

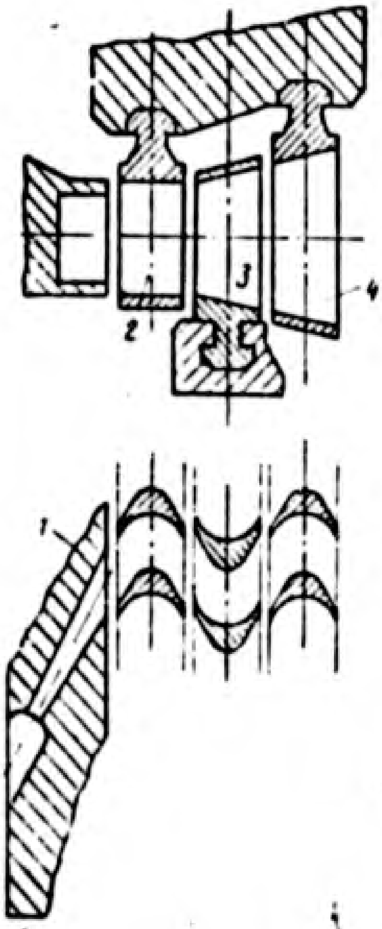

Figure 190. The diagram of the air-gas flow area in the turbine of the A-4.

1 -- nozzle of the turbine; 2 -- first series of vanes of the wheel of the turbine; 3 -- vanes of the guide apparatus; 4 -- second series of vanes of the wheel.

The second variant of the turbine with speed stages is employed in the "Walter" engine (Figure 194).

The steam, after leaving nozzle 7, passes to the vanes of the wheel of the turbine, and then is turned into the rotary chamber 8, having guide vanes 10, and again strikes the wheel of the turbine. The turbine executed in accordance with this diagram is simpler, but the turn of the steam gas in the body is possible only when the delivery of steam gas through the turbine is small and the nozzles are placed farther apart. The data concerning the turbines of the liquid-fuel rocket engine and their description are given below.

We should note that the increase in the power of the turbo-pump units, which can be expected as a result of the development of long range rockets, will increase the relative role of the reserve of the working substance in the initial weight of the turbo-pump unit. This obliges us to devote more attention to the designing of turbines and to employ those types which, under the operating conditions in liquid-fuel rocket engines, will give the greatest efficiency.

The Turbo-Pump Unit of the Engine of the Rocket A-4.

The turbo-pump unit of the rocket A-4 engine is shown in Figure 191.[1] It is a one-shaft unit with the turbine placed between the pumps. The steam gas goes into the nozzle chambers 20 (there are 4 of them in all) through the duct of the fresh steam gas 13. After developing a high velocity in the nozzle, it passes to the wheel with the speed stages described above, and enters the spent steam gas collector 3, which constitutes at the same time the body of the turbine.

The dimensions of the turbine are selected in harmony with the dimensions of the pumps, so that the ratio $\frac{u}{c_1}$ for this turbine is $\frac{u}{c_1} \approx 0.09$.

The vanes of both stages of the wheel of turbine 11 are made of an aluminum alloy and are set on the rim of the wheel by fastenings of the dovetail type. The stationary vanes 21 of the guide apparatus are assembled in 3 sections and fastened to the body of the turbine with screws. The disc of the turbine is made of aluminum alloy and fastened with rivets to the steel collar which is set on the shaft. The seals 9, preventing the leakage of steam gas along the shaft of the turbine, are placed on both sides of the wheel and are

---

[1] D. Satton, Raketnye dvigateli /Rocket Engines/, Publishing House of Foreign Literature, 1952.

executed in the form of the ordinary sleeve packing. The steam gas leaking through the packing along the openings in the body of the turbine escapes into the atmosphere.

The pump 10 for feeding alcohol is placed together with the turbine body. It has a speed coefficient $n_s = 64$. This determines the form of the wheel, which has a large $\frac{D_2}{D_1}$ ratio. The sealing of the pump wheel is accomplished by means of D-rings, into which the projections of the wheel enter with a small clearance. The wheel is set in grooves and pressed by means of a nut to prevent axial shifting. The ball bearings 6 are protected against the entrance of alcohol by double seals, pressed to the shaft by ring springs. Between the packing there are overflow openings for the removal of the alcohol seeping through the first packing.

The liquid oxygen pump is placed in a separate body 19. For ensuring the proper alignment of the axis of the turbine and the pump in case of possible deformations of the bodies (as a result of a great difference in temperature), the fastening of the pump is accomplished by means of bolts on four sliding blocks, making possible mutual shifting of the parts in the radial direction, retaining at the same time their coaxiality.

The liquid oxygen pump has a higher speed coefficient ($n_s = 74$) than the alcohol pump and a more favorable shape of wheel. The sealing of the wheel of the oxygen pump is accomplished just as in the case of the wheel of the alcohol pump. The bearings of the shaft of oxygen pump 16 are of the sliding kind; their lubrication is accomplished with liquid oxygen, which has sufficient viscosity for this purpose. The leakage of liquid oxygen towards the turbine is prevented by a triple row of seals 17. It consists of a metallic ring slit into three sectors and ground both towards the collar of the shaft and over the plane faces of the sector slit. The pressing of the sectors to each other and to the shaft is accomplished by the spiral springs.

The shafts of the turbine and the oxygen pump are connected by means of the elastic coupling 18. The feeding and the removal of the alcohol and of liquid oxygen is done perpendicularly to the axis of the turbo-pump unit, this being convenient because of the placing of the turbo-pump unit on the rocket. The feeding of the components to the wheel is accomplished through the entrance spiral shells 1 and 22, and the removal of the components is done through collectors 8 and 12.

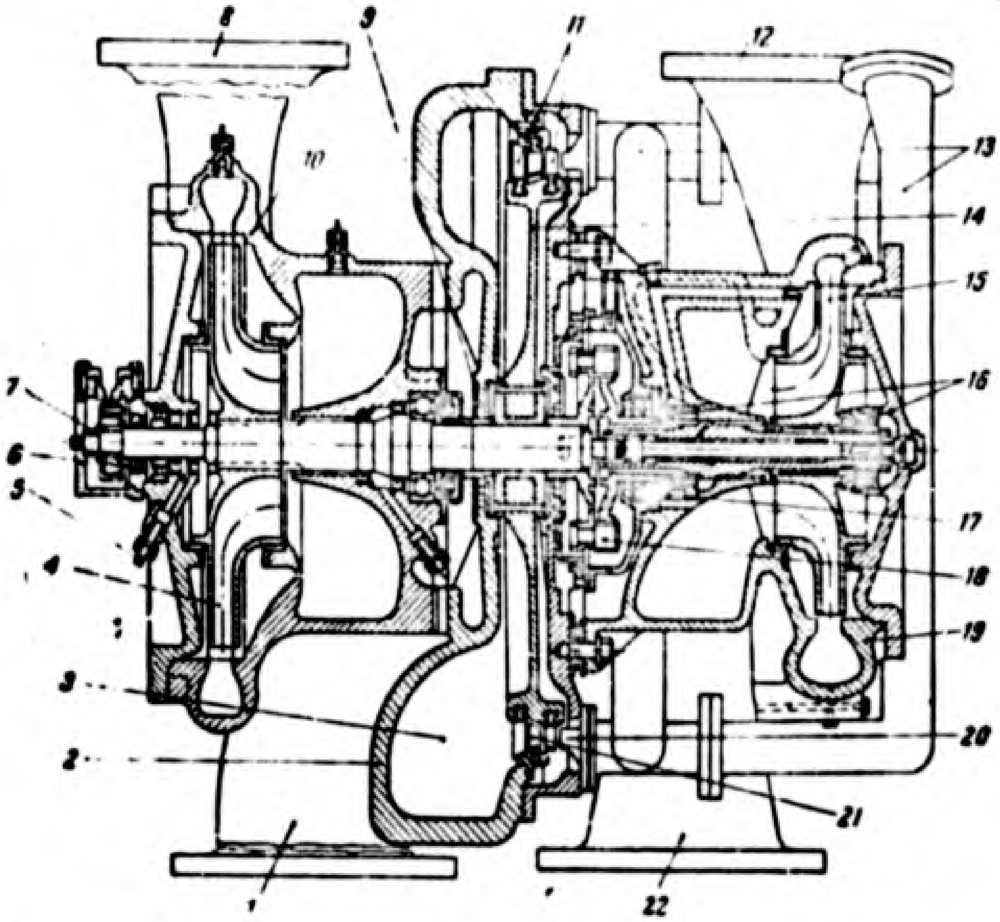

Figure 191. The turbo-pump unit of the rocket A-4 engine.

1 -- entrance spiral shell of the alcohol pump; 2 -- body of the turbine; 3 -- collector of the spent steam gas; 4 -- vane wheel of the alcohol pump; 5 -- connecting branch for the overflow of leaking alcohol; 6 -- ball bearings of the alcohol pump; 7 -- regulator of the rpm of the turbo-pump unit; 8 -- branch of the collector of the alcohol pump; 9 -- sealing of the shaft of the turbine; 10 -- body of the alcohol pump; 11 -- vanes of the wheel of the turbine; 12 -- branch of the collector of liquid oxygen; 13 -- pipes for feeding steam gas; 14 -- disc of the turbine; 15 -- vane wheel of oxygen pump; 16 -- bearings for the sliding of the oxygen pump; 17 -- seals of the shaft of the oxygen pump; 18 -- resilient sleeve; 19 -- body of the oxygen pump; 20 -- nozzle of the turbine; 21 -- vanes of the intermediate guide apparatus; 22 -- entrance spiral shell of the oxygen pump.

In the grouping of the pumps and turbine into a single turbo-pump unit, the placing of the entrances into the centrifugal pumps with respect to each other has substantial significance because the pressure on the front and the rear walls of the wheel are not the same. As a matter of fact (see Figure 170), on the rear wall of the wheel, over all of its area (excluding the shaft), the liquid exerts a high pressure p_{pump}' after leaving the wheel, but on the front wall it exerts a pressure only up to the diameter on which the front seals are arranged, that is, over practically the whole area of the entrance there acts a low entrance pressure. Hence, on the wheel of the operating pump there acts a total axial force equal to $(p_p' - p_{ent})\frac{\pi D_{1.0}^2}{4}$ and directed towards the entrance to the pump. This force reaches a very high value and loads the bearings of the shaft.

For reducing the axial forces in the turbo-pump unit, the pumps are arranged so that the axial forces of the different pumps will be balanced as much as possible. For example, in the turbo-pump unit of the A-4 rocket, the pumps were placed with the entrances toward the inside; in the turbo-pump unit of the Walter engine they are placed with the entrances toward the outside.

Turbo-Pump Units of the Liquid-Fuel Rocket Engines of Airplanes.

In airplane liquid-fuel rocket engines, in spite of the relatively small thrust of the engine and the relatively long duration of operation, the reserve of fuel components is large and in them one employs pump delivery exclusively. Hence, airplane liquid-fuel rocket engines furnish many examples of turbo-pump unit design, and particularly of pump designs with drive from the main airplane engine.

As an example of airplane turbo-pump units we can cite the turbo-pump unit constructed by V. P. Glushko in 1941 (Figure 192). Turbine 1 of the unit used steam gas, generated in a steam generator. The turbo-pump unit had three pumps: for the oxidizer 4 (nitric acid), combustible 3 (kerosene) and water (for the delivery of water to the steam gas generator). The turbine of the unit was of the velocity and one-stage type. The pumps were of the rotary type. They were driven by the reducer-distributor chamber 2 with a gear train.

As another example, we shall consider the turbo-pump unit of the "Walter" engine.[1] It is also independent and intended for feeding combustible and oxidizer under pressure into the combustion chamber, and hydrogen peroxide into the steam generator. Since hydrogen peroxide is at the same time an oxidizer, it is not necessary to have a separate pump for feeding it.

The turbo-pump unit is executed in the form of a single structural unit (Figure 193), which is fastened to the frame of the central block of the engine. It consists of a combustible pump 4, an oxidizer pump 2, and a turbine 3, between these pumps. This arrangement of the parts of the set made it

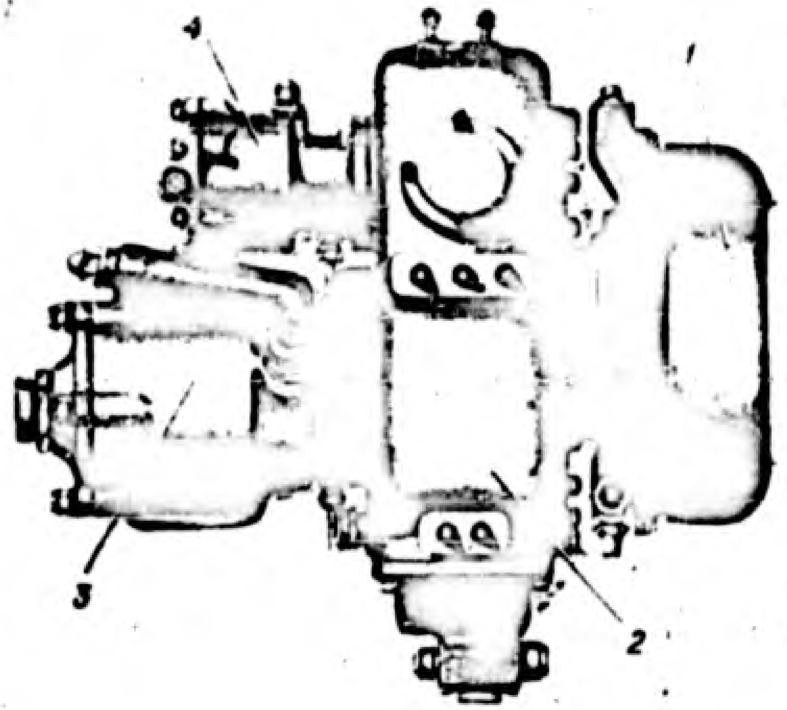

Figure 192. The outer appearance of the airplane turbo-pump unit designed by V. P. Glushko (1941).

1 -- turbine; 2 -- reducer-distributor box; 3 -- pump for combustible; 4 -- pump for oxidizer.

---

[1] The description of the turbo-pump unit of the "Walter" engine and of the pumps of engines R-3395 and R-3390 is taken from the article of A. B. Ionov and M. M. Churkov, Tsentrobezhnye toplivnye nasosy firm "Walter" i BMV dlya ZhRD /Centrifugal Fuel Pumps of the "Walter" and BMW Firms for Liquid-Fuel Rocket Engines/, Obzornyi: Biulleten' Aviamotorostroeniia /Survey Bulletin of the Aviation Motor Construction/, 1948, No. 12.

possible to relieve the shaft of the turbine of the axial stresses generated in the pumps, and also to disconnect the pumps and in this way prevent the mixing of the components in case of leakage, something which is very dangerous from the standpoint of fire.

The disc of the turbine and the rotor wheels of the pumps are placed on the same shaft (Figure 194). On the end of the shaft projecting from the oxidizer pump there is the gear wheel 1, engaging the gear wheel of the reducer, used for starting the turbo-pump unit from the electric motor.

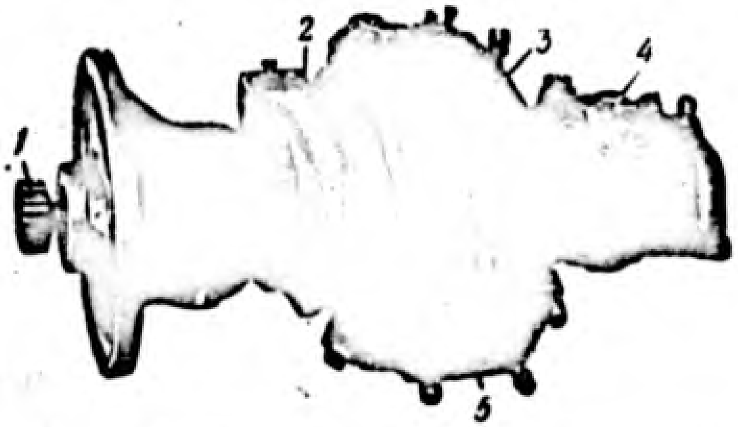

Figure 193. External view of turbo-pump unit of "Walter" aircraft engine.
1 -- driving gear wheel; 2 -- oxidizer pump; 3 -- turbine; 4 -- combustible pump; 5 -- exhaust manifold.

The bearings of the shaft are of the ball and roller type, placed in groups and set in the bodies of both pumps. In addition to this, the shaft also turns on sliding bearings 5 and 6.

The ball bearings are lubricated with the oil in the gear box of the reducer, being sprayed during the rotation of the gear wheel of the reducer.

In order to prevent oil from falling into the cavity of the sealing sleeve, there is an oil seal, which is rotated together with the shaft. For the drainage of oil drain ducts are drilled in the seat of the block, in the reduction gear box.

The roller bearings are mounted in a special block which is centered on brackets of the body of the turbine. The inside cage (race) of the bearings is pressed on the shaft of the turbine and when expanded by heat it can shift together with the shaft. The oil for lubrication of the roller bearings is fed along the line from the lubricator installed on the panel in the cockpit. In order to prevent leakage of oil along both sides of the bearing, felt seals are inserted in the block.

In order to prevent leakage of the components from the pumps and steam gas from the turbine along the shaft, special seal assemblies are placed on the latter. The components of the fuel and the steam gas leaking through the seals are drained off by separate tubes. In this way it is impossible for them to be mixed. The arrangement of the drainage openings in the turbopump is shown in Figure 194.

The oxidizer pump (Figure 195) consists of the following basic parts: body of the pump 6, the suction tube 1, the impeller 7, the helix 9, guide apparatus 8 placed between the impeller and the helix, and the special sealing units A, B, and V.

The body of the pump 6 and the suction pipe 1 are fastened together by pins. The tightness of the joints is assured by packing 4, made of material resistant to hydrogen peroxide.

The suction tube has a flange for fastening to the body of the reducer. The component, under the static head, passes through the suction tube to the pump. In the section of the turbine between the inlet and outlet valve through which the steam passes there are guide vanes b at the turn, set here for the purpose of preventing or reducing a twisting of the flow before the entrance into the helix, which is placed in the cylindrical part of the tube. By means of the helix there is created a backwater for the liquid (1.6-1.8 atü) before the entrance into the rotor wheel, which is necessary for the non-cavitational operation of the wheel of the main centrifugal pump. The

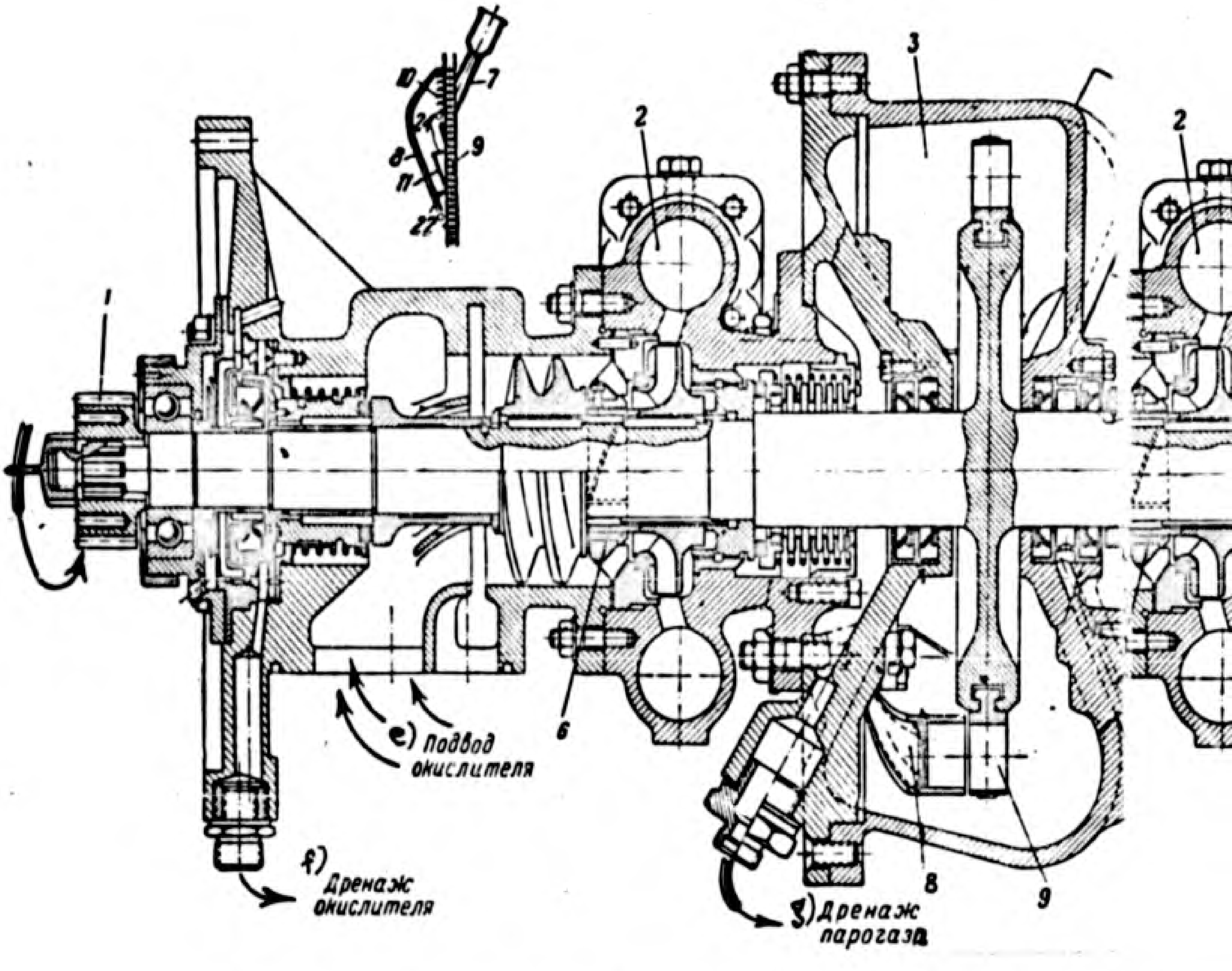

Figure 194. Section of the turbo-pump unit of the "Walter" airplane engine

1 -- gear wheel; 2 -- oxidizer pump; 3 -- turbine; 4 -- combustible pump; 5 -- sl
bearings on the side of the combustible pump; 6 -- sliding bearings on the side c
oxidizer pump; 7 -- nozzle; 8 -- swinging chamber; 9 -- wheel of the turbine with
10 -- guide vanes; 11 -- longitudinal partition.

a -- steam gas inlet; b -- combustible branch to the engine; c -- combustible bra
the pressure regulator; d -- drainage line from the fuel cock; e -- oxidizer inle
drainage of oxidizer; g -- drainage of steam gas; h -- drainage of combustible; i
combustible inlet.

ie turb
.ane en
bine;
6 --
mber;
. -- lo
to th
om the
gas; h
stible
3a

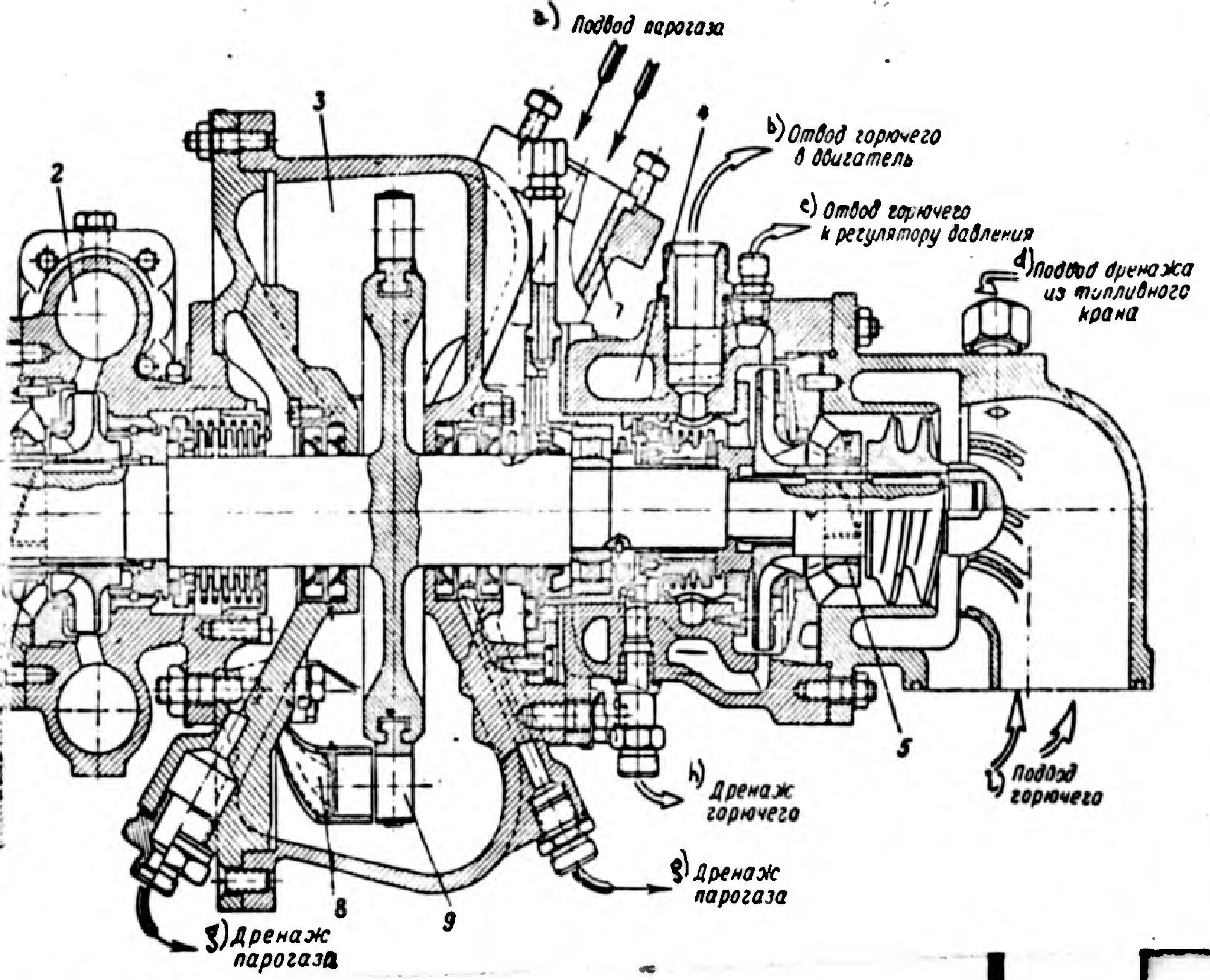

ıe turbo-pump unit of the "Walter"
.ane engine

l·bine; 4 -- combustible pump; 5 -- sliding
c; 6 -- sliding bearings on the side of the
hımber; 9 -- wheel of the turbine with vanes;
. -- longitudinal partition.

aı to the engine; c -- combustible branch to
e·om the fuel cock; e -- oxidizer inlet; f --
i gas; h -- drainage of combustible; i --
ıtible inlet.

Helix is made in the form of a double spiral and is fastened on the shaft by means of a spline.

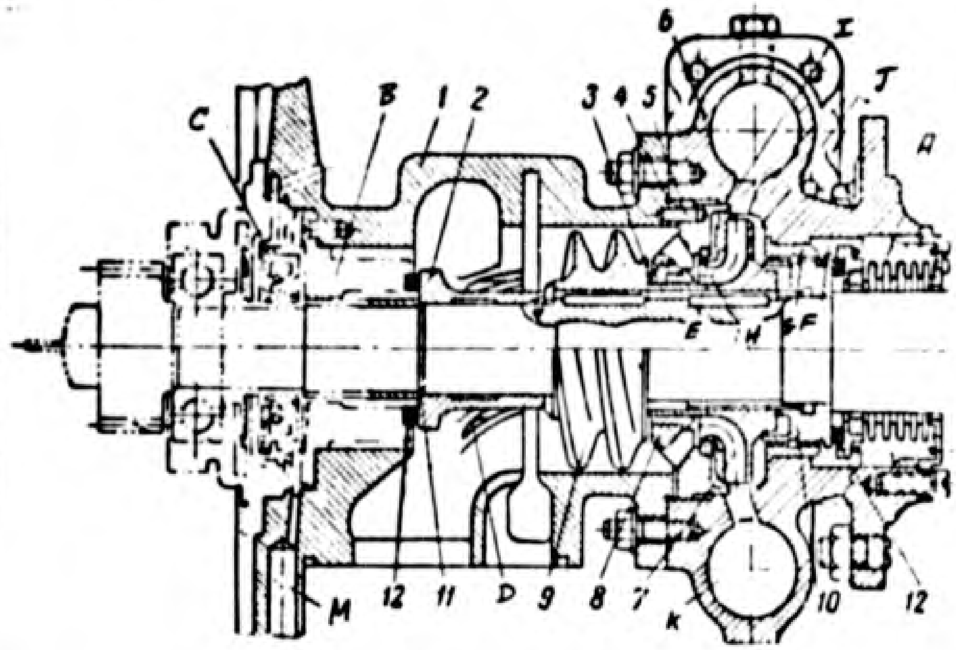

Figure 195. The oxidizer pump (hydrogen peroxide) of the "Walter" engine.

1 -- suction tube; 2 -- distance sleeve; 3 -- distance ring; 4 -- sealing; 5 -- pin; 6 -- body of pump; 7 -- impeller; 8 -- guide apparatus at the entrance; 9 -- helix (spiral wheel); 10 -- packing ring; 11 -- packing (rubber ring); 12 -- graphite packing ring.

A -- packing unit; B -- packing unit (contact type); C -- tightening unit (the sleeve type); D -- guide vanes; E -- ring of labyrinth packing; F -- drainage chamber; G -- ring of the labyrinth packing; H -- low pressure cavity (intake); I -- guide apparatus at the exit; J -- high pressure cavity; K -- collector; L -- drainage of the oxidizer.

In order to obtain a smooth flow of the liquid at the entrance to the vanes of the working wheel a guide apparatus 8 is placed between the helix and the impeller. The guide apparatus is fastened to the body of the suction tube by the pin 5, which prevents it from turning.

On the hub of the guide apparatus there is pressed a tempered collar which serves to support the shaft of the turbine. In the inside part of the collar there are spiral grooves for lubrication and cooling (by means of the transferred components) of the surface of the sleeve rubbing against distance ring 3.

The unilateral rotor wheel 7, of the closed type, has 10 vanes bent backward.

Between the high pressure cavity J and the low pressure cavity (for suction) H on the one side and the cavity J and the drainage chamber F on the other there are placed some labyrinthic seals of the ring type with tempered steel rings E and G, which prevent the rapid enlargement of the clearances.

In order to prevent the hydrogen peroxide from penetrating along the shaft to the ball bearing there has been provided, between the suction pipe and the seat of the bearing, a drainage cavity with 2 seals, one of which is of the contact type B, and the other of the sleeve type C. The employment of the contact type seal B with a graphite ring 12 on the friction surface protects it against wear.

The leakage of oxidizer (from the suction tube) is drained off through the duct L outside the feed system. The leakage of the oxidizer (from the drainage chamber) along the shaft is prevented by means of a contact seal A, placed behind the wheel of the centrifugal pump.

The fuel pump is made in accordance with the same structural diagram as the oxidizer pump, but its working parts have dimensions that are different from those of the other pump.

The housings, the impellers, the screw conveyers, suction tubes, and the deflectors of the fuel and oxidizer pumps are manufactured from an aluminum alloy, and the shaft, sealing rings and sleeves are made of stainless steel.

The pumps are driven by a steam-powered, two-speed velocity turbine, made as a separate unit.

The section of the turbine between the inlet and outlet valve through which the steam passes (see Figure 194) consists of nozzle 7, set on the lugs of the body, the rotary chamber 8, attached to the cover of the body of the turbine, and the exhaust pipe. The body and the cover of the turbine are made of aluminum alloy.

The nozzle of stainless steel has a diameter at the entrance of 35 mm and in the critical section, 11 mm. For a better filling up of the vanes of the rotor wheel with steam gas, the nozzle at the exit has a rectangular section. The flow of steam coming from the nozzle strikes the operating vanes of the turbine and moves on to the stationary guide vanes 10 of the rotary chamber 8. After the turn of the steam by the partition 11 the flow of steam is again directed towards the operating vanes of the turbine and is drained off through the exhaust tube.

The rotary chamber is a case welded of stainless sheet steel, segment shaped in appearance, inside which there are 6 guide vanes and one longitudinally bent baffle plate.

The disc of the turbine is made of one forged piece with a shaft. It has on it 79 profiled vanes of stainless steel which are set on the wheel by a fastening of the dovetail type and are reinforced along the outside diameter by the rim which has 4 slits as compensation for heat expansions.

The sealing along the shaft on both sides of the turbine is provided by means of slitted graphite rings, clamped to the shaft by a spiral ring spring. The small clearances in three transverse slits of each graphite ring give a tight and constant adherence of the ring to the shafts and compensates for their wear. In order to facilitate assembly, the graphite rings are placed in separate races which are set in the seat of the casing, two races on each side of the turbine.

The steam gas leaking through the seals is drained off by ducts, drilled in the body of the turbine, towards the exhaust tube 5 (see Figure 193). The turbo-pump unit by the flange of the oxidizer pump body, is fastened to the body of the reduction gear. The reduction gear, a simple gear train with 5 cylindrical gear wheels, connects the shaft of the turbo-pump unit with the shaft of the starter and transmitter of the tachometer.

The starting of the turbine is done by means of an electrical starter, coupled with the idler gear of the reduction gear which transmits a torque to the shaft of the turbo-pump. The pumps, set on a common shaft, generate a small head (about 3-4 ex at*) under which the oxidizer (hydrogen peroxide) moves into the steam generator, where, being decomposed in the presence of a solid catalyzer, forms steam gas. From the steam generator, the steam gas passes through the nozzle into the turbine and turns the rotor of the turbo-pump. After this, the turbo-pump begins to operate independently, fed from the steam generator. As soon as the velocity of rotation of the shaft of the turbine exceeds the normal velocity of rotation of the electric starter, the latter automatically cuts off with the help of the claw coupling.

With operation at the maximum rate of the turbine (n = 17,200 rpm), the delivery of the centrifugal combustible pump amounts to 2.11 kg/sec (design data), and that of the oxidizer pump, 6.68 kg/sec, of which 6.39 kg/sec goes into the engine and 0.29 kg/sec into the steam gas generator. The pressure at the exhaust for both pumps is equal to 40 kg/cm^2. The pressure of the steam gas at the entrance to the turbine is 20 kg/cm^2, and its temperature is 475-496° C.

Pumps of Engines R-3395 and R-3390.

The nitric acid pump for engine R-3395 is structurally executed as a separate unit (Figure 196). The vane wheel with 3 radial blades is made integral with the shaft, of chrome nickel steel. The shaft rotates on two ball bearings 2, placed in the bearing block 3.

Bearing 2 towards the vane wheel is fixed so that its inside and outside races are fastened in a stationary position and do not allow any axial shifting of the shaft; the outside race is fastened by a special spring loaded plunger, with ring 13, set in a recess of the body, and an inside race fastened to the shaft. Between the face of the outside race and the body there is a regulation disc 14, by means of which the bearing is fixed in the position necessary for forming a clearance (0.5) between the rotating blades of the vane wheel 1 on the one side and the entrance tube 5 and the flange 15 on the other.

---

*excessive atmosphere

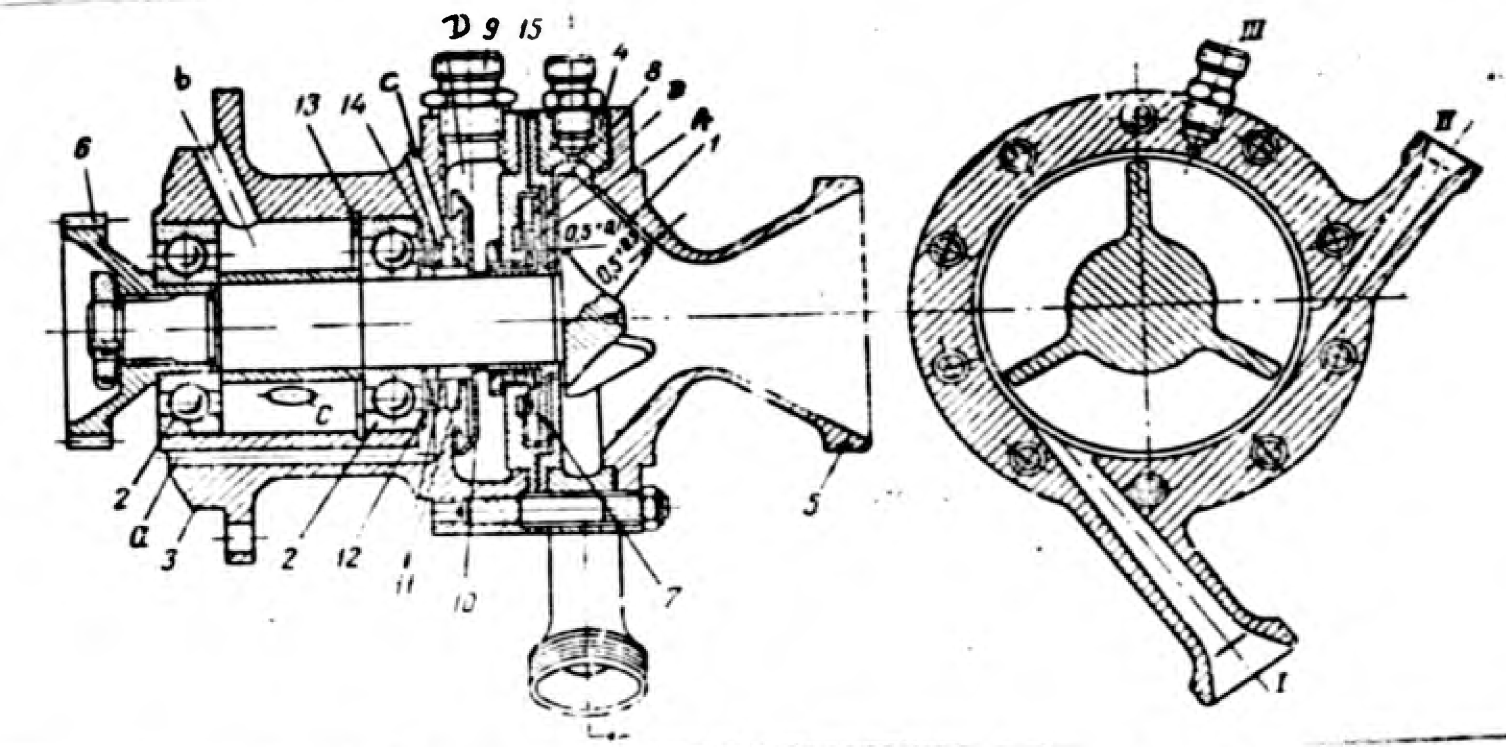

Figure 196. Section of the nitric acid centrifugal pump for engine R-3395.

1 -- vane wheel; 2 -- ball bearings; 3 -- block of the bearings; 4 -- body of the ring collector; 5 -- entrance duct; 6 -- driven gear; 7 -- sealing ring; 8 -- vane wheel of the hydraulic seal; 9 -- drain pipe; 10 -- deflector; 11 -- sealing rings (plastic material); 12 -- oil baffle; 13 -- stop ring; 14 -- regulating disc; 15 -- flange.

I -- branch for draining the component into the main line to the engine; II -- branch for leading off the component to the injector; III -- drain pipe for the release of air from the working cavity of the pump.

A -- cavity between the seal ring 7 and the smooth face of the disc of the hydraulic seal 8; B -- cavity between the hydraulic seal 8 and the flange 15; C -- drainage opening; D -- drainage cavity.

a -- duct for the flow of oil into the reduction gear crankcase; b -- duct for the delivery of oil from the reduction gear to the cavity of the block of the bearings.

The pump is driven from the shaft of the air-breathing reaction engine through a hydro-coupling and reduction gear (see diagram of the engine R-3395 in Figure 224).

For the transmission of rotation from the reduction gear to the shaft of the pump there is set on the projecting end of the shaft, in slots, a gear wheel 6, which engages the central gear wheel of the reduction gear. The gear wheel is fastened to the shaft by a nut, which at the same time tightly fastens all the rotating parts placed on the shaft. The nut is locked by a special washer.

The oxidizer enters the pump through tube 5, which has a diameter in the minimum section of 32 mm. Between the inlet tube and the frame of the bearings 3, there is a ring collector 4 with two outlets for the component of high pressure and one connecting sleeve. Along outlet I the component passes into the main line to the engine (the diameter of the cylindrical part at the entrance to the diffuser is 8.2 mm); along outlet II the materials go into the ejector pump; the sleeve III serves for releasing the air from the vane pocket of the pump when it is filled with the latter component.

Immediately behind the vane wheel of the pump there is a double seal which consists of an elastic packing ring 7, made of special plastic material, and a hydraulic seal, constituted by vane wheel 8, set on a shaft.

In the fixed position and during operation of the pump at a rate of 5,000-6,000 rpm, the sealing on the shaft is provided by ring 7, which presses against the polished end of the vane wheel 8 under the action of the difference in pressure -- the static head on the suction on the one side and the atmospheric pressure in the drainage cavity D on the other.

With a number of revolutions of more than 6,000 rpm, the sealing is provided by a hydraulic seal. For this purpose the face of the vane wheel 8 towards the gasket ring has 24 milled vanes which, drawing away the liquid contained in cavity A, create a head balancing the pressure acting on the side of the vane pocket of the pump, in this way preventing the flow of the liquid through the clearance B into the cavity of the gasket ring.

The gasket ring 7 moves away from the face surface of the vane wheel 8 by 0.2-0.3 mm, as a result of which friction between the gasket ring and the face of the vane wheel 8 is prevented and the possibility of a rapid wearing out of the gasket ring removed.

The liquid leaking through the packing goes into cavity D and is led to the outside through the drainage pipe 9. In order to prevent the leakage of components and nitric acid fumes from the cavity D into the cavity of the bearings race, there is installed a deflector seal 10 and two gasket rings 11 of special plastic material. The space between the gasket rings leads to the outside 14 through the openings C with a diameter of 3 mm, drilled in the body 3.

The bearing, placed near the drive, is lubricated with oil, sprayed by the gear wheels of the reduction gear, and the bearing placed on the side of the vane wheel is lubricated by oil penetrating into the cavity of the bearing race through the drill hole b, which extends to the cavity of the reduction gear housing. To prevent the oil from accumulating within the cavity of the bearings race and overflowing into the seal cavity, there are two ducts a, along which it can flow into the reduction gear crankcase. To prevent the penetration of oil, during operation, into the drainage cavity through the sealing system, there is a special oil baffle 12 placed on the side of the bearings to deflect the oil towards the periphery of the recess from where it flows along duct a into the reduction gear crankcase.

The sealing along the faces of the body of the ring collector 4 is provided by means of aluminum gaskets. The body of the bearings, the ring collector, entrance tube and deflector are made of an acid-resistant aluminum alloy.

The results of the test of this pump (with water) are given in Figure 197 in the form of a graph of the dependence of the delivery pressure and efficiency of the pump on the delivery of water at different rpm. From the graph we can see that with n = 20,700 rpm the pump develops a pressure of P_{pump} = 53 at with a delivery Q = 4.5 l/sec and the efficiency of the pump η = 0.49.

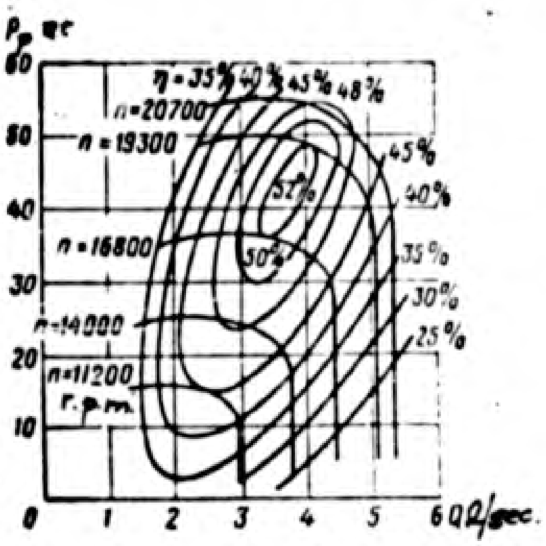

Figure 197. Characteristic of the centrifugal pump for nitric acid of engine R-3395, found in tests with water.

P_{pump} -- pressure at the exit; Q -- delivery; n -- number of revolutions of the shaft; η-- efficiency of the pump.

The centrifugal combustible pump of the engine R-3395 (Figure 198) is similar in construction to the nitric acid pump but its delivery is lower.

A characteristic of this pump is the sealing (Figure 199). For low rpm (4,000-5,000) and for the pump not in operation the sealing is done by a special ring plate 3 made of chrome leather, pressed between the faces of body 2 of the hydraulic seal and the shaft. This plate is pressed against the polished face of flange 7 by a special steel spring disc 4 with deep slots dividing it into 12 segments. The outside ends of the disc are firmly rolled in with the edge of the body 2. The face of the body 2 on the side of the bearings is made in the form of a semi-closed vane wheel with 24 milled blades A (see Figure 198).

During the rotation of the shaft of the pump at 4,000-5,000 rpm and more, the segments of the disc 4 are shifted in a radial direction under the influence of the centrifugal force, creating a bending moment around the rolled-in edge of the slotted disc 4. Under the action of the bending moment, the leather ring plate 3 is moved away from the polished face of flange 7 inside the body. The friction against the face is stopped and the possibility of rapid wearing out of the leather plate eliminated.

The body of the hydraulic seal 2 (see Figure 199), by rotating, creates a head, balancing the pressure from the valve pocket, by means of which we have a reliable packing at a high rpm of the shaft of the pump.

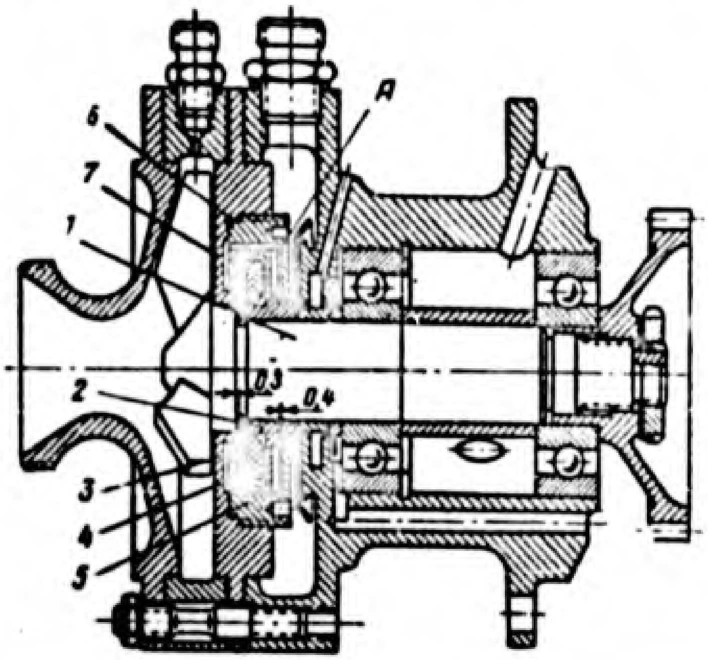

Figure 198. Section of the centrifugal pump for combustible engine R-3395.

1 -- shaft of the vane wheel; 2 -- body of the hydraulic seal; 3 -- leather plate; 4 -- slotted resilient disc; 5 -- body of the seal; 6 -- seal ring; 7 -- flange.

A -- vanes of the hydraulic seal.

The characteristics of the pump at different rpm are given in Figure 200. From the characteristics we can see that with n = 21,000 rpm, the delivery of the pump is equal to Q = 2.7 l/sec, and the delivery pressure P_{pump} = 72 ex at, efficiency of the pump η = 0.29.

The operating life of the pumps of engine R-3395 is 45 minutes. After this period they require overhauling and replacement of the sealing units.

The centrifugal pump for hydrogen peroxide (Figure 201) is designed for the delivery of hydrogen peroxide in the steam generator of the engine R-3390.

The designed delivery of the pump Q = 0.75 l/sec; the delivery pressure

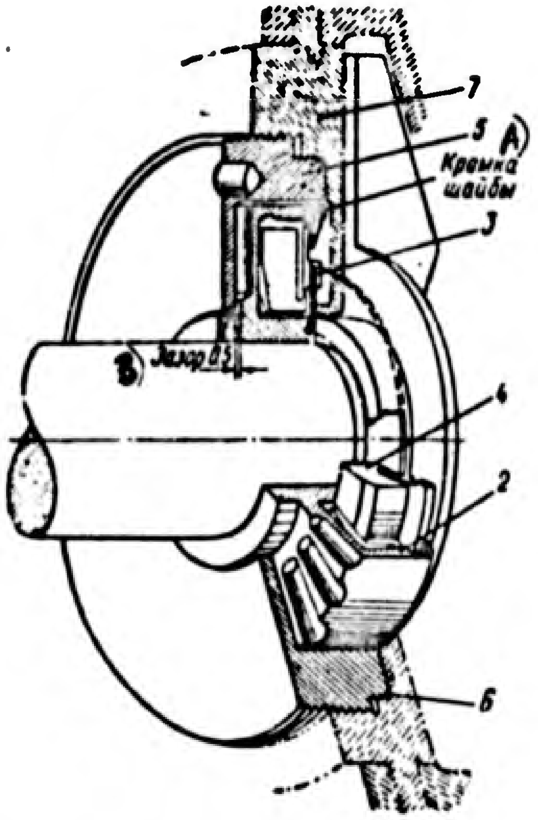

Figure 199. The sealing unit of the combustible pump.

The legends are the same as for Figure 198.
A -- edge of the disc; B -- clearance 0.5.

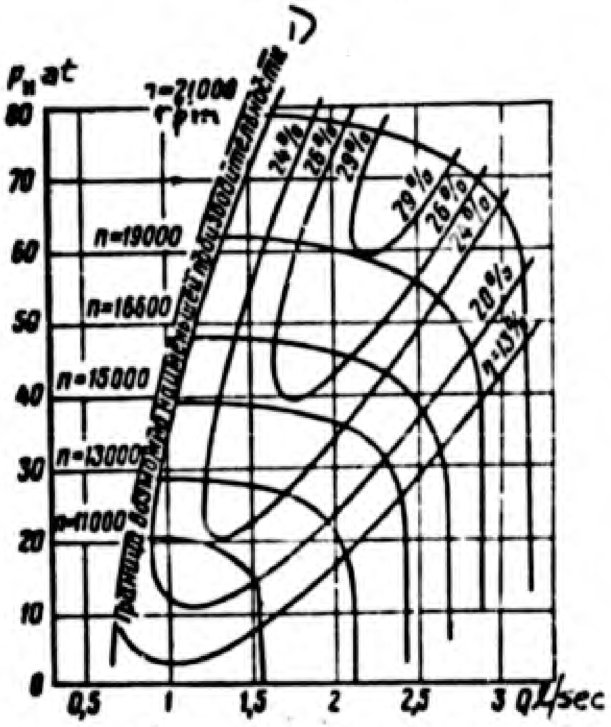

Figure 200. A (design) characteristic of the centrifugal combustible pump of the R-3390 engine.

1 -- limit of the possible minimum delivery.

$P_{pump} = 50$ ex at; $n = 16,000$ rpm. In general, the construction of this pump is identical with the combustible pump.

Its characteristic feature is its contact-type sealing consisting of the graphite ring 1, pressed into the race 2 and pressed against the tempered collar 3 of spring 4.

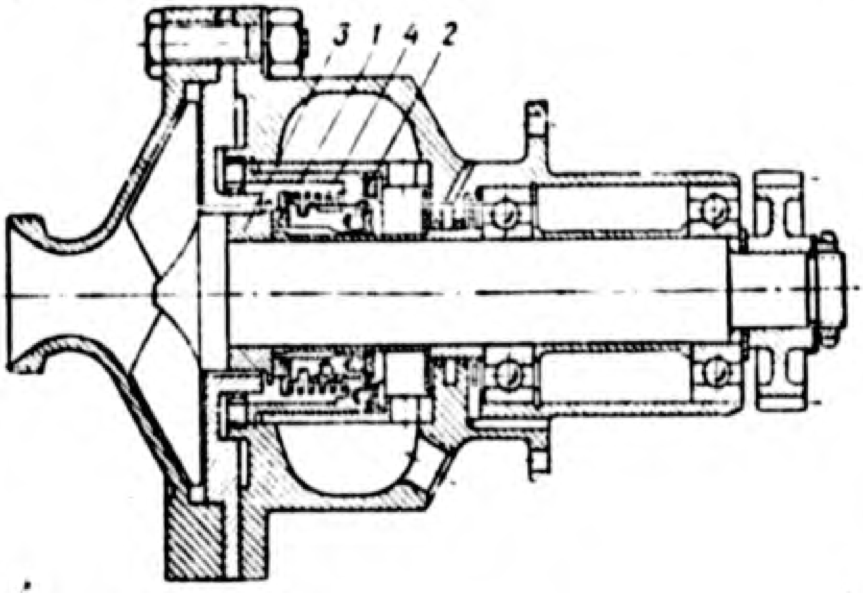

Figure 201. Section of the centrifugal pump for hydrogen peroxide.

1 -- graphite ring; 2 -- race; 3 -- collar; 4 -- spring.

The construction of this sealing unit is taken from the "Walter" turbopump without any change.

The Steam Generator of Liquid-Fuel Rocket Engines.

The function of steam generators is to generate the mass carrier for the turbine, namely, gases, heated up to a high temperature at a definite pressure.

There are 3 types of steam generators employed widely in rocket engineering. In the steam generator of the first type, in order to obtain a steam gas, we employ a high concentration (80-90%) of hydrogen peroxide, decomposed under the action of a catalyzer with the liberation of heat. In such steam generators the process of combustion is absent. In the steam generator of the second type, in order to obtain heated gases we employ the reaction of combustion of an ordinary or special liquid fuel. Since in the products of combustion of these fuels the content of water vapor is small, we may call them simply gas generators. Since they operate on liquid fuel, we call them liquid-fuel generators (LGG). Lastly, in the third type of gas generator, we employ as a fuel a solid powder. Such a gas generator is similar in construction to the cartridge pressure accumulator (see Section 56).

The designs of steam generators pursue two aims: first, the determination of the temperature and composition of the steam gas (these values are necessary for the calculation of the heat transfer $\Delta I_{\text{heat transfer}}$, which can be employed in the turbine); in the second place it serves for the determination of the dimensions of the parts of the steam generator, necessary for the generation of the prescribed quantity of steam gas $G_{\text{steam gas}}$ kg/sec.

The steam generators which use the reaction of decomposition of hydrogen peroxide consist of a reactor; -- that is, a vessel in which the decomposition of the hydrogen peroxide takes place under the action of the catalyzer, tanks for the hydrogen peroxide and the catalyzer, and also systems for feeding the components to the reactor.

The construction of the steam generator is determined to a considerable extent by the kind of catalyzer employed for obtaining the steam gas. We employ two types of catalyzers: liquid and solid.

As a liquid catalyzer we employ a concentrated solution (25-35%) of potassium permanganate KM_nC_4 in water; as a solid catalyzer we employ grains of some porous substance, the pores of which contain the catalyzing substance, consisting largely of potassium permanganate.

The layout of the steam generator reactor operating on a liquid catalyzer (rocket A-4) is represented in Figure 202. The steam gas generator is a cylindrical steel tank 2, in the upper bottom of which there is placed the injector 3 for the spraying of the hydrogen peroxide.

Across the stream of hydrogen peroxide there is directed a stream of permanganate solution, sprayed through the side jet injector 4. In the upper part of the reactor there takes place a mixing of the hydrogen peroxide and the catalyzer.

For lengthening the path of the hydrogen peroxide, in order that it may be decomposed more completely and in order to prevent undecomposed hydrogen peroxide from falling into the lead-off tube for the steam gas tube 6, there is placed within the reactor a worm insert 1, so that the steam gas and the undecomposed hydrogen peroxide of the engine move through the reactor along a screw trajectory.

In order that the liquid hydrogen peroxide may not gather in the upper part of the insert 1, we put in it a small overflow opening 5.

The reactor for solid catalyzer is simpler in construction. In Figure 203 we show the diagram of the steam generator of the "Walter" engine. The parts of it are shown in Figure 204.

The body of the reactor 4 (see Figure 203) is closed above by a cover 2, in the center of which there is the group of injectors 1, consisting of 5 centrifugal injectors, uniformly distributing the sprayed hydrogen peroxide over the transversal section of the reactor. Under the cover of the reactor there is a packet of solid catalyzer 3, resting on the perforated bulkhead 5. In the lower part of the reactor there is the collector 6, terminated by the tube for the lead off of the steam gas. We should note that the cavity of the collector of the steam gas and the lines carrying the steam gas to the turbine are sometimes used to complete the decomposition of the H_2O_2, which was not decomposed in the steam generator itself. The decomposition of the hydrogen peroxide in the steam generator is completed by having the liquid catalyzer in the mixture of vapors and gases that leave. The solid catalyzer, however, is made in such a way that the particles of the catalyzing substance can be washed away by the flow of the hydrogen peroxide passing through the catalyzer, and be carried together with it into the collector, where, due to its effect, there takes place the final decomposition of the hydrogen peroxide.

Let us note that the extensive removal of the catalyzing substance reduces the period of action of the solid catalyzer, the so-called time of effective action of the catalyzer, and leads to an increased wear of the vanes of the turbine, because the catalyzing substance ($KMnO_4$) is decomposed with the generation of solid particles of manganese peroxide.

As we can see from the layouts given in Figures 202 and 203, the simplest is the steam generator operating with a solid catalyzer, because the feed system in it is simplified, it not being necessary to provide an arrangement for the feeding of the catalyzer.

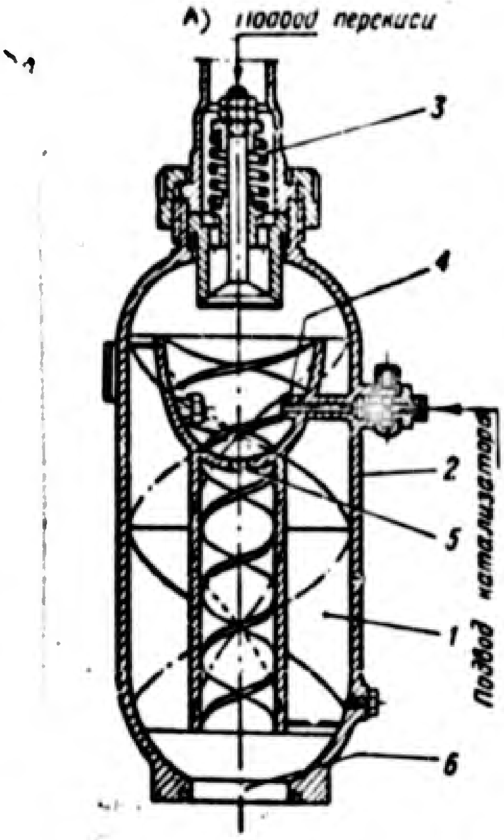

Legend:
A) peroxide inlets:
B) catalyzer inlet.

Figure 202. The layout of the reactor of the steam generator using a liquid catalyzer.

1 -- worm conveyer; 2 -- body of the steam generator; 3 -- injector of hydrogen peroxide; 4 -- injector of catalyzer; 5 -- overflow opening; 6 -- collector of steam gas.

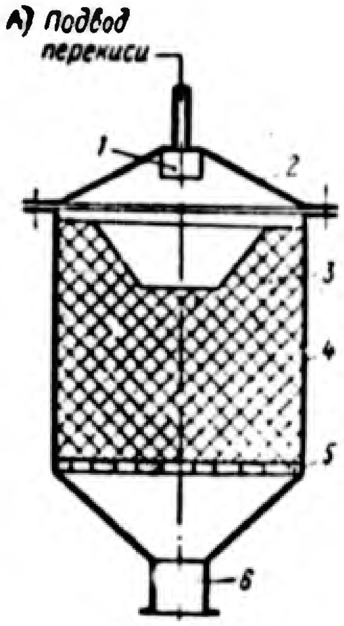

Figure 203. Layout of the reactor of the steam gas generator using a solid catalyzer.

1 -- injector head; 2 -- cover; 3 -- packet of catalyzer; 4 -- body of the reactor; 5 -- bulkhead; 6 -- collector of steam gas and drainage tube.

The feed systems of the steam generator are also of two types: cylinder and pump. The cylinder system is employed in case of a relatively small delivery of hydrogen peroxide. As an example of the cylinder feeding hydrogen peroxide, we may take the steam generator of the A-4 rocket engine. With large total deliveries of hydrogen peroxide, the weight of the cylinder feed system of the steam generator becomes excessively large and must be replaced by a pump. This is precisely the system used in the delivery of hydrogen peroxide in the "Walter" engine R-3390.

The temperature and composition of the steam gas generated by the decomposition of hydrogen peroxide are determined entirely (if we neglect a certain amount of incomplete decomposition of the hydrogen peroxide and the heat losses) by the concentration of hydrogen peroxide entering the reactor.

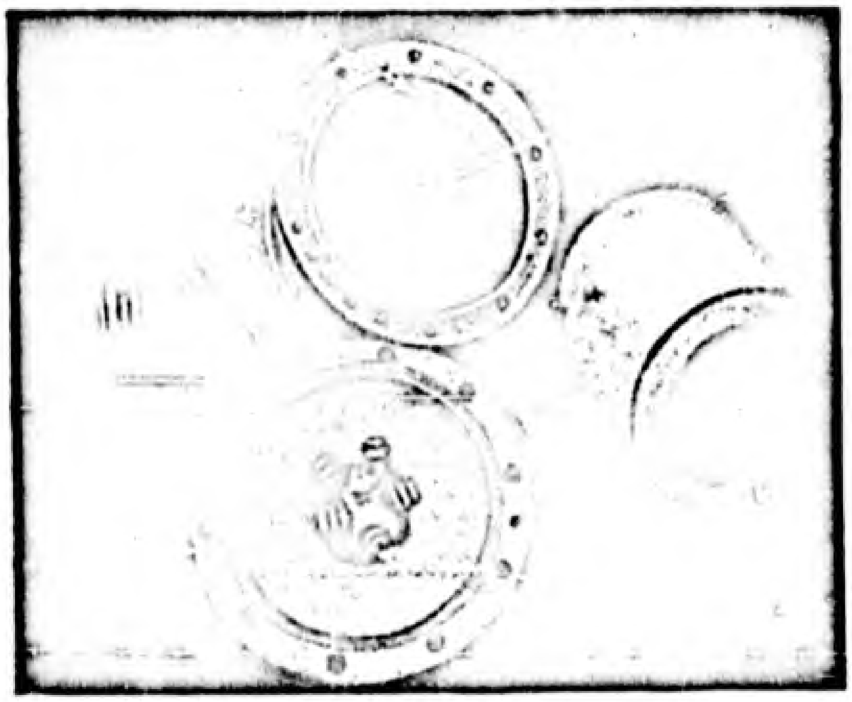

Figure 204. Parts of steam generator for the "Walter" engine.

1 -- body of the reactor; 2 -- supporting bracket; 3 -- exhaust manifold; 4 -- cover plate; 5 -- jet head; 6 -- hydrogen peroxide pipe; 7 -- catalyzing packet; 8 -- bulkhead.

In the calculation of the composition of the steam gas, we must start from the fact that, with the low temperatures we have in the steam generator reactor, there is no dissociation of the products of decomposition and the steam gas consists of water vapor and free oxygen (we disregard the content of the catalyzer and the products of its decomposition). 1 gram-molecule of hydrogen peroxide (34 g) upon decomposition gives 1 gram-molecule of water

(18 g) and ½ gram-molecule of oxygen (16 g). The relative content of water vapor and oxygen depends on the concentration of the hydrogen peroxide.

If we designate the concentration of hydrogen peroxide by σ_0, the composition by weight of the steam gas will be the following:

The amount of the water vapor in 1 kg of the product of the decomposition of hydrogen peroxide amounts to

$$g_{H_2O} = (1-\sigma_0) + \frac{18}{34}\sigma_0 \text{ kg } H_2O/\text{kg of steam gas.} \qquad (IX.151)$$

Oxygen content

$$g_{O_2} = \sigma_0 \frac{16}{34} \text{ kg } O_2/\text{kg of steam gas.} \qquad (IX.152)$$

The value of σ_0 should also take into account the entrance of water into the reactor, when the liquid catalyzer is being injected.

Knowing the composition of hydrogen peroxide, we find the theoretical temperature of the steam gas from the equation of total heat content of hydrogen peroxide with a concentration σ_0 and the products of its decomposition

$$I_{p_0} = [g_{H_2O} I_{H_2O} + g_{O_2} I_{O_2}]_T. \qquad (IX.153)$$

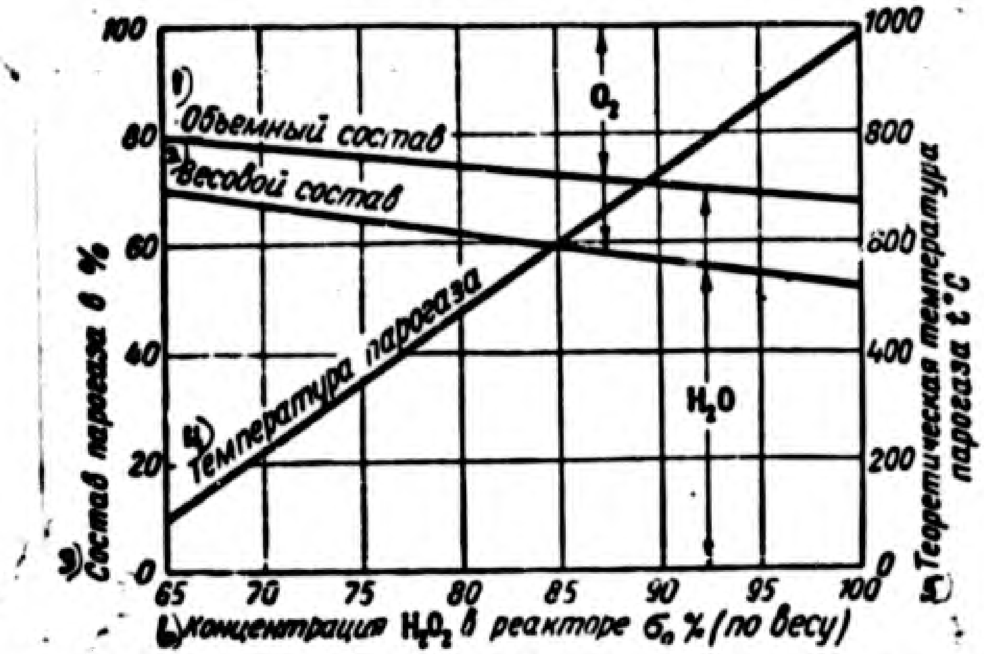

Figure 205. Composition and theoretical temperature of the steam gas obtained by the decomposition of hydrogen peroxide of different concentrations.

1 -- volumetric composition; 2 -- composition by weight; 3 -- composition of the steam gas in %; 4 -- temperature of the steam gas; 5 -- theoretical temperature of steam gas in t° C; 6 -- concentration of H_2O_2 in the reactor σ_0% (by weight).

The data for the heat content of water vapor $I_{vapor} H_2O$ and of oxygen $I_{vapor} O_2$ are taken from the table of appendix 3. However, they should be reduced to kilo-cal/kg, in keeping with the formula

$$1 \text{ kilo-cal/kg} = 1 \text{ kilo-cal/g-mol} \frac{1{,}000}{\mu_\Sigma} \qquad (IX.154)$$

The calculation of the heat content of hydrogen peroxide is made in the same way as the calculation of the heat content of the components of fuel (see Section 27).

The data for the calculation of the composition and the theoretical temperature of steam gas are given in Figure 205.[1]

The real temperature of the steam gas will be less than the theoretical because of the loss of heat due to the incomplete decomposition of the hydrogen peroxide and because of the cooling of the steam gas in the reactor and lines.

We may assume that the real temperature $T_{steam\ gas}$ amounts to 0.92-0.95 of the theoretical temperature.

In determining the dimensions of the reactor operating on liquid catalyzer, we must start from the fact that for 1 liter volume of the reactor with a pressure of generated steam gas of 20-30 kg/cm^2 we can decompose thoroughly in 1 sec 1 kg of hydrogen peroxide of 80% concentration. The consumption of liquid catalyzer should amount to 7-8% of the consumption of the hydrogen peroxide.

The calculation of the dimensions of the reactor using a solid catalyzer is based on the determination of the weight and dimensions of the packet of catalyzer. For this purpose we use two values in the calculation. The first value is the permissible specific consumption of hydrogen peroxide in kg/sec that can be decomposed by 1 kg of solid catalyzer. We designate this value by $S \frac{\text{kg/sec } H_2O_2}{\text{kg catalyzer}}$. The second value is the operating life of the catalyzer S kg H_2O_2/kg catalyzer, by which we understand the total quantity of hydrogen

---

[1] A. V. Bolgarskiy and V. K. Shchukin, Rabochiye Protsessy v zhidkostnoreaktubnykh dvigatelyakh /Working Processes in the Liquid Fuel Jet Engines/, Oborongiz, 1953.

peroxide in kg which can be decomposed by 1 kg of catalyzer during the total time of its operation.

Making use of these values, we can easily determine the weight of the packet of catalyzer G_{cat}. It is determined by the formula

$$G_{cat} = \frac{G_{sg}}{s} \text{ kg.} \qquad \text{(IX.155)}$$

The determined weight is checked for the total resource in the following way. The entire consumption of hydrogen peroxide for the time that the engine operates τ must be smaller than the full resource of a given amount of catalyzer

$$G_{sg}\tau < G_{cat}S. \qquad \text{(IX.156)}$$

For the German aviation engines the value of s amounted to $s = 0.2 \frac{\text{kg/sec } H_2O_2}{\text{kg catalyzer}}$, and the value $S \approx 2{,}000$ kg/kg.[1]

With smaller periods of operating life for S, the value s may be greatly increased. This is explained by the fact that with an increase in the specific consumption of hydrogen peroxide due to the large velocity of movement of the hydrogen peroxide and the steam gas through the packet of the catalyzer there is an increase in the wear of the catalyzing substance.

The volume of the packet of catalyzer V_{cat} is found on the basis of the specific weight of 1 cubic unit of dry granular catalyzer material γ_{cat}

$$V_{cat} = \frac{G_{cat}}{\gamma_{cat}}. \qquad \text{(IX.157)}$$

We can assume $\gamma_{cat} = 1.0-1.2$ kg/l.

The geometrical dimensions of the packet of catalyzer are found by proceeding from the permissible intensity of consumption of the catalyzer r_{cat}.

Just as in the case of the intensity of consumption of the combustion chamber, the value r_{cat} is the ratio of the flow rate per second of hydrogen

---

[1] Voprosy raketnoy tekhniki [Problems of Rocket Engineering], 1955, No. 1, and 1956, No. 3, Publishing House for Foreign Literature.

peroxide (or steam gas) $G_{steam\ gas}$ to the area of the transversal section of the packet of the catalyzer F_{cat} and it is expressed in g/cm^2 sec, that is,

$$r_{cat}=\frac{1000\,G_{s.g}}{F_{cat}}\ \text{g/cm}^2\text{sec}. \qquad (IX.158)$$

The permissible intensity of consumption r_{cat} depends to a considerable extent on the permissible specific consumption of peroxide s. With $s = 0.2\ \frac{\text{kg/sec}\ H_2O_2}{\text{kg catalyzer}}$, the value r_{cat} amounts to 3-4 g/cm^2 sec. With an increase in s the permissible consumption intensity of the catalyzer rises in a manner that is approximately proportional.

Knowing the value of the intensity of consumption, it is easy to determine the area of the transversal section F_{cat} and the diameter D_{cat} of the packet of catalyzer

$$F_{cat}=\frac{1000\,G_{s.g}}{r_{cat}}\ \text{cm}^2. \qquad (IX.159)$$

After this, we determine the length of the packet of the catalyzer L_{cat}.

The other dimensions of the reactor using solid catalyzer are determined by starting from the structural considerations.

Example 25. To calculate a steam generator using solid catalyzer for driving the turbine of an airplane liquid-fuel rocket engine and consuming hydrogen peroxide at the rate of $G_{steam\ gas} = 0.8$ kg/sec, if the time τ of its operation without recharging is equal to 2.5 hours.

Solution:

1. We determine the weight of the packet of the catalyzer.

We take $s = 0.2\ \frac{\text{kg/sec}\ H_2O_2}{\text{kg catalyzer}}$. Then, according to formula (IX.155)

$$G_{cat}=\frac{G_{s.g}}{s}=\frac{0.8}{0.2}=4\ \text{kg}.$$

2. We check the weight of the packet of catalyzer for operation life.

The operating life is

$$G_{s.g}\tau<G_{cat}S.$$

We take the period of effective action (operation life) of the catalyzer to be $S = 2{,}000$ kg/kg. Then

$$G_s\tau = 0{,}8\cdot3600\cdot2{,}5 = 7200 \text{ kg};$$
$$G_{cat}S = 4\cdot2000 = 8000 \text{ kg},$$

that is, the necessary requirements have been met.

3. We determine the volume of the packet of the catalyzer, taking the volume weight of the catalyzer $\gamma_{cat} = 1.2$ kg/ . In accordance with the formula (IX.157)

$$V_{cat} = \frac{G_{cat}}{\gamma_{cat}} = \frac{4{,}0}{1{,}2} = 3{,}38 \ l$$

4. We determine the dimensions of the packet of catalyzer, taking $r_{cat} = 3.5$ g/cm^2 sec. In accordance with formula (IX.159)

$$F_{cat} = \frac{1000G_s}{r_{cat}} = \frac{1000\cdot0{,}8}{3{,}5} = 228 \text{ cm}^2.$$
$$D_{cat} = \sqrt{\frac{4}{\pi}F_{cat}} = \sqrt{\frac{4}{\pi}228} = 17{,}1 \text{ cm};$$
$$L_{cat} = \frac{V_{cat}}{F_{cat}} = \frac{3{,}38\cdot1000}{228} = 14{,}8 \text{ cm}.$$

We take

$$D_{cat} = 170 \text{ мм}; \quad L_{cat} = 150 \text{ мм}.$$

The liquid-fuel gas generator (LFGG) is constructed and operates in a manner similar to the combustion chamber of the liquid-fuel rocket engine.

We can use various kinds of fuels in this generator. From the point of view of construction and operation of rockets and engines, it is very convenient to have this generator operate with the same components as the liquid-fuel rocket engines, that is, on the basic fuel. When this is done, it is not necessary to have a separate feed system for the liquid-fuel gas generator and there is a reduction in the number of components which are necessary to fuel the rocket. However, for various reasons we can employ in the liquid-fuel gas generator fuels different from the basic one. Besides, it will be particularly convenient to employ a mono-component fuel, for example, a triple mixture -- hydrogen peroxide plus ethyl alcohol plus water, nitromethane (CNO_2), isopropylnitrate etc. The employment of the mono-component fuels, of course, simplifies the system of fuel feed to the liquid-fuel gas generator.

Since the products of combustion of the ordinary liquid fuels for rocket engines have a high temperature of combustion, which is not permissible because of the conditions of operation of the turbine or the tanks (if the liquid-fuel gas generator is employed in the system of liquid-fuel pressure accumulators), it is necessary to lower their temperature artificially. For this we employ 2 methods: ballasting the fuel with one of the components of the fuel and the feeding of a third component into the liquid-fuel gas generator -- usually water.

The selection of the component (combustible or oxidizer), the excess feeding of which reduces the temperature of the products of combustion, depends on the requirements for the utilization of the liquid-fuel gas generator. From the point of view of conventional operation of the turbine, it will be advantageous to employ a fuel ballast with the combustible (that is, $\alpha < 1$), because in this case the generated steam gas does not contain oxygen, which, with high temperatures, can react with the material of the structural parts and destroy them very quickly. The ballasting with an oxidizer must be employed in those cases when the products of combustion of the liquid-fuel gas generator are employed for the pressurization of the oxidizer tank.

The calculation of the temperature and the composition of the products of combustion of the liquid-fuel gas generator is made by starting from the assumption that there is no dissociation of the products of combustion and that combustion is complete. In this case the composition of the products of combustion depend only on the composition of the fuel.

In ballasting the fuel of the liquid-fuel gas generator with an oxidizer, the products of combustion of four-element fuels will include CO_2, H_2O, N_2 and

O_2. The weight proportions of these gases will be g_{CO_2}, g_{H_2O}, g_{N_2} and g_{O_2}, that is, the quantity of them expressed in kg and necessary for 1 kg of fuel or products of combustion, in accordance with (V.9) and V.10) will amount to

$$g_{CO_2}=\frac{11}{3}C_T;\quad g_{H_2O}=9H_T;\quad g_{N_2}=N_T;$$
$$g_{O_2}=O_T-\frac{8}{3}C_T-8H_T. \qquad (IX.160)$$

Of course,

$$g_{CO_2}+g_{H_2O}+g_{N_2}+g_{O_2}=1.$$

The temperature of the generated products of combustion is determined, in the usual manner, from the equation of the total heat content of the fuel and the products of combustion. Besides, it is necessary to seek a composition of the fuel (α or ν) which will ensure the obtaining of a gas of the prescribed temperature. In this case the scheme of calculation will be as follows. After prescribing the different α or ν, we find the elementary composition of the fuel. On the basis of formula (IX.160), we determine the composition of the products of combustion and also the total heat content of the fuel with the selected values of ν or α. Making use of the composition of the products of combustion found at the prescribed temperature $T_{\text{products of gas}}$, we find the total heat content of the products of combustion $I_{\text{products of steam gas}}$

$$I_{p_{\text{сг}}}=\sum_i I_{p_i}g_i=I_{p_{CO_2}}g_{CO_2}+I_{p_{H_2O}}g_{H_2O}+I_{p_{N_2}}g_{N_2}+I_{p_{O_2}}g_{O_2} \qquad (IX.161)$$

with the different ratios of the components of the fuel ($I_{\text{products } i}$ is taken in kilo-cal/kg).

In addition, we solve graphically the equation of the law for the conservation of energy $I_{p\ t} = I_{\text{products of steam gas}} = I_{\text{product of gas}}$ (Figure 206), and we determine the necessary design value of ν_{design} ensuring a steam gas of the prescribed temperature.

Example 26. Problem: To find the necessary ratio between the consumption of oxidizer and combustible ν, ensuring a gas with a temperature of 727° C or

1,000° absolute. The fuel consists of 96% HNO_3 ($H_o = 0.020$; $O_o = 0.767$; $N_o = 0.213$) and kerosene ($C_o = 0.85$, $H_o = 0.15$). The ballasting is done with the oxidizer.

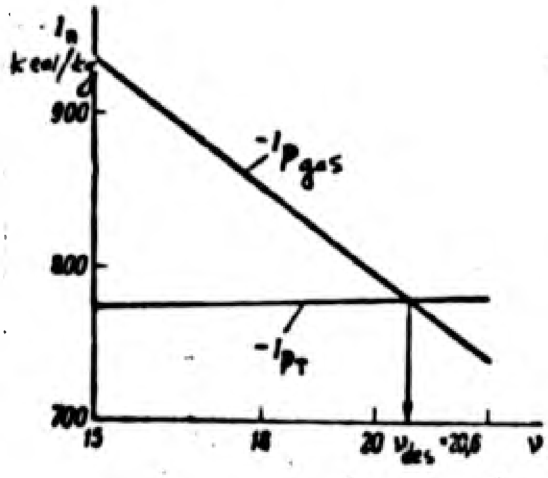

Figure 206. For the calculation of the necessary ratio ν_{design} of the components of fuel of the steam gas generator.

Solution:

We prescribe the values of ν equal to 15, 18, 20 and 22. On the basis of formula (V.17) we find the composition of the fuel and on the basis of formula (IX.160) the composition of the products of combustion. From the table of Appendix 3, we take the values of the total heat contents of CO_2, H_2O, O_2 and N_2 at a temperature of 1,000° absolute, and we convert them to kilo-cal/kg. They amount to the following

$$I_{p\,CO_2} = -1870 \text{ kilo-cal/kg}, \quad I_{p\,H_2O} = -2660 \text{ kilo-cal/kg}, \quad I_{p\,N_2} = 185 \text{ kilo-cal/kg},$$
$$I_{p\,O_2} = 170{,}5 \text{ kilo-cal/kg}.$$

We find the total heat content of the fuel by formula (V.25). In this case $I_{p\,HNO_3} = -795$ kilo-cal/kg; $I_{p\,kerosene} = -440$ kilo-cal/kg. The results of the calculation are given in Table 34.

The graphical solution of the equation $I_{p\,T} = I_{p\,steam\,gas}$, performed in Figure 206, gives $\nu_{design} = 20.6$.

The calculation of the composition and temperature of the steam gas in case of ballasting of the fuel with combustible is rendered difficult by the fact that with $\alpha = 0.3$-0.4 and low temperatures, there appear in the products of combustion solid carbons and hydrocarbons (methane CH_4, acetylene C_2H_2 etc). The calculation of the composition of such products of combustion, under conditions of equilibrium of the chemical reactions, is possible, but it requires more time. In the calculation of the liquid-fuel gas generator we can use in this case the data for the values of the product RT, as this is sometimes done in the calculation of the liquid-fuel pressure accumulator operating at small α.

Table 34

ν	15	18	20	22	ν	15	18	20	22
C_T	0,053	0,045	0,041	0,037	g_{H_2O}	0,252	0,243	0,234	0,225
H_T	0,028	0,027	0,026	0,026	g_{N_2}	0,200	0,202	0,203	0,204
O_T	0,719	0,726	0,730	0,732	g_{O_2}	0,354	0,390	0,413	0,435
N_T	0,200	0,202	0,203	0,204	Total	1,000	1,000	1,000	1,00
Total	1,000	1,000	1,000	1,000	I_{psg} kcal/kg	−936	−850	−794	−741
g_{CO_2}	0,194	0,165	0,150	0,136	I_{pi} kcal/kg	−774	−778	−780	−781

In case of the addition of water, the combustion in the liquid-fuel gas generator takes place at close to unity, and the water, vaporized and heated, reduces the temperature of the steam gas that is generated. If the fuel of the liquid-fuel gas generator burns at $\alpha > 1$, then for the calculation of the necessary addition of water for the purpose of obtaining steam gas of the prescribed temperature, we use the same method which we used for the determination of ν_{design}, in case of the ballasting of the fuel with oxidizer. Let us designate by x the number of kilograms of water to be added to one kg of fuel burning in the liquid-fuel gas generator. It is easy to see that with $\alpha > 1$ the weight composition of the products obtained will be the following:

$$g_{CO_2} = \frac{\frac{11}{3} C_T}{1+x}; \quad g_{H_2O} = \frac{x + 9H_T}{1+x}; \quad g_{N_2} = \frac{N_T}{1+x};$$

$$g_{O_2} = \frac{O_T - 8 \cdot H_T - \frac{8}{3} C_T}{1+x}.$$

Having prescribed the necessary temperature of the steam gas $T_{\text{steam gas}}$, we can construct the dependence of $I_{p\ \text{steam gas}}$ on the addition of water x. The total heat content of the fuel and water $I_{p\ T} + H_2O$ in accordance with the formula analogous to (V.25) amounts to

$$I_{p_{T+H_2O}} = \frac{I_{p_T} + xI_{p_{H_2O}}}{1+x}. \qquad (IX.162)$$

For finding the calculated amount of water which it is necessary to feed in for one kg of fuel x_{design} kg H_2O/kg of fuel, it is necessary to solve the equation

$$I_{p_{T+H_2O}} = I_{p_{s.g.}}. \qquad (IX.163)$$

Knowing the necessary consumption of steam gas (or gas) G_{sg} and the ratio of the components ν, we can find the separate consumption of fuel G_{sg} and oxidizer $G_{\text{oxidizer steam gas}}$, and in case of the feeding of water and its consumption G_{H_2O}:

$$G_{g_{sg}} = \frac{G_{sg}}{1+\nu+x};\quad G_{o_{sg}} = \frac{\nu G_{sg}}{1+\nu+x};\quad G_{H_2O} = \frac{xG_{sg}}{1+\nu+x}. \qquad (IX.164)$$

On the basis of what we find for the consumptions of fuel, the oxidizer, and water, we design the combustion chamber and the feed system of the steam generator. In the calculation of the chamber of the liquid-fuel gas generator and the steam generator we can also use these same ratios, as for the calculation of the combustion chamber of the liquid-fuel rocket engine; however, in the designing of chambers in this case we should take into account the ratios of the components necessary for the liquid-fuel rocket engine. In this case, we can recommend the planning of fuel combustion at $\alpha \approx 1$, selecting for this amount of fuel a combustion chamber volume in accordance with the usual ratios and a ballasting combustible, oxidizer or water, to be added afterwards. In the case of the calculation of the volume of the combustion chamber, necessary for the vaporization of the ballasting component or water, its selection should be made on the basis of experiments. As an example of a steam generator using nitric acid plus kerosene fuel with additional feeding of water, we can cite the steam gas generator constructed by V. P. Glushko (Figure 207). The steam generator consists of a combustion chamber 2, in which the fuel is fed through a system 5 of injectors for combustible and 3 for oxidizer. The ignition of the fuel is accomplished by a pyrocartridge 1. The water is injected by injector 4. The vaporization of the water takes place chiefly in the supplementary vaporization chamber 6. For a better mixing of the gases a turbulence diaphragm is installed.

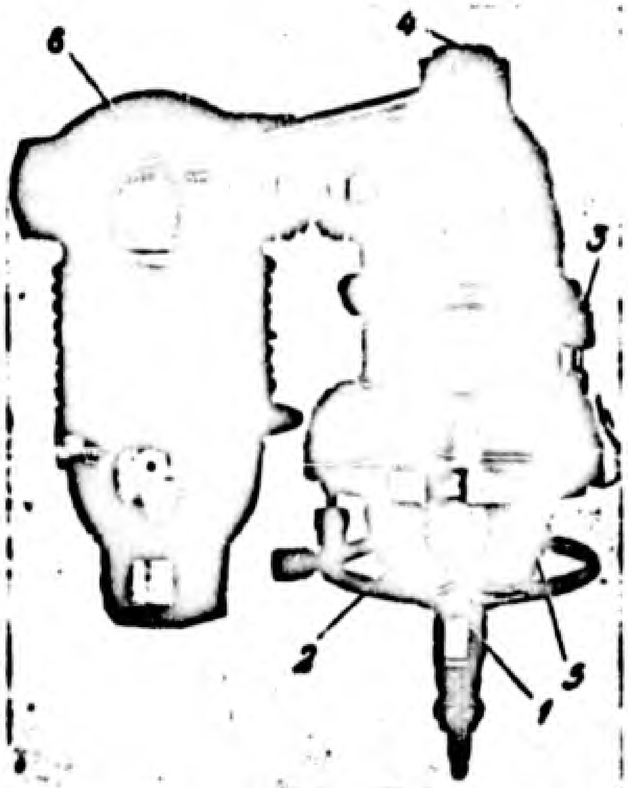

Figure 207. External view of the steam gas generator for fuel consisting of nitric acid plus kerosene (1937).

1 -- pyrocartridge igniter; 2 -- combustion chamber; 3 -- oxidizer injector; 4 -- water injector; 5 -- combustible injector; 6 -- chamber for supplementary vaporization.

In the designing of the feed system for the steam generator and the liquid-fuel gas generator a certain difficulty arises because of the small consumption of one of the components. For example, in accordance with the results of the calculation of example 26, the ratio of HNO_3 to kerosene in the fuel of the liquid-fuel gas generator when we ballast with the oxidizer was found to be ν = 20.6. This means that if the necessary consumption of steam gas equals 0.5 kg/sec, the consumption of combustible amounts to a total of 23 g/sec and of oxidizer 477 g/sec. Then, in order to avoid generating steam gas at an excessively high temperature, their ratio should be kept at a very precise figure.

Method of Calculating the Turbo-Pump Unit and the Steam Gas Generator.

The calculation of the turbo-pump unit and the steam generator is made in the following manner:

1. We determine the number of rpm of the turbo-pump unit. This calculation is made on the basis of the computation of maximum rpm of the pump, which is most dangerous for cavitation (see Section 60).

2. We calculate the dimension and power of the pumps feeding the components (see Section 61).

3. We determine the necessary power of the turbine $N_{turbine}$ equal to the total power of the pumps feeding the components

$$N_T = \sum N_{pump}$$

4. We calculate the heat drop taking place in the turbine. The theoretical temperature and the composition of the steam gas are determined in accordance with the type of steam gas generator. Having fixed the pressure p_1 at the entrance to the turbine and p_2 at the exit from it, we determine the temperature drop in the turbine ΔI_T in accordance with the formula (IX.146)

$$\Delta I_T = c_p(T_1 - T_2) = c_p T_1\left(1 - \frac{T_2}{T_1}\right),$$

where T_1 is the temperature at the entrance of the steam gas into the turbine. In the absence of cooling $T_1 = T_{prod\ of\ com}$. Since the process of expansion in the turbine is adiabatic, then

$$\frac{T_2}{T_1} = \left(\frac{p_2}{p_1}\right)^{\frac{k-1}{k}} \text{ and } \Delta I_T = c_p T_1\left[1 - \left(\frac{p_2}{p_1}\right)^{\frac{k-1}{k}}\right].$$

The value of the thermal capacity of the steam gas is in conformity to a corresponding formula for thermal capacity of the gas mixture, analogous to (VII.38)

$$c_p = \sum_i g_i c_{p_i} \qquad (IX.165)$$

where the value C_{pi} kilo-cal/kg °C can be taken from Table 21. On the basis of the value of C_p, we can also find the adiabatic index $k = C_p/C_v$. Besides, $C_v = C_p - AR$. The value of the gas constant of the mixture is found from the relation

$$R = \sum_i R_i g_i, \qquad (IX.166)$$

where R_i is the gas constant of the component of the mixture in kgm/kg °C.

5. We determine the necessary delivery of steam gas G_{sg}. For this purpose it is necessary to bear in mind that the temperature drop is a source of work in the turbine. Taking into account the coefficient of useful action (efficiency) of the turbine η_t, the work L performed by the turbine in the generation of 1 kg of steam gas amounts to

$$L = \frac{\Delta I_T}{A}\eta_T \text{ kgm/kg}, \qquad (IX.167)$$

and the power of the turbine with the generation in 1 second of G_{sg} will be equal to

$$N_T = \frac{LG}{75} = \frac{\Delta I_T \eta_T G}{75A}, \qquad (IX.168)$$

whence

$$G = \frac{75AN_T}{\Delta I_T \eta_T}. \qquad (IX.169)$$

6. On the basis of the flow rate of the steam gas which has been determined, we calculate the steam gas generator of a given type. We also find the flow rates of the components fed into the steam gas generator.

7. Having prescribed the time of operation of the steam gas generator,

we can then determine the dimensions of the tanks for the components fed to the steam gas generator (see Section 54).

8. Knowing the pressure of the steam at the entrance to the turbine, we determine the necessary feed pressure for the components (see Section 54) and calculate the units creating the delivery pressure - cylinder and reducer in the case of cylinder feeding, pump - in the case of pump feeding.

Example 27. Problem: To calculate the consumption of steam gas necessary for driving a turbine having a power of 600 hp. Source of the steam gas: hydrogen peroxide 87% concentration. Pressure at the entrance to the turbine $p_1 = 24$ at, at the exit $p_2 = 1.2$ at, efficiency of the turbine $\eta_t = 0.62$.

Solution:

1. On the basis of the graph of Figure 205 we find the theoretical temperature of the steam gas and its weight composition. We obtain

$$T_{sg} = 653^\circ \text{C};\ g_{H_2O} = 0{,}58;\ g_{C_2O} = 0.42.$$

2. Taking into account heat losses with a coefficient of loss equal to 0.92, we take the temperature at the entrance to the turbine T_1 equal to

$$T_1 = 0{,}92 \cdot 653 = 600^\circ \text{C} = 873^\circ \text{abs}.$$

3. We determine the heat capacity C_p of steam gas at $T_1 = 600^\circ$ C, making use of formula (IX.165) and the data of Table 22.

$$c_p = \sum_i g_i c_{p_i} = g_{H_2O} c_{p_{H_2O}} + g_{CO_2} c_{p_{CO_2}} =$$
$$= 0{,}58 \cdot 0{,}526 + 0{,}42 \cdot 0{,}256 = 0{,}412 \text{ kcal/kg}^\circ\text{C}.$$

4. We determine the gas constant of steam gas by formula (IX.166)

$$R = \sum_i g_i R_i = g_{H_2O} R_{H_2O} + g_{CO_2} R_{CO_2} =$$
$$= 0{,}58 \cdot 47 + 0{,}42 \cdot 26{,}5 = 38{,}4 \text{ kgm/kg}^\circ\text{C}.$$

5. We determine the heat capacity C_p of steam gas at 600° C and its

adiabatic index k

$$c_v = c_p - AR = 0{,}42 - \frac{38{,}4}{427} = 0{,}33 \text{ kcal/kg}^\circ\text{C};$$

$$k = \frac{c_p}{c_v} = \frac{0{,}42}{0{,}33} = 1{,}28.$$

6. We determine the heat drop in the turbine

$$\Delta I_T = C_p T_1 \left[1 - \left(\frac{p_2}{p_1} \right)^{\frac{k-1}{k}} \right] = 0{,}412 \cdot 873 \left[1 - \left(\frac{1{,}2}{24} \right)^{\frac{1{,}28-1}{1{,}28}} \right] = 173. \text{ kcal/kg.}$$

7. On the basis of formula (IX.169) we determine the necessary delivery of steam gas

$$Q_{s.g} = \frac{75AN_T}{\Delta I_T \eta_T} = \frac{75 \cdot 600}{427 \cdot 173{,}1 \cdot 0{,}62} = 0{,}981 \text{ kg/sec.}$$

Section 63. Fittings of the Delivery System of Rocket Engines.

The fittings of the feed system include the scoops of the tanks, filling plug and drain plugs, cut-off valves, pressure relay, rupture membranes, and ducts. We shall now consider some of the basic types of fittings of the liquid-fuel rocket engine feed system.

Fittings for the Tanks.

The scoops of the type represented in Figure 157 a, are suspended on a flexible bellows made of copper or (in case of the employment of a corrosive chemical) of stainless steel. In case of the appearance of transversal accelerations during maneuvers of the rocket, the scoop shifts together with the liquid, inclining toward the proper side as a result of the flexing of a bellows. The scoop is suspended in such a way that in case of a flexing of the bellows by the force of inertia there cannot take place any suction of the scoop to the bottom of the tank.

Another type of scoop which insures the continuous feeding of the component during the maneuvers of the rocket, is shown in Figure 157 b. This is the so-called rotating scoop, set on a central tube of the tank. When forces of inertia act on the liquid, they also act on the scoop and turn it following the liquid.

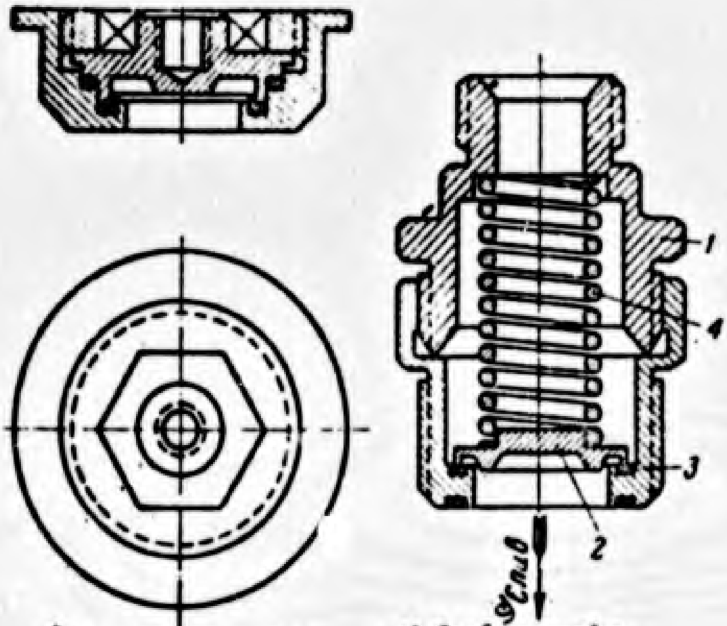

a) Заправочная пробка b) Сливная пробка

Figure 208. Fueling plug and drain plug.

1 -- body; 2 -- plates; 3 -- seat of the valve; 4 -- spring; a -- fueling plug; b -- drain plug; c -- drain.

Other devices which ensure continuity in the intake of the components are described in Section 54.

In Figure 208 we show the fueling and the drain plugs.

The construction of fueling plug can be seen from the figure. After filling the tank, the fueling plug should be locked.

The drain plug operates in the following manner. When the component is under pressure, plate 2, by the pressure of the component and the spring 4, is pressed to the seat of the valve 3 and blocks the exit of the component. For the drainage of the component in the tank, we cut off the pressure and screw the drain sleeve towards outlet 1 (not shown in Figure 208). In addition, a special pin, present in the drain outlet presses against the plate 2 and moves it away from the seat 3, forming a slit through which the component is drained from the tank.

The Cut-Off and the Return Valves.

The cut-off valves are for the purpose of overlapping the lines. The opening and closing of them can direct the delivery of liquid and gases. The cut-off consists of a seat, a valve overlapping the lines, and a drive for this valve.

In the selection of the dimensions for the cut-off valve, we proceed from the fact that the diameter of the valve should be equal to the diameter of the corresponding line in the opening. Then, too, the valve lift must not be greater than one-fourth of its diameter.

The force necessary for the secure closing of the valve is determined from the calculating the sealing of the valve (see Section 57).

As a material for the sealing inserts, we can employ, depending upon the component, plastic materials and soft metals. Sometimes, especially for sealing off corrosive liquids, we employ valves ground into the seats.

The force necessary for closing or opening the valve may, in the cut-off valve of the rocket engine, be generated by an electro-magnetic or by a servo-piston - (pneumatic or hydraulic type), loaded by a control pressure. Because of the high consumption of electrical current, cut-off valves with an electro-magnetic drive are made only for tube lines of small dimensions. For tube lines of large diameters, we usually employ valves with servo-pistons.

On the basis of construction, the valves may be of the normally closed type or the normally opened type. By this we understand the following: a normally closed valve is closed if on it there is no control pressure or electrical current (depending upon the type of the drive). The normally open valve, however, is open in the absence of a control pressure or electrical current and closes when these are turned on.

In Figure 209 we show a cut-off valve with an electro-magnetic drive. This valve is oftentimes called a pneumatic valve of remote control. It consists of a body into which there is screwed the inlet sleeve 1, which leads to the valve of the corresponding component. The pressure of the component, together with the force of spring 2, raises the lower valve 3.

The sealing collar 4 of the valve is set on a seat and effectively blocks the exit of the component. Simultaneously, by means of the stem 5, the upper valve 6 is lifted, which connects the outlet 7 and the system of pipes behind it with the atmosphere through drainage opening 8. To begin feeding the component, we send the current through the winding of the coils of the electro-magnet 9. In this case armature 10 touches yoke 11 and through stem 12 the force is transmitted to the upper valve 6, which, dropping into its seat, disconnects the component feed line from the drainage opening 8. Simultaneously, by means of stem 5, the lower valve 4 is let down and gives the component access to the outlet, and after this into the proper main line. Shutting off the current from the coil of the electro-magnet brings the valve back into the initial position. Usually, such an electro-magnetic valve with drainage is employed as a valve for feeding of gas for control of the servo-pistons of the other valves.

In Figure 210 we show the shut-off valve with the servo-piston. Into the body 1, there is pressed the seat 2 with a gasket 3 (a collar) on which the valve 4 is seated. This valve is pressed to the seat by the pressure of spring 5 and of the component. The valve is opened by feeding control pressure on servo-piston 6 through branch 7. The leakage of the control gas is prevented by packing 8, and the leakage draining into the space under the gas piston takes place through the opening in the body of the valve. After the opening of the valve, the component enters through inlet 9 and is removed by duct 10. The seal 11 prevents the leaking of the component into the cavity under the piston.

In the feed systems of liquid-fuel rocket engines, we also have duplex or triplex valves in which one servo-piston opens 2 or 3 valves on lines of different components or on parallel lines of one component. The transmission of movement from the servo-piston to the valves in this case is effected with the aid of a rocking lever.

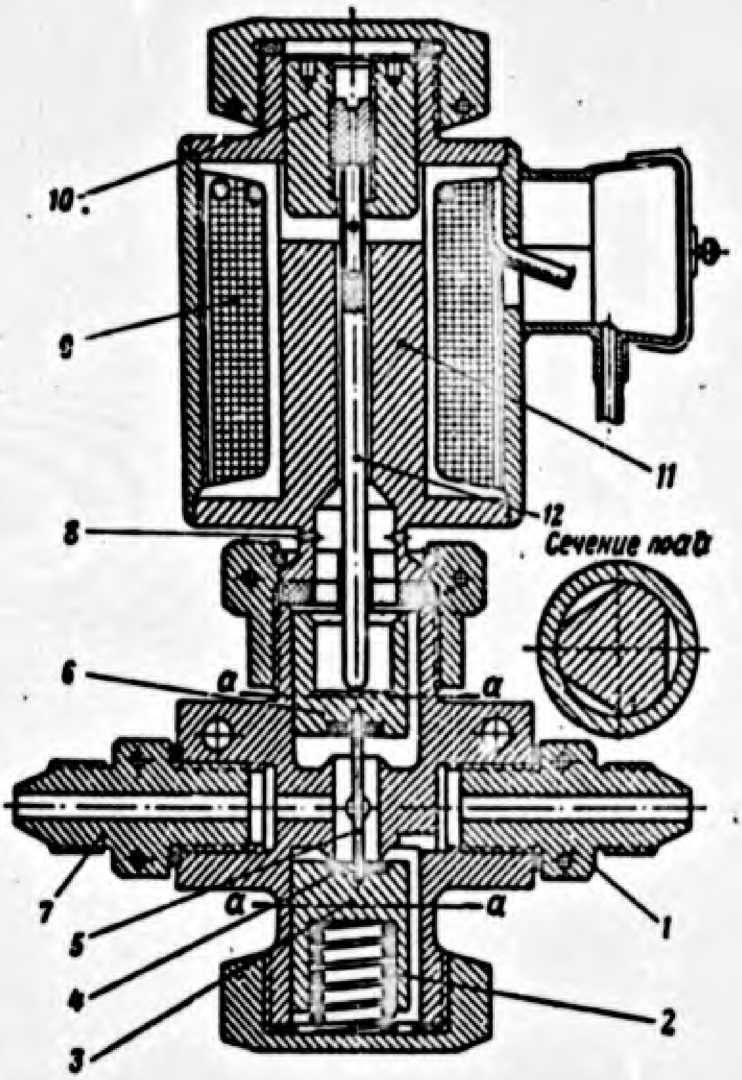

Legend:
A) Section along aa.

Figure 209. Shut-off valve with an electro-magnetic drive.

1 -- entrance branch; 2 -- spring; 3 -- lower valve; 4 -- packing collar; 5 -- stem; 6 -- upper valve; 7 -- exit branch; 8 -- drainage; 9 -- electro-magnet; 10 -- armature; 11 -- yoke of electro-magnet; 12 -- stem.

In Figure 211 we show the return valve. The plate of valve 2, by pressure of spring 4, is pressed to the seat of valve 3. The component goes into branch 5. If the force of the pressure of the component on the plate becomes greater than the force of pressure of spring 4, the valve opens and the component, through opening 7 in the body of the valve, passes to the exit branch 6 and on to the "consumer." A return movement of the liquid is impossible, because it always leads to the closing of the valve. The movement of the plate of the valve is limited by the support flange.

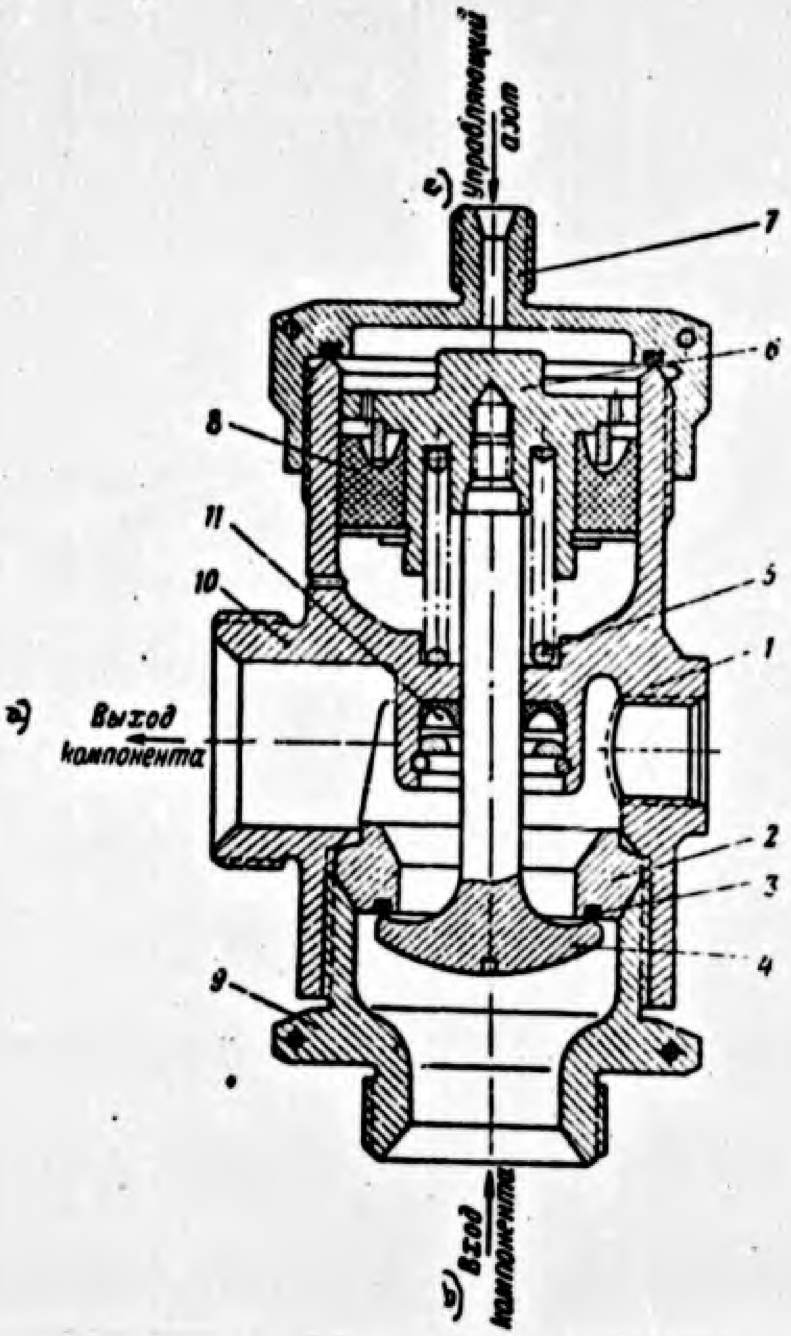

Figure 210. The shut-off valve with the servo-piston.

1 -- body; 2 -- seat; 3 -- packing washer of the seat, 4 -- valve; 5 -- spring; 6 -- servo-piston; 7 -- branch pipe; 8 -- seal; 9 -- branch pipe; 10 -- exit branch; 11 -- seal.

a -- exit of the component; b -- entrance of the component; c -- control of nitrogen.

Other Fittings.

Figure 212 shows a pressure relay. It serves to switch the electrical circuits, when the pressure in the line or space used reaches a certain valve and to reverse them when the pressure drops below prescribed limits.

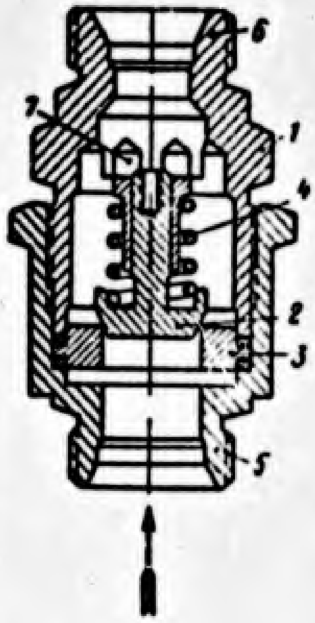

Figure 211. Return valve.

1 -- body; 2 -- plate of the valve; 3 -- seat of the valve; 4 -- spring; 5 -- entrance branch; 6 -- exit branch; 7 -- opening to the support flange.

The pressure relay consists of a pressure receiver and a snap-action switch. The sensitive element receiving the pressure is membrane 1, pressed around the perimeter by the base of pressure receiver 2 against block 3 and reinforced by regulator spring 4. Under the action of the pressure exerted under the membrane (when it reaches the prescribed value), it is deflected and the pusher 5 set on it presses against the spring of switch 6, which is shifted to the upper contact. When the pressure drops, the membrane releases switch 6 and it again drops to the lower contact. The turning of switch 6 closes either electrical circuit. The regulation of the device for the prescribed value of pressure generation is accomplished by a change in the flexure of spring 4 by means of the threaded ring 7.

The simplest shut-off devices employed on single action engines with pressure feeding are rupture membranes. When the prescribed pressure develops, the membrane breaks and allows the component to enter the chamber of the engine.

In Figure 213, we show examples of rupture membranes and how they are attached to the lines.

In Figure 213 a, we show a membrane with a weakening of the section in the form of a cut. When subjected to high pressures the membrane breaks along this cut, because here the resistance of the membrane is less. After the tearing of the membrane along the cut, its petal-shaped piece bends back and opens a passage for the liquid.

Figure 213 b, shows a membrane with a cross cut. Under pressure the membrane breaks along the cut and is bent in the form of petals.

The determination of the membrane for the necessary rupture pressure is usually done by trial and error, because the breaking of the thin material of the membrane will depend to a considerable extent on the depth of the cut.

A necessary element of the feed system is the pipe lines.

The selection of the lines' cross sections for the feed system of liquid-fuel rocket engines is made by starting from the permissible velocity of movement of the components along the lines. The velocity of movement is usually taken as equal to 6-10 m/sec. A velocity greater than 10 m/sec is not advantageous, because the hydraulic resistance in the pipes, proportional to the square of the velocity u, will be very high, that is, very high hydraulic losses may arise in the lines. A velocity of movement less than 6 m/sec will not be advantageous, because in this case the lines would have very large dimensions.

In Figure 214, we show the different types of connections of the lines. With small diameters of the lines (up to 25 mm), the most widely used line connection is the nipple of the expanded type (Figure 214 a).

For making this connection it is necessary to put a coupling nut and ring on the smooth pipe and then expand the end of the pipe. In Figure 214 b, we show a connection with a soldered nipple. For this purpose the nipple should be welded or soldered to the pipes. The packing of the surface of the nipple is most often made circular, but, there may also be other kinds: conical or flat. In this case the branch connection should have the proper kind of surface.

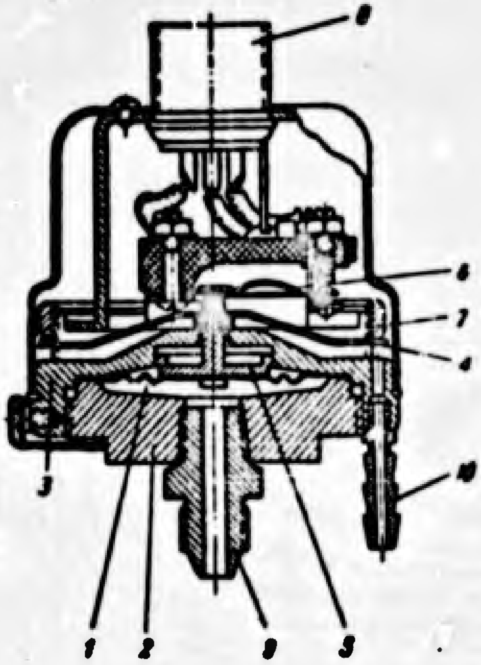

Figure 212. Pressure relay.

1 -- membrane; 2 -- base of the receiver; 3 -- body; 4 -- regulator spring; 5 -- pusher; 6 -- switch; 7 -- threaded regulating ring; 8 -- entrance of the electric cable; 9 -- pressure branch; 10 -- drain pipe.

Connection by means of a bellows (Figure 214 b), employed with very large pipe cross sections (diameter of the pipe amounting to about 100 mm). Such a connection makes it easily possible to compensate for any lack of accuracy in manufacture, and also any temperature expansion of the tubes or other parts.

The flange connection (Figure 214 d) of two pipes, with the throttle plate placed between them, is employed for adjusting the resistance of the feed system for components to the required value. By giving the throttle a larger or smaller passage section, we reduce to a correspondingly lesser or greater degree the resistance of the system and this changes in a corresponding manner the delivery of the component. In the calibration of the feed system for liquid-fuel rocket engines, the setting of these throttles on the feed lines of the components is absolutely necessary, because it is only by means of the throttle that we can keep the delivery of fuel and oxidizer at the absolute value and in the proper ratio.

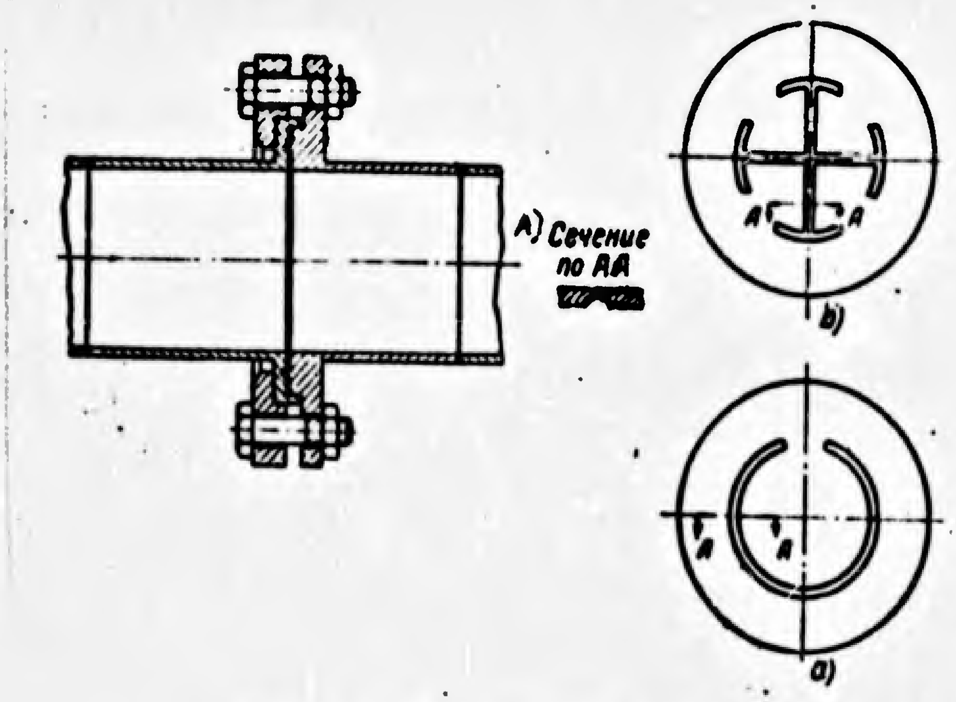

Figure 213. Rupture membranes.

A) -- Cross section through A-A.

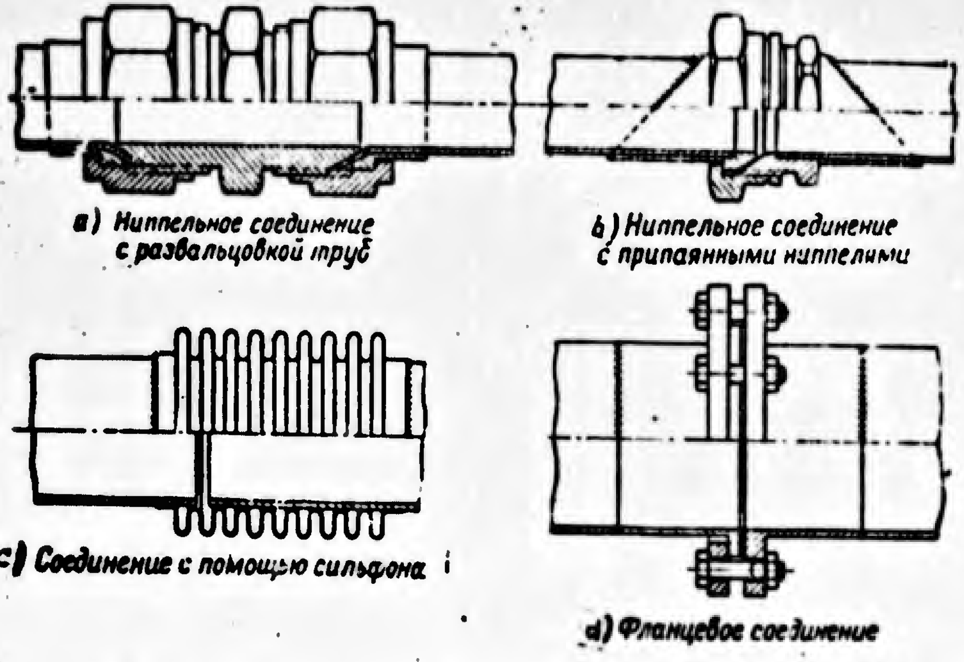

Figure 214. Methods of connecting the lines.

a) -- nipple connection with expanded pipe; b) -- nipple connection with soldered nipples; c) -- connection by means of a bellows; d) -- flange connection.

Section 64. Determination of the Hydraulic Losses in the Feed System of the Liquid-Fuel Rocket Engine.

The calculation of the necessary feed pressure p_{tank}, as we have already said (see Section 54), is made in accordance with the expression

$$p_t = p_k + \Delta p_n + \Delta p_{cool} + \Delta p_{loss} + \Delta p_v \qquad (IX.170)$$

The sum $(\Delta p_n + \Delta p_{cool} + \Delta p_{loss} + \Delta p_v)$ constitutes the hydraulic losses of the feed system.

The pressure losses in the nozzle Δp_{nozzle} are known from the nozzle computations (see Section 49).

The precise determination of the hydraulic losses in the feed system of the liquid-fuel rocket engine is possible only after the completion of the thermal calculation and the sketching of the design of the engine when we have found the dimensions of the cooling sector of the chamber, adopted the diagram of the feed system, and know the dimensions and form of the lines and also the type and number of valves and other local hydraulic resistances: elbows, branches, collectors, etc.

Determination of the Hydraulic Losses in the Cooling Tract of the Engine Chamber.

In the cooling tract of the chamber there are two kinds of losses:

1) Losses $\Delta p_{cool\ fr}$ due to friction, occurring as a result of the friction of the liquid against the wall of the duct.

2) These losses are $\Delta p_{cool\ loc}$. This loss is caused by some obstacle or other in the cooling tract (fastening of the connection, pins, projections, sharp turns, etc).

Hence,

$$\Delta p_{cool} = \Delta p_{cool\ fr} + \Delta p_{cool\ loc} \qquad (IX.171)$$

In view of the fact that the cooling sector has variable dimensions over the length of the chamber, the calculation of the losses due to friction $\Delta p_{cool\ fr}$ is made over sections conventionally taken as cylindrical. In the designation of such sections, it will be convenient to employ the division of the chamber already adopted earlier in the calculation of the cooling of the engine (see Section 41).

For each sector, we take the averages of all the designed values (diameter, area of the passage sections, velocity, etc). Knowing $\Delta p_{cool\ fr\ i}$ of each section, we find $\Delta p_{cool\ fr}$ as the sum of all the chambers. Hence,

$$\Delta p_{cool\ fr} = \Sigma \Delta p_{cool\ fr\ i};$$

All the subsequent operations are given for the calculation of one sector of the system, in which all the parameters are averaged.

The losses due to friction are estimated roughly by the formula

$$\Delta p_{cool\ fr\ i} = f \frac{L}{d_{eq.}} \gamma \frac{w^2}{2g}, \tag{IX.172}$$

where $\Delta p_{cool\ fr\ i}$ are the losses due to friction in the given sector, in kg/cm^2;

L the length of the sector of the cooling tract in cm;

d_e the equivalent diameter of the cooling tract on the given sector in cm (the determination of d_e for the different forms of tracts are given below);

γ the specific weight of the coolant in kg/cm;

w, the velocity of the movement of the cooling substance in cm/sec;

$g = 981$, the acceleration of the force of the earth's gravity in cm/sec^2;

f, the dimensionless coefficient of loss due to friction.

As we can see, our task boils down to the determination of d_e and the coefficient f in the formula (IX.172).

The equivalent diameter is determined as the ratio of the quadruple of the area of the cross section to the perimeter of the section

$$d_g = \frac{4F}{P}.$$ (IX.173)

The coefficient of friction f depends upon the type of the flow and the shape of the duct.

The type of the flow is determined by the Reynold's number Re, and the form of the duct, by the coefficient of the form w.

For the laminar flows, that is, with Re $\leqslant$ 2320

$$f = \frac{64}{\mathrm{Re}}\,\omega.$$ (IX.174)

For turbulent flows at 2320 $< \mathrm{Re} < 10^5$

$$f = \frac{0{,}3164}{\mathrm{Re}^{0{,}75}}\,\omega,$$ (IX.175)

and with Re $> 10^5$

$$f = (0{,}0032 + 0{,}221\,\mathrm{Re}^{-0{,}237})\,\omega.$$ (IX.176)

For circular ducts $\omega = 1$.

For rectangular ducts with a ratio of sides of b/a, the value w has the following significance:

$\frac{b}{a}$	0	0,1	0,2	0,3	0,4	0,5	0,7	1,0
ω	1,50	1,32	1,25	1,10	1,03	0,97	0,91	0,90

For the circular duct $\omega = 1.5$.

The Reynolds number is estimated roughly by the formula

$$\mathrm{Re} = \frac{d_g w}{\nu},$$ (IX.177)

where ν is the kinematic coefficient of viscosity in m^2/sec.

For a more convenient determination of the Re number we transform the expression (IX.177)

Since

$$G = wF\gamma, \tag{IX.178}$$

that is,

$$w = \frac{G}{F\gamma}, \tag{IX.179}$$

and

$$\nu = \frac{\mu}{\rho} = \frac{\mu g}{\gamma}, \tag{IX.180}$$

then, substituting the expressions (IX.173), (IX.179), and (IX.180) in formula (IX.177), we obtain

$$\mathrm{Re} = \frac{d_e w}{\nu} = \frac{4FG\gamma}{PF\gamma g\mu} = \frac{4G}{Pg\mu}, \tag{IX.181}$$

where G is the delivery of the coolant liquid in kg/sec;

P, the perimeter in meters.

The values of $g \cdot \mu$ in kg-m/sec are given in Figures 116-119.

For the different types of cooling tracts the formulas for the determination of Re and d_e can be reduced to the following form.

1. A smooth slot duct (see Figure 103 a).

Assuming in view of the smallness of the clearance δ_{cool}

$$d_{av} = d_{cool} \tag{IX.182}$$

we obtain

$$\mathrm{Re} = \frac{4G}{P\mu g} = \frac{4G}{2\pi d_{cool} g\mu}. \tag{IX.183}$$

The equivalent diameter is determined by the formula

$$d_e = \frac{4F}{P} = \frac{4\pi d_{cool}\delta_{cool}}{2\pi d_{cool}} = 2\delta. \tag{IX.184}$$

2. Slot duct with longitudinal ribs for rigidity (see Figure 103 b).

In this case the cooling tract is a system of several parallel identical ducts. The resistance of all the cooling tract is equal to the resistance of one of these ducts (any one of them), estimated on the basis of formula (IX.172).

The values Re and d_e are calculated on the basis of the following expressions.

$$\mathrm{Re} = \frac{4G_i}{P_i g\mu} = \frac{4G_i}{2(a+h)g\mu}, \qquad (IX.185)$$

where $G_i = \frac{G}{z}$ is the delivery through one duct;

$P_i = 2(a+h)$ the perimeter of one of the ducts.

$$d_e = \frac{4F_i}{P_i} = \frac{4ah}{2(a+h)} = \frac{2ah}{a+h}, \qquad (IX.186)$$

where $F_i = a \times h$ is the area of the section of one of the ducts.

3. The cooling tract in the form of a spiral slot duct (see Figure 104).

In the case of spiral ducts the cooling tract is also made up of a number of identical ducts connected in parallel, the number of them being equal to the number of turns of the spiral worm.

The resistance of all the tract is also equal to the resistance of one of the ducts and is estimated by formula (IX.172).

The values Re and d_e are determined by the same expressions as in the case of the slot duct with longitudinal and rectangular ribs of rigidity; -- that is, in accordance with formulas (IX.185) and (IX.186).

The coefficient of friction for the spiral duct is determined by the formula

$$f_{spir} = \beta f. \qquad (IX.187)$$

The coefficient of friction f is estimated by use of the ordinary formulas (IX.174), (IX.175), (IX.176), and the coefficient β is determined by the expression

$$\beta = 1 + 3{,}5\frac{d_e}{d_{spir}}, \qquad (IX.188)$$

where d_{spiral} is the diameter of the spiral line in the given calculated section (see Figure 104).

The length of the spiral duct in the given sector L_{spiral} is determined by the expression

$$L_{spir} = \frac{L_i}{\sin \gamma_{av}}, \qquad (IX.189)$$

where L_i is the length of the given sector;

$\gamma_{average}$, the average angle of slope of the spiral line on the given sector.

The local losses $\Delta p_{cool\ local}$ are estimated separately for each particular case of local losses, on the basis of the data from hydraulic handbooks. Usually $\Delta p_{cool\ local}$ is much smaller than $\Delta p_{cool\ fr}$, but for certain constructions of the cooling tract the value $\Delta p_{cool\ local}$ can reach considerable values and exceed $\Delta p_{cool\ fr}$. Knowing $\Delta p_{cool\ fr}$ and $\Delta p_{cool\ local}$, we can determine the total resistance of the chamber Δp_{cool} by the formula (IX.171).

<u>The Determination of the Hydraulic Losses in the Lines and Fittings.</u>

In the lines the head losses are the same as in the cooling tract; they are made up of the losses due to frictions against the walls of the lines and the local losses; -- that is,

$$\Delta p_{loss} = \Delta p_{fr} + \Delta p_{loc} \qquad (IX.190)$$

The losses of head due to friction in the lines are determined just as in the case of those of the cooling tract, by the formula (IX.172).

$$\Delta p_{fr} = f \frac{L}{d_{eq.}} \gamma \frac{w^2}{2g},$$

where the coefficient of friction f for the different cases of friction of the liquid along the pipes is determined in accordance with formulas (IX.174), (IX.175), (IX.176).

The losses of head due to local resistances Δp_{local} are determined by the formula analogous to (IX.172)

$$\Delta p_{lc} = \zeta \gamma \frac{w^2}{2g}, \qquad \text{(IX.191)}$$

where w is the velocity due to local losses in cm/sec;

ζ is the coefficient of the local resistance.

For the different cases the coefficient ζ is estimated in the following manner.

For losses due to a shock as a result of sudden expansion

$$\zeta = \left(\frac{F_2}{F_1} - 1\right)^2. \qquad \text{(IX.192)}$$

where F_1 and F_2 are the sections of the line before expansion and after expansion.

With a sudden contraction the value of ζ is taken depending upon the ratio F_2/F_1 where F_1 is the section before contraction; -- that is, the larger section and F_2 the section after contraction.

$\frac{F_2}{F_1}$	0,01	0,1	0,2	0,4	0,6	0,8	1,0
ζ	0,5	0,5	0,42	0,34	0,25	0,15	0,0

The losses in the presence of the diaphragm are determined from the ratio F_D/F where F_D is the area of the diaphragm, and F the cross-sectional area of the line.

$\frac{F_D}{F}$	0,1	0,2	0,3	0,4	0,5	0,6	0,7	0,8	0,9
ζ	226	48	17,5	7,8	3,75	1,8	0,8	0,29	0,06

With smooth turns in the lines (Figure 215 a) the coefficient ζ is determined on the basis of the ratio r/d, where r is the radius of the turn, and d, the diameter of the line.

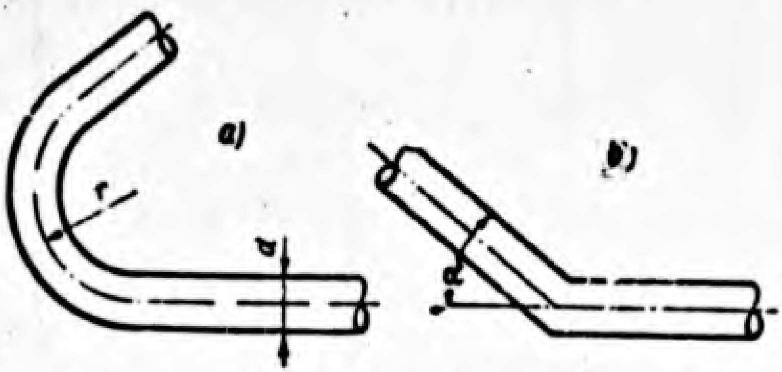

Figure 215. For determination of losses in the lines.

With a turn of 90°, ζ takes the following values (for Re* = 0.5×10^5).

$\frac{r}{d}$	4	6	15	20	30	40	50
ζ	0,20	0,102	0,043	0,080	0,060	0,046	0,033

With an increase in Re up to 10^5, the value ζ decreases by 12.5%, with a decrease of Re to 10^4, it increases by 46.7%, With a turn of the pipe by 180°, the value of ζ increases by 40%, with a turn of 135°, it increases by 21.5%, with a turn of 45°, it decreases by 37.7%.

For the elbow (see Figure 215 b) the values of the coefficient of losses are determined by the formula

$$\zeta=0,946\cdot\sin^2\frac{\alpha}{2}+2,05\cdot\sin^4\frac{\alpha}{2}, \tag{IX.193}$$

where α is the angle of turn of the flow.

Knowing Δp_f and Δp_{local}, we determine the total value of losses Δp_{line} in the line by formula (IX.190).

The losses in the valves Δp_{valve} are determined by test flows of a given valve design.

By way of orientation, the value Δp_{valve} for valves with conical seat can be determined by the formula (IX.191) and

$$\zeta=2,6+0,14\left(\frac{d_v}{h}\right)^2+0,8\frac{d}{h}, \tag{IX.194}$$

---

[*] Reynolds number

where d is the diameter of the valve;

h, the lift of the valve.

The formula (IX.194) is suitable for determining the relative lift of the valve h/d in the limits from 0.1 to 0.25.

QUESTIONS FOR REVIEW

1. Name the basic elements of the feed system of the liquid-fuel rocket engine.

2. Draw the diagram of a cylinder feed system.

3. Draw the diagram of pump feeding.

4. What are the shapes that tanks for liquid-fuel rocket engines may have? How are they arranged?

5. How do we determine the necessary capacity of the tanks?

6. How do we compute the volume of the gas cushion in the tanks?

7. On the basis of what requirements do we find the necessary gas reserve during the cylinder feeding?

8. How does the temperature of the gas change in the cylinder and in the tanks in the process of displacement of fuel?

9. On the basis of what requirements do we select the initial pressure in the cylinder?

10. How is the cartridge pressure accumulator constructed?

11. How do we calculate the cross section of the charge of the cartridge pressure accumulator?

12. For what purpose do we need a launching cartridge pressure accumulator?

13. How do we calculate the length of the charge for the cartridge pressure accumulator?

14. How is the gas pressure reducer constructed? What types of reducers do you know?

15. How does the reducer of direct action differ from that of reverse action?

16. What is meant by the characteristic of a reducer?

17. What requirements should be met by a reducer for a liquid-fuel rocket engine?

18. What dimensions of a reducer can be calculated?

19. How do we calculate the dimensions of the valve of a reducer?

20. Name the basic parts of the centrifugal pump.

21. What magnitudes characterize the operation of the centrifugal pump?

22. Draw the layout of the velocities at the entrance to the wheel and explain it.

23. Draw the layout of the velocities at the exit from the wheel and explain it.

24. What determines the theoretical head generated by the centrifugal pump?

25. What influence does the finite number of vanes on the wheel have on the head developed by the pump?

26. What kinds of hydraulic losses take place on the wheel of the pump?

27. What coefficients go to make up the efficiency of a pump?

28. How do we estimate the power expended in driving the pump?

29. How is a gear pump constructed?

30. What is cavitation and how does it endanger the pumps of a liquid-fuel rocket engine?

31. Why is it necessary to limit the rpm of a pump?

32. Which pump is more dangerous as regards the possibility of the development of cavitation?

33. How do we determine the head at the intake of the pump?

34. What type of turbines are employed in liquid-fuel rocket engines?

35. How is the force rotating the wheel of the turbine generated?

36. Name the basic parts and explain the construction of the turbo-pump unit of the rocket A-4 engine.

37. Describe the sealing of a pump for nitric acid.

38. How do we estimate the necessary reserve of hydrogen peroxide?

39. Draw the layouts of reactors of steam generators using a liquid and a solid catalyzer.

40. How do you estimate the dimensions of the packet of solid catalyzer or the reserve of liquid catalyzer?

41. On the basis of what considerations do we determine the necessary ratio of the components of fuel of liquid gas generators when we ballast it with an oxidizer?

42. How do we determine the consumption of water necessary for reducing the temperature of the steam gas to the prescribed value?

43. What is meant by the heat drop, used in the turbine, and how is it determined?

44. What types of valves are employed in the feed system of liquid-fuel rocket engines?

45. How do we determine the dimensions of the lines for liquids and gases in the feed system of liquid-fuel rocket engines?

46. What hydraulic losses take place in the feed systems of liquid-fuel rocket engines?

CHAPTER X

DESCRIPTIONS OF THE DIAGRAMS OF LIQUID-FUEL ROCKET ENGINES THAT HAVE BEEN CONSTRUCTED

Below we give the layouts of certain actual engines for various purposes with different systems of feeding, ignition, and stopping.

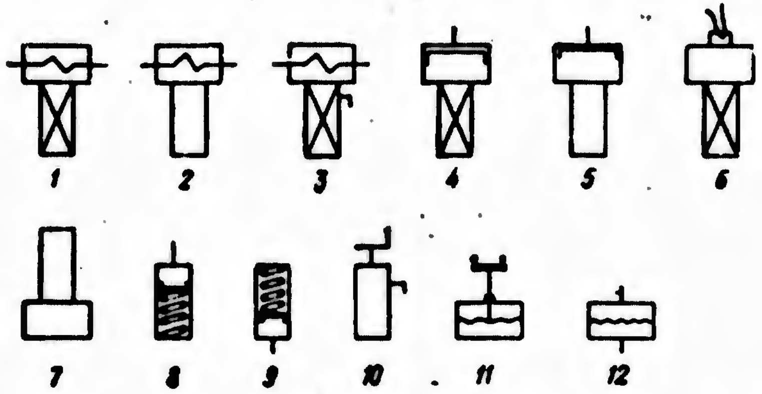

Figure 216. Conventional designations used in the engine diagrams.

1 -- electrovalve, normally closed; -- that is, closed in the absence of an electrical current in the circuit and opening when the current is turned on; 2 -- electrovalve, normally open, that is, open in the absence of a current in the circuit and closing when it is turned on; 3 -- electrovalve, normally closed, with drainage; -- that is, an opening gradually relieving pressure from the line behind the valve upon removal of the electrical current; 4 -- valve made with a servo-piston (hydraulic or pneumatic), normally closed; -- that is, closed in the absence of pressure on the servo-piston and opening when pressure is turned on; 5 -- valve made with a servo-piston, normally open; 6 -- pyrovalve or membrane, rupturing under the action of a pyrocartridge with an electrical igniter; 7 -- reducer of gas pressure; 8 -- non-return and filling valve; 9 -- safety valve; 10 -- manual shut-off or drainage valve; 11 -- pressure relay normally open; -- that is, open in the absence of pressure in the line; 12 -- rupture membrane.

The conventional designations adopted in these layouts are given in Figure 216.

Section 65. Diagram of the A-4 Rocket Engine.

In Figure 217 we show the diagram of the rocket A-4 engine (described in Section 6).[1] Let us consider the purpose and operation of the parts of this layout in the operation of the engine assembly.

The whole period of operation of the engine consists of characteristic stages:

1) The fueling of the engine and the preparation of it for launching;

2) The starting of the engine and the departure for the main stage;

3) Operation of the engine in flight and its final cut-off.

Fueling the Engine and Its Preparation for Launching.

During the time of fueling and launching, the engine, by a system of lines and through the branches I, II, III, IV, and V, is connected with the ground equipment, which is used for starting.

Before starting to tank up, we close the main combustible valve 58 and the main oxidizer valve 51. For this purpose, air under high pressure, fed by ground equipment through the electrovalve 74, which is normally closed, is brought to the pressure reducer 75, where its pressure is reduced to ~ 30 at. The control air through valve 65 and branch IV, opening the return valve 56, is led to the control, normally opened, electrovalves 53 and 59, and, passing through them, goes to the main valves 51 and 58. By acting on the servo-pistons of these valves, the control air closes them. Simultaneously, the control air approaches the servo-piston of valve 45 and forces it to open, having contact with the atmosphere through the drainage tube 41 of the oxygen tank 34. After this the whole rocket is filled in the following order:

1. The 7-tank steam generator 12 is filled with high-pressure air (200 at). The filling is done from the ground installation by the opening of hand cock 70, after which the air, through branch III and the combined

---

[1] I. Kooy and I. Yutenbogart, Dinamika Raket /Dynamics of Rockets/, Oborongiz, 1950. D. Satton, Raketnyye Dvigateli /Rocket Engines/, Publishing House of Foreign Literature, 1952.

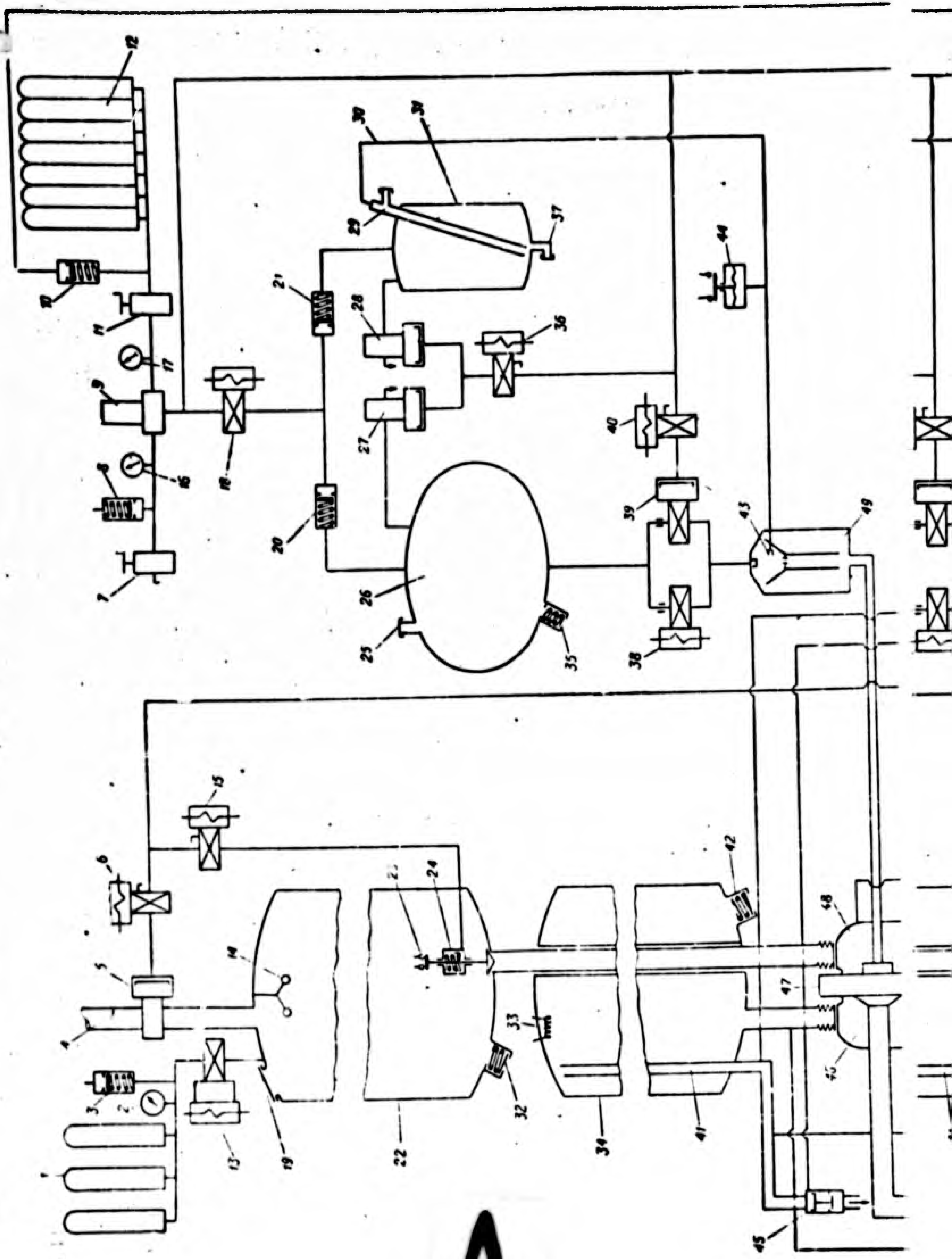

12
10
11
17
9
16
8
7
18
21
20
30
31
29
37
28
27
36
26
25
35
44
40
39
43
49
38
15
6
5
4
3
2
1
13
14
19
22
23
24
32
33
34
41
42
47
48
46
45

A

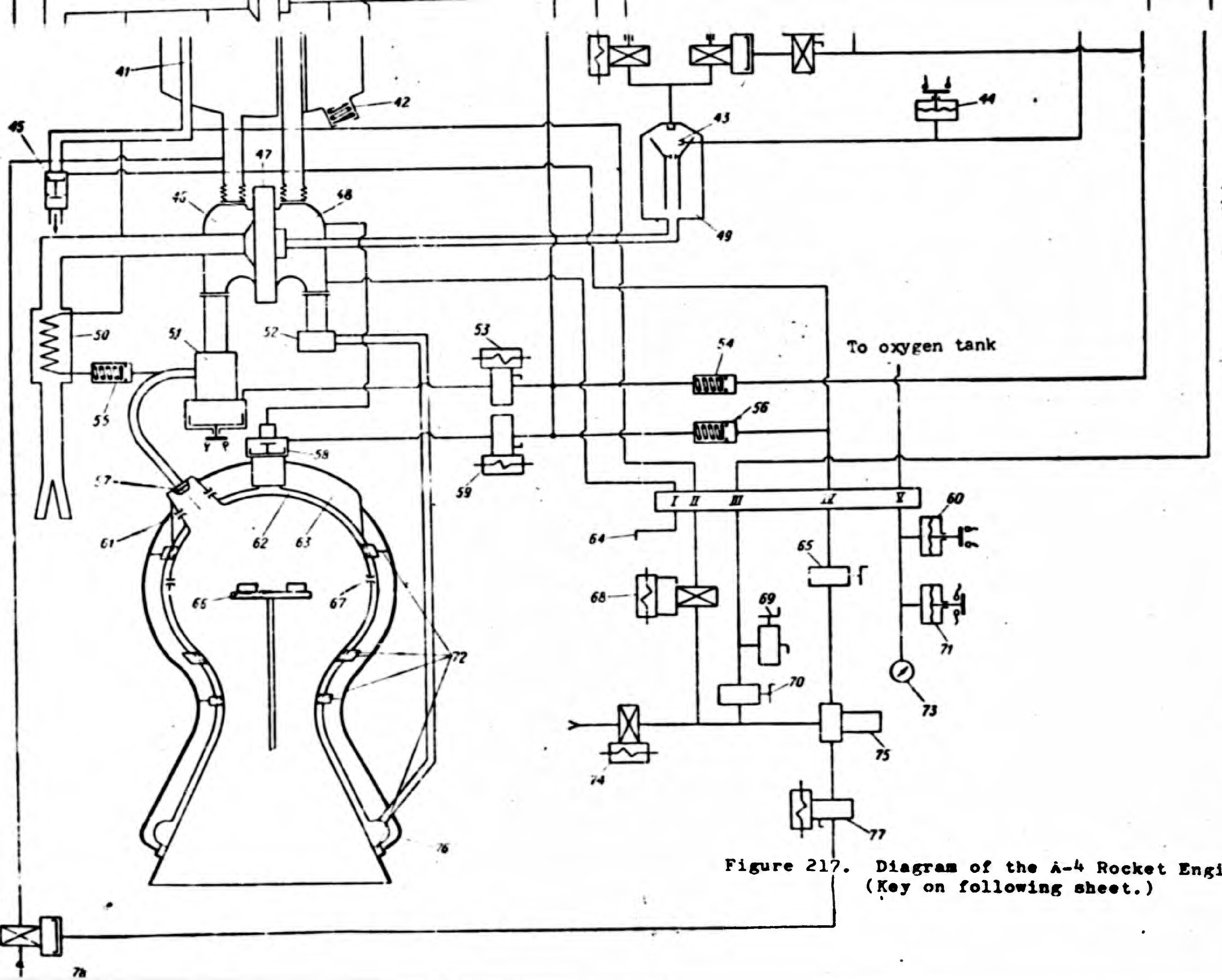

Figure 217. Diagram of the A-4 Rocket Engine. (Key on following sheet.)

Figure 217. Diagram of the A-4 Rocket Engine.

1 -- three-cylinder battery with air under high pressure; 2 -- manometer pressure in the battery; 3 -- valve for filling the three-cylinder battery; 4 -- tube for pressurization of the gas by a pressure difference; 5 -- deflection of the pressure difference and safety valve of the combustible tank; 6 -- pilot electro-valve; 7 -- hand valve for the gradual change of the low pressure after the reducer; 8 -- safety valve for low pressure; 9 -- reducer of gas pressure; 10 -- filler valve of the 7-cylinder battery; 11 -- hand valve; 12 -- 7-cylinder battery of high pressure; 13 -- combined valve-reducer for pressurization of the fuel tank; 14 -- indicator of the level of the fuel in the tank; 15 -- pilot electro-valve of the advance alcohol valve; 16 -- low pressure manometer; 17 -- high pressure manometer; 18 -- main valve of the steam generator; 19 -- the filler (opening) of the combustible tank; 20 -- return valve for the hydrogen peroxide tank; 21 -- return valve for the permanganate tank; 22 -- combustible tank; 23 -- contact device of the advance valve; 24 -- alcohol advance valve; 25 -- filler opening of the hydrogen peroxide tank; 26 -- tank for hydrogen peroxide; 27 -- drainage valve of the tank for hydrogen peroxide; 28 -- drainage valve of the tank for permanganate; 29 -- the filler; 30 -- pipe for feeding permanganate to the reactor; 31 -- permanganate tank; 32 -- over-flow valve; 33 -- indicator of the level of liquid oxygen; 34 -- tank for the oxidizer; 35 -- overflow valve; 36 -- electro-valve controlling the drainage valve; 37 -- overflow pipe; 38 -- electro-valve for the hydrogen peroxide of the final stage; 39 -- valve for the hydrogen peroxide of the main stage; 40 -- pilot electro-valve; 41 -- drainage pipe of the oxygen tank; 42 -- filler and overflow pipe of the oxygen tank; 43 -- injector of permanganate; 44 -- pressure relay for the permanganate; 45 -- drainage (safety) valve for the oxygen tank; 46 -- pump for liquid oxygen; 47 -- turbine; 48 -- alcohol pump; 49 -- reactor of the steam generator; 50 -- heat exchanger for vaporizing the liquid oxygen; 51 -- the main oxygen valve; 52 -- alcohol distributor; 53 -- pilot electro-valve for the main oxygen valve; 54 -- return valve on the low pressure line; 55 -- return valve on the line for feeding oxygen to the vaporizer; 56 -- return valve on the line for the control of air from the ground installation; 57 -- injector of oxidizer; 58 -- main alcohol valve; 59 -- pilot electro-valve for the main alcohol valve; 60 -- pressure relay for the oxygen tank; 61 -- alcohol injector; 62 -- cavity of the cooling chamber; 63 -- cavity for the feeding of alcohol to the precombustion chamber; 64 -- pilot tube; 65 -- valve for the delivery of control air from the ground installation; 66 -- ignition device; 67 -- opening for the feeding of alcohol to the walls of the chamber; 68 -- combined valve-reducer for pressurization of the oxygen tank; 69 -- hand-valve for gradual release of the high pressure; 70 -- hand-valve for filling the 7-cylinder battery; 71 -- pressure relay for the oxygen tank; 72 -- zone of internal cooling, fed with alcohol from the upper cavity of the head; 73 -- pressure manometer for the oxygen tank; 74 -- high pressure electro-valve of the ground installation; 75 -- reducer of control air; 76 -- collector of alcohol in front of the cooling jacket; 77 -- pilot electro-valve for the feed valve; 78 -- valve for feeding liquid oxygen.

I -- alcohol overflow; II -- branch for safety pressurization of the oxygen tank; III -- branch for filling the 7-cylinder battery; IV -- branch for delivery of control air from the ground installation; V -- branch of the pressure meter of the oxygen tank.

return and filler valve 10, fills the tanks of set 12. The hand valve 69 serves for release, in case of necessity, of air from tanks 12. At the same time, over a separate line, one fills with high pressure the 3-cylinder set 1, serving for the pressurization of the combustible tank.

2. The combustible tank 22 is filled with alcohol through filler opening 19. After putting a certain amount in the combustible tank, we open the advance valve 24. To do this we feed the electric current to the normally closed control valve 15, which, upon opening, admits the control pressure from branch IV to the servo-piston of valve 24 and opens it. Then, the alcohol by the force of gravity, flows through the alcohol pump 48 and then, along the T-piece alcohol distributor 52 and the pipes, passes into the jacket of the cooling chamber, forcing the air from the filled spaces through the open supplementary valve of the main combustible valve 58.

After filling all the line with combustible,the advance valve 24 is closed by cutting off the current from valve 15, which closes and simultaneously releases gradually into the atmosphere the remaining air from the lines leading to valve 24. The position of the valve 24 is fixed by the electric contact device 23.

The combustible tank is filled with alcohol up to the necessary level, which is fixed by the electrical indicator 14. Any necessary drainage of combustible from the tank is done by valve 32.

3. The oxidizer tank 34 is filled with liquid oxygen through the lower filler valve 42. The air from the tank leaves through the drainage tube and the drainage valve 45 forced open previously. The filling of the tank with oxygen is done until it overflows through the drainage pipe 41 and the valve 45.

4. The tank 26 is filled with hydrogen peroxide through filler 25. The air passes out of the tank through the normally open drainage valve 27. If necessary, we can drain the tank of hydrogen peroxide through the overflow

valve 35.

5. The tank 31 is filled with a solution of permanganate through the filler 29. Removal of air from the tank is provided by the open drainage valve 28. The jettisoning of permanganate can be effected through the overflow tube 37.

After completion of the filling, we open the hand cock 11, allowing the air from the 7-cylinder battery to pass to the pressure reducer.

6. The pressure reducer is adjusted at the prescribed air pressure, namely, ~ 30 at. On the low pressure line there is a manometer 16 and a low pressure safety valve 8. The hand valve 7 serves for the gradual release of air from the line of low pressure (after the reducer).

After the adjustment of the reducer, we cut off the valve 65 and allow the control air to move from the line of low pressure of the reducer of the steam generator (item 9). Then we open the return valve 54 and close the return valve 56, preventing the leakage of control air. Simultaneously with the closing of valve 65, we remove the pressure of the control air from the drainage valve 45, as a result of which it begins to perform its normal function of regulator valve, preventing an increase of pressure in the oxygen tank (as a result of the possibility of vaporization of the liquid oxygen) above the fixed pressurization level.

Since from the moment of the completion of the filling up to the start of the engine there may be a rather long interval of time, then, for the prevention of a reduction in the reserve of oxygen, as a result of its vaporization, there is connected with the engine layout and the ground equipment a system of supplementary feeding. If there is a lowering of the level of the oxygen in the tank, the indicator 33 of the level of oxygen gives the signal to the control valve 77 of the ground installation, which admits control air to the valve 78 for supplementary feeding of oxygen, and through it, from the ground installation, the oxygen is fed into the tank. When the required level is reached, the indicator 33 cuts off the current from the pilot valve 77 and the valve 78 is closed.

Just before turning on the current for pilot valve 15, the advance valve of the combustible tank 24 is opened. In addition to this, if the pressure in the oxygen tank, as a result of its natural vaporization in the tank, does not reach the prescribed pressure, we employ the forced pressurization of the oxygen tank from the ground installation, For this purpose, the pressure in the oxygen tank through branch V is transmitted to pressure relay 71; it furnishes electric current to the combined electrovalve-reducer 68, which reduces the high pressure of the air to the necessary value and directs it through branch II along the line to the drainage pipe. When the necessary pressure is obtained, relay 60 cuts off pressurization valve 68.

The Starting of the Engine and Transition to Full Power to the Main Stage.

For the starting of the engine, we ignite, with an electric current, powder charges which are placed on a small rotating platform of the ignition device 66, introduced into the chamber of the engine through the critical section of the nozzle. During the combustion of the powder charges, the small platform starts to rotate, and the ignition flame fills the volume of the chamber in a uniform manner. After the filling of the chamber by the flame and the heating up of the chamber, we turn the electric current on the control valve 53, which blocks access of the control air to the servo-piston of the main valve of the oxidizer 51 and gradually releases the air that is in it. The valve, under the action of the spring, is lifted up from the seat in the so-called advance position. The lifting of the valve of the oxidizer is fixed by an electric indicator of position, which supplies electric current to the pilot valve 59. This valve also closes and gradually releases the air from the main combustible valve 58, after which the valve, under the action of its spring, moves from its seat into the preliminary position. With this position of the valves, the oxygen flows along the lines to the oxidizer injector 57 placed on 18 of the precombustion chambers of the engine. The alcohol from the lower cooling chamber 62 passes through the open valve 58 into the upper cavity of the head 63 and through the alcohol injector 61 to the precombustion chambers in the engine's chamber.

Hence, during the preliminary conditions, the combustible and oxidizer move by gravity, while turbo-pump units are not operating, in comparatively small quantities into the chamber filled by the ignition flame. After the establishment of uniform combustion of the basic components in the chamber, the steam generator and the turbo-pump unit are switched into operation. For this purpose, electric current is fed to the electro-magnetic pilot valve 36, which, upon opening, feeds pressure to the servo-pistons of the drain valves 27 and 28. These valves close and seal tightly the hydrogen peroxide tank 26 and the permanganate tank 31. After the closing of the drain valves 27 and 28, a signal is given to electrovalve 18, which admits air for the pressurization of the hydrogen peroxide and permanganate tanks. The return valves 20 and 21 prevent the overflow of liquid from the tanks as well as their mixing. On the permanganate feed line to injector 43, along which the permanganate passes into the reactor, there are no shut-off devices, as a result of which the permanganate begins to flow at once into the reactor 49. As a result of the increase in pressure in the line, pressure relay 44 closes and sends electric current at once to the two valves: electrical 38 and control 40.

The electrovalve 38 (valve of the final step) is immediately opened and allows the passage of hydrogen peroxide into the reactor 49. After it, valve 39 of the main stage also opens, a valve on whose servo-piston the control air strikes, coming through valve 40. The hydrogen peroxide enters the reactor in a still larger quantity. The steam gas begins to flow into the turbine, the turbo-pump units start to move, the pressures in the lines for the feeding of the components are increased and the main valves 51 and 58 are opened full width.

The delivery of the components increases smoothly up to the nominal rate and the engine then operates at full power.

Operation of the Engine in Flight and Cutting it Off.

In flight, the engine operates in the main stage. Besides, the pressure in the oxygen tank is maintained by the vaporization of small quantities of liquid oxygen, fed from the main valve of the oxidizer 51 through the return valve 55 into the heat exchanger coil 50. The heat exchanger coil is heated by the spent steam gas coming from turbine 47. The vaporized oxygen goes into the drain tube 41. The spent steam gas flows through the supplementary nozzles and passes into the atmosphere.

The necessary pressure in the combustible tank is maintained in the first stage of the flight by the velocity head of the oncoming air, which is fed into the tank over the pressurization tube 4 through the pressurization valve 5. When the pressure of the velocity head becomes insufficient, the pressurization valve is closed due to the feeding to it, by the servo-piston, of air by the pilot valve 6, receiving for this purpose a signal from the clock mechanism. After the closing of valve 5, it becomes a safety valve, preventing an increase in pressure in the fuel tank above the prescribed pressure.

At the moment of the closing of valve 5, this same clock mechanism turns on the electric current to the combined valve-reducer 13, which feeds into the tank, under the necessary pressure, air from the three air cylinders 1.

During the time of the operation of the engine, a part of the combustible from the upper cavity of the head 63 is fed along the three lines to the 4-zone cooler 72, through which the alcohol enters the chamber for the internal cooling of its walls. In addition to this, a certain part of the alcohol goes to the walls of the chamber from the cooling jacket through the system of openings 67.

The cut-off of the engine is done in 2 ways. At first the engine is placed in the final stage with a lesser thrust by closing the valve for feeding hydrogen peroxide from the main stage 39, for which purpose we cut off the current from the pilot valve 40. This takes place as the rocket approaches the required velocity. The feeding of hydrogen peroxide into the steam generator and the generation of steam gas are reduced, and, consequently, the rpm of the turbo-pump is also reduced. As a result of this there is a drop in the pressure and delivery of the basic components, and the engine operates in the final stage with reduced thrust.

At the moment the rocket reaches the prescribed velocity, the main signal is given for cut-off of the engine. The following also takes place: the current is cut off from the electrovalve 38, which closes and blocks the access of hydrogen peroxide to the steam generator; the generation of steam gas is also stopped and the turbo-pump unit begins to cut off.

At the same time the electric current is cut off from pilot valve 53, which opens, and the control air closes the main valve 51 of the oxidizer. The shifting of this valve breaks the electric circuit, to which the pilot electric valve 59 is connected. This valve opens and the control air closes the main combustible valve 58, simultaneously opening in it the supplementary valve connecting the cooling cavity 62 with the fuel pump. This is done in order to prevent the possibility of the hydraulic shock in the system of tubes behind the pump.

After closing of the main valves in the chamber, combustion shuts off and the engine ceases to develop thrust.

Parallel with this there takes place a closing of the advance alcohol valve 24, as a result of shutting off the current from pilot valve 15. The main valve 18, of the steam generator shuts off, stopping the feeding of air into tank 26 and 31. After the shutting off of the engine there is retained an increased pressure in the fuel tank and oxidizer tanks, because the pressurization valve 5 and the drain valve 45 are left closed.

This is necessary so that when the rocket returns into the atmosphere the tanks will not be crushed by the excessive pressure of the atmosphere.

Section 66. Diagrams of Anti-Aircraft Rocket Engines.

Diagram of the Missile "Wasserfall" Engine.

The anti-aircraft missile "Wasserfall," guided from the ground, has an engine with a thrust of 8 tons, burning hypergolic propellant consisting of a melange M-10 (90% HNO_3 + 10% H_2SO_4) + Tonka-341 with a flow rate of about 42 kg/sec. The duration of the engine's operation is about 40 seconds. The engine has cylinder forced feed.

The high pressure cylinder 1 (Figure 218) is filled with compressed air under a pressure of 300 kg/cm^2, through the filler valve 2. On the high pressure line there is placed a safety valve 4. Combustible and oxidizer are placed in tanks 10 and 12. Hermetical sealing of these tanks is provided by membranes 9 and 14. Since the basic fuel is hypergolic, the engine does not have any special system for ignition, except the system of butterfly valves 16, which are opened smoothly by servo-piston 17 and insure a gradual increase in the feeding of the components into the chamber.

When the engine starts, the electric current is turned on to the low pressure pyrovalve 8. After the opening of this valve, the reducer of the pressure of air 6 is connected to the lines leading into the tank. After this, the pyro-cartridge of the valve of high pressure 5 is broken, after which the air from the cylinder 1 passes through filter 3 into reducer 6, and, through the already open valve 8, on to the diaphragm 9.

On the low pressure line we have the low pressure safety valve 7. The air of the working pressure ruptures the diaphragm 9 and moves through the lines into the combustible tank 10 and the oxidizer tank 12. In the lower part of these tanks there are some rotating intakes 11 and 13, which, during the maneuvers of the rocket, follow the level of the liquid and prevent any break in the feeding of the components.

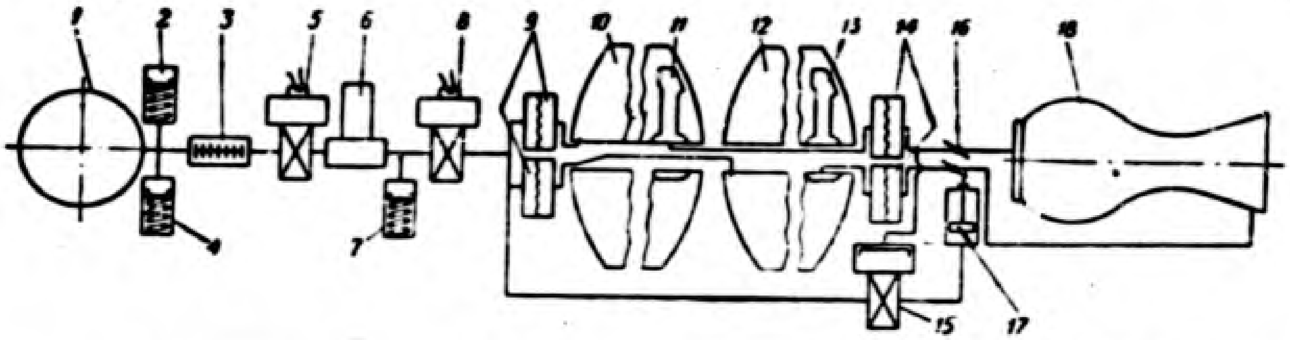

Figure 218. Diagram of the anti-aircraft rocket "Wasserfall" engine.

1 -- high pressure cylinder; 2 -- valve; 3 -- filter; 4 -- high pressure safety valve; 5 -- high pressure pyrovalve (rupture diaphragm);6 -- reducer of air pressure; 7 --low pressure butterfly valves; 8 -- low pressure pyrovalve; 9 -- rupture diaphragms on the air line of the combustible tank and the oxidizer tank; 10 -- combustible tank; 11 -- rotating intake; 12 -- oxidizer tank; 13 -- rotating intake; 14 -- rupture diaphragm on the lines for feeding combustible and oxidizer; 15 -- servo-piston of the butterfly valves; 16 -- butterfly valves on the combustible and oxidizer lines; 17 -- servo-motor of the shutter; 18 -- chamber of the engine.

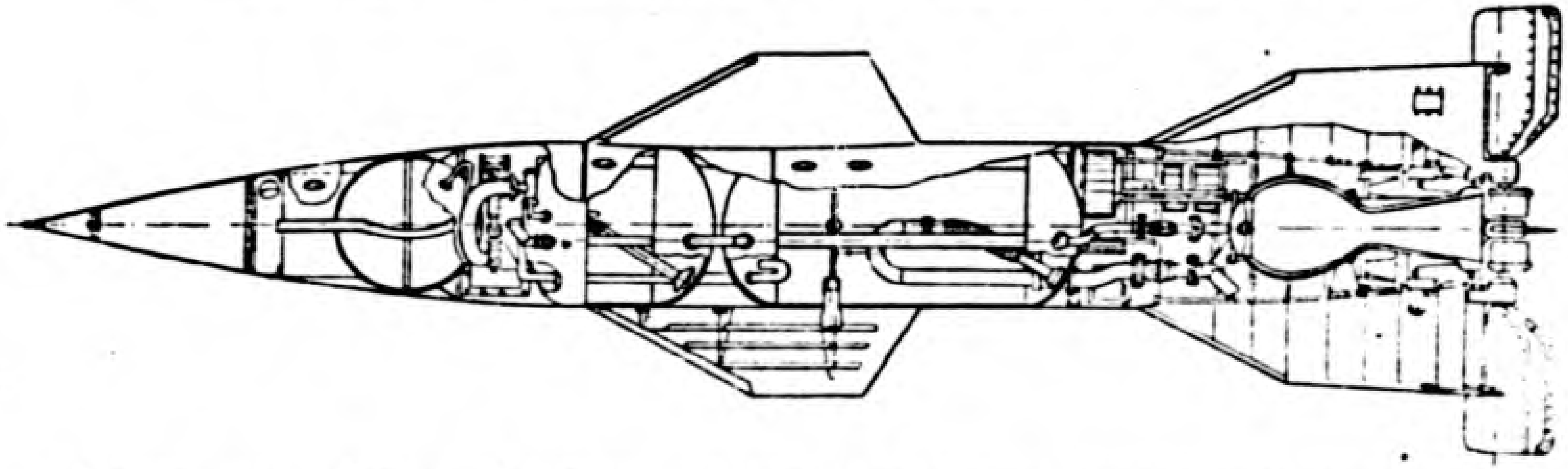

Figure 219. The installation of the liquid-fuel rocket engine of the "Wasserfall" rocket.

The fuel, forced from the tank, breaks the diaphragm 14 and reaches the butterfly valves 16. When the pressure in the combustible line rises, it opens the valve 15 and allows the air of the working pressure to reach servo-piston 17, which moves slowly and opens the butterfly valve 16; the combustible and the oxidizer pass into the engine, self ignite, and the engine begins to develop a thrust. The engine operates until the components are exhausted.

Diagram of the "Schmetterling" Rocket Engine.

The "Schmetterling" rocket (Figures 220 and 221) is an anti-aircraft guided rocket (missile) of small dimensions. The engine of this rocket burns a hypergolic fuel consisting of nitric acid plus Tonka-250 and has a thrust in flight varying between limits up to 380 kg. The regulation of the thrust is accomplished by overlapping a part of the injector with a rotating slide valve or shutter. The control of the thrust is accomplished by a regulator of the Mach number; -- that is, by a regulator of the velocity of flight of the rocket (item 10 in Figure 220), acting on the shutter through the electro-mechanical drive 12. The engine has a cylinder pressure feed system.

In order to ensure continuous feeding of the fuel components into the chamber, the tanks of the engines are made in the shape of mechanically machined cylinders within which there are pistons to force out the components.

The high pressure cylinder 2 is filled with compressed air through the filler valve 1. Upon the starting of the engine the pyrocartridge of valve-reducer 3 explodes and the air from high pressure cylinder 2 passes into the reducer, from which it is forced with the necessary pressure into tanks 6 and 9.

Before entering the tank the air ruptures diaphragms 4 and 7, and, acting on piston 5, pushes out the oxidizer from tank 6, and acting on piston 8, forces the combustible from tank 9. The combustible and oxidizer reach diaphragms 11 and 14, break the diaphragms, and, through the control slide valves placed in the chamber head (see Figure 129), go into the engine.

In the flight of the rocket, the sensitive element of speed regulator 10

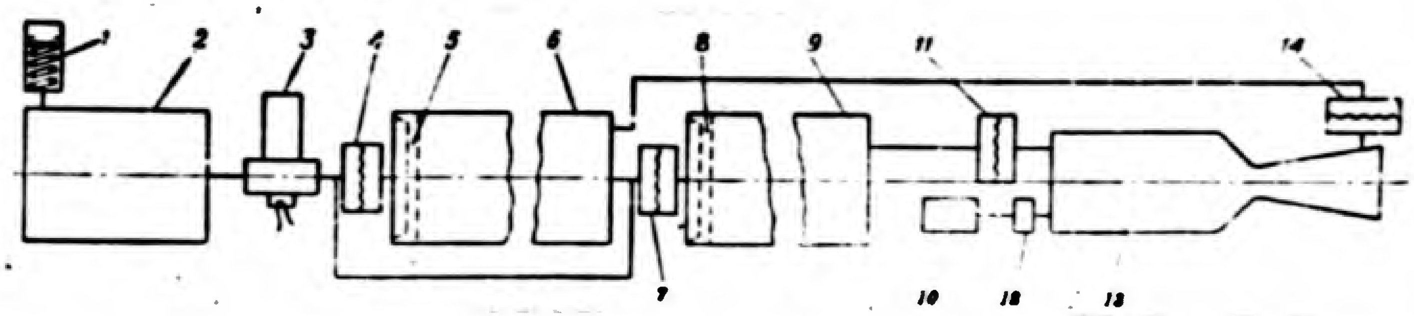

Figure 220. Diagram of the anti-aircraft rocket "Schmetterling" engine.

1 -- high pressure filler valve; 2 -- high pressure cylinder; 3 -- pyrovalve in combination with a gas pressure reducer; 4 -- rupture diaphragm before the oxygen tanks; 5 -- piston of the oxidizer tank; 6 -- oxidizer tank; 7 -- rupture diaphragm before the combustible tank; 8 -- piston of the combustible tank; 9 -- combustible tank; 10 -- sensitive element of the regulator of the Mach No.; 11 -- rupture diaphragm on the combustible line; 12 -- electric motor and transmission for rotation of the slide valve; 13 -- chamber of the engine; 14 -- rupture diaphragm of the oxidizer before the entrance to the engine.

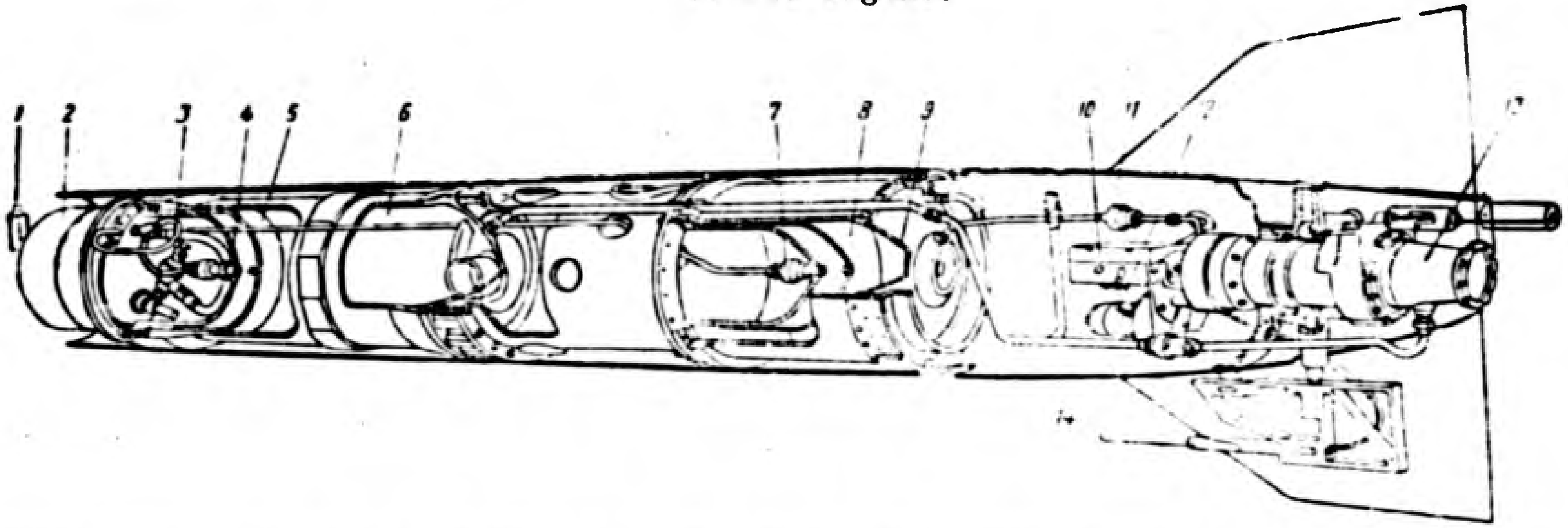

Figure 221. Engine of the anti-aircraft missile "Schmetterling."

The legend is the same as for Figure 220.

transmits, through the relay system, the necessary signal for the turning of the slide valve, reducing or increasing the thrust. The engine runs until the components in the tank are used up.

Diagram of the Engine of the Anti-Aircraft Rocket "Typhoon".[1]

The engine of this rocket develops a thrust of about 1,000 kg for a period of 6 seconds. In view of the short duration of the operation of the engine chamber, it is made without any external cooling. The engine burns hypergolic components: melange M-10 (90% HNO_3 + 10% H_2SO_4) + Tonka-841, and it has a forcing feed system with a cartridge pressure accumulator.

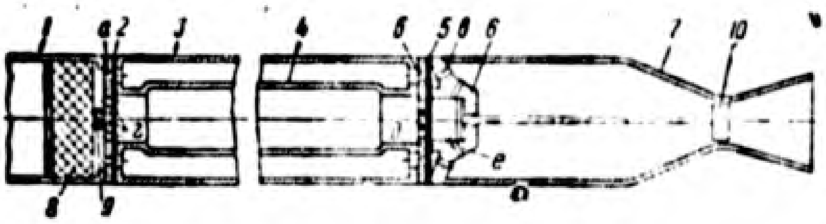

Figure 222. Diagram of the engine of the anti-aircraft unguided rocket "Typhoon".

1 -- body of the cartridge pressure accumulator; 2 -- rupture membrane separating the cartridge pressure accumulator from the tank; 3 -- combustible tank; 4 -- oxidizer tank; 5 -- rupture membrane separating the tank from the chamber; 6 -- engine head; 7 -- engine chamber; 8 -- powder charge; 9 -- igniter; 10 -- piston closing the chamber.

a -- opening for feeding the powder gases into the combustible tank; b -- opening for the feeding of combustible into the chamber; c -- combustible injectors; d -- opening for feeding the powder gases into the oxidizer tank; e -- opening for feeding oxidizer into the chamber; f -- oxidizer injectors.

The engine of the rocket consists of 2 tanks, placed concentrically one within the other (Figure 222). The outside tank 3 consists of the body of the missile and in it there is placed the combustible, namely, Tonka. The inside tank 4, having thin aluminum walls, is placed concentrically with respect to the outside one. In it there is the oxidizer, namely, nitric acid. The feeding of the components into the chamber of the engine 7 is done by the combustion products of the slowly burning powder charge 8, placed in the solid body 1. The ignition of the powder charge is accomplished with igniter 9. The tanks

---

[1] Naill. Upravlyayemyye snaryady, razvitiye printsipy raboty. [illegible] /Guided Missiles, their Development and Principles of Operation/ from the magazine "The Aeroplane", 1948, No. 1929, 1931, 1933, 1937, 1943, 1948, 1953.

are separate from the combustion chamber and the body of the generator of powder gases by membranes 2 and 5, rupturing under the pressure of the powder gases (at the entrance to the tank) and the components (at the exit from the tank).

The engine is started by the ignition of the powder charge. After the rupture of diaphragm 2 and then 5, the components pass into head 6 and are ignited in the combustion chamber. For ensuring reliable starting, before the beginning of the combustion of fuel in the chamber, the critical section is covered by piston 10, which is set on a stem that breaks off after the beginning of combustion, as a result of increasing pressure in the chamber.

Section 67. Diagrams of Airplane Engines for Different Purposes. Diagram of the "Walter" Airplane Engine.[1]

The "Walter" engine, for fighter-interceptor airplanes, is constructed in several ways and can be either single- or double-chambered.

The engine runs on hypergolic fuel, a mixture of hydrazinehydrate and methyl alcohol, used as the combustible, and hydrogen peroxide of 80% concentration, used as the oxidizer. The engine uses pump feeding. Hydrogen peroxide is also used for the generation of steam gas, on which the turbine operates.

The thrust of the engine is regulated within limits from 1,500 to 200 kg by varying the fuel flow rate. For keeping the pressure differential on the injectors within permissible limits, the engine has for combustible and oxidizer 3 groups of injectors, which, with a decrease in thrust, are cut off one after the other.

When the engine is started by the electric motor 4 (Figure 223), the turbopump unit, including pump 3 for hydrogen peroxide, starts to operate. Hydrogen peroxide, delivered by the pump, is forced into the flow rate regulator of hydrogen peroxide and when slide valve 9 lifts the regulator valve 12, it passes along the by-pass canal around valve 6 and goes into steam generator 1

---

[1] D. Satton, Raketnyye dvigateli [Rocket Engines], Publishing House of Foreign Literature, 1952.

with a packet of solid catalyzer 2. The steam gas generated in the steam generator continues to accelerate the turbine and at a certain rpm the electric motor is cut off by the free wheeling clutch. After this, the turbo-pump unit operates on idle, the number of rpm in idle being determined by the tension of spring 11.

During the idling the hydrogen peroxide passes into cavity 20 of the main oxidizer valve, closes the hydrogen peroxide valve 18 and the combustible valve 14, shifting them to the left, together with the servo piston 15. This prevents the overflow of fuel into the engine chamber. With further turning of the slide valve 9 by the pilot, the slide valve 13, paired with it, also begins to turn. Then slide valve 13, through the opening in its left chamber, by-passes the fuel into the chamber of servo piston 15 and shifts it to the right, opening in this way access of the hydrogen peroxide to the three valves 19. Besides, the combustible can pass through the jacket of the engine cooler and run into the inside cavity of slide valve 13.

With further turning of slide valve 13, the opening 1 of slide valve 13 allows the combustible to pass into line I of the combustible feed into the engine. The fuel passes simultaneously along line I to the servo-piston 16 of the oxidizer feed valve 19 and opens it, allowing the hydrogen peroxide to pass into line I for the feeding of hydrogen peroxide to the engine. Group I of engine injectors begins to operate; the fuel components ignite spontaneously in the chamber and the engine then operates at the rated conditions.

Simultaneously with the turning of slide valve 13, slide valve 9 continues to turn and the hydrogen peroxide passes through the appropriate opening of the slide valve up to valve 6; after lifting it, a large quantity of hydrogen peroxide passes into steam generator 1. An excessive increase in the feeding of hydrogen peroxide and the racing of the turbo-pump unit are prevented by the fact that the pressure of hydrogen peroxide is transmitted to membrane 8, which, yielding under this pressure, strives to close valve 6 and in this way reduces

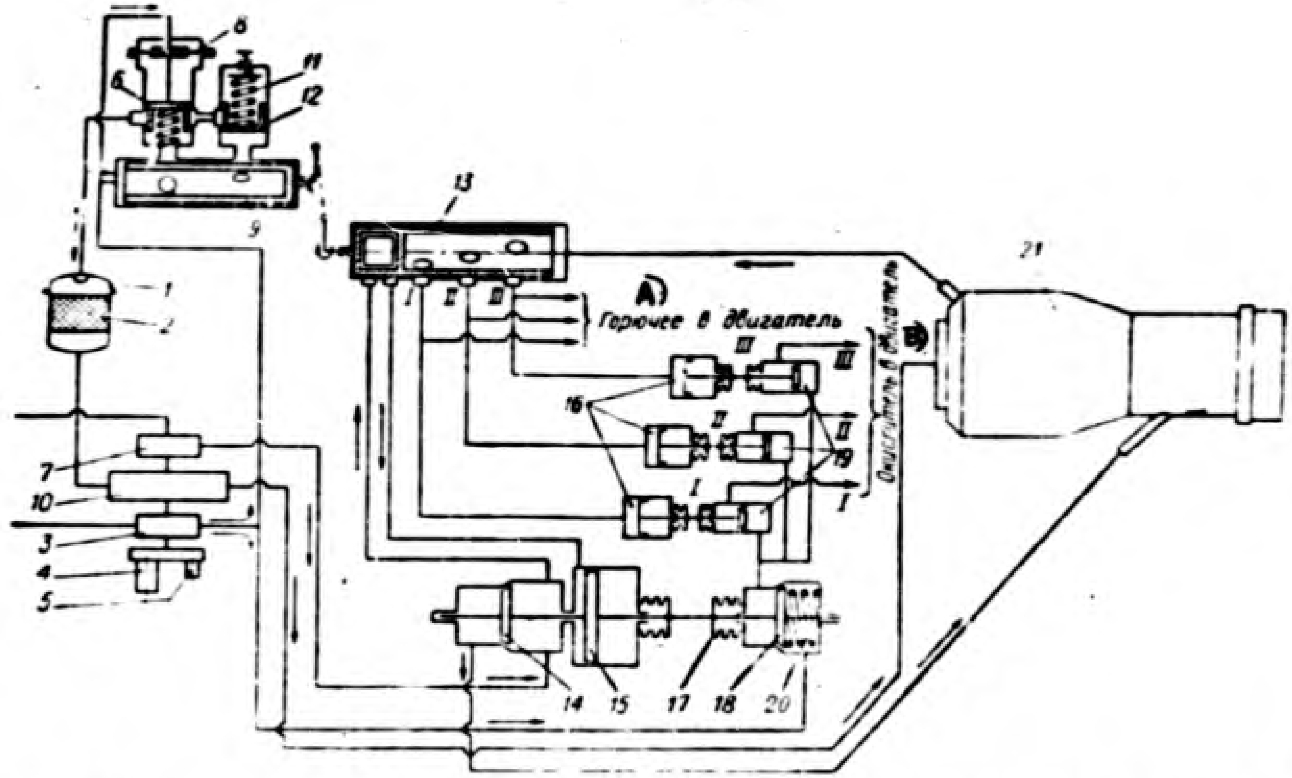

Figure 223. Diagram of the "Walter" airplane liquid-fuel rocket engine.

1 -- steam generator; 2 -- packet of solid catalyzer; 3 -- pump for the delivery of hydrogen peroxide; 4 -- electric motor for starting the turbo-pump unit (TPU); 5 -- transmitter of the tachometer; 6 -- valve for the regulation of the delivery of hydrogen peroxide in harmony with the rate of operation of the turbo-pump unit; 7 -- pump for delivery of combustible; 8 -- diaphragm for receiving the pressure of the hydrogen peroxide; 9 -- slide valve for controlling delivery of hydrogen peroxide; 10 -- turbine; 11 -- spring for regulating the rpm of the idle running of the turbo-pump unit; 12 -- valve for regulating the delivery of hydrogen peroxide for idle running; 13 -- slide valve for control of the delivery of fuel to the chamber; 14 -- main combustible valve; 15 -- servo-piston of the main valves; 16 -- servo-piston of the valves for the delivery of oxidizer; 17 -- diaphragm sealing the stem; 18 -- main valve of the oxidizer; 19 -- valves for delivery of oxidizer; 20 -- cavity of the main valve for the oxidizer; 21 -- chamber of the engine.

A) Fuel to the engine; B oxidizer to the engine.

the delivery of hydrogen peroxide, returning the flow rate of hydrogen peroxide to the necessary value.

For an additional increase in the thrust of the engine, it is necessary to continue the turning of slide valve 13, whose opening II, and after this III, turns on the delivery of combustible and oxidizer into group II and III of the injectors. Besides, the rpm of the turbo-pump unit (TPU) is maintained constant by the operation of the hydrogen peroxide feed regulator.

The cut-off of the engine is the result of the turning of the slide valve in the opposite direction; and, in flight, the turbo-pump unit may or may not stop entirely; it can operate with the chamber shut off at a minimum rpm.

In order that the fuel components may not accumulate in the chamber when idling, because of leaks in the feeding system, a certain amount of steam gas, spent in the turbine, is directed into the chamber of the engine, and decomposes, as a result of the increased temperature and the active substance, namely, the catalyzer, and the seeping hydrogen peroxide brought by the steam gas. It also blows out the chamber of the engine.

Slide valve 13, the main fuel valve, and the 3 valves 19 for the feeding of oxidizer are placed structurally in one block. In order to prevent the possibility of the contact of the fuel components and their ignition, all the stems passing from the cavity of one component into the cavity of another are sealed hermetically by membranes 17.

Diagram of the Aircraft Climb Booster.

A booster of this type was installed on German turbojet aircraft engines. The thrust of the booster amounted to 1,200 kg. It operated on hypergolic fuel, the components of which were Tonka-250 and nitric acid.

The booster has pump feeding. The pumps are driven from the shaft of the airplane engine, through hydraulic clutch 6 (Figure 224) and a reduction gear 7. The total weight of the booster itself is 57 kg.

The installation of the booster on the turbo-jet engine and its external appearance are shown in Figure 35.

We start the engine by closing the switch 20 of the electrical circuit of the engine. When we do this the electrical current is turned on the electromagnetic valve 11, which allows oil to pass from the system of the airplane engine to hydraulic clutch 6. Through the hydraulic clutch and a reduction gear 7, a movement of rotation is transmitted to the oxidizer pump 5 and the combustible pump 13. Combustible and oxidizer from tanks 1 and 2 flow to the respective pumps. The tanks have pressurization up to 0.5 at, but this pressurization is insufficient for preventing cavitation in the pumps, especially under the conditions prevailing during maneuvered flight of the airplane, during which there appear accelerations in different directions.

Hence, for the suction of the main pumps there are installed auxiliary ejector pumps 4 and 12, which increase the pressure of the components at the entrance to the pump. A certain quantity of component, under the high pressure created by the pump, is fed into the nozzle of the ejector, holds the main flow of the liquid in the conical inlet portion and accelerates it. As a result of further braking of the flow of the liquid in the divergent part of the ejector, the static pressure of the liquid is increased.

As the pumps start to operate, within 0.7-0.8 seconds after turning on the hydraulic clutch the pressure in the pressurized lines of the components, reaches full designed value. Then, after transfer valves 3 and 15, the fuel is returned to the entrance part of the pumps. When the pressure in the main lines of the components reaches 7 at, the normally disconnected pressure relays 16 and 17 are closed. In addition to this, in the period of starting, the disconnected pressure relay in combustion chamber 18 is shunted by time relay 19: hence, when relays 16 and 17 close, there is a switching on of the electric circuit controlling the electromagnetic valve 14, which admits the combustible from the pressure line to the servo-piston 9 of the double valve 8 for the combustible and oxidizer. This valve is opened, the fuel components

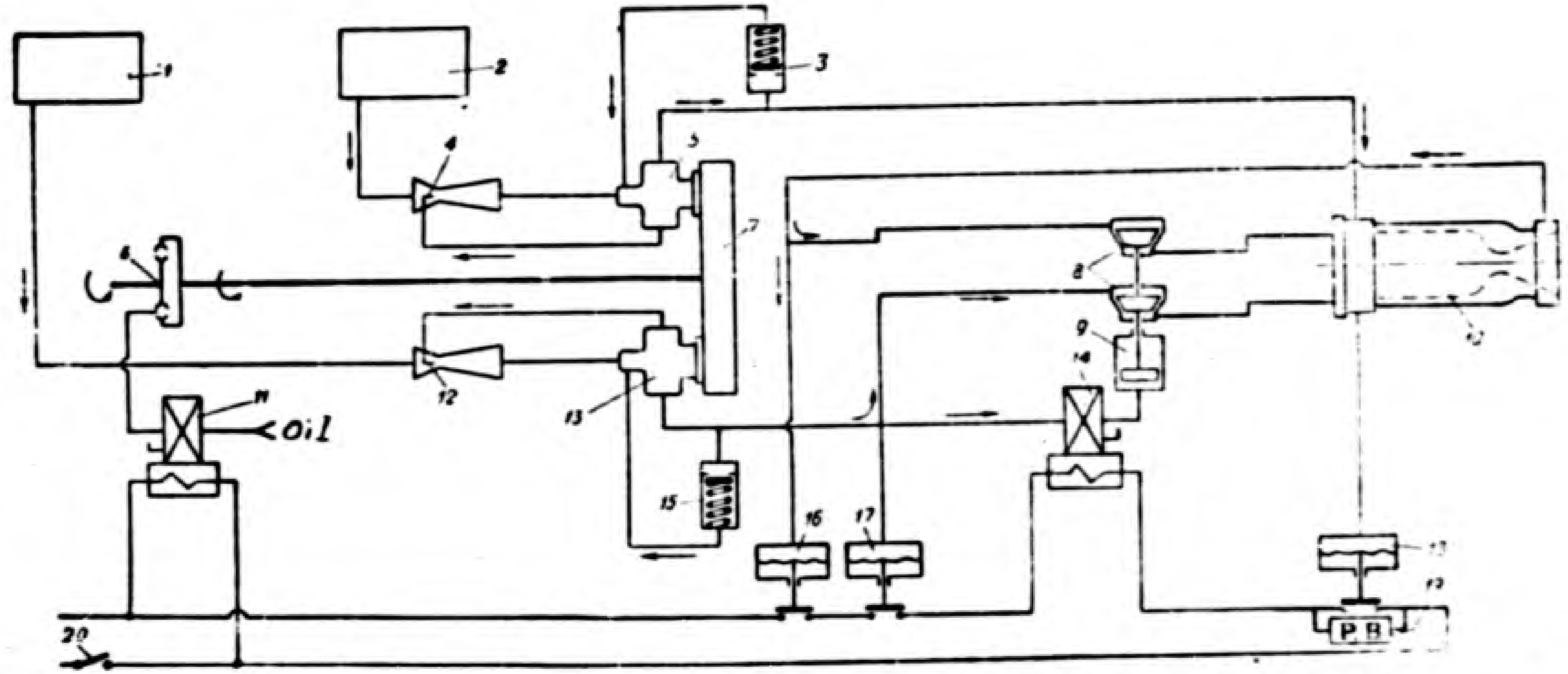

Figure 224. Diagram of the aircraft climb booster.

1 -- combustible tank; 2 -- oxidizer tank; 3 -- transfer valve for the oxidizer; 4 -- ejector pump for oxidizer; 5 -- pump for oxidizer; 6 -- hydraulic clutch for the driving of the pumps; 7 -- reduction gear; 8 -- double main valve for fuel; 9 -- servo-piston for control of the main valve; 10 -- chamber of the engine; 11 -- electromagnetic valve for the control of the hydraulic clutch; 12-- ejector of the pump for the feeding of combustible; 13 -- combustible pump; 14 -- electro-valve control for the double main fuel valve; 15 -- transfer valve for combustible; 16 -- pressure relay on the line for oxidizer; 17 -- pressure relay on the line for combustible; 18 -- pressure relay in the chamber; 19 -- time relay; 20 -- switch.

pass into the combustion chamber, ignite spontaneously in it, and the engine begins to operate. The time relay 19 is designed to shunt the pressure relay in chamber 18 for a period of 3 seconds. If during this time the pressure in the chamber reaches the designed value of 15 at, indicating a normal course of the process of starting, then, by the moment of the shutting off of time relay 19 the pressure relay in chamber 18 will already be closed and the engine will continue to operate. The rate of operation of the engine will be maintained by the fact that the pressure of the components, after the pump, is regulated by the transfer valves 3 and 15.

For the cutoff of the engine, it will suffice to disconnect the shut-down switch 20. In addition, electromagnetic control valve 14 closes. Through the drainage system of this valve, there is a gradual release of the pressure over servo-piston 9 and dual valve 8 closes, stopping the access of fuel into the chamber. The engine will be cut off. Simultaneously, the electromagnetic valve 11 closes and blocks the access of oil to the hydraulic clutch, as a result of which it will be shut off and the pumps will stop.

In case of abnormal starting of the engine, when the pressure in the chamber does not reach 15 at in 3 seconds, and also when the rate of operation of the engine is upset, when the pressure in the chamber drops below 15 at, or the pressure in the delivery lines drops lower than 7 at, one of the pressure relays 16, 17, or 18 will break the electric circuit of the control valve 14 and the engine will shut off.

In addition to the German airplane booster described above, there have been published in literature a great deal of information about the English airplane booster "Snarler." This engine was designed for operation on a fuel of LOX plus kerosene. However, difficulties with the cooling obliged the constructors to shift the engine to fuel consisting of liquid oxygen plus 65% methyl alcohol plus 35% water.

The thrust of the engine amounts to 900 kg, and the specific thrust, 200 kg-sec/kg. Its layout is analogous to that of the German booster, which, evidently, was taken as the prototype. However, the employment in the engine of liquid oxygen made it necessary to employ an artificial system for pressurization of the tanks with compressed gas, and also to employ compressed gas for the control of the slave valve of the main components. The system of ignition is also more complicated. For this system there was provided an ignition chamber, in which the starting components are ignited by an electric spark.

Diagram of the Engine of the Buzz Bomb.

The engine 109-507 (Figure 225) belongs to the category of "cold" engines, in which the thrust is created as a result of the escape of the products of decomposition of hydrogen peroxide. The decomposition of hydrogen peroxide is brought about with the help of a catalyzer.

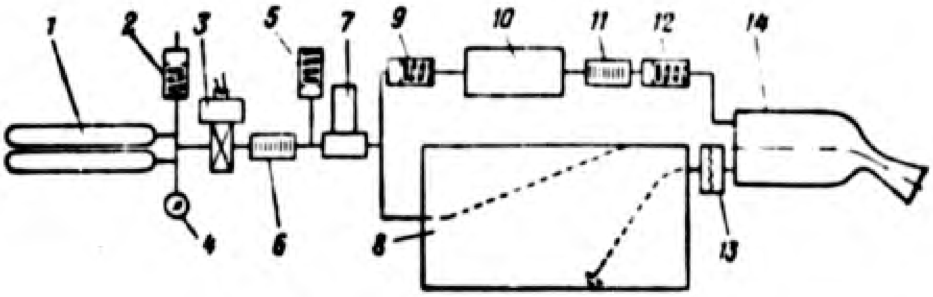

Figure 225. Diagram of the engine of the buzz bomb.

1 -- high pressure cylinders; 2 -- filler valve; 3 -- high pressure pyrovalve; 4 -- high pressure manometer; 5 -- high pressure safety valve; 6 -- filter; 7 -- reducer of gas pressure; 8 -- hydrogen peroxide tank; 9 -- check valve; 10 -- liquid catalyzer tank; 11 -- filter; 12 -- check valve; 13 -- rupture membrane; 14 -- chamber of the engine.

This engine develops a thrust of 600 kg for a period of 10 seconds, with a specific thrust of about 100 kg-sec/kg. The fuel used is 93% hydrogen peroxide, decomposed by a liquid catalyzer. It has a cylinder feed system. In the engine the following spaces are filled (the engine may be kept filled for several months): high pressure cylinder 1 (through filler valve 2), the hydrogen peroxide tank 8 and the liquid catalyzer 10.

We start the engine, the pyro-cartridge of the pyro-valve 3 explodes and the air, under high pressure, passes through filter 6 to reducer 7. On the high pressure line there is a safety valve 5. The air of the operating pressure, passing through the return valve 9, forces the catalyzer from tank 10, and, passing through filter 11 and the return valve 12, it moves into the chamber of the engine.

The air of the operating pressure also passes into the tank 8 for hydrogen peroxide (in the upper part). By means of a flexible intake, the hydrogen peroxide moves into the pipe leading to chamber 14. In the system of this pipe there is installed a rupture diaphragm 13.

The necessary advance in the feeding of the catalyzer is obtained by a definite ratio between the pressure of the opening of the return valves 9 and 12 and the pressure of the rupture diaphragm 13.

The engine operates until the complete exhaustion of the fuel.

Diagram of the "Schmidding" Engine.

The characteristic feature of this engine is the fact that it uses as an oxidizer gaseous oxygen placed in cylinders 1 (Figure 226) under high pressure.

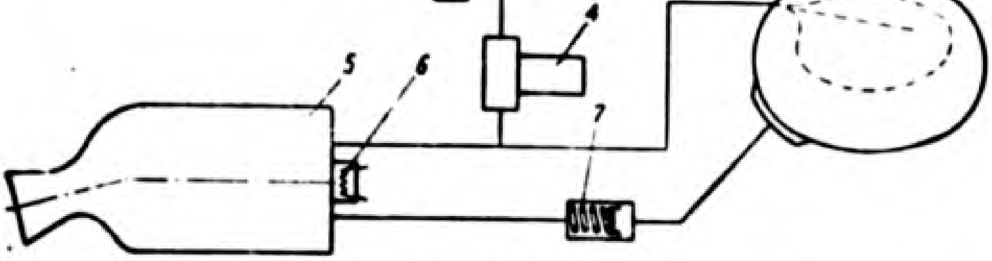

Figure 226. Diagram of the "Schmidding" engine.

1 -- high pressure cylinder for the gaseous oxygen; 2 -- filler valve; 3 -- high pressure pyro-valve; 4 -- reducer of gas pressure; 5 -- chamber of the engine; 6 -- pyro-cartridge for ignition; 7 -- return valve; 8 -- combustible tank; 9 -- rubber sack.

This same oxidizer is also employed for forcing the combustible from the tank into the chamber of the engine. As a combustible, one employs methyl alcohol of 78% concentration. The gaseous oxygen does not pass directly into the tank but into a rubber sack, which, when inflating, presses the alcohol out into the engine. This is necessary in order not to have an explosion and to force out the combustible completely.

The engine develops a thrust up to 600 kg for 10 seconds.

At the time of the start, the pyro-cartridge of the high pressure pyro-valve 3 explodes and ignites the pyro-cartridge ignition 6. The oxygen under high pressure from cylinder 1 goes into reducer 4, and, passing through it, under working pressure, is fed into the combustion chamber, where it is employed as an oxidizer, and along a second pipe it passes into the rubber sack 9 of the combustible tank 8. The combustible is forced from the tank and along the pipe and through the return valve 7 passes into chamber 5, where ignition and combustion take place.

The engine operates until the complete exhaustion of the components.

Diagram of the Takeoff Booster "Super-Spright."

After the close of the Second World War, there was elaborated in England a cold engine, based on captured materiel and models of German liquid-fuel rocket engines, which used concentrated hydrogen peroxide in the take off booster "Spright." This booster develops a thrust of 2,060 kg for 11 seconds, with a specific thrust of 110 kg-sec/kg. Its layout is analogous to that of the engine of the buzz bomb 109-507, described above. A further development of the "Spright" booster was the very interesting take-off assist engine "Super-Spright," in which one employed the principle of complete combustion of the products of decomposition of hydrogen peroxide by the injection of kerosene. This method increases the specific thrust of the engine up to 160 kg-sec/kg.

The supply of hydrogen peroxide is placed in tank 2 (Figure 227), and the

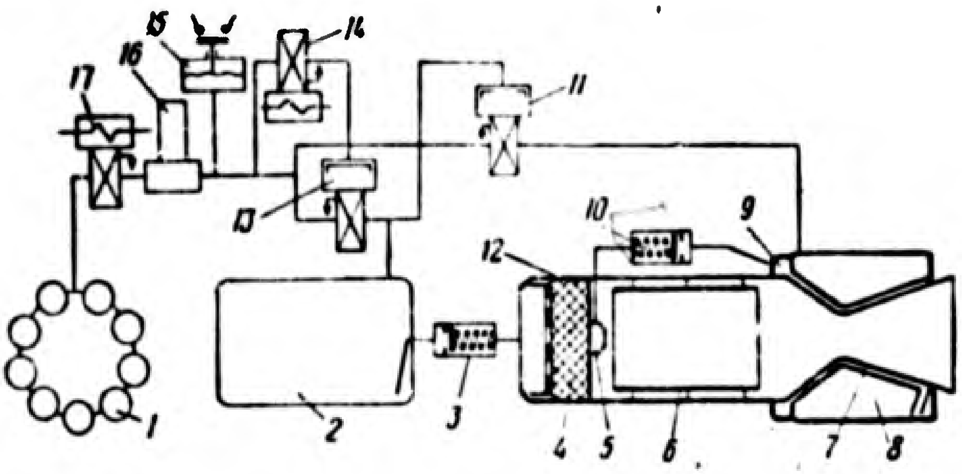

Figure 227. Diagram of the take-off booster "Super-Spright."

1 -- battery of 9 cylinders with compressed air; 2 -- tank for highly concentrated hydrogen peroxide; 3 -- check valve on the hydrogen peroxide feed line; 4 -- packet of solid catalyzer; 5 -- jet injector for kerosene; 6 -- protective tube of fireproof alloy; 7 -- cooling jacket of the nozzle part of the chamber; 8 -- circular kerosene tank; 9 -- collector of kerosene; 10 -- check kerosene valve; 11 -- slave valve for pressurization of the kerosene tank; 12 -- reactor for decomposition of hydrogen peroxide; 13 -- slave valve for pressurization of the hydrogen peroxide tank; 14 -- control valve; 15 -- pressure relay (normally disconnected); 16 -- pressure reducer; 17 -- high pressure electromagnetic valve (starting valve).

kerosene in tank 8, surrounding the nozzle part of the engine chamber. The supply of air for displacing the hydrogen peroxide and kerosene is placed in battery 1, consisting of 9 high pressure cylinders, which surround hydrogen peroxide tank 2. For starting the engine an electric signal is given to the high pressure valve 17, which passes the compressed air into the reducer, lowering the pressure of the air to 33 at. When the necessary pressure is reached in the line behind the reducer, the normally disconnected pressure relay 15 closes and opens the control valve 14, which gives the signal to slave valve 13 for pressurization of the hydrogen peroxide tank. Simultaneously, the opening of valve 13 gives a signal to slave valve 11 for pressurization of the kerosene tank. Through the automatic check valve 3, the hydrogen peroxide passes into reactor 12, where there is a packet 4 of solid catalyzer.

The latter consists of metallic plastics, covered with a thin layer of silver. Before the entrance into the packet of catalyzer, the hydrogen peroxide is uniformly distributed over the cross section of the packet by means of a number of metallic nets, covering the top of the catalyzer packet. The drop in pressure in the catalyzer packet amounts to 14 at. The kerosene, under the action of compressed air, passes through nozzle cooling jacket 7 into collector 9, from which it is directed along a pipe through the automatic return valve 10 into injector 5, by which it is injected into the combustion chamber of the engine into the zone of the heated products of decomposition of hydrogen peroxide, having in their composition free oxygen. The ignition of the kerosene takes place upon contact with the hot gases. The necessary retardation in the feeding of the kerosene is obtained by the successive opening of pressurization valves 10 and 11, described above, and by the adjustment of valves 3 and 10, due to which the return valve in kerosene line 10 opens when there is high pressure. The protection of the walls of the non-cooled combustion chamber from the action of gases at a high temperature is accomplished by means of a thin cylindrical tube 6, made of fireproof material known as "nimonik." In the clearance spaces between tube 6 and the walls of the combustion chamber there flow relatively cold (500° C) products of the decomposition of hydrogen peroxide, which cool the tube 6 and at the same time protect the walls of the combustion chamber against the action of the products of combustion of higher temperature.

The shutoff of the booster is accomplished by switching off the electric current from the high pressure valve 17. When there is a drop in pressure in the line behind the reducer, the pressure relay 15 cuts off the control valve 14, which drains the valve 13. The valve 13 closes and gradually releases the air from hydrogen peroxide tank 2 and from valve 11, which also gradually releases the pressure from kerosene tank 8. When the pressure in valves 3 and 10 is reduced, they close and the engine shuts off. Besides, the proper adjustment of the check valves causes the feeding of kerosene to shut off somewhat earlier and the engine is scavenged by the neutral products of decomposition of the hydrogen peroxide.

Certain data for the engines described above are reproduced in Table 35.

Name or Make of the Engine	Purpose of the Engine	Fuel		Thrust on the ground P_o kg	Maximum time of operation sec t_{max}	Total Impuls $P_o t_{max}$ kg/sec	Fuel Consumption G kg/sec	Specific Thrust
		Oxidizer	Combustible					
A-4	Long range rocket	liquid oxygen	ethyl alcohol 75%	25 000	65	$1690 \cdot 10^3$	125	2
"Wasserfall"	anti-aircraft rocket	melange M-10 (90% HNO_3 + 10% H_2SO_4)	Tonka-841	8 000	40	$320 \cdot 10^3$	42,1	1
"Schmetterling"	anti-aircraft rocket	nitric acid	Tonka-250	380—60	—	—	2.0	1
"Typhoon"	unguided anti-aircraft rocket	melange M-10 (90% HNO_3 + 10% H_2SO_4)	Tonka-841	555	3	1670	3,33	1
"Walter"	airplane engine	80% hydrogen peroxide	hydrazine hydrate alcohol	1500—200	—	—	7,8—1,82	190*
R-3395	super-performance engine	nitric acid	Tonka	1200	—	—	6,4	1
109-507	buzz bomb	87% hydrogen peroxide		600	10	6000	6,5	9
"Schmidding"	buzz bomb	gaseous oxygen	78% methyl alcohol	600	10	600	3,42	1
"Rheintochter"	anti-aircraft rocket	nitric acid	Tonka-250 or Vizol	2200	22	$55 \cdot 10^3$	12,5	1

---

* At the rate of operation of maximum thrust.

Certain Data for Liquid-Fuel Rocket Engines That Have Been Constructed

tion G kg/sec	Specific Thrust on ground P_{sp} kg-sec/kg	Specific consumption of fuel C_{sp} kg/t-sec	Complex of Parameters $\beta = \frac{f_{cr}}{G} p_2$ kg-sec/kg	Combustion Chamber								Pressure on the exit	
				Pressure p_2 at	Volume of the chamber V_k l	Chamber volume-to-throat area ratio l_{red} mm	Specific calorific intensity U kilo-cal/l-sec	Volumetric Thrust P_1 kg/l	Ratio $\frac{F_a}{f_{cr}}$	Average consumption intensity r_{av} g/cm²/sec	Designed height H_p m	p_a at	Exhaust velocity W m/sec
125	200	5,00	151	15	376	2990	500	69	5,60	17,8	1800	0,8	2020
2,1	190	5,26	137	20	78	2640	825	102,5	6,25	23,3	—	—	~1870
2,0	195*	5,14*	133	25	1,9	1860	1420	190	6,95	28,6	—	—	~1920
,33	185	5,40	190	46	1,0	935	4700	555	6,60	46,8	—	—	1820
-1,82	190*—110	5,26*—9,10	143	19—4	11	2000	—	—	—	—	—	—	—
6,4	188	5,31	142	27	6,9	2160	1280	173	9,0	22,0	—	—	~1850
,5	92,5	10,90	—	—	6,0	3060	500	100	11,6	28,5	—	—	~910
,42	174	5,75	137	16	6,35	2320	810	95	8,0	15,1	—	—	~1710
,5	175	5,71	145	20	7,5	860	2280	294	3,62	39,8	—	—	~1720

Table 35

Exhaust velocity w m/sec	Cri thr sec d cr	Nozzle					Feed System	Ignition	Weight Characteristics					
		velocity w m/sec	Critical throat section d_{cr} mm	Section at exit d_a mm	Widening $\frac{f_a}{f_{cr}}$	Angle of opening of super-critical part in degrees of nozzle			Weight of Engine in kg		Specific Weight of Engine in g/kg		Weight per Unit Impulse in g/kg-sec	
									**	***	**	***	**	***
2020		2020	400	740	3,42	25	Pump	Pyrotechnic or Chemical	920	1095	35,4	42,2	0,545	0,643
~1870		~1870	192	365	3,61	25	Cylinder	hypergolic	150	546	125	682	0,465	2,13
~1920		~1920	36	75	4,34	40	Cylinder	hypergolic	19	79	50	207	—	—
1820		1820	37	90	5,92	22	Cartridge Pressure Accumulator	hypergolic	—	6,5	—	11,7	—	0,39
—		—	84	163	3,76	—	Pump	hypergolic	130	—	86,8	—	—	—
~1850		~1850	64	130	4,13	—	Pump	hypergolic	57	—	47,5	—	—	—
~910		~910	50	90	3,24	—	Cylinder	—	—	68	—	113	—	1,13
~1710		~1710	60	100	2,72	30	Cylinder	pyrotechnic	—	96	—	160	—	1,60
~1720	1	~1720	105	178	2,78	24	Cylinder	hypergolic	—	390	—	177	—	3,21

** Without tanks

*** With tanks

APPENDICES

TABLE OF DECIMAL LOGARITHMS OF

T° abs	$\lg K_1 = \lg \frac{p_{CO} p_{O_2}^{1/2}}{p_{CO_2}}$	$\Delta \lg K_1$	$\lg K_2 = \lg \frac{p_{H_2} p_{O_2}^{1/2}}{p_{H_2O}}$	$\Delta \lg K_2$	$\lg K_{2a} - \lg \frac{p_{CO} p_{H_2O}}{p_{CO_2} p_{H_2}}$	$\Delta \lg K_{2a}$	$\lg K_3 = \lg \frac{p_{OH} p_{H_2}^{1/2}}{p_{H_2O}}$	$\Delta \lg K_3$
300	−44,7389	12,3295	−39,7860	10,5464	−4,9529	1,7831	−46,2890	12,3814
400	−32,4094	7,4044	−29,2396	6,3542	−3,1698	1,0502	−33,9076	7,4539
500	−25,0050	4,9107	−22,8854	4,2534	−2,1196	0,6873	−26,4537	4,9852
600	−20,0643	3,5268	−18,6320	3,0494	−1,4323	0,4774	−21,4685	3,5706
700	−16,5375	2,6434	−15,5826	2,2949	−0,9549	0,3485	−17,8979	2,6846
800	−13,8941	2,0541	−13,2877	1,7909	−0,6064	0,2632	−15,2133	2,0923
900	−11,8400	1,6415	−11,4968	1,4377	−0,3432	0,2038	−13,1210	1,6779
1000	−10,1985	1,3412	−10,0591	1,1779	−0,1394	0,1633	−11,4431	1,3735
1100	−8,8573	1,1160	−8,8812	0,9838	0,0239	0,1322	−10,0696	1,1463
1200	−7,7413	0,9428	−7,8974	0,8343	0,1561	0,1085	−8,9233	0,9710
1300	−6,7985	0,8069	−7,0631	0,7164	0,2646	0,0905	−7,9523	0,8333
1400	−5,9916	0,6980	−6,3467	0,6220	0,3551	0,0760	−7,1190	0,7228
1500	−5,2936	0,6104	−5,7247	0,5452	0,4311	0,0652	−6,3962	0,6331
1600	−4,6832	0,5363	−5,1795	0,4817	0,4963	0,0546	−5,7631	0,5590
1700	−4,1469	0,4763	−4,6978	0,4288	0,5509	0,0475	−5,2041	0,4973
1800	−3,6706	0,4255	−4,2690	0,3841	0,5984	0,0414	−4,7068	0,4452
1900	−3,2451	0,3821	−3,8549	0,3461	0,6398	0,0360	−4,2616	0,4009
2000	−2,8630	0,3451	−3,5388	0,3136	0,6758	0,0315	−3,8607	0,3629
2100	−2,5179	0,3131	−3,2252	0,2856	0,7073	0,0275	−3,4978	0,3301
2200	−2,2048	0,2852	−2,9396	0,2606	0,7348	0,0246	−3,1677	0,3016
2300	−1,9196	0,2610	−2,6790	0,2394	0,7594	0,0216	−2,8661	0,2766
2400	−1,6586	0,2395	−2,4395	0,2204	0,7810	0,0191	−2,5695	0,2546
2500	−1,4191	0,2207	−2,2192	0,2037	0,8001	0,0170	−2,3349	0,2351
2600	−1,1984	0,2039	−2,0155	0,1889	0,8171	0,0150	−2,0998	0,2178
2700	−0,9945	0,1890	−1,8266	0,1755	0,8321	0,0135	−1,8820	0,2024
2800	−0,8055	0,1756	−1,6511	0,1637	0,8456	0,0119	−1,6796	0,1885
2900	−0,6299	0,1635	−1,4874	0,1528	0,8575	0,0107	−1,4911	0,1760
3000	−0,4664	0,1525	−1,3346	0,1432	0,8682	0,0093	−1,3151	0,1648

Note. In the columns of the differences of the decimal logarithms of the constants of equilibrium $\Delta \lg K_1$, $\Delta \lg K_2$, etc, we have given the difference of the value of the decimal logarithms of the constants of equilibrium for the successive and the current temperatures. For example, in the column T = 3,400° absolute, we have given the difference of the values of lg K at 3,500 and 3,400° absolute.

THE CONSTANTS OF EQUILIBRIUM

$\lg K_4 - \lg \frac{p_{NO}^2}{p_{N_2} p_{O_2}}$	$\Delta \lg K_4$	$\lg K_5 - \lg \frac{p_H^2}{p_{H_2}}$	$\Delta \lg K_5$	$\lg K_6 - \lg \frac{p_O^2}{p_{O_2}}$	$\Delta \lg P_6$	$\lg K_7 - \lg \frac{p_N^2}{p_{N_2}}$	$\Delta \lg K_7$	T abs.
−30,1770	7,8670	−70,7414	18,9993	−90,0867	21,5758	−118,6656	31,1918	300
−22,3100	4,7228	−51,7421	11,4322	−58,5109	12,9798	−87,4738	17,7479	400
−17,5872	3,1492	−40,3099	7,6430	−45,5311	8,6731	−68,7259	12,5195	500
−14,4380	2,2502	−32,6669	5,4748	−36,8580	6,2081	−56,2064	8,9572	600
−12,1878	2,6880	−27,1921	4,1177	−30,6499	4,6645	−47,2492	6,7278	700
−10,4998	1,3124	−23,0744	3,2106	−25,9854	3,6339	−40,5214	5,2399	800
−9,1874	1,0508	−19,8636	2,5753	−22,3515	2,9115	−35,2815	4,1974	900
−8,1366	0,8590	−17,2883	2,1128	−19,4400	2,3855	−31,0841	3,4386	1000
−7,2776	0,7172	−15,1755	1,7650	−17,0545	1,9905	−27,6455	2,8689	1100
−6,5604	0,6064	−13,4105	1,4970	−15,0640	1,6863	−24,7766	2,4301	1200
−5,9540	0,5198	−11,9135	1,2860	−13,3777	1,4470	−22,3465	2,0851	1300
−5,4342	0,4506	−10,6275	1,1170	−11,9307	1,2555	−20,2614	1,8088	1400
−4,9836	0,3944	−9,5105	0,9794	−10,6752	1,0996	−18,4526	1,5842	1500
−4,5892	0,3480	−8,5311	0,8659	−9,5756	0,9712	−16,8684	1,3990	1600
−4,2412	0,3094	−7,6652	0,7711	−8,6044	0,8641	−15,4694	1,2447	1700
−3,9318	0,2768	−6,8941	0,6912	−7,7403	0,7738	−14,2247	1,1146	1800
−3,6550	0,2490	−6,2029	0,6231	−6,9665	0,6970	−13,1101	1,0038	1900
−3,4060	0,2252	−5,5798	0,5647	−6,2695	0,6311	−12,1063	0,9090	2000
−3,1808	0,2048	−5,0151	0,5141	−5,6384	0,5741	−11,1973	0,8270	2100
−2,9760	0,1868	−4,5010	0,4701	−5,0643	0,5245	−10,3703	0,7556	2200
−2,7892	0,1712	−4,0309	0,4315	−5,5398	0,4812	−9,6147	0,6929	2300
−2,6180	0,1574	−3,5994	0,3976	−4,0586	0,4429	−8,9218	0,6383	2400
−2,4606	0,1454	−3,2018	0,3674	−3,6157	0,4091	−8,2835	0,5895	2500
−2,3152	0,1342	−2,8344	0,3406	−3,2066	0,3789	−7,6940	0,5461	2600
−2,1810	0,1248	−2,4938	0,3166	−2,8277	0,3521	−7,1479	0,5075	2700
−2,0562	0,1158	−2,1772	0,2951	−2,4756	0,3279	−6,6404	0,4727	2800
−1,9404	0,1082	−1,8821	0,2757	−2,1477	0,3062	−6,1677	0,4416	2900
−1,8322	0,1012	−1,6064	0,2582	−1,8415	0,2865	−5,7261	0,4133	3000

By making use of the table of differences, we can, by linear interpolation of the logarithms of the constants of equilibrium, determine the values of the constants of equilibrium for any intermediate temperature.

T° abs.	$\lg K_1 = \lg \frac{p_{CO} p_{O_2}^{1/2}}{p_{CO_2}}$	$\Delta \lg K_1$	$\lg K_2 = \lg \frac{p_{H_2} p_{O_2}^{1/2}}{p_{H_2O}}$	$\Delta \lg K_2$	$\lg K_w = \lg \frac{p_{CO} p_{H_2O}}{p_{CO_2} p_{H_2}}$	$\Delta \lg K_w$	$\lg K_8 = \lg \frac{p_{OH} p_{H_2}^{1/2}}{p_{H_2O}}$	$\Delta \lg K_8$
3100	−0,3139	0,1428	−1,1914	0,1344	0,8775	0,0084	−1,1503	0,1545
3200	−0,1711	0,1339	−1,0570	0,1265	0,8859	0,0074	−0,9958	0,1452
3300	−0,0372	0,1257	−0,9305	0,1191	0,8933	0,0069	−0,8506	0,1365
3400	0,0885	0,1183	−0,8114	0,1125	0,8999	0,0058	−0,7138	0,1290
3500	0,2068	0,1115	−0,6989	0,1064	0,9057	0,0051	−0,5848	0,1219
3600	0,3183	0,1052	−0,5925	0,1007	0,9108	0,0045	−0,4629	0,1154
3700	0,4235	0,0994	−0,4918	0,0957	0,9153	0,0037	−0,3475	0,1094
3800	0,5229	0,0942	−0,3961	0,0908	0,9190	0,0034	−0,2381	0,1040
3900	0,6171	0,0893	−0,3053	0,0865	0,9224	0,0028	−0,1341	0,0987
4000	0,7064	0,0847	−0,2188	0,0823	0,9252	0,0024	−0,0354	0,0940
4100	0,7911	0,0806	−0,1365	0,0785	0,9276	0,0021	0,0586	0,0896
4200	0,8717	0,0764	−0,0580	0,0751	0,9297	0,0013	0,1482	0,0855
4300	0,9481	0,0731	0,0171	0,0718	0,9310	0,0013	0,2337	0,0817
4400	1,0212	0,0696	0,0889	0,0686	0,9323	0,0010	0,3154	0,0781
4500	1,0908	0,0664	0,1575	0,0659	0,9333	0,0005	0,3935	0,0748
4600	1,1572	0,0634	0,2234	0,0631	0,9338	0,0003	0,4683	0,0716
4700	1,2206	0,0607	0,2865	0,0607	0,9341	0,[illegible]	0,5399	0,0688
4800	1,2813	0,0580	0,3472	0,0582	0,9341	−0,[illegible]	0,6087	0,0660
4900	1,3393	0,0556	0,4054	0,0561	0,9339	−[illegible]	0,6747	0,0635
5000	1,3949	0,0533	0,4615	0,0539	0,9334	−[illegible]	0,7382	0,0610
5100	1,4482	0,0512	0,5155	0,0521	0,9327	−0,0008	0,7992	0,0587
5200	1,4994	0,0492	0,5675	0,0501	0,9319	−0,0010	0,8579	0,0566
5300	1,5485	0,0470	0,6176	0,0484	0,9309	−0,0013	0,9145	0,0545
5400	1,5956	0,0454	0,6660	0,0467	0,9296	−0,0014	0,9690	0,0526
5500	1,6409	0,0435	0,7127	0,0452	0,9282	−0,0015	1,0216	0,0508
5600	1,6846	0,0420	0,7579	0,0437	0,9267	−0,0017	1,0724	0,0492
5700	1,7265	0,0405	0,8016	0,0423	0,9249	−0,0018	1,1216	0,0474
5800	1,7670	0,0389	0,8439	0,0409	0,9231	−0,0020	1,1690	0,0459
5900	1,8059	0,0376	0,8848	0,0397	0,9211	−0,0021	1,2149	0,0445
6000	1,8435		0,9245		0,9190		1,2594	

Note. In the columns of the differences of the decimal logarithms of the constants of equilibrium $\Delta \lg K_1$, $\Delta \lg K_2$, etc, we have given the difference of the value of the decimal logarithms of the constants of equilibrium for the successive and the current temperatures. For example, in the column T = 3,400° absolute, we have given the difference of the values of lg K at 3,500 and 3,400° absolute.

Continued

$\lg K_4 = \lg \frac{p^2_{NO}}{p_{N_2}p_{O_2}}$	$\Delta \lg K_4$	$\lg K_5 = \lg \frac{p^2_H}{p_{H_2}}$	$\Delta \lg K_5$	$\lg K_6 = \lg \frac{p^2_O}{p_{O_2}}$	$\Delta \lg K_6$	$\lg K_7 = \lg \frac{p^2_N}{p_{N_2}}$	$\Delta \lg K_7$	T° abs
−1,7310	0,0946	−1,3482	0,2423	−1,5550	0,2688	−5,3128	0,3878	3100
−1,6364	0,0888	−1,1059	0,2278	−1,2862	0,2525	−4,9250	0,3615	3200
−1,5476	0,0830	−0,8781	0,2146	−1,0337	0,2377	−4,5605	0,3433	3300
−1,4646	0,0790	−0,6635	0,2025	−0,7960	0,2242	−4,2172	0,3239	3400
−1,3856	0,0742	−0,4610	0,1913	−0,5718	0,2118	−3,8933	0,3061	3500
−1,3114	0,0700	−0,2697	0,1812	−0,3600	0,2005	−3,5872	0,2898	3600
−1,2414	0,0660	−0,0885	0,1717	−0,1595	0,1899	−3,2974	0,2747	3700
−1,1754	0,0630	0,0832	0,1630	0,0304	0,1802	−3,0227	0,2609	3800
−1,1124	0,0594	0,2462	0,1550	0,2106	0,1712	−2,7618	0,2480	3900
−1,0530	0,0564	0,4012	0,1475	0,3818	0,1629	−2,5138	0,2361	4000
−0,9966	0,0538	0,5487	0,1405	0,5447	0,1552	−2,2777	0,2250	4100
−0,9428	0,0512	0,6892	0,1341	0,6999	0,1480	−2,0527	0,2148	4200
−0,8916	0,0488	0,8233	0,1280	0,8479	0,1413	−1,8379	0,2052	4300
−0,8428	0,0464	0,9513	0,1223	0,9892	0,1351	−1,6327	0,1962	4400
−0,7964	0,0444	1,0736	0,1171	1,1243	0,1292	−1,4365	0,1879	4500
−0,7520	0,0424	1,1907	0,1122	1,2535	0,1237	−1,2486	0,1801	4600
−0,7096	0,0406	1,3029	0,1075	1,3772	0,1186	−1,0685	0,1728	4700
−0,6690	0,0388	1,4104	0,1031	1,4958	0,1138	−0,8957	0,1659	4800
−0,6302	0,0372	1,5135	0,0991	1,6096	0,1092	−0,7298	0,1595	4900
−0,5930	0,0356	1,6126	0,0951	1,7188	0,1050	−0,5703	0,1533	5000
−0,5574	0,0342	1,7077	0,0915	1,8238	0,1010	−0,4170	0,1477	5100
−0,5232	0,0330	1,7992	0,0881	1,9248	0,0972	−0,2693	0,1423	5200
−0,4902	0,0316	1,8873	0,0848	2,0220	0,0936	−0,1270	0,1372	5300
−0,4586	0,0304	1,9721	0,0818	2,1156	0,0902	0,0102	0,1324	5400
−0,4282	0,0290	2,0539	0,0788	2,2058	0,0870	0,1426	0,1278	5500
−0,3992	0,0284	2,1327	0,0760	2,2928	0,0840	0,2704	0,1235	5600
−0,3708	0,0272	2,2087	0,0735	2,3768	0,0811	0,3939	0,1195	5700
−0,3436	0,0260	2,2822	0,0709	2,4579	0,0784	0,5134	0,1156	5800
−0,3176	0,0252	2,3531	0,0685	2,5363	0,0758	0,6290	0,1120	5900
−0,2924		2,4216		2,6121		0,7410		6000

By making use of the table of differences, we can, by linear interpolation of the logarithms of the constants of equilibrium, determine the values of the constants of equilibrium for any intermediate temperature.

Appendix 2

CONSTANTS OF EQUILIBRIUM

T°abs.	$K_1=\frac{p_{CO}p_{O_2}^{1/2}}{p_{CO_2}}$	$K_2=\frac{p_{H_2}p_{O_2}^{1/2}}{p_{H_2O}}$	$K_{10}=\frac{p_{CO}p_{H_2O}}{p_{CO_2}p_{H_2}}$	$K_3=\frac{p_{OH}p_{H_2}^{1/2}}{p_{H_2O}}$	$K_4=\frac{p_{HO}^2}{p_{N_2}p_{O_2}}$	$K_5=\frac{p_H^2}{p_{H_2}}$	$K_6=\frac{p_O^2}{p_{O_2}}$	$K_7=\frac{p_N^2}{p_{N_2}}$	T°abs.
300	$0{,}1825\cdot10^{-44}$	$0{,}1637\cdot10^{-39}$	$0{,}1115\cdot10^{-4}$	$0{,}5140\cdot10^{-46}$	$0{,}6653\cdot10^{-30}$	$0{,}1813\cdot10^{-70}$	$0{,}8191\cdot10^{-80}$	$0{,}216\cdot10^{-118}$	300
400	$0{,}3895\cdot10^{-32}$	$0{,}5759\cdot10^{-29}$	$0{,}6764\cdot10^{-3}$	$0{,}1237\cdot10^{-33}$	$0{,}4898\cdot10^{-22}$	$0{,}1811\cdot10^{-51}$	$0{,}3084\cdot10^{-58}$	$0{,}3359\cdot10^{-87}$	400
500	$0{,}9886\cdot10^{-25}$	$0{,}1302\cdot10^{-22}$	$0{,}7593\cdot10^{-2}$	$0{,}3518\cdot10^{-26}$	$0{,}2587\cdot10^{-17}$	$0{,}4899\cdot10^{-40}$	$0{,}2944\cdot10^{-45}$	$0{,}1879\cdot10^{-68}$	500
600	$0{,}8624\cdot10^{-20}$	$0{,}2333\cdot10^{-18}$	$0{,}3696\cdot10^{-1}$	$0{,}3400\cdot10^{-21}$	$0{,}3648\cdot10^{-14}$	$0{,}2153\cdot10^{-32}$	$0{,}1387\cdot10^{-36}$	$0{,}6218\cdot10^{-56}$	600
700	$0{,}2900\cdot10^{-16}$	$0{,}2614\cdot10^{-15}$	$0{,}1109$	$0{,}1265\cdot10^{-17}$	$0{,}6489\cdot10^{-12}$	$0{,}6425\cdot10^{-27}$	$0{,}2240\cdot10^{-30}$	$0{,}5633\cdot10^{-47}$	700
800	$0{,}1277\cdot10^{-13}$	$0{,}5156\cdot10^{-13}$	$0{,}2475$	$0{,}6119\cdot10^{-15}$	$0{,}3163\cdot10^{-10}$	$0{,}8426\cdot10^{-23}$	$0{,}1034\cdot10^{-25}$	$0{,}3010\cdot10^{-40}$	800
900	$0{,}1445\cdot10^{-11}$	$0{,}3185\cdot10^{-11}$	$0{,}4537$	$0{,}7568\cdot10^{-13}$	$0{,}6495\cdot10^{-9}$	$0{,}1369\cdot10^{-19}$	$0{,}4450\cdot10^{-22}$	$0{,}5230\cdot10^{-35}$	900
1000	$0{,}6331\cdot10^{-10}$	$0{,}8728\cdot10^{-10}$	$0{,}7254$	$0{,}3604\cdot10^{-11}$	$0{,}7302\cdot10^{-8}$	$0{,}5148\cdot10^{-17}$	$0{,}3631\cdot10^{-19}$	$0{,}8239\cdot10^{-31}$	1000
1100	$0{,}1389\cdot10^{-8}$	$0{,}1314\cdot10^{-8}$	$1{,}0560$	$0{,}8519\cdot10^{-10}$	$0{,}5277\cdot10^{-7}$	$0{,}6676\cdot10^{-15}$	$0{,}8820\cdot10^{-17}$	$0{,}2252\cdot10^{-27}$	1100
1200	$0{,}1814\cdot10^{-7}$	$0{,}1267\cdot10^{-7}$	$1{,}4320$	$0{,}1193\cdot10^{-8}$	$0{,}2752\cdot10^{-6}$	$0{,}3886\cdot10^{-13}$	$0{,}8630\cdot10^{-15}$	$0{,}1673\cdot10^{-24}$	1200
1300	$0{,}1591\cdot10^{-6}$	$0{,}8648\cdot10^{-7}$	$1{,}8400$	$0{,}1116\cdot10^{-7}$	$0{,}1112\cdot10^{-5}$	$0{,}1220\cdot10^{-11}$	$0{,}4191\cdot10^{-13}$	$0{,}4503\cdot10^{-22}$	1300
1400	$0{,}1020\cdot10^{-5}$	$0{,}4501\cdot10^{-6}$	$2{,}2660$	$0{,}7603\cdot10^{-7}$	$0{,}3680\cdot10^{-5}$	$0{,}2358\cdot10^{-10}$	$0{,}1173\cdot10^{-11}$	$0{,}5478\cdot10^{-20}$	1400
1500	$0{,}5087\cdot10^{-5}$	$0{,}1885\cdot10^{-6}$	$2{,}6990$	$0{,}4016\cdot10^{-6}$	$0{,}1039\cdot10^{-4}$	$0{,}3087\cdot10^{-9}$	$0{,}2113\cdot10^{-10}$	$0{,}3527\cdot10^{-18}$	1500
1600	$0{,}2074\cdot10^{-4}$	$0{,}6615\cdot10^{-5}$	$3{,}1350$	$0{,}1726\cdot10^{-5}$	$0{,}2575\cdot10^{-4}$	$0{,}2944\cdot10^{-8}$	$0{,}2657\cdot10^{-9}$	$0{,}1354\cdot10^{-16}$	1600
1700	$0{,}7131\cdot10^{-4}$	$0{,}2005\cdot10^{-4}$	$3{,}5550$	$0{,}6250\cdot10^{-5}$	$0{,}5738\cdot10^{-4}$	$0{,}2162\cdot10^{-7}$	$0{,}2486\cdot10^{-8}$	$0{,}3393\cdot10^{-15}$	1700
1800	$0{,}2135\cdot10^{-3}$	$0{,}5383\cdot10^{-4}$	$3{,}9670$	$0{,}1964\cdot10^{-4}$	$0{,}1170\cdot10^{-3}$	$0{,}1277\cdot10^{-6}$	$0{,}1819\cdot10^{-7}$	$0{,}5961\cdot10^{-14}$	1800
1900	$0{,}5687\cdot10^{-3}$	$0{,}1303\cdot10^{-3}$	$4{,}3630$	$0{,}5475\cdot10^{-4}$	$0{,}2213\cdot10^{-3}$	$0{,}6267\cdot10^{-6}$	$0{,}1080\cdot10^{-6}$	$0{,}7761\cdot10^{-13}$	1900
2000	$0{,}1371\cdot10^{-2}$	$0{,}2892\cdot10^{-3}$	$4{,}7410$	$0{,}1378\cdot10^{-3}$	$0{,}3926\cdot10^{-3}$	$0{,}2631\cdot10^{-5}$	$0{,}5376\cdot10^{-6}$	$0{,}7829\cdot10^{-12}$	2000
2100	$0{,}3035\cdot10^{-2}$	$0{,}5954\cdot10^{-3}$	$5{,}0970$	$0{,}3178\cdot10^{-3}$	$0{,}6595\cdot10^{-3}$	$0{,}9658\cdot10^{-5}$	$0{,}2299\cdot10^{-5}$	$0{,}6349\cdot10^{-11}$	2100
2200	$0{,}6240\cdot10^{-2}$	$0{,}1149\cdot10^{-2}$	$5{,}4300$	$0{,}6797\cdot10^{-3}$	$0{,}1057\cdot10^{-2}$	$0{,}3155\cdot10^{-4}$	$0{,}8624\cdot10^{-5}$	$0{,}4263\cdot10^{-10}$	2200
2300	$0{,}1203\cdot10^{-1}$	$0{,}2094\cdot10^{-2}$	$5{,}7460$	$0{,}1361\cdot10^{-2}$	$0{,}1625\cdot10^{-2}$	$0{,}9313\cdot10^{-4}$	$0{,}2885\cdot10^{-4}$	$0{,}2429\cdot10^{-9}$	2300
2400	$0{,}2195\cdot10^{-1}$	$0{,}3634\cdot10^{-2}$	$6{,}0390$	$0{,}2573\cdot10^{-2}$	$0{,}2410\cdot10^{-2}$	$0{,}2516\cdot10^{-3}$	$0{,}8738\cdot10^{-4}$	$0{,}1198\cdot10^{-8}$	2400
2500	$0{,}3810\cdot10^{-1}$	$0{,}6037\cdot10^{-2}$	$6{,}3110$	$0{,}4625\cdot11^{-2}$	$0{,}3391\cdot10^{-2}$	$0{,}6284\cdot10^{-3}$	$0{,}2423\cdot10^{-3}$	$0{,}5206\cdot10^{-8}$	2500
2600	$0{,}6333\cdot10^{-1}$	$0{,}9649\cdot10^{-2}$	$6{,}5630$	$0{,}7947\cdot10^{-2}$	$0{,}4840\cdot10^{-2}$	$0{,}1464\cdot10^{-2}$	$0{,}6215\cdot10^{-3}$	$0{,}2023\cdot10^{-7}$	2600
2700	$0{,}1013$	$0{,}1490\cdot10^{-1}$	$6{,}7940$	$0{,}1312\cdot10^{-1}$	$0{,}6592\cdot10^{-2}$	$0{,}3207\cdot10^{-2}$	$0{,}1487\cdot10^{-2}$	$0{,}7114\cdot10^{-7}$	2700
2800	$0{,}1565$	$0{,}2233\cdot10^{-1}$	$7{,}0060$	$0{,}2091\cdot10^{-1}$	$0{,}8786\cdot10^{-2}$	$0{,}6649\cdot10^{-2}$	$0{,}3345\cdot10^{-2}$	$0{,}2289\cdot10^{-6}$	2800

2900	0,2345	$0,3256 \cdot 10^{-1}$	7,2020	$0,3228 \cdot 10^{-1}$	$0,1148 \cdot 10^{-1}$	$0,1312 \cdot 10^{-1}$	$0,7117 \cdot 10^{-2}$	$0,6797 \cdot 10^{-6}$	2900
3000	0,3417	$0,4628 \cdot 10^{-1}$	7,3820	$0,4841 \cdot 10^{-1}$	$0,1472 \cdot 10^{-1}$	$0,2475 \cdot 10^{-1}$	$0,1441 \cdot 10^{-1}$	$0,1879 \cdot 10^{-5}$	3000
3100	0,4854	$0,6436 \cdot 10^{-1}$	7,5430	$0,7074 \cdot 10^{-1}$	$0,1858 \cdot 10^{-1}$	$0,4485 \cdot 10^{-1}$	$0,2786 \cdot 10^{-1}$	$0,4866 \cdot 10^{-5}$	3100
3200	0,6744	$0,8770 \cdot 10^{-1}$	7,6900	0,1009	$0,2310 \cdot 10^{-1}$	$0,7836 \cdot 10^{-1}$	$0,5174 \cdot 10^{-1}$	$0,1189 \cdot 10^{-4}$	3200
3300	0,9179	0,1173	7,8210	0,1410	$0,2833 \cdot 10^{-1}$	0,1324	$0,9253 \cdot 10^{-1}$	$0,2751 \cdot 10^{-4}$	3300
3400	1,2260	0,1544	7,9410	0,1933	$0,3431 \cdot 10^{-1}$	0,2170	0,1600	$0,6064 \cdot 10^{-4}$	3400
3500	1,6100	0,2000	8,0480	0,2601	$0,4115 \cdot 10^{-1}$	0,3459	0,2680	$0,1278 \cdot 10^{-3}$	3500
3600	2,0810	0,2556	8,1430	0,3444	$0,4862 \cdot 10^{-1}$	0,5374	0,4364	$0,2587 \cdot 10^{-3}$	3600
3700	2,6520	0,3222	8,2280	0,4492	$0,5736 \cdot 10^{-1}$	0,8156	0,6926	$0,5042 \cdot 10^{-3}$	3700
3800	3,3340	0,4017	8,2990	0,5780	$0,6677 \cdot 10^{-1}$	1,2120	1,0730	$0,9491 \cdot 10^{-3}$	3800
3900	4,1410	0,4951	8,3640	0,7343	$0,7720 \cdot 10^{-1}$	1,7630	1,6240	$0,1731 \cdot 10^{-2}$	3900
4000	5,0870	0,6042	8,4180	0,9217	$0,8851 \cdot 10^{-1}$	2,5190	2,4080	$0,3063 \cdot 10^{-2}$	4000
4100	6,1810	0,7303	8,4650	1,1450	0,1008	3,5380	3,5050	$0,5276 \cdot 10^{-2}$	4100
4200	7,4420	0,8750	8,5060	1,4070	0,1141	4,8890	5,0100	$0,8857 \cdot 10^{-2}$	4200
4300	8,8740	1,0400	8,5310	1,7130	0,1283	6,6580	7,0460	$0,1452 \cdot 10^{-1}$	4300
4400	10,5000	1,2280	8,5570	2,0670	0,1436	8,9390	9,7540	$0,2330 \cdot 10^{-1}$	4400
4500	12,5300	1,4370	8,5760	2,4750	0,1598	11,8500	13,3100	$0,3660 \cdot 10^{-1}$	4500
4600	14,3600	1,6730	8,5850	2,9400	0,1770	15,5200	17,9300	$0,5641 \cdot 10^{-1}$	4500
4700	16,6200	1,9340	8,5920	3,4660	0,1952	20,0800	23,8300	$0,8541 \cdot 10^{-1}$	4700
4800	19,1100	2,2240	8,5920	4,0610	0,2143	25,7200	31,3200	0,1272	4800
4900	21,8400	2,5430	8,5880	4,7290	0,2343	32,6200	40,7000	0,1863	4900
5000	24,8300	2,8940	8,5780	5,4730	0,2553	40,9900	52,3400	0,2689	5000
5100	28,0600	3,2760	8,5670	6,2980	0,2771	51,0100	66,6500	0,3828	5100
5200	31,5800	3,6940	8,5490	7,2090	0,2997	62,9800	84,1000	0,5379	5200
5300	35,3700	4,1460	8,5310	8,2130	0,3234	77,1400	105,2000	0,7464	5300
5400	39,4100	4,6340	8,5040	9,3110	0,3478	93,7800	130,5000	1,0230	5400
5500	43,7500	5,1600	8,4780	10,5100	0,3731	113,2000	160,6000	1,3890	5500
5600	48,3700	5,7270	8,4450	11,8100	0,3988	135,7000	196,3000	1,8640	5600
5700	53,2700	6,3330	8,4120	13,2300	0,4258	161,7000	238,1000	2,4750	5700
5800	58,4800	6,9810	8,3770	14,7600	0,4533	191,5000	287,0000	3,2610	5800
5900	63,9600	7,6700	8,3390	16,4000	0,4812	225,5000	343,3000	4,2560	5900
6000	69,7400	8,4050	8,2990	18,1800	0,5100	264,0000	409,4000	5,5080	6000

Appendix 3

Total Heat Content of the Products of Combustion I_{pi} of the Fuel of Liquid-Fuel Rocket Engines (in cal/g-mol °C)

T° abs.	CO_2	H_2O	CO	OH	NO	H_2	O_2	N_2	H	O	N	T° abs.
300	-93990,0	-57731,4	-26375,1	10107,9	21645,2	46,9	47,9	47,6	52115,6	59183,1	85591,6	300
400	-93049,8	-56919,4	-25676,8	10815,0	22359,2	741,4	758,0	744,9	52612,4	59701,0	86088,4	400
500	-92021,8	-56087,9	-24970,6	11520,4	23082,3	1439,9	1489,1	1447,5	53109,2	60211,5	86585,2	500
600	-90922,2	-55231,2	-24251,1	12226,2	23819,6	2139,0	2244,4	2160,5	53606,0	60717,8	87082,0	600
700	-89763,3	-54341,9	-23514,8	12932,3	24575,0	2841,9	3022,3	2887,8	54102,8	61221,6	87578,8	700
800	-88555,2	-53423,8	-22760,8	13643,8	25348,0	3547,8	3819,9	3631,1	54599,6	61723,7	88075,6	800
900	-87304,7	-52478,7	-21990,0	14362,8	26138,9	4258,4	4634,0	4390,5	55096,4	62224,8	88572,4	900
1000	-66022,6	-51505,4	-21204,1	15091,4	26944,4	4976,2	5461,5	5165,0	55593,2	62724,9	89069,2	1000
1100	-84709,6	-50505,1	-20404,6	15830,0	27762,9	5702,7	6300,3	5953,2	56090,0	63224,5	89566,0	1100
1200	-83371,8	-49477,2	-19593,3	16579,6	28592,1	6438,5	7148,6	6753,7	56586,8	63723,7	90062,8	1200
1300	-82013,4	-48423,2	-18771,7	17340,3	29430,5	7184,3	8005,1	7565,1	57083,6	64222,5	90559,6	1300
1400	-80637,2	-47344,3	-17941,0	18112,0	30276,7	7940,5	8869,0	8386,0	57580,4	64721,0	91056,4	1400
1500	-79245,6	-46242,2	-17102,6	18894,4	31129,6	8707,3	9739,6	9215,1	58077,2	65219,3	91553,2	1500
1600	-77840,4	-45118,3	-16257,6	19686,8	31988,3	9484,4	10616,5	10051,6	58574,0	65717,4	92050,0	1600
1700	-76423,0	-43974,5	-15406,8	20488,7	32852,0	10271,7	11499,4	10894,5	59070,8	66215,4	92546,8	1700
1800	-74995,0	-42812,4	-14550,7	21299,6	33720,1	11068,8	12388,1	11743,0	59567,6	66713,2	93043,6	1800
1900	-73557,4	-41633,7	-13690,1	22118,9	34592,1	11875,2	13282,6	12596,6	60064,4	67211,1	93540,5	1900
2000	-72111,2	-40440,1	-12825,5	22945,9	35467,6	12690,4	14182,7	13454,7	60561,2	67708,8	94037,4	2000
2100	-70657,4	-39232,8	-11957,3	23780,2	36346,2	13514,0	15088,3	14316,8	61058,0	68206,6	94534,3	2100
2200	-69196,4	-38013,1	-11085,9	24621,3	37227,6	14345,5	15999,5	15182,5	61554,8	68704,4	95031,3	2200
2300	-67729,0	-36782,1	-10211,5	25468,6	38111,6	15184,5	16916,1	16051,5	62051,6	69202,3	95528,5	2300
2400	-66255,6	-35540,7	-9334,4	26321,9	38997,9	16030,8	17838,2	16923,4	62548,4	69700,4	96025,8	2400
2500	-64776,6	-34289,9	-8454,9	27180,6	39886,4	16883,9	18765,7	17798,0	63045,2	70198,6	96523,4	2500
2600	-63292,4	-33030,3	-7573,2	28044,5	40776,8	17743,5	19698,4	18675,1	63542,0	70697,1	97021,4	2600
2700	-61803,2	-31762,6	-6689,5	28913,1	41669,1	18609,5	20636,4	19554,5	64038,3	71195,9	97519,8	2700
2800	-60309,3	-30487,6	-5803,9	29786,4	42563,2	19481,3	21579,4	20436,0	64535,6	71695,0	98018,9	2800

2900	—58811,1	—29205,7	—4916,6	30664,0	43458,9	20358,9	22527,3	21319,5	65032,4	72194,6	98518,6	2900
3000	—57308,8	—27917,4	—4027,6	31545,8	44356,3	21242,1	23480,0	22204,7	65529,2	72694,8	99019,2	3000
3100	—55802,6	—26623,4	—3136,0	32431,6	45255,1	22130,6	24437,3	23091,6	66026,0	73195,5	99520,9	3100
3200	—54292,7	—25324,1	—2244,0	33321,1	46155,4	23024,4	25399,1	23980,2	66522,8	73696,8	100023,3	3200
3300	—52779,2	—24020,0	—1350,7	34214,2	47057,1	23923,3	26365,2	24870,2	67019,6	74198,9	100528,0	3300
3400	—51262,4	—22711,4	—456,2	35110,7	47960,2	24827,2	27335,5	25761,6	67516,4	74701,8	101033,9	3400
3500	—49742,4	—21398,7	+439,6	36010,6	48864,5	25736,0	28309,7	26654,3	68013,2	75205,4	101541,6	3500
3600	—48219,2	—20082,2	1336,4	36913,7	49770,0	26649,6	29287,8	27548,3	68510,0	75710,0	102051,4	3600
3700	—46693,2	—18762,1	2234,4	37819,9	50676,7	27568,0	30269,5	28443,5	69006,8	76215,5	102563,3	3700
3800	—45164,4	—17438,7	3133,4	38729,1	51584,6	28491,0	31254,7	29339,3	69503,6	76722,0	103077,7	3800
3900	—43632,8	—16112,2	4033,4	39641,2	52493,6	29418,5	32243,2	30237,2	70000,4	77229,5	103594,8	3900
4000	—42098,6	—14782,8	4934,4	40556,0	53403,8	30350,5	33234,8	31135,6	70497,2	77738,1	104114,7	4000
4100	—40561,8	—13450,7	5836,3	41473,6	54315,0	31286,9	34229,4	32035,0	70994,0	78247,8	104637,7	4100
4200	—39022,6	—12116,1	6739,2	42393,8	55227,3	32227,6	35226,8	32935,4	71490,8	78758,6	105164,0	4200
4300	—37480,9	—10779,1	7643,0	43316,6	56140,6	33172,5	36226,8	33836,6	71987,6	79270,6	105693,8	4300
4400	—35936,8	—9439,9	8547,7	44241,9	57054,9	34121,7	37229,3	34738,8	72484,4	79783,8	106227,3	4400
4500	—34390,5	—8098,6	9453,2	45169,7	57970,2	35074,9	38234,1	35641,9	72981,2	80298,1	106764,6	4500
4600	—32841,8	—6755,2	10359,5	46099,9	58886,5	36032,1	39241,2	36545,8	73478,0	80813,7	107305,9	4600
4700	—31291,0	—5409,8	11266,5	47032,5	59803,8	36993,4	40250,4	37450,6	73974,8	81330,5	107851,4	4700
4800	—29737,8	—4062,4	12174,3	47962,5	60722,1	37958,6	41261,6	38356,2	74471,6	81848,5	108401,1	4800
4900	—28182,6	—2713,2	13082,9	48904,8	61641,4	38927,7	42274,6	39262,6	74968,4	82367,7	108955,4	4900
5000	—26625,0	—1362,0	13992,1	49844,3	62561,7	39900,5	43289,3	40169,8	75465,2	82888,1	109514,1	5000
5100	—25065,4	—9,0	14902,1	50786,0	63483,0	40877,2	44305,7	41077,8	75962,0	83409,7	110077,6	5100
5200	—23503,4	+1346,0	15812,7	51729,7	64405,3	41857,6	45323,7	41986,5	76458,8	83932,5	110645,8	5200
5300	—21939,4	2702,8	16724,1	52675,6	65328,5	42841,6	46343,1	42896,1	76955,6	84456,6	111218,9	5300
5400	—20373,0	4061,4	17636,1	53623,5	66252,6	43829,3	47363,9	43806,3	77452,4	84981,8	111796,9	5400
5500	—18804,6	5422,0	18548,7	54573,4	67177,7	44820,5	48386,0	44717,4	77949,2	85508,2	112380,0	5500
5600	—17233,8	6784,3	19462,1	55525,3	68103,8	45815,1	49409,9	45629,1	78446,0	86035,8	112968,1	5600
5700	—15661,0	8148,5	20376,1	56479,1	69030,9	46813,5	50433,8	46541,6	78942,8	86564,6	113561,4	5700
5800	—14085,8	9514,5	21290,7	57434,9	69958,9	47815,1	51459,4	47454,9	79439,6	87094,5	114159,9	5800
5900	—12508,6	10882,3	22206,0	58392,5	70887,8	48820,1	52485,9	48368,8	79936,4	87625,5	114763,7	5900
6000	—10929,0	12251,9	23121,9	59351,9	71817,7	49828,5	53513,4	49283,5	80433,2	88157,7	115372,8	6000

Remarks. The values of the total heat content are given in cal/g-mol °Centigrade. **For** conversion of them into kilo-cal/g-mol °Centigrade, the values taken from the table **are** divided by 1,000.

Appendix 4

Table of the Entropies of the Products of Combustion S_{oi} of the Fuels of Rocket Engines (in cal/g-mol °C)

T° abs	CO_2	H_2O	CO	OH	NO	H_2	O_2	N_2	H	O	N	T° abs.
0												0
298,16	51,061	45,106	47,301	43,868	50,339	31,211	49,011	45,767	27,3927	38,4689	36,6145	298,16
300	51,116	45,154	47,342	43,934	50,384	31,253	49,056	45,809	27,4232	38,5010	36,6450	300
400	53,815	47,490	49,352	45,978	52,436	33,250	51,098	47,818	28,8524	39,9915	38,0742	400
500	56,113	49,344	50,927	47,553	54,046	34,809	52,728	49,385	29,9610	41,1308	39,1828	500
600	58,109	50,903	52,238	48,840	55,392	36,084	54,105	50,685	30,8667	42,0540	40,0885	600
700	59,895	52,269	53,373	49,927	56,556	37,167	55,303	51,805	31,6326	42,8307	40,8544	700
800	61,507	53,490	54,379	50,977	57,589	38,108	56,358	52,797	32,2959	43,5011	41,5177	800
900	62,980	54,599	55,287	51,723	58,520	38,946	57,327	53,692	32,8811	44,0914	42,1029	900
1000	64,3310	55,6180	56,1160	52,4910	59,3700	39,7040	58,1990	54,5090	33,4045	44,6183	42,6263	1000
1100	65,5822	56,5712	56,8779	53,1949	60,1500	40,3963	58,9983	55,2601	33,8780	45,0945	43,0998	1100
1200	66,7461	57,4654	57,5837	53,8470	60,8715	41,0365	59,7364	55,9565	34,3103	45,5288	43,5321	1200
1300	67,8334	58,3090	58,2413	54,4559	61,5425	41,6334	60,4220	56,6060	34,7079	45,9281	43,9297	1300
1400	68,8532	59,1084	58,8569	55,0278	62,1696	42,1938	61,0622	57,2143	35,0761	46,2975	44,2979	1400
1500	69,8132	59,8687	59,4353	55,5675	62,7580	42,7227	61,6628	57,7853	35,4188	46,6413	44,6406	1500
1600	70,7200	60,5939	59,9806	56,0788	63,3122	43,2243	62,2287	58,3261	35,7395	46,9628	44,9613	1600
1700	71,5792	61,2873	60,4964	56,5650	63,8358	43,7016	62,7640	58,8371	36,0407	47,2646	45,2625	1700
1800	72,3955	61,9515	60,9857	57,0285	64,3319	44,1571	63,2719	59,3221	36,3246	47,5492	45,5464	1800
1900	73,1727	62,5887	61,4510	57,4714	64,8034	44,5931	63,7555	59,7836	36,5932	47,8184	45,8151	1900
2000	73,9145	63,2010	61,8945	57,8956	65,2524	45,0112	64,2172	60,2237	36,8180	48,0737	46,0699	2000
2100	74,6238	63,7900	62,3181	58,3027	65,6811	45,4130	64,6590	60,6443	37,0904	48,3166	46,2124	2100
2200	75,3034	64,3574	62,7234	58,6939	66,0912	45,7998	65,0829	61,0471	37,3215	48,5481	46,5436	2200
2300	75,9557	64,9045	63,1121	59,0705	66,4811	46,1728	65,4904	61,4333	37,5424	48,7695	46,7646	2300
2400	76,5828	65,4328	63,4854	59,4337	66,8613	46,5329	65,8828	61,8044	37,7538	48,9814	46,9763	2400
2500	77,1865	65,9434	63,8444	59,7842	67,2240	46,8812	66,2614	62,1614	37,9566	49,1848	47,1794	2500
2600	77,7687	66,4374	64,1902	60,1230	67,5732	47,2183	66,6272	62,5054	38,1515	49,3803	47,3747	2600
2700	78,3307	66,9159	64,5238	60,4508	67,9100	47,5451	66,9812	62,8373	38,3390	49,5686	47,5628	2700
2800	78,8740	67,3796	64,8456	60,7664	68,2351	47,8622	67,3241	63,1579	38,5196	49,7501	47,7443	2800

2900	79,3997	67,8294	65,1572	61,0764	68,5494	48,1702	67,6568	63,4679	38,6940	49,9254	47,9197	2900
3000	79,9090	68,2661	65,4586	61,3753	68,8537	48,4696	67,9797	63,7680	38,8624	50,0950	48,0894	3000
3100	80,4029	68,6904	65,7506	61,6658	69,1484	48,7609	68,2936	64,0588	39,0253	50,2592	48,2539	3100
3200	80,8822	69,1029	66,0338	61,9462	69,4342	49,0447	68,5990	64,3409	39,1830	50,4183	48,4135	3200
3300	81,3480	69,5042	66,3087	62,2230	69,7117	49,3213	68,8963	64,6148	39,3359	50,5728	48,5687	3300
3400	81,8008	69,8949	66,5757	62,4906	69,9813	49,5911	69,1859	64,8809	39,4842	50,7229	48,7197	3400
3500	82,2414	70,2754	66,8354	62,7515	70,2434	49,8545	69,4683	65,1397	39,6282	50,8689	48,8669	3500
3600	82,6705	70,6463	67,0680	63,0059	70,4985	50,1119	69,7439	65,3915	39,7681	51,0111	49,0105	3600
3700	83,0886	71,0080	67,3340	63,2542	70,7469	50,3635	70,0128	65,6368	39,9043	51,1496	49,1508	3700
3800	83,4962	71,3609	67,5738	63,4966	70,9891	50,6097	70,2756	65,8758	40,0368	51,2846	49,2880	3800
3900	83,8941	71,7054	67,8076	63,7336	71,2252	50,8506	70,5323	66,1089	40,1658	51,4165	49,4223	3900
4000	84,2826	72,0420	68,0357	63,9652	71,4556	51,0866	70,7834	66,3364	40,2916	51,5452	49,5539	4000
4100	84,6620	72,3710	68,2584	64,1917	71,6806	51,3178	71,0290	66,5585	40,4142	51,6711	49,6830	4100
4200	85,0329	72,6926	68,4760	64,4135	71,9005	51,5445	71,2693	66,7754	40,5340	51,7942	49,8099	4200
4300	85,3957	73,0071	68,6887	64,6306	72,1154	51,7668	71,5046	66,9875	40,6509	51,9147	49,9345	4300
4400	85,7507	73,3150	68,8966	64,8434	72,3256	51,9850	71,7351	67,1949	40,7651	52,0326	50,0572	4400
4500	86,0982	73,6164	69,1001	65,0518	72,5312	52,1992	71,9609	67,3979	40,8767	52,1482	50,1779	4500
4600	86,4386	73,9117	69,2993	65,2563	72,7326	52,4096	72,1822	67,5965	40,9859	52,2615	50,2969	4600
4700	86,7721	74,2011	69,4944	65,4569	72,9299	52,6164	72,3993	67,7911	41,0928	52,3727	50,4142	4700
4800	87,0991	74,4847	69,6855	65,6537	73,1232	52,8196	72,6122	67,9818	41,1973	52,4817	50,5299	4800
4900	87,4198	74,7629	69,8728	65,8470	73,3128	53,0194	72,8210	68,1687	41,2998	52,5888	50,6442	4900
5000	87,7344	75,0359	70,0565	66,0368	73,4987	53,2159	73,0261	68,3520	41,4002	52,6939	50,7571	5000
5100	88,0433	75,3038	70,2367	66,2233	73,6812	53,4093	73,2273	68,5318	41,4985	52,7972	50,8687	5100
5200	88,3466	75,5669	70,4136	66,4065	73,8602	53,5997	73,4250	68,7082	41,5950	52,8988	50,9790	5200
5300	88,6445	75,8254	70,5872	66,5867	74,0361	53,7871	73,6192	68,8815	41,6896	52,9986	51,0882	5300
5400	88,9373	76,0794	70,7576	66,7639	74,2088	53,9717	73,8100	69,0516	41,7825	53,0968	51,1962	5400
5500	89,2251	76,3290	70,9251	66,9382	74,3786	54,1536	73,9975	69,2188	41,8736	53,1933	51,3032	5500
5600	89,5081	76,5745	71,0897	67,1097	74,5454	54,3328	74,1819	69,3831	41,9632	53,2884	51,4092	5600
5700	89,7865	76,8159	71,2514	67,2785	74,7095	54,5095	74,3632	69,5446	42,0511	53,3820	51,5142	5700
5800	90,0604	77,0535	71,4105	67,4447	74,8709	54,6837	74,5416	69,7034	42,1375	53,4742	51,6183	5800
5900	90,3301	77,2873	71,5670	67,6084	75,0297	54,8555	74,7171	69,8596	42,2224	53,5649	51,7215	5900
6000	90,5955	77,5175	71,7209	67,7697	75,1860	55,0250	74,8898	70,0134	42,3059	53,6544	51,8238	6000

BIBLIOGRAPHY

1. Abramovich, G. N., Gazovaya dinamika vozdushno-reaktivnikh dvigateley [Gas Dynamics of Air-Breathing Reaction Engines], published by BNT [?], 1947

2. Bolgarskiy, A. V. and Shchukin, V. K., Rabochiye protsessy v zhidkostno-reaktivnykh dvigatelyakh [Operating Processes in Liquid-Propellant Rocket Engines], Oborongiz [State Publishing House of the Defense Industry], 1953

3. Britske, E. V., Termokhimicheskiye konstanty neorganicheskikh veshchestv [Thermochemical Constants of Inorganic Substances], published by AN SSR [The Academy of Sciences of the USSR], 1949

4. Vanichev, A. P., Termodinamicheskiy raschet goreniya i istecheniya v oblasti vysokikh temperatur [The Thermodynamic Calculation of Combustion and Discharge in High Temperature Areas], published by BNT, 1947

5. Vanichev, A. P. and Knorre, G. F., Obobshchenniye raschetnyye formuly gazovogo analiza [Generalized Gas Analysis Design Formulae], published by BNT, 1946

6. Vukalovich, M. P. et al., Termodinamicheskiye svoystva gazov [Thermodynamic Characteristics of Gases], Mashgiz [State Scientific and Technical Publishing House of Literature on Machinery], 1953

7. Glushko, V. P., Zhidkoye toplivo dlya reaktivnikh dvigateley [A Liquid Propellant for Reaction Engines], published by VVIA [Air Force Engineering Academy] im. N. Ye. Zhukovskiy, part I, 1936

8. Gukhman, A. A. and Ilyukhin, N. V., Osnovy ucheniya o teploobmene pri techenii gaza s bol'shoy skorost'yu [Basic Studies of Heat Exchange During a High-Speed Gas Discharge], Mashgiz, 1951

9. Getlend, K. U., Razvitiye upravlyayemykh snaryadov [The Development of Guided Missiles], Foreign Literature Publishing House, 1956

10. Dushkin, L. S., Osnovniye polozheniya obshchey teorii reaktivnogo dvizheniya [The Principal Aspects of the General Theory of Jet Propulsion], in the collection "Reaktivnoye dvizheniye" [Jet Propulsion], 1935, No. 1, ONTI [United Scientific and Technical Publishing Houses]

11. Zel'dovich, Ya. B. and Polyarnyy, A. I., Raschety teplovykh protsessov pri vysokoy temperature [The Calculations of Thermal Processes at High Temperature], published by BNT, 1947

12. Inozemtsev, N. V. and Zuyev, V. S., Aviatsionnyye gazoturbinnyye dvigatelei [Gas Turbine Aircraft Engines], Oborogiz, 1949

13. Inozemtsev, N. V., Osnovy termodinamiki i kinetiki khimicheskikh reaktsiy [Principles of the Thermodynamics and Kinetics of Chemical Reactions], Mashgiz, 1950

14. Knorre, G. F., Topochnyye protsessy [Heating Processes], Gosenergoizdat [State Power Engineering Publishing House], 1951

15. Kozhevnikova, T., Kryl'ya nashey rodiny [Wings of Our Motherland], Goskul'tprosvetizdat [State Publishing House of Literature on Culture and Education], 1953

16. Kondratyuk, Uy. V., *Zavoyevaniye mezhplanetnykh prostranstv* [The Conquest of Interplanetary Space], Oborongiz, 1947

17. Korolev, S. P., *Raketnyy polet v stratosfere* [A Rocket Flight into the Stratosphere], Voyenizdat [Military Publishing House], 1934

18. Langemak, G. E. and Glushko, V. P., *Rakety, ikh ustroystvo i primeneniye* [Rockets, Their Construction and Application], ONTI, 1935

19. Levinson, Ya. I., *Aerodinamika bol'shikh skorostey* [High Speed Aerodynamics], Oborongiz, 1950

20. Lomakin, A. A., *Tsentrobezhnyye i propellernyye nasosy* [Centrifugal and Turbine Pumps], GONTI [State United Scientific and Technical Publishing Houses], 1950

21. Malkov, M. P. and Pavlov, K. F., *Spravochnik po glubokomu okhlazhdeniyu* [A Handbook on Deep Cooling], Gostekhizdat [State Publishing House of Theoretical and Technical Literature], 1947

22. Mikheyev, M. A., *Osnovy teploperedachi* [Principles of Heat Transfer], Gosenergoizdat, 1949

23. Sushkov, V. V., *Tekhnicheskaya termodinamika* [Technical Thermodynamics], Gosenergoizdat, 1953

24. Fedulov, I. F. and Kireyev, V. A., *Uchebnik Fizicheskoy khimii* [A Textbook of Physical Chemistry], Goskhimizdat [State Scientific and Technical Publishing House of Chemical Literature], 1952

25. Feodos'yev, V. I. and Sinyarev, G. B., *Vvedeniye v raketnuyu tekhniku* [An Introduction to Rocketry], Oborongiz, 1956

26. Tsander, F. A., *Problema poleta pri pomoshchi raketnykh apparatov* [The Problem of Flight with the Aid of Rocket Devices], Oborongiz, 1947

27. Tsiolkovskiy, K. E., *Trudy po raketnoy tekhnike* [Works on Rocketry], Oborongiz, 1947

28. *Motornyye topliva, masla i zhidkosti* [Motor Fuels, Lubricants, and Liquids], vol. I, Gostoptekhizdat [State Scientific and Technical Publishing House of the Petroleum and Mineral-Fuel Industry], 1953

29. *Obzornyy byulleten' aviamotorostroyeniya* [Review Bulletin of Aircraft Engine Construction], No. 12, TsIAM [Central Scientific Research Institute of Aircraft Engines (im. P. I. Baranov)] Publishing House, 1948

30. *Spravochnik mashinostroitel'ya* [A Mechanical Engineer's Handbook], vol. I, Mashgiz, 1940

31. *Spravochnik khimika* [A Chemist's Handbook], Goskhimizdat, 1951

32. Terminologiya ZhRD [Liquid-Propellant Rocket Engine Terminology] published by the AN, SSSR, 1953

33. Tekhnicheskaya entsiklopediya [A Technical Encyclopedia], Spravochnik fizicheskikh, khimicheskikh i tekhnologicheskikh velichin [A Handbook of Physical, Chemical, and Technological Values], vols. 1-10, "Sovetskaya entsiklopediya" [Soviet Encyclopedia], 1927

34. Fizika i khimiya reaktivnogo dvizheniya [The physics and Chemistry of Jet Propulsion], collection No. 2, edited by Professor Sokolik, Foreign Literature Publishing House

35. Entsiklopedicheskiy spravochnik "Mashinostroyeniye" [Encyclopedia Handbook "Mechanical Engineering"], vols. 3, 4, 8, and 11, Mashgiz, 1948

36. Boden, I. Zeybert, G., Mills, M., and Summerfield, M., Nekotoriyye problemy teploperedachi i okhlazhdeniya raketnykh dvigateley [Certain Problems of Heat Transfer and Cooling of Rocket Engines], from the collection "Voprosy raketnoy tekhniki" [Problems of Rocketry], No. 3 (2), Foreign Literature Publishing House, 1952

37. Kooy, I. and Yutenbogart, I., Dinamika raket [Dynamics of Rockets], Oborongiz, 1950

38. Moles, G., Ispol'zovaniye raketnykh dvigateley dlya samoletov [The Use of Rocket Engines for Aircraft], from the collection "Voprosy raketnoy tekhniki" [Problems of Rocketry], No. 1 (7), Foreign Literature Publishing House, 1952

39. Satton, D., Raketnyye dvigateli [Rocket Engines], Foreign Literature Publishing House, 1952

40. Wimpress, R. N., Vnutrennyaya ballistika porokhovykh raket [Internal Ballistics of Solid-Propellant Rockets], Foreign Literature Publishing House, 1952

41. Feling, G. and Leser, T., Teoreticheskoye opredeleniye istinnogo sostava produktov sgoraniya i kislorode i kislorodno-azotnykh smesyakh pri temperaturakh do 2500° C i atmosfernom d[illegible]i [The Theoretical Determination of the Actual Composition of Combustion Products in Oxygen and Oxygen-Nitrogen Mixtures at Temperatures Up to 2,500° [illegible] and at Atmospheric Pressure], from the collection "Voprosy goreniya" [Combustion Problems], No. 2, Foreign Literature Publishing Hours, 1953

42. Tsukrov, M. and Warner, K., Primeneniye beloy dymyashcheysya azotnoy kisloty i topliva AN-F-58 v kachestve reaktivnogo topliva [The Use of White Fuming Nitric Acid and AN-F-58 Fuel as a Rocket Propellant], from the collection "Voprosy raketnoy tekhniki" [Problems of Rocketry], No. 3, Foreign Literature Publishing House, 1951

43. Eklind, K., Upravlyayemyye snaryady [Guided Missiles], from the collection "Voprosy raketnoy tekhniki" [Problems of Rocketry], No. 2, Foreign Literature Publishing House, 1951

44. Journal of the American Rocket Society, No. 82, 1950

45. Journal of the American Rocket Society, vol. 22, No. 3, 1952

RECOMMENDED READING

For Chapter I

Feodos'yev, V. I. and Sinyarev, G. B., *Vvedeniye v raketnuyu tekhniku* [An Introduction to Rocketry], Oborongiz, 1956

Inozemtsev, N. V. and Zuyev, V. S., *Aviatsionnyye gazoturbinnyye dvigateli* [Gas Turbine Aircraft Engines], Chapter I, Oborongiz, 1949

Tsander, F. A., *Problemy poleta pri pomoshchi raketnykh apparatov* [The Problem of Flight with the Aid of Rocket Devices], Oborongiz, 1947

Tsiolkovskiy, K. E., *Trudy po raketnoy tekhnike* [Works on Rocketry], Oborongiz, 1947

For Chapter II

Inozemtsev, N. V., *Osnovy termodinamiki i kinetiki khimicheskikh reaktsiy* [Principles of the Thermodynamics and Kinetics of Chemical Reactions], Mashgiz, 1950

Sushkov, V. V., *Tekhnicheskaya termodinamika* [Technical Thermodynamics], Gosenergoizdat, 1953

Fedulov, N. F. and Kireyev, V. A., *Uchebnik fizicheskoy khimii* [A Textbook of Physical Chemistry], Goskhimizdat, 1952

For Chapter III

Abramovich, G. N., *Prikladnaya gazovaya dinamika* [Applied Gas Dynamics], Gostekhteoretizdat [State Publishing House of Technical and Tehoretical Literature], 1953

Levinson, Ya. I., *Aerodinamika bol'shikh skorostey* [High Speed Aerodynamics], Oborongiz, 1950

For Chapter IV

Bolgarskiy, A. V. and Shchukin, V. K., *Rabochiye protsessy v zhidkostno-reaktivnykh dvigatelyakh* [Operating Processes in Liquid-Propellant Rocket Engines], chapter II, Oborongiz, 1953

Satton, D., *Raketnyye dvigateli* [Rocket Engines], chapter III, Foreign Literature Publishing House, 1952

For Chapters V and VI

Vanichev, A. P., *Termodinamicheskiy raschet goreniya i istecheniya v oblasti vysokikh temperatur* [The Thermodynamic Calculation of Combustion and Discharge in High Temperature Areas], published by BNT, 1947

Motornyya topliva, masla i zhidkocti [Motor Fuels, Lubricants, and Liquids], vol. I, *Motornyye topliva* [Motor Fuels], Gostoptekhizdat, 1953

For Chapter VII

Mikheyev, M. A., Osnovy teploperedachi [Principles of Heat Transfer], Gosenergoizdat, 1949

For Chapters VIII, IX, and X

Satton, D., Raketnyye dvigateli [Rocket Engines], Foreign Literature Publishing House, 1952

Bolgarskiy, A. V. and Shchukin, V. K., Rabochiye protsessi v zhidkostno-reaktivnykh dvigatelyakh [Operating Processes in Liquid-Propellant Rocket Engines], chapter II, Oborongiz, 1953

END

7·22·65