NAVAL FACILITIES ENGINEERING SERVICE CENTER
Port Hueneme, California 93043-4370

USER GUIDE
UG-2022-ENV

USER GUIDE FOR CONVERSION TO DUAL FUEL OPERATION OF EMD 645 ENGINES ON NAVY MUSE GENERATOR SETS

by

Norman L. Helgeson, Ph.D.
Scott E. Jensen, Eugene Conversions, Inc.
Allen E. Willey, PO1
Delbert Terrell, PO2
Dave Vawter, PO1
Michael Childers, PO1

March 1997

Sponsored by
Naval Facilities Engineering Command

REPORT DOCUMENTATION PAGE

Form Approved
OMB No. 0704-018

1. AGENCY USE ONLY *(Leave blank)*

2. REPORT DATE
March 1997

3. REPORT TYPE AND DATES COVERED
Final

4. TITLE AND SUBTITLE
USER GUIDE FOR CONVERSION TO DUAL FUEL OPERATION OF EMD 645 ENGINES ON NAVY MUSE GENERATOR SETS

5. FUNDING NUMBERS

6. AUTHOR(S)
N.L. Helgeson, Ph.D, S.E. Jenson (Eugene Conversions, Inc.),
A. Wiley, D. Terrell, D. Vawter, and M. Childers

7. PERFORMING ORGANIZATION NAME(S) AND ADDRESSE(S)
Naval Facilities Engineering Service Center
1100 23rd Ave
Port Hueneme, CA 93043-4370

8. PERFORMING ORGANIZATION REPORT NUMBER
UG-2022-ENV

9. SPONSORING/MONITORING AGENCY NAME(S) AND ADDRESSES

Naval Facilities Engineering Command
200 Stovall Street
Alexandria, VA 22332-2300

Chief of Naval Operations
2000 Navy Pentagon (Code N45)
Washington, DC 20350-2000

10. SPONSORING/MONITORING AGENCY REPORT NUMBER

11. SUPPLEMENTARY NOTES

12a. DISTRIBUTION/AVAILABILITY STATEMENT
Approved for public release; distribution is unlimited.

12b. DISTRIBUTION CODE

13. ABSTRACT *(Maximum 200 words)*

Conrversion of the Navy's Mobile Utilities System Equipment (MUSE) diesel generators to dual fuel (natural gas plus diesel fuel) operation to reduce their NOx (nitrogen oxide) emissions is described. The Navy maintains a fleet of 60 such units, powered by EMD 645 engines, that range in size from 1,500 kW to 2,500 kW. A means for providing low-NOx MUSE generators that will not compromise the operational capability of the fleet is required.

This guide is based upon the experience gained from converting a 1,500 kW MUSE unit to dual fuel operation (the unit is currently installed and operating at King's Bay Naval Station in Georgia). Information on the conversion process, operation, maintenance, and the cost of the dual fuel conversion are provided.

14. SUBJECT TERMS
Diesel generators, MUSE, dual fuel conversions, low-NOx emissions, EMD 645 engines, and natural gas operations.

15. NUMBER OF PAGES
166

16. PRICE CODE

17. SECURITY CLASSIFICATION OF REPORT	18. SECURITY CLASSIFICATION OF THIS PAGE	19. SECURITY CLASSIFICATION OF ABSTRACT	20. LIMITATION OF ABSTRACT
Unclassified	Unclassified	Unclassified	UL

EXECUTIVE SUMMARY

Steps are described for converting the Navy's Mobile Utilities System Equipment (MUSE) diesel generators to dual fuel (natural gas plus diesel fuel) operation to reduce their NOx (nitrogen oxide) emissions. The Navy maintains a fleet of 60 such units, powered by EMD 645 engines, that range in size from 1500 kW to 2,500 kW. As the current MUSE diesel units meet few existing local NOx emission regulations, newer more-restrictive regulations (a trend now ensured with the proposed further tightening of the National Ambient Air Quality Standards) will ensure that the areas accessible to MUSE diesel generators will continue to decrease. Therefore a means for providing low-NOx MUSE generators that will not compromise the operational capability of the fleet is required.

This guide is based upon the experience gained from converting to dual fuel operation a 1500 kW MUSE unit that is now installed and operating at the King's Bay Naval Station in Georgia. Information on the conversion process, operation, maintenance and the cost of the dual fuel conversion are provided.

NOx emission reductions of 70 percent were demonstrated with this unit; NOx reductions of greater than 90. per cent are achievable using an additional secondary ignition cell. Capital requirements for the retro-fit dual fuel conversion of a 2500 kW MUSE engine generator are shown to be $158. per kilowatt (including the secondary ignition cells). This is compared to the cost of replacing this same MUSE unit with a new spark-ignited, low-NOx, natural gas engine. The cost for the latter is $560. per kilowat. For a 2500 kW MUSE unit, these numbers translate into a capital savings of over $1.0 million if the option of retro-fitting for dual fuel operation is chosen. Operating costs for dual fuel (natural gas) operation of MUSE generating sets are also substantially reduced over that of unmodified diesel operation. For the case evaluated, the cost for natural gas firing is 4.1 cents per kW-hr while that for diesel firing is 8.9 cents kW-hr.

A further major operational (strategic) advantage of the retro-fit dual fuel unit over that of a new, spark-ignited, natural gas engine is that it can be made to operate as either a full diesel or a full natural gas unit.

ACKNOWLEDGEMENTS

This project was funded by the Pollution Abatement Ashore Progam, managed by the Naval Facilities Engineering Command, and sponsored by the Environmental Protection, Safety and Occupational Health Division (N45) of the Chief of Naval Operations.

This project would not have been possible without able assistance of many people. A technically challenging aspect of the project was automation of the controls which was required to ensure the safe handling of natural gas within the engine house. Master Chief Petty Officer (retired) Ronald Kluender's intimate knowledge of the original MUSE control system and Scott Jensen's thorough understanding of the ECI dual fuel conversion engine control unit (ECU) made possible the successful integration of those two control systems. John Pesar, Program Manager for MUSE, made available a 1,500 kW MUSE engine generator set to serve as the prototype and approved use of MUSE personnel to assist with the conversion to dual fuel operation. MCPO Russell Dominy, MCPO Jim Riley, PO1 Anthony Fourage, and PO1 Rodney Hood also assisted.

Delma Keene of SUBASE King's Bay provided a field test site along with funds from NAVSEA to install the dual fuel unit at King's Bay. He and Bill Strickland arranged for installation of the unit there, oversaw its operational schedule, and provided a strong presence in resolving field operational problems. Their assistance was invaluable. Ralph Kerwin of Gage Babcock (fire safety consultants) helped to define hardware and procedures for safely operating the MUSE engine generator while using natural gas. Kevin Beaty of Southwest Research Institute (SwRI) recognized the potential value of the results of this project to the efforts to GasRail, Inc. for developing lo-NO_x engines for locomotive use, and provided flowrate measuring and data logging instrumentation for the project. Jack Smith and Butch Quip of SwRI installed that instrumentation.

George Warren and Ed O'Neil of NFESC provided structural recommendations for the installation and mounting of a new compressor and water pump. Wayne Tanaka of the Natural Gas Vehicle Division of the Southern California Gas Company (SCGC) made special arrangements for weekend use of the SCGC compressed natural gas tanker along with a high-capacity pressure reduction manifold and the personnel to operate them for shakedown tests. Manny Perez, Bob Saunders, Ken Hanzlick, and Galen Marks of NFESC gave up their weekends to assist with measurements during the shakedown tests.

CONTENTS

CONTENTS

CONTENTS

1.0 INTRODUCTION

This user data package describes steps in the conversion of the Navy's Mobile Utilities System Equipment (MUSE) transportable diesel generator sets from diesel to dual fuel (natural gas plus diesel fuel) operation. These diesel generator sets are part of a fleet of 60 such units maintained by the Navy's MUSE detachment for deployment to Navy, other military, and sometimes civilian uses throughout the world (Ref 1-1). The units range in size from 750 to 2,500 kW and are powered, largely, by EMD 645 engines manufactured by the ElectroMotive Division of the General Motors Corporation. The engines are medium-speed (750 or 900 RPM), have 8 to 20 cylinders with cylinder displacements of 645 cubic inches, and use a 2-stroke operational cycle. This guide is based on the experience gained from converting to dual fuel operation a 1,500-kW MUSE unit that is now installed and operating at the King's Bay Naval Station in Georgia (Fig. 1-1). The technology used for this conversion was provided by ECI Inc., Tacoma, Washington. MUSE personnel, assisted by ECI technicians, installed the required engine modification hardware and the electrical and engine skid modifications.

1.1 Environmental Compliance and Navy Need

Of the Navy's many diesel engines, those installed in its MUSE generating equipment for temporary (<4 years) stationary electrical power were the first off-road Navy engines to be affected by environmentally-mandated nitrogen oxide (NO_x) emission regulations. As MUSE units are transportable but are typically employed at a given site for periods exceeding that normally used to define 'temporary power' (temporary power is often defined as service not exceeding one year), they must comply with air pollution regulations that apply to stationary power generating equipment. But regulatory emission standards for stationary power units are highly variable as they both depend upon the degree of nonattainment in the surrounding air control region and upon the air control district in which the region is located. Therefore MUSE units must have a capability for meeting these variable standards as the units are moved from one location to another. Such regulations can vary from none to those applicable in the South Coast Air Quality Management District (SCAQMD) of California, where emission limits are <1.0 gram/horsepower-hour (gm/HpH). As NO_x emissions from current MUSE units range anywhere from 12 to 16 gm/HpH, attempts to operate them in areas in which they do not comply with emission regulations could result in the imposition of heavy fines and as well as ordered shut-down by civilian authorities. Therefore a means for reducing NO_x emissions from them is required.

The following factors and criteria were determined to be important in evaluating approaches for reducing NO_x emissions from MUSE diesel generator sets: (a) most MUSE engine generator units are driven by an EMD 645 engine, (b) when burning diesel fuel, these EMD engines do not meet the emission requirements in many areas of the country where the Navy operates, (c) although transportable, MUSE units must comply with emission regulations that apply to stationary devices because of their extended time on site, (d) the required transportability of the MUSE units limits the types of NO_x emission control technology that can

be used with them, (e) the large number of MUSE units in inventory and the cost of their replacement requires that a retrofit rather than a replacement technology be acquired for reducing NO_x emissions, (f) a capability for firing diesel fuel must be maintained to meet the Navy's operational commitments, (g) full generator power capability must be maintained, (h) reliability equal to or better than that for the diesel-only configuration is needed, (i) the technology selected must be within the technical expertise of MUSE and onsite personnel who will be required to operate and maintain the modified units, and (j) operational costs must not escalate appreciably beyond those incurred when the MUSE unit is operating as a diesel-only engine.

1.2 Selection of NO_x Control Technology

Two general approaches can be used for reducing NO_x emissions from diesel engines: (a) modification of the engine combustion process so that fewer NO_x species (nitric oxide, NO, and nitrogen dioxide, NO_2) are generated, and/or (b) treatment of the exhaust gases to destroy the NO_x species generated to prevent their emission into the atmosphere. Of the many variations of these approaches that have been investigated, two were considered for application to MUSE diesel generator sets: (a) conversion of the engine to dual fuel operation, and (b) the use of selective catalytic reduction (SCR) for treatment of the engine exhaust stream. Although SCR offers the advantage of bringing the MUSE engine generators into immediate full compliance with the most restrictive of NO_x emission regulations, its application would add significant cost, complexity, and size (requiring that an additional module be transported) to the transportable MUSE engine generator set, and would also introduce ammonia (NH3, a hazardous chemical) at the operating site. NH3, which is used as the chemical reductant for NO_x, is not only a hazardous chemical, but, itself, presents a threat to the environment. Therefore the SCR process using NH3 as the reductant was not considered to be a practical solution for reducing NO_x emissions from MUSE diesel generator sets.

The recommended application of dual-fuel technology (or alternative fuel) is based upon a retrofit conversion kit designed, specifically, for the EMD 645 engine by Energy Conversions, Incorporated, Tacoma, WA. The performance, reliability, and emissions reduction of that conversion technology have been demonstrated in a single application on two tandem locomotives used for coal line-haul operations on the Burlington and Northern Railway between Montana and Wisconsin (Ref 1-2). Liquefied natural gas (LNG) from a separate LNG fuel car was used to fuel the tandem locomotives, and NO_x reductions of nearly 70 percent (to 4.0 from the 12.0 gms./Hph produced when burning diesel fuel) were achieved. Because of these demonstrated results, because no other competing technology could make similar claims with the EMD 645 engine, and because this technology satisfied the criteria for selection of a MUSE NO_x reduction technology (discussed above), it was selected for installation and testing on a 1,500 kW MUSE diesel generator set.

1.3 Installation and Testing of Prototype Dual Fuel MUSE Diesel Generator

The retrofit, dual fuel conversion was completed in July 1995 at the Construction Battalion Center in Port Hueneme, California. Although previously tested in a locomotive application, it had not been used for stationary power. And although the application to stationary power is, in ways, not as complex as that for locomotives, it is different and presents other

significant challenges. To meet these new challenges, to accommodate the use of natural gas within the MUSE unit, and to provide a capability for the remote operation of the engine generator unit, a new automated control system was designed and installed along with the dual-fuel conversion. Operational checkout tests of the modified unit provided the emissions data that are summarized in Table 1-1. The tests also showed: (a) that the unit could be started, electrically synchronized with a grid, stopped, and otherwise controlled remotely, (b) that full engine generator set power could be produced, and (c) that NO_x emissions could be reduced by 65 percent, the approximate level anticipated by the dual fuel conversion. The modified unit was then transported to SUBASE King's Bay Georgia where it is now undergoing field testing. Further engine efficiency, fuel usage, power, and emissions data will be obtained during the field test period along with maintenance and other operational and control data.

1.4 Organization of the Guide

This guide contains the information necessary for installing, operating, and maintaining the dual fuel conversion hardware supplied by ECI Inc., Tacoma WA, when used on MUSE diesel generator units that utilize the EMD 645 engine. Section 2 reviews some of the factors involved in NO_x production in 2-stroke diesel engines and some of the efforts that have been undertaken previously to minimize those emissions. Suggestions are included for making further important reductions in NO_x emissions from the EMD 645 engines. Section 3 describes the fundamental elements of the ECI dual fuel conversion kit, and Section 4 provides detailed descriptions and installation instructions for the conversion sub-systems, as defined for this new application. Section 5 describes operational procedures of the converted unit and Section 6 discusses field site installation, maintenance, and training requirements. Section 7 provides capital and operating costs for the retrofit, dual-fuel MUSE diesel generator.

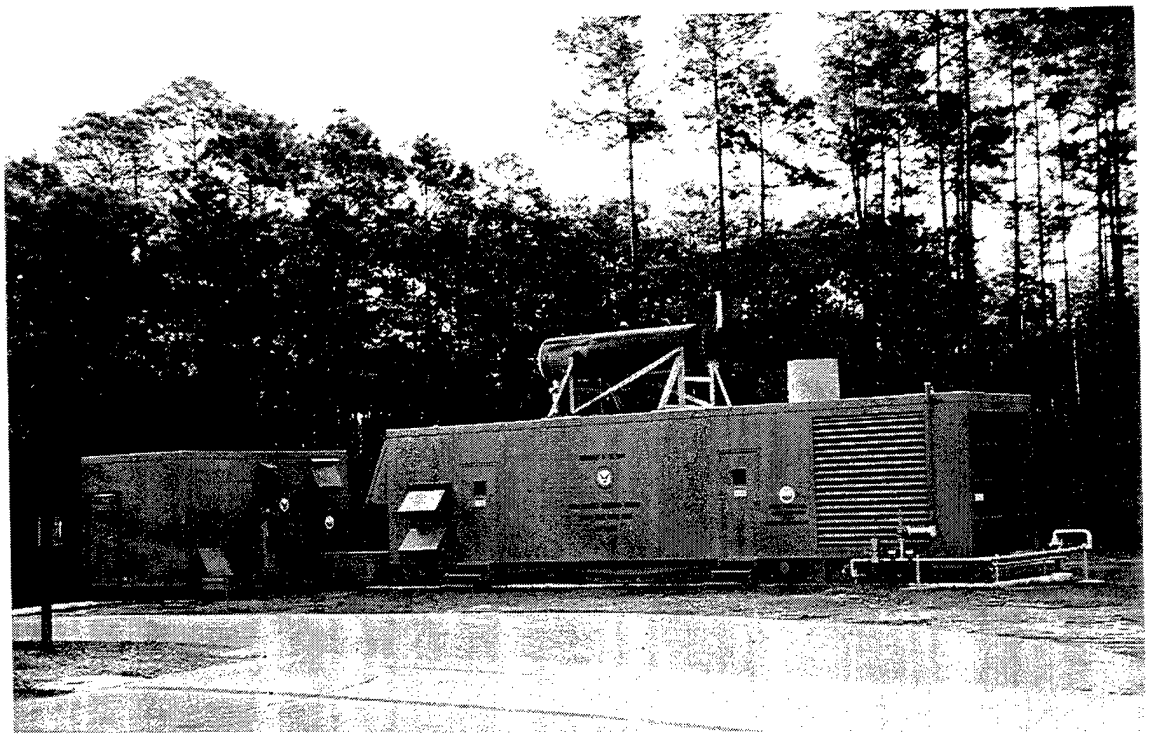

(a) Side view of switchgear, interconnecting cable housing, and engine house.

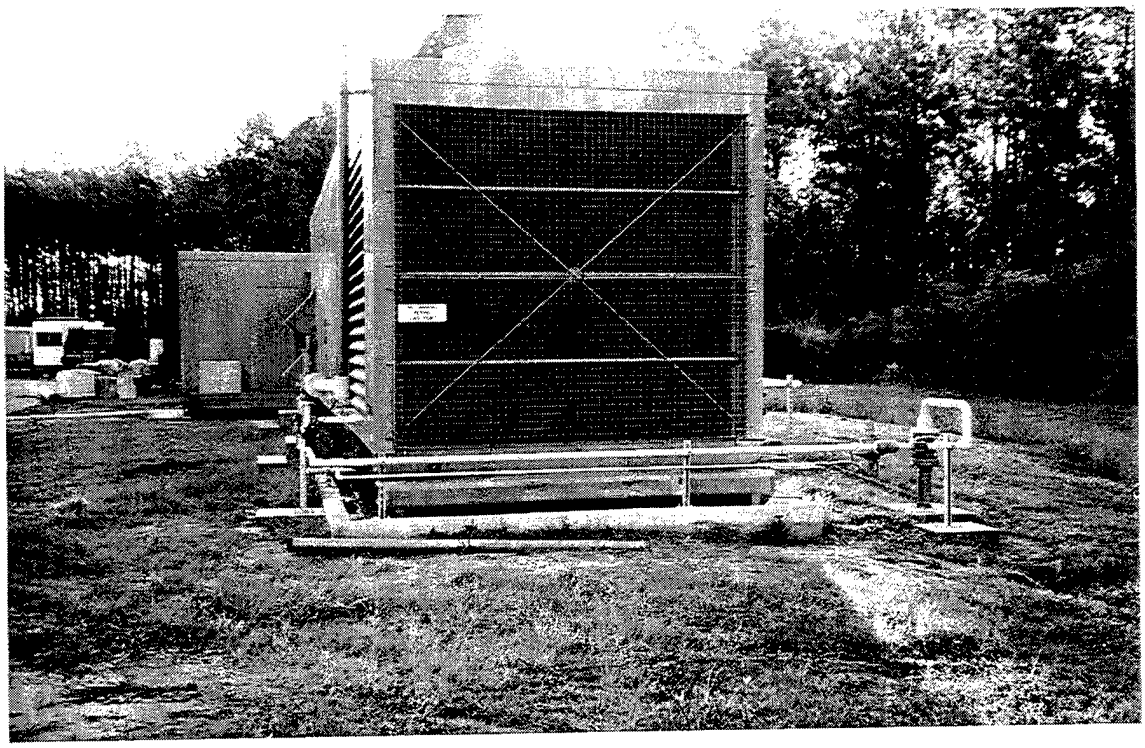

(b) End view showing natural gas supply line.

Figure 1-1. MUSE 1,500 kW dual-fuel engine generating set at SUBASE, King's Bay, Georgia.

Table 1-1. Comparison of Measured Emissions Before and After Dual-Fuel Conversion

Engine			Emissions		
	Fuel	Power (hp)	NO_x (grams/hph)	CO (grams/hph)	Particulates (grams/hph
Before Conversion	Diesel	2,119	10.5	0.25	0.35
After Conversion	Dual Fuel	2,119	2.40	9.2	0.211
	Dual Fuel	2,402	3.42	11.4	---

2.0 NO_x REDUCTION FOR LARGE, TWO-STROKE DIESEL ENGINES

Of the many combustion devices having large commercial usage, diesel engines have provided the greatest technical challenges to achieving significant NO_x reductions. Two general approaches can be used to reduce NO_x emissions from them: (a) modification of the engine combustion process so that fewer NO_x species (nitric oxide, NO, and nitrogen dioxide, NO_2) are generated, and/or (b) treatment of the exhaust gases to destroy the NO_x species generated and to prevent their emission into the atmosphere. As diesel engines are lean-burn (stoichiometrically, fuel lean), the catalytic reactors used by spark-ignited gasoline engines to reduce NO_x and hydrocarbon emissions and which require near-stoichiometric combustion, are not effective for reducing the concentrations of the same pollutant species from diesel exhausts. Further, diesel engines operate at higher compression ratios than gasoline engines and combustion in them proceeds according to a complex, heterogeneous diffusion process as opposed to the simpler, easier-to-control, homogeneous flame propogation that characterizes gasoline engine combustion (see Fig. 2-1). The higher compression ratio of the diesel engine leads to its greater efficiency and the diffusion-controlled combustion is what permits its operation at higher pressures without the occurrence of destructive knocking. However, both of these factors lead to higher combustion temperatures and increased NO_x production in the diesel engine.

Most of the work for reducing NO_x emissions from diesel engines has been with smaller sized engines. Little research has been carried out on engines as large as the EMD 645. And as the complexity of combustion increases and one's ability to control those processes decreases with engine size, progress in NO_x emissions reduction from larger engines has been comparably slow. However, as characterization of the fundamental processes in diesel engines improves, the results for controlling NO_x emissions from both large and small engines may improve. The Navy's Office of Naval Research (ONR) is sponsoring fundamental research (see Refs 2-1, 2-2, and 2-3) on the control of NO_x emissions from the larger engines used for boat and ship operations. Those results could also find an application with MUSE engines. However, the practical application of that research, if successful, is several years in the future. A further complication with the EMD 645 engines is that they are 2-stroke engines. This reduces the number of engine parameters available for controlling or altering the internal engine processes for the purpose of NO_x reduction. Further, most work on NO_x reduction from diesel engines has been on those of the 4-stroke design. Therefore, the quantity of engine research to draw on for reducing NO_x emissions from the EMD 645 engine is limited.

2.1 Exhaust Gas Treatment

Exhaust gas treatment provides one option for significantly reducing NO_x emissions from diesel engines, although the additional equipment and chemicals required for its implementation works against its application on MUSE units. Two such approaches are available commercially; others are being developed. Those available commercially use a chemical reductant either with catalysts (selective catalytic reduction (SCR)), or without catalysts (selective non-catalytic reduction (SNCR)). The reductants used are usually ammonia or a related compound such as

urea. Other than the identification of a useful chemical additive, the development of an appropriate catalyst is the major technical problem in the development of a useful SCR approach. Although SNCR requires no catalyst, other chemical routes and temperatures for the destruction of NO_x must be used. The general features and flow paths of the two approaches are contrasted in Figure 2-1.

Ammonia has been the chemical most used for NO_x reduction, but recent years have seen development of the use of related chemicals (e.g., urea and cyanuric acid). Ammonia and urea have both been used in SNCR and SCR processes, but the temperature window of their application for SNCR is too high to be useful with diesel exhausts. The use of urea in SCR processes is a rather recent development and offers significant advantages over that of ammonia. SCR (urea) provides at least the NO_x reduction that SCR (NH_3) provides (both >90 percent), but without the burden of being either a hazardous chemical or an environmental threat. The use of SCR (urea) was developed in Europe and is currently available only from European suppliers. Cyanuric acid has been used for SNCR (non-catalytic) processes. Its major claim is that it is more effective than either ammonia or urea at the lower temperatures characteristic of diesel exhausts.

2.2 NO_x Reduction From EMD 645 Dual-Fuel Engines

Several efforts have been undertaken to use natural gas with 2-stroke diesel engines. Those of interest to the MUSE engine generator program are summarized in Table 2-1. The first line provides operating data from current MUSE EMD 645 diesel engines as a baseline for comparison. The remaining cases are for engines from the same locomotive-type engine series (the EMD's 567, 645, and 710, cylinder displacement in cubic inches) and the Detroit Diesel 92 (a truck-sized engine). Fuel type is either dual fuel (DF) or natural gas (NG), and charging of the engine cylinders with natural gas is described as either early or late in the compression stroke. For early injection (EI), a low injection pressure (100 to 300 psi) can be used. Air flow and mixing patterns within the cylinder then produce a nearly homogeneous fuel/air mixture prior to ignition. For late cycle injection (LCI), a much higher pressure (>3,000 psi) is required, and as pre-mixing of the fuel and air is not achieved prior to ignition, a diesel-type combustion takes place. Ignition of the natural gas charge in both of these cases is by injection of a pilot quantity of diesel fuel (4 to 7 percent of the amount required for full diesel operation) into the cylinder at the time of ignition. Significant NO_x reduction is achieved with the EI process. NO_x reduction is much more difficult to achieve for the LCI process.

Anticipated advantages of LCI are increased engine thermal efficiency (a higher compression ratio diesel cycle can be used) and avoidance of the combustion "knock" that limits power production in Otto cycle (homogeneous combustion) engines. Disadvantages of LCI are the technical problems and high cost of providing natural gas at pressures greater than 3,000 psi and the difficulty in achieving reduced NO_x emissions in higher-pressure, higher-temperature combustion environments. The advantage of reduced fuel costs due to the use of natural gas rather than diesel fuel is provided by both approaches.

The data of Case 1 were obtained in 1982 from a locomotive engine fueled from compressed natural gas cylinders carried on a railroad flatcar (Ref 2-4). The major limitation observed in that test operation was the reduction (20 to 30 percent) of available engine power

caused by the onset of combustion knocking. In Case 2, the Department of Energy (DOE) sponsored single-cylinder engine tests (Refs 2-5 and 2-6) to determine if improved engine thermal efficiencies and power production could be obtained with a diesel-type (late cycle injection) combustion process for dual fuel operation. Although substantial progress was made in these tests, engine efficiency and exhaust emission objectives were not achieved. The DD 92 spark-ignited, truck-sized engine (Case 3) had significantly different requirements than those for the larger locomotive engines. Its manufacture was discontinued after several years' production.

Case 4 was undertaken by many of the same parties involved in Case 1, but with several changes. These included: using turbocharging rather than positive displacement compressors for charge-air compression; changing the piston crown design to improve fuel-air mixing and to reduce the compression from 14.5 to 12.8; altering the head configuration to allow admission of natural gas into the chamber using electronic rather than mechanical controls; incorporating additional charge-air cooling for the engine; modifying the controls of the injector rack; and incorporating single-bank engine idling to reduce emissions and improve engine efficiency (Ref 2-7). The results achieved were sufficient to convince the Burlington and Northern Railway to install retro-fit packages designed, specifically, for the EMD 645 engine on two tandem locomotives for coal line-haul operations between Montana and Wisconsin. Liquefied natural gas (LNG) was used as the fuel, and a separate LNG fuel car was constructed to provide fuel. An LNG refueling station for the round trip was provided in Minnesota. The performance, reliability, and emissions reduction of that technology were demonstrated in a program that continued for over two years. The technology represented by this demonstration test appears to be the only engine-related retro-fit technology available for achieving significant NO_x reductions with the EMD 645 engine.

The last entry in Table 2-1 is for development tests that have been underway at the Southwest Research Institute (SwRI) for development of the late, high-pressure injection of natural gas. Data regarding the performance, emissions, cost, and reliability of this technology have not yet been published.

2.3 Further Reduction of NO_x Emissions

Although the 70 percent reduction in NO_x demonstrated by the results of Case 4 is an important step forward, further NO_x reductions appear to be available with some additional modification of the dual-fuel EMD 645 engine. These have centered on the use of pre-ignition chambers and/or separate diesel injection igniters (see Table 2-2). The results presented in this table show that NO_x emissions for dual fuel injection can be reduced to the level of 1.0 gram/hph while the required pilot fuel is reduced to about 1.0 percent (Reference 2-8 and 2-9 indicate that CO, hydrocarbon, and particular emission are also significantly reduced.). Although the use of pre-chambers in engines is a familiar concept, their use with dual fuel engines has been limited and their significant advantages have not been widely explored. In the cases shown, the Wartsilla is a somewhat complex multi-fueled application requiring high pressure injection (Ref 2-10). It would not be useful for Navy MUSE units. Cooper Bessemer (Cases 2 through 5) conducted tests that started with the objective of improving the operation of large spark-ignited natural gas engines and resulted in major improvements in their dual fuel engines as well (see Fig. 2-2, Ref 2-8). The Cooper Bessemer engines were all four-stroke units. Fairbanks-Morse (Ref 2-9) achieved results similar to those of Cooper Bessemer with a 900-rpm, two-stroke,

opposed-piston engine. A plan view of the injector arrangement for the natural gas, diesel, and pre-chamber injectors of the Fairbanks Morse application is shown on Fig. 2-3. When the engine is operating in the diesel mode, both diesel injectors are used. In the natural gas mode, a single, low-pressure gas injector is used along with a diesel-fired pre-ignition chamber. Figure 2-4 shows Fairbanks-Morse data for four modes of engine operation: standard diesel, standard dual fuel, spark ignition, and Enviro Design pre-chamber. The numbers within each region of the figure refer to the number of data points used to define that region, NO_x emissions and thermal efficiency (brake-specific fuel consumption) are significantly superior for the Enviro-Design.

Pre-chamber parameters affecting the reliability and effectiveness for achieving ignition, minimum emissions, and minimum pilot fuel are shown on Figure 2-5 (Ref 2-8).

Combustion pre-chambers can be used with dual fuel engines to:

- Further lower NO_x, hydrocarbon, CO, and particulate emissions.
- Improve engine thermal efficiency.
- Reduce the required diesel pilot fuel for both two- and four-stroke dual fuel engines.

This technology is now available and could be applied to the EMD-645 to achieve further important improvements in exhaust emissions and thermal efficiency for dual fuel operation. Such efforts would require a modest extension of the existing dual fuel technology (low-pressure injection) already demonstrated on B&N RR locomotives and the Navy MUSE unit. Successful demonstration of a dual fuel EMD-645 engine with pilot ignition would bring the Navy's stationary dual fuel units to the level of NO_x required by the most restrictive emissions regulations in the country for stationary engines.

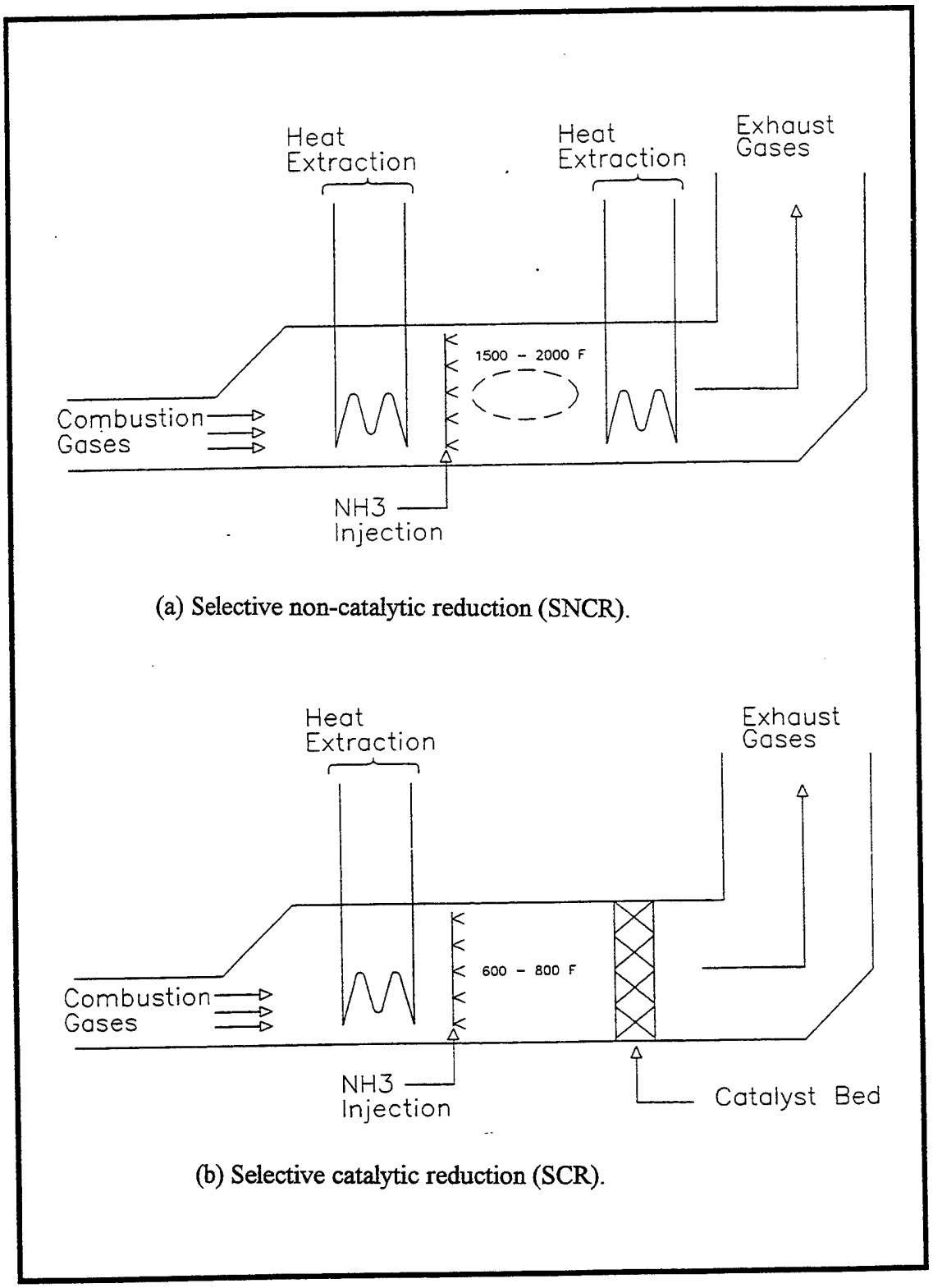

Figure 2-1. General features of SCR and SNCR NO_x reduction processes.

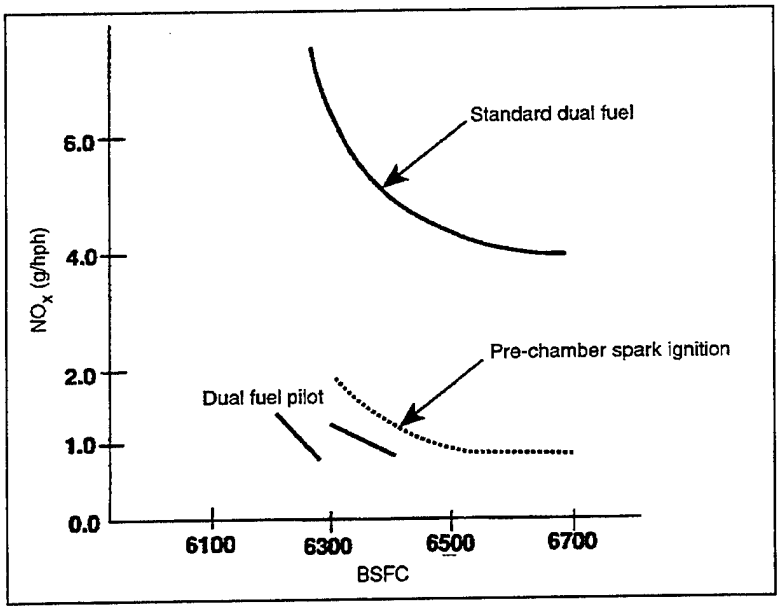

Figure 2-2. Results of tests conducted by Cooper Bessemer showing NO_x

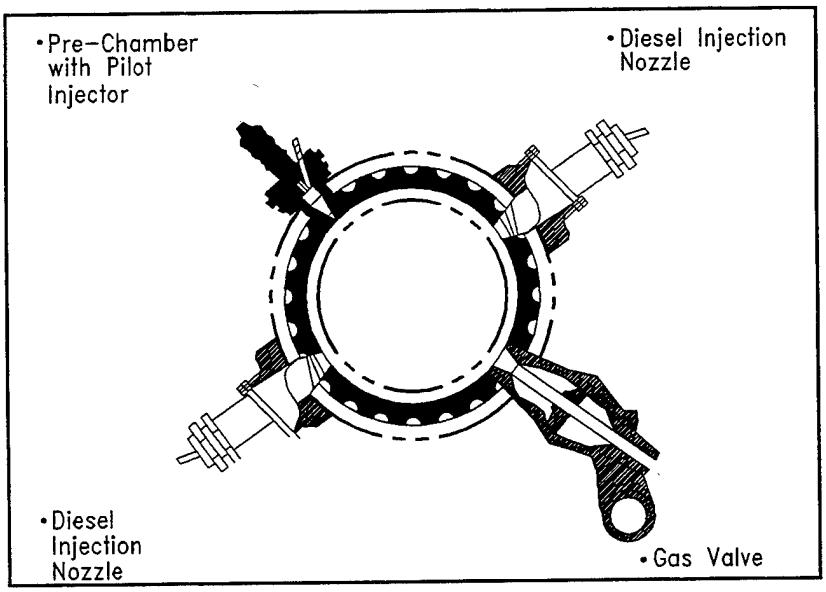

Figure 2-3. Plan view of arrangement of natural gas, diesel, and pre-chamber injection for Fairbanks-Morse application.

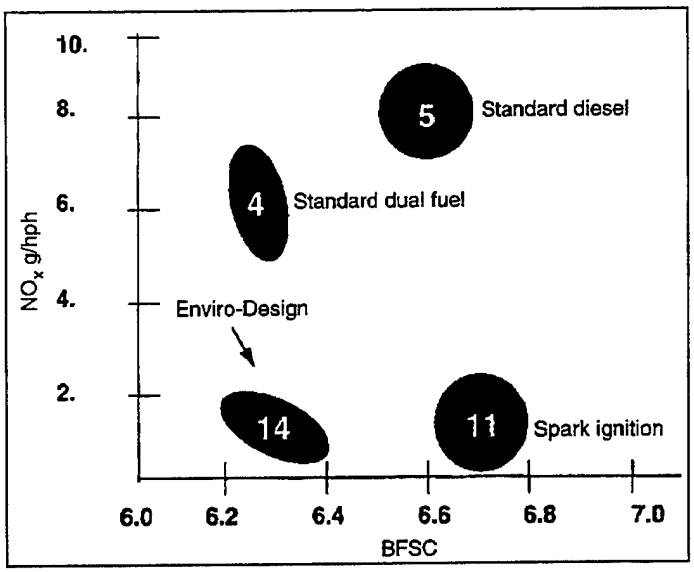

Figure 2-4. Results of tests conducted by Fairbanks-Morse showing NO_x emissions and brake specific fuel consumption (Btu/hph).

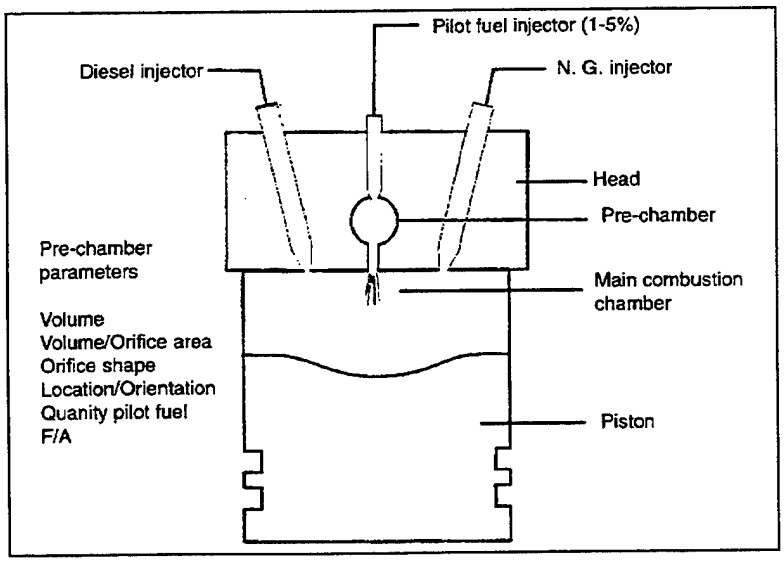

Figure 2-5. Schematic outline of dual fuel cylinder and parameters that affect pre-chamber performance.

Table 2-1. NO_x Reduction Technologies Related to EMD-645

Case	Mfgr	Number Strokes	Fuel Type*	Natural Gas Injection		Pilot Diesel		NO_X g/hph	Other
				Time	Pressure	%	Location		
1	EMD-567	2	DF	Early	200	7	Main	---	Low power, 1982
2	EMD-567	2	DF	Late	3,500	2.0 knock limit	Main, side wall	5	Heavy smoke, reduced efficiency SwRI**
3	Detroit Diesel 92	2	NG	Early	250	N/A	N/A	N/A	Discont'd production
4	EMD-645	2	DF	Early	100	6	Main	4	Full power locomotive, 1992-1995
5	EMD-710	2	DF	Late	High	?	Main	?	Results not available

*DF = Dual Fuel, NG = Natural Gas.
**Southwest Research Institute, Inc.

Table 2-2. Further NO_x Reductions Using Pre-Ignition Chambers

Mfgr	Number Strokes	Fuel Type*	Natural Gas Injection		Pilot Diesel		NO_X g/hph	Other
			Time	Pressure (psig)	%	Location		
Wartsilla	4	MF	Late	4,000	5	Main	5	New and Retrofit
Cooper Bessemer	4	NG	Early	Low	Spark	Pre-	1.5	Std for DF
Cooper Bessemer	4	DF	Early	Low	5	Main	5	Optimized
Cooper Bessemer	4	DF	Early	Low	1	Main	4	Unstable combustion
Cooper Bessemer	4	DF	Early	Low	0.9	Pre-	1	Full power, improved opacity
Fairbanks-Morse Enviro Op	2	DF	Early	Low	---	Main	4.5	---
Fairbanks-Morse Enviro Op	2	DF	Early	Low	1.4	Pre-	1	Full power

*MF = Multi-fuel, NG = Natural Gas, DF = Dual fuel.

3.0 ELEMENTS OF THE ECI/EMD DUAL-FUEL CONVERSION

The EMD 645 two-stroke engine has 8 to 20 cylinders, is of 45-degree V construction, uses a turbocharger to pressurize the air supply, and has direct diesel fuel injection. It has 4 exhaust valves in each cylinder head and receives its combustion air through ports in the cylinder liner (Fig. 3-1). When converted to dual fuel operation, natural gas is admitted into the cylinder by a gas inlet valve (GIV) with direct access to the combustion chamber (Fig. 3-2).

3.1 Natural Gas Fuel

Natural gas is composed principally of methane (CH4), with smaller quantities of other hydrocarbons, carbon dioxide, water, and other species. The composition of a typical pipeline natural gas is given in Table 3.1. The non-methane hydrocarbons are often referred to as "heavy ends;" the multiple carbon atoms in their molecules providing both increased molecular weight and additional combustion energy because of the greater number of atomic bonds present in a given volume of gas. The heavy ends contribute more energy (BTUs) per volume of gas than does pure methane, but do not, necessarily, provide for better engine operation. Natural gas with a composition of methane and heavy ends that has a heat content greater than 1,100 BTU per standard cubic foot (SCF) is known as a "hot gas" that can lead to destructive engine knocking.

Methane is a high octane (130) fuel that exhibits excellent antiknock characteristics when used in spark-ignited engines. However, fuel characteristics that are good for spark-ignited engines are often undesirable for compression-ignited engines. The latter require high compression ratios to heat the air in the cylinder to the point that the fuel will spontaneously ignite upon injection. When natural gas is used as the fuel a compression ratio enabling the natural gas to spontaneously ignite would be significantly greater than that required for diesel fuel and would be too high to maintain reliable engine operation and performance. Therefore other approaches for igniting the natural gas/air charge must be used.

3.2 Dual Fuel Characteristics

The solution adopted by ECI for igniting the premixed gas/air mixture in each cylinder is to use a small quantity of diesel fuel as a pilot charge to initiate combustion. Air is admitted to the cylinder at the bottom of the piston stroke and natural gas is then injected at low cylinder pressure. As the piston rises to the top of its compression stroke the gas/air charge is adiabatically heated. The diesel pilot fuel is then injected and the diesel fuel, with its lower ignition temperature, ignites and sets in motion a flame front through the gas/air mixture. Combustion chamber temperatures and pressures increase as the combustion front proceeds from the point of diesel injection. If the pressure becomes too great, autoignition can be triggered within the unburned air/gas mixture ahead of the flame front. When severe, this autoignition becomes destructive knock, and is aggravated when "hot gases" are used. To counteract this potential problem when burning natural gas in the EMD engine, ECI reduced the compression ratio of the engine from 14.5 to 12.8.

Although a lower compression ratio usually leads to lower engine power and efficiency, ECI redesigned the piston crowns and cylinder heads of the EMD 645 to minimize efficiency losses. It also added an auxiliary water-cooling circuit for the turbo-charger aftercooler to reduce air charge temperatures to the cylinders. These changes enabled the converted dual fuel engine to produce full diesel-rated horsepower in both dual fuel and diesels mode of operation in the locomotive application. Although the thermal efficiency for dual fuel operation is reduced several per cent from that obtained for full diesel operation, the savings in using natural gas more than compensates for this reduced efficiency and usually produces significant fuel savings.

Other than being a convenient method for initiating combustion, the dual fuel approach offers the advantage of a backup fuel system when natural gas is either not available or if a problem should arise in the gas system. This is an especially important consideration for Navy MUSE units. On the occurrence of a hazardous situation or engine malfunction while operating on natural gas, the ECI dual fuel system, controlled by the engine control unit (ECU), automatically shuts off the natural gas supply and, on-line, switches the engine to full diesel operation.

Natural gas in the ECI conversion is delivered to the cylinders at low pressure (100 to 200 psig). This involves admission of the natural gas into the combustion chamber when the piston is near the bottom of its travel and when chamber pressure is low. (High pressure injection (3,000 psig) entails forcing the gas into the already-compressed air along with the pilot fuel near the top of the piston stroke.) The major advantages of the low pressure injection system used by ECI are improved safety, material, and construction concerns, the opportunity to use less exotic, precision hardware than that required to handle and inject the low-lubricity natural gas at 3,000 psi, the avoidance of a fuel energy penalty for compressing the natural gas to 3,000 psi, and greater NOx reduction. High pressure injection systems would provide some advantage of increased horsepower and thermal efficiency, but the results of the development of that approach are not yet available.

3.3 Engine Operating Sequence

Dual fuel operation of the EMD engine can be divided into four phases: exhaust scavenging and air charging; gas admission, gas/air mixing and compression; ignition; and power production. These phases are described below and illustrated by the piston positions shown on Figure 3-2:

1. The piston is at the bottom of its stroke, starting up. The exhaust valves are open and the inlet air ports in the liner are uncovered. Compressed air (from the turbocharger at about 17 psig) is forced from the air box that surrounds each cylinder into and through each cylinder, displacing the exhaust gases from the previous power stroke out through the exhaust valves and into the exhaust system.

2. Admission of natural gas into the cylinder begins with the GIV opening after the cylinder has been recharged with fresh air and after the exhaust valves have closed. The quantity of fuel gas charged to the cylinder is controlled by a Gas Flow Control Valve (GFCV) and the time of opening of the GIV, both of which are controlled by the Engine Control Unit (ECU). The discharge of the gas into the cylinder under

pressure along with the air motion established by the recharging of the air provides fluid motion for mixing the fuel and air charges. The upward movement of the piston further enhances the mixing and compresses the air/gas charge to a temperature sufficient for ignition of the diesel pilot fuel.

3. Just prior to the arrival of the piston at top-dead center (TDC) a small amount of diesel pilot fuel is sprayed into the cylinder by the diesel injector. The pilot fuel is ignited by the hot gases and, in turn, serves as an ignition source for the natural gas/air mixture that is now nearly homogeneously mixed.

4. The fuel/air mixture burns, increasing the temperature and pressure within the cylinder and driving the piston down during the power stroke.

5. The exhaust valves open as the piston passes 106° after TDC to allow the exhaust gases to escape the power assembly, and the inlet air ports open at 135° to allow the charging air to scavenge the exhaust gases and to replace them with a fresh air charge. The piston continues to BDC where the cycle repeats itself.

3.4 Conversion Kit Components

The ECI conversion kit converts the standard EMD diesel engine to dual fuel operation by replacing the pistons and heads, adding gas handling and gas injection hardware, and installing modified aftercoolers and other supporting hardware and instrumentation.

3.4.1 Duel Fuel Heads and Pistons. The ECI dual fuel head is similar to the standard EMD diesel head with the exception of an additional opening through its top that directly accesses the combustion chamber. This opening accepts the gas inlet valve.

Piston head modifications are made to ensure proper gas/air mixing and to lower the compression ration to 12.9. The shape of the top of the piston enhances swirl and promotes combustion of the gaseous fuel. At idle, the engine runs 100 percent on diesel using the ECI-developed Low Emission Idle (LEI) method that alternates engine banks to improve efficiency and reduce emissions.

3.4.2 Gas Inlet Valves. The Gas Inlet Valve is a microprocessor controlled, electrically-acturated, pneumatically-driven poppet valve. The GIVs have advantages over mechanically-actuated valves in that they can be software-tuned for various engine speeds and conditions without changing the camshaft. The gas inlet valves are modular components that are unit replaceable, similar to the diesel injector. They remain closed when the engine is not running on gas to preserve their life and reliability and to prevent combustion by-products from building up on the GIV's valve stem.

3.4.3 Pilot Fuel Control and Diesel Injection. The standard diesel fuel injectors are re-calibrated to a pilot level. This slightly alters the fuel output at full diesel throttle, although full horsepower is still available when running in the diesel mode. The converted engine starts and

idles on diesel and automatically begins gas operation after the engine reaches operating temperature and a preset speed (880 RPM) and an engine loading of 300 kW. On shutdown, the diesel-to-gas operational transfer occurs at an engine loading of 55 kW, just prior to opening the breaker at 50 kW.

The fuel injection system is designed to make it possible to run equally well on full diesel or on natural gas. The pilot fuel control system employs an electronically controlled mechanism that is attached to the governor/fuel rack linkage. During gas operation the device overrides the diesel governor permitting only a small pilot quantity of diesel to be injected into the cylinder. During diesel operation, the device relinquishes control to the governor, which then provides conventional diesel operation.

3.4.4 Low Emission Idle (LEI). Low Emission Idle (LEI) runs the engine on eight of its sixteen cylinders when the engine is idling. The additional load the non-firing cylinders places on the engine causes the firing cylinders to burn the diesel fuel completely, producing a fuel savings of approximately 15 percent and significantly reducing unburned hydrocarbons in the exhaust. An electronic timer in the air control cabinet controls switching between the engine banks. (Note: The current Navy unit does not include this option as Navy engines do not, normally, have extended periods of idling. This option could be included, however, if smoking at idling, when diesel fuel is being used, is perceived to be a problem.)

3.4.5 Electronic Control Unit. The patent for the engine control method was purchased by the ECI partnership in 1984. Using copyrighted software developed in-house, the ECU controls critical engine functions and safety systems. It is designed to, on-line, switch the engine to full diesel operation in the event of an irregularity in gas operation.

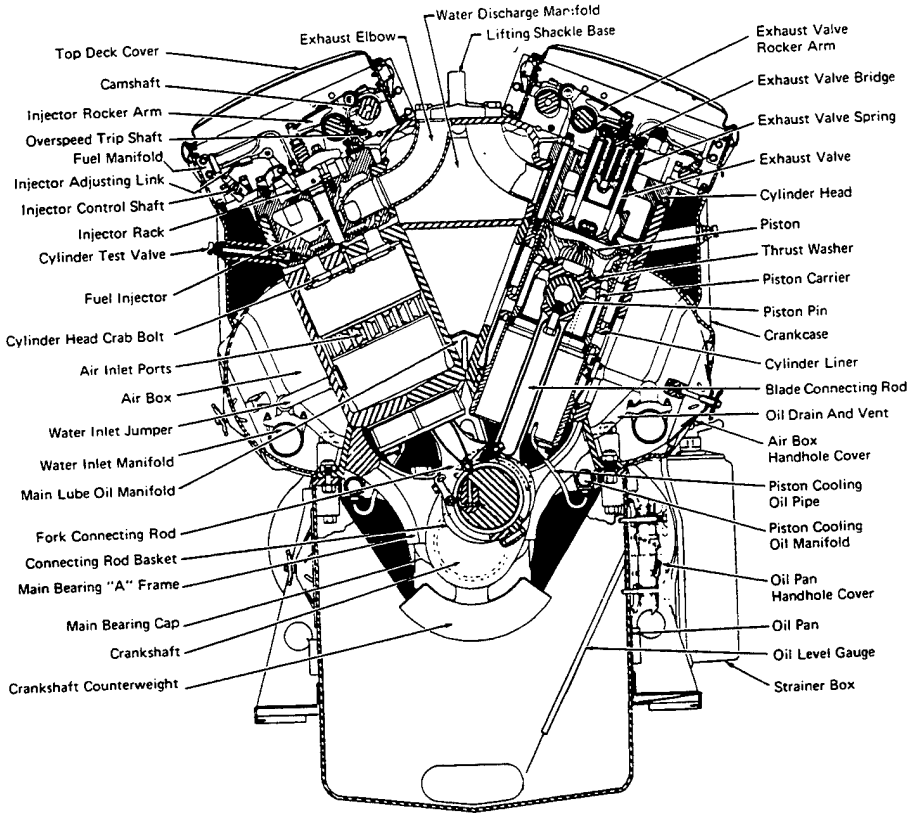

Figure 3-1. Cross section of EMD engine.

(Used by permission, Energy Conversions, Inc., U.S.A., 1996.)

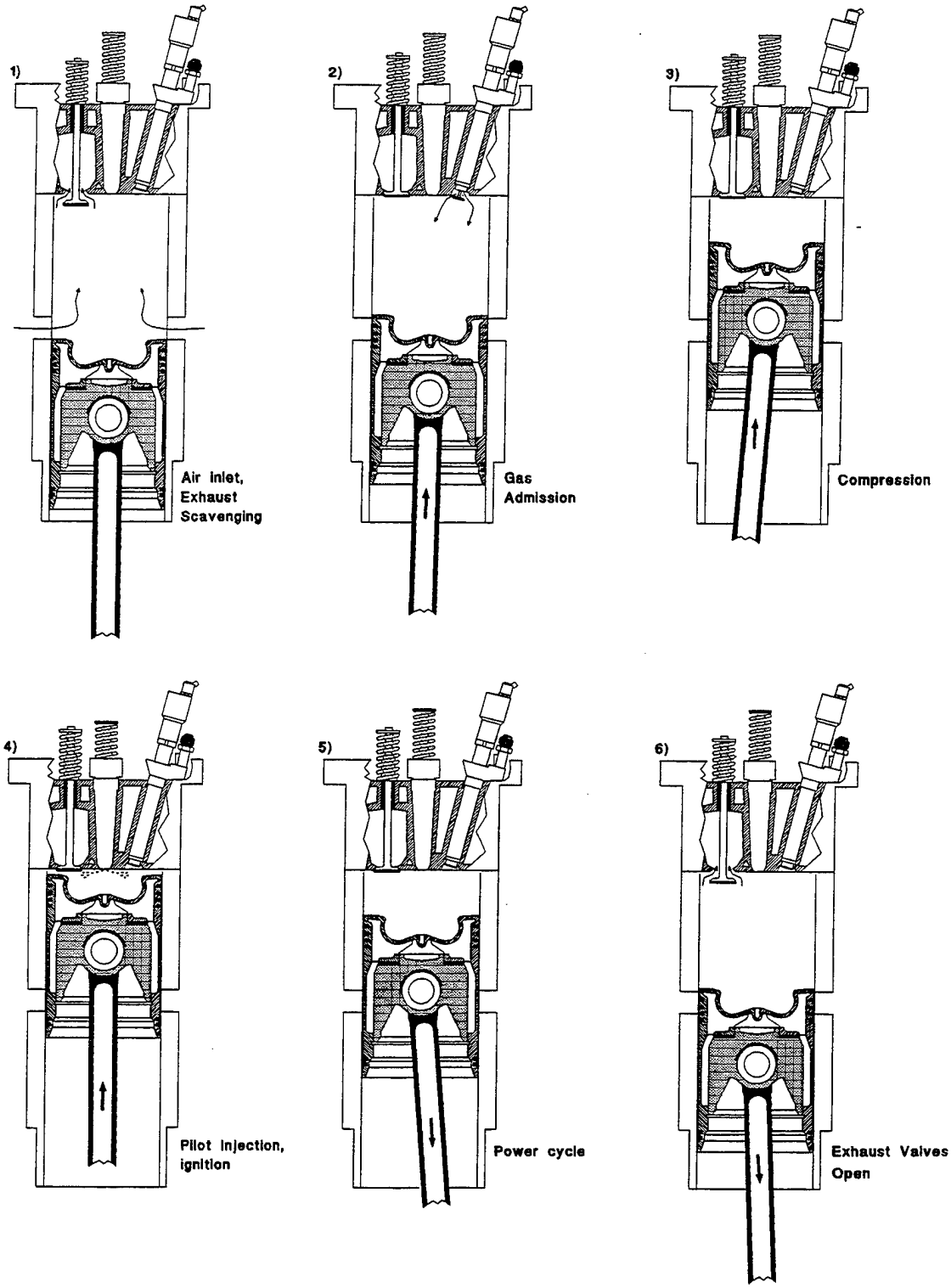

Figure 3-2. Dual-fuel EMD 645 engine operating phases.
(Used by permission, Energy Conversions, Inc., U.S.A., 1996)

Table 3-1. Typical Natural Gas Composition

Component	Molar Percentage
Nitrogen	0.323
Carbon Dioxide	0.174
Methane	92.241
Ethane	6.500
Propane	0.551
Iso Butane	0.042
N Butane	0.055
Hexanes +	0.045
Oxygen	0.069
Btu/cu ft.	1,071.000

4.0 SUB-SYSTEM DESCRIPTIONS AND INSTALLATION PROCEDURES

The modification of the MUSE 1,500-kW engine generator set to dual fuel operation is described as a series of systems, each consisting of components connected by electrical circuitry, mechanical or electrical conduits, and/or other mechanical linkages. The actual modification hardware and procedures are described in References 4-1, 4-2, and 4-3 that have been assembled by ECI, Inc., based on the Navy's prototype application for stationary power. The use of those publications is essential to the proper installation of this dual fuel kit. This section draws heavily on them, and supplements them with information specific to the Navy MUSE unit. The description of each system includes schematics, detailed drawings, and photographs of the installation and installation process.

4.1 Engine Modifications

4.1.1 Power Pack Assembly. The dual fuel power pack assembly is shown on Figure 4-1. Included in it is the head, modified to receive the gas injection valve (GIV), the dual fuel piston, whose top surface has been modified to lower the compression ratio from 14.5 to 12.8 and to provide a greater intensity of mixing of the natural gas and air, and natural gas connecting hardware that includes the load valve, load block, gas and air lines and the GIV. Although the heads and pistons are changed as noted and the ring sets are special parts, the power pack assembly procedure is identical to that of the standard diesel power pack. Figures 4-2(a) through 4-2(d) show the placement of the GIV into the cylinder head with attachment of the natural gas supply and control air hoses.

4.1.2 Cylinder Relief Valves. ECI cylinder pressure relief valves (Fig. 4-3) are used to replace the standard cylinder test valves. These valves are located at each cylinder just under the natural gas supply line to relieve excess pressures that can arise during gas operation.

4.1.3 Diesel Fuel Supply. The original diesel fuel system is modified to provide "pilot" fueling capability during natural gas operation. Standard diesel injectors are used, but require special calibration to provide the correct "pilot" fuel quantities. Modifications also include the addition of a pilot fuel stop assembly mounted by the injector rack control linkage, and a system of air rams. The pilot stops are actuated with control air pressure through solenoid valves controlled by the Engine Control Unit (ECU). During higher loads the left-hand ram is extended. If the load drops below 20 percent, the second ram is energized increasing the pilot fuel and stabilizing combustion at the light load. Figure 4-4 shows elements of the pilot fuel stop assembly and the modified injector control rack linkage. Figure 4-5 shows photographs of engine modification components.

4.2 Natural Gas Supply System

Figures 4-6 is a schematic diagram showing installation of the gas lines within the engine house leading from the engine cylinders to the external natural gas (NG) supply and control components leaving the engine house. Figure 4-8 shows photographs of the NG piping, fittings, and their installations.

Under normal operation, natural gas is used within the unit at pressures of 100 to 150 psi. The pressure, normally, must be reduced from a higher supply pressure and closely regulated to the desired level. The gas, first, passes through a master manual shutoff valve followed by the pressure regulator. It then passes through two air-operated shutoff valves and a piping tee that leads to a pressure relief valve (set at 150 psi), a filter, an air-operated vent valve, and on to the NG piping in the interior of the engine house. There it passes through an instrumentation run (Fig. 4-9) where the gas temperature, pressure, and the flow rate are measured, to a third air-actuated gas cutoff valve (GCOV, Fig. 4-10), and on to the gas flow control valve (GFCV).

When the ECU determines that it is time for gas operation, valves V1, V2, and GCOV are opened for a brief period of time (5 seconds) to charge the natural gas supply line. At that point, the V1 and V2 are closed and the pressure of the natural gas in the line downstream of them is monitored for 180 seconds to ensure that the pressure remains constant and that no significant leaks are present in the gas supply line (a pressure loss of less than 3.0 psi must be observed for the system to pass this test). If the gas line does not pass the integrity test, it is vented to atmospheric pressure (through a vent valve, located on the gas flow control valve (GFCV), Fig. 4-10), and on to the exterior vent pipe). V1 and V2 remain closed, and the engine is prevented from proceeding to NG operation. If the gas line passes the integrity test, valves V1 and V2 are opened, providing a NG supply up to the GCOV. At that point, the ECU opens the GCOV and starts to sequentially open the GIVs to each of the cylinders to provide a flow of NG to them. The gas flowrate to the engine is controlled by the GFCV (Fig. 4-11), the position of which is determined by a direct mechanical linkage from the output shaft of the Woodward governor (the standard diesel component for governing engine speed and load).

From the GFCV the gas makes its way through the headers (Fig. 4-12) to each load block and GIV. Each load block has a restrictor valve that can be adjusted to either increase or decrease the gas flow to each cylinder to balance the power that is delivered. The gas pressure in the header, controlled by the GFCV, changes with load over a range of 25 to 65 psi. In switching to diesel operation, the GCOV, V1 and V2 all close. The GIV's cease to operate shortly thereafter, leaving some NG in the header. This gas is immediately vented via the vent valves on the GFCV and on the NG supply line external to the unit so that no natural gas lines within the engine skid remain pressurized at any time except when the engine is operating on it.

4.3 Control Air System

Most working parts of the conversion are pneumatically actuated and require a reliable source of compressed air. The largest single requirement for compressed air is for actuation of the GIVs. These require 15 SCFM so that a larger compressor (30 SCFM vs. the original 15 SCFM) with a similarly sized air storage tank (240 SCF at 225 psi) was installed on the MUSE unit (the compressor installation is described in Section 4.5). Air from the compressor first passes through a filter, regulator, and air lubricator (Fig. 4-13). One branch of the air line then

passes directly to the GIVs. Figures 4-14 and 4-15 show a pictorial of the air hose connections and details of the routing of the air to the GIVs. Item 2 of Figure 4-14 shows a second air supply line going to the Air Supply Cabinet (ASC) out of which air control hoses emanate to provide actuating air to: the diesel ram (item 3), the pilot fuel stop (item 4), the vent valve on the GFCV (item 5), and the GCOV (items 6 and 7). Items 8 through 11 indicate additional air hose routes are left to the installer to determine after the locations of the components connected by them are fixed. Details of the air supply tubing for the GIV's are shown on Figure 4-16, and the internal arrangement of the ASC is shown on Figure 4-17. A schematic diagram for the mounting bracket for the ESC and ASC is shown on Figure 4-18 and photographs of them mounted are provided on Figure 4-19.

4.4 Air Throttle

The air throttle is a device that is used to control the amount of combustion air available to the engine. It provides a means of operating the engine at increased efficiency at reduced loads and is located at the turbocharger inlet. Figure 4-20 compares the original turbocharger installation with that of the installation that includes the air throttle. Figure 4-21 provides photographs of the modified installation.

4.5 Engine Cooling System

The engine cooling system has been enhanced by adding a cooling water circuit to send part of cold water stream exiting the radiator directly to the inlet of the aftercoolers (Fig. 4-22). This is to provide greater cooling of the combustion air than is normally obtained and allows operation of the engine in the natural gas mode at increased power levels. The added water circuit requires the use of an aftercooler water pump, and to further enhance cooling of the combustion air, an ECI-designed 6-pass aftercooler is used to replace the standard 2-pass aftercooler. The new aftercoolers (Fig. 4-23) are designed so that counter flow is accomplished on both sides of the engine. The coolers are installed following the guidelines found in the EMD maintenance manual for the standard aftercoolers. A 140-gpm pump is used for the aftercooling circuit.

Installation of the new cooling water pump, along with the new air compressor, is shown on Figures 4-24 through 4-27. The original air compressor and air tank had to be replaced with ones of greater capacity and structural strength. A place to mount the water pump also had to be found. Therefore, a mounting plate capable of supporting both was designed. Figure 4-24a and 24b show the original air compressor mounting configuration and the final one with both air compressor and water pump installed. Figure 4-25 shows the support platform supported at four positions by the compressed air tank, by two channel iron leg supports mounted on the side I-beam of the unit, and be a fourth support leg. Figure 4-26 and 4-27 provide specifications for the compressed air tank and platform, the support legs, and the platform.

4.6 Sensors

Sensors are provided for a variety of measurements (Fig. 4-28). It is important that they operate properly. Out-of-specification measurements are warning signs indicating either engine malfunction or improperly functioning sensors. In either case, they may indicate dangerous or hazardous conditions and cause the engine to terminate operations. Figures 4-29 and 4-30 show the installation of several of the sensors described below.

4.6.1 Thermocouples. Thermocouples are fitted one per cylinder through the engine manifold. They are used to monitor the temperature of the exhaust gas coming from each cylinder as a primary indication of proper cylinder performance.

4.6.2 Water Temperature. A bad or partially failed sensor will be displayed by the ECU as an error.

4.6.3 Control Air Pressure. Control air is provided by the compressor at 200 to 240 psi. It is then reduced in pressure by the pressure regulator to the control range of 125 to 135 psi. Pressures more than 4 psi outside of this range cause the unit to shut down.

4.6.4 Flywheel Sensors. The flywheel sensor apparatus consists of three sensors mounted on a bracket over the flywheel, along with sensor targets. The two sensors provide timing information to the ECU. These are positioned to sense 1/4-inch targets embedded in the flywheel, and their output is used to synchronize the natural gas sequencer with the cam shaft for timing injection of natural gas into the cylinders. The third sensor is positioned directly over the teeth of the ring gear and uses the gear teeth as targets to determine flywheel speed.

4.6.5 Air Box Temperature. The air box temperature is monitored to sense temperatures that become too high (>200°F) and which can lead to engine knocking when operating in the natural gas mode.

4.6.6 Air Box Pressure. Air box pressure is an indication of turbocharger (TC) function. Low air box pressure (< 14 psi) indicates that the turbocharger is still probably being driven directly by the engine. Higher pressures (> 17 psi) indicate sufficient exhaust gases (at higher engine loads) to cause the TC to disengage from the engine and to be driven, solely, by the exhaust gases. The latter results in more efficient engine operation.

4.6.7 Natural Gas Sensors. These include the temperature and pressure sensors, the delta pressure sensor, and the delta pressure transducer. These monitor the condition of the natural gas upstream of the GFCV before being admitted to the gas header along with its flow rate to the engine.

4.6.8 Gas Header Pressure. The gas header pressure measures the pressure of the natural gas to the end of the header farthest from the supply. A minimum level must be maintained to continue engine operation. Excessive pressure indicates gas injector malfunction.

4.7 Natural Gas Safety System

Several approaches are used to ensure safe natural gas (NG) operation of the MUSE unit. These include both hardware additions and modifications and operational changes. Natural gas consists, mostly of methane, a colorless, odorless, non-toxic gas. The familiar "odor of gas" often smelled is not that of methane, but of small amounts of sulfur-containing compounds added, specifically to provide the pungent odor. This is a safety feature provided by all natural gas suppliers, the odor being noticeable at very small concentrations.

The main concern with natural gas is that when it is mixed with air at concentrations of between 5 and 15 percent of NG by volume, it forms a combustible mixture. If such a mixture should form in a space it would be subject to an explosion if confronted by an adequate ignition source. As all 110 volt electrical circuits (and many circuits of less voltage) provide ignition sources sufficient to initiate a natural gas explosion, and as many such circuits exist within the MUSE engine enclosure, the approach taken for ensuring a safe environment has been to ensure that the NG concentration within the engine space will never reach the level of an explosive concentration. This has involved ensuring adequate ventilation of the engine space along with the installation and operation of a gas detection system. The fact that NG is lighter than air and has a strong tendency to rise away from the source of any leak is helpful in achieving this objective.

Appendix A includes an analysis and recommended design modifications and operational procedures to ensure the safe operation of this dual fuel conversion. This study was undertaken by a fire safety consulting firm with particular expertise in the handling of natural gas within enclosed areas. The recommendations of that study were incorporated into the design and operating characteristics of this dual fuel conversion.

Figure 4-31 shows a cutaway side view of the MUSE unit indicating NG pipe routing and safety features included in that piping run, and Figure 4-32 is a plan view showing air flows within the engine compartment to prevent the accumulation of NG explosive concentrations. The venting rate of the compartment is such that even with a severed NG supply line, concentrations of NG within the engine compartment would not reach an explosive level, assuming that the exhaust blower is properly functioning. System interlocks prevent the entry of NG into the engine compartment (ECU controlled) unless the exhaust blower is shown to be operating, unless air flow gauges show that adequate venting is actually taking place, and unless the natural gas detection system shows the absence of any measurable concentrations of an explosive gas. The shutdown level is set at 10 percent of the LEL (lower explosive limit for NG). This allows for the presence of some hydrocarbon vapors from greases and oils within the unit but provides a conservative monitoring level for the presence of NG from any leaks in the NG system. Figures 4-33 and 4-34 show the installation of the NG sensors and connecting conduits and wiring.

4.8 Electrical System and Controls

A pictorial view of the main features of the electrical and control system is shown on Figure 4-35. The two main electrical/control cabinets are the engine control unit (ECU) and the air service cabinet (ASC). An analog termination box is also shown. The basic wiring scheme for the system is indicated on Figure 4-36 which shows 16 wiring runs, 12 of which (numbers 1,

3, 4, 5, 7, 10, 11, 12, 13, 14, 15, and 16) are contained within conduits (flex or hard). The number, size, and type of wires within each run are indicated and each wire carries an alphanumeric designation.

The wiring design is laid out in a manner so that wire harnesses, assembled at the factory, can be pulled through the conduits and attached to terminal strips. Conduits from the ECU lead to (a) the operating system status screen, (b) the analog termination box, and (c) the ASC. The conduit leading from the ECU to the ASC actually contains several distinct wire harnesses for: (a) GIV control for admission of natural gas to each cylinder, (b) control functions to the existing engine control panel (ECP) and the switchgear (SG) house, (c) the control harness solenoids within the ASC, (d) electrical signals to the ECP for actuating the water pump, and (e) for controlling and receiving signals from the gas detection system.

4.8.1 Engine Control Unit. The ECU controls all major functions of the dual fuel engine operating system. It is an electronic device, and consideration should be given to the ambient temperatures of its proposed location to prevent unnecessary overheating. Otherwise, its location may be at any place within the engine generator housing that is convenient for gathering the engine operating data and for exercising its control function.

Figure 4-37 provides a block diagram of the electrical control signals entering and leaving the ECU and Figure 4-38 shows the physical layout of the inside of the ECU. Wiring connections internal to the ECU are shown on Figure 4-39 and ECU digital inputs, analog inputs, digital outputs, and GIV outputs are shown on Figures 4-40 to 4-43. Schematic diagrams of the switchhouse connections and wire harnesses are shown on Figures 4-44 and 4-45. Terminal connections within the ASC and the analog termination box are shown on Figure 4-46. Additional drawings of wiring harnesses are shown on Figures 4-47 to 4-50.

4.8.2 Air Service Cabinet and Engine Control Panel. The internal components of the ASC are discussed in Section 4-3 and electrical wiring hookups were discussed in the sub-section, above. Photographs of wiring within the ECU and ASC are shown on Figure 4-51. Photographs of the ECP modifications are shown on Figure 4-52.

4.8.3 GIV Wire Harness. The GIV wire harness leads from the ASC to the upper deck (under the valve cover) where it is divided into two segments for either side of the engine (Fig. 4-53). It has leads to each cylinder for both operating the solenoid valves to admit natural gas and for monitoring the temperature of each valve (valve temperature switch (VTS)).

4.9 Switchgear, External Power Hookups and External Communications

All hardware electrically linking the diesel generator with the activity is located in the switchgear house. Interconnects between the engine house and the switchgear (Fig. 4-54) include, (a) the 3-phase 4,160-volt power-carrying conductors, (b) a 40-wire umbilical interconnecting cable for transmitting engine and electrical control data, and (c) a second umbilical containing 12 shielded triads (20-gauge) for communication between the ECU and remote sites and for electrical control of the NG sensors mounted in engine house by the hazardous gas control module mounted in the switchgear house. The second umbilical includes signal wire for five telephone connections. Two of these are for separate signals for starting and

stopping of the unit from a remote site. Two dedicated lines are used for this purpose to avoid the possibility of interrupted telephone service interfering with control of the unit. The three other lines are used for transmitting operating data to the remote site control center and to other off-base sites by modem. Interconnects between the switchgear house and the base are the power-carrying cables contained in 4-inch underground conduit and a telephone interconnecting cable carried by a 1-inch underground conduit.

Electrical wiring connections to and within the switchgear house are described in the schematic diagrams referred to in Section 4.10. Photographs of the switchgear installation are shown in Figure 4-55.

4.10 Modification of MUSE Schematic Drawings

The impact of the modifications discussed above on existing MUSE schematic drawings has been incorporated into those drawings as indicated in Appendix B. Such modified drawings have been identified by the designation DF (dual fuel) appended to the original drawing numbers.

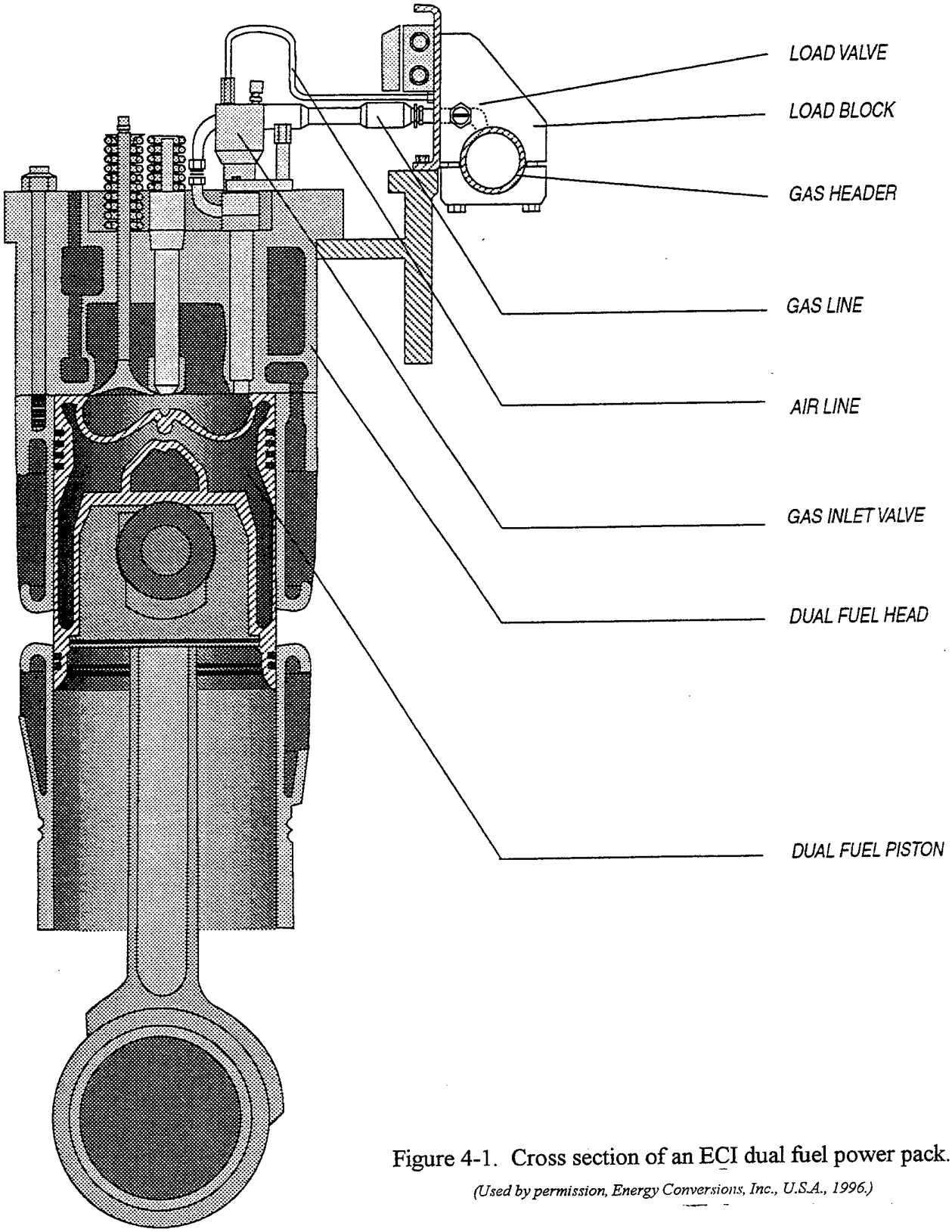

Figure 4-1. Cross section of an ECI dual fuel power pack.

(Used by permission, Energy Conversions, Inc., U.S.A., 1996.)

(a) GIV.

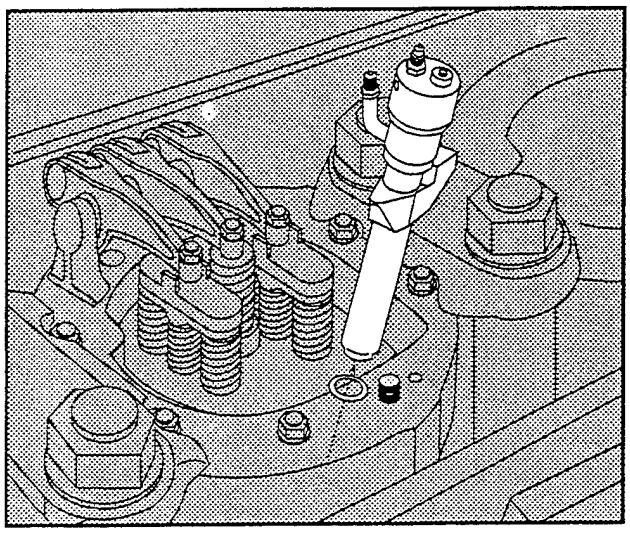

(b) GIV being installed.

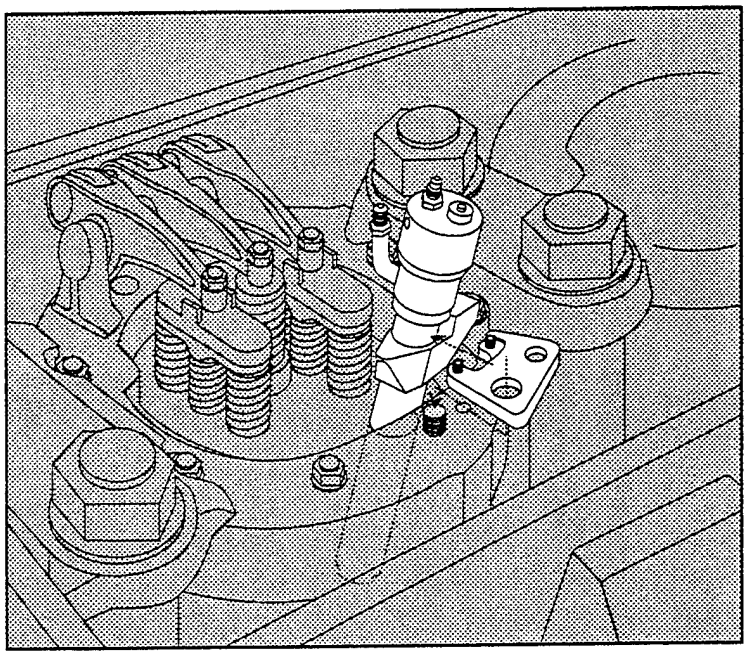

Figure 4-2. Installation of gas inlet valve (GIV) with natural gas and actuating air hoses.

(Used by permission, Energy Conversions, Inc., U.S.A., 1996.)

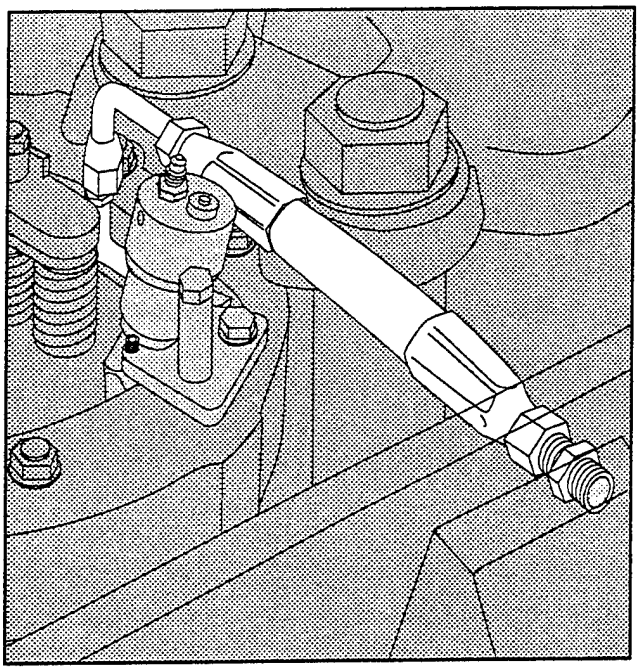

(c) Natural gas hose.

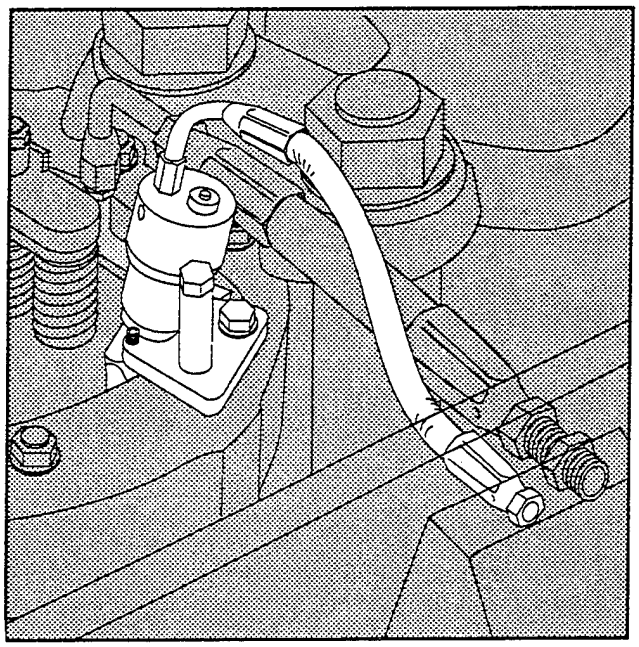

(d) Actuating air hose.

Figure 4-2. Installation of gas inlet valve (GIV) with natural gas and actuating air hoses. (Cont'd.)

(Used by permission, Energy Conversions, Inc., U.S.A., 1996.)

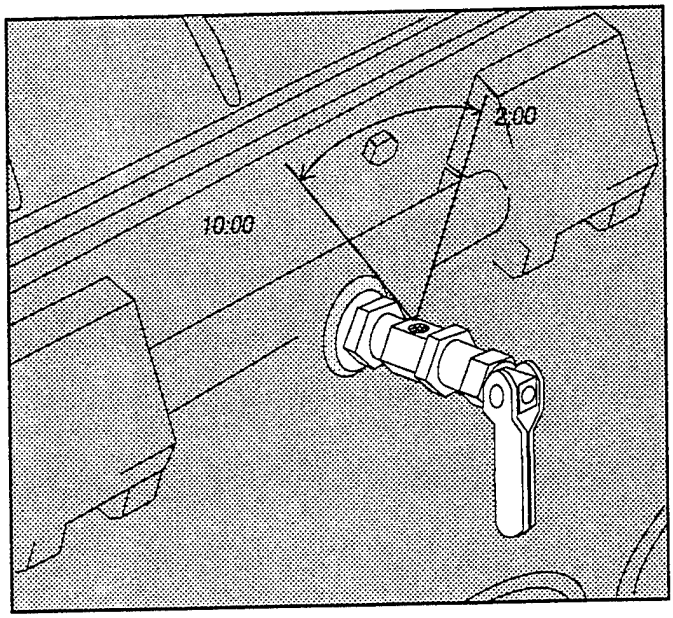

(a) In relation to NG header.

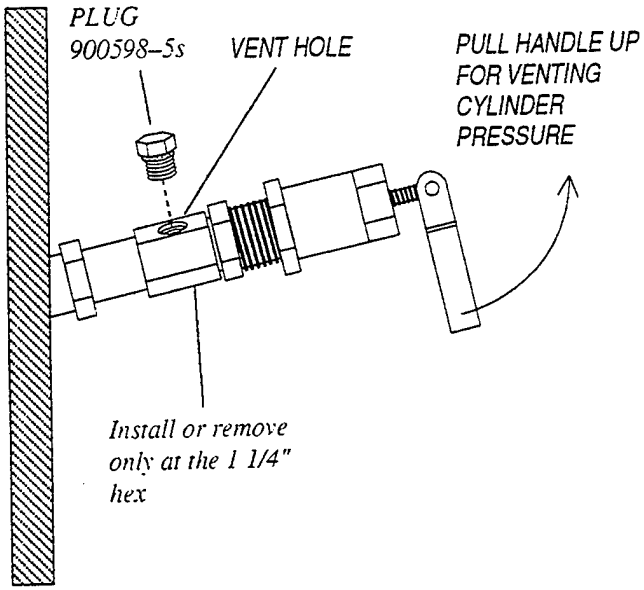

(b) Operating parts.

Figure 4-3. Installation of cylinder relief valve.

(Used by permission, Energy Conversions, Inc., U.S.A., 1996.)

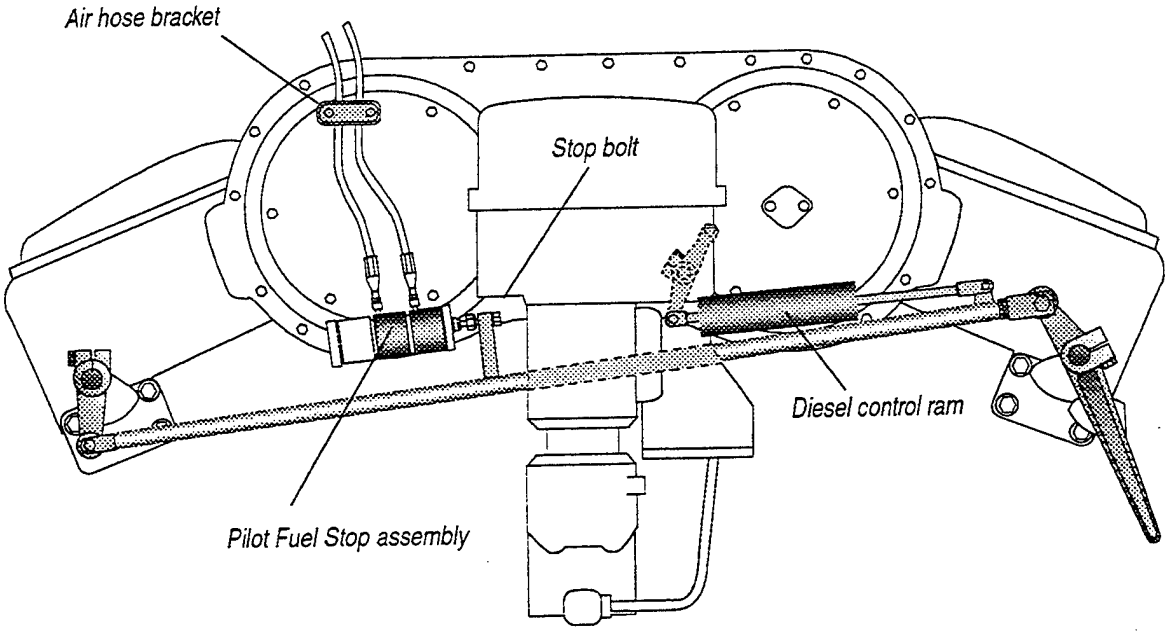

Figure 4-4. Pilot fuel stop assembly installed.
(Used by permission, Energy Conversions, Inc., U.S.A., 1996.)

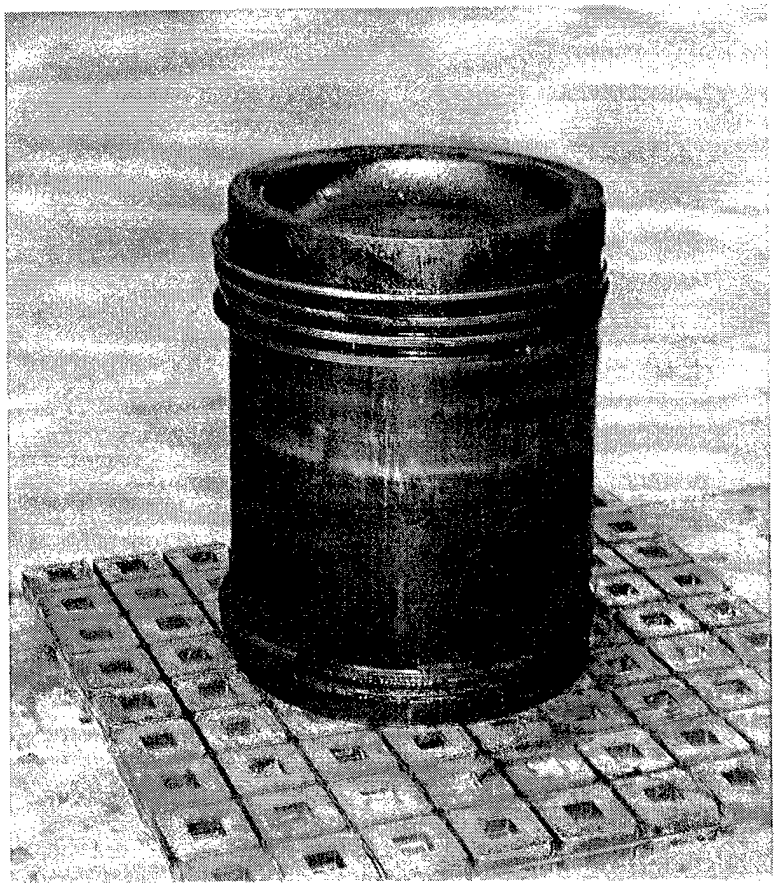

(a) Original piston.

(b) Modified piston.

Figure 4-5. Engine modification components.

(c) Cylinder head with GIV.

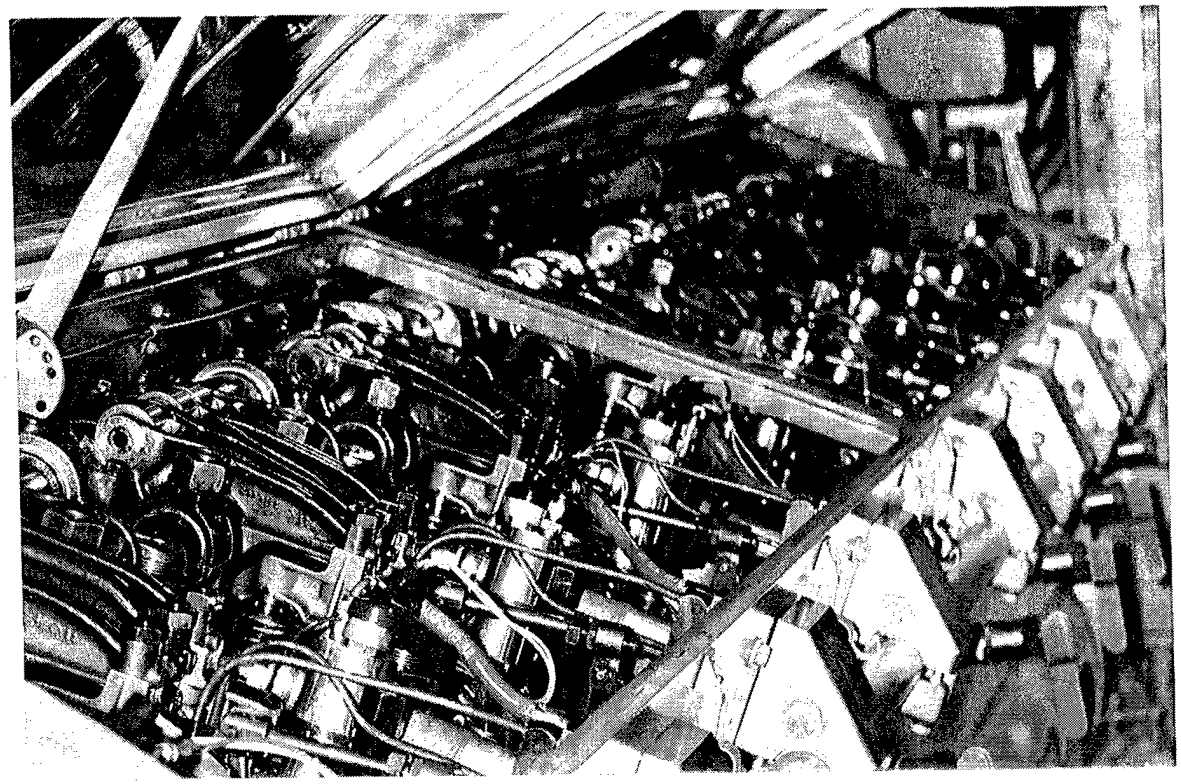

(d) NG load blocks, GIV's, NG hoses, and actuating air hoses installed.

Figure 4-5. Engine modification components. (Cont'd.)

(e) Air-actuated diesel ram control and NG supply hose leading to gas flow control valve (GFCV) mounted adjacent to governor.

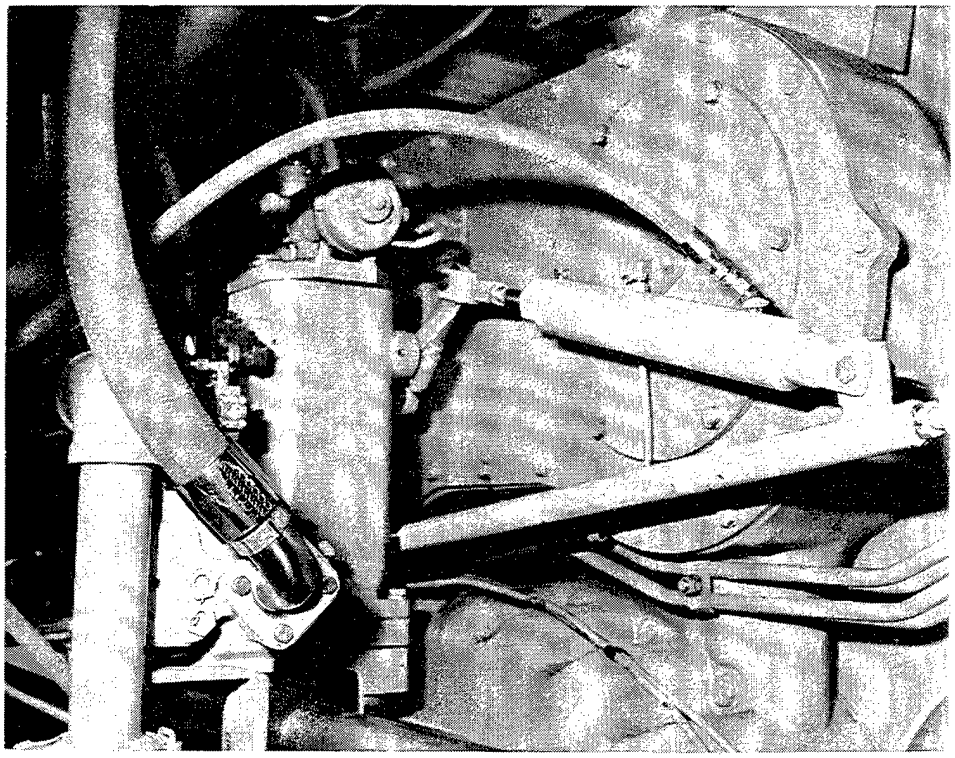

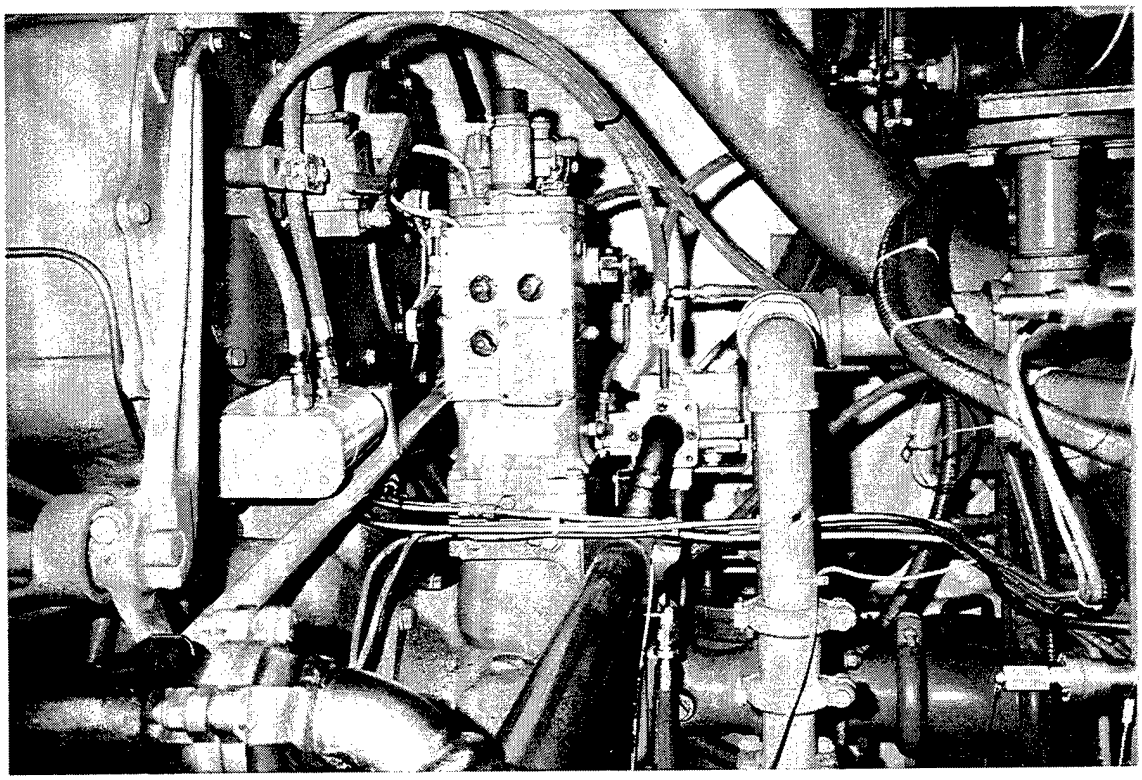

(f) Air-actuated pilot fuel stop assembly and governor output linkage to GFCV.

Figure 4-5. Engine modification components. (Cont'd.)

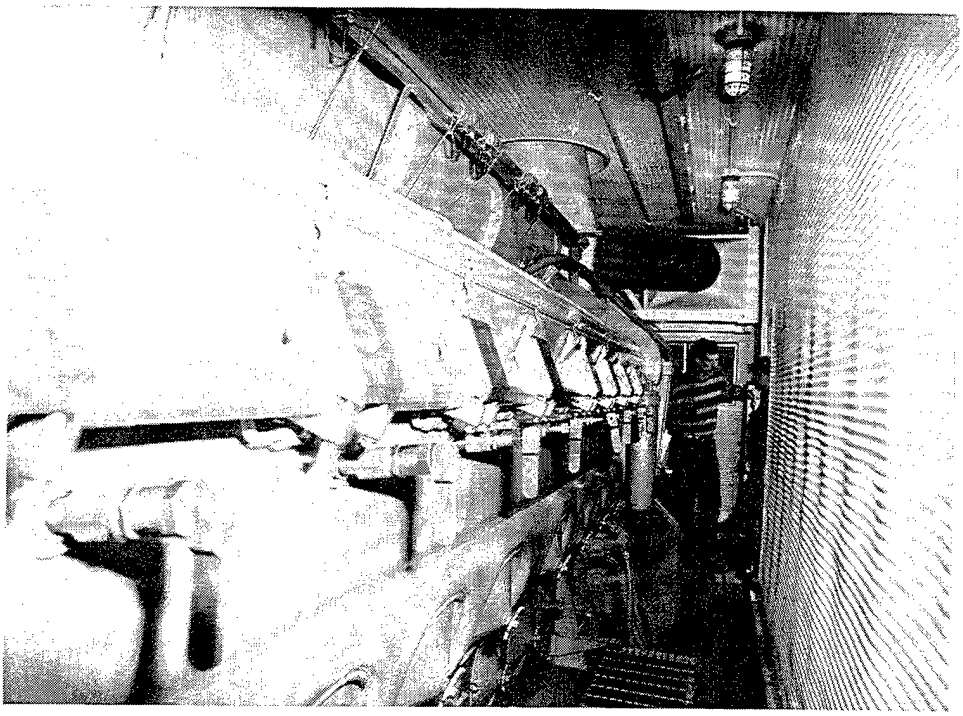

(g) NG header, load blocks, and cylinder relief valves installed.

Figure 4-5. Engine modification components. (Cont'd.)

Figure 4-6. Plan view of natural gas piping and components.
(Used by permission, Energy Conversions, Inc., U.S.A., 1996.)

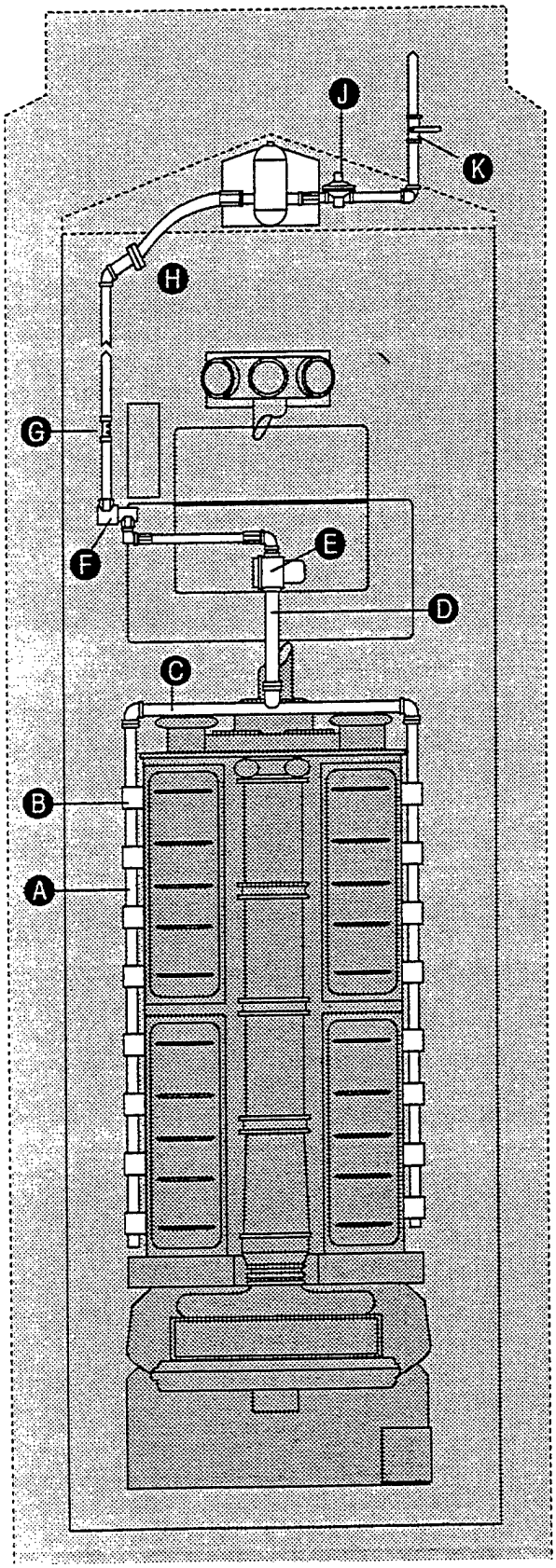

A. Gas header
B. Load blocks
C. Crossover header
D. Crossover hose
E. Gas flow control valve (GFCV)
F. Gas cutoff valve (GCOV)
G. Differential pressure sensor
H. Pipe-O-ring hose flange
J. Regulator
K. Manual shutoff valve
] External to engine house (See Figs. 4-7 and 4-8).

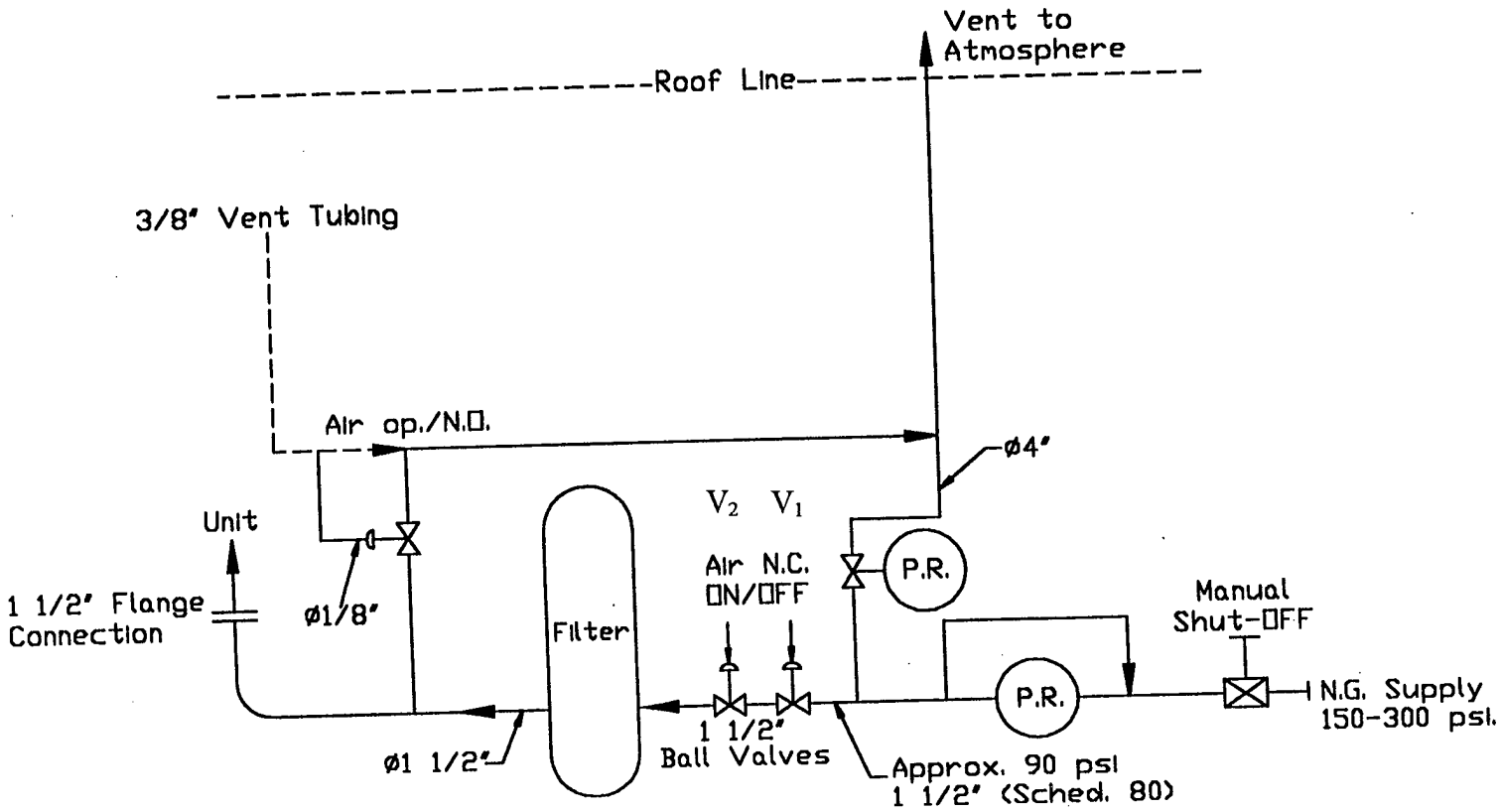

Figure 4-7. Natural gas piping components external to MUSE unit.

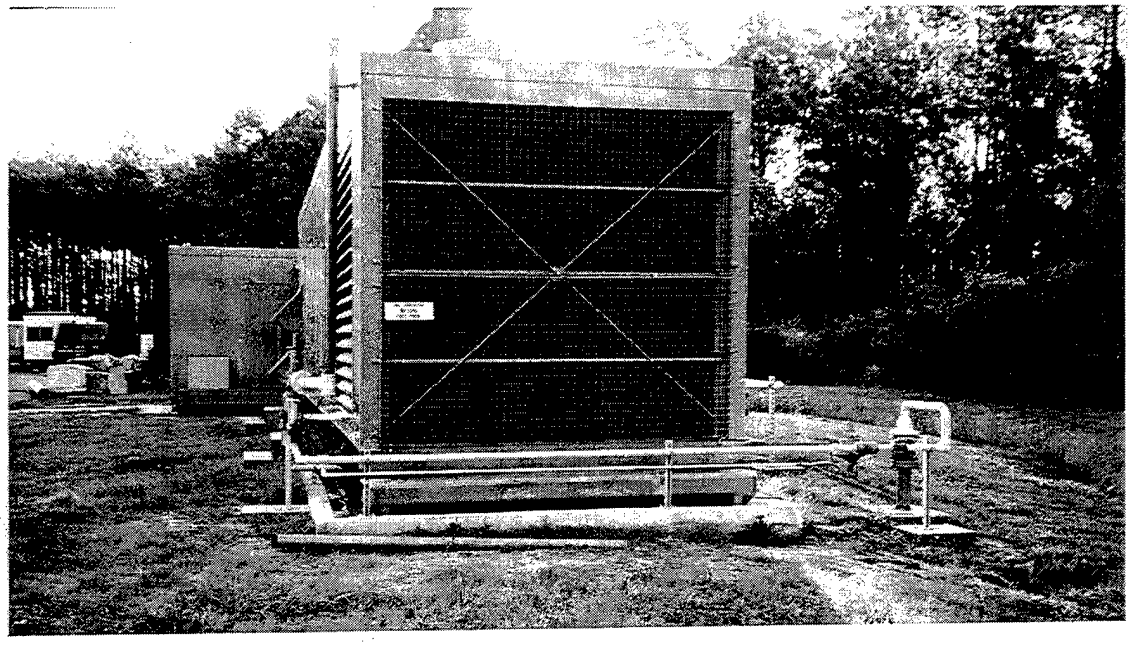

(a) From right, NG supply, manual shutoff valve, and pressure regulator with sensing line. Use schedule 80 steel piping for added mechanical safety.

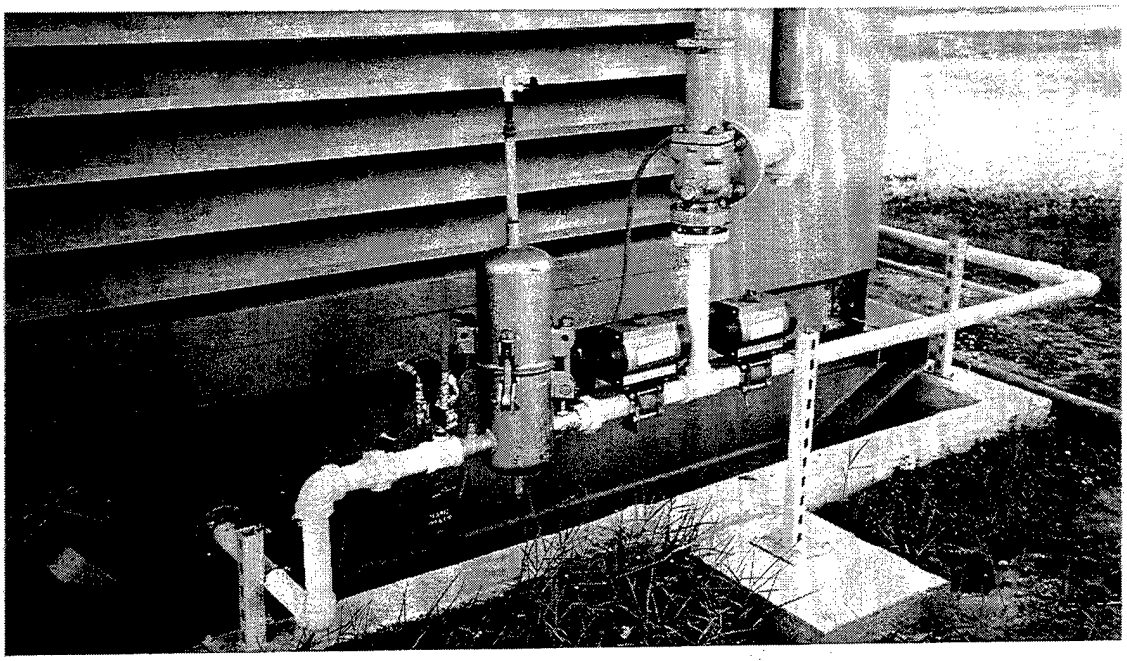

(b) Two air-actuated ball valves, 150 psig relief valve with a 4-inch vent tube, filter, and air-actuated valve to vent NG line.

Figure 4-8. Natural gas (NG) supply line and components.

(c) Compressed air tank removed inside radiator room.

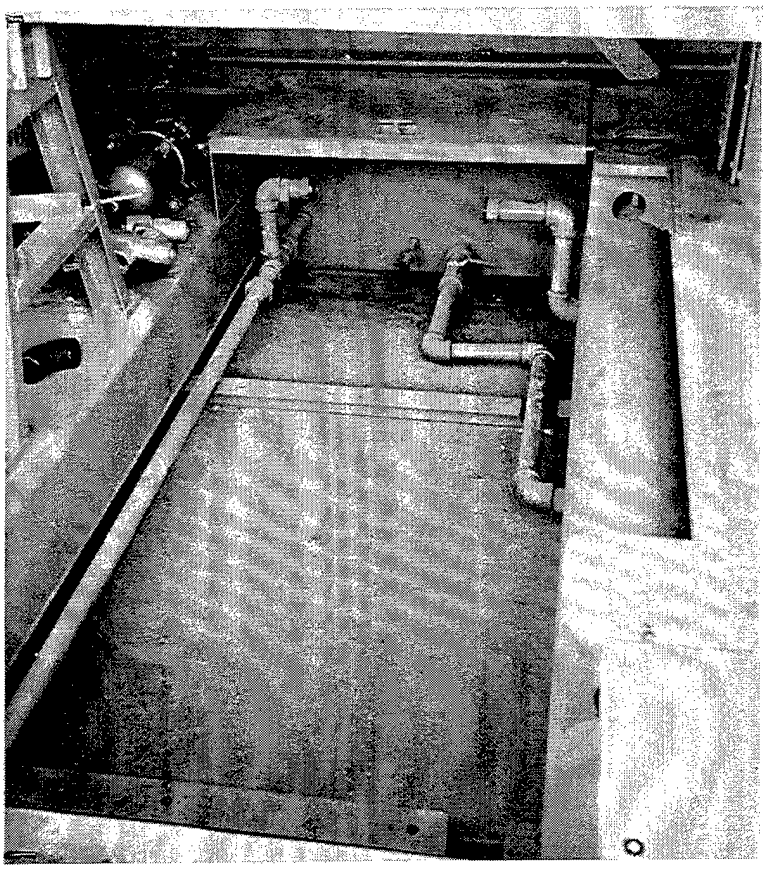

(d) NG line welded in place in radiator room.

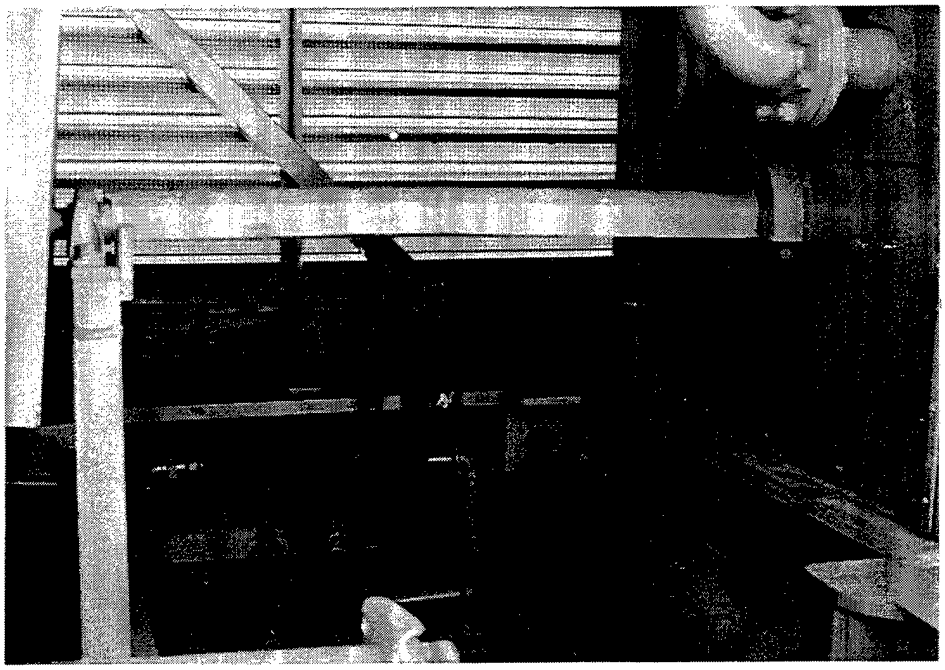

Figure 4-8. Natural gas (NG) supply line and components.(Cont'd.)

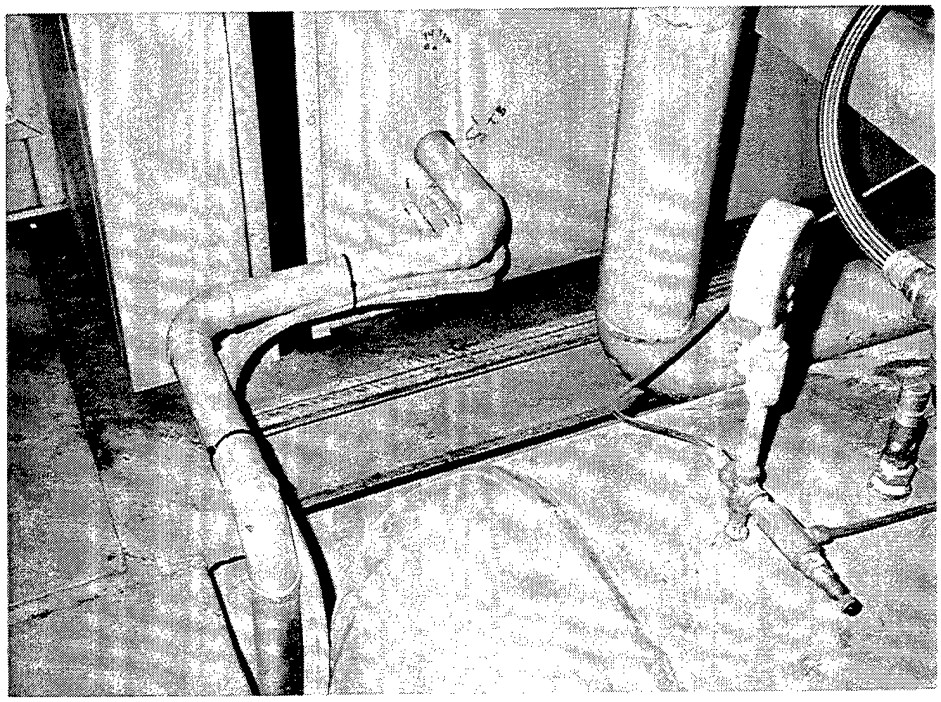

(e) NG piping passes through the radiator room, past compressed air tank and through wall into engine compartment. Actuating air lines from ASC are routed along with NG piping.

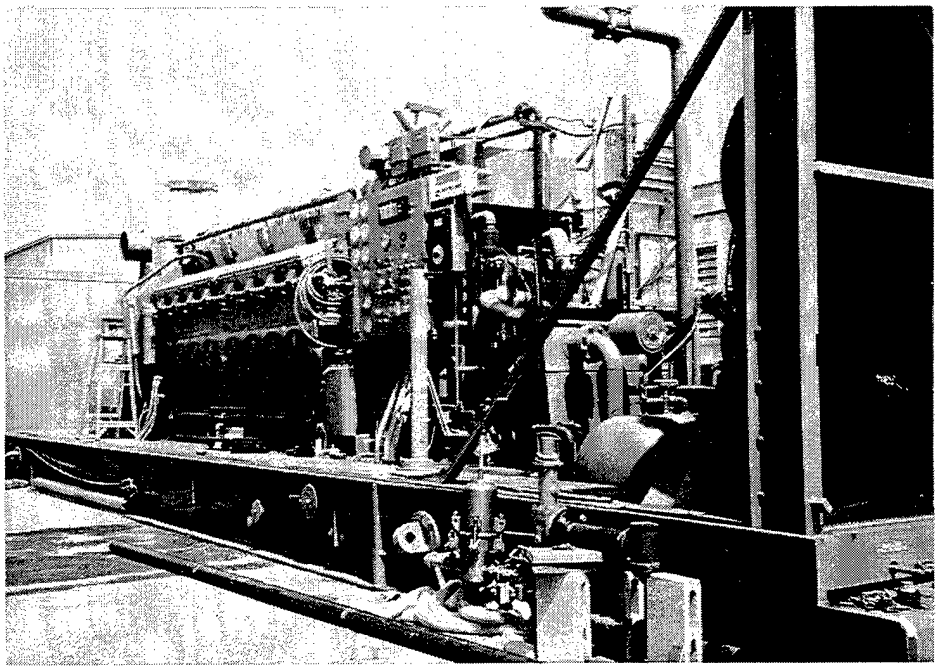

(f) NG line rises to top of engine compartment and enters metering run.

Figure 4-8. Natural gas (NG) supply line and components.(Cont'd.)

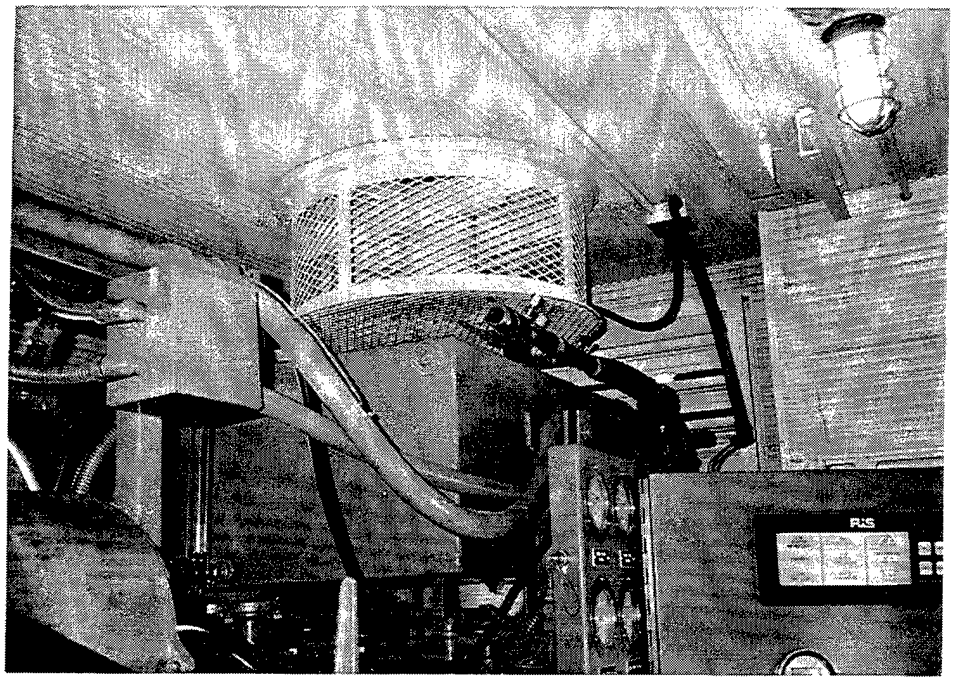

(g) Metering run is initiated (see Fig. 4-9) --

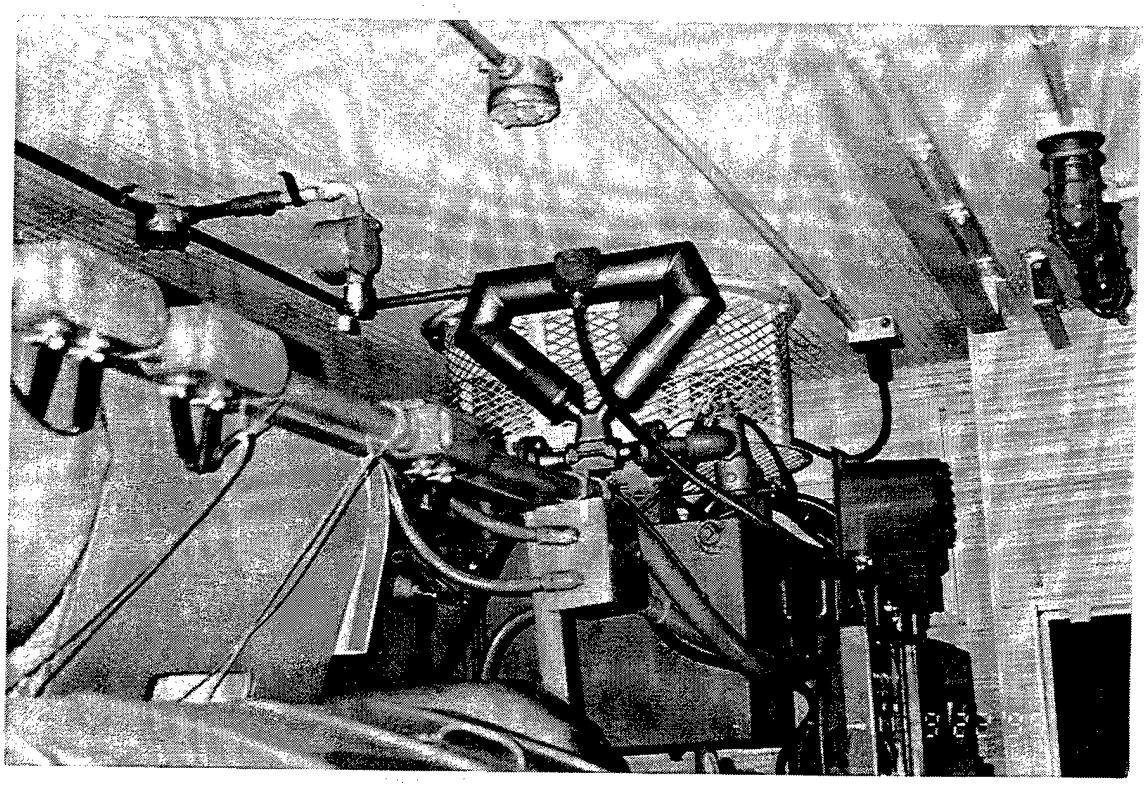

(h) and completed. Mass flow meter is added for test purposes in addition to standard differential pressure measurement.

Figure 4-8. Natural gas (NG) supply line and components. (Cont'd.)

(i) Installing an NG load block.

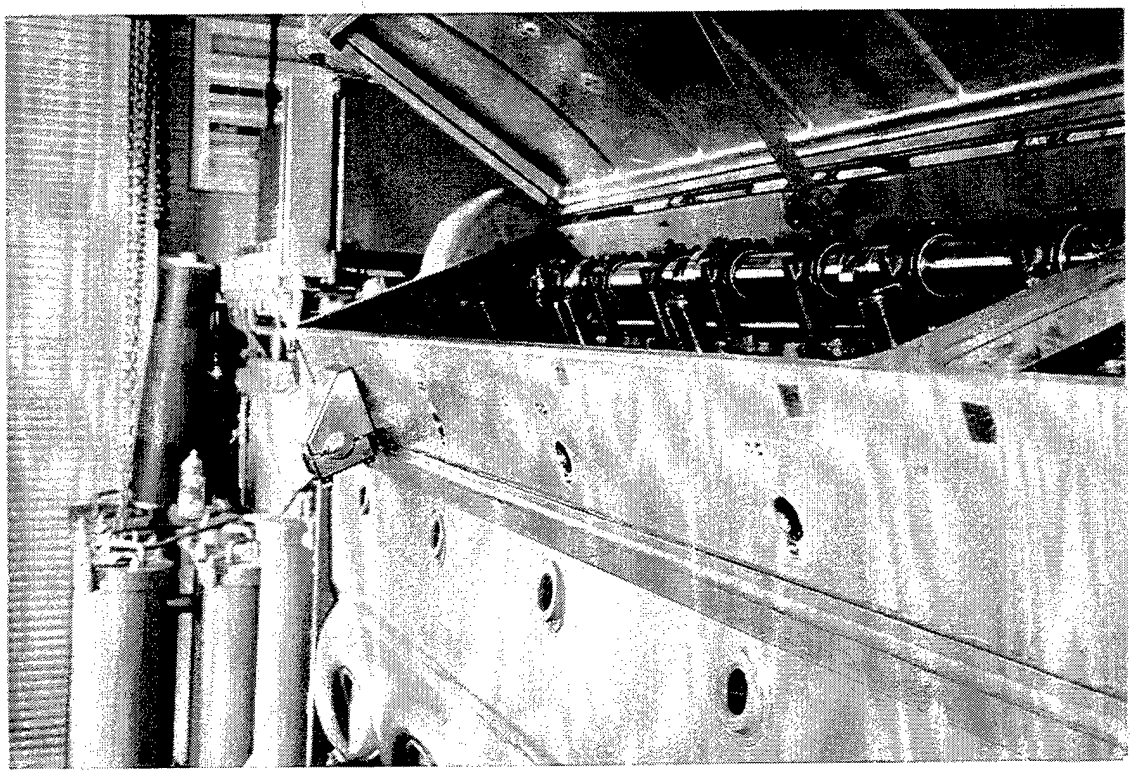

(j) One NG load block installed, mounting holes cut.

Figure 4-8. Natural gas (NG) supply line and components. (Cont'd.)

(k) Load blocks and NG header installed.

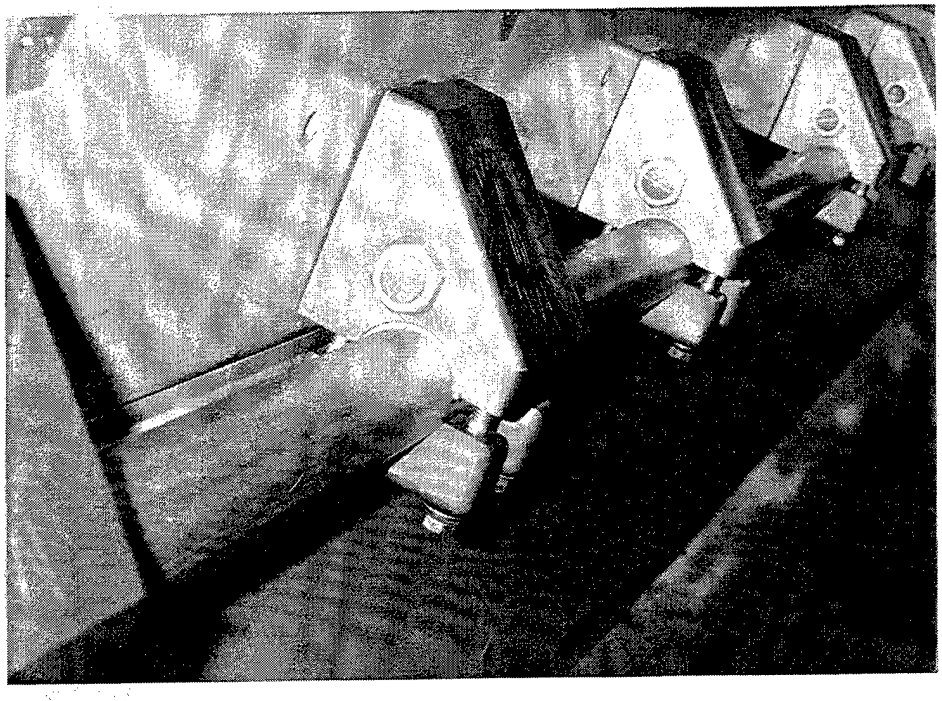

(l) NG supply line with gas and air hoses to cylinders installed.

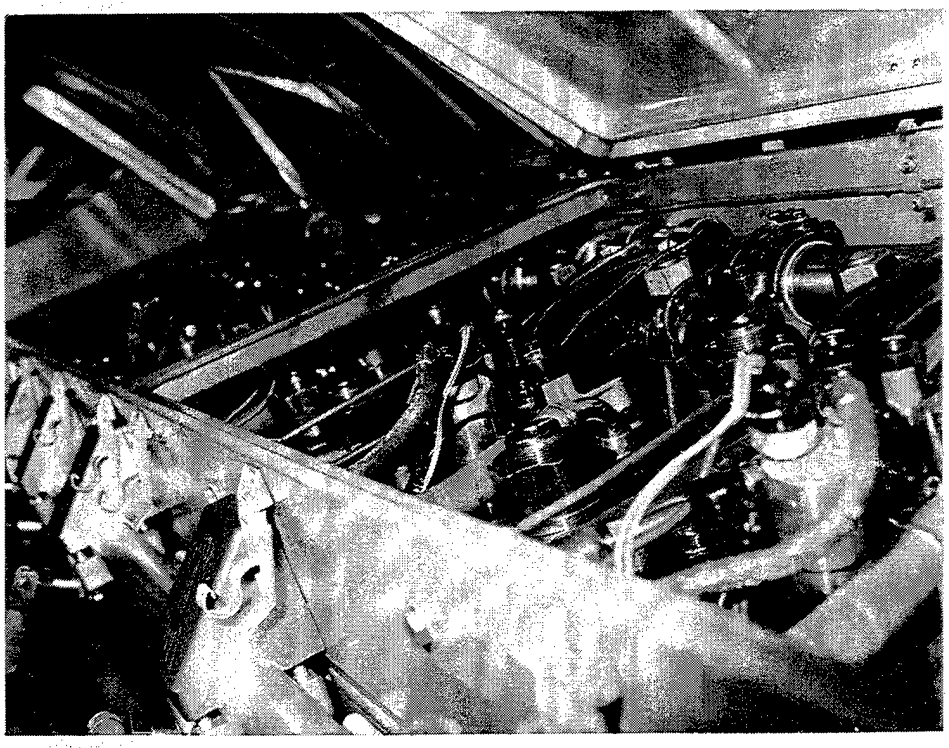

Figure 4-8. Natural gas (NG) supply line and components. (Cont'd.)

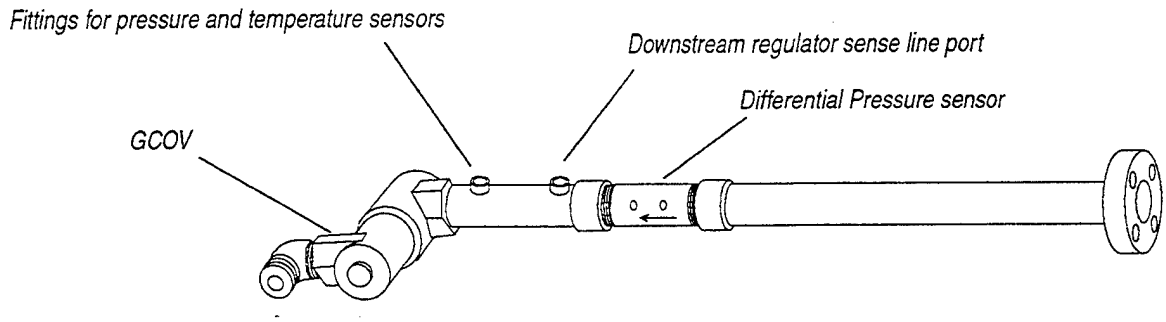

Figure 4-9. ECI-supplied NG metering assembly.
(Used by permission, Energy Conversions, Inc., U.S.A., 1996.)

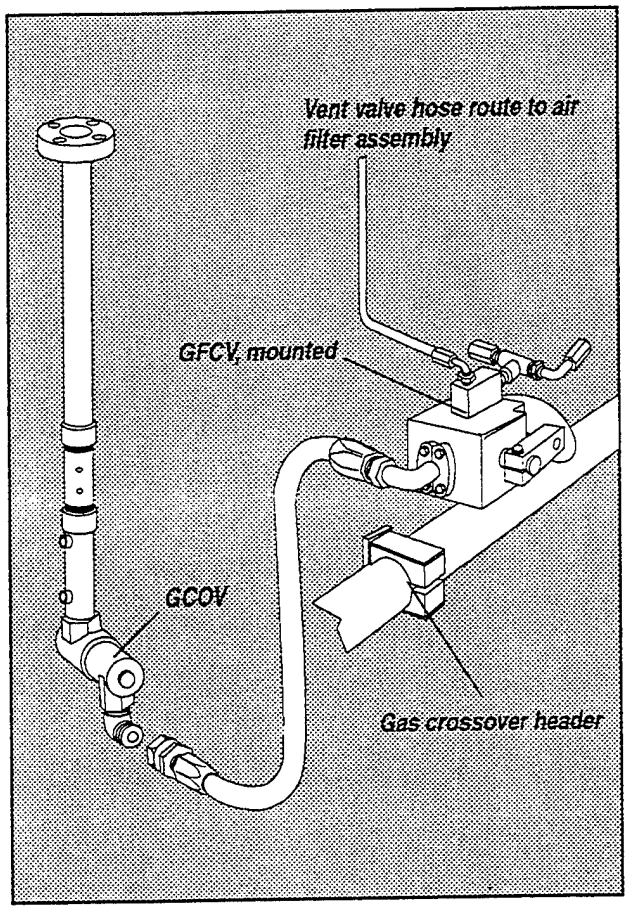

Figure 4-10. Attaching gas line to GFCV.
(Used by permission, Energy Conversions, Inc., U.S.A., 1996.)

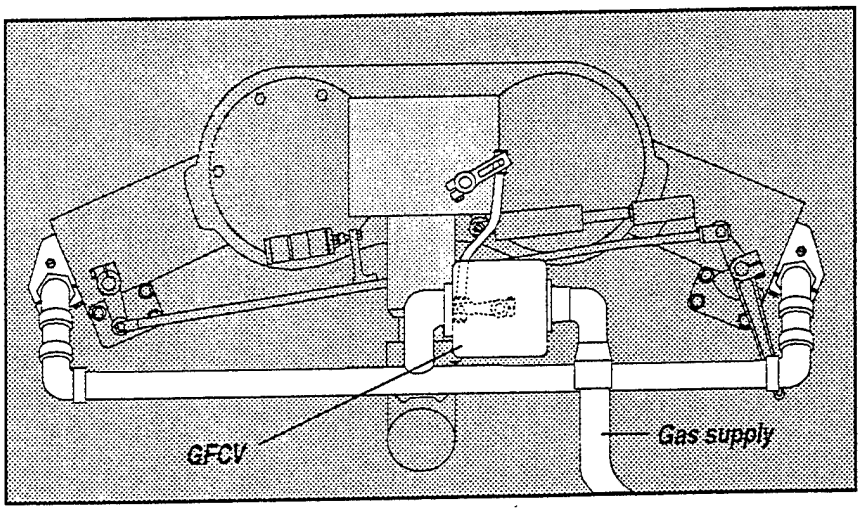

Figure 4-11. The GFCV is mounted adjacent to governor.
(Used by permission, Energy Conversions, Inc., U.S.A., 1996.)

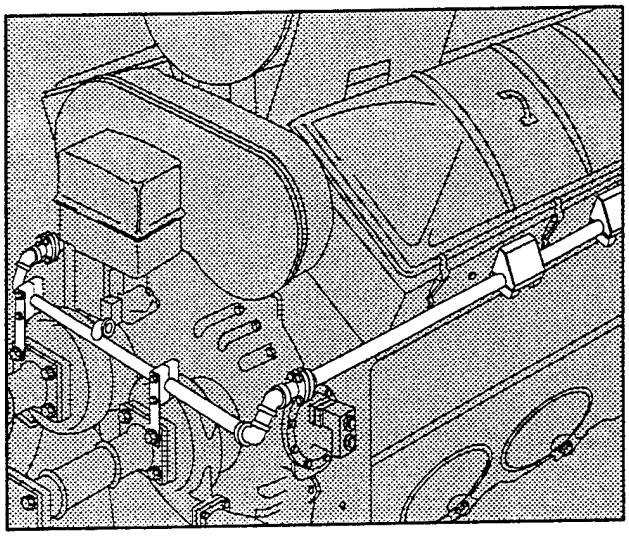

Figure 4-12. Gas header to cylinders.
(Used by permission, Energy Conversions, Inc., U.S.A., 1996.)

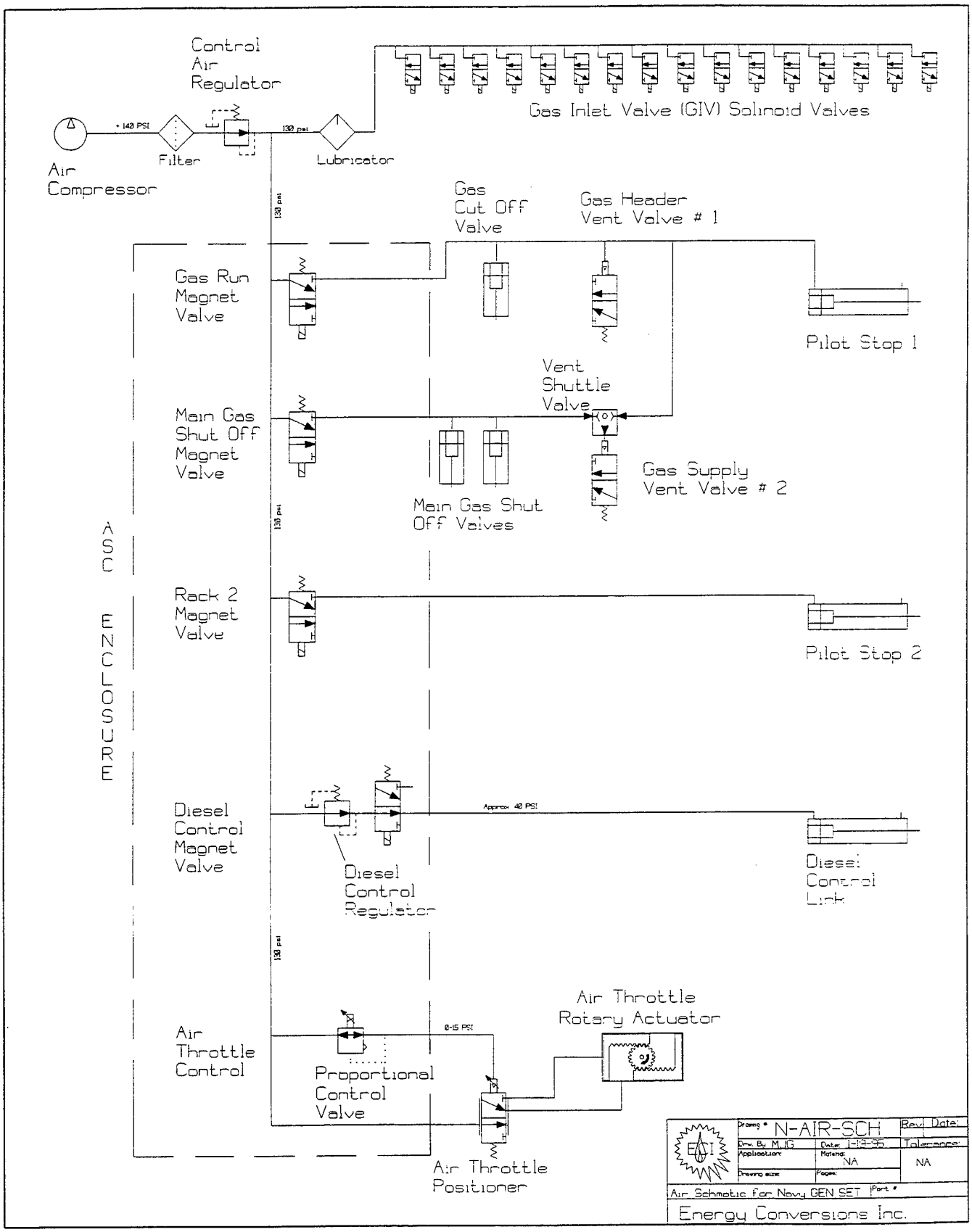

Figure 4-13. Compressed air supply ASC and usage schematic.
(Used by permission, Energy Conversions, Inc., U.S.A., 1996.)

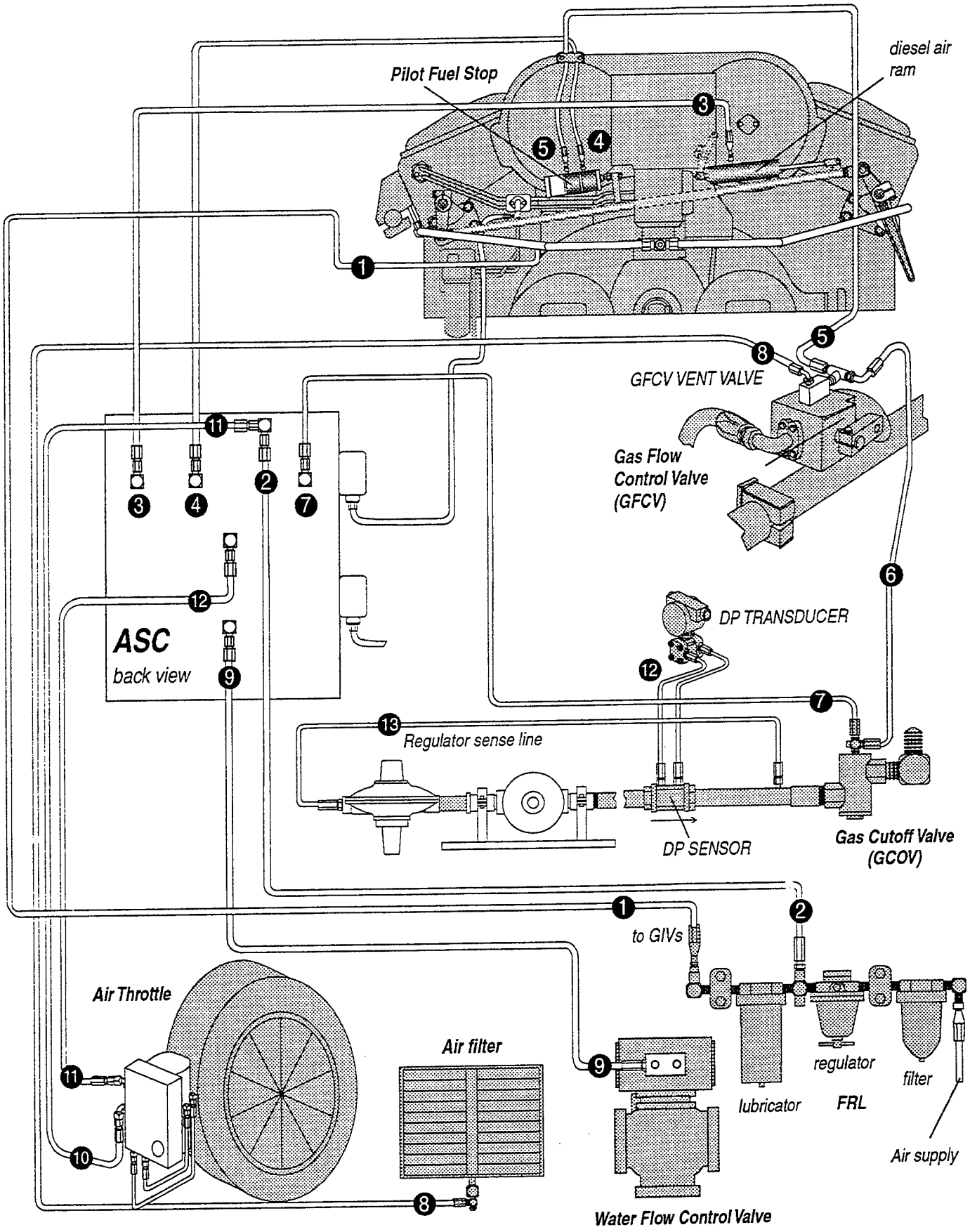

Figure 4-14. Pictorial of air hose connections.
(Used by permission, Energy Conversions, Inc., U.S.A., 1996.)

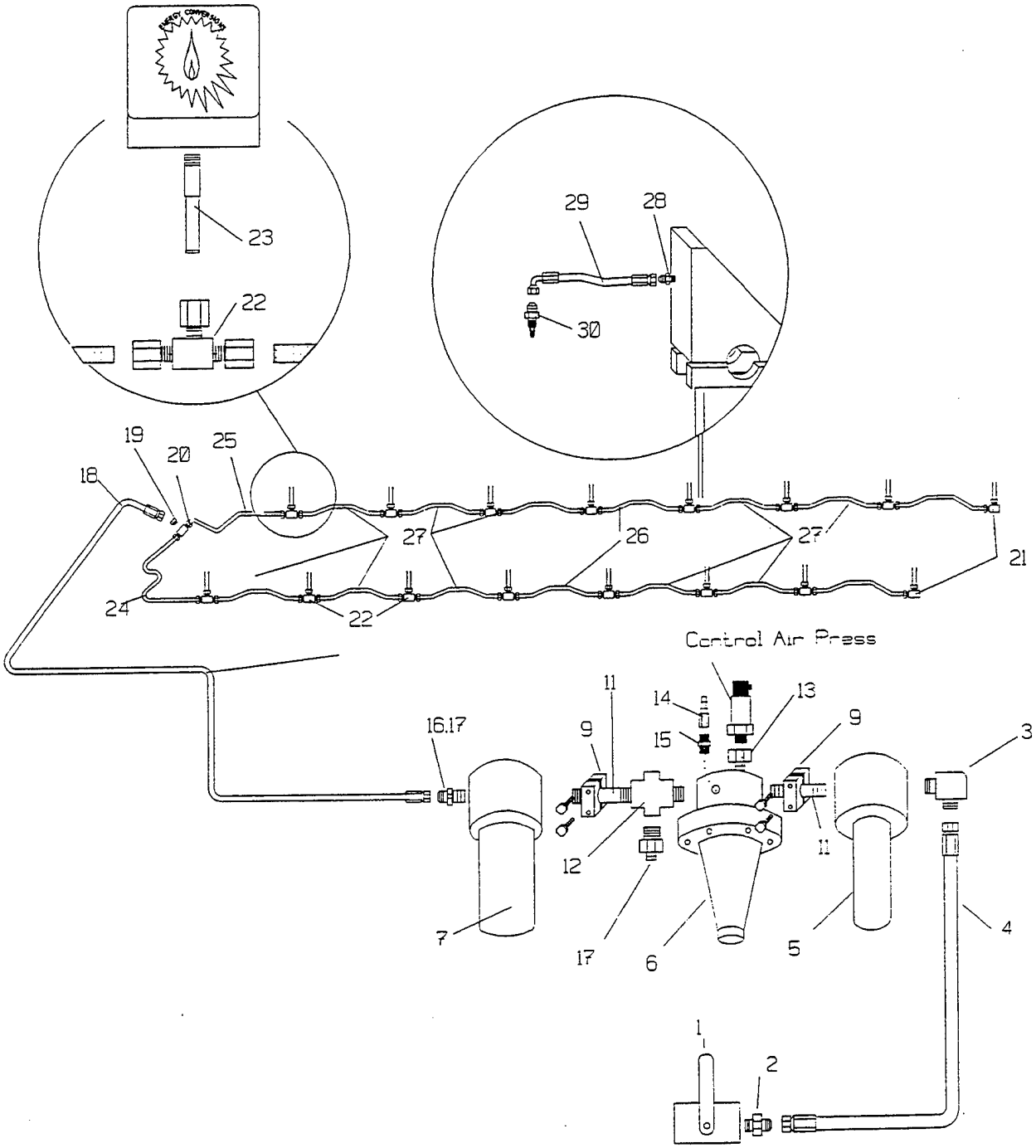

Note: Air Piping Hardware:

Ref. No.	Description	Ref No.	Description	Ref No.	Description
1	Air shutoff valve	13	Bushing	23	Fitting: SS custom nipple
2	Fitting valve to hose	14	Fitting test point	24	Tube engine - front left
3	Fitting oiler inlet	15	Fitting nipple	25	Tube engine - front right
4	Hose assembly	16	Fitting oiler outlet	26	Tube engine - center jumper
5	Filter	17	Fitting adapter	27	Tube engine jumpers
6	Regulator	18	Hose assy.	28	Fitting
7	Oiler	19	Fitting	29	Hose assembly
9	Mount bracket assy.	20	Fitting: male branch tee	30	Fitting - GIV AIR w/filter
11	Fitting: connector	21	Fitting: union elbow		
12	Fitting tee	22	Fitting: union tee		

Figure 4-15. Schematic diagram of air tubing to GIV's.

(Used by permission, Energy Conversions, Inc., U.S.A., 1996.)

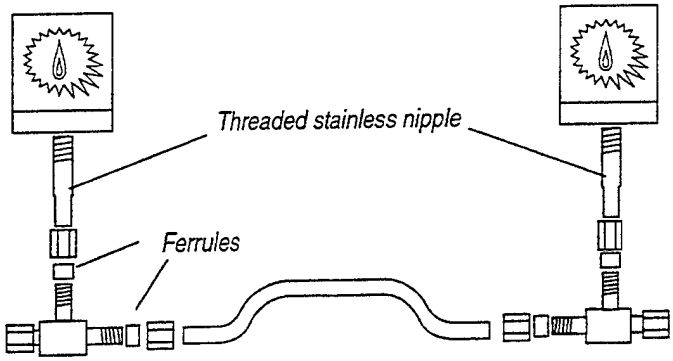

(a) Connection to load blocks.

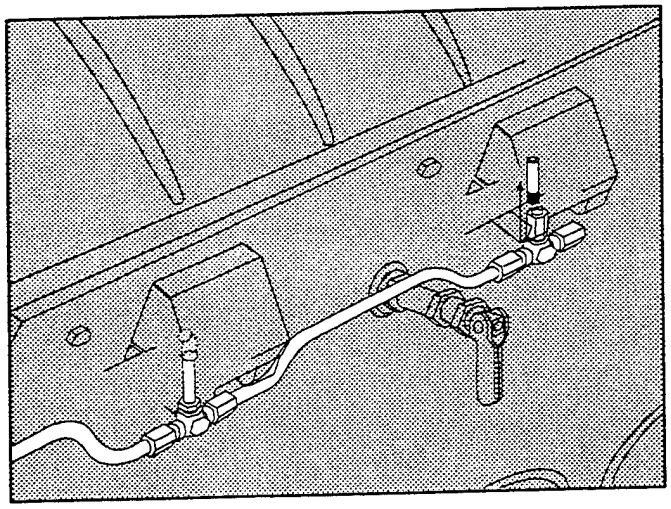

(b) Route around cylinder relief valves.

Figure 4-16. Routing of GIV tubing for compressed air.
(Used by permission, Energy Conversions, Inc., U.S.A., 1996.)

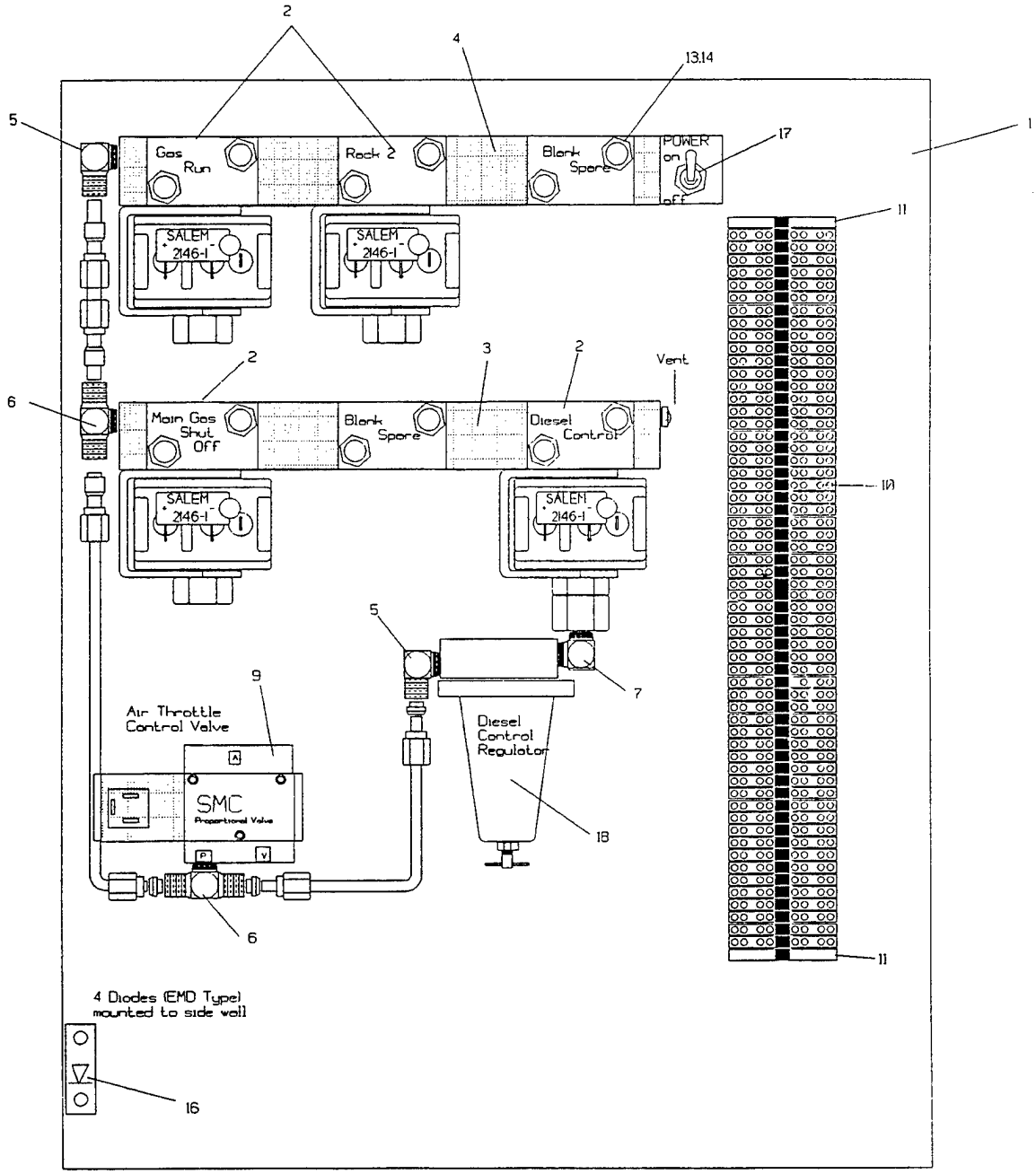

Note: Air Service Cabinet.

Ref. No.	Description	Ref. No.	Description	Ref. No.	Description
1	ASC assembly	6	Mounting block	13	Nut
2	Magnet valve	7	Fitting	14	Lockwasher
3	Mounting block	9	Press. control valve	16	Diode
4	Mounting block	10	Terminal block	17	Toggle switch
5	Fitting	11	Support	18	Pressure Regulator

Figure 4-17. Internal Arrangement of ASC.

(Used by permission, Energy Conversions, Inc., U.S.A., 1996.)

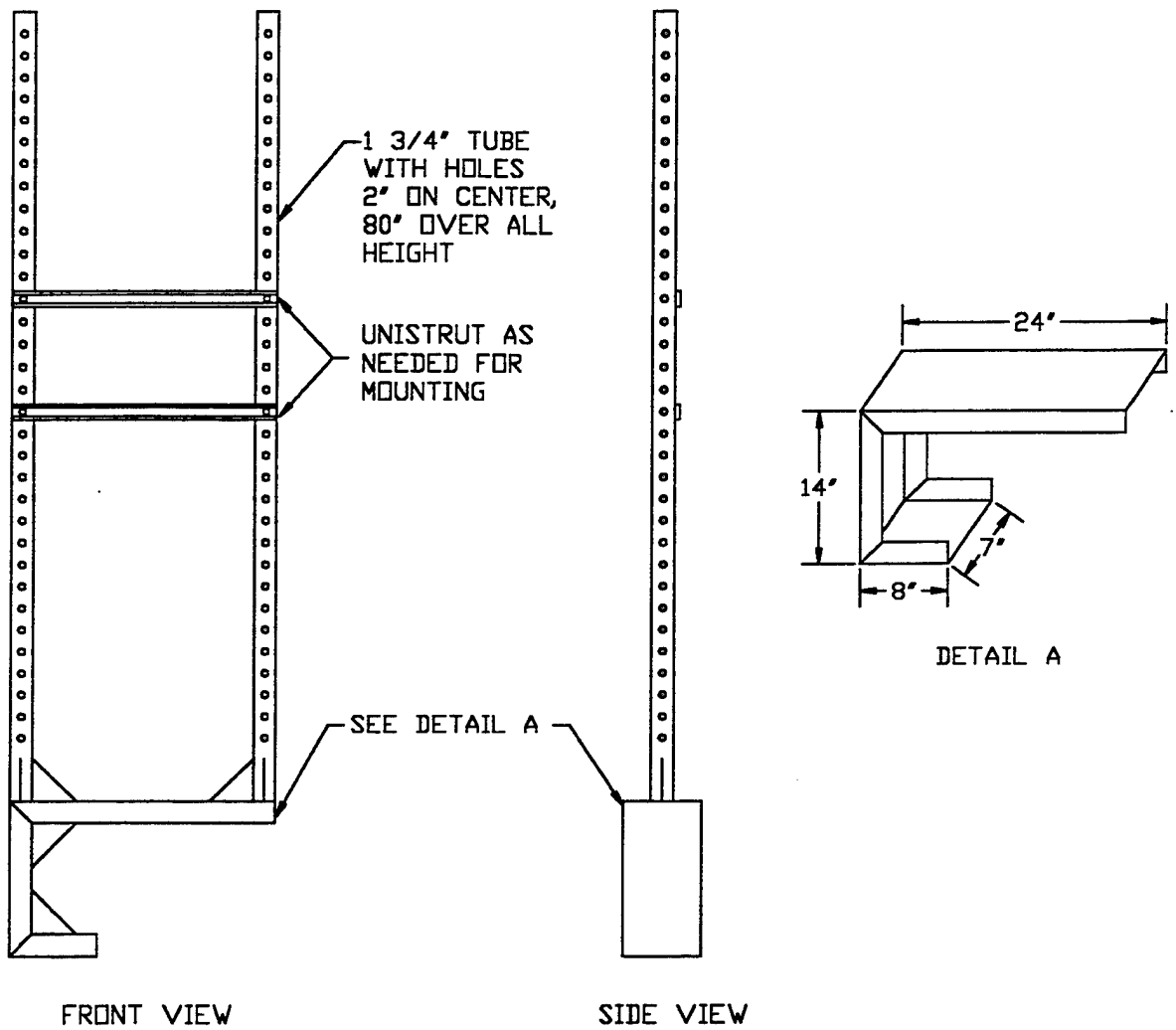

Figure 4-18. Mounting bracket for engine control unit (ECU) and air service cabinet (ASC).

(a) In process of checkout.

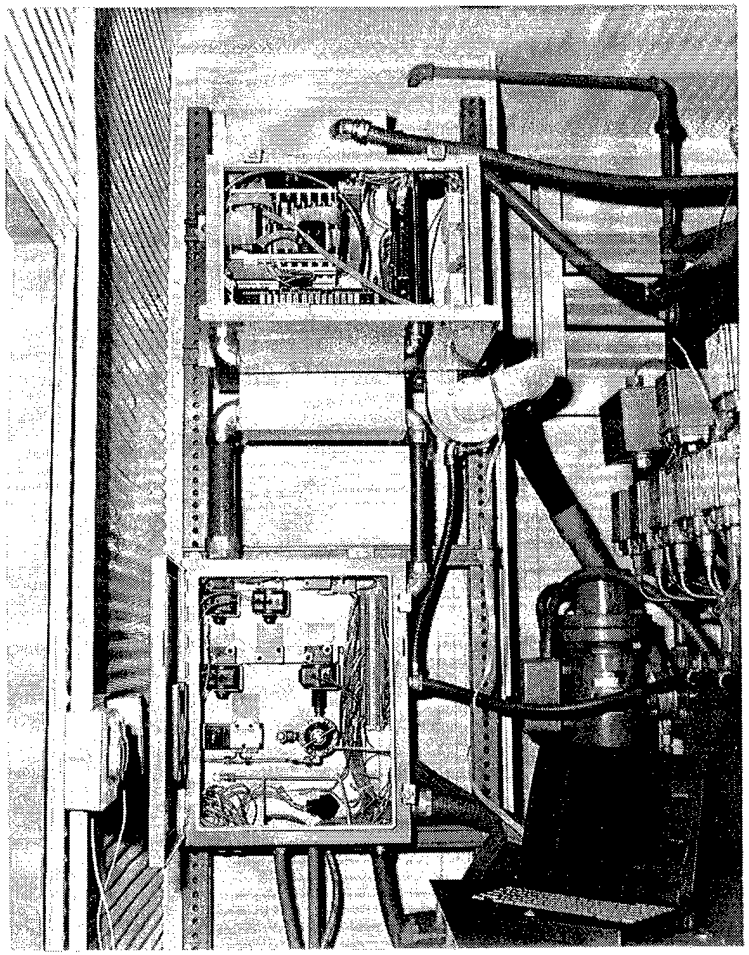

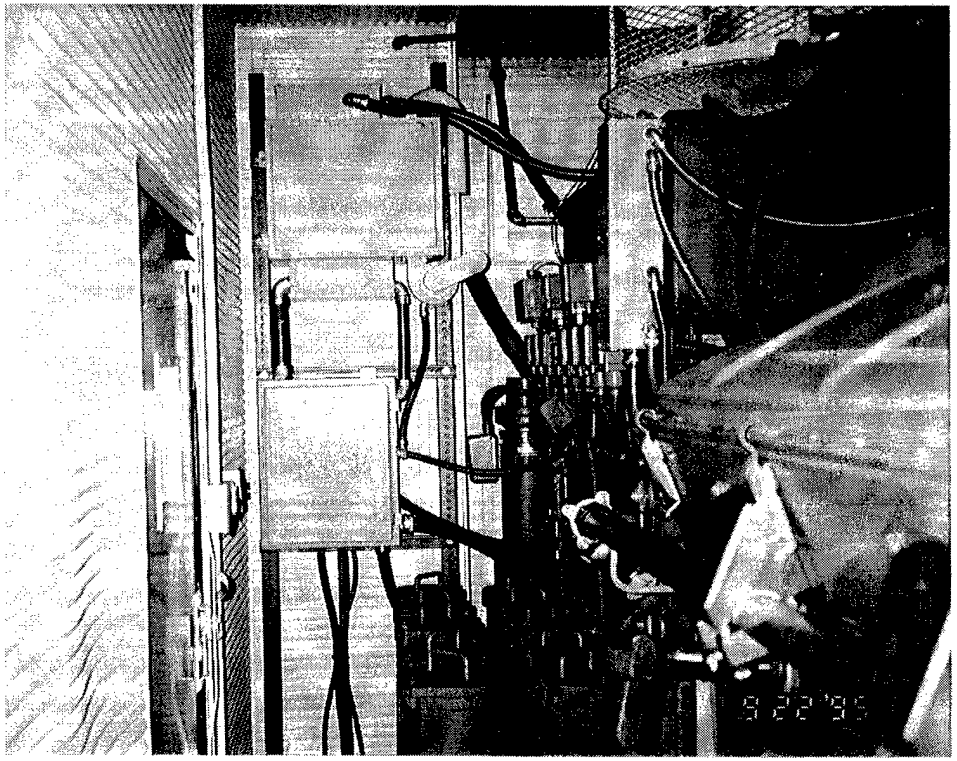

(b) Completed installation.

Figure 4-19. ECU and ASC mounted in engine house.

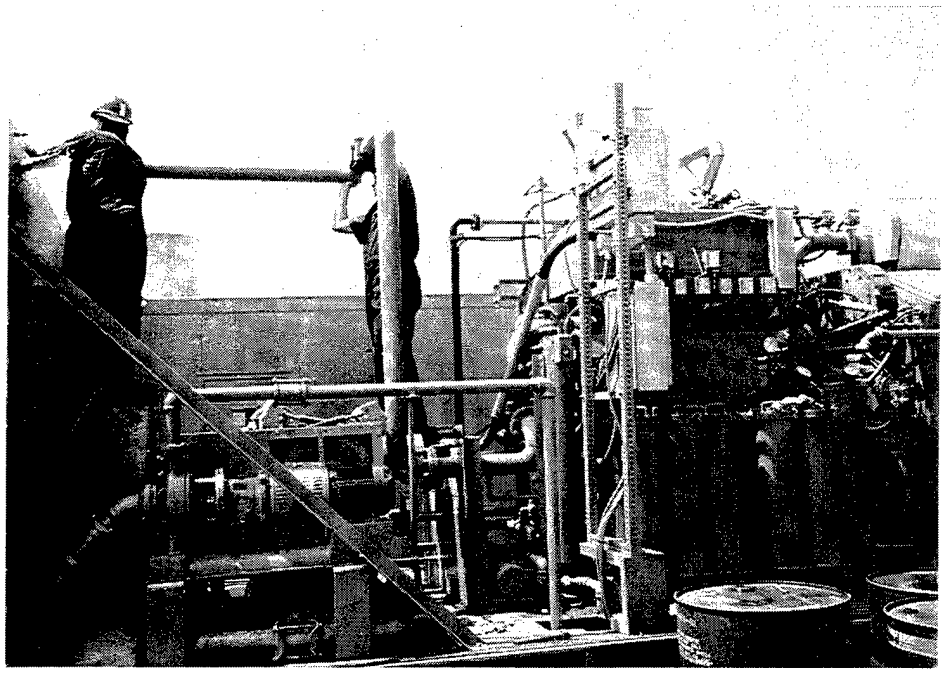

(c) Mounted on freestanding support bracket to allow engine generator set housing cover to be removed.

Figure 4-19. ECU and ASC mounted in engine house. (Cont'd.)

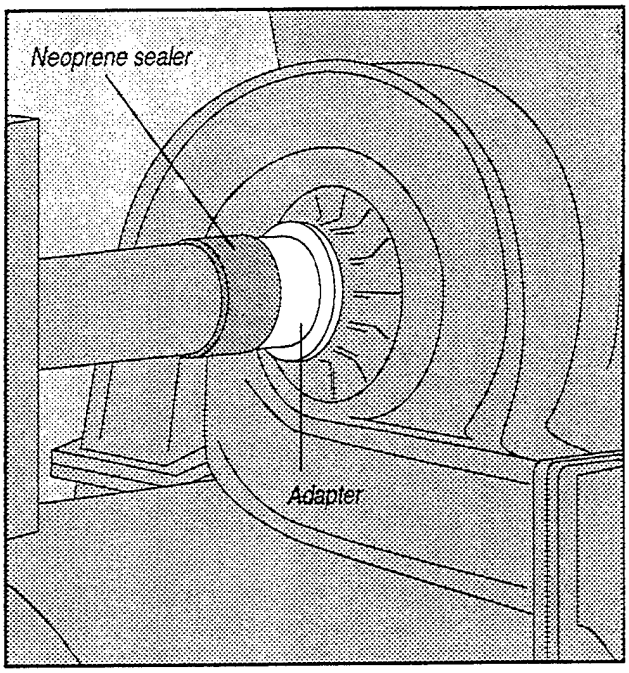

(a) Standard turbocharger with adapter fitting highlighted.

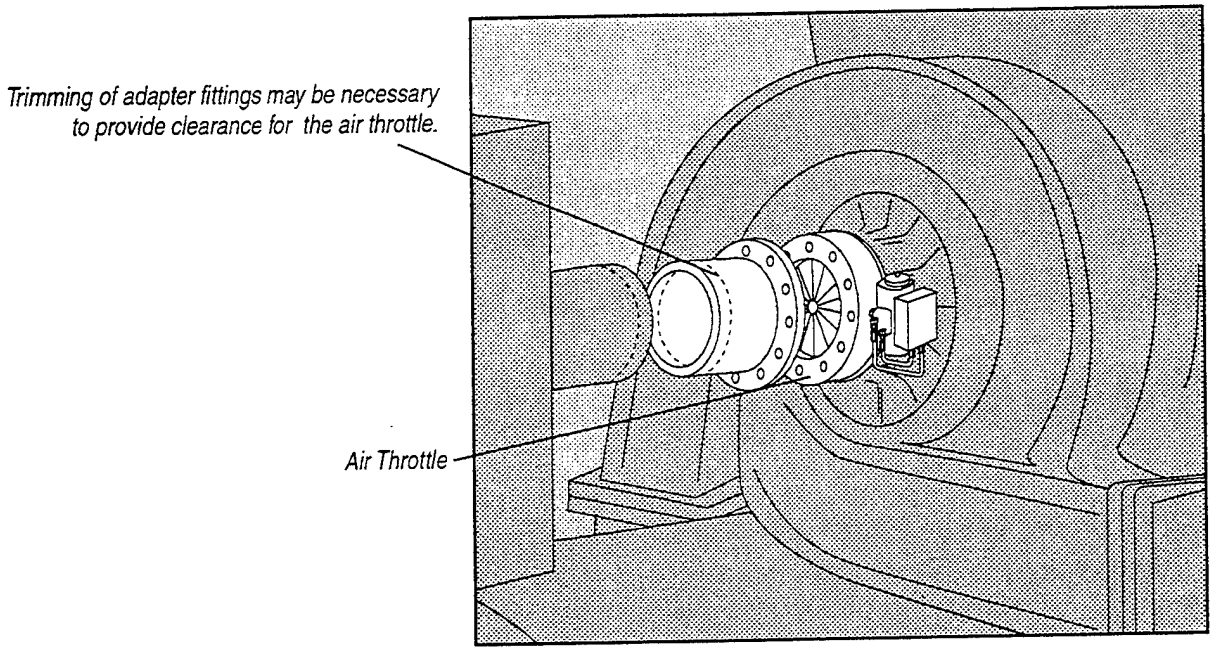

(b) Air throttle being installed with adapter fitting.

Figure 4-20. Turbocharger installation.
(Used by permission, Energy Conversions, Inc., U.S.A., 1996.)

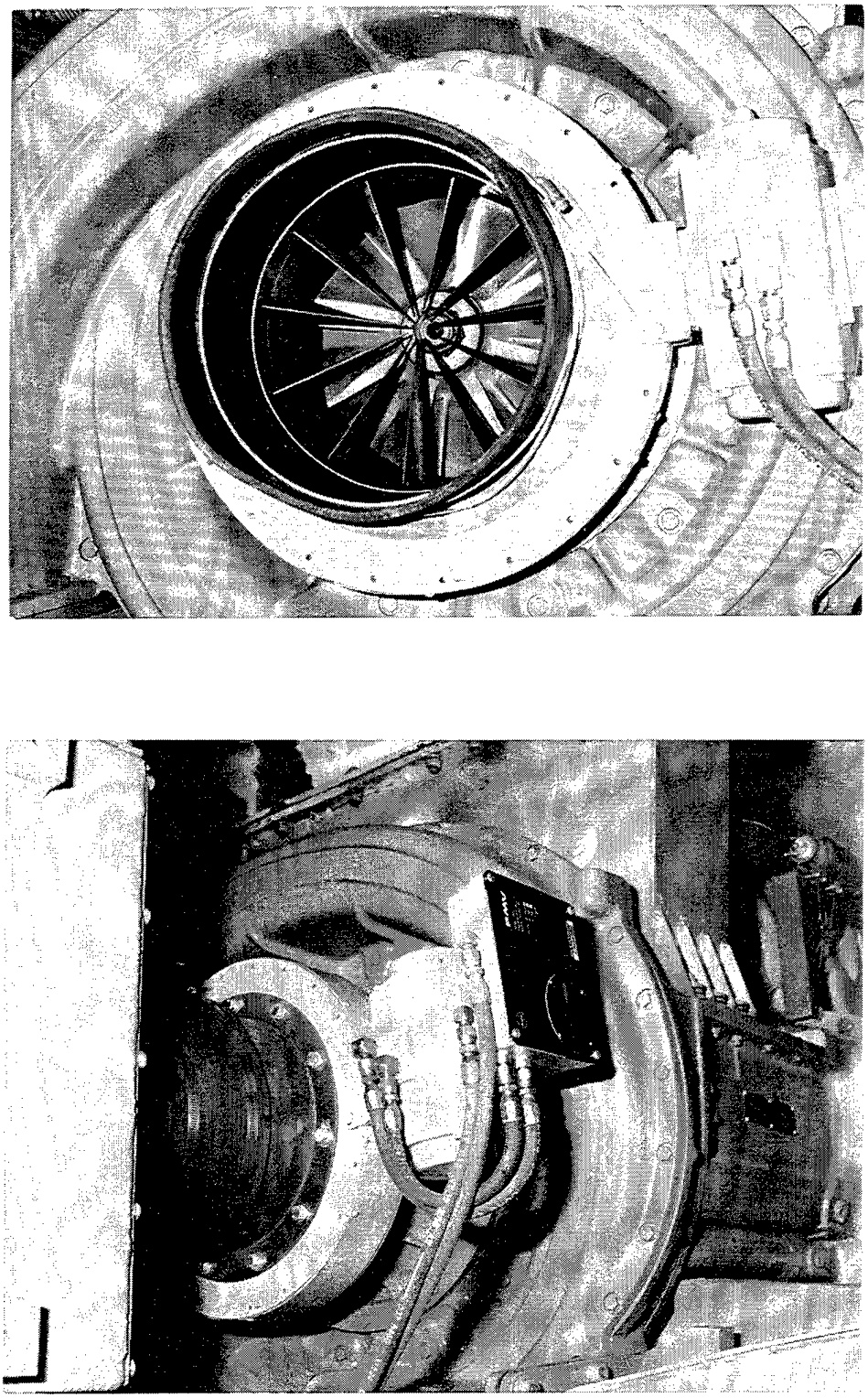

(b) Installation complete with air-actuated positioner.

Figure 4-21. Photographs of air throttle installation.

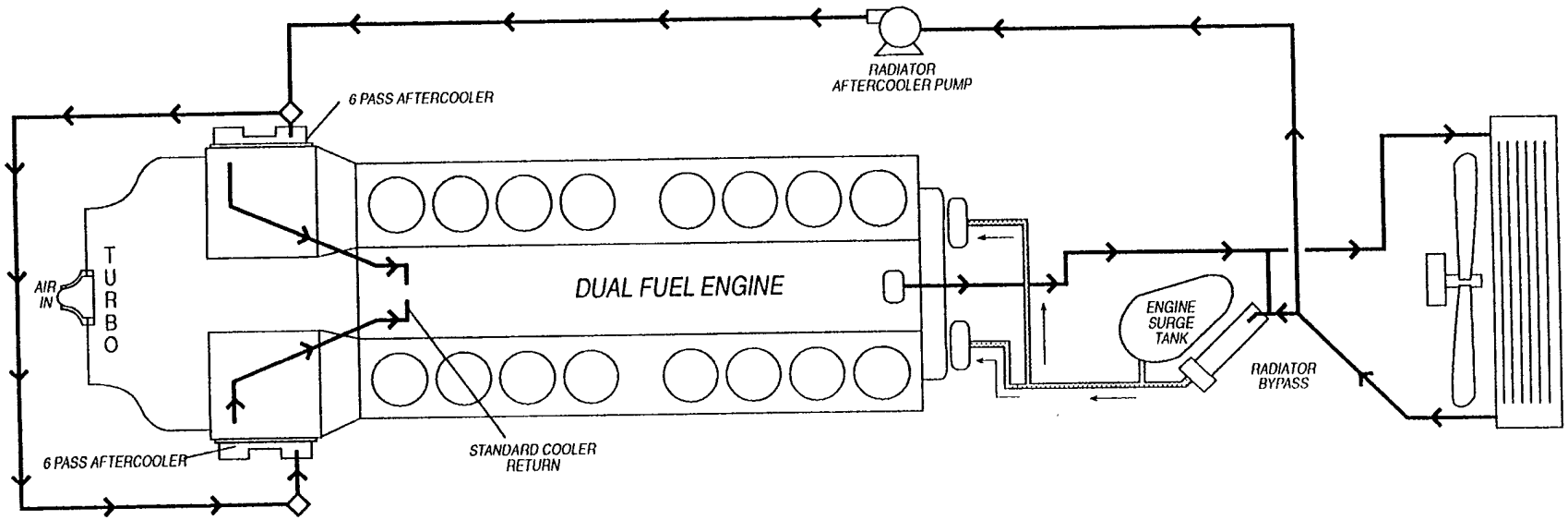

Figure 4-22. Schematic diagram of enhanced cooling system.
(Used by permission, Energy Conversions, Inc., U.S.A., 1996.)

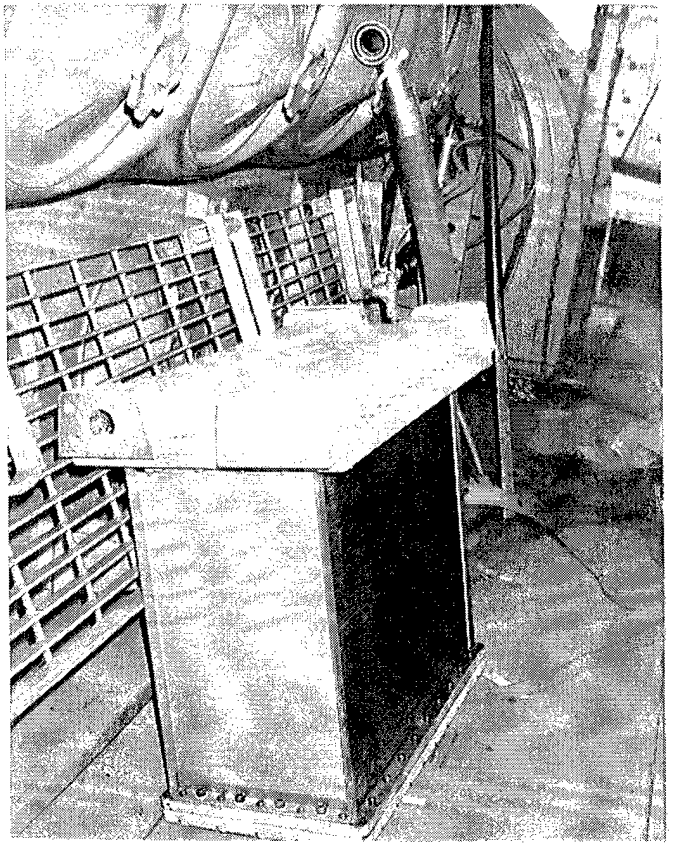

(a) 6-Pass aftercooler ready for installation.

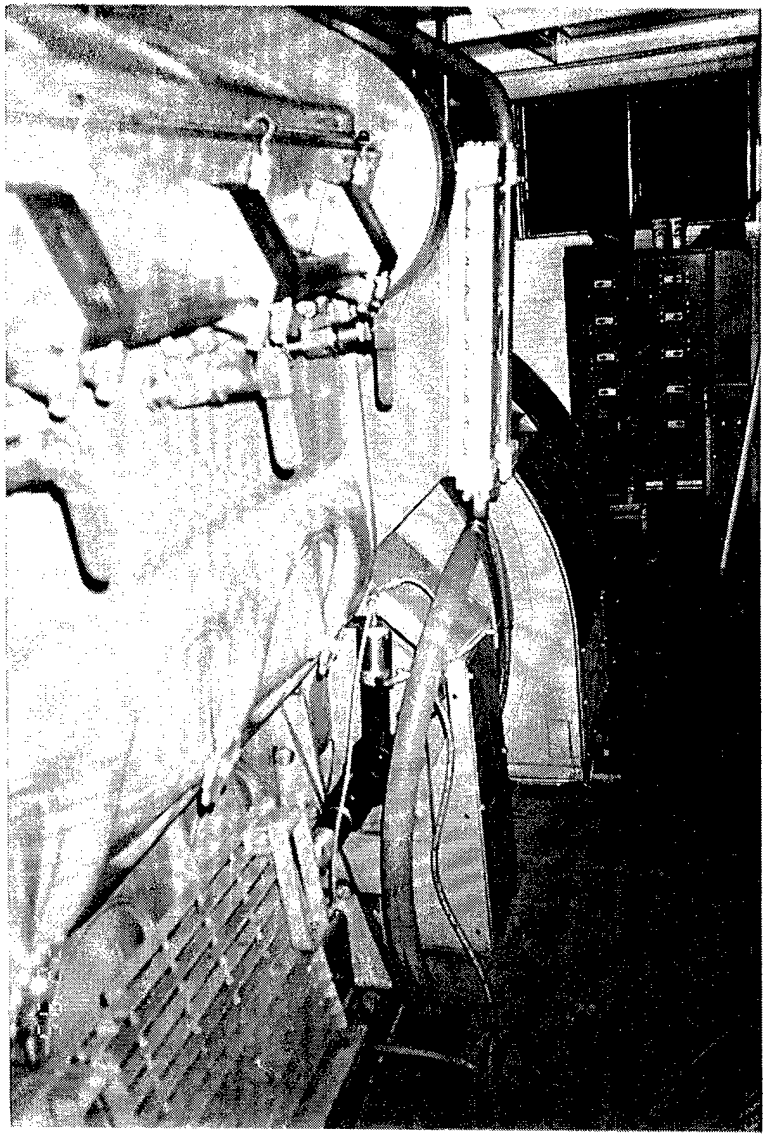

(b) New aftercooler installed with modified water lines.

Figure 4-23. Aftercooler installation.

(a) Original air compressor mounted longitudinally on air tank (interior view).

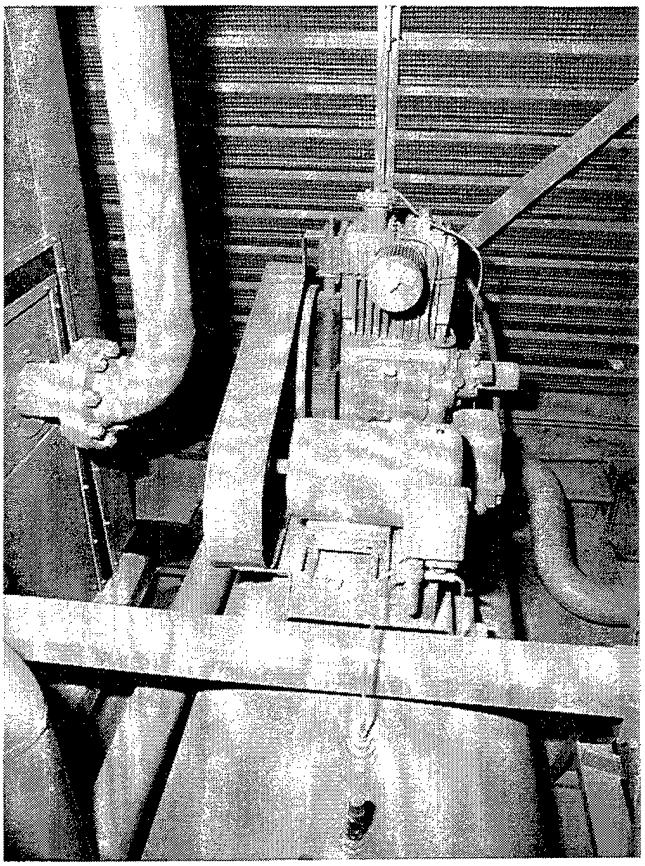

(b) New air compressor (rear) and water pump with suction and outlet water lines installed (exterior view).

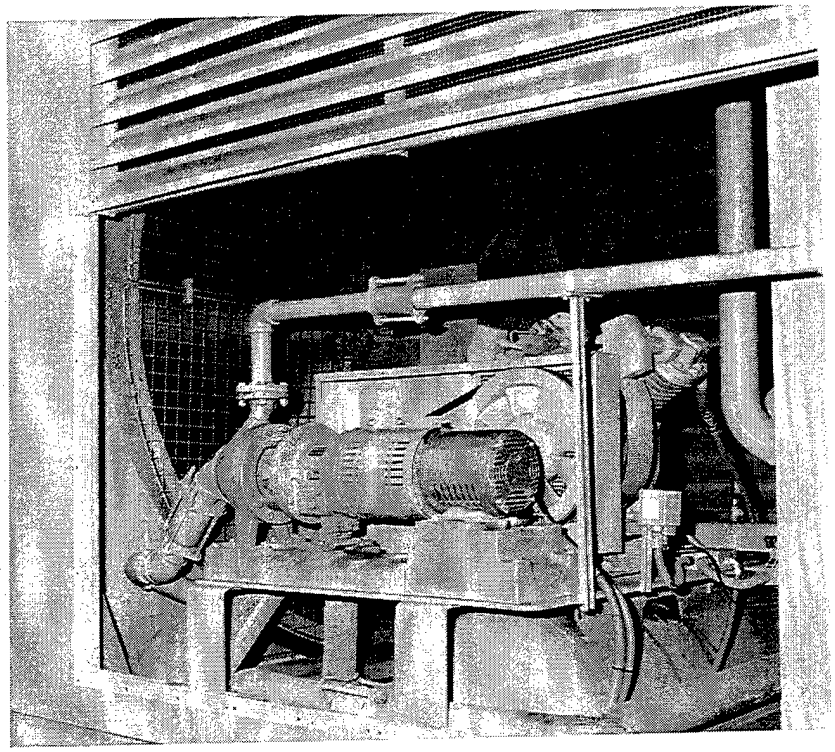

Figure 4-24. Mounting of air compressor and water pump.

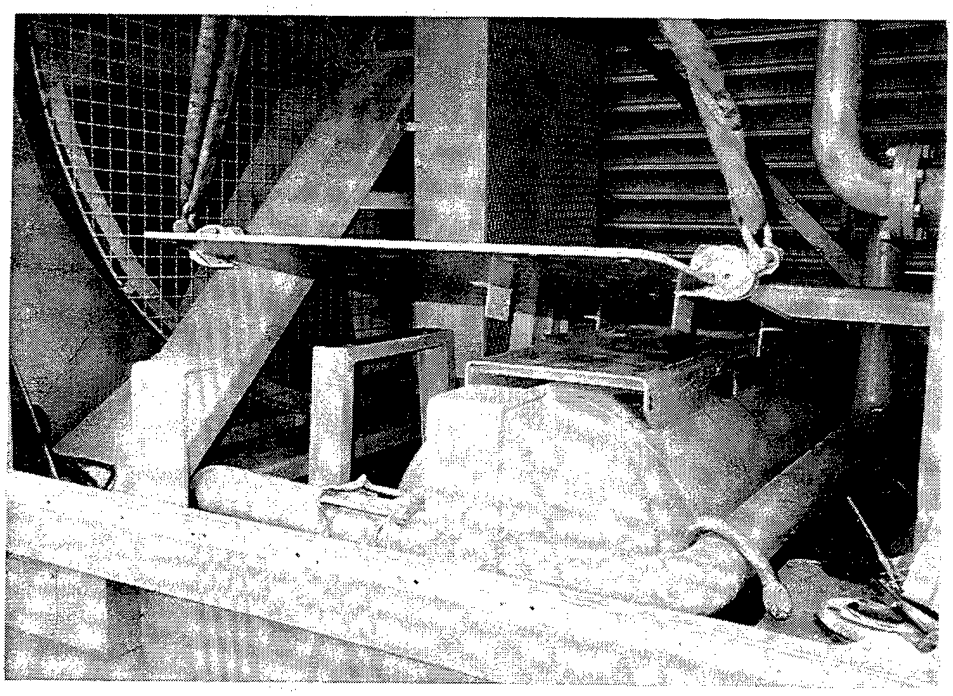

(a) Support legs, including compressed air tank with mounting brackets and channel iron support legs.

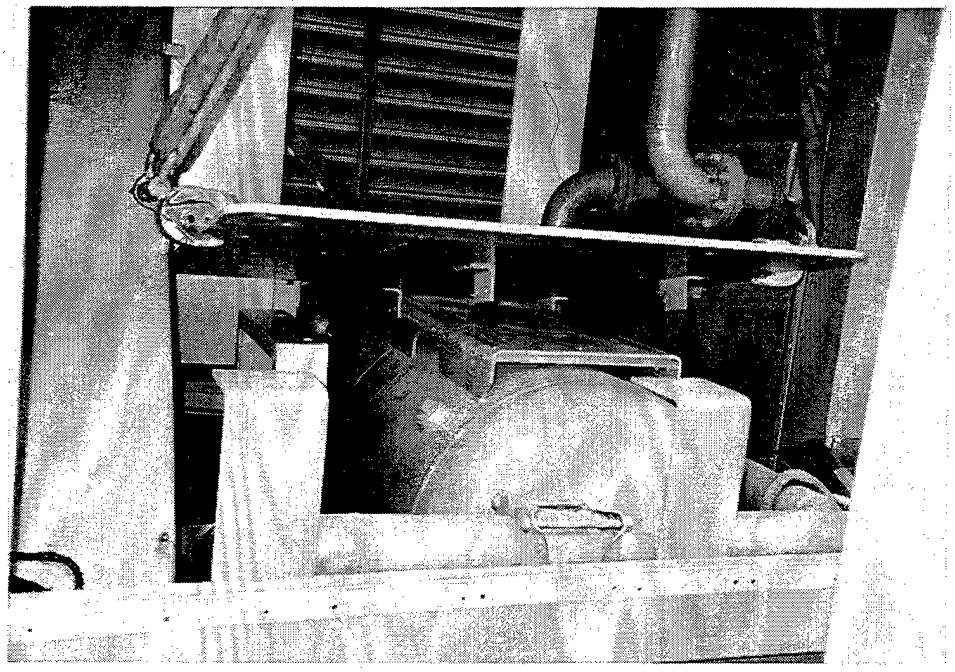

(b) View from opposite side.

Figure 4-25. Table for supporting air compressor and water pump.

(c) Closeup of channel iron support legs.

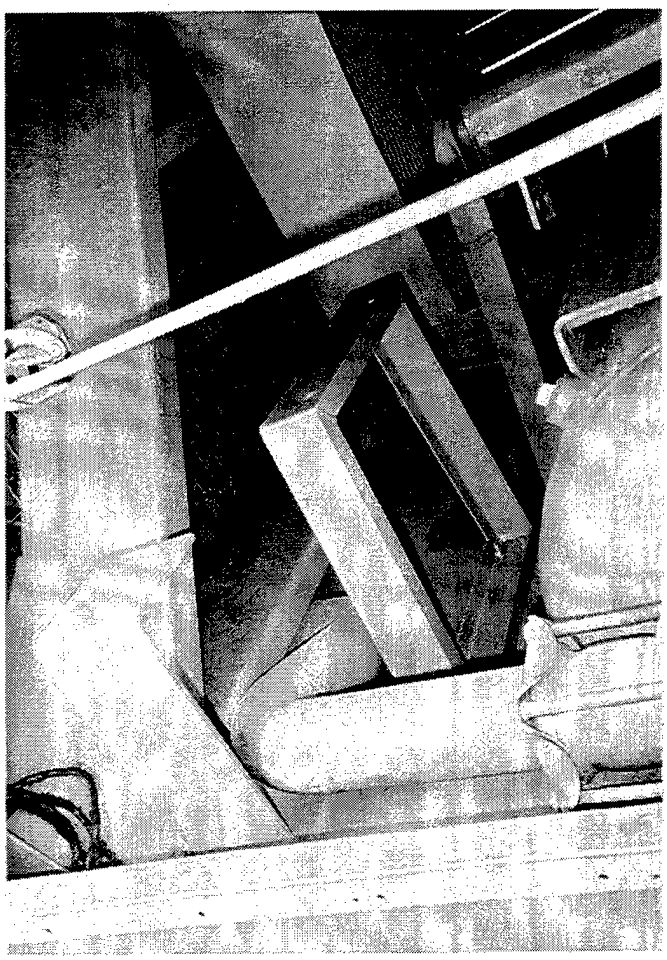

(d) Table bolted in place.

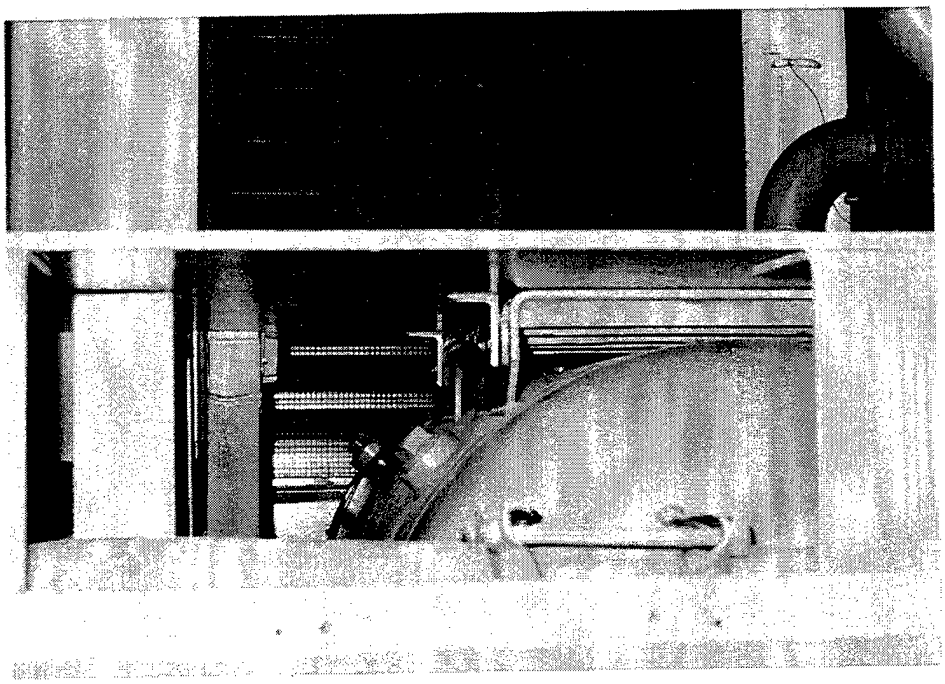

Figure 4-25. Table for supporting air compressor and water pump. (Cont'd.)

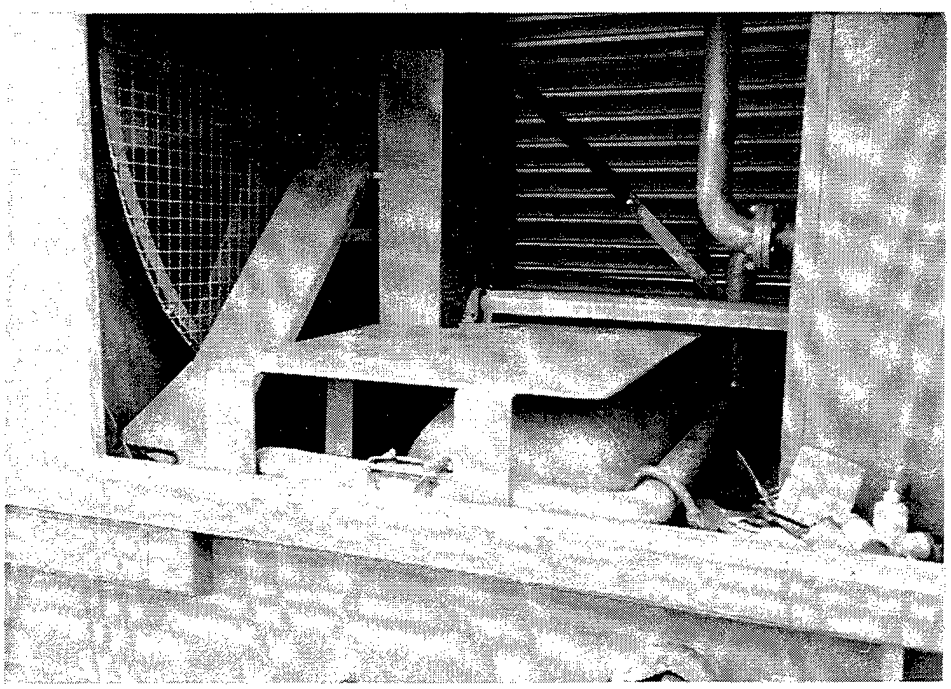

(e) Table installed.

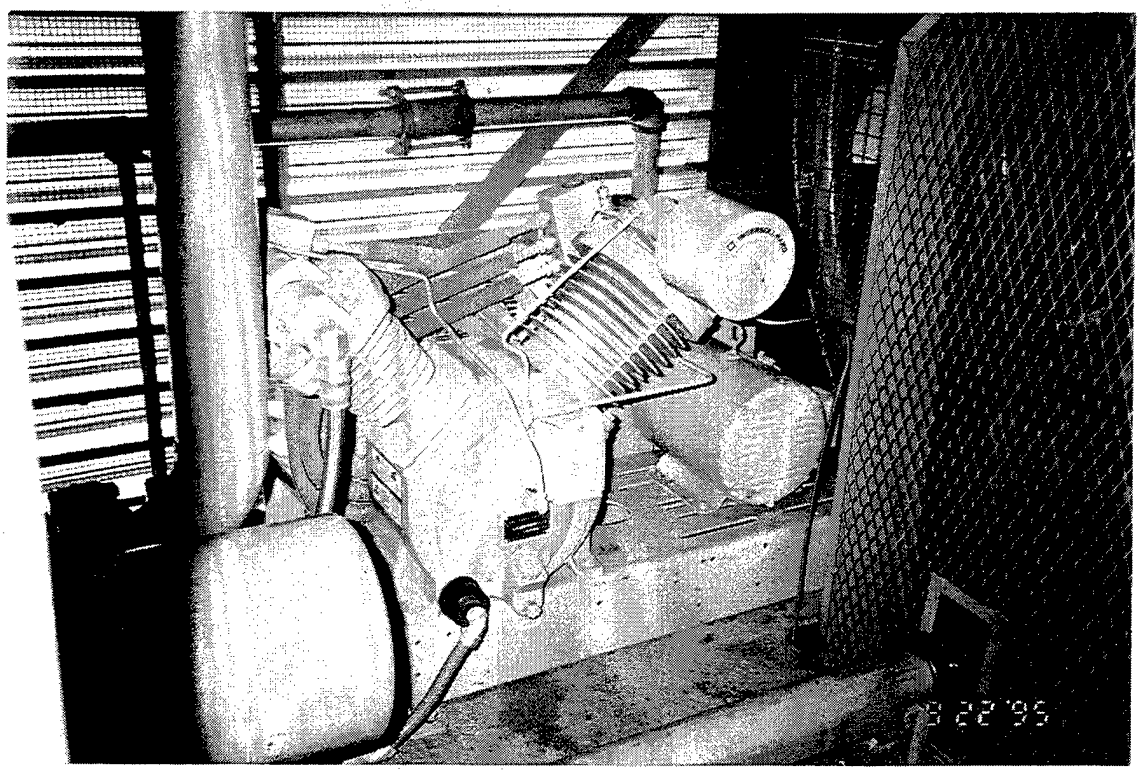

(f) Inside view of new compressor after installation.

Figure 4-25. Table for supporting air compressor and water pump. (Cont'd.)

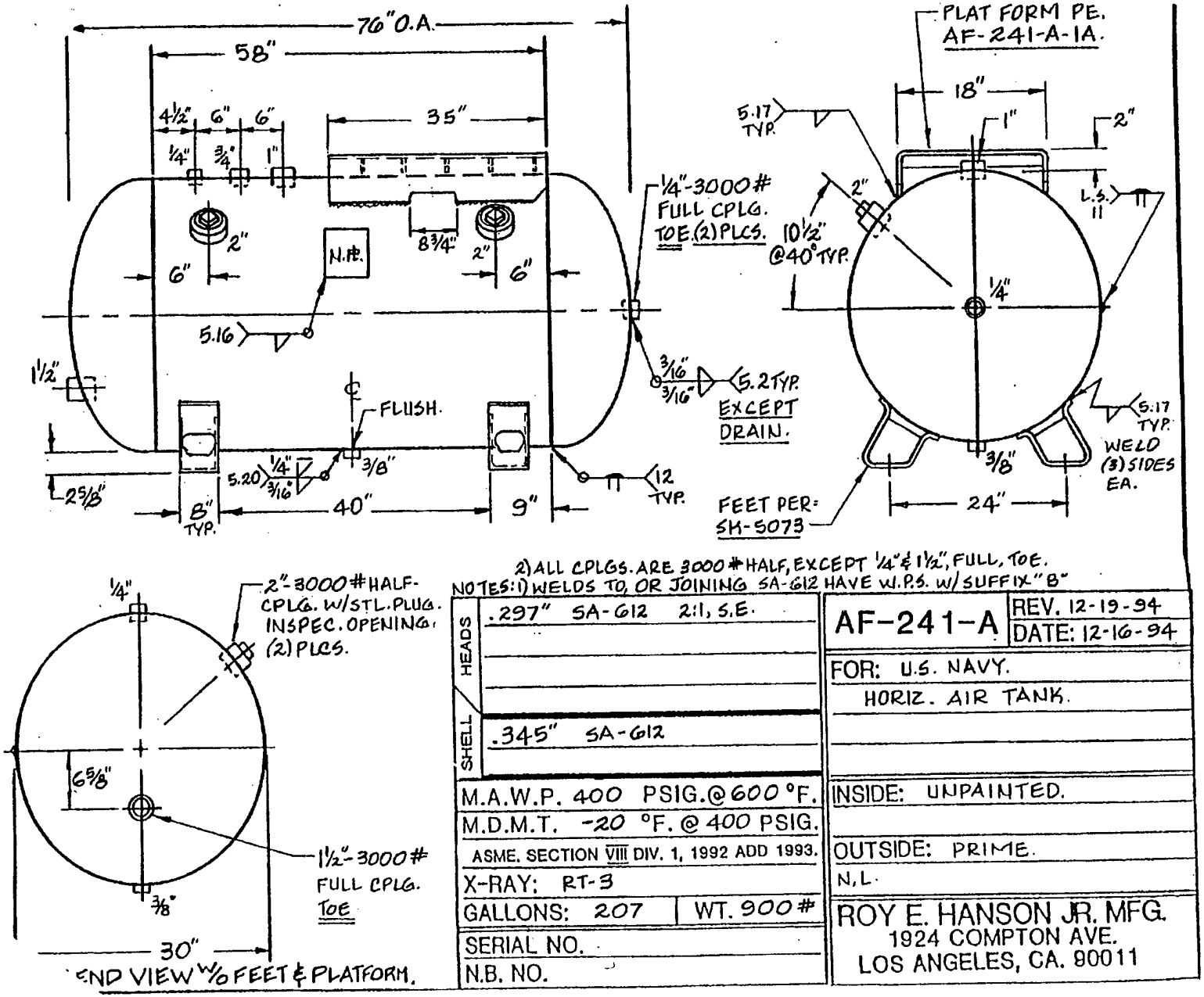

Figure 4-26. Specification for replacement compressed air storage tank.

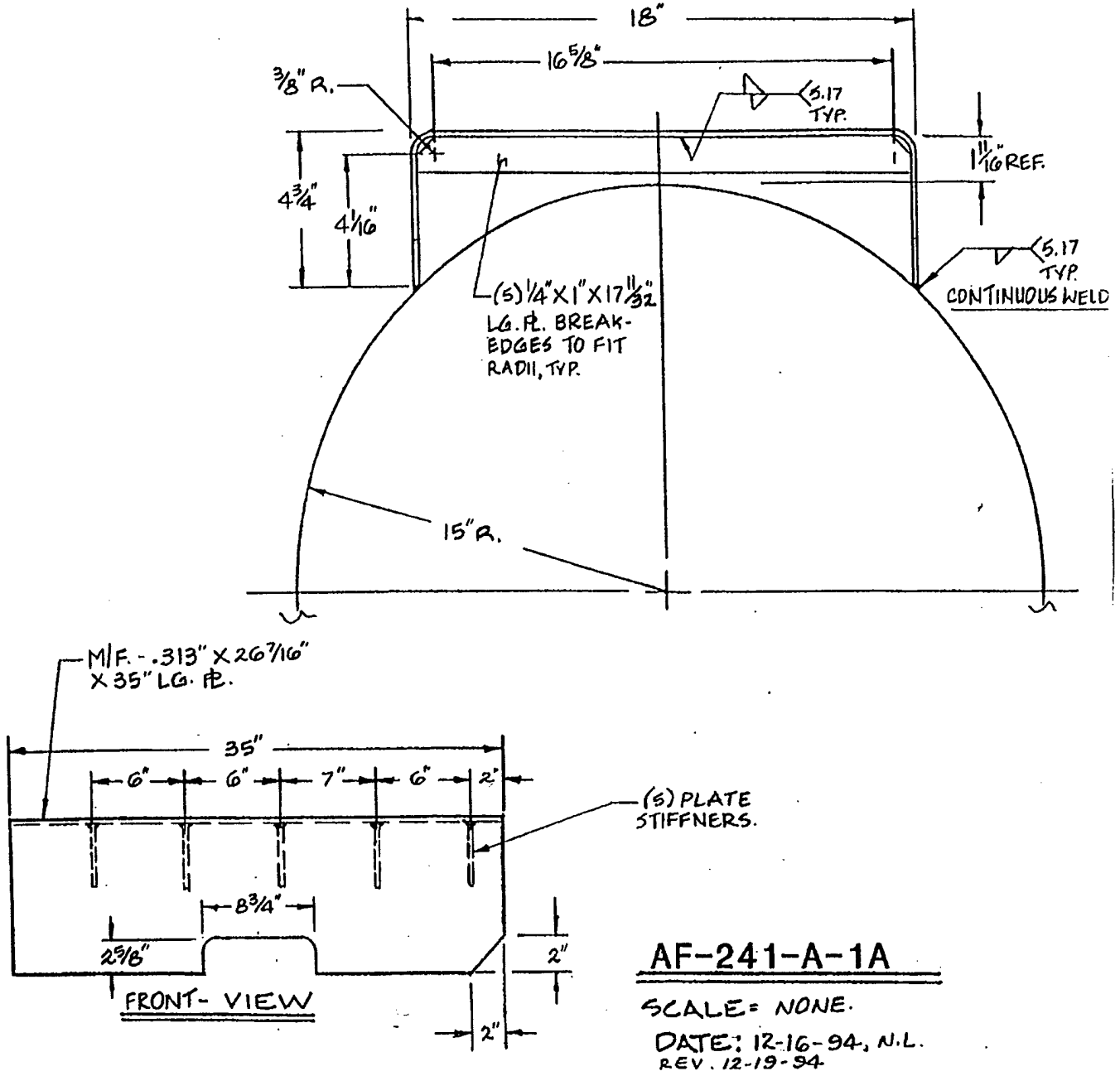

Figure 4-26. Specification for replacement compressed air storage tank. (Cont'd.)

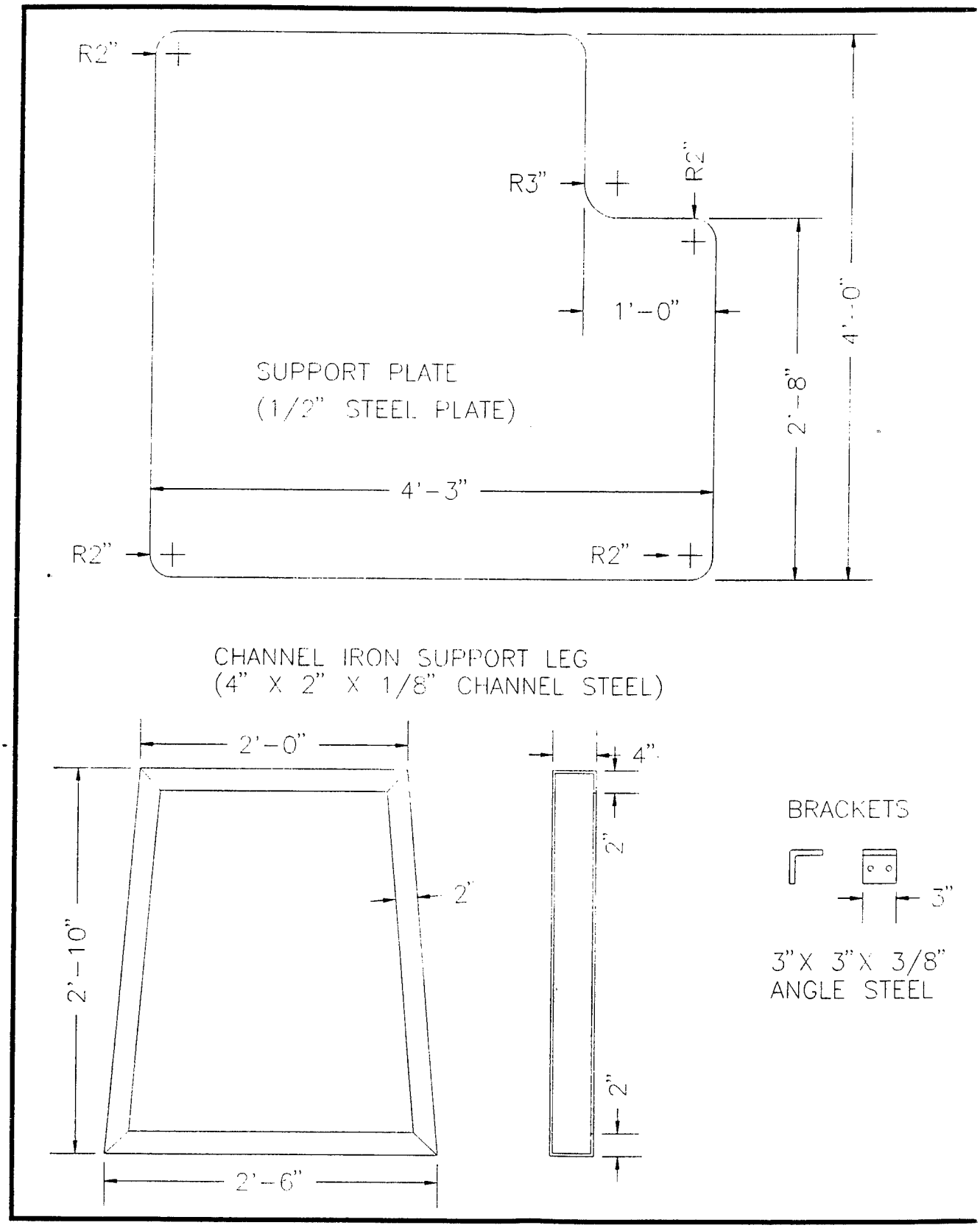

Figure 4-27. Specifications of tabl

1

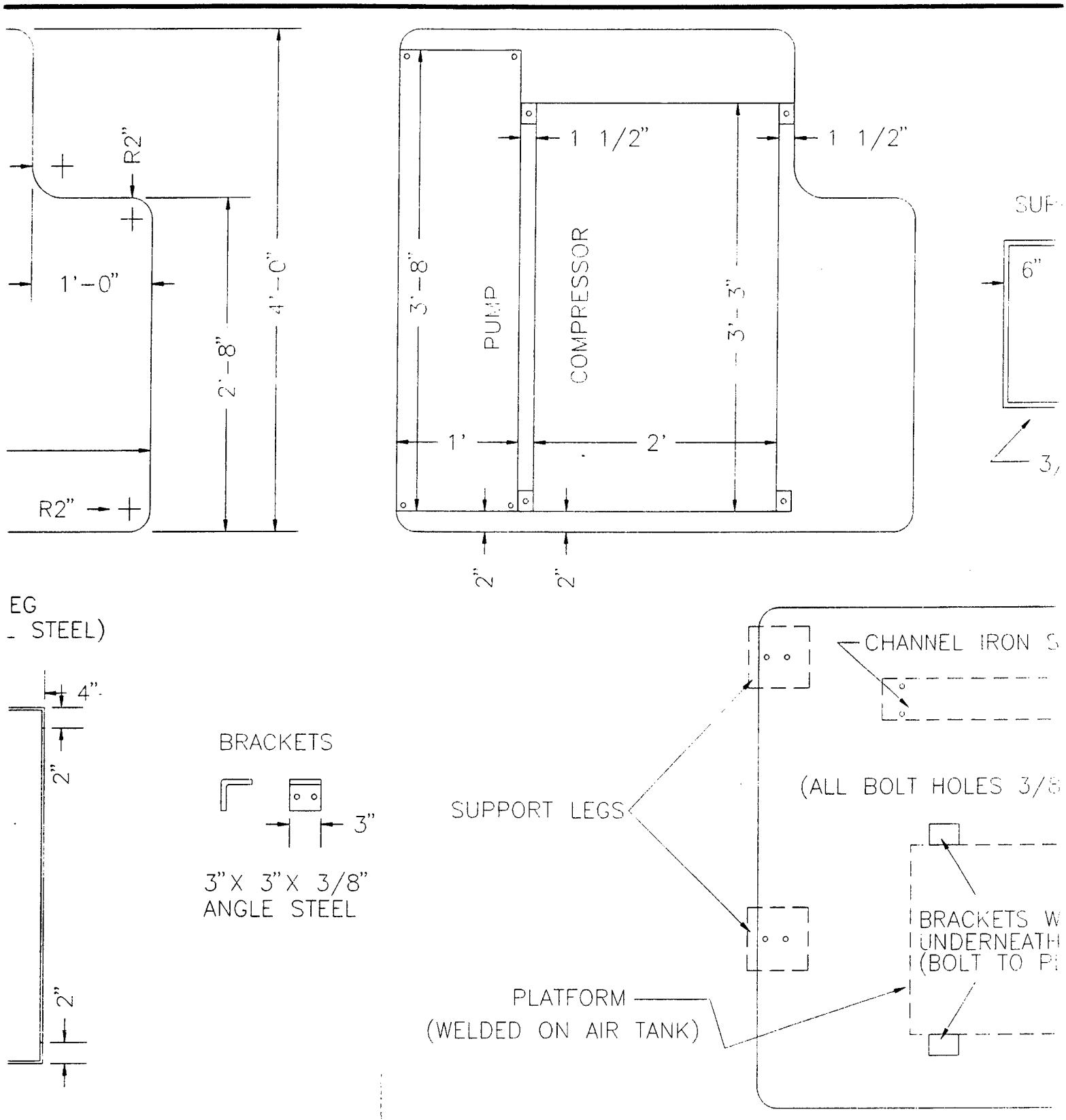

Figure 4-27. Specifications of table for pump and compressor support.

2

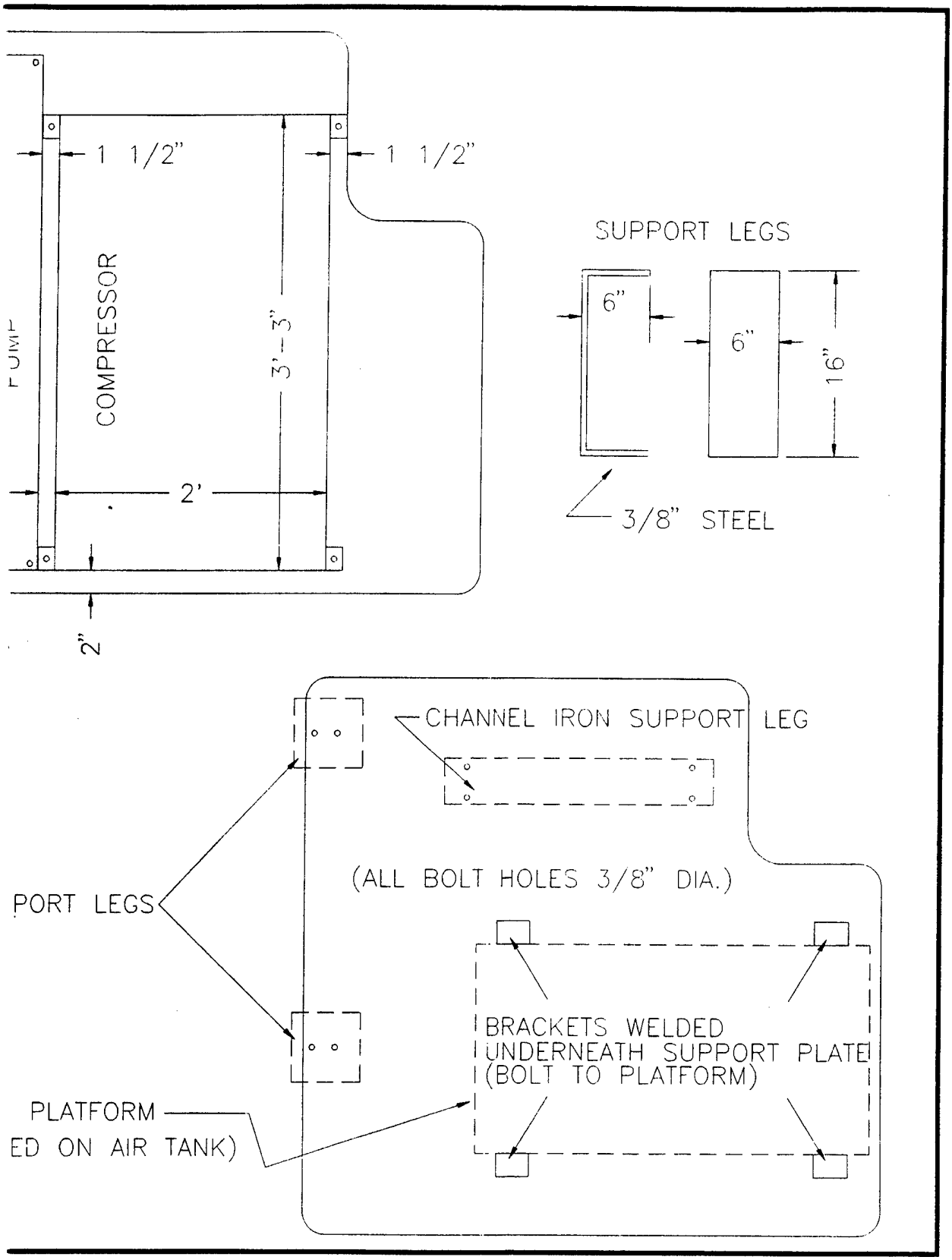

and compressor support.

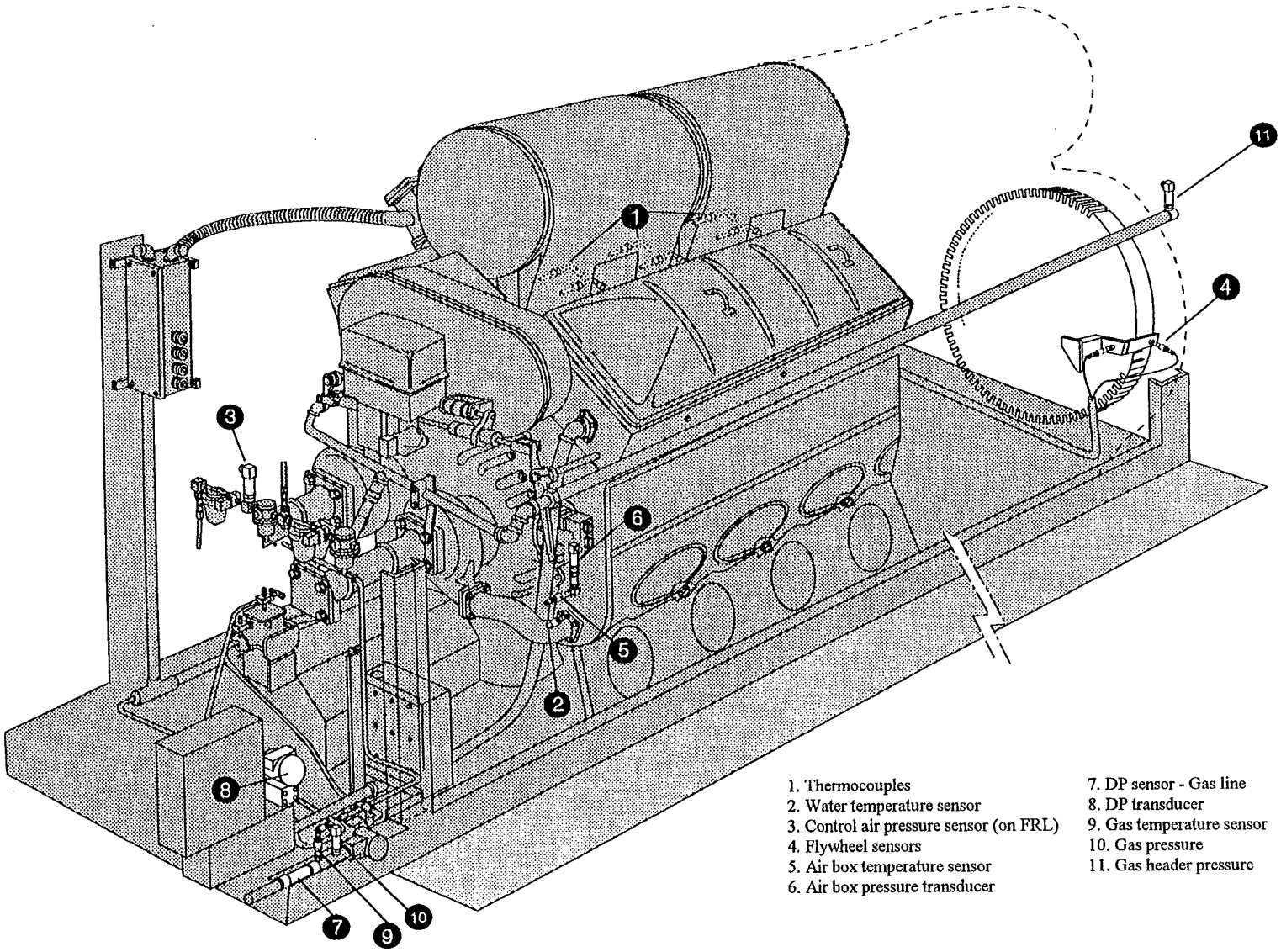

Figure 4-28. Sensors for dual fuel conversion.
(Used by permission, Energy Conversions, Inc., U.S.A., 1996.)

Exhaust Conduit and Thermocouples

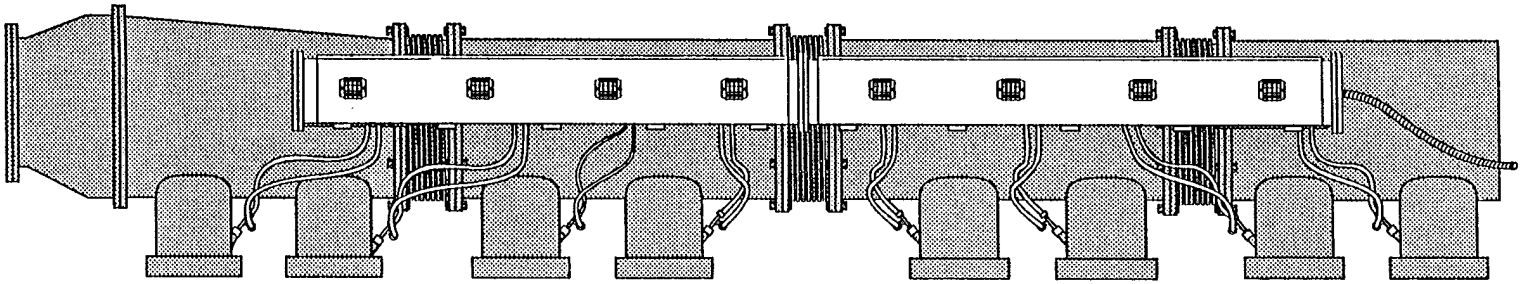

NOTE: All sensors face toward the center on all engines. Exceptions can be made if carefully planned.

Figure 4-29. Exhaust temperature measurements.
(Used by permission, Energy Conversions, Inc., U.S.A., 1996.)

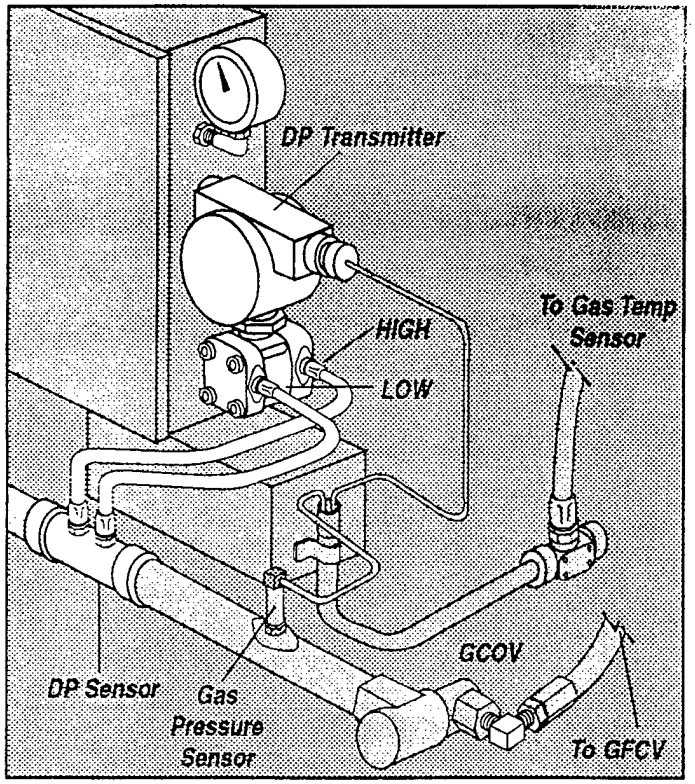

(a) NG metering sensors.

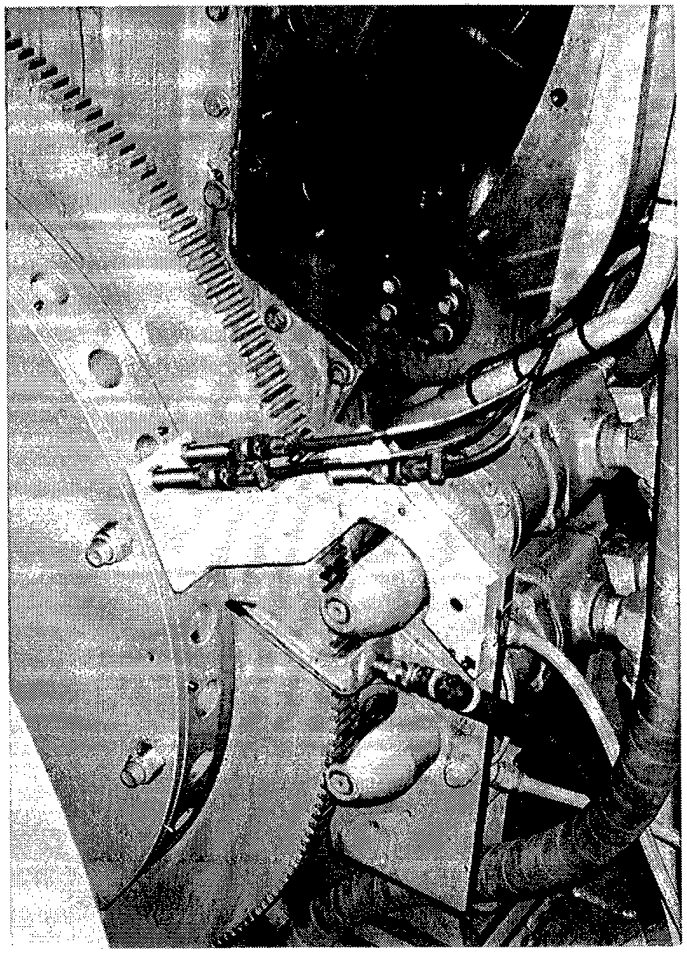

(b) Flywheel sensors on mounting bracket.

Figure 4-30. Dual fuel sensors.

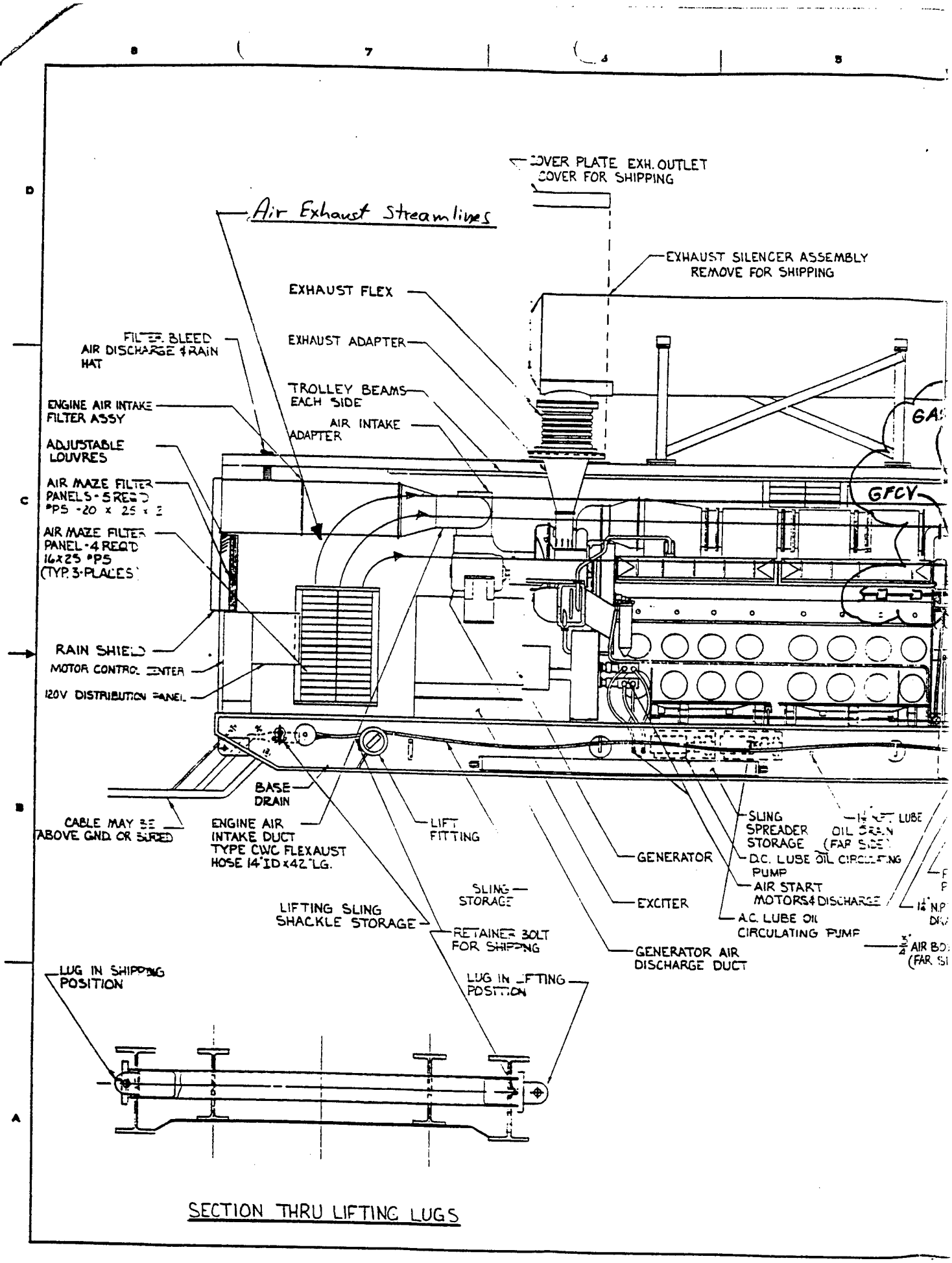

Figure 4-31. Cutaway side view of MU
gas detectors and air flow
(Used by permission, Energy Conversio

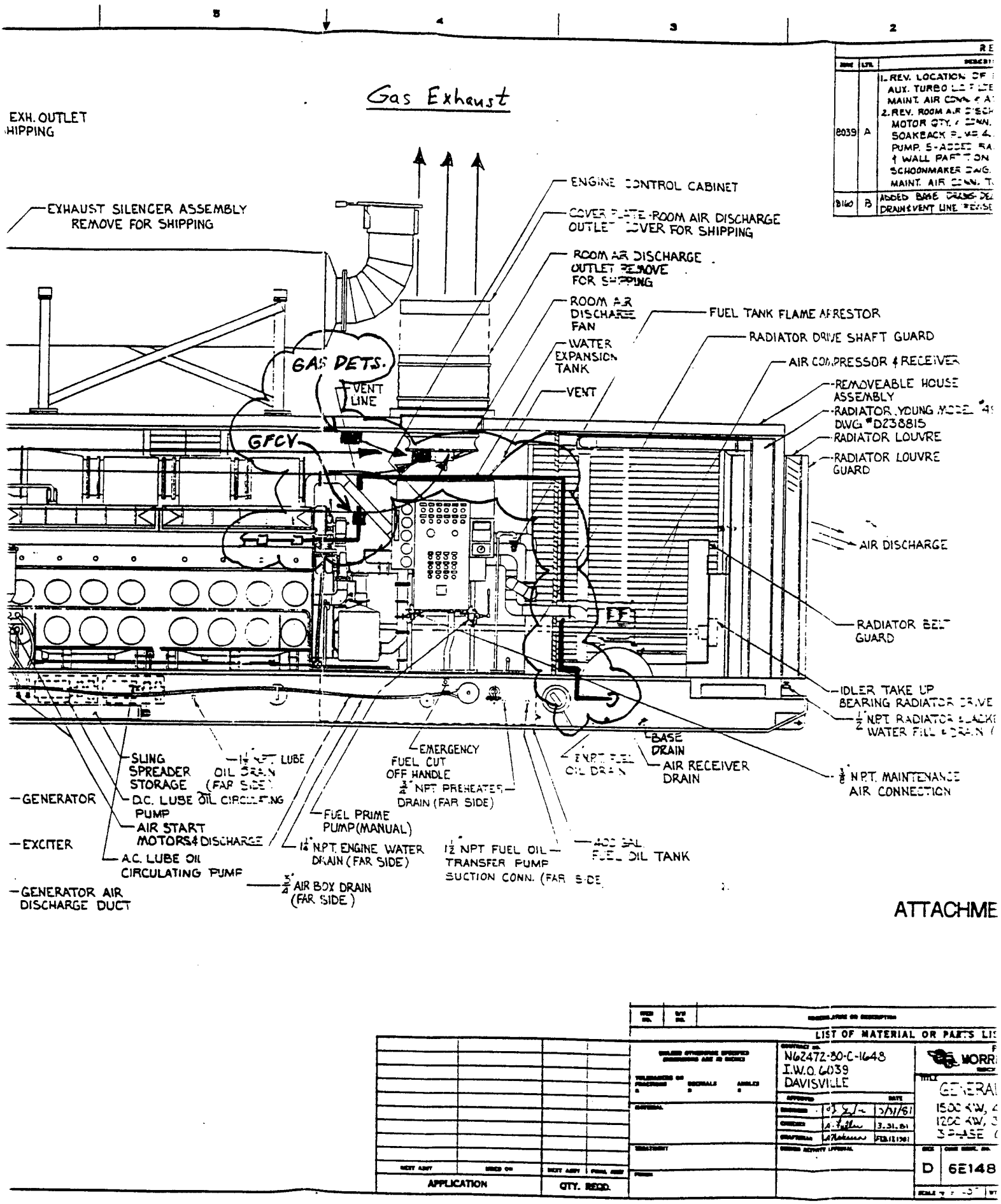

Figure 4-31. Cutaway side view of MUSE unit showing NG piping, gas detectors and air flow streamlines.
(Used by permission, Energy Conversions, Inc., U.S.A., 1996.)

2

REVISIONS				
ZONE	LTR.	DESCRIPTION	DATE	APPROVED
8039	A	1. REV. LOCATION OF FUEL PRIME PUMP, AUX. TURBO LUBE FILTER, DRAIN CONN, 1 1/2 NPT MAINT. AIR CONN & ASSOC. PIPING. 2. REV. ROOM AIR DISCHARGE FAN, AIR START MOTOR QTY. & CONN. 3-RELOCATED AC SOAKBACK FLAME & ADDED DC SOAKBACK PUMP. 5-ADDED RADIATOR DRIVE SHAFT & WALL PARTITION 6-REV. REF TO SCHOONMAKER DWG. TO GFE. 7-REV. 1/2" MAINT. AIR CONN. TO 3/8"	7-17-81	J. Humphry
8160	B	ADDED BASE DRAIN, DEL. LOPI. ADDED RADIATOR DRAIN & VENT LINE REVISED J.W PIPING CONFIGURATION	8-13-81	D. Pearce

Exhaust

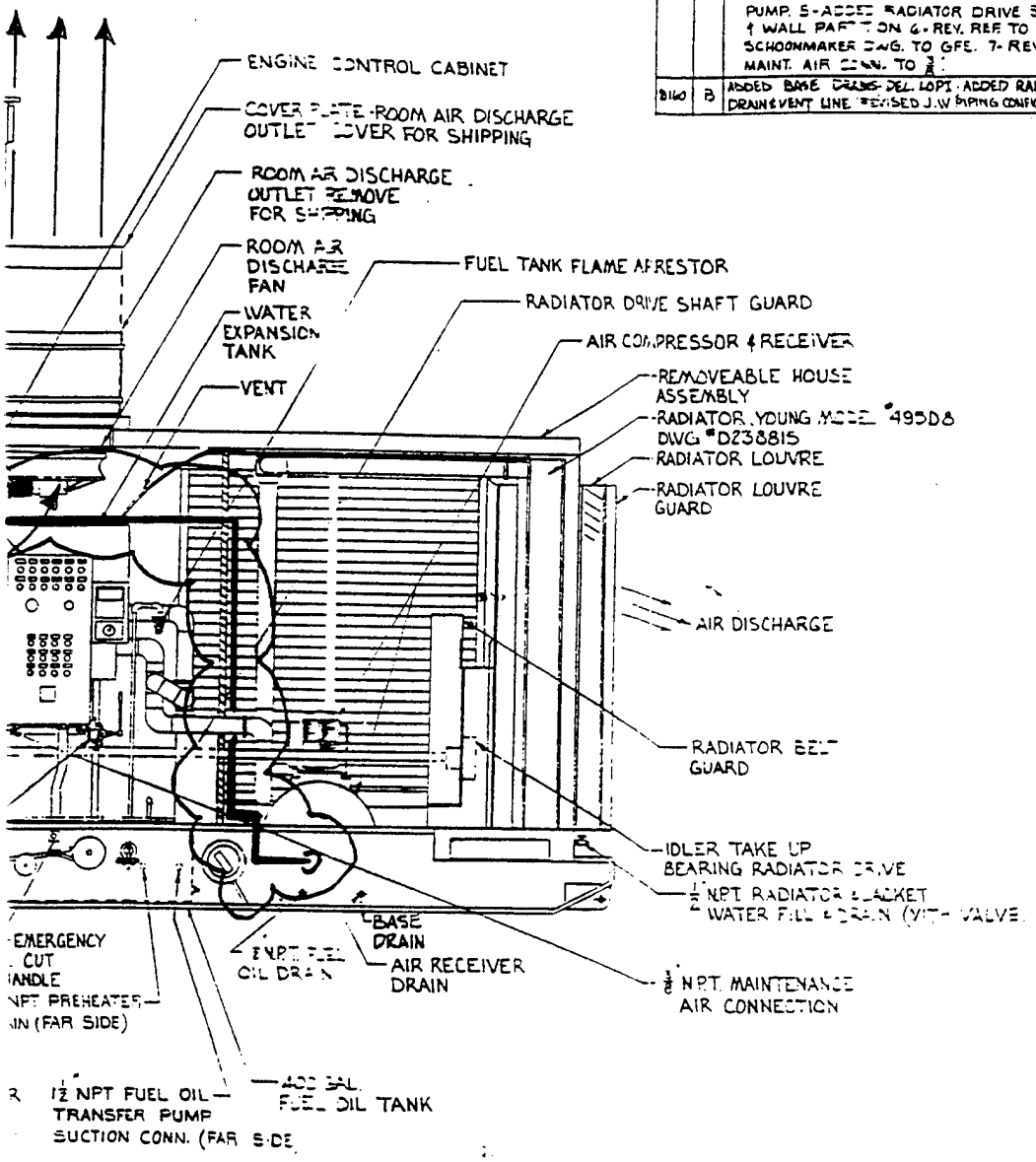

ATTACHMENT 1

LIST OF MATERIAL OR PARTS LIST

APPLICATION	QTY. REQD.

CONTRACT NO. N62472-80-C-1648
I.W.O. 6039
DAVISVILLE

POWER SYSTEMS DIVISION
MORRISON-KNUDSEN COMPANY, INC.
ROCKY MOUNT, NORTH CAROLINA 27801

TITLE GENERAL ARRANGEMENT
1500 KW, 4160/2400V 60Hz
1200 KW, 3600/2100V 50Hz
3 PHASE 0.8 P.F.

SIZE	CODE IDENT. NO.	DRAWING NO.	REV.
D	6E148	6039D02001	B

SCALE 1" = 1'-0" WT SHEET 1 OF 2

owing NG piping,

S.

1996.)

3

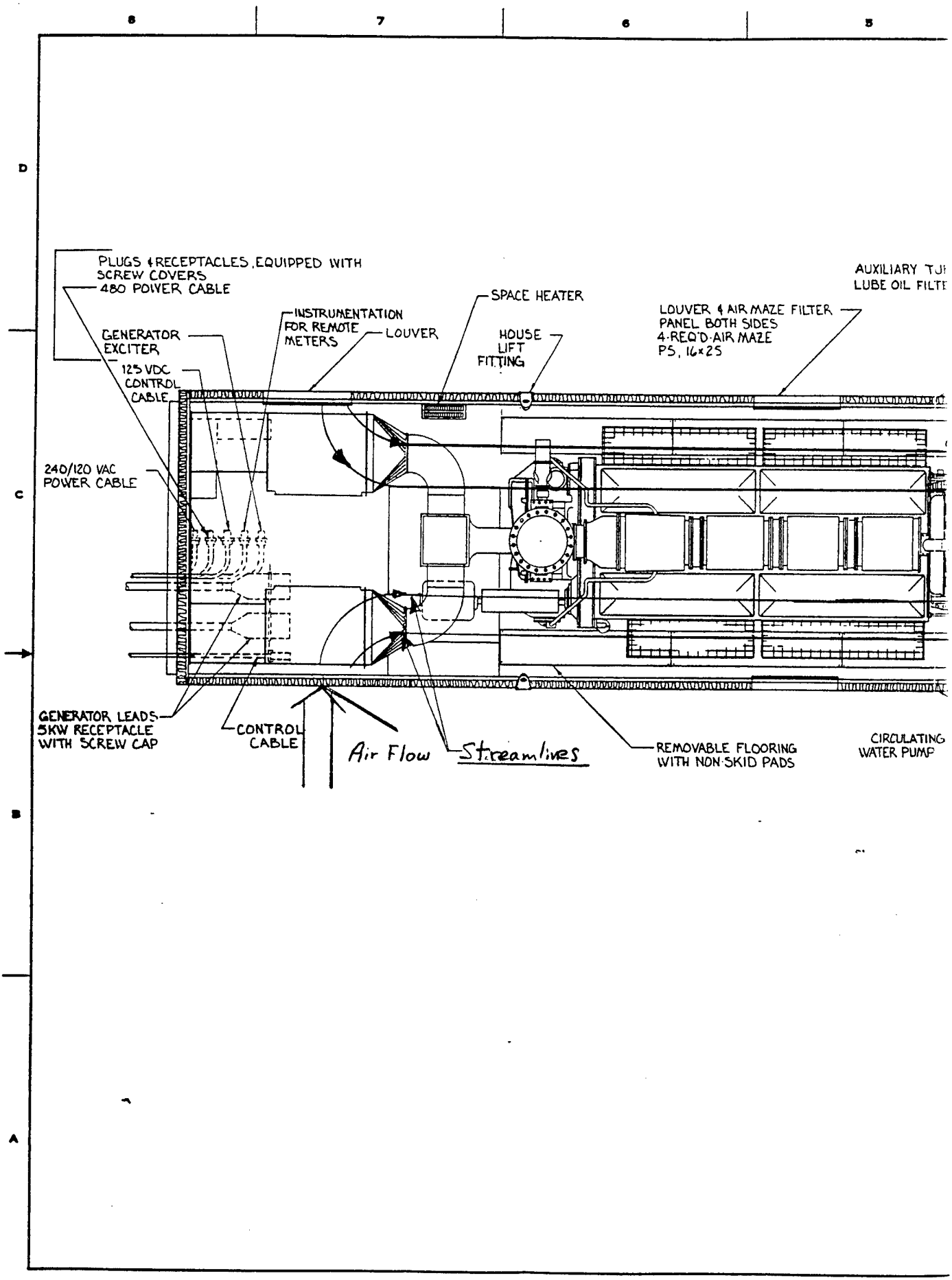

Figure 4-32. Cutaway top view of MU
and air flow streamlines.
(Used by permission, Energ

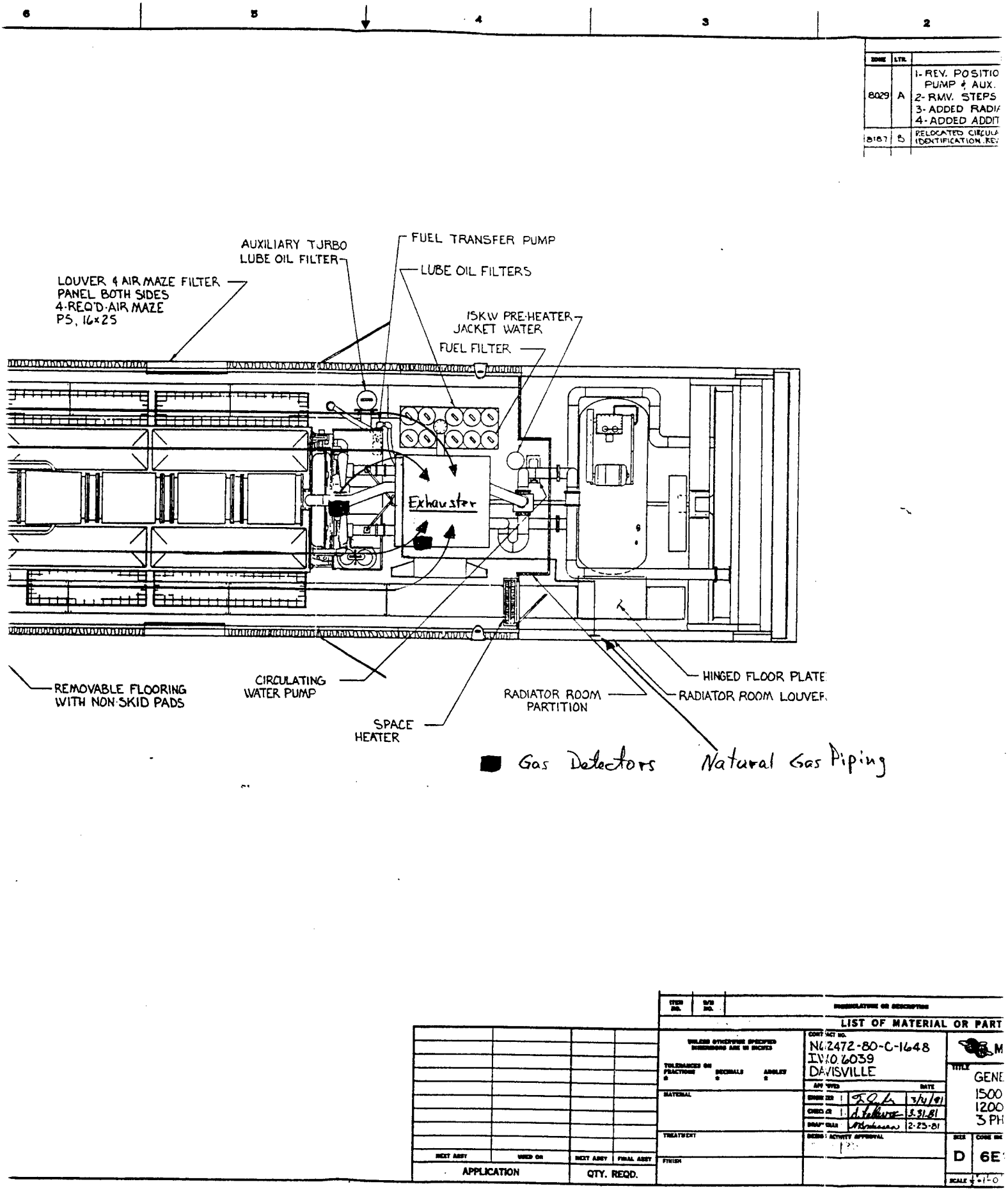

Figure 4-32. Cutaway top view of MUSE unit showing NG piping, gas detectors, and air flow streamlines.

(Used by permission, Energy Conversions, Inc., U.S.A., 1996.)

2

REVISIONS				
ZONE	LTR.	DESCRIPTION	DATE	APPROVED
8029	A	1- REV. POSITION OF FUEL TRANSFER PUMP & AUX. TURBO L.O. FILTER. 2- RMV. STEPS @ RADIATOR BELT GUARD. 3- ADDED RADIATOR DRIVE SHAFT. 4- ADDED ADDITIONAL INTCON CABLES	7-16-81	J. Hampling
8187	B	RELOCATED CIRCULATING WATER PUMP; ADDED PLUG IDENTIFICATION. REVISED J.W. PIPING CONFIGURATION	08-14-81	

ER PUMP

TERS

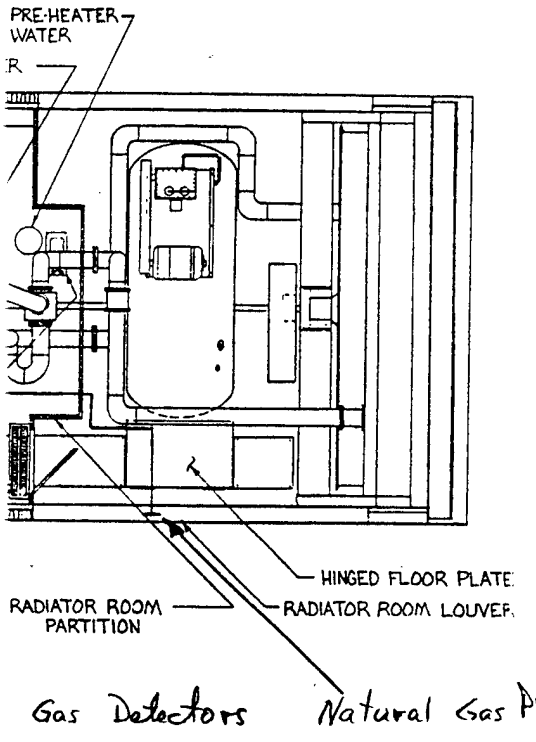

ITEM NO.	QTY REQD.	NOMENCLATURE OR DESCRIPTION	CODE IDENT.	PART OR IDENTIFYING NO.	QTY. REQD.

LIST OF MATERIAL OR PARTS LIST

UNLESS OTHERWISE SPECIFIED DIMENSIONS ARE IN INCHES

TOLERANCES ON FRACTIONS ± DECIMALS ± ANGLES ±

MATERIAL

TREATMENT

FINISH

CONTRACT NO. N62472-80-C-1648 IV10.6039 DAVISVILLE

	APPROVED	DATE
ENGR. DES.	T. Q. L.	7/4/81
CHECK. DR.	J. Fellows	3.31.81
DRAFT. MAN.	M. Anderson	2-23-81
DESIG. ACTIVITY APPROVAL		

POWER SYSTEMS DIVISION
MORRISON-KNUDSEN COMPANY, INC.
ROCKY MOUNT, NORTH CAROLINA 27801

TITLE
GENERAL ARRANGEMENT
1500 KW, 4160/2400V 60Hz
1200 KW, 3600/2100V 50Hz
3 PHASE 0.8 P.F.

SIZE	CODE IDENT. NO.	DRAWING NO.	REV.
D	6E148	6039D02001	B

SCALE 1/4"=1'-0" WT. SHEET 2 OF 2

USED ON	NEXT ASSY	FINAL ASSY
ION	QTY. REQD.	

piping, gas detectors,

3

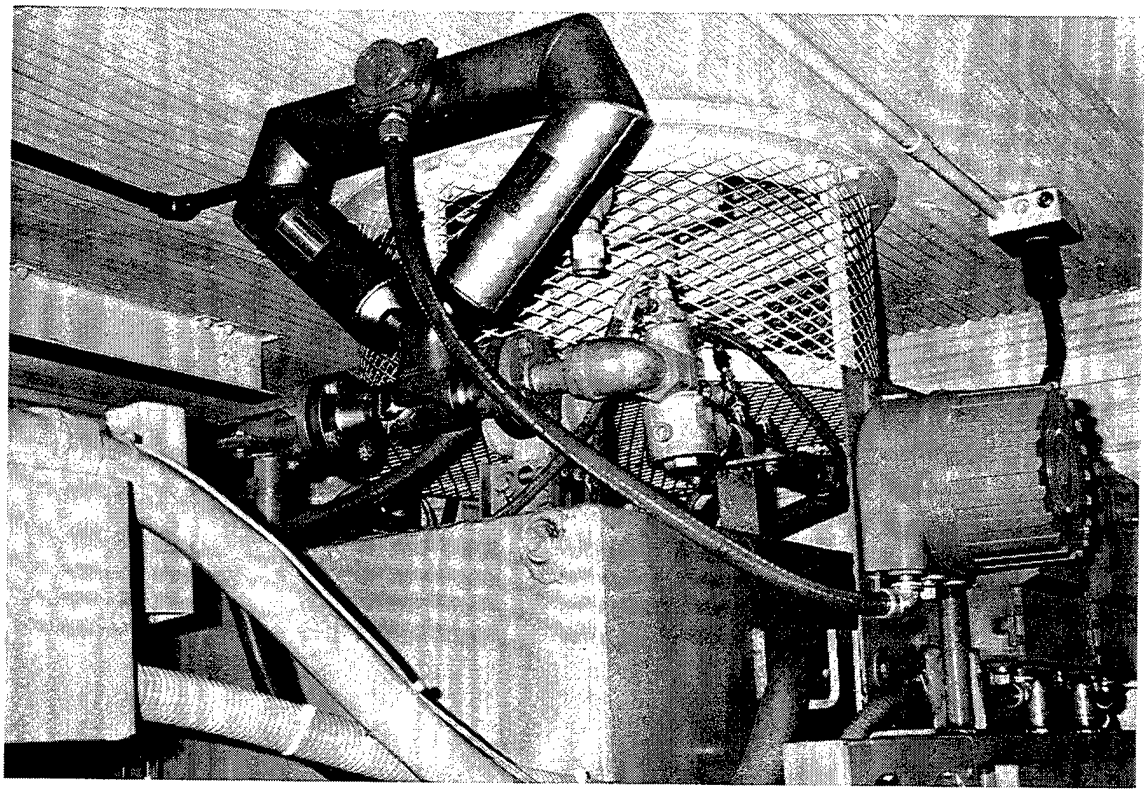

(a) Engine compartment exhaust blower.

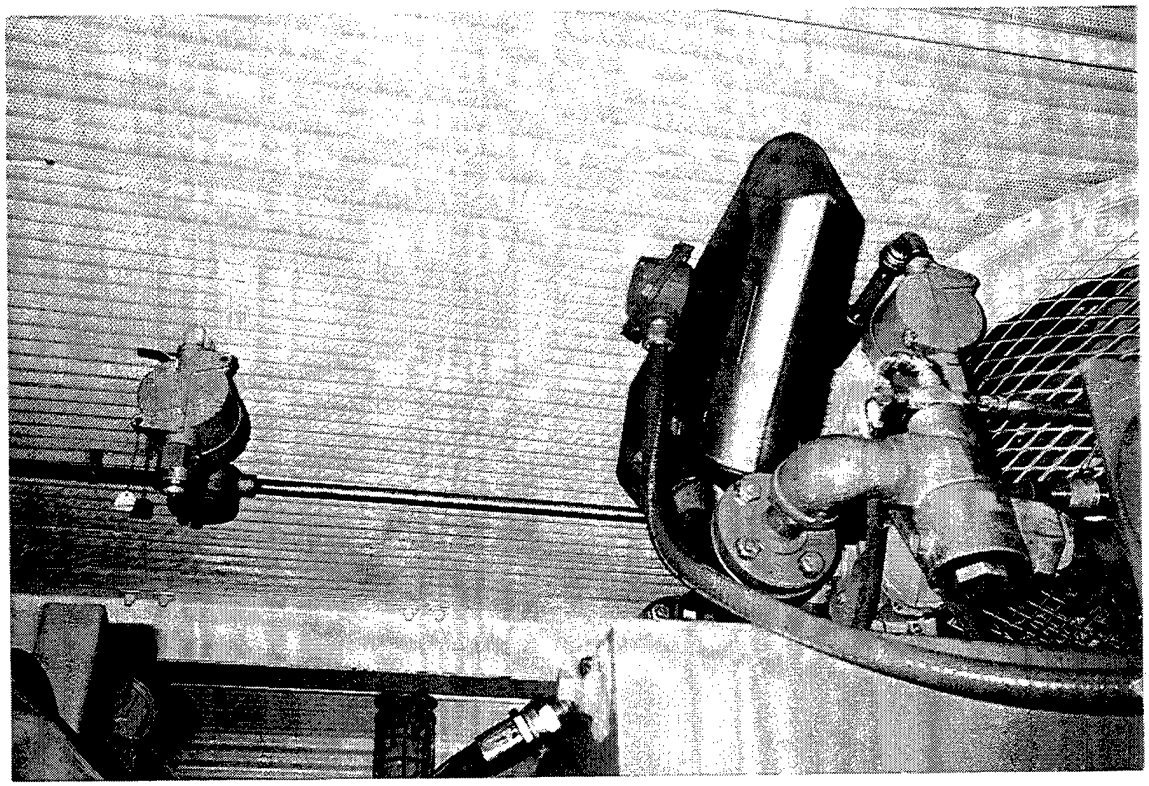

(b) Explosive gas detectors.

Figure 4-33. Photographs of safety equipment.

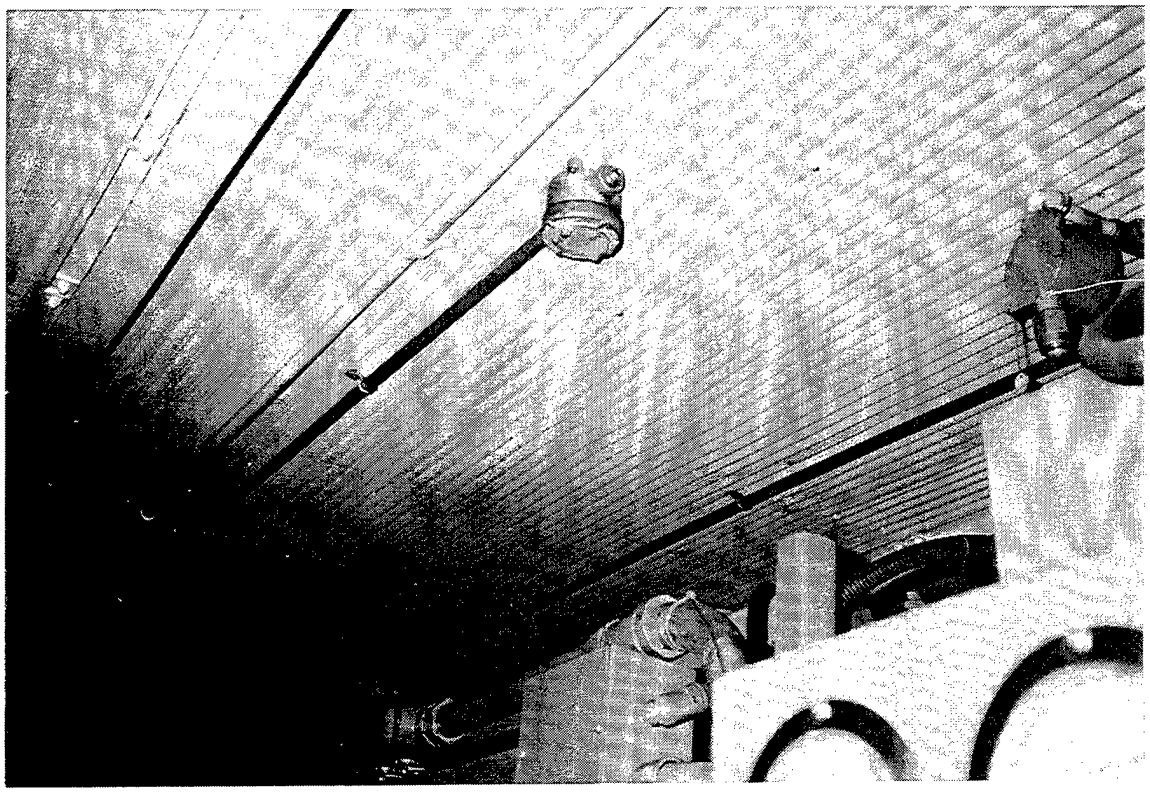

(a) Explosive gas detectors and conduit to junction box.

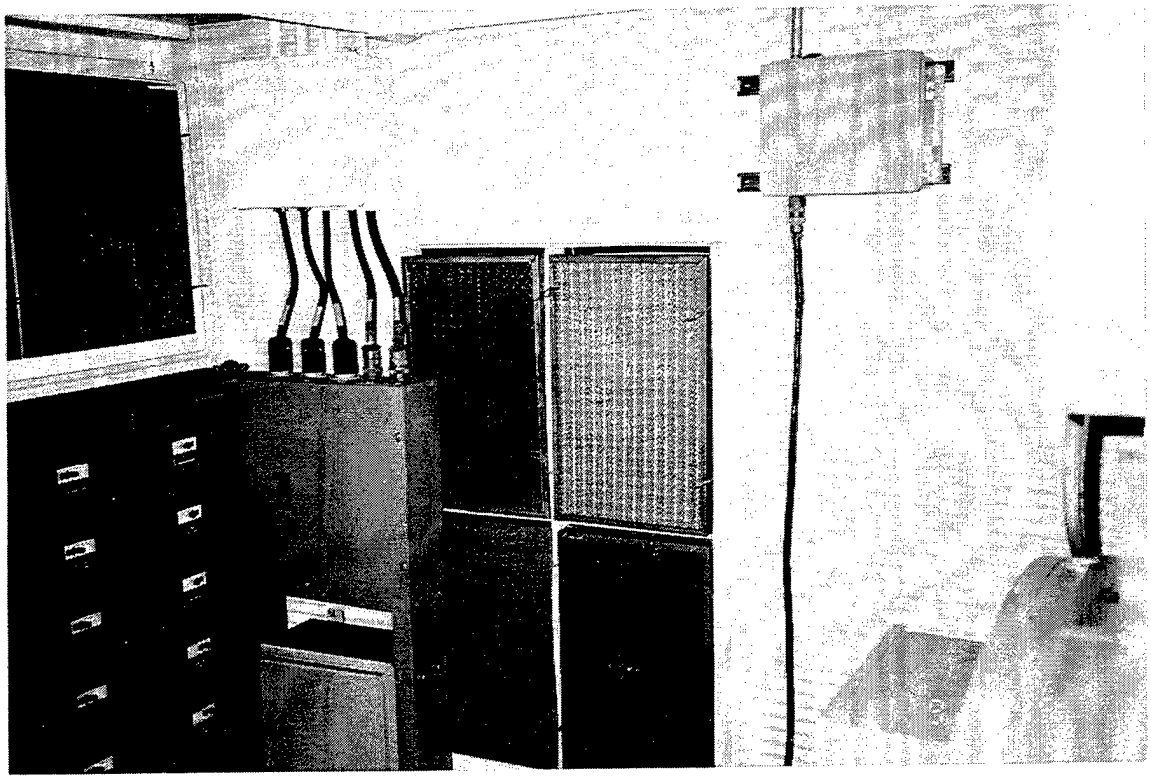

(b) Junction box/J connector for removal of housing.

Figure 4-34. Photographs of safety equipment.

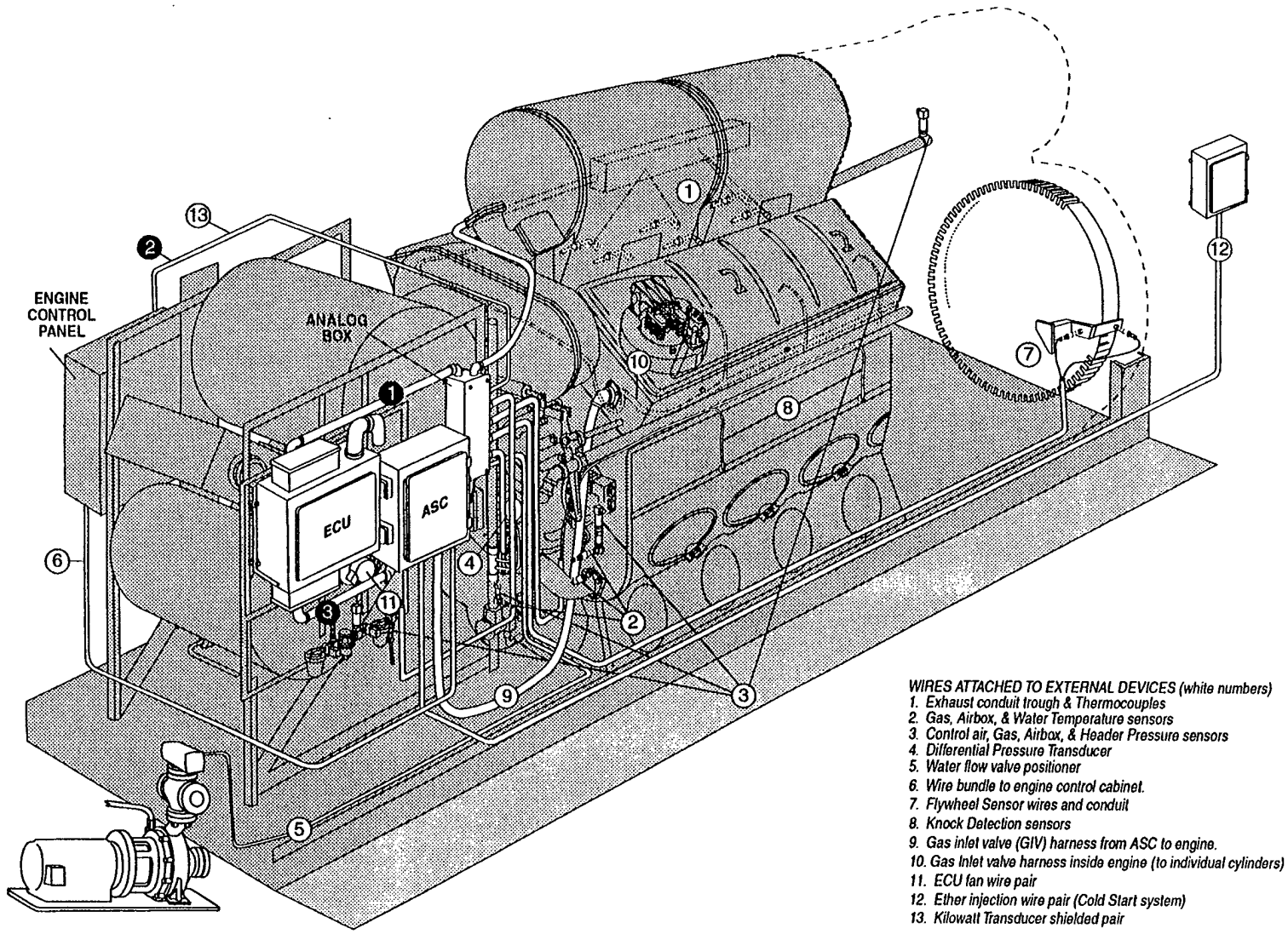

Figure 4-35. Pictorial view of gas system controllers and electrical conduits.
(Used by permission, Energy Conversions, Inc., U.S.A., 1996.)

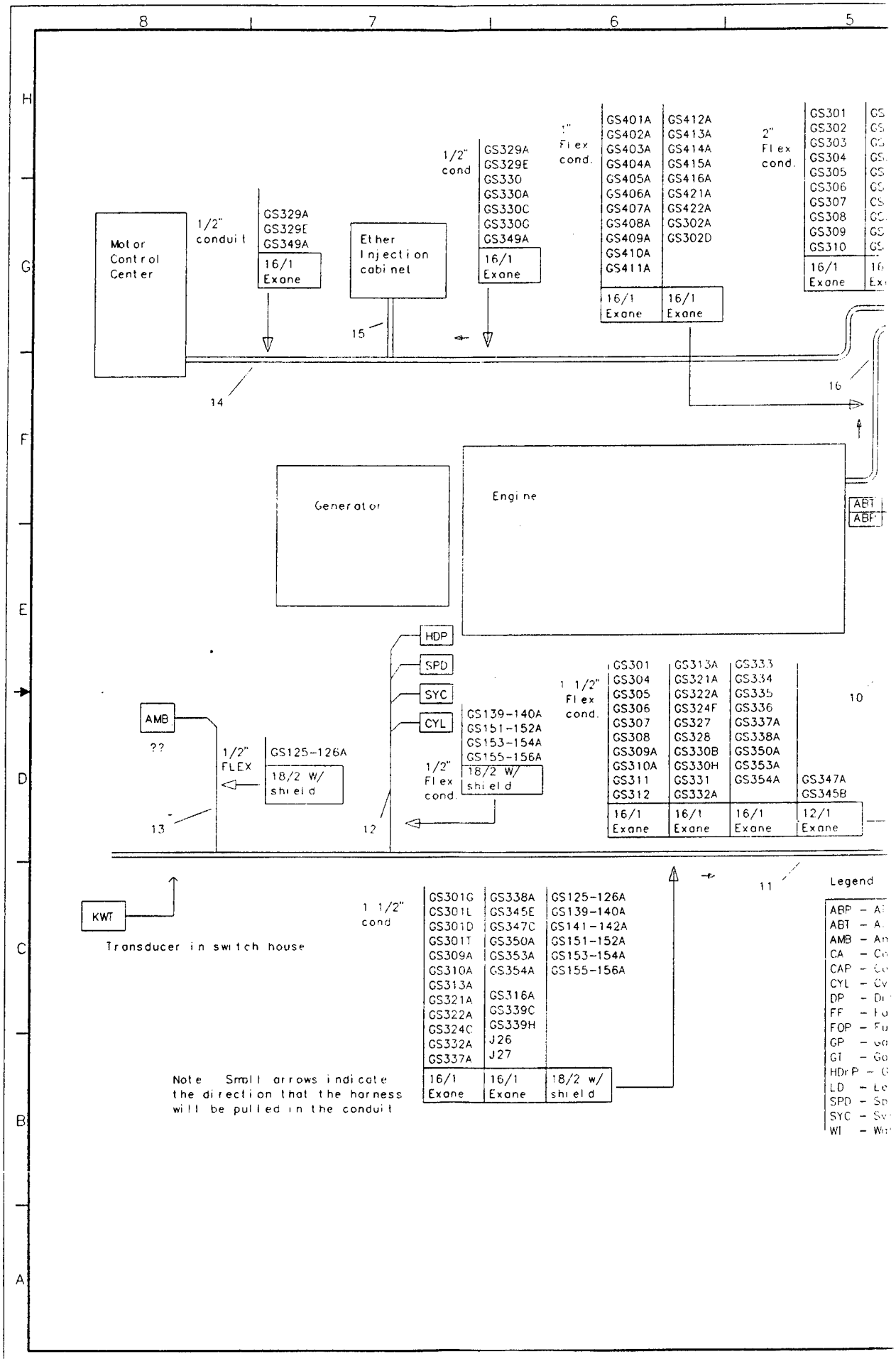

Figure 4-36. Functional layout of gas system co

(Used by permission, Energy Conver

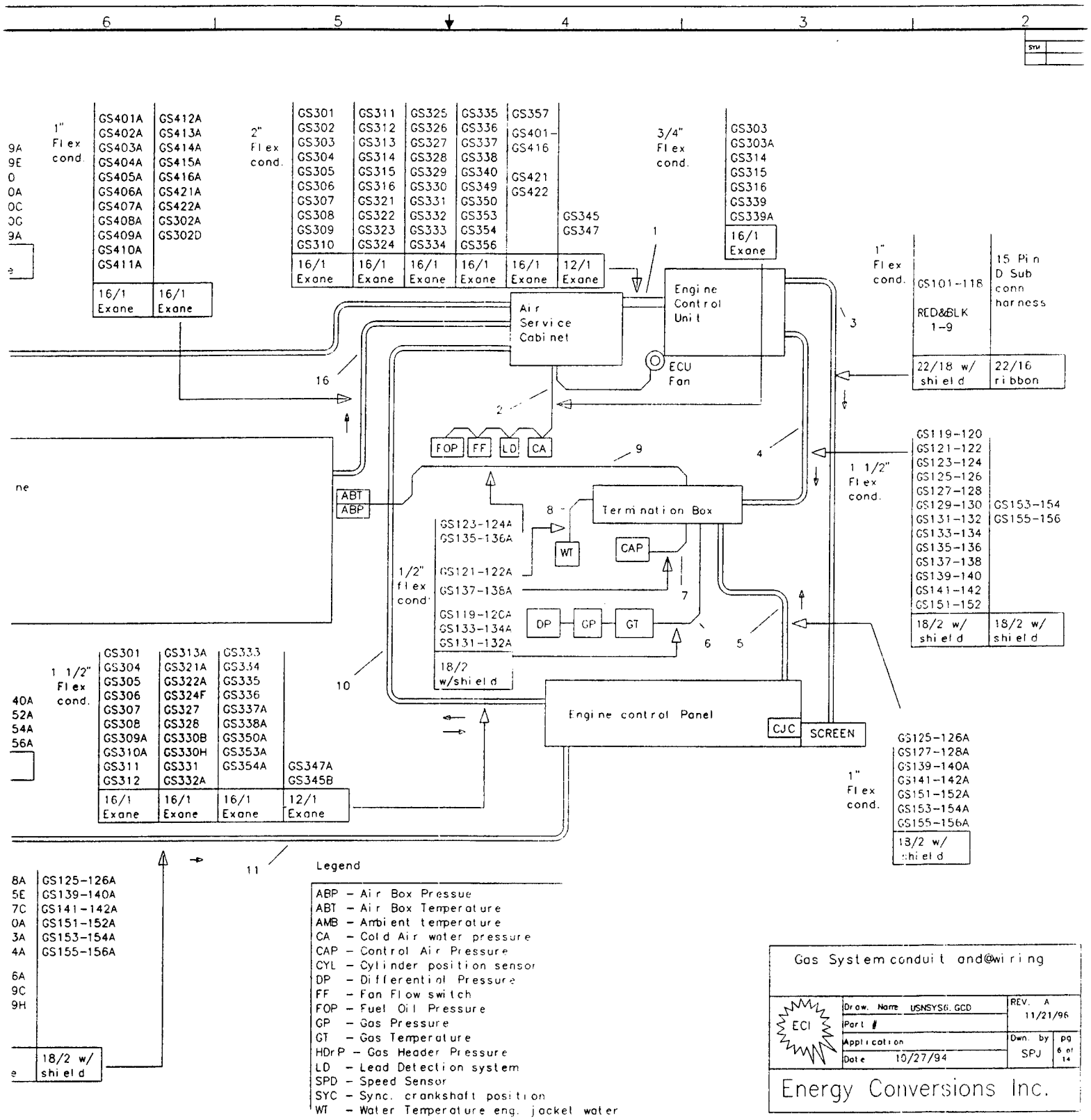

e 4-36. Functional layout of gas system controllers, electrical conduits, and wiring.

(Used by permission, Energy Conversions, Inc., U.S.A., 1996.)

2

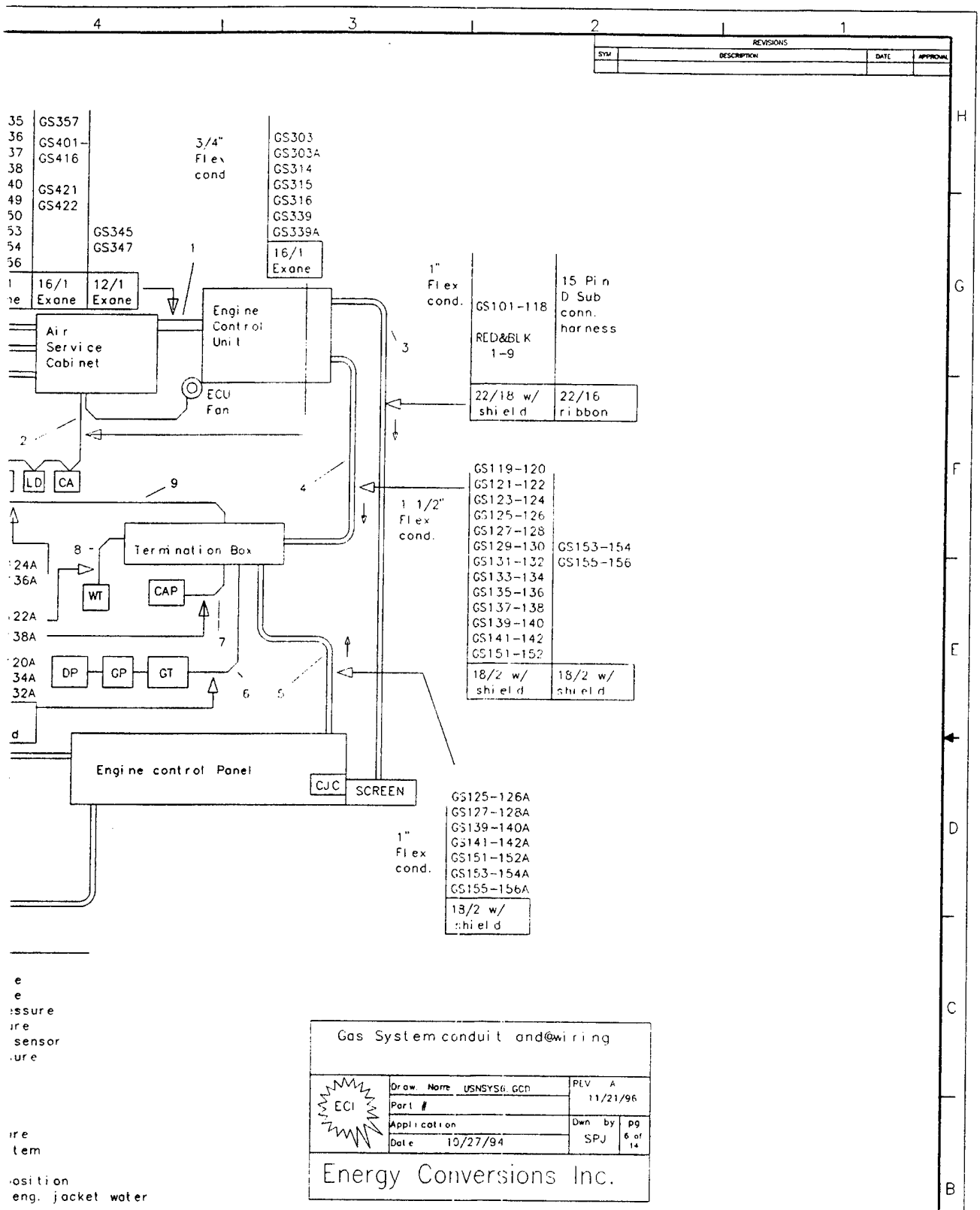

e
e
essure
ure
sensor
ure

ure
tem

osition
eng. jacket water

trical conduits, and wiring.
'996.)

3

System Block Diagram

of electrical control signals for

Gas conversion system on EMD 645 Mobil generators

Energy Conversions Inc. 10/27/94

Dwg. USNBLOK.GCD

ECI

1

Analog signals

- Gas Temperature
- Water Temperature engine
- Air Box Temperature
- Ambient Temperature
- CJC temp compensation
- Spare
- Differential Pressure gas
- Gas Pressure supply
- Air Box Pressure
- Control Air Pressure
- Gas Headder Pressure
- Killowatts
- Exhaust temperature cylinders 1-16
- Engine Speed
- Crankshaft position
- Cylinder pulses

Digital inputs

Engine Control Unit

Screen data display and Operator diagnostic interface

Gas inlet valve timing signals. cylinders 1-16

Engine modulation signal

Air Throttle PWM signal

Digital Output singal

- DCR Diesel Control Rom
- R1-Gas run
- R2
- R3
- Engine Run
- After Cooler Pump
- Cold Start

Gas Pressure supply

Air Box Pressure

Control Air Pressure

Gas Headder Pressure

Killowatts

Exhaust temperature cylinders 1-16

Engine Speed

Crankshaft position

Cylinder pulses

Digital inputs

Gas operate

VTS gas valve temp limit

Fuel Oil Pressure

* Engine ready

*STarting

*Remote/Local control

*Online/stop engine

*Auto Load/Manual Load

*Governor up

*Governor down

Shut Down Relay

* Alarm - Horn

*Main Breaker

*Fan Flow

*Cold Air pressure

*Leak Detection

Engine modulation signal

Air Throttle PWM signal

Digital Output singal

DCR Diesel Control Rar

R1-Gas run

R2

R3

Engine Run

After Cooler Pump

Cold Start

* Pre Lube

*Alarm - Horn

*Bar Engine

*Governor up

*Governor down

*Crank engine

*Syncronizer Enable

*Trip Breaker

*Engine Vent Fan

*Gas Main valve control

Indicator gas stand by

Indicator gas fault

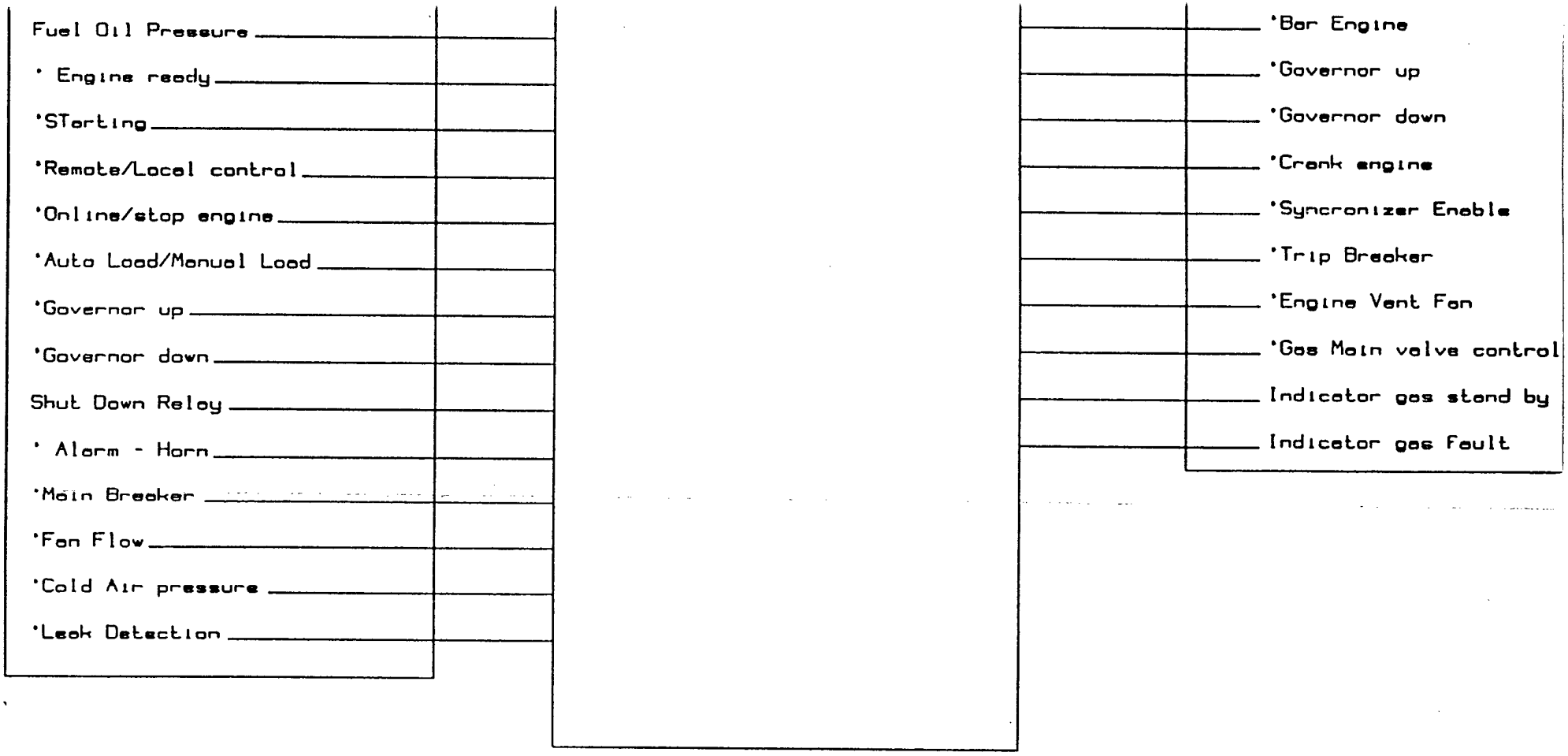

* signals applied for automated remote operation

Figure 4-37. Electrical block diagram of engine control unit (ECU).
(Used by permission, Energy Conversions, Inc., U.S.A., 1996.)

Legend

SBC53= single Board Computer
A I/O = Analon Input output board
AT = Analog termnation board
CTC = Counter Timer Board
DI 01 = Digital I/O 1
DI 02 = Digital I/O 2
ISO = power filter
PS = Power Supply
SB = Support Board
STD = STD mounting rack/bus
VSuP = Valve Sequencer micro Processor
VSD = Valve Sequrncer Driver
2401-1 = Modem line 1
2401-2 = Modem line 2
7508 = Digital input output board

Natural gas conversion

Engine Control Unit

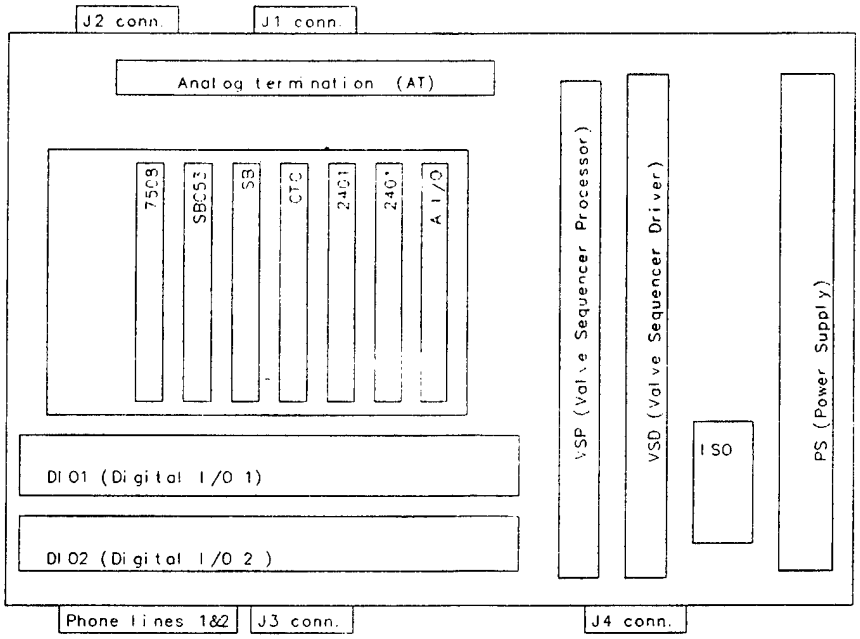

Figure 4-38. Phy:

(Used by permission, E

6 5 4 3 2

SYM DES

gas conversion

ontrol Unit

Ribbon cable connection list

Boards	Connectors	Conn. to
SBC53	J1	2401 1&2
	J2	SB J4
	J3	SB J5
A I/O	J1	AT J3
	J2	AT J4
AT	J1	External harness
	J2	5 discrete wires
	J3	A I/O J1
	J4	A I/O J2
	J5	CTC J1
CTC	J1	AT J5
	J2	SB J1
D I/O 1	J1	7508 J1
D I/O 2	J1	7508 J2
PS	J1	14 discrete wires
SB	J1	ECU conn. J2
	J2	CTC J2
	J3	5 discrete wires
	J4	SBC J2
	J5	SBC J3
VSD	J1	VSuP J2
	J2	ECU J4
VSuP	J1	6 discrete wires
	J2	VSD J1
2401-1	J1	Phone 1
	J2	SBC J1
2401-2	J1	Phone 2
	J2	JUMP 2401-1 J2
7508	J1	D I/O1 J1
	J2	D I/O2 J1

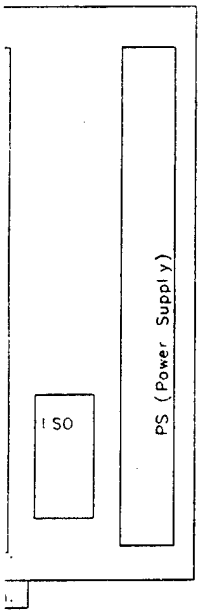

Schematic of Navy Engine Control Unit

ECI	Draw. Name USNECU1.GCD	REV. A 1/17/95
	Part #	
	Application	Dwn. by SPJ — pg. 13 of 14
	Date 2/11/94	

Energy Conversions Inc.

QUANTITY FOR EACH ASSEMBLY

ITEM NO. PART NO.

UNLESS OTHERWISE SPECIFIED DIMENSIONS ARE IN FEET AND/OR INCHES

TOLERANCES:
X DECIMALS
.XX DECIMALS
.XXX DECIMALS
FRACTIONS ±1/16"
ANGLES ±0.5°

PROJ NO
DWG NO USNECU1.gcd
DES XX DR. F. DELLAURERA
CHK XX
BRANCH HEAD K MACK
DIV CHK
SATISFACTORY TO
APPROVED DATE
COMMANDING OFFICER
APPROVED DATE
FOR COMMANDER, NAVFAC

DEPARTMENT OF NAVAL

SIZE F

SCALE NONE

PART DASH NO. NEXT ASSY

- DO NOT SCALE

Figure 4-38. Physical internal layout of ECU.

(Used by permission, Energy Conversions, Inc., U.S.A., 1996.)

REVISIONS			
SYM	DESCRIPTION	DATE	APPROVAL

n cable connection list

	Connectors	Conn. to
	J1	2401 1&2
	J2	SB J4
	J3	SB J5
	J1	AT J3
	J2	AT J4
	J1	External harness
	J2	5 discrete wires
	J3	A I/O J1
	J4	A I/O J2
	J5	CTC J1
	J1	AI J5
	J2	SB J1
	J1	7508 J1
	J1	7508 J2
	J1	14 discrete wires
	J1	ECU conn. J2
	J2	CTC J2
	J3	5 discrete wires
	J4	SBC J2
	J5	SBC J3
	J1	VSuP J2
	J2	ECU J4
	J1	6 discrete wires
	J2	VSD J1
	J1	Phone 1
	J2	SBC J1
	J1	Phone 2
	J2	JUMP 2401-1 J2
	J1	D I/O1 J1
	J2	D I/O2 J1

Schematic of Navy Engine Control Unit

ECI	Draw. Name USNECU1 GCD	REV A 1/17/95	
	Part #		
	Application	Dwn. by SPJ	pg. 13 of 14
	Date 2/11/94		

Energy Conversions Inc.

QUANTITY FOR EACH ASSEMBLY	ITEM NO.	PART NO	DESCRIPTION	MATERIAL
			PARTS LIST	

UNLESS OTHERWISE SPECIFIED DIMENSIONS ARE IN FEET AND/OR INCHES

TOLERANCES
X DECIMALS
XX DECIMALS
.XXX DECIMALS
FRACTIONS ±1/16"
ANGLES ±0.5°

PROJ NO
DWG NO USNECU1.gcd
DES XX DR F DELLALIBERA
CHK XX
BRANCH HEAD K.MACK
DIV DIR
SATISFACTORY TO
APPROVED DATE
COMMANDING OFFICER
APPROVED DATE
FOR COMMANDER, NAVFAC

DEPARTMENT OF THE NAVY NAVAL FACILITIES ENGINEERING COMMAND
NAVAL FACILITIES ENGINEERING SERVICE CENTER
PORT HUENEME, CALIFORNIA 93043

DUEL FUEL 1500 KW
CONVERSION OF DIESEL POWER PLANT
SCHEMATIC OF GAS CONVERSION SYSTEM
SCHEMATIC OF NAVY ENGINE CONTROL UNIT

SIZE F CODE IDENT NO 80091 NAVFAC DRAWING NO
CONSTR CONTR NO
SCALE NONE SPEC SHEET 1 OF

PART DASH NO NEXT ASSY

- DO NOT SCALE

layout of ECU.
Inc., U.S.A., 1996.)

3

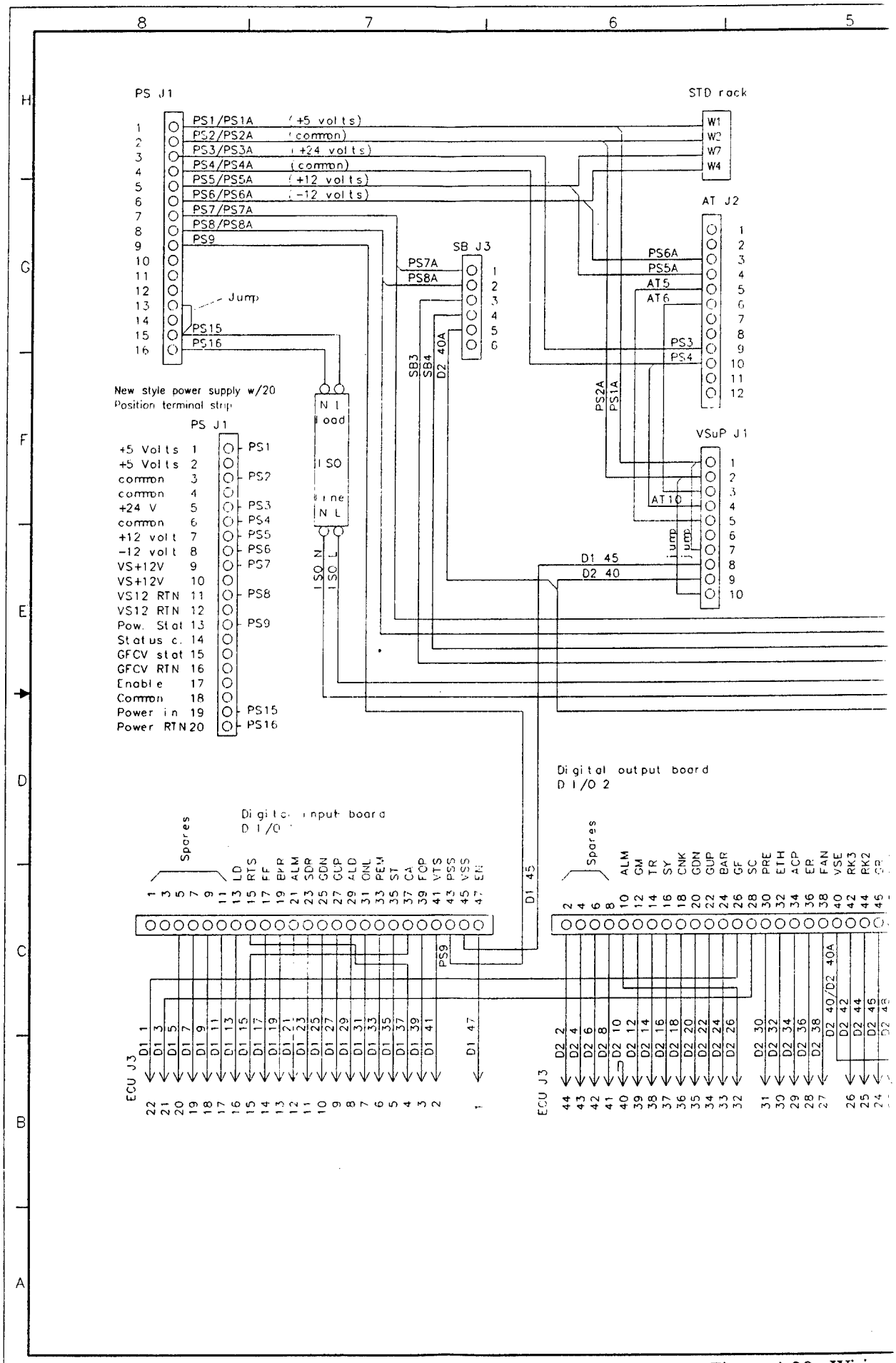

Figure 4-39. Wiring

(Used by permission, Energ

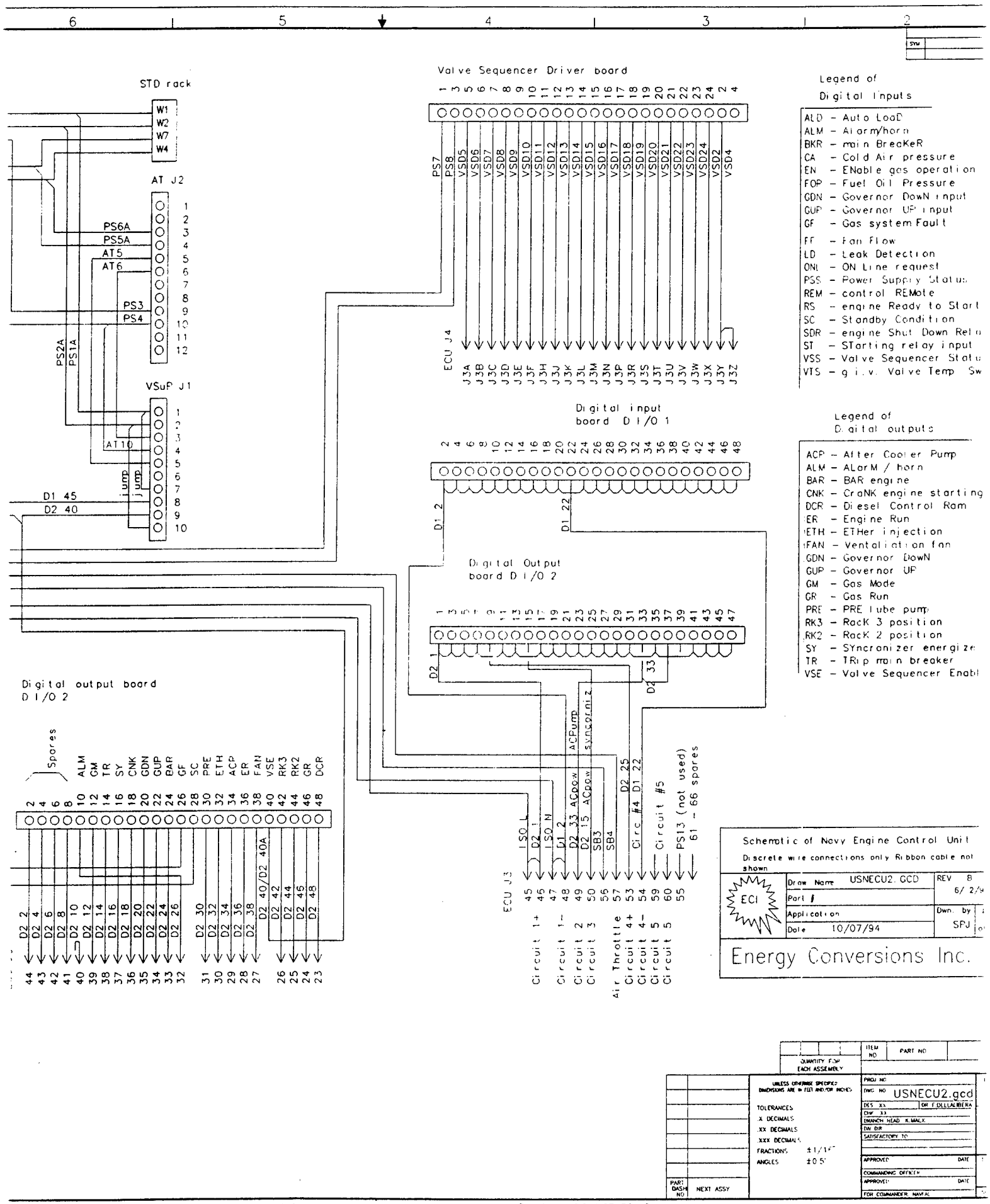

Figure 4-39. Wiring connections within ECU.

(Used by permission, Energy Conversions, Inc., U.S.A., 1996.)

4	3	2	1

REVISIONS			
SYM	DESCRIPTION	DATE	APPROVAL

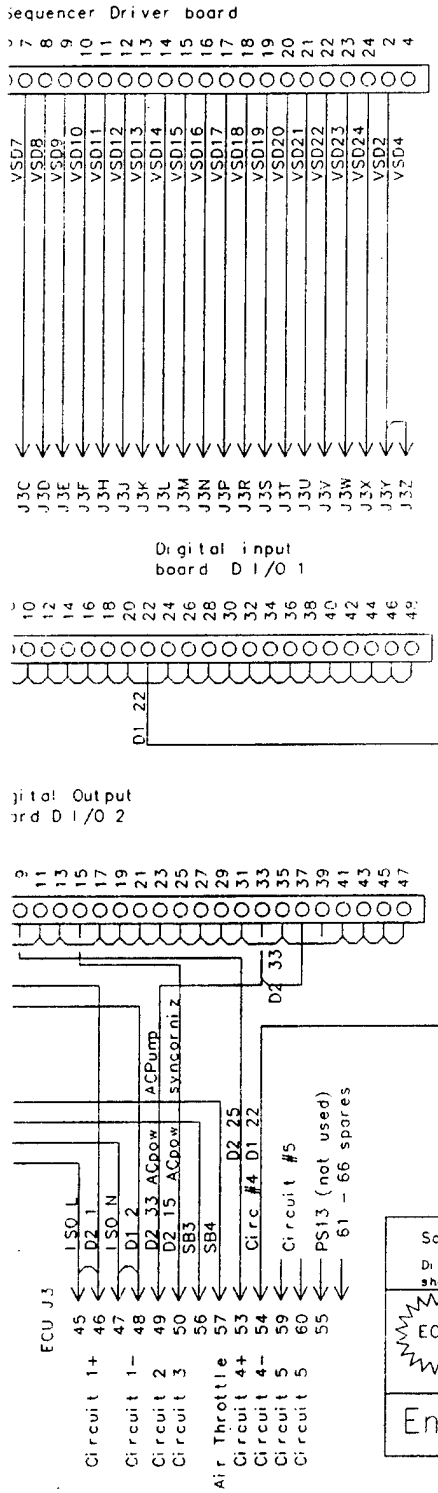

Legend of
Digital Inputs

ALD - Auto LoaD
ALM - Alarm/horn
BKR - main BreaKeR
CA - Cold Air pressure
EN - ENable gas operation
FOP - Fuel Oil Pressure
GDN - Governor DowN input
GUP - Governor UP input
GF - Gas system Fault
FF - Fan Flow
LD - Leak Detection
ONL - ON Line request
PSS - Power Supply Status
REM - control REMote
RS - engine Ready to Start
SC - Standny Condition
SDR - engine Shut Down Relay
ST - STarting relay input
VSS - Valve Sequencer Status
VTS - g.i.v. Valve Temp. Switch

Legend of
Digital outputs

ACP - After Cooler Pump
ALM - ALarM / horn
BAR - BAR engine
CNK - CraNK engine starting
DCR - Diesel Control Rom
ER - Engine Run
ETH - ETHer injection
FAN - Ventalation fan
GDN - Governor DowN
GUP - Governor UP
GM - Gas Mode
GR - Gas Run
PRE - PRE lube pump
RK3 - RacK 3 position
RK2 - RacK 2 position
SY - SYncronizer energize
TR - TRip main breaker
VSE - Valve Sequencer Enable

Schematic of Navy Engine Control Unit
Discrete wire connections only Ribbon cable not shown

ECI		
	Draw Name USNECU2.GCD	REV B 6/2/96
	Part #	
	Application	Dwn by SPJ	pg 14 of 14
	Date 10/07/94	

Energy Conversions Inc.

				ITEM NO	PART NO	DESCRIPTION	MATERIAL
QUANTITY FOR EACH ASSEMBLY				PARTS LIST			

UNLESS OTHERWISE SPECIFIED DIMENSIONS ARE IN FEET AND/OR INCHES TOLERANCES X DECIMALS .XX DECIMALS XXX DECIMALS FRACTIONS ±1/16" ANGLES ±0.5°	PROJ NO	DEPARTMENT OF THE NAVY NAVAL FACILITIES ENGINEERING COMMAND NAVAL FACILITIES ENGINEERING SERVICE CENTER PORT HUENEME, CALIFORNIA 93043	
	DWG NO USNECU2.gcd	DUEL FUEL 1500 KW CONVERSION OF DIESEL POWER PLANT SCHEMATIC OF NAVY ENGINE CONTROL UNIT DISCRETE WIRE CONNECTIONS	
	DES XX	DR F.DELLALIBERA	
	CHK XX		
	BRANCH HEAD K.MACK		
	DIV DIR		
	SATISFACTORY TO		
	APPROVED DATE	SIZE F	CODE IDENT NO 80091	NAVFAC DRAWING NO
	COMMANDING OFFICER		CONSTR CONTR NO
	APPROVED DATE		
	FOR COMMANDER, NAVFAC	SCALE NONE	SPEC	SHEET 1 OF

PART DASH NO | NEXT ASSY

H G F E D C B A

CU. 1. ASK - DO NOT SCALE
'6.)

3

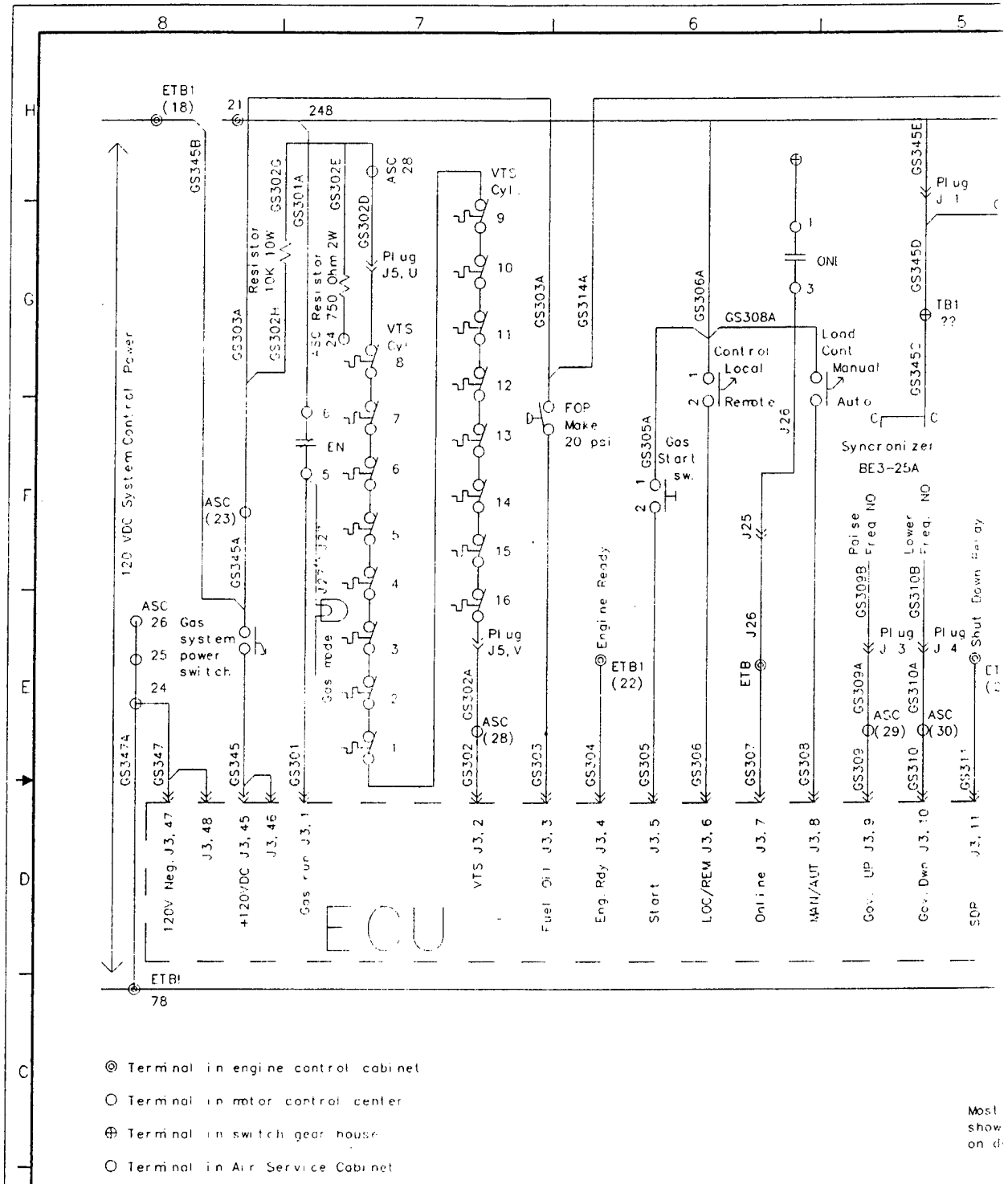

Most
show
on d

Figure 4-40. Digital sig

(Used by permission, Energy Con

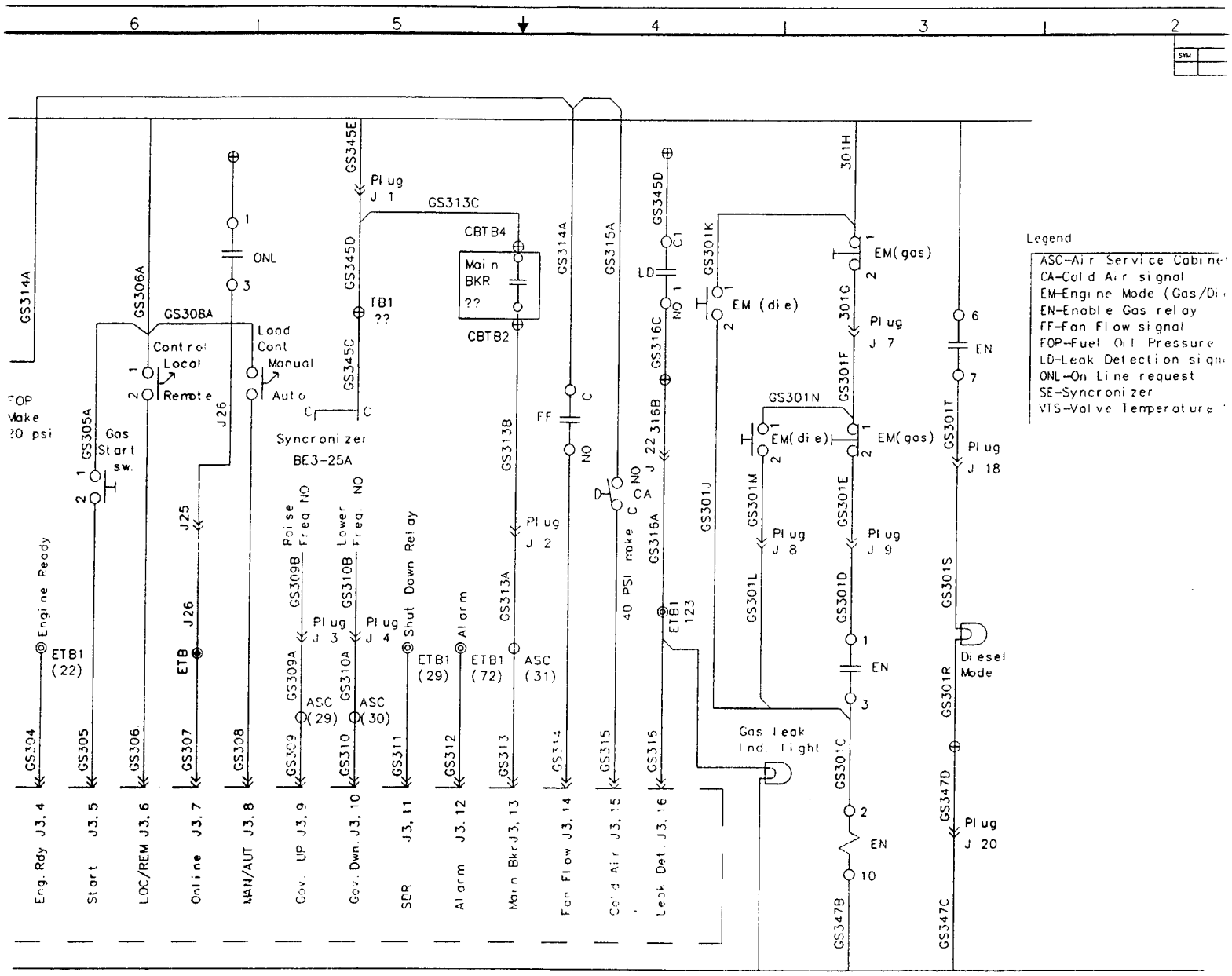

Figure 4-40. Digital signal inputs to ECU.

(Used by permission, Energy Conversions, Inc., U.S.A., 1996.)

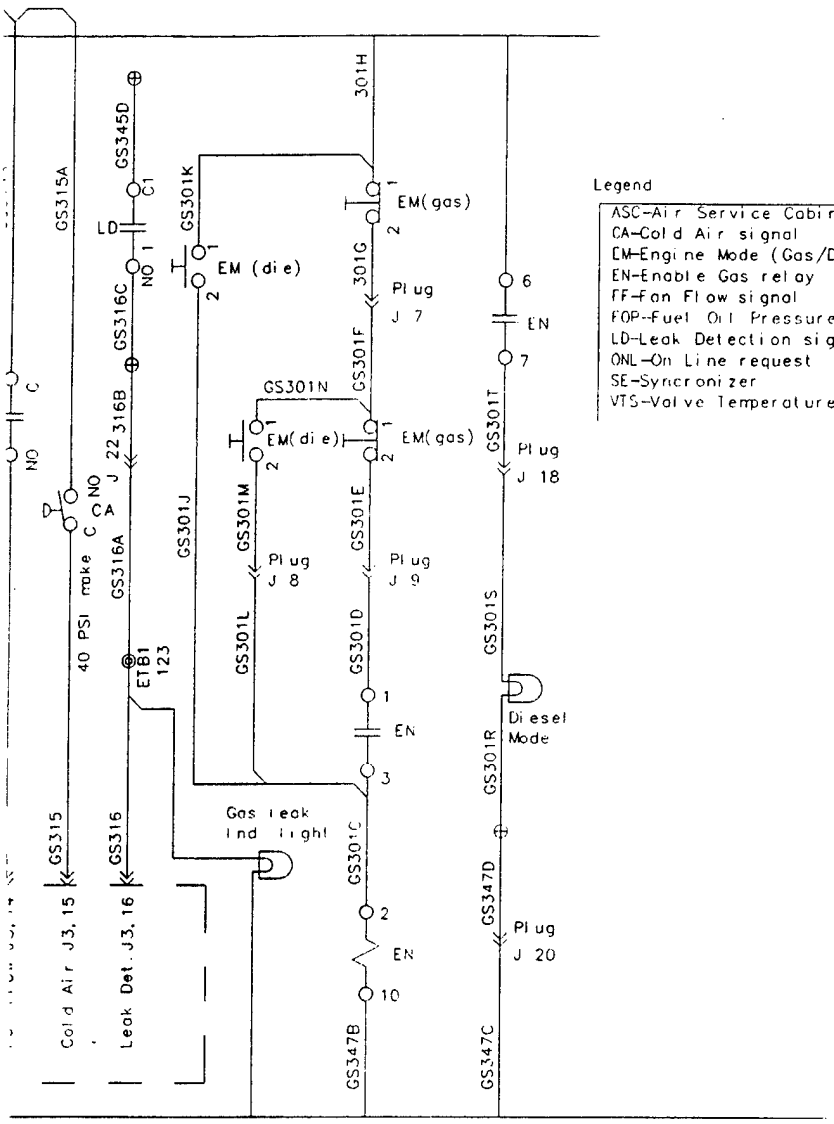

Legend

ASC-Air Service Cabinet
CA-Cold Air signal
EM-Engine Mode (Gas/Diesel)
EN-Enable Gas relay
FF-Fan Flow signal
FOP-Fuel Oil Pressure Sw
LD-Leak Detection signal
ONL-On Line request
SE-Syncronizer
VTS-Valve Temperature Sw.

Enable Gas signal
(EN)

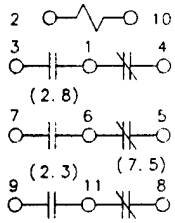

nnections

Schematic of Gas Conversion system
ECU digital inputs

ECI	Draw. Name USNSYS2. GCD	REV B 6/02/95	
	Part #		
	Application MP40	Dwn. by SPJ	pg. 2 of 14
	Date 10/27/94		

Energy Conversions Inc.

ITEM NO	PART NO	DESCRIPTION	MATERIAL
QUANTITY FOR EACH ASSEMBLY		PARTS LIST	

UNLESS OTHERWISE SPECIFIED DIMENSIONS ARE IN FEET AND/OR INCHES
TOLERANCES
.X DECIMALS
.XX DECIMALS
.XXX DECIMALS
FRACTIONS ±1/16"
ANGLES ±0.5°

PART DASH NO. | NEXT ASSY

PROJ NO
DWG NO USNSYS2.gcd
DES XX | DR F.DELLALIBERA
CHK XX
BRANCH HEAD K MACK
DIV DIR
SATISFACTORY TO
APPROVED DATE
COMMANDING OFFICER
APPROVED DATE
FOR COMMANDER, NAVFAC

DEPARTMENT OF THE NAVY NAVAL FACILITIES ENGINEERING COMMAND
NAVAL FACILITIES ENGINEERING SERVICE CENTER
PORT HUENEME, CALIFORNIA 93043

DUEL FUEL 1500 KW
CONVERSION OF DIESEL POWER PLANT
SCHEMATIC OF GAS CONVERSION SYSTEM
ECU DIGITAL INPUTS

SIZE F | CODE IDENT NO 80091 | NAVFAC DRAWING NO
CONSTR CONTR NO
SCALE NONE | SPEC | SHEET 1 OF

IN DOUBT, ASK - DO NOT SCALE

ECU.
. 1996.)

3

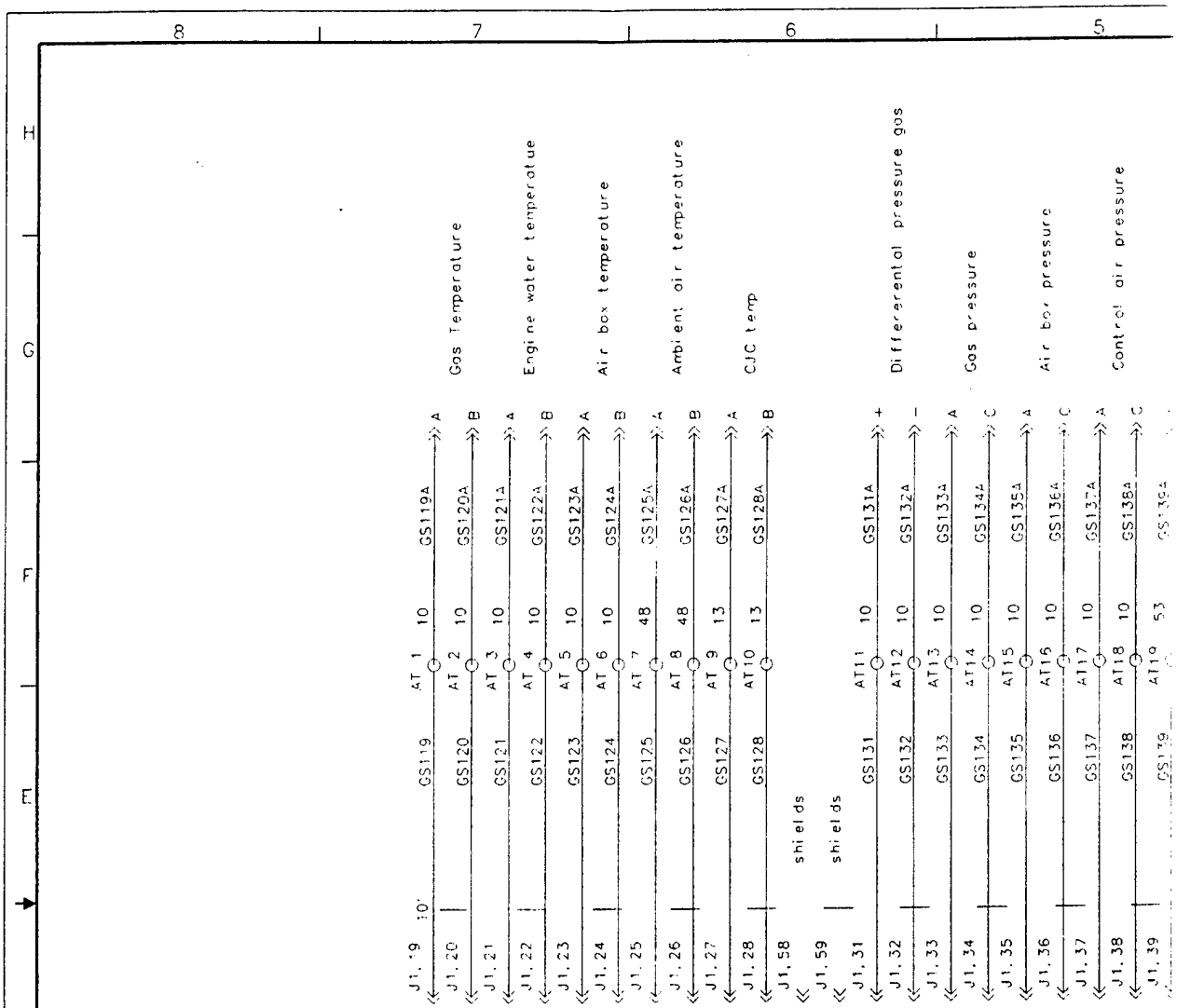

Bill of Materials

Name	Qtv	Discription	Manuf	Part number
Connector J1	1	66 pos. metal shell	Win.	XMRA66PM1000
Wire	1000	18/2 w/shield (teflon)	Bel.	444390
Wire	25'	18/18 w/shield	Bel.	9520
Pins	66	Gold plated pins	Win	100-1016P
Lables	66	Heat shrink	T&B	HV187

Figure 4-41. Analog sign

(Used by permission. Energy Conver

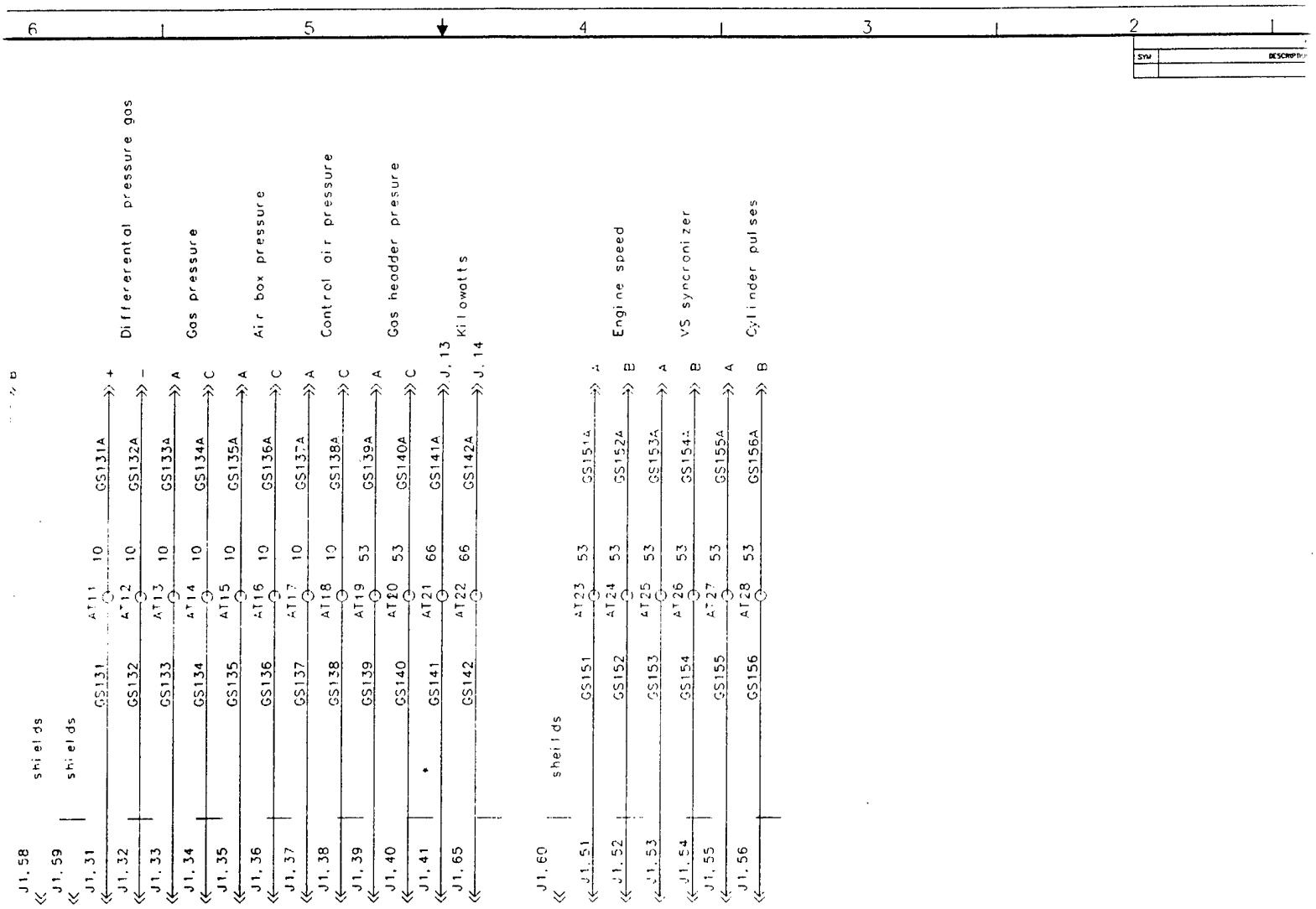

n	Manuf	Part number
tal shell	Win.	XMRA66PM1000
eld (teflon)	Bel.	444390
ield	Bel.	9520
ed pins	Win.	100-1016P
nk	T&B	HV187

Wire harness and connections for ECU analog group

ECI

Draw. Name USNSYS8. gcd	REV A 11/22/96	
Part #		
Application	Dwn by SPJ	pg 8 of 14
Date 10/27/94		

Energy Conversions Inc.

ITEM NO	PART NO	DE
QUANTITY FOR EACH ASSEMBLY		PART

UNLESS OTHERWISE SPECIFIED DIMENSIONS ARE IN FEET AND/OR INCHES

TOLERANCES:
X DECIMALS
XX DECIMALS
XXX DECIMALS
FRACTIONS ±1/16"
ANGLES ±0.5°

PART DASH NO | NEXT ASSY

PROJ NO
DWG NO ECI-DF-4
DES XX | DR F DELLALIBERA
CHK XX
BRANCH HEAD K MACP
DIV DIR
SATISFACTORY TO
MIKE CHILDER
NORMAN HELGESON DEC 1996
APPROVED DATE
COMMANDING OFFICER
APPROVED DATE
FOR COMMANDER, NAVFAC

DEPARTMENT OF THE NAVAL FACI
CONVE
SCHEMA
WIRE HAR

SIZE F | CODE IDENT 800
SCALE NONE

N DOUBT, ASK - DO NOT SCALE

Figure 4-41. Analog signal inputs to ECU.

(Used by permission, Energy Conversions, Inc., U.S.A., 1996.)

2

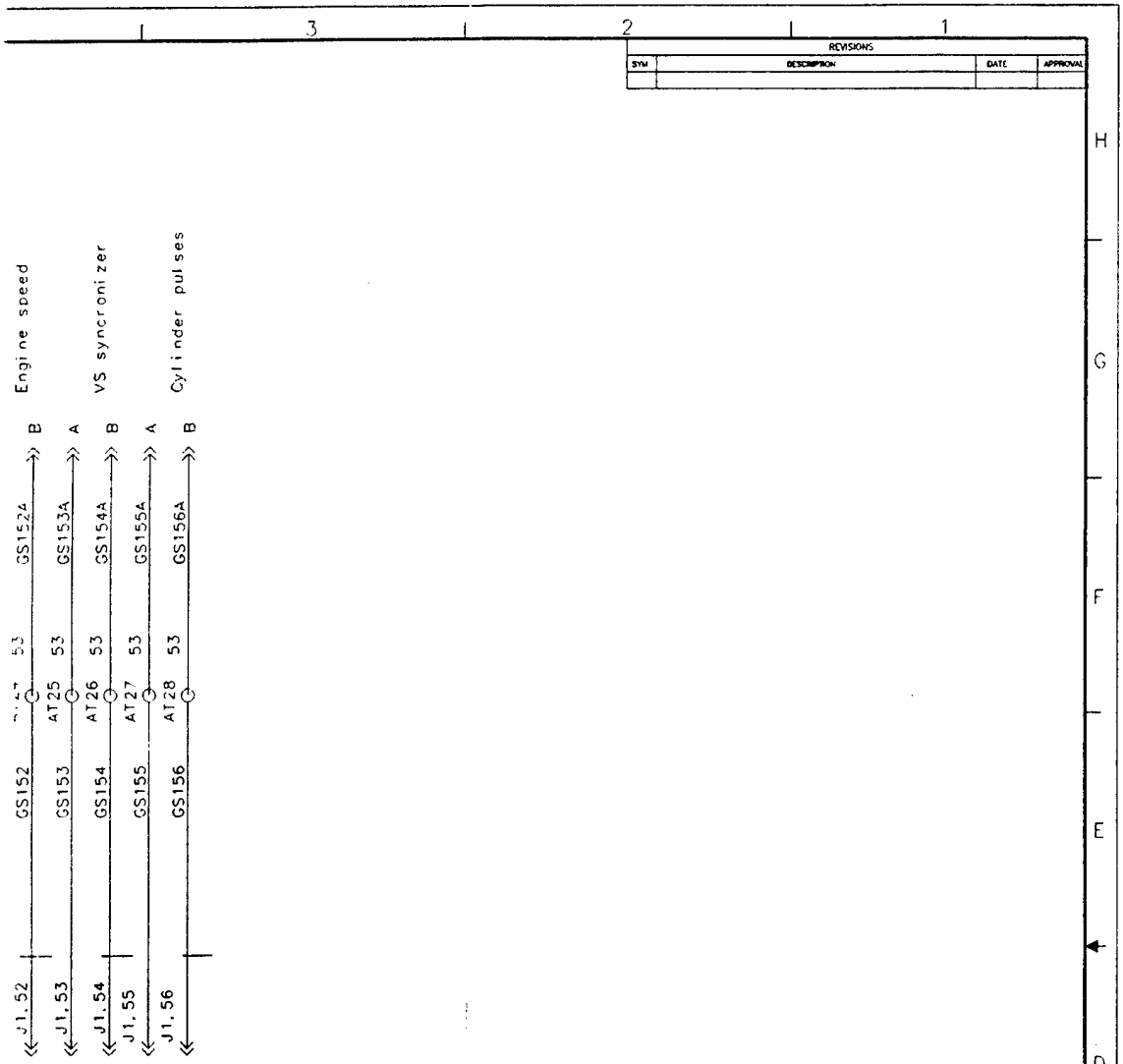

REVISIONS			
SYM	DESCRIPTION	DATE	APPROVAL

ECU

REV. A
11/22/96

DWN by SPJ | pg 8 of 14

inc.

QUANTITY FOR EACH ASSEMBLY	ITEM NO	PART NO	DESCRIPTION	MATERIAL
			PARTS LIST	

UNLESS OTHERWISE SPECIFIED DIMENSIONS ARE IN FEET AND/OR INCHES

TOLERANCES
X DECIMALS
.XX DECIMALS
.XXX DECIMALS
FRACTIONS ±1/16"
ANGLES ±0.5°

PART DASH NO | NEXT ASSY

PROJ NO
DWG NO ECI-DF-4
DES XX | DR F.DELLALIBERA
CHK XX
BRANCH HEAD K MACK
DIV DIR
SATISFACTORY TO
MIKE CHILDER
NORMAN HELGESON DEC 1996
APPROVED DATE
COMMANDING OFFICER
APPROVED DATE
FOR COMMANDER, NAVFAC

DEPARTMENT OF THE NAVY NAVAL FACILITIES ENGINEERING COMMAND
NAVAL FACILITIES ENGINEERING SERVICE CENTER
PORT HUENEME, CALIFORNIA 93043

DUEL FUEL 1500 KW
CONVERSION OF DIESEL POWER PLANT
SCHEMATIC OF GAS CONVERSION SYSTEM
WIRE HARNESS AND CONNECTIONS FOR ECU
ANALOG GROUP

SIZE F | CODE IDENT NO 80091 | NAVFAC DRAWING NO
CONSTR CONTR NO
SCALE NONE | SPEC | SHEET 1 OF

JBI, ASK - DO NOT SCALE

3

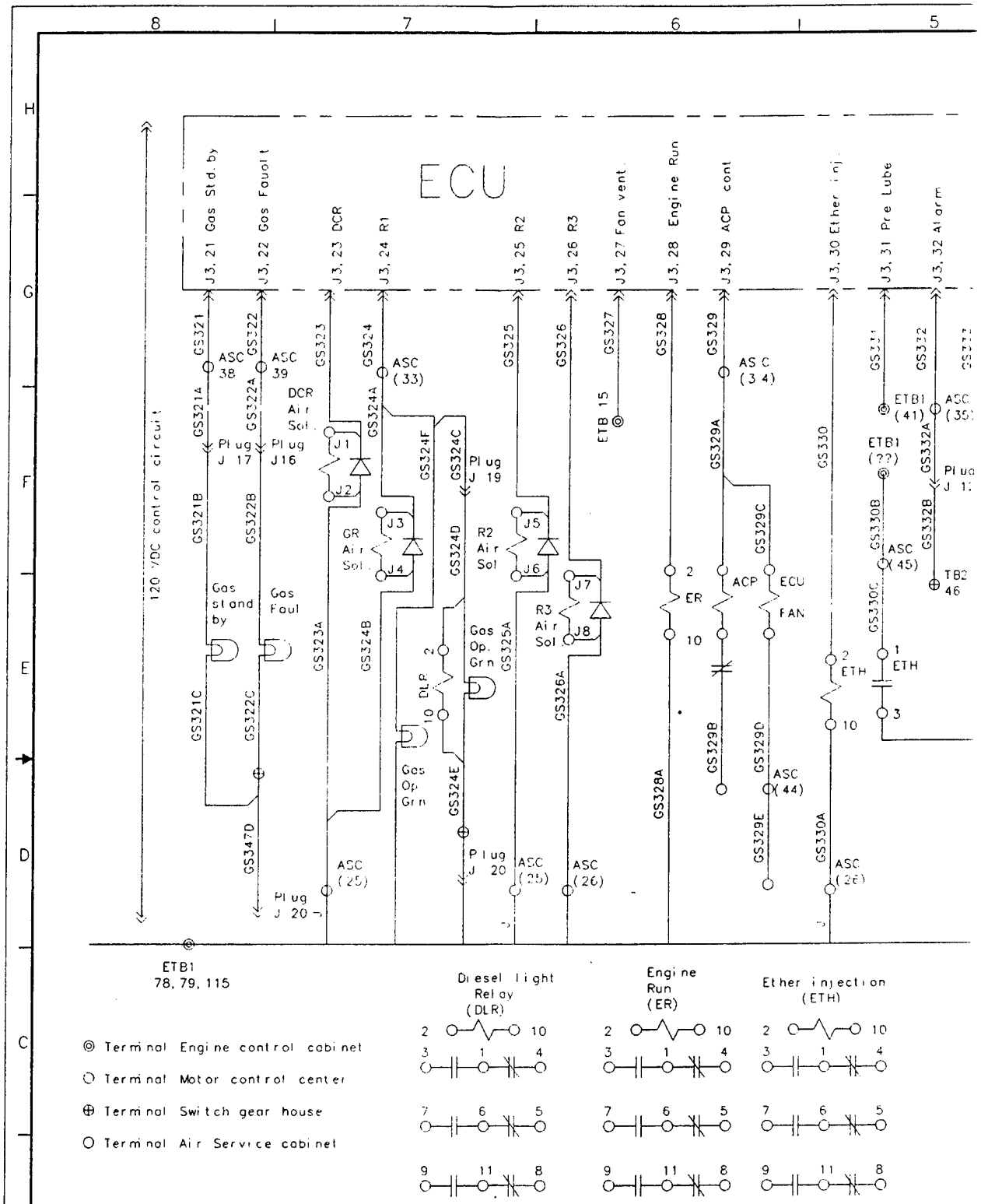

Figure 4-42. Digital control

(Used by permission, Energy Conversi

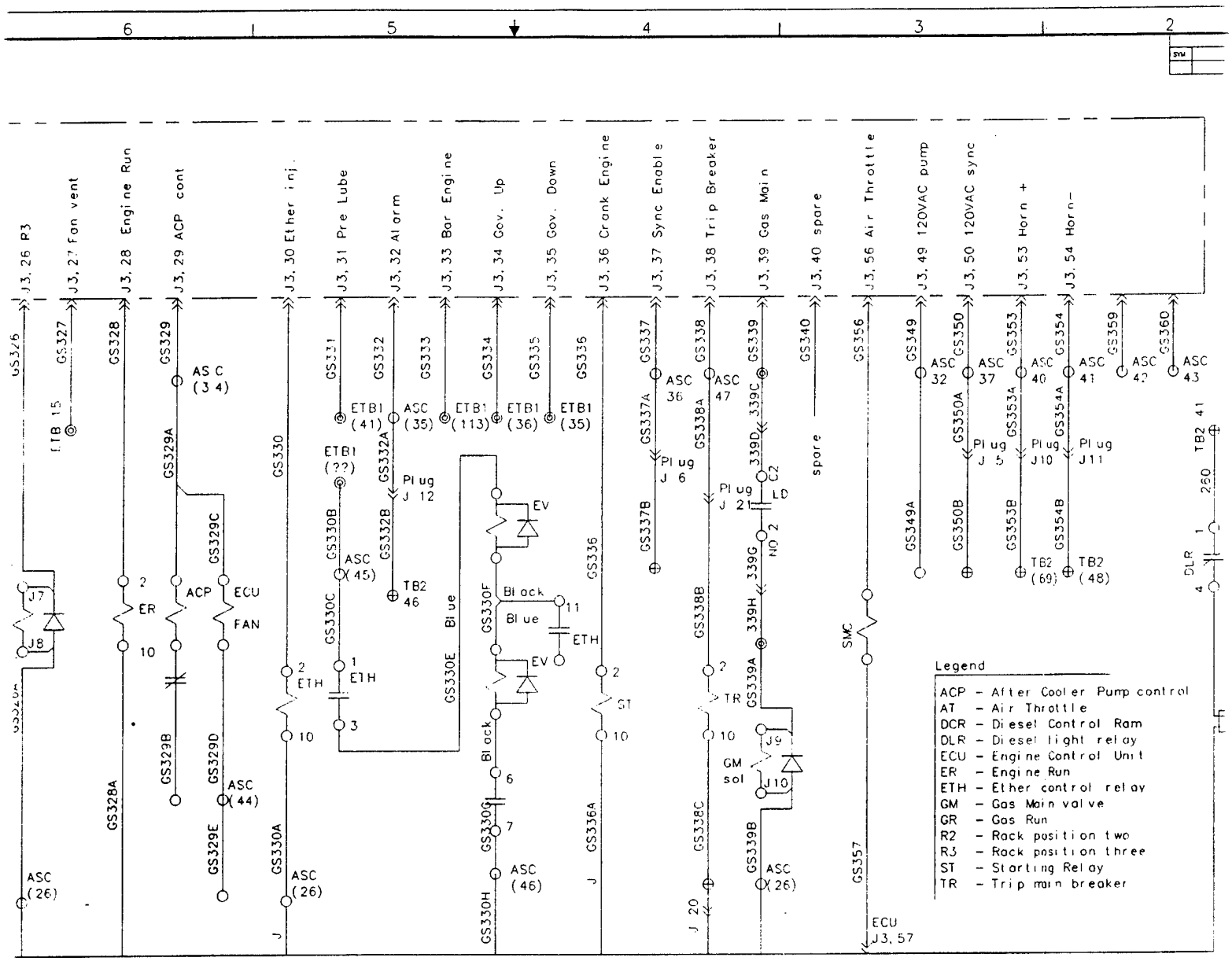

Figure 4-42. Digital control outputs from ECU.

(Used by permission, Energy Conversions, Inc., U.S.A., 1996.)

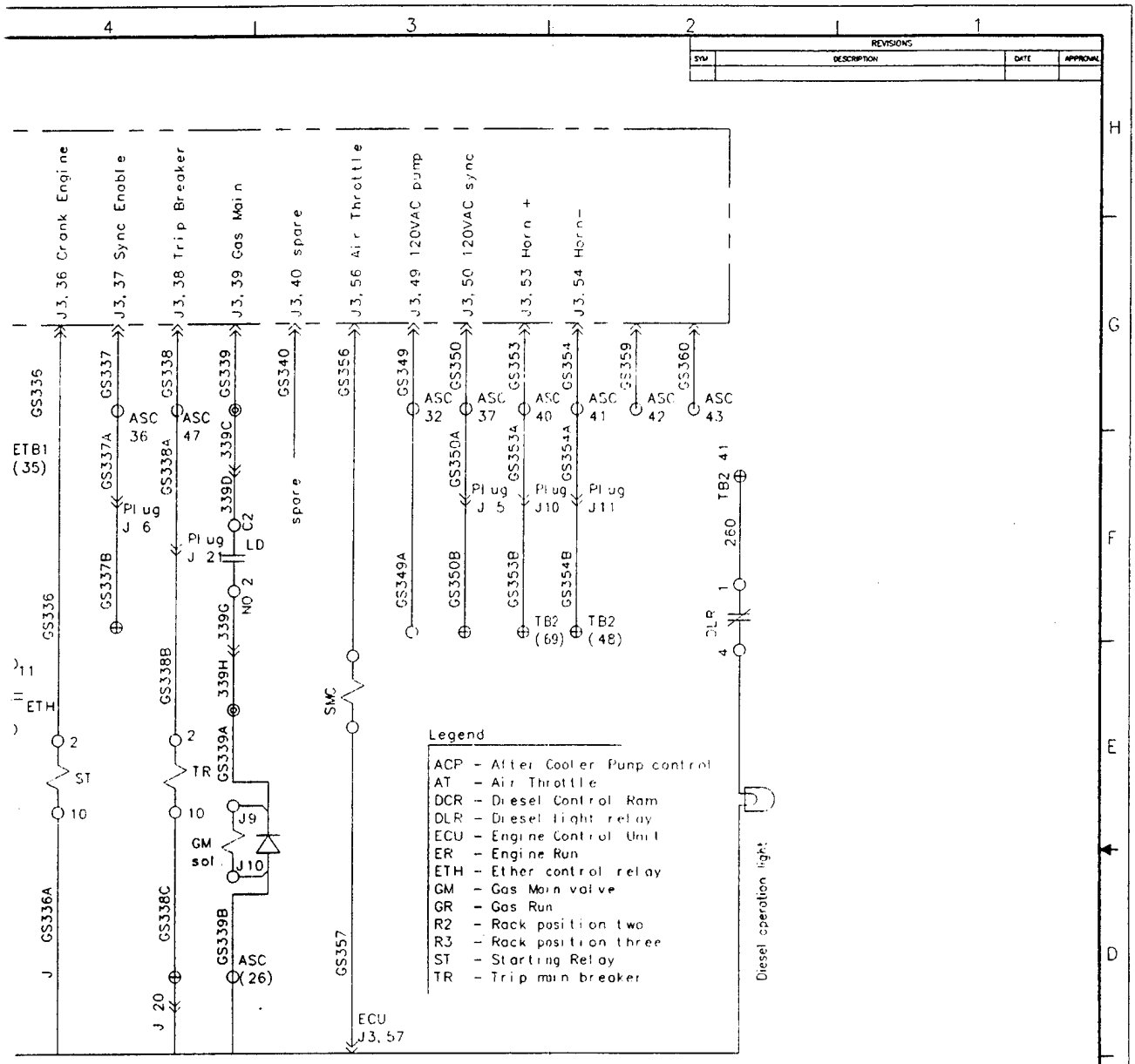

Schematic of gas system
ECU digital outputs

ECI	Drow. None USNSYS3 GCD	REV B 6/ 2/95	
	Part #		
	Application MP40 generator	Dwn by SPJ	pg 3 of 14
	Date 10/25/94		

Energy Conversions Inc.

QUANTITY FOR EACH ASSEMBLY	ITEM NO.	PART NO	DESCRIPTION	MATERIAL
			PARTS LIST	

UNLESS OTHERWISE SPECIFIED DIMENSIONS ARE IN FEET AND/OR INCHES

TOLERANCES
X DECIMALS
.XX DECIMALS
.XXX DECIMALS
FRACTIONS ±1/16"
ANGLES ±0.5°

PART DASH NO. | NEXT ASSY

PROJ NO
DWG NO USNSYS3.gcd
DES XX | DR F.DELLALIBERA
CHK XX
BRANCH HEAD R.MACK
DIV DIR
SATISFACTORY TO
APPROVED DATE
COMMANDING OFFICER
APPROVED DATE
FOR COMMANDER, NAVFAC

DEPARTMENT OF THE NAVY NAVAL FACILITIES ENGINEERING COMMAND
NAVAL FACILITIES ENGINEERING SERVICE CENTER
PORT HUENEME, CALIFORNIA 93043

DUEL FUEL 1500 KW
CONVERSION OF DIESEL POWER PLANT
SCHEMATIC OF GAS CONVERSION SYSTEM
ECU DIGITAL OUTPUTS

SIZE F | CODE IDENT NO 80091 | NAVFAC DRAWING NO
CONSTR CONTR NO
SCALE NONE | SPEC | SHEET 1 OF

N DOUBT, ASK - DO NOT SCALE

ECU.

3

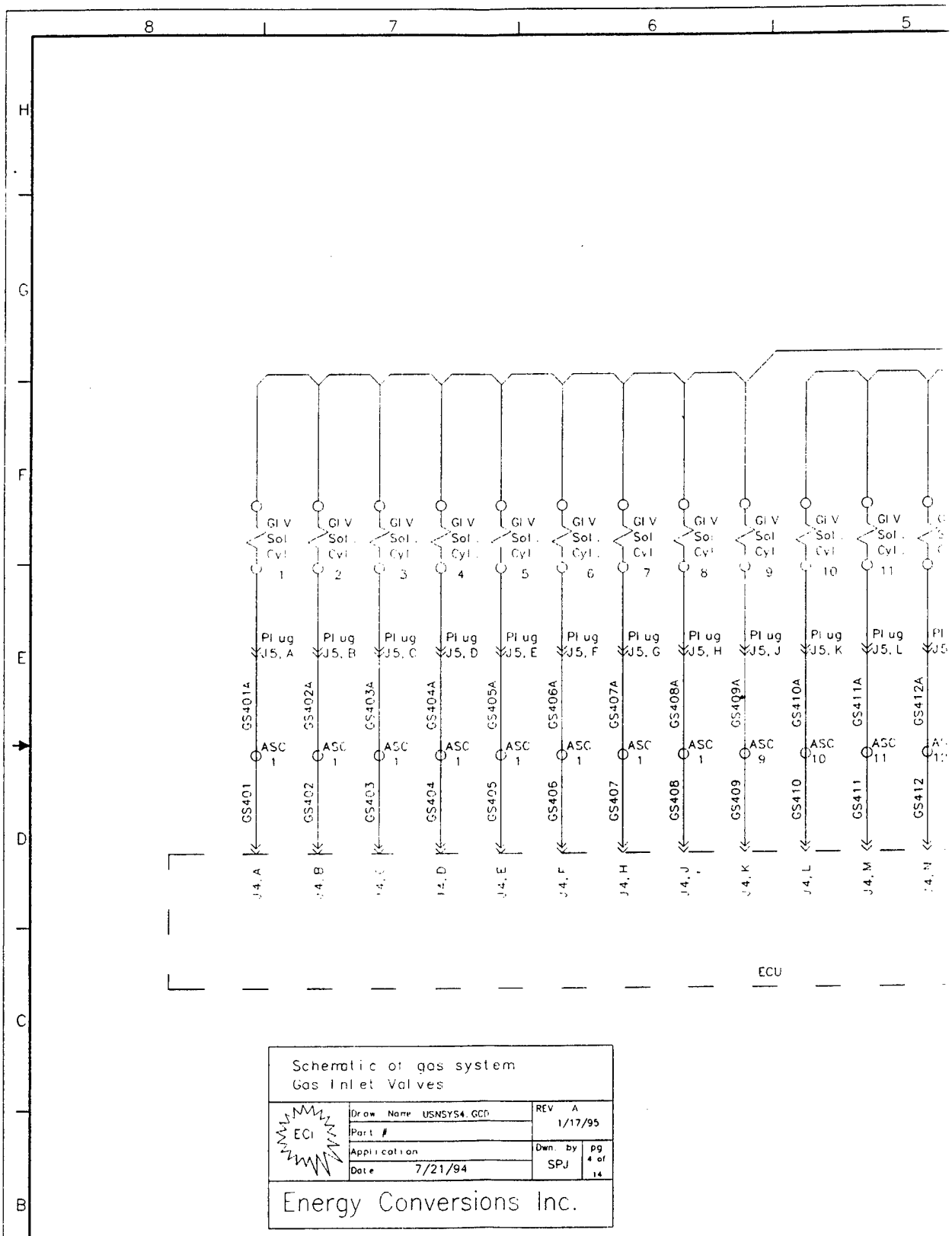

Figure 4-43. Schematic wiring

(Used by permission, Energy Co

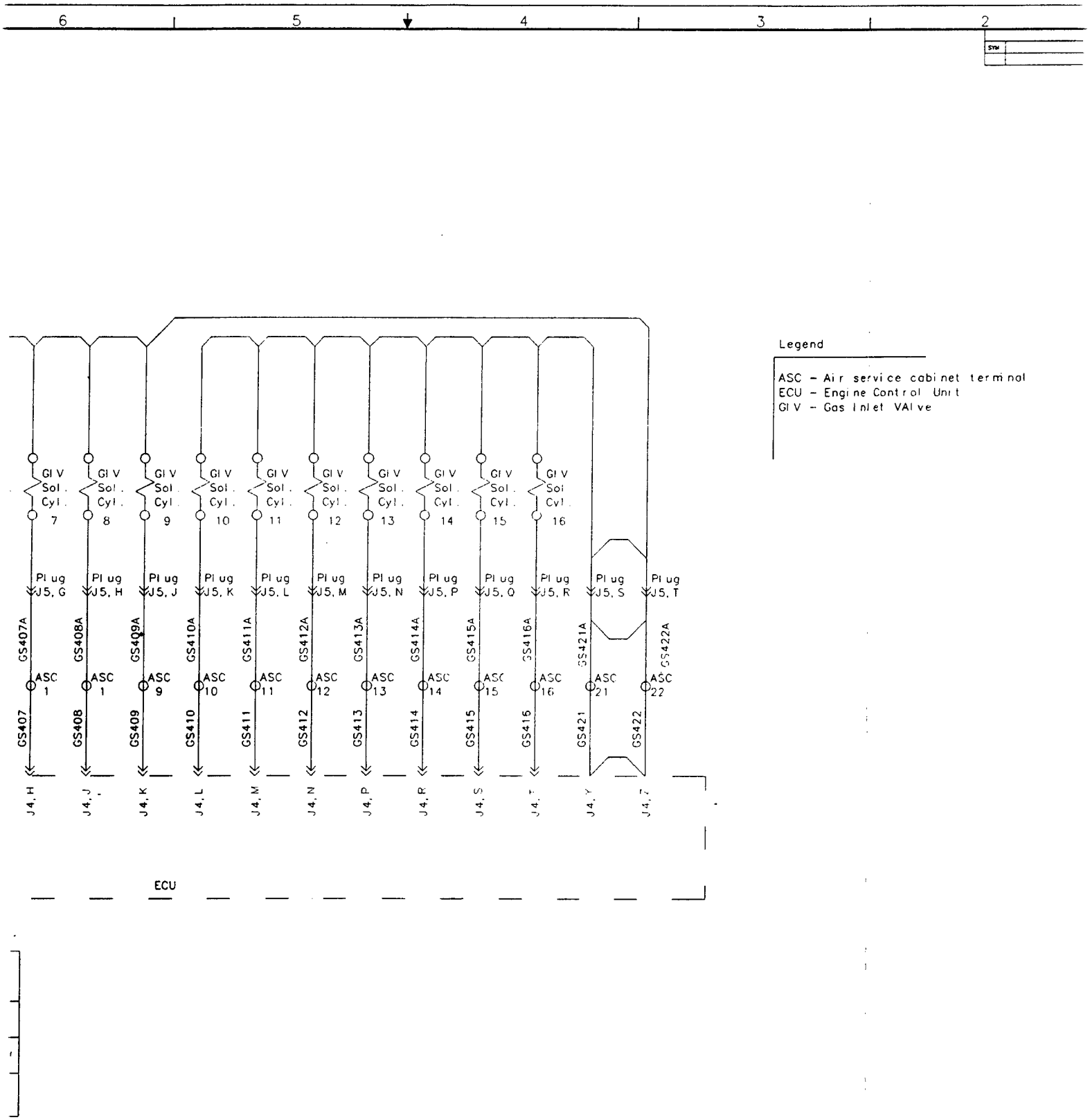

Figure 4-43. Schematic wiring diagram for control of GIV's.

(Used by permission, Energy Conversions, Inc., U.S.A., 1996.)

REVISIONS			
SYM	DESCRIPTION	DATE	APPROVAL

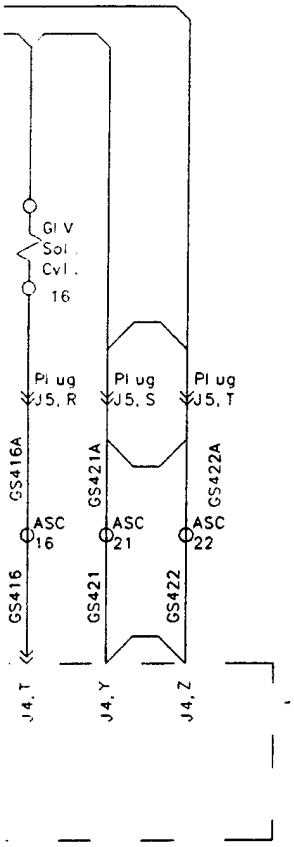

Legend

ASC - Air service cabinet terminal
ECU - Engine Control Unit
GIV - Gas Inlet VAlve

ITEM NO.	PART NO	DESCRIPTION	MATERIAL
QUANTITY FOR EACH ASSEMBLY		PARTS LIST	

UNLESS OTHERWISE SPECIFIED DIMENSIONS ARE IN FEET AND/OR INCHES

TOLERANCES
.X DECIMALS
.XX DECIMALS
.XXX DECIMALS
FRACTIONS ±1/16"
ANGLES ±0.5°

PART DASH NO | NEXT ASSY.

PROJ NO
DWG NO ECI-DF-2
DES XX | DR F.DELLALIBERA
CHK XX
BRANCH HEAD K.MACK
DIV DIR
SATISFACTORY TO
MIKE CHILDERS
NORMAN HELGESON DEC 1996
APPROVED DATE
COMMANDING OFFICER
APPROVED DATE
FOR COMMANDER NAVFAC

DEPARTMENT OF THE NAVY NAVAL FACILITIES ENGINEERING COMMAND
NAVAL FACILITIES ENGINEERING SERVICE CENTER
PORT HUENEME, CALIFORNIA 93043

DUEL FUEL 1500 KW
CONVERSION OF DIESEL POWER PLANT
SCHEMATIC OF GAS SYSTEM
GAS INLET VALVES

SIZE F | CODE IDENT NO 80091 | NAVFAC DRAWING NO
CONSTR CONTR NO
SCALE NONE | SPEC | SHEET 1 OF

GIV's. : - DO NOT SCALE

3

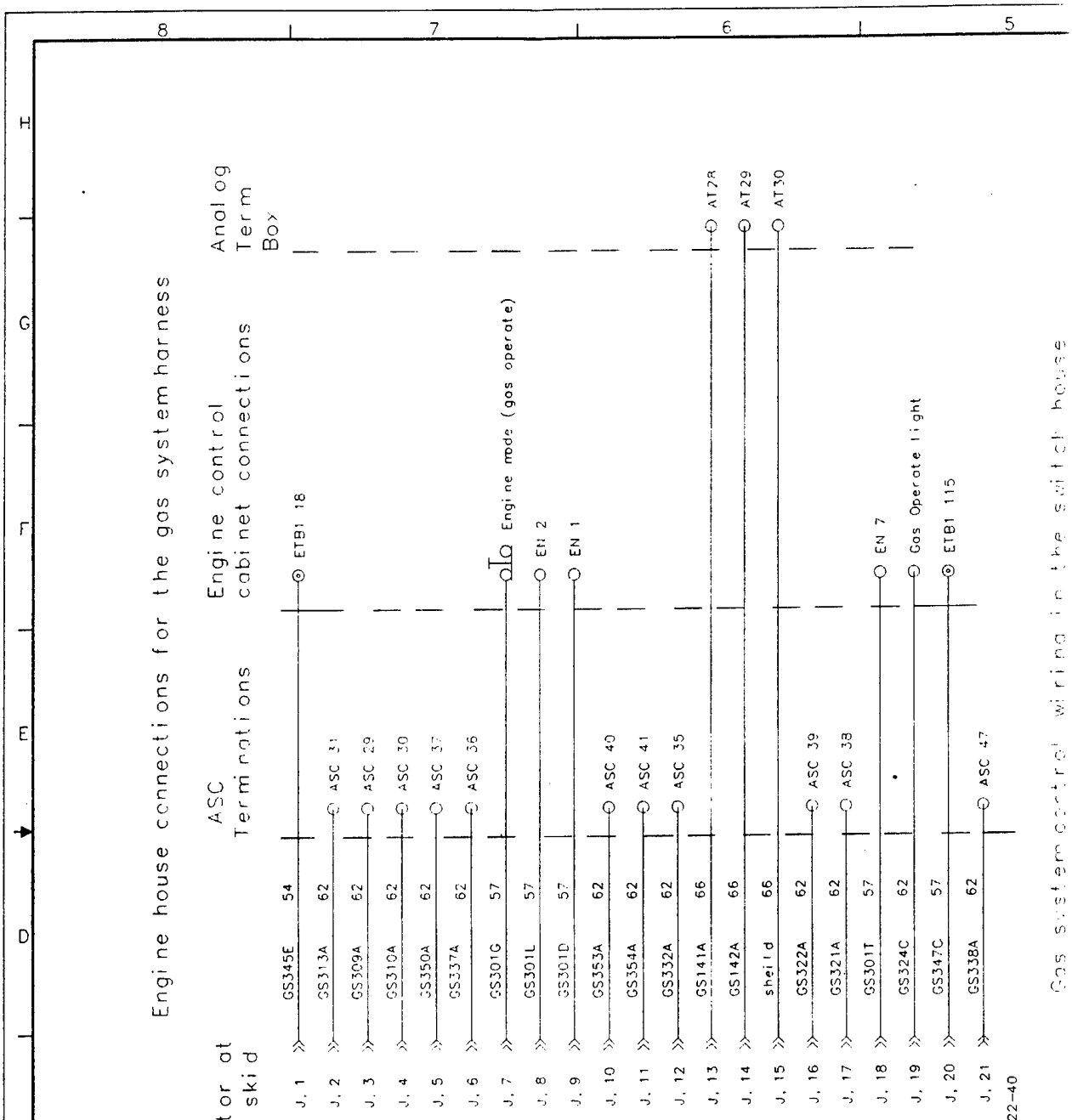

Bill of Materials

Name	Qty.	Discription	Manut.	Part number
Connector J	2	40 pos. connector	C. H.	
Wire	350'	16Ga. Exane 600V	E. W.	1929U (030)
Wire	100	18/2 w sheild	Bel.	444390
Wire				

Figure 4-44. Schematic wiring diagram
engine house and switchg
(Used by permission, Energy C

1

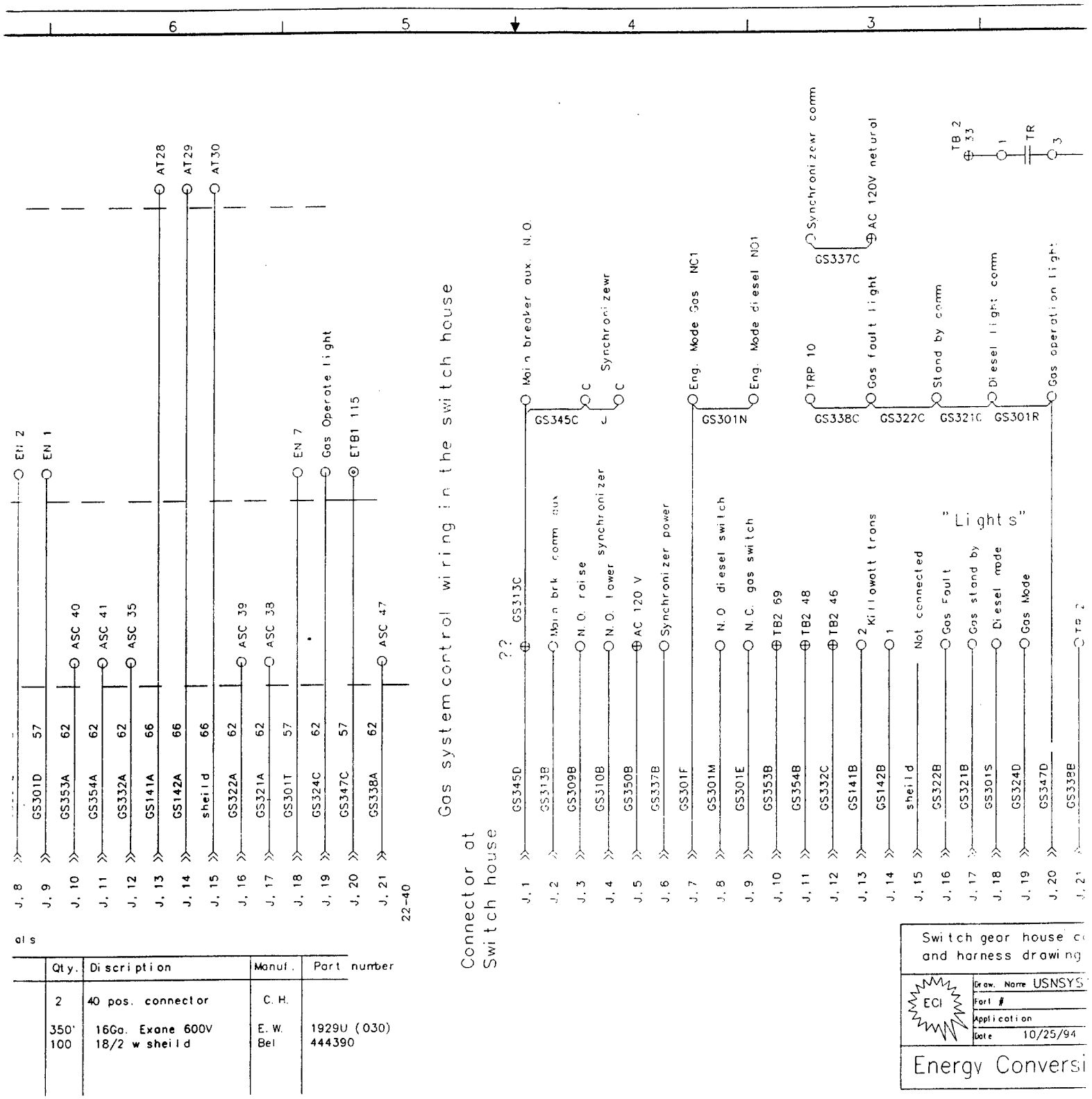

als

	Qty.	Discription	Manuf.	Part number
	2	40 pos. connector	C. H.	
	350'	16Ga. Exane 600V	E. W.	1929U (030)
	100	18/2 w sheild	Bel	444390

Figure 4-44. Schematic wiring diagram showing electrical connection points in engine house and switchgear through connecting umbilical harness.

(Used by permission, Energy Conversions, Inc., U.S.A., 1996.)

2

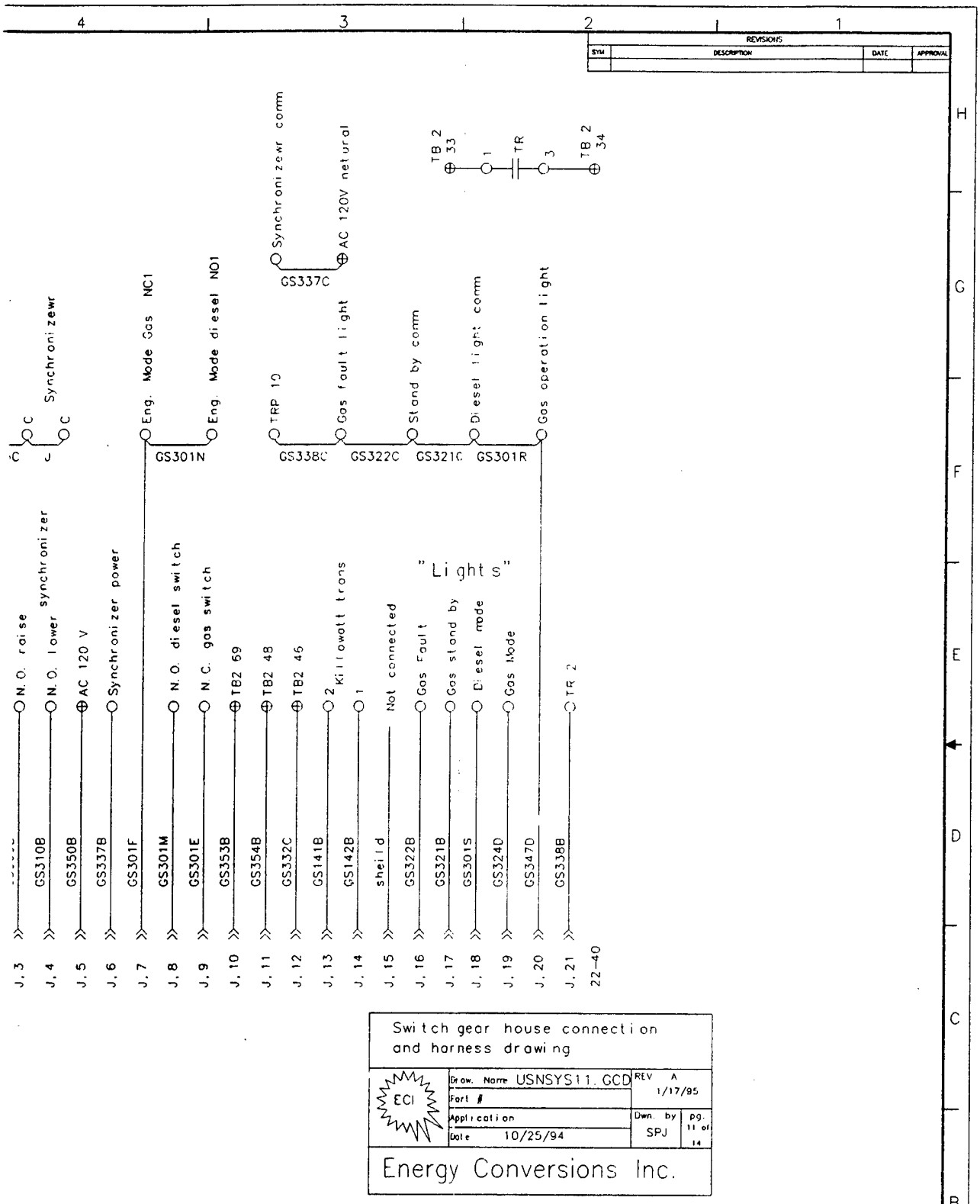

rical connection points in
nnecting umbilical harness.
4., 1996.)

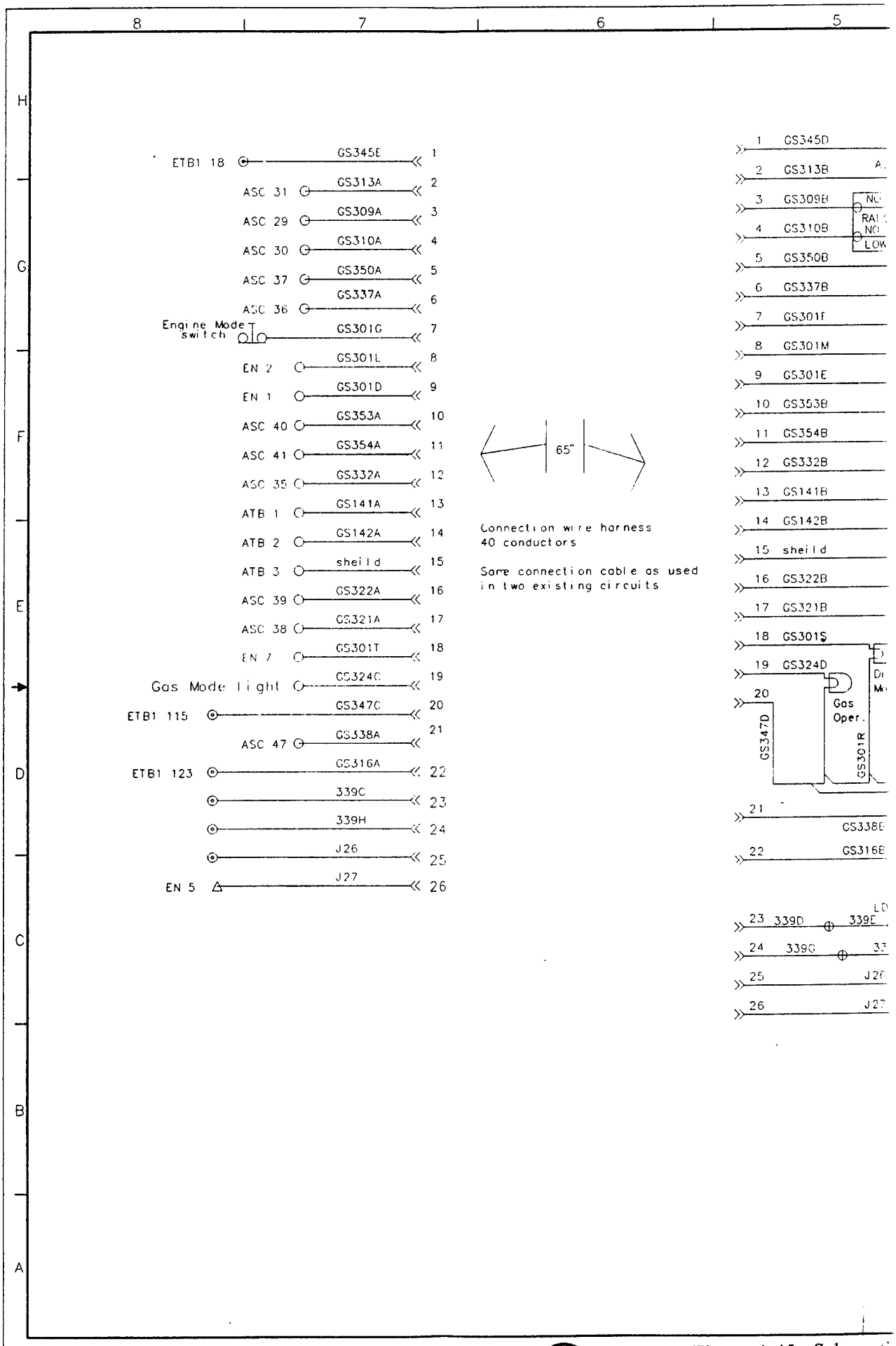

Figure 4-45. Schemati

(Used by permission, Ener

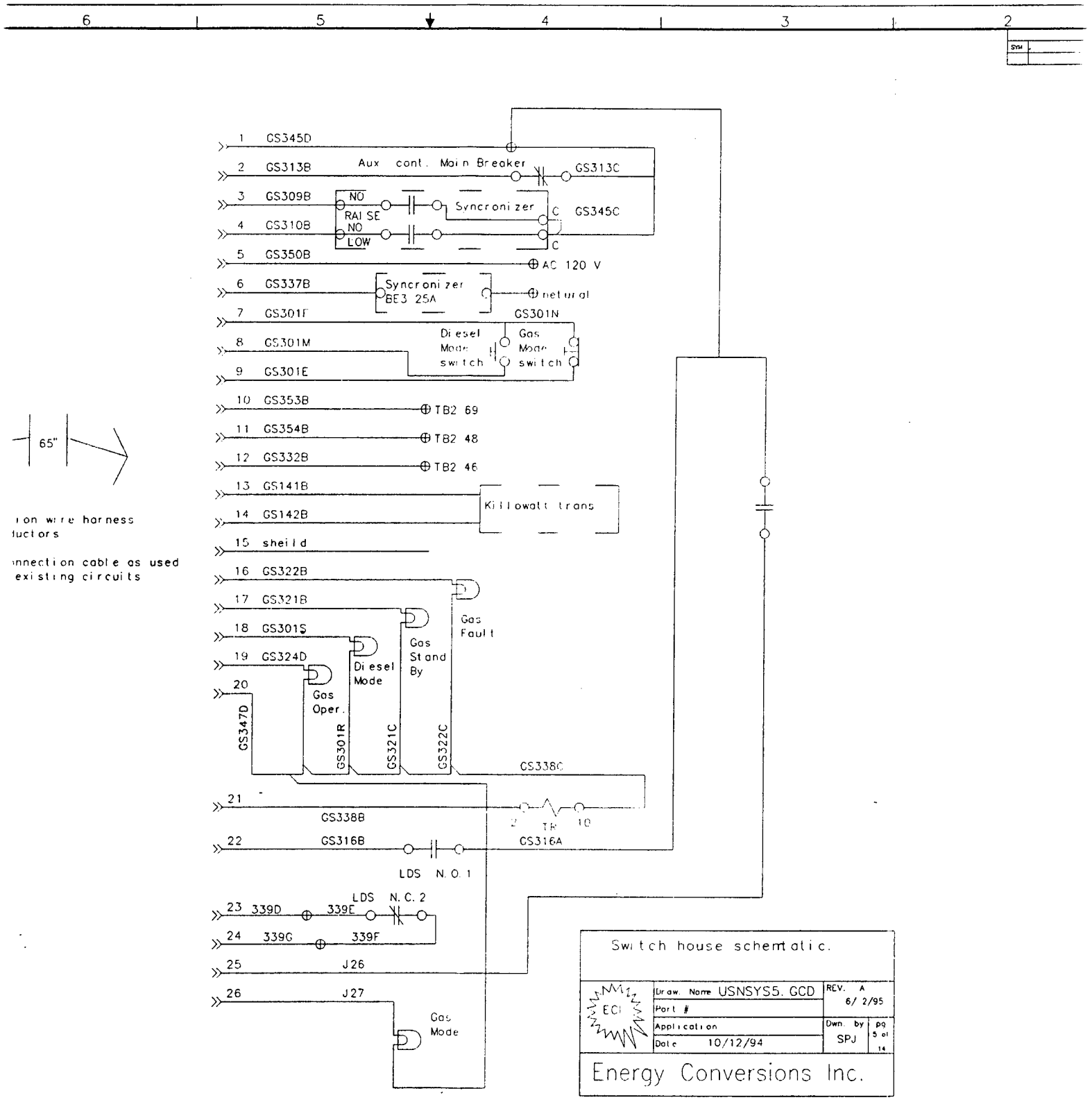

Figure 4-45. Schematic wiring detail for switchgear.

(Used by permission, Energy Conversions, Inc., U.S.A., 1996.)

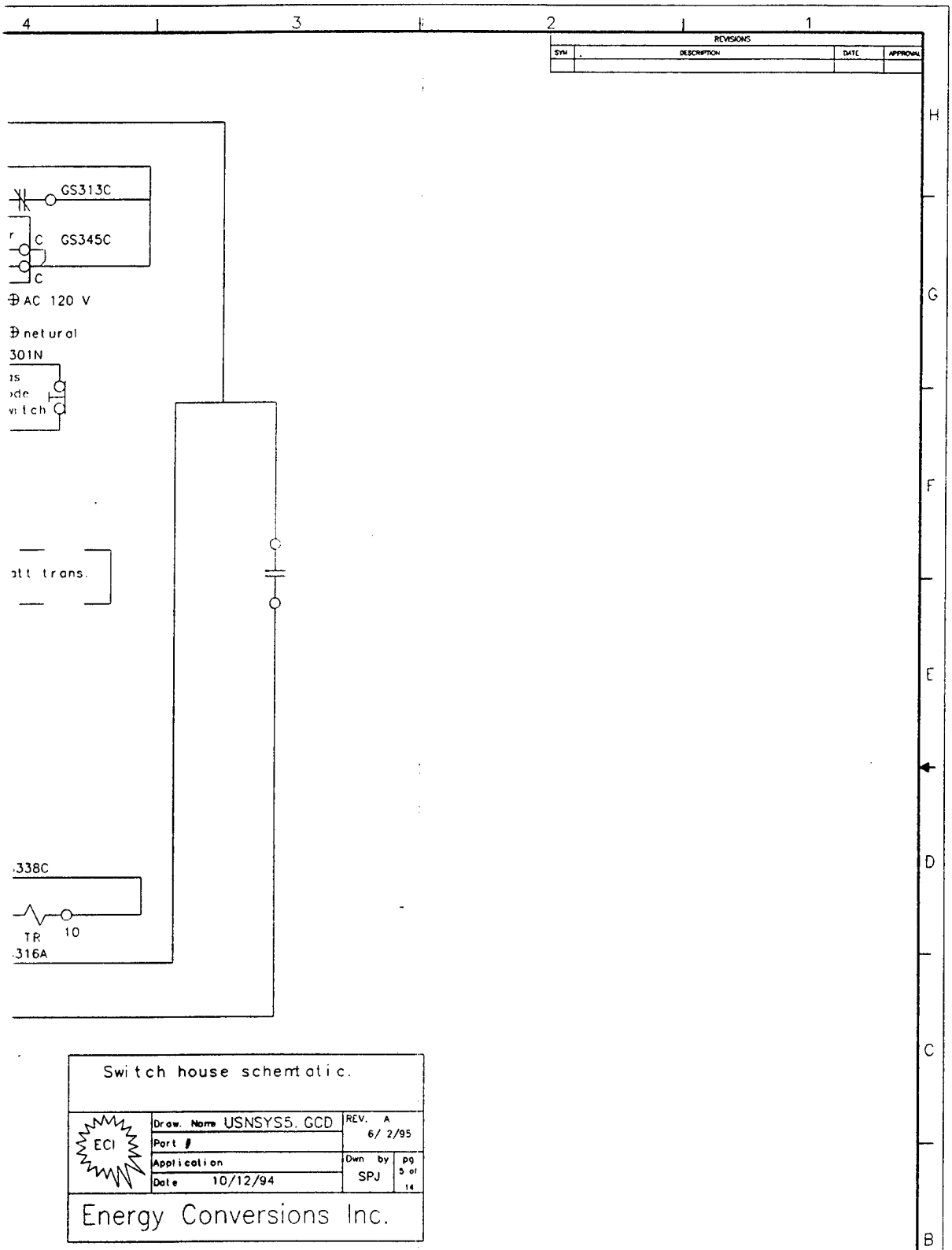

REVISIONS			
SYM	DESCRIPTION	DATE	APPROVAL

QUANTITY FOR EACH ASSEMBLY	ITEM NO	PART NO.	DESCRIPTION	MATERIAL

PARTS LIST

UNLESS OTHERWISE SPECIFIED DIMENSIONS ARE IN FEET AND/OR INCHES

TOLERANCES
X DECIMALS
.XX DECIMALS
.XXX DECIMALS
FRACTIONS ±1/16"
ANGLES ±0.5°

PART DASH NO. | NEXT ASSY.

PROJ NO
DWG NO USNSYS5.gcd
DES XX | DR F.DELLALIBERA
CHK XX
BRANCH HEAD K.MAC'k
DIV DIR
SATISFACTORY TO
APPROVED DATE
COMMANDING OFFICER
APPROVED DATE
FOR COMMANDER, NAVFAC

DEPARTMENT OF THE NAVY NAVAL FACILITIES ENGINEERING COMMAND
NAVAL FACILITIES ENGINEERING SERVICE CENTER
PORT HUENEME, CALIFORNIA 93043

DUEL FUEL 1500 KW
CONVERSION OF DIESEL POWER PLANT
SCHEMATIC OF GAS CONVERSION SYSTEM
SWITCH HOUSE SCHEMATIC

SIZE F | CODE IDENT NO 80091 | NAVFAC DRAWING NO
CONSTR CONTR NO
SCALE NONE | SPEC | SHEET 1 OF

witchgear. DO NOT SCALE

. 1996.)

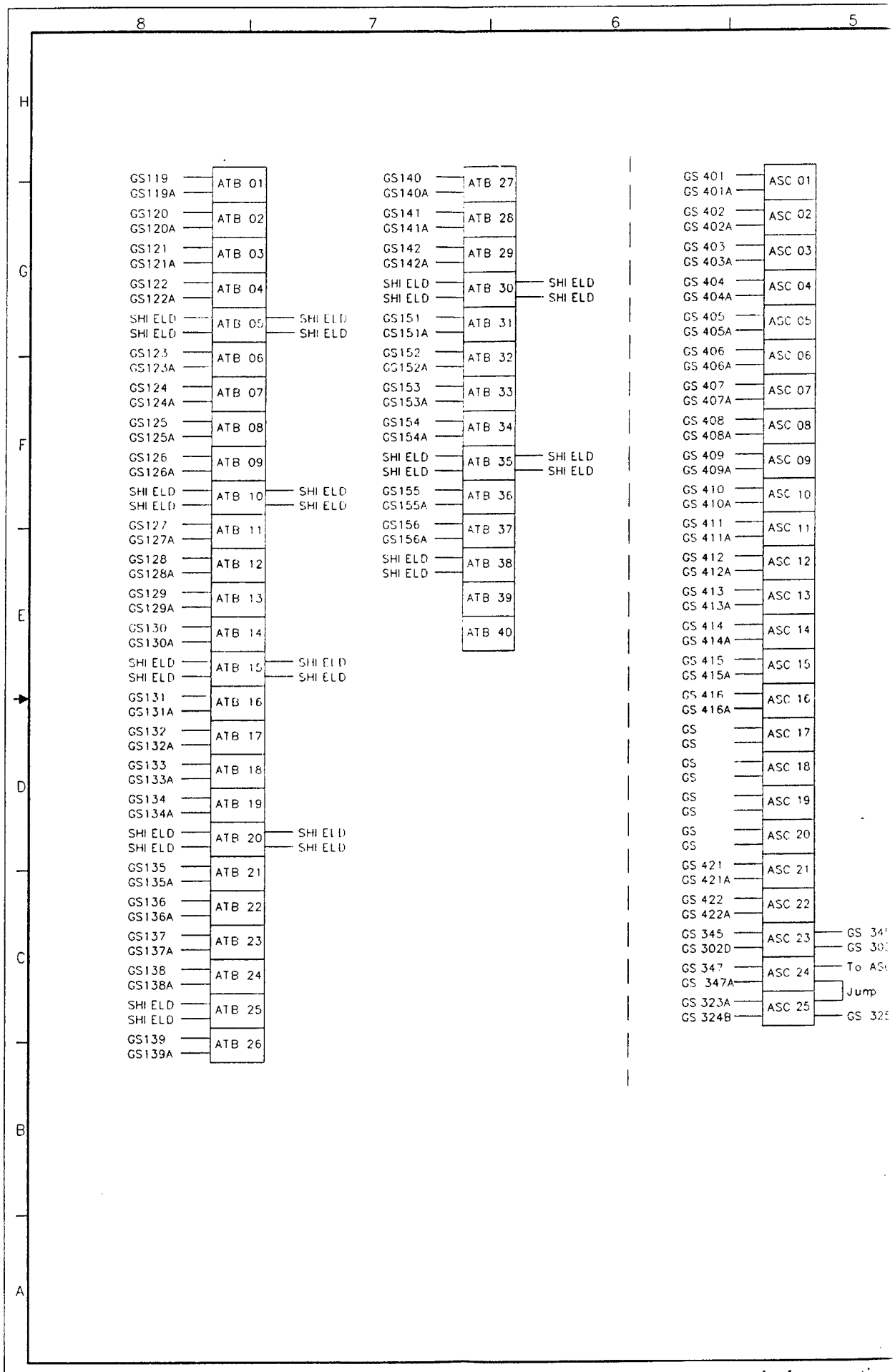

Figure 4-46. Terminal connection

(Used by permission, Ener

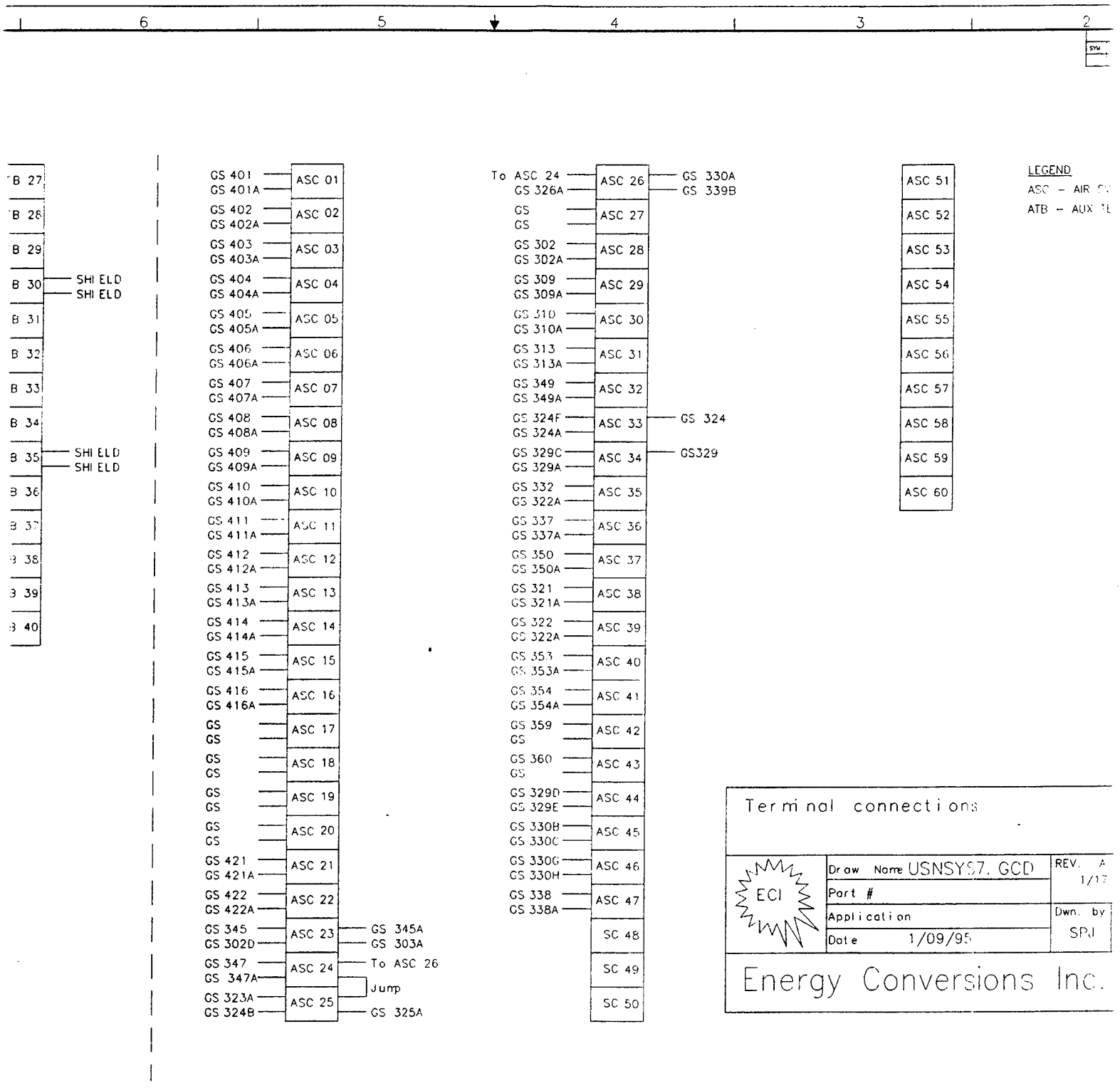

Figure 4-46. Terminal connections with ASC and analog termination box.

(Used by permission, Energy Conversions, Inc., U.S.A., 1996.)

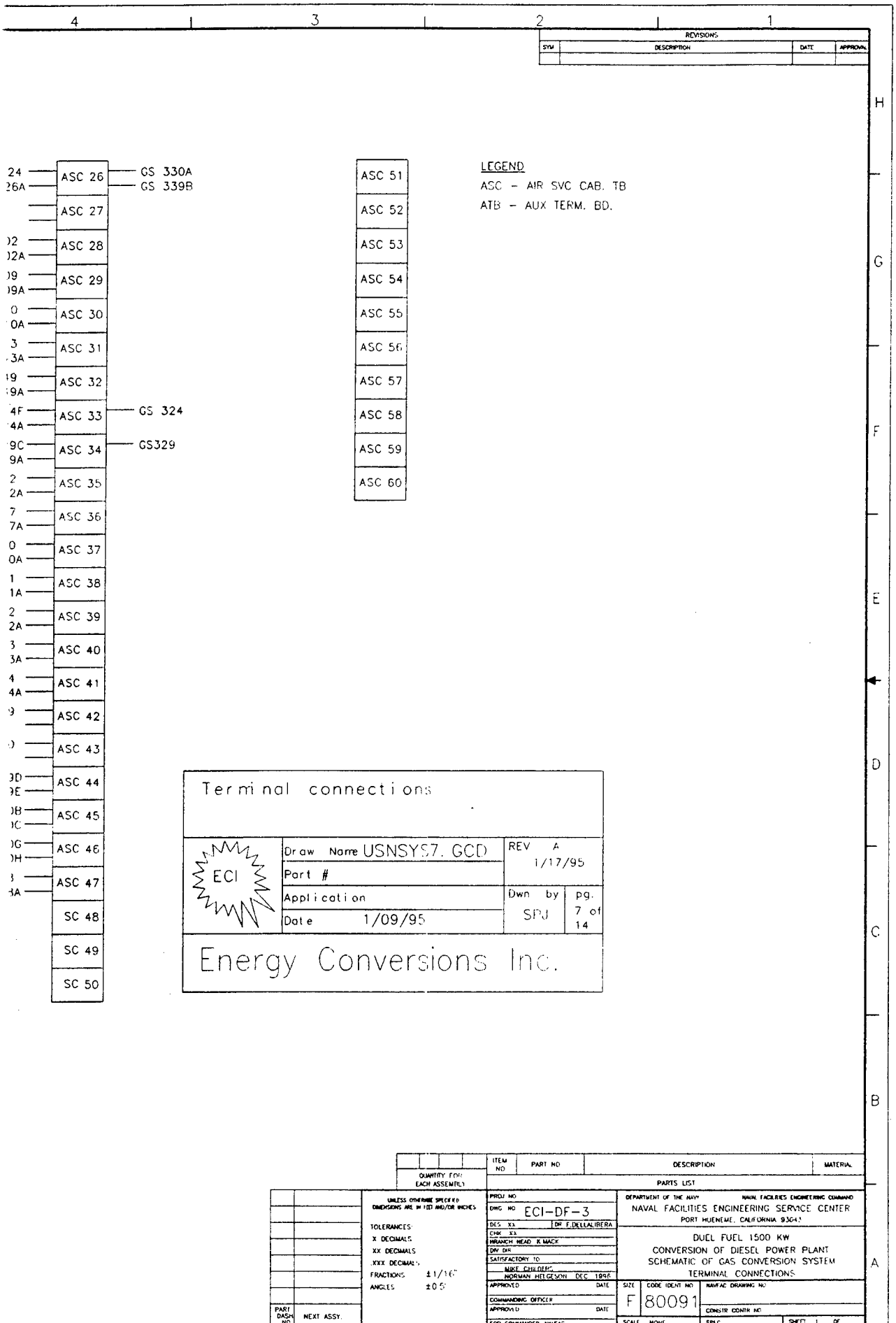

d analog termination box.

J.S.A., 1996.)

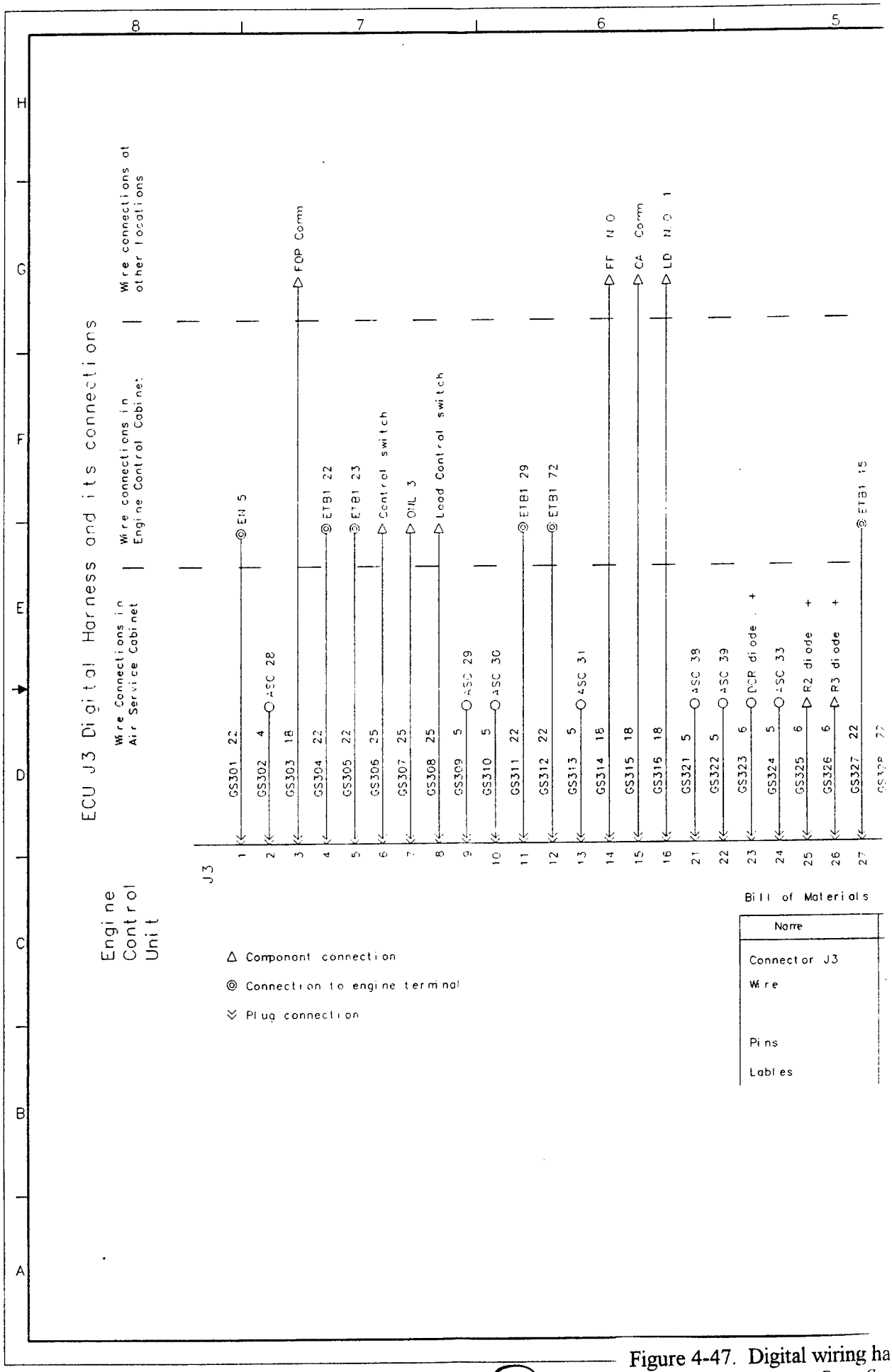

Figure 4-47. Digital wiring ha

(Used by permission, Energy Con

1

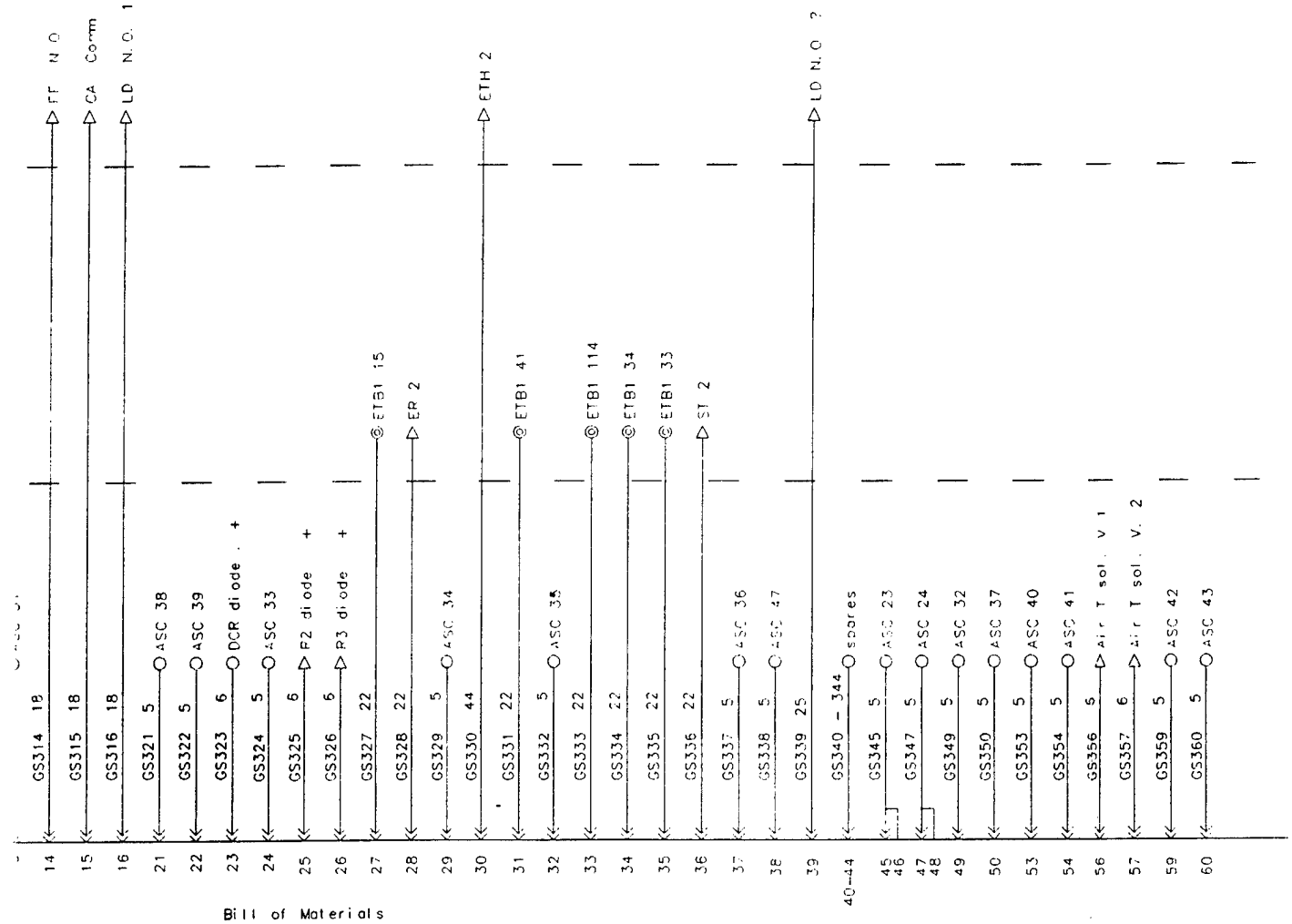

Bill of Materials

Name	Qty.	Discription	Manuf.	Part number
Connector J3	1	66 pos. metal shell	Win	XMRA66PM-1000
Wire	1000	16/1 Exane 1000v	EW	1929U (030)
Pins	66	Gold plated pins	Win	100-1016P
Lables	66	Heat shrink	T&B	HVM187-9-1S

Gas conversion digital harness drawing and connections

ECI

Draw. Name USNSYS9. GCD	REV. B 4/27/95	
Part #		
Application	Dwn by SPJ	pg. 9 of 14
Date 10/07/94		

Energy Conversions Inc.

QUANTITY FOR EACH ASSEMBLY

ITEM NO | PART NO

UNLESS OTHERWISE SPECIFIED DIMENSIONS ARE in FEET AND/OR INCHES

TOLERANCES
.X DECIMALS
.XX DECIMALS
.XXX DECIMALS
FRACTIONS ±1/16"
ANGLES ±0.5°

PART DASH NO | NEXT ASSY

PROJ NO
DWG NO USNSYS9.gcd
DES DR F. DELLALIBERA
CHK
BRANCH HEAD
DIV DIR
SATISFACTORY TO
APPROVED DATE
COMMANDING OFFICER
APPROVED DATE
FOR COMMANDER, NAVFAC

DEPARTMENT OF THE NAVAL FAC
CONVE SCHEMA GAS CONV
SIZE F | CODE IDENT 80
SCALE NONE

SK - DO NOT SCALE

Figure 4-47. Digital wiring harness connections to ECU.

(Used by permission, Energy Conversions, Inc., U.S.A., 1996.)

2

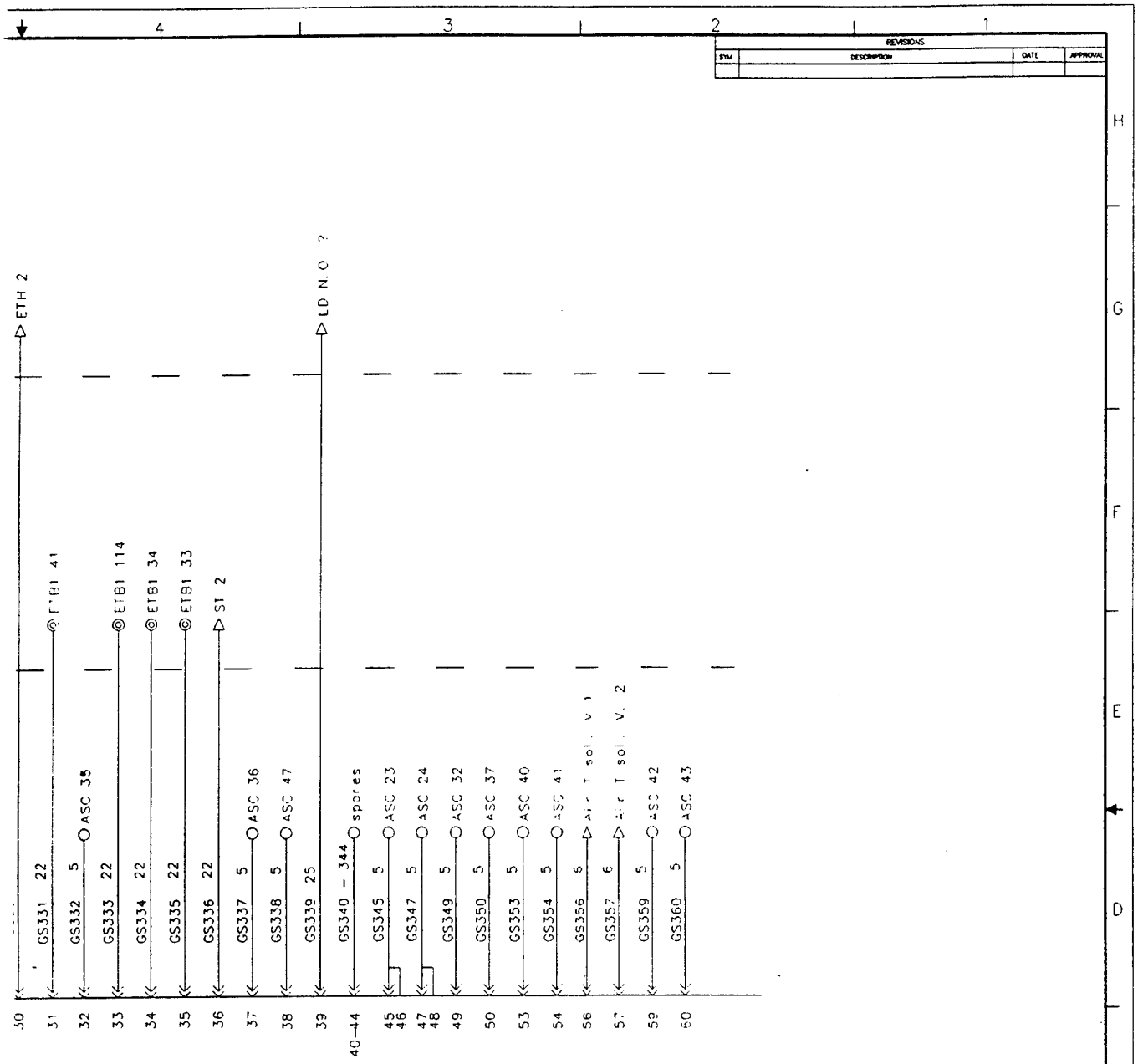

cription	Manuf.	Part number
pos metal shell	Win.	XMRA66PM-1000
/1 Exane 1000v	EW	1929U (030)
ld plated pins	Win.	100-1016P
at shrink	T&B	HVM187-9-1S

Gas conversion digital harness drawing and connections

ECI

Draw. Name USNSYS9. GCD	REV. B 4/27/95	
Part #		
Application	Dwn by SPJ	pg. 9 of 14
Date 10/07/94		

Energy Conversions Inc.

ITEM NO	PART NO	DESCRIPTION	MATERIAL
		PARTS LIST	

QUANTITY FOR EACH ASSEMBLY

UNLESS OTHERWISE SPECIFIED DIMENSIONS ARE IN FEET AND/OR INCHES

TOLERANCES
.X DECIMALS
.XX DECIMALS
.XXX DECIMALS
FRACTIONS ±1/16"
ANGLES ±0.5°

PROJ NO
DWG NO USNSYS9.gcd
DES XX DR. F.DELLALIBERA
CHK XX
BRANCH HEAD K.MACK
DIV DIR
SATISFACTORY TO
APPROVED DATE
COMMANDING OFFICER
APPROVED DATE
FOR COMMANDER, NAVFAC

DEPARTMENT OF THE NAVY NAVAL FACILITIES ENGINEERING COMMAND
NAVAL FACILITIES ENGINEERING SERVICE CENTER
PORT HUENEME, CALIFORNIA 93043

DUEL FUEL 1500 KW
CONVERSION OF DIESEL POWER PLANT
SCHEMATIC OF GAS CONVERSION SYSTEM
GAS CONVERSION DIGITAL HARNESS DRAWING AND CONNECTIONS

SIZE F CODE IDENT NO 80091 NAVFAC DRAWING NO
CONSTR CONTR NO
SCALE NONE SPEC SHEET 1 OF

PART DASH NO NEXT ASSY

SK - DO NOT SCALE

connections to ECU.

Inc., U.S.A., 1996.)

3

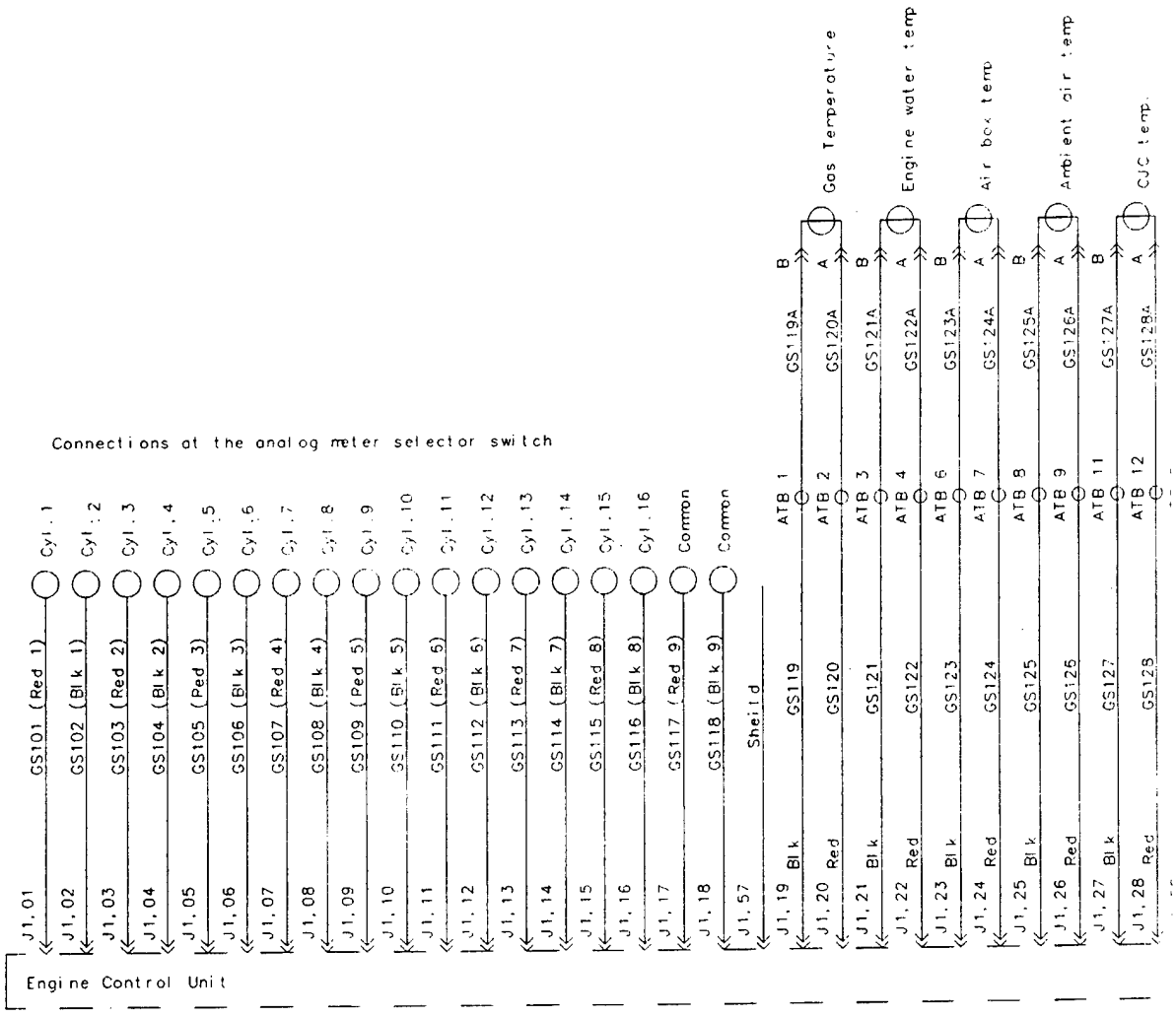

ECU J1 pins

Spare temp. input pins 29, 30

Spare analog input pins 43, 44
45, 46
47, 48
49, 50

⊕ terminal in switch house

△ component connection

○ Air service termination point

≫ Pin and socket plug connection

Schematic of gas conversion system
Analog sensor connections

ECI	Draw. Name USNSYS1. gcd	REV. B 4/11/95	
	Part #		
	Application	Dwn by SPJ	pg 1 of 14
	Date 10/05/94		

Energy Conversions Inc.

Figure 4-48. Ana

(Used by perm

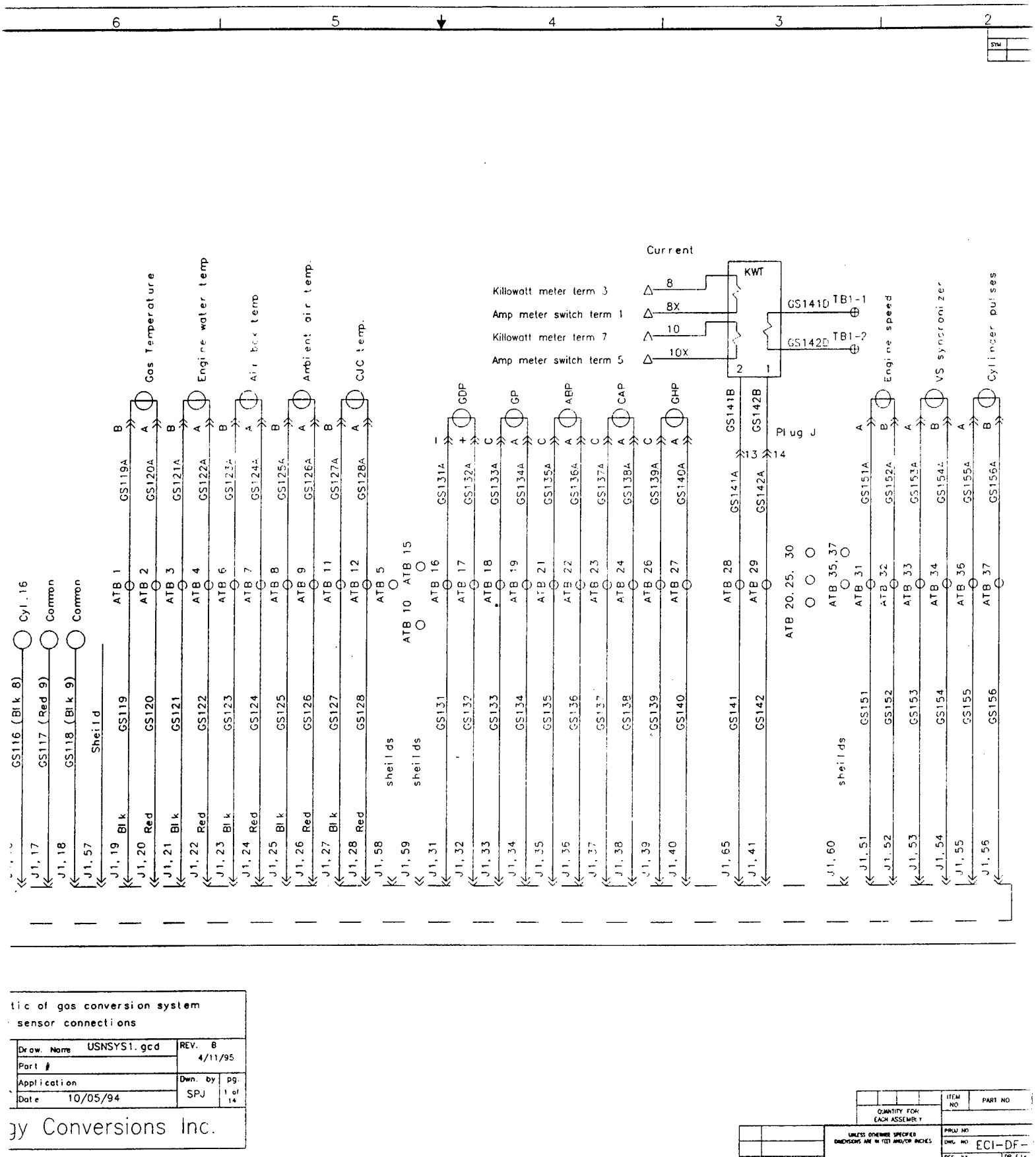

tic of gas conversion system
sensor connections

Draw. Name USNSYS1.gcd	REV. B 4/11/95	
Part #		
Application	Dwn. by SPJ	pg. 1 of 14
Date 10/05/94		

gy Conversions Inc.

QUANTITY FOR EACH ASSEMBLY		ITEM NO	PART NO
PART DASH NO	NEXT ASSY		

UNLESS OTHERWISE SPECIFIED DIMENSIONS ARE IN FEET AND/OR INCHES

TOLERANCES:
X DECIMALS
XX DECIMALS
.XXX DECIMALS
FRACTIONS ±1/16"
ANGLES ±0.5°

PROJ NO
DWG NO ECI-DF-
DES XX
CHK XX
BRANCH HEAD K.MACK
DIV DIR
SATISFACTORY TO
MIKE CHILDERS
NORMAN HELGESON
APPROVED
COMMANDING OFFICER
APPROVED
FOR COMMANDER NAVFAC

Figure 4-48. Analog sensor harness connections to ECU.

(Used by permission, Energy Conversions, Inc., U.S.A., 1996.)

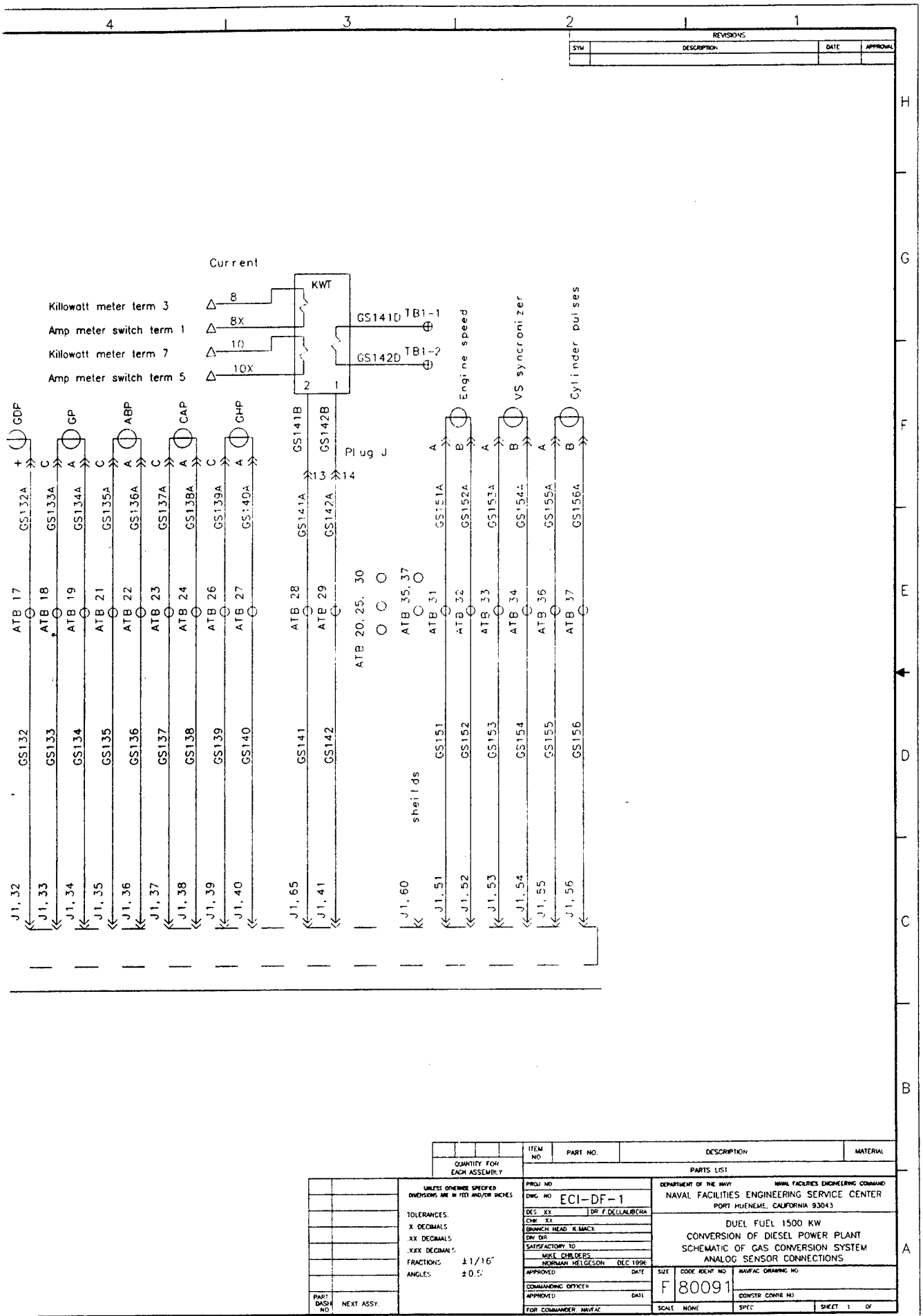

r harness connections to ECU.

Conversions, Inc., U.S.A., 1996.)

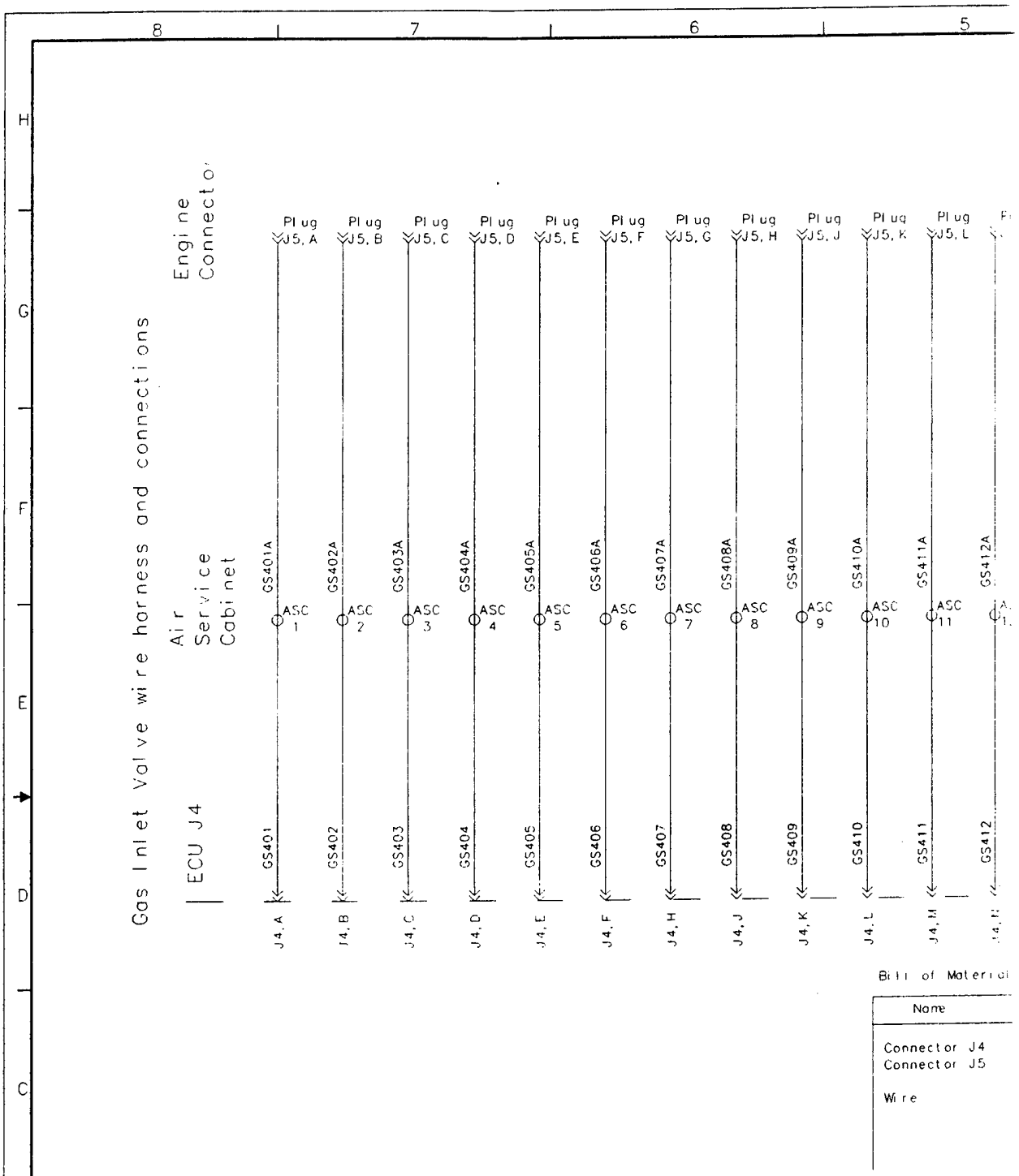

Figure 4-49. GIV wiri

(Used by permission, Er

1

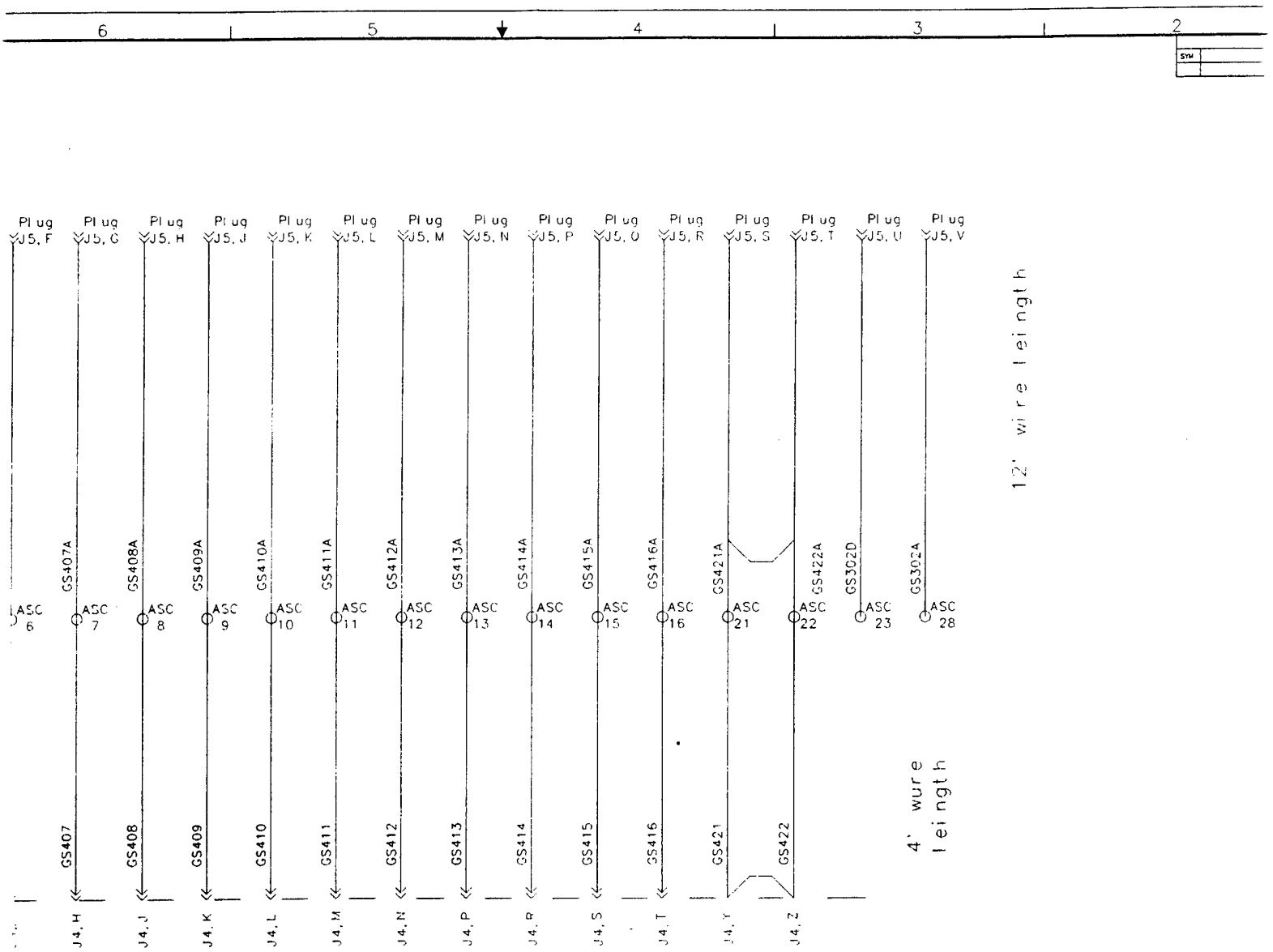

Bill of Materials

Name	Qty.	Description	Manuf.	Part number
Connector J4	1	24 pos. metal. conn	Win.	XMRA24PM-1000
Connector J5	1	20 pos. Circular met.	Ben	MS3108A 2816-S-A95
Wire	200	16 Ga. Exane 600V	E W	1929U (030)

Gas Inlet Valves harness and wire connections

ECI

Drow. Name USNSYS10.GCD | REV. A 1/17/95

Part #

Application

Date 10/25/94 | Dwn. by SPJ | PG 10 of 14

Energy Conversions Inc.

QUANTITY FOR EACH ASSEMBLY | ITEM NO | PART NO

UNLESS OTHERWISE SPECIFIED DIMENSIONS ARE IN FEET AND/OR INCHES

TOLERANCES

X DECIMALS

XX DECIMALS

XXX DECIMALS

FRACTIONS ±1/16"

ANGLES ±0.5°

PART DASH NO | NEXT ASSY

PROJ NO

DWG NO USNSYS10.gcd

DES XX | DR F.DELLALIBERA

CHK XX

BRANCH HEAD K.MACK

DIV DIR

SATISFACTORY TO

APPROVED | DATE

COMMANDING OFFICER

APPROVED | DATE

FOR COMMANDER, NAVSEA

DO NOT SCALE

Figure 4-49. GIV wiring harness connections to ECU.

(Used by permission, Energy Conversions, Inc., U.S.A., 1996.)

2

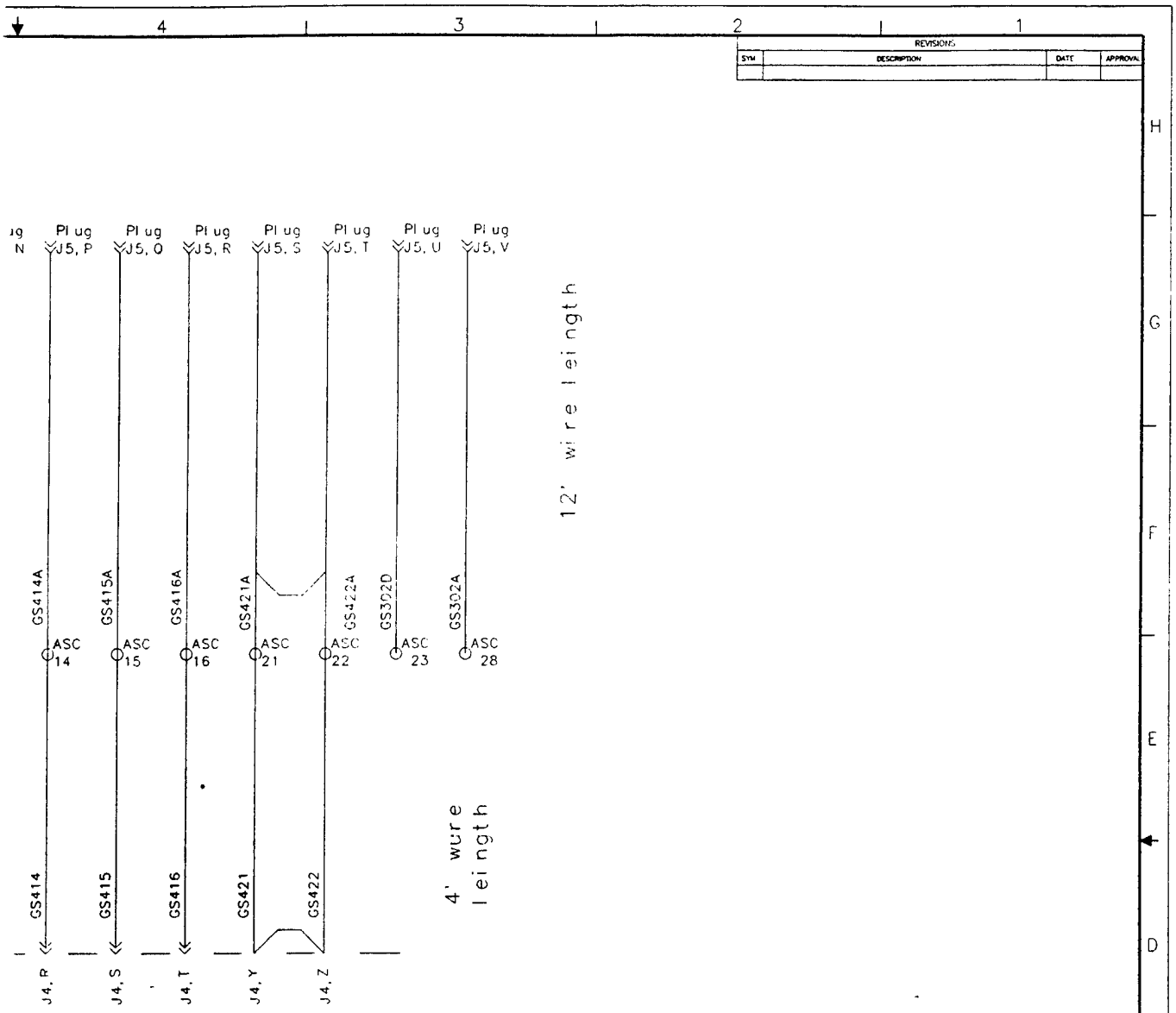

scription	Manuf.	Part number
4 pos. metal conn.	Win.	XMRA24PM-1000
0 pos. Circular met.	Ben.	MS3108A 2816-S-A95
6 Ga. Exane 600V	E. W.	1929U (030)

Gas Inlet Valves harness and wire connections

ECI

Draw. Name USNSYS10 GCD | REV A 1/17/95

Part /

Application

Date 10/25/94 | Dwn. by SPJ | pg. 10 of 14

Energy Conversions Inc.

ITEM NO	PART NO	DESCRIPTION	MATERIAL
QUANTITY FOR EACH ASSEMBLY		PARTS LIST	

UNLESS OTHERWISE SPECIFIED DIMENSIONS ARE IN FEET AND/OR INCHES

TOLERANCES
X DECIMALS
XX DECIMALS
XXX DECIMALS
FRACTIONS ±1/16"
ANGLES ±0.5°

PART DASH NO | NEXT ASSY.

PROJ NO
DWG NO USNSYS10.gcd
DES XX | DR F DELLALIBERA
CHK XX
BRANCH HEAD K MACY
DV DIR
SATISFACTORY TO
APPROVED DATE
COMMANDING OFFICER
APPROVED DATE
FOR COMMANDER, NAVFAC

DEPARTMENT OF THE NAVY NAVAL FACILITIES ENGINEERING COMMAND
NAVAL FACILITIES ENGINEERING SERVICE CENTER
PORT HUENEME, CALIFORNIA 93043

DUEL FUEL 1500 KW
CONVERSION OF DIESEL POWER PLANT
SCHEMATIC OF GAS CONVERSION SYSTEM
GAS INLET VALVES HARNESS AND WIRE CONNECTIONS

SIZE F | CODE IDENT NO 80091 | NAVFAC DRAWING NO
CONSTR CONTR NO
SCALE NONE | SPEC | SHEET 1 OF

DO NOT SCALE

ss connections to ECU.

sions, Inc., U.S.A., 1996.)

3

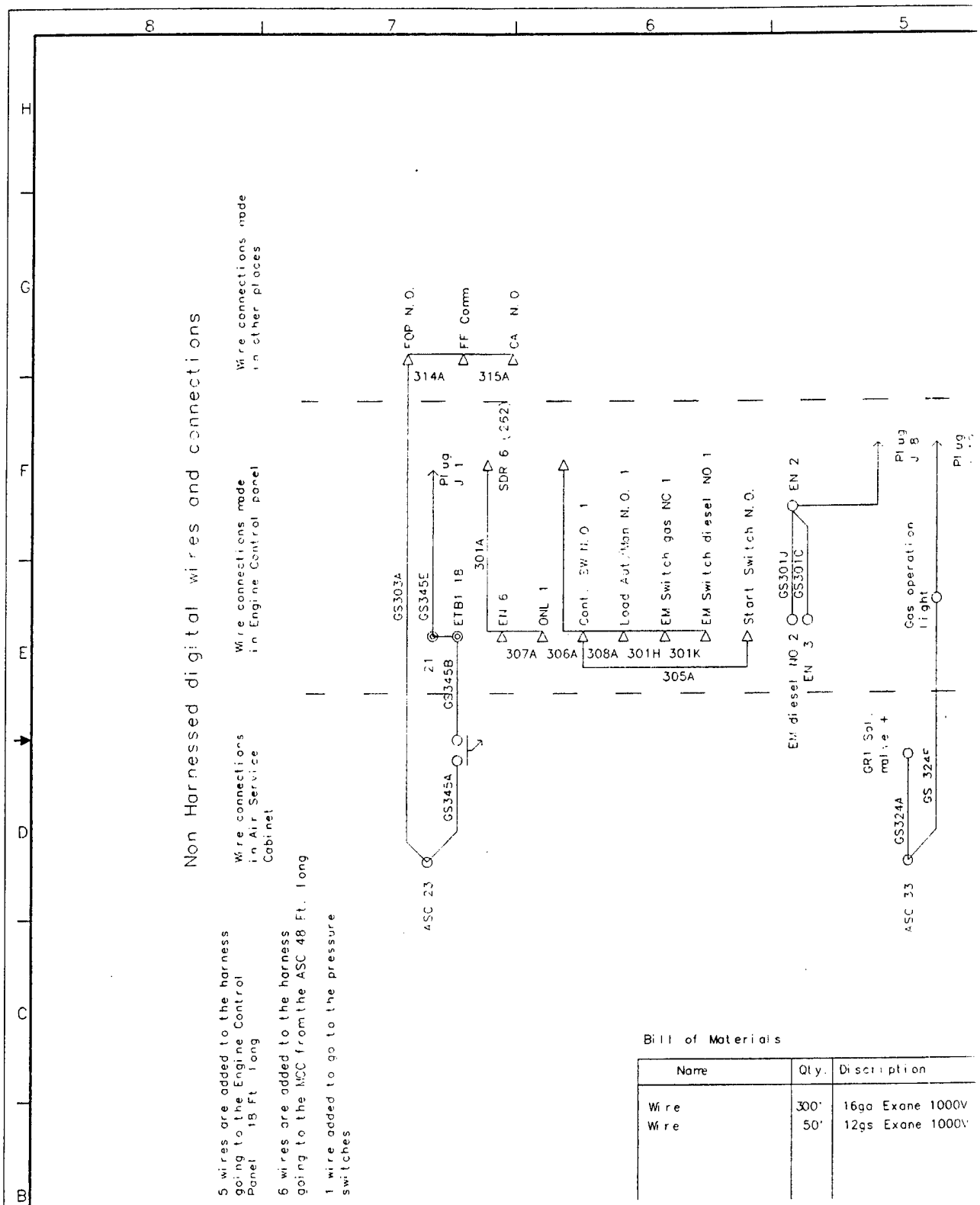

Bill of Materials

Name	Qty.	Discription
Wire	300'	16ga Exane 1000V
Wire	50'	12gs Exane 1000V

Figure 4-50. Non-harne

(Used by permission, Energy

1

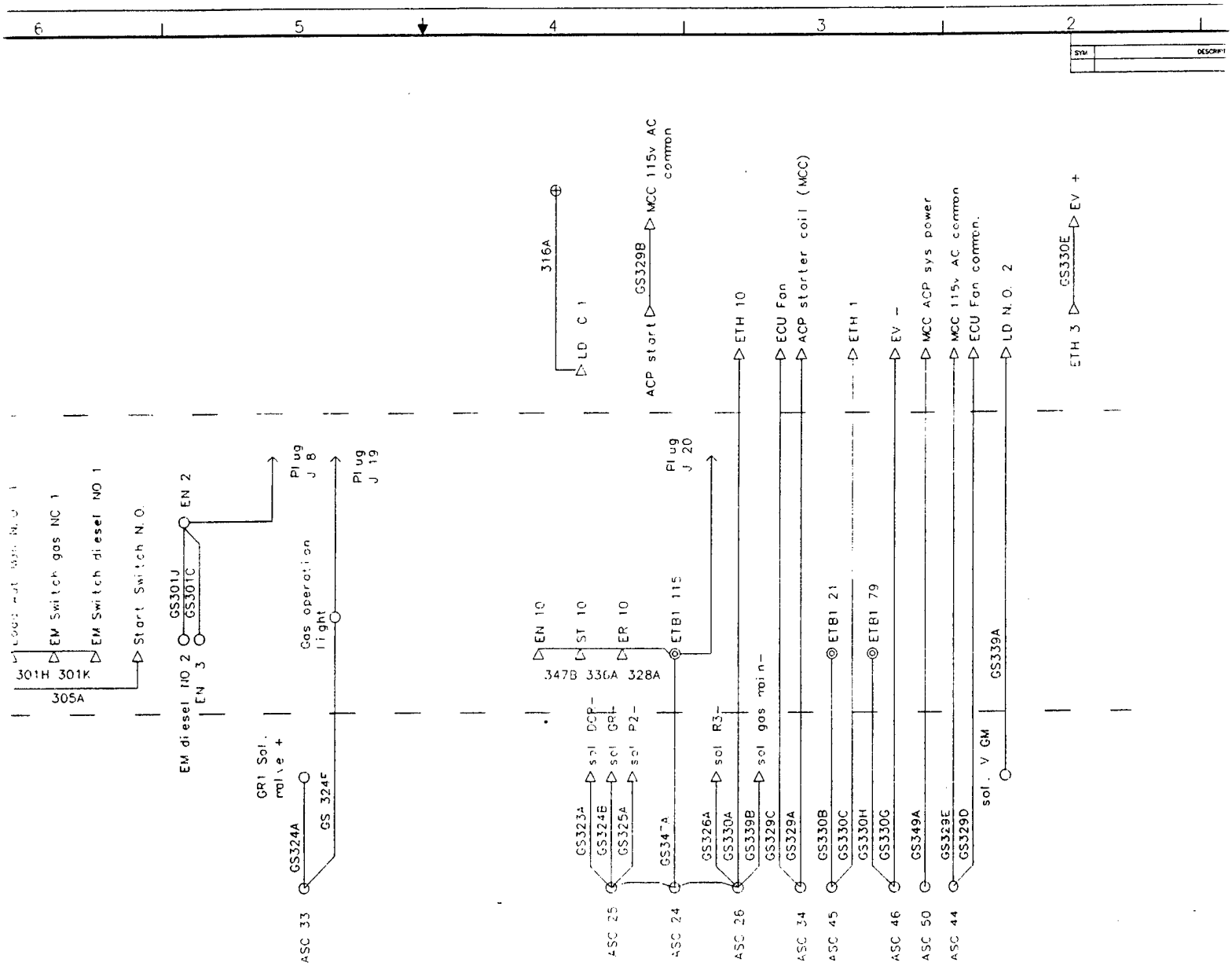

Bill of Materials

Name	Qty.	Discription	Manuf.	Part number
Wire	300'	16ga Exane 1000V	EW	1929U (030)
Wire	50'	12gs Exane 1000V	EW	

Gas conversion system non harness wire connections

ECI

Draw Name USNSYS12. GCD

REV B 4/28/95

Part #

Application

Date 10/27/94

Dwn by SPJ

pg. 12 of 14

Energy Conversions Inc.

ITEM NO | PART NO

QUANTITY FOR EACH ASSEMBLY

UNLESS OTHERWISE SPECIFIED DIMENSIONS ARE IN FEET AND/OR INCHES

TOLERANCES
X DECIMALS
.XX DECIMALS
.XXX DECIMALS
FRACTIONS ±1/16"
ANGLES ±0.5°

PROJ NO
DWG NO USNSYS12.gcd
DES XX DR F.DULLALIBERA
CHK XX
BRANCH HEAD K MACK
DIV DIR
SATISFACTORY TO
APPROVED DATE
COMMANDING OFFICER
APPROVED DATE
FOR COMMANDER, NAVAL

DEPARTMENT OF
NAVAL

CONV
SCHEM

SIZE F CODE IDEN 800

SCALE NONE

PART DASH NO | NEXT ASSY

DO NOT SCALE

Figure 4-50. Non-harness wire connections in ASC.

(Used by permission, Energy Conversions, Inc., U.S.A., 1996.)

2

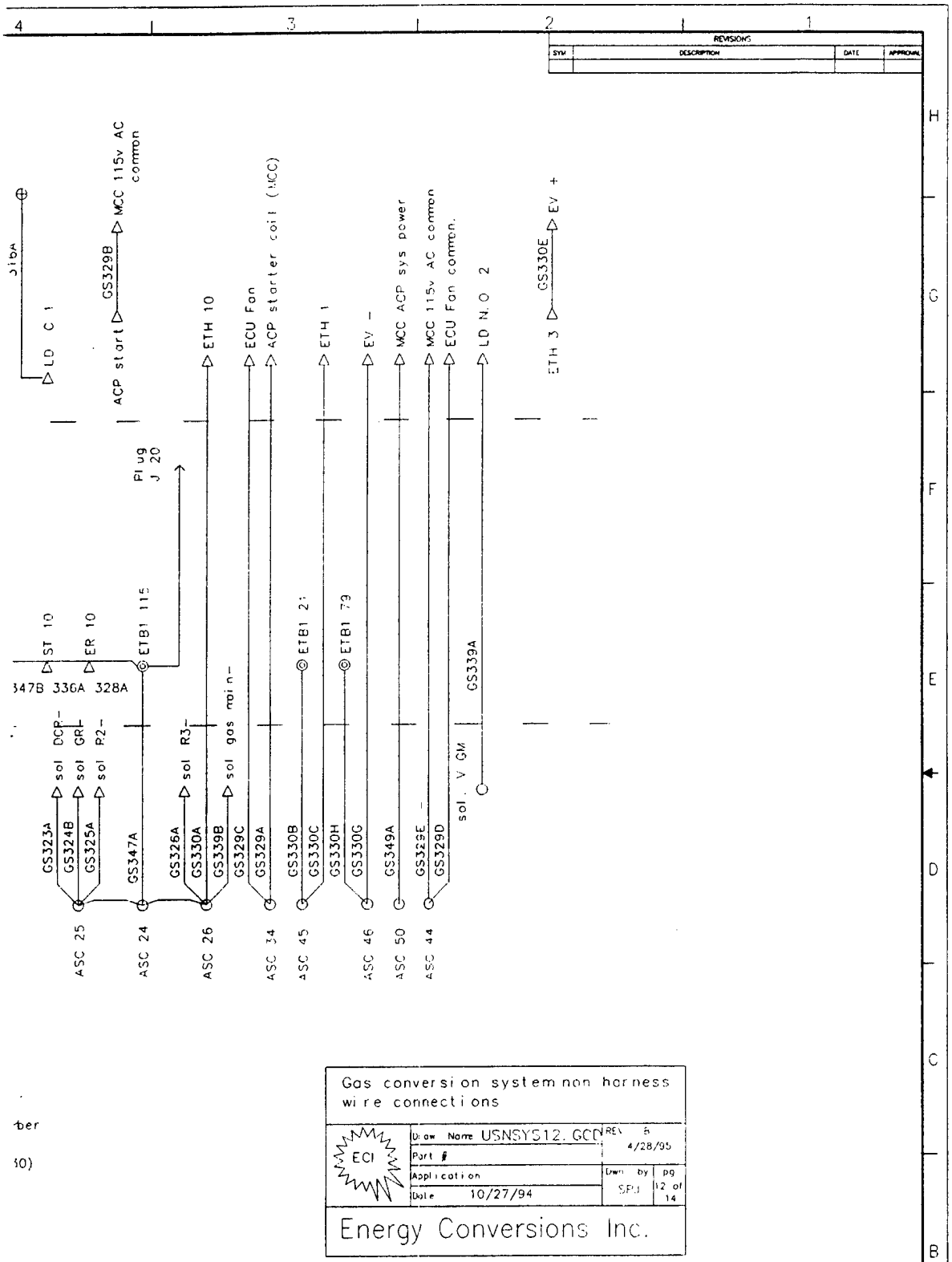

ber

30)

ns in ASC. - DO NOT SCALE

. 1996.)

3

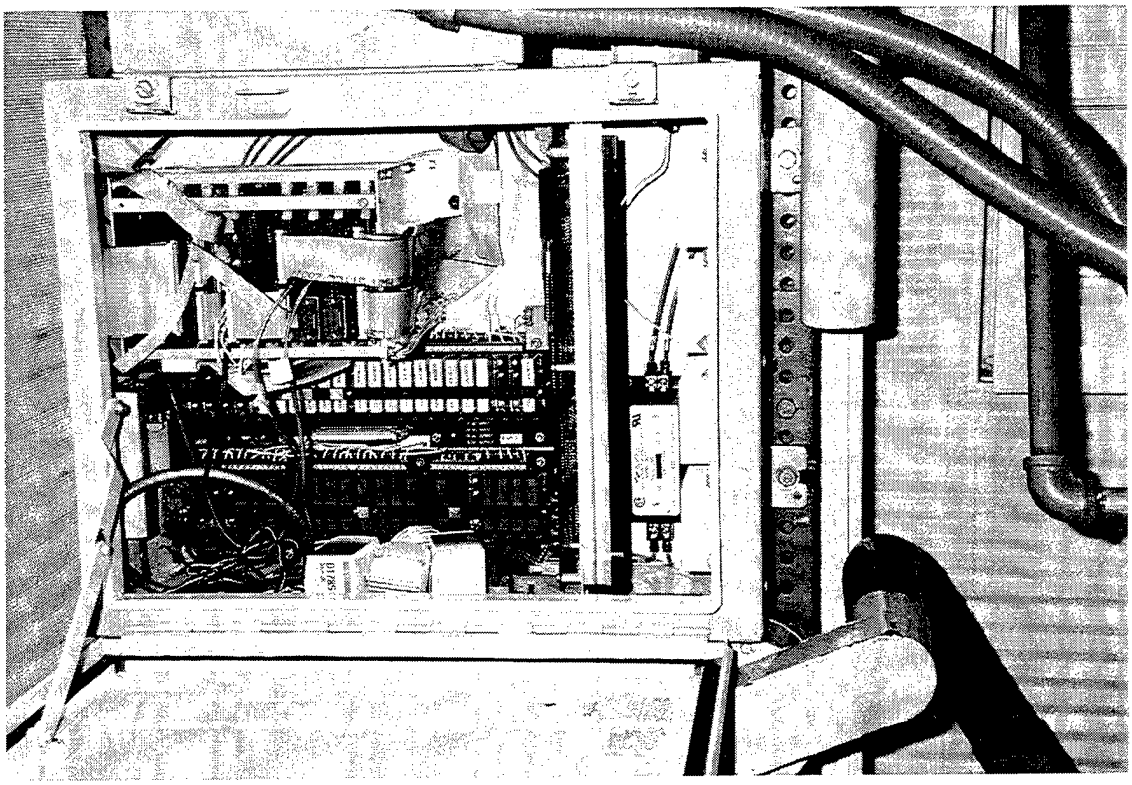

(a) Internal view of ECU.

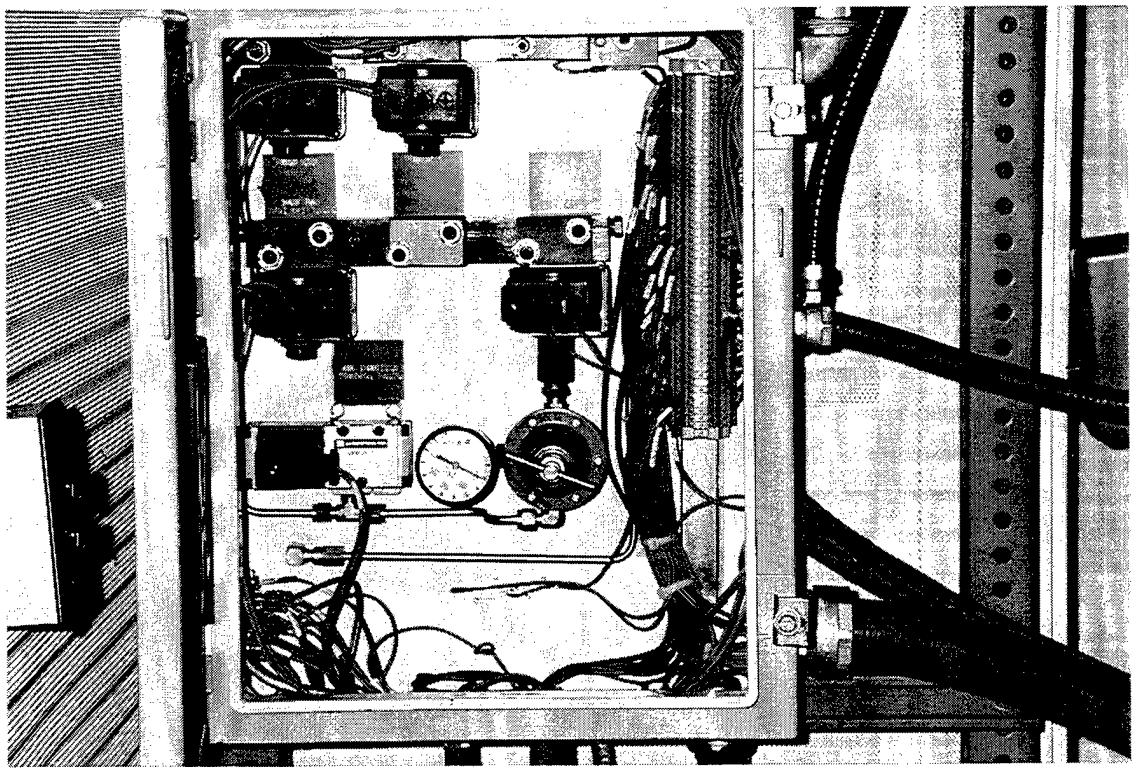

(b) Internal view of ASC.

Figure 4-51. Photographs of controller modifications.

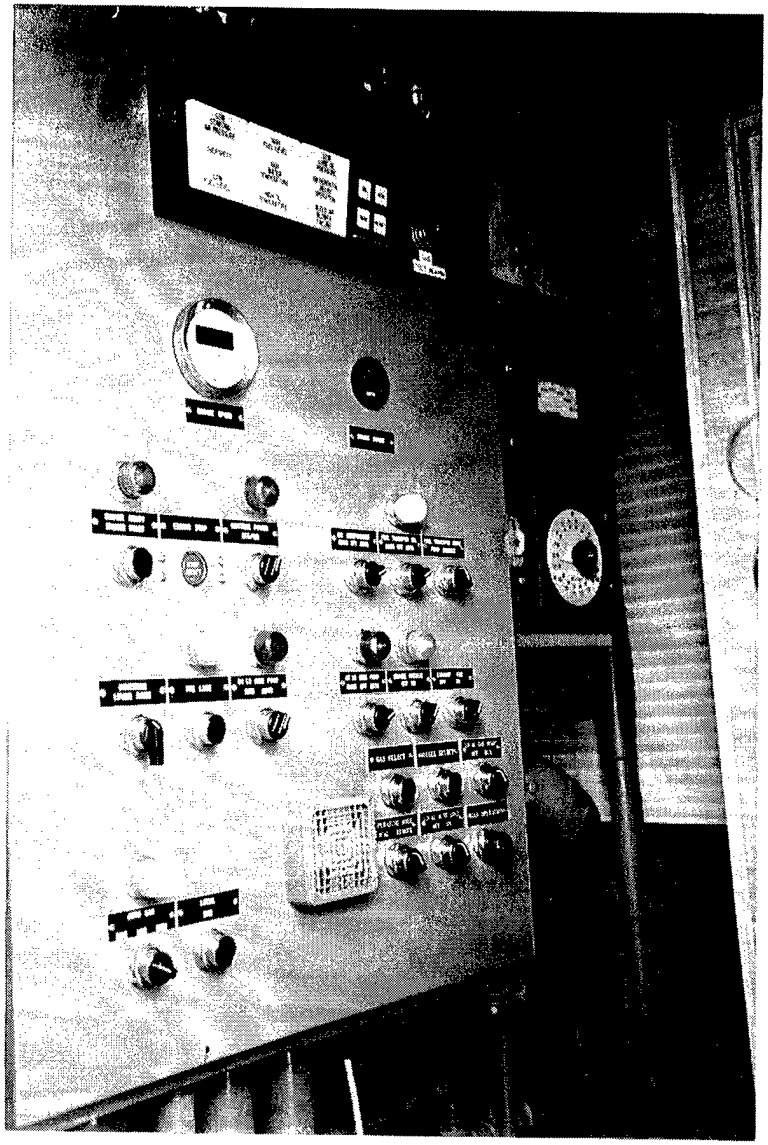

(a) ECP showing status screen (upper right) and gas detect alarm light.

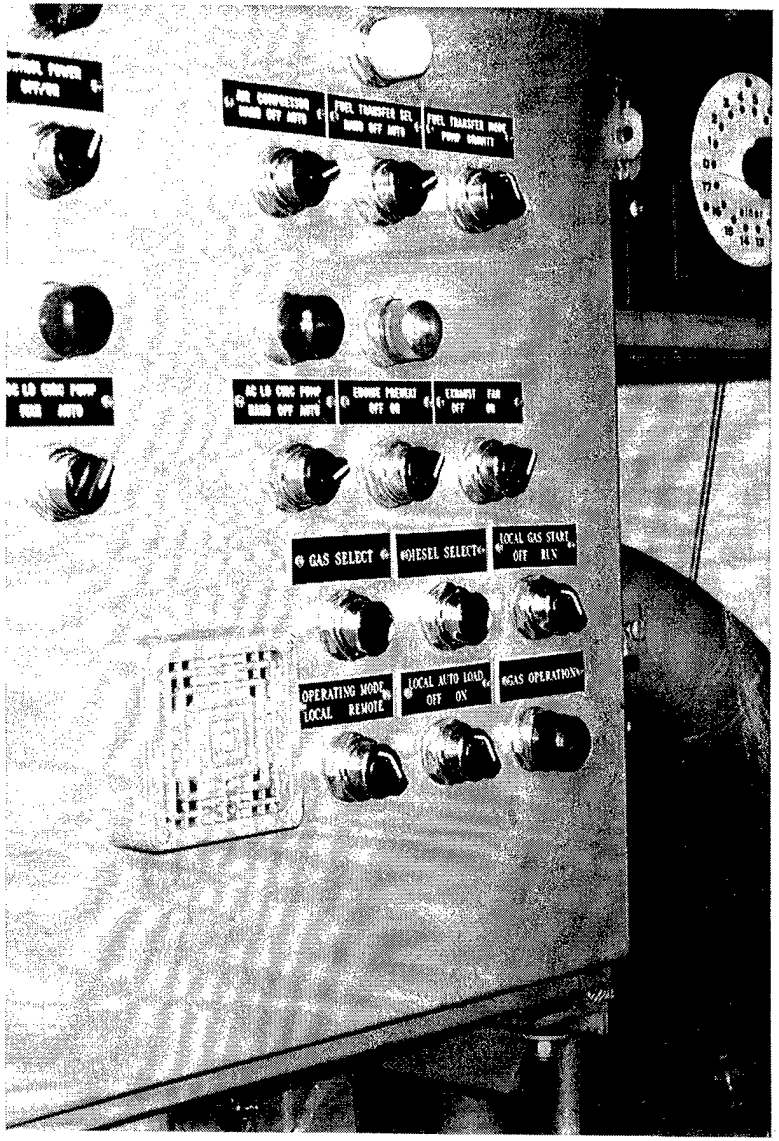

(b) ECP with modified selector switches.

Figure 4-52. Engine control panel (ECP) modifications.

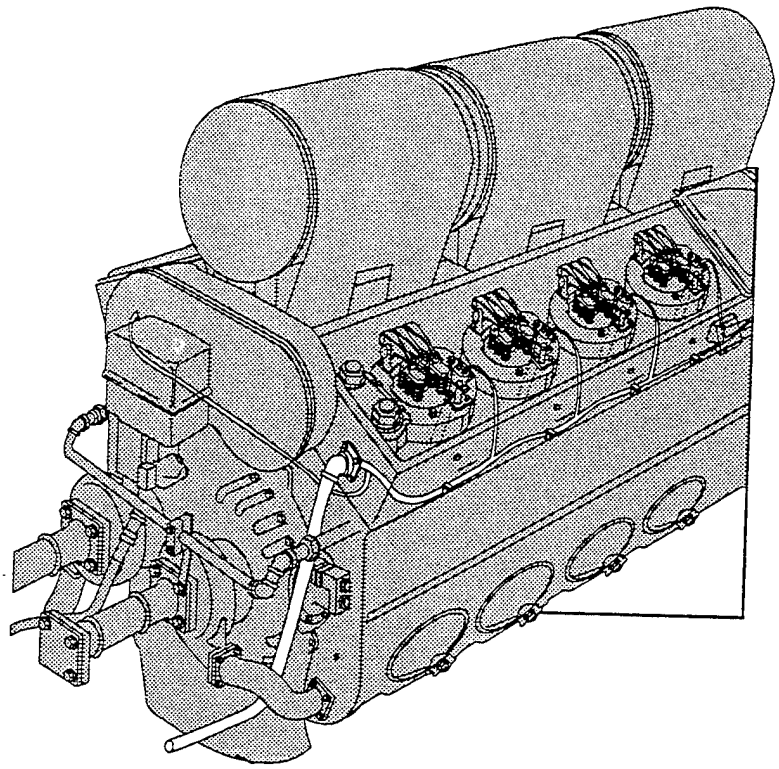

(a) GIV wire harness from ASC to engine.

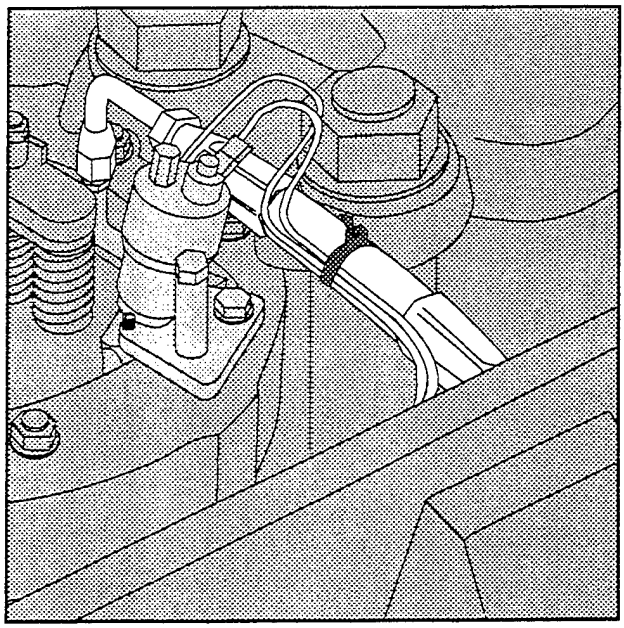

(b) Wiring connections for GIV-actuating signal and for temperature monitoring of GIV.

Figure 4-53. GIV electrical hookup.
(Used by permission, Energy Conversions, Inc., U.S.A., 1996.)

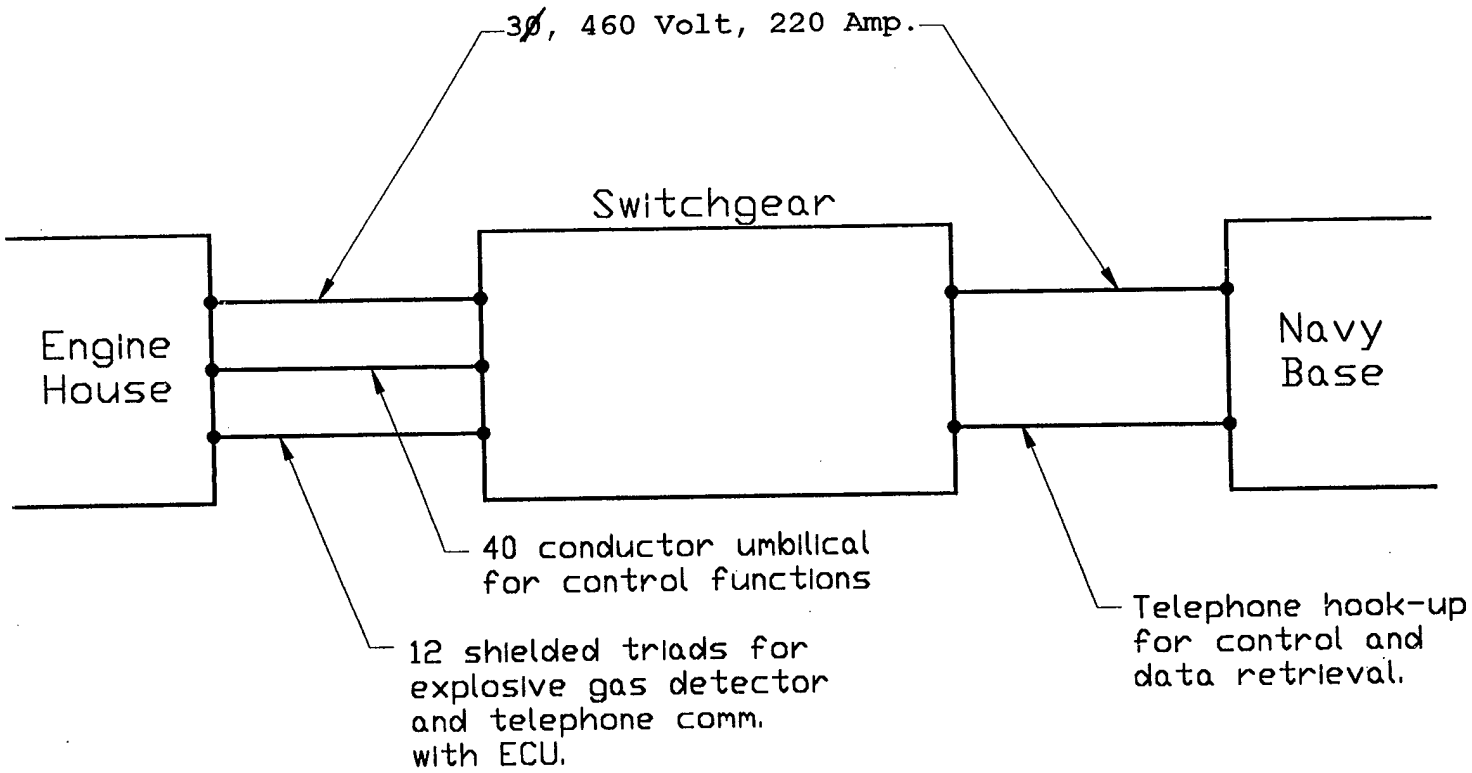

Figure 4-54. Schematic diagram of electrical interconnect to switchgear.

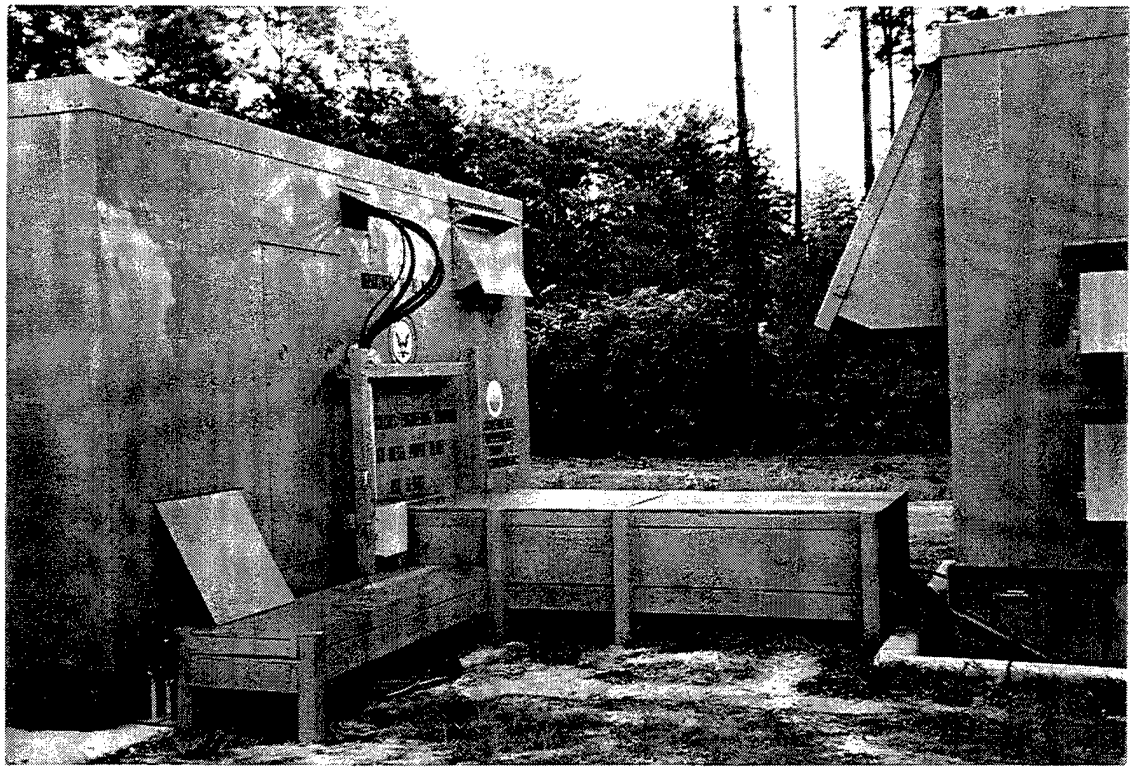

(a) Switchgear installed and wiring in place.

Figure 4-55. Photograph of gas conversion components in switchgear house.

(b) Switchgear control panel.

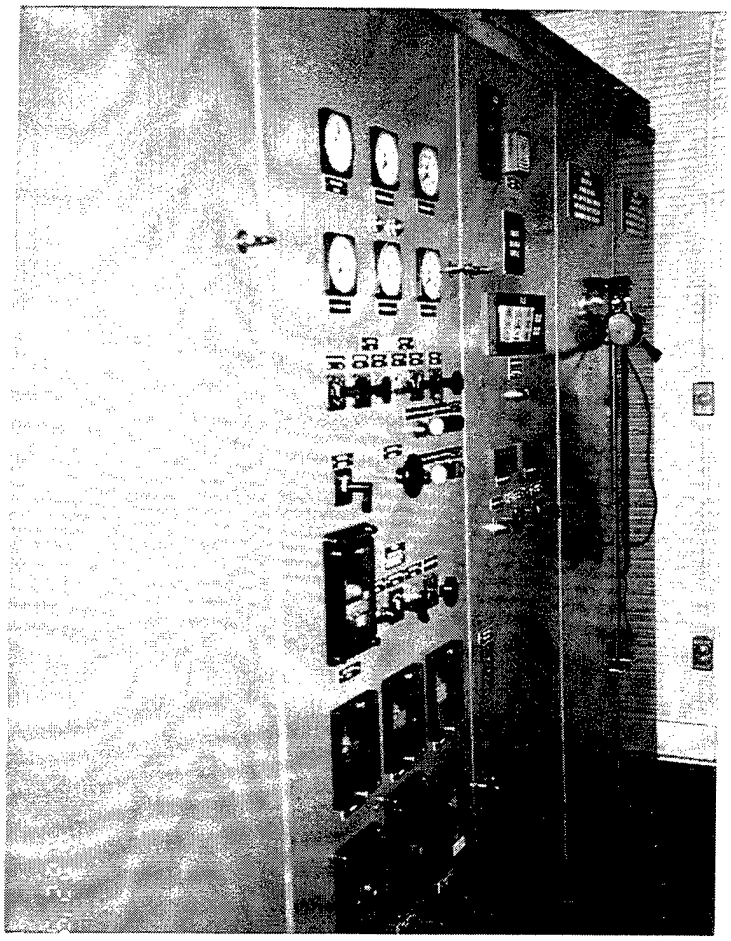

(c) Added selector pushbuttons and indicating lights for gas conversion.

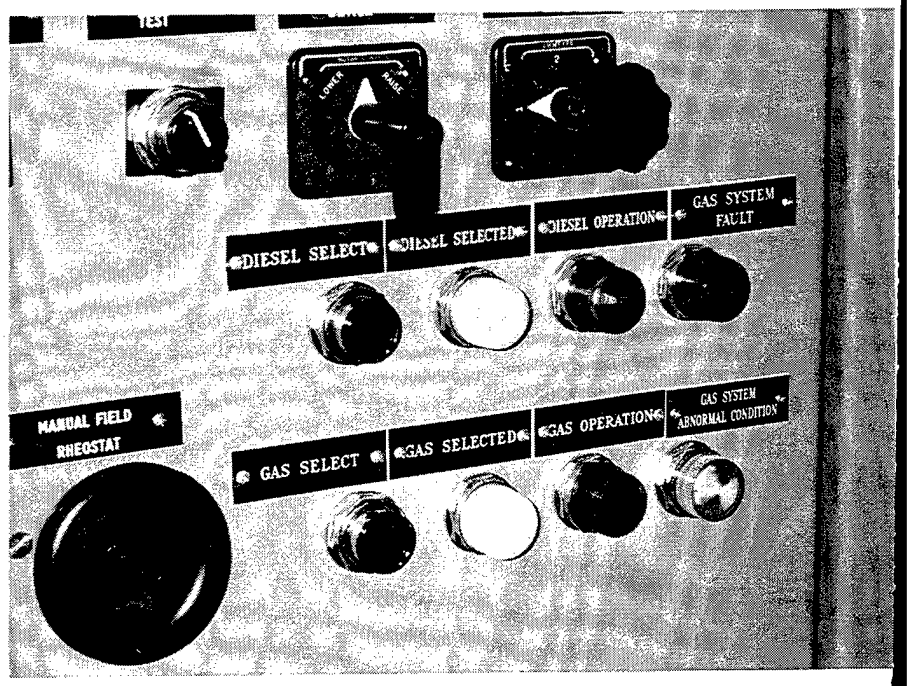

Figure 4-55. Photographs of gas conversion components in switchgear house. (Cont'd.)

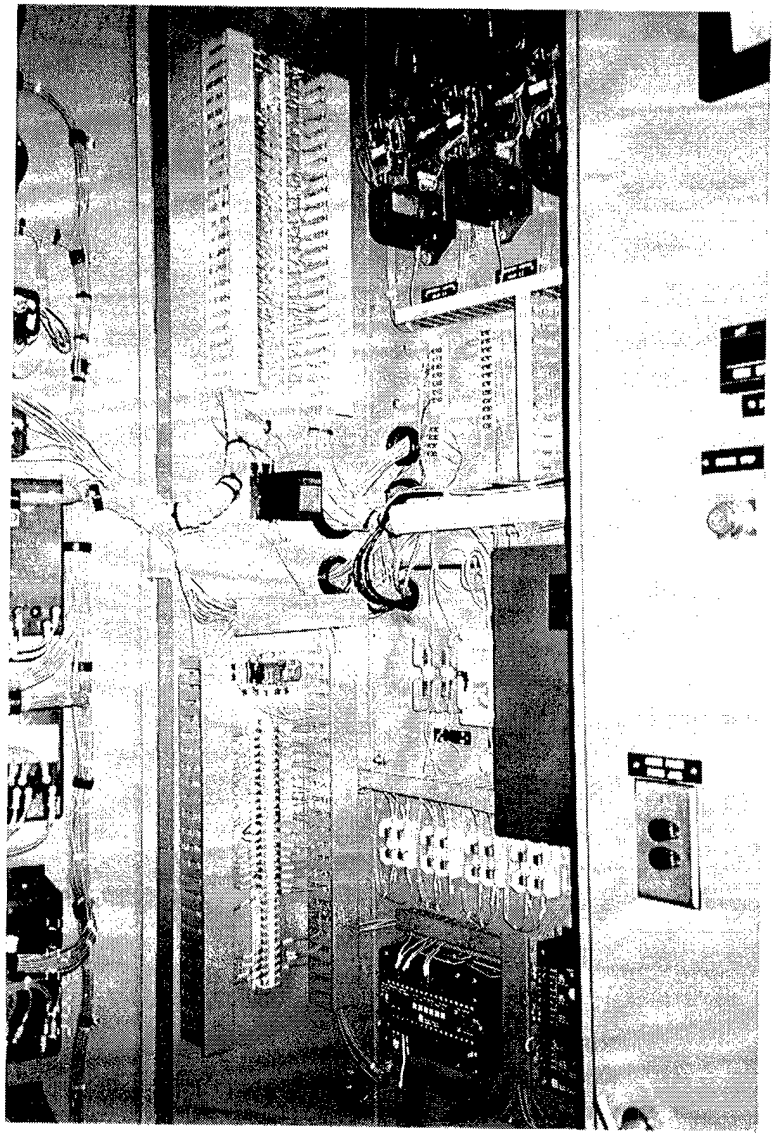

(d) Internal view of switchgear wiring.

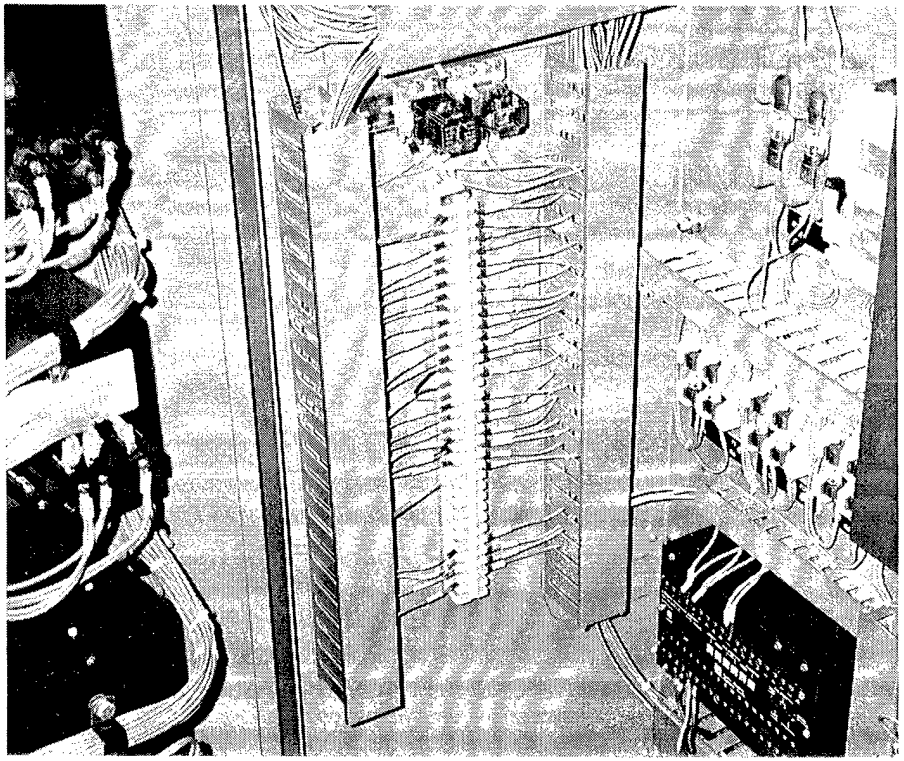

(e) Gas conversion terminal strip.

Figure 4-55. Photographs of gas conversion components in switchgear house. (Cont'd.)

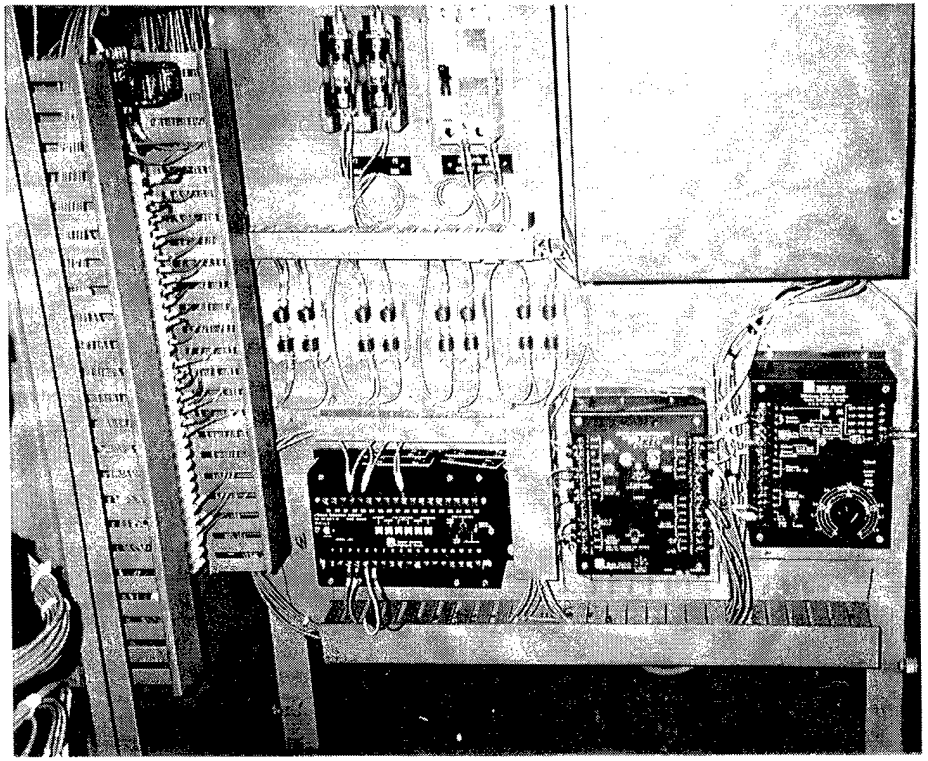

(f) Reference adjuster, auto-synchronizer, and power factor controller for remote, auto-synchronization of generator set to electrical grid.

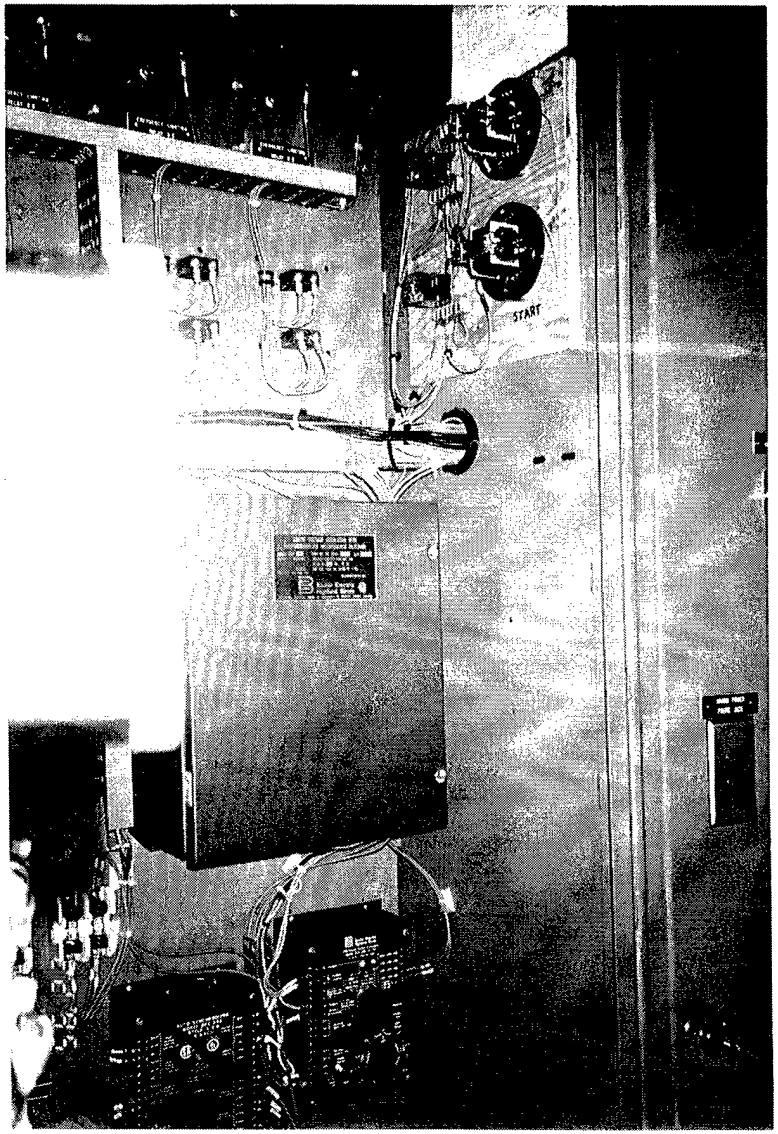

(g) Telephonic relays for remote start/stop.

Figure 4-55. Photographs of gas conversion components in switchgear house. (Cont'd.)

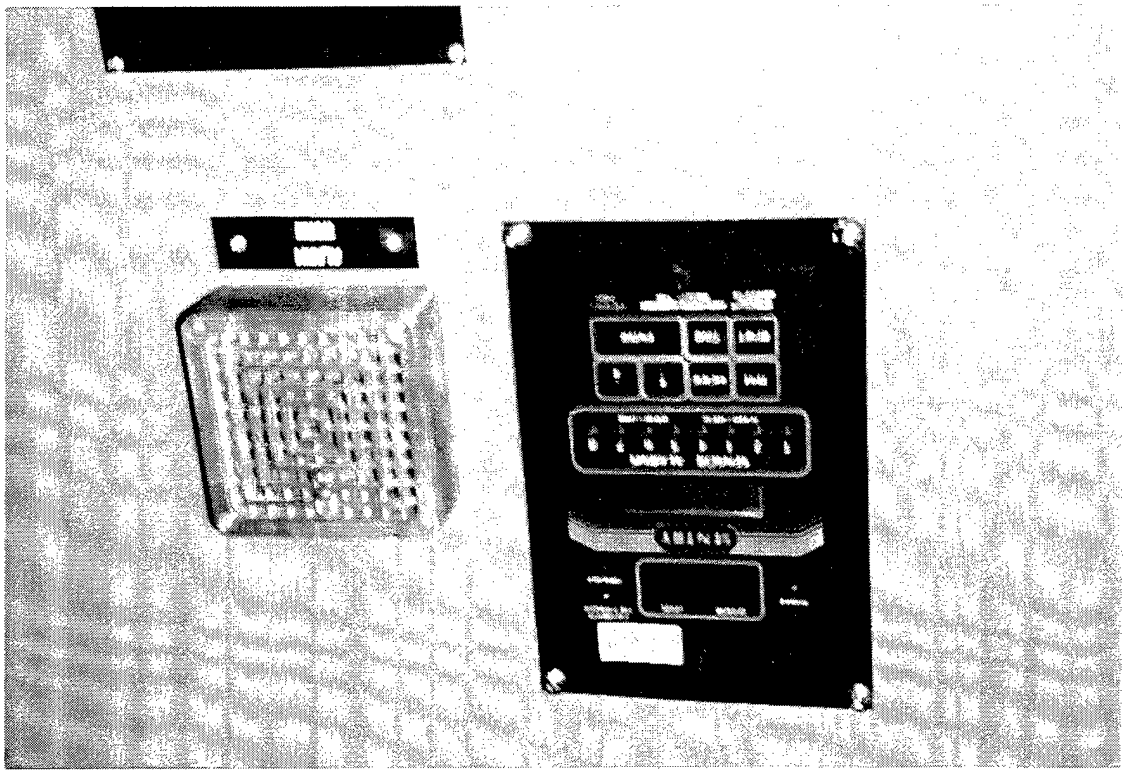

(h) Hazardous gas controller module.

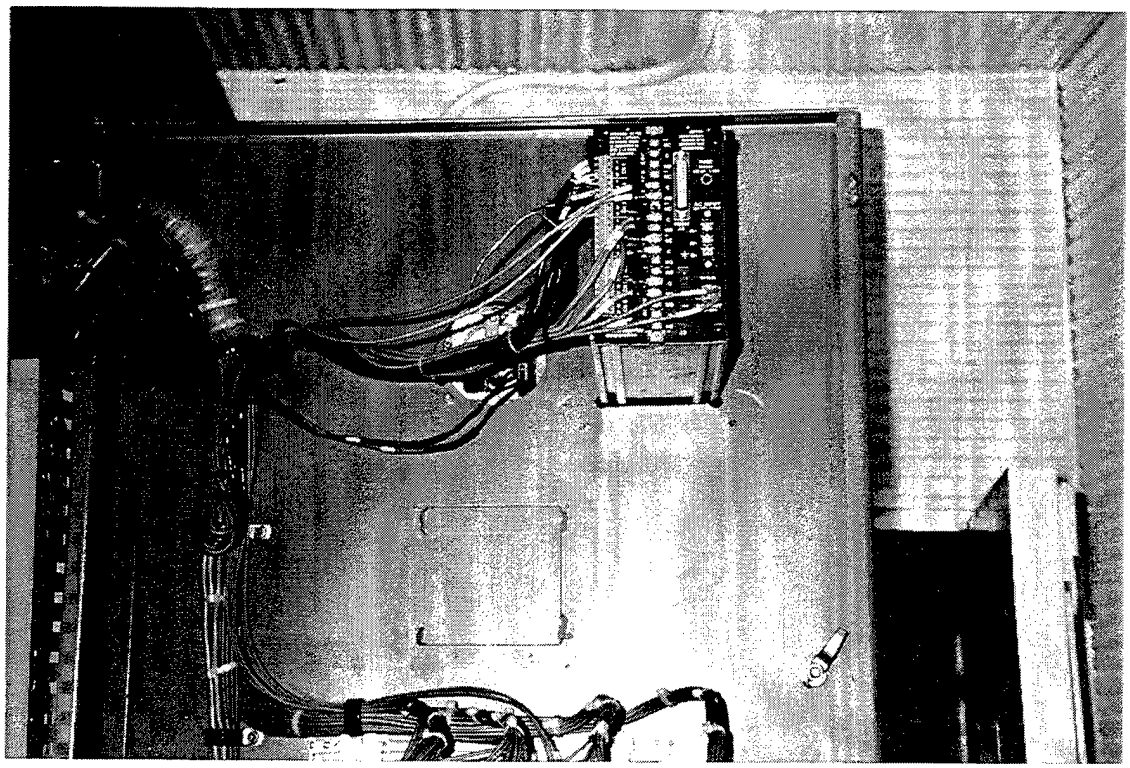

(i) Controller module installed and wired in to two hazardous gas sensors in engine house.

Figure 4-55. Photographs of gas conversion components in switchgear house. (Cont'd.)

5.0 OPERATIONAL PROCEDURES

Operation of the converted dual fuel MUSE engine generator set can be by either diesel or diesel/natural gas mode of operation. It can be controlled from the on-site engine control panel (ECP) or switchgear panels (SGP) or from a remote site. It can operate as either a stand-alone electrical generating station or be synchronized with and provide power to an electrical grid at 4,160 volts.

5.1 Diesel Only Operation

Diesel operation can be by (a) manual, (b) local automatic, or (c) remote automatic control. Manual operation utilizes the existing ECP. Selector switches on the ECP (Fig. 4-2(b) are appropriately set for manual diesel operation. The engine is started and brought to speed by the operator who must verify temperature, pressure, engine speed, and other measurements as the unit warms and is brought to operating speed. The unit is then synchronized with the power grid (voltage, frequency, and phase angle), the breaker is closed, and the unit is loaded to the desired power level. All of these manual operations are performed in the same manner as for a MUSE diesel engine generator that has not been converted to dual fuel operation.

The addition of the ECU as part of the installation of the dual fuel system has made it possible to operate the unit in a completely automatic mode. The automatic mode of operation is also set by selector switches on the ECP. In this mode of operation the actuation of a single 'start' switch initiates the sequence of actions required to proceed through all steps to start the engine, close the electrical breaker to the electrical grid, and load the unit. Actuation of the 'stop' switch causes the reverse of this procedure and brings the unit to a stop.

The actions that take place during remote automatic control are identical to those for local automatic control with the exception that the 'start' and 'stop' switches are at a remote location and that an additional computer status screen is provided at the remote site. The details for using the automatic mode of operation are discussed in the sections below.

5.2 Natural Gas (Dual-Fuel) Operation

Natural gas operation refers to dual-fuel operation where approximately 95 percent of the fuel required to run the engine generator set is provided by natural gas. About 5 percent is diesel fuel that is used as an ignition source for the natural gas charge.

Natural gas operation requires automatic control. Manual 'local' control is not an option. This is because operation in the natural gas mode requires several operations in the startup and run routines that are essential but are not easily performed in the manual mode. It is also because automatic operation serves to ensure that conditions for which safety interlocks are provided for natural gas operation are satisfied prior to natural gas firing. The engine is always started in the diesel mode and only after the engine has been started and reaches a speed of 900 rpm (the normal operating speed is 900 rpm) is the unit transferred to natural gas operation. Similarly, the engine automatically transfers from natural gas to diesel operation at 900 rpm before coming off line.

When the unit is on-line and generating power, it may transfer from natural gas to diesel operation for any of several 'faults' that can arise. If a fault corrects itself during the course of the operation a return to natural gas operation can automatically occur. Other faults may cause permanent transfer to diesel operation or may cause immediate shutdown of the unit. Transfers from diesel operation to natural gas, and the reverse, normally occur automatically and without interruption of power generation.

5.3 Automatic Control

The autostart flow chart is shown on Figure 5-1. Autostart can be initiated from either a remote site or from the ECP. Several software routines and parameters are included in the autostart. Nine time-parameters, indicated in the lower right-hand corner of Figure 5-3, indicate the various time intervals involved in the startup procedure. In Step 2, after receiving a 'Start' request, Autostart first verifies that the engine is not running. A leak detection system check is then made in Step 3 to ensure that no combustible species are present in the air space of the engine house. The exhaust fan is then turned on and an air flow measurement is made to verify proper operation of the exhaust blower. At that point the main gas valves (V1 and V2, see Fig. 4-7) and the GCOV Fig. 4-10) are opened briefly to charge natural gas to all of the lines downstream of V1 and V2. V1 and V2 are then closed and the pressure in the downstream line is monitored for T3 seconds. No change in pressure indicates that gas line integrity is adequate to proceed. GCOV is then closed and V1 and V2 are opened. At this point the controller walks the engine through its normal start-up procedure by pre-lubing it, sounding the starting alarm, barring the engine for T6 seconds, and after a check to ensure that all parameters are in their proper ranges for starting as indicated by the Ready-to-Start (RTS) relay, cranking the engine (Step 16). After starting, the controller ramps the engine up to operating speed with continuous signals to the governor (GUP). At 900 RPM the synchronizer is enabled and the generator is brought into synchronous operation with the electrical grid by utilizing feedback signals from the synchronizer to the controller. These signals cause adjustment of engine speed by providing signals to the governor (GUP or GDN). The electrical breaker to the grid is closed upon synchronization and the controller then proceeds to increase the electrical load on the generator until it reaches the desired operating level (normally 1,500 kW). The engine automatically changes to NG operation as the load passes through 300 kW.

Any of several reasons will cause the engine to be stopped. These include the detection of a hazardous gas within the engine space, a failure of the exhaust fan, the opening of a valve temperature switch, or receipt of a 'Stop' signal. Other faults may cause operation of the engine to shift to diesel fuel operation until any out-of-specification variables return to acceptable values.

5.3.1 Autostart Software. Software functions important to the automatic starting and running of the engine generator set are discussed below.

Basic Gas Engine Operation. This routine defines the engine mode so that it will switch to gas operation if all prescribed variables are in order. The controller monitors all engine, gas system, and electrical parameters to ensure that each is in the prescribed range for gas operation. Out-of-range parameters may cause the engine to automatically switch to diesel operation until the variable returns to an acceptable value.

SY. This routine enables the controller to turn AC power on to the synchronizer and causes the synchronizer to send signals to the controller to speed up or slow down the engine. As electrical synchronization is achieved, the synchronizer causes the main circuit breaker to close.

ER. The engine run relay must be opened to activate a control circuit that keeps the engine running. Its closing causes the engine to shut down.

CNK. The crank engine routine energizes the start relay that causes the starter motor (driven by compressed air) to spin. The controller holds the start relay on for a maximum of 20 seconds with the expectation that the engine will start in that time and that engine speed will increase above a threshold value of 200 RPM. At this point the controller disables the CNK signal and begins performing other control functions. If the engine fails to start, the controller attempts to again start the engine after waiting for one minute until the starting air pressure builds to a satisfactory level. The controller again recycles through the pre-lube and engine barring steps before attempting the restart.

RTS. The ready-to-start signal is required before the engine starting sequence can commence. The controller will wait for a maximum of 5 minutes following initiation of the engine barring procedure to activate an RTS signal. A longer time interval will cause a fault to be displayed and a lock-out from gas operation.

Electrical Mode Determination. This routine allows the controller to determine whether the unit is operating as a single generating unit or is paralleled to a buss. To accomplish this the controller first increases the speed set point of the engine slightly while monitoring speed and load. If load increases, the unit is determined to be paralleled and the controller will work to load the engine to its set point power rating. If speed increases, the controller determines that the unit is operating singly and will work to maintain a engine speed of 900 RPM (equal to 60 Hz).

Gas Pressure Test. Before the full gas supply is allowed into the engine house the gas pressure test must prove successful. An initial condition is that the engine must not be running. The engine controller must then receive a start signal either from the remote control center or from the engine control panel. It will then turn on the ventilation fan and monitor both the ventilating air flow signal and the leak detection signal. When both of these responses are satisfactory, the controller will send signals to open the GCOV and the gas main valves (V1 and V2). In approximately three seconds it closes V1 and V2 but keeps GCOV open. The controller waits a short period of time for pressures to stabilize across the GFCV and then reads pressure signals from the two gas pressure transducers. The readings must be within 5 percent of each other and above 50 PSI. The controller then waits 60 seconds and again reads the two pressure sensor signals. The signals must again be with in 5 percent of each other and not more than 5 psi

less than the first reading. Such a test constitutes a passed pressure test. At that point the GCOV is closed and V1 and V2 are opened in anticipation of running on gas. If the test fails because no gas was admitted to the system, the controller will start the engine and operate it on diesel fuel. The ECU will indicate "Low gas pressure...test failed". If the test fails due to dropping gas pressure the ECU will indicate "Failed Gas Pressure Test". For the latter, a site inspection and system reset is required before further gas operation. In the event that the ECU does not receive satisfactory signals for the fan flow and leak detection measurements, it will indicate such and will not perform the gas pressure test and will not start the engine.

GIV Sequencer. The valve sequencer board inside the ECU processes input signals from the flywheel sensors and controls the GIV (gas inlet valve) timing. The valve sequencer processor (VSP) operates the GIVs when it receives an enable signal from the main controller. It then returns a signal to the main controller indicating that operation of the GIVs is satisfactory. If the main controller asks for GIV operation and the VSP does not return its status operational signal, gas operation is prevented and the main controller displays a valve sequencer fault on the status screen.

The VSP is programmed to examine crankshaft input signals for clarity and operational limits. If the VSP detects defects it will not operate the GIVs. However, the VSP is programmed so that if the signal defects are corrected it will resume operating. The main controller determines if too many faults have been detected by the VSP to continue gas operation. If gas operation is unsuccessful after a given number of attempts, the main controller stops attempting to initiate gas operation. Causes of problems detected by the VSP are displayed by four indicating lights on the board itself. The door to the ECU must be opened to view these lights.

5.3.2 Alarm Logic. In order for the ECU to allow gas operation the conditions indicated on the Alarm Chart (Table 5-1) must be met. If any of these conditions are not met the ECU will transfer operation to diesel operation. When the ECU determines that the conditions are once again within operating range, gas operation will continue. In order for an alarm to occur, the signal must fall outside of either the high or low limit. The alarm condition is cleared once the signal either rises above the 'low alarm clear' limit or falls below the 'high alarm clear' limit. Once the alarm is cleared, the ECU will wait for a 'time off after clear' period before resuming gas operation. If too many faults occur within a set period of time (# faults before long pause), the ECU will wait for the 'long pause time' before resuming gas operation. If this sequence occurs more than 'max # of pauses before lockout,' the ECU will not allow further gas operation until the problem has been resolved.

5.3.3 ECU Status Messages. The ECU decides when to switch between diesel and dual fuel operation based on predetermined limits for rpm, temperatures, pressures, switches, etc. The status of gas operation is displayed on the status screen. The screen automatically displays faults and conditions as they occur. The messages that appear on the status screen and explanations of them are as follows.

Values in Normal Range - On/Off Gas. This message will occur when the ECU is either on gas or ready to go on gas - all system parameters are within acceptable limits.

Abnormal Values - On/Off Gas. This shows a list of all values that have exceeded their normal range. Some may not be critical to gas operation (e.g., Ether left in canisters).

Gas Operation Suspended...or Gas System Fault.... Both of these messages have the same result - the engine will resort to diesel operation. Gas Operation Suspended indicates that there is no need for concern. (e.g., WT - 100.0 shows that the ECU is waiting for the water temperature to rise.) Gas System Fault indicates that the engine is not operating properly (e.g., WT - 210.0 would indicate that the water temperature is above safe operating limits.) The engine will resume gas operation when the value falls returns to an acceptable range.

ECU Locked Out on Faults. This shows that the ECU has determined that too many faults of one kind have occurred and that the engine will not run on gas until the problem has been fixed. After the problem is remedied, use the **ALT** and **HOME** buttons on the status screen to acknowledge the fault.

Long Pause in Process. The ECU has determined that a longer period of time than usual is needed before re-attempting gas operation. Use the **ALT** and **HOME** buttons on the status screen to shortcut this wait if it is unnecessary.

Pilot Stop Test Active. When the **ALT** and the **PG DN** buttons on the status screen are simultaneously depressed, the pilot fuel rams will be activated if: (1) The engine is off gas and not running, (2) the MR/EN (enable) is off, and (3) the gas pressure is less than 25.0 psi

Pilot Stop Test Canceled. Occurs when one of the above conditions is not met.

Replace Ether Canisters. This indicates that there is less than 30 seconds of ether left in the canisters and that they should soon be replaced.

Reset the Ether? When the Ether canisters for the cold start system are replaced, the ECU should be informed that the canisters are full. This is done by simultaneously depressing the **ALT** and **PG UP** buttons on the status screen. To confirm the resetting, press the **PG UP** button.

Attention - ECU's SBC-53 Battery Low. This is a rare message indicating a low CPU battery that needs to be reported to ECI.

Initializing ECU... This message should appear on power-up. If it is seen repeatedly, it may indicate that the power to the ECU is inconsistent.

Initialization Error. This message indicates that the computer memory or hardware is faulty.

ECU Hardware not responding. !Hardware Fault ! This message occurs when one of the peripheral computer cards is faulty.

5.4 The ECU

The ECU is a microprocessor-based controller that controls main engine parameters such as speed and GIV timing, monitors engine performance, and records and displays important operating data and engine diagnostic data required for maintenance purposes. The ECU is completely integrated with the existing ECP so that local controls on the ECP can be used as originally intended for local operation, or so that the ECU can be used for fully automatic operation, utilizing the monitoring and control functions already available on the ECP and switchgear and adding to them, as required.

5.4.1 ECU Status Screen. Data from the ECU can be obtained on the ECU status screen (Figure 5-2) located near the ECP. Information such as exhaust temperatures, other system temperatures and pressures, and gas system fault conditions can be read from the status panel display. To reach the desired information screen, press the **PAGE UP/PAGE DOWN** buttons as necessary (Fig. 5-3). The panel can also be used to initiate other functions, such as air ram test cycles, by pressing certain combinations of buttons. (See the troubleshooting section and individual system maintenance sections below.)

Figure 5-3 shows, in order, the titles of screens that are available by using the **PAGE UP/PAGE DOWN** buttons. From these menu titles, specific information needed for the dual-fuel engine can be accessed. To access fault histories, scroll **PAGE DOWN** through the items listed. To skip fault histories, scroll **PAGE DOWN** through the items listed, or use the **PAGE UP** button. Other button sequences for control of the status screen are as follows:

ALT + PG DN = Rack Stop Test

ALT + HOME = Acknowledges an Alarm

ALT + PG UP = Ether reset (new ether canisters have been installed)

The **HOME** button will return the screen to **ECI, ALL VALUES** unless a fault exists, then **HOME** will take you to **FAULT/CONDITION**.

5.4.2 Computer Interface. The ECU can be connected to an IBM compatible computer through its serial communication port. The computer (a laptop for example) can display more information at one time than is available on the status screen. The computer may also be used for retrieving data files that the ECU has recorded.

The ECU may have its operational parameters adjusted through the serial port by making changes to one of its control files and loading the new code. The door of the ECU must be opened in order to gain access to the serial port connector on the SBC V53 control board. ECI's software must be used to communicate with the ECU. Table 5-2 provides guidance for using a laptop computer to communicate with the ECU.

5.4.3 Using LCD Screen Editor. Simple changes/adjustments in the files CONTROL.TXT (which stores values of operating parameters for the ECU, Table 5-3) and ALARM.TXT (which stores parameter values for alarm settings) can be modified without the use

of a laptop by using the LCD screen buttons (Note: To effectively use this editor the user needs to be trained by the supplier of the ECU (ECI) to ensure a full understanding of the effects of the changes being made.)

This editor can only be used when the unit is not running on gas and when ECU functions are not otherwise needed. The following steps apply.

1. After starting the editor the screen will display a list of *.TXT.

2. Move through the files with the **UP/DOWN** buttons and select a file with the **HOME** button to get into the edit mode.

3. Edit mode controls:

   - **UP** and **DOWN** buttons move up and down through file

   - **DOWN/HOME** together to move right

   - **UP/HOME** together to move left

   UP and DOWN together- toggles between moving through the file and character change mode (large blinking cursor).

   When in character change mode, **UP** and **DOWN** buttons change the character at the cursor.

   - **ALT** button to exit and save

4. When finished, the ECU will automatically reset and run the control program.

5. If left unattended for several minutes the editor will stop and the ECU program will start automatically.

5.4.4 ECU Dial-Up Software. Table 5-4 describes the hardware requirements, computer set-up, the files used, and the control keys for accessing the ECU from a remote location. Figure 5-4 shows one of the screens available as graphic output at the remote location along with the nomenclature that applies to the entries on this screen.

5.4.5 Static Protection Precautions. Generally, the ECU chassis should not be opened unnecessarily. If a troubleshooting procedure requires work to be done inside the ECU, static electricity protection procedures must be followed. The following points should be observed when working inside the ECU or handling circuit boards:

- Turn off the system power before any connectors or boards are removed or installed.

- Put on a static grounding wrist strap such as 3M model 2210 before installing circuit boards or checking internal ECU connections. Wrap the Velcro strap around one wrist and clip the lead to the metal chassis of the ECU. Be sure the lead stays clipped to the chassis during the work.

- Do not remove circuit boards from static protective packaging until just before installation.

- Place replaced circuit boards in static protective packaging and return to ECI.

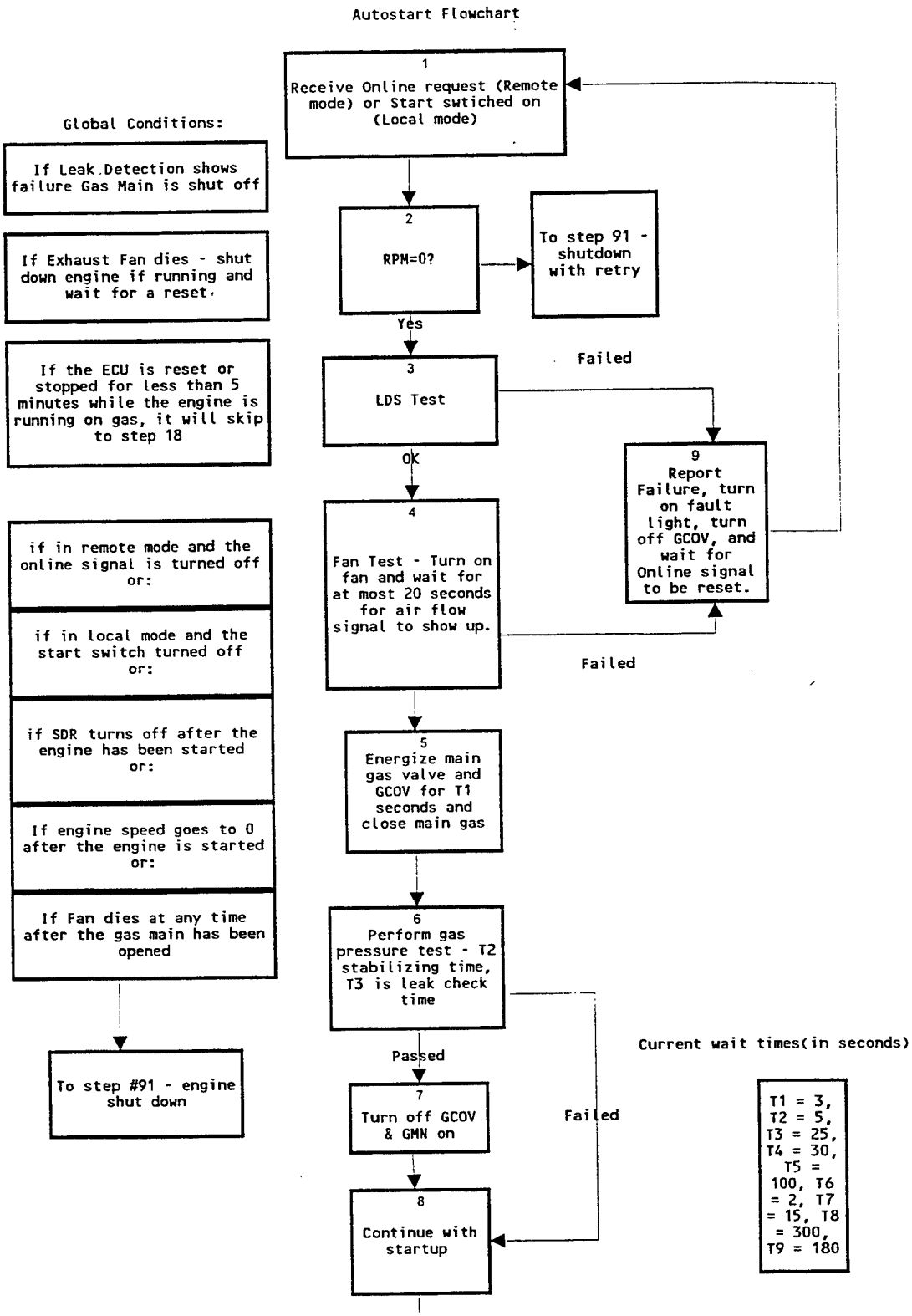

Figure 5-1. Autostart flowchart.

(Used by permission, Energy Conversion, Inc., U.S.A., 1996.)

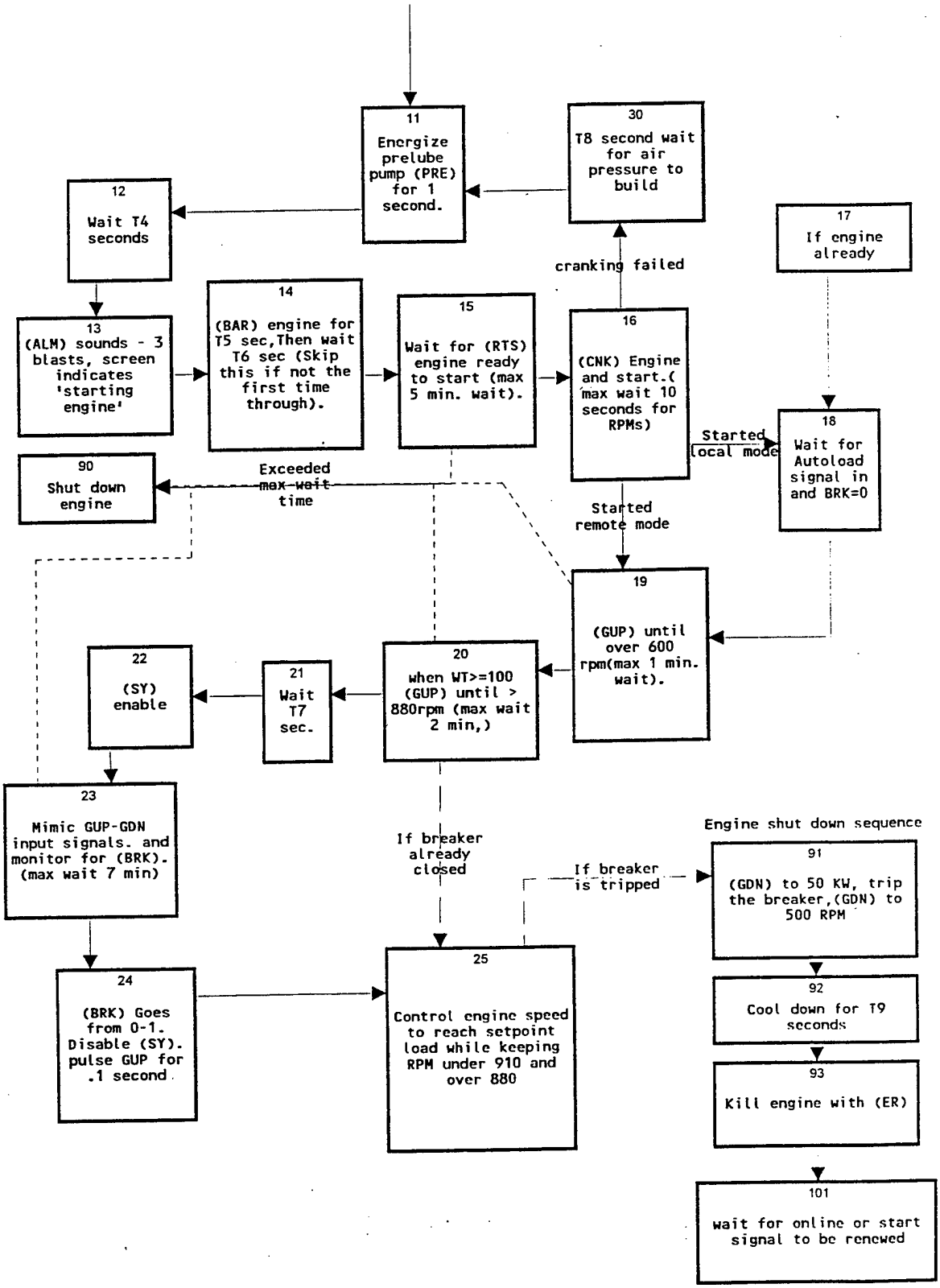

Figure 5-1. Autostart flowchart. (Cont'd.)

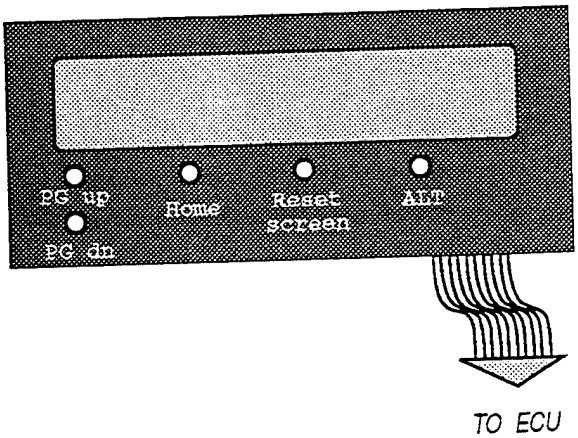

Figure 5-2. ECU status screen.
(Used by permission, Energy Conversion, Inc., U.S.A., 1996.)

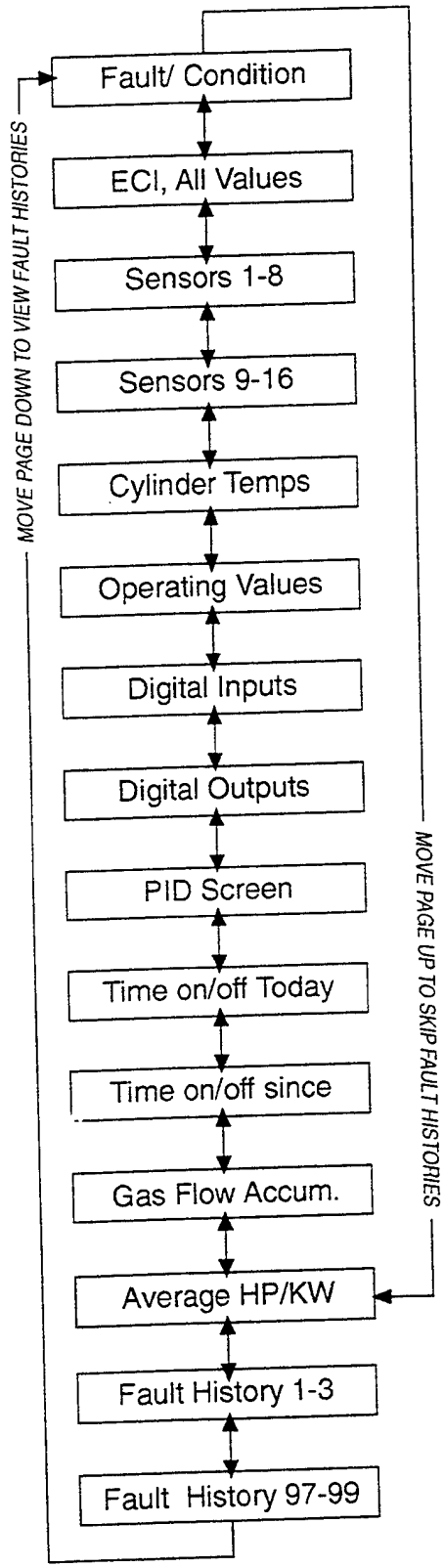

Figure 5-3. ECU status screen page sequence.
(Used by permission, Energy Conversion, Inc., U.S.A., 1996.)

In the View program the keys:

F1 - show the analog sensors in the bottom window
F2 - show the average screen in the bottom window L - toggle logging on/off - this will record the data into the file ECU.LOG
[ESC] - quit the program
[Space] - while in playback mode, to step through a log file

the View screen

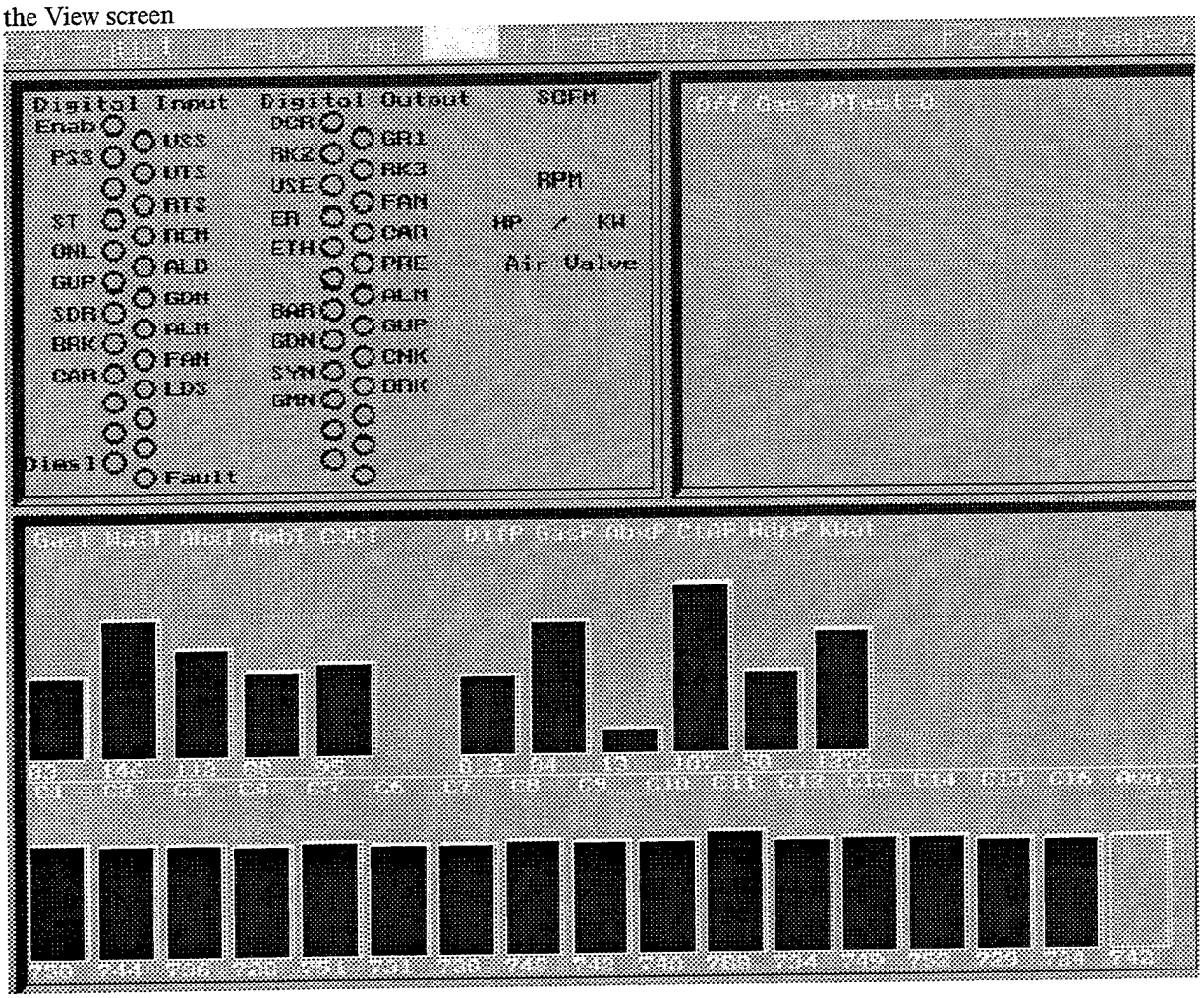

Figure 5-4. Screen one of remote computer readout.

Description of the screen elements:

Digital Inputs Bits:

Enab - Gas run enable switch - needs to be on for gas operation
VSS - Valve sequencer status - will be on when running on gas
PSS - Power Supply Status - turns off if the power supply is faulty
VTS - Valve Temperature Switch - trips off if a gas valve overheats
RTS - Ready To Start - turns on after baring engine
ST - Start - momentary start button
REM - Remote/Local switch - turns on when in remote, off in local
ONL - Online request - requests engine to be online while in remote mode
ALD - Autoload - ECU will autoload engine in local mode if up
GUP - Governor Up signal
GDN - Governor Down signal
SDR - Shut Down Relay - turns off to shut down engine
ALM - Engine Alarm signal
BRK - Breaker - turns on when synchronizer closes the breaker
FAN - turns on when fan runs
CA - Cold Air Relay - turns on when cold air system is on
LDS - Leak Detection System - turns off if a gas leak is detected
CON - Condition - a condition has occurred that prevents gas operation
FLT - Fault - a fault has occurred that prevents gas operation

Digital Output Bits:

DCR - Diesel Control Ram - when on this energizes the Diesel Control Ram
GR1 - Gas run 1 - enables gas to flow to the gas injectors
RK2 - Rack Stop #2 enable
RK3 - Rack Stop #3 enable
VSE - Valve Sequencer Enable - ECU turns this on to enable the valve sequencer
FAN - Fan enable - starts the ventilation fan
ER - Engine Shutdown - picks up the ER relay on generator
CAR - Cold Air Relay enable
ETH - Ether Injection - injects ether into engine during startup
PRE - Prelube - starts the prelube pump
ALM - Alarm - echoes the ALM input and sounds a start-up warning horn
BAR - Bar engine during autostart
GUP - Governor up - echoes the GUP input during autostart
GDN - Governor down - echoes the GDN input during autostart
CNK - Crank engine - energizes the starter
SYN - Synchronizer enable - enables synchronizer during autostart
BRK - Trip Breaker -
GMN - Gas Main - when on, this opens the main gas valve outside the generator compartment

SCFM - gas flow in Standard Cubic Feet Per Minute
RPM - engine speed
HP/KW - horsepower & kilowatts
Air Valve - position of the air throttle valve
GasT - Gas Temperature
WatT - Jacket Water Temperature
AbxT - Air Box Temperature
AmbT - Ambient Temperature
CJCT - Cold junction compensation temp. for thermocouples
DiffP - Gas Differential Pressure
GasP - Gas Supply Pressure
AbxP - Air Box Pressure
CtAP - Control Air Pressure for gas valves
HdrP - Gas Header Pressure
Kwatt - Kilowatts
C1-C16 - Exhaust Temperatures for each cylinder
Avg - average exhaust temperature

The upper right hand window shows the on/off gas status along with other important occurrences.

Figure 5-4. Screen one of remote computer readout. (Continued)

Table 5-1. Alarm Setting Criteria

Name	Description.	gas operation affected	low limit	low alarm clear	high alarm clear	high limit	time off after clear	# faults before long pause	long pause time	max # pauses before lockout
WT	water temperature	Yes	145F	160F	195F	200F	10 Sec.	10 in 4hr	4hrs.	1
GT	gas temperature.	Yes	5F	22F	100F	170F	10 Sec.	10 in 2hr	1hr	1
ABxT	air box temp.	Yes	84F	95F	185F	210F	10 Sec.	10 in 2hr	2hrs	1
AmbT	ambient air temp.	No	n/a	n/a	120F	125F	n/a	n/a	n/a	n/a
CJCT	cold junction temperature	No	n/a	n/a	120F	180F	n/a	n/a	n/a	n/a
GasP	gas pressure	Yes	70psi	80psi	110psi	115psi	10 Sec.	15 in 2hr	4hrs	1
CtAP	control air pressures.	Yes	115psi	123spi	138psi	147psi	10 Sec.	15 in 2hr	2hr	1
HdrP	header pipe prs	Yes	n/a		20psi	75psi	20 Sec	10 in 2hr	1hr	2
DifP	differential pressures	Yes	n/a		30psi	32psi	30 Sec	5 in 2hr	1hr	2
AbxP	air box pressure	Yes	n/a		19psi	22psi	20 Sec	10 in 2hr	1hr	2
RPM	engine speed	Yes	770rpm	880rpm	915rpm	925rpm	10 Sec	5 in 2hr	2hrs	10
KW	Killowatts	Yes	300		1650	1700	20 Sec.	10 in 2hrs	1hr	2
AFMix	air/fuel mix ratio	Yes	n/a		3.8:1	6.5:1	1 Sec	15 in 2 hr	2 hrs	15
Ptest	autostart pressure test	Yes	must pass test during autostart							
ExhAv	average exhaust temp	Yes	250F	300F	1200F	1250F	10 Sec	15 in 2hr	1 hr	2
MR/EN	gas enable	Yes	signal must be on				1 Sec.	n/a	n/a	n/a
Fan	ventilation fan	Yes	fan must stay on				30 Sec.	10 in 2hrs	2 hrs	1
Vseq	valve sequencer	Yes	signal must stay on when running on gas				10 Sec.	5 in 2hrs	2 hrs	2
LDS	leak detection system	Yes	a leak is indicated if the signal is off				10 Sec.	1 in 1min	1min	2
CA	cold air feedback	Yes	must stay up if cold air relay is energized				5 Sec.	5 in 2 hrs	2hrs	2
PowS	power supply status	Yes	power supply is faulty if signal is off				5 Sec.	2 in 2hrs	2hrs	1
ALM	gen. set alarm signal	Yes	engine alarm indicated when signal is on				0 Sec.	0	n/a	n/a
SDR	shut down relay	Yes	when signal is off, the engine is shutting down				1 Sec	10 in 2hrs	2hrs	1
VTS	valve temperature switch	Yes	when the signal is off, a valve has overheated, if in 90 seconds the signal doesn't turn on the engine will shut down				20 Sec	50 in 2hrs	2hrs	2

Table 5-2. Laptop Communications with the ECU

1) Connecting to the ECU

To communicate with the ECU use a null-modem cable connected to the serial port (Com1 or Com2) of your laptop or PC. The other end is connected to the SBC53 rack card's connector J1 inside the ECU.

2) Establishing communications with COMM.EXE

First, go to the directory in which COMM.EXE resides (probably `C:\WS`). If you are hooked to Com1 then type `COMM[ENTER]`. If you are hooked to Com2 type `COMM /Com2`. The ECU communicates at 2400 Baud. Check the baud rate at the bottom of the screen to see if COMM is also communicating at 2400 Baud. If not, press `[ALT+B]` successively to change the baud rate to 2400.

To stop the ECU from running control code and to get into DOS, press `[ESC]`. You should see the DOS prompt `B:\`

You may now use many familiar DOS commands such as `DIR,REN,COPY,TYPE`.....

To exit COMM, press `[ALT+X]`

3) File Transfers

To transfer a file from the laptop to the ECU type (from the B: drive):

1)`TRANSFER {filename}[ENTER]`
2) `[PAGE UP]` - COMM will now prompt for a file name
3) type in the filename to transfer and `[ENTER]`
4) select X for the XMODEM transfer protocol
the file will now transfer to the ECU - a string of `TTTTT...` will appear

To transfer a file from the ECU to the laptop type (from the B: drive):

1)`TRANSFER -S {filename}[ENTER]`
2) `[PAGE DOWN]` - COMM will now prompt for a filename
3) type in the filename to transfer and `[ENTER]`
4) select X for the XMODEM transfer protocol
the file will now transfer to the laptop - a string of `RRRRR...` will appear

4) Changing to a higher baud rate for faster transfers

For large files, 2400 Baud can be slow. To speed up the baud rate use BRC.EXE. Type `BRC 7[ENTER]` - this will change the baud rate to 57600. Now press `[ALT+B]` until 57600 appears at the bottom of the screen and press `[ENTER]` to get the DOS prompt back at the higher speed.

*** Note - when you start the control code running again the baud rate will revert back to 2400 baud automatically**

5) Files on the ECU and what they do:

ECU.BAT - start-up and contains the control code
ECUPROG.EXE - the main control code file
ALARM.TXT - holds gas system alarms
CONTROL.TXT - holds data prescribing options for the code
JAN95.PRF - a daily performance file (gas use, KW hours, etc.)
BITTEST.COM - utility to turn on & off selected bits (type BITTEST for options)
PWMTEST.COM - utility to test the pulse width output (type PWMTEST for options)

Table 5-3. Listing of Computer File CONTROL.TXT
Which Provides Reference Data for ECU

```
CYLINDERS (8,12,16,or 20)
16

; Gas On & Off Sequence - timed sequence in 100th of seconds
;  gas valves are time 0 - others are timed after valves
;  DieselControl/TNRelay Bit, GR/R1, R2&3
ON SEQUENCE
50 10 10
OFF SEQUENCE - same as above, expressed as 100ths of a second before valves turned ofF
20 30 30

; Rack Stops- value 1 is low threshold, value 2 is high threshold,
; S indicates RPMx10, H indicates Horsepower control
RACKS - Rack 2, Rack 3
500 540 H
4000 6000 S

; Cold Air Relay - if any of these (hp,gt,wt,abt[throttle]) go below their limit
; CAR will switch to 'switch value'
COLD AIR RELAY - On/Off switch_val Pacesetter_on/off HP GT  WT ABT[0-8]
1 0 0 1000 0 12000 1700 1700 1700 1700 1700 1700 1700 1700 1700

; LEI
; engine needs to run over 'EngineRunning' RPMx10 for 20 seconds to run lei
; can also enable/disable pacesetter and noload modes of LEI
LEI - on/off EngineRunning  pacesetter(1/0 = y/n) NoLoad(1/0 = y/n)
0 2000 1 1

; Fans - successive # of fans & hot engine signal are turned on as wt goes above each point
; Fan1 (tn 0 - 8),Fan2 (tn 0 - 8),Fan3 (tn 0 - 8),HotEngine value
FAN CONTROL - on/off
0
1900 1900 1900 1800 1800 1800 1800 1750 1750
2000 2000 2000 1900 1850 1850 1850 1800 1800
2050 2050 2050 2000 1900 1900 1900 1850 1850
2120

; Pid
PID - speed active, air active, excitation active
0 1 0
; DownRate Cutlimit Stepsize Delay AfterTransitionResetNotch
500 6000 20 1 4
; setpoints[0-8], reset[0-8,Air,Exc], P[0-8,AirP,ExcP], I[0-8,AirI,ExcI], D[0-8,AirD,ExcD]
 00 3100 3900  5000  5700  6650  7380  8320  9020 2130  0
  0 5000 7500 12500 13500 15000 17500 18500 20000 19000 5000
 500  25  180  180  180  180  180  180  180 500  100
 30  30  50  60  50  50  50  50  50 500  100
 950  40  170  190  175  150  140  140  140  25  10
```

Table 5-3. Listing of Computer File CONTROL.TXT
Which Provides Reference Data for ECU (Continued)

```
AIR THROTTLE prs setpts for 0% 25% 50% 75% 100% of max hp (10th pid stpt), 0% & 100% pulse
width numbers
80 100 120 130 160 5200 7200
; Cold Start
COLD START - On/Off,Start Delay(100th of sec),Min Crank RPMx10, Max Crank RPMx10,
Hysteresisx10,
;       Cut Out RPMx10, (ML of Ether/sec)x10, (MLx10 in a full can)
1 100 250 6000 2000 200 25 8330

PRESSURE SCALE
;full scale for channel 6,7,8,9,10,11(KWatt on gen set),12,13,14,15
35 250 30 250 250 2500 1 500 20 20

IDLE CONTROL
0
THROTTLE NOTCH
0
DIESEL CLEANOUT
0
KVA INPUT
1
ORS TIME
0
THERMOCOUPLE
J
KIT VERSION 0-Navy 1-Sundowner 2-Locy ... add more later
0
CALLBACK
ATDT 99222258

DIGITAL LABELS
EN ,VSS,PSS,VTS,---,RTS,ST ,REM,ONL,ALD,GUP,GDN,SDR,ALM,BRK,FAN,CAR,LDS,---,---,---,---
,---,---
DCR,GR1,RK2,RK3,VSE,FAN,ER
,CAR,ETH,PRE,CON,FLT,BAR,GUP,GDN,CNK,SYN,BRK,GMN,ALM,---,---,---,---

AUTOSTART
; on/off, load_setpoint(x10), load_maximum(x10),
; times1-10(energize,stabilize,leak check,prelube,bar,afterbar,before synch,retry crank,cool down,spare
;  time 1  2  3  4  5  6  7  8  9
;1 15000 times found in chart t1-t9
1 15000 17250 3  5 25 30 100  2 15 300 180
```

Table 5-4. Accessing the ECU From a Remote Location

(A) Hardware requirements:

IBM 386 or higher PC
2400 baud modem
VGA video capability

(B) Setup: from the floppy drive type **install** <ret> and follow instructions when asked for com port and phone number. The following files need to be installed on the c: drive: callecu.bat, viewcu.bat, dialup.exe, hangup.exe, and view.exe.

(C) File functions:

CALLECU.BAT - dials the ECU and starts the VIEW.EXE program
VIEW {filename} - replays a previously recorded log file (e.g. VIEW ECU.LOG)
VIEW [/Com1][/Com2] - will start the view program when a laptop is connected to the ECU via a null modem cable. The null modem cable needs to be connected to the SBC-V53 board in the ECU. Disconnect the serial cable from the 2401 modem card and connect the null modem cable to the 9-pin connector at the end of the ribbon cable. When finished using the laptop, reconnect the ribbon cable to the 2401 modem card.

(D) Within the VIEW program use the following keys:

F1 - to show the analog sensors in the bottom window (Figure 5-4)
F2 - show the average screen in the bottom window
L - toggle logging on/off - this will record the data into the file ECU.LOG
ESC - quit the program
Space - while in playback mode, to step through a log file

6.0 FIELD SITE INSTALLATION, MAINTENANCE, AND TRAINING

6.1 Site Requirements

Site requirements for installation and operation of the 1,500 kW dual fuel diesel generator set are identical, with two exceptions, with those required for the unmodified diesel units. Those two exceptions are: (a) the requirements for a natural gas supply, and (b) a capability to communicate electronically with remote sites for the purposes of both control and for data transmission. The site drawing for installation of the 1,500 kW unit at SUBASE King's Bay GA is shown on Figures 6-1 and 6-2. The unit is located across a roadway from an existing boiler plant, and the engine house and the switchgear house are each located on separate concrete pads. Trenching was provided to the unit for running (a) the natural gas supply line, and (b) the diesel fuel supply line along with a 4-inch electrical conduit for electrical power transmission cables and a 1-inch conduit for communication lines.

6.2 Maintenance Schedule and Procedures

Maintenance procedures for the engine generator set for subjects other than those directly connected to the dual fuel conversion are the same as those for which standard maintenance procedures are already available (Ref 6-1). Several of the subjects dealing specifically with the dual fuel conversion are discussed in Appendix C. More detailed information is available in Reference 4-2. A recommended schedule for periodic maintenance activities is provided in Table 6-1. The subjects addressed in the appendix are special tools, injector calibration, injector settings and adjustments, a recommended spare parts list, and a trouble-shooting guide.

6.3 Training

Training is required in the areas of both maintenance and operation. A major step in this direction was taken by the decision to use MUSE personnel for installation of the dual fuel system on the MUSE unit and for its start-up. This established a hands-on familiarity within MUSE of the complexities of the installation and of the operational features of the dual fuel system. In the process of the installation of this system and its subsequent start-up, the adequacy of the suppliers publications (Refs 4-1, 4-2, and 4-3) for describing installation, operating and maintenance procedures was demonstrated. Therefore those documents provide not only the basic technical knowledge of the dual fuel conversion, but with supplementary knowledge provided by ECI bulletins and by this document, the background needed for personnel to understand the conversion is provided. In addition, as this dual fuel conversion is now being implemented by other commercial users, a one and one-half hour training video (Ref 6-2) prepared by ECI, is now available.

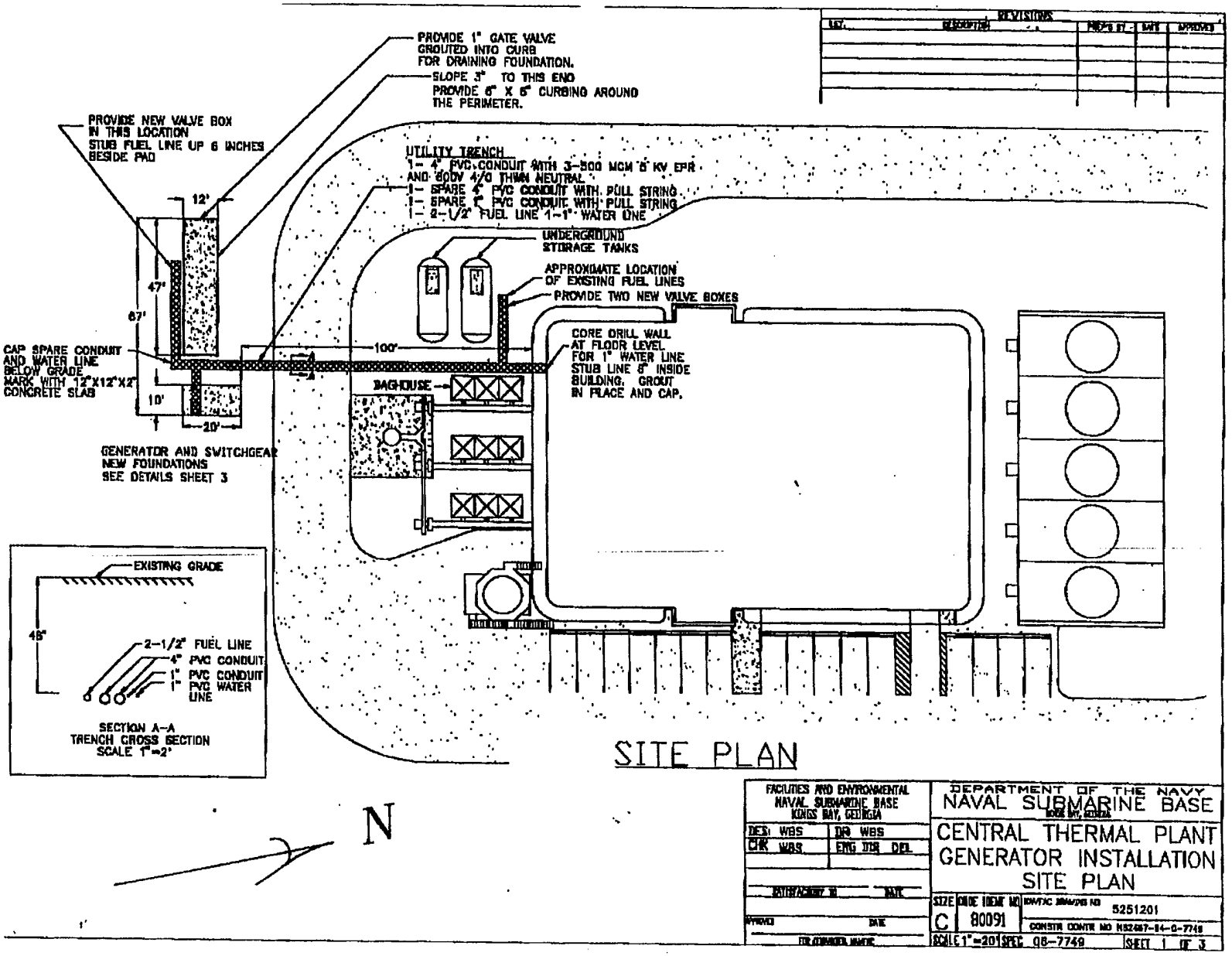

Figure 6-1. Overall site drawing for installation of 1,500 kW dual fuel engine generator set at SUBASE King's Bay, GA.

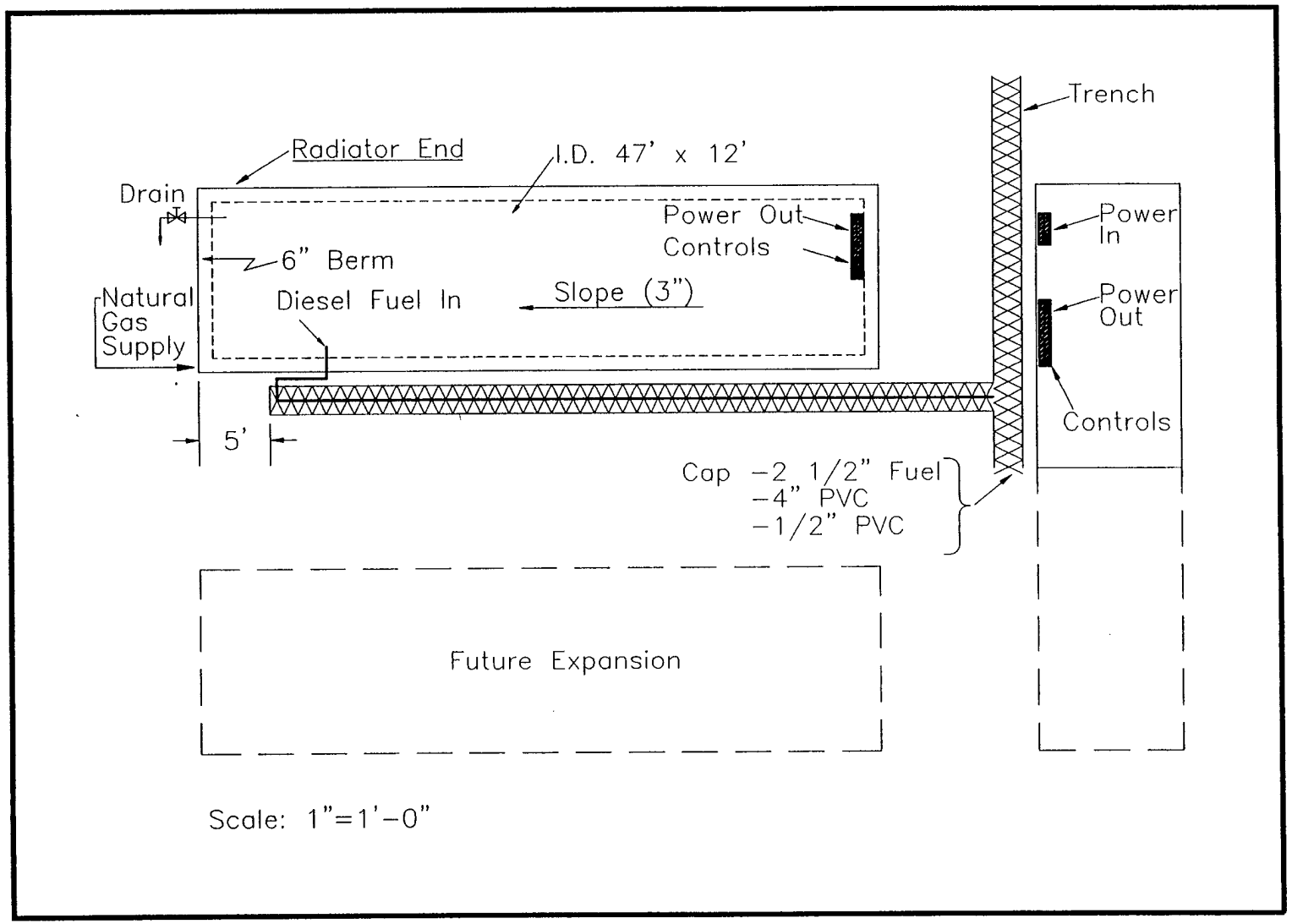

Figure 6-2. Schematic diagram of concrete supporting slabs showing functional requirements.

Table 6-1. Recommended Maintenance Schedule

Inspections	Frequency
Verify gas operation	Daily
Observe gas hours of operation and log entries of faults experienced. (Available on ECU information screen or by remote phone link.)	Daily
Aftercooler pump	
Inspect operation	Weekly
Lube	Quarterly
GIV oiler service	Weekly
Test gas quality	Monthly (Weekly for first six months)
Record gas filter differential pressure	Monthly
Inspect gas supply line and pipe fittings for leaks	Monthly
Inspect gas system leak detection system	Monthly
Gas flow control valve (Spray-lube the linkage swivel joint between governor arm and gas flow control valve arm in two places. Use LPS3 or a similar lubricant.)	Monthly
Leak detection system sensor inspection and calibration*	Semi-annually
Inspect/calibrate exhaust thermocouples	Annually
Inspect/calibrate all other sensors	Semi-annually
Lubricate ECU fan	Annually

Table 6-1. Recommended Maintenance Schedule (Continued)

Parts Replacement	Frequency
Gas Flow control valve* (Disassemble valve and replace O-rings and seals when engine is rebuilt or if it is leaking.)	5-7 years
Change GIV actuation seals	8,000 hours of operation
Gas cutoff valve (replace O-ring seals)	5 years
Control air regulator	5 years
GIV gas lines (internal on engine)	5 years
Gas inlet valve (GIV) (unit exchange)	5 years
Aftercooler coolant pump (rebuild)	5 years
Heat exchanger zinc anodes	5 years

* Gas Flow Control Valve should not require maintenance on internal parts unless gas filter is not serviced properly. The valve must be kept clean and free of internal debris to function properly.

7.0 CAPITAL AND OPERATING COSTS OF THE DUAL-FUEL MUSE GENERATOR

The capital requirements for conversion of MUSE engine generator sets to dual fuel operation consist of hardware costs, installation costs, and the costs for an inventory of spare parts. These are summarized in Table 7-1. Hardware costs are, largely, covered by the cost of the dual fuel conversion kit provided by the supplier. This kit has been developed, specifically, for generator sets using the EMD 645 engine, and most hardware items that will be needed for the conversion are included. The exceptions, in the present case, are caused by requirements that result from the special 'packaging' of the MUSE engine generator sets into mobile units required by the Navy. These special requirements, and their impact on the system hardware costs, are identified in the table. The costs for installation (labor) are estimates based both on the labor involved in the conversion of this MUSE unit and on the conversion of subsequent commercial units.

The cost per kilowatt of power for the dual fuel conversion is a function of the size of the unit converted and of the fraction of the rated horsepower at which the engine is operated. The data in Table 7-2 provide estimates of this cost for retrofitting existing MUSE diesel generators for dual fuel operation, the cost additive for including a secondary chamber ignition system in the dual fuel system, and the cost of replacing the MUSE diesel generators with new, spark-ignited, gas-fired engine generator sets.

It is anticipated that the operating costs for dual fuel MUSE generating sets will be substantially less than those for diesel operating units. These savings are due, primarily, to anticipated fuel savings, but also due to some labor savings as a result of the automation of the operation of the units. Operational added costs would result from the requirement of maintaining some additional hardware. These costs are summarized in Table 7-3.

Table 7-1. Capital Costs for Converting of Navy MUSE Generating Sets to Dual Fuel Operation

	16 Cylinder (1,500 kW) (K$)	20 Cylinder (2,500 kW) (K$)
Hardware costs		
ECI dual fuel kit*	225	250
Supplementary hardware costs for MUSE units*	12	14
Installation and startup (labor, services)†	45	55
Totals	282	319
Cost/kW‡	188	128

*ECI's dual fuel conversion kit has been assembled to provide essentially all hardware components required for this conversion. This includes preassembled wiring harnesses ready to be drawn through conduits and connected to their terminals. However, the kits do not include hardware items that are unique to the MUSE application. The latter include a larger air compressor and other miscellaneous hardware.

†Installation and startup include 700 to 900 hours of labor plus other services.

‡The cost effectiveness of converting 2,500 kW units is significantly improved both because the engine in the 2,500 kW application is required to work at a level much closer to its rated horsepower and because the costs are common to the units and of the same amount.

Table 7-2. Estimated Costs for Four Approaches to Achieving Lo-NO_x Muse Engine Generator Sets

	Approach	Estimated Total Cost (K$)	Estimated Cost/kW ($)
I	EMD 645 dual fuel conversion (16 cylinder - 1,500 kW)	282	188
II	EMD 645 dual fuel conversion (20 cylinder - 2,500 kW)	319	128
III	EMD 645 dual fuel conversion with secondary ignition chamber* (20 cyclinder - 2,500 kW)	379	152
IV	New spark-ignited natural gas engine† (1,200 kW)	425	354

*Based on estimated costs for a secondary ignition system for the EMD 645 engine as discussed in Section 2.0.

†Based on cost of new engines available on the market installed in the required Navy MUSE configuration.

Table 7-3. Estimated Operating Costs of Navy MUSE Generating Sets (2,500 kW) for Diesel and for Dual Fuel Operation

	Diesel Fuel (K$)	Natural Gas (K$)
Fuel cost/1,000 hrs. operation*	210	92
Operating labor (daily start/stop)†	8	1
Maintenance adder for natural gas	5	10
Totals/1,000 hrs. of operation	223	103
Totals/1,000 hrs. of operation	282	319
Energy cost (cents/kW-hr)	8.9	4.1

*Fuel costs were calculated based on those applicable for the dual fuel unit installed at SUBASE King's Bay, GA. For that installation, the equivalent cost per therm (100,000 Btu's) was .33/therm for natural gas (including a 10% penalty for loss in efficiency for natural gas firing) and .75/therm for diesel fuel.

†An operational cycle of 10 hrs/day of operation for 100 days was assumed. A labor rate of $40.00/hr was assumed.

8.0 REFERENCES

1-1. Naval Facilities Engineering Command. NAVFAC Instruction 11310.2E: Mobile utilities support equipment (MUSE) program. Alexandria, VA, 25 Mar 1985.

1-2. "The Natural Gas Locomotive at Burlington Northern Railroad," Leslie E. Olsen, at *Pacific Rim Trans Tech Conference*, Seattle, Wa, July 25-28, 1993.

2-1. "Air Emission Control," at *The Seventh Office of Naval Research, Propulsion Meeting*, Gabriel D. Roy and Peyman Givi, Eds., State University of New York at Buffalo, August 1994.

2-2. "Air Emission Control," at *The Eighth Office of Naval Research, Propulsion Meeting*, Gabriel D. Roy and Forman A. Williams, Eds., Univeristy of California at San Diego, CA, October, 1995.

2-3. "Air Emission Control," at *The Ninth Office of Naval Research Propulsion Meeting*, Gabriel D. Roy and D. Kailanaseth, eds., Naval Research Laboratory, Washington, D.C., Sep 1996.

2-4. "Burlington and Northern Railroad Natural Gas Locomotive Project," Burlington and Northern Railroad at *Texas Alternative Vehicle Fuel Symposium*, Austin, TX, Apr 1992.

2-5. "An Investigation of High Pressure/Late Cycle Injection of CNG as a Fuel for Rail Applications," J.F. Wakenell, et.al., Oak Ridge National Laboratory Report 85-22032-1, Apr 1988.

2-6. "High-Pressure Late Cycle Direct Injection of Natural Gas in a Rail Medium Speed Diesel Engine," James F. Wakenell, Glenn B. O'Neal, Quentin A. Baker, and Charles M. Urban, *Society of Automotive Engineers, Inc.*, Paper No. 872041, 1987.

2-7. "The Natural Gas Locomotive at Burlington Northern Railroad," Leslie E. Olsen, at *Pacific Rim Trans Tech Conference*, Seattle, WA, July 25-28, 1993.

2-8. Wartsilla Marketing Brochures, 1994.

2-9. "Development of the Cooper-Bessemer Cleanburn Gas-Diesel (Dual Fuel) Engine," Donald T. Blizzard, Frederick S. Schaub, and Jesse G. Smith, *ASME Internal Combustion Engines*, Vol 15, 1991.

2-10. "Development of the Fairbanks-Morse Enviro-Design Opposed Piston Dual Fuel Engine," Neil X. Blythe, *ASME Internal Combustion Engines*, Vol 22, Oct 1994.

4-1. Installation Manual for *Dual Fuel Conversion Kit* (for the EMD Model 645 medium-speed diesel engine) for Stationary Power Applications, Energy Conversions, Inc., 1996.

4-2. Maintenance Supplement for *Dual Fuel Conversion Kit*, Energy Conversions, Inc., Tacoma WA 1996.

4-3. *Parts Catalog for EMD 645 Dual Fuel Generator Conversion Kit,* Energy Conversions Inc., Tacoma WA 1996.

6-1. *645E4 Turbocharged Engine Maintenance Manual*, Service Department, Electromotive Division of General Motors, La Grange, IL.

6-2. *Energy Conversions, Inc., Training Video*, June 1996.

9.0 GLOSSARY

The following abbreviations have been used to describe major components of the dual fuel conversion system:

Abbreviation	Definition
ASC	Air service cabinet
BDC	Bottom dead center
BTu	British thermal unit
DF	Dual Fuel
DP	Differential pressure
ECI	Energy Conversions, Inc.
ECP	Engine control panel
ECU	Electronic control unit
EI	Early injection
EMD	Electro-Motive Division of General Motors Corporation
FRL	Filter/regulator/lubricator
GCOV	Gas cutoff valve
GFCV	Gas flow control valve
GIV	Gas injection value
gm/HpH	grams per horsepower-hour
LCI	Late-cycle injection
LDS	Leak detection system
LEI	Low emission idle
LEL	Lower explosion limit
LNG	Liquefied natural gas
MUSE	The Navy's mobile utilities support equipment
NG	Natural gas
NO_x	Nitrogen oxides (nitric (NO) and nitrogen dioxide (NO_2)
RPM	Revolution per minute
SCAQMD	South Coast Air Quality Management District
SCF	Standard cubic foot
SCFM	Standard cubic foot per minute
SCR	Selective catalytic reduction

Abbreviation	Definition
SG	Switchgear
SGP	Switchgear panels
SNCR	Selective non-catalytic reduction
SwRI	Southwest Research Institute
TDC	Top dead center
VTS	Valve temperature switch

Appendix A

LETTER REPORT REGARDING FIRE SAFETY MEASURES FOR CONVERSION OF USN MUSE DIESEL-GENERATOR UNITS FROM DIESEL TO NATURAL GAS FUELING

GAGE-BABCOCK & ASSOCIATES, INC.

SAN FRANCISCO OFFICE • 1990 NORTH CALIFORNIA BLVD., SUITE 200 • WALNUT CREEK, CA 94596 • (510) 930-8000
FAX (510) 930-0433

THOMAS W. JAEGER, PE, *President*
JOHN E. WOYCHEESE, PE, *Principal*

July 12, 1994

Mr. Norman Helgeson
Mechanical Engineer
Energy and Environment Department
Naval Civil Engineering Laboratory
Port Hueneme, CA 93043

Subject: Letter/Report Regarding Fire Safety Measures for Conversion of USN MUSE Diesel-Generator Units from Diesel to Natural Gas Fueling

Dear Mr. Helgeson:

The report given below examines the measures necessary to provide a reasonable level of fire safety in portable diesel engine driven diesel-generator units to allow for the addition of natural gas fuel capability. The suggestions given are conceptual in nature and do not constitute a detailed design documents such as would be necessary for equipment installation.

Introduction

The Navy is currently employing several diesel-generator units for mobile and emergency power uses. The skid-mounted units are to be converted from diesel to natural gas fuel to minimize exhaust emissions. This report contains findings and recommendations of a fire safety study. It analyzes measures needed to provide a reasonable level of safety against the hazard of fire or explosion due to the release and subsequent ignition of natural gas inside the diesel generator housing.

This study was requested by Mr. Norm Helgeson of the Naval Facilities Engineering Service Center (FESC). It was conducted under the direction of Jack Woycheese, P.E., Principal. Field work, evaluation and report writing was conducted by Ralph Kerwin, P.E., Senior Engineer. A field walkdown was conducted on July 7, 1994. Attending the walkdown were Mr. Helgeson, Master Chief Petty Officer Ron Kluender, Chief Petty Officer Jim Riley, Mr. Rand Drake, PO-1 Al Willey and PO-1 John Love. Gage-Babcock and Associates gratefully acknowledges the assistance of the above personnel and Mr. Scott Jensen of ECI in providing technical information used for this assessment.

Summary of Recommendations

Based on a review of drawings and technical information, together with field observation, Gage-Babcock and Associates concludes that electrical classification of the D-G enclosure is not required, providing that the following measures are observed:

ENGINEERS AND CONSULTANTS IN FIRE PROTECTION, SAFETY AND SECURITY
CHICAGO • SAN FRANCISCO • LOS ANGELES • NEW YORK • WASHINGTON • ATLANTA • VANCOUVER

1. Provide welded or threaded gas supply piping. The use of flanged or bolted fittings should be minimized (and eliminated if feasible). All piping, fittings and valves should be rated for a minimum of 150 psi. Bubble test joints under full design pressure.

2. Provide a supervised methane detector at ceiling level above the engine (see Attachment 1 for suggested location. The detector should be rated for the expected air flow rates in its suggested location.

3. Provide an independent air flow sensor for the fan to positively identify when the fan is operating. A dependable sensor without moving parts (such as a venturi-style device) is suggested for maintenance reasons.

4. Interlock the fan and the methane detectors to shut down the gas supply upon either of the following conditions:

   a. Gas supply valve is open and fan is not running.

   b. Methane is detected in a concentration greater than 1% by volume in air (this represents 20% of the lower flammable limit).

5. Provide a self-check sequence at startup. The ability to activate non-classified (spark producing) electrical equipment should be contingent on a clear reading from the gas detectors following verification of supply pipe pressure integrity (see Attachments 2 and 3).

6. Following engine stop signal and switchover to 100% diesel fuel operation, provide for automatic, momentary opening of the gas cutoff valve and gas vent valve to depressurize gas piping in the engine enclosure.

7. Institute procedures and practices to regulate the use of open flame operations within the engine enclosure during maintenance operations and to periodically evaluate tightness of any flanged or bolted gas pipe fittings.

8. Remove the two fan-coil heaters from the engine compartment. If these heaters cannot be removed, they must be interlocked to shut down (and cool down) prior to initiation of the pressurization test discussed in Item 5 above.

9. Ensure that adequate safeguards are present in the gas line to prevent a single failure (such as a regulator) from overpressurizing the gas supply line and associated equipment above 150 psig.

Description of D-G Unit

Enclosure:

An existing, typical diesel-generator unit is shown on Attachment 1. These units have a nominal output of 2300 KW. Each uses a GM Electro-motive Division Model 16-645 E4 engine, with 3070 hp. The engine sits in an enclosed compartment with interior dimensions of approximately 10 x 10 x 35 feet. A separate, adjacent compartment which contains the radiator is approximately 10 x 10 x 10 feet in enclosed dimension. Accounting for space occupied by equipment, the available space inside the engine compartment is approximately 2800 cubic feet. Ventilation within the engine compartment is provided by a 12,000 cubic

feet per minute (cfm) ceiling fan. At its rated flow, this fan provides four air changes per minute within the enclosure. The radiator compartment provides air-cooling for a radiator, and ventilation rates are extremely high. Three sides of the radiator enclosure are substantially open to the passage of air. Attachment 1 shows major equipment locations.

Proposed Conversion to Natural Gas:

The proposed conversion of the engine would allow for dual fuel operation, with an option for diesel piloted ignition of natural gas. The conversion would be conducted with equipment provided by a firm such as Energy Conversion Incorporated (ECI), which has converted other engines of this particular make and model for locomotive applications. Maximum natural gas flow to engine under normal operating conditions would be 350 scfm at 100 psig.

Hazard Analysis

The primary hazard which would exist due to conversion to natural gas would be leakage of gas from fittings in the gas supply piping inside the engine enclosure. Leaks could occur at flanged or screwed fittings, at the individual load blocks or at jumper hose fittings inside the engine cover. Sudden and catastrophic failure of a fitting is not anticipated unless caused by gross maintenance error. Such an error would be detectable through a gas detector following opening of the gas control valve during startup.

Natural gas is flammable in air at concentrations between 5% and 15% by volume. The primary criterion for not requiring electrical area classification in an enclosure containing pressurized gas piping would be that adequate ventilation be provided to ensure that a significant quantity of methane-air mixture could not accumulate in concentrations greater than 20%. Based on the fugitive emissions calculation method of NFPA 30, the existing ventilation rate is considered adequate to provide dilution for leaks of up to 150 scfm.

A worst case scenario would be an open 1-1/2 inch fitting connection (i.e. open pipe) due to maintenance error. Such a break would be detectable through a pressure integrity test (described below), which would involve a short period of gas pipe pressurization prior to engine start up. The purpose of the pressure test would be to discern piping leaks larger than could be handled by the ventilation fan (in excess of 150 scfm). If a worst case pipe disconnection were present in the gas piping, the primary restriction to flow would be the throttle valve, rated in its closed position at 40 lbs/minute. During and shortly after a five second release (the maximum recommended pressurization time period), the possibility of a flammable atmosphere would exist. During this time period, ignition sources could be controlled by operational means (not allowing exposed heating element operation, not allowing changes of state in sparking devices such as solenoids). The existing exhaust fan consists of an in-line squirrel cage induction motor which drives an aluminum propeller in an aluminum hub. This fan is inherently spark resistive and would be considered suitable for use to evacuate gas following such a substantial release.

Referenced Publications

1. NFPA 30, Flammable and Combustible Liquids Code, 1993 Edition, Appendix F, "Fugitive Emissions Calculations

2. NFPA 70, National Electrical Code, 1993 Edition, Article 500, "Electrical Classification."

3. NFPA 497M, Manual for Classification of Gases ... for Electrical Equipment...., 1991 Edition.

4. AMCA Standard 99-0401-86, Classifications for Spark Resistant Construction.

If you have any questions, please call me at (510) 930-8000.

Yours sincerely,

Gage-Babcock & Associates

Ralph Kerwin

Ralph Kerwin, P.E.
Senior Engineer

Encl.

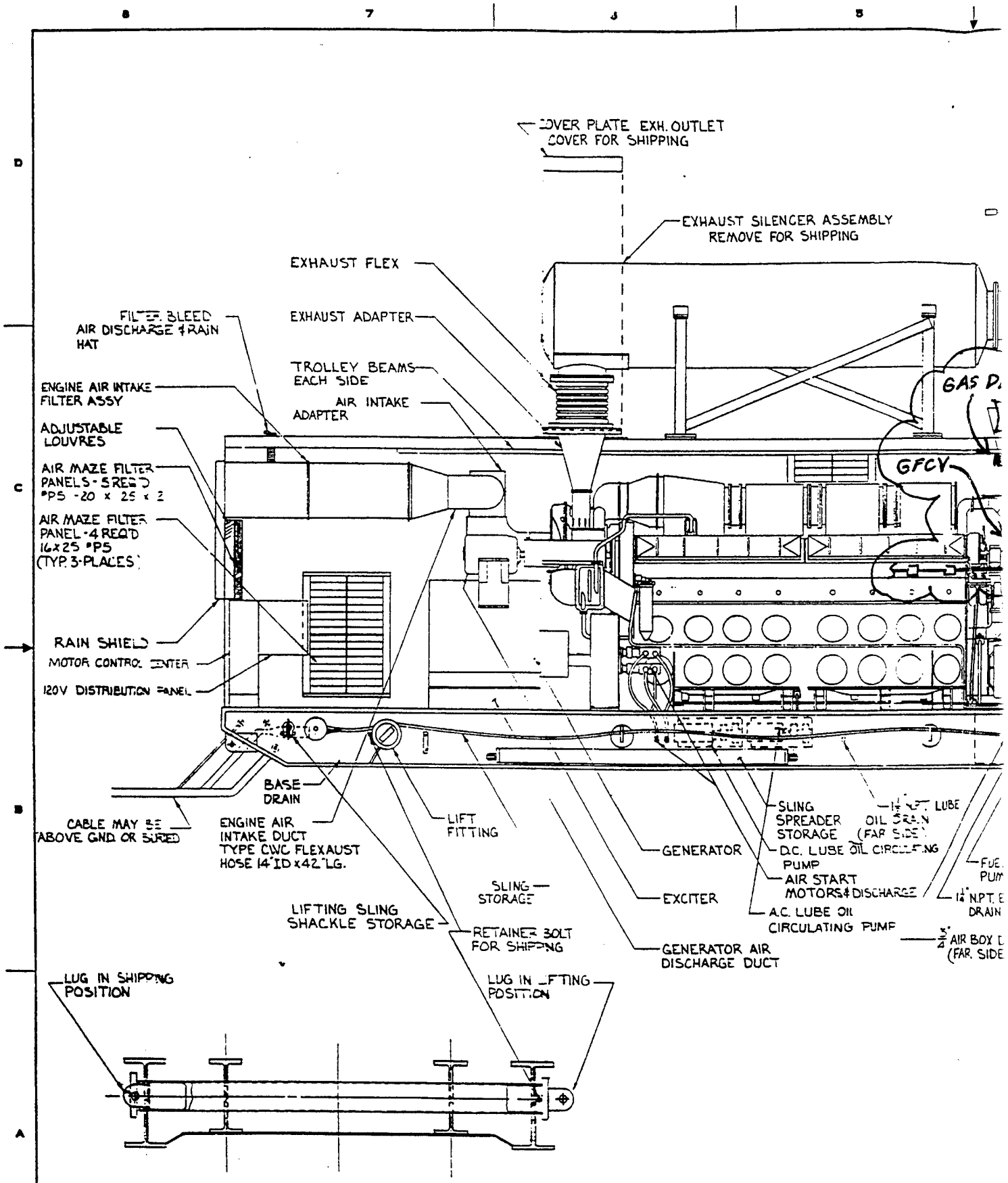

SECTION THRU LIFTING LUGS

1

REVISIONS		
ZONE	LTR	DESCRIPTION
8039	A	1. REV. LOCATION OF FUEL PRIME AUX. TURBO LUBE FILTER, DRAIN CO MAINT. AIR CONN. & ASSOC. PIPIN 2. REV. ROOM AIR DISCHARGE FAN, MOTOR QTY. & CONN. 3-RELOCA SOAKBACK PLUG & ADDED DC PUMP. 5-ADDED RADIATOR DR & WALL PART ON 6-REV. RE SCHOONMAKER DWG. TO GFE. MAINT. AIR CONN. TO 3/4"
8160	B	ADDED BASE DRAINS-DEL. LOPI ADDE DRAIN & VENT LINE REVISED J.W. PIPING

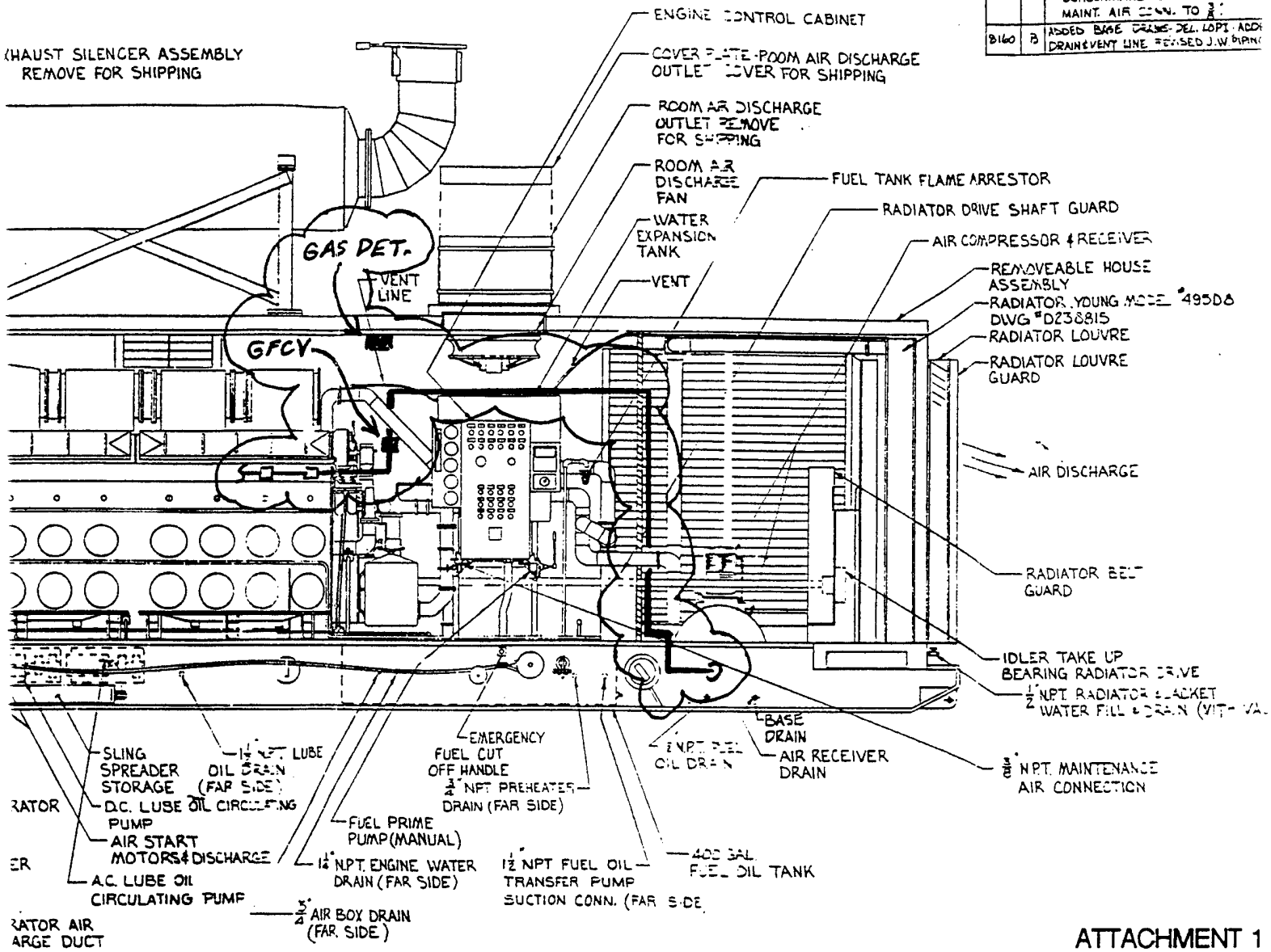

ATTACHMENT 1

ZONE DIS.	LTR DIS.	REGULATIONS OR DESCRIPTION	CODE IDENT.
		LIST OF MATERIAL OR PARTS LIST	

NEXT ASSY	USED ON	NEXT ASSY	FINAL ASSY
APPLICATION		QTY. REQD.	

UNLESS OTHERWISE SPECIFIED DIMENSIONS ARE IN INCHES
TOLERANCES ON FRACTIONS ± DECIMALS ± ANGLES ±
MATERIAL
TREATMENT
FINISH

CONTRACT NO. N62472-80-C-1648
I.W.O. 6039
DAVISVILLE

APPROVED		DATE
ENGINEER	J. Sylla	3/31/81
CHECKER	J. Fuller	3.31.81
DRAFTSMAN	Makum	FEB 12 1981

ENGINE ACTIVITY APPROVAL

POWER SYS
MORRISON-KN
ROCKY MOUNT, NO

TITLE GENERAL ARRA
1500 KW, 4160/240
1200 KW, 3600/210
3 PHASE 0.8 P.F.

SIZE	CODE IDENT. NO.	DRAWING NO.
D	6E148	603

SCALE 1" = -0" WT.

2

REVISIONS				
ZONE	LTR	DESCRIPTION	DATE	APPROVED
8039	A	1. REV. LOCATION OF FUEL PRIME PUMP, AUX. TURBO LUBE FILTER, DRAIN CONN, & 1½ NPT MAINT. AIR CONN & ASSOC. PIPING. 2. REV. ROOM AIR DISCHARGE FAN, AIR START MOTOR QTY. & CONN. 3-RELOCATED AC SOAKBACK PUMP. 4-ADDED DC SOAKBACK PUMP. 5-ADDED RADIATOR DRIVE SHAFT & WALL PARTITION 6-REV. REF TO SCHOONMAKER DWG. TO GFE. 7-REV. ½" MAINT. AIR CONN. TO ¾".	7-17-81	J. Humphrey
8160	B	ADDED BASE DRAIN DEL. LOPI. ADDED RADIATOR DRAIN & VENT LINE REVISED J.W. PIPING CONFIGURATION	8-13-81	D. Pierce

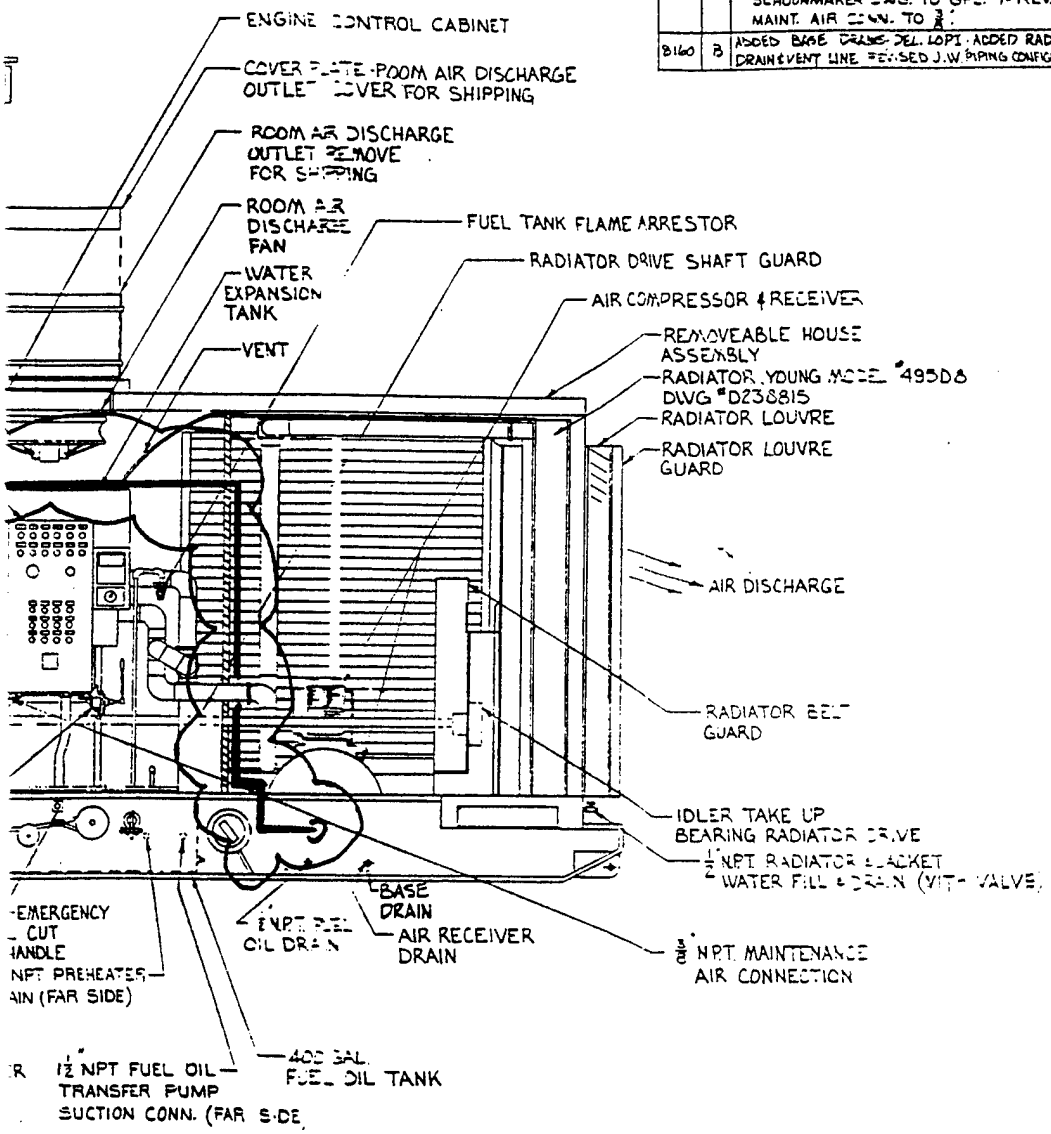

ATTACHMENT 1

ITEM NO.	QTY NO.	NOMENCLATURE OR DESCRIPTION	CODE IDENT.	PART OR IDENTIFYING NO.	QTY. REQD.

LIST OF MATERIAL OR PARTS LIST

UNLESS OTHERWISE SPECIFIED DIMENSIONS ARE IN INCHES
TOLERANCES ON FRACTIONS ± DECIMALS ± ANGLES ±

MATERIAL

TREATMENT

FINISH

CONTRACT NO. N62472-80-C-1648
I.W.O. 6039
DAVISVILLE

APPROVED		DATE
DESIGNED	J. Sl[illegible]	3/31/81
CHECKED	J. Fuller	3.31.81
DRAFTSMAN	Mokeum	FEB 12 1981

DESIGN ACTIVITY APPROVAL

POWER SYSTEMS DIVISION
MORRISON-KNUDSEN COMPANY, INC.
ROCKY MOUNT, NORTH CAROLINA 27801

TITLE
GENERAL ARRANGEMENT
1500 KW, 4160/2400V 60Hz
1200 KW, 3600/2100V 50Hz
3 PHASE 0.8 P.F.

SIZE	CODE IDENT. NO.	DRAWING NO.	REV.
D	6E148	6039D02001	B

SCALE 1" = 1'-0" WT. SHEET 1 OF 2

NEXT ASSY	USED ON	NEXT ASSY	FINAL ASSY
APPLICATION		QTY. REQD.	

3

Engine Gas Manifold

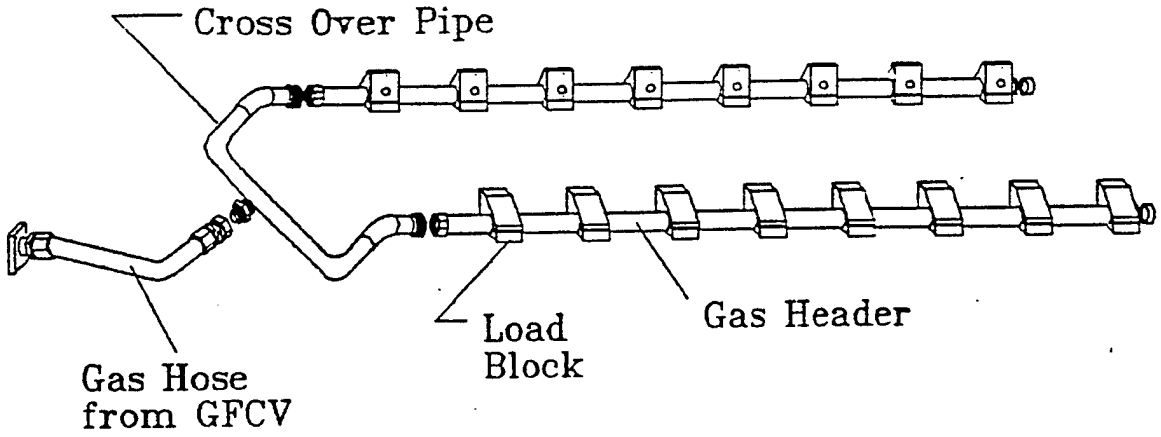

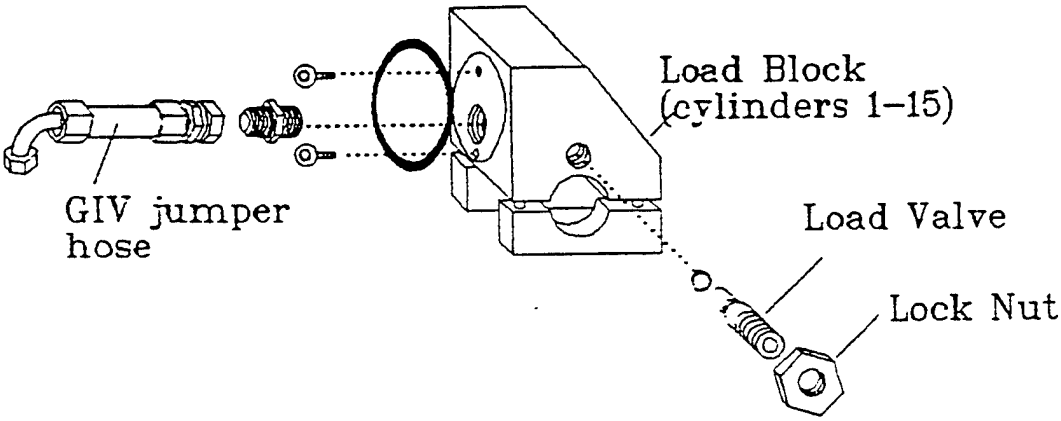

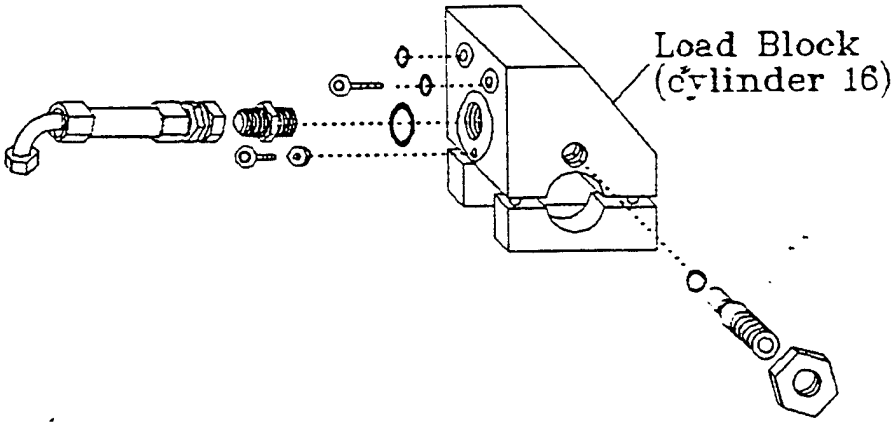

Figure Gas Pipe 2

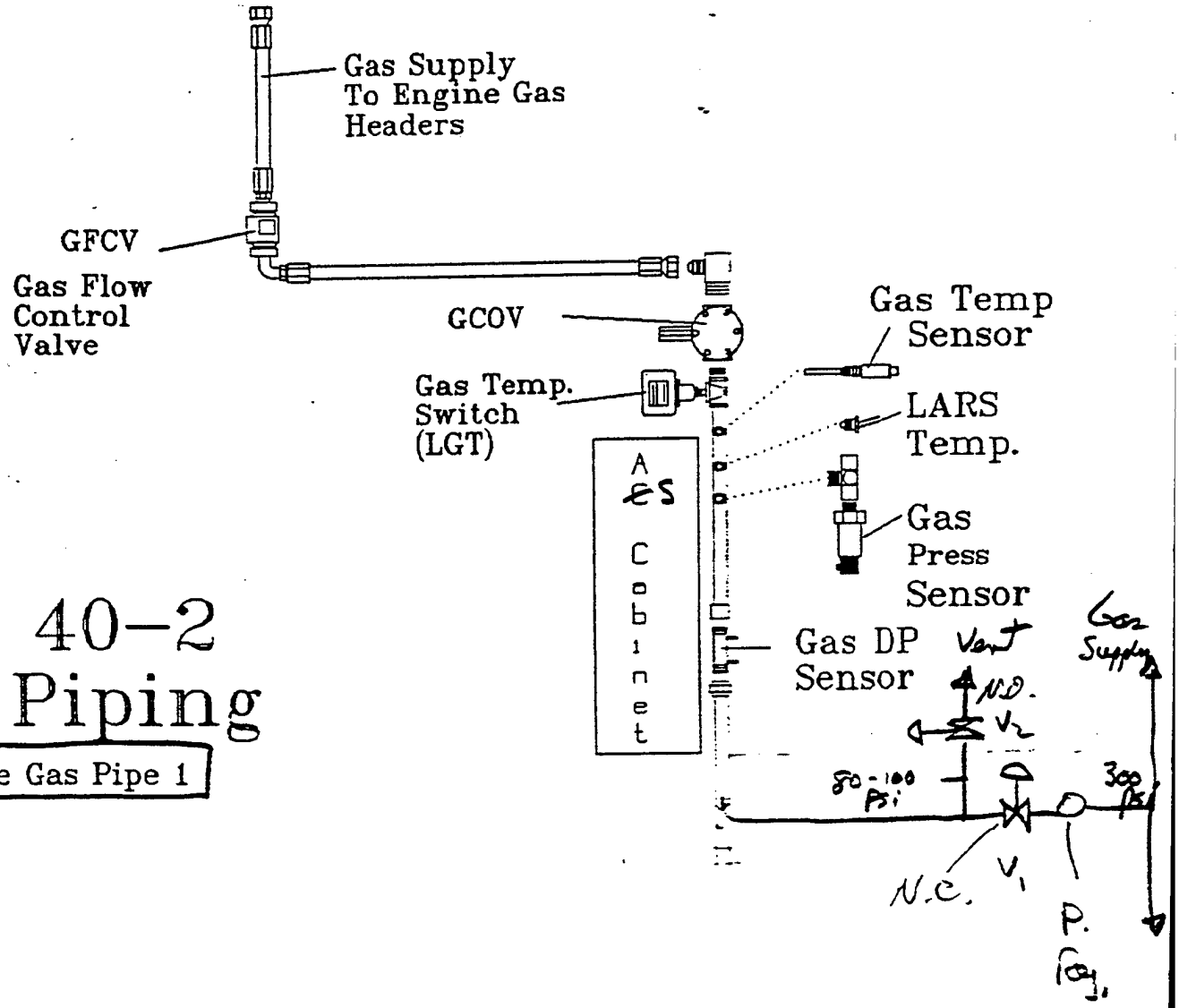

DF 40-2
Gas Piping

Figure Gas Pipe 1

ATTACHMENT 3

SELF-CHECK SEQUENCE FOR GAS PIPING INTEGRITY

The following sequence of events describes activities which should be directed by the Engine Control Unit (ECU) prior to engine pre-lube and subsequent start up activities:

1. Check gas detector to verify no detection of gas above the 1% by volume threshold (20% LFL).

2. Turn on exhaust fan and verify operation by independent air flow sensor.

3. ECU initiates following activities:

   a. Close normally open vent valve in gas supply line (V_2 in Attachment 2).

   b. Freeze all electrical operations requiring the use of spark producing devices (relays, etc.). Turn off any air-heating coils within the engine enclosure.

   c. Open main gas valve (V_1) and gas cutoff valve (GCOV). If relay activation in the ECU is necessary, provide non-sparking relays for these operations.

   d. After five seconds (maximum), close main gas control valve (V_1).

   e. After a brief time delay (say, 30 seconds), verify that gas pressure sensor indicates a pressure of at least 80 psi (Note: Individual cylinder valves may allow leakage of gas into cylinders for pressures above 85 psig, resulting in a rapid decline in pressure from line pressure to 85 psig.)

   f. If pressure declines below 80 psi or if gas detector indicates presence of gas over 1% by volume, abort startup sequence and give trouble signal to remote location. Close main gas cutoff valve (V_1) and open gas vent valve (V_2).

   g. Otherwise, unfreeze electrical operations in engine enclosure, close cutoff valve (GCOV) and proceed with pre-lube operation.

Appendix B

SCHEMATIC DRAWINGS OF DUAL FUEL 1,500 kW CONVERSION OF DIESEL POWER PLANTS

Included Drawings

Drawing No.	Title
761-DF	Air Start System
766-DF	Jacket Water System
768-DF	Interconnecting Cables
769-DF	Interconnecting Cables Mating Receptacles
772-DF	Switchgear Lineup Plan and Elevation
780-DF	AC Generator
781-DF	Circuit Breaker Control
784-DF	Motor Control Circuits
788-DF	Engine Control Circuits
788A-DF	Engine Control Circuits
788B-DF	Engine Control Circuits
789-DF	Annunciator
790-DF	Engine Control and Subpanel Assembly
791-DF	Engine Control and Subpanel Assembly
965-DF	Metering Cubicle, Door Wiring Diagram
966-DF	Metering Cubicle, Door Wiring Diagram
966A-DF	Metering Cubicle, Right Wall
967-DF	Metering Cubicle, Subpan Wiring Diagram
969-DF	Metering Cubicle, Cable Receptacles Wiring Diagram
970-DF	Circuit Breaker Cubicle, Door Wiring Diagram
971-DF	Circuit Breaker Cubicle, Subpan Wiring Diagram
988-DF	Connection Diagram, Motor Control Center
989-DF	Connection Diagram, MCC Distribution Panel
990-DF	Connection Diagram, Engine Control Panel
990A-DF	Connection Diagram, Engine Control Panel
991-DF	Connection Diagram, Engine Control Panel
993-DF	Connection Diagram, Engine House Equipment
994DF	Connection Diagram, Engine House Equipment

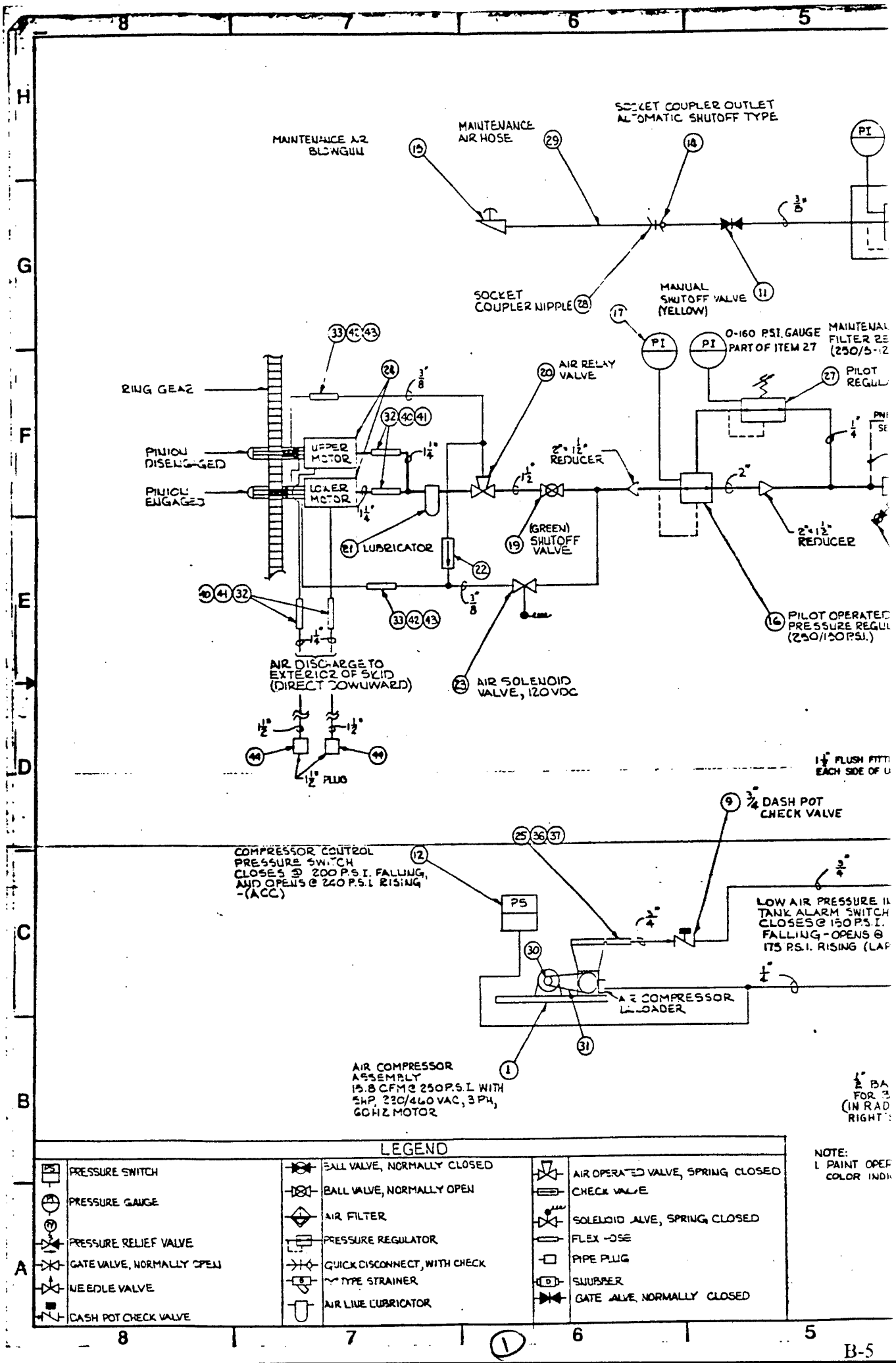
MAINTENANCE AIR BLOWGUN
MAINTENANCE AIR HOSE
SOCKET COUPLER OUTLET AUTOMATIC SHUTOFF TYPE
SOCKET COUPLER NIPPLE
MANUAL SHUTOFF VALVE (YELLOW)
0-160 P.S.I. GAUGE PART OF ITEM 27
RING GEAR
PINION DISENGAGED
PINION ENGAGED
UPPER MOTOR
LOWER MOTOR
AIR RELAY VALVE
2"x1½" REDUCER
(GREEN) SHUTOFF VALVE
LUBRICATOR
PILOT OPERATED PRESSURE REGULATOR (250/150 P.S.I.)
AIR DISCHARGE TO EXTERIOR OF SKID (DIRECT DOWNWARD)
AIR SOLENOID VALVE, 120 VDC
1½" PLUG
¾ DASH POT CHECK VALVE
COMPRESSOR CONTROL PRESSURE SWITCH CLOSES @ 200 P.S.I. FALLING, AND OPENS @ 260 P.S.I. RISING -(ACC)
PS
LOW AIR PRESSURE IN TANK ALARM SWITCH CLOSES @ 150 P.S.I. FALLING - OPENS @ 175 P.S.I. RISING (LAP
AIR COMPRESSOR UNLOADER
AIR COMPRESSOR ASSEMBLY 15.8 CFM @ 250 P.S.I. WITH 5HP, 230/460 VAC, 3 PH, 60 HZ MOTOR
LEGEND
PRESSURE SWITCH
PRESSURE GAUGE
PRESSURE RELIEF VALVE
GATE VALVE, NORMALLY OPEN
NEEDLE VALVE
DASH POT CHECK VALVE
BALL VALVE, NORMALLY CLOSED
BALL VALVE, NORMALLY OPEN
AIR FILTER
PRESSURE REGULATOR
QUICK DISCONNECT, WITH CHECK
Y TYPE STRAINER
AIR LINE LUBRICATOR
AIR OPERATED VALVE, SPRING CLOSED
CHECK VALVE
SOLENOID VALVE, SPRING CLOSED
FLEX-HOSE
PIPE PLUG
SNUBBER
GATE VALVE, NORMALLY CLOSED
NOTE:
1. PAINT OPER
COLOR INDI

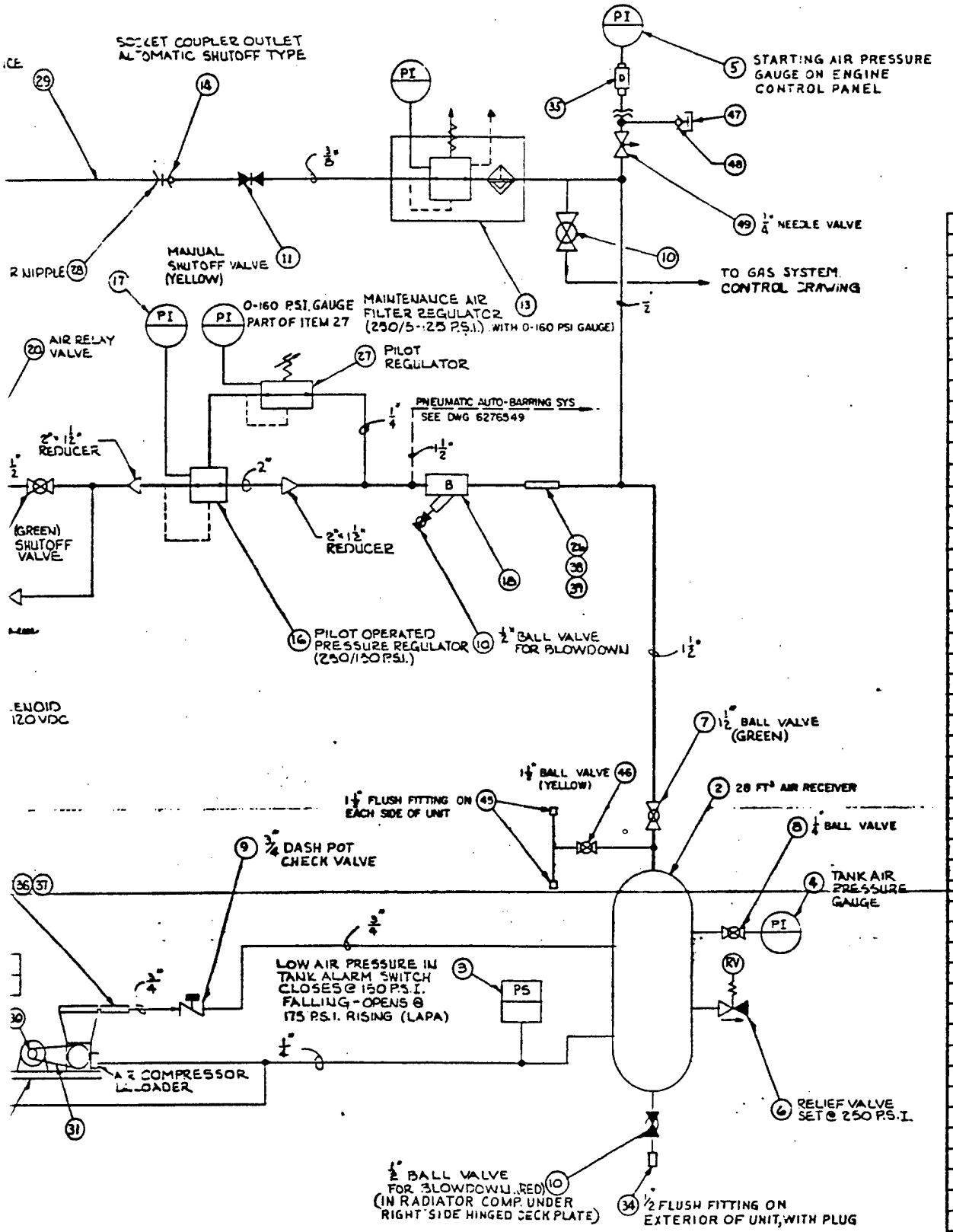

QTY REQ	FSCM NO.	PART OR IDENTIFYING NO.	NOMENCLATURE OR DESCRIPTION
1			1/4" NEEDLE VA
1		SS-QC4-B1-400	GAUGE TEST
1		SS-QC4-BP	DUST CAP
1			1 1/2 BALL VALVE
2			1 1/2 PIPE PLUG
2			PLUG
2	8F708	63-90535-6	FITTING
2	8F708	38-90628-6-6	FITTING
4	8F708	63-90535-20	FITTING
4	8F708	38-90628-20-20	FITTING
1	8F708	63-90535-24	FITTING
1	8F708	38-90628-24-24	FITTING
1	8F708	63-90535-12	FITTING
1	8F708	38-90628-12-12	FITTING
1	78763	872-1	SNUBBER
1			1/2" PIPE PLUG
2	8F708	2808-8	FLEX HOSE
4	8F708	2808-20	FLEX HOSE
1	24161	2/B75	DRIVE BELT
1	24161	2-B 7.4" O.D.	SHEAVE
1	14592	514-50	MAINT. AIR HOSE
1	14592	CP8	SOCKET COUPLER NIP
1	43990	R11-200-R6SA	PILOT REG.
1	8F708	2808-24	FLEX HOSE
1	8F708	FC186-12	FLEX HOSE
2	54837	150BMPDR-VRSM1534	AIR
1	30187	712-001	SOLENOID VAL
1	72915	8394052	CHECK VALVE
1	54837	UL24-8	LUBRICATOR A
1	30187	853-3	RELAY VALVE
1	72915	8409024	BALL COCK VAL
1	54837	20BM-A267AT	STRAINE
1	43990	18-013-210	PRESSURE GAU
1	43990	R18-C00-RNXA	PRESS. RE
1	14592	204-30A	MAINT. AIR BLOWG
1	14592	C6	SOCKET COUPLER OU
1	43990	B01-324-A3LA	FILTER RE
1	51917	CL.9013	PRESSURE SWIT
1	80996	3050	GATE VALVE
3	14652	30MXF	BALL VALVE
1	75336	205	CHECK VALVE
1	14652		BALL VALVE
1	80996	3050	BALL VALVE
1	75336	114	RELIEF VALVE
1	78763	893-0-300	PRESSURE GAU
1	78763	890-0-300	PRESSURE GAU
1	51917	CL.9012	PRESSURE SWI
1			AIR RECEIVE
1	49576	D325	AIR COMPRES
1	05472	M3615T	MOTOR

NOTE:
1. PAINT OPERATING HANDLES OF VALVES THE COLOR INDICATED.

- AIR OPERATED VALVE, SPRING CLOSED
- CHECK VALVE
- SOLENOID VALVE, SPRING CLOSED
- FLEX HOSE
- PIPE PLUG
- SNUBBER
- GATE VALVE, NORMALLY CLOSED

DUEL FUEL 1500 KW CONVERSION OF DIESEL POWER PLANTS

761-

REVISIONS				
ZONE	LTR	DESCRIPTION	DATE	APPROVED
	A	SEE NEESA DCN 92-14	1992-2-14	

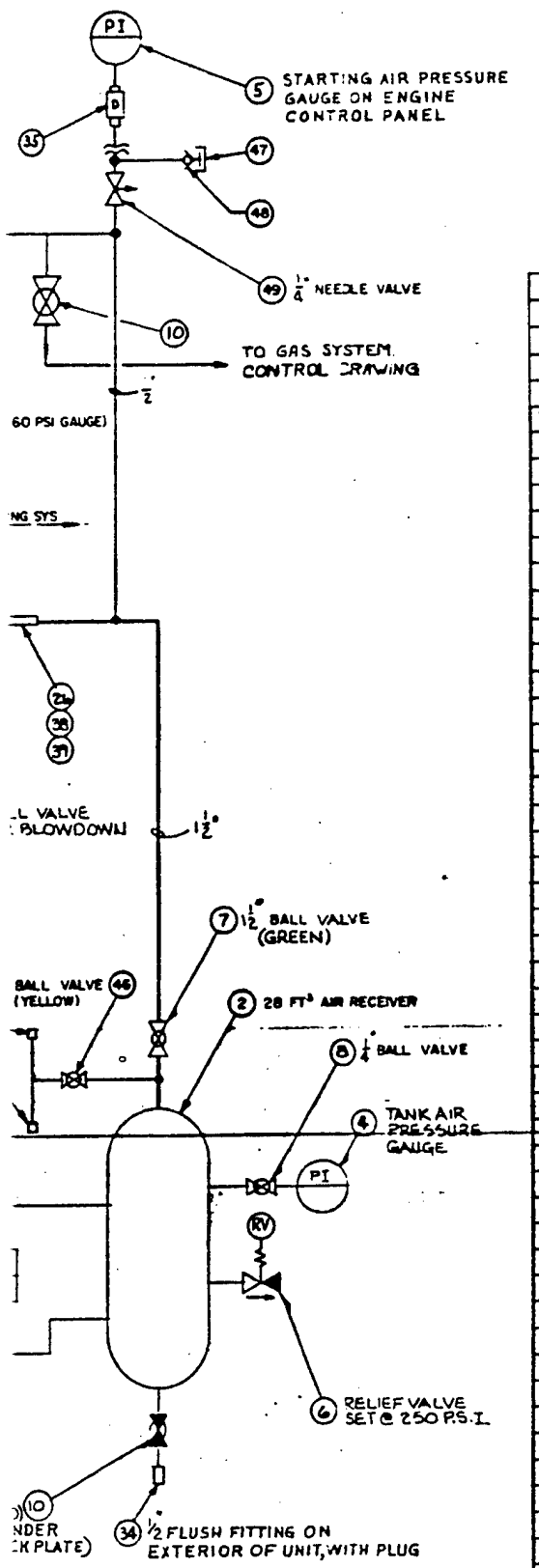

QTY REQD	FSCM NO	PART OR IDENTIFYING NO.	NOMENCLATURE OR DESCRIPTION	MATERIAL/SPECIFICATION	ITEM NO.
1			1/4" NEEDLE VALVE		49
1		SS-QC4-B1-4001	GAUGE TEST "AP	SWAGELOK – BULKHEAD QUICK-CONNECT	48
1		SS-QC4-BP	DUST CAP	BODY PROTECTOR PLUG FOR ITEM 48	47
1			1 1/2" BALL VALVE		46
2			1 1/2" PIPE PLUG		45
2			PLUG	1 1/2" PLUG - T-HANDLE CAPTIVE	44
2	8F708	63-190535-6	FITTING	AEROQUIP 3/4" SAE 37° SWIVEL	43
2	8F708	38-190628-6-6	FITTING	AEROQUIP 3/8" MALE PIPE	42
4	8F708	63-190535-20	FITTING	AEROQUIP 1 3/8" SAE 37° SWIVEL	41
4	8F708	38-190628-20-20	FITTING	AEROQUIP 1 1/4" MALE PIPE	40
1	8F708	63-190535-24	FITTING	AEROQUIP 1 5/8" SAE 37° SWIVEL	39
1	8F708	38-190628-24-24	FITTING	AEROQUIP 1 1/2" MALE PIPE	38
1	8F708	63-190535-12	FITTING	AEROQUIP 1 1/8" SAE 37° SWIVEL	37
1	8F708	38-190628-12-12	FITTING	AEROQUIP 3/4" MALE PIPE	36
1	78763	872-1	SNUBBER	TRERICE (1/4 NPT)	35
1			1/2" PIPE PLUG		34
2	8F708	2808-8	FLEX HOSE	AEROQUIP	33
4	8F708	2808-20	FLEX HOSE	AEROQUIP	32
1	24161	2/B75	DRIVE BELT	GATES (POWERBAND)	31
1	24161	2-B 7.4" O.D.	SHEAVE	GATES (W/SK-1 1/8" O.D. BUSHING)	30
1	14592	514-50	MAINT. AIR HOSE	AMFLO (50FT.)	29
1	14592	CP8	SOCKET COUPLER NIPPLE	AMFLO (3/8" x 1/4" N.P.T.)	28
1	43990	R11-200-R6SA	PILOT REG.	NORGREN (15-250 P.S.I. ADJ RANGE, SET @ 150 P.S.I.)	27
1	8F708	2808-24	FLEX HOSE	AEROQUIP	26
1	8F708	FC18G-12	FLEX HOSE	AEROQUIP	25
2	54837	150BMPDR-VRSM1534	AIR START MOTOR ASS'Y.	INGERSOL-RAND	24
1	30187	712-001	SOLENOID VALVE ASSY.	SALEM	23
1	72915	8394052	CHECK VALVE	EMD (1/8" FPT)	22
1	54837	UL24-8	LUBRICATOR ASSY.	INGERSOLL-RAND (AUTO. AIR LINE)	21
1	30187	853-3	RELAY VALVE	SALEM (AIR START, 1 1/2" FPT)	20
1	72915	8409024	BALL COCK VALVE	EMD (1 1/2" FPT)	19
1	54837	20BM-A267AT	STRAINER	INGERSOLL-RAND (IN-LINE, Y-TYPE, 1 1/2" FPT)	18
1	43990	18-013-210	PRESSURE GAUGE	NORGREN – (0-300 P.S.I.)	17
1	43990	R18-C00-RNXA	PRESS. REG.	NORGREN (250/150 P.S.I., 2" NPT)	16
1	14592	204-30A	MAINT. AIR BLOWGUN	AMFLO	15
1	14592	C6	SOCKET COUPLER OUTLET	AMFLO (3/8" x 3/8" NPT)	14
1	43990	B01-324-A3LA	FILTER REG.	NORGREN (250/5-125 P.S.I., 3/8" NPT)	13
1	51917	CL.9013	PRESSURE SWITCH	SQUARE D (TYPE GHW-5)	12
1	80996	3050	GATE VALVE	GRINNELL (1/2" NPT)	11
3	14652	30MXF	BALL VALVE	UNITED BRASS (1/2" NPT)	10
1	75336	205	CHECK VALVE	KINGSTON (DASH POT, 3/4", NPT)	9
1	14652		BALL VALVE	WHITEY (1/4", SWAGELOK)	8
1	80996	3050	BALL VALVE	GRINNELL (1 1/2" NPT)	7
1	75336	114	RELIEF VALVE	KINGSTON (1/2" NPT, SET @ 250 P.S.I.)	6
1	78763	893-0-300	PRESSURE GAUGE	TRERICE (0-300 P.S.I.)	5
1	78763	890-0-300	PRESSURE GAUGE	TRERICE (0-300 P.S.I.)	4
1	51917	CL.9012	PRESSURE SWITCH	SQUARE D (TYPE GAW-6)	3
1			AIR RECEIVER	(28 FT³ HORIZ)	2
1	49576	D325	AIR COMPRES.	QUINCY (W/7970 x 1 UNLOADER)	1
1	05472	M361ST	MOTOR	BALDOR (5HP, 460 VAC, 3Φ)	A

PARTS LIST

NAVAL ENERGY AND ENVIRONMENTAL SUPPORT ACTIVITY

761-DF

OVERHAUL 1500 KW
- DIESEL POWER PLANTS
AIR START SYSTEM SCHEMATIC

DUEL FUEL 1500 KW
CONVERSION OF DIESEL POWER PLANTS

SATISFACTORY TO
MIKE CHILDERS
NORMAN HUGESON DEC 1994

SIZE F | CAGE NO 80091 | MANFAC DRAWING NO 6276548
CONTR NO N47408-89-C-2011
SCALE NONE | SHEET 2 OF

3

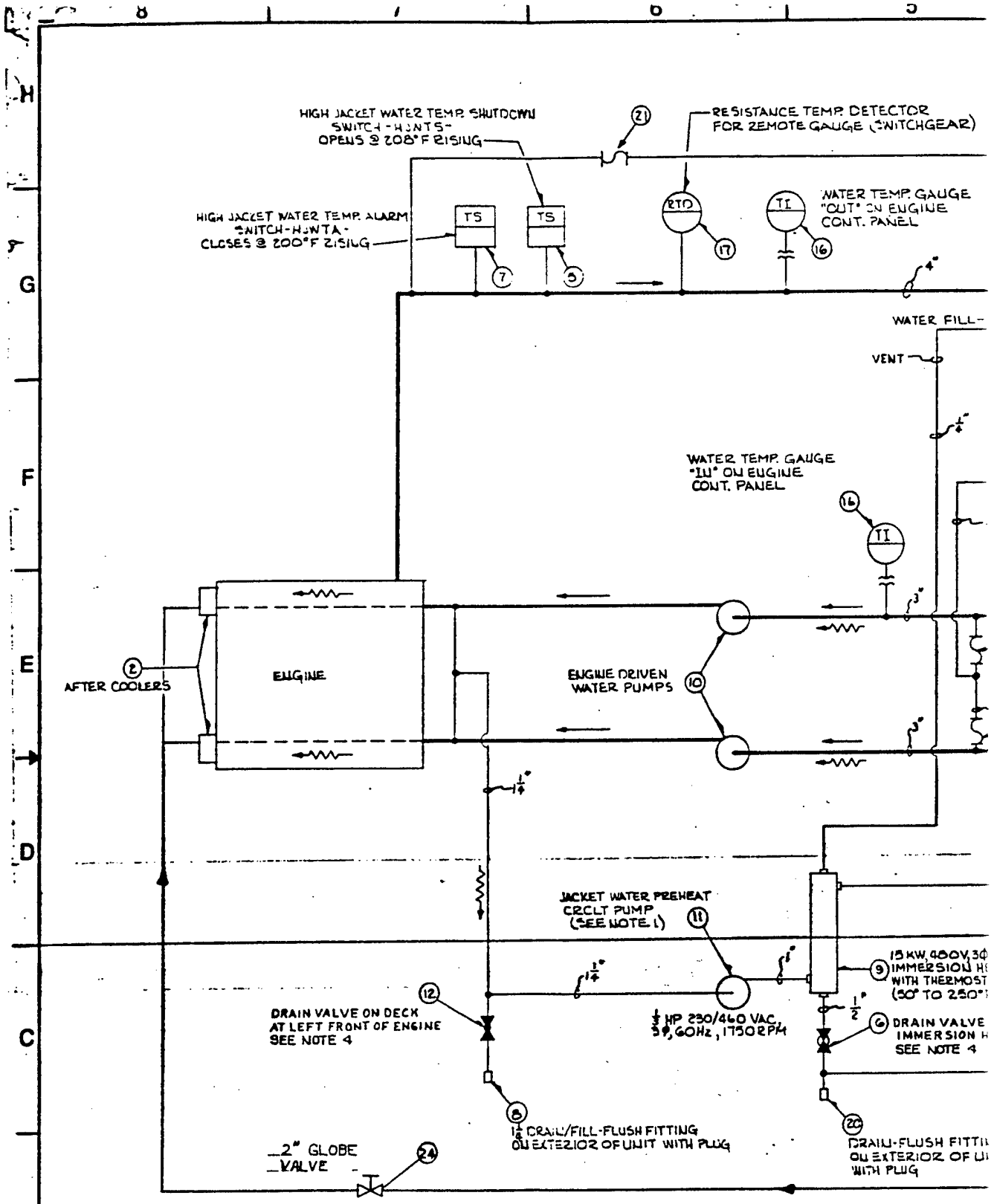
HIGH JACKET WATER TEMP. SHUTDOWN SWITCH - HJWTS - OPENS @ 208°F RISING
RESISTANCE TEMP. DETECTOR FOR REMOTE GAUGE (SWITCHGEAR)
HIGH JACKET WATER TEMP. ALARM SWITCH - HJWTA - CLOSES @ 200°F RISING
TS
TS
RTD
TI
WATER TEMP. GAUGE "OUT" ON ENGINE CONT. PANEL
WATER FILL
VENT
WATER TEMP. GAUGE "IN" ON ENGINE CONT. PANEL
TI
AFTER COOLERS
ENGINE
ENGINE DRIVEN WATER PUMPS
JACKET WATER PREHEAT CRCLT PUMP (SEE NOTE 1)
15 KW, 480V, 3Φ IMMERSION H WITH THERMOST (50° TO 250°
DRAIN VALVE ON DECK AT LEFT FRONT OF ENGINE SEE NOTE 4
1/3 HP 230/460 VAC 3Φ, 60Hz, 1750 RPM
DRAIN VALVE IMMERSION H SEE NOTE 4
1 1/4 DRAIN/FILL-FLUSH FITTING ON EXTERIOR OF UNIT WITH PLUG
DRAIN-FLUSH FITTI ON EXTERIOR OF U WITH PLUG
2" GLOBE VALVE
LEGEND
TEMPERATURE GAUGE
TEMPERATURE SWITCH
PIPE PLUG
CENTRUFUGAL PUMP
FLEX COUPLING
THREE WAY TEMPERATURE MODULATING VALVE
RESISTANCE TEMP. DETECTOR
BALL VALVE, NORMALLY OPEN
BALL VALVE, NORMALLY CLOSED
MAIN WATER CIRCUIT FLOW
STAND BY HEATING FLOW
NOTES:
1. JACKET WATER PREHEAT CIRCULATION PUMP MOUN ABOVE DECK.
2. JACKET WATER TO BE CORROSION INHIBITED IN A WITH M.I. 1748, "ENGINE COOLANT".
3. FOR LUB OIL COOLER AND LUB OIL COOLER COR INFORMATION REF. DWG. NO. 6276552 "LUB OIL
4. OPERATING HANDLES OF THESE DRAIN VALVES ARE TO BE

RESISTANCE TEMP. DETECTOR FOR REMOTE GAUGE (SWITCHGEAR)

VENT

WATER TEMP. GAUGE "OUT" ON ENGINE CONT. PANEL

WATER FILL

EXPANSION TANK

WATER TEMP. GAUGE "IN" ON ENGINE CONT. PANEL

TEMP. GAUGE ON LUB OIL COOLER INLET PIPE

AIR FLOW

CORE

LUB. OIL COOLER (SEE NOTE 3)

ENGINE DRIVEN WATER PUMPS

DRAIN VALVE ON RADIATOR INLET PIPE SEE NOTE 4

FILL A VALVE

JACKET WATER PREHEAT CIRCLT PUMP (SEE NOTE 1)

15 KW, 480V, 3Φ, 60HZ IMMERSION HEATER WITH THERMOSTAT INTEGRAL (80° TO 250°F)

1/3 HP 230/460 VAC, 3Φ, 60Hz, 1750 RPM

DRAIN VALVE ON IMMERSION HEATER SEE NOTE 4

FILL-FLUSH FITTING ON EXTERIOR OF UNIT WITH PLUG

DRAIN-FLUSH FITTING ON EXTERIOR OF UNIT WITH PLUG

PS

240 GPM CENTRIFUGAL PUMP

QTY REQD	FSCM NO	PART OR IDENTIFYING NO.	NOMENCLATURE OR DESCRIPTION
1			GLOBE
1			PRES.
1			CENT.
3			FLEX
2	—		PIPE PL
1	80996	3050	V
2	3A161	411-045001-011	FLEX
1	02009	21D-10-S-4-C3-A-C	
2	78763	V80040	TEMP G
2	72915	8244328	COUPLI
1	72915	8394263	THERMOS VALVE
1			RADIAT
1			BALL V
1	13012	P95	CIR. PUM
1	05472	M3534	MOTOR
2	72915	8349607-LEFT 8249002-RIGHT	WATER
1	65586	NWH 31525	IMMERSIO
1	—		PIPE P
1	72915	8449676	ALARM
2	80996	3050	GATE VA
1	72915	8447099	SHUTDOWN
1	20969	NO. 3	SIGHT G
1			EXPANSI
2	72915	8409891	AFTER C
1	72915	8031666	TEMP G

→ MAIN WATER CIRCUIT FLOW
⇝ STAND BY HEATING FLOW

NOTES:
1. JACKET WATER PREHEAT CIRCULATION PUMP MOUNTED ABOVE DECK.
2. JACKET WATER TO BE CORROSION INHIBITED IN ACCORDANCE WITH M.I. 1748, "ENGINE COOLANT".
3. FOR LUB OIL COOLER AND LUB OIL COOLER CORE INFORMATION REF. DWG. NO. 6276552 "LUB OIL SCHEMATIC".
4. OPERATING HANDLES OF THESE DRAIN VALVES ARE TO BE PAINTED RED.

DUEL FUEL 1500 KW CONVERSION OF DIESEL POWER PLANTS

REVISIONS				
ZONE	LTR	DESCRIPTION	DATE	APPROVED
	A	SEE NEESA DCN 92-16	1992-2-18	

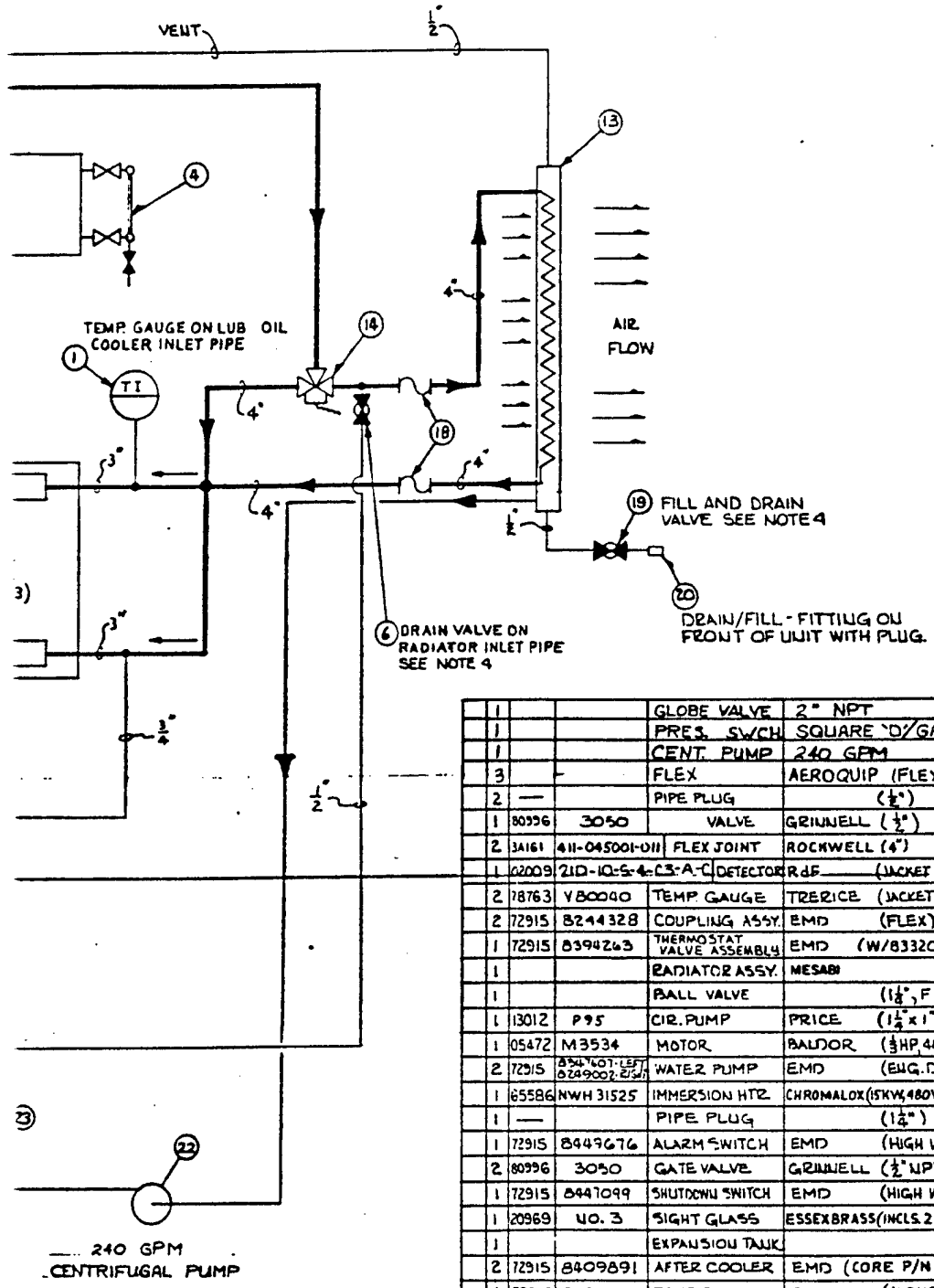

QTY REQD	FSCM NO	PART OR IDENTIFYING NO.	NOMENCLATURE OR DESCRIPTION	MATERIAL/SPECIFICATION	ITEM NO.
1			GLOBE VALVE	2" NPT	24
1			PRES. SWCH	SQUARE 'D'/GAW-4 SER.B (1.5-75 PSI)	23
1			CENT. PUMP	240 GPM	22
3			FLEX	AEROQUIP (FLEX)	21
2	—		PIPE PLUG	(1/2")	20
1	80996	3050	VALVE	GRINNELL (1/2")	19
2	3A161	411-045001-011	FLEX JOINT	ROCKWELL (4")	18
1	02009	21D-10-S-4-C3-A-C	DETECTOR RTD	(JACKET WATER TEMP. RTD)	17
2	78763	V80040	TEMP. GAUGE	TRERICE (JACKET WATER - 30-240°F)	16
2	72915	8244328	COUPLING ASSY.	EMD (FLEX)	15
1	72915	8394263	THERMOSTAT VALVE ASSEMBLY	EMD (W/8332066 180°F ELEMENTS)	14
1			RADIATOR ASSY.	MESABI	13
1			BALL VALVE	(1 1/4", F PT)	12
1	13012	P95	CIR. PUMP	PRICE (1 1/4" x 1") USE MECHANICAL SEAL PART 80538 FOR ETHYLENE-GLYCOL	B 11
1	05472	M3534	MOTOR	BALDOR (1/3 HP, 460 VAC, 3Φ, 1725 RPM)	A
2	72915	8347607-LEFT 8249002-RIGHT	WATER PUMP	EMD (ENG. DRIVEN - 1 EA-LEFT & RIGHT)	10
1	65586	NWH 31525	IMMERSION HTR.	CHROMALOX (15KW, 480VAC, 3Φ, W/AR2525 THERMO)	9
1	—		PIPE PLUG	(1 1/4")	8
1	72915	8449676	ALARM SWITCH	EMD (HIGH WATER TEMP. -200°F)	7
2	80996	3050	GATE VALVE	GRINNELL (1/2" NPT)	6
1	72915	8447099	SHUTDOWN SWITCH	EMD (HIGH WATER TEMP. -208°F)	5
1	20969	NO. 3	SIGHT GLASS	ESSEX BRASS (INCLS. 2 GAUGE COCKS & DRAIN COCK)	4
1			EXPANSION TANK		3
2	72915	8409891	AFTER COOLER	EMD (CORE P/N 8352305)	2
1	72915	8031666	TEMP. GAUGE	EMD (JACKET WATER - 30°-300°F)	1

PARTS LIST

766-DF

NAVAL ENERGY AND ENVIRONMENTAL SUPPORT ACTIVITY
PORT HUENEME, CALIFORNIA

OVERHAUL 1500 KW
DIESEL POWER PLANTS
JACKET WATER SYSTEM SCHEMATIC

DUEL FUEL 1500 KW
CONVERSION OF DIESEL POWER PLANTS

SATISFACTORY TO
MIKE CHILDERS
NORMAN HENDERSON, DEC. 1998

SIZE F | CODE IDENT NO 80091 | MANFAC DRAWING NO 6276553
CONTR NO N47408-89-C-2011
SCALE NONE | SHEET 7 OF

3

SWITCHGEAR CONTROL UNIT END

ENGINE GENERATOR UNIT END

SWITCHGEAR CONTROL U

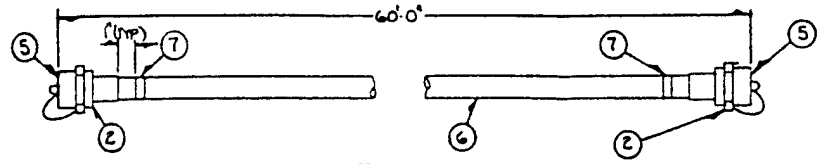

CABLE - 8 GROUPS TWISTED SHIELDED
PAIRS #20 AWG
PAIRS INDIVIDUALLY SHIELDED WITH DRAIN WIRE,
OVERALL SHIELD WITH DRAIN WIRE
600 VOLT INSULATION CLASS
RATED FOR 105°C

(1) CABLE "A" ~ INSTRUMENTATION CABLE

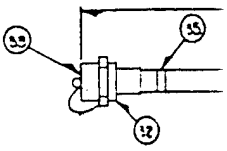

(31) CABLE

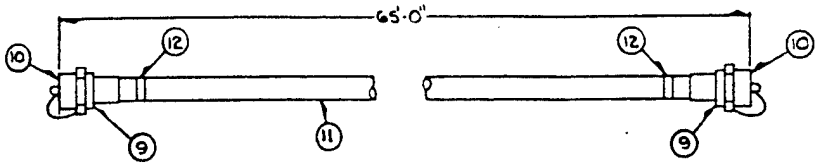

CABLE - 40 CONDUCTOR #14 AWG
600 VOLT INSULATION TYPE SOW-A
RATED FOR 90°C

(8) CABLE "B" ~ CONTROL CABLE

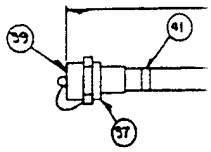

(36) CABLE "

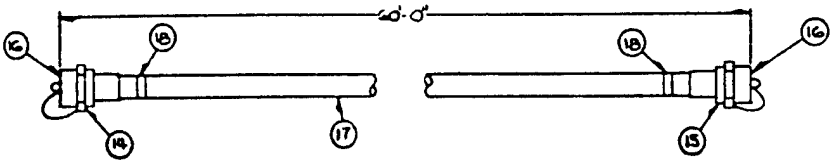

CABLE - 3 CONDUCTOR #4 AWG
WITH 1-#12 GROUND WIRE
600 VOLT INSULATION
RATED FOR 90°C

(13) CABLE "C" ~ 480 VAC STATION POWER CABLE

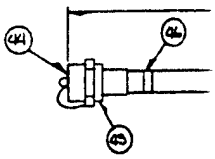

(42) CABLE "

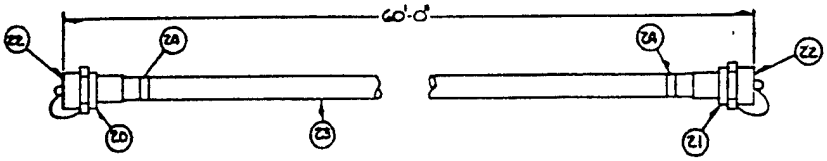

CABLE - 3 CONDUCTOR #6 AWG
600 VOLT INSULATION TYPE SO
RATED FOR 90°C

(19) CABLE "D" ~ 120/240 STATION POWER CABLE

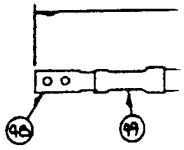

(47) C
GENERATO

(55) CABLE "J" ~ CONTROL CABLE (ECW)
SAME AS CABLE "B" ABOVE

(56) C

NERATOR UNIT END | SWITCHGEAR CONTROL UNIT END | ENGINE GENERATOR UNIT END (EXCEPT CABLE 'F')

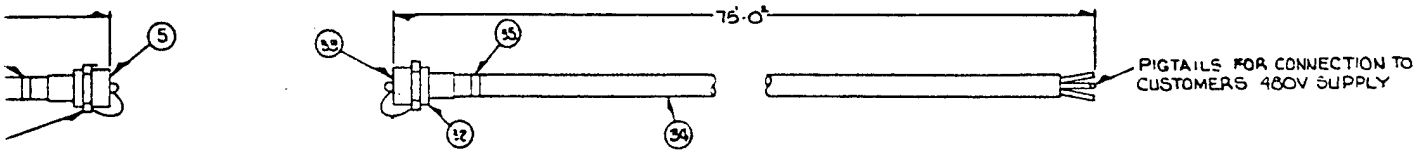

CABLE - 3 CONDUCTOR #2AWG WITH #10 GROUND
600 VOLT INSULATION
RATED FOR 90°C

(31) CABLE "F" ~ SHORE POWER CABLE

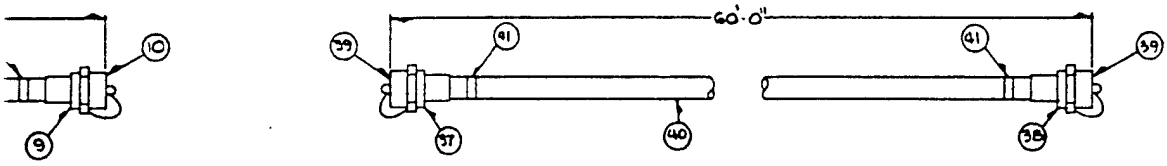

CABLE - 4 CONDUCTOR #10 AWG
600 VOLT INSULATION
RATED FOR 90°C

(36) CABLE "G" ~ 125 V DC POWER & EMER. LIGHTING CABLE

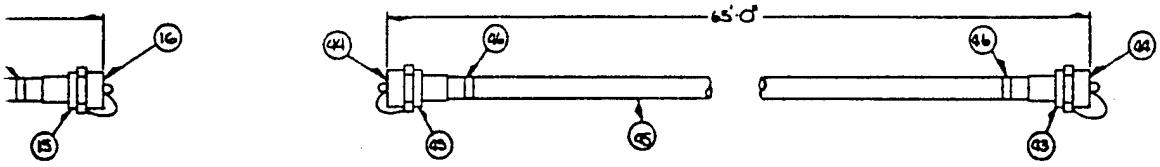

CABLE - 40 CONDUCTOR #14 AWG
600 VOLT INSULATION TYPE SOW-A
RATED FOR 90°C

(42) CABLE "H" ~ ANNUNCIATOR CABLE

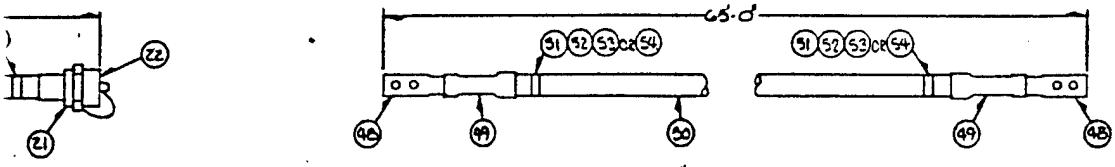

1 - CONDUCTOR #2/0 AWG
5/15 KV INSULATION
RATED FOR 90°C.

(47) GENERATOR POWER CABLE BETWEEN GENERATOR CABLE CONNECTION BOX & SWITCHGEAR CONTROL UNIT

(56) CABLE "S" ~ COMMUNICATIONS CABLE

QTY REQD	FSCM NO	PART OR IDENTIFYING NO.	NOMENCLATURE OR DESCRIPTION
1			CABLE ASS
1			CABLE ASS
2	80607		METAL TAG
2	80607		METAL TAG
2	80607		METAL TAG
2	80607		METAL TAG
65FT	57672	5R-2021	CABLE
2	4L056	54031-2	HEAT SHRINK
2	4L056	53681-2	LUG
4			CABLE ASSY.
2	80607		METAL TAG
65FT	57672	4A-1440	CABLE
2	5U539	2PE033-008	DUST CAP
2	5U539	RPEM133-338-517NT	PLUG
1			CABLE ASSY.
2	80607		METAL TAG
60FT	57672	4A-1004	CABLE
2	5U539	CPK13	DUST CAP
1	5U539	APJ3475522	PLUG
1	5U539	APJ3475	PLUG
1			CABLE ASSY.
1	80607		METAL TAG
75FT	5P990	H02216	CABLE
1	5U539	-CPK64	DUST CAP
1	5U539	APJ1047754/522	PLUG
1			CABLE ASSY
			(REMOVED)
			(REMOVED)
			(REMOVED)
			(REMOVED)
			(REMOVED)
			(REMOVED)
2	80607		METAL TAG
60FT	57672	4A-0603	CABLE
2	5U539	CPK32	DUST CAP
1	5U539	APJ6375522	PLUG
1	5U539	APJ6375	PLUG
1			CABLE ASSY
2	80607		METAL TAG
60FT	5P990	H02214	CABLE
2	5U539	CPK34	DUST CAP
1	5U539	APJ6485522	PLUG
1	5U539	APJ6485	PLUG
1			CABLE ASSY.
2	80607		METAL TAG
65FT	57672	4A-1440	CABLE
2	5U539	RPE033-008	DUST CAP
2	5U539	RPEM133-388-P17NT	PLUG
1			CABLE ASSY.
2	80607		METAL TAG
60FT	5P990	H10303	CABLE
2	08051	MS25042-28D	DUST CAP
2	08051	MS3106F-28-16P	PLUG
1			CABLE ASSY

DUEL FUEL 1500 KW
CONVERSION OF DIESEL POWER PLANTS

SATISFACTORY TO
MIKE CHILDERS
NORMAN H. SESSIN OCT 1990

768-

2

REVISIONS				
ZONE	LTR	DESCRIPTION	DATE	APPROVED
	A	SEE NEESA DCN 92-3	1992-1-6	

ENGINE GENERATOR UNIT END
(EXCEPT CABLE 'F')

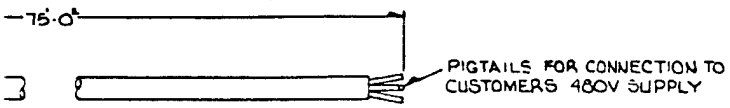

TOR #2AWG WITH #10 GROUND
T-ON

POWER CABLE

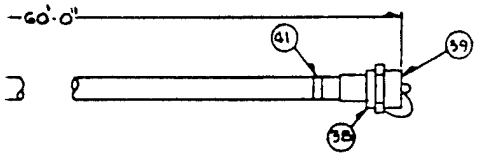

TOR #10 AWG
TION

POWER & EMER. LIGHTING CABLE

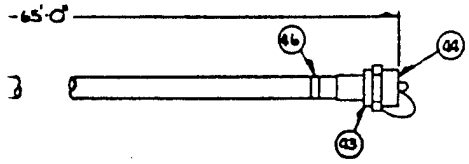

CTOR #14 AWG
TION TYPE SOW-A

TOR CABLE

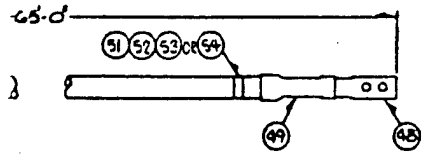

/0 AWG
N

ER CABLE BETWEEN
ECTION BOX & SWITCHGEAR CONTROL UNIT

OMMUNICATIONS CABLE

QTY REQD	FSCM NO.	PART OR IDENTIFYING NO.	NOMENCLATURE OR DESCRIPTION	MATERIAL/SPECIFICATION	ITEM NO.
1			CABLE ASS'Y.	CABLE "S" COMM. CABLE	56
1			CABLE ASS'Y.	CABLE "J" (ITEMS 9-12)	55
2	80607		METAL TAG	"N"	54
2	80607		METAL TAG	"T-3"	53
2	80607		METAL TAG	"T-2"	52
2	80607		METAL TAG	"T-1"	51
65FT	57672	3R-2021	CABLE	ANIXTER (1 COND. 2/0 AWG, 5/15 KV)	50
2	4L056	54031-2	HEAT SHRINK	AMP	49
2	4L056	53681-2	LUG	AMP (2/0 NEMA 2 HOLE, COMPRESSION)	48
4			CABLE ASSY.	GENERATOR POWER (ITEMS 48-50 & 2 OF ITEMS 51-54)	47
2	80607		METAL TAG	"ANNUNCIATOR"	46
65FT	57672	4A-1440	CABLE	ANIXTER (40 COND. #14 AWG, 600 VOLT)	45
2	5U539	2PE033-008	DUST CAP	CROUSE HINDS	44
2	5U539	RPEM133-338-517NT	PLUG	CROUSE HINDS (39 WIRE, 39 POLE, FEMALE)	43
1			CABLE ASSY.	CABLE "H" ~ ANNUNCIATOR (ITEMS 43-46)	42
2	80607		METAL TAG	"125 VDC POWER & EMERG. LTS."	41
60FT	57672	4A-1004	CABLE	ANIXTER (4 COND. #10 AWG, 600 VOLT)	40
2	5U539	CPK13	DUST CAP	CROUSE HINDS	39
1	5U539	APJ3475522	PLUG	CROUSE HINDS (4 WIRE, 4 POLE, FEMALE)	38
1	5U539	APJ3475	PLUG	CROUSE HINDS (4 WIRE, 4 POLE, MALE)	37
1			CABLE ASSY.	CABLE "G" ~ 125 VDC PWR & EMER. LIGHTS (ITEMS 37-41)	36
1	80607		METAL TAG	"SHORE POWER"	35
75FT	5P990	H02216	CABLE	HOUSTON (3 COND. #2 AWG W/1 #10 GRD.)	34
1	5U539	CPK64	DUST CAP	CROUSE HINDS	33
1	5U539	APJ1047754/522	PLUG	CROUSE HINDS (4 WIRE, 4 POLE, FEMALE OFFSET 22½°)	32
1			CABLE ASSY.	CABLE "F" ~ SHORE POWER (ITEMS 32-35)	31
			(REMOVED)		30
			(REMOVED)		29
			(REMOVED)		28
			(REMOVED)		27
			(REMOVED)		26
			(REMOVED)		25
2	80607		METAL TAG	"120/240 VAC STATION POWER"	24
60FT	57672	4A-0603	CABLE	ANIXTER (3 COND. #6 AWG, 600 VOLT)	23
2	5U539	CPK32	DUST CAP	CROUSE HINDS	22
1	5U539	APJ6375522	PLUG	CROUSE HINDS (3 WIRE, 3 POLE, FEMALE)	21
1	5U539	APJ6375	PLUG	CROUSE HINDS (3 WIRE, 3 POLE, MALE)	20
1			CABLE ASSY.	CABLE "D" ~ 120/240 VAC STA. PWR (ITEMS 20-24)	19
2	80607		METAL TAG	"480 VAC STATION POWER"	18
60FT	5P990	H02214	CABLE	HOUSTON (3 COND. #4 AWG W/1 #12 GRD.)	17
2	5U539	CPK34	DUST CAP	CROUSE HINDS	16
1	5U539	APJ6485522	PLUG	CROUSE HINDS (3 WIRE, 4 POLE, FEMALE)	15
1	5U539	APJ6485	PLUG	CROUSE HINDS (3 WIRE, 4 POLE, MALE)	14
1			CABLE ASSY.	CABLE "C" ~ 480 VAC STA. PWR. (ITEMS 14-18)	13
2	80607		METAL TAG	"CONTROL"	12
65FT	57672	4A-1440	CABLE	ANIXTER (40 COND. #14 AWG., 600 VOLT)	11
2	5U539	RPE033-008	DUST CAP	CROUSE HINDS	10
2	5U539	RPEM133-388-P17NT	PLUG	CROUSE HINDS (39 WIRE, 39 POLE, MALE)	9
1			CABLE ASSY.	CABLE "B" ~ CONTROL (ITEMS 9-12)	8
2	80607		METAL TAG	"INSTRUMENTATION"	7
60FT	5P990	H10303	CABLE	HOUSTON (8 GPS-TWISTED SHIELDED PAIRS #20 AWG)	6
2	08051	MS25042-28D	DUST CAP	CANNON	5
				N/A	4
				N/A	3
2	08051	MS3106F-28-16P	PLUG	CANNON (20 WIRE, 20 POLE, MALE)	2
1			CABLE ASSY.	CABLE "A" ~ INSTRUMENTATION (ITEMS 2-7)	1

PARTS LIST

768-DF

NAVAL ENERGY AND ENVIRONMENTAL SUPPORT ACTIVITY
PORT HUENEME, CALIFORNIA 93043-5014

OVERHAUL 1500 KW
DIESEL POWER PLANTS
INTERCONNECTING CABLES

DUEL FUEL 1500 KW
CONVERSION OF DIESEL POWER PLANTS

SATISFACTORY TO
MIKE CHILDERS
NORMAN HUDSON DEC 1998

SIZE F | CODE IDENT NO 80091 | NAVFAC DRAWING NO 6276555
CONTRACT NO N47408-89-C-2011
SCALE NONE | SHEET 9 OF

3

SWITCHGEAR CONTROL UNIT END

CANNON
*MS 3102R-28-16S RECEPTACLE
*MS 25043-28D DUST CAP
13 AMP, 500 V AC
20 WIRE, 20 POLE

ENGINE-GENERATOR UNIT END

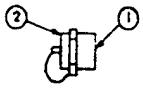

CANNON
*MS 3102R-28-16S RECEPTACLE
*MS 25043-28D DUST CAP
13 AMP 500 V AC
20 WIRE, 20 POLE

SWITCHGEAR CONTROL L

CROUSE HINDS
*AR104754/572 RE
(PIN INSERT)
100 AMP, 600 V AC
4 POLE, 4 WIRE
(ROTATED 22.5°)

RECEPTACLE "A"-INSTRUMENTATION CABLE

RECEPT

CROUSE HINDS
*RPE233-014-S17NT RECEPTACLE W/CAP
(SOCKET INSERT)
30AMP, 250 V AC
39 WIRE, 39 POLE

CROUSE HINDS
*RPE233-014-S17NT RECEPTACLE W/CAP
(SOCKET INSERT)
30AMP, 250 V AC
39 WIRE, 39 POLE

CROUSE HINDS
*AR347 RECEPTACLE
(SOCKET INSERT)
30 AMP, 600V AC
4 WIRE, 4 POLE

RECEPTACLE "B"-CONTROL CABLE

RECEPTACLE "G"

CROUSE HINDS
*AR648 RECEPTACLE W/CAP
(SOCKET INSERT)
60 AMP, STYLE 2
3 WIRE, 4 POLE

CROUSE HINDS
*AR6648S22 RECEPTACLE W/CAP
(PIN INSERT)
60 AMP, STYLE 2
3 WIRE, 4 POLE

CROUSE HINDS
*RPE233-014-P17NT
(PIN INSERT)
30 AMP, 250V AC
39 WIRE, 39 POLE

RECEPTACLE "C"-480V AC STATION POWER CABLE

RECEPTACLE

CROUSE HINDS
*AR637 RECEPTACLE W/CAP
(SOCKET INSERT)
60 AMP 600 V AC
3 WIRE, 3 POLE

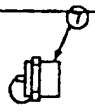

CROUSE HINDS
*AR6637S22 RECEPTACLE W/CAP
(PIN INSERT)
60 AMP, 600V AC
3 WIRE, 3 POLE

RECEPTACLE "D"-120/240V AC STATION POWER CABLE

RECEPTACLE "J" CONTROL CABLE (ECU)

SAME AS RECEPTACLE "B"

RECEPTACLE "S"

SAME AS RE

ZONE	LTR	
	A	SEE NEESA

END

SWITCHGEAR CONTROL UNIT END

ENGINE-GENERATOR UNIT END

TACLE
AP

CROUSE HINDS
*AR10475 4/522 RECEPTACLE W/CAP
(PIN INSERT)
100 AMP, 600 V AC
4 POLE, 4 WIRE
(ROTATED 22.5°)

RECEPTACLE "F"~ SHORE POWER CABLE

RECEPTACLE W/CAP

CROUSE HINDS
*AR 347 RECEPTACLE W/CAP
(SOCKET INSERT)
30 AMP, 600V AC
4 WIRE, 4 POLE

CROUSE HINDS
*AR 6347S22 RECEPTACLE W/CAP
(PIN INSERT)
30 AMP, 600 V AC
4 WIRE, 4 POLE

RECEPTACLE "G"~125 V DC POWER & EMER. LIGHTING CABLE

TACLE W/CAP

CROUSE HINDS
*RPE233-014-P17NT RECEPTACLE W/CAP
(PIN INSERT)
30 AMP, 250V AC
39 WIRE, 39 POLE

CROUSE HINES
*RPE233-014-P17NT RECEPTACLE W/CAP
(PIN INSERT)
30 AMP, 250V AC
39 WIRE, 39 POLE

RECEPTACLE "H"~ANNUNCIATOR CABLE

E W/CAP

QTY REQD	FSCM NO.	PART OR IDENTIFYING NO.	NOMENCLATURE OR DESCRIPTION	
2	5U539	RPE233-014-P17NT	RECEPTACLE	CROUS
1	5U539	AR 6347S22	RECEPTACLE	CROUS
1	5U539	AR 347	RECEPTACLE	CROUS
1	5U539	AR10475 4/522	RECEPTACLE	CROUS
			(REMOVED)	
			(REMOVED)	
1	5U539	AR6637S22	RECEPTACLE	CROUSE
1	5U539	AR637	RECEPTACLE	CROUS
1	5U539	AR6648S22	RECEPTACLE	CROUS
1	5U539	AR648	RECEPTACLE	CROUS
2	5U539	RPE233-014-S17NT	RECEPTACLE	CROUS
2	C8051	MS 25043-28D	DUST CAP	CANNO
2	C8051	MS 3102R-28-16S	RECEPTACLE	CANNO

PARTS LIST

RECEPTACLE "S" COMMUNICATIONS CABLE

SAME AS RECEPTACLE "B"

769-DF

DUEL FUEL 1500 KW
CONVERSION OF DIESEL POWER PLANTS

SATISFACTORY TO
MIKE CHILDERS
NORMAN HILLESON DEC 1996

NAV

F

(2)

REVISIONS				
ZONE	LTR	DESCRIPTION	DATE	APPROVED
	A	SEE NEESA DCN 92-4.	1992-1-6	

ENGINE-GENERATOR UNIT END

CAP

RE POWER CABLE

CROUSE HINDS
*AR 6347S22 RECEPTACLE & CAP
(PIN INSERT)
30 AMP, 600 V AC
4 WIRE, 4 POLE

POWER & EMER. LIGHTING CABLE

CROUSE HINES
AP *RPE233-014-P17NT RECEPTACLE W/CAP
(PIN INSERT)
30 AMP, 250V AC
39 WIRE, 39 POLE

IATOR CABLE

CATIONS CABLE

3"

QTY REQD	FSCM NO	PART OR IDENTIFYING NO.	NOMENCLATURE OR DESCRIPTION	MATERIAL/SPECIFICATION	ITEM NO.
2	5U539	RPE233-014-P17NT	RECEPTACLE	CROUSE HINDS (39 WIRE, 39 POLE, MALE)	13
1	5U539	AR6347S22	RECEPTACLE	CROUSE HINDS (4 WIRE, 4 POLE, MALE)	12
1	5U539	AR347	RECEPTACLE	CROUSE HINDS (4 WIRE, 4 POLE, FEMALE)	11
1	5U539	AR10475 4/S22	RECEPTACLE	CROUSE HINDS (4 WIRE, 4 POLE, MALE)	10
			(REMOVED)		9
			(REMOVED)		8
1	5U539	AR6637S22	RECEPTACLE	CROUSE HINDS (3 WIRE, 3 POLE, MALE)	7
1	5U539	AR637	RECEPTACLE	CROUSE HINDS (3 WIRE, 3 POLE, FEMALE)	6
1	5U539	AR6648S22	RECEPTACLE	CROUSE HINDS (3 WIRE, 4 POLE, MALE)	5
1	5U539	AR648	RECEPTACLE	CROUSE HINDS (3 WIRE, 4 POLE, FEMALE)	4
2	5U539	RPE233-014-S17NT	RECEPTACLE	CROUSE HINDS (39 WIRE, 39 POLE, FEMALE)	3
2	C8051	MS 25043-28D	DUST CAP	CANNON	2
2	C8051	MS 3102R-28-16S	RECEPTACLE	CANNON (20 WIRE, 20 POLE, FEMALE)	1

PARTS LIST

DUEL FUEL 1500 KW
CONVERSION OF DIESEL POWER PLANTS

SATISFACTORY TO
MIKE CHILDERS
NORMAN HIGESON DEC 1994

769-DF

NAVAL ENERGY AND ENVIRONMENTAL SUPPORT ACTIVITY

OVERHAUL 1500 KW
DIESEL POWER PLANTS
INTERCONNECTING CABLES
MATING RECEPTACLES

SIZE F | CAGE NO 80091 | NAVFAC DRAWING NO 6276556

CONTRACT NO N47408-89-C-2011

SCALE NONE | SHEET 10 OF

3 2 1A 1

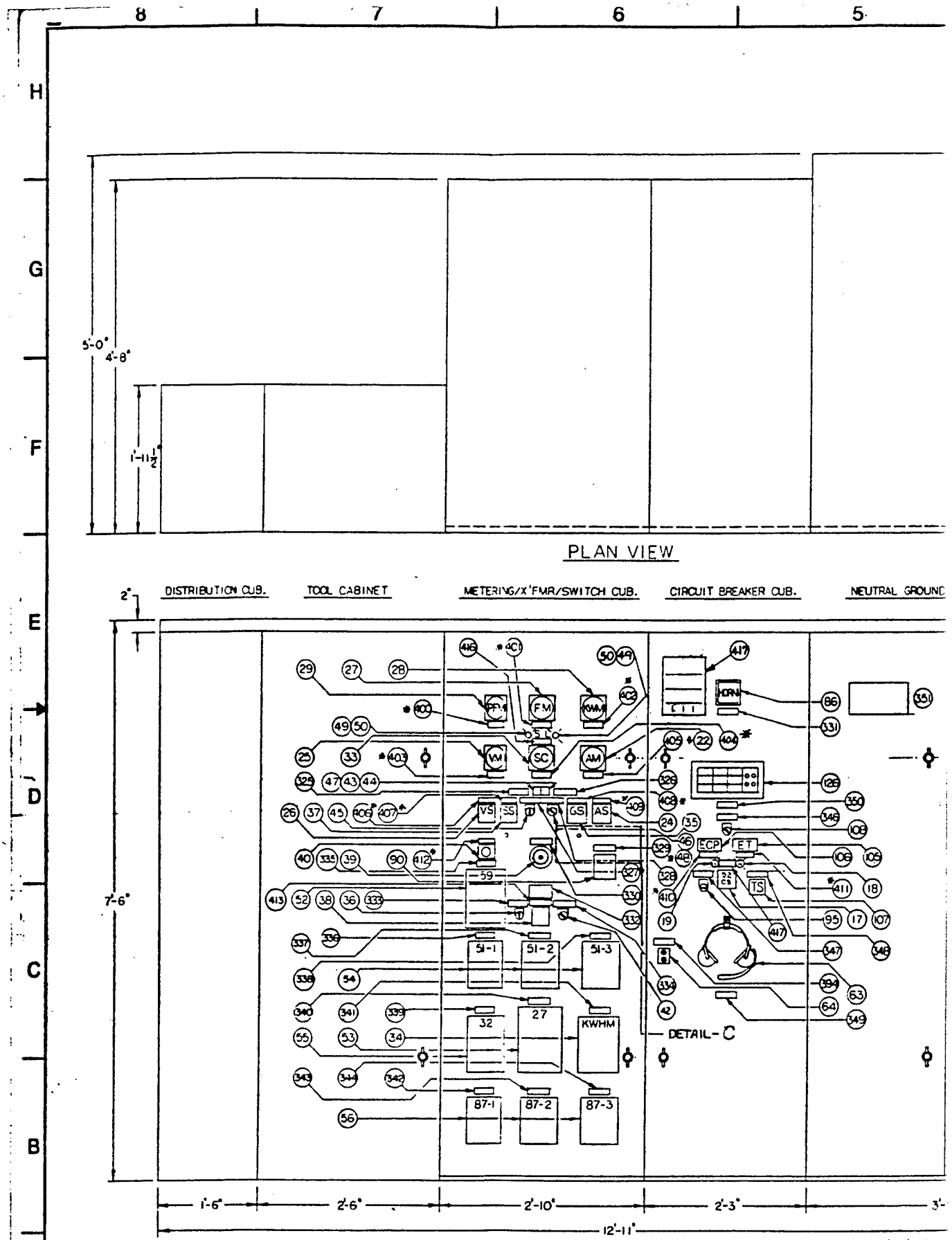
PLAN VIEW
5'-0"
4'-8"
1'-11½"
DISTRIBUTION CUB.
TOOL CABINET
METERING/X'FMR/SWITCH CUB.
CIRCUIT BREAKER CUB.
NEUTRAL GROUND
2"
7'-6"
FM
KWHM
VM
SC
AM
VS
SS
GS
AS
ECP
ET
TS
HORN
51-1
51-2
51-3
32
27
KWHM
87-1
87-2
87-3
DETAIL-C
1'-6"
2'-6"
2'-10"
2'-3"
12'-11"
FRONT ELEVATION
*SEE BILL OF MATERIALS
DWG 6276560

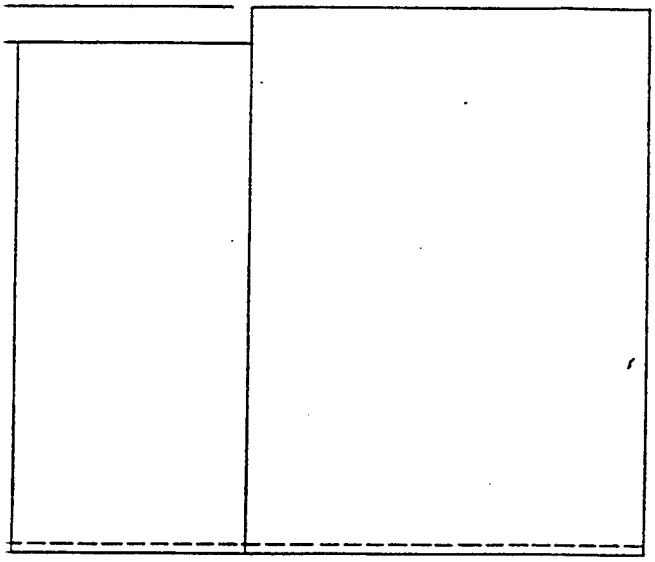

EW

CIRCUIT BREAKER CUB. NEUTRAL GROUNDING REACTOR CUB.

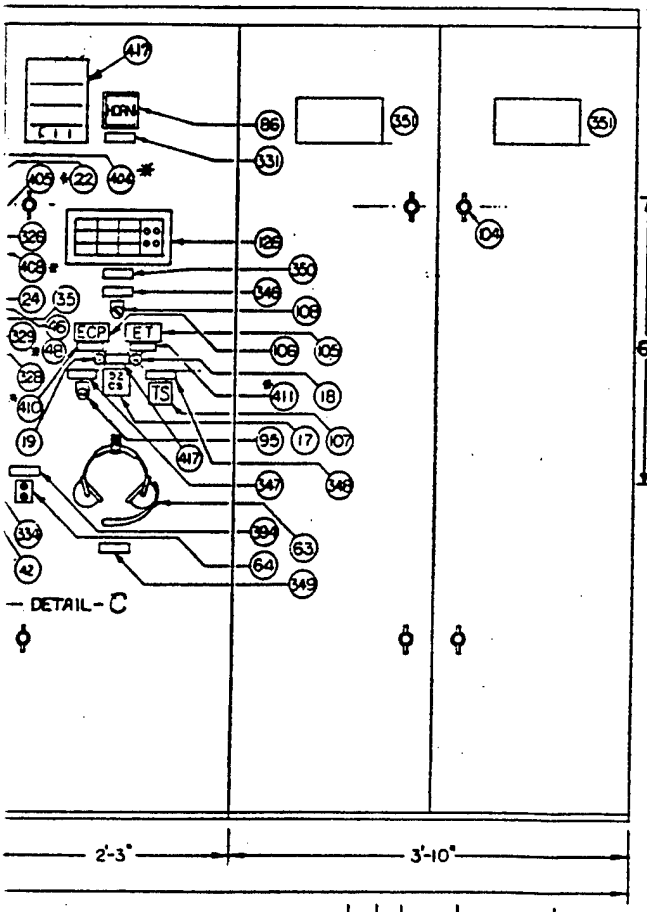

— DETAIL-C

DANGER
HIGH VOLTAGE
OPENING THIS DOOR
WILL TRIP GEN CIRCUIT BREAKER
HIGH VOLTAGE MAY BE PRESENT
EVEN THOUGH GEN IS SECURED.

6" × 15"

(35) DETAIL-A SCALE: 1/2

RED PHENOLIC WITH WHITE LETTERS

1/2" LETTERS

4" × 1 3/4"

CAUTION
DO NOT IDLE ENGINE
BELOW 75% ENGINE SPEED
WITH VOLTAGE REG ON

(32) DETAIL-B

RED PHENOLIC WITH WHITE LETTERS

1/4" LETTERS

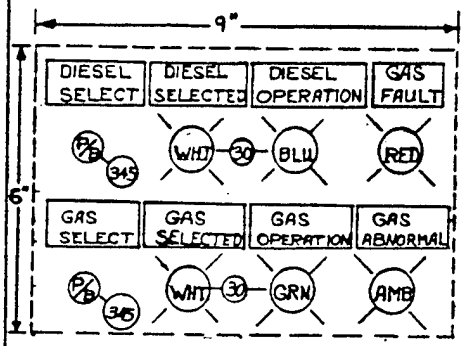

— DETAIL-C

DUAL FUEL STATUS LIGHTS, SELECTOR SWITCHES, AND LABELING PLATES — BLACK PHENOL WITH WHITE LETTERS

ZONE	LTR	DESCR
	A	SEE NEESA DCN 9

1			GAS DETECTOR	SIERRA MON
1	1CA79	NAMEPLATE	1 X 3 BLACK	SYNCHRONIZ
1	56093	JP-2	JACK PLATE	SOUND POWE
1	1CA79	NAMEPLATE	1 X 3 1/2 BLACK	SOUND POWE
2	1CA79	NAMEPLATE	6 X 15 RED	(SEE DETAIL
1	1CA79	NAMEPLATE	1 X 3 1/2 BLACK	ANNUNCIATO
1	1CA79	NAMEPLATE	1 X 3 1/2 BLACK	5KV CIRCUIT
1	1CA79	NAMEPLATE	1 X 3 1/2 BLACK	ENGINE TEM
1	1CA79	NAMEPLATE	1 X 3 1/2 BLACK	ENGINE STO
1	1CA79	NAMEPLATE	1 X 3 1/2 BLACK	EMERGENCY
1	1CA79	NAMEPLATE	1 X 3 1/2 BLACK	ALARM HORN
2			PUSH-BTN SW	C-H (INO/IN
1	1CA79	NAMEPLATE	1 X 3 1/2 BLACK	DIFFERENTIA
1	1CA79	NAMEPLATE	1 X 3 1/2 BLACK	DIFFERENTIA
1	1CA79	NAMEPLATE	1 X 3 1/2 BLACK	DIFFERENTIA
1	1CA79	NAMEPLATE	1 X 3 1/2 BLACK	KILOWATT
1	1CA79	NAMEPLATE	1 X 3 1/2 BLACK	UNDER VOL
1	1CA79	NAMEPLATE	1 X 3 1/2 BLACK	REVERSE P
1	1CA79	NAMEPLATE	1 X 3 1/2 BLACK	OVER CURR
1	1CA79	NAMEPLATE	1 X 3 1/2 BLACK	OVER CURR
1	1CA79	NAMEPLATE	1 X 3 1/2 BLACK	OVER CURR
1	1CA79	NAMEPLATE	1 X 3 1/2 BLACK	OVER VOLT
1	1CA79	NAMEPLATE	1 X 3 1/2 BLACK	UNIT PARAL
1	1CA79	NAMEPLATE	1 X 3 1/2 BLACK	FREQUENCY
1	1CA79	NAMEPLATE	1 3/4 X 4 RED	(SEE DETAIL
1	1CA79	NAMEPLATE	1 X 3 1/2 BLACK	MANUAL FIE
1	1CA79	NAMEPLATE	1 X 3 1/2 BLACK	LOCKOUT REL
1	1CA79	NAMEPLATE	1 X 3 BLACK	PHASE SEQ.
1	1CA79	NAMEPLATE	1 X 3 BLACK	PHASE SEQ.
1	1CA79	NAMEPLATE	1 X 3 1/2 BLACK	PHASE SEQ.
1	1CA79	NAMEPLATE	1 X 3 1/2 BLACK	PHASE SEQ.
1	32582	TYPE-4N3CO	ANNUNCIATOR	ROCHESTER, AN
1	15605	10250T20K6S42	SW. EMERG LTS	CUTLER-HAM
1	62606	SBMICAAC44	SW. ENG. TEMP	GE, TYPE SBM
1	81045	CE-4700-0000	METER, DGTL PNL	LFE, MODEL 44
1	81045	CE-9994-0000	METER, DGTL PNL	LFE, MODEL 444
10	67978	68-10-101-20	TEE HANDLE	SOUTHCO. CH
1	15605	10250TRS34	ENGINE STOP PB	CUTLER-HAM
1	60336	112HEA61M21	RELAY, DEVICE 86	PROTECTIVE
1	65063	450	HORN	FEDERAL, 125
3	62606	121JD52A11A	RELAY, DEVICE-87	GE, PROTECTI
1	62606	121CW51A1A	RELAY, DEVICE-32	GE, PROTECTI
3	62606	121FCV51A01A	RELAY, DEVICE-51	GE, PROTECTI
1	62606	121AV54E1A	RELAY, DEVICE-27	GE, PROTECTI
1	62602	121AV51A1A	RELAY, DEVICE-59	GE, PROTECTI
2	24455	6S60C-125V	LAMP, SYNC	GE, LAMP, 125
2	96312	9-3202-0533-301	LIGHT, SYNC	DIALCO, 24V
2	54837	B8J22K5	RES, 22.5KΩ, 8W	OHMITE META
1	15605	10250T1371	SW, Ø SEQ TEST	CUTLER-HAM
1	15605	10250T21K8	SWITCH, Ø SEQ	CUTLER-HAM
2	62606	B7A (NE45)	LAMP, NEON	GE, T-4 1/2 SC
2	62606	CR103C2102	LIGHT, INDICATOR	GE, TYPE CR10
1	15605	10250T20K8	SWITCH, PARALLEL	CUTLER-HAM
1	68513	06874	RHEO, 500Ω-4W	BASLER, AUT
1	54837	5105	RHEOSTAT, FIELD	OHMITE, 75Ω,
1	62606	C3C2951A2P1	SW, VOLT REG	GE, TYPE-SBM
1	62606	SBMIOAA024	SWITCH, SYNC	GE, TYPE-SBM
1	15605	10250T21K8	SWITCH, FREQ	CUTLER-HAM
1	62606	SBMIOAAC65	SWITCH, GOV	GE, TYPE-SBM
1	60335	70CX63G1	KILOWATT-HOUR MTR	GE, TYPE-DS-
1	60336	50-106-452-AAAA	SYNCHROSCOPE	GE, TYPE-AB-
6	P/N 10250T/91000b		LAMP SOCKETS	CUTLER-HAM
1	60336	50-103-[illegible]	POWER FACTOR MTR	GE, TYPE-AB-
1	60336	[illegible]	KILOWATT METER	GE, TYPE-AB-
1	60336	50-103-372-A[illegible]	FREQUENCY MTR	GE, TYPE-AB-
1	62606	SBMIOAAC07	SW, VOLTMETER	GE, TYPE-SBM
1	60336	50-103-02-H2[illegible]	VOLTMETER	GE, TYPE-AB-
1	62606	SBMIOAAC06	SWITCH, AMMETER	GE, TYPE-SBM
1	60336	50-103-131-L[illegible]	AMMETER	GE, TYPE-AB-
1	62606	CR6B6703G3-G	LIGHT, GREEN	GE, TYPE-ET-
1	62606	CR6B6703G3-R	LIGHT, RED	GE, TYPE-ET-
1	62606	SBMICAA107	SW, CB CONTROL	GE, TYPE-SBM

QTY REQD	FSCM NO.	PART OR IDENTIFYING NO.	NOMENCLATURE OR DESCRIPTION

PARTS LIST

ATION

E BILL OF MATERIALS
G 6276560

4	15605	10250TS36	NAMEPLATE	UNIT PARALLEL AND PHASE SEQUENCE TEST FREQUENCY AND PHASE SEQUENCE	128
1	15605	10250T2	CONTACT BLOCK	CONTACT BLOCK USED WITH ITEM 46	127

QTY REQD	FSCM NO	PART OR IDENTIFYING NO	NOMENCLATURE OR DESCRIPTION	MATERIAL/SPECIFICATION	ITEM NO

PARTS LIST

NEESA DRAWING NO 772-DF

DUEL FUEL 1500 KW
CONVERSION OF DIESEL POWER PLANTS

PREPARED CHECKED REVIEWED ENGINEER OR SHOP HEAD APPROVED DATE

SATISFACTORY TO NAVAL CONTRACTS
NORMAN WILLSON DEC 1994

SATISFACTORY TO NAVAL OFFICER

DEPARTMENT OF THE NAVAL ENERG

SIZE F CAGE NO 800

SCALE 1/8

REVISIONS				
ZONE	LTR	DESCRIPTION	DATE	APPROVED
	A	SEE NEESA DCN 92-6	1992-1-7	

	1		GAS DETECTOR	SIERRA MONITOR CONTROLLER		417
	1	ICA79 NAMEPLATE	1 X 3 BLACK	SYNCHRONIZING / LIGHTS		416
	1	5609 JP-2	JACK PLATE	SOUND POWER HEADSET		64
	1	ICA79 NAMEPLATE	1 X 3 1/2 BLACK	SOUND POWER PHONE JACK		394
	2	ICA79 NAMEPLATE	6 X 15 RED	(SEE DETAIL-A)		351
	1	ICA79 NAMEPLATE	1 X 3 1/2 BLACK	ANNUNCIATOR		350
	1	ICA79 NAMEPLATE	1 X 3 1/2 BLACK	5KV CIRCUIT/BREAKER CUBICLE		349
	1	ICA79 NAMEPLATE	1 X 3 1/2 BLACK	ENGINE TEMP/OIL WATER		348
	1	ICA79 NAMEPLATE	1 X 3 1/2 BLACK	ENGINE STOP		347
	1	ICA79 NAMEPLATE	1 X 3 1/2 BLACK	EMERGENCY LIGHTS / OFF ON		346
	1	ICA79 NAMEPLATE	1 X 3 1/2 BLACK	ALARM HORN		331
	2		PUSH-BTN SW	C-H (INDINC) P/N 10260T791000t		345
	1	ICA79 NAMEPLATE	1 X 3 1/2 BLACK	DIFFERENTIAL / RELAY - 3		344
	1	ICA79 NAMEPLATE	1 X 3 1/2 BLACK	DIFFERENTIAL / RELAY - 2		343
	1	ICA79 NAMEPLATE	1 X 3 1/2 BLACK	DIFFERENTIAL / RELAY - 1		342
	1	ICA79 NAMEPLATE	1 X 3 1/2 BLACK	KILOWATT HOUR / METER		341
	1	ICA79 NAMEPLATE	1 X 3 1/2 BLACK	UNDER VOLTAGE / RELAY		340
	1	ICA79 NAMEPLATE	1 X 3 1/2 BLACK	REVERSE POWER / RELAY		339
	1	ICA79 NAMEPLATE	1 X 3 1/2 BLACK	OVER CURRENT / RELAY - 3		338
	1	ICA79 NAMEPLATE	1 X 3 1/2 BLACK	OVER CURRENT / RELAY - 2		337
	1	ICA79 NAMEPLATE	1 X 3 1/2 BLACK	OVER CURRENT / RELAY - 1		336
	1	ICA79 NAMEPLATE	1 X 3 1/2 BLACK	OVER VOLTAGE / RELAY		335
	1	ICA79 NAMEPLATE	1 X 3 1/2 BLACK	UNIT PARALLEL SWITCH		334
	1	ICA79 NAMEPLATE	1 X 3 1/2 BLACK	FREQUENCY METER/SWITCH		333
	1	ICA79 NAMEPLATE	1 3/4 X 4 RED	(SEE DETAIL-B)		332
	1	ICA79 NAMEPLATE	1 X 3 1/2 BLACK	MANUAL FIELD/RHEOSTAT		330
	1	ICA79 NAMEPLATE	1 X 3 1/2 BLACK	LOCKOUT RELAY		329
	1	ICA79 NAMEPLATE	1 X 3 BLACK	PHASE SEQ. / TEST		328
	1	ICA79 NAMEPLATE	1 X 3 BLACK	PHASE SEQ. / SELECT		327
	1	ICA79 NAMEPLATE	1 X 3 1/2 BLACK	PHASE SEQ. / CBA		326
	1	ICA79 NAMEPLATE	1 X 3 1/2 BLACK	PHASE SEQ. / ABC		325
	1	32582 TYPE-AN3100	ANNUNCIATOR	ROCHESTER, AN-3100A-D14-INTB-3E-9-W-MX-B-MOD-RMD		126
	1	15605 10250T20K6S42	SW. EMERG LTS	CUTLER-HAMMER, 2PST, ON OFF LIGHTING		108
	1	62606 SBM10AAC44	SW. ENG. TEMP.	GE, TYPE SBM, 4P, OIL-WATER		107
	1	81045 CE-4700-0000	METER, DGTL PNL	LFE MODEL 4443, 0-100 MV RANGE 100 PSIG		106
	1	81045 CE-99940000	METER, DGTL PNL	LFE MODEL 4443, RTD 100Ω PLAT-200°+600°F		105
	10	67978 68-10-101-20	TEE HANDLE	SOUTHCO. CHROME-PLATED HANDLE		104
	1	15605 10250TRS34	ENGINE STOP PB	CUTLER-HAMMER, OIL-TIGHT, 1 NC CONTACT		95
	1	60336 12HEA61M21	RELAY, DEVICE 86	PROTECTIVE, LOCKOUT RELAY		90
	1	65063 450	HORN	FEDERAL, 125VDC VIBRATONE HORN		86
	3	62606 12IJD52A11A	RELAY, DEVICE-87	GE, PROTECTIVE DIFFERENTIAL RELAY		56
	1	62606 12ICW51A1A	RELAY, DEVICE-32	GE, PROTECTIVE REVERSE POWER RELAY		55
	3	62606 12IFCV51A0IA	RELAY, DEVICE-51	GE, PROTECTIVE OVERCURRENT RELAY		54
	1	62606 12IAV54E1A	RELAY, DEVICE-27	GE, PROTECTIVE UNDERVOLTAGE RELAY		53
	1	62602 12IAV51A1A	RELAY, DEVICE-59	GE, PROTECTIVE OVERVOLTAGE RELAY		52
	2	24455 6S60C-125V	LAMP, SYNC	GE, LAMP, 125V, 6W, INCANDESCENT		50
	2	96312 9-3202-0533-3C1	LIGHT, SYNC	DIALCO, 24V-250V, CLEAR TORPEDO LENS		49
	2	54837 BBJ22K5	RES, 22.5KΩ, 8W	OHMITE META FILM RESISTOR		47
	1	15605 10250T1371	SW. Ø SEQ TEST	CUTLER-HAMMER, 2 POSITION, SPRING RET		46
	1	15605 10250T21K8	SWITCH, Ø SEQ	CUTLER-HAMMER, 3 POSITION, GEN-OFF-BUS		45
	2	62606 B7A (NE45)	LAMP, NEON	GE, T-4 1/2 SCREW BASE, 120VAC		44
	2	62606 CR103C2102	LIGHT, INDICATOR	GE, TYPE CR103C, PHASE SEQUENCE/IND		43
	1	15605 10250T20K8	SWITCH, PARALLEL	CUTLER-HAMMER, 2 POSITION, OILTIGHT		42
	1	68513 06874	RHEO, 500Ω-4W	BASLER, AUTOMATIC VOLTAGE/ADJUST		40
	1	54837 5105	RHEOSTAT, FIELD	OHMITE, 75Ω, 300 W		39
	1	62606 CR2951A2P1	SW. VOLT REG	GE, TYPE-SBM, AUTO-MAN-OFF, SPECIAL		38
	1	62606 SBM10AA024	SWITCH, SYNC	GE, TYPE-SBM, W/ PN 23WW145 REM HDL		37
	1	15605 10250T21K8	SWITCH, FREQ	CUTLER-HAMMER, 3 POS, OT, GEN-OFF-BUS		36
	1	62606 SBM10AA065	SWITCH, GOV	GE, TYPE-SBM, RAISE-LOWER, SPRING RET		35
	1	60335 7COX63G1	KILOWATT-HOUR MTR	GE, TYPE-DS-63, 2 ELEMENT, 3Ø, 3W		34
	1	60336 50-106-452-AAAA	SYNCHROSCOPE	GE, TYPE-AB-40, 60 HZ, SLOW-FAST SCALE		33
	6	P/N 10250T/910000t	LAMP SOCKETS	CUTLER-HAMMER AC/DC RESIST, 120V		30
	1	60336 60-103-402-FCA2	POWER FACTOR MTR	GE, TYPE-AB-40, .5-1-.5 SCALE, 120V COIL		29
	1	60336 [illegible]	KILOWATT METER	GE, TYPE-AB-40, 0-2500KW, 3Ø, 3W		28
	1	60336 50-103-372A-AA	FREQUENCY MTR	GE, TYPE-AB-40, 45-65HZ SCALE, 120V COIL		27
	1	62606 SBM10AA007	SW. VOLTMETER	GE, TYPE-SBM, KNURLED HANDLE, VMSW		26
	1	60336 50-103-021-P2UL	VOLTMETER	GE, TYPE-AB-40, 0-5250V SCALE, 150V COIL		25
	1	62606 SBM10AA008	SWITCH, AMMETER	GE, TYPE-SBM, KNURLED HANDLE, AMSW		24
	1	60336 50-103-131-LSSU	AMMETER	GE, TYPE-AB-40, 0-600A SCALE, 5A COIL		22
	1	62606 CR6567C8G3-G	LIGHT, GREEN	GE, TYPE-ET-16, W/ ET16G CAP		19
	1	62606 CR6567C8G3-R	LIGHT, RED	GE, TYPE-ET-16, W/ ET16R CAP		18
	1	62606 SBM10AA107	SW. CB CONTROL	GE, TYPE-SBM, PISTOL GRIP HANDLE, 52CS		17
QTY REQD	FSCM NO.	PART OR IDENTIFYING NO.	NOMENCLATURE OR DESCRIPTION	MATERIAL/SPECIFICATION		ITEM NO.

PARTS LIST

DANGER
HIGH VOLTAGE
OPENING THIS DOOR
WILL TRIP GEN CIRCUIT BREAKER
HIGH VOLTAGE MAY BE PRESENT
EVEN THOUGH GEN IS SECURED.

6" × 15"

(35) DETAIL-A SCALE: 1/2

RED PHENOLIC WITH WHITE LETTERS
1/2" LETTERS

CAUTION
DO NOT IDLE ENGINE
BELOW 75% ENGINE SPEED
WITH VOLTAGE REG ON

4" × 1 3/4"

(32) DETAIL-B

RED PHENOLIC WITH WHITE LETTERS
1/4" LETTERS

9" × 6"

DIESEL SELECT	DIESEL SELECTED	DIESEL OPERATION	GAS FAULT
P/B 345	WHT 30	BLU	RED
GAS SELECT	GAS SELECTED	GAS OPERATION	GAS ABNORMAL
P/B 345	WHT 30	GRN	AMB

DETAIL-C

DUAL FUEL STATUS LIGHTS, SELECTOR SWITCHES, AND LABELING PLATES - BLACK PHENOL WITH WHITE LETTERS

NAMEPLATE	UNIT PARALLEL AND PHASE SEQUENCE TEST FREQUENCY AND PHASE SEQUENCE	128
CONTACT BLOCK	CONTACT BLOCK USED WITH ITEM 46	127
NOMENCLATURE OR DESCRIPTION	MATERIAL/SPECIFICATION	ITEM NO.

PARTS LIST

NEESA DRAWING NO 772-DF

DEPARTMENT OF THE NAVY NAVAL FACILITIES ENGINEERING COMMAND
NAVAL ENERGY AND ENVIRONMENTAL SUPPORT ACTIVITY
PORT HUENEME, CALIFORNIA

DUEL FUEL 1500 KW
CONVERSION OF DIESEL POWER PLANTS

OVERHAUL 1500 KW
DIESEL POWER PLANTS
SWITCHGEAR LINE-UP
PLAN AND ELEVATION

SATISFACTORY TO: MAE OFFICER
NORMAN HELLSON DEC 1994
NAVE OFFICER

APPROVED DATE
DESIGN OFFICER

SIZE F | CODE NO 80091 | NAVFAC DRAWING NO 6276559
CONTRACT NO N47408-89-C-2011
SCALE 1/8 | SHEET 13 OF

A

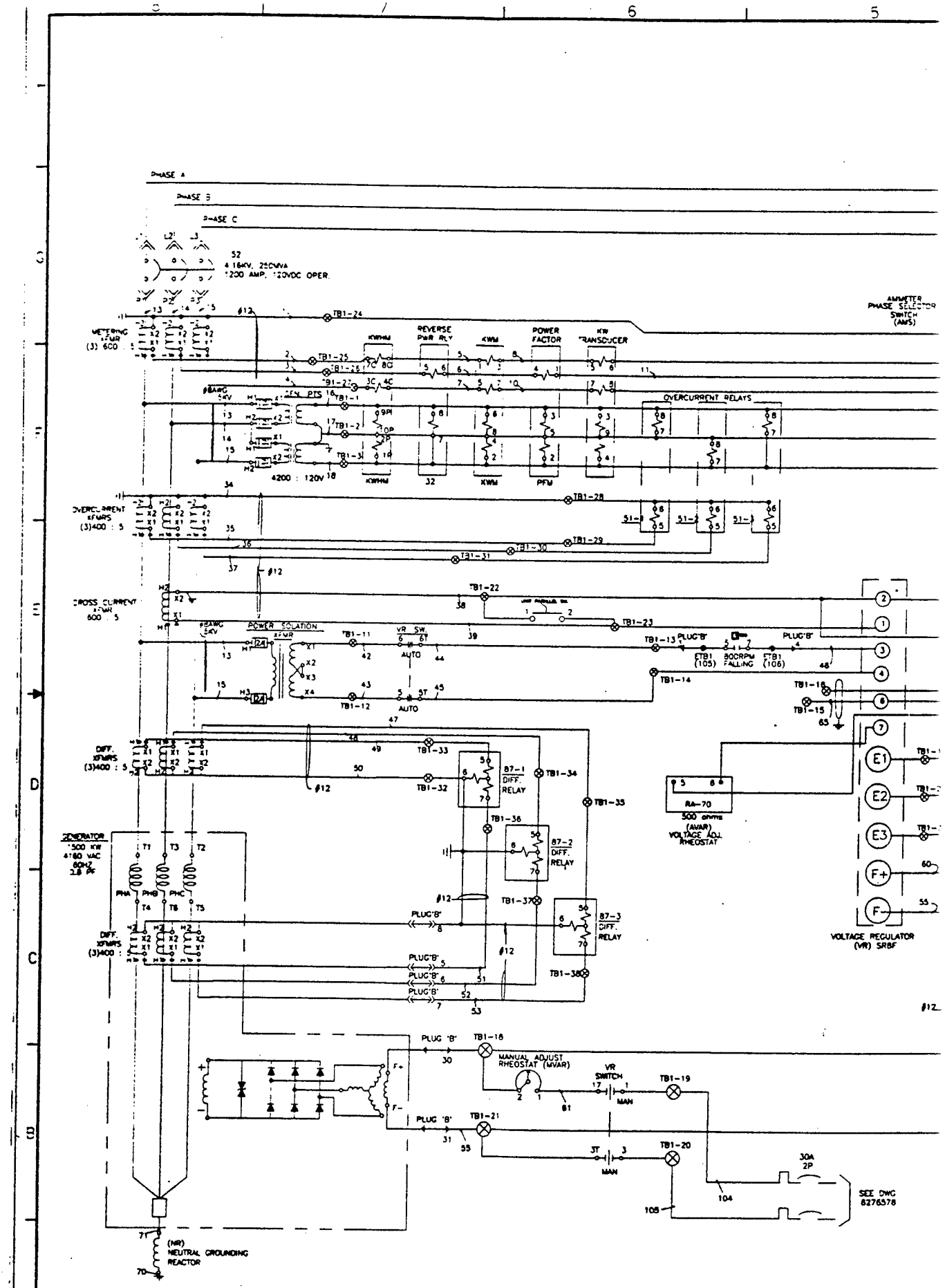
PHASE A
PHASE B
PHASE C
52
4.16KV, 250MVA
1200 AMP, 120VDC OPER.
METERING XFMR (3) 600 : 5
KWHM
REVERSE PWR RLY
KWM
POWER FACTOR
KW TRANSDUCER
AMMETER PHASE SELECTOR SWITCH (AMS)
OVERCURRENT RELAYS
4200 : 120V
OVERCURRENT XFMRS (3)400 : 5
CROSS CURRENT XFMR 600 : 5
POWER ISOLATION XFMR
VR SW.
AUTO
PLUG'B'
ETB1 (105)
800RPM FALLING
ETB1 (106)
DIFF. XFMRS (3)400 : 5
87-1 DIFF. RELAY
87-2 DIFF. RELAY
87-3 DIFF. RELAY
RA-70
500 ohms
(AVAR) VOLTAGE ADJ. RHEOSTAT
VOLTAGE REGULATOR (VR) SRBF
GENERATOR
1500 KW
4160 VAC
60HZ
0.8 PF
DIFF. XFMRS (3)400 :
MANUAL ADJUST RHEOSTAT (MVAR)
VR SWITCH
MAN
30A 2P
SEE DWG 8276578
(NR) NEUTRAL GROUNDING REACTOR

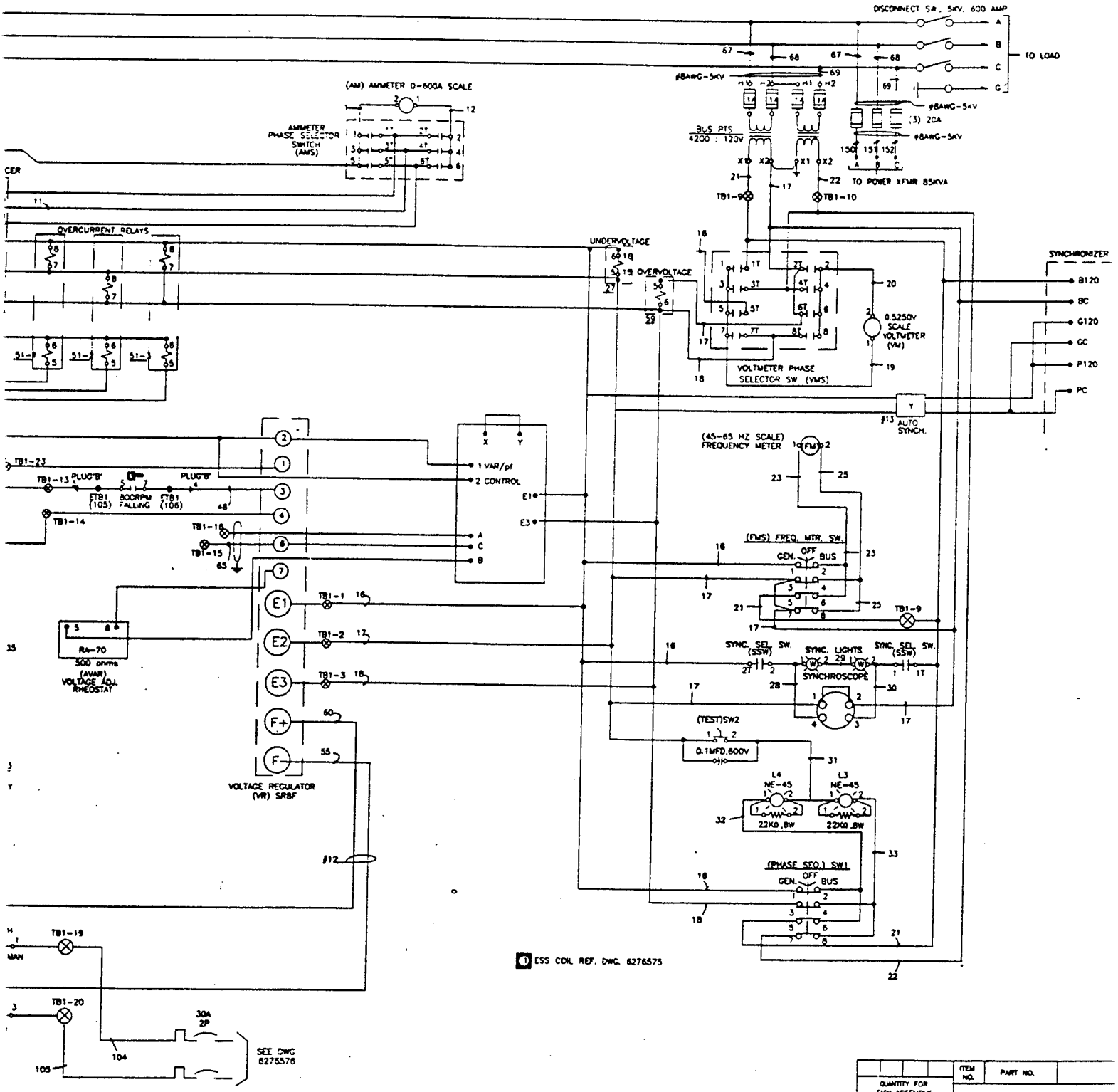

ITEM NO.	PART NO.
QUANTITY FOR EACH ASSEMBLY	

UNLESS OTHERWISE SPECIFIED DIMENSIONS ARE IN FEET AND/OR INCHES

TOLERANCES:
.X DECIMALS
.XX DECIMALS
.XXX DECIMALS
FRACTIONS ±1/16"
ANGLES ±0.5°

PART DASH NO. | NEXT ASSY.

PROJ NO.
DWG. NO. 780 - DF
DES XX | DR F.DELLAUBERA
CHK XX
BRANCH HEAD K MACK
DIV DIR
SATISFACTORY TO
MIKE CHILDERS
NORMAN HELGESON DEC 1998
APPROVED DATE
COMMANDING OFFICER
APPROVED DATE
FOR COMMANDER, NAVFAC

SIZE F
SCALE

IF IN DOUBT, ASK - DO NOT SCALE

REVISIONS			
SYM	DESCRIPTION	DATE	APPROVAL
A	SEE NEESA DCN 92-3	2/19/92	

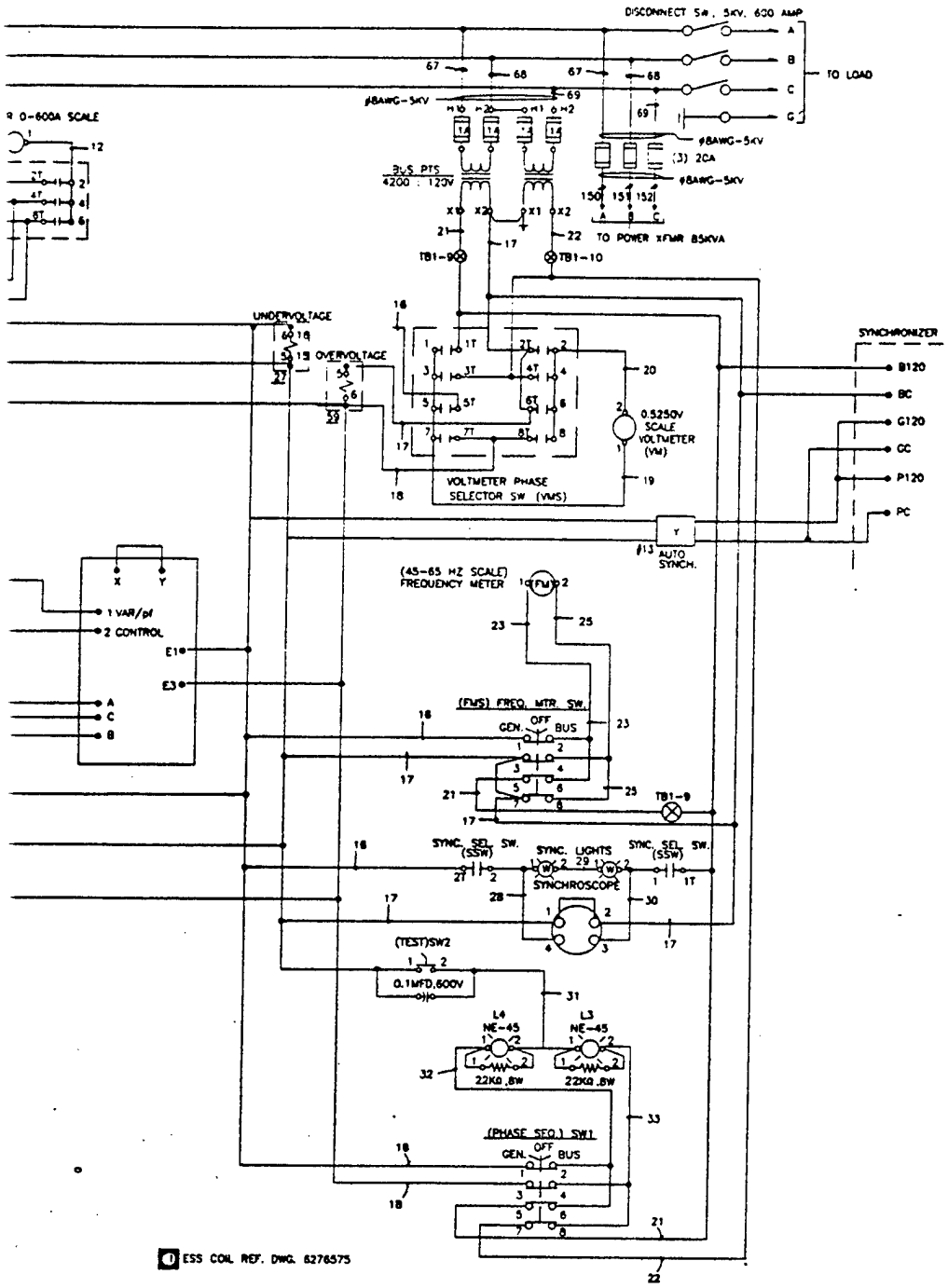

QUANTITY FOR EACH ASSEMBLY	ITEM NO.	PART NO.	DESCRIPTION	MATERIAL
			PARTS LIST	

UNLESS OTHERWISE SPECIFIED DIMENSIONS ARE IN FEET AND/OR INCHES

TOLERANCES:
.X DECIMALS
.XX DECIMALS
.XXX DECIMALS
FRACTIONS ±1/16"
ANGLES ±0.5°

PART DASH NO. | NEXT ASSY.

PROJ NO
DWG. NO. 780 - DF
DES XX | DR F.DELLAUBERA
CHK XX
BRANCH HEAD K MACK
DIV DIR
SATISFACTORY TO
MIKE CHILDERS
NORMAN HELGESON DEC 1998
APPROVED DATE
COMMANDING OFFICER
APPROVED DATE
FOR COMMANDER, NAVFAC

DEPARTMENT OF THE NAVY — NAVAL FACILITIES ENGINEERING COMMAND
NAVAL FACILITIES ENGINEERING SERVICE CENTER
PORT HUENEME, CALIFORNIA 93043

DUEL FUEL1500 KW
CONVERSION OF DIESEL POWER PLANTS
SCHEMATIC DIAGRAM AC GENERATOR

SIZE F | CODE IDENT NO 80091 | NAVFAC DRAWING NO
CONSTR CONTR NO
SCALE NONE | SPEC | SHEET 1 OF

IF IN DOUBT, ASK - DO NOT SCALE

3

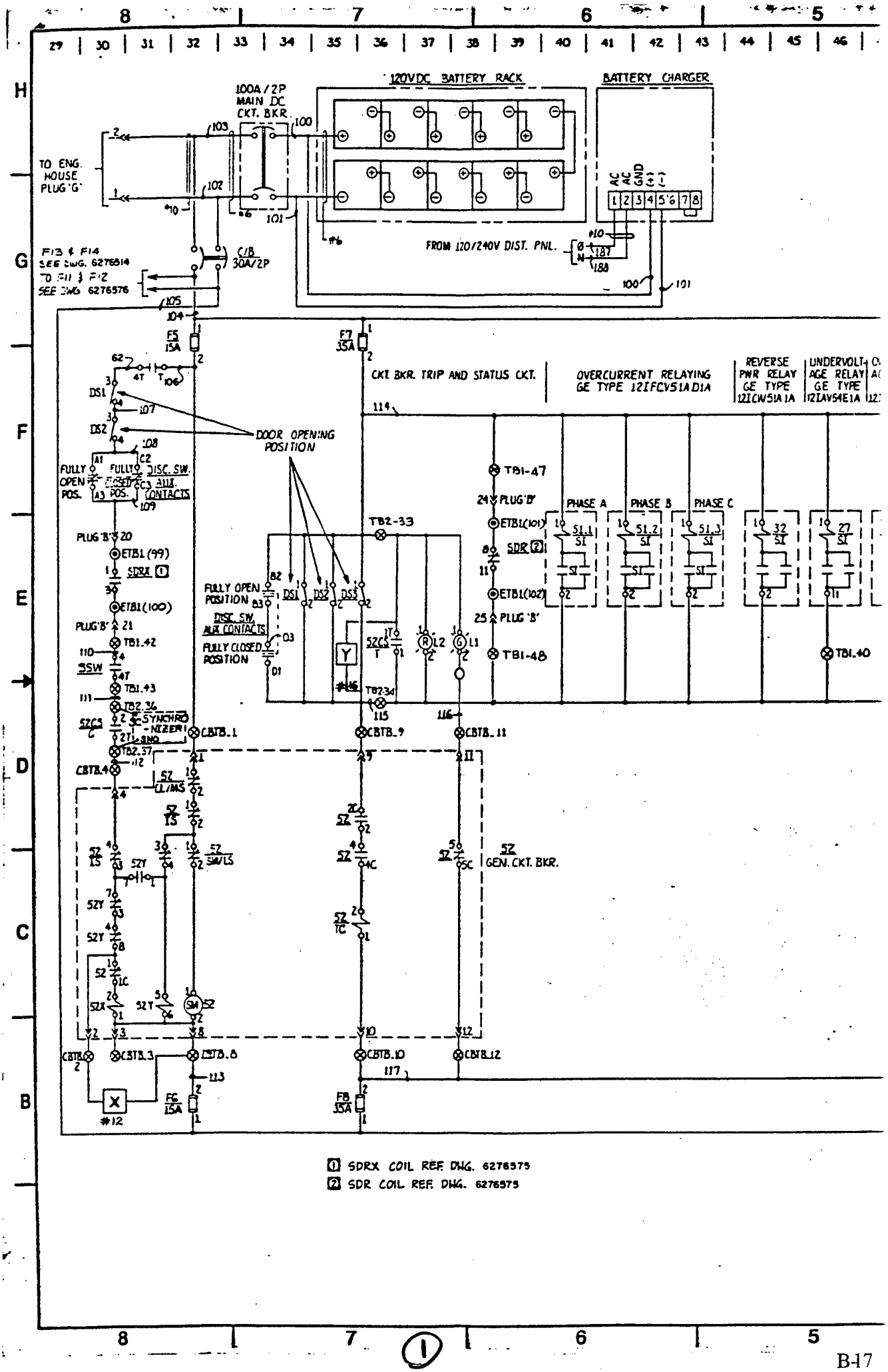
120VDC BATTERY RACK
BATTERY CHARGER
100A/2P MAIN DC CKT. BKR.
TO ENG. HOUSE PLUG 'G'
FROM 120/240V DIST. PNL.
F13 & F14 SEE DWG. 6276514
TO F11 & F12 SEE DWG 6276576
C/B 30A/2P
F5 15A
F7 35A
CKT BKR. TRIP AND STATUS CKT.
OVERCURRENT RELAYING GE TYPE 12IFCV51A D1A
REVERSE PWR RELAY GE TYPE 12ICW51A1A
UNDERVOLTAGE RELAY GE TYPE 12IAV54E1A
DOOR OPENING POSITION
FULLY OPEN POS.
FULLY CLOSED POS.
DISC. SW. AUX. CONTACTS
PHASE A
PHASE B
PHASE C
TB1-47
TB1-48
TB2-33
TB1.40
SDRX
SDR
SSW
SYNCHRO-NIZER
GEN. CKT. BKR.
FG 15A
FB 35A
1 SDRX COIL REF. DWG. 6276575
2 SDR COIL REF. DWG. 6276575

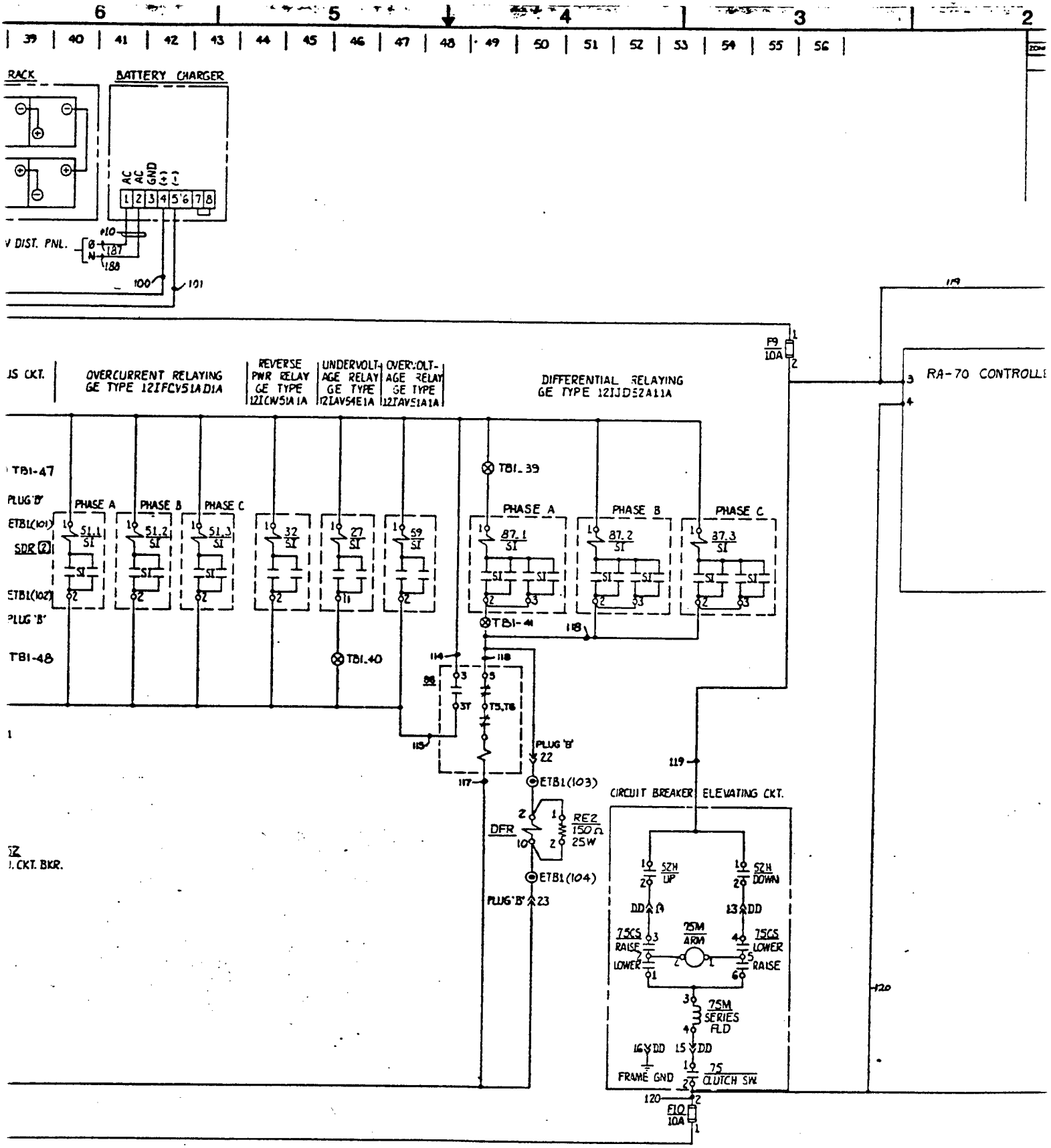
BATTERY CHARGER
AC
AC
GND
(+)
(-)
V DIST. PNL.
OVERCURRENT RELAYING
GE TYPE 12IFCV51A1A
REVERSE PWR RELAY
GE TYPE
12ICW51A1A
UNDERVOLTAGE RELAY
GE TYPE
12IAV54E1A
OVERVOLTAGE RELAY
GE TYPE
12IAV51A1A
DIFFERENTIAL RELAYING
GE TYPE 12IJD52A11A
RA-70 CONTROLLE
PHASE A
PHASE B
PHASE C
TB1-47
TB1-48
TB1-39
TB1-40
TB1-41
PLUG 'B'
ETB1(101)
ETB1(102)
ETB1(103)
ETB1(104)
DFR
RE2
150Ω
25W
CIRCUIT BREAKER ELEVATING CKT.
52H UP
52H DOWN
75CS RAISE
75CS LOWER
75M ARM
75M SERIES FLD
FRAME GND
75 CLUTCH SW.
F9
10A
F10
10A
DUEL FUEL 1500 KW
CONVERSION OF DESEL POWER PLANTS
(DWG. 6276575)
(DWG. 6276576)

ZONE	LTR	DESCRIPTION	DATE	APPROVED
	A	SEE NEESA DCN 92-19	1992-2-19	

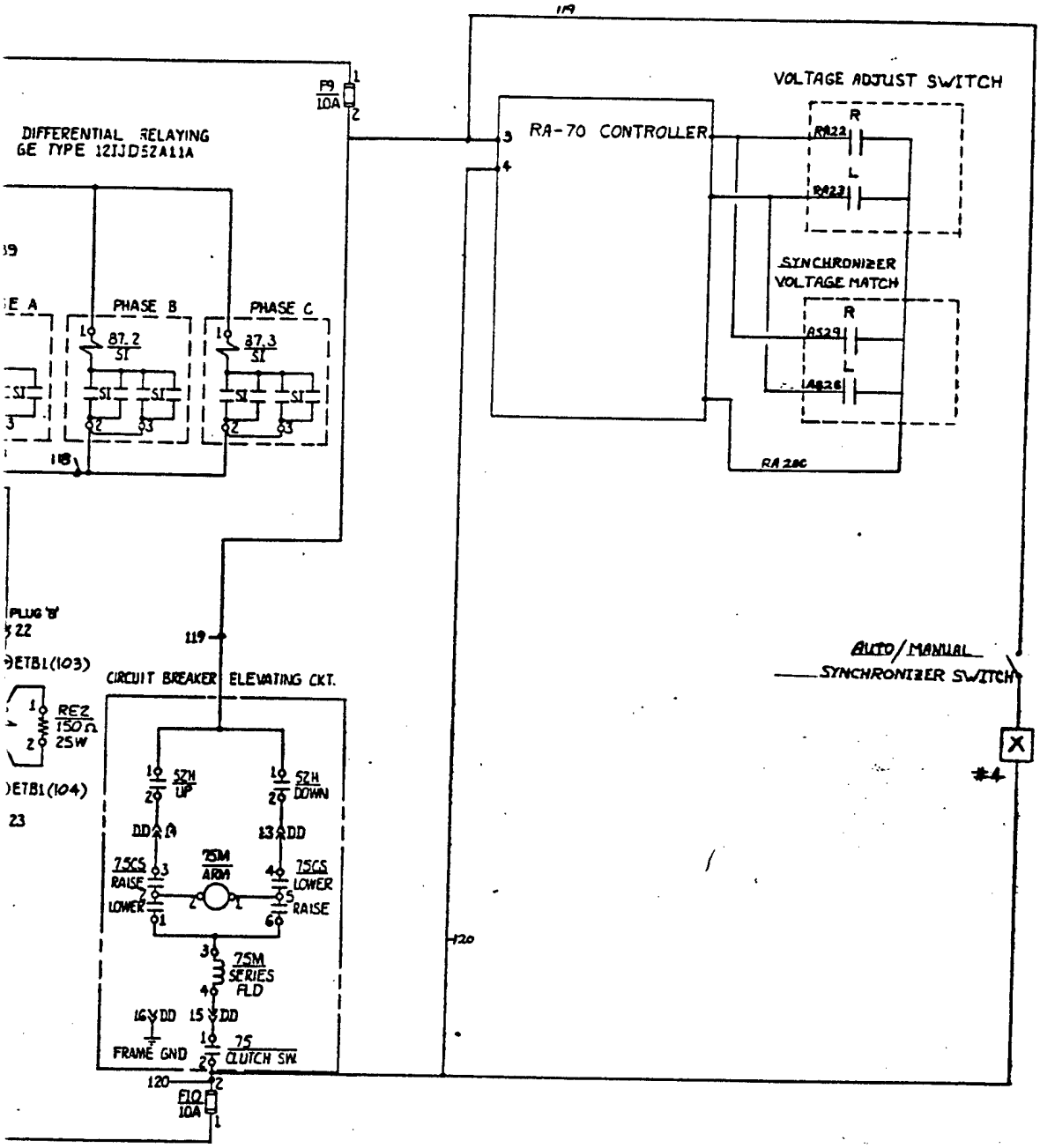

QTY REQD	FSCM NO.	PART OR IDENTIFYING NO.	NOMENCLATURE OR DESCRIPTION	MATERIAL/SPECIFICATION	ITEM NO.

PARTS LIST

DUEL FUEL 1500 KW
CONVERSION OF DIESEL POWER PLANTS

SATISFACTORY TO
MIKE CHILDERS
NORMAN HELLESON DEC 1998

781-DF

DEPARTMENT OF THE NAVY — NAVAL FACILITIES ENGINEERING COMMAND
NAVAL ENERGY AND ENVIRONMENTAL SUPPORT ACTIVITY
PORT HUENEME, CALIFORNIA

OVERHAUL 1500 KW
DIESEL POWER PLANTS
SCHEMATIC DIAGRAM
CIRCUIT BREAKER CONTROL

SIZE F | CAGE NO 80091 | NAVFAC DRAWING NO 6276568
CONTRACT NO N47408-89-C-2011
SCALE NONE | SHEET 22 OF

3

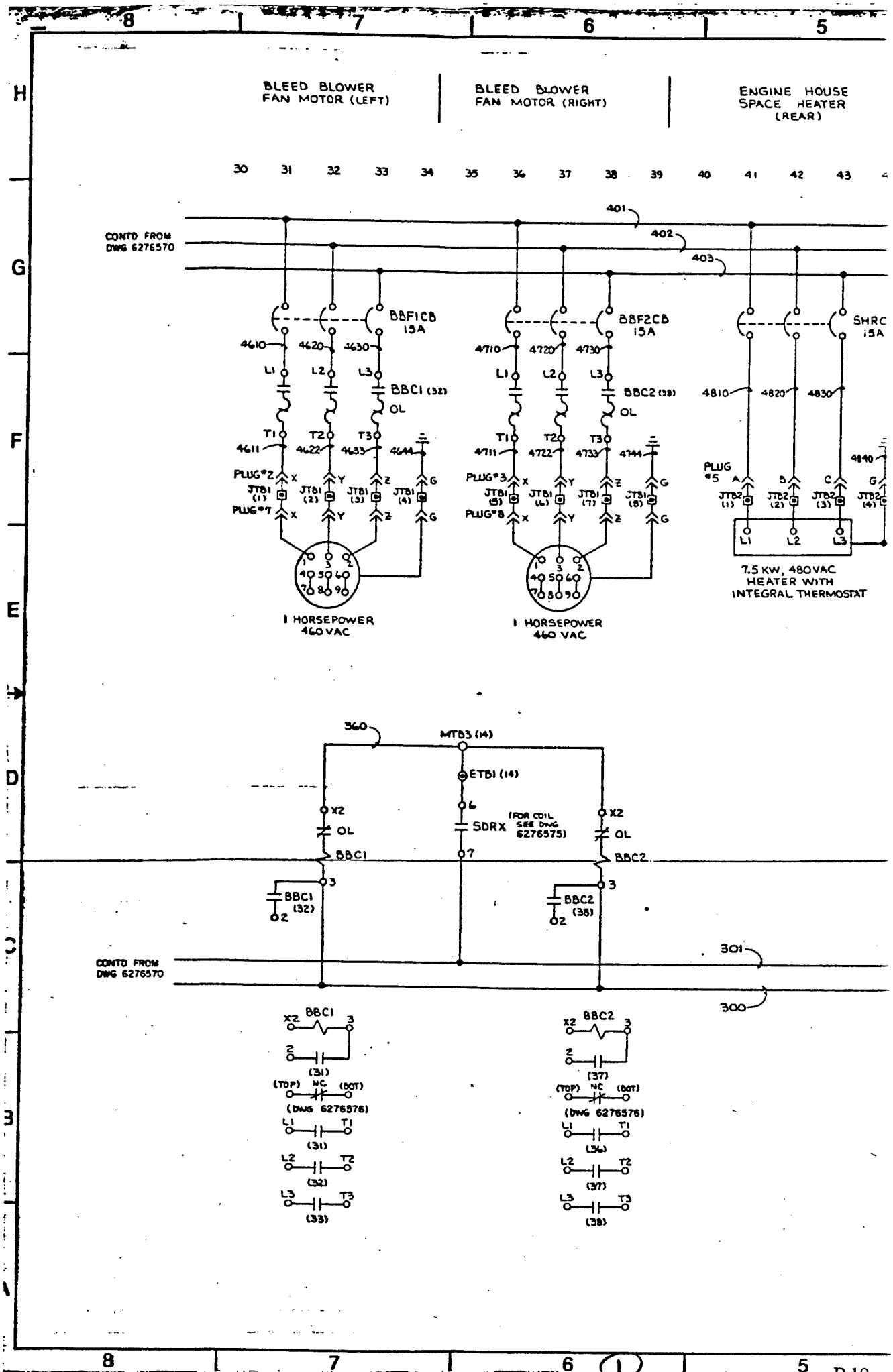
BLEED BLOWER FAN MOTOR (LEFT)
BLEED BLOWER FAN MOTOR (RIGHT)
ENGINE HOUSE SPACE HEATER (REAR)
CONTD FROM DWG 6276570
BBF1CB 15A
BBF2CB 15A
SHRC 15A
BBC1 (32)
BBC2 (38)
OL
PLUG #2
PLUG #7
PLUG #3
PLUG #8
PLUG #5
1 HORSEPOWER 460 VAC
1 HORSEPOWER 460 VAC
7.5 KW, 480VAC HEATER WITH INTEGRAL THERMOSTAT
MTB3 (14)
ETB1 (14)
SDRX
(FOR COIL SEE DWG 6276575)
BBC1
BBC2
CONTD FROM DWG 6276570
(DWG 6276576)
(TOP) NC (BOT)

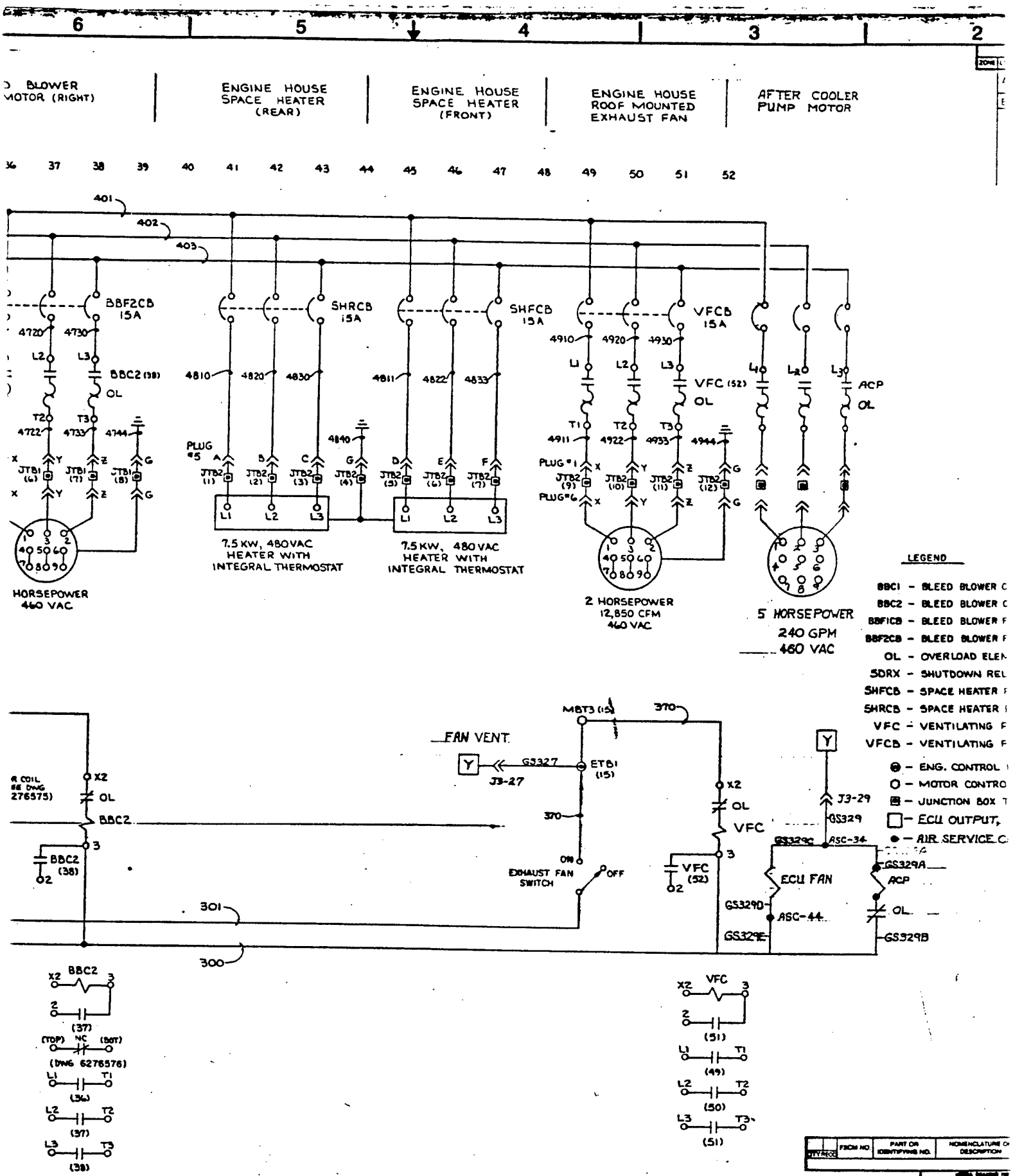
BLOWER MOTOR (RIGHT)
ENGINE HOUSE SPACE HEATER (REAR)
ENGINE HOUSE SPACE HEATER (FRONT)
ENGINE HOUSE ROOF MOUNTED EXHAUST FAN
AFTER COOLER PUMP MOTOR
BBF2CB 15A
SHRCB 15A
SHFCB 15A
VFCB 15A
BBC2 (38)
VFC (52)
ACP
OL
7.5 KW, 480VAC HEATER WITH INTEGRAL THERMOSTAT
7.5 KW, 480 VAC HEATER WITH INTEGRAL THERMOSTAT
HORSEPOWER 460 VAC
2 HORSEPOWER 12,850 CFM 460 VAC
5 HORSEPOWER 240 GPM 460 VAC
LEGEND
BBC1 - BLEED BLOWER
BBC2 - BLEED BLOWER
BBF1CB - BLEED BLOWER
BBF2CB - BLEED BLOWER
OL - OVERLOAD ELEM
SDRX - SHUTDOWN REL
SHFCB - SPACE HEATER
SHRCB - SPACE HEATER
VFC - VENTILATING
VFCB - VENTILATING
ENG. CONTROL
MOTOR CONTRO
JUNCTION BOX
ECU OUTPUT
AIR SERVICE
FAN VENT
EXHAUST FAN SWITCH
ECU FAN
784
DUEL FUEL 1500 KW
CONVERSION OF DESEL POWER PLANTS

REVISIONS				
ZONE	LTR	DESCRIPTION	DATE	APPROVED
	A	SEE NEESA DCN 89-36.	1989-6-2	
	B	SEE NEESA DCN 92-20	1992-2-19	

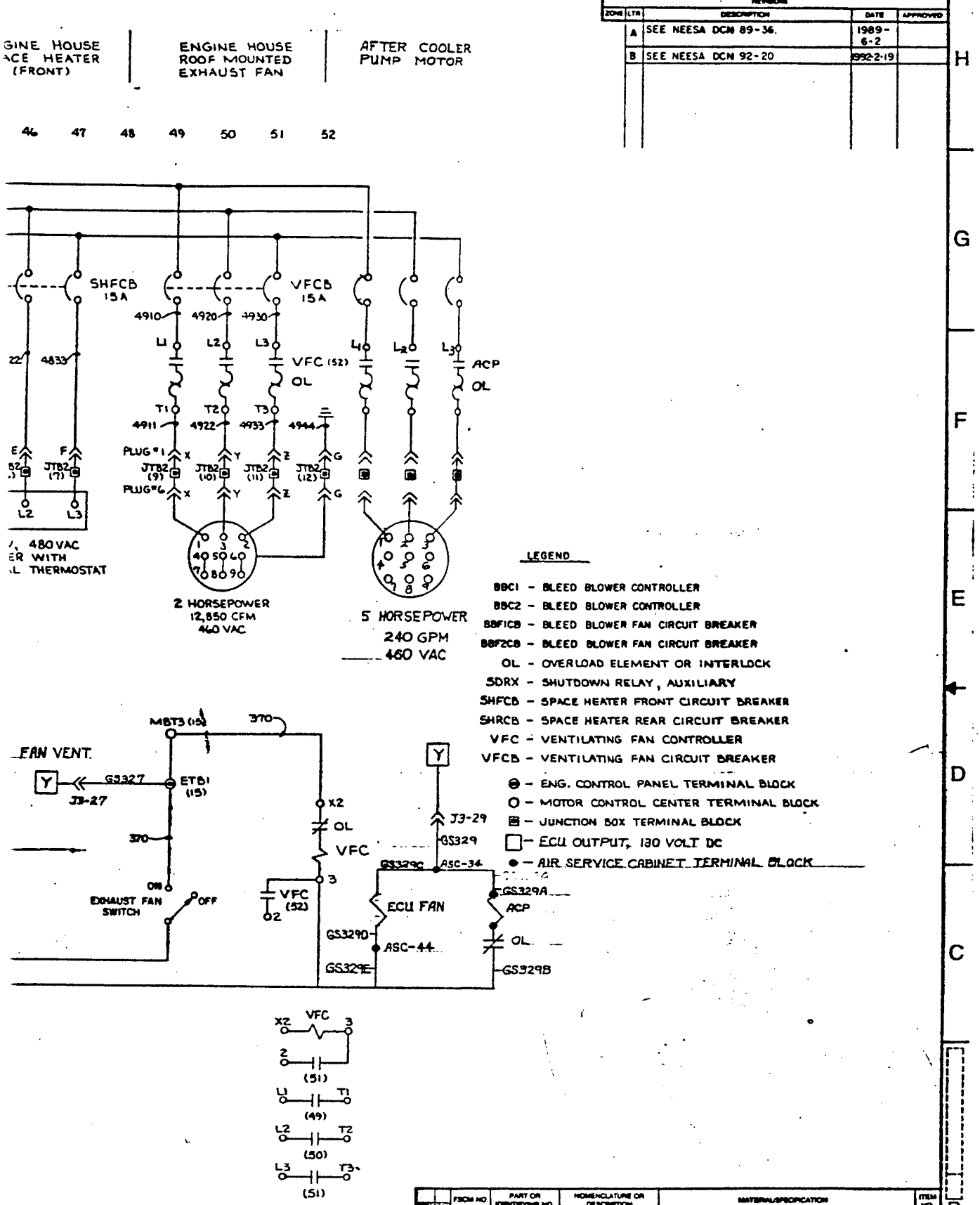

QTY REQD	FSCM NO	PART OR IDENTIFYING NO.	NOMENCLATURE OR DESCRIPTION	MATERIAL/SPECIFICATION	ITEM NO.

PARTS LIST

784

DEPARTMENT OF THE NAVY NAVAL FACILITIES ENGINEERING COMMAND
NAVAL ENERGY AND ENVIRONMENTAL SUPPORT ACTIVITY
PORT HUENEME, CALIFORNIA 93043-5014

DUEL FUEL 1500 KW
CONVERSION OF DIESEL POWER PLANTS

SATISFACTORY TO
MIKE CHILDERS
NORMAN HELGESON DEC 1994

OVERHAUL 1500 KW
DIESEL POWER PLANTS
SCHEMATIC DIAGRAM
MOTOR CONTROL CIRCUITS

SIZE F | CODE IDENT NO 80091 | NAVFAC DRAWING NO 6276571
CONTR NO N47408-99-C-2011
SCALE NONE | SHEET 25 OF

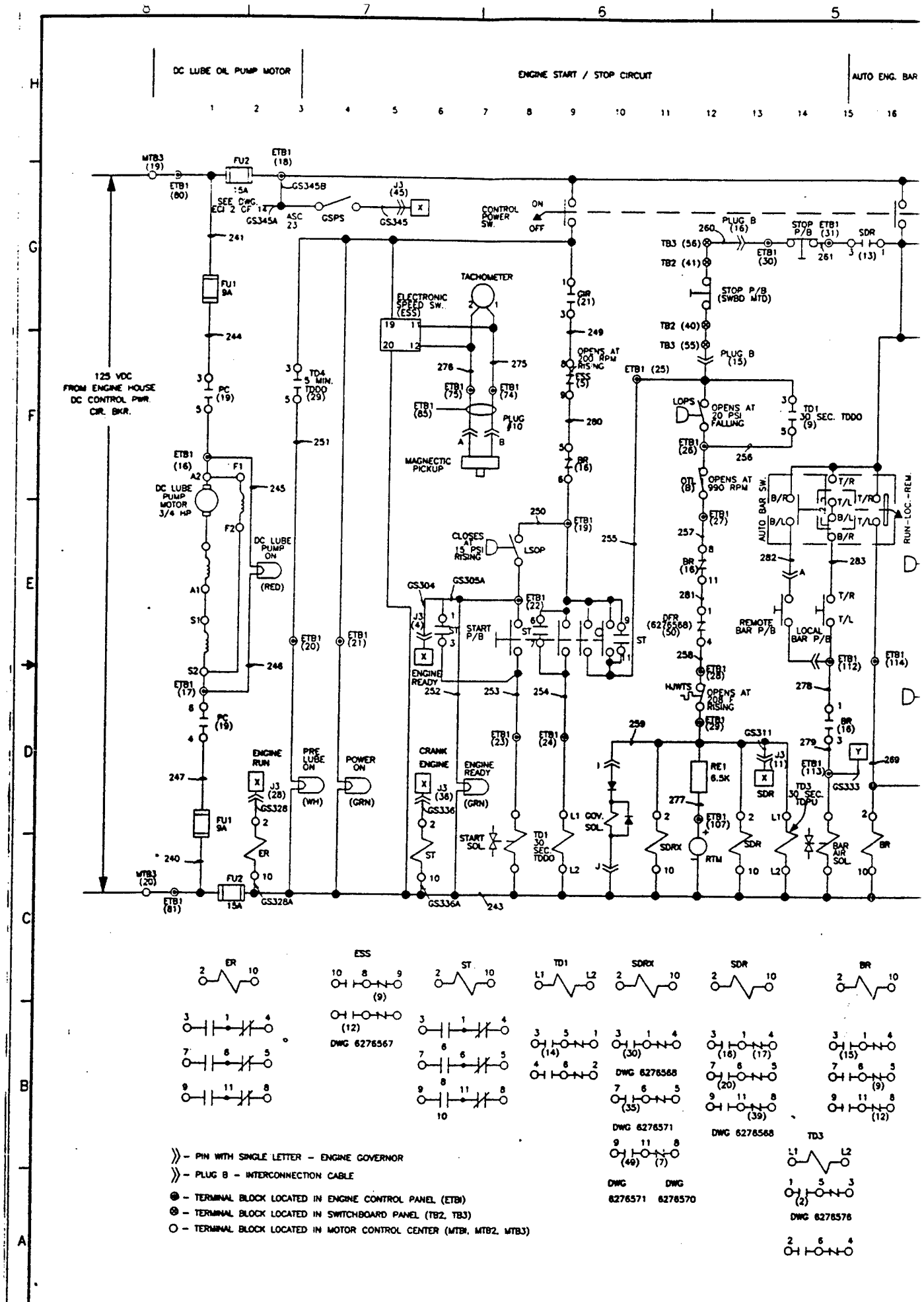
DC LUBE OIL PUMP MOTOR
ENGINE START / STOP CIRCUIT
AUTO ENG. BAR
125 VDC FROM ENGINE HOUSE DC CONTROL PWR. CIR. BKR.
DC LUBE PUMP MOTOR 3/4 HP
DC LUBE PUMP ON (RED)
ENGINE RUN
PRE LUBE ON (WH)
POWER ON (GRN)
CRANK ENGINE
ENGINE READY (GRN)
ENGINE READY
START P/B
START SOL.
TD1 30 SEC. TDDO
TD4 5 MIN. TDDO
TACHOMETER
ELECTRONIC SPEED SW. (ESS)
MAGNETIC PICKUP
CONTROL POWER SW.
OPENS AT 200 RPM RISING
CLOSES AT 15 PSI RISING
LSOP
LOPS
OPENS AT 20 PSI FALLING
OPENS AT 990 RPM
OPENS AT 208°F RISING
GOV. SOL.
RE1 6.5K
RTM
SDRX
SDR
BAR AIR SOL.
STOP P/B (SWBD MTD)
STOP P/B
PLUG B (16)
PLUG B (15)
TD1 30 SEC. TDDO
TD3 30 SEC. TDPU
AUTO BAR SW.
RUN-LOC.-REM.
REMOTE BAR P/B
LOCAL BAR P/B
ER
ESS
ST
TD1
SDRX
SDR
BR
TD3
DWG 6276567
DWG 6276568
DWG 6276571
DWG 6276570
DWG 6276576
- PIN WITH SINGLE LETTER - ENGINE GOVERNOR
- PLUG B - INTERCONNECTION CABLE
- TERMINAL BLOCK LOCATED IN ENGINE CONTROL PANEL (ETBI)
- TERMINAL BLOCK LOCATED IN SWITCHBOARD PANEL (TB2, TB3)
- TERMINAL BLOCK LOCATED IN MOTOR CONTROL CENTER (MTBI, MTB2, MTB3)

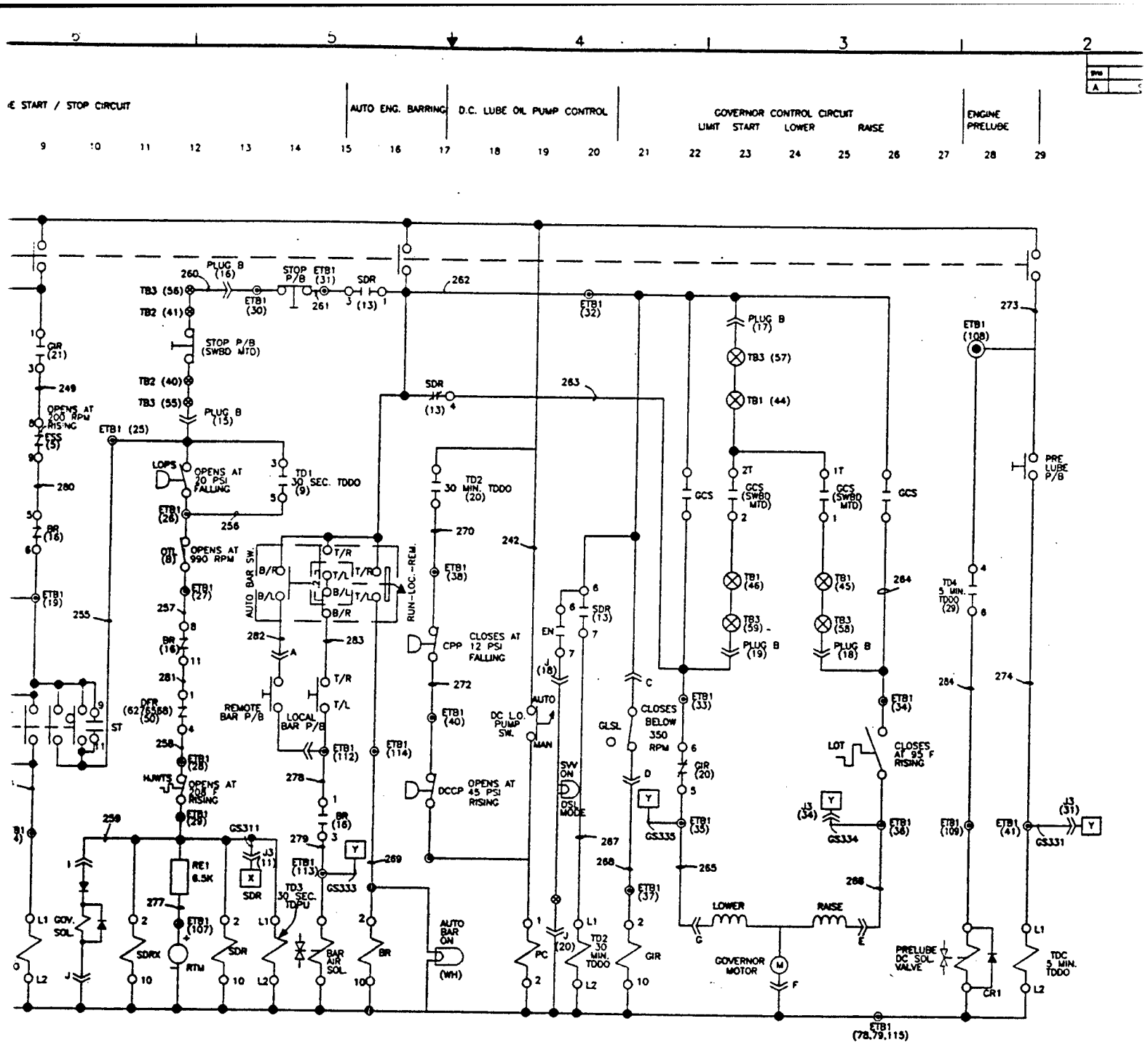

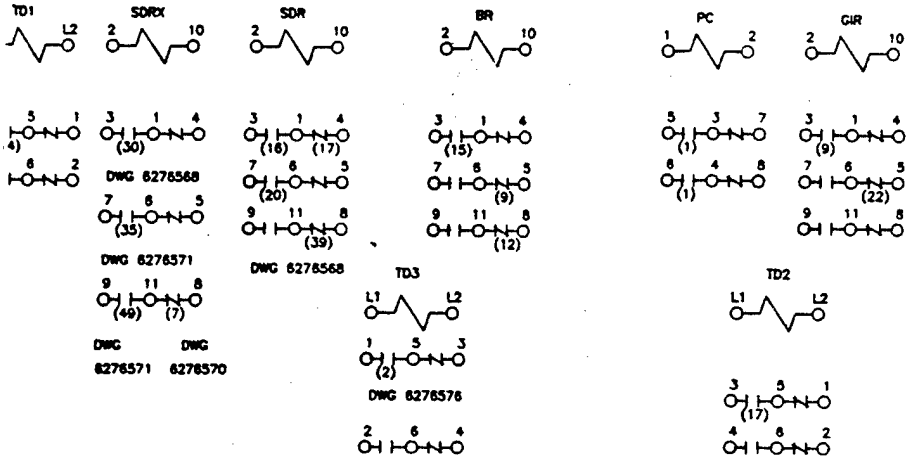

GCS

DECK	CONTRACT		POSITION			LOCATION
			LOWER	OFF	RAISE	
1	N.O.	TOP	X			(22)
	N.O.	BOT			X	(26)

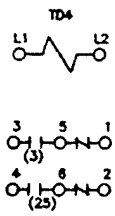

QUANTITY FOR EACH ASSEMBLY

ITEM NO. | PART NO.

UNLESS OTHERWISE SPECIFIED DIMENSIONS ARE IN FEET AND/OR INCHES

TOLERANCES:
.X DECIMALS
.XX DECIMALS
.XXX DECIMALS
FRACTIONS ±1/16"
ANGLES ±0.5°

PART DASH NO. | NEXT ASSY.

PROJ NO.
DWG. NO. 788 – [
DES XX | DR F DELLALUN
CHK XX
BRANCH HEAD K MACK
DIV DIR
SATISFACTORY TO
MIKE CHILDERS
NORMAN HOLCESON
APPROVED
COMMANDING OFFICER
APPROVED
FOR COMMANDER, NAVFAC

IF IN DOUBT, ASK – DO NOT SCALE

2

REVISIONS			
SYM	DESCRIPTION	DATE	APPROVAL
A	SEE NEESA DCN 92-11	11/7/92	

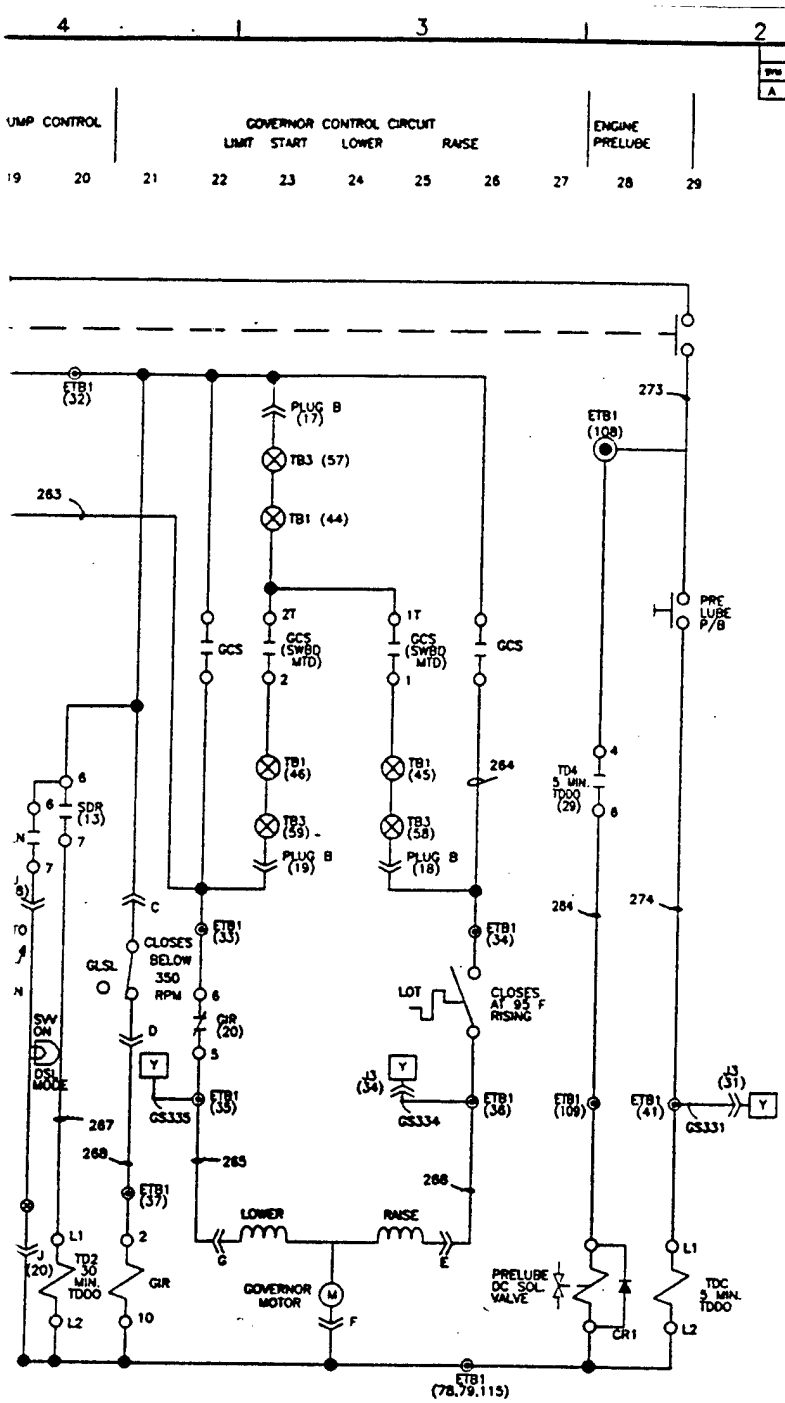

LEGEND

BR – BARRING RELAY
CPP – CIRCULATING PUMP PRESSURE SWITCH
CRI – CONTROL RECTIFIER
DCCP – D.C. CIRCULATING PUMP SWITCH
DFR – DIFFERENTIAL FAULT RELAY
GCS – GOVERNOR CONTROL SWITCH
GIR – GOVERNOR IDLE RELAY
GLSL – GOVERNOR LIMIT SWITCH – LOW
HJWTS – HIGH JACKET WATER TEMP. SHUTDOWN
LOPS – LOW OIL PRESSURE SHUTDOWN
LOT – LOW OIL TEMPERATURE SWITCH
LSOP – LOW STANDBY OIL PRESSURE
OTL – OVERSPEED TRIP LIMIT SWITCH
PC – PUMP CONTROLLER
REI – RESISTOR
RTM – RUNNING TIME METER
SDR – SHUTDOWN RELAY
SDRX – SHUTDOWN RELAY, AUXILIARY
TDI – TIME DELAY RELAY
TD2 – TIME DELAY RELAY
TD3 – TIME DELAY RELAY
TD4 – TIME DELAY RELAY
ER – ENGINE RUN
ETBI – ENG. TERMINAL BOARD NO. 1
GSPS – GAS SYSTEM POWER SW.
ST – STAYTIME RELAY
[X] – ECU INPUT
[Y] – ECU OUTPUT 130V DC

OPERATING POINTS		
SWITCH	CLOSE	OPEN
PRESSURE P.S.I.		
CPP	12	15
DCCP	35	45
LOPS	30	20
LSOP	15	12
TEMPERATURE		
HJWTS	198	208
LOT	95	85

GCS

DECK	CONTRACT		POSITION LOWER	OFF	RAISE	LOCATION
1	N.O.	TOP	X			(22)
	N.O.	BOT			X	(28)

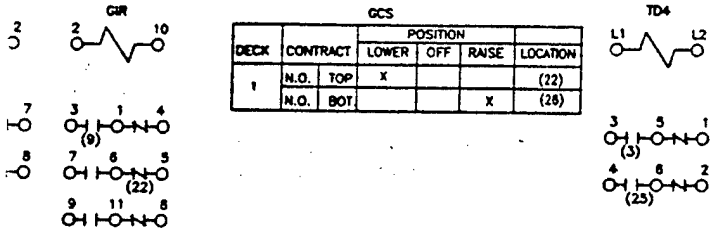

ITEM NO.	PART NO.	DESCRIPTION	MATERIAL
		PARTS LIST	

QUANTITY FOR EACH ASSEMBLY

UNLESS OTHERWISE SPECIFIED DIMENSIONS ARE IN FEET AND/OR INCHES

TOLERANCES:
.X DECIMALS
.XX DECIMALS
.XXX DECIMALS
FRACTIONS ±1/16"
ANGLES ±0.5°

PART DASH NO. | NEXT ASSY.

PROJ NO
DWG. NO. 788 – DF
DCS XX | DR F DELLALUBERA
CHK XX
BRANCH HEAD R MACK
DIV DIR
SATISFACTORY TO
MIKE CHILDERS
NORMAN HODGSON DEC 1998
APPROVED DATE
COMMANDING OFFICER
APPROVED DATE
FOR COMMANDER, NAVFAC

DEPARTMENT OF THE NAVY NAVAL FACILITIES ENGINEERING COMMAND
NAVAL FACILITIES ENGINEERING SERVICE CENTER
PORT HUENEME, CALIFORNIA 93043

DUEL FUEL 1500 KW
CONVERSION OF DIESEL POWER PLANTS
SCHEMATIC DIAGRAM
ENGINE CONTROL CIRCUITS

SIZE F | CODE IDENT NO 80091 | NAVFAC DRAWING NO
CONSTR CONTR NO
SCALE NONE | SPEC | SHEET 1 OF

N DOUBT, ASK – DO NOT SCALE

3

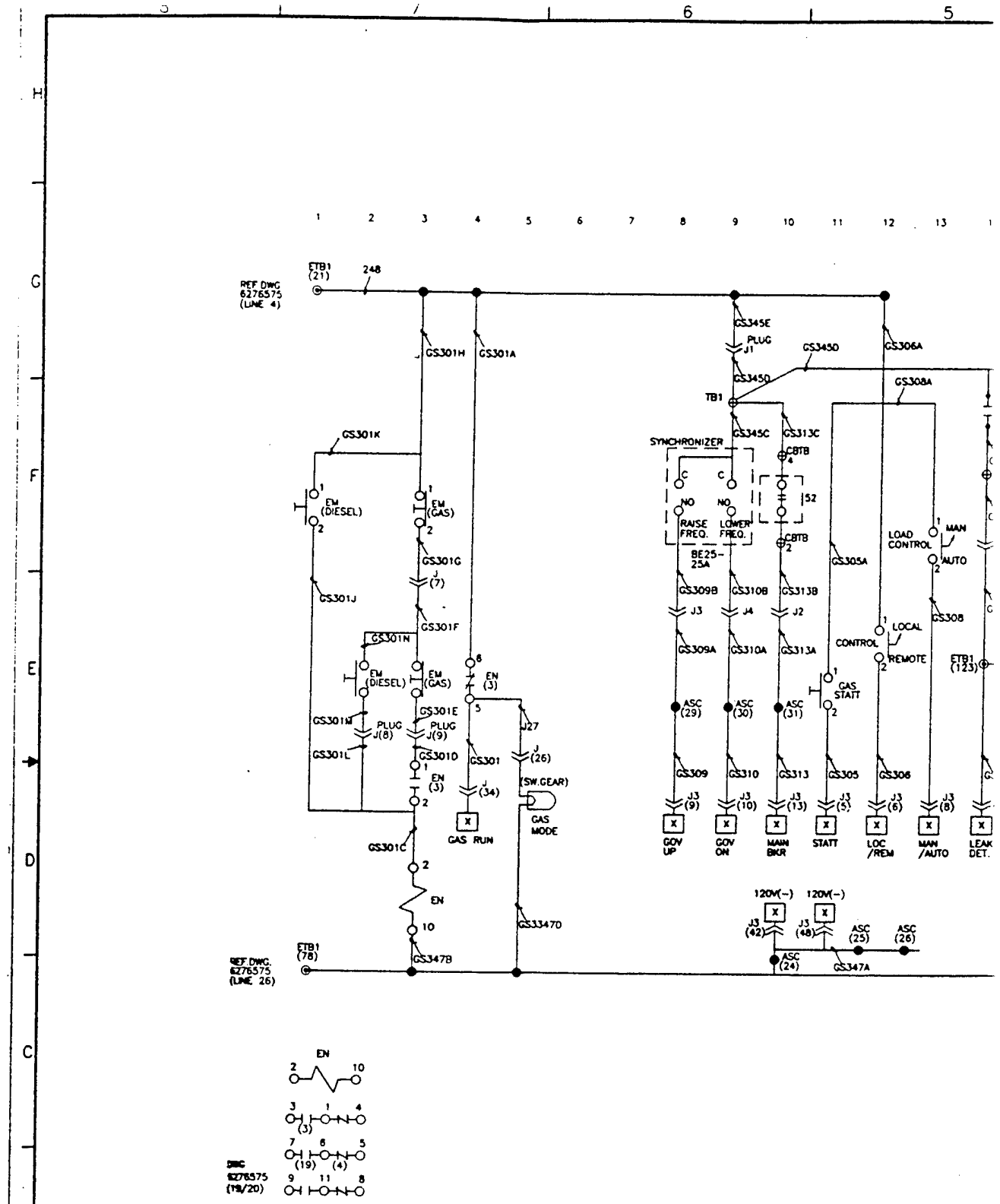
REF DWG 6276575 (LINE 4)
ETB1 (21)
248
GS301H
GS301A
GS345E
PLUG J1
GS345D
GS306A
GS345D
TB1
GS308A
GS301K
SYNCHRONIZER
GS345C
GS313C
CBTB
52
EM (DIESEL)
EM (GAS)
RAISE FREQ.
LOWER FREQ.
BE25-25A
LOAD CONTROL
MAN
AUTO
GS301G
GS301J
GS301F
GS309B
GS310B
GS313B
GS305A
GS308
GS301N
GS309A
GS310A
GS313A
CONTROL
LOCAL
REMOTE
ETB1 (123)
EN (3)
GAS STATT
ASC (29)
ASC (30)
ASC (31)
GS301M
PLUG J(8)
PLUG J(9)
GS301E
GS301L
GS301D
GS301
J27
J(26)
(SW.GEAR)
GAS RUN
GAS MODE
GS309
GS310
GS313
GS305
GS306
GOV UP
GOV ON
MAIN BKR
STATT
LOC /REM
MAN /AUTO
LEAK DET.
GS301C
EN
GS33470
120V(-)
ASC (25)
ASC (26)
ASC (24)
GS347A
ETB1 (78)
GS347B
REF DWG 6276575 (LINE 26)
EN
DWG 6276575 (19/20)

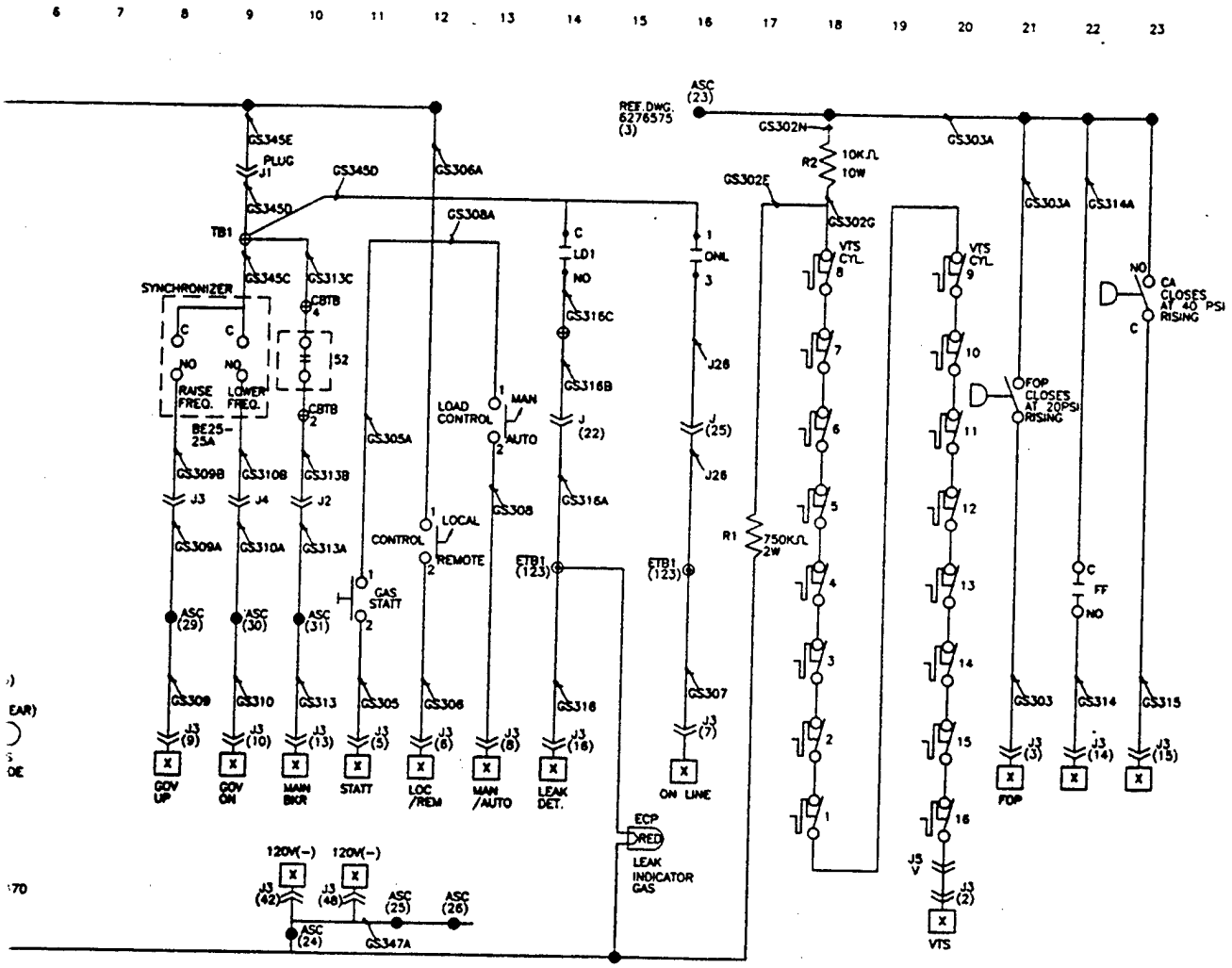

QUANTITY FOR EACH ASSEMBLY	ITEM NO.

UNLESS OTHERWISE SPECIFIED DIMENSIONS ARE IN FEET AND/OR INCHES

TOLERANCES:
.X DECIMALS
.XX DECIMALS
.XXX DECIMALS
FRACTIONS ±1/16"
ANGLES ±0.5°

PART DASH NO. | NEXT ASSY.

PROJ NO
DWG. NO.
DES XX
CHK XX
BRANCH HEAD
DIV DIR
SATISFACTORY T
MIKE CHI
NORMAN
APPROVED
COMMANDING OF
APPROVED
FOR COMMANDER

IF IN DOUBT, ASK – DO NOT SCALE

REVISIONS			
SYM	DESCRIPTION	DATE	APPROVAL

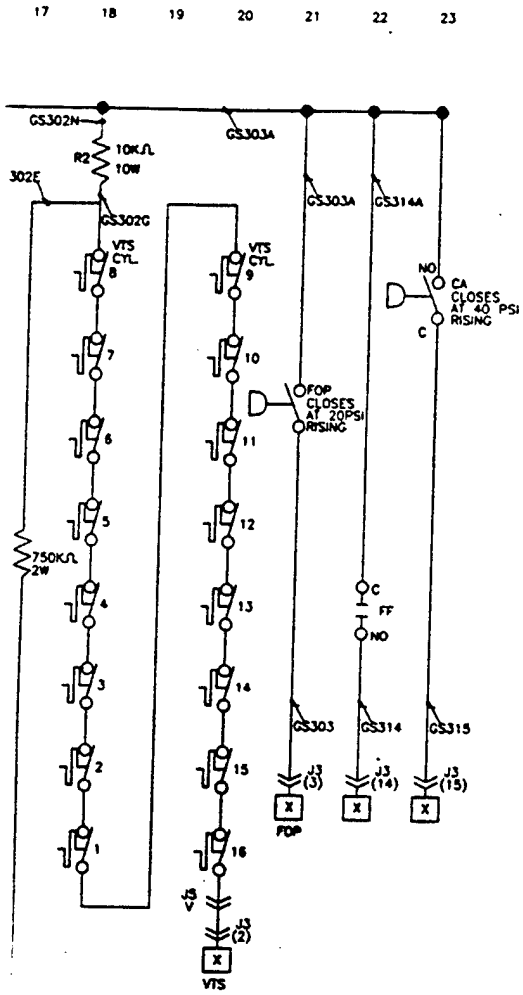

LEGEND

ASC - AIR SERVICE CAB
CA - COLD AIR SIGNAL
EM - ENGINE MODE SW.
EN - ENABLE GAS RELAY
FF - FAN FLOW SIGNAL
FOP - FUEL OIL PRESSURE
LD - LEAK DETECTION SIGNAL
VTS - VALVE, TEMPERATURE SW.

[X] - ECU INPUT
[Y] - ECU OUTPUT 130V DC

QUANTITY FOR EACH ASSEMBLY	ITEM NO.	PART NO.	DESCRIPTION	MATERIAL
			PARTS LIST	

UNLESS OTHERWISE SPECIFIED DIMENSIONS ARE IN FEET AND/OR INCHES
TOLERANCES:
.X DECIMALS
.XX DECIMALS
.XXX DECIMALS
FRACTIONS ±1/16"
ANGLES ±0.5°

PART DASH NO. | NEXT ASSY.

PROJ NO
DWG NO. 788A- DF
DES XX | DR F.DELLALIBERA
CHK XX
BRANCH HEAD K.MACK
DIV DIR
SATISFACTORY TO
MIKE CHILDERS
NORMAN HELGESON DEC. 1999
APPROVED DATE
COMMANDING OFFICER
APPROVED DATE
FOR COMMANDER, NAVFAC

DEPARTMENT OF THE NAVY NAVAL FACILITIES ENGINEERING COMMAND
NAVAL FACILITIES ENGINEERING SERVICE CENTER
PORT HUENEME, CALIFORNIA 93043

DUEL FUEL 1500 KW
CONVERSION OF DIESEL POWER PLANTS
SCHEMATIC DIAGRAM
ENGINE CONTROL CIRCUITS

SIZE F | CODE IDENT NO 80091 | NAVFAC DRAWING NO
CONSTR CONTR NO
SCALE NONE | SPEC | SHEET 1 OF

IF IN DOUBT, ASK - DO NOT SCALE

3

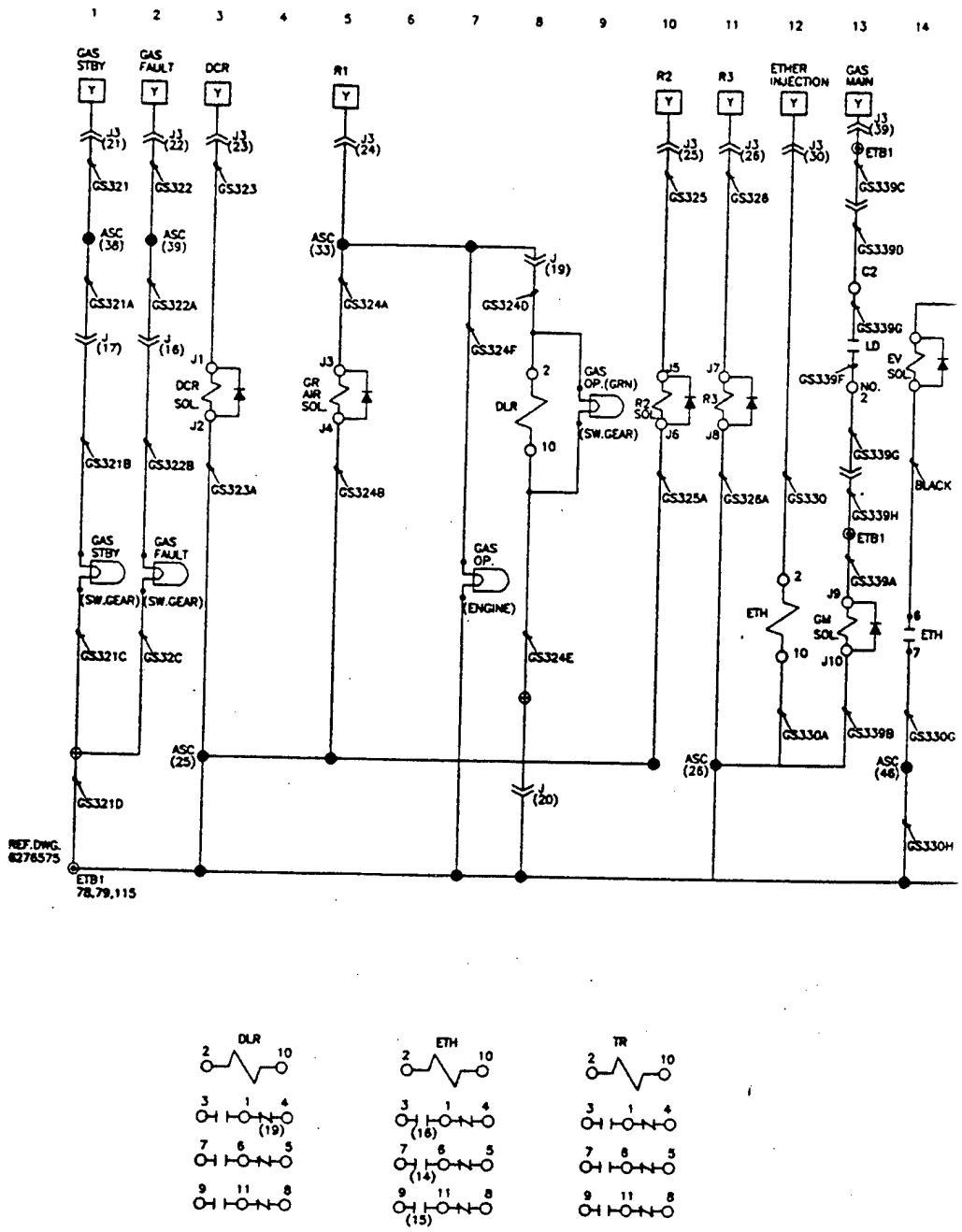
GAS STBY
GAS FAULT
DCR
R1
R2
R3
ETHER INJECTION
GAS MAIN
GS321
GS322
GS323
GS324A
GS324D
GS324F
GS324E
GS324B
GS325
GS326
GS325A
GS326A
GS330
GS339C
GS339D
GS339G
GS339F
GS339H
GS339A
GS339B
GS330G
GS330H
GS321A
GS322A
GS321B
GS322B
GS323A
GS321C
GS32C
GS321D
ASC (38)
ASC (39)
ASC (33)
ASC (25)
ASC (26)
ASC (46)
DCR SOL.
GR AIR SOL.
DLR
GAS OP.(GRN)
R2 SOL.
R3
ETH
GM SOL.
EV SOL.
LD
NO. 2
C2
BLACK
(SW.GEAR)
(ENGINE)
REF.DWG. 6276575
ETB1 78,79,115
DLR
ETH
TR

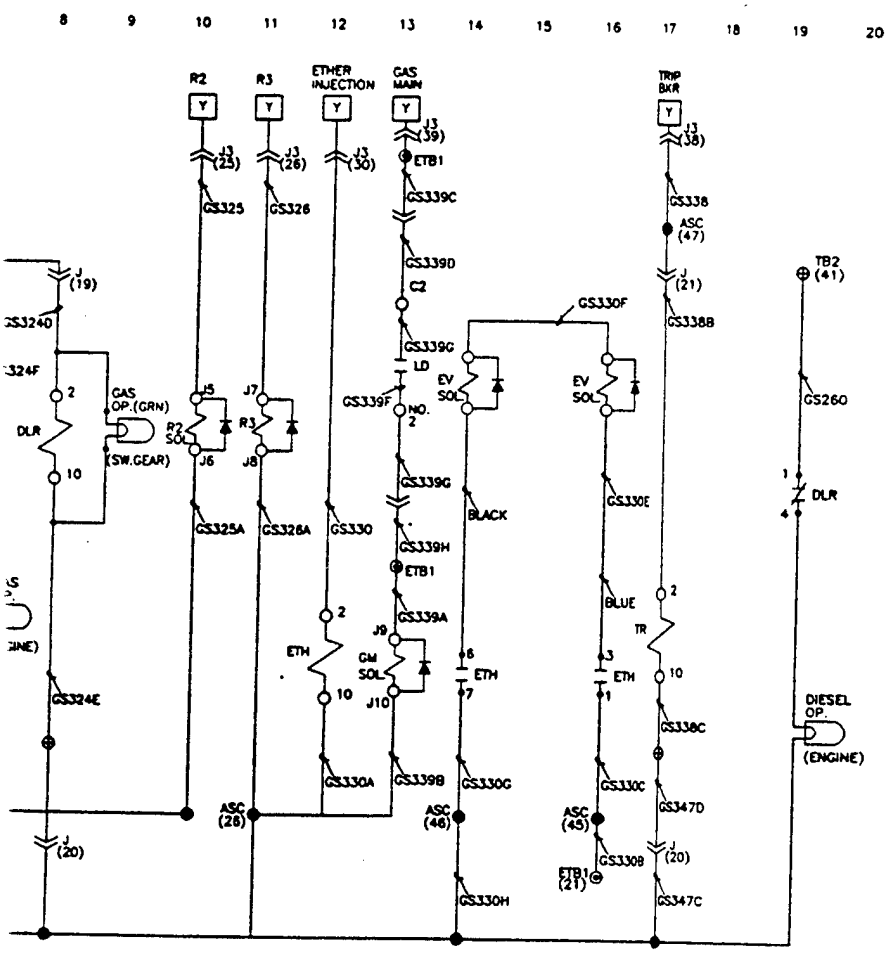

LEGEND

DCR - DIESEL CONTROL RAM
DLR - DIESEL LIGHT RELAY
ETH - ETHER INJECTION RELAY
GR - GAS RUN
LD - LEAK DETECTION
R2 - RACK POSITION TWO
R3 - RACK POSITION THREE
TR - TRIP MAIN BREAKER RELAY

X - ECU INPUT
Y - ECU OUTPUT 130V DC

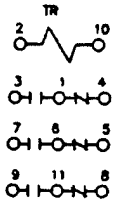

QUANTITY FOR EACH ASSEMBLY	ITEM NO.	PART NO.

UNLESS OTHERWISE SPECIFIED DIMENSIONS ARE IN FEET AND/OR INCHES

TOLERANCES:
.X DECIMALS
.XX DECIMALS
.XXX DECIMALS
.XXXX DECIMALS
FRACTIONS ±1/16"
ANGLES ±0.5°

PART DASH NO. | NEXT ASSY.

PROJ NO
DWG. NO. 788B- DF
DES XX | DR F DELLAUBERA
CHK XX
BRANCH HEAD K MACK
DIV DIR
SATISFACTORY TO
MIKE CHILDERS
NORMAN HELGESON DEC. 1996
APPROVED DATE
COMMANDING OFFICER
APPROVED DATE
FOR COMMANDER, NAVFAC

IF IN DOUBT, ASK - DO NOT SCALE

REVISIONS			
SYM	DESCRIPTION	DATE	APPROVAL

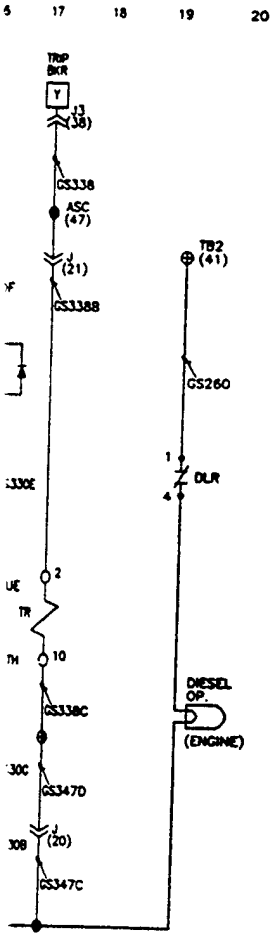

LEGEND

DCR - DIESEL CONTROL RAM
DLR - DIESEL LIGHT RELAY
ETH - ETHER INJECTION RELAY
GR - GAS RUN
LD - LEAK DETECTION
R2 - RACK POSITION TWO
R3 - RACK POSITION THREE
TR - TRIP MAIN BREAKER RELAY

[X] - ECU INPUT
[Y] - ECU OUTPUT 130V DC

QUANTITY FOR EACH ASSEMBLY	ITEM NO.	PART NO.	DESCRIPTION	MATERIAL
			PARTS LIST	

UNLESS OTHERWISE SPECIFIED DIMENSIONS ARE IN FEET AND/OR INCHES

TOLERANCES:
.X DECIMALS
.XX DECIMALS
.XXX DECIMALS
FRACTIONS ±1/16"
ANGLES ±0.5°

PART DASH NO. | NEXT ASSY.

PROJ NO
DWG. NO. 788B- DF
DES XX | DR F DELLAMERA
CHK XX
BRANCH HEAD K MACK
DIV DIR
SATISFACTORY TO
MIKE CHILDERS
NORMAN HELGESON DEC. 1998
APPROVED DATE
COMMANDING OFFICER
APPROVED DATE
FOR COMMANDER, NAVFAC

DEPARTMENT OF THE NAVY NAVAL FACILITIES ENGINEERING COMMAND
NAVAL FACILITIES ENGINEERING SERVICE CENTER
PORT HUENEME, CALIFORNIA 93043

DUEL FUEL 1500 KW
CONVERSION OF DIESEL POWER PLANTS
SCHEMATIC DIAGRAM
ENGINE CONTROL CIRCUITS

SIZE F | CODE IDENT NO 80091 | NAVFAC DRAWING NO
CONTR CONFIG NO
SCALE NONE | SPEC | SHEET 1 OF

IF IN DOUBT, ASK - DO NOT SCALE

3

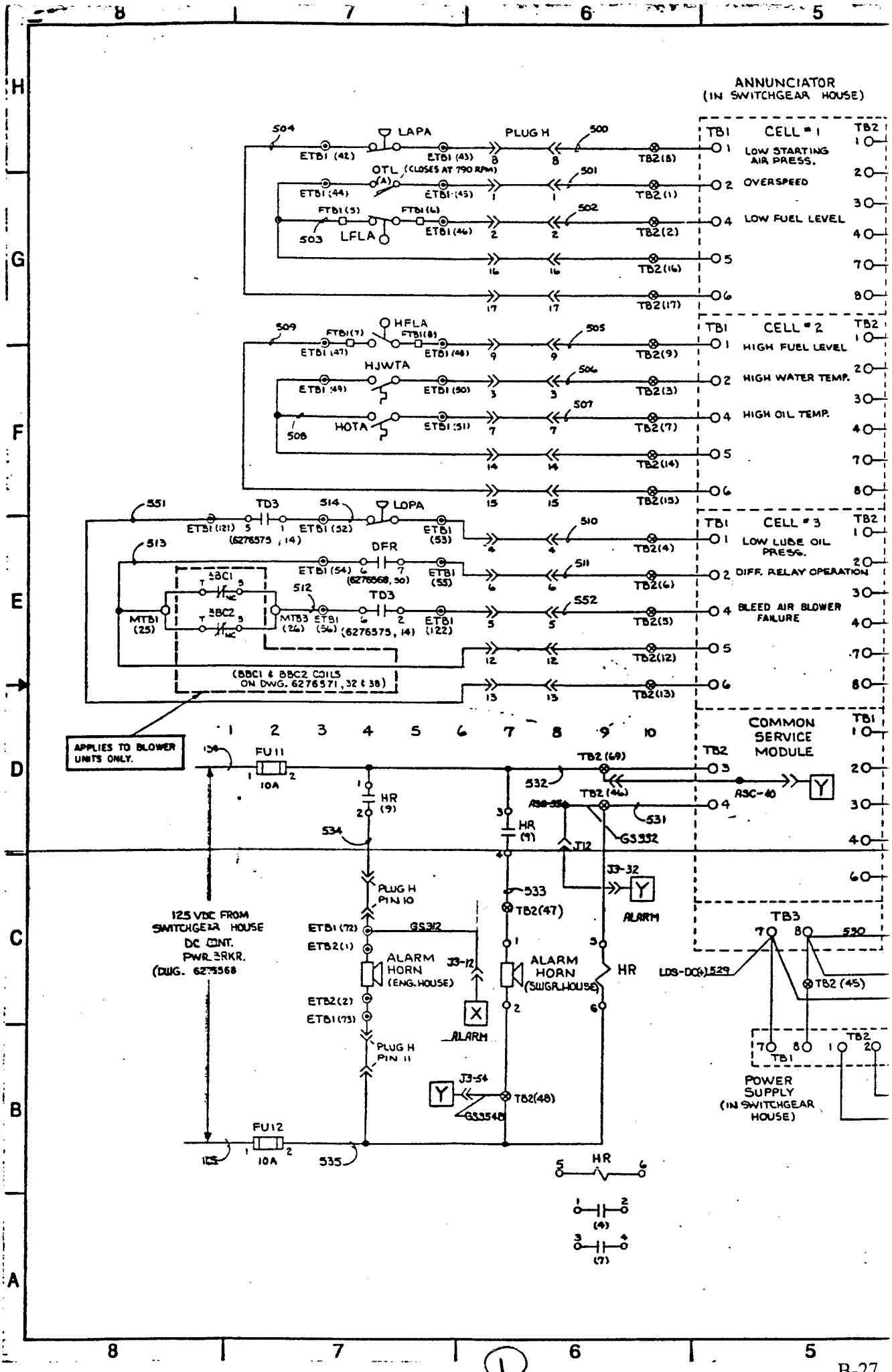
ANNUNCIATOR
(IN SWITCHGEAR HOUSE)
CELL # 1
LOW STARTING AIR PRESS.
OVERSPEED
LOW FUEL LEVEL
CELL # 2
HIGH FUEL LEVEL
HIGH WATER TEMP.
HIGH OIL TEMP.
CELL # 3
LOW LUBE OIL PRESS.
DIFF. RELAY OPERATION
BLEED AIR BLOWER FAILURE
LAPA
PLUG H
OTL (CLOSES AT 790 RPM)
LFLA
HFLA
HJWTA
HOTA
LOPA
TD3
DFR
BBC1
BBC2
(BBC1 & BBC2 COILS ON DWG. 6276571, 32 & 38)
APPLIES TO BLOWER UNITS ONLY.
FU11
10A
HR (9)
PLUG H PIN 10
PLUG H PIN 11
125 VDC FROM SWITCHGEAR HOUSE DC CONT. PWR. BRKR. (DWG. 6275568)
ALARM HORN (ENG. HOUSE)
ALARM HORN (SWGR. HOUSE)
ALARM
FU12
COMMON SERVICE MODULE
ASC-40
TB3
POWER SUPPLY (IN SWITCHGEAR HOUSE)

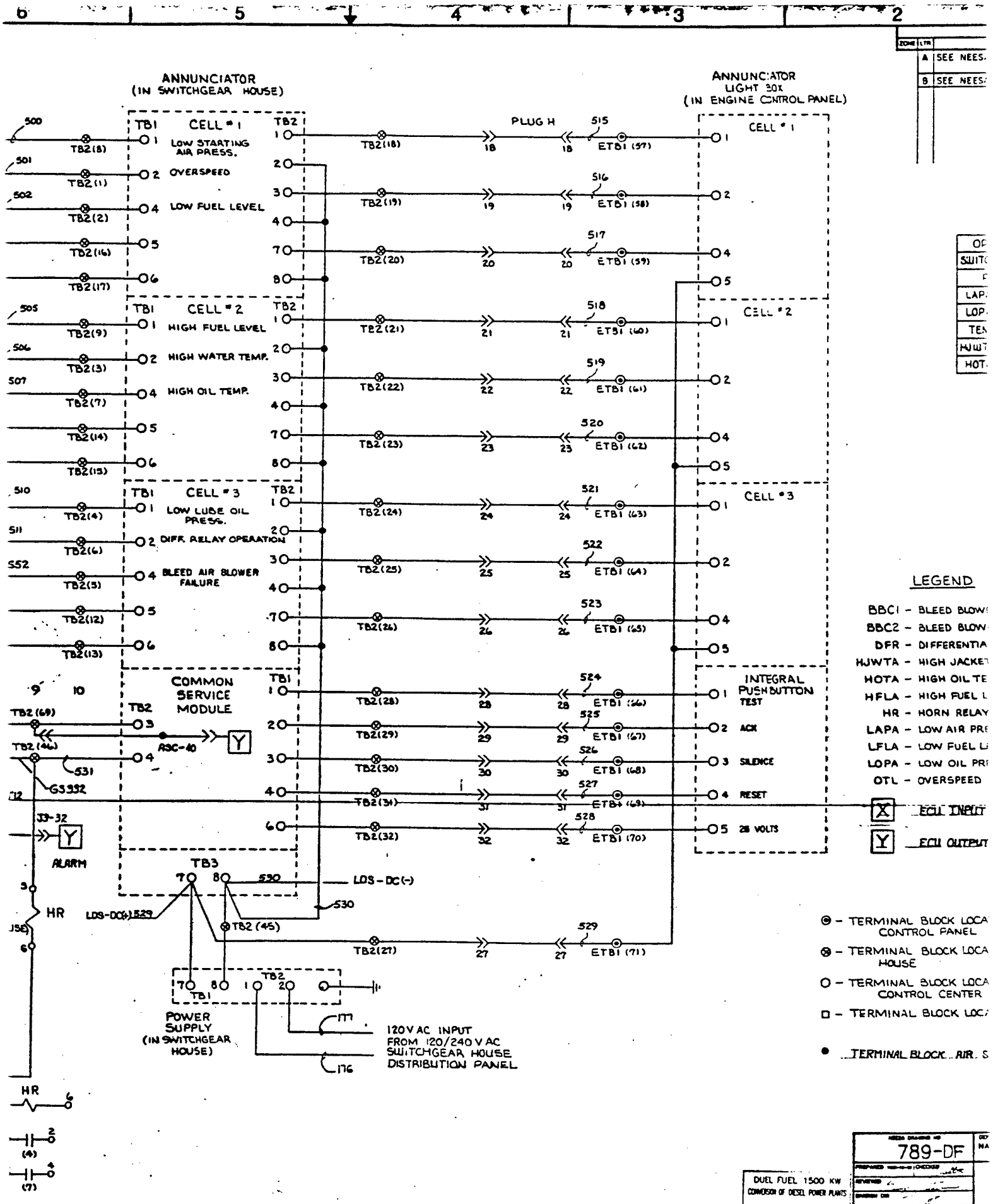
ANNUNCIATOR
(IN SWITCHGEAR HOUSE)
ANNUNCIATOR
LIGHT BOX
(IN ENGINE CONTROL PANEL)
CELL # 1
LOW STARTING AIR PRESS.
OVERSPEED
LOW FUEL LEVEL
CELL # 2
HIGH FUEL LEVEL
HIGH WATER TEMP.
HIGH OIL TEMP.
CELL # 3
LOW LUBE OIL PRESS.
DIFF. RELAY OPERATION
BLEED AIR BLOWER FAILURE
COMMON SERVICE MODULE
INTEGRAL PUSHBUTTON TEST
ACK
SILENCE
RESET
28 VOLTS
PLUG H
ALARM
HR
POWER SUPPLY
(IN SWITCHGEAR HOUSE)
120V AC INPUT
FROM 120/240 V AC
SWITCHGEAR HOUSE
DISTRIBUTION PANEL
LOS-DC(-)
LEGEND
BBC1 - BLEED BLOW
BBC2 - BLEED BLOW
DFR - DIFFERENTIA
HJWTA - HIGH JACKET
HOTA - HIGH OIL TE
HFLA - HIGH FUEL L
HR - HORN RELAY
LAPA - LOW AIR PRE
LFLA - LOW FUEL L
LOPA - LOW OIL PRE
OTL - OVERSPEED
ECU INPUT
ECU OUTPUT
TERMINAL BLOCK LOCA CONTROL PANEL
TERMINAL BLOCK LOCA HOUSE
TERMINAL BLOCK LOCA CONTROL CENTER
TERMINAL BLOCK LOC
TERMINAL BLOCK AIR S
789-DF
DUEL FUEL 1500 KW
COMBOSOR OF DESEL POWER PLANTS

REVISIONS				
ZONE	LTR	DESCRIPTION	DATE	APPROVED
	A	SEE NEESA DCN 89-37	1989-6-2	
	B	SEE NEESA DCN 92-22	1992-2-19	

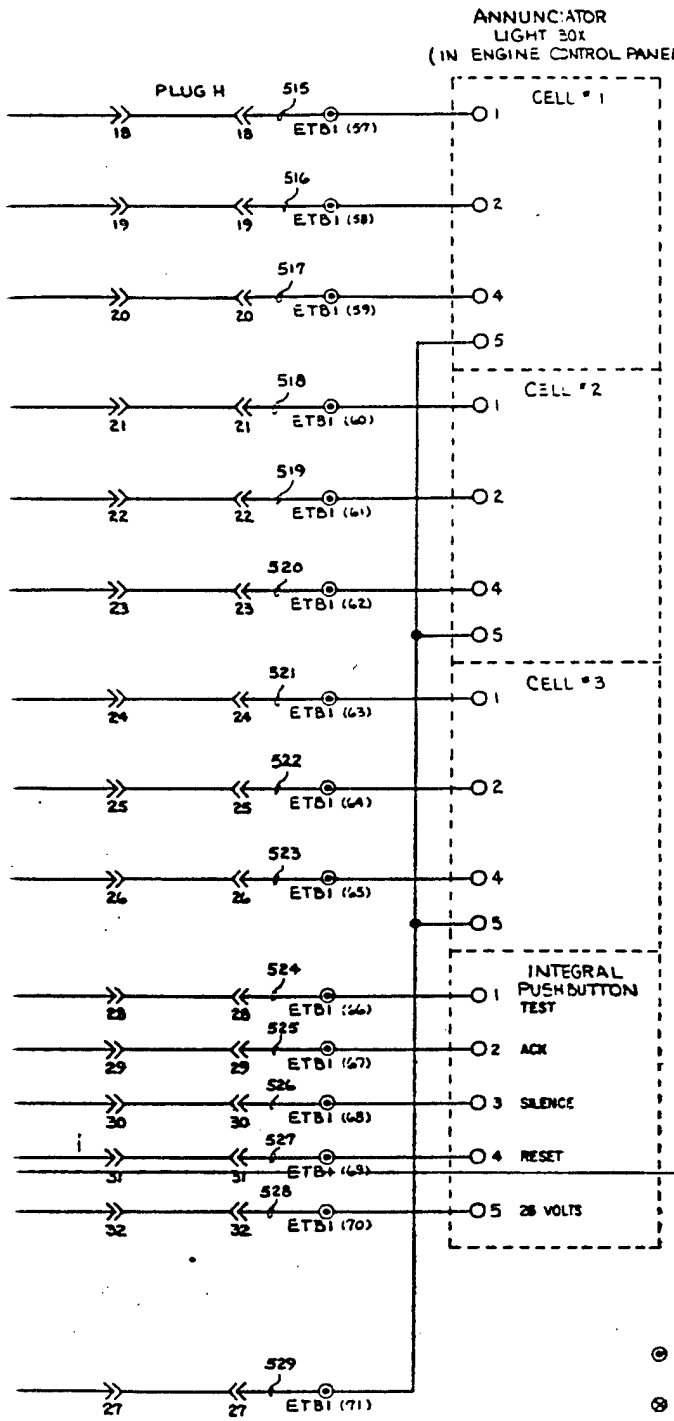

OPERATING POINTS		
SWITCH	CLOSE	OPEN
PRESSURE PSI		
LAPA	150	175
LOPA	35	45
TEMPERATURE (°F)		
HJWTA	200	190
HOTA	230	220

LEGEND

BBC1 - BLEED BLOWER CONTROLLER
BBC2 - BLEED BLOWER CONTROLLER
DFR - DIFFERENTIAL FAULT RELAY
HJWTA - HIGH JACKET WATER TEMPERATURE ALARM
HOTA - HIGH OIL TEMPERATURE ALARM
HFLA - HIGH FUEL LEVEL ALARM
HR - HORN RELAY
LAPA - LOW AIR PRESSURE ALARM
LFLA - LOW FUEL LEVEL ALARM
LOPA - LOW OIL PRESSURE ALARM
OTL - OVERSPEED TRIP LIMIT SWITCH
[X] ECU INPUT 130 VDC
[Y] ECU OUTPUT 130 VDC

⊕ - TERMINAL BLOCK LOCATED IN ENGINE CONTROL PANEL (ETB1 & ETB2)
⊗ - TERMINAL BLOCK LOCATED IN SWITCHGEAR HOUSE
O - TERMINAL BLOCK LOCATED IN MOTOR CONTROL CENTER (MTB1, MTB2, & MTB3)
□ - TERMINAL BLOCK LOCATED ON FUEL TANK
● - TERMINAL BLOCK AIR SERVICE CABINET

C INPUT
120/240 V AC
HGEAR HOUSE
BUTION PANEL

DUEL FUEL 1500 KW
CONVERSION OF DIESEL POWER PLANTS

SATISFACTORY TO
MIKE CHILDERS
NORMAN HIGGSON

789-DF

DEPARTMENT OF THE NAVY
NAVAL ENERGY AND ENVIRONMENTAL SUPPORT ACTIVITY

OVERHAUL 1500 KW
DIESEL POWER PLANTS
SCHEMATIC DIAGRAM ANNUNCIATOR

SIZE F
CAGE NO 80091
NAVFAC DRAWING NO 6276576
CONTR NO N47408-89-C-2011
SCALE NONE
SHEET 30 OF

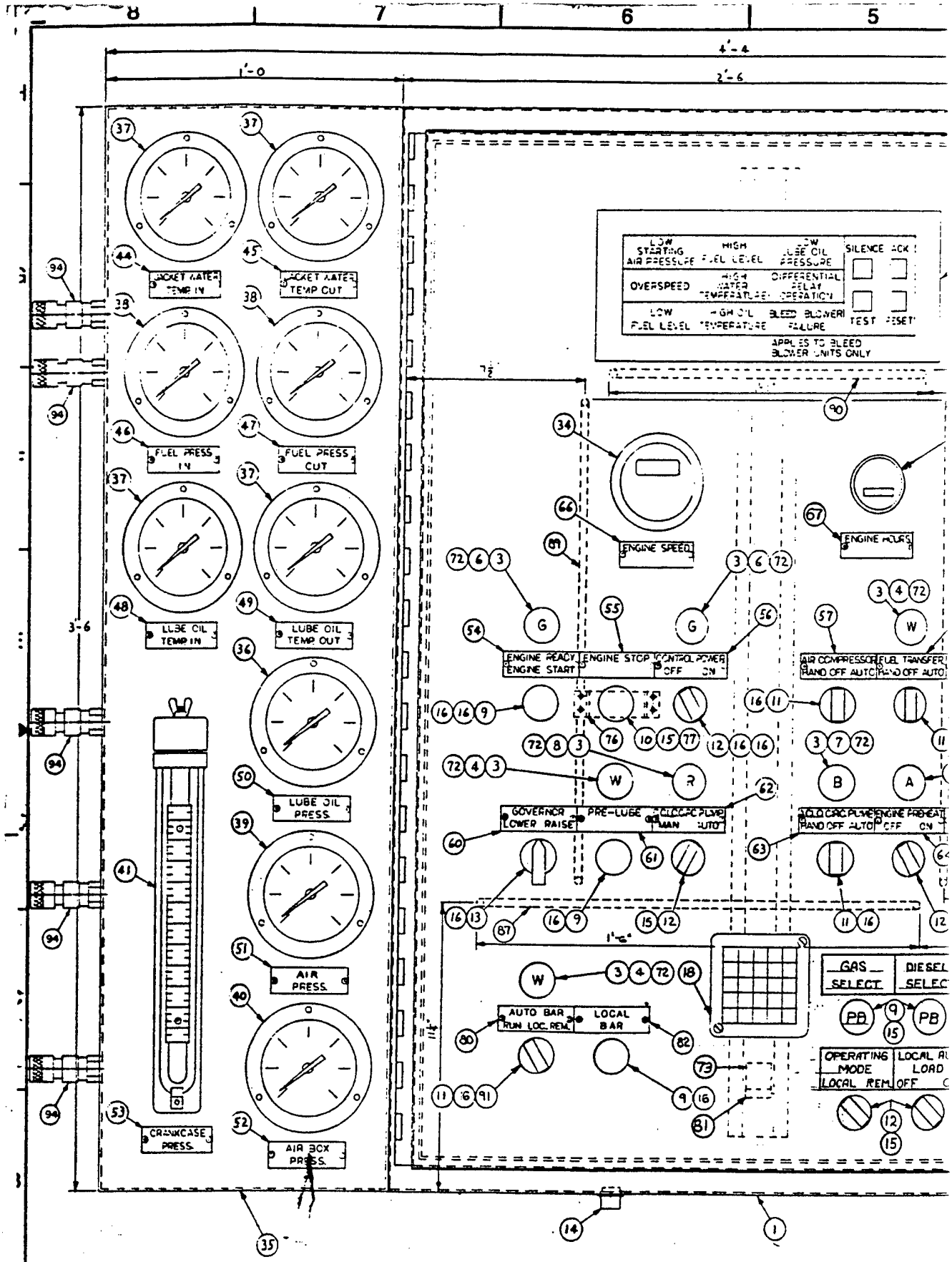

ENGINE CONTROL PANEL ASSEMBLY

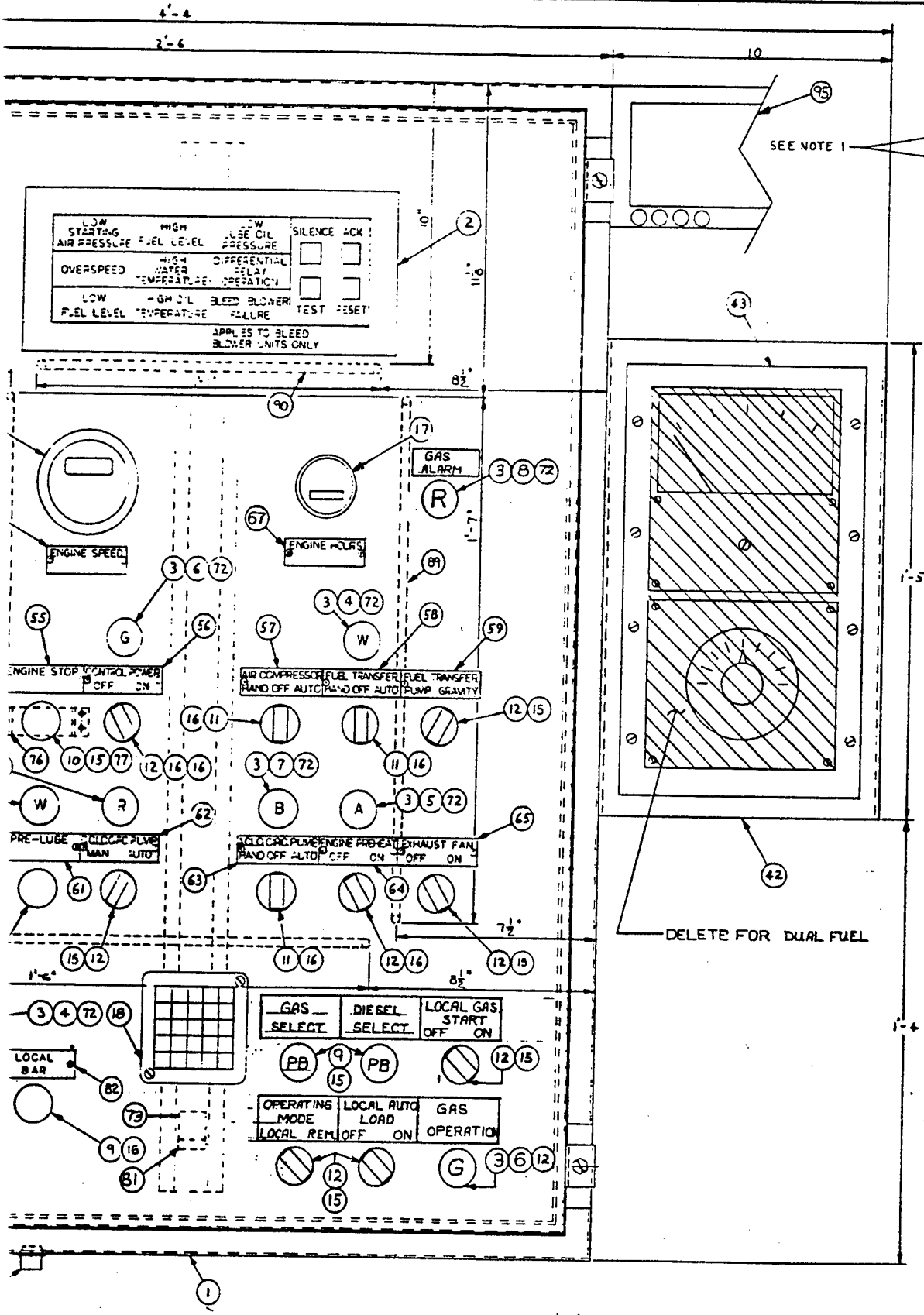

QTY REQD	ITEM NO	PART OR IDENTIFYING NO.	NOMENCLATURE OR DESCRIPTION	
			LCD DISPLAY	
5		SS-QC4-B1-100	GAUGE TEST TAP	
1	5605	10250T3	CONTACT BLOCK	
			NAMEPLATE	
1	37137	MS-2-141	MARKER STRIP	
			NAMEPLATE	
1			CONTACT PLATE	
1			MTG. BRACKET	
1	37137	2-141	TERMINAL BOARD	
10	72838	656-120V	LIGHT BULB	
			NAMEPLATE	
			NAMEPLATE	
1	01518	603-502-074	PYROMETER	A
1			PANEL	
1	39739	10AA25WM	MANOMETER	ME
1	78763	893 0-30	GAUGE	TI
1	78763	893 0-300	GAUGE	TF
2	78763	893 0-100	GAUGE	TR
4	78763	V80040	GAUGE	TR
1	78763	893 0-160	GAUGE	TF
1			GAUGE PANEL	
1	54571	SPD-108	TACHOMETER	DY
1	12K221	450-125V	ALARM HORN	FE
1	18583	12729-12	METER	CU
12	15605	10250T2	CONTACT BLOCK	CI
10	15605	10250T1	CONTACT BLOCK	CI
1	72915	8458522	RECEPTACLE	EN
1	15605	10250T3C43	SWITCH	CH
8	15605	10250T1311	SWITCH	CH
				CO
4	15605	10250T1323	SWITCH	CH
1	15605	10935H5	OPERATOR	CH
5	15605	10250T101	PUSH BUTTON	CH
2	15605	10250TC1N	LENS CAP	CH
1	15605	10250TC4N	LENS CAP	CH
3	15605	10250TC2N	LENS CAP	CH
1	15605	10250TC19N	LENS CAP	CH
3	15605	10250TC6N	LENS CAP	CH
10	15605	10250T201N	SOCKET	CH
1	32582	AN-5131-1HX4W-3-9-W-STH	BOX	RC
1	00643	A-433008LP	CABINET ECP	HC

PARTS

NE CONTROL PANEL ASSEMBLY

LTR	DESCRIPTION	DATE	APPROVED
A	SEE NEESA DCN 92-12.	1992-1-8	

REVISIONS

DUEL FUEL 1500 KW CONVERSION OF DIESEL POWER PLANTS

SATISFACTORY TO MIKE CHILDERS NORMAN HELGESON

790-DF

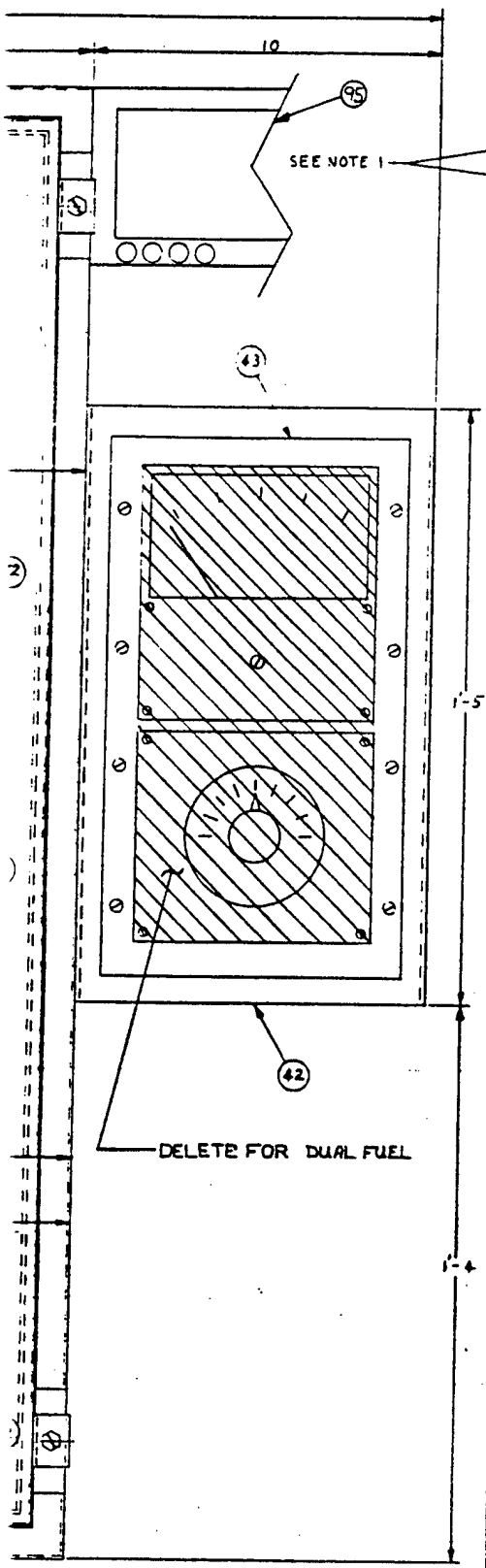

QTY	FSCM NO	PART OR IDENTIFYING NO.	NOMENCLATURE OR DESCRIPTION	MATERIAL/SPECIFICATION	ITEM NO.
			LCD DISPLAY	GAS SYSTEM STATUS & CONTROL SCN.	95
5		SS-QC4-B1-400	GAUGE TEST TAP	SWAGELOK - QUICK-CONNECT W/PROTECTOR PLUG	94
1	5605	10250T3	CONTACT BLOCK	CH (2 NC)	91
			NAMEPLATE	(LOCAL BAR)	82
1	37137	MS-2-141	MARKER STRIP	TRW (FOR ITEM 73)	81
			NAMEPLATE	(AUTO BAR/RUN LOC. REM.)	80
			CONTACT PLATE	(OPERATOR) (FOR ITEM 10)	77
			MTG. BRACKET	(CONTACT BLOCK) (FOR ITEM 15)	76
1	37137	2-141	TERMINAL BOARD	TRW (FOR ITEM 18) (ETB-2)	73
10	78338	656-120V	LIGHT BULB	SYL (FOR ITEM 3)	72
			NAMEPLATE	(ENGINE HOURS)	67
				(ENGINE SPEED)	66
				(EXHAUST FAN/OFF ON)	65
				(ENGINE PREHEAT/OFF ON)	64
				(AC L.O. CIRC. PUMP/HAND OFF AUTO)	63
				(DC L.O. CIRC. PUMP/MAN. AUTO)	62
				(PRE-LUBE)	61
				(GOVERNOR/LOWER RAISE)	60
				(FUEL TRANSFER (MODE)/PUMP GRAVITY)	59
				(FUEL TRANSFER (SEL)/HAND OFF AUTO)	58
				(AIR COMPRESSOR/HAND OFF AUTO)	57
				(CONTROL POWER/OFF ON)	56
				(ENGINE STOP)	55
				(ENGINE READY/ENGINE START)	54
				(CRANKCASE PRESS.)	53
				(AIR BOX PRESS.)	52
				(AIR PRESS.)	51
				(LUBE OIL PRESS.)	50
				(LUBE OIL TEMP. OUT)	49
				(LUBE OIL TEMP. IN)	48
				(FUEL PRESS. OUT)	47
				(FUEL PRESS. IN)	46
				(JACKET WATER TEMP OUT)	45
			NAMEPLATE	(JACKET WATER TEMP. IN)	44
1	01518	603-502-074	PYROMETER	ALNOR (ENG. EXHAUST MODEL FND)	43
			PANEL	(EXHAUST PYROMETER)	42
1	39739	10AA25WM	MANOMETER	MERIAM CRANKCASE PRESS.)	41
1	78763	893 0-30	GAUGE	TRERICE (AIR BOX PRESS. 0-30)	40
1	78763	893 0-300	GAUGE	TRERICE (START AIR PRESS. 0-300)	39
2	78763	893 0-100	GAUGE	TRERICE (FUEL PRESS. IN & OUT 0-100)	38
4	78763	V80040	GAUGE	TRERICE (LUBE OIL & WATER TEMP IN & OUT 30-240)	37
1	78763	893 0-160	GAUGE	TRERICE (LUBE OIL PRESS. 0-160)	36
1			GAUGE PANEL		35
1	54571	SPD-108	TACHOMETER	DYNALCO (ENG. SPEED 0-1000 RPM)	34
1	12K221	450-125V	ALARM HORN	FEDERAL	18
1	18583	12729-12	METER	CURTIS (RUNNING TIME 0-99,999)	17
12	15605	10250T2	CONTACT BLOCK	CH (2-NO)	16
10	15605	10250T1	CONTACT BLOCK	CH (1-NO & 1-NC)	15
1	72915	8458522	RECEPTACLE	EMD (AUTO BAR)	14
1	15605	10250T3C43	SWITCH	CH (GOVERNOR CONTROL)	13
8	15605	10250T1311	SWITCH	CH (FUEL TRANS. MODE, ENG. PRE-HEAT, CONTR. PWR., DC LO. CIRC. PUMP, EXH. FAN)	12
4	15605	10250T1323	SWITCH	CH (AC MODE, FUEL TRANS. SEL., AC L.O.C.P., AUTO BAR)	11
1	15605	10935H5	OPERATOR	CH (RED) (ENG. STOP)	10
5	15605	10250T101	PUSH BUTTON	CH (BLACK) (ENG. START) (LOCAL BAR) (PRE LUBE)	9
2	15605	10250TC1N	LENS CAP	CH (RED) (DC LUBE PUMP)	8
1	15605	10250TC4N	LENS CAP	CH (BLUE) (AC LUBE PUMP)	7
3	15605	10250TC2N	LENS CAP	CH (GREEN) (POWER ON, ENG. READY)	6
1	15605	10250TC19N	LENS CAP	CH (AMBER) (ENG. PRE-HEAT)	5
3	15605	10250TC6N	LENS CAP	CH (WHITE) (PRE-LUBE, FUEL TRANS., AUTO BAR)	4
10	15605	10250T201N	SOCKET	CH (INDICATING LIGHTS)	3
1	32582	AN-5131-1HX4W-3-9-W-STH	BOX	ROCH (ANNUNCIATOR LIGHTS)	2
1	00843	A-423008LP	CABINET ECP	HOFFMAN (42 x 30 x 8)	1

PARTS LIST

NEESA DRAWING NO 790-DF

DEPARTMENT OF THE NAVY NAVAL FACILITIES ENGINEERING COMMAND
NAVAL ENERGY AND ENVIRONMENTAL SUPPORT ACTIVITY
PORT HUENEME, CALIFORNIA 93043-5014

DUEL FUEL 1500 KW
CONVERSION OF DIESEL POWER PLANTS

OVERHAUL 1500 KW
DIESEL POWER PLANTS
ENGINE CONTROL AND SUBPANEL ASSEMBLY

SATISFACTORY TO
MIKE CHILDERS
NORMAN HELGESON

LTR	DESCRIPTION	DATE	APPROVED
A	SEE NEESA DCN 92-12.	1992-1-8	

REVISIONS

SIZE F | CAGE NO 80091 | MANFAC DRAWING NO 6276577
CONTR NO N47408-89-C-2011
SCALE 1/2 | SHEET 31 OF

3 1A

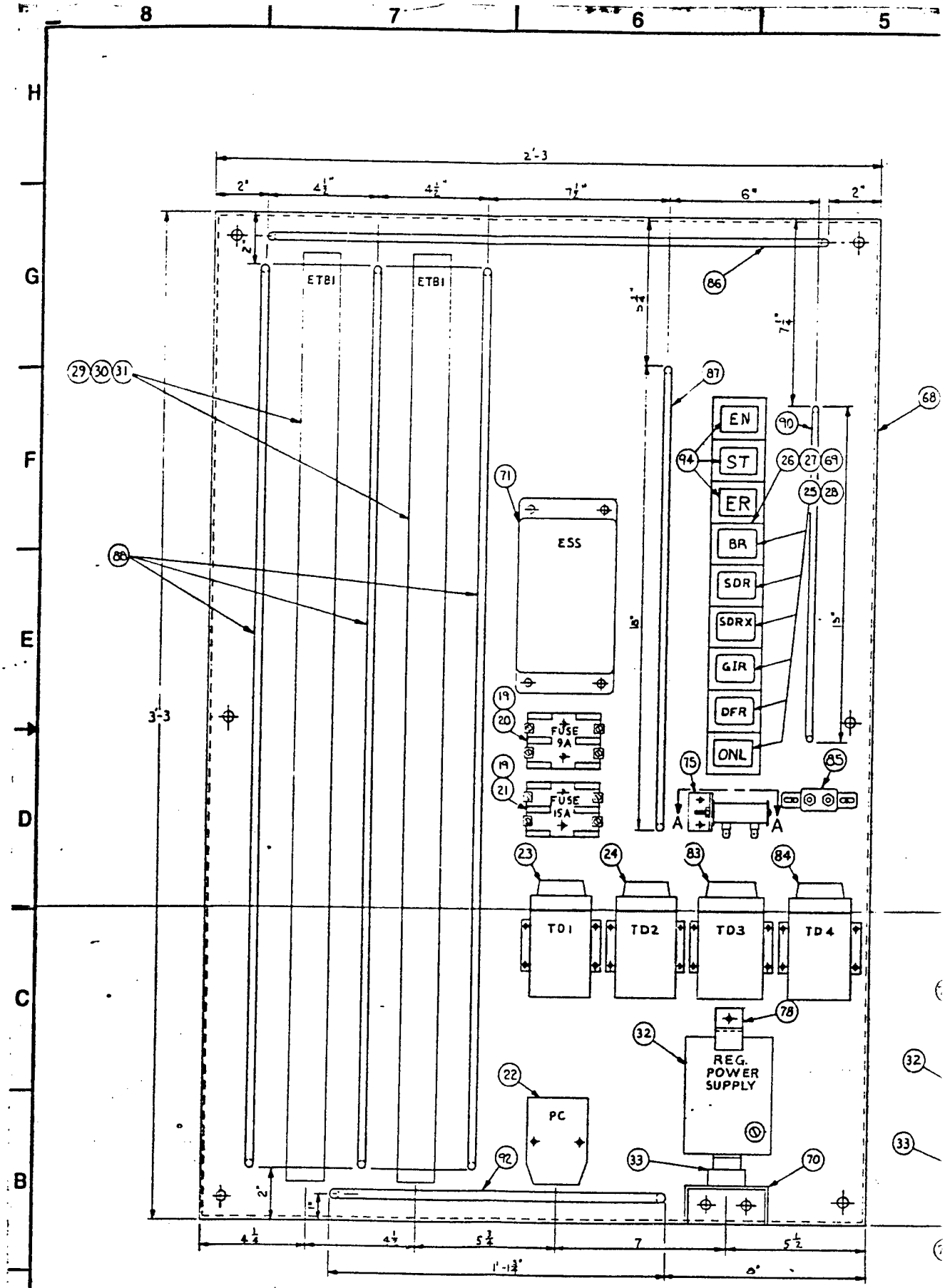

ENGINE CONTROL SUBPANEL ASSEMBLY

ZONE	LTR	
	A	SEE D

LEGEND

BR — BARRING RELAY.
DFR — DIFFERENTIAL FAULT RELAY
ESS — ELECTRONIC SPEED SWITCH
ETB-1 — ENGINE CONTROL PANEL TERMINAL BOARD
GIR — GOVERNOR IDLE RELAY
PC — PUMP CONTROLLER (D.C.)
CR1 — RECTIFIER
RE1 — RESISTOR
SDR — SHUTDOWN RELAY
SDRX — SHUTDOWN RELAY AUXILIARY
TD1 — TIME DELAY RELAY
TD2 — TIME DELAY RELAY
TD3 — TIME DELAY RELAY
TD4 — TIME DELAY RELAY
RE2 — RESISTOR

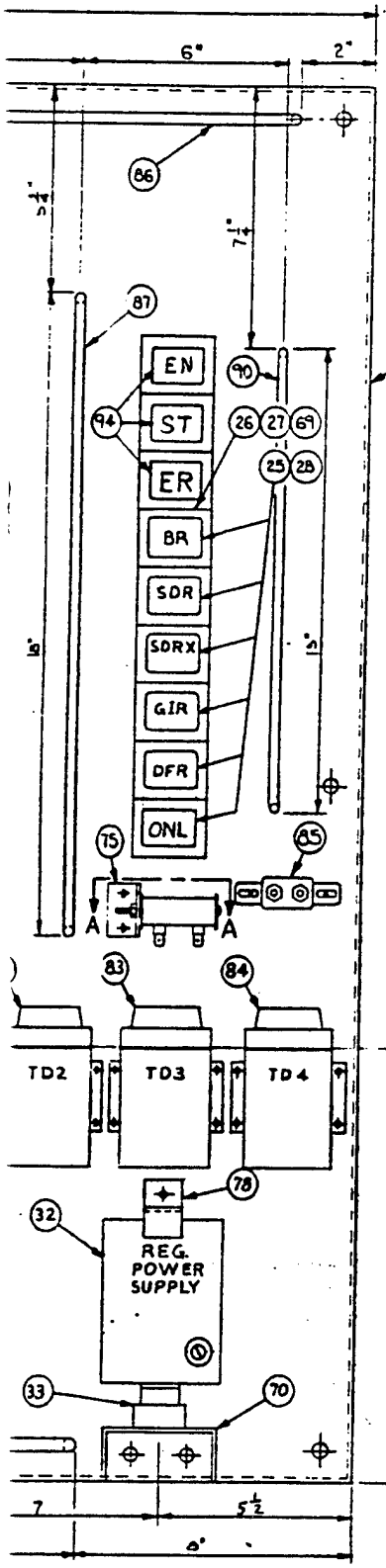

SEMBLY

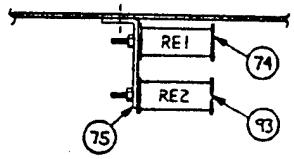

SECTION A-A

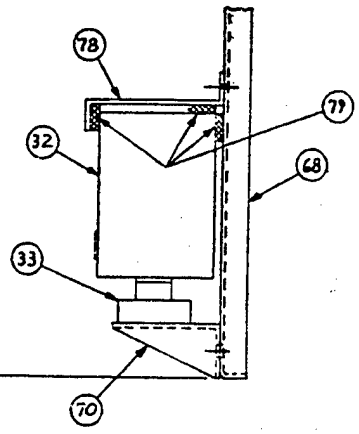

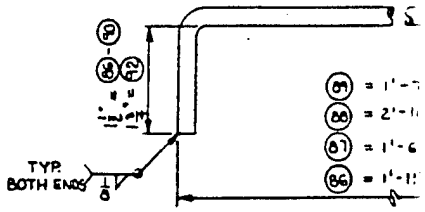

TIE BAR DET

N.T.S.

	3		KRD14DG	RELAY	S
	1		10015-R150	RESISTOR RE2	
	1			TIE BAR	3/16" F
	2			TIE BAR	1/4" F
	2			TIE BAR	1/4" R
	3			TIE BAR	1/4" R
	2			TIE BAR	1/4" R
	1			TIE BAR	1/4" R
	1	30187	3405-3	RECTIFIER-CR1	SAL
	1	70382	7022PFI2M	RELAY-TD4	AGA
	1	70382	7012PDI2M	RELAY-TD3	AGA
	1			SPONGE RUBBER	
	1			CLAMP	
	1			MTG. BRACKET	
	1	72915	8290343	RESISTOR-RE1	EM
	1	78386	ESSB-2AT	SWITCH-ESS	SYN
	1			MTG. BRACKET	
	2	81487	8501-NT10	END CLAMP	SQ
	1	00843	A-42P30	PANEL	HOF
	1	81487	8501-NR52	SOCKET	SQ-
	1	14749	5J20	POWER SUPPLY	ACO
	2	02261	67	TRACK	BUC
	4	02261	0530	END SECTION	BUC
	122	02261	0511	TERM. BLOCK	BUC
	5	81487	8501-NH2	CLIP	SQ-
	1	81487	8501-NT13	TRACK	SQ-
	5	81487	8501-NR62	SOCKET	SQ-
	6	81487	8501-KPD13	RELAY	SQ-
	1	70382	7022PII2M	RELAY-TD2	AGA
	1	70382	7022PDI2M	RELAY-TD1	AGA
	1	77342	PRD-11DHO-110	CONTACTOR-PC	P
	2	71400	NON-15	FUSE	BUS
	2	71400	FRN-9	FUSE	BUS
	2	71400	180002	FUSE BLOCK	BU
QTY REQ		FSCM NO.	PART OR IDENTIFYING NO.	NOMENCLATURE OR DESCRIPTION	

PARTS LI

791-DF

DUEL FUEL 1500 KW
CONVERSION OF DIESEL POWER PLANTS

SATISFACTORY TO
MIKE CHILDERS
NORMAN HELGESON 5 OCT 1998

REVISIONS				
ZONE	LTR	DESCRIPTION	DATE	APPROVED
	A	SEE DCN 92-23	1992-2-20	

LEGEND

BR — BARRING RELAY.
DFR — DIFFERENTIAL FAULT RELAY
ESS — ELECTRONIC SPEED SWITCH
ETB-1 — ENGINE CONTROL PANEL TERMINAL BOARD
GIR — GOVERNOR IDLE RELAY
PC — PUMP CONTROLLER (D.C.)
CR1 — RECTIFIER
RE1 — RESISTOR
SDR — SHUTDOWN RELAY
SDRX — SHUTDOWN RELAY AUXILIARY
TD1 — TIME DELAY RELAY
TD2 — TIME DELAY RELAY
TD3 — TIME DELAY RELAY
TD4 — TIME DELAY RELAY
RE2 — RESISTOR

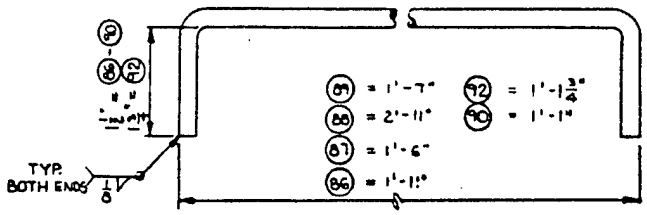

TIE BAR DETAIL

N.T.S.

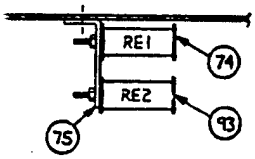

SECTION A-A

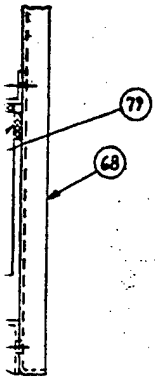

QTY REQ	FSCM NO	PART OR IDENTIFYING NO.	NOMENCLATURE OR DESCRIPTION	MATERIAL/SPECIFICATION	ITEM NO.
3		KRD14DG	RELAY	SQ.D. (EN, ST, ER)	94
1		10015-R150	RESISTOR RE2	(150Ω, 25 WATT)	93
1			TIE BAR	5/16" ROD X 1'-5 1/4"	92
2			TIE BAR	1/4" ROD X 1'-4 1/2"	90
2			TIE BAR	1/4" ROD X 1'-10 1/2"	89
3			TIE BAR	1/4" ROD X 3'-2 1/2"	88
2			TIE BAR	1/4" ROD X 1'-9 1/2"	87
1			TIE BAR	1/4" ROD X 2'-2 1/2"	86
1	30187	3405-3	RECTIFIER-CR1	SALEM	85
1	70382	7022PFI2M	RELAY-TD4	AGASTAT (1-10 MIN.) (TDDO)	84
1	70382	7012PDI2M	RELAY-TD3	AGASTAT (5-50 SEC.) (TDPU)	83
1			SPONGE RUBBER	3/4 X 5/16 X 3	79
1			CLAMP	(FOR ITEM 32)	78
1			MTG. BRACKET	(FOR ITEMS 74 & 93)	75
1	72915	8290343	RESISTOR-RE1	EMO (6.5K-25 WATT)	74
1	78388	ESSB-2AT	SWITCH-ESS	SYN. ST. 120 V DC (ELECTRONIC SPEED)	71
~~1~~			~~MTG. BRACKET~~	~~(FOR ITEM 33)~~	~~70~~
2	81487	8501-NT10	END CLAMP	SQ-D (FOR ITEM 27)	69
1	00843	A-42P30	PANEL	HOFFMAN (EQUIPMENT MOUNTING)	68
1	81487	8501-NR52	SOCKET	SQ-D (FOR ITEM 32)	33
1	14749	5J20	POWER SUPPLY	ACOPIAN (REGULATED POWER SUPPLY)	32
2	02261	67	TRACK	BUCH (FOR ITEM 29)	31
4	02261	0530	END SECTION	BUCH (FOR ITEM 29)	30
122	02261	0511	TERM. BLOCK	BUCH (ETB1)	29
5	81487	8501-NH2	CLIP	SQ-D (RELAY RETAINING, FOR ITEM 25)	28
1	81487	8501-NT13	TRACK	SQ-D (RELAY MTG. FOR ITEM 25)	27
5	81487	8501-NR62	SOCKET	SQ-D (RELAY MTG. FOR ITEM 25)	26
6	81487	8501-KPD13	RELAY	SQ-D (SDR, SDRX, GIR, DFR, BR) (125 VDC COIL)	25
1	70382	7022PII2M	RELAY-TD2	AGASTAT (6-60 MIN) (TDDO)	24
1	70382	7022PDI2M	RELAY-TD1	AGASTAT (5-50 SEC.) (TDDO)	23
1	77342	PRD-11DHO-110	CONTACTOR-PC	P&B (110 VDC COIL)	22
2	71400	NON-15	FUSE	BUSS (CONTROL PWR. - 15A)	21
2	71400	FRN-9	FUSE	BUSS (DC L.O. CIRC. PUMP-9A)	20
2	71400	180002	FUSE BLOCK	BUSS	19

PARTS LIST

DUEL FUEL 1500 KW
CONVERSION OF DIESEL POWER PLANTS

SATISFACTORY TO
MIKE CHILDERS
NORMAN HELGESON OCT 1998

791-DF

DEPARTMENT OF THE NAVY — NAVAL FACILITIES ENGINEERING COMMAND
NAVAL ENERGY AND ENVIRONMENTAL SUPPORT ACTIVITY
PORT HUENEME, CALIFORNIA 93043-5014

OVERHAUL 1500 KW
DIESEL POWER PLANTS
ENGINE CONTROL AND SUBPANEL ASSEMBLY

SIZE F | CAGE NO 80091 | NAVFAC DRAWING NO 6276578
CONTR NO N47408-89-C-2011
SCALE 1/2 | SHEET 32 OF

A

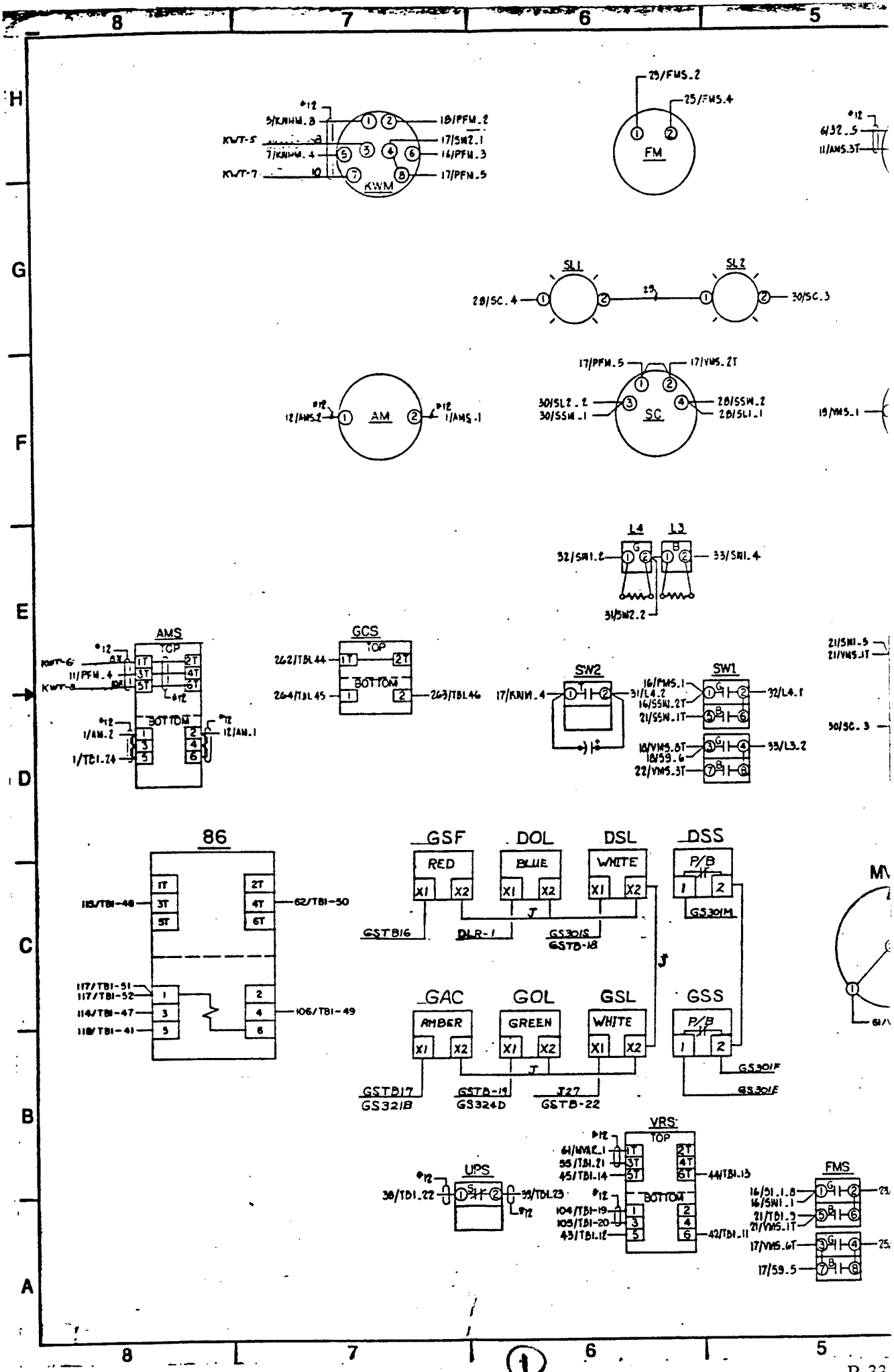
KWM
FM
SL1
SL2
AM
SC
L4
L3
AMS
TOP
BOTTOM
GCS
SW2
SW1
86
GSF
RED
DOL
BLUE
DSL
WHITE
DSS
P/B
GAC
AMBER
GOL
GREEN
GSL
WHITE
GSS
P/B
UPS
VRS
TOP
BOTTOM
FMS

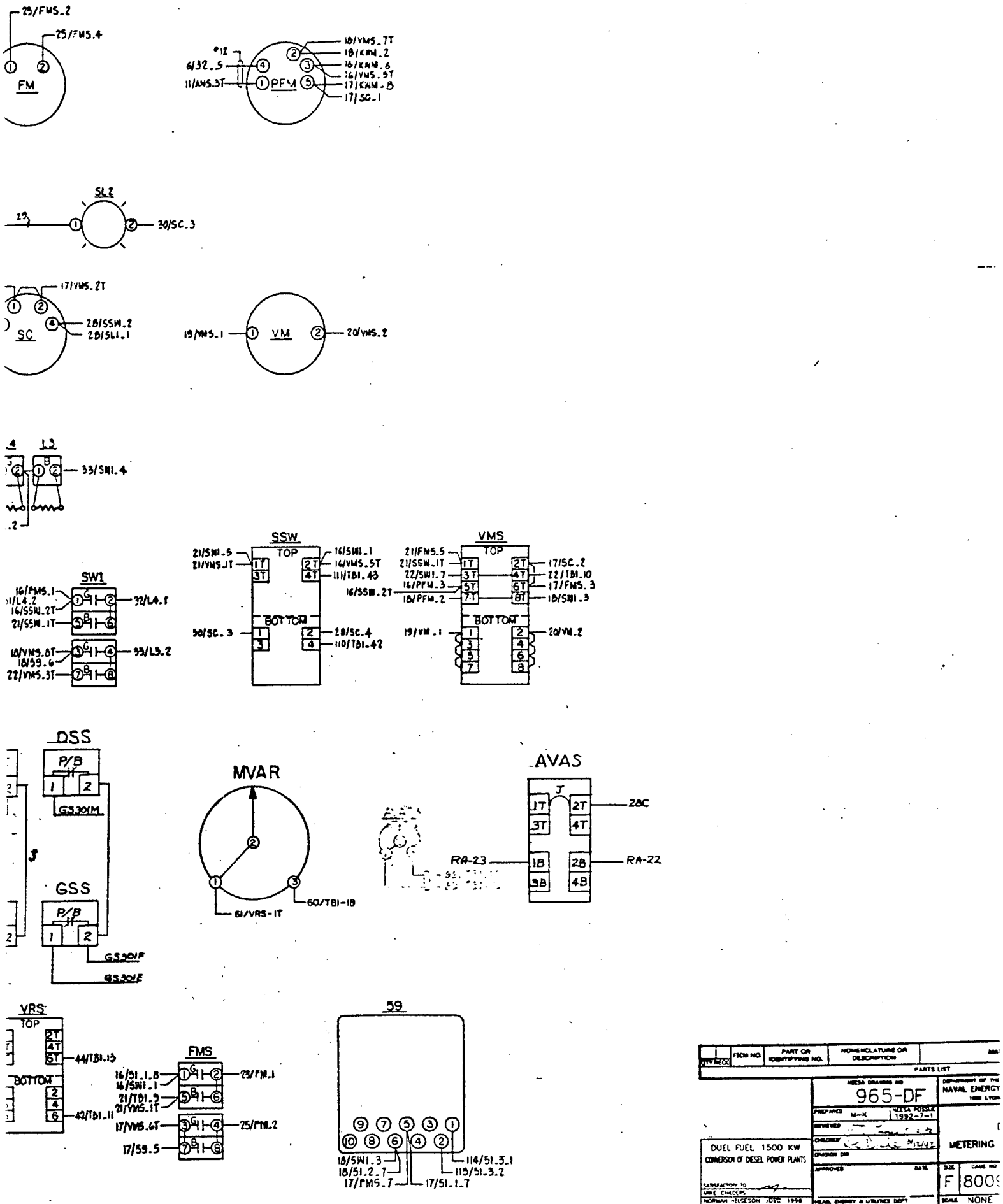
FM
25/FMS.2
25/FMS.4
PFM
6/32.5
11/AMS.3T
16/VMS.7T
16/KWM.2
16/KWM.6
16/VMS.5T
17/KWM.8
17/SC.1
SL2
30/SC.3
SC
17/VMS.2T
28/SSW.2
28/SLI.1
VM
19/VMS.1
20/VMS.2
33/SW1.4
SW1
16/FMS.1
16/SSW.2T
21/SSW.1T
32/L4.1
16/VMS.6T
16/59.6
22/VMS.3T
93/L3.2
SSW
TOP
BOTTOM
21/SW1.5
21/VMS.1T
16/SW1.1
16/VMS.5T
111/TBI.43
30/SC.3
28/SC.4
110/TBI.42
VMS
21/FMS.5
21/SSW.1T
22/SW1.7
16/PFM.3
16/SSW.2T
18/PFM.2
17/SC.2
22/TBI.10
17/FMS.3
18/SW1.3
19/VM.1
20/VM.2
DSS
P/B
GS301M
GSS
GS301F
MVAR
61/VRS-1T
60/TBI-18
AVAS
28C
RA-23
RA-22
VRS
TOP
BOTTOM
44/TBI.15
42/TBI.11
FMS
16/51.1.8
16/SW1.1
21/TBI.3
21/VMS.1T
17/VMS.6T
17/59.5
23/FM.1
25/FM.2
59
18/SW1.3
18/51.2.7
17/FMS.7
17/51.1.7
114/51.3.1
115/51.3.2
DUEL FUEL 1500 KW
CONVERSION OF DIESEL POWER PLANTS
SATISFACTORY TO
MIKE CHICERS
NORMAN HELGESON DEC 1998
PARTS LIST
965-DF
NAVAL ENERGY
METERING
F
800
NONE

ZONE	LTR	DESCRIPTION	DATE	APPROVED

REVISIONS

VMS.7T
KNM.2
KNM.6
VMS.5T
KNM.8
SC.1

VMS.2

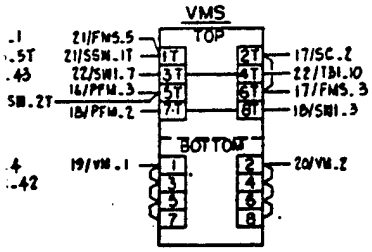

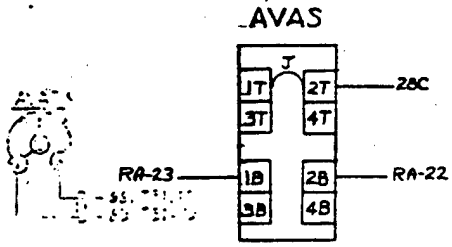

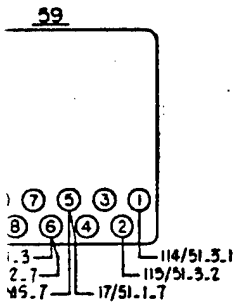

QTY REQD		FSCM NO.	PART OR IDENTIFYING NO.	NOMENCLATURE OR DESCRIPTION	MATERIAL/SPECIFICATION	ITEM NO.

PARTS LIST

NEESA DRAWING NO 965-DF

DEPARTMENT OF THE NAVY — NAVAL FACILITIES ENGINEERING COMMAND
NAVAL ENERGY AND ENVIRONMENTAL SUPPORT ACTIVITY
1000 LYONS ST. PORT HUENEME, CALIFORNIA 93043-4310

PREPARED M-K NEESA ROSSLE 1992-7-1
REVIEWED
CHECKED
DIVISION DIR
APPROVED DATE
NAVAL ENERGY & UTILITIES DEPT

OVERHAUL 1500 KW
DIESEL POWER PLANTS
METERING CUBICLE, DOOR WIRING DIAGRAM

DUEL FUEL 1500 KW
CONVERSION OF DIESEL POWER PLANTS

SATISFACTORY TO
MIKE CHEEPS
NORMAN HELGESON DEC 1996

SIZE F | CAGE NO 80091 | NAVFAC DRAWING NO (SEE APPLICABLE) | CONTR NO N47408-89-C-2011
SCALE NONE | SHEET 86 OF

3

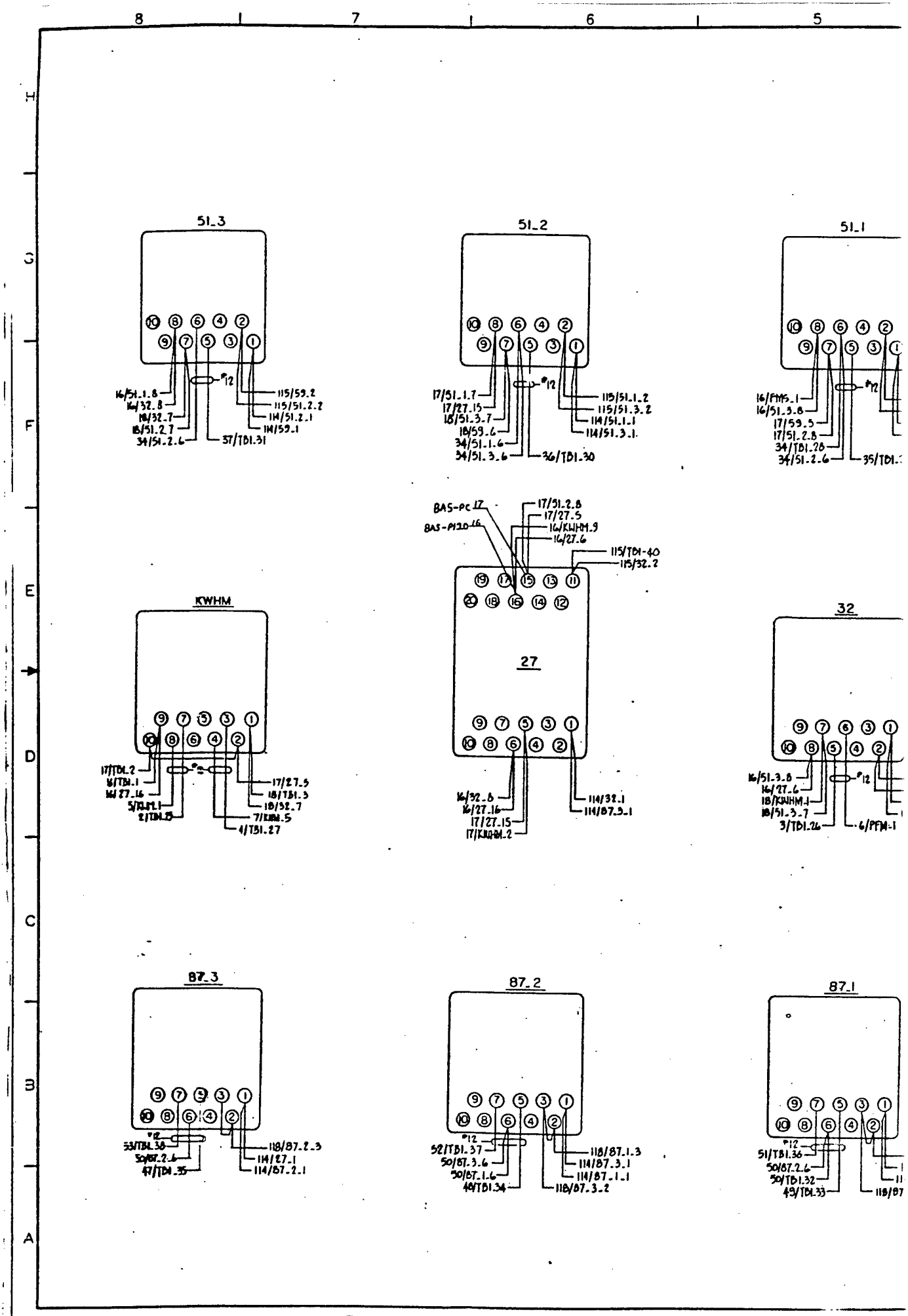
8
7
6
5
H
G
F
E
D
C
B
A
51_3
16/51.1.8
16/32.8
18/32.7
18/51.2.7
34/51.2.6
*12
37/TD1.31
115/59.2
115/51.2.2
114/51.2.1
114/59.1
51_2
17/51.1.7
17/27.15
18/51.3.7
18/59.6
34/51.1.6
34/51.3.6
*12
36/TD1.30
115/51.1.2
115/51.3.2
114/51.1.1
114/51.3.1
51_1
16/FMS.1
16/51.3.8
17/59.5
17/51.2.8
34/TD1.28
34/51.2.6
*12
35/TD1.
KWHM
17/TD1.2
16/TB1.1
16/27.16
5/KWH.1
2/TD1.25
*2
17/27.5
18/TB1.3
18/32.7
7/KWH.5
4/TB1.27
BAS-PC 17
BAS-P120 16
17/51.2.8
17/27.5
16/KWHM.9
16/27.6
115/TD1-40
115/32.2
27
16/32.6
16/27.16
17/27.15
17/KWH.2
114/32.1
114/87.3.1
32
16/51.3.8
16/27.6
18/KWHM.1
18/51.3.7
3/TD1.26
*12
6/PFM-1
87_3
53/TB1.38
50/87.2.6
47/TD1.35
*12
118/87.2.3
114/27.1
114/87.2.1
87_2
52/TB1.37
50/87.3.6
50/87.1.6
48/TD1.34
*12
118/87.1.3
114/87.3.1
114/87.1.1
118/87.3.2
87_1
51/TB1.36
50/87.2.6
50/TD1.32
49/TD1.33
*12
118/87

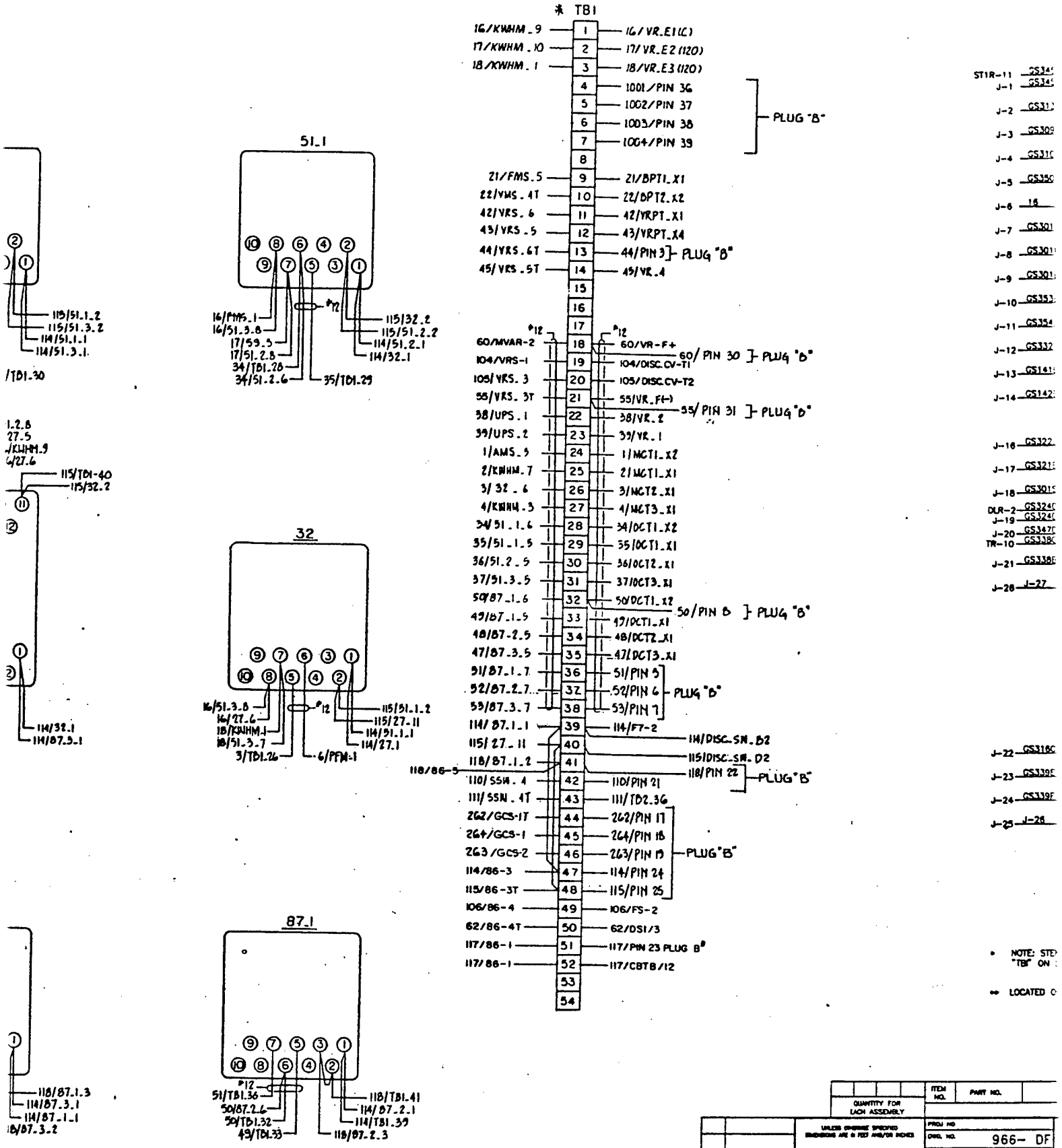

IF IN DOUBT, ASK – DO NOT SCALE

REVISIONS			
SYM	DESCRIPTION	DATE	APPROVAL

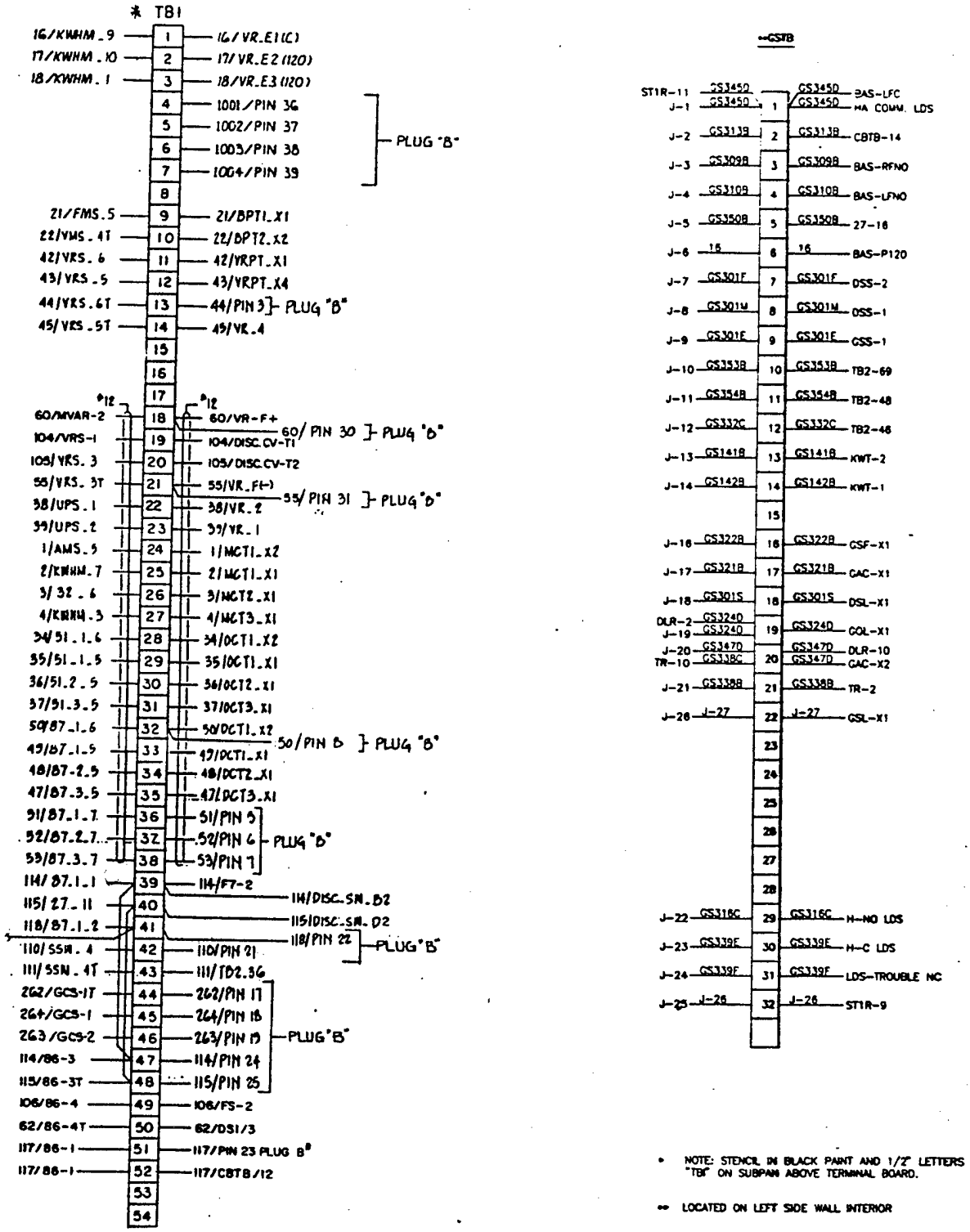

* NOTE: STENCIL IN BLACK PAINT AND 1/2" LETTERS "TB1" ON SUBPAN ABOVE TERMINAL BOARD.

** LOCATED ON LEFT SIDE WALL INTERIOR

QUANTITY FOR EACH ASSEMBLY	ITEM NO.	PART NO.	DESCRIPTION	MATERIAL
			PARTS LIST	

UNLESS OTHERWISE SPECIFIED DIMENSIONS ARE IN FEET AND/OR INCHES

TOLERANCES:
.X DECIMALS
.XX DECIMALS
.XXX DECIMALS
FRACTIONS ±1/16"
ANGLES ±0.5°

PART DASH NO. | NEXT ASSY.

PROJ NO
DWG. NO. 966- DF
DES XX | DR F.DELLAUBERA
CHK XX
BRANCH HEAD H.MACK
DIV DIR
SATISFACTORY TO MIKE CHILDERS
NORMAN HELGESON Dec. 89
APPROVED DATE
COMMANDING OFFICER
APPROVED DATE
FOR COMMANDER, NAVFAC

DEPARTMENT OF THE NAVY NAVAL FACILITIES ENGINEERING COMMAND
NAVAL FACILITIES ENGINEERING SERVICE CENTER
PORT HUENEME, CALIFORNIA 93043

DUEL FUEL 1500 KW
CONVERSION OF DIESEL POWER PLANTS

METERING CUBICLE, DOOR WIRING DIAGRAM

SIZE F | CODE IDENT NO 80091 | NAVFAC DRAWING NO
CONSTR CONTR NO
SCALE NONE | SPEC | SHEET 1 OF

IF IN DOUBT, ASK — DO NOT SCALE

3

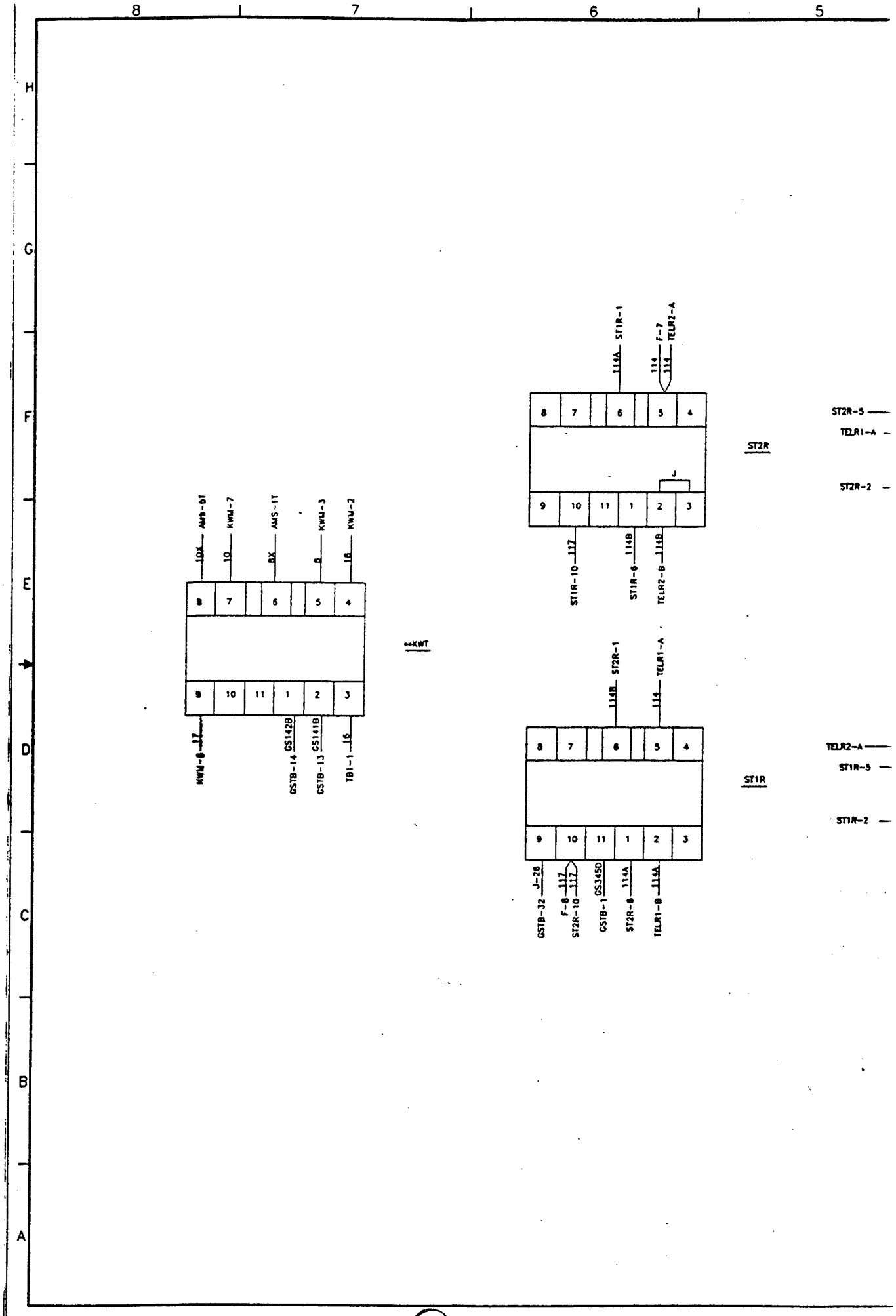
8
7
6
5
H
G
F
E
D
C
B
A
10X AWS-6T
10 KWW-7
8X AWS-1T
8 KWW-3
1B KWW-2
8 7 6 5 4
9 10 11 1 2 3
KWW-8 17
GSTB-14 GS142B
GSTB-13 GS141B
TB1-1 16
KWT
114A ST1R-1
114 F-7
114 TELR2-A
8 7 6 5 4
9 10 11 1 2 3
J
ST1R-10 117
ST1R-6 114B
TELR2-B 114B
ST2R
ST2R-5
TELR1-A
ST2R-2
114B ST2R-1
114 TELR1-A
8 7 6 5 4
9 10 11 1 2 3
GSTB-32 J-28
F-8 117
ST2R-10 117
GSTB-1 GS345D
ST2R-6 114A
TELR1-B 114A
ST1R
TELR2-A
ST1R-5
ST1R-2

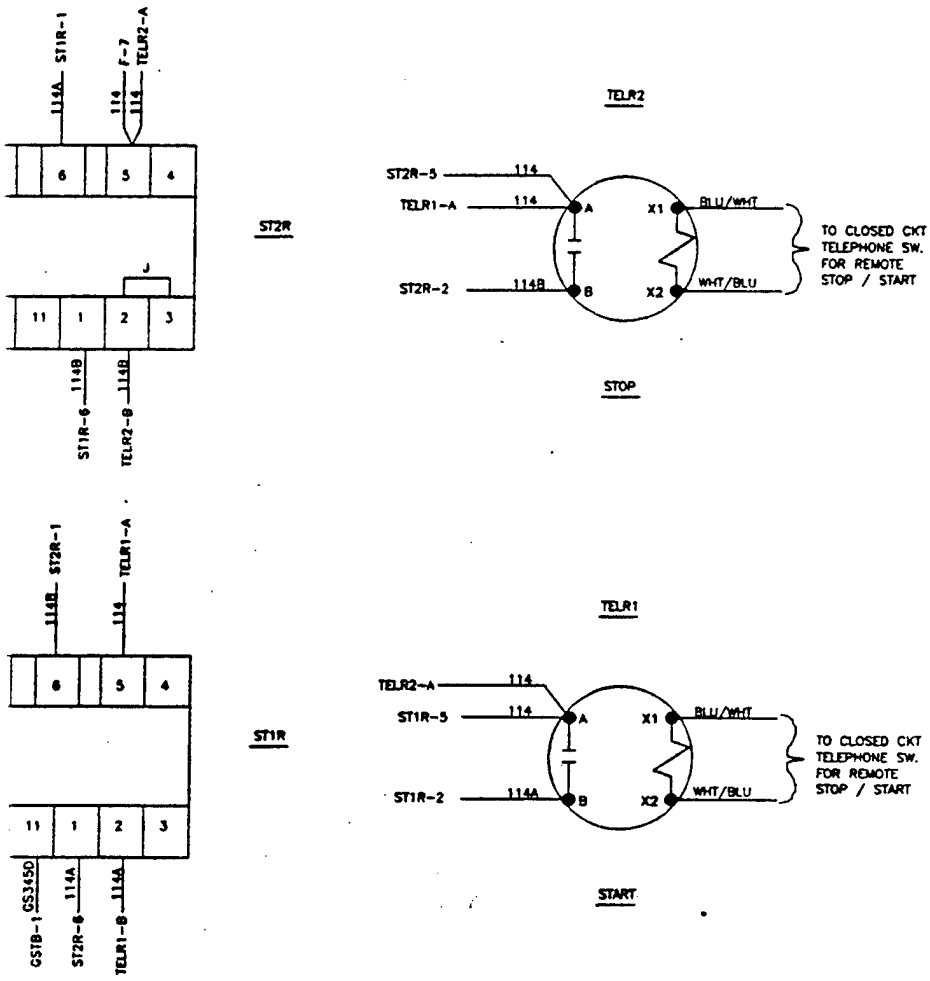

QUANTITY FOR EACH ASSEMBLY	ITEM NO.	PART NO.

UNLESS OTHERWISE SPECIFIED ENGINEERING ARE IN FEET AND/OR INCHES

TOLERANCES:
.X DECIMALS
.XX DECIMALS
.XXX DECIMALS
FRACTIONS ±1/16"
ANGLES ±0.5°

PART DASH NO. | NEXT ASSY.

PROJ NO
DWG. NO. 966A- DF
DES XX | DR F DELLALIBERA
CHK XX
BRANCH HEAD K. MACK
DIV DIR
SATISFACTORY TO
MIKE CHILDERS
HOFFMAN HOLGESON DEC. 1998
APPROVED DATE
COMMANDING OFFICER
APPROVED DATE
FOR COMMANDER, NAVFAC

SIZE F
SCALE

IF IN DOUBT, ASK – DO NOT SCALE

2

REVISIONS			
SYM	DESCRIPTION	DATE	APPROVAL

BLU/WHT
WHT/BLU
TO CLOSED CKT TELEPHONE SW. FOR REMOTE STOP / START

BLU/WHT
WHT/BLU
TO CLOSED CKT TELEPHONE SW. FOR REMOTE STOP / START

QUANTITY FOR EACH ASSEMBLY	ITEM NO.	PART NO.	DESCRIPTION	MATERIAL

PARTS LIST

UNLESS OTHERWISE SPECIFIED DIMENSIONS ARE IN FEET AND/OR INCHES

TOLERANCES:
.X DECIMALS
.XX DECIMALS
.XXX DECIMALS
FRACTIONS ±1/16"
ANGLES ±0.5°

PROJ NO
DWG. NO. 966A- DF
DES XX DR F DELLAUBERA
CHK XX
BRANCH HEAD K. MACK
DIV DIR
SATISFACTORY TO
MIKE CHILDERS
NORMAN HOLGESON DEC. 1998
APPROVED DATE
COMMANDING OFFICER
APPROVED DATE
FOR COMMANDER, NAVFAC

DEPARTMENT OF THE NAVY NAVAL FACILITIES ENGINEERING COMMAND
NAVAL FACILITIES ENGINEERING SERVICE CENTER
PORT HUENEME, CALIFORNIA 93043

DUEL FUEL 1500 KW
CONVERSION OF DIESEL POWER PLANTS

METERING CUBICLE, RIGHT WALL

SIZE F | CODE IDENT NO 80091 | NAVFAC DRAWING NO
CONSTR CONTR NO
SCALE NONE | SPEC | SHEET 1 OF

PART DASH NO.	NEXT ASSY.

N DOUBT, ASK – DO NOT SCALE

3

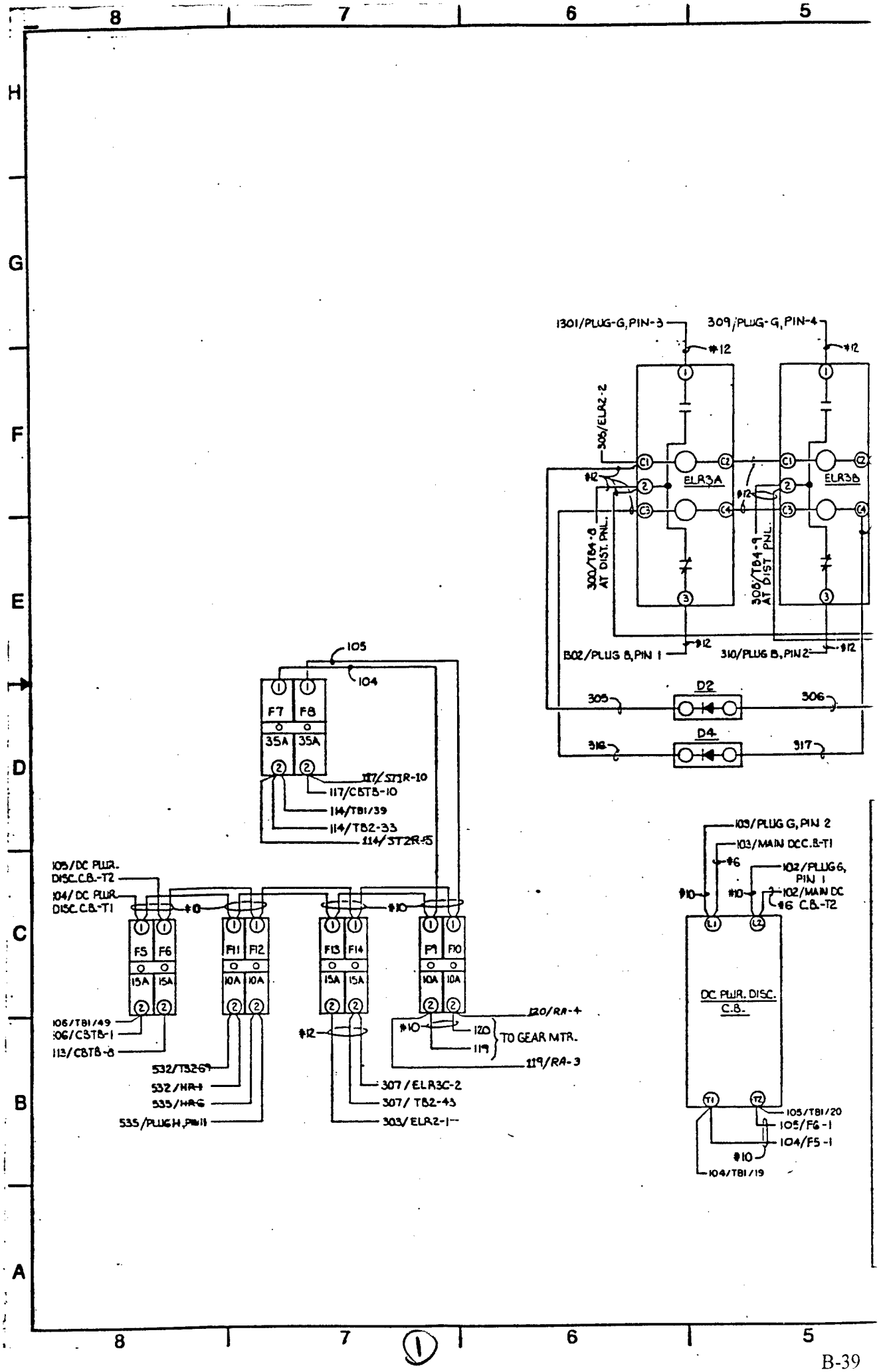
1301/PLUG-G, PIN-3
309/PLUG-G, PIN-4
#12
306/ELR2-2
ELR3A
ELR3B
300/TB4-8 AT DIST. PNL.
306/TB4-9 AT DIST. PNL.
302/PLUG B, PIN 1
310/PLUG B, PIN 2
D2
D4
305
306
316
317
105
104
F7
F8
35A
117/ST1R-10
117/CBTB-10
114/TB1/39
114/TB2-33
114/ST2R-5
105/DC PWR. DISC. C.B.-T2
104/DC PWR. DISC. C.B.-T1
#10
F5
F6
15A
F11
F12
10A
F13
F14
F9
F10
106/TB1/49
106/CBTB-1
113/CBTB-8
532/TB2-69
532/HR-1
535/HR-G
535/PLUG H, PIN 11
307/ELR3C-2
307/TB2-43
303/ELR2-1
120/RA-4
120
119
TO GEAR MTR.
119/RA-3
103/PLUG G, PIN 2
103/MAIN DC C.B.-T1
#6
102/PLUG 6, PIN 1
102/MAIN DC #6 C.B.-T2
DC PWR. DISC. C.B.
105/TB1/20
105/F6-1
104/F5-1
104/TB1/19

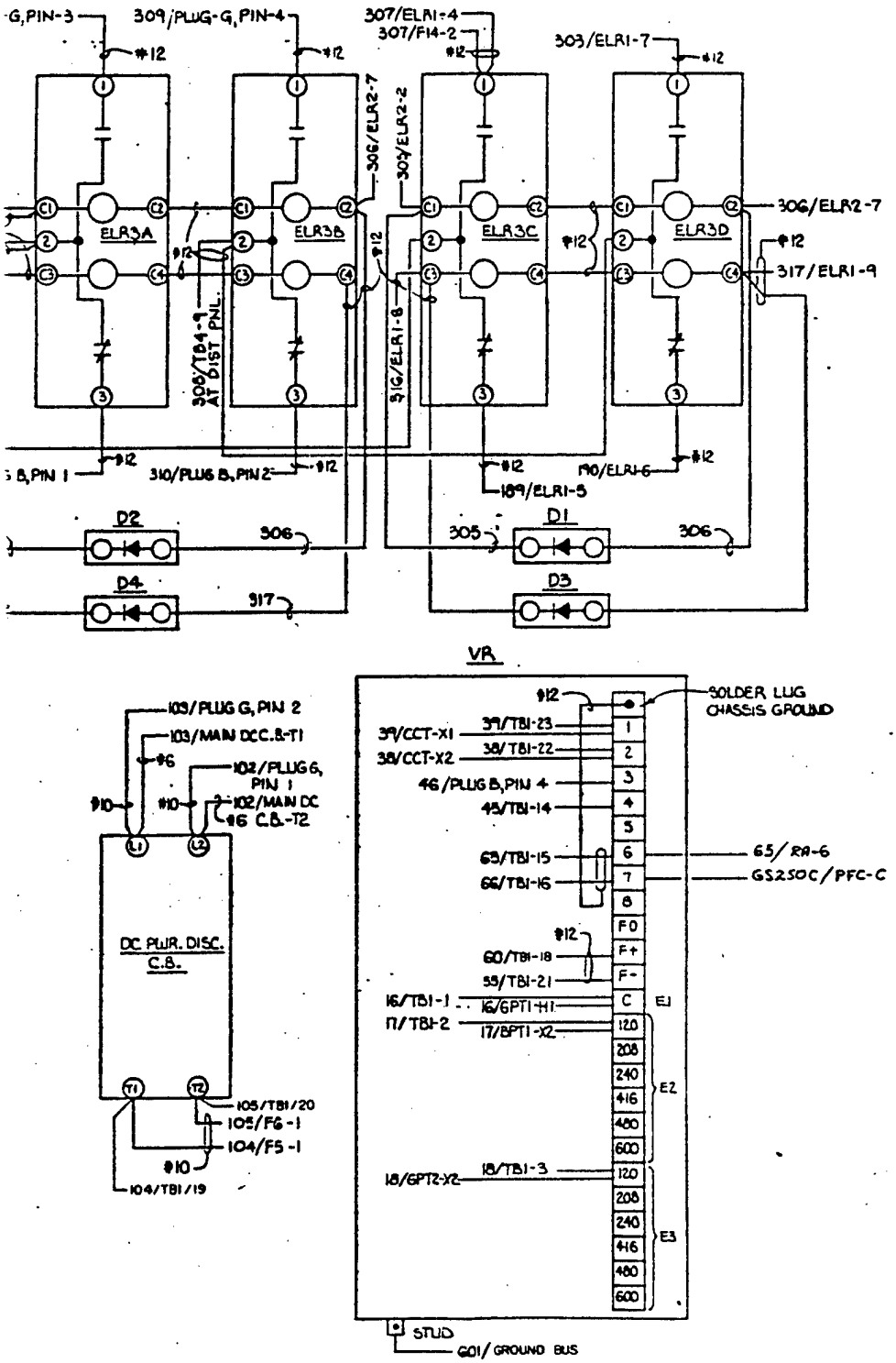

* NOTE: STENCIL IN BLACK PAINT AND 1/2" L
'41TB' ON SUBPAN ABOVE TERMINAL

QTY REQ	FSCM NO.	PART OR IDENTIFYING NO.	NOMENCLATURE OR DESCRIPTION

PARTS LIST

NEESA DRAWING NO 967-DF

DEPARTMENT OF THE NAVAL ENERGY

PREPARED M-K NEESA REVISION 1992-7-1

REVIEWED

CHECKED 9/12/92

METERING C

DUEL FUEL 1500 KW
CONVERSION OF DIESEL POWER PLANTS

SATISFACTORY TO
MIKE CHILDERS
NORMAN HELGESON OCC 1998

APPROVED DATE

NAVAL ENERGY & VALUES DEPT

SIZE F CAGE NO 800

SCALE NONE

REVISIONS				
ZONE	LTR	DESCRIPTION	DATE	APPROVED

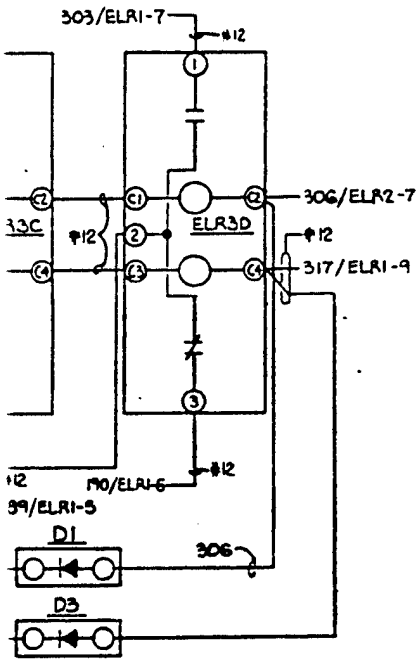

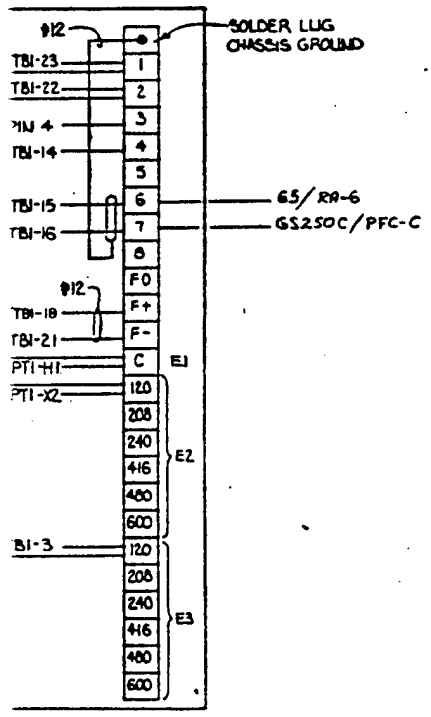

* NOTE: STENCIL IN BLACK PAINT AND 1/2" LETTERS "41TB" ON SUBPAN ABOVE TERMINAL BOARD.

QTY REQD	FSCM NO.	PART OR IDENTIFYING NO.	NOMENCLATURE OR DESCRIPTION	MATERIAL/SPECIFICATION	ITEM NO.

PARTS LIST

DUEL FUEL 1500 KW
CONVERSION OF DIESEL POWER PLANTS

SATISFACTORY TO
MIKE CHILDERS
NORMAN HELGESON DEC 1998

NEESA DRAWING NO 967-DF

DEPARTMENT OF THE NAVY — NAVAL FACILITIES ENGINEERING COMMAND
NAVAL ENERGY AND ENVIRONMENTAL SUPPORT ACTIVITY
1939 LYONS ST, PORT HUENEME, CALIFORNIA 93043-4340

DRAFTED M-K NEESA MODULE 1992-7-1
REVIEWED
CHECKED 3/12/97
APPROVED DATE

OVERHAUL 1500 KW
DIESEL POWER PLANTS
METERING CUBICLE, SUBPAN WIRING DIAGRAM

SIZE F CAGE NO 80091 NAVFAC DRAWING NO SHIP APPLICABILITY
ENTRY NO N47408-89-C-2011
SCALE NONE SHEET 88 OF

HEAD, DRAWING & MULTIPLE SUPP

3

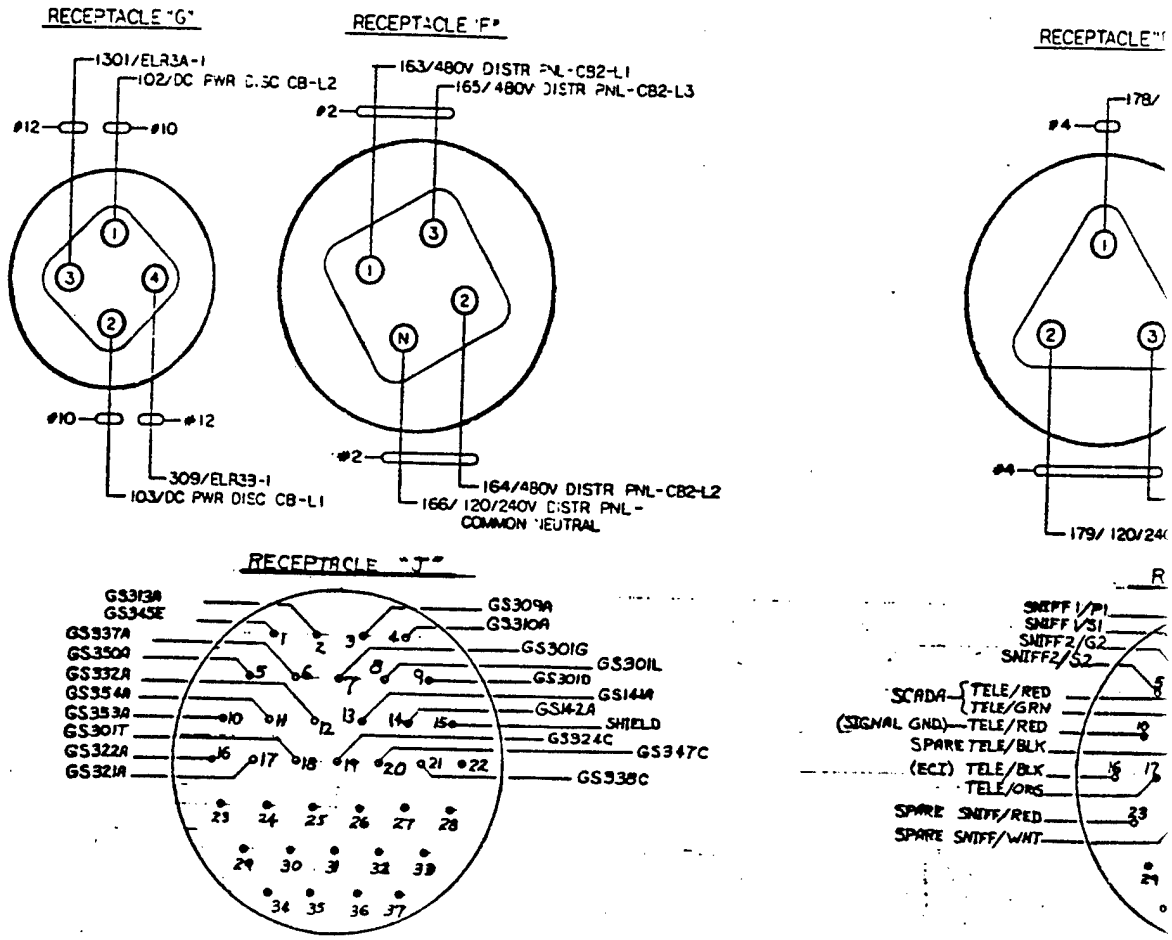
RECEPTACLE "G"
1301/ELR3A-1
102/DC PWR DISC CB-L2
#12
#10
309/ELR33-1
103/DC PWR DISC CB-L1
RECEPTACLE "F"
163/480V DISTR PNL-CB2-L1
165/480V DISTR PNL-CB2-L3
#2
164/480V DISTR PNL-CB2-L2
166/120/240V DISTR PNL-COMMON NEUTRAL
RECEPTACLE "J"
GS313A
GS345E
GS337A
GS350A
GS332A
GS354A
GS353A
GS301T
GS322A
GS321A
GS309A
GS310A
GS301G
GS301L
GS301D
GS144A
GS142A
SHIELD
GS324C
GS347C
GS338C
SCADA
TELE/RED
TELE/GRN
(SIGNAL GND)
TELE/RED
SPARE TELE/BLK
(ECI) TELE/BLK
TELE/ORG
SPARE SNIFF/RED
SPARE SNIFF/WHT
SNIFF 1/P1
SNIFF 1/S1
SNIFF 2/G2
SNIFF 2/S2

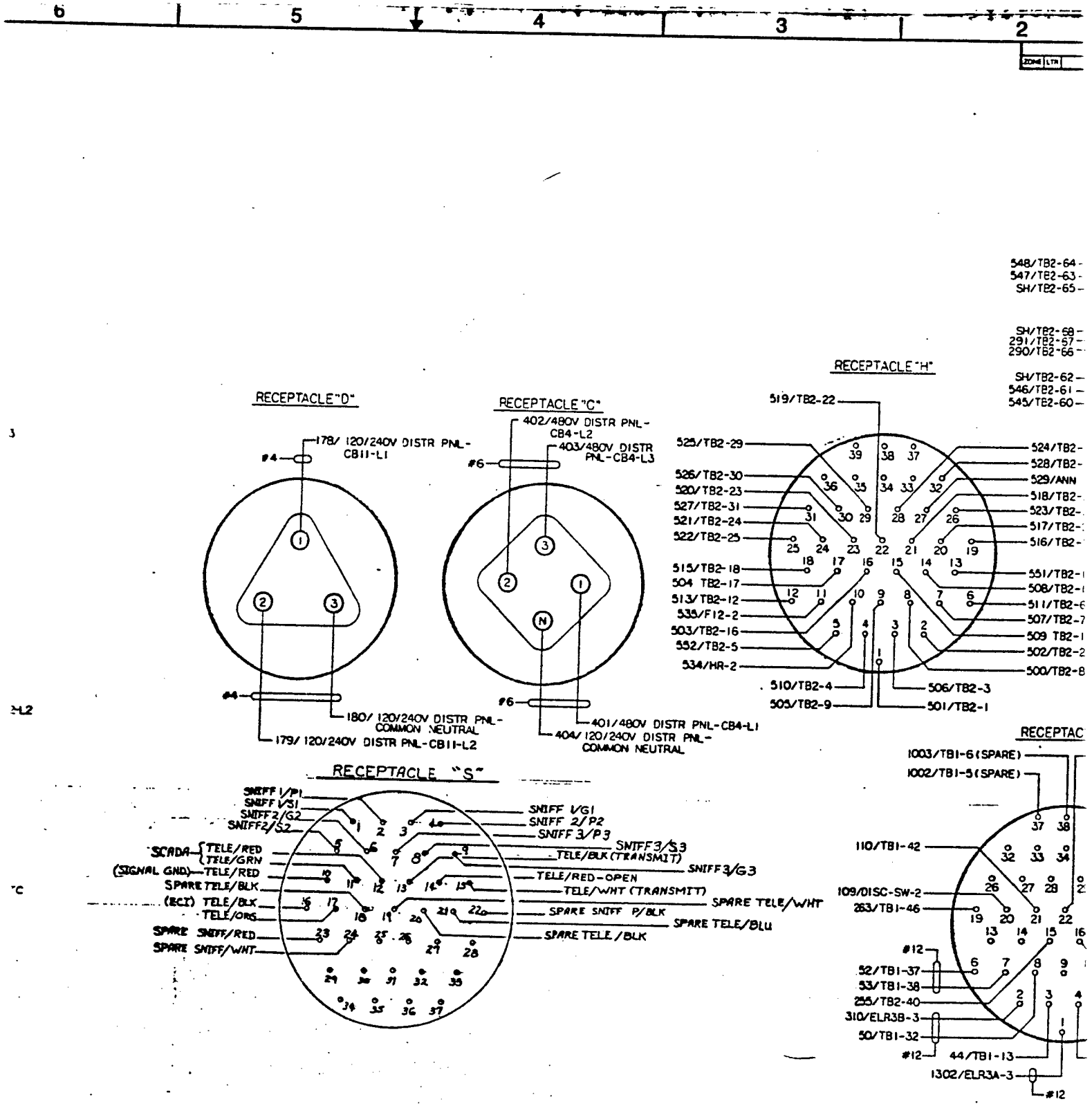
RECEPTACLE "D"
178/ 120/240V DISTR PNL-CB11-L1
#4
180/ 120/240V DISTR PNL-COMMON NEUTRAL
179/ 120/240V DISTR PNL-CB11-L2
RECEPTACLE "C"
402/480V DISTR PNL-CB4-L2
403/480V DISTR PNL-CB4-L3
#6
401/480V DISTR PNL-CB4-L1
404/ 120/240V DISTR PNL-COMMON NEUTRAL
RECEPTACLE "H"
519/TB2-22
525/TB2-29
526/TB2-30
520/TB2-23
527/TB2-31
521/TB2-24
522/TB2-25
515/TB2-18
504 TB2-17
513/TB2-12
535/F12-2
503/TB2-16
552/TB2-5
534/HR-2
510/TB2-4
505/TB2-9
506/TB2-3
501/TB2-1
524/TB2-
528/TB2-
529/ANN
518/TB2-
523/TB2-
517/TB2-
516/TB2-
551/TB2-
508/TB2-
511/TB2-
507/TB2-
509 TB2-
502/TB2-
500/TB2-
548/TB2-64
547/TB2-63
SH/TB2-65
SH/TB2-68
291/TB2-67
290/TB2-66
SH/TB2-62
546/TB2-61
545/TB2-60
RECEPTACLE "S"
SNIFF 1/P1
SNIFF 1/S1
SNIFF2/G2
SNIFF2/S2
SCADA TELE/RED
TELE/GRN
(SIGNAL GND) TELE/RED
SPARE TELE/BLK
(ECI) TELE/BLK
TELE/ORG
SPARE SNIFF/RED
SPARE SNIFF/WHT
SNIFF 1/G1
SNIFF 2/P2
SNIFF 3/P3
SNIFF3/S3
TELE/BLK (TRANSMIT)
SNIFF3/G3
TELE/RED-OPEN
TELE/WHT (TRANSMIT)
SPARE TELE/WHT
SPARE SNIFF P/BLK
SPARE TELE/Blu
SPARE TELE/BLK
RECEPTAC
1003/TB1-6 (SPARE)
1002/TB1-5 (SPARE)
110/TB1-42
109/DISC-SW-2
263/TB1-46
#12
52/TB1-37
53/TB1-38
255/TB2-40
310/ELR3B-3
50/TB1-32
44/TB1-13
1302/ELR3A-3
DUEL FUEL 1500 KW
COMBUSTION OF DIESEL POWER PLANTS
969-DF
SATISFACTORY TO
MIKE CHILDERS
NORMAN HELGESON / DEC 1996

ZONE	LTR	REVISIONS DESCRIPTION	DATE	APPROVED

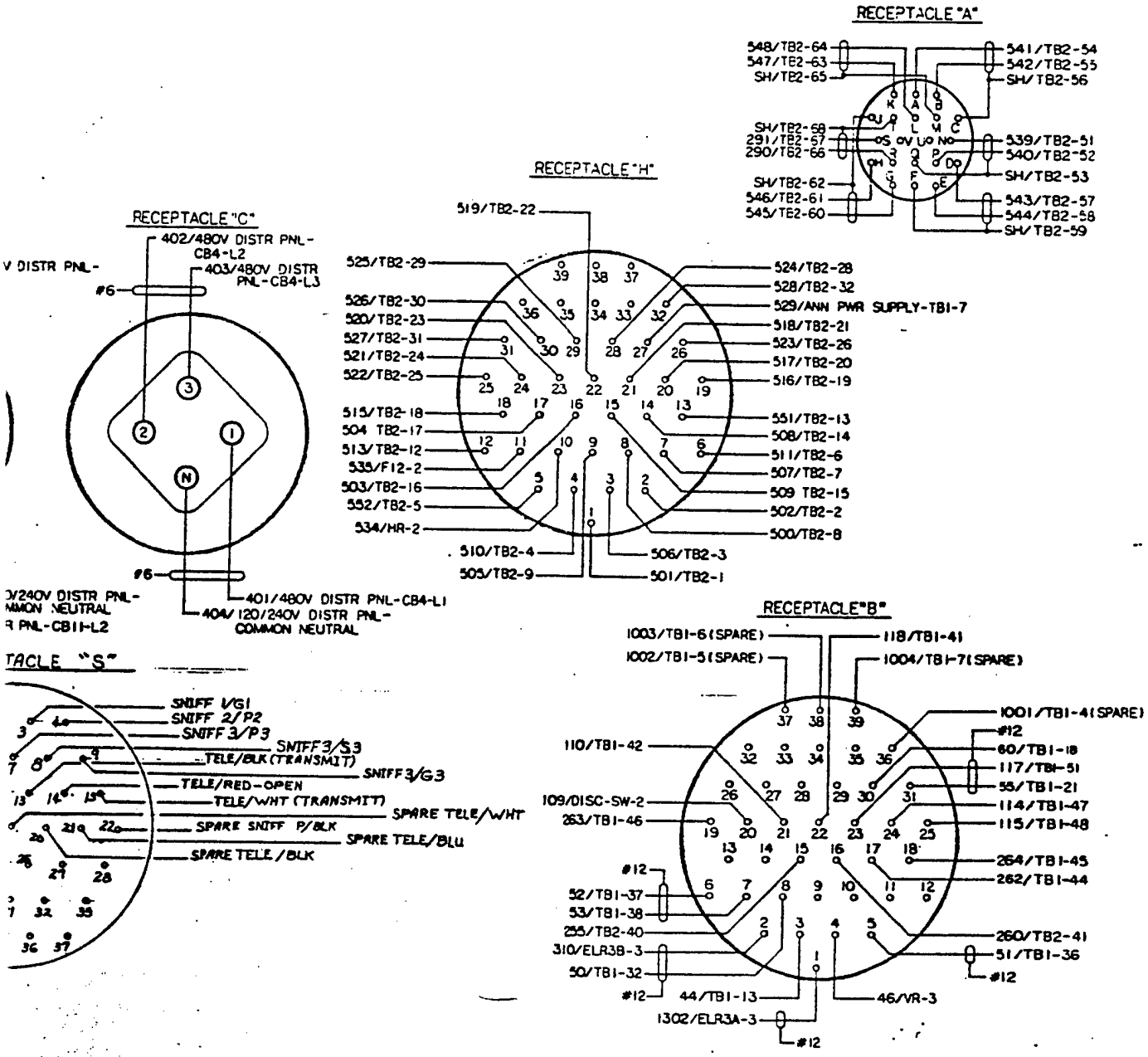

QTY REQD	FSCM NO.	PART OR IDENTIFYING NO.	NOMENCLATURE OR DESCRIPTION	MATERIAL/SPECIFICATION	ITEM NO.

PARTS LIST

NEESA DRAWING NO 969-DF

DEPARTMENT OF THE NAVY NAVAL FACILITIES ENGINEERING COMMAND
NAVAL ENERGY AND ENVIRONMENTAL SUPPORT ACTIVITY
1939 LYONS ST, PORT HUENEME, CALIFORNIA 93043-4340

PREPARED U-K DATE 1992-7-1
REVIEWED
CHECKED
DIVISION DIR
APPROVED DATE

OVERHAUL 1500 KW
DIESEL POWER PLANTS
METERING CUBICLE,
CABLE RECEPTACLES WIRING DIAGRAM

SIZE F CAGE NO 80091 NAVFAC DRAWING NO SHEET APPLICABLE
CONTRO NO N47408-89-C-2011
SCALE NONE SHEET 90 OF

DUEL FUEL 1500 KW
COMMISSION OF DIESEL POWER PLANTS
SATISFACTORY TO
MIKE CHILDERS
NORMAN HELGESON / DEC 1994

MASS, CHEMICAL & VERIFIED COPY

(3)

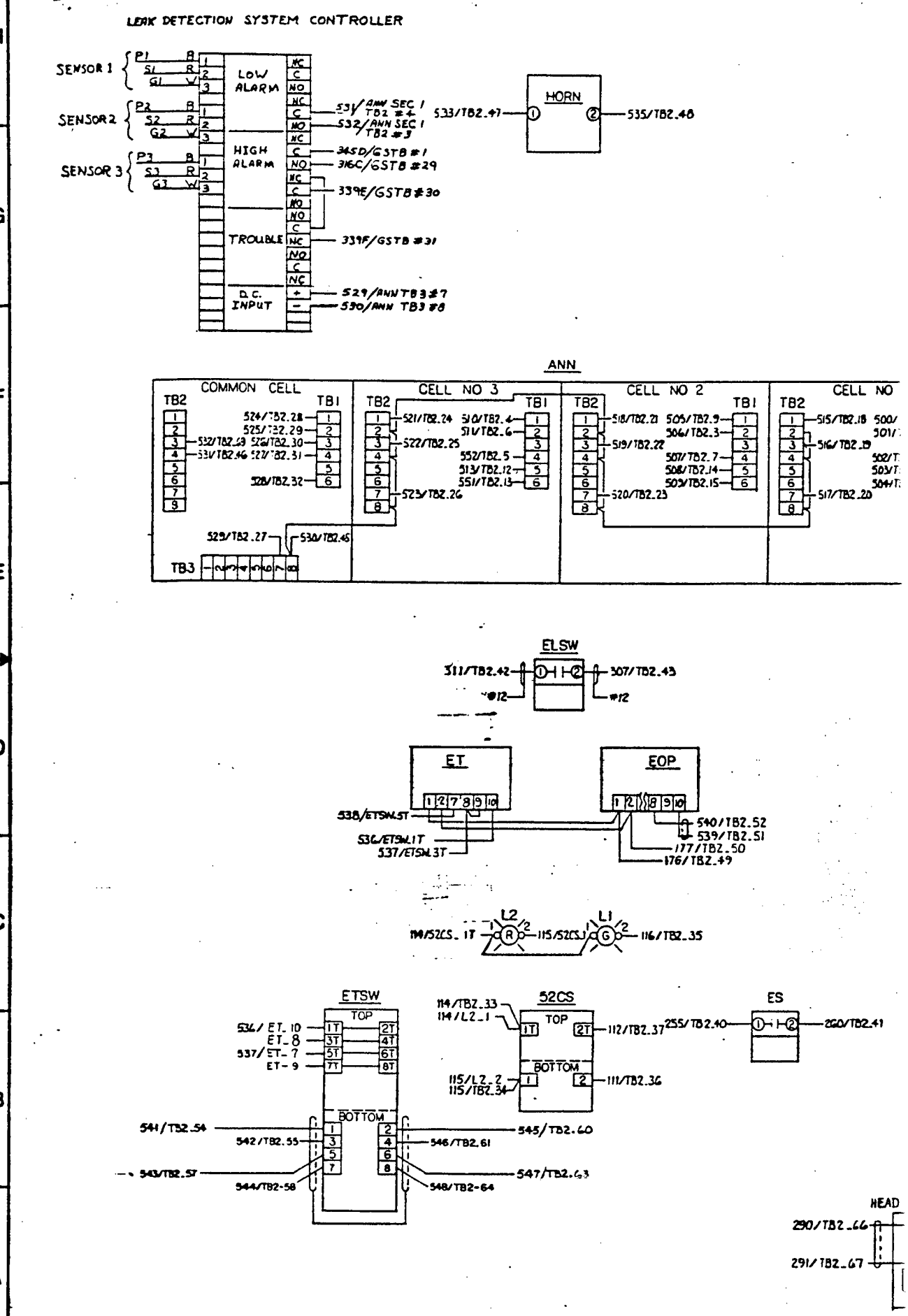
LEAK DETECTION SYSTEM CONTROLLER
SENSOR 1
SENSOR 2
SENSOR 3
LOW ALARM
HIGH ALARM
TROUBLE
D.C. INPUT
531/ANN SEC 1 TB2 #4
532/ANN SEC 1 TB2 #3
345D/GSTB #1
316C/GSTB #29
339E/GSTB #30
339F/GSTB #31
529/ANN TB3 #7
530/ANN TB3 #8
533/TB2.47
535/TB2.48
HORN
ANN
COMMON CELL
CELL NO 3
CELL NO 2
CELL NO
TB1
TB2
TB3
524/TB2.28
525/TB2.29
532/TB2.49
526/TB2.30
533/TB2.46
527/TB2.31
528/TB2.32
529/TB2.27
530/TB2.46
521/TB2.24
522/TB2.25
523/TB2.26
510/TB2.4
511/TB2.6
552/TB2.5
513/TB2.12
551/TB2.13
518/TB2.21
519/TB2.22
520/TB2.23
505/TB2.9
506/TB2.3
507/TB2.7
508/TB2.14
509/TB2.15
515/TB2.18
516/TB2.19
517/TB2.20
ELSW
311/TB2.42
307/TB2.43
#12
ET
EOP
538/ETSW.5T
536/ETSW.1T
537/ETSW.3T
540/TB2.52
539/TB2.51
177/TB2.50
176/TB2.49
L2
L1
114/52CS.1T
115/52CS.1
116/TB2.35
ETSW
TOP
BOTTOM
536/ET.10
ET.8
537/ET.7
ET-9
52CS
114/TB2.33
114/L2.1
112/TB2.37
115/L2.2
115/TB2.34
111/TB2.36
ES
255/TB2.40
260/TB2.41
541/TB2.54
542/TB2.55
543/TB2.57
544/TB2-58
545/TB2.60
546/TB2.61
547/TB2.63
548/TB2-64
HEAD
290/TB2.66
291/TB2.67

REVISIONS (CONTINUED)					
ZONE/LTR	DESCRIPTION	DATE	APPROVE	ZONE	LTR

—535/TB2.48

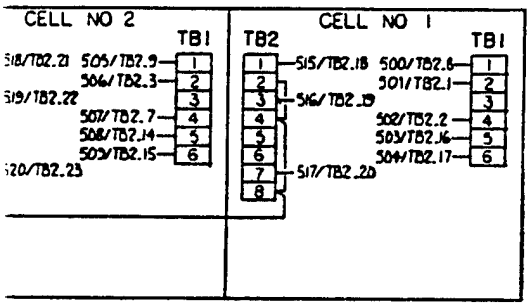

07/TB2.43

12

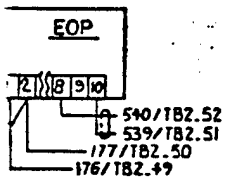

2 116/TB2.35

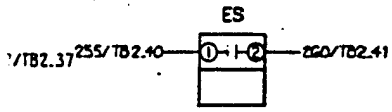

/TB2.36

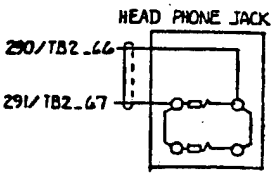

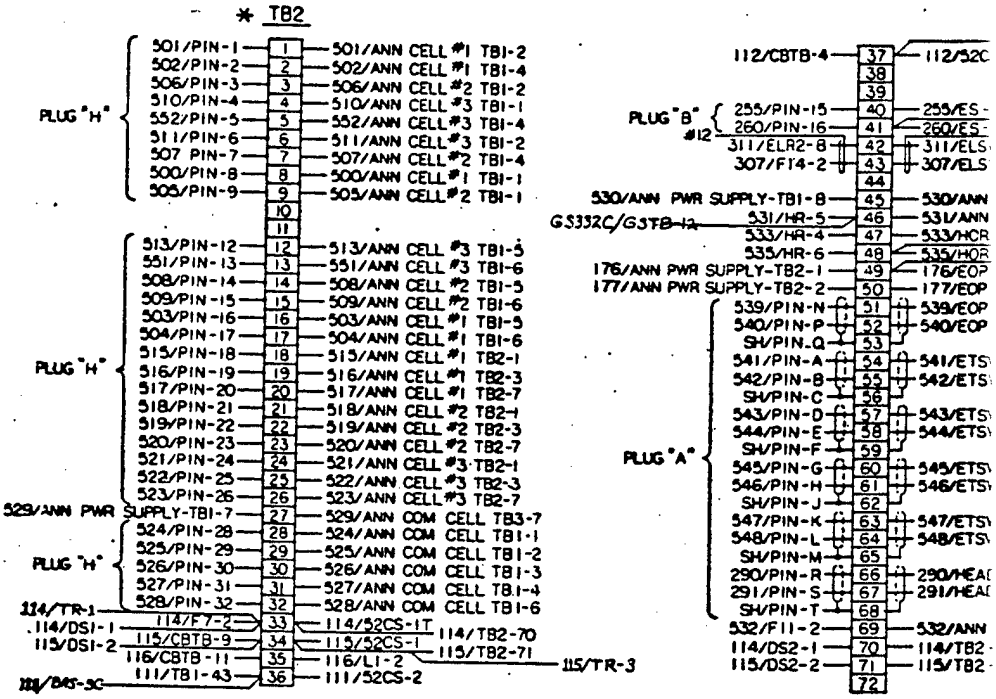

* NOTE: STENCIL IN BLACK PAINT AND "TB2" ON SUBPAN ABOVE TERM

QTY REQD	FROM NO.	PART OR IDENTIFYING NO.	NOMENCLATURE OR DESCRIPTION

PARTS LIST

NEESA DRAWING NO	970-DF
PREPARED M-K	NEESA MISSUE 1992-7-1
REVIEWED	
CHECKED	
DESIGN OR	
APPROVED	DATE
NAVAL ENERGY & UTILITIES DEPT	
DEPARTMENT OF NAVAL ENERG	
SIZE F	CAGE NO 800
SCALE NONE	

DUEL FUEL 1500 KW
CONVERSION OF DIESEL POWER PLANTS

SATISFACTORY TO
MIKE CHILDERS
NORMAN HELGESON DEC 1994

REVISIONS (CONTINUED)				REVISIONS			
ZONE/LTR	DESCRIPTION	DATE	APPROVE	ZONE LTR	DESCRIPTION	DATE	APPROVED

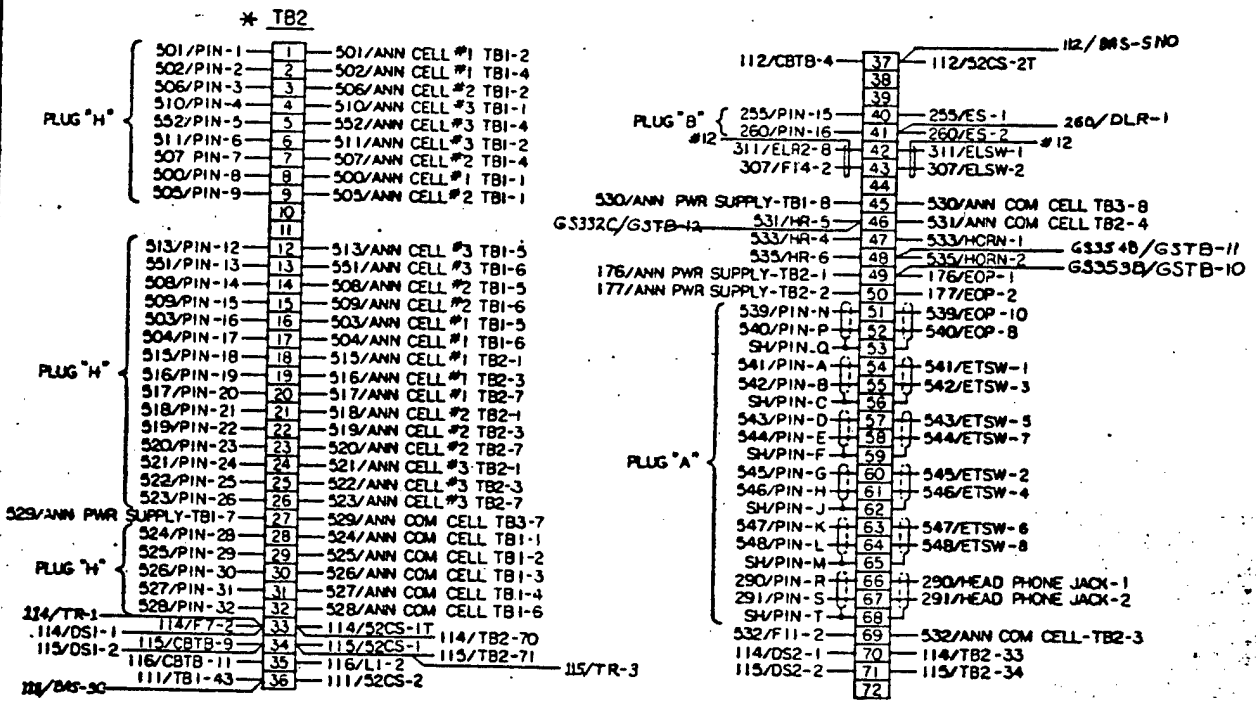

* NOTE: STENCIL IN BLACK PAINT AND 1/2" LETTERS "TB2" ON SUBPAN ABOVE TERMINAL BOARD.

QTY REQD	FSCM NO	PART OR IDENTIFYING NO.	NOMENCLATURE OR DESCRIPTION	MATERIAL/SPECIFICATION	ITEM NO.

PARTS LIST

NEDA DRAWING NO 970-DF

DEPARTMENT OF THE NAVY — NAVAL FACILITIES ENGINEERING COMMAND
NAVAL ENERGY AND ENVIRONMENTAL SUPPORT ACTIVITY
1939 LYONS ST, PORT HUENEME, CALIFORNIA 93043-4349

PREPARED M-K NEDA RESEX 1992-7-1
REVIEWED
CHECKED
SUPERV DR
APPROVED DATE
NEAR, ENERGY & UTILITIES DEPT

OVERHAUL 1500 KW
DIESEL POWER PLANTS
CIRCUIT BREAKER CUBICLE,
DOOR WIRING DIAGRAM

SIZE F | CAGE NO 80091 | NAVFAC DRAWING NO | DWG APPLICABLE
CONTRACT NO N47408-89-C-2011
SCALE NONE | SHEET 91 OF

DUEL FUEL 1500 KW
CONVERSION OF DIESEL POWER PLANTS

SATISFACTORY TO
MIKE LINDERS
NORMAN HELGESON DEC 1998

3

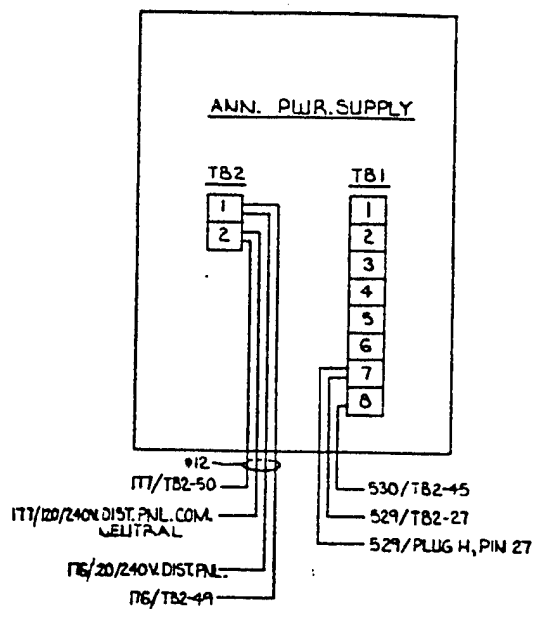
ANN. PWR. SUPPLY
TB2
TB1
1
2
1
2
3
4
5
6
7
8
#12
177/TB2-50
177/120/240V. DIST. PNL. COM. NEUTRAL
176/120/240V. DIST. PNL.
176/TB2-49
530/TB2-45
529/TB2-27
529/PLUG H, PIN 27

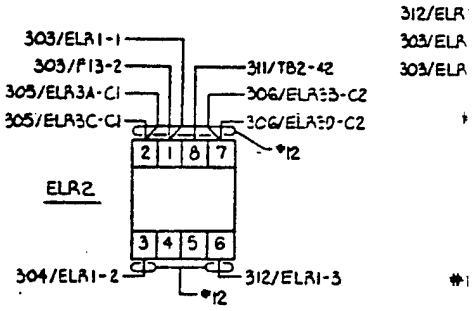
303/ELR1-1
303/F13-2
305/ELR3A-C1
305/ELR3C-C1
311/TB2-42
306/ELR3B-C2
306/ELR3D-C2
#12
ELR2
2 1 8 7
3 4 5 6
304/ELR1-2
312/ELR1-3
#12
312/ELR
303/ELR
303/ELR

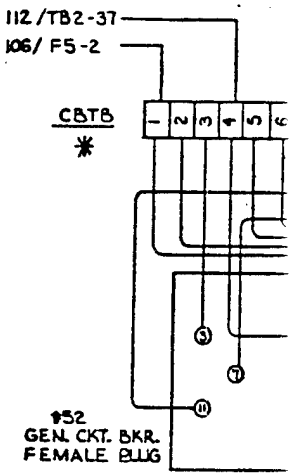
112/TB2-37
106/F5-2
CBTB
*
1 2 3 4 5 6
#52
GEN. CKT. BKR.
FEMALE PLUG

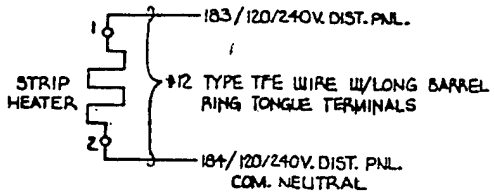
183/120/240V. DIST. PNL.
STRIP HEATER
1
2
#12 TYPE TFE WIRE W/LONG BARREL RING TONGUE TERMINALS
184/120/240V. DIST. PNL. COM. NEUTRAL

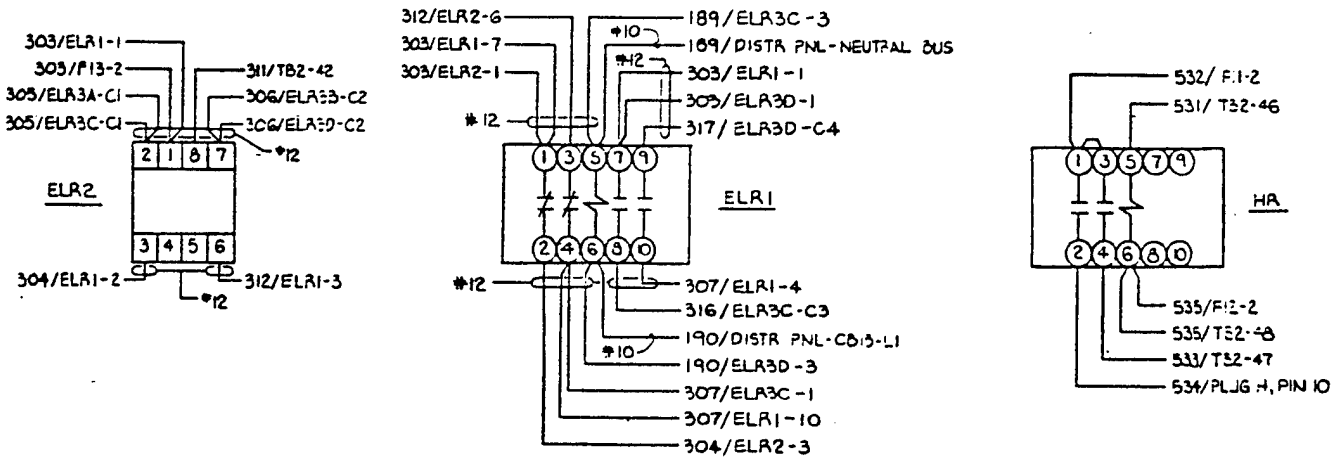

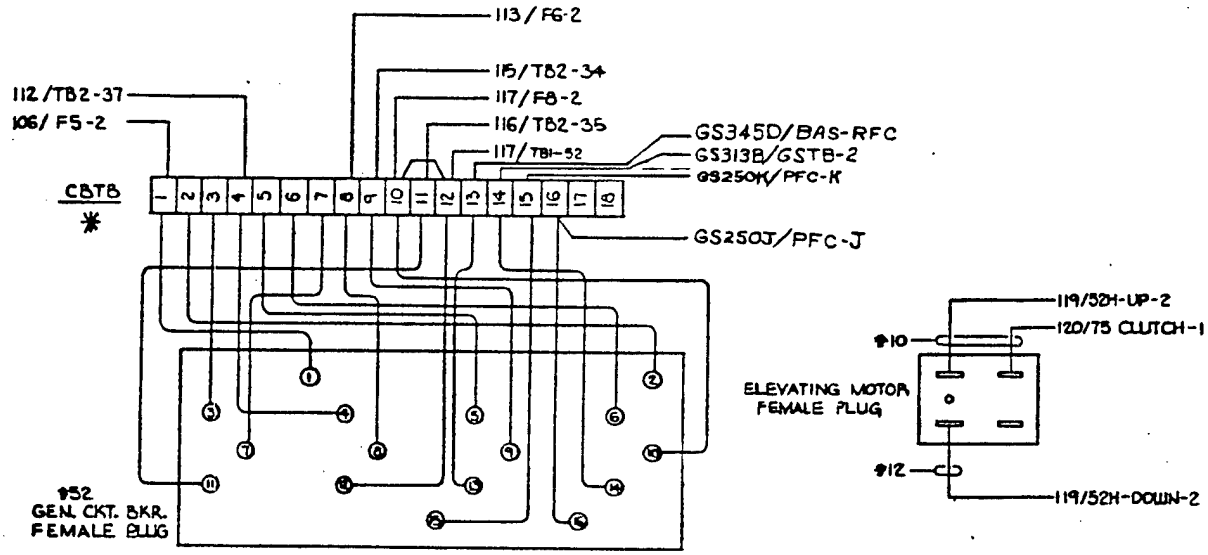

* NOTE: STENCIL IN BLACK PA
"CBTB" ON SUBPAN NE

REL

QTY REQ	FSCM NO.	PART OR IDENTIFYING NO.	NOMENCLATURE OR DESCRIPTION

PARTS LIST

971-DF

DUEL FUEL 1500 KW
COMVERSION OF DIESEL POWER PLANTS

SATISFACTORY TO
MIKE CHILDERS
NORMAN HELGESON DEC 1998

NAVAL ENERGY & UTILITIES DEPT

ZONE	LTR	DESCRIPTION	DATE	APPROVED

REVISIONS

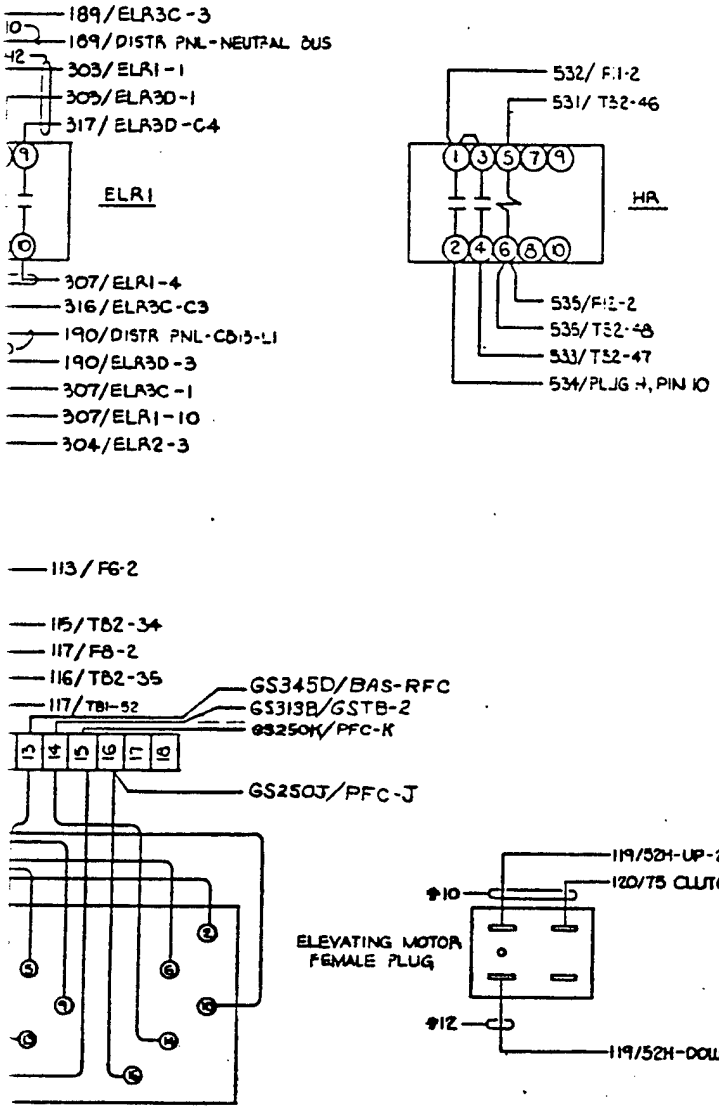

* NOTE: STENCIL IN BLACK PAINT AND 1/2" LETTERS "CBTB" ON SUBPAN NEXT TO TERMINAL BOARD.

QTY REQD	FSCM NO.	PART OR IDENTIFYING NO.	NOMENCLATURE OR DESCRIPTION	MATERIAL/SPECIFICATION	ITEM NO.

PARTS LIST

NEESA DRAWING NO 971-DF

DEPARTMENT OF THE NAVY NAVAL FACILITIES ENGINEERING COMMAND
NAVAL ENERGY AND ENVIRONMENTAL SUPPORT ACTIVITY
1000 LYONS ST. PORT HUENEME, CALIFORNIA 93043-4340

PREPARED M-K NEESA REVISION 1992-1-1

OVERHAUL 1500 KW
DIESEL POWER PLANTS
CIRCUIT BREAKER CUBICLE,
SUBPAN WIRING DIAGRAM

DUEL FUEL 1500 KW
CONVERSION OF DIESEL POWER PLANTS

SATISFACTORY TO
MIKE CHILDERS
NORMAN HELGESON DEC 1998

SIZE F CAGE NO 80091

NAVFAC DRAWING NO (REF APPLICABLE)

CONTRACT NO N47408-89-C-2011

SCALE NONE SHEET 92 OF

3

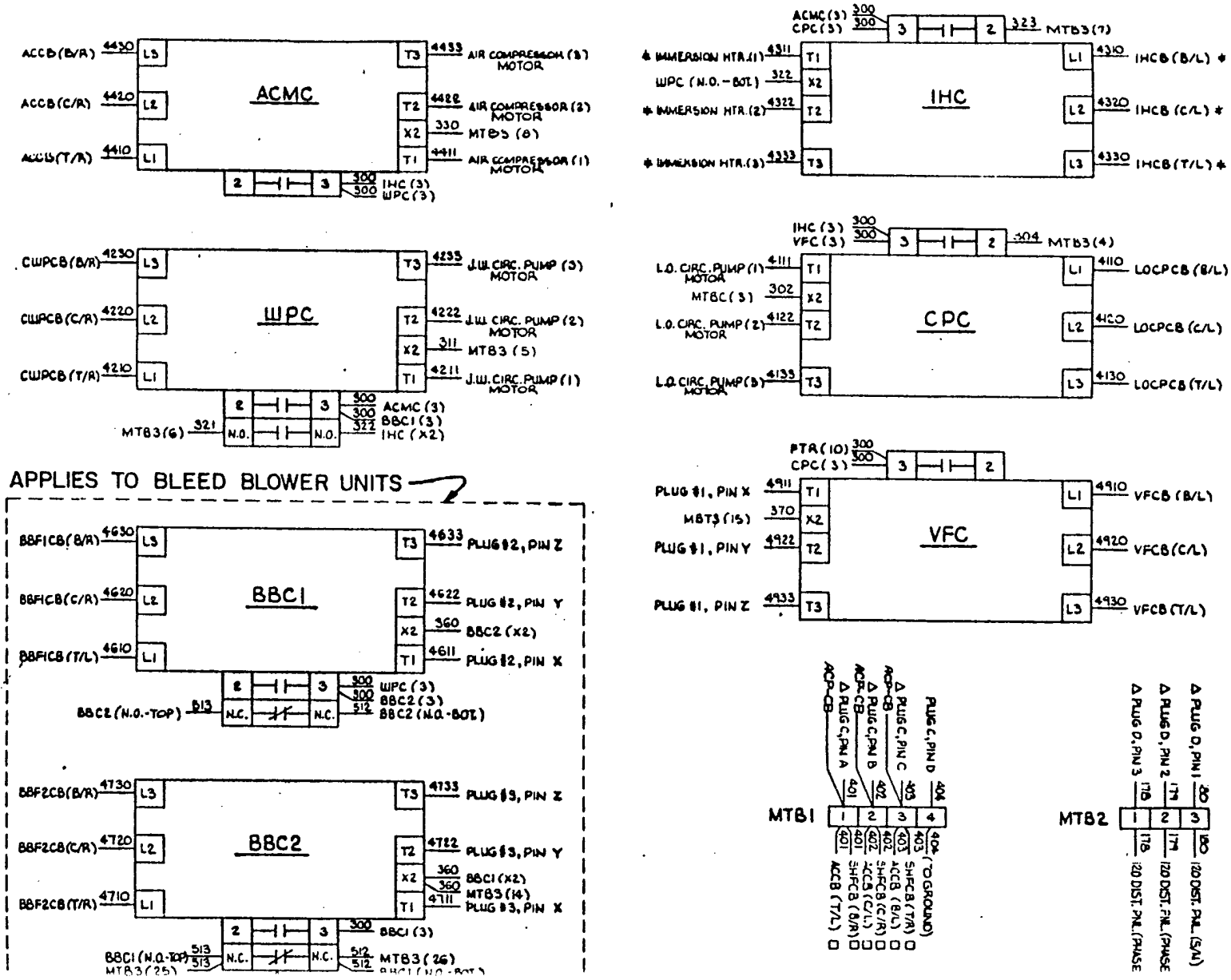
ACMC
ACCB(B/R) 4430 L3
ACCB(C/R) 4420 L2
ACCB(T/R) 4410 L1
T3 4433 AIR COMPRESSOR (3) MOTOR
T2 4422 AIR COMPRESSOR (2) MOTOR
X2 330 MTB3 (8)
T1 4411 AIR COMPRESSOR (1) MOTOR
2 3 300 IHC (3) 300 WPC (3)
IHC
ACMC (3) 300 CPC (3) 300 3 2 323 MTB3 (7)
* IMMERSION HTR.(1) 4311 T1
WPC (N.O.-BOT.) 322 X2
* IMMERSION HTR.(2) 4322 T2
* IMMERSION HTR.(3) 4333 T3
L1 4310 IHCB (B/L) *
L2 4320 IHCB (C/L) *
L3 4330 IHCB (T/L) *
WPC
CWPCB(B/R) 4230 L3
CWPCB(C/R) 4220 L2
CWPCB(T/R) 4210 L1
T3 4233 J.W. CIRC. PUMP (3) MOTOR
T2 4222 J.W. CIRC. PUMP (2) MOTOR
X2 311 MTB3 (5)
T1 4211 J.W. CIRC. PUMP (1) MOTOR
2 3 300 ACMC (3) 300 BBC1 (3) 322 IHC (X2)
MTB3 (6) 321 N.O. N.O.
CPC
IHC (3) 300 VFC (3) 300 3 2 304 MTB3 (4)
L.O. CIRC. PUMP (1) MOTOR 4111 T1
MTBC (3) 302 X2
L.O. CIRC. PUMP (2) MOTOR 4122 T2
L.O. CIRC. PUMP (3) MOTOR 4133 T3
L1 4110 LOCPCB (B/L)
L2 4120 LOCPCB (C/L)
L3 4130 LOCPCB (T/L)
VFC
PTR (10) 300 CPC (3) 300 3 2
PLUG #1, PIN X 4911 T1
MBT3 (15) 370 X2
PLUG #1, PIN Y 4922 T2
PLUG #1, PIN Z 4933 T3
L1 4910 VFCB (B/L)
L2 4920 VFCB (C/L)
L3 4930 VFCB (T/L)
APPLIES TO BLEED BLOWER UNITS
BBC1
BBF1CB(B/R) 4630 L3
BBF1CB(C/R) 4620 L2
BBF1CB(T/L) 4610 L1
T3 4633 PLUG #2, PIN Z
T2 4622 PLUG #2, PIN Y
X2 360 BBC2 (X2)
T1 4611 PLUG #2, PIN X
2 3 300 WPC (3) 300 BBC2 (3) 512 BBC2 (N.O.-BOT.)
BBC2 (N.O.-TOP) 513 N.C. N.C.
BBC2
BBF2CB(B/R) 4730 L3
BBF2CB(C/R) 4720 L2
BBF2CB(T/R) 4710 L1
T3 4733 PLUG #3, PIN Z
T2 4722 PLUG #3, PIN Y
X2 360 BBC1 (X2) 360 MTB3 (14)
T1 4711 PLUG #3, PIN X
2 3 300 BBC1 (3)
BBC1 (N.O.-TOP) 513 513 MTB3 (25) N.C. N.C. 512 512 MTB3 (26)
MTB1
PLUG C, PIN D 404
Δ PLUG C, PIN C 403
Δ PLUG C, PIN B 402
Δ PLUG C, PIN A 401
ACP-CB
1 2 3 4
401 402 403 404 (TO GROUND)
401 ACCB (T/L)
401 SHFCB (B/R)
402 ACCB (C/L)
402 SHFCB (C/R)
403 ACCB (B/L)
403 SHFCB (T/R)
MTB2
Δ PLUG D, PIN 1 180
Δ PLUG D, PIN 2 174
Δ PLUG D, PIN 3 178
1 2 3
178 174 180
120 DIST. PNL. (PHASE
120 DIST. PNL. (PHASE
120 DIST. PNL. (S/N)

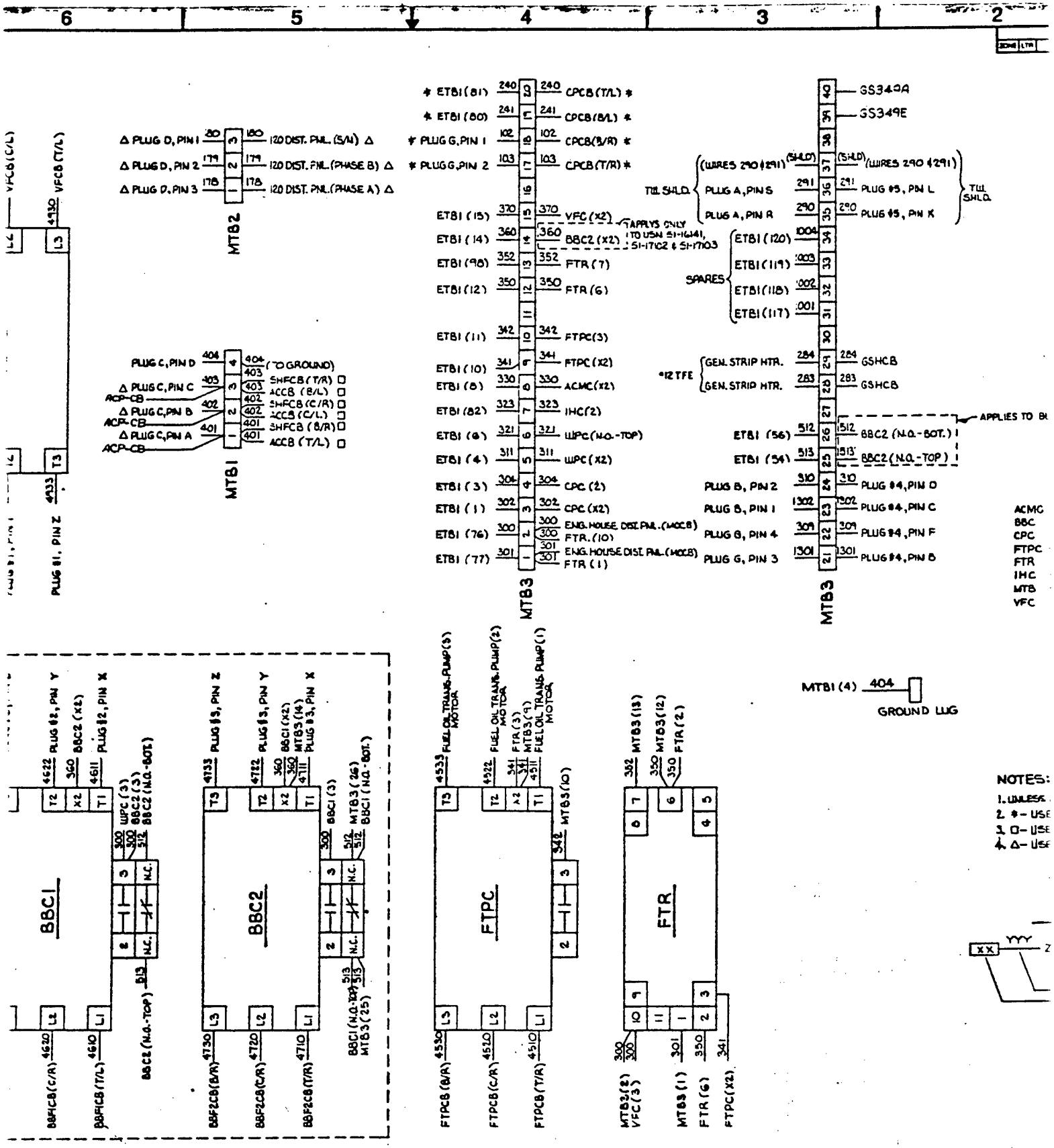
MTB2
MTB1
MTB3
MTB3
BBC1
BBC2
FTPC
FTR
GROUND LUG
DUEL FUEL 1500 KW
CONVERSION OF DIESEL POWER PLANTS

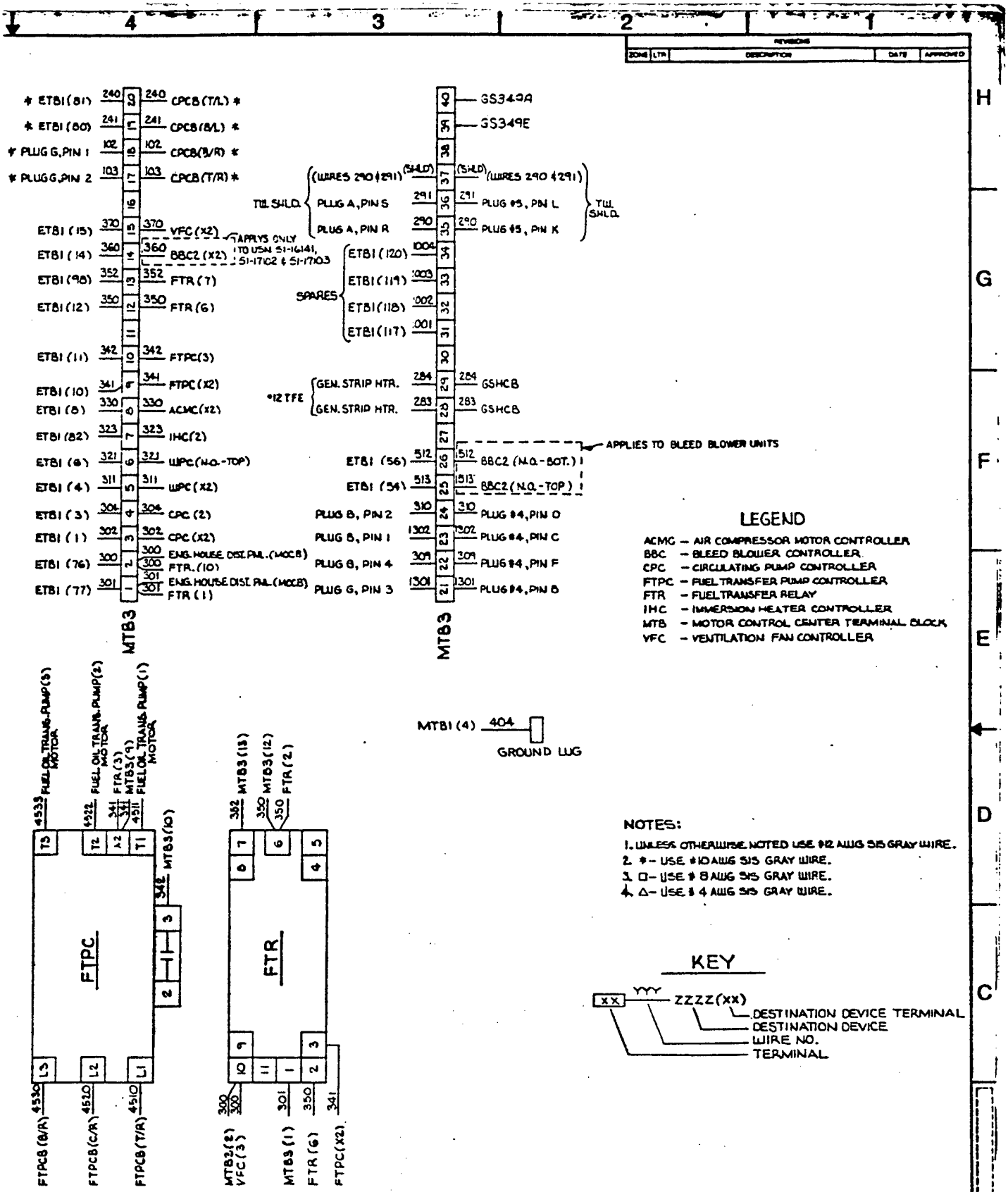
REVISIONS
ZONE LTR DESCRIPTION DATE APPROVED
* ETB1 (81) 240 — 240 CPCB (T/L) *
* ETB1 (80) 241 — 241 CPCB (B/L) *
* PLUG G, PIN 1 102 — 102 CPCB (B/R) *
* PLUG G, PIN 2 103 — 103 CPCB (T/R) *
ETB1 (15) 370 — 370 VFC (X2)
ETB1 (14) 360 — 360 BBC2 (X2)
APPLYS ONLY TO USN S1-16141, S1-17102 & S1-17103
ETB1 (98) 352 — 352 FTR (7)
ETB1 (12) 350 — 350 FTR (6)
ETB1 (11) 342 — 342 FTPC (3)
ETB1 (10) 341 — 341 FTPC (X2)
ETB1 (8) 330 — 330 ACMC (X2)
ETB1 (82) 323 — 323 IHC (2)
ETB1 (6) 321 — 321 WPC (N.O.-TOP)
ETB1 (4) 311 — 311 WPC (X2)
ETB1 (3) 304 — 304 CPC (2)
ETB1 (1) 302 — 302 CPC (X2)
ETB1 (76) 300 — 300 ENG. HOUSE DIST. PNL. (MCCB)
300 FTR. (10)
ETB1 (77) 301 — 301 ENG. HOUSE DIST. PNL. (MCCB)
301 FTR (1)
MTB3
GS349A
GS349E
TWL SHLD. (WIRES 290 & 291) (SHLD) — (SHLD) (WIRES 290 & 291) TWL SHLD.
PLUG A, PIN S 291 — 291 PLUG #5, PIN L
PLUG A, PIN R 290 — 290 PLUG #5, PIN K
SPARES
ETB1 (120) 1004
ETB1 (119) 1003
ETB1 (118) 1002
ETB1 (117) 1001
*12 TFE
GEN. STRIP HTR. 284 — 284 GSHCB
GEN. STRIP HTR. 283 — 283 GSHCB
APPLIES TO BLEED BLOWER UNITS
ETB1 (56) 512 — 512 BBC2 (N.O.-BOT.)
ETB1 (54) 513 — 513 BBC2 (N.O.-TOP)
PLUG B, PIN 2 310 — 310 PLUG #4, PIN D
PLUG B, PIN 1 1302 — 1302 PLUG #4, PIN C
PLUG B, PIN 4 309 — 309 PLUG #4, PIN F
PLUG G, PIN 3 1301 — 1301 PLUG #4, PIN B
MTB3
LEGEND
ACMC — AIR COMPRESSOR MOTOR CONTROLLER
BBC — BLEED BLOWER CONTROLLER
CPC — CIRCULATING PUMP CONTROLLER
FTPC — FUEL TRANSFER PUMP CONTROLLER
FTR — FUEL TRANSFER RELAY
IHC — IMMERSION HEATER CONTROLLER
MTB — MOTOR CONTROL CENTER TERMINAL BLOCK
VFC — VENTILATION FAN CONTROLLER
MTB1 (4) 404
GROUND LUG
FUEL OIL TRANS. PUMP (3) MOTOR
FUEL OIL TRANS. PUMP (2) MOTOR
FUEL OIL TRANS. PUMP (1) MOTOR
4533 4522 341 FTR (3) 341 MTB3 (9) 4511
T3 T2 A2 T1 MTB3 (10)
342
FTPC
L3 L2 L1
FTPCB (B/R) 4530
FTPCB (C/R) 4520
FTPCB (T/R) 4510
352 MTB3 (13) 350 MTB3 (12) 350 FTR (2)
7 6 5 4
FTR
9 10 11 1 2 3
300 300 301 350 341
MTB3 (2) VFC (3)
MTB3 (1)
FTR (6)
FTPC (X2)
NOTES:
1. UNLESS OTHERWISE NOTED USE #12 AWG SIS GRAY WIRE.
2. * - USE #10 AWG SIS GRAY WIRE.
3. □ - USE # 8 AWG SIS GRAY WIRE.
4. Δ - USE # 4 AWG SIS GRAY WIRE.
KEY
XX ZZZZ(XX)
DESTINATION DEVICE TERMINAL
DESTINATION DEVICE
WIRE NO.
TERMINAL
QTY REQD FSCM NO. PART OR IDENTIFYING NO. NOMENCLATURE OR DESCRIPTION MATERIAL/SPECIFICATION ITEM NO.
PARTS LIST
988-DF
NAVAL ENERGY AND ENVIRONMENTAL SUPPORT ACTIVITY
OVERHAUL 1500 KW
DIESEL POWER PLANTS
CONNECTION DIAGRAM,
MOTOR CONTROL CENTER
DUEL FUEL 1500 KW
CONVERSION OF DIESEL POWER PLANTS
F 80091
N47408-89-C-2011
NONE
SHEET 109 OF

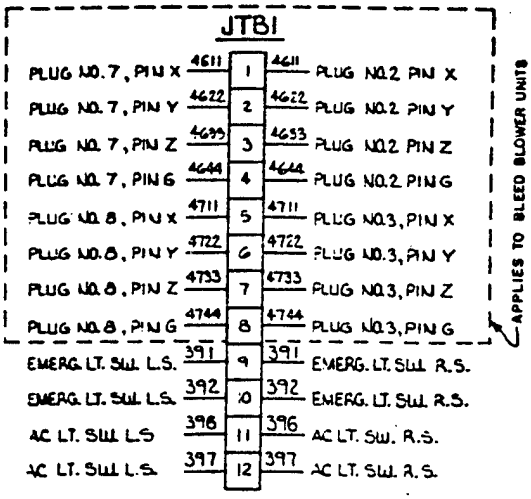

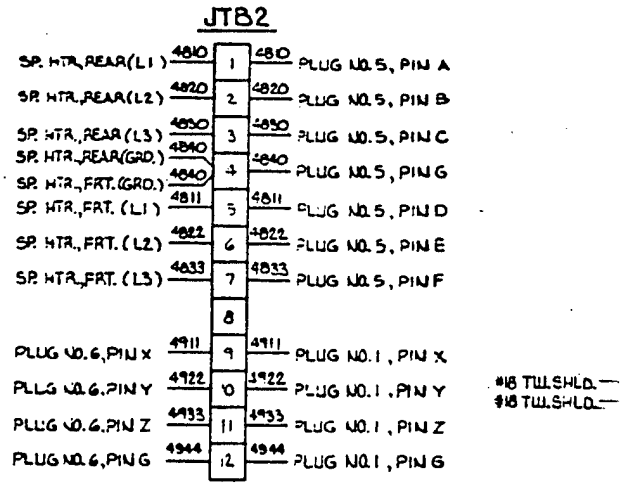

TERMINAL BOARDS ABOVE MOTOR CONTROL CEN

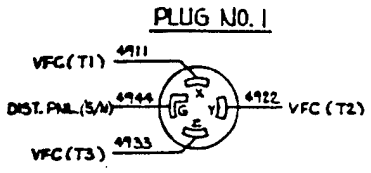

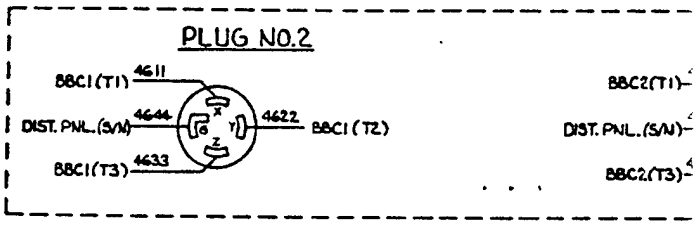

APPLIES TO BLEED BLOWER UI

TOP OF DISTRIBL
(VIEW

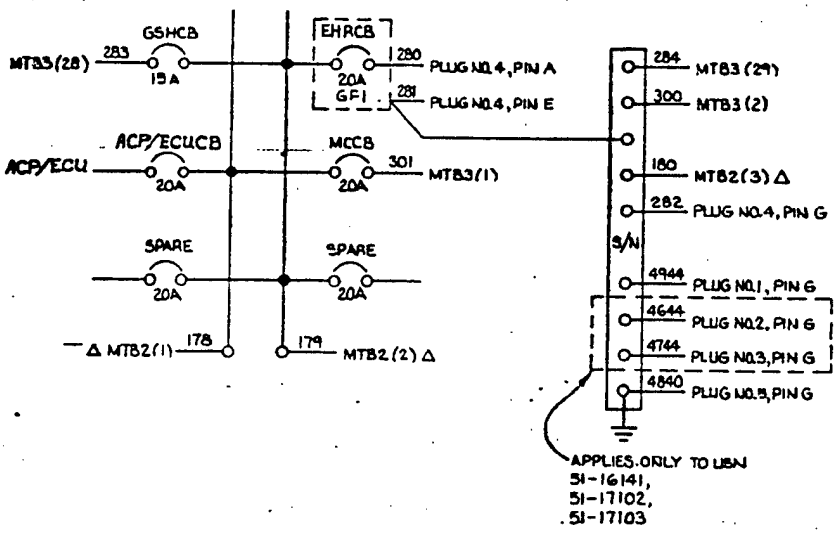

ENGINE HOUSE DISTRIBUTION PANEL

120/240 VAC

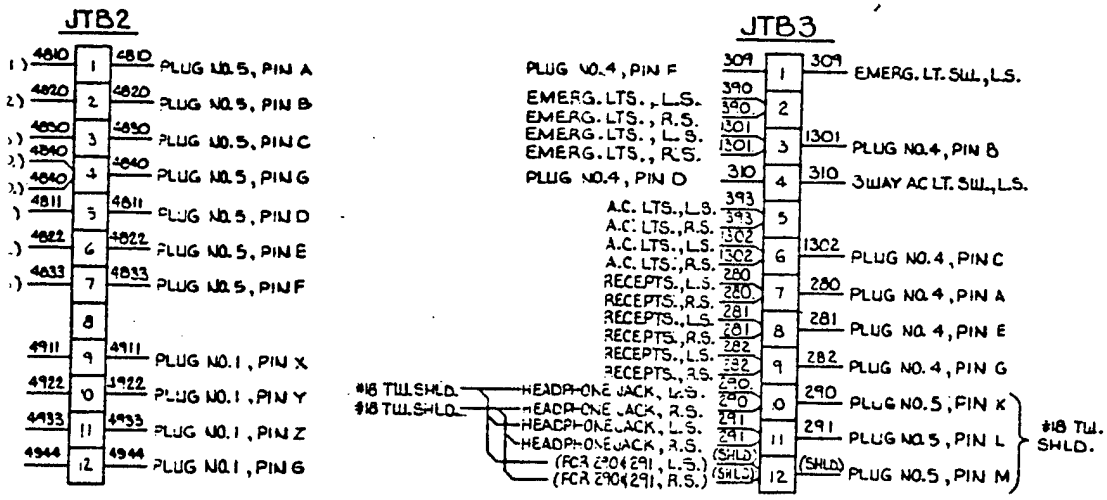

ARDS ABOVE MOTOR CONTROL CENTER

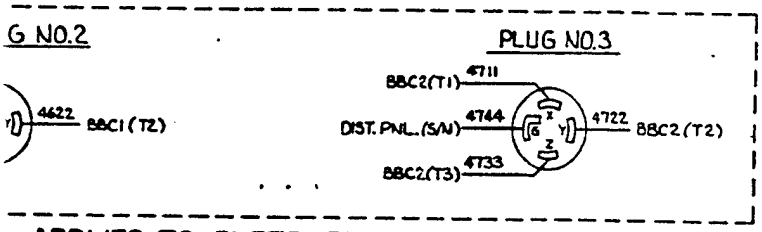

APPLIES TO BLEED BLOWER UNITS

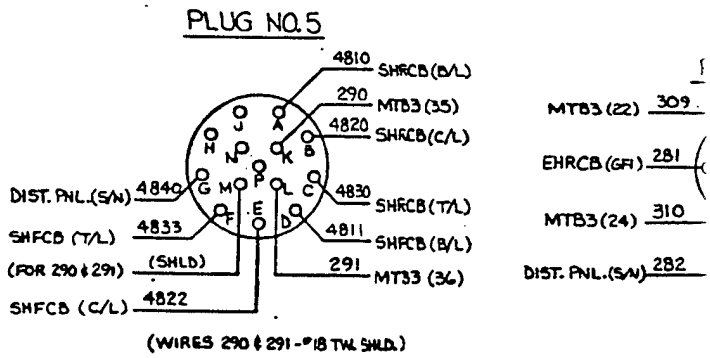

TOP OF DISTRIBUTION PANEL~RECEPTACLES
(VIEW FROM REAR)

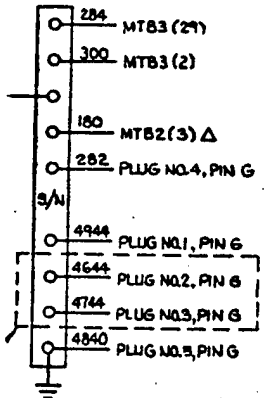

PPLIES ONLY TO USN
1-16141,
1-17102,
1-17103

LEGEND

EHRCB – ENGINE HOUSE RECEPTACLE
GSHCB – GENERATOR STRIP HEATER
JTB1,2&3 – JUNCTION BOX TERMINAL
MCCB – MAGNETIC CONTACTOR CIRC
SHFCB – SPACE HEATER FRONT CIRC
SHRCB – SPACE HEATER REAR CIRC
S/N – SOLID NEUTRAL

NOTES:

1. UNLESS OTHERWISE NOTED USE #12
2. Δ-USE #4 AWG SIS GRAY WIRE.

KEY

XX — YYY — ZZZZ (XX)
DESTINAT
DESTINAT
WIRE NO.
TERMINAL

QTY REQD	FSCM NO	PART OR IDENTIFYING NO.	NOMENCLATURE OR DESCRIPTION

PARTS LI

NEESA DRAWING NO 989-DF

DUEL FUEL 1500 KW CONVERSION OF DIESEL POWER PLANTS

SATISFACTORY TO MIKE CHILDERS
NORMAN HELGESON DEC. 1996

ZONE	LTR	DESCRIPTION	DATE	APPROVED
		REVISIONS		

JTB3

PIN F	309	1	309 — EMERG. LT. SW., L.S.
S., L.S.	390	2	
S., R.S.	390		
S., L.S.	301	3	1301 — PLUG NO.4, PIN B
S., R.S.	1301		
PIN D	310	4	310 — 3WAY AC LT. SW., L.S.
LTS., L.S.	393	5	
LTS., R.S.	393		
LTS., L.S.	302	6	1302 — PLUG NO.4, PIN C
LTS., R.S.	1302		
EPTS., L.S.	280	7	280 — PLUG NO.4, PIN A
EPTS., R.S.	280		
EPTS., L.S.	281	8	281 — PLUG NO.4, PIN E
EPTS., R.S.	281		
EPTS., L.S.	282	9	282 — PLUG NO.4, PIN G
EPTS., R.S.	282		
CK, L.S.	290	10	290 — PLUG NO.5, PIN K
CK, R.S.	290		
CK, L.S.	291	11	291 — PLUG NO.5, PIN L
CK, R.S.	291		
291, L.S.)	(SHLD)	12	(SHLD) — PLUG NO.5, PIN M
291, R.S.)	(SHLD)		

#18 TW. SHLD.

BBC2 (T2)

PLUG NO.5

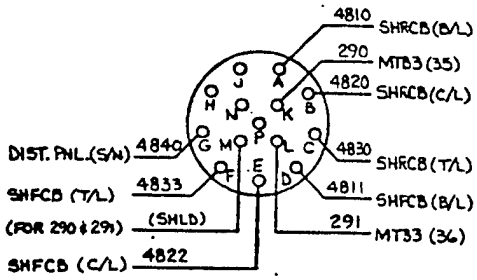

(WIRES 290 & 291 - #18 TW. SHLD.)

PLUG NO. 4

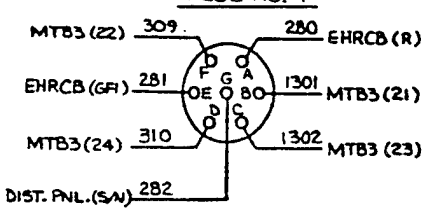

~RECEPTACLES

LEGEND

EHRCB – ENGINE HOUSE RECEPTACLES CIRCUIT BREAKER
GSHCB – GENERATOR STRIP HEATER CIRCUIT BREAKER
JTB1,2&3 – JUNCTION BOX TERMINAL BOARDS
MCCB – MAGNETIC CONTACTOR CIRCUIT BREAKER
SHFCB – SPACE HEATER FRONT CIRCUIT BREAKER
SHRCB – SPACE HEATER REAR CIRCUIT BREAKER
S/N – SOLID NEUTRAL

NOTES:

1. UNLESS OTHERWISE NOTED USE #12 AWG SIS GRAY WIRE.
2. Δ-USE #4 AWG SIS GRAY WIRE.

KEY

XX — YYY — ZZZZ (XX)

- (XX) — DESTINATION DEVICE TERMINAL
- ZZZZ — DESTINATION DEVICE
- YYY — WIRE NO.
- XX — TERMINAL

QTY/FOC	FSCM NO	PART OR IDENTIFYING NO.	NOMENCLATURE OR DESCRIPTION	MATERIAL/SPECIFICATION	ITEM NO.

PARTS LIST

NEESA DRAWING NO 989-DF

DEPARTMENT OF THE NAVY — NAVAL FACILITIES ENGINEERING COMMAND
NAVAL ENERGY AND ENVIRONMENTAL SUPPORT ACTIVITY
1400 LYONS ST. PORT HUENEME, CALIFORNIA 93043-4340

PREPARED M-K 1992-7-1
REVIEWED 7-17-92
CHECKED 7-17-92
DRAWING DATE
APPROVED DATE

OVERHAUL 1500 KW
DIESEL POWER PLANTS
CONNECTION DIAGRAM,
MCC DISTRIBUTION PANEL

DUEL FUEL 1500 KW
CONNEXION OF DIESEL POWER PLANTS
SATISFACTORY TO
MIKE CHILDERS
NORMAN HELGESON DEC. 1994

NAVAL ENERGY & UTILITIES DEPT

SIZE F | CAGE NO 80091 | NAVFAC DRAWING NO (BUR APPLICABLE) | CONTR NO N47408-89-C-2011
SCALE NONE | SHEET 110 OF

4 3 2 1

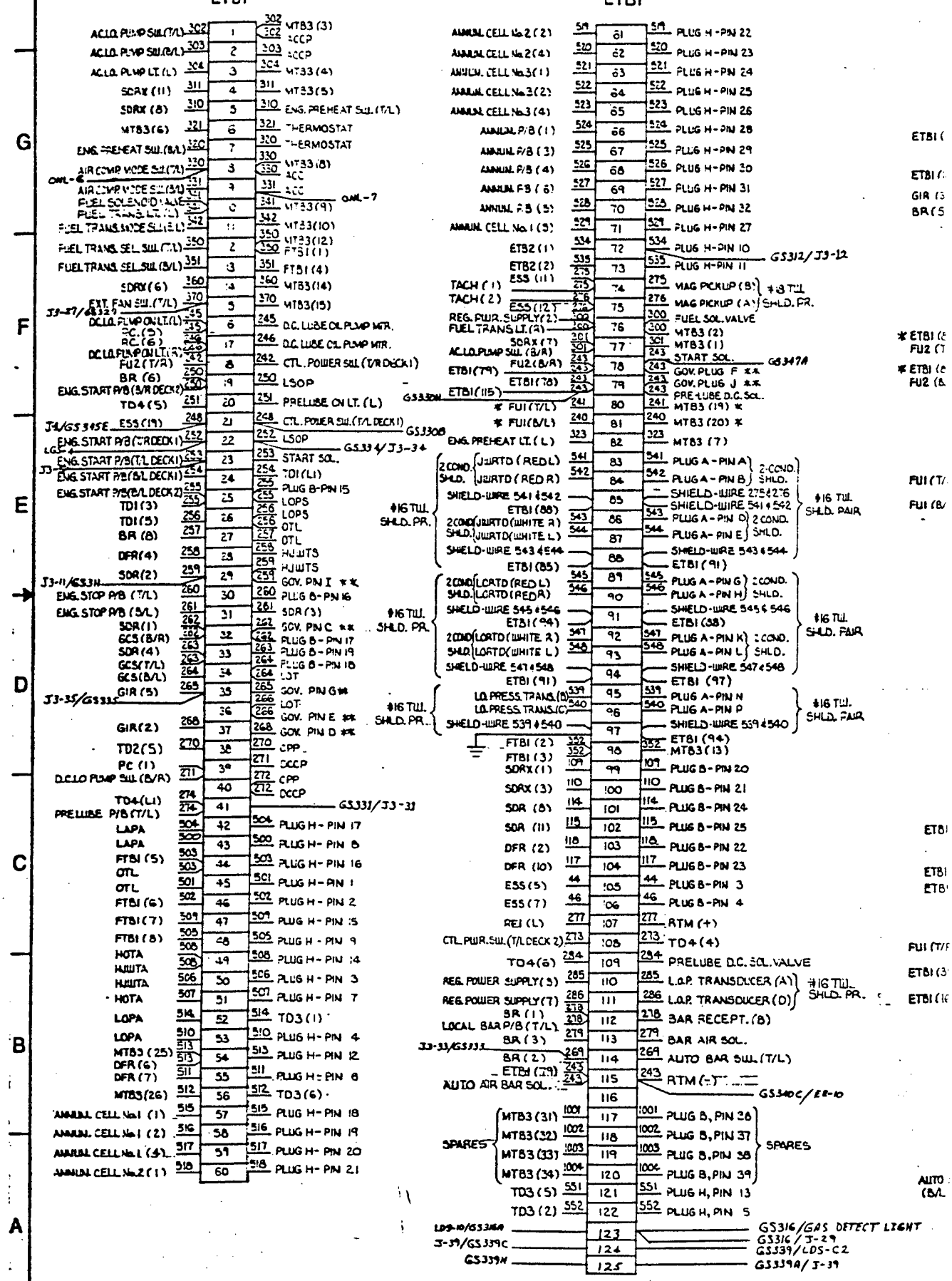
ETB1
ETB1
AC LO. PUMP SW.(T/L) 302 1 302 MT83 (3)
AC LO. PUMP SW.(B/L) 303 2 303 ACCP
AC LO. PUMP LT. (L) 304 3 304 MT83 (4)
SDRX (11) 311 4 311 MT83 (5)
SDRX (8) 310 5 310 ENG. PREHEAT SW. (T/L)
MT83 (6) 321 6 321 THERMOSTAT
ENG. PREHEAT SW. (B/L) 320 7 320 THERMOSTAT
AIR COMP MODE SW.(T/L) 330 8 330 MT83 (8)
OWL-6
AIR COMP MODE SW.(B/L) 331 9 331 ACC
FUEL SOLENOID VALVE 341 10 341 MT83 (9)
OWL-7
FUEL TRANS. LT. (L) 342 11 342 MT83 (10)
FUEL TRANS. MODE SW.(B/L) 350 12 350 MT83 (12)
FUEL TRANS. SEL. SW. (T/L) 350 2 350 FTB1 (1)
FUEL TRANS. SEL. SW. (B/L) 351 3 351 FTB1 (4)
SDRX (6) 360 14 360 MT83 (14)
EXT. FAN SW. (T/L) 370 15 370 MT83 (15)
J3-27/GS329
DC LO. PUMP ON LT. (L) 245 16 245 D.C. LUBE OIL PUMP MTR.
PC (5) 245 17 246 D.C. LUBE OIL PUMP MTR.
PC (6) 246
DC LO. PUMP ON LT. (R) 242
FU2 (T/R) 242 18 242 CTL. POWER SW. (T/R DECK 1)
BR (6) 250 19 250 LSOP
ENG. START P/B (B/R DECK 2) 250
TD4 (5) 251 20 251 PRELUBE ON LT. (L)
J4/GS345E ESS (19) 248 21 248 CTL. POWER SW. (T/L DECK 1)
ENG. START P/B (T/R DECK 1) 252 22 252 LSOP
GS330B
LG-4
ENG. START P/B (T/L DECK 1) 253 23 253 START SOL.
GS334/J3-34
J3-
ENG. START P/B (B/L DECK 1) 254 24 254 TDI (L1)
ENG. START P/B (B/L DECK 2) 255 25 255 PLUG B-PIN 15
TDI (3) 255 26 256 LOPS
TDI (5) 256 27 256 LOPS
BR (8) 257 28 257 OTL
DFR (4) 258 29 258 OTL
SDR (2) 259 30 259 HJWTS
J3-11/GS331
ENG. STOP P/B (T/L) 260 31 259 HJWTS
ENG. STOP P/B (B/L) 261 32 260 GOV. PIN I **
SDR (1) 262 33 261 PLUG B-PIN 16
GCS (B/R) 262 34 262 SDR (3)
SDR (4) 263 35 263 GOV. PIN C **
GCS (T/L) 263 36 264 PLUG B-PIN 17
GCS (B/L) 264 37 264 PLUG B-PIN 19
GIR (5) 265 38 265 PLUG B-PIN 18
J3-35/GS335 266 39 266 LOT
GIR (2) 268 40 266 GOV. PIN G **
TD2 (5) 270 41 268 GOV. PIN E **
PC (1) 271 42 268 GOV. PIN D **
D.C. LO PUMP SW. (B/R) 270 43 270 CPP
TD4 (L1) 274 44 271 DCCP
PRELUBE P/B (T/L) 274 45 272 CPP
LAPA 504 46 272 DCCP
LAPA 500 47 274 GS331/J3-31
FTB1 (5) 503 48 504 PLUG H-PIN 17
OTL 503 49 500 PLUG H-PIN 8
OTL 501 50 503 PLUG H-PIN 16
FTB1 (6) 502 51 501 PLUG H-PIN 1
FTB1 (7) 509 52 502 PLUG H-PIN 2
FTB1 (8) 505 53 509 PLUG H-PIN 15
HOTA 508 54 505 PLUG H-PIN 9
HJWTA 508 55 508 PLUG H-PIN 14
HJWTA 506 56 508 PLUG H-PIN 3
HOTA 507 57 506 PLUG H-PIN 7
LOPA 514 58 507 TD3 (1)
LOPA 510 59 514 PLUG H-PIN 4
MT83 (25) 513 60 510 PLUG H-PIN 12
DFR (6) 513 61 513 PLUG H-PIN 8
DFR (7) 511 62 511 TD3 (6)
MT83 (26) 512 63 512 PLUG H-PIN 18
ANNUN. CELL No.1 (1) 515 64 515 PLUG H-PIN 19
ANNUN. CELL No.1 (2) 516 65 516 PLUG H-PIN 20
ANNUN. CELL No.1 (4) 517 66 517 PLUG H-PIN 21
ANNUN. CELL No.2 (1) 518 67 518
ANNUN. CELL No.2 (2) 519 68 519 PLUG H-PIN 22
ANNUN. CELL No.2 (4) 520 69 520 PLUG H-PIN 23
ANNUN. CELL No.3 (1) 521 70 521 PLUG H-PIN 24
ANNUN. CELL No.3 (2) 522 71 522 PLUG H-PIN 25
ANNUN. CELL No.3 (4) 523 72 523 PLUG H-PIN 26
ANNUN. P/B (1) 524 73 524 PLUG H-PIN 28
ANNUN. P/B (3) 525 74 525 PLUG H-PIN 29
ANNUN. P/B (4) 526 75 526 PLUG H-PIN 30
ANNUN. P/B (6) 527 76 527 PLUG H-PIN 31
ANNUN. P/B (5) 528 77 528 PLUG H-PIN 32
ANNUN. CELL No.1 (5) 529 78 529 PLUG H-PIN 27
ETB2 (1) 534 79 534 PLUG H-PIN 10
ETB2 (2) 535 80 535 PLUG H-PIN 11
GS312/J3-12
ESS (11) 275 81 275 MAG PICKUP (B)
TACH (1) 275 82 276 MAG PICKUP (A)
TACH (2) 276 83 300 FUEL SOL. VALVE
ESS (12) 276 84 300 MT83 (2)
REG. PWR. SUPPLY (2) 300 85 301 MT83 (1)
FUEL TRANS. LT. (R) 300 86 243 START SOL.
SDRX (7) 301 87 243 GOV. PLUG F **
AC LO. PUMP SW. (B/R) 301 88 243 GOV. PLUG J **
FU2 (B/R) 243 89 243 PRE-LUBE D.C. SOL.
ETB1 (79) 243 90 241 MT83 (19) *
ETB1 (78) 243 91 240 MT83 (20) *
ETB1 (115) 243 92 323 MT83 (7)
GS330N
* FU1 (T/L) 241 93 541 PLUG A-PIN A
* FU1 (B/L) 240 94 542 PLUG A-PIN B
ENG. PREHEAT LT. (L) 323 95 543 PLUG A-PIN D
2 COND. SHLD. J3WRTD (RED L) 541 96 544 PLUG A-PIN E
J3WRTD (RED R) 542 97 ETB1 (91)
SHIELD-WIRE 541 & 542 98 545 PLUG A-PIN G
ETB1 (88) 99 546 PLUG A-PIN H
2 COND. SHLD. J3WRTD (WHITE R) 543 100 547 PLUG A-PIN K
J3WRTD (WHITE L) 544 101 548 PLUG A-PIN L
SHIELD-WIRE 543 & 544 102 539 PLUG A-PIN N
ETB1 (85) 103 540 PLUG A-PIN P
2 COND. SHLD. LORTD (RED L) 545 104 ETB1 (94)
LORTD (RED R) 546 105 352 MT83 (13)
SHIELD-WIRE 545 & 546 106 109 PLUG B-PIN 20
ETB1 (94) 107 110 PLUG B-PIN 21
2 COND. SHLD. LORTD (WHITE R) 547 108 114 PLUG B-PIN 24
LORTD (WHITE L) 548 109 115 PLUG B-PIN 25
SHIELD-WIRE 547 & 548 110 118 PLUG B-PIN 22
ETB1 (91) 111 117 PLUG B-PIN 23
LO. PRESS. TRANS. (D) 539 112 44 PLUG B-PIN 3
LO. PRESS. TRANS. (C) 540 113 46 PLUG B-PIN 4
SHIELD-WIRE 539 & 540 114 277 RTM (+)
FTB1 (2) 352 115 273 TD4 (4)
FTB1 (3) 352 116 284 PRELUBE D.C. SOL. VALVE
SDRX (1) 109 117 285 L.O.P. TRANSDUCER (A)
SDRX (3) 110 118 286 L.O.P. TRANSDUCER (D)
SDR (8) 114 119 278 BAR RECEPT. (B)
SDR (11) 115 120 279 BAR AIR SOL.
DFR (2) 118 121 269 AUTO BAR SW. (T/L)
DFR (10) 117 122 243 RTM (-)
ESS (5) 44 123 GS340C/EE-10
ESS (7) 46 124
REJ (L) 277 125
CTL. PWR. SW. (T/L DECK 2) 273
TD4 (6) 284
REG. POWER SUPPLY (5) 285
REG. POWER SUPPLY (7) 286
BR (1) 278
LOCAL BAR P/B (T/L) 278
BR (3) 279
J3-33/GS333
BR (2) 269
ETB1 (79) 243
AUTO AIR BAR SOL. 243
SPARES
MT83 (31) 1001 PLUG B, PIN 28
MT83 (32) 1002 PLUG B, PIN 37
MT83 (33) 1003 PLUG B, PIN 38
MT83 (34) 1004 PLUG B, PIN 39
TD3 (5) 551 PLUG H, PIN 13
TD3 (2) 552 PLUG H, PIN 5
LDS-10/GS336A GS316/GAS DETECT LIGHT
J-39/GS339C GS316/J-29
GS339N GS339/LDS-C2
GS339A/J-39
#16 TW. SHLD. PR.
#16 TW. SHLD. PAIR
2 COND. SHLD.
#8 TW. SHLD. PR.
ETB1 (
ETB1 (
GIR (3
BR (5
* ETB1 (
FU2 (T
* ETB1 (
FU2 (B
FU1 (T/
FU1 (B/
ETB1
ETB1
ETB1
ETB1 (3
ETB1 (16
FU1 (T/F
AUTO
(B/L
B-51

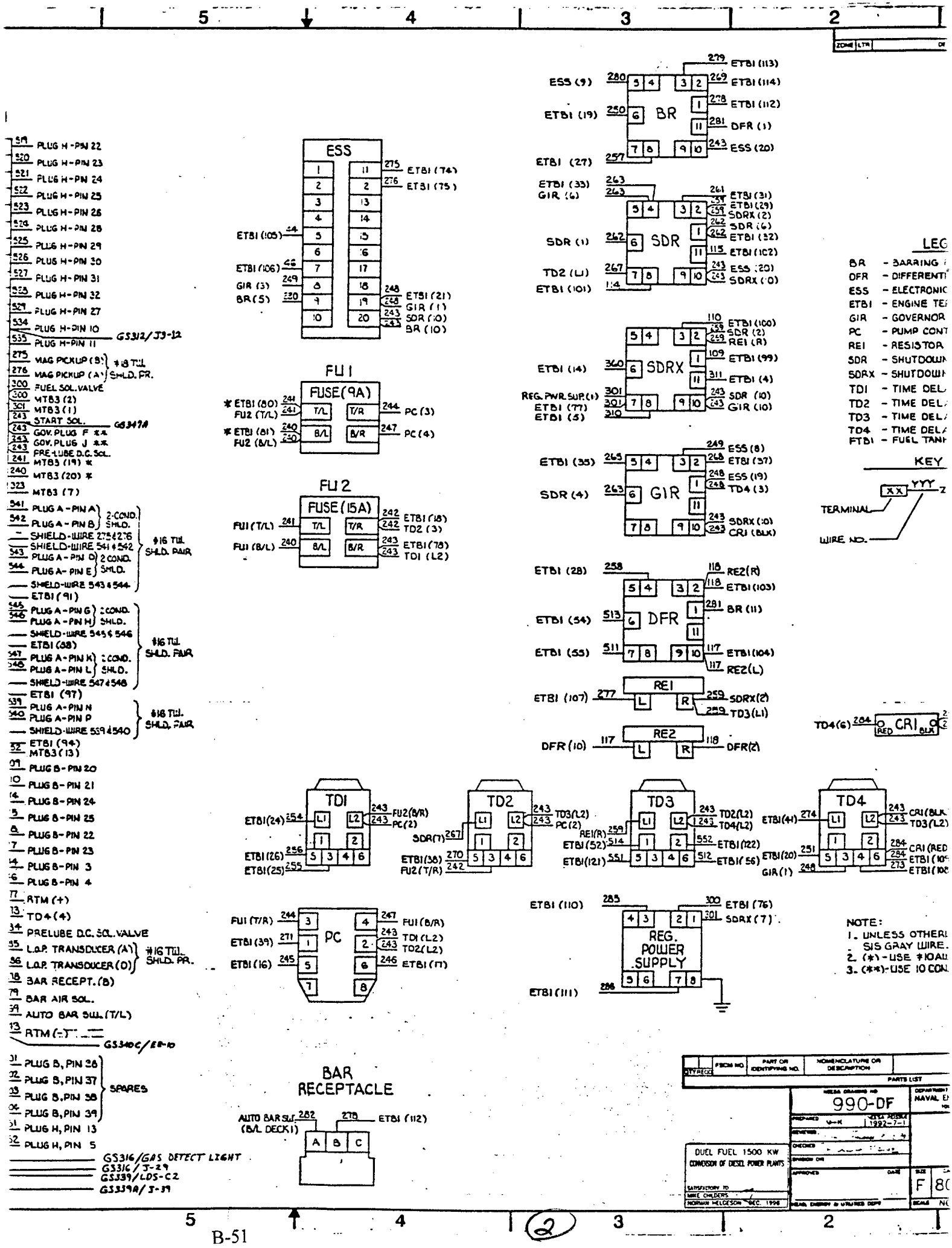
ESS
FU1
FUSE(9A)
FU2
FUSE(15A)
BR
SDR
SDRX
GIR
DFR
RE1
RE2
CRI
TD1
TD2
TD3
TD4
PC
REG. POWER SUPPLY
BAR RECEPTACLE
KEY
TERMINAL
WIRE NO.
LEG
BR - BARRING
DFR - DIFFERENTI
ESS - ELECTRONIC
ETBI - ENGINE TE
GIR - GOVERNOR
PC - PUMP CONT
REI - RESISTOR
SDR - SHUTDOWN
SDRX - SHUTDOWN
TDI - TIME DEL
TD2 - TIME DEL
TD3 - TIME DEL
TD4 - TIME DEL
FTBI - FUEL TANK
NOTE:
1. UNLESS OTHERI
SIS GRAY WIRE.
2. (*) - USE #10 AW
3. (**) - USE 10 CON
PARTS LIST
990-DF
DUEL FUEL 1500 KW
COMBUSION OF DIESEL POWER PLANTS
NAVAL E
F
B-51

ZONE	LTR	DESCRIPTION	DATE	APPROVED
		REVISIONS		

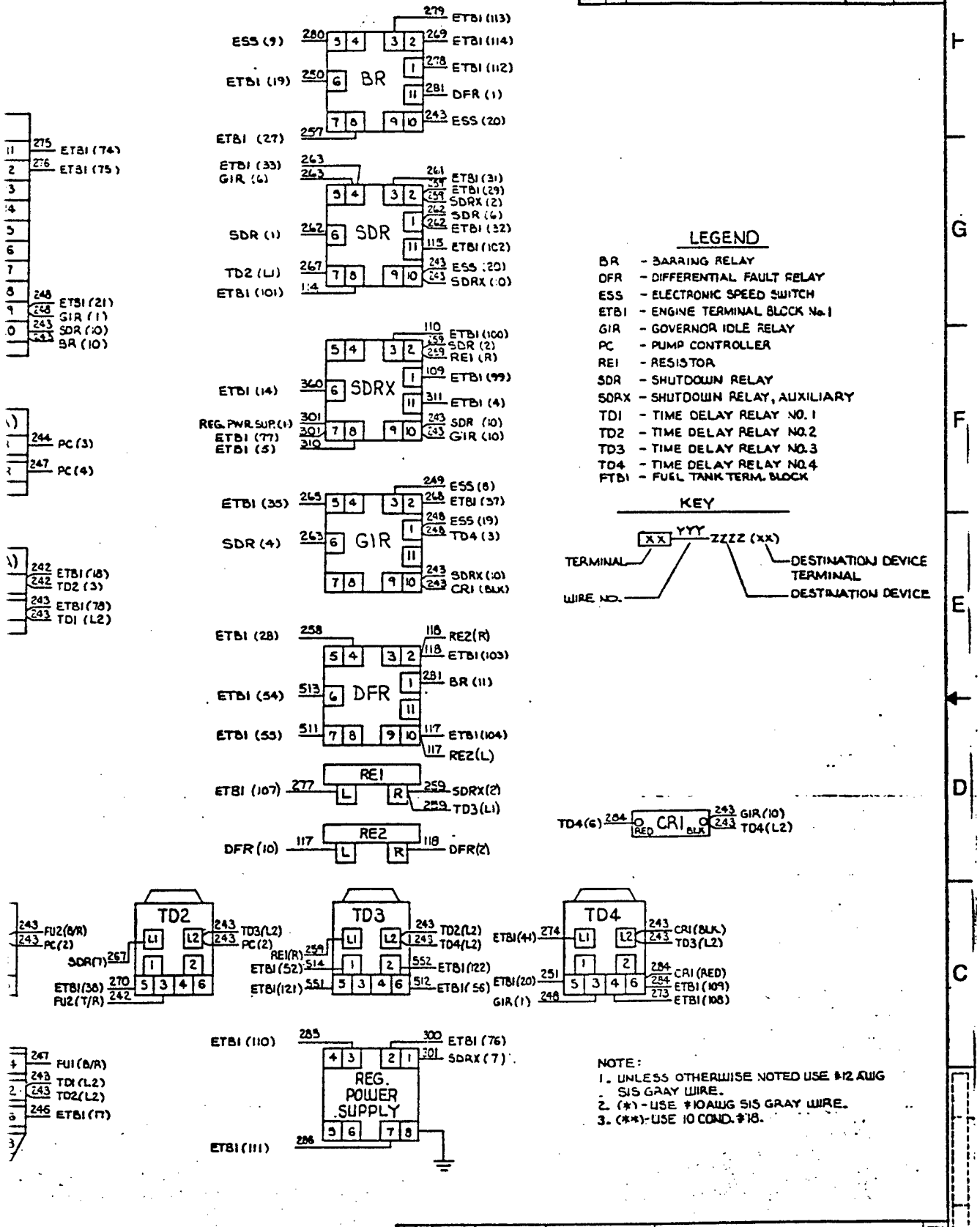

NOTE:
1. UNLESS OTHERWISE NOTED USE #12 AWG SIS GRAY WIRE.
2. (*) - USE #10 AWG SIS GRAY WIRE.
3. (**) - USE 10 COND. #18.

QTY REQD	FSCM NO.	PART OR IDENTIFYING NO.	NOMENCLATURE OR DESCRIPTION	MATERIAL/SPECIFICATION	ITEM NO.

PARTS LIST

NAVSEA DRAWING NO 990-DF

DEPARTMENT OF THE NAVY — NAVAL FACILITIES ENGINEERING COMMAND
NAVAL ENERGY AND ENVIRONMENTAL SUPPORT ACTIVITY
1100 LIVING ST, PORT HUENEME, CALIFORNIA 93043-4340

PREPARED V-K 1993-7-1
REVIEWED
CHECKED
DIVISION DIR
APPROVED DATE

OVERHAUL 1500 KW
DIESEL POWER PLANTS
CONNECTION DIAGRAM,
ENGINE CONTROL PANEL

DUEL FUEL 1500 KW
COMOSION OF DIESEL POWER PLANTS

SATISFACTORY TO
MIKE CHILDERS
NORMAN HELGESON DEC 1990

NAVAL ENERGY & UTILITIES DEPT

SIZE F | CAGE NO 80091 | NAVFAC DRAWING NO (NOT APPLICABLE)
CONTRACT NO N47408-89-C-2011
SCALE NONE | SHEET 111 OF

3

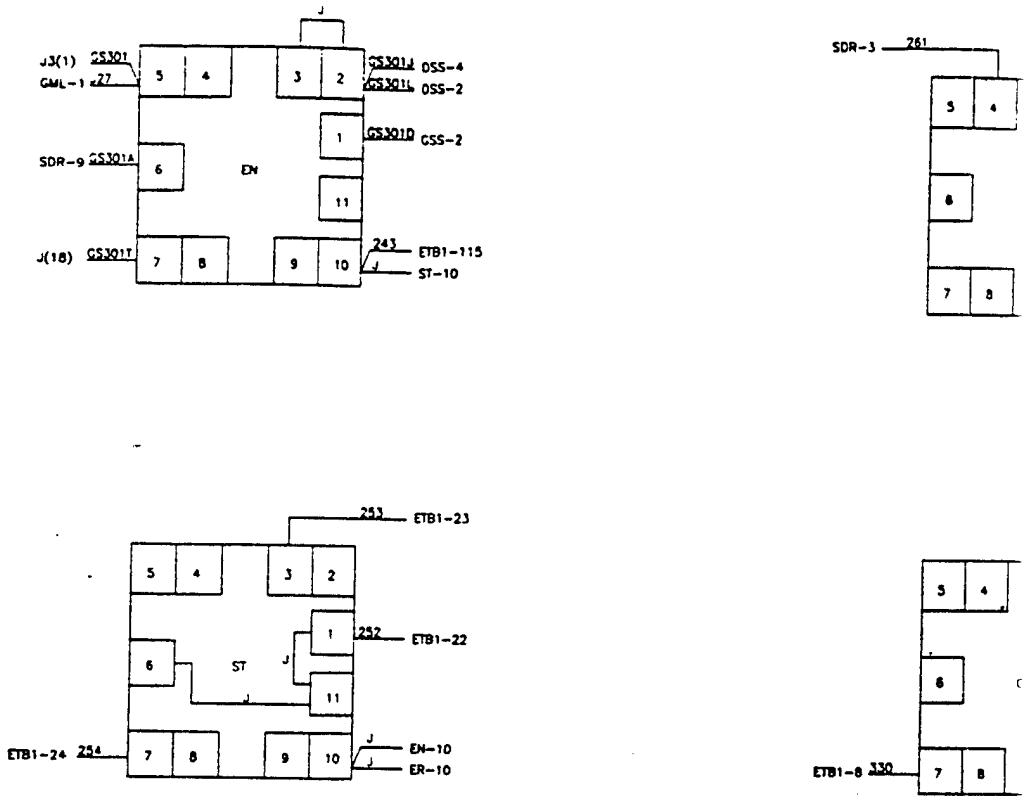

MOUNTED ON BACK WALL OF ECP

1

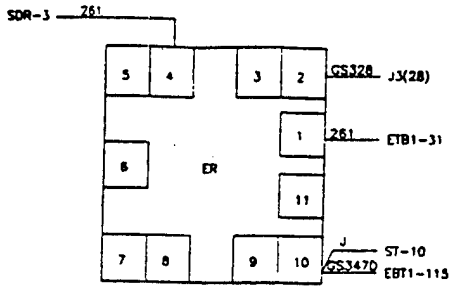

LEGEND

EN - GAS SYSTEM ENABLE
ER - ENGINE RUN RELAY
ONL- AIR COMPRESSOR RU
ST - START RELAY

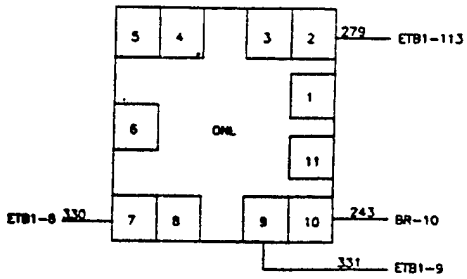

'ED ON BACK WALL OF ECP

ITEM NO.	PART NO.	DESCRIPTION
		PARTS LIST

QUANTITY FOR EACH ASSEMBLY

PART DASH NO | NEXT ASSY.

UNLESS OTHERWISE SPECIFIED DIMENSIONS ARE IN FEET AND/OR INCHES

TOLERANCES:
.X DECIMALS
.XX DECIMALS
.XXX DECIMALS
FRACTIONS ±1/16"
ANGLES ±0.5°

PROJ NO
DWG NO. 990A- DF
DES DR F. DELLAUBERA
CHK
BRANCH HEAD
DIV DIR
SATISFACTORY TO
MIKE CHILDERS
NORMAN HELGESON 1994
APPROVED DATE
COMMANDING OFFICER
APPROVED DATE
FOR COMMANDER, NAVFAC

DEPARTMENT OF THE NAVY
NAVAL FACILITIES
PORT HUE
DUEL
CONVERSION
CONN
ENGINE

SIZE F | CODE IDENT NO 80091
SCALE NONE

IF IN DOUBT, ASK - DO NOT SCALE

2

REVISIONS			
SYM	DESCRIPTION	DATE	APPROVED

328 J3(28)

— ETB1-31

— ST-10

470 EBT1-115

— ETB1-113

— BR-10

— ETB1-9

LEGEND

EN - GAS SYSTEM ENABLE RELAY

ER - ENGINE RUN RELAY

CNL - AIR COMPRESSOR RUN RELAY

ST - START RELAY

QUANTITY FOR EACH ASSEMBLY	ITEM NO.	PART NO.	DESCRIPTION	MATERIAL
			PARTS LIST	

PART DASH NO	NEXT ASSY.

UNLESS OTHERWISE SPECIFIED DIMENSIONS ARE IN FEET AND/OR INCHES

TOLERANCES:
.X DECIMALS
.XX DECIMALS
.XXX DECIMALS
FRACTIONS ±1/16"
ANGLES ±0.5°

PROJ NO
DWG NO 990A- DF
DES YX DR F DELLAVERA
CHK XX
BRANCH HEAD K.MACK
DIV DIR
SATISFACTORY TO
MIKE CHILDERS
NORMAN HELGESON 1994
APPROVED DATE
COMMANDING OFFICER
APPROVED DATE
FOR COMMANDER, NAVFAC

DEPARTMENT OF THE NAVY NAVAL FACILITIES ENGINEERING COMMAND
NAVAL FACILITIES ENGINEERING SERVICE CENTER
PORT HUENEME, CALIFORNIA 93043

DUEL FUEL 1500 KW
CONVERSION OF DIESEL POWER PLANTS
CONNECTION DIAGRAM,
ENGINE CONTROL PANELS

SIZE F | CODE IDENT NO 80091 | NAVFAC DRAWING NO
CONSTR CONTR NO
SCALE NONE | SPEC | SHEET 1 OF

IN DOUBT, ASK - DO NOT SCALE

3

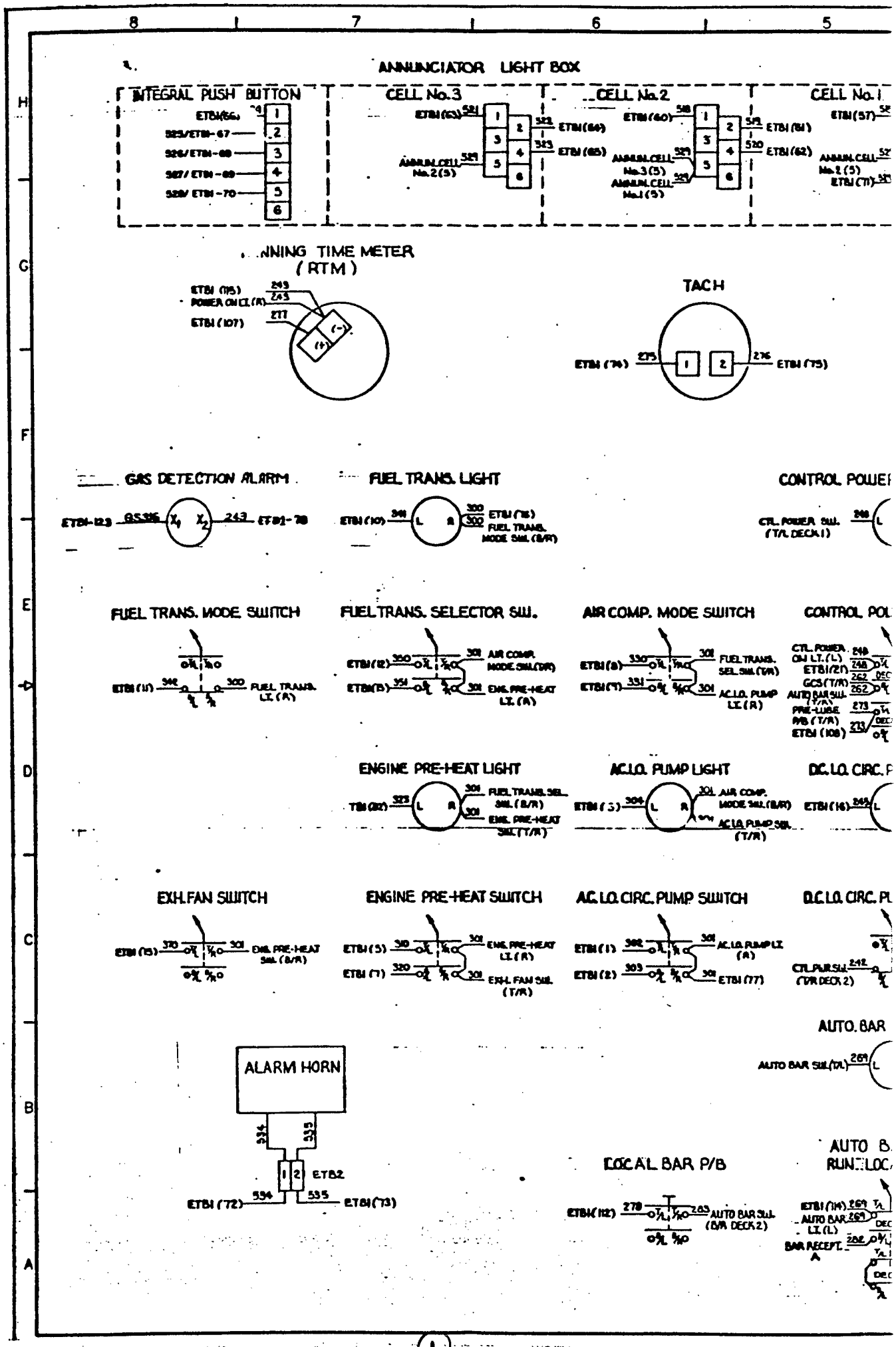
8
7
6
5
H
G
F
E
D
C
B
A
ANNUNCIATOR LIGHT BOX
INTEGRAL PUSH BUTTON
CELL No.3
CELL No.2
CELL No.1
RUNNING TIME METER (RTM)
TACH
GAS DETECTION ALARM
FUEL TRANS. LIGHT
CONTROL POWER
FUEL TRANS. MODE SWITCH
FUEL TRANS. SELECTOR SW.
AIR COMP. MODE SWITCH
CONTROL POL
ENGINE PRE-HEAT LIGHT
AC.LO. PUMP LIGHT
DC.LO. CIRC. P
EXH.FAN SWITCH
ENGINE PRE-HEAT SWITCH
AC.LO. CIRC. PUMP SWITCH
D.C.LO. CIRC. PU
AUTO. BAR
ALARM HORN
LOCAL BAR P/B
AUTO B
RUN. LOC

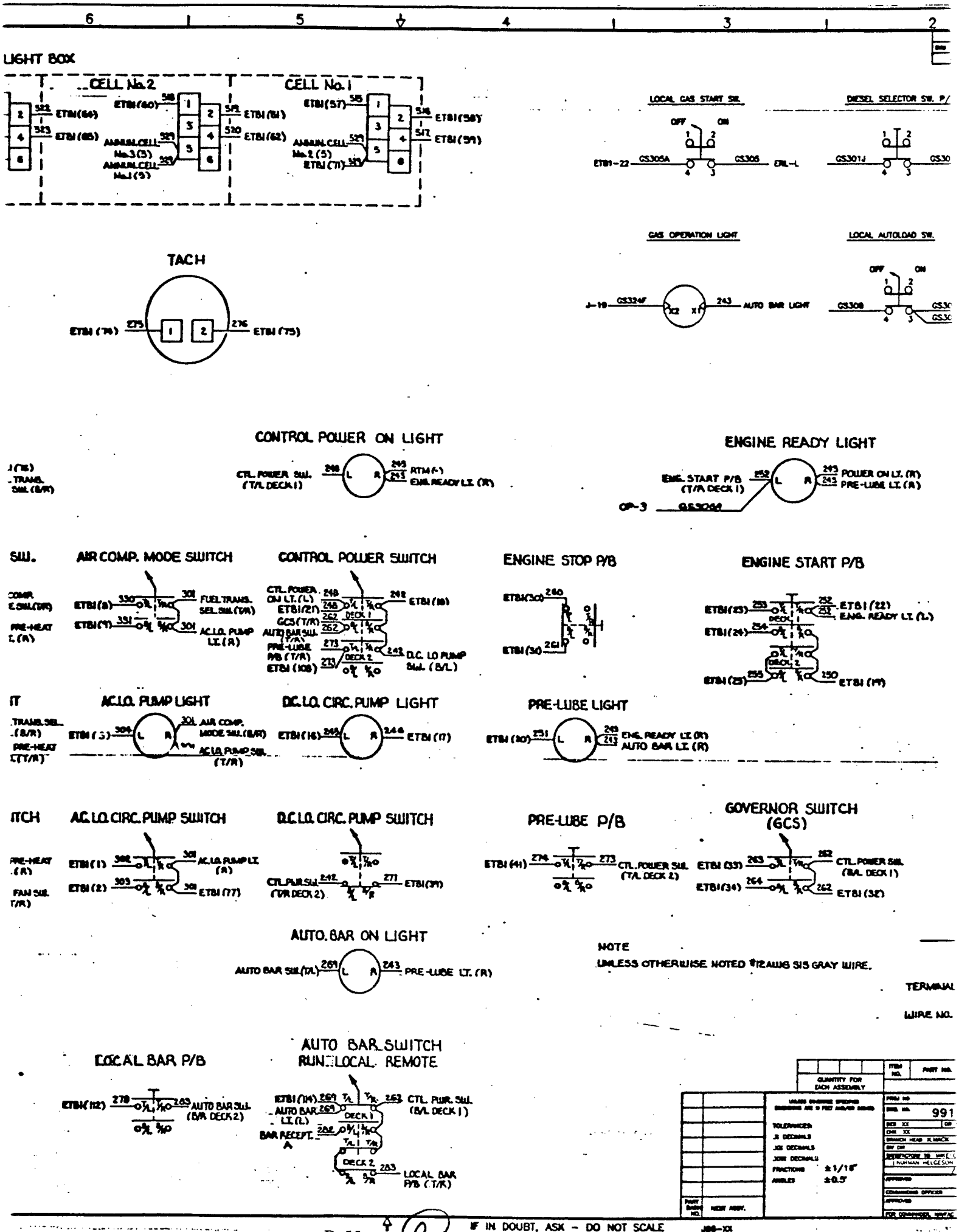
LIGHT BOX
CELL No. 2
CELL No. 1
ETBI(60)
ETBI(61)
ETBI(62)
ETBI(57)
ETBI(58)
ETBI(59)
ANNUN. CELL No. 3 (5)
ANNUN. CELL No. 1 (5)
ANNUN. CELL No. 2 (5)
ETBI(71)
LOCAL GAS START SW.
DIESEL SELECTOR SW. P/
OFF
ON
ETBI-22
GS305A
GS306
ETBI-L
GS301J
GAS OPERATION LIGHT
LOCAL AUTOLOAD SW.
J-19
GS324F
AUTO BAR LIGHT
GS308
TACH
ETBI (76)
ETBI (75)
CONTROL POWER ON LIGHT
CTL. POWER SW. (T/L DECK 1)
RTM(-)
ENG. READY LT. (R)
ENGINE READY LIGHT
ENG. START P/B (T/R DECK 1)
POWER ON LT. (R)
PRE-LUBE LT. (R)
OP-3
GS304
AIR COMP. MODE SWITCH
FUEL TRANS. SEL. SW. (T/R)
AC LO. PUMP LT. (R)
CONTROL POWER SWITCH
CTL. POWER ON LT. (L)
GCS (T/R)
AUTO BAR SW. (T/R)
PRE-LUBE P/B (T/R)
ETBI (108)
DECK 1
DECK 2
D.C. LO PUMP SW. (B/L)
ENGINE STOP P/B
ENGINE START P/B
ETBI (22)
ENG. READY LT. (L)
AC LO. PUMP LIGHT
AIR COMP. MODE SW. (B/R)
AC LO. PUMP SW. (T/R)
DC. LO. CIRC. PUMP LIGHT
PRE-LUBE LIGHT
ENG. READY LT. (R)
AUTO BAR LT. (R)
AC. LO. CIRC. PUMP SWITCH
AC. LO. PUMP LT. (R)
D.C. LO. CIRC. PUMP SWITCH
CTL. PWR. SW. (T/R DECK 2)
PRE-LUBE P/B
CTL. POWER SW. (T/L DECK 2)
GOVERNOR SWITCH (GCS)
CTL. POWER SW. (B/L DECK 1)
AUTO. BAR ON LIGHT
AUTO BAR SW. (T/L)
PRE-LUBE LT. (R)
NOTE
UNLESS OTHERWISE NOTED TRAINS SIS GRAY WIRE.
TERMINAL
WIRE NO.
LOCAL BAR P/B
AUTO BAR SW. (B/R DECK 2)
AUTO BAR SWITCH
RUN LOCAL REMOTE
CTL. PWR. SW. (B/L DECK 1)
AUTO BAR LT. (L)
BAR RECEPT. A
LOCAL BAR P/B (T/R)
QUANTITY FOR EACH ASSEMBLY
991
TOLERANCES
FRACTIONS ±1/16"
ANGLES ±0.5°
NEXT ASSY.
IF IN DOUBT, ASK - DO NOT SCALE
J88-XX

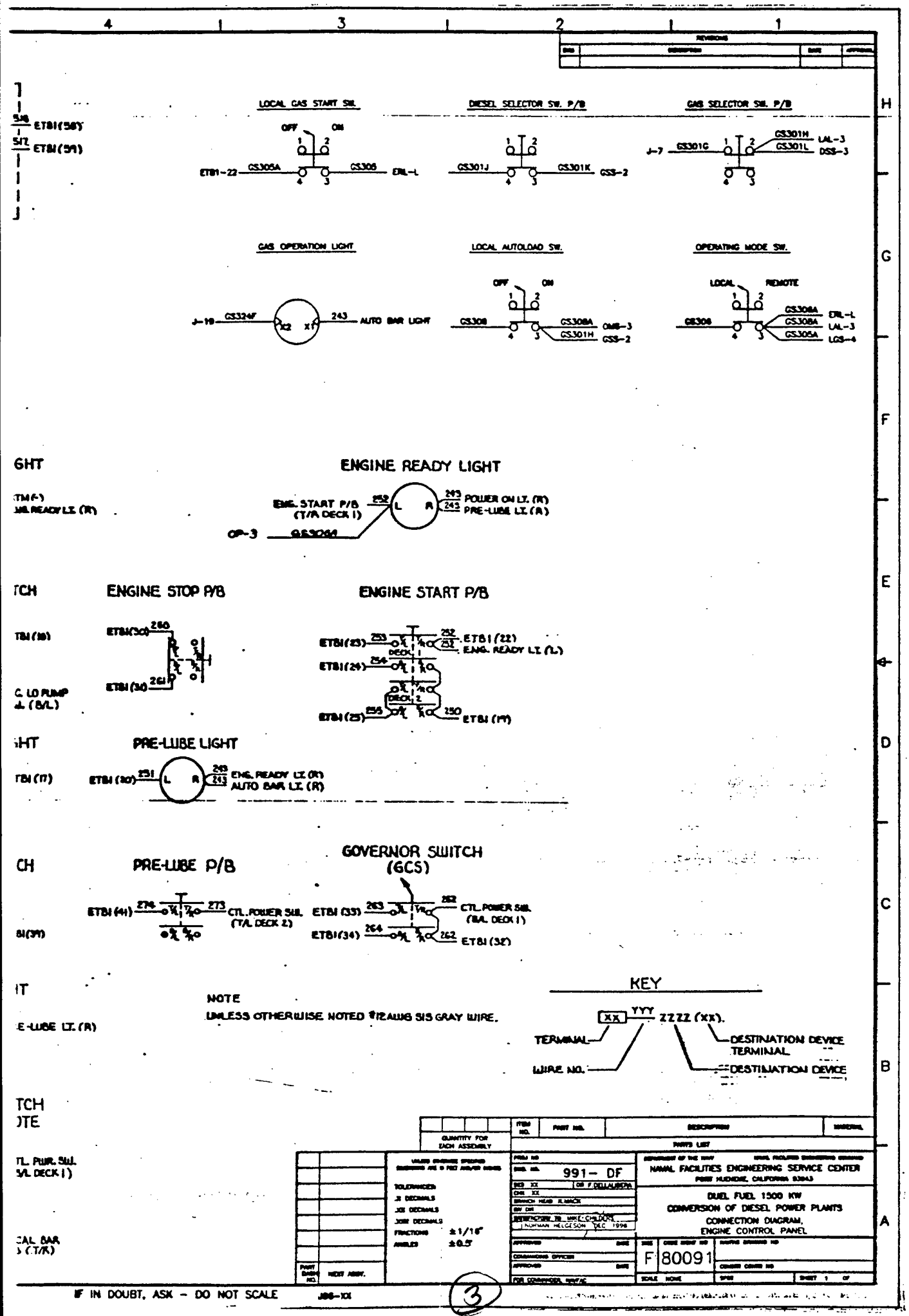
LOCAL GAS START SW.
OFF
ON
ETB1-22
GS305A
GS306
ERL-L
DIESEL SELECTOR SW. P/B
GS301J
GS301K
GSS-2
GAS SELECTOR SW. P/B
J-7
GS301G
GS301H
GS301L
LAL-3
DSS-3
GAS OPERATION LIGHT
J-19
GS324F
243
AUTO BAR LIGHT
LOCAL AUTOLOAD SW.
GS308
GS308A
GS301H
OMS-3
GSS-2
OPERATING MODE SW.
LOCAL
REMOTE
GS308
GS308A
GS308A
GS305A
ERL-L
LAL-3
LGS-4
ENGINE READY LIGHT
ENG. START P/B
(T/A DECK 1)
252
L
R
243
POWER ON LT. (R)
243
PRE-LUBE LT. (R)
OP-3
GS306A
ENGINE STOP P/B
ETB1(30)
260
ETB1(30)
261
ENGINE START P/B
ETB1(23)
253
252
ETB1(22)
252
ENG. READY LT. (L)
ETB1(24)
254
DECK 1
DECK 2
ETB1(25)
255
250
ETB1(17)
PRE-LUBE LIGHT
ETB1(30)
251
L
R
243
ENG. READY LT. (R)
243
AUTO BAR LT. (R)
PRE-LUBE P/B
ETB1(41)
276
273
CTL. POWER SUL.
(T/A DECK 2)
GOVERNOR SWITCH
(GCS)
ETB1(33)
263
262
CTL. POWER SUL.
(B/A DECK 1)
ETB1(34)
264
262
ETB1(32)
NOTE
UNLESS OTHERWISE NOTED TRACING SIS GRAY WIRE.
KEY
XX
YYY
ZZZZ (XX).
TERMINAL
WIRE NO.
DESTINATION DEVICE TERMINAL
DESTINATION DEVICE
QUANTITY FOR EACH ASSEMBLY
ITEM NO.
PART NO.
DESCRIPTION
MATERIAL
PARTS LIST
991- DF
NAVAL FACILITIES ENGINEERING SERVICE CENTER
PORT HUENEME, CALIFORNIA 93043
DUEL FUEL 1500 KW
CONVERSION OF DIESEL POWER PLANTS
CONNECTION DIAGRAM,
ENGINE CONTROL PANEL
NORMAN HELGESON DEC 1996
F 80091
SCALE NONE
SHEET 1 OF
NEXT ASSY.
IF IN DOUBT, ASK - DO NOT SCALE
J08-101
3

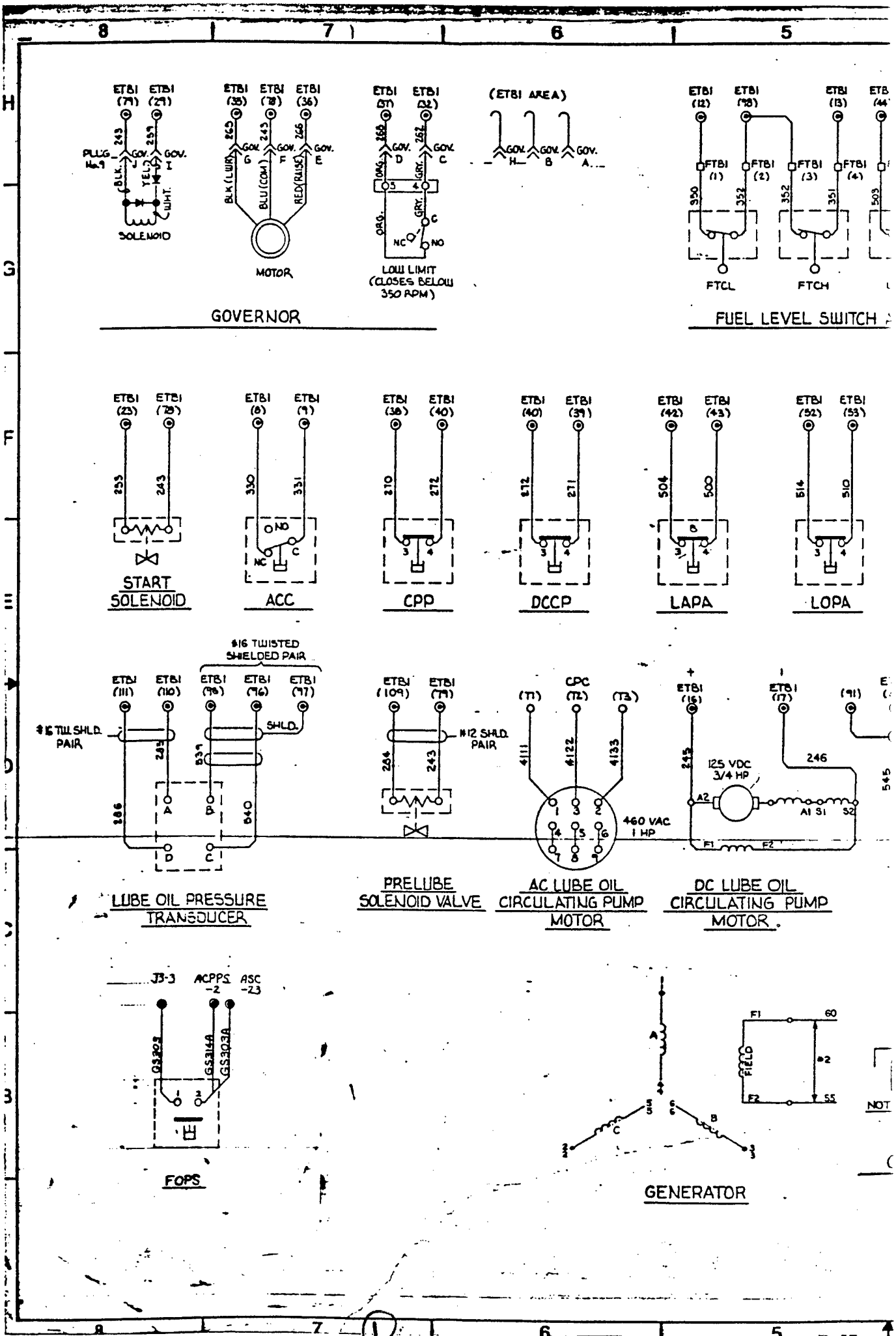
GOVERNOR
SOLENOID
MOTOR
LOW LIMIT (CLOSES BELOW 350 RPM)
(ETBI AREA)
FUEL LEVEL SWITCH
FTCL
FTCH
START SOLENOID
ACC
CPP
DCCP
LAPA
LOPA
#16 TWISTED SHIELDED PAIR
#16 TWI. SHLD. PAIR
#12 SHLD. PAIR
LUBE OIL PRESSURE TRANSDUCER
PRELUBE SOLENOID VALVE
AC LUBE OIL CIRCULATING PUMP MOTOR
DC LUBE OIL CIRCULATING PUMP MOTOR
125 VDC 3/4 HP
460 VAC 1 HP
FOPS
GENERATOR

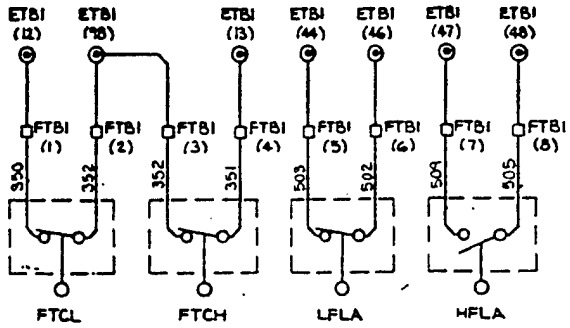

FUEL LEVEL SWITCH ASSEMBLY

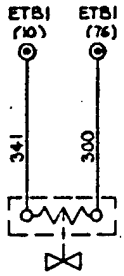

FUEL SOLENOID VALVE

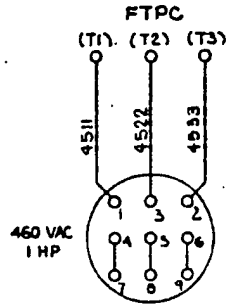

FUEL OIL TRANSFER PUMP MOTOR

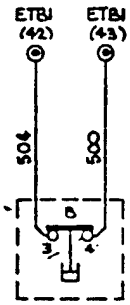

LAPA

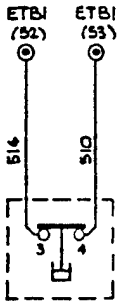

LOPA

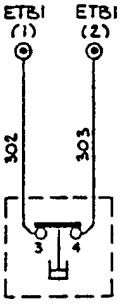

ACCP

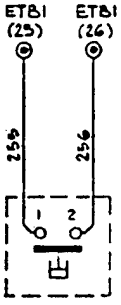

LOPS

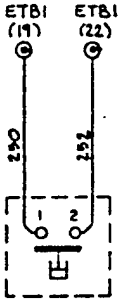

LSOP

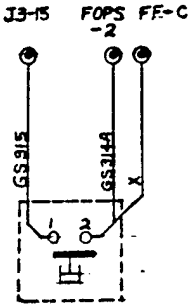

ACPPS

LEGEN

ACPPS- AFTER COOL
ACC - AIR COMPRES
ACCP - A.C. CIRCULAT
CPP - CIRCULATING
DCCP - D.C. CIRCULAT
LAPA - LOW AIR PRES
LOPA - LOW OIL PRES
LOPS - LOW OIL PRES
LORTD- LUBE OIL RES
LSOP - LOW STANDB
OTL - OVERSPEED
FTBI - FUEL TANK
FOPS- FUEL OIL P

NOTE :

1. UNLESS NOTED OTHI
SIS GRAY WIRE.

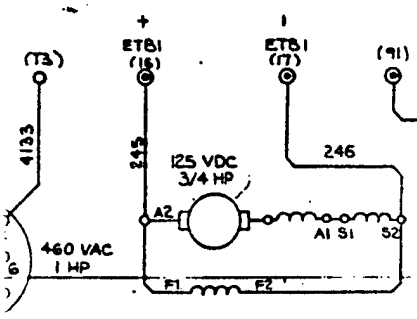

OIL PUMP

DC LUBE OIL CIRCULATING PUMP MOTOR.

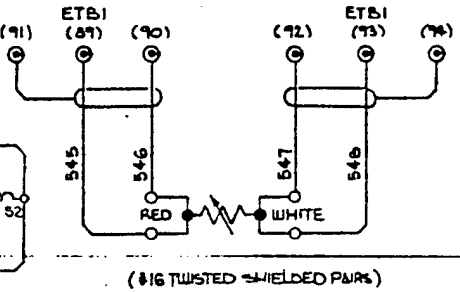

LORTD

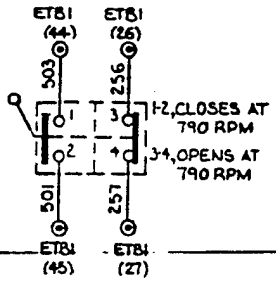

OTL

OPERATING POINTS		
SWITCH	CLOSE	OPE
PRESSURE PSI		
ACC	200	24
ACCP	20	3
CPP	12	1
DCCP	35	4
LAPA	150	17
LOPA	35	4
LOPS	30	2
LSOP	15	12
ACPPS	40↑	4
FOPS	20↑	2

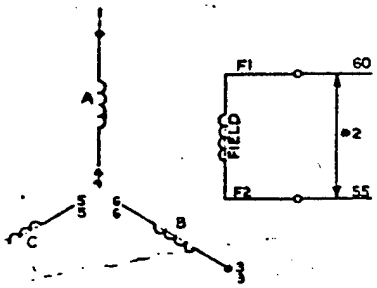

GENERATOR

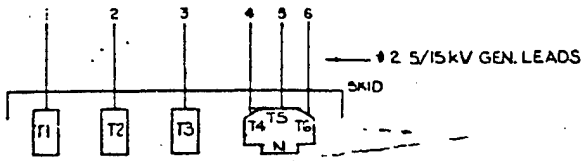

NOTE: AT EACH CONN. POINT, ONE CABLE GOES ABOVE BUS BAR, ONE GOES BELOW BUS BAR.

GEN. OUTPUT CONN. BOX

QTY REQD	FSCM NO.	PART OR IDENTIFYING NO.	NOMENCLATURE OR DESCRIPTION

PARTS LIST

993-DF

DEPARTMENT OF NAVAL ENER

DUEL FUEL 1500 KW CONVERSION OF DIESEL POWER PLANTS

SATISFACTORY TO
MIKE CHILDERS
NORMAN HELGESON

SIZE F

CAGE 80

SCALE NONE

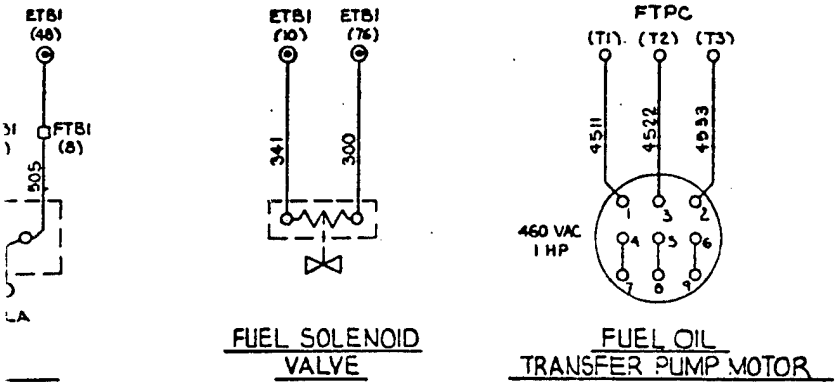

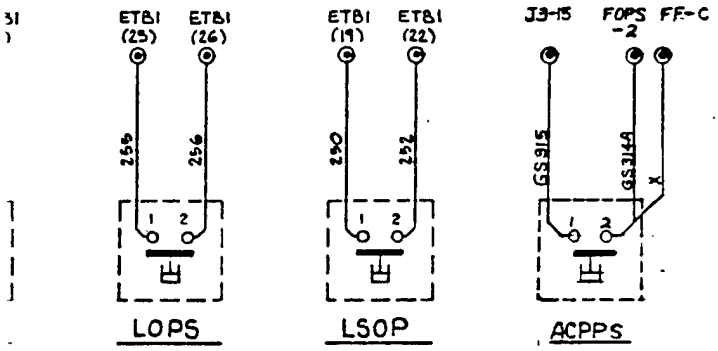

LEGEND

ACPPS- AFTER COOLER PUMP PRESSURE SWITCH
ACC - AIR COMPRESSOR CONTROLLER
ACCP - A.C. CIRCULATING PUMP SWITCH
CPP - CIRCULATING PUMP PRESSURE SWITCH
DCCP - D.C. CIRCULATING PUMP SWITCH
LAPA - LOW AIR PRESSURE ALARM
LOPA - LOW OIL PRESSURE ALARM
LOPS - LOW OIL PRESSURE SHUTDOWN
LORTD- LUBE OIL RESISTANCE TEMP DETECTOR
LSOP - LOW STANDBY OIL PRESSURE
OTL - OVERSPEED TRIP LIMIT SWITCH
FTB1 - FUEL TANK TERMINAL BLOCK
FOPS- FUEL OIL PRESSURE SWITCH

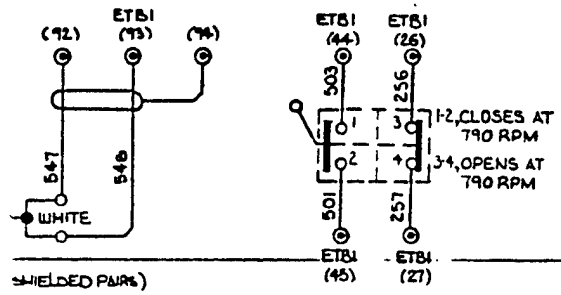

NOTE :

1. UNLESS NOTED OTHERWISE USE #12 AWG SIS GRAY WIRE.

OPERATING POINTS		
SWITCH	CLOSE	OPEN
PRESSURE PSI		
ACC	200	240
ACCP	20	30.
CPP	12	15
DCCP	35	45
LAPA	150	175
LOPA	35	45
LOPS	30	20
LSOP	15	12
ACPPS	40↑	40↓
FOPS	20↑	20↓

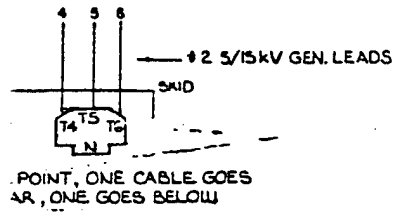

CONN. BOX

QTY REQD	FSCM NO.	PART OR IDENTIFYING NO.	NOMENCLATURE OR DESCRIPTION	MATERIAL/SPECIFICATION	ITEM NO.

PARTS LIST

DUEL FUEL 1500 KW CONVERSION OF DIESEL POWER PLANTS

SATISFACTORY TO
MIKE CHILDERS
NORMAN HELGESON DEC. 1998

MEDIA DRAWING NO. 993-DF

DEPARTMENT OF THE NAVY — NAVAL FACILITIES ENGINEERING COMMAND
NAVAL ENERGY AND ENVIRONMENTAL SUPPORT ACTIVITY
NEW LYONS ST., PORT HUENEME, CALIFORNIA 93043-4340

PREPARED M-K — MEDIA REVISED 1992-7-1
REVIEWED
CHECKED
DRAWN BY
APPROVED — DATE

OVERHAUL 1500 KW
DIESEL POWER PLANTS
CONNECTION DIAGRAM,
ENGINE HOUSE EQUIPMENT

SIZE F — CAGE NO 80091 — NAVFAC DRAWING NO — DWG APPROVED
CONTR NO N47408-89-C-2017
SCALE NONE — SHEET 114 OF

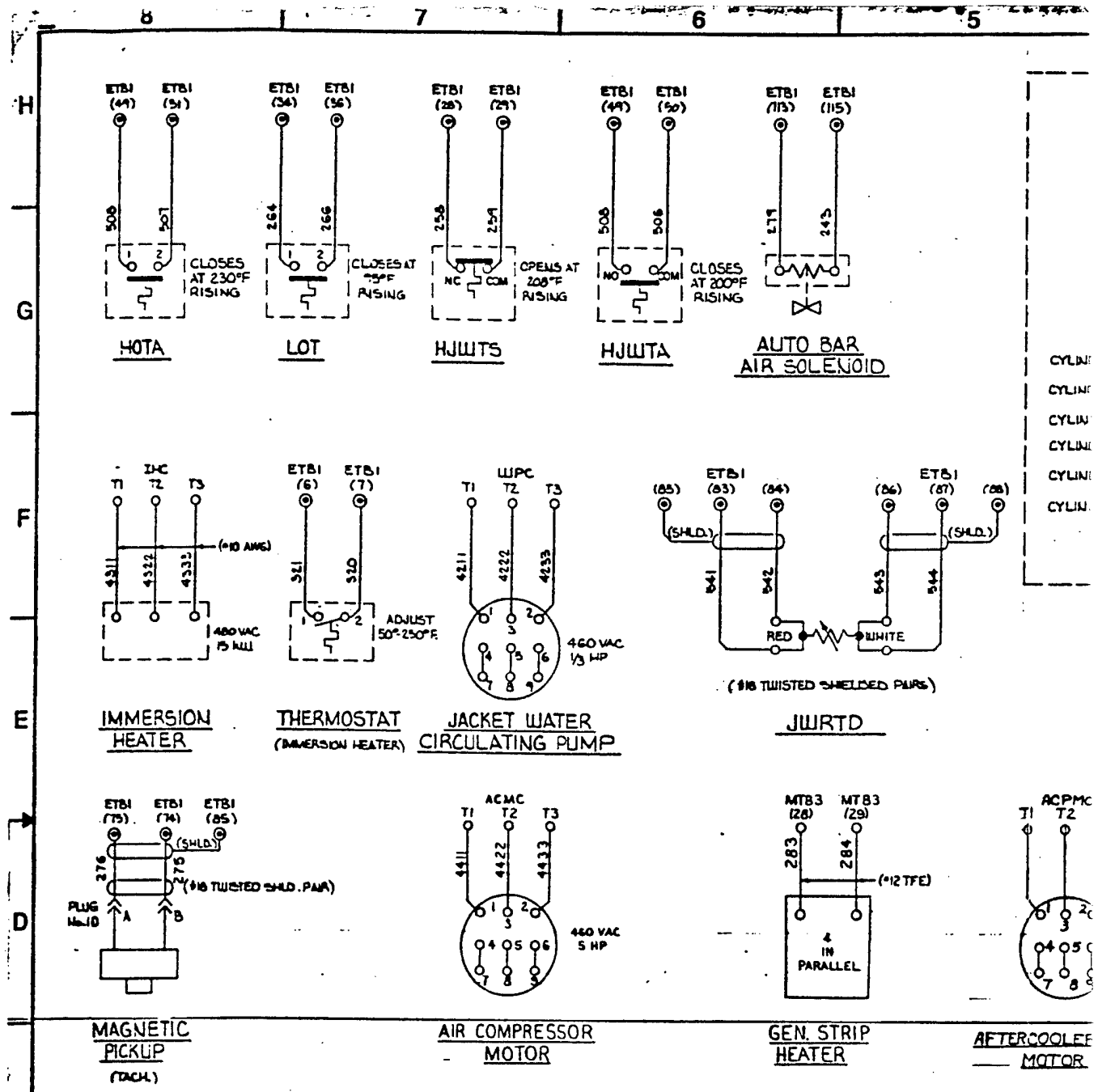
ETB1 (49) ETB1 (51)
506 507
CLOSES AT 230°F RISING
HOTA
ETB1 (34) ETB1 (36)
264 266
CLOSES AT 75°F RISING
LOT
ETB1 (28) ETB1 (29)
258 259
NC COM
OPENS AT 208°F RISING
HJWTS
ETB1 (49) ETB1 (50)
505 506
NO COM
CLOSES AT 200°F RISING
HJWTA
ETB1 (113) ETB1 (115)
273 245
AUTO BAR AIR SOLENOID
IHC T1 T2 T3
4311 4322 4333
(#10 AWG)
480 VAC 15 kW
IMMERSION HEATER
ETB1 (6) ETB1 (7)
321 320
ADJUST 50°-250°F
THERMOSTAT (IMMERSION HEATER)
WPC T1 T2 T3
4211 4222 4233
460 VAC 1/3 HP
JACKET WATER CIRCULATING PUMP
ETB1 (85) (83) (84) (86) (87) (88)
(SHLD.)
541 542 543 544
RED WHITE
(#18 TWISTED SHIELDED PAIRS)
JWRTD
ETB1 (75) ETB1 (74) ETB1 (85)
(SHLD.)
276 275
(#18 TWISTED SHLD. PAIR)
PLUG No. 10
A B
MAGNETIC PICKUP (TACH.)
ACMC T1 T2 T3
4411 4422 4433
460 VAC 5 HP
AIR COMPRESSOR MOTOR
MTB3 (28) MTB3 (29)
283 284
(#12 TFE)
4 IN PARALLEL
GEN. STRIP HEATER
ACPMC T1 T2
AFTERCOOLER MOTOR

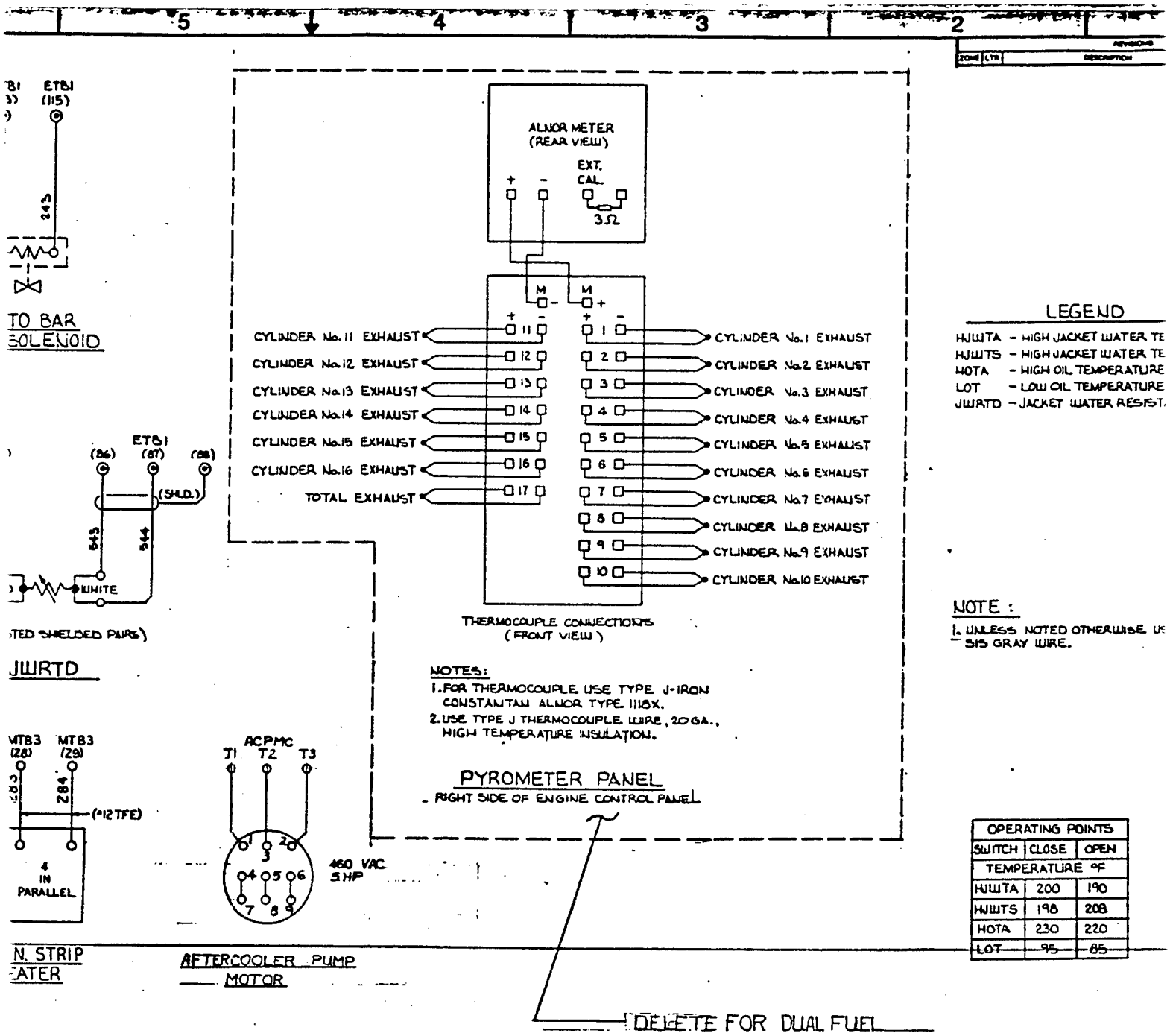

OPERATING POINTS		
SWITCH	CLOSE	OPEN
TEMPERATURE °F		
HJWTA	200	190
HJWTS	198	208
HOTA	230	220
LOT	95	85

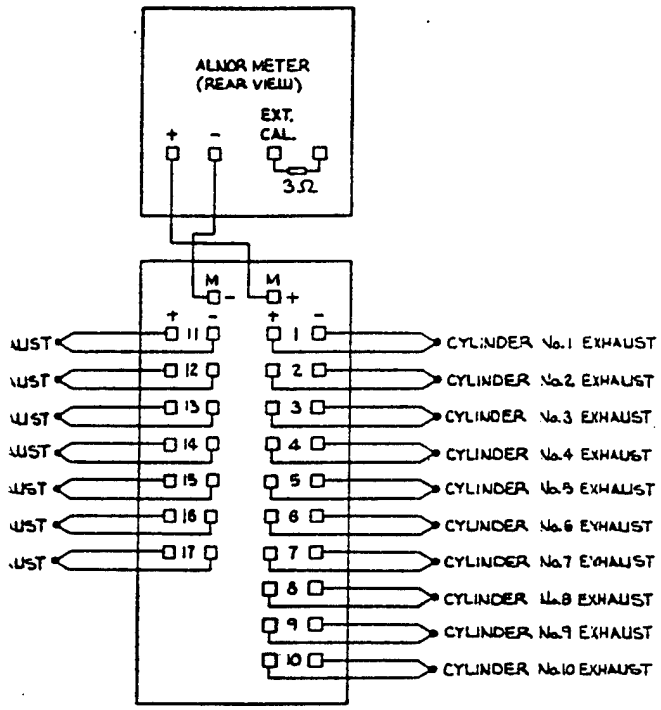

NOTES:
1. FOR THERMOCOUPLE USE TYPE J-IRON CONSTANTAN ALNOR TYPE 1118X.
2. USE TYPE J THERMOCOUPLE WIRE, 20 GA., HIGH TEMPERATURE INSULATION.

PYROMETER PANEL
RIGHT SIDE OF ENGINE CONTROL PANEL

LEGEND

HJWTA - HIGH JACKET WATER TEMPERATURE ALARM
HJWTS - HIGH JACKET WATER TEMPERATURE SHUTDOWN
HOTA - HIGH OIL TEMPERATURE ALARM
LOT - LOW OIL TEMPERATURE SWITCH
JWRTD - JACKET WATER RESISTANCE TEMP. DETECTOR

NOTE:
1. UNLESS NOTED OTHERWISE USE #12 AWG SIS GRAY WIRE.

OPERATING POINTS		
SWITCH	CLOSE	OPEN
TEMPERATURE °F		
HJWTA	200	190
HJWTS	198	208
HOTA	230	220
~~LOT~~	~~95~~	~~85~~

DELETE FOR DUAL FUEL

QTY REQD	FSCM NO.	PART OR IDENTIFYING NO.	NOMENCLATURE OR DESCRIPTION	MATERIAL/SPECIFICATION	ITEM NO.

PARTS LIST

NEDA DRAWING NO 994-DF
NEDA REVISION 1992-7-1
DEPARTMENT OF THE NAVY NAVAL FACILITIES ENGINEERING COMMAND
NAVAL ENERGY AND ENVIRONMENTAL SUPPORT ACTIVITY
1900 LYONS ST, PORT HUENEME, CALIFORNIA 93043-4340

OVERHAUL 1500 KW
DIESEL POWER PLANTS
CONNECTION DIAGRAM,
ENGINE HOUSE EQUIPMENT

SIZE F CAGE NO 80091 NAVFAC DRAWING NO
CONTR NO N47408-89-C-2011
SCALE NONE SHEET 115 OF

DUEL FUEL 1500 KW
CONNEXION OF DIESEL POWER PLANTS
SATISFACTORY TO
MIKE CHILDERS
NORMAN HELLESOEL 1998
NAVAL ENERGY & UTILITIES DEPT

3

Appendix C

MAINTENANCE BULLETINS AND INSTRUCTIONS

CONTENTS

Energy Conversions Inc.

Natural Gas power from EMD engines
Technical bulletin 05-001 2/ 7/96 Pg 1 of 1

Subject : Special tools used on natural gas converted engine systems
File name: TBTOOL.DOC

ECI has worked to keep the required special tools to a minimum. There are several tools that are required for proper servicing and operation of the converted engine. At the bottom is a short list of tools that are not supplied by ECI.

Rack Measuring Tool p/n 05-0130: This required tool is needed to properly set the level of diesel pilot fuel. Code named boomerang. This tool is not designed to come back if you throw it real hard. The boomerang has a detachable standard that is used to calibrate it. The standard is available separately if lost or misplaced. p/n 05-0132

GIV port brush p/n 05-0112: Not required, but useful. This bottle cleaning brush works well for cleaning out the oil and small debris that may be left in the hole where the Gas Inlet Valve fits into the cylinder head. If there is heavy buildup from a leaking seal washer this brush won't help. You will need a ream. ECI can supply a modified ream that will scrape clean the surface where the seal washer sets too. p/n 05-0113

GIV removal and installation tools: 1/4" drive - 7/32" hex driver, 6" long 1/4" wobble extension, 1/4" to 3/8" drive adapter and a torque wrench that can indicate torque at 22 Ft. Lbs. is needed for Gas Inlet Valve installation. Snap-On part numbers indicated in the table below.

GTMA7	Hex wrench for GIV crab bolts
GTMXW60	Extension 1/4" wobble 6" long
GTMA1	1/4" - 3/8" adapter
GSCO40	Gas line crows foot 1 1/4" 1/2 drive

Pressure gauge: 0-160 PSI hand held gauge with adapter fitting for quick connect/disconnect

Adapter fitting: for installation to relief valve, allowing measurement of compression or combustion pressure using standard Kein indicating gauge.

Useful tools not normally supplied by ECI:

A pump spray bottle for searching out pipe leaks using soapy water.
3/16 lead wire for taking Piston to head clearance (available from EMD)
Torque wrench, 3/8" drive 15-75 Ft. Lbs. (Snap On # QJFR275E)

Energy Conversions Inc.

Natural Gas power from EMD engines
Technical bulletin 20-001 2/6/96 Pg.1 of 3

Subject : Injector settings and adjustments for ECI converted dual fuel engines in stationary power applications. Page 1 of 3
File Name: TBINJECT.DOC

Use the special ECI tool to measure the rack lengths. It is designed to better fit the tight areas of the injector rack and to measure the longer rack positions.

For initial setup of the racks after kit installation and any time that the engine governor is changed or if significant linkage service is performed start at step number 1. If a routine adjustment is to be performed or inspections are to be made start at step 5.

A simplified description of the steps taken to adjust pilot fuel is to first make an initial adjustment of injector rack to governor position. (injector to governor relationship). Next make an adjustment the pilot stop adjustment screw and third set the injector racks.

Standard settings for injectors are dependent on the part number of the injector applied to the converted engine. The 5229335 injector will operate well at a injector rack setting of 1.870" the 5229250 injector will operate better set at 1.830" Testing has shown that when Roots engine injectors are installed into Turbocharged engines they can provide a reduced pilot fuel consumption. However there are other variables that can affect the combustion of pilot fuel to the level that increased rack settings are required. Efficient air after-cooling and large load changes create a potential for misfire. To avoid misfire the pilot fuel must be increased. The rack setting value for turbocharged natural gas engines using injector part number 5229200 will vary depending on the type of air after cooling equipment used and the type of duty cycle that the engine is normally operated. Additionally due to manufacturing tolerances, rack adjustment should be done when the injector racks are at the pilot fuel level.

The table indicates expected rack settings for different operations

Load swing	After Cooling	Rack Setting	
Tool standard length		1.870"	
Low to Medium	Enhanced	1.830"	Navy MUSE
Low to medium	Extended	1.800	
High	Extended	1.780"	Rig 801

The detailed procedure for proper injector setting is as follows.

1. Make certain that air pressure is available to the gas control system and turn the gas supply off.

2. Install a governor jack and adjust it to hold the governor and injector racks to the full fuel position. Pay attention to the possibility that one or more injectors links maybe to short and bottoming out on the injector. This would cause adjustment errors. Extend the adjustment of any cylinder if this is the case, insuring that the governor is free to go to its full fuel stop.

3. Set up the rack tool so it indicates zero with the 0.625" standard (the short end) On two of the cylinders, one on each bank (easiest if it is the first cylinder on the bank) adjust the racks to 0.625".

4. Remove the governor jack and set the fuel limit knob on the governor to the no fuel position.

5. Press the buttons on the gas system diagnostic screen, Alt + Page Down. This will put air pressure on the pilot stop ram. (If gas pressure over 25 psi is detected by the ECU it will not put air pressure on the system. It may be necessary to manually bleed off some of the gas pressure to allow the adjustment. This is conveniently done at the point where the gas pressure test point is located.)

6. Calibrate the rack tool to zero on the long side of the standard. (see notes on using the rack tool)

7. Measure the injector racks of the injectors that were set to 0.625" make adjustments as necessary to the pilot stop ram screw so that the injectors you previously set at the 0.625" setting are very near the tools setting with the standard. (You may find that the injectors are not equal. One rack may be longer than the proper setting and one may be shorter. In this case split the difference). Now you are done making adjustments to the pilot stop adjusting screw.

8. Set all of the injectors to the proper pilot fuel setting as indicated in the above tables. (including the two used for governor to injector relationship) Accuracy is critical to insure proper gas operation.

9. Return the fuel limit knob on the governor to the max fuel position

10. Press a button on the ECU screen to deactivate the pilot stop test.

11. Open the gas supply manual valve.

Notes on using the ECI rack measuring tool

The ECI rack tool is used to measure the length of the diesel injector racks for the purpose of adjusting and setting the diesel injectors for proper dual fuel operation. It is designed to fit the tight areas of the injector rack area and to measure the long rack positions.

Prior to taking measurements the tools calibration should be checked. Hold the standard in place and set the dial to zero. You may find this a little difficult. By using your thumb you can move the tools lever and lessen the force from the spring on the standard. After you have made adjustments to the tool and rechecked them you are ready to measure the prepared engine injector racks.

The indicator on the rack measuring tool reads 1/2 of the actual rack deviation because of the lever to pivot ratio. The adjusted rack length change is twice the reading of the indicator scale (2:1 ratio). For an example, a rack adjustment of 0.020" would only indicate a 0.010" on the dial.

Careful attention should be taken when using the standard and to acknowledge what the standard is. The most common supplied is machined to 1.870" however for known applications such as Rig 801 a standard of 1.780" has been supplied. If you are trying to set the racks at a level that is different than the standard you do the math to determine what is the setpoint you are aiming for on the indicator dial. For example, if the proper rack setting is 1.830" and your standard is 1.870", (0.040" difference) the normal procedure would be to zero the indicator with the standard. Then adjust the rack linkage to the setting that is - 0.020" from the zero. Refer to the engravings

determine if you have a special standard. **special note** Pay attention to the small indicator pointer as well so you don't inadvertently make settings that are off by 0.200".

Injector Timing

Injector timing is independent of the rack setting. Different injector types are set at different flywheel degree points.

Injector part #	Timing degrees
5229200	4 Deg BTDC
5229250	4 Deg. ATDC
5229335	0 Deg. BTDC

Certain applications may allow adjustments to this setting. depending on gas quality, engine load and turbo after cooling, advanced or retarded timing may be desired. Always start with the standard setting. If gas content is largely methane ">92%" and the after cooler system is optimized then advanced timing could provide greater thermal efficiency in both the diesel and the gas modes of operation. On the other hand if gas quality is low and air box temperatures are high a reduced timing may be necessary to avoid the lifting of the cylinder relief valves. The maximum advance setting for the timing on these injectors is 8 degrees BTDC. Consult ECI before attempting to adjust and operate an engine at this level. If an over advance setting is made to the cylinder the rocker movement will be greater than the movement of the injector and damage to the camshaft, rocker, injector and cylinder head will occur. Potentially requiring the replacement of all of these components

Energy Conversions Inc.

Natural Gas power from EMD engines
Technical bulletin 20-002 3/ 5/96 Pg. 1 of 2

Subject : Injector calibration for dual fuel converted engines
File name: tbinjcal.doc

Explanation: Injectors used on engines converted to operate dual fuel differ only in there calibration. The diesel injectors contain all the same parts as the standard injectors. There have been three different part number injectors used in Dual Fuel operation to date. 5229335, 5229250 and 5229200. Normally these injectors are calibrated on a test stand with a rack length of exactly 7/8", stroked a number of times (300 or 400) and adjusted to match a calibration standard. For optimum dual fuel operation and balance, the injectors are calibrated at there pilot fuel setting.

The explanation given here assumes that the person doing injector calibration is already knowledgeable about operating the calibration machine.

The injector is now calibrated at a rack length of 1.880" it is then stroked a number of times dependent on injector part number. The injector rack slide is then adjusted so the injector delivers the proper level of fuel. The fuel feed pressure should be kept between 30 and 50 psi. The speed should be kept between 880 and 910 RPM. To hold the injector rack to the new (longer) position of 1.880" a simple extension should be added to the standard rack holding fixture. This extension can be obtained from ECI. After installation of the extension check the setting with a depth mic and make adjustments if necessary.

Insert the injector rack into the holding fixture. Because the rack is at its long position it is more difficult to seat it into the holder. By using a short push rod at the back of the injector rack it is easy to force the rack into the holding fixture. By performing adjustments you will find that some injectors are very sensitive and that a small fraction of a turn on the adjustment screw can make a fairly large difference.

Table 20-1

Injector type	number of strokes	number of CC's
5229200	1600	45-55
5229250	1600	65-75
5229335	800	45-55

The time for tests on injectors are longer due to the number of strokes. There are alternate methods of running the tests because of the low amount of fuel pumped. Especially useful on the 5229200 injectors you can set the test stand to run manual so as not to shut off at the time the counter is reached. Preliminary adjustments and inspections can be performed on fewer strokes. After you have fuel to a level that is visible in the column, note that level. Start the test and measure just the amount of change in level. You can run several of these tests back to back before draining the columns. When you think you have the level set then run a standard test.

It may be desirable to run a standard test on the injectors after they have been calibrated at the pilot fuel level just to note the level of shift in the delivery. If desired you can use the table supplied to record the variables associated with injector performance.

Injector calibration record sheet Date _____

	Part Number_____ Injector serial #	Std. delivery before before pilot settings	Pilot level setting after adjustments	Std. delivery after
1				
2				
3				
4				
5				
6				
7				
8				
9				
10				
11				
12				
13				
14				
15				
16				
17				
18				
19				
20				
21				
22				
23				
24				

RECOMMENDED SPARE PARTS LIST

DUAL FUEL DIESEL ENGINE

Item	Description	Park Number	Manufacturer	Qty
001	Piston	10-1002	ECI	4
002	Piston Rings	10-1004	Kaydon	4
003	Cylinder Head	10-1005	ECI	4
004	Cylinder Relief Valve	10-1020	ECI	4
005	Air Cylinder, Diesel Cont	20-1110	BW	1
006	Gas Inlet Valve Assy	35-1402	ECI	4
007	Filter, Gas Inlet Valve	P-18	Aeroquip	16
008	Gasket, GIV to Head	35-1438	PHO	10
009	Exhaust Temp. Sensor	xx50-1740	Alnor	4
010	Flywheel Pickup	50-1728	Dynalco	3
011	Control Air Press. Sen. Gas Hdr. Press. Sensor Gas Pressure Transmitter	50-1700	Foxboro	1
012	Water Temp. Sensor Air Temp. Sensor Gas Temp. Sensor	50-1715	ECI	1
013	Air Box Press. Sensor	50-1705	Foxboro	1
014	Exhaust Temp. Sensor	xx50-1740	Alnor	4
015	D. P. Transmitter	50-2021	SMAR	1
016	Power Supply, ECU	60-1996	ECI	1
017	Input Isolation Relay	MIAC5	Gordos	10

Item	Description	Park Number	Manufacturer	Qty
018	Ouput Isolation Relay	MODC5MA	Gordos	10
019	Cooling Air Filter, ECU	PA-2002	Solberg	5
020	Switch, VTS	80-2311	Fenwal	3
021	Gas Cut Off Valve Main Gas Shut Off Valve	90-2608	Sealco	1
022	Rebuild Kit, GCOV, MGSOV			3
023	Gasket, Gas Supply Piping	90-2669	FNW	5
024	O'Ring, Gas Hdr.	V137	Eriks	4
025	Gasket, Load Block	90-2418 (Modified Style)	ECI	20
026	O'Ring	230	Eriks	2
027	O'Ring	238	Eriks	20
028	Gas Hose Assembly	90-2515	ECI	4
029	Fitting, GIV Air w/Filter	35-1470	ECI	5
030	Magnet Valve	816-L 1	Graham White	1
031	Gasket, Magnet Valve	1702	Graham White	1
032	Press Control Valve	VEP-321	Air	1
033	Diode	8421017	EMD	4
034	Shuttle Valve	SV-10-B	ARO	2
035	Starting Fuel Canister	020-020	KBI	2
036	Hose, Air Control	FC-300-4	Aeroquip	50 ft
037	Hose, GCOV to GFCV	90-2644	ECI	1

Item	Description	Park Number	Manufacturer	Qty
038	Lead Wire, 3/16"	8245511	EMD	2

Problem Area/Indication	Possible cause	Recommended check or corrective action
Gas Fault		
Engine speed	Loose or damaged gas flow control valve linkage	Inspect the gas valve linkage to insure that it is not loose, damaged or improperly adjusted. Repair as necessary.
	Sticking gas flow control valve	Disconnect gas valve linkage from the governor. Work the lever of the gas valve; see that it is smooth and free and that spring returns. If the valve feels notched or sticky, service the valve per manufacturer's recommendations.
	Improperly set pilot fuel setting	Loose or improperly adjusted pilot fuel control rams can cause the minimum amount of fuel injected at low loads to be too high to maintain proper engine speed. Inspect and adjust the pilot rams if necessary.
	Sticking diesel fuel control linkage	The diesel control ram may not be extending to the pilot fuel position, allowing too much fuel for no load. This problem can be aggravated by sticking injector linkages or control shafts. Inspect the movement of the diesel linkages by moving the layshaft by hand and checking for freedom of movement.
Valve sequencer		The valve sequencer is part of the ECU. It could be complaining about one of several possible conditions during which gas operation is prevented. The signals received by the valve sequencer are evaluated for accuracy: they could be unclear, or the engine may not be ready for gas operation because of some other condition the valve sequencer detects. These could be low engine speed, high engine speed, missing crankshaft position signals, or too many crankshaft position signals per revolution. Note the fault as indicated on the VSuP board inside the ECU. Match the code to the table on page *C-4* to determine the indicated problem.
	Loose sensor wires, damaged sensors	Inspect connectors to insure they are secure. Inspect sensors and wires for damage.

Problem Area/Indication	Possible cause	Recommended check or corrective action
Valve Sequencer	Bad sensors	The signals the sensors produce can be measured with a oscilloscope inside the ECU. If the sensor is suspect due to poor signal quality, replace it.
	Damaged or missing sensor targets	Inspect for missing or damaged targets. Repair or replace as necessary according to procedure on pg. *H-6*.
Exhaust Temperature		Exhaust temperature faults can occur for several reasons. The reactions of ECU cylinder temperature readings can help diagnose the problem. For example, a cylinder temperature reading that bounces by large jumps, or erratically drops to near zero even during diesel operation, indicates a bad sensor or wiring. A temperature reading that looks good in diesel mode but drops off drastically after gas operation may indicate a inoperative diesel injector or gas valve. Temperatures that drift high or low when in the gas mode may indicate overfueling of gas or underfueling of the pilot fuel.
	Bad sensor or damaged wires or connectors	The cylinder reading may be completely dead or may be making large jumps. Replace sensor or repair wiring as necessary.
	Improperly set pilot fuel or bad diesel injector	The cylinder reading seems to be OK for a short time after switching to gas, but then starts to drop out. If this is happening to one cylinder repeatedly, suspect a problem in the diesel injector. If more than one cylinder is affected, the pilot fuel amount should be increased as described on page 1*D-2*.
	Improperly set gas fuel load valve or failing gas inlet valve	Using the load valve, reduce the gas flow to the high temperature cylinder as described on page *E-6*. If problems persist, suspect problems with the GIV itself. Generally, after initial adjustment the load valves should not need further adjustment.
	Damaged electronics board	Depending on the level of damage, the reading may be a large negative, with several other cylinders showing the same low reading. The erroneous readings will not change

Problem Area/Indication	Possible cause	Recommended check or corrective action
		between fueling modes. Replace the AI/O board in the ECU, using static precautions described on page *C-5*.
	Failing power assembly	Most obvious at light loads. The cylinder shows low temperature in both fuel modes and is unresponsive to adjustment changes.
Water temperature		The water temperature will only be indicated as a fault if it is too high. Follow this table only If the actual water temperature is normal, but reads high at the ECU. If the engine water temperature is actually high, refer to standard maintenance procedures.
	Bad sensor	Check the calibration of the sensor as outlined on page *H-4*. Replace the sensor if it is bad.
	Bad wiring	Bad wiring may cause either a high or low reading depending on the nature of the damage. Wires shorted by bared insulation or moisture will generally cause a high temperature reading. Bad connections or broken wires will give a low temperature reading.
	Bad power supply	Measure the voltage between the two sockets of the sensor connector. If the voltage is above 5.2V, then the precision voltage source is failing. Replace the AT board in the ECU. If the voltage is below 4.8V then be sure there is no shorting in the wires causing the signal to be bypassed. If the wiring and connections are clean and dry but the problem remains, replace the AT board in the ECU.
Gas temperature		The gas temperature is primarily used for calculating the gas flow into the engine. Follow this table If the gas temperature is normal, but reads high or low at the ECU. If the gas temperature is actually high or low (very unlikely), check the gas fuel supply system.
	Bad sensor	Check the calibration of the sensor as outlined on page *H-3*. Replace the sensor if it is bad.

Problem Area/Indication	Possible cause	Recommended check or corrective action
Gas Temperature	Bad wiring	Bad wiring may cause either a high or low reading depending on the nature of the damage. Wires shorted by bared insulation or moisture will generally cause a high temperature reading. Bad connections or broken wires will give a low temperature reading.
	Bad power supply	Measure the voltage between the two sockets of the sensor connector. If the voltage is above 5.2V, then the precision voltage source is failing. Replace the AT board in the ECU. If the voltage is below 4.8V then be sure there is no shorting in the wires causing the signal to be bypassed. If the wiring and connections are clean and dry but the problem remains, replace the AT board in the ECU.
Air box temperature		The airbox temperature is monitored to determine the power capacity of the engine. The ECU will lower engine power output when air temperature is high. If the temperature is high, resulting in abnormal power loss, inspect the cooling system. If the ECU temperature reading seems in error then continue with this table.
	Bad sensor	Check the calibration of the sensor as outlined on page *H-2*. Replace the sensor if it is bad.
	Bad wiring	Bad wiring may cause either a high or low reading depending on the nature of the damage. Wires shorted by bared insulation or moisture will generally cause a high temperature reading. Bad connections or broken wires will give a low temperature reading.
	Bad power supply	Measure the voltage between the two sockets of the sensor connector. If the voltage is above 5.2V, then the precision voltage source is failing. Replace the AT board in the ECU. If the voltage is below 4.8V then be sure there is no shorting in the wires causing the signal to be bypassed. If the wiring and connections are clean and dry but the problem remains, replace the AT board in the ECU.

Problem Area/Indication	Possible cause	Recommended check or corrective action
Gas pressure		The gas pressure reading is used to measure the gas flow into the engine. It is also used to detect gas pressure levels outside of operating limits. Improper gas pressure will cause a mismatch in the governor linkage controlling the two different fuels, which will lead to less stable operation when switching between fuel modes. Low pressure faults can indicate a gas flow restriction. A high pressure fault definitely indicates a problem in the gas pressure regulator.
	Closed control valves (manual or automatic)	Check to see if the manual gas valve near the gas filter is closed or partly closed. Inspect the air line going to the automatic gas shut–off valve (GCOV) and determine that it is in fact open.
	Leak detection system alarm	If a gas leak or bad leak sensor is detected, the automatic gas valves will be closed. Inspect the system using proper precautions (see pages *E-3, F-1* and *F-2*) if a leak has been indicated on the leak detection system.
	Bad sensor or wiring	Using a hand-held gauge, check the pressure at the test point and compare it to the reading on the status panel. If the ECU reading is incorrect, inspect the supply power to the sensor by measuring the voltage at the 24V test point on the power supply board. If it is not approximately 24 volts, inspect the power supply and sensor wiring. If these are OK, replace the sensor.
	Failing gas pressure regulator or low supply pressure to the regulator	Improper gas regulator operation could result in either high or low pressure. High pressure is definitely due to improper regulator operation. If low pressure is indicated, measure the pressures upstream and downstream of the regulator to determine its condition. Service the regulator as required.
	Plugged gas filter	The gas filter may be plugged if the gas pressure decreases with more flow, but bounces back as the flow decreases. Service the filter as described on page *E-4*.
Airbox pressure		An air box pressure fault may indicate a bad sensor or wiring. High air box pressure should only occur during gas operation, since air throttling is only done in the gas mode.

Problem Area/Indication	Possible cause	Recommended check or corrective action
		Compare the ECU status panel reading with the reading of a hand-held gauge. If they are more than 2 psi apart, look for sensor and wiring problems
Control Pressure	Air throttle	If air box pressures over 22 psi are indicated, there may be problems related to the air throttle. Inspect the linkages and the air pressure control hardware. View the ECU display screen showing the air throttle PID numbers. The air box pressures should never be significantly higher than the set point. They may be lower than the indicated set point, however. A nonresponsive throttle valve could be caused by lack of control air pressure, poor electrical connections to the air pressure control valve inside the air service cabinet, damaged or plugged control air line to the valve, or a stuck or jammed valve.
	Bad sensor or wiring	Using a hand-held gauge, check the pressure at the test point and compare it to the reading on the ECU. If the ECU reading is incorrect, inspect the supply power to the sensor by measuring the voltage at the 24V test point on the power supply board. If it is not approximately 24 volts, inspect the power supply and sensor wiring. If these are OK, replace the sensor.
Control Air Pressure		Control air is used to activate gas inlet valves. Improper air pressure may cause the GIVs to respond poorly. Air pressure is supplied from the air start air compressor through a manual shut-off valve, filter, regulator and lubricator. Use a hand-held gauge and check the pressure at the test point and compare with the ECU display screen. If the readings differ significantly, look for bad sensor or wiring.
	Low air supply from air compressor	Check the air pressure going to the gas system regulator from the existing compressor. Be sure that the manual valve is fully open.
	Plugged air filter or other control air flow restrictions	If the pressure is good when there is no air being used (i.e., during diesel only operation), but the pressure drops

Problem Area/Indication	Possible cause	Recommended check or corrective action
		out when gas operation begins, inspect the air filter for fouling. Inspect the air system for restricted flow.
Airbox Pressure	Improperly adjusted or faulty air regulator	If the air pressure is only slightly out of range, adjust the regulator. If the reading is high, the regulator is faulty and needs replacement. If the reading is low, inspect the regulator and air hoses for integrity.
	Bad sensor or wiring	Using a hand-held gauge, check the pressure at the test point and compare it to the reading on the ECU. If the ECU reading is incorrect, inspect the supply power to the sensor by measuring the voltage at the 24V test point on the power supply board. If it is not approximately 24 volts, inspect the power supply and sensor wiring. If these are OK, replace the sensor.
Gas Header Pressure		Gas header should have little or no pressure when in the diesel mode. The control system assumes there is a problem if excessive header pressure exists. View the status panel screen that shows the value **HdPr**. If the pressure is >70 psi and is constant, then check the gas cutoff valve. Check for bad sensor or wiring. If the pressure is low and goes high only when gas operation is attempted, check the GIVs.
	Stuck gas cutoff valve or air supply	Check to be sure that there is no actuating air applied to the gas cutoff valve. If no air is applied, the vent valve should be venting. There should be no power applied to the GR/R1 solenoid valve. If the valve has power, inspect electronic controls for possible cause. If these are OK, then shut off the gas supply manually, vent the trapped gas (see gas precautions, page *A-1*), and inspect the gas cutoff valve
	GIVs not operating properly	If the GIVs fail to operate due to electrical or air supply problems, gas header pressure will go high when attempting to switch to the gas mode. Check the air supply to the GIVs. Check the valve sequencer inside the ECU and see that it is sequencing the valves; if it is not, replacement may be necessary. Check the control wiring.

Problem Area/Indication	Possible cause	Recommended check or corrective action
Gas Header Pressure	Bad sensor or wiring	Using a hand-held gauge, check the pressure at the test point and compare it to the reading on the ECU. If the ECU reading is incorrect, inspect the supply power to the sensor by measuring the voltage at the 24V test point on the power supply board. If it is not approximately 24 volts, inspect the power supply and sensor wiring. If these are OK, replace the sensor.
Power Output (kW) *(For units with VG8 governors and automatic controls)*		Negative values indicate a damaged sensor or electrical connection. High values may indicate a control malfunction.
	Malfunctioning Synchronizing motor on governor or associated wiring	View the status panel digital output screen. The **GDN** dot should be blinking on and off. If so, then the ECU is trying to lower the load but the motor on the governor is not responding. If the ECU is not trying to lower the load, inspect variables affecting load control: kW reading, air box temperature reading.
	Bad kW transducer or associated wire connections	Check the accuracy of the ECU kW reading compared to switch gear house meters. If they are different find the cause and repair or replace as necessary.
Power Supply Status		Monitored by ECU to prevent improper operation in gas mode due to irregular supply voltage. The information on the ECU screen is affected by four of the five power sources generated on the power supply board inside the ECU. Information may be logged at the fault history after power is restored.
	Blown fuse	A blown fuse probably indicates a bad power module on the power supply board. Replace the power supply board if a new fuse blows again immediately. Shorted outputs of the power modules may blow the input fuse. Inspect for damaged wires and possible short circuits.

Problem Area/Indication	Possible cause	Recommended check or corrective action
Power Supply Status	Overheated	The power modules have built-in temperature limits. High temperature causes them to turn off. When cooled off they will once again provide power. If high temperature is suspected, inspect the ECU cooling fan.
	Overvoltage output trip	If the voltage of the module is >15% of its rated output voltage, the module will turn itself off. In this event, the incoming power must be switched off before the module will supply power again. Overvoltage can occur with a rapid load change from full on to full off. However, it should not occur in normal operation. Repeated occurrences are cause to replace the power supply board.
	Short circuit	Shorting the output of the power supply modules will cause the module to limit current by reducing the output voltage. Repair the short circuit and the supply should regain its output voltage.
VTS fault	Gas Inlet Valve failure	The Valve temperature switches located on gas inlet valve (GIV) are wired in series and will indicate to the controller that there is a hot valve and gas operation must be stopped. Engine shut down will occur within 1- 1/2 minutes if the hot signal does not reset. If there is a bad or improper operating gas valve it should be detectable by a load block that is noticeably hotter than the others. If the engine has shut down, be careful because the load block could be very hot. Change the GIV and the gas jumper hose that has been overheated even though it may look fine. There are three possible reasons for a gas valve to overheat. (1). A damaged sticking or malfunctioning solenoid valve on top of the GIV may cause the valve to stay open too long and allow compressed air to overheat the valve. (2). A damaged or distorted valve head or valve guide causing the valve seat to leak. (3). A failure on the electronic control side whereby the valve is held open and not closed during the remaining cycle.

Problem Area/Indication	Possible cause	Recommended check or corrective action
		If either #1 or #2 is the cause, then changing the valve is all that is necessary. However, if #3 is the cause, then gas operation is first attempted that the red indicating lights are inspected to determine that the cylinder that failed is being cycled and not staying on. If it appears to stay on, immediately stop gas operation and change out the board.
	Bad valve temperature switch or broken wire.	If there is no heat level indication on the load blocks, and particularly if the VTS signal does not reset, there is most likely a bad connection or a bad switch. Check the circuit for where the voltage is no longer present (most commonly these are a 24V circuit). The wiring is laid out so that the chain of switches and the power starts at the right bank rear cylinder, daisy chains to the front, crosses over to the front of the left bank, daisy chains to the rear and returns to the connector. Repair or replace components as necessary.
ECU gas condition		
Water temperature	Engine just started (too cold)	Gas operation requires the engine to have reached a stable operating temperature. If engine temperature has not yet reached its minimum level, the status panel will display the engine water temperature. If it is known that the engine is warm enough to run on gas (>150°F), inspect the sensor as described on page *H-4*.
Engine speed	Engine speed too low	The engine speed must be >800 RPM for gas operation to start
	Bad speed sensor or wiring	If the speed is known to be >800 and the speed indicated by the ECU display is incorrect, then inspect the connections on the sensor, insure that the electrical connector is tight, inspect the wiring and replace the sensor if necessary. If this fails to solve the problem, then internal ECU diagnostics are required.
ECU display report		
Differential pressure	Differential pressure sensor is out of calibration	Follow the procedures for calibration of the DP sensor on page *H–3*.