Report No. CG-D-30-96

Theoretical Basis of the Ship Fire Safety Engineering Methodology

Chester M. Sprague, P.E.

CompuCon
21808 East River Road
Grosse Ile, MI 48138

Brian L. Dolph

U.S. Coast Guard
Research & Development Center
1082 Shennecossett Road
Groton, CT 06340-6096

Final Report
September 1996

DISTRIBUTION STATEMENT A
Approved for public release
Distribution Unlimited

This document is available to the U.S. public through the National Technical Information Service, Springfield, Virginia 22161

DTIC QUALITY INSPECTED 4

Prepared for:

U.S. Department of Transportation
United States Coast Guard
Systems, (G-S)
Washington, DC 20593-0001

19961226 095

NOTICE

This document is disseminated under the sponsorship of the Department of Transportation in the interest of information exchange. The United States Government assumes no liability for its contents or use thereof.

The United States Government does not endorse products or manufacturers. Trade or manufacturers' names appear herein solely because they are considered essential to the object of this report.

The contents of this report reflect the views of the Coast Guard Research & Development Center. This report does not constitute a standard, specification, or regulation.

Anthony L. Rowek
Technical Director
United States Coast Guard
Research & Development Center
1082 Shennecossett Road
Groton, CT 06340–6096

Technical Report Documentation Page

1. Report No. CG-D-30-96	2. Government Accession No.	3. Recipient's Catalog No.
4. Title and Subtitle Theoretical Basis of the Ship Fire Safety Engineering Methodology		5. Report Date September 1996 6. Performing Organization Code 3309.026
7. Author(s) Chester M. Sprague, P.E., Brian L. Dolph		8. Performing Organization Report No. R&DC 30/96
9. Performing Organization Name and Address CompuCon 21808 East River Road Grosse Ile, MI 48138 Safety and Human Resource Division U.S. Coast Guard Research and Development Center Groton, CT 06340-6096		10. Work Unit No. (TRAIS) SHRD Report No. 108 11. Contract or Grant No. DTCG39-90-D-E38425 D.O. DTCG39-91-F-E33441
12. Sponsoring Agency Name and Address U.S. Department of Transportation United States Coast Guard Systems, (G-S) Washington, DC 20593-0001 U.S. Coast Guard Research and Development Center 1082 Shennecossett Road Groton, CT 06340-6096		13. Type of Report and Period Covered Final Report 14. Sponsoring Agency Code Commandant (G-SEN)

15. Supplementary Notes

A companion User Manual for the computer program SAFE is available at the Coast Guard Research and Development Center.

16. Abstract

The Ship Fire Safety Engineering Methodology (SFSEM) is a probabilistic-based fire risk analysis methodology. It is useful to conduct a structured and comprehensive analysis of the performance of all types of surface ships as a fire safety system. The SFSEM provides an integrated framework for analyzing fires on ships in comparison to established fire safety objectives. It accounts for all relevant aspects of fire safety; the growth and spread of fire, the effectiveness of passive design features such as barriers and active fire protection features such as fixed fire extinguishing and manual suppression systems.

The Ship Applied Fire Engineering (SAFE) computer programs implement the SFSEM and evaluates the probability of spaces and barriers limiting a fire. The evaluation is conducted on a compartment-by-compartment basis. SAFE calculates the probable paths of fire spread for specified time durations. SFSEM/SAFE has been used successfully in a design application and in a retrofit situation.

This report is a comprehensive documentation of the Theoretical Basis of the SFSEM. It describes the current state of development and plans for continued further development of the methodology. It explains the fundamental assumptions and underlying philosophy designed into the SFSEM. It describes the present limitations as well as the past and present applications of the SFSEM..

17. Key Words Fire Safety, Engineering Methodology, Ship Fire, Risk Analysis, Flame Movement, Fire Hazard	18. Distribution Statement This document is available to the U.S. public through the National Technical Information Service, Springfield, VA 22161.

19. Security Classif. (of this report) UNCLASSIFIED	20. SECURITY CLASSIF. (of this page) UNCLASSIFIED	21. No. of Pages	22. Price

Form DOT F 1700.7 (8/72) Reproduction of form and completed page is authorized

METRIC CONVERSION FACTORS

Approximate Conversions to Metric Measures

Symbol	When You Know	Multiply By	To Find	Symbol
		LENGTH		
in	inches	*2.5	centimeters	cm
ft	feet	30	centimeters	cm
yd	yards	0.9	meters	m
mi	miles	1.6	kilometers	km
		AREA		
in^2	square inches	6.5	square centimeters	cm^2
ft^2	square feet	0.09	square meters	m^2
yd^2	square yards	0.8	square meters	m^2
mi^2	square miles	2.6	square kilometers	km^2
	acres	0.4	hectares	ha
		MASS (WEIGHT)		
oz	ounces	28	grams	g
lb	pounds	0.45	kilograms	kg
	short tons (2000 lb)	0.9	tonnes	t
		VOLUME		
tsp	teaspoons	5	milliliters	ml
tbsp	tablespoons	15	milliliters	ml
fl oz	fluid ounces	30	milliliters	ml
c	cups	0.24	liters	l
pt	pints	0.47	liters	l
qt	quarts	0.95	liters	l
gal	gallons	3.8	liters	l
ft^3	cubic feet	0.03	cubic meters	m^3
yd^3	cubic yards	0.76	cubic meters	m^3
		TEMPERATURE (EXACT)		
°F	Fahrenheit temperature	5/9 (after subtracting 32)	Celsius temperature	°C

*1 in = 2.54 (exactly).

Approximate Conversions from Metric Measures

Symbol	When You Know	Multiply By	To Find	Symbol
		LENGTH		
mm	millimeters	0.04	inches	in
cm	centimeters	0.4	inches	in
m	meters	3.3	feet	ft
m	meters	1.1	yards	yd
km	kilometers	0.6	miles	mi
		AREA		
cm^2	square centimeters	0.16	square inches	in^2
m^2	square meters	1.2	square yards	yd^2
km^2	square kilometers	0.4	square miles	mi^2
ha	hectares (10,000 m^2)	2.5	acres	
		MASS (WEIGHT)		
g	grams	0.035	ounces	oz
kg	kilograms	2.2	pounds	lb
t	tonnes (1000 kg)	1.1	short tons	
		VOLUME		
ml	milliliters	0.03	fluid ounces	fl oz
l	liters	0.125	cups	c
l	liters	2.1	pints	pt
l	liters	1.06	quarts	qt
l	liters	0.26	gallons	gal
m^3	cubic meters	35	cubic feet	ft^3
m^3	cubic meters	1.3	cubic yards	yd^3
		TEMPERATURE (EXACT)		
°C	Celsius temperature	9/5 (then add 32)	Fahrenheit temperature	°F

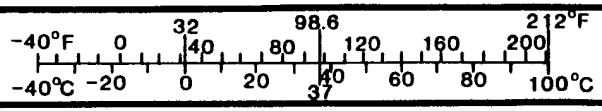

Table of Contents

Page

List of Figures x

List of Tables xi

1. INTRODUCTION 1

1.1. FRAMEWORK OF THE SFSEM 1

1.1.1. Fire Safety Objectives 2

1.1.2. Engineering Analyses 3

1.1.2.1. Prevent Established Burning 4

1.1.2.2. Flame Movement 4

1.1.2.3. Smoke Movement 5

1.1.2.4. People Movement 5

1.1.2.5. Structural Frame 5

1.2. WHEN TO USE THE SFSEM 6

1.2.1. Preliminary Design Phase 6

1.2.2. Fire Doctrine Analysis 6

1.2.3. Damage Control Organization 7

1.3. WHO SHOULD USE THE SFSEM 7

1.3.1. Short Term 7

1.3.2. Mid Term 7

1.3.3. Long Term 8

1.4. HISTORICAL DEVELOPMENT 8

1.5. DOCUMENTATION 9

1.5.1. Purpose 9

1.5.2. Ship Applied Fire Engineering 10

1.5.3. Bibliography 10

2. SHIP FIRE SAFETY 12

2.1. SHIPBOARD FIRE PROTECTION 12

2.1.1. Strategy 12

2.1.2. Material Condition of Readiness 12

2.1.3. Ship Operating Status 13

2.2. COMPARTMENT FIRE SAFETY 14

2.2.1. Fire Hazard Factors 14

2.2.2. Fire Protection Factors 15

Table of Contents
(continued)

Page

2.2.2.1. Active Fire Protection 15

2.2.2.2. Passive Fire Protection 16

3. BASIC PRINCIPLES OF SHIPBOARD FIRE SAFETY 17

3.1. FUNDAMENTAL CONCEPTS OF FIRE 17

3.1.1. Fire Tetrahedron 17

3.1.1.1. Removing the Fuel 18

3.1.1.2. Removing the Oxygen 18

3.1.1.3. Removing the Heat 19

3.1.1.4. Breaking the Chain Reaction 19

3.1.2. Classification of Fires 19

3.1.2.1. Class A Fires 19

3.1.2.2. Class B Fires 19

3.1.2.3. Class C Fires 19

3.1.2.4. Combined Class A and C Fires 20

3.1.2.5. Combined Class B and C Fires 20

3.1.2.6. Combined Class A and B Fires 20

3.1.2.7. Class D Fires 20

3.1.3. Extinguishing Agents 20

3.2. PRINCIPLES OF COMBUSTION 22

3.2.1. Combustion Stoichiometry 22

3.2.2. Flame and Flame Color 22

3.2.3. Products of Combustion 23

3.3. HEAT TRANSFER MODES 24

3.3.1. Conduction 24

3.3.2. Convection 25

3.3.3. Radiation 25

3.4. FIRE SAFETY METHODOLOGY 26

3.4.1. Systems Approach 26

3.4.2. Event Trees 27

3.4.3. Network Analysis/Diagrams 27

3.4.4. Risk Management 27

3.4.5. Subjective Probability 28

3.4.6. Engineering Design 29

Table of Contents
(continued)

Page

4. FIRE SAFETY OBJECTIVES **29**

4.1. LIFE SAFETY 29

4.2. PROPERTY PROTECTION 30

4.3. MISSION PROTECTION 30

4.4. COMPARISON OF SHIP'S PERFORMANCE WITH OBJECTIVES 30

5. PREVENT ESTABLISHED BURNING **30**

5.1. FIRE PREVENTION 31

5.2. PROBABILITY OF EB 31

5.3. FREQUENCY OF EB 36

5.3.1. Analytic Hierarchy Process *39*

6. FLAME MOVEMENT ANALYSIS **39**

6.1. FUNDAMENTALS OF FLAME MOVEMENT ANALYSIS 40

6.1.1. Fire Growth in Realms *40*

6.1.2. Full Room Involvement *41*

6.1.2.1. FRI Time 42

6.1.3. Space-Barrier Concept *43*

6.1.4. Heat Energy Impact *43*

6.2. FIRE SAFETY AUDIT 45

6.2.1. Ship Design Factors *46*

6.2.2. Fire Hazard Factors *46*

6.2.3. Fire Protection Factors *47*

6.3. DETAILED FLAME MOVEMENT ANALYSIS 47

6.3.1. Limitation by Self-Termination *49*

6.3.2. Limitation by Fixed Fire Protection System Extinguishment *51*

6.3.3. Limitation by Manual Fire Extinguishment *56*

6.3.4. Limitation by Barriers *60*

6.3.4.1. Rate of Heat Release 60

6.3.4.1.1. Fire Growth Regime 61

6.3.4.1.2. Fully Developed Fire Regime 62

6.3.4.2. Barrier Failure Modes 63

6.3.4.3. Procedure for Constructing Tbar and Dbar Curves 66

Table of Contents
(continued)

Page

6.3.5. The L-curve *66*

6.4. SHIP APPLIED FIRE ENGINEERING PROGRAMS 70

6.4.1. Inputs *70*

6.4.2. Running SAFE *70*

6.4.3. Output Options *71*

6.5. FLAME MOVEMENT ANALYSIS LIMITATIONS 72

6.5.1. Barrier Attack *72*

6.5.2. Ventilation *72*

6.5.3. Compartments *73*

6.5.4. Cable Protection/Routing *73*

6.5.5. Thermal Protection of Barriers *73*

6.5.6. Heat Energy Impact *73*

6.6. ESTABLISHING FIRE SAFETY OBJECTIVES FOR FLAME MOVEMENT 74

6.6.1. Traditional Approach *74*

6.6.1.1. Magnitude of Acceptable Loss (MAL) 75

6.6.1.2. Frequency of Acceptable Loss (FAL) 76

6.6.2. Comparison of Ship's Performance with Objectives *77*

7. SMOKE MOVEMENT ANALYSIS **78**

8. STRUCTURAL FRAME ANALYSIS **78**

9. PEOPLE MOVEMENT ANALYSIS **78**

10. SFSEM APPLICATIONS **78**

10.1. SHIP FIRE SAFETY DESIGN ANALYSIS 79

10.1.1. Comparison of Alternatives *79*

10.1.2. The SCFP Project *79*

10.1.3. Performance-Benefit Studies *81*

10.2. EXAMPLES 81

10.2.1. The CGC VIGOROUS Fire *81*

10.2.1.1. Fire in June 1989 82

10.2.1.2. Fire Safety Analysis 82

Table of Contents
(continued)

Page

10.2.1.2.1. General Problem Areas 83
10.2.1.2.2. Flammable Liquids Storeroom 83
10.2.1.2.3. Forward Crews Berthing 83
10.2.1.2.4. Main Deck Passage 84
10.2.1.2.5. Engine Room 84
10.2.1.2.6. After Steering 84
10.2.1.3. Cost-Benefit Analysis 84
10.2.2. The CGC SEAHAWK Fire *86*
10.2.3. The PIR Analysis *87*
10.3. FIRE INVESTIGATIONS 87
10.4. FUTURE APPLICATIONS 87
10.4.1. "Indexing" of Ships *87*
10.4.2. Training Damage Control Teams *88*
10.4.3. Identifying Gaps and Redundancies *88*

References Reference-1

Bibliography Bibliography-1

Glossary Glossary-1

Index Index-1

Appendices

A. Network Diagram Calculations ..... Appendix A-1

B. Calculation of FRI Time ..... Appendix B-1

C. Fire Growth Models ..... Appendix C-1

D. Fuel Load Formulas ..... Appendix D-1

List of Tables

Table

		Page
1-1.	Framework of the SFSEM	2
1-2.	Ship Fire Safety Engineering Methodology Modules	7
2-1.	Degrees of Readiness and Condition Watches	14
2-2.	Active Fire Protection Features	15
2-3.	Passive Fire Protection Features	16
3-1.	Fire Extinguishing Agents	21
3-2.	Extinguishing Agents of Choice	21
3-3.	Flame Color of Burning Cellulosic Fuels	23
3-4.	Dangerous Concentrations of Gases	23
3-5.	Primary Hazards from Burning Materials	24
3-6.	Effects of Thermal Radiation	26
5-1.	Definition of Terms in Figure 5-4	36
5-2.	Fire Frequency Data	38
6-1.	ASTM E119 Standard Time-Temperature Curve	44
6-2.	Ingberg's Fuel Load Density vs Required Barrier Fire Resistance	45
6-3.	Heat Energy vs Fuel Load Density	45
6-4.	Definition of Terms in Figure 6-2	49
6-5.	Definition of Terms in Figure 6-3	51
6-6.	Definition of Terms in Figures 6-4 and 6-4A	54
6-7.	Definition of Terms in Figures 6-5 and 6-5A	59
6-8.	Typical Shoreside Fire Growth Rates	61
6-9.	Shipboard Fire Growth Rates	61
10-1.	Cost/Benefit of Recommended Solutions	85

List of Figures

Figure		Page
1-1.	SAFE Program Development	11
3-1.	The Fire Tetrahedron	18
5-1.	Ignition Factors	32
5-2.	Fire Growth from Ignition to EB	33
5-3.	Network Diagram for Fire Limitation to Compartment of Origin (partial)	34
5-4.	Network Diagram for Prevent Established Burning on Ships	35
6-1.	Realms of Fire Growth and Transition Points	41
6-2.	Network Diagram for Limiting Flame Movement on Ships	48
6-3.	Network Diagram for Self-Termination on Ships	50
6-4.	Network Diagram for Fixed Fire Extinguishing System Suppression on Ships	52
6-4A.	Continued for Figure 6-4	53
6-5.	Network Diagram for Manual Suppression of Fire on Ships	57
6-5A.	Continued from Figure 6-5	58
6-6.	Characteristic Tbar Curve	64
6-7.	Characteristic Dbar Curve	65
6-8.	The L-Curve for a Compartment	68
6-9.	The L-Curve for a Fire Path Beyond Room of Origin	69
10-1.	Comparison of Alternatives Using the SFSEM	80

[BLANK]

1. INTRODUCTION

The marine fire safety community has addressed problems in ship design, firefighting technology, and crew training in forums such as the International Convention for the Safety of Life at Sea (SOLAS), 1974. The impetus for such conventions has often been well publicized disasters such as the ANGELINA LAURA, YARMOUTH CASTLE, USS STARK and USS SAMUEL B. ROBERTS. The results of these conferences are prescriptive codes and consensus standards usually enforced for new ships constructed subsequent to the conference. The implication is that if the ship is designed according to the code, somehow it will be safe from the ravages of fire. To be sure, as codes and standards have improved, so has the fire safety in ships. Unfortunately, this approach to fire safety has serious drawbacks. The codes are not founded on the basic principles of fire science nor do they allow quantification of the fire risk. Moreover, they do not provide any insight into acceptable levels of fire risk. Codes cannot anticipate new designs. In summary, even though a ship may be designed in accordance with all applicable codes, there is no way to predict the relative fire safety of that vessel.

The Ship Fire Safety Engineering Methodology (SFSEM) takes a different approach to fire safety. It starts with the basic assumption that fire, even though a relatively rare event, will eventually occur. The methodology then proceeds to provide a comprehensive engineering framework to predict the ship's performance in response to that fire. Finally, using the techniques of risk analysis, operations research, and systems engineering, it serves to rationally identify acceptable levels of risk.

The purpose of this report is to record in a single, comprehensive document the theoretical basis of the SFSEM. The SAFE User Manual is a companion document to the Theoretical Basis and provides detailed guidance for the associated computer programs which implement the SFSEM.[1]

1.1. FRAMEWORK OF THE SFSEM

The complete SFSEM consists of six major modules that are categorized as shown in Table 1-1. The following sections provide an overview of these six individual modules.

Table 1-1. Framework of the SFSEM

A.	**Performance Identification**		
	1.	**Establish Fire Safety Objectives**	
		a.	People Protection
		b.	Property Protection
		c.	Mission Protection
B.	**Engineering Analysis**		
	2.	**Prevent Established Burning**	
		a.	Prevent Ignition
		b.	Initial Fire Growth Hazard Potential
		c.	"First Aid"
	3.	**Flame Movement**	
		a.	Fire Growth Hazard Potential
		b.	Fixed Fire Protection Systems Extinguishment
		c.	Manual Fire Extinguishment
		d.	Barrier Effectiveness
	4.	**Smoke Movement**	
		a.	Obscuration
		b.	Toxicity of Combustion Products
	5.	**Structural Frame**	
		a.	Heat Energy Impact
		b.	Deflection
	6.	**People Movement**	
		a.	Egress Paths
		b.	Defend in Place

1.1.1. Fire Safety Objectives

The SFSEM is a performance-based engineering methodology. In order to use this methodology as a design tool, performance objectives must be developed. The SFSEM is designed to analyze a ship as a complete fire safety system. Accordingly, it will include an analysis of the flame movement, smoke movement, people movement, and the structural frame in response to a fire. The fire safety objectives (FSOs) should be set for each compartment considering life safety, property protection and mission protection goals.

The traditional approach of establishing fire safety objectives as discussed in Section 4.0 requires "cognizant authorities" to define an acceptable critical damage level and allowable frequency of sustaining that damage for each compartment. Cognizant authorities, in the case of the U. S. Coast Guard, are the program and support managers responsible for the operation of the Coast Guard fleet of cutters. The traditional approach has been used in the fire safety analysis of all ships to date including the preliminary design of the U.S. Coast Guard Polar Icebreaker Replacement (PIR) and ten classes of Coast Guard Cutters in the Small Cutter Fire Protection

Project (SCFP). Two general problems have been identified with the traditional approach. First, it is difficult for cognizant authorities, who have minimal experience in setting performance objectives, to establish realistic FSOs for military ships. Second, setting objectives on a compartment basis is difficult and does not account for or represent the interrelationships between compartments. The first problem was addressed by assigning the responsibility for establishing FSOs to the engineer/analysts who performed the fire safety analysis; acceptance of the final report implies acceptance of the FSOs by the cognizant authorities. A different approach for establishing FSOs is needed to adequately address the second problem.

Another approach for establishing fire safety objectives using mission oriented objectives has been explored but not implemented.[2] This approach uses a fault tree technique to relate compartment loss to mission failure. In order to identify all the combinations of component failures which can lead to mission failure, minimal cut sets must be determined for the fault tree. These minimal cut sets identify the smallest combinations of component failures which together can cause mission failure. Then compartments which contain the components in the minimal cut sets are identified. The mission failure rate is then calculated from the frequency of loss of the compartments in the minimal cut sets and compared to the allowable mission failure rates. This approach has been applied to the PIR and problems were identified.[3] The problems noted were primarily in establishing the allowable mission failure rates which is a management function. The exercise on the PIR showed that management, in general, established unrealistically high allowable mission failure rates. When this problem is resolved the mission oriented objectives approach will be implemented in the SFSEM to establish fire safety objectives.

1.1.2. Engineering Analyses

Engineering Analyses comprise five of the six parts in the SFSEM. Each of these, like fire safety objectives above, are considered a module of the SFSEM. Prevent Established Burning is designed to analyze the actions that are taken to prevent a fire from occurring in the first place and the initial actions taken by a person discovering a fire in its incipient stage. Flame Movement, Smoke Movement, People Movement and Structural Frame are modules that analyze the ship's response to a fire assuming the fire has reached the point of established burning. Each of these analyses is designed to provide information that will allow a comparison of the ship's performance to the established fire safety objectives.

At the present time only flame movement can be analyzed in detail. Therefore fire safety objectives can be established for loss due to the spread of fire through the ship. As other modules are developed, fire safety objectives will be revised accordingly. The SFSEM provides useful information on a compartment basis to facilitate comparing the ship's performance with the objectives established. Deficient areas in fire safety can be identified, as well as over-protected areas.

The following discussion is an overview of the five engineering analyses modules.

1.1.2.1. Prevent Established Burning

The portion of the ship's fire safety system from fire free status to established burning involves the following three principal components:

1. Overheat
2. Ignition
3. Established Burning

Fire prevention programs on ships are designed to prevent unwanted ignitions. Therefore a complete analysis of the fire safety of a ship includes an analysis of established burning.

Network diagrams are used to analyze the various events that comprise this portion of the ship's fire safety system. A complete discussion of Prevent Established Burning is in Section 5.0. All other engineering analyses in the SFSEM start with the presumption that established burning has occurred and analyze the ship's performance in response to the fire.

1.1.2.2. Flame Movement

The analysis of flame movement is the central focus of the SFSEM because the ship response to the products of combustion is time and fire size dependent. From the perspective of flame movement, the ship can be described as a series of spaces and barriers to the spread of flames. If the fire grows beyond EB the goal is to limit the flame spread first to the room of origin and subsequently to adjacent rooms.

The probability of success in limiting the flame to the room of origin is evaluated first. If the fire grows to the point where all combustibles in the space are surface burning (full room involvement), then the effectiveness of the compartment boundaries as barriers to the fire are evaluated. Two modes of barrier failure are evaluated. A thermal, or hot spot failure, and a durability, or massive failure. If the boundary fails and EB is established in the adjacent room, the probability of limiting the flame in that room is evaluated in a similar manner to the room of origin. This process is repeated until the probability of limiting the flame for all possible fire paths is 1.0 or until a user-specified time has elapsed, whichever comes first.

Network diagrams are employed to structure the analysis and facilitate the calculation of the various probabilities. The concept of network diagrams is discussed in Section 3.4.3 and calculational procedures are explained in Appendix A. Network diagrams used in the flame movement module are discussed in Section 6.0.

After the flame movement has been analyzed the performance of the ship can be compared to the fire safety objectives as described in Section 6.6. The results identify areas where fire protection systems need to be improved and where they can be reduced and still achieve desired levels of fire protection. The SFSEM is robust enough to evaluate the ability of barriers,

equipment, or procedures to improve fire performance and to evaluate these normally incomparable entities against each other in terms of effectiveness.

The flame movement analysis is the most completely developed module in the SFSEM. A detailed discussion of all aspects of this module is in Section 6.0 of this report.

1.1.2.3. Smoke Movement

All fires produce smoke and toxic gases as products of combustion. In addition certain firefighting agents create toxic gases in a fire or significantly reduce available oxygen. The resulting obscuration from the smoke and the untenable atmosphere from the toxic gases often result in a more life threatening situation than the flames from the fire. An analysis of the movement of smoke is therefore vitally important in determining the ship's performance relative to life safety objectives. Unfortunately, the analysis of smoke movement in a shipboard environment is extremely complex. Considerable research has been devoted to smoke movement by the fire protection engineers in the academic as well as research and development communities. In particular, a recent Master's Degree thesis at Worcester Polytechnic Institute (WPI) deals with the development of probabilistic smoke tenability curves for a target space using an approach similar to that used to evaluate flame movement in the SFSEM.[4] The smoke movement module will be the next module integrated into the SFSEM.

1.1.2.4. People Movement

In the event of a fire emergency on a ship, passengers and off-duty crewmen have to proceed to areas of safe refuge. On-duty crewmen in certain spaces such as the Bridge and Engineering Control Room cannot evacuate due to the necessity to operate the ship's propulsion system and navigate the ship. In wartime, battle stations also remain occupied during a fire. Consequently certain compartments require fire protection systems adequate to protect occupants who cannot evacuate for one reason or another. The people movement module will be designed to analyze egress routes to areas of refuge and the adequacy of fire protection systems for maintaining tenability. This module is planned for development in the future and will be documented coincident with integration into the SFSEM.

1.1.2.5. Structural Frame

Ships are designed with watertight decks and bulkheads which provide the necessary segregation for adequate protection against flooding. These watertight compartments are further subdivided with non-structural joiner bulkheads to accommodate the ship's missions and provide for the needs of the passengers and crew. Most ships are constructed with steel boundaries to provide the necessary hydrostatic strength against flooding. The structural collapse of steel decks and bulkheads in the first hour or so of a fire is quite unlikely. However, some ships such as fast patrol boats, hydrofoils, surface effect ships and other weight-critical vessels are constructed of aluminum. This material loses structural strength at relatively low temperatures compared to steel. The structural frame module is intended to analyze the effects of fire on the structural frame and structural barriers. This module will be developed, documented and integrated into the SFSEM in the future.

1.2. WHEN TO USE THE SFSEM

The Ship Fire Safety Engineering Methodology is a probabilistic-based fire risk analysis methodology. This means that the results are based primarily on probabilities determined by the user/analyst as opposed to deterministic calculations of conditions precisely known. Therefore, the results are most useful when the analyst uses the methodology to compare outcomes on a relative basis. Analyzing competing preliminary designs of a ship to identify the best design with respect to fire safety is an example of such an analysis. It is also appropriate to use the SFSEM to compare, on the same ship, the effectiveness of different fire protection alternatives. It is not appropriate to use a probabilistic methodology such as the SFSEM to analyze a fire that has occurred in a forensic type of analysis to determine the cause of the fire or the path of flame spread. There are other deterministic computer models which are more appropriate for this type of fire reconstruction analysis. A detailed discussion of these computer fire models is given elsewhere.[5] In the following sections additional details and examples will be discussed regarding useful and appropriate applications of this methodology.

1.2.1. Preliminary Design Phase

As noted above, competing preliminary designs may be compared to each other and rank ordered for their relative level of fire safety. Alternatively, each design could be compared to fire safety objectives established by cognizant authorities, using a pass-fail type of criteria. The results of this analysis could range from all designs exceeding the objectives where the "worst" design would be acceptable, to none of the designs meeting the objectives and the "best" design is unacceptable. More realistically, one or more preliminary designs would be acceptable, and the SFSEM could be used to point out specific deficiencies in the design. The SFSEM could also be used to suggest improvements to the best acceptable design before proceeding to the detailed design stage, because engineering change proposals at this point are typically less expensive than retrofitting a ship already built. The first application of the SFSEM was the analysis of the preliminary design of the U.S. Coast Guard Polar Icebreaker Replacement (PIR) which was completed in 1987.[6] Section 10.2.3 provides additional information concerning this developmental application of the methodology. The most extensive application of the SFSEM to date is the analysis of ten classes of Coast Guard Cutters in the Small Cutter Fire Protection (SCFP) project over a four year period from 1990 to 1994.[7, 8, 9, 10] Section 10.1.2 provides additional information concerning this developmental application of the methodology.

1.2.2. Fire Doctrine Analysis

A published fire doctrine is unique to military ships. This doctrine delineates the tactics, philosophy, and procedures associated with the use and operation of ship fire protection systems in combating fires. In the Navy and Coast Guard there is a formal requirement for a published fire doctrine for combating fires in the main machinery spaces. In conjunction with the SCFP, a comprehensive fire protection doctrine was developed which provides class-specific guidance for combating all classes of fires in all compartments for that class cutter. Such a doctrine has been written for eleven classes of Coast Guard Cutters to date and there are plans to provide a doctrine for other classes. The SFSEM provides a means to analyze the fire doctrine for a ship to identify tactics, procedures or equipment which, if implemented in the doctrine, would result in improved fire safety.

1.2.3. Damage Control Organization

The damage control organization in a ship is designed to ensure the survivability of the ship by effectively controlling damage, stability, list, trim, fire, and flooding. There are numerous aspects of this organization including training, supply, firefighting doctrine, casualty control, communications, inspections, etc. The SFSEM is useful to analyze all aspects of the damage control organization that directly affects firefighting efforts. For example, the SFSEM could be used to point out deficiencies in firefighting equipment and training, suggest improvements in firefighting tactics and procedures, and support changes in the ship's active and passive fire protection systems. Section 10.4.2 provides additional information concerning this application of the methodology.

1.3. WHO SHOULD USE THE SFSEM

It is extremely important that the users of a complex methodology such as the SFSEM be well qualified. Misuse of the methodology is worse than no use at all. Ineffective, if not dangerous, changes to existing fire protection systems may be recommended by users who do not understand the applicability and limitations of the methodology. A common reaction to this problem is the suggestion that only the developers of the methodology should "use" the SFSEM. It is certainly true that the developers gain insight into the areas of the methodology that need improvement when they "use" the methodology in a given application. On the other hand, the developers can not know the customers needs as well as the customers do. Table 1-2 shows the current state of development of the various modules that comprise the SFSEM.

Table 1-2. Ship Fire Safety Engineering Methodology Modules

Presently Developed	Under Development	Future Development
Prevent Established Burning	Fire Safety Objectives	Structural Frame
Flame Movement	Smoke Movement	People Movement

1.3.1. Short Term

The short term is intended to span the period of time from the present until development of modules currently underway at the Coast Guard Research and Development Center (R&D Center) are completed. These modules include smoke movement and fire safety objectives. Development will be accomplished by fire protection engineers and students pursuing degrees in fire protection engineering. Even though four modules are yet to be integrated into the methodology, useful results can still be obtained with the two modules that currently comprise the methodology. These modules are Flame Movement and Prevent Established Burning. This document and the SAFE User Manual provide detailed documentation of these modules.[1]

1.3.2. Mid Term

The mid term is the period of time it will take to incorporate the two modules planned for future development into the SFSEM. These modules are the People Movement and Structural Frame Analysis. During this period of time the methodology, consisting of the four modules shown in Table 1-2, could be used by professional engineers who have an in-depth knowledge of the methodology.

1.3.3. Long Term

In the long term the development of all modules in the methodology should be complete. All of the algorithms should have been validated, and the documentation should be complete and readily available to prospective users. The implementing computer programs should be complete, debugged and well tested. In addition, due to publication in the literature, the theory and applications of the methodology should have received peer review and acceptance by professionals in the fire protection community. The intent is for users in the long term to be professional engineers.

1.4. HISTORICAL DEVELOPMENT

In 1972, Harold E. Nelson wrote the "Goal Oriented Systems Approach for Building Fire Safety" as Appendix D to a book titled "Building Fire Safety Criteria" published by the General Services Administration.[11] The concept was ingenious in that it developed a basis for comparing fire safety in buildings and a method for calculating the interaction of components. It was groundbreaking in that it approached building fire safety as a design process rather than as a code compliance procedure.

The basic concept developed by Nelson was a quantifiable descriptor of building fire safety performance called the "L-curve". The L-curve describes the cumulative probability of success in limiting the flame movement within sequential rooms along a specific fire path. Consequently, the L-curve can be used to identify a numerical level of risk for all parts of a building, such as within a particular room, at a specific barrier, within a connecting room, etc.

In 1974 Mr. Rexford Wilson and Dr. Robert Fitzgerald taught a short course in building fire safety at the University of Wisconsin using Nelson's approach. This course demonstrated that a broad spectrum of professionals could understand building fire safety as a design process. The method provided a common framework from which individuals of different backgrounds could discuss on the same basis fire safety features of mutual interest.

After the success of the initial course, Wilson and Fitzgerald collaborated on a number of similar courses over the next ten years. Each succeeding course advanced the technology over the previous one. The unanswered questions of one course were eventually answered in later courses. The intellectual challenge of practicing professionals provided a stimulus to advance the technology rapidly and continuously.

Once the method had matured to the point where all questions could be addressed on the basis of consistent logic, confidence in applications grew. A series of student projects at Worcester Polytechnic Institute (WPI) explored the feasibility of a variety of applications. More importantly, a major achievement realized at WPI in 1985 was the development of FIRE, a computer program which implemented the method.[12]

The courses taught by Fitzgerald at WPI and abroad attracted the attention of fire protection engineers in Canada and other countries such as Sweden. A Canadian company,

NAVWARE Inc., adapted WPI's FIRE model and integrated their version of the model into a larger vulnerability model for ships called GVAM (General Vulnerability Assessment Model).

In 1987, the Coast Guard R&D Center adapted the Building Fire Safety Engineering Method for evaluating the preliminary design of the Polar Icebreaker Replacement (PIR). This effort resulted in the development of the Ship Fire Safety Engineering Methodology and its implementing computer programs called SAFE (Ship Applied Fire Engineering). The results from this analysis proved to senior Coast Guard management the merit of evaluating a ship's performance in response to a fire and provided the impetus for future development of the SFSEM.

From 1990 to 1994 the SFSEM was used at the Coast Guard R&D Center in a second major developmental application to analyze the fire safety of "small" cutter classes in the Coast Guard. In addition to analyzing the existing fire safety on ten classes of Coast Guard Cutters, comprehensive fire protection doctrines were developed for these Cutters. Section 10.1.2 discusses this project in more detail. In FY 96 the SFSEM will be used to analyze the fire safety of several "large" Coast Guard cutter classes.

WPI and NAVWARE are continuing to develop the methodology in parallel efforts. WPI and the Coast Guard R&D Center are collaborating in their developmental effort to ensure no duplication of effort. NAVWARE's program called NAVFIRE and SAFE were used by Maguire in 1995 to evaluate a dinner cruise vessel. This permitted an evaluation of NAVFIRE and a comparison to SAFE.[13] In his thesis Maguire discusses this and the lack of detailed documentation available for NAVFIRE and it's limitations.

1.5. DOCUMENTATION

It is vitally important for a complex methodology to be well documented. In fact until the documentation is complete and available, use of the methodology by anyone other than the developers is impossible. All of the modules in the SFSEM are constantly being scrutinized and improved as deficiencies are identified and as research and technology provide better algorithms. The modular construction facilitates inclusion of a new module. The following sections explain the purpose of this theoretical documentation and related documentation in the Bibliography, as well as the corresponding user manual for the related computer programs which implement the methodology.

1.5.1. Purpose

The SFSEM is an adaptation of the Building Fire Safety Engineering Method which has been under development at Worcester Polytechnic Institute since 1975. Documentation of the Building Fire Safety Engineering Method has been developed but never officially published.[14, 15] The purpose of the documentation in this report is to explain in a comprehensive manner the theoretical basis for the SFSEM. This includes more than a description of the fire science and engineering that is incorporated in the algorithms. It is also intended to document the philosophical basis underlying the development of the methodology. For example, this methodology is a probabilistic-based engineering method which represents the degree of belief of the user/analyst in the determination of quantifiable subjective values. It could have been a

deterministic-based method using long run statistics for the subjective values. The philosophy of this and other key decisions are explained in this documentation.

1.5.2. Ship Applied Fire Engineering

WPI produced a related computer program called FIRE with subsequent versions called FIRE1, FIRE2 and so on. The current version is FIRE3. In a parallel effort, the R&D Center developed the computer programs called SAFE (Ship Applied Fire Engineering) which implement the SFSEM. Eventually, it was decided to merge the kernels of SAFE and FIRE as shown in Figure 1-1. The kernel refers to the computer code for the algorithms that comprise the methodology less the inputs and outputs. As shown in Figure 1-1, the input and output of the two models is remarkably different.

The Defence Research Establishment Valcartier (DREV) in Canada developed the Simulation Model for the assessment of Onboard Fire (SMOF) as a module in the General Ship Vulnerability Assessment Model (GVAM). This module was adapted from WPI's version of FIRE. SMOF was then superseded by NAVFIRE which is developed and distributed in all NATO countries by NAVWARE Canada Inc.[16] Figure 1-1 is a graphic description of the evolution of SAFE, FIRE and NAVFIRE.

1.5.3. Bibliography

The Bibliography lists various documents that explain certain aspects of the SFSEM and SAFE, as well as related methodologies such as the Building Fire Safety Engineering Method. The Bibliography contains technical reports published in the National Technical Information Service, Technical Notes stored in the Marine Fire and Safety section of the library at the U.S. Coast Guard Research and Development Center, articles published in professional journals, and other stand alone documents such as Master's Theses submitted to the faculty at WPI.

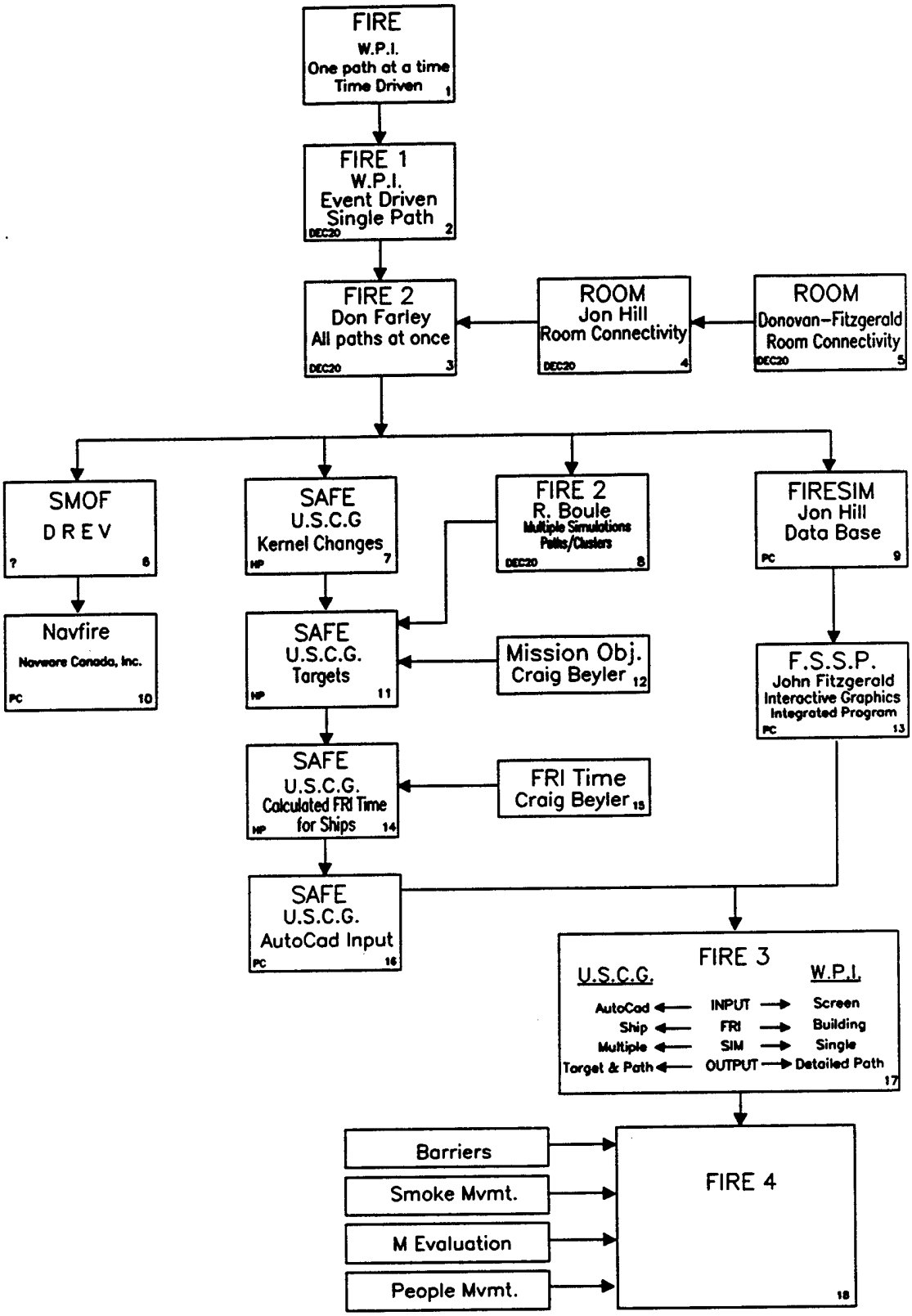

Figure 1-1. SAFE Program Development

2. SHIP FIRE SAFETY

Fire, flooding, and collision are three of the major threats to ship survivability. The design criteria for military ships provides capability to withstand damage including environmental effects, accidental damage, and damage from wartime actions. Fire and flooding represent the greatest threats to ship survivability. Unlike other ships, fire is more likely on military ships because, by their very nature, they deliberately go in harm's way. In addition, they carry great quantities of ordnance, munitions and other highly-explosive, flammable and dangerous cargoes. Moreover, they are equipped with a vast array of electronic equipment and engineering systems which result in very high fuel loads in many compartments.

The Ship Fire Safety Engineering Methodology (SFSEM) focuses on fire and its effects. The primary goal of ship survivability is the maintenance of operational readiness and the preservation of offensive and defensive capabilities in all climatic conditions, and in both hostile and peaceful environments. Ship fire safety objectives are thus established with high priority given to protect compartments such as ammunition handling rooms, combat information center, the sonar equipment room, etc.

2.1. SHIPBOARD FIRE PROTECTION

2.1.1. Strategy

The guiding design philosophy of shipboard fire protection embraces a sequence of steps beginning with prevention and continuing through detection, confinement, control, and extinguishment. The four basic principles of fire prevention are proper stowage, frequent inspections, reduction of fire hazards, and enforcement of fire prevention policies and practices. While prevention is designed to minimize accidental fires, it is also effective in reducing the severity of fires caused by enemy action.

Most fires grow exponentially with time and forced ventilation. In ships, fires can achieve full room involvement where all combustibles are burning and conditions for supporting life do not exist in 5 minutes or less in some cases. Very short fire growth times may exceed the ability of the crew to respond; therefore, ships are designed with incombustible barriers to confine the fire to the room of origin even if full room involvement conditions are reached. These barriers serve a dual purpose of containing both fire and flooding below the waterline. Thus they are designed with a means to secure all ventilation, access and other penetrations. It is feasible in some compartments, therefore, to isolate and starve the fire of oxygen as a method of controlling a fire. Ships are also equipped with an inventory of portable, semi-portable and fixed fire protection systems to automatically and/or manually extinguish fires.

2.1.2. Material Condition of Readiness

Ships are designed and constructed to provide for increasing degrees of effective compartmentation and systems segregation through systematic closing of increasing numbers of closures and fittings. All closures such as doors and windows as well as other fittings in bulkheads and decks, piping systems and ventilation systems that have damage control value are

classified and labeled with one of three basic material conditions of readiness. In a fire or flooding situation it is necessary to secure or close open doors and fittings quickly. Since keeping them closed at all times would be a great inconvenience to the crew, they are classified with one of three ratings that determine which fittings can be left open. Since open doors and windows can contribute to fire spread it is important that the designated condition be conscientiously maintained to ensure the highest degree of fire safety. These three conditions are described in the following paragraphs.

Condition XRAY provides the least tightness and the greatest ease of access throughout the ship. All closures and fittings marked with a black X are closed when this condition is prescribed by the Commanding Officer. These include access closures not required for routine access such as watertight hatches and watertight doors to fan rooms, chain lockers, paint locker, storerooms, and bolted manholes to tanks. Examples of XRAY fittings include air test fittings, valves in sewage system, and drainage system valves. Condition XRAY is set during working hours when the ship is in port and there is no threat from weather or enemy attack. The minimum degree of tightness typically permitted on a military ship is condition XRAY.

Condition YOKE provides a greater degree of tightness than condition XRAY, but a lesser degree than the maximum condition, ZEBRA. All closures and fittings marked with a black X and a black Y are closed when this condition is set. Typical access closures labeled YOKE include watertight doors on alternate accesses to machinery spaces and watertight hatches to shaft alleys, pump rooms and emergency generator room. Examples of YOKE fittings include valves for segregating loop firemain systems and ventilation closures to the Windlass Room. Condition YOKE is normally set at sea and in port during wartime. A modified condition YOKE is sometimes allowed at sea when cruising independently in good weather and calm seas or in port in peacetime. In the modified condition, some YOKE fittings above the waterline are left open to improve ventilation and habitability, all other X and Y fittings are closed.

Condition ZEBRA provides the greatest degree of subdivision and tightness to the ship. It is the maximum state of readiness for the ship's damage control systems. When condition ZEBRA is set all fittings and closures with black X's and Y's and red Z's are closed. Condition ZEBRA is set under any of the following conditions:

1. Immediately and automatically upon the sounding of the general quarters alarm.
2. When leaving or entering port in wartime.
3. To control fire and flooding when the crew is not at general quarters and the Commanding Officer so directs.

When condition ZEBRA is set virtually all doors, hatches, and closures on the ship are required to be secured.

2.1.3. Ship Operating Status

A military ship is designed to operate under different threat scenarios that include heavy weather and likely or unlikely hostile enemy action. The Commanding Officer ensures the ship maintains an appropriate degree of readiness in accordance with five watch conditions as shown in

Table 2-1. The Commanding Officer will designate an appropriate material condition of readiness for each watch condition in the ship's battle organization. For example, material condition Zebra is usually specified for Condition I, and material condition YOKE is normally specified for Condition IV, etc.

Table 2-1. Degrees of Readiness and Condition Watches

General Degree of Readiness	Condition Watch
Complete readiness for immediate action	I
Some armament ready for immediate action, remainder on short notice	II
Some armament ready for immediate action, remainder on prolonged notice	III
Peacetime cruising, no armament manned	IV
In Port, peacetime, no armament manned	V

2.2. COMPARTMENT FIRE SAFETY

2.2.1. Fire Hazard Factors

Modern military ships are capable of inflicting and withstanding more damage today than comparable ships in World War II. This ability is a result of better and more efficient firefighting agents, techniques and equipment. Rapidly advancing technology allowed the introduction of automated operating and engineering systems thus permitting fewer crew members to operate increasingly sophisticated ships. In the past, ships were designed with the philosophy that the crew would detect and extinguish most fires well before full room involvement occurred. Unfortunately, as the numbers of crew members were reduced, their ability to detect fires was not always supplanted with the installation of automatic fire detectors.

The usual firefighting philosophy in buildings is to evacuate the occupants and undertake manual firefighting efforts by professional firefighters. Furthermore, many buildings are equipped with an installed automatic fire sprinkling system to combat the class A fires normally encountered. Ships have to combat class A fires in the berthing areas and cargo holds, class B fires in engineering spaces and class C fires in electrical/electronic spaces. The ship's crew is trained in firefighting but they are not professional firefighters. Underway, the ship's crew must combat the fire without evacuating the ship and while simultaneously operating the ship. This prevents abandoning certain spaces such as the Pilot House and the Engineering Control Center, therefore the discharge of a total flooding agent such as CO_2 cannot be allowed in certain spaces. A ship has numerous electrical systems and electronic equipment which would be severely damaged by a sprinkler system. Consequently, ships are not usually equipped with automatic sprinkler systems. Instead they are generally equipped with fixed fire protection systems which require manual activation such as aqueous film forming foam (AFFF) bilge sprinkler systems, Halon 1301 and CO_2 total flooding systems, as well as sea water and fresh water sprinkler systems. CO_2 in concentrations sufficient to extinguish fire are lethal to humans, therefore CO_2 total flooding systems are not used in buildings and are only installed in certain shipboard

compartments which are not normally occupied. Of course ships are also equipped with a variety of portable and semi-portable fire extinguishers and hoselines to facilitate manual fire extinguishing efforts.

2.2.2. Fire Protection Factors

Portable fire extinguishers are strategically located throughout the ship to facilitate "first aid" (firefighting efforts on fires in the beginning stages of fire growth). In the vast majority of cases, incipient fires are extinguished by an alert crew member who has been trained in the use of portable fire extinguishers. However some fires can grow beyond the capability of a portable extinguisher. When this occurs, the ship relies on its passive and active fire protection features to confine, control and eventually extinguish the fire. The various active and passive features are described in the following sections.

2.2.2.1. Active Fire Protection

Active fire protection implies the application of an extinguishing agent. In ships this includes handheld hoselines, fixed fire protection systems which are manually energized such as magazine sprinkling systems and Halon or CO_2 total flooding systems. It also includes semi-portable fire extinguishers such as twin agent hose or CO_2 hose reel systems. A list of active fire protection systems used on Coast Guard Cutters is shown in Table 2-2.

Table 2-2. Active Fire Protection Features

Fixed Fire Protection Systems
Magazine Sprinkling System (Seawater)
CO_2 Total Flooding System
Halon 1301 Total Flooding System
AFFF Sprinkling System
APC Range Hood System
Manual Fire Extinguishing Systems
Firemain with Seawater Hand Lines
AFFF Hand Lines
CO_2 Hose Reel System
Twin Agent System
Portable Pumps (P-250)
Portable Fire Extinguishers (all types)

2.2.2.2. Passive Fire Protection

Passive fire protection features are designed into the ship by the installation of incombustible bulkheads and decks and outfitting the ship with materials that are not highly flammable. Other measures include intumescent and other fire retardant coatings applied to the ship's structure and its equipment. For example, exhaust systems and other potential sources of ignition may be insulated. The distribution/stowage of materials which can fuel fires in the vessel also affect fire safety and should be carefully considered. Thus, there is a significant improvement in fire safety if flammables are stowed in metal containers instead of loose on open shelves. The majority of fires are extinguished before the fire grows to full room involvement, but some fires do progress to this stage of fire growth. Of these, most are prevented from spreading beyond the room of origin by the passive fire protection features designed into the ship. Moreover, passive measures slow the fires which do breach the room of origin thus allowing more time for the ship's crew to respond with manual fire extinguishing equipment. A list of passive fire protection features is shown in Table 2-3.

Table 2-3. Passive Fire Protection Features

Structural Fire Protection Features
Incombustible Construction Materials for Hull, Superstructure, Decks, and Bulkheads
Fire Doors and Dampers
Venting of Cargo Spaces, Fuel Tanks, and Pump Rooms
Means of Personnel Egress
Insulation of Exhaust Systems
Fuel Load and Distribution Control
Restrictions on Stowage of Combustible Materials
Guidelines for Fuel Load Limitations in Certain Spaces

3. BASIC PRINCIPLES OF SHIPBOARD FIRE SAFETY

Oxidation is a chemical process in which a substance combines with oxygen. Fire or combustion is rapid oxidation in which a fuel pyrolyzes or turns into a vapor and mixes with oxygen at an extremely high rate of speed. By-products of this reaction are intense heat and light and can be visibly seen as flames. The heat given off is in the form of radiant energy similar to that released by the sun. It travels in all directions including back toward the fire itself, this radiational feedback pyrolyzes more fuel. The chain reaction is responsible for the fire growing rapidly and continues as long as there is fuel, oxygen and heat to sustain the pyrolysis process. The following sections describe the elements of this chain reaction pyrolysis process in more detail in the context of a shipboard environment.

3.1. FUNDAMENTAL CONCEPTS OF FIRE

In a ship, fuels are present in solid, liquid and gaseous forms. The most obvious solid fuels are cellulosics such as wood, paper, and cloth products and plastics such as nylon, polystyrene, vinyl, acrylics, cellulose acetates, and polyethylene. These are found aboard ship as mooring lines, and canvas in the Boatswain's Hold, furniture in the Wardroom, Mess Deck and Lounge spaces; mattresses and clothes in the Berthing areas and Ships Laundry; and books, papers and office equipment in the Ships Office and Shops. Cellulosic fuels can produce smoldering fires or fires with visible flames.

The flammable liquids most commonly found aboard ship are lubricating oil, hydraulic oil, diesel fuel, JP-5 fuel, paints and solvents. Pound for pound, flammable liquids produce 2.5 times more heat than wood, and they release this heat 3 to 10 times faster. When flammable liquids spill on, or worse, spray under pressure onto a hot surface, the resulting fire burns with tremendous intensity. Flammable liquid spray fires have led to major conflagrations on ships.[17]

There are both natural and manufactured flammable gases. Those commonly found on board ship include acetylene, propane and butane. Gases, like flammable liquids, always produce visible flames and will not smolder. Radiation feedback is not necessary to vaporize a gaseous fuel but it is still necessary to maintain the chain reaction combustion process.

3.1.1. Fire Tetrahedron

The classic fire triangle of fuel, heat, and oxygen is a simple means of illustrating the requirements for the existence of fire. It does not, however, explain the nature of fire which includes the chain reaction process described above. The fire tetrahedron, Figure 3-1, is a better representation of the combustion process. A tetrahedron is useful for representing this process because it consists of four triangular faces each of which touches the other three. The tetrahedron illustrates how flaming combustion is supported and sustained through the chain reaction.

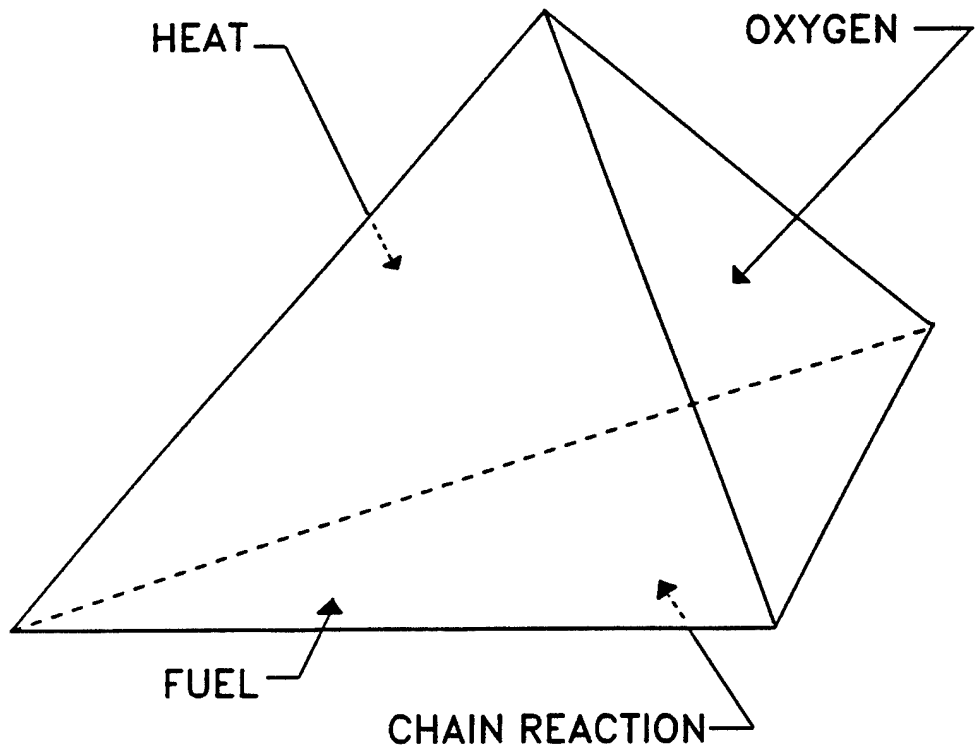

Figure 3-1. The Fire Tetrahedron

A fire can be extinguished by eliminating one or more of the four faces of the tetrahedron. At least one face must be eliminated, otherwise the fire will continue to burn. The following sections explain how these elements are typically eliminated on board a ship.

3.1.1.1. Removing the Fuel

The easiest way to remove the fuel is to shut off the supply of the leaking gas or flammable liquid. Remote shut-offs should be installed outside machinery spaces to facilitate securing the fuel supply to internal combustion engines such as diesel engines and gas turbines. In the case of class A fuels, physically removing the materials that are burning and jettisoning them overboard will certainly extinguish the flames. Good housekeeping aboard ship means cleanliness. However, from the fire prevention standpoint, it means the proper stowage and distribution of sources of fuel for fires.

3.1.1.2. Removing the Oxygen

Air contains 21% oxygen by volume. A fire can smolder with as little as 3% oxygen and flaming combustion requires a minimum of 16% oxygen by volume. Therefore a smothering agent would have to reduce the oxygen content below 16% to extinguish the flames and below 3% to extinguish a smoldering fire. Smothering is a practical technique in a ship because it has compartments which can be tightly sealed. On the other hand, there are numerous penetrations of the compartments for piping, ductwork, wiring, accesses etc. Each of these penetrations is a possible source of air leakage and therefore should be tightly sealed.

3.1.1.3. Removing the Heat

The most commonly used method of extinguishment is to remove the heat by cooling. Water absorbs radiational feedback and heat from the fuel. Therefore water is a very efficient fire extinguishing agent for class A fires and there is a limitless supply of seawater available to ships. Ship stability however, can be adversely affected due to the added weight of firefighting water. Firefighting doctrine emphasizes the need to dewater a ship even as firefighting operations are in progress.

3.1.1.4. Breaking the Chain Reaction

Firefighting agents designed to break the chain reaction, directly attack the molecular compounds formed in the chemical process of combustion. The attack is extremely rapid; in some automatic systems the fire is extinguished in 50-60 milliseconds. Because of their ultra fast action, these agents are used in explosion suppression systems. These agents however, are not effective cooling agents and the concentration of agent must be maintained until the fuel has cooled naturally.

3.1.2. Classification of Fires

Fires are grouped into four classes: A, B, C, and D by the National Fire Protection Association (NFPA) according to type of fuel. However, some fuels are found in combinations, and electrical fires usually involve some solid or liquid fuel. Thus for firefighting purposes there are actually seven possible combinations of fire classes.

3.1.2.1. Class A Fires

Fires involving common (ash producing) combustibles, which can be extinguished with water. Materials in this category include cellulosics and plastics found in the ship's berthing areas, shops, offices, labs, galley, mess deck, wardroom, lounges, passageways, gear lockers, storage spaces and cargo holds.

3.1.2.2. Class B Fires

Fires involving flammable liquid or gaseous fuels, greases, oils, paints, solvents and other substances that give off large amounts of flammable vapors which smothering agents are effective in extinguishing. Class B combustibles are usually found in the engineering spaces, paint lockers, galley, flammable liquids storeroom and other hazardous liquids storage spaces.

3.1.2.3. Class C Fires

Fires involving energized electrical or electronic equipment. A non-conducting fire extinguishing agent such as CO_2, Halon or dry chemical must be used, however they are not effective until the source of electrical power to the affected equipment has been secured. Class C fires sometimes occur in the casings of propulsion motors and generators; therefore these equipments are frequently protected by installed CO_2 flooding systems. A class C fire frequently starts a class A or class B fire in fuel packages which are in close proximity to the burning electrical equipment. The following sections discuss these combination class fires.

3.1.2.4. Combined Class A and C Fires

Fires involving solid fuel combined with electrical equipment. Because energized electrical equipment is involved, a non-conducting fire extinguishing agent such as CO_2, Halon or dry chemical must be used. Radio rooms, pilot house, engineering control center, electronics shops and electrical repair shops are typical spaces where this combination class fire might occur.

3.1.2.5. Combined Class B and C Fires

Here again a non-conducting agent must be chosen. Halon, dry chemical, and in enclosed spaces, CO_2 are effective against this combination of classes. Main machinery and auxiliary machinery spaces are the most common spaces where this combination class fire occurs.

3.1.2.6. Combined Class A and B Fires

Fires involving both solid fuels and flammable liquids or gases. Water spray, CO_2 and aqueous film forming foam (AFFF) has been found to be effective against this combination of classes. Engineering spaces, pump rooms, air conditioning equipment room, and auxiliary machinery spaces are examples of compartments where this combination class fire may occur.

3.1.2.7. Class D Fires

Fires involving combustible metals are relatively rare on non-aviation capable ships. Combustible metals include potassium, sodium, magnesium, zinc, and powdered aluminum. These fires are normally smothered by specialized agents called dry powders (not to be confused or interchanged with dry chemicals). Class D fires may also occur in the wheel assemblies of helicopters.

3.1.3. Extinguishing Agents

An extinguishing agent is a substance that will put out a fire by removing one or more of the faces of the fire tetrahedron. There are four basic extinguishing methods as follows:

1. Cooling: This is a direct attack on the heat face of the tetrahedron. The goal is to reduce the temperature of the fuel below its ignition temperature.
2. Smothering: This is an attack on the edge of the tetrahedron where the fuel and oxygen meet (i.e. attack on both fuel and oxygen faces of the tetrahedron). The action is to separate the fuel from the oxygen.
3. Oxygen Dilution: This is an attack on the oxygen face and the goal is to reduce the oxygen content below that necessary for sustaining combustion.
4. Chain Breaking: This is an attack on the chain reaction face. The goal here is to interrupt the chain reaction long enough for the fuel to cool below its ignition point.

There are eight fire extinguishing agents normally encountered in shipboard firefighting. These agents are in the form of liquids, solids or gases as shown in Table 3-1. The choice of extinguishing agents depends on the class of fire and the agents available. Table 3-2 shows appropriate choices categorized by the extinguishing method discussed above.

Table 3-1. Fire Extinguishing Agents

Liquids
Water
AFFF
Gases
Halons
1301
1211
CO_2
Solids
Dry Chemicals
Monammonium Phosphate
Bicarbonate
Potassium Bicarbonate
Potassium Chloride

Table 3-2. Extinguishing Agents of Choice

Extinguishing Method	Class of Fire	Appropriate Extinguishing Agents
Cooling	A	Water, AFFF
	A/C	
	B	AFFF, Water Mist
	B/C	
Smothering	A	AFFF
	A/C	Dry Chemical
	B	AFFF, Dry Chemical
	B/C	Dry Chemical
Oxygen Dilution	A	
	A/C	CO_2
	B	
	B/C	CO_2
Chain Breaking	A	Dry Chemical
	A/C	Halon
	B	Halon
	B/C	Dry Chemical

3.2. PRINCIPLES OF COMBUSTION

3.2.1. Combustion Stoichiometry

During pyrolysis or combustion the carbon atoms in the burning material are converted to carbon monoxide (CO), carbon dioxide (CO_2), smoke, and other carbon-containing compounds. Smoke consists of soot and other unburned gaseous and liquid chemical compounds. Ventilation of the compartment provides the oxygen in this chemical conversion. The production of CO_2 increases with increased ventilation and the production of CO increases with decreased ventilation. Complete or stoichiometric combustion would result in production of CO_2 as opposed to CO according to the following stoichiometric equation for burning a hydrocarbon:

$$\mathbf{C_mH_n + (x)O_2 \dashrightarrow (m)CO_2 + (n/2)H_2O}$$

In stoichiometric combustion x = m + n/4 atoms of oxygen; if less than x atoms of oxygen are supplied CO is produced as well as CO_2 and H_2O. Thus CO_2 and H_2O are produced with increased efficiency with increased ventilation and maximum compartment temperatures are generated by stoichiometric combustion.

Two general philosophies are applied consistently in the development of subjective values used in the Ship Fire Safety Engineering Methodology:

1. Consistent conditions are assumed to enhance the relative comparisons often made in the applications of the SFSEM
2. Worst case scenarios are utilized to ensure the resulting design of fire protection systems will be adequate under all conceivable conditions.

Applying these philosophies to a ship where ventilation is controlled in nearly every space dictates the assumption of stoichiometric combustion. For example, the engineer/analyst assumes stoichiometric combustion in assigning probabilities of flame self-termination, fixed fire protection system extinguishment, and manual fire extinguishment of the fire in the room of origin. In addition stoichiometric burning conditions are assumed in the development of the Post-FRI Heat Release Rate as explained in Section 6.3.4.1.2.

3.2.2. Flame and Flame Color

Flame color is a reliable indicator of the temperature of the flame and can be easily seen by the human eye. Table 3-3 relates the flame color and its absolute temperature in degrees Kelvin and the radiant flux generated by cellulosic fuels and other hydrocarbons. Refer to the discussion on radiation in Section 3.3.3 for a complete explanation of radiant flux.

Table 3-3. Flame Color of Burning Cellulosic Fuels

Color	Temperature (°Kelvin)	Radiant Flux (kW/m^2)
Deep Blood Red	800	25
Cherry Red	1000	60
Orange	1200	120
Yellow	1350	190
White	1475	270

3.2.3. Products of Combustion

Combustion produces heat and flames, smoke and fire gases, and results in reduced oxygen levels. Fire gases include CO_2, CO, NO_2, NO, H_2O and others. Reduced oxygen and carbon monoxide represent the primary hazard to humans. Carbon monoxide is lethal at very small concentrations as shown in Table 3-4. This table also includes effects on humans of dangerous concentrations of oxygen and carbon dioxide.

Table 3-4. Dangerous Concentrations of Gases

Concentration by Volume (%)	Combustion Product	Effects on Humans
	Oxygen	
21		Normal
15-16		Choking, loss of motor skills
10-14		Fatigue, loss of judgment
6-10		Collapse
	Carbon Dioxide	
2		Hyperventilation
5		Labored breathing
10		Fatal in a few minutes
	Carbon Monoxide	
.05		Dangerous to life in 3 hours
.15		Dangerous to life in 1 hour
.4		Fatal in less than 1 hour
1.3		Fatal in a few minutes

The tenability levels of compartments are affected by obscuration due to smoke and toxicity of combustion products. Table 3-5 summarizes the products of combustion from some materials commonly found on board ship which are hazardous to humans. A review of this table

will explain why it is imperative for firefighters and investigators in shipboard fires to be equipped with a self contained breathing apparatus.

Table 3-5. Primary Hazards from Burning Materials

Materials	Products of Combustion
Cellulosics (wood and wood products)	Carbon dioxide, reduced oxygen, carbon monoxide
Clothing, furniture, carpet, canvas, burlap, rope, bedding materials	Carbon monoxide, reduced oxygen
Wool, silk	Hydrogen cyanide
Plastics, rubber (wiring insulation)	Hydrogen chloride, hydrogen sulfide, sulfur dioxide
Urethane foams (furniture padding)	Dense smoke
Petroleum products	Acrolein, carbon monoxide, carbon dioxide, reduced oxygen
PVC (polyvinyl chloride)	Hydrogen chloride
Freon (Refrigerant)	Phosgene gas

3.3. HEAT TRANSFER MODES

There are three basic mechanisms of heat transfer: conduction, convection, and radiation. An understanding of heat transfer modes is essential before the phenomenon of fire can be analyzed in detail. The following sections provide a basic review of the fundamentals of each heat transfer mechanism. While it is probable that heat is transferred by all three modes to some degree in every fire, one mode usually predominates at certain stages of fire growth.

3.3.1. Conduction

The transmission of heat through a solid is known as conduction. It is important in analyzing the spread of flames over combustible solids and in ignition. In a fire, it is the predominant mechanism for the transmission of heat through a fire boundary. It has been shown that heat flows through a solid from an area of high temperature to an area of relatively low temperature due to conduction. This flow is referred to as heat flux. A ramification of this is that a boundary will eventually transfer heat into the adjacent space from a compartment involved in fire. The rapidity with which this occurs is strictly dependent on the insulating quality of the barrier material. Fourier's Law of heat conduction is shown in the following equation:

$$qx = - k (dT/dx)$$

where qx is the heat flux in the x direction, k is the thermal conductivity of the material, and dT/dx is the temperature difference over a distance x. Materials with high conductivity conduct heat rapidly. Insulation is the classic example of a material with low conductivity. On board ship, steel and aluminum bulkheads without insulation have relatively high thermal conductivities. This means that compartments with these materials for boundaries will lose heat rapidly in a fire

increasing the time for that compartment to achieve flashover or full room involvement. On the one hand, this is good because it gives the firefighters more time to control the fire. On the other hand, these thermally thin bulkheads increase the likelihood of spreading the fire due to the heat transfer to adjacent spaces where combustibles are likely to ignite.

3.3.2. Convection

Convective heat transfer is associated with the transfer of heat between a fluid (gas or liquid) and a solid. It explains, for example, why cold hands feel warmer when you breathe on them. The term "buoyant plume" describes the convective column rising above a heat source and explains why more heat attacks the overhead in a fire than the deck. Heat flux due to convective heat transfer can be related to its driving force, $T_s - T_f$, as shown in the following equation:

$$q = h\,(T_s - T_f)$$

where q is the heat flux, h is the heat transfer coefficient, T_s is the temperature of the solid and T_f is the temperature of the fluid. Note that if the temperature difference is zero there is no heat transfer. The heat transfer coefficient, h, is a function of the geometry of the solid, the properties of the fluid, the flow parameters (especially velocity), the temperature difference, and other parameters. The evaluation of h is therefore complicated. An illustration of the complexity of determining h is shown in Appendix B of this document in the calculation of the time to full room involvement.

3.3.3. Radiation

Unlike conduction and convection, radiation does not depend on a medium for heat transfer. Any object with a temperature above absolute zero transfers heat by invisible electromagnetic waves which can be absorbed, transmitted or reflected similar to visible light. It is the dominant mode of heat transfer in fires where the fuel bed is greater than .3 meters in diameter. According to the Stefan-Boltzmann relationship shown below, the total energy radiated by an object is proportional to the fourth power of its temperature:

$$E = \varepsilon \sigma T^4$$

where ε is the emissivity of the object, σ is the Stefan-Boltzmann constant, and T is the temperature of the object. This relationship can be used to determine the radiative heat flux by taking into account the configuration factor, F, as shown in the next equation:

$$q = F \varepsilon \sigma T^4$$

The configuration factor is merely the geometrical relationship between the object (radiator) and the receiver. A perfect radiator, or so-called black body, has an emissivity of 1. Table 3-6 shows the effects of thermal radiation.[18]

Table 3-6. Effects of Thermal Radiation

Radiant Heat Flux (kW/m^2)	Effect
0.67	Summer sunshine
1.00	Maximum for indefinite skin exposure
6.4	Pain after 8 seconds of skin exposure
10.4	Pain after 3 seconds of skin exposure
16	Blistering of skin after 5 seconds
29	Wood ignites spontaneously after prolonged exposure
52	Fiberboard ignites spontaneously in 5 seconds

3.4. FIRE SAFETY METHODOLOGY

The Ship Fire Safety Engineering Methodology is fundamentally concerned with safety. Safety, in general, can be defined as the judgment of the acceptability of risk, and risk can be defined as the probability and severity of harm to either people or property.[19] Nothing can be absolutely free from risk, therefore nothing can be absolutely safe. The goal, therefore, is to accurately assess the risk and reduce that risk to a level judged to be acceptable. The definitions emphasize that probability and judgment are inherent in the concept of safety. Moreover, this is an engineering methodology. Koen has described an engineering method as: "the strategy for causing the best change in a poorly understood or uncertain situation within the available resources."[20] This can be interpreted to mean that engineers strive for workable solutions to real-world problems. The above reasoning accounts, in part, for basing this methodology on probabilistic assessments using engineering judgments. In this context then, the SFSEM is used to evaluate the expected performance of the ship as a fire safety system and to compare alternative fire safety systems or components based primarily on engineering judgments.

The methodology has been developed incorporating techniques from the following scientific disciplines: operations research, systems analysis, and risk assessment. The following sections will explain in more detail some of the techniques borrowed from these disciplines as implemented in the methodology.

3.4.1. Systems Approach

The process of understanding and structuring a complex problem such as fire safety is simplified by using a systems approach. Systems methods can be used to analyze a complex problem or separately, its many component parts. This facilitates examining the effect of changing a specific component of the problem. The ship fire safety system is understood and defined sufficiently well to enable the fire risk to be evaluated in an organized systematic fashion. The risk analysis, however, requires a knowledge of fire science and fire protection engineering due to the necessity for the analyst to use engineering judgment in developing the probability assessments required in the methodology.

3.4.2. Event Trees

A number of techniques in risk analysis provide the means to understand and evaluate hazards and risks. The application of these tools provide an insight into the qualitative understanding and quantitative relationships of the fire safety problem. Event trees and network diagrams are two techniques used in the methodology which are discussed in detail in the following sections.

An event tree is a logic diagram that identifies sequential relationships. The event tree starts with a specific failure condition, and then proceeds with a forward (inductive) analysis to identify all possible sequences of events that could result in that failure condition. The diagrammatic structure that relates these outcomes to an initiating event is an event tree. In the SFSEM, probabilistic values are assigned to the events, therefore it is possible to calculate the likelihood of a failure condition (loss due to fire). A major problem is that the probabilities are usually based on conditionalities. For example, the calculation of the loss due to fire of a compartment is based on the condition that the fire occurred in the first place. In this methodology, the terminology "...given established burning..." is often used; the significance of the word "given" is that it denotes conditionality or the probability of EB is 1.0.

3.4.3. Network Analysis/Diagrams

Another technique that incorporates many of the useful features of event trees, and also provides additional flexibility to tailor the analysis of ship fire safety to specific needs such as consideration of new designs involves the construction of network diagrams. The diagram shows the graphical relationship of the logic, the sequencing, and the relationships of the component parts in the fire safety problem.

The particular network diagram used in the SFSEM characterizes all events in binary form. For example, the event of ignition either occurs (IG) or it does not (IGbar). Given the fact that ignition occurred, the fire progresses to an event called established burning (EB), or it does not (EBbar). The word "bar" indicates the symbol over the acronym in the network diagrams which signifies the contra-positive event. These are the first two events in the upper level network diagram for flame movement which will be explained in detail in Section 6.3. The upper level diagram can be decomposed into additional diagrams. This process is continued until the events can no longer be subdivided. Happily, the computer, in an implementing set of computer programs, takes care of all the bookkeeping thus freeing the analyst of tedious calculations. These programs, called Ship Applied Fire Engineering (SAFE), are documented in a companion User Manual to this theoretical documentation.[1]

3.4.4. Risk Management

A hazard is a condition or object that, when given the proper exposure, can place people or property in jeopardy. Risk, is a measure of the potential level of injury or loss (from a hazard). It becomes important to be able to quantify the risk posed by a hazard. If a level of risk is considered acceptable then it is considered safe. If a level of risk is greater than that which seems tolerable, an unsafe condition exists, and the risk must be reduced, transferred, or accepted. Making conscious decisions to reduce, transfer or accept the risks is the essence of risk management.

Building codes and fire safety standards are designed to incorporate safety into the building design process. Essentially the code prescribes what shall be done and standards prescribe how to do it. For example, the code specifies that a particular building shall be equipped with an automatic water sprinkler system and the NFPA standards provide the detailed design guidance for an acceptable sprinkler system. An important characteristic of this process is that the fire regulations are written in such a way that neither the building owner or the authority having jurisdiction needs a technical background in fire safety. This is not the case with the electrical, structural, or mechanical requirements in the building code. In these cases, the standards are written in a manner that anticipates use by technically trained and licensed professional engineers in the field. The International Convention for Safety of Life at Sea, (SOLAS) 1974 as amended and implemented through the International Maritime Organization (IMO) has resulted in fire safety standards for ships. Note that U.S. Coast Guard Cutters and U.S. Navy ships are not necessarily required to comply with SOLAS. Recent contracts for new cutter acquisitions awarded by the Coast Guard however, have required the shipbuilder to comply with SOLAS. Other than these recent acquisitions, the management of fire safety risk on U.S. military ships, has been "designed" by naval engineering staffs. The SFSEM is a tool to assess levels of fire risk so that cognizant authorities may better manage the risk.

3.4.5. Subjective Probability

There are different ways in which the results of a risk analysis may be described. One approach is qualitative. This is the approach used in the building codes and standards. For example recommendations to install a particular sprinkler system, a specific type of fire alarm, or a 2-hour fire barrier are prescriptive in nature and do not give a description of required performance as a fire safety system. Another approach is quantitative, albeit rarely used in fire protection engineering. One of the reasons that quantitative fire safety assessments are rare is that the state of the art of calculation procedures for fire protection engineering is in its infancy. Performance calculations for fire protection that are analogous to those available for structural, electrical or mechanical behavior performance do not yet exist.[21] Due to significant progress recently, some calculations and computer models will predict certain aspects of fire protection performance, nevertheless a systematic set of deterministic performance calculations do not exist today. In the absence of deterministic calculation methods, there are two types of non-deterministic quantitative models to consider: probabilistic and stochastic.

In stochastic models, critical events occurring sequentially form a chain interconnected by transition probabilities.[22] Epidemic theory, branching processes, random walk, and percolation processes are examples of stochastic models. Since stochastic models deal with probability distributions their use as a fire model in ships is limited by the paucity of statistical data. Probabilistic models, on the other hand deal with events as entirely random with no dependence on previous events. Probability models deal with the final outcome such as fire damage in a compartment, and utilize techniques such as logic trees. Fault trees in particular trace the subevents that lead to an undesirable top (final) event. The risk associated with the top event can thus be reduced by identifying and eliminating the risk related to one or more of the subevents.[22] In the SFSEM, network diagrams utilize a hybrid mix of success and fault trees as a probabilistic model of fire.

There are two fundamentally different methods of assessing probabilities. One is the classical, or objective method. The other is the personal, or subjective method. The objective method views probability as a characteristic of an identifiable physical process. Objective probabilities are established as a measure of relative frequency or as a condition of symmetry. The subjective method views probability as a degree of belief held by a knowledgeable individual. Subjective probabilities are based on available information. This may include acquired knowledge from deterministic calculations, results from computer models, experimental results, and personal experience. In the SFSEM, the term "engineering judgment" implies the assessment of risk in a probabilistic model utilizing subjective probabilities. The SFSEM actually utilizes both subjective and objective methods of determining probabilities. The probability of ignition and established burning are estimated by objective methods. Subjective probabilistic assessments based on available information and engineering judgment are the basis of the quantification of some of the components in the flame movement analysis module.

3.4.6. Engineering Design

The fundamental organization of the hierarchical networks has been structured in a manner to allow new knowledge to be incorporated without disruption or change to the basic analytical framework. This allows each component to be evaluated analogous to free body analysis in structural mechanics. The present application of engineering design principles in the SFSEM is similar in approach to those used in mechanical or civil engineering. For example a machine element or building structure is designed based on certain criteria and an assumed primary mode of failure such as tensile strength. Then other modes of failure are considered and the base design changed accordingly. In the SFSEM, recommendations concerning fire safety design is based on analysis of flame movement. Eventually these recommendations may need to be changed due to consideration of smoke movement, people movement, or structural frame analyses.

4. FIRE SAFETY OBJECTIVES

Establishing fire safety objectives is an often overlooked but vitally important step in the fire safety design of a ship. Cognizant authorities such as ship operator/owners, insurance underwriters, regulatory agencies, etc., should establish fire safety objectives early in the design of a ship. In military ship construction, fire safety objectives are usually established indirectly by eliminating as many fire hazards as possible and installing as much fire protection as funding will permit. This often results in the over-protection of some spaces and under-protection of others. Fire safety objectives should consider life safety, property protection and mission protection as explained in the following sections.

4.1. LIFE SAFETY

Objectives for life safety include adequate protection for the egress of passengers and crew to a safe refuge area and suitable protection for areas that must remain occupied to operate the ship such as the pilot house or the engineering control center. Design for life safety thus results in the protection of spaces comprising the egress routes on a ship. In addition, fire protection systems for permanently occupied spaces cannot include total flooding agents that are life threatening.

4.2. PROPERTY PROTECTION

There are two types of property in a ship: cargo and the ship's outfit. Cargo is temporary in nature and is only on board for a particular voyage. Ship's outfit, on the other hand, is more permanent in nature and includes the ship's installed equipment as well as the personal possessions of the crew. Objectives for property protection identify an acceptable level of loss in terms of the magnitude and frequency of damage that can be sustained in each compartment subject to fire.

4.3. MISSION PROTECTION

Every ship has a primary mission and usually one or more secondary missions. Objectives for mission protection identify compartments that contain non-redundant equipment necessary to execute the ship's missions. For example a ship with two engine rooms (each powering one shaft) would not classify either engine room as vitally important because it would take the simultaneous loss of both compartments to totally disable propulsion on the ship. To illustrate further, scientific laboratories are vitally important only on ships such as Icebreakers which have a science mission. Similarly, the Torpedo Control Room is vitally important on a warship while the compartment that contains the hydraulic equipment for controlling the ship's crane is equally important to a construction tender's primary mission.

A final consideration is that fire safety objectives can change, sometimes rapidly, for the same compartment. For example a cargo hold on a merchant ship may have very high priority against loss in a fire when the ship is underway transporting valuable cargo, while that same hold may have very low priority when the ship is in port and the hold is empty. In this case mission protection blends with property protection because the "mission" of a merchant ship may be to carry cargo.

4.4. COMPARISON OF SHIP'S PERFORMANCE WITH OBJECTIVES

The results from the engineering analyses in the SFSEM are compared to the fire safety objectives in order to evaluate the performance of the ship. This process identifies the compartments which exceed or fail to meet the objectives. Furthermore, the process is structured mathematically so that all compartments in the ship may be rank ordered relative to each other. This process for flame movement analysis is described in detail along with the relevant mathematical equations in Section 6.6. This process will be described for smoke movement, structural frame, and people movement analyses in Sections 7.0, 8.0, and 9.0, respectively as these modules are developed and documented.

5. PREVENT ESTABLISHED BURNING

Established Burning (EB) is a concept which describes the size of the fire that is considered to be the start of the fire safety design process for the ship. It is the demarcation between fire prevention and the beginning of the ship response to the fire. The specific fire size can be a spark or a flame height of 4 feet or more. A 10 inch high flame is commonly accepted as the smallest flame which constitutes EB in a shipboard environment. At this flame height, radiational feedback to the fuel bed starts to predominate as the heat transfer mode and the fire will commence growing rapidly assuming proper conditions for combustion exist. The

engineer/analyst is not required to use 10 inches as the criteria for EB. The system is flexible and any size may be used.

5.1. FIRE PREVENTION

Fire prevention involves events that occur before the fire grows to EB, primarily preventing unwanted fire ignition. Three requirements are necessary for ignition to occur:

1. Kindling fuel or volatile gases must be present.
2. A heat-energy source sufficient to cause ignition in the kindling fuel must be available.
3. The fuel and the heat source must be sufficiently close in proximity to initiate combustion.

Figure 5-1 lists the factors that influence the probability of ignition. The determination of the probability that ignition will occur requires the subjective engineering judgment of the engineer/analyst.

5.2. PROBABILITY OF EB

The probability that EB will occur in a compartment is composed of two parts. The first consideration is the probability of ignition, P(IG). The second is the probability that the fire will grow to the critical size defined as EB given that the ignition event occurred in the first place, P(EB|IG). Factors that influence fire growth from ignition to the critical size defined as EB are listed in Figure 5-2.

The probability of EB can be calculated mathematically as shown in the following equation:

$$\mathbf{P(EB) = P(IG)\ P(EB|IG)}$$

In words, this equation says that the probability of established burning is equal to the probability of ignition times the probability that the fire will grow to the critical size defined as EB given that the ignition event occurred. The probability of EB is easily calculated using data from the network diagram shown in Figure 5-3 as follows:

$$\begin{aligned} \mathbf{P(EB)} &= \mathbf{P(IG)\ P(EB|IG)} \\ &= \mathbf{.8 \quad x \quad .9} \\ &= \mathbf{.72} \end{aligned}$$

The event "EB" in Figure 5-3 can be subdivided as shown in Figure 5-4 to aid in the analysis. The acronyms for the events shown in Figure 5-4 are defined in Table 5-1. The two intermediate events in the EB network shown in Figure 5-4 represent the two ways that the fire can terminate before EB is achieved. The first way is the fire self terminates (If) due to lack of fuel or oxygen or other possible reasons shown in Figure 5-2. The other possibility is for the person discovering the fire to extinguish it (Mf). This event is further subdivided as shown in Figure 5-4 into three events: the decision to attempt extinguishment (dmf), the application of a fire extinguishing agent (amf), and successful extinguishment (emf).

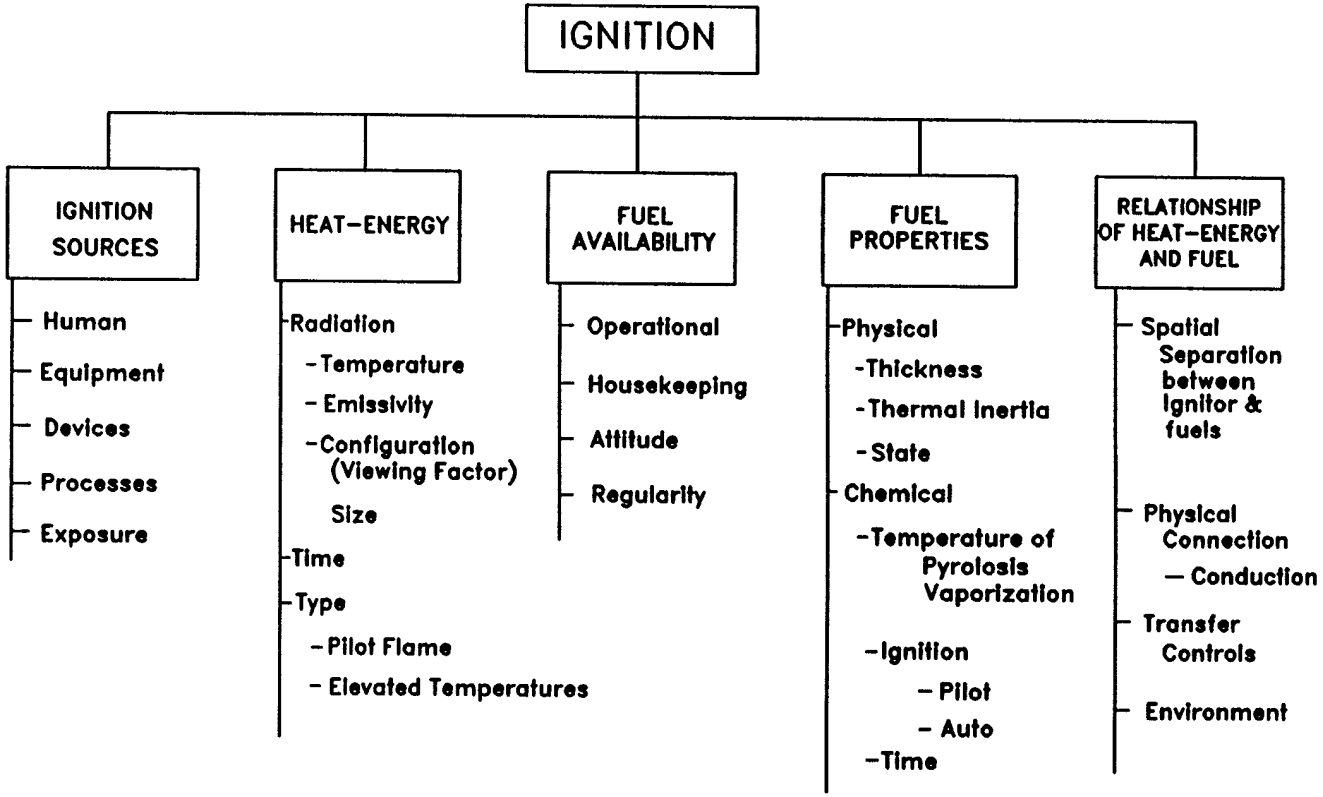

Figure 5-1. Ignition Factors

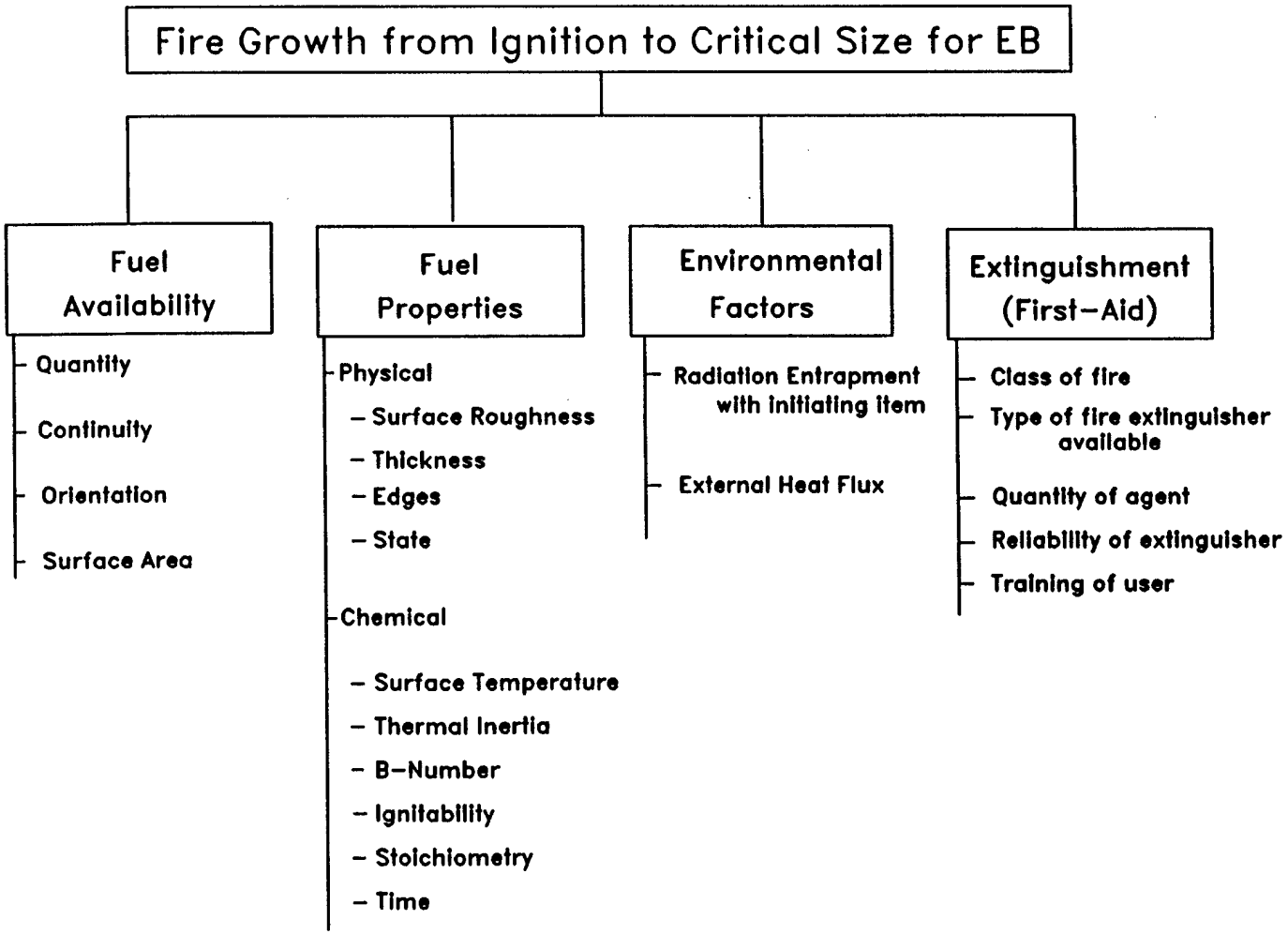

Figure 5-2. Fire Growth from Ignition to EB

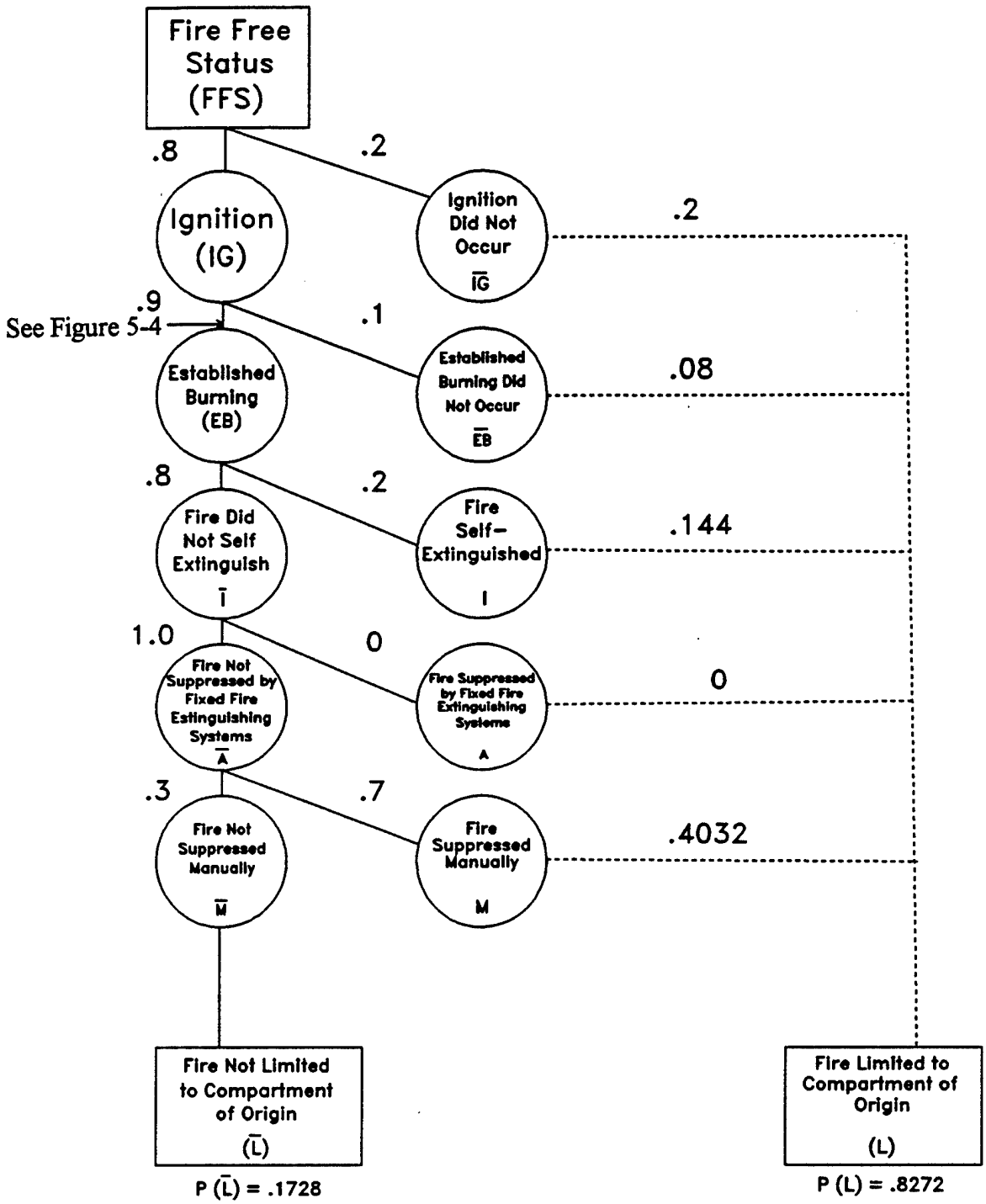

Figure 5-3. Network Diagram for Fire Limitation to the Compartment of Origin (partial)

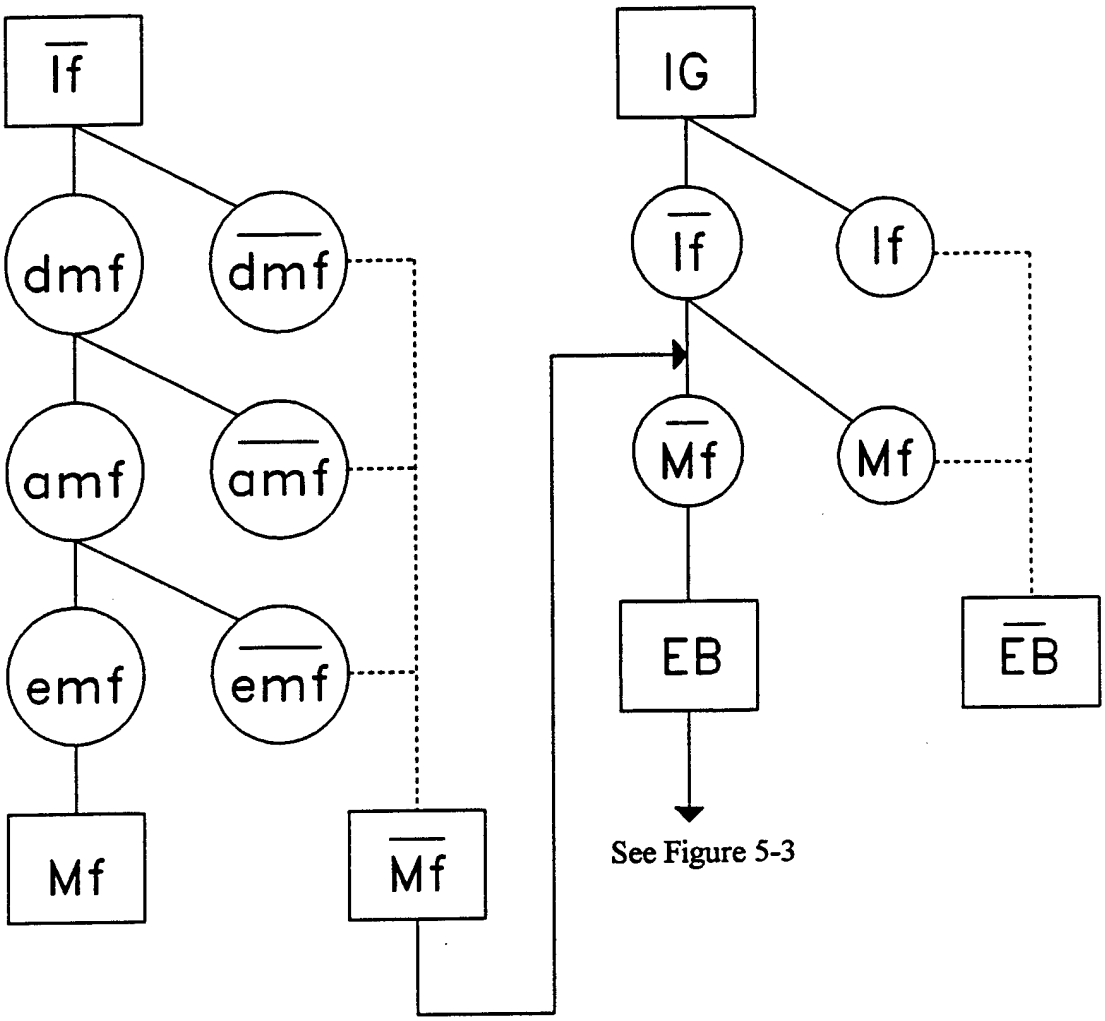

Figure 5-4. Network Diagram for Prevent Established Burning on Ships

Table 5-1. Definition of Terms in Figure 5-4

Abbreviation	Definition
If	Self termination prior to EB
Mf	Manual fire extinguishment prior to EB
dmf	Person discovering fire decides to attempt to extinguish fire before EB
amf	Agent application by person discovering fire before EB
emf	Extinguishment of fire by person discovering fire before EB

Instead of using this process to determine the probability of EB the engineer/analyst can use historical data to determine the frequency of EB as described in the next section.

5.3. FREQUENCY OF EB

Military ships are required to report all fires that result in damage to the vessel. This allows an opportunity to utilize historical records to establish the frequency of EB. A problem arises, however, in that some fires which reach EB may not cause enough damage to warrant reporting. As a result the frequency of EB based on historical data is doubled to account for the possibility of unreported fires.

The historical data collected for use in the PIR analysis covered the years 1975 through 1986 for selected Navy ships compiled by the U.S. Naval Safety Center.[23] The unit "compartment-year" was selected as the measure of exposure used in the calculation of the frequencies, primarily because the flame movement analysis in the SFSEM is accomplished on a compartment basis. The numbers of each type of compartment aboard each class of vessel included in the analysis were obtained from Ship Compartment Directory data obtained from the U.S. Naval Sea Systems Command.[24] For the PIR analysis, all U.S. Navy cruisers, destroyers, and frigates that were in active commissioned status at any time during the period 1 January 1975 through 31 December 1986 were considered. Time undergoing overhaul was not considered as active status. As noted above, adjusted fire frequency values were obtained by doubling the calculated fire frequency values on the assumption that half of all actual fires are not reported. In the case of compartment types where no fires were reported, an arbitrary adjusted fire frequency value of .0001 was selected.

Fire safety analyses of Coast Guard Cutters since the PIR analysis have utilized historical records to establish the frequency of EB based on data collected from the U.S. Naval Safety Center augmented by additional data from U.S. Coast Guard Headquarters for each type of compartment aboard a cutter. Historical reports of fires on all classes of Coast Guard Cutters was obtained from the Commandant (G-KSE-4), U.S. Coast Guard, for the period 1984 through 1992. This data was combined with data received from the U.S. Naval Safety Center on 21

classes of large naval vessels during the period 1975 through 1986 to refine the reported fire frequencies. For the purposes of the SFSEM, similar compartments were grouped by compartment use indicator (CUI). CUI categories were adapted from the standard nomenclature used by the Coast Guard and Navy to identify compartment usage. Some CUIs were further subdivided in order to reflect a more accurate assignment of reported fire frequency. Similar to the PIR analysis, the "reported frequency of EB" based on historical data was doubled and called "adjusted fire frequency" to account for unreported fires. The number of fires reported and adjusted fire frequency values from the combined Navy and Coast Guard data is shown in Table 5-2 grouped according to CUI.

Note that the Main Propulsion Mechanical (EM) and Emergency Auxiliary Generator Rooms (QE) exhibit adjusted fire frequencies which are orders of magnitude greater than other compartments. This fact has a substantial impact on the results of a fire safety analysis using the SFSEM.

The adjusted fire frequency values are included in the database for the SAFE computer programs which implement the SFSEM. The values are called Frequency of EB and cannot be changed by the user/analyst. Only the developers of the Methodology may change the frequencies in the database as additional data is collected and analyzed from reliable sources such as the U.S. Naval Safety Center or U.S. Coast Guard Headquarters.

The probability of EB and the frequency of EB are two alternative ways of expressing the likelihood of the event EB occurring in a given compartment. The user should be careful to ensure that the units used are compatible with the way the fire safety objectives are stated. The computer programs which implement SFSEM currently use frequency data for EB, in compartment-year units, and fire safety objectives for frequency of loss are stated in compatible terms of compartment loss per year. If the analyst desires to use the probability of EB, the fire safety objectives must be expressed in similar terms. For example, the objectives would be stated as the probability of losing compartment X should not exceed .003 (or .3%). Since losing a compartment is a rare event, establishing objectives in probability terms is very difficult, therefore the frequency terms implemented in SFSEM is highly recommended.

Table 5-2 Fire Frequency Data

Type of Compartment	Compartment Use Indicator (CUI)	Number of Fires Reported	Adjusted Fire Frequency (1) (Fires per Compt Year)
Cargo Hold	AA	0 (2)	0.0001 (3)
Gear Locker	AG	19	0.0010
Refrigerated Storage	AR	3	0.0009
Storeroom	AS	34	0.0009
Ship Control Area	C	4	0.0012
Main Propulsion Electrical	EE	7	0.0031
Main Propulsion Mechanical	EM	148	0.0272
Fuel Oil, Lube Oil Tank	F	(4)	(4)
JP-5 Fuel Tank	J	(4)	(4)
Hazardous Material Storage	K	4	0.0013
Berthing Space	L1, L2, L5	20	0.0008
Wardroom, Mess, Lounge Space	LL	7	0.0008
Medical, Dental Space	LM	0	0.0001
Passageway, Staircase, Vestibule	LP	3	0.0001
Sanitary Space	LW	4	0.0002
Explosives Storage	M	(4)	(4)
Auxiliary Machine Space	QA	89	0.0029
Emergency Aux. Generator Room	QE	23	0.0204
Fan Room	QF	7	0.0004
Galley, Pantry, Scullery	QG	13	0.0026
Helicopter Hangar	QH	(4)	(4)
Laundry	QL	5	0.0031
Office Space	QO	5	0.0004
Shops, Labs	QS, QW	15	0.0018
Trunk, Hoist, Dumbwaiter	TH	0 (2)	0.0001
Stack, Uptake	TU	5	0.0013
Void, Cofferdam	V	1	0.0001 (3)
Water, Peak, Ballast Tank	W	1 (2)	0.0004

NOTES:

1. Taken as twice the reported fire frequency
2. Based on 1986 - 1991 USCG data only. (All other numbers of fires based on both USN and USCG data.)
3. Default value used in cases where no fires have been reported, or when calculated adjusted frequency is below 0.00005
4. Not considered in analysis.

5.3.1. Analytic Hierarchy Process

In May 1995, Maguire used the Ship Fire Safety Engineering Method to analyze a dinner cruise vessel.[13] Maguire states that he did not use the statistical frequencies of EB shown in Table 5-2 for two reasons:

1. Frequencies of EB coded in SAFE were based on data collected for military vessels, thus they are not considered appropriate for commercial vessels.
2. Frequency values that represented the certain occurrence of fire, opposed to the probability of fire, was desired.

Since statistical data was unavailable concerning the historical frequency of fire on the dinner cruise vessel, Maguire utilized the Analytic Hierarchy Process (AHP) to determine the probability that a fire will occur in a particular compartment given that the sum of the probabilities for all compartments equates to 1.0. The AHP was used to synthesize the judgment of several people in the marine fire protection field to determine fire origin priorities in a series of pairwise comparisons. These comparisons codified the survey participant's degree of belief of which compartment was more likely to be the origin of a fire. The results from using this process (for his thesis only) were specially coded into SAFE, the implementing computer program for the SFSEM, instead of the frequencies of EB shown in Table 5-2. In general the frequencies of EB were significantly different using the AHP compared to the historic frequencies of EB used in SAFE. For example the Galley has a .84% share of the frequency of EB in SAFE, but applying the AHP the Galley has a 9.5% share of EB.

It should be noted that frequencies of EB presently encoded in SAFE cannot be changed by the user. The results of using the AHP to determine the probabilities of EB in a commercial vessel, given that a fire will occur, are documented in Maguire's Thesis.[13]

6. FLAME MOVEMENT ANALYSIS

The flame movement analysis module can be considered the most important module in the SFSEM. The spread of flames through the ship presents a significant threat to life safety and to the ship's equipment and structure. Although smoke and toxic gases are certainly hazardous and worth carefully analyzing, it may be said that without fire there would be no smoke. Fire science research has also made considerable progress in understanding and quantifying flame movement, so it follows that this is the most developed module in the SFSEM. Accordingly, the majority of the details in this theoretical documentation concerns this module with explanation of other modules in proportion to their relative state of development. It is appropriate at this juncture to state in general terms the philosophical basis underlying the development of the SFSEM.

First it should be emphasized that this methodology is a probabilistic-based risk analysis methodology. This means that the results from the SFSEM are based primarily on probabilities determined by engineering judgment of the user/analyst as opposed to deterministic calculations of conditions precisely known. Therefore the results are most useful when the analyst uses the methodology to compare outcomes on a relative basis. For example, an appropriate use would be to analyze competing preliminary designs of a ship to identify the best design with respect to fire

safety. It is also appropriate to use the methodology to compare, on the same ship, the effectiveness of different fire protection alternatives. A probabilistic methodology such as this should not be used to analyze a fire that has occurred in a forensic type of analysis to determine the cause of the fire or the path of flame spread. There are other deterministic computer models such as HAZARD which are more appropriate for this type of fire reconstruction analysis.[25]

The methodology is fundamentally probabilistic and will always require the engineering judgment of the analyst for determination of critically important subjective values such as the probabilities of limiting the fire to a particular compartment. However, one of the basic developmental philosophies in the method is to substitute a deterministic algorithm for engineering judgment of a certain entity (e.g., full room involvement time) when research yields a new algorithm which has been proven valid for shipboard conditions.

In a probabilistic-based analysis of fire safety, it is appropriate to carefully consider the design fire scenario. This is important from a design viewpoint to ensure adequate firefighting equipment will be installed. Moreover, in an engineering methodology it is common practice to be conservative. For example, the highest fire temperatures occur under stoichiometric combustion conditions. While it is not likely in a ventilation-controlled shipboard environment that stoichiometric conditions will exist, this condition is assumed by the analyst in the determination of the probabilities of flame limitation.

6.1. FUNDAMENTALS OF FLAME MOVEMENT ANALYSIS

6.1.1. Fire Growth in Realms

Fire growth within a compartment advances from one stage to another sequentially. Each of these separate stages is called a realm and each realm is separated by a well-defined transition point to the next realm as shown in Figure 6-1.

The point described as the radiation point is also referred to as Established Burning or EB. EB is further defined as the demarcation point between fire prevention and fire control. It is the point where the dominant heat transfer mode shifts from convection to radiation. Radiational feedback is assumed to occur when the flames reach a height of approximately 10 inches and subsequent to this point, the fire grows remarkably faster.

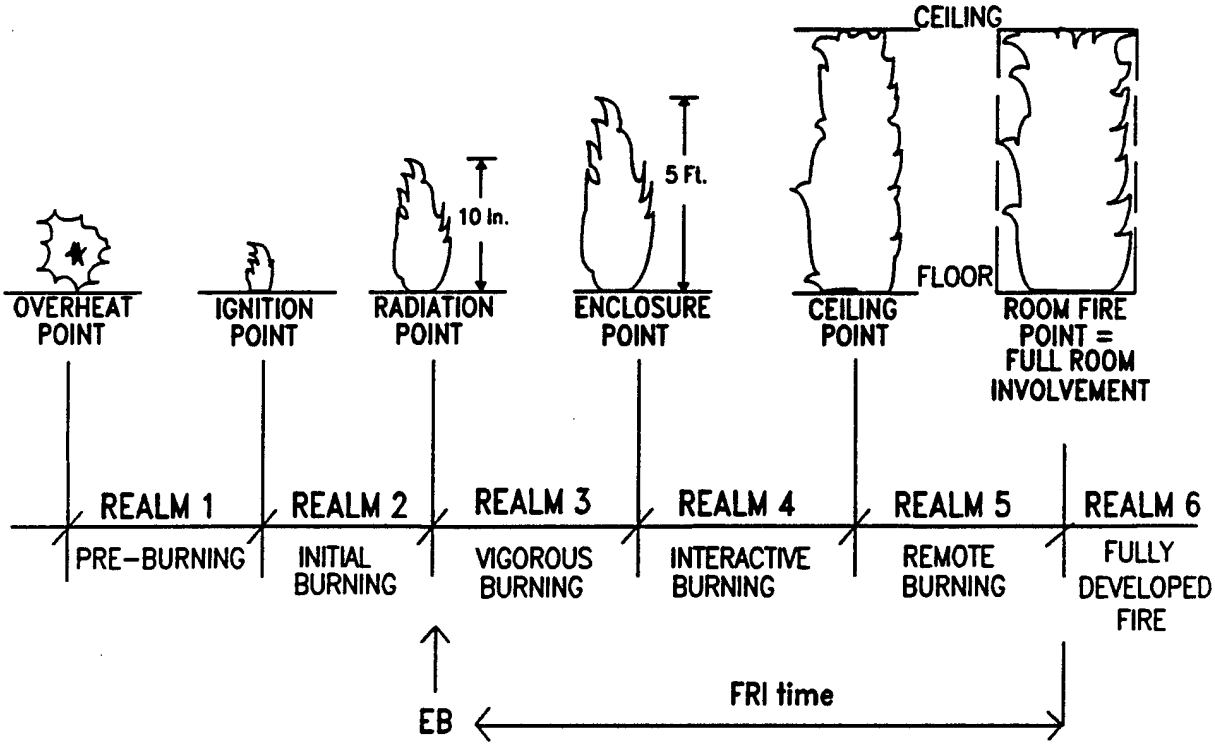

Figure 6-1. Realms of Fire Growth and Transition Points

6.1.2. Full Room Involvement

Flashover and full room involvement (FRI) are terms in fire science which have precise definitions even though there is no consensus on criteria that will result in flashover. When a low energy ignition occurs in an enclosure, a small fire starts and grows initially in much the same way that it would if it were in the open. At some point the enclosure begins to have an accelerating affect on the fire growth due to the radiational feedback to the fuel bed from the hot layer of combustion gases collecting below the ceiling. As the fire consumes the available oxygen in the enclosure the fire growth will slow and may even self-terminate if the ventilation is sufficiently restricted. If the ventilation is adequate, and other factors favoring fire growth are present, the fire will eventually grow to full room involvement (FRI). This condition is characterized by all the combustibles in the compartment actively surface burning. Survival in a compartment which has reached FRI is impossible without a self contained breathing apparatus and thermal protective clothing. The fire growth from EB to FRI may be accelerated by wall or corner effects depending on the location of the fire within the enclosure. Various researchers in fire science have attempted to define criteria for full room involvement. Two of the most commonly accepted criteria are heat

flux at the floor equal to 20 kw/m^2 and a rise in fire gas temperature in the enclosure equal to 500 degrees Celsius. In the SFSEM, the latter criteria is used to define the fully developed fire regime when full room involvement conditions are assumed to exist in the compartment as shown in Appendix B, Figure B-1.

Depending on the ventilation, rate of heat release, heat loss through the boundaries, and other factors, the fire growth may result in flashover. Flashover is a phenomena characterized by the sudden transition from localized burning to full room involvement. Full room involvement can be achieved without flashover but flashover always results in full room involvement.

6.1.2.1. FRI Time

Figure 6-1 has been annotated to indicate where established burning and full room involvement occur during an enclosure fire. The elapsed time between these two points is called the FRI time (for a given compartment) and calculated in the SFSEM in accordance with the following equation. This equation is based on a temperature correlation algorithm originally developed by Beyler and Deal and subsequently refined by Beyler and Peatross; see Appendix B for details concerning FRI time algorithms.

$$\Delta T = Qdot / (Mdot\ c_p + h_k A_T)$$

When ΔT is equal to 500 Celsius, full room involvement conditions are assumed to exist in the compartment.

Qdot is calculated in the fire growth regime as described in Section 6.3.4.1.1 and limited to the user-specified value for Qmax as explained in Appendix C.

Mdot is assumed to be the stoichiometric burning rate which is equal to Qdot divided by the heat of reaction of the fuel. The heat of reaction of hydrocarbon fuel (cellulosics, plastics, and flammable liquids) is essentially a constant value of 3 MJ/kG.

c_p is the specific heat of air which is essentially a constant value equal to 1040 J/kG Kelvin.

h_k is the heat loss coefficient of the boundaries which is calculated according to the equations for thermally thick or thermally thin boundaries as shown in Appendix B.

A_T is the total bounding surface area of the enclosure. This includes the deck, overhead and all vertical boundaries.

The product $h_k A_T$ is actually calculated in SAFE by summing this product for each barrier in the compartment to account for the possibility of different barrier types.

Note that FRI times calculated in SAFE for each compartment are dependent on certain variables which are specified in the user-defined scenario. For example the user specifies the

material condition XRAY or YOKE; this will result in different values for A_T since doors and hatches comprise a part of the compartment's barriers. Experience has shown that there is very little difference in the calculated FRI time due to an access to a compartment being open or closed. The reason for this is that the accesses comprise a relatively small percentage of the total bounding surface area. On the other hand, since an open door is considered a vent there is a significant difference in the calculated rate of heat release.

The FRI time algorithm developed by Beyler and Peatross is considered applicable to shipboard conditions. For example the algorithm includes a calculation for the heat loss coefficient, h_k, that takes into account if the barrier is thermally thin (bare steel or bare aluminum for example) or thermally thick (insulated steel or insulated aluminum for example). However, the algorithm assumes that the compartment is not irregularly shaped. This assumes that one of the three dimensions (length, width, or depth) is not excessively out of proportion to the others. It also assumes that the fire starts in the center of the room. This would preclude corner or wall effects from affecting fire growth. Finally, ventilation is accounted for in the algorithm in the calculation of Mdot c_p, however in the SFSEM stoichiometric burning conditions are assumed, therefore actual ventilation conditions are not used. Appendix B contains additional information concerning the FRI time algorithm and it's associated limitations.

6.1.3. Space-Barrier Concept

All ships are subdivided into compartments primarily to provide protection against progressive flooding. Compartmentation also provides segregation of ship's functions and barriers to the spread of fire, smoke, and toxic gases. The space-barrier concept in the SFSEM considers a ship as an assemblage of spaces (compartments) defined by barriers (decks, overheads, bulkheads, and the shell plating). The fire spreads by attacking the barriers in the room of origin, and if a barrier fails, the fire spreads to an adjacent space. This process is repeated for each sequence of space-barriers and referred to as a fire path until the fire is finally extinguished or until the expiration of the time specified by the user. Due to the similarity of bulkheads in a compartment, it is common for multiple fire paths to propagate from a compartment. The SFSEM accounts for these multiple paths and analyzes each.

A space in a ship is a volume enclosed by barriers. This includes tanks, voids, all types of compartments, the stack, shaft alleys, passages, etc. A space could even be considered an enclosure such as a walk-in reefer. Thermal and physical properties of barriers are stored in a database which the SAFE computer programs access. Also stored are Tbar and Dbar curves which determine the likelihood of barrier failure (see Section 6.3.4.3). The fuel load in each space determines the heat energy available to attack the barriers; this concept is discussed in the next section.

6.1.4. Heat Energy Impact

The fuel load in a compartment is the total weight of all combustibles in the compartment. It represents the total heat energy in the compartment. The rate at which this heat is released is important because in the fully developed fire regime this is the rate of heat release that attacks the barriers. This attack continues until the barrier fails or the fuel load is consumed. The combustibles in a compartment consist of its contents, interior finish, and boundaries. There are

two general classes of combustibles in non-nuclear surface ships: cellulosics and petro-chemicals. Examples of cellulosics are wood, paper and textiles. Examples of petro-chemical products include flammable liquids and synthetic polymers such as plastics and polyester. Petro-chemicals contain approximately twice the heat energy per pound as cellulosics. Therefore the total fuel load is calculated by adding the total weight of cellulosics and twice the weight of petro-chemical products. To convert the fuel load in pounds to heat energy in terms of BTU's per square foot, the Ingberg conversion is utilized as explained in the following paragraphs. Appendix D provides guidance in the calculation of fuel loads.

The concept of testing a full scale sample of a structural component or barrier material (under load if appropriate) to failure in a test furnace with a standard fire was first introduced in 1916. The standard time-temperature curve is defined in the United States by the American Society for Testing and Materials (ASTM) as a series of data points shown in Table 6-1 and defined mathematically as follows:

$$T = T_0 + 345 \log (0.133t + 1)$$

where T_0 and T are the temperatures (degrees Celsius or Kelvin) at time t = 0 and t = t respectively. The "fire-resistance" of a barrier or structural component is the time to failure in the standard ASTM E119 test. Ingberg, in 1928, hypothesized that equal areas under different time-temperature curves were equal in severity. If one of those curves was the standard curve, he proposed that the severity could then be related to the fire resistance requirement.[26] In a series of tests Ingberg identified fuel load density (combustible contents per unit floor area) as an important factor in determining fire severity. Since fire severity is related to barrier fire resistance in accordance with the equal area hypothesis, Ingberg related required barrier fire resistance directly to the fuel load density in Table 6-2.

Since the heat of combustion of cellulosics is approximately 8000 BTU/lb up to 40 lb/sq ft, 7600 BTU/lb for 50 lbs/sq ft, and 7200 BTU/lb for 60 lbs/sq ft or more, the fuel load density in pounds per square ft can be converted to heat energy in terms of BTU's per square foot as shown in Table 6-3.

Table 6-1. ASTM E119 Standard Time-Temperature Curve

Time (min)	Temperature (degrees Celsius)
5	538
10	704
30	843
60	927
120	1010
240	1093
>480	1260

Table 6-2. Ingberg's Fuel Load Density vs Required Barrier Fire Resistance

Fuel Load Density (cellulosics equivalent) (lbs/sq ft floor area)	Barrier Fire Resistance (Standard Fire) (hours)
10	1
15	1.5
20	2
30	3
40	4.5
50	6
60	7.5

Table 6-3. Heat Energy vs Fuel Load Density

Fuel Load Density (cellulosics equivalent) (lbs/sq ft floor area)	Heat Energy (BTUs/sq/ft)	Barrier Fire Resistance (Standard Fire) (hours)
10	80,000	1
15	120,000	1.5
20	160,000	2
30	240,000	3
40	320,000	4.5
50	380,000	6
60	432,000	7.5

In the SFSEM, the developers of the methodology use Table 6-3 and the results from ASTM E119 tests of the barrier materials to construct Tbar and Dbar curves for barrier materials not already in the database showing probability of failure versus heat energy impact. This subject is discussed in more detail in Section 6.3.4.2.

6.2. FIRE SAFETY AUDIT

The purpose of this audit is to identify hazards, fire protection measures, and to obtain information necessary for flame movement analysis by analyzing ships plans, reviewing historical records of fires on similar ships and conducting an initial ship check. The risk from fire in a compartment is a function of fire hazard factors which define the potential for a fire, and fire protection factors which mitigate or minimize the effects of the fire once it occurs.

One condition which affects the fire hazard factors and the fire protection factors in a compartment is the number of crew members. The size of the crew compared to the size of the ship affect early detection and extinguishment while the fire is in the incipient stage and manual fire extinguishment efforts after the fire has become established. Thus the compartment status of manned, unmanned with regular roving watches, or unmanned, should be considered when

designing the vessel's fire protection. This is especially important on modern ships with smaller numbers of crew members and on military ships with the minimal manning concept.

6.2.1. Ship Design Factors

Design factors include compartmentation, location of hatches and doors, bulkhead material selection, ventilation, etc. A ship is subdivided into fire zones by the installation of fumetight and watertight decks and transverse bulkheads. Each zone is further subdivided into compartments by non-structural or joiner bulkheads. Consequently, a fire is confronted with many barriers which will tend to retard its growth. On the other hand excessive compartmentation can also serve to prevent a fire from being detected early. Accesses to compartments are sometimes located so as to avoid tripping hazards or for other design reasons. Sometimes compartment accesses are located in close proximity to ventilation exhausts from machinery spaces. If this should occur in the case of a berthing area, this could be a potential threat to life safety.

Most commercial vessels have segregated ventilation systems which tend to isolate fires to particular zones. These zones may contain numerous compartments. This allows the smoke and toxic gases generated in a shipboard fire to be rapidly transported from compartment to compartment. The ventilation-controlled shipboard environment, however, frequently serves to reduce the probability that the fire will grow to fully involve the compartment in fire. Thus damage control personnel can gain significant time advantages in fighting the fire. Furthermore the installed ventilation systems could be used for the control of smoke and toxic gases.

6.2.2. Fire Hazard Factors

The fire hazard for a particular compartment can be categorized into two separate components: internal and external fire hazards. The internal fire hazard factors usually include the fuel loading; the combustibility, flame spread and smoke production for the various materials in the ship; and the various types of ignition sources. The size of the ignition source varies with the cause of the fire. An accidentally induced fire will usually have a low-energy ignition source such as a cigarette. Accidental fires are usually caused by equipment or people failures. The prevention of fires due to equipment failures is often accomplished through design techniques and intrinsically safe equipment. Training and education can minimize, but not eliminate, the human errors that lead to fires. Intentional fires or arson will also never be eliminated, although supervision and other deterrents are effective in minimizing arson. Ignition sources for arson fires range from low to extremely high energy.

A fire, external to the compartment being analyzed, is of concern when it can penetrate the compartment's boundaries either thermally or structurally. It is of most concern when it affects the life safety of people due to immobility because of sleep or other incapacitation. It is also of major concern when it affects the operationally essential compartments. The severity of the external fire will normally be a function of the types of adjacent compartments and how the fire was started in them. Normal or accidental fires will provide one level of fire severity while a fire caused by a collision or enemy missile hit may provide a fire with a much higher energy level. Fires in compartments substantially removed from the compartment being analyzed can also affect

the continuity of mission by denying access to vital spaces due to smoke and toxic gases, or by rendering vital services and electrical cabling inoperative.

6.2.3. Fire Protection Factors

Fire defense mechanisms on ships can be classified into two groups - active and passive. Passive fire defense measures are those features that resist fire simply by their presence and without the need for external stimulus to operate. Active features are those that require human, electrical, or mechanical stimulus to operate and resist the fire. Tables 2-2 and 2-3 are examples of each type of fire defense.

In the SFSEM passive fire defense features are analyzed in the determination of the self-termination or "I-values". The active fire defense features are analyzed in the fixed fire protection system extinguishment and manual fire extinguishment events. These events are also referred to as the "A-values" and "M-values" in the flame movement analysis module. The determination of these and other critical values are explained in the next section.

6.3. DETAILED FLAME MOVEMENT ANALYSIS

EB is the initial event in flame movement analysis. This event is assumed to have occurred in a compartment before conducting an analysis of flame movement. An appropriate breakdown of the ways a fire can go out on a ship is self-extinguishment (I), extinguishment by fixed fire protection systems (A), and manual fire extinguishment with portable and semi-portable equipment (M) as shown in Figure 6-2. Maximum similarity to the Building Fire safety Engineering Method is maintained by using the letters I, A, and M for these events. The following sections explain the events in the network diagram for flame movement shown in Figure 6-2. The definition of terms in Figure 6-2 is shown in Table 6-4.

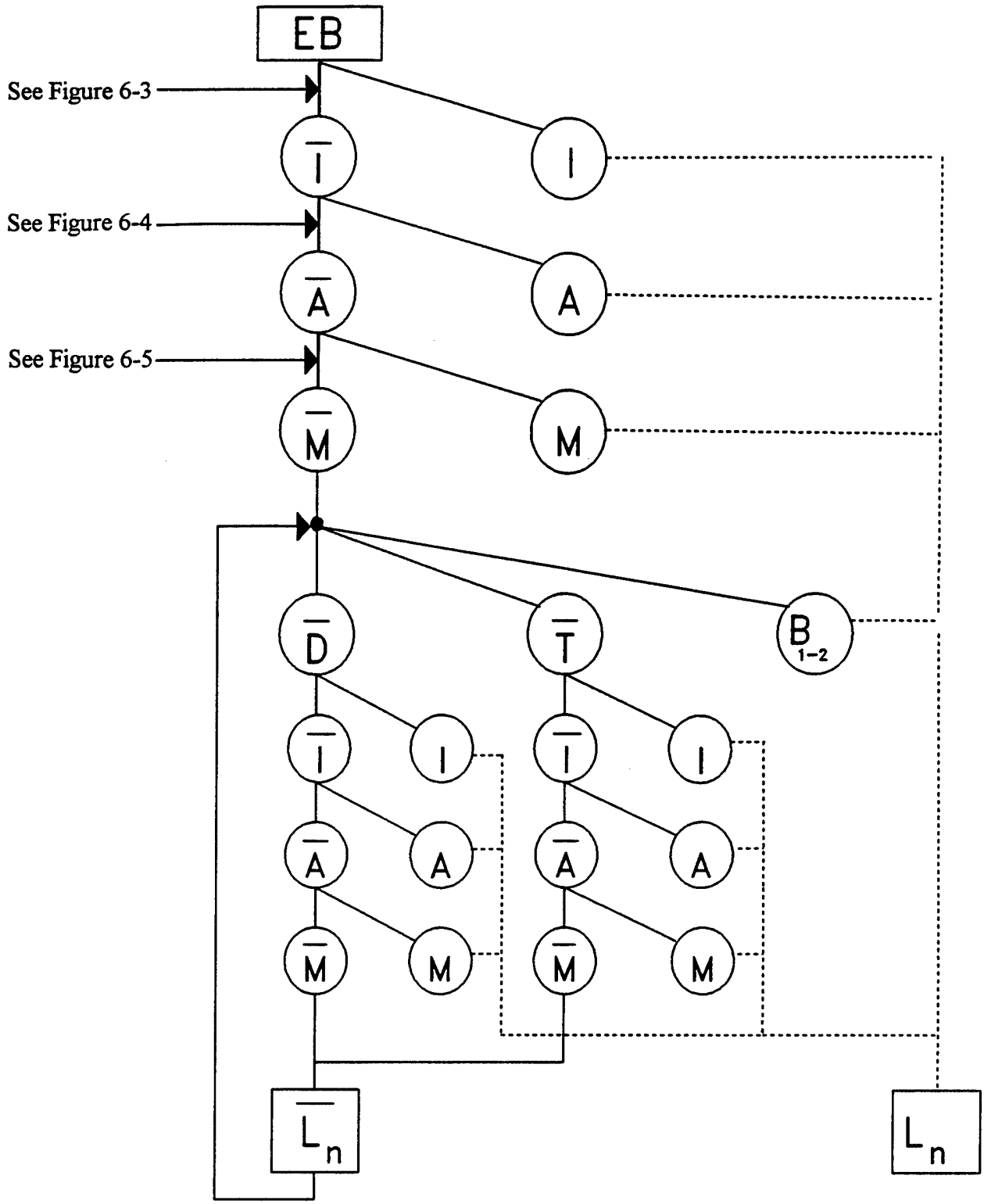

Figure 6-2. Network Diagram for Limiting Flame Movement on Ships

Table 6-4. Definition of Terms in Figure 6-2

Abbreviation	Definition
EB	Established Burning
I	Self Termination of Fire
A	Fixed Fire Protection System Extinguishment of Fire
M	Manual Fire Extinguishment of Fire
Dbar	Durability Failure of Barrier
Tbar	Thermal Failure of Barrier
B	Barrier Success in Limiting Fire
L	Limit of Flame Movement

6.3.1. Limitation by Self-Termination

In a compartment where established burning has occurred, the fire can go out in one of three different ways (or else it continues to grow). The first way is for the fire to simply go out on its own without further intervention, or self-terminate. This may happen if the fuel quantity, type, and distribution are such that they will not support continued combustion. Ventilation is also a major factor in the fire self-extinguishing. If the fire does not self-extinguish, it grows in size with time. Thus this tendency to self-extinguish is often referred to as the fire growth hazard potential or the I-value.

The probability of self-termination is determined from the network diagram shown in Figure 6-3. Each of the three intermediate events in the I-value network diagram describes fire limitation prior to the enclosure point (Ie), prior to the ceiling point (Ic), and prior to the room point (Ir). The enclosure point has been reached when the fire first touches a boundary of the compartment. Similarly, when the overhead of the compartment becomes involved the ceiling point has been achieved and finally, the room point is synonymous with full room involvement. Table 6-5 provides a definition for all of the acronyms used in Figure 6-3.

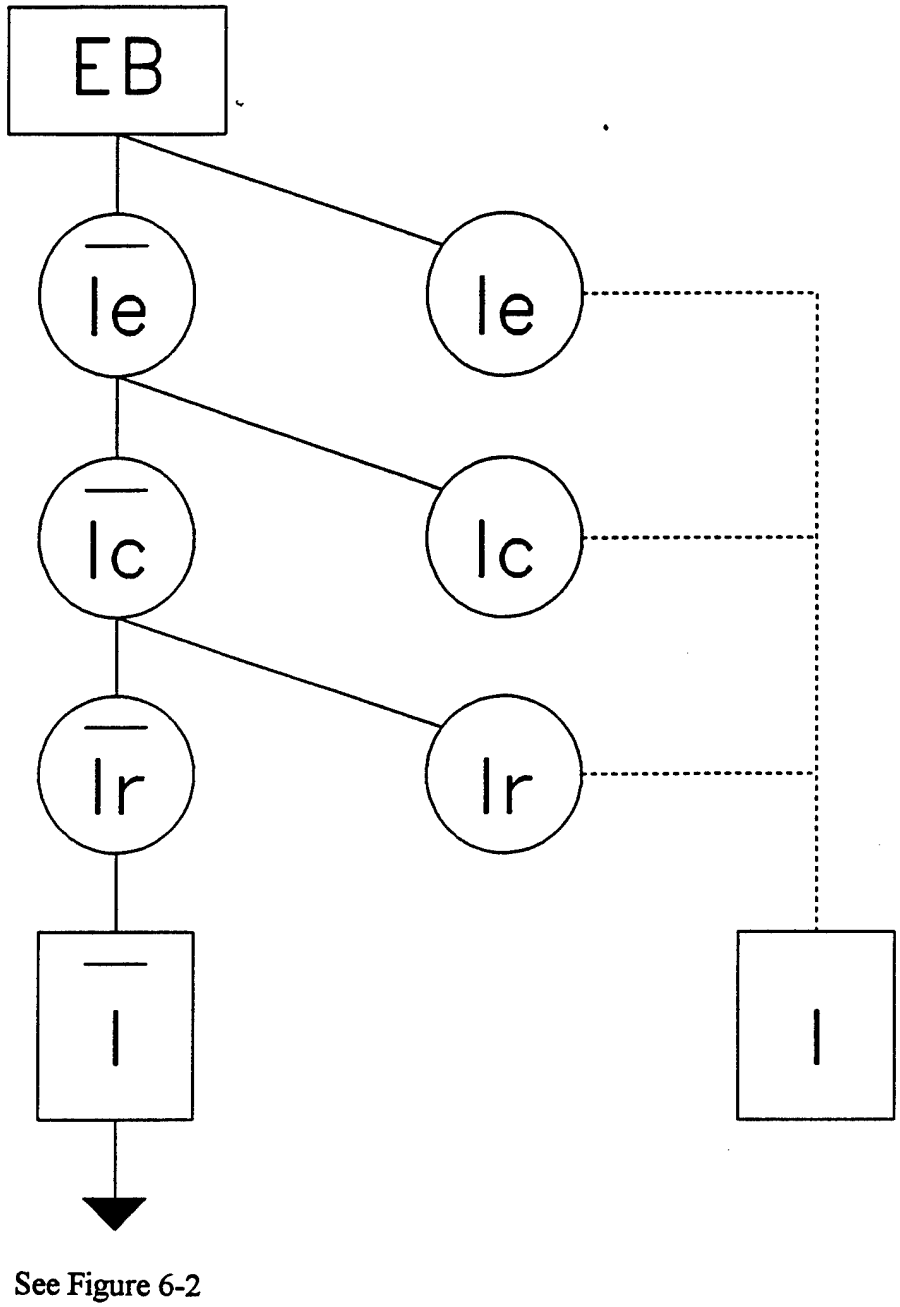

Figure 6-3. Network Diagram for Self-Termination on Ships

Table 6-5. Definition of Terms in Figure 6-3

Abbreviation	Definition
Ie	Self-Termination Before Enclosure Point
Ic	Self-Termination Before Ceiling Point
Ir	Self-Termination Before Room Point

The probabilities associated with self-termination vary with the assumed location of EB. For example if the fire starts in a corner of the compartment the enclosure point is reached simultaneously with EB. Furthermore, due to the corner effect, the ceiling point will be reached much earlier than if the fire had started in the center of the compartment. The engineer/analyst must integrate all of the possibilities for location of EB when assigning the probabilities of I-values.

As noted earlier, ventilation has a significant influence on the time for fire propagation and for the likelihood of self-termination in a compartment. The chance event that doors or hatches may be open or closed should not alter the evaluation of the compartment's I-values. Consequently, for the purpose of assigning I-values, it is assumed that sufficient oxygen is present to allow stoichiometric burning of the combustibles. This ensures a conservative approach generally employed in the SFSEM.

6.3.2. Limitation by Fixed Fire Protection System Extinguishment

The network diagram for fixed fire protection system extinguishment on ships is shown in Figures 6-4 and 6-4A. The acronyms used in these figures are defined in Table 6-6. Since fixed fire protection systems on ships are either automatic or automated, the symbol "A" is used in the associated network diagrams. The major difference between this diagram and its counterpart for buildings is that ships are generally equipped with multiple, manually activated, fixed fire protection systems discharging a variety of firefighting agents while buildings are equipped with a single, automatic, sprinkler system discharging water. It is still appropriate, however, to consider the probabilities of extinguishment in sequentially expanding areas of the compartment being studied. The reason for this is that the probabilities of extinguishment vary with the area of the compartment and the related fire involvement. Therefore, this network diagram, like its counterpart for buildings, is used to evaluate the probability of success of a particular fixed system to control or extinguish a fire within a specific deck area of the compartment.[14]

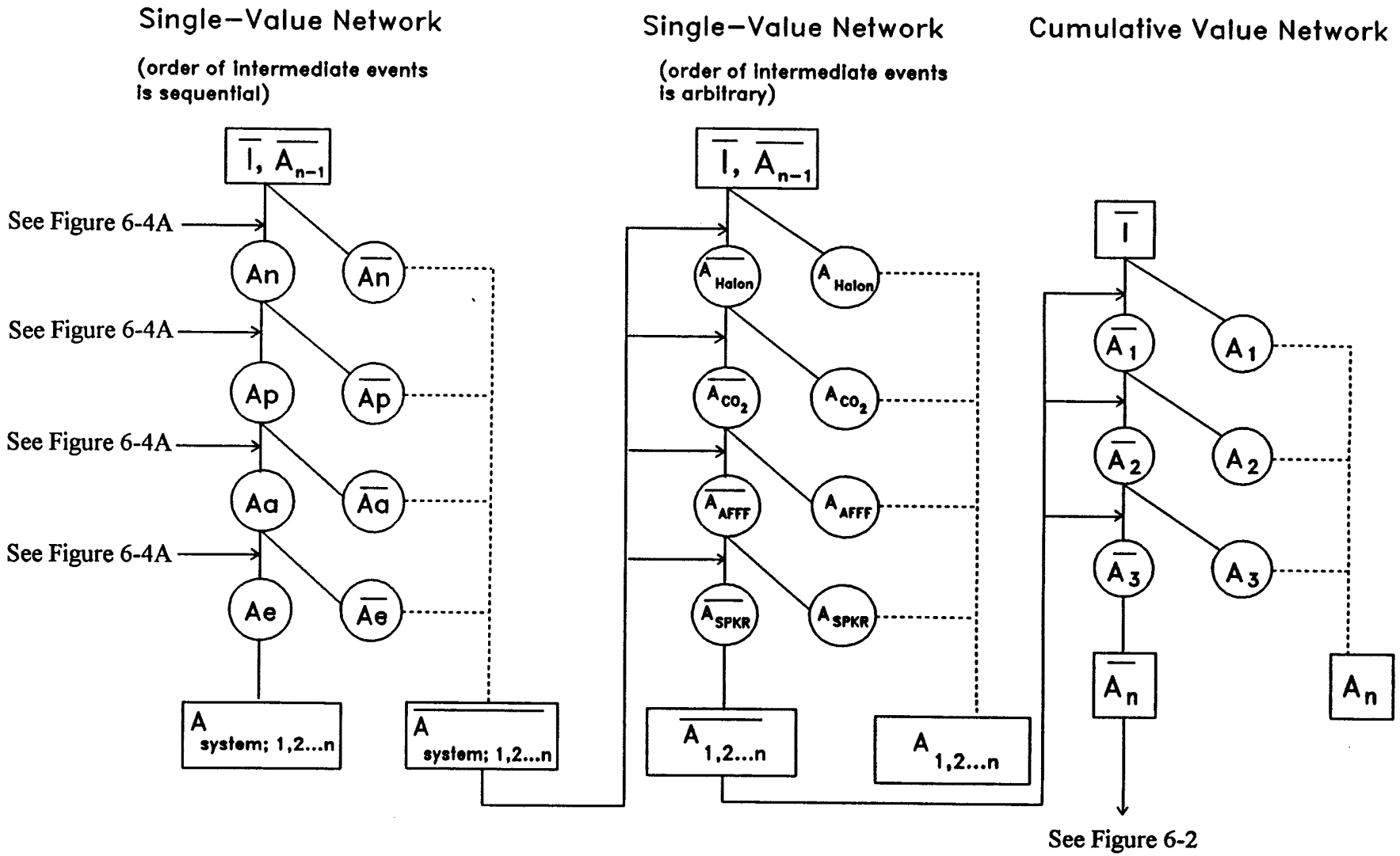

Figure 6-4. Network Diagram for Fixed Fire Extinguishing System Suppression on Ships

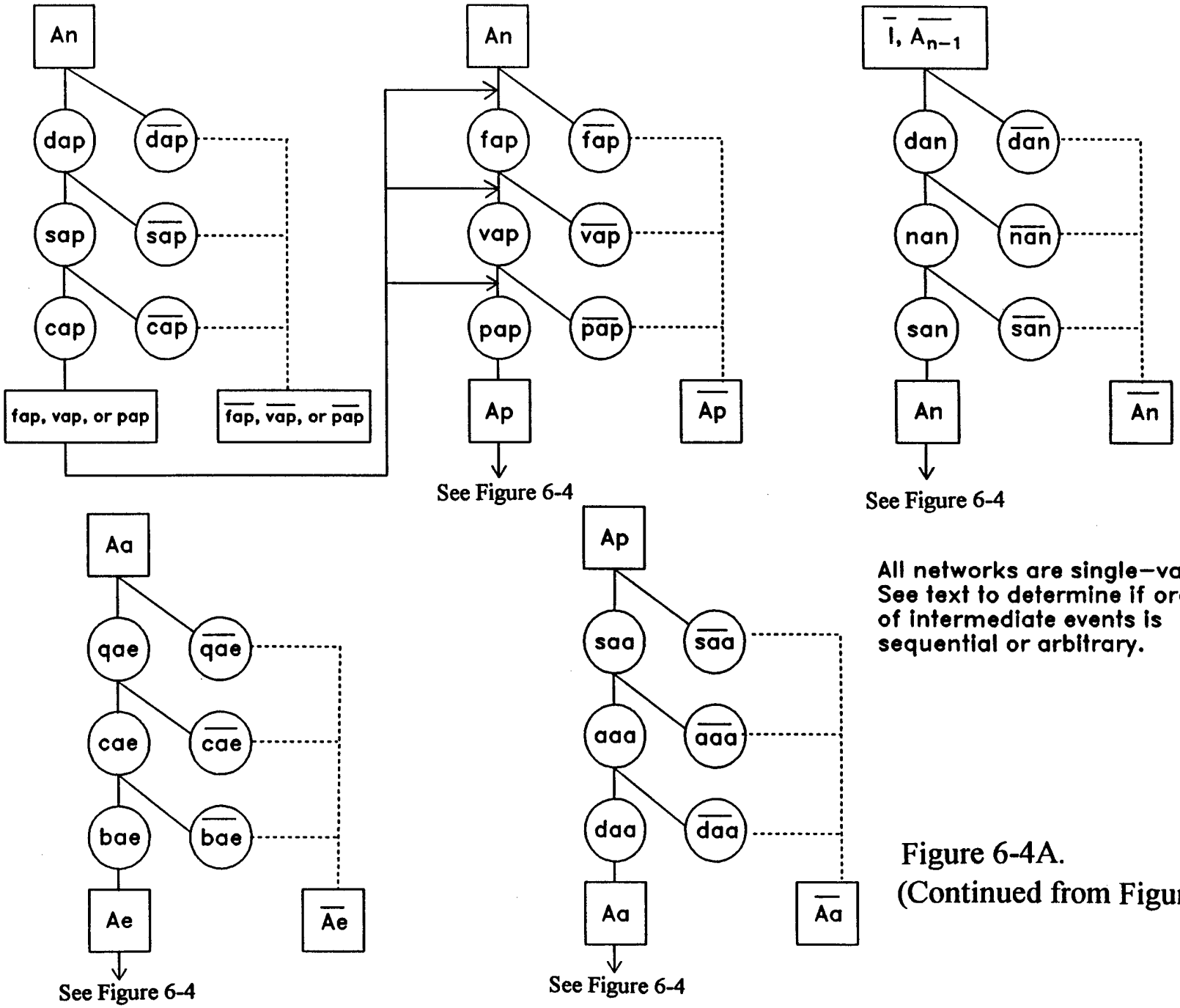

All networks are single–value. See text to determine if order of intermediate events is sequential or arbitrary.

Figure 6-4A.
(Continued from Figure 6-4)

Table 6-6. Definition of Terms in Figures 6-4 and 6-4A

Abbreviation	Definition
$A_1, A_2, A_3, \ldots, A_n$	Fixed Fire Protection System Extinguishment Before Fire Grows to Size Denoted by Subscript
A_{Halon}, A_{CO2}, A_{AFFF}, $A_{Sprkr}, \ldots, A_n$	Extinguishment by Type of Fixed Fire Protection System Denoted by Subscript
An	Notification of Fire
Ap	Compartment Preparation
Aa	Agent Application
Ae	Fire Extinguishment
dan	Detection of Fire
nan	Notification of the Bridge of the Fire
san	Sound the Alarm with the Location and Class of Fire
fap	Secure the Fuel Supply
vap	Secure (or Provide) Ventilation
pap	Secure the Electrical Power
dap	Decide to Secure the Fuel, Ventilation or Power
sap	Start to Secure the Fuel, Ventilation or Power
cap	Complete Securing the Fuel, Ventilation or Power
saa	Fixed Fire Protection System Alignment for Operation
aaa	Agent Discharges from the Nozzle into the Compartment

The network diagram for fixed fire protection system extinguishment is structured so that each fixed system that may be present in a compartment is evaluated separately and results accumulated as shown in Figure 6-4. However, each system is evaluated for the same four components. These components are notification (An), compartment preparation (Ap), agent application (Aa), and fire extinguishment (Ae). Notification involves detection of the fire, notification of the bridge and sounding the alarm with the location and class of fire. Preparation involves the necessary actions to prepare a compartment for the release of a firefighting agent. Agent application involves the reliability of the fixed fire protection system to release the agent onto the fire in the compartment when it is activated. Fire extinguishment involves the design of the fixed fire protection system to successfully extinguish the fire. Each of these components is discussed in more detail in the following sections.

The notification event is subdivided into three events as shown in Figure 6-4A. These events are sequential in nature and include: detection of the fire (dan), notification of the bridge (nan), and sounding the alarm (san). Detection can be accomplished by an automatic installed fire/smoke detector or by a crew member/passenger/watchstander discovering the fire. The notification event probabilities vary according to the method of transmitting the information to the

bridge. A person can be sent to the bridge, the telephone (or other internal communication systems) could be used, or an automatic detector may alert the bridge electronically. A person going to the bridge takes the most time and is somewhat likely to relay incorrect information, whereas automatic detectors are extremely fast and accurately report the location of the fire. The final event in this network is the sounding of the alarm with the location and class of fire. Obviously it is necessary for the firefighters to be notified of the class of fire and the proper location before they can respond with the appropriate equipment or to activate the appropriate fixed fire protection system.

The events that comprise the preparation event involve the fuel (fap), ventilation (vap) and electrical power (pap) in the compartment. The actions required in the preparation event must occur prior to the release of the firefighting agent in the compartment. Securing the fuel is critically important in a machinery space fire and in the case of a class B spray fire, if the fuel supply is not secured, attempts to extinguish the fire are most likely futile. Ventilation refers to the appropriate action required prior to release of the agent. This may include ventilating the space to exhaust the smoke and heat, or it may mean securing the ventilation blowers prior to releasing a total flooding gaseous agent such as Halon 1301 or CO_2. Electrical power is usually secured in a space prior to release of an agent and in the case of a class C fire it is critically important.

The preparation event, as shown in Figure 6-4A, has been further subdivided with another network. This network involves three actions that apply to each of the components in the preparation network. These events are the decision to secure the fuel, ventilation or power (dap), the commencement of action to secure the fuel, ventilation or power (sap), and the completion of the action to secure the fuel, ventilation or power (cap). Since these actions are required prior to releasing an agent and they consume valuable time at a crucial stage of fire growth, their evaluation could reveal problems in the fire protection doctrine of the vessel.

The events that constitute the agent application component are system alignment (saa), agent discharges from the nozzle (aaa), and agent discharges on the fire in the compartment (daa). System alignment involves all the physical devices (e.g., electrical, mechanical, pneumatic, hydraulic) that have to be properly configured for the system to work if it is activated. The aaa event includes the probability that the firefighting agent will flow from its storage location to the nozzle and discharge into the compartment. The daa event depends on the aim and location of the nozzle. Note, the agent application event for fixed fire protection systems is an indicator of the reliability of the particular system under evaluation. Since this event is a function of the system and not the deck area, the evaluation of this event only needs to be done once.

The events that comprise the fire extinguishment event are a function of deck area therefore this event must be evaluated for a given deck area in the compartment. As shown in Figure 6-4A the fire extinguishment event can be subdivided into the following three events that describe the design effectiveness of the fixed fire protection system: Quantity of agent (qae), concentration of agent (cae), and blackout (bae). Agents in fixed systems include Halon, CO_2 and AFFF and others which require a particular design concentration and quantity to be effective.

Blackout refers to the cessation of visible flaming whereas extinguishment refers to the suppression of smoldering combustion and a return to pre-fire conditions.

6.3.3. Limitation by Manual Fire Extinguishment

The occupants in a building are generally untrained in firefighting. Moreover they are generally encouraged to evacuate and notify the city fire department in the event of a fire. The fire department responds to the scene with a trained professional team of firefighters. In contrast, crew members on military ships all receive a minimum amount of firefighting training, and in general they cannot evacuate the ship although they may be able to evacuate the compartment. Passengers in a ship are much like the occupants in a building. The fire department on a ship consists of a damage control team from a repair locker. If the fire department on a building fire desires assistance, they can call in a second alarm. Similarly, in a ship fire the Master can request assistance from city firefighters if in port or the Coast Guard if at sea. Other ships can offer assistance if in close proximity as well. These conditions are reflected in the network diagram for manual fire extinguishment shown in Figure 6-5. Figure 6-5A provides an additional level of detail in order to develop some of the probabilities shown in Figure 6-5. The various acronyms used in Figures 6-5 and 6-5A are defined in Table 6-7.

The major events in the evaluation of manual fire extinguishment are notification (Mn), compartment preparation (Mp), agent application (Ma), and fire extinguishment (Me). Each of these events is evaluated for one of three possible groups that could be attempting the manual fire extinguishment effort. The notification event involves the reliability of the fire detection system and the notification of the bridge so that the nature and location of the fire can be announced to all hands. Preparation involves appropriate action concerning the fuel, ventilation and electrical power in the affected compartment. Agent application involves the firefighters arriving on scene with the proper equipment, accessing the compartment and successfully applying the appropriate firefighting agent. The fire extinguishment event evaluates the probability that the techniques and equipment employed by the firefighters are successful in extinguishing the fire.

The firefighting efforts on a ship are increased with the severity of the fire. The flying squad is a team of three or four crew members who are specially trained and designated to respond immediately to the scene of a reported fire and hopefully extinguish it before it can grow in size. In the meanwhile, the repair party is assembling, dressing out in firefighting ensembles and manning hose lines. If the flying squad is unable to extinguish the fire, the repair party will take over or complement the firefighting effort. In either event, the Master may decide to request assistance from other ships or other organizations such as the Coast Guard, Harbor Patrol, city fire department etc. The network diagram is structured to evaluate the probability of success of each of these groups as shown in Figure 6-5. One of the benefits of this type of evaluation is the ability to demonstrate and evaluate the relative effectiveness of each group.

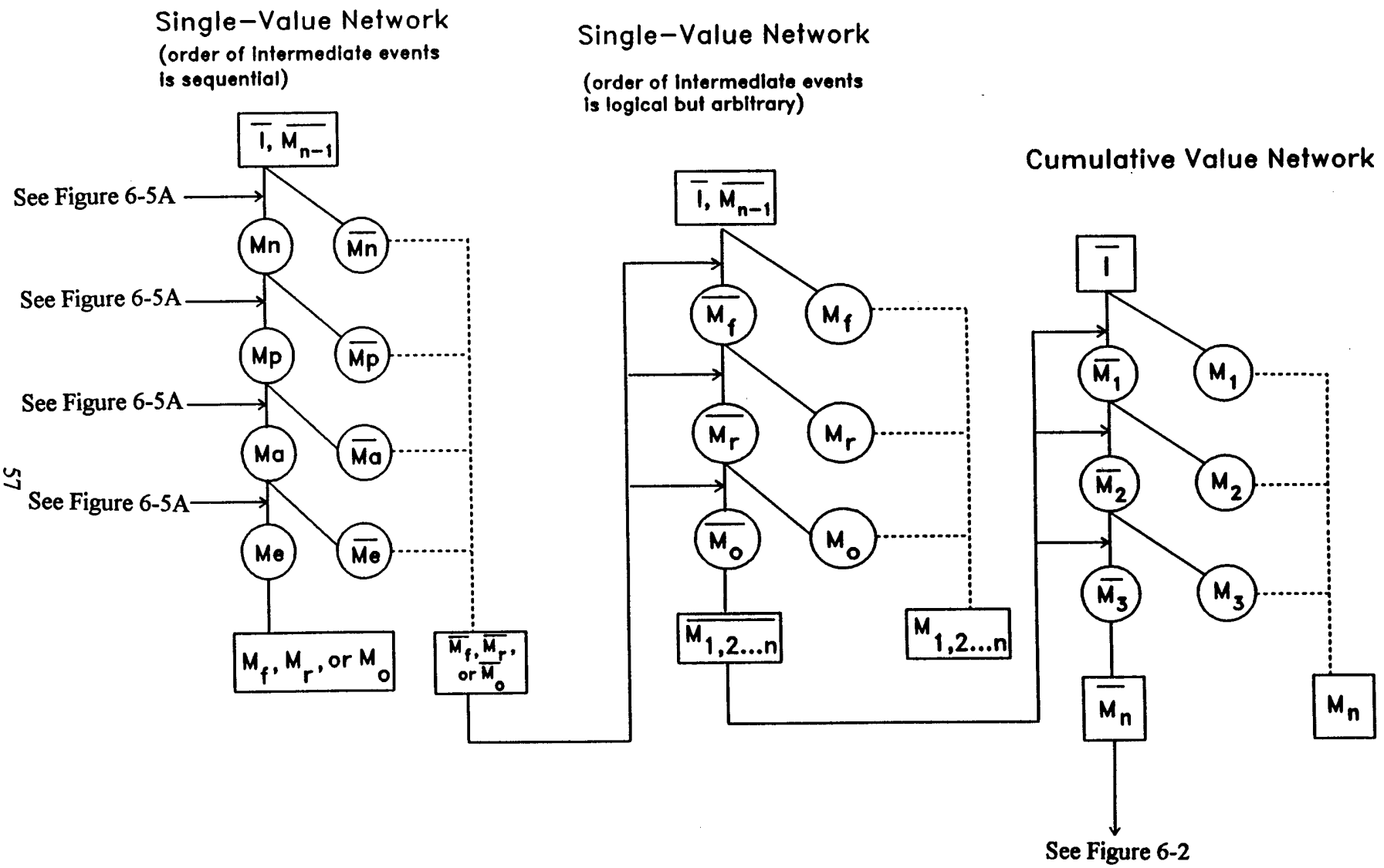

Figure 6-5. Network Diagram for Manual Suppression of Fire on Ships

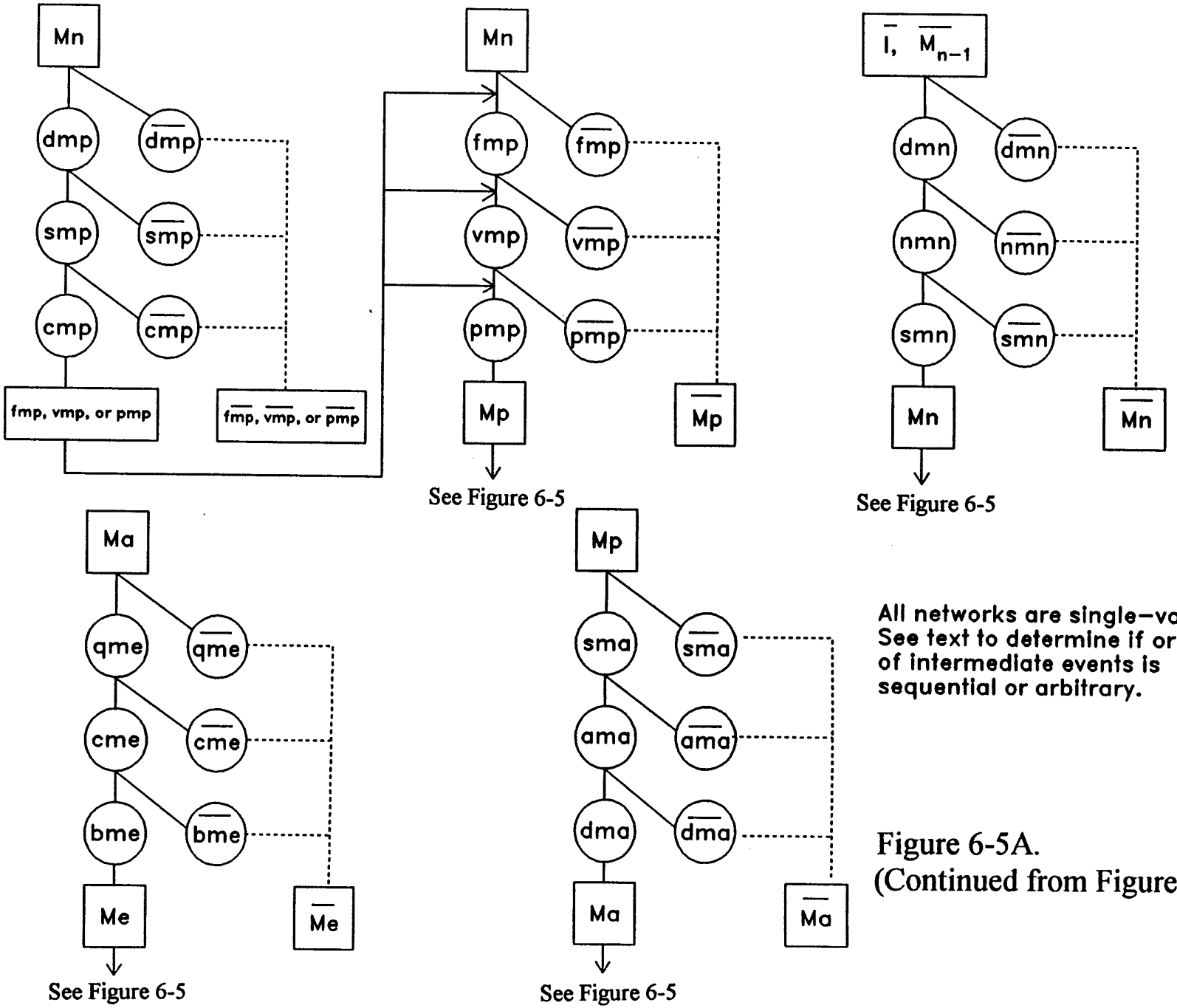

All networks are single–value. See text to determine if order of intermediate events is sequential or arbitrary.

Figure 6-5A.
(Continued from Figure 6-5)

Table 6-7. Definition of Terms in Figures 6-5 and 6-5A

Abbreviation	Definition
$M_1, M_2, M_3, \ldots, M_n$	Manual Fire Extinguishment Before Fire Grows to Size Denoted by Subscript
M_f	Manual Fire Extinguishment by Flying Squad
M_r	Manual Fire Extinguishment by Repair Party
M_o	Manual Fire Extinguishment by Outside Assistance
Mn	Notification of Fire
Mp	Compartment Preparation
Ma	Agent Application
Me	Fire Extinguishment
dmn	Detection of Fire
nmn	Notification of the Bridge of the Fire
smn	Sound the Alarm with the Location and Class of Fire
fmp	Secure the Fuel Supply
vmp	Secure (or Provide) Ventilation
pmp	Secure Electrical Power
dmp	Decide to Secure the Fuel, Ventilation or Power
smp	Start to Secure the Fuel, Ventilation or Power
cmp	Complete Securing the Fuel, Ventilation or Power
sma	Firefighters Respond to Scene of Fire
ama	Firefighters Access the Compartment
dma	Agent Discharges on the Fire in the Compartment

The events in the manual fire extinguishment event closely parallel the events in the fixed fire protection system extinguishment event. The notification and preparation events are identical - only the acronyms are different to distinguish them from the fixed fire protection system extinguishment event but the definitions are precisely the same. The agent application and fire extinguishment events are parallel in construction but the events and definitions are different as explained in the following sections.

Agent application requires the firefighters to respond to the scene (sma), access the compartment (ama), and discharge agent on the fire (dma) as shown in Figure 6-5A. These actions are the same regardless of whether it is the flying squad, repair party or outside assistance,

but the times required will most likely be quite different. Obviously it takes longer for a repair party to muster, dress out and respond than for the flying squad to proceed directly to the scene of the fire upon hearing the announcement. Outside assistance has to travel to the ship first and then to the scene of the fire in the ship second, so their time might very well be measured in hours compared to minutes for the repair party and seconds for the flying squad.

The fire extinguishment event in manual fire extinguishment involves the following three events as shown in Figure 6.5A: quantity of agent (qme), continuous discharge of agent (cme), and blackout (bme). Training greatly influences the probability of these events. The proper quantity, type and location of firefighting equipment is another factor. The best firefighters would be unsuccessful without the proper equipment. Finally the sea state affects manual fire extinguishment. If the ship is rolling and pitching severely due to weather conditions it degrades the effectiveness and speed of the firefighting effort. All of these factors need to be considered in the assignment of M-values by the engineer/analyst.

6.3.4. Limitation by Barriers

The probabilities that the fire will be extinguished in one of the three ways described above can be determined with the aid of the associated network diagrams. If the fire is not extinguished and grows to full room involvement it is assumed to attack the barriers with the rate of heat release generated in the fully developed fire regime. The barriers are first evaluated in the room of origin. If their evaluation reveals failure then it is assumed that EB is established in the appropriate adjacent compartment. The likelihood of self-termination, fixed fire protection system and manual fire extinguishment is then evaluated for the adjacent compartment. If full room involvement is achieved in the adjacent compartment before the fire is extinguished, the adjacent compartment's barriers are attacked. This process is repeated until the fire is limited or the user-specified evaluation time elapses.

The next few sections will address the two basic failure modes of barriers. First the unexposed side of a barrier may fail by a hot spot ignition, referred to as a thermal failure, or Tbar. The other mode of failure is massive failure of the barrier to contain the heat and smoke. This mode of failure is referred to as a durability failure, or Dbar. Note that as heat continues to attack the barrier, a thermal failure is quite likely to grow into a durability failure. The criteria for barrier failure are specified by the user as explained in section V-H.6 of the SAFE User Manual.[1] Before discussing failure modes however, the rate of heat release which causes barrier failure is discussed.

6.3.4.1. Rate of Heat Release

The rate of heat release is an important parameter in the SFSEM. It is a key variable in the determination of full room involvement time in the fire growth regime. It also represents the magnitude of the attack on the barriers in the fully developed fire regime. The following sections describe the equations used to quantify this parameter in both regimes.

6.3.4.1.1. Fire Growth Regime

Fire testing has shown that the heat release rate in the fire growth period (before full room involvement) can be characterized by the following time-dependent exponential function for the majority of common fuels:

$$\text{Qdot (pre FRI)} = \alpha\,(t - t_i)^2$$

where Qdot is the rate of heat release in kilowatts, α is the fire growth rate in kilowatts per second squared, t is time in seconds, and t_i is the time in seconds until the fire starts to grow according to the second power of time. Since α is a proportionality constant, its value can be determined empirically. In an extensive series of tests at Factory Mutual Research Corporation, the fire growth rates shown in Table 6-8 were determined for actual fire situations involving different commodities and geometric storage arrangements:[27]

Table 6-8. Typical Shoreside Fire Growth Rates

Fire Growth Rate	α
Slow	.00293
Medium	.01172
Fast	.0469
Ultra-Fast	.1876

The rates shown in Table 6-8 are considered conservative for ships since they were determined for cellulosic type materials in a warehouse environment. Petro-chemicals, commonly found on board ships, are known to burn more vigorously and shipboard environments are quite different than warehouses. The fire growth rates shown in Table 6-9 are considered more appropriate for shipboard fuel loads and ventilation conditions:[28]

Table 6-9. Shipboard Fire Growth Rates

Fire Growth Rate	α
Slow	.001
Medium	.01
Fast	.1
Ultra-Fast	1.0

The effect of this parameter in the calculation of time to full room involvement is significant. Guidance is provided in Appendix C for selection of fire growth models corresponding to certain fuel types commonly encountered in shipboard compartments. This is an important step in the analysis since the fire growth model determines the fire growth rate and maximum rates of heat release used to calculate heat release rate (and therefore FRI times) in the pre-FRI fire growth regime.

6.3.4.1.2. Fully Developed Fire Regime

After full room involvement, the burning rate of the fuel may be expressed by the following rate of heat release:

$$\textbf{Qdot (post-FRI)} = \textbf{(mdot) (X) } (\Delta H_{c,air})$$

where Qdot is the rate of heat release in kilowatts, mdot is the mass flowrate of incoming air in kilograms per second, X is an efficiency factor to account for incomplete combustion, and $\Delta H_{c,air}$ is the heat of combustion in air of the burning fuel in kilojoules per kilogram. Drysdale has shown that the mass flowrate of incoming air can be approximated by:

$$\textbf{mdot} = .52\ A\ H^{.5}$$

where $A\ H^{.5}$ is the ventilation factor, A is the area of the vent in square meters and H is the vent height in meters.[29] Since the heat of combustion of cellulosics ($\Delta H_{c,air}$) is approximately 3000 kJ/kg and assuming stoichiometric burning conditions (X = 1) the rate of heat release in the fully developed fire regime reduces to the following:

$$\textbf{Qdot (post-FRI)} = 1500\ A\ H^{.5}$$

The above equation is based on the following assumptions:

- Stoichiometric Burning of cellulosics fuel
- Natural ventilation through a single vent opening in a bulkhead
- Qdot is approximate because mdot and $\Delta H_{c,air}$ are approximate

While these assumptions are conservative, the engineer/analyst should bear in mind that the following conditions are likely to be encountered in a shipboard environment:

- Most compartments in ships have forced ventilation systems. During a fire evolution the vent fans are secured, but the vent openings are in general left open. Therefore ventilation is likely to be somewhat less than natural ventilation conditions.

- Engineering spaces in ships have the highest frequency of EB indicating they are the most likely to be involved in a fire. These spaces contain a relatively high percentage of petro-chemical fuels compared to cellulosics.

- Single vent openings in a bulkhead are not common in ships. Multiple vent openings are more common because supply and exhaust are ducted separately. Overhead vent openings are common as well.

- Horizontal vents are common in ships. Determination of the area for horizontal vents is not affected but the "height" of a horizontal vent is assumed equal to the height of the compartment. The validity of this assumption has not been validated.

The engineer/analyst should take into account the first two assumptions when interpreting the results from the SFSEM. In the case of horizontal vents, the value for H_i is the height of the compartment. The following equations are used to deal with multiple vents:

$$\mathbf{A = \Sigma A_i \text{ and } H = (1/i) \Sigma H_i}$$

If a door or hatch or window is open, the area of that closure is added to the other vent openings for that compartment and thus included in the calculation for the ventilation factor $A H^{.5}$. Qdot is not allowed to exceed a maximum value called Qmax. Values for Qmax and alpha are specified for the fire growth model selected by the user to represent the fuel load in a given compartment. These fire growth models are listed in Appendix C.

6.3.4.2. Barrier Failure Modes

In the SFSEM, a barrier is any surface that separates two spaces and which will stop, or delay ignition from one space to the other. Barriers may be penetrated, or unpenetrated, combustible, or noncombustible, load bearing or non-load bearing. In order to provide flexibility, a barrier may also be defined as a "zero strength" barrier. This concept is useful for segmenting large areas into smaller areas for more detailed analysis.

The ability of barriers to limit the spread of fire is dependent on their fire resistive effectiveness. In the SFSEM this effectiveness is described by Tbar and Dbar curves. The Tbar curve is a plot of the probability of a barrier preventing a thermal or hot spot failure on the unexposed side versus heat energy impact. A characteristic Tbar curve is shown in Figure 6-6. The Dbar curve is a plot of the probability of a barrier preventing a massive or durability failure versus heat energy impact. A characteristic Dbar curve is shown in Figure 6-7. A zero probability of barrier failure equates to success in barrier performance (fire limitation). Correspondingly, failure in barrier performance is equivalent to 100% probability of Tbar or Dbar.

Tbar and Dbar curves are currently plotted with three data points connected by straight lines. Two of the data points correspond to zero and 1.0 probability of barrier performance. The third is plotted at 50% probability of failure. Since the ordinate axis for probability of barrier performance is normally plotted on a log scale, this causes the 50% data point to appear "high" in Figures 6-6 and 6-7. The heat energy impact is plotted on a linear scale on the abscissa axis in terms of BTU's per square foot (of deck area).

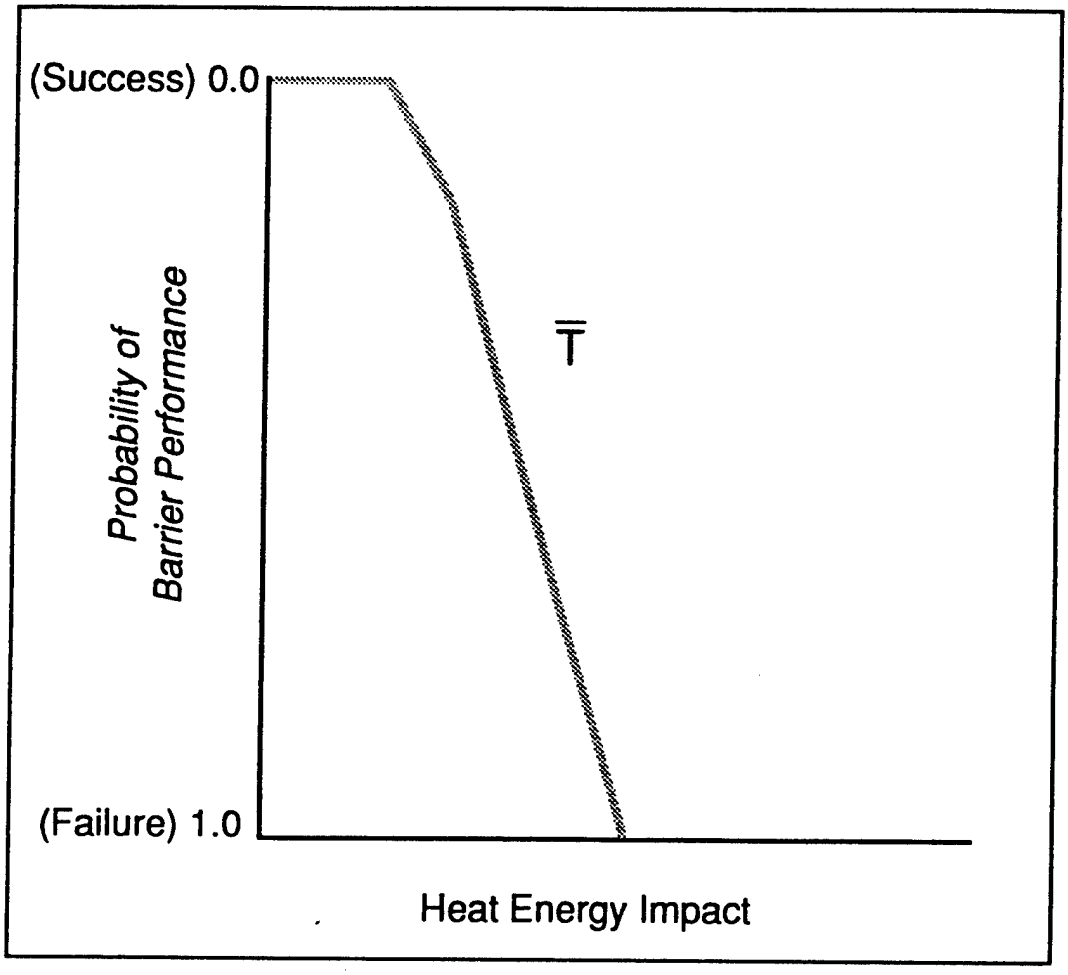

Figure 6-6. Characteristic Tbar Curve

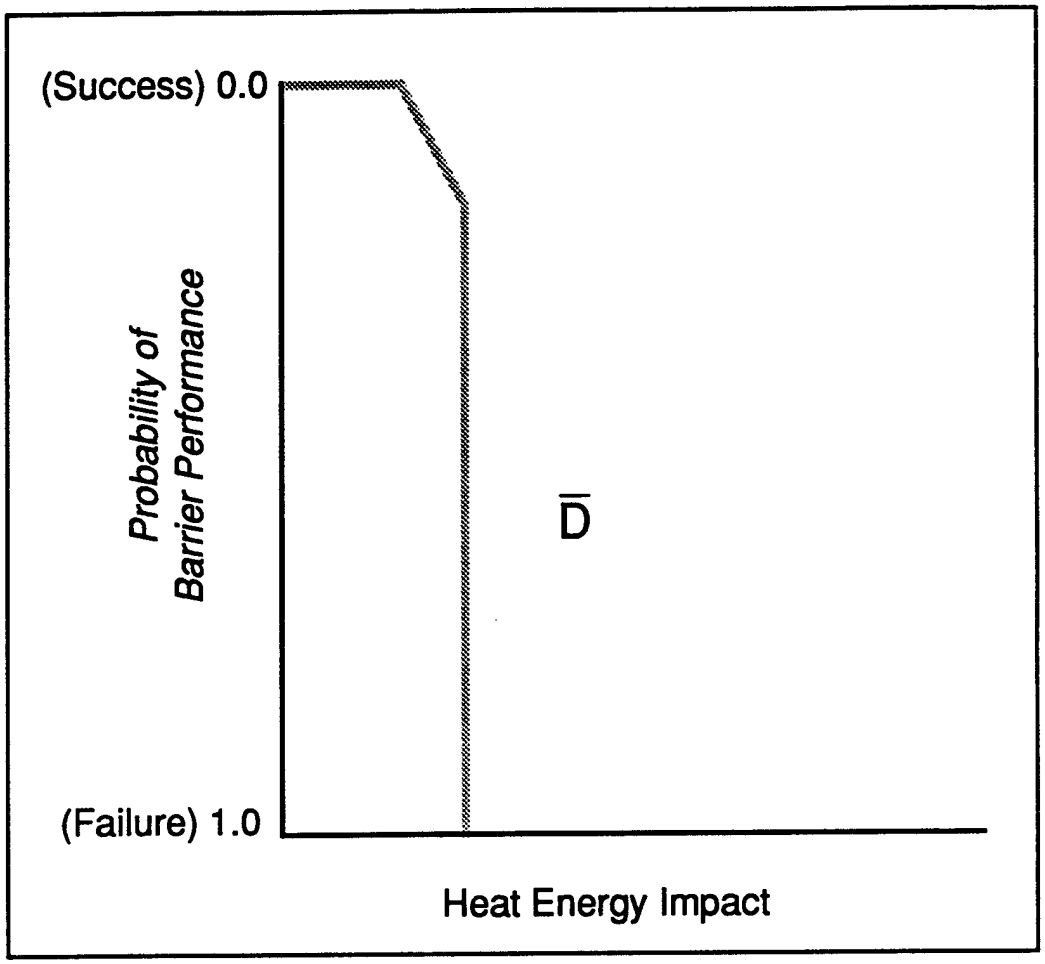

Figure 6-7. Characteristic Dbar Curve

6.3.4.3. Procedure for Constructing Tbar and Dbar Curves

A catalog of curves for barrier materials normally encountered in ship construction is maintained in the database associated with SAFE.[1] The following procedure has been documented by Mahoney for developing barrier performance curves for materials that do not appear in the catalog.[30]

1. Determine the hourly rating of the barrier or the actual failure time of the barrier during a standard fire endurance test such as ASTM E-119.

2. Assume the hourly rating represents the mean Tbar failure time of the barrier.

3. Use engineering judgment to estimate the Dbar failure time.

4. Assume that barrier failure follows a normal distribution.

5. Use engineering judgment to estimate the standard deviation for the normal probability distribution.

6. Construct the probability distributions.

7. Determine and construct the cumulative probability distributions from the normal distributions in Step 4.

8. Convert the time values to heat energy impact values so that the desired units for the abscissa of the catalog curves are obtained.

Standard catalog Tbar and Dbar curves are constructed for barriers that assume they are unpenetrated and non-deteriorated, as they would appear in new ship construction. Mahoney provides excellent examples of using the above procedure to develop Tbar and Dbar curves.[30] These curves are then derated or prorated to reflect the influence of construction, modifications, and deterioration as observed during the ship visit. The terms D-adjust and T-adjust refer to this derating or prorating which in effect shifts the Tbar and Dbar curves right or left to more accurately reflect actual conditions of the barrier.

Thermal properties for barrier materials in a compartment are needed for the calculation of full room involvement times as described in Appendix B. If more than one type of barrier material is found in a given compartment these thermal properties are averaged or added according to the "combination barrier algorithm" described in the SAFE User Manual.[1]

6.3.5. The L-curve

The network diagrams described above are used to calculate the probabilities for the I, A, and M-values. The values are determined for discrete areas of the compartment being analyzed. If each of these values is plotted graphically (probability versus deck area) the resulting points

approximate a smooth curve when connected. The resulting plots are called the I, A, and M-curves. These curves describe the set of probabilities for limiting the flame movement in a given compartment and an individual data point is referred to as the I, A, or M-value. By convention, if a value is stated without an associated deck area it is presumed that the value is associated with the entire compartment. If the I, A, and M-values for a given deck area are recorded on the network diagram for flame movement as shown in Figure 6-8 the L-value can be calculated. The L-curve can then be constructed as shown in Figure 6-8. Note that one network diagram will yield one L-value and several L-values are needed to accurately portray the shape of the L-curve. If only one L-value is calculated (for the full room) the L-curve may be sketched as shown in Figure 6-9. Intermediate values in this case would be only approximate.

The construction of I, A, M, and L-curves is fundamentally dependent on the timeline for fire growth since the probability of extinguishing a fire declines with increasing fire size. The timeline plots critical events such as detection, notification, and agent application versus fire size. These events are shown at the top of figure 6-8 denoted by "d" for detection, "n" for notification, and "a^2" for agent application.

The L-curve is also used to describe the probability of limiting the flames in a given fire path as shown in Figure 6-9. The L-curve for the room of origin is the curved portion shown in the top left of the plot. The vertical portion to the right of the room of origin represents the probability of the barrier successfully preventing the flames from entering the next room in the fire path. The vertical portion corresponds to the probability of barrier success. The next curved portion represents the probability of limiting the flames to the next room in the fire path and so on.

The L-curve is normally plotted for a single fire path. If multiple fire paths are shown on the same plot (from the same room of origin) the uppermost curve would describe the most dangerous path for that given analysis. This is because probabilities are plotted, by tradition, with zero at the top and 1.0 (100%) at the bottom of the ordinate axis. Moreover, if all the L-curves for all paths emanating from all rooms of origin were to be plotted, the uppermost L-curve would represent the most dangerous fire path in the ship for a given analysis. Note that depending on the probability of EB in the room of origin, this may or may not represent the most likely fire path.

Figure 6-8. The L-Curve for a Compartment

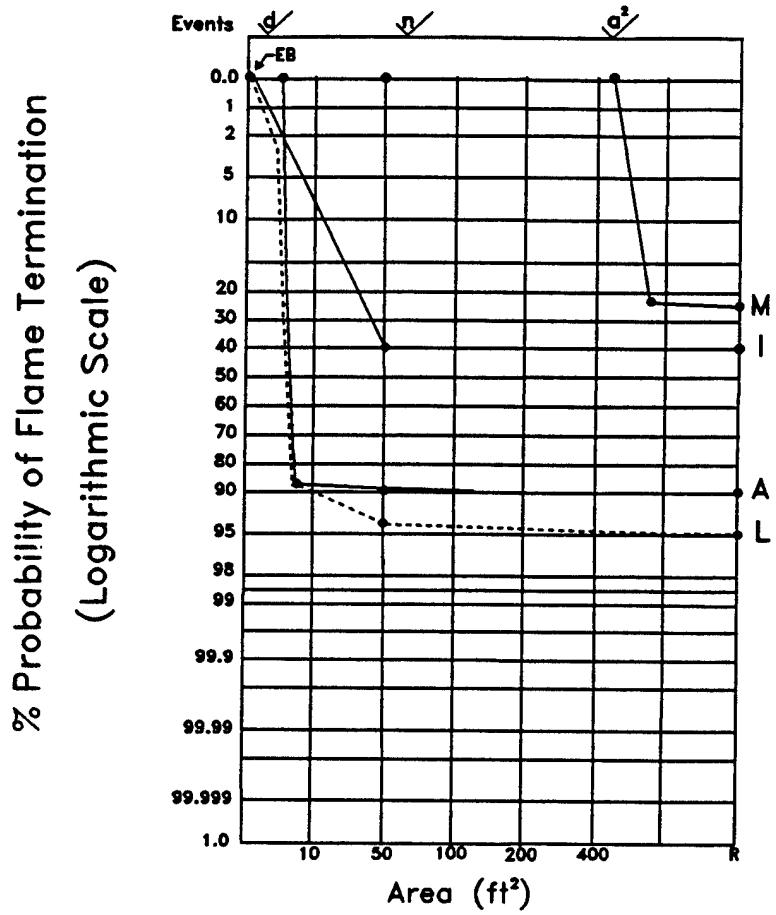

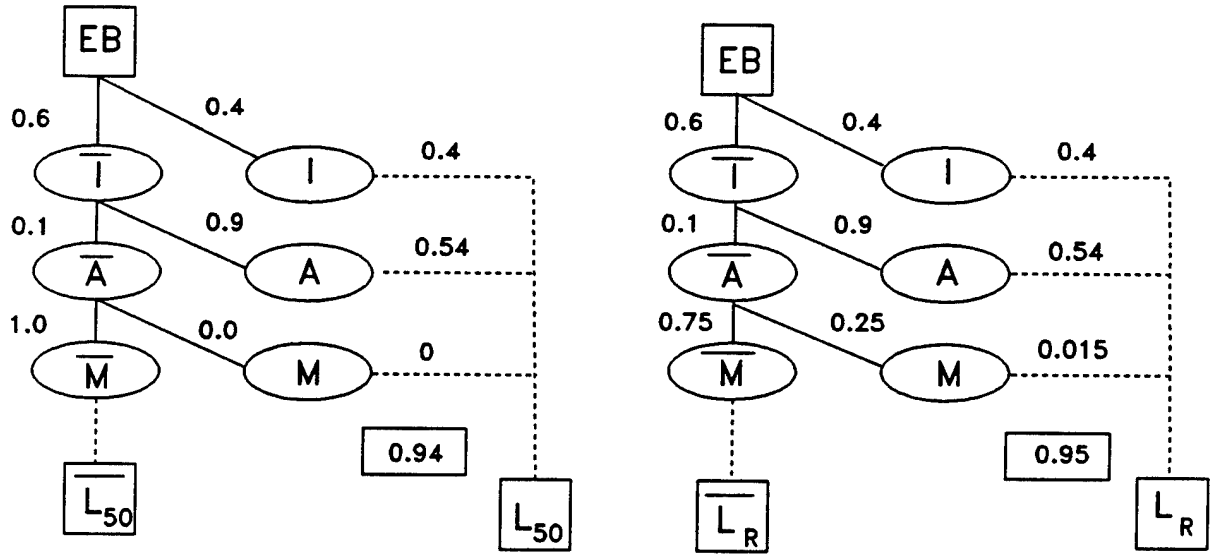

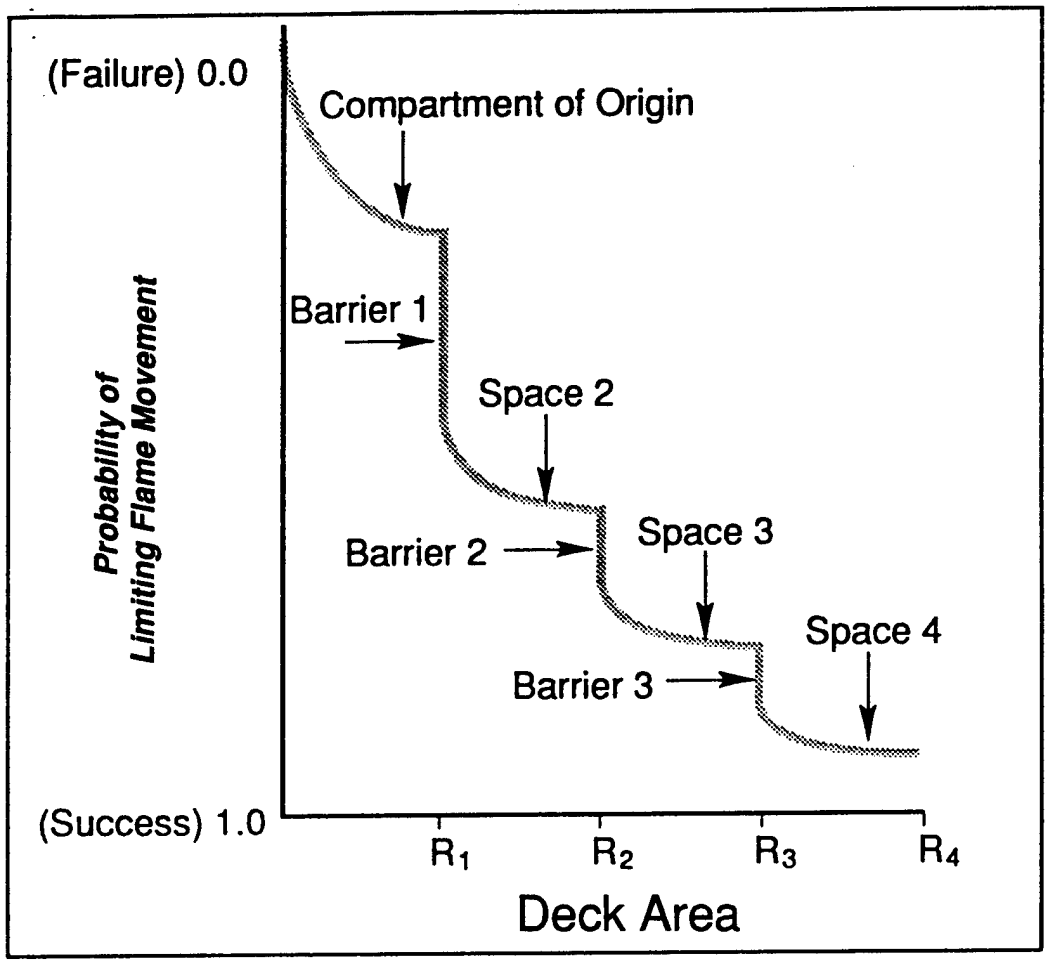

Figure 6-9. The L-Curve for a Fire Path Beyond Room of Origin

6.4. SHIP APPLIED FIRE ENGINEERING PROGRAMS

The Ship Applied Fire Engineering (SAFE) computer programs automate calculations in the SFSEM engineering analyses modules. The programs are actually an integrated series that requires engineering evaluations, ship geometry, ship characteristics and features as input. They enable the engineer/analyst to select a scenario and perform an analysis. The following sections provide an overview of SAFE and a description of the options available to the user, inputs required, and outputs available to document the analyses. A complete description of SAFE is provided in the SAFE User Manual.[1]

6.4.1. Inputs

Before an analysis can be conducted, information about the layout of the ship must be entered into the SAFE database. If drawings of the vessel's compartmentation are available in AutoCAD this step is simplified since SAFE utilizes AutoCAD to transfer ship geometry to the SAFE database. Data for each compartment and barrier such as fuel loads and ventilation parameters must be entered into the database. This requires an extensive ship visit which is usually accomplished in conjunction with the fire safety audit discussed in Section 6.2. Following the ship visit the network diagrams in the flame movement analysis module are utilized to determine the I, A, and M-values for each compartment as a room of origin and as an adjacent room. Data regarding fuel loads, and fire growth parameters such as fire growth model, fuel stack height, and fuel area are also required inputs. Finally, Tbar and Dbar curves for certain barrier materials are contained in a catalog of curves maintained in the database. Currently in SAFE, the engineer/analyst must assign one or more of these materials to each barrier in the ship. New Tbar and Dbar curves for barrier materials not found in the catalog of curves are developed in accordance with the procedure described in section 6.3.4.3.

After all data is input, the time to full room involvement (FRI Time) for each compartment is calculated in SAFE as discussed in Section 6.1.2.1.

6.4.2. Running SAFE

An analysis consists of "starting" a fire at time 0 in the user-specified room of origin and allowing the fire to progress through time to a predetermined stopping point. SAFE can be run showing the frequency of involvement of a compartment or probable paths of fire propagation. The engineer/analyst must specify certain conditions for the analysis. These include the degree of fire protection (passive only, passive and active, etc.), the room of origin, the simulation duration in minutes of the analysis (between 0 and 120), output option (fire-paths, target room, etc.), the material condition of readiness (XRAY or YOKE), location of the ship (in port or at sea), and barrier failure criteria (best case or worst case).

The analysis begins by the computer establishing EB in the specified room of origin. After FRI has been reached in the room of origin, SAFE calculates the rate of heat release according to the formula for Qdot in the fully developed fire regime, this quantity of heat attacks the barriers each minute and is subtracted from the fuel load. The cumulative heat energy impact is compared to the fire resistance of the barriers plotted on the appropriate Tbar and Dbar curves. The

probabilities thus determined are then compared to the criteria for failure according to the scenario selected by the analyst. If it is determined that a barrier has failed, then EB is established in the adjacent compartment. Residual heat transfer is added to its fuel load to obtain the total heat energy available to attack the barriers in the adjacent room when the barrier is determined to be "destroyed". The criteria for barrier "failure" and barrier "destroyed" is dependent on the user-specified best case or worst case scenario. The glossary in this document and the SAFE User Manual provides the specific criteria used in SAFE.[1]

In this space-barrier propagation, SAFE builds a set of fire paths. As the analysis proceeds, the number of paths grows exponentially and the probabilities of flame limitation in each compartment are accumulated. Certain output options are provided to assist the engineer/analyst in analyzing the ship as a fire safety system. Finally the ship's performance is compared to the fire safety objectives as explained in Section 6.6.3 to determine where improvements should be made.

SAFE is used to analyze the baseline or existing fire protection levels on the ship. Alternatives are also analyzed to improve fire safety in target compartments which fail to meet fire safety objectives. Sometimes this requires improving fire protection features in a different compartment which is acting as a room of origin for fires that ultimately involve the target compartment. Alternatives are modeled by changing all input values which are affected by the hypothetical alternative. For example, if an automated system is "installed" in a particular compartment, the engineer/analyst needs to assign appropriate A-values for the compartment which will contain the proposed system. In other cases alternatives may result in required changes to many existing input values. The engineer/analyst must consider all ramifications of proposed changes and make appropriate changes to all affected input values.

6.4.3. Output Options

The five output options in SAFE permit the user to analyze the fire safety of the ship under study. The results can be viewed on the screen, printed or both. The options are described in detail in the SAFE User Manual [1]; the following discussion provides an overview of these user-specified options.

The target room option in SAFE analyzes the cumulative probability of flame limitation in every possible target compartment after systematically establishing EB in every compartment and analyzing each fire path to the target compartment. SAFE then calculates the relative loss factor by comparing the frequency of loss of the target compartment with the allowable frequency of loss established in the fire safety objectives. The target compartments are then rank-ordered by relative loss factor as described in Section 6.6.3. The sets option is similar to the target room option except a user-specified set of compartments is analyzed in lieu of each compartment as an individual target. The present algorithm for calculating cumulative probabilities of loss in the target option does not properly account for the fact that fire paths are not independent. In general the target option provides conservative results, that is the results predict higher than normal losses; therefore the ship is actually "safer" than the analysis results indicate.

The fire paths option is used to examine in detail all the fire paths from a user-specified room of origin. By examining the results from the target room and fire paths options, the user can document the "baseline" fire protection levels for the ship under consideration. The barriers option allows the user to analyze the probability of room of origin barrier failure in detail. In this option all compartments are considered as rooms of origin. The barriers in these compartments are rank ordered by probability of failure. The run time option provides a means for the engineer/analysts to determine an appropriate length of time to run SAFE. In general fire losses increase with time but since these losses tend to plateau, the run time option serves to identify the optimal run time.

6.5. FLAME MOVEMENT ANALYSIS LIMITATIONS

6.5.1. Barrier Attack

It is assumed in the SFSEM that barriers are attacked with the heat energy of the burning fuel at the point when the fire reaches full room involvement. This neglects all of the heat generated in the fire growth period. Moreover, ship's barriers are often thermally thin, thus the likelihood of a Tbar failure in the fire growth regime is substantial. The SFSEM does not presently account for heat energy impact of a barrier in the fire growth period.

6.5.2. Ventilation

Ventilation is difficult to model in a ship because the ventilation is often provided in the form of recirculated air from other nearby compartments. In a fire this would result in the rapid consumption of available oxygen, thus contributing to the extinguishment of the flames. Further complicating the analysis is the actions of the crew to secure the ventilation fans upon the sounding of the general quarters alarm. While this certainly substantially reduces the incoming air supply, it does not necessarily eliminate it. Therefore realistically predicting the ventilation in a ship is considerably more difficult than in a building.

The geometry of the ventilation openings is the key variable in the algorithm for calculating the heat release rate in the fully developed fire regime. The ventilation factor used in this algorithm was semi-empirically derived by Kawagoe.[31] His experiments were based on naturally ventilated wood crib fires through a single vent opening in the wall. Compartments in ships have multiple vent openings and use a combination of natural and forced ventilation through vent openings in the bulkheads, deck and overhead. Moreover horizontal vents complicate the determination of the "height" of the opening. The ventilation factor used in the SFSEM is modified to account for multiple vent openings and overhead/deck vents. However, there is no experimental data to validate this modification.

Finally, compartments in ships are not always adjacent to the outside world. Therefore a door or hatch in a given compartment frequently leads to another compartment which may be considerably smaller in size. Open doors and hatches are treated as an additional vent, when indeed they may only provide a limited amount of ventilation. This may affect the accurate calculation of full room involvement times.

6.5.3. Compartments

All ships contain voids, cofferdams, uptakes and other spaces which are generally devoid of any fuel load or ventilation. They are analyzed in the SFSEM but do not generally contribute to the spread of fire. Military ships usually have magazines, and other ammunition storage spaces. These spaces are not considered in the SFSEM because the flame movement analysis commences with the assumption that Established Burning has occurred. In a magazine, if a flame height of 10 inches were to occur the resulting explosion would obviate the need for further analysis. All ships contain fuel tanks and lube oil tanks. If these tanks are completely full, they represent a negligible fire hazard and if they are empty the fuel load is negligible. There may be an explosion hazard, but the SFSEM does not presently have the capability to analyze this type of problem. Therefore tanks containing flammable liquids are not analyzed in the SFSEM. Since helicopter hangars typically contain a helicopter with JP-5 jet fuel in the fuel tanks, these compartments are similarly not analyzed.

6.5.4. Cable Protection/Routing

Ships have relatively dense wiring often routed in unprotected cable trays. Above the main deck, electric cables penetrate bulkheads and decks through open collars. In a very short time a heavy coating of dirt and dust settles on the cables and in engineering spaces this dust and dirt is combined with an oily film. There have been numerous reports of fires spreading to other compartments along unprotected cable trays. The analyst can indirectly consider this within a compartment through fuel load and the I-value and by derating the barriers. The SFSEM does not directly consider this very real problem in a shipboard fire.

6.5.5. Thermal Protection of Barriers

Tbar and Dbar curves for barrier materials are derived based in part on data from testing the material in accordance with standard fire endurance tests such as ASTM E-119. Unfortunately, few barrier materials in ships have been tested and certified. The reasons for this are obvious, buildings are built in accordance with the building code which specifies the required ratings for walls, floors and ceilings. In order for a manufacturer to sell his product, he must obtain the rating required by the code for the intended application. Ships, on the other hand are not built in accordance with the building code. However, they are built in accordance with 46CFR, SOLAS, NSTM and other appropriate regulations applicable to the type of ship under construction. Furthermore major watertight bulkheads, decks and overheads below the damage control deck must withstand the hydrostatic forces from flooding, and weight is almost always a limiting criteria. As a result, bulkheads vary from bare steel (thermally thin) to composites (used for their habitability and lightweight features) and decks vary from bare steel or aluminum to complicated composites which serve as sound and vibration dampeners. Most of these materials, if not unique to ships, are rare in buildings, thus little ASTM E-119 test data is available. Often, basic thermal property data such as specific heat, thermal conductivity and density are not even available. Engineering judgment is used along with any available data as the basis for Tbar and Dbar curves until a sample of the barrier material can be tested according to ASTM E-119.

6.5.6. Heat Energy Impact

In a real fire a higher percentage of the heat attacks the overhead and the top of the bulkheads than the deck and the bottom of the bulkheads. The SFSEM does not model this

attack precisely, instead 100% of the heat available attacks the overhead and bulkheads and 10% of the heat available attacks the deck.

If a barrier fails, a certain amount of heat from the unburned fuel in a compartment "spills" into the adjacent compartment through the breach in the barrier. This additional heat is considered an additional fuel load in the adjacent compartment. In the SFSEM, the quantity of heat transferred is referred to as the "residual heat transfer" and is presently a function of the barrier material. In reality the amount of heat transferred into an adjacent compartment is a function of the size of the failure, temperature differential, and other factors not accounted for in the SFSEM.

6.6. ESTABLISHING FIRE SAFETY OBJECTIVES FOR FLAME MOVEMENT

In order to analyze the performance of a ship as a fire safety system, there must be acceptable performance standards or criteria established by cognizant authorities. These criteria are referred to as Fire Safety Objectives (FSOs). Ideally, FSOs are established by cognizant authorities taking into consideration life safety, property protection and mission impairment. Cognizant authorities in the Coast Guard are the appropriate program and support managers in Coast Guard Headquarters. In the absence of such input, FSOs may be established by the engineer/analyst using the process described in this section.

FSOs are designed to establish the performance standard for a fire safety system taking into account all aspects of fire including flame movement, smoke movement, people movement (egress for the occupants), and the ability of the structure to withstand the fire's assault. In the SFSEM, smoke movement, people movement, and structural analysis modules are not yet fully developed, therefore the FSOs are presently established considering flame movement only.

FSOs are established for each compartment utilizing the so-called traditional approach. It is the approach used over the past eight years in the fire safety analysis of eleven classes of Coast Guard Cutters. A number of limitations and drawbacks have been identified with the traditional approach, and there has been some discussion concerning the practicality and validity of establishing FSOs on a compartment basis [2,3]. Even with these minor concerns, the traditional approach has merit and is considered valid. A Fault Tree Analysis (FTA) approach to establish FSOs is currently under development but is not yet available. The following paragraphs describe the traditional approach in more detail.

6.6.1. Traditional Approach

FSOs are established for each compartment in the cutter that may be analyzed by SAFE. Currently, magazines, flammable liquid tanks, and helicopter hangars are not analyzed due to the inability of SAFE to deal with explosion hazards. All other compartments are rated for both Magnitude of Acceptable Loss (MAL) and Frequency of Acceptable Loss (FAL). The MAL is established by assigning a rating to each of the following four factors and then weighting these factors to determine an overall rating for the compartment:

- Life Safety (LS)
- Property Protection (PP)
- Primary Mission (PM)
- Secondary Mission (SM)

The weighting factors are different for each module in the SFSEM. For example, in the flame movement module, damage from flames affects the primary mission of the ship more than it causes life safety concerns. Whereas considering the effects of smoke, life safety will be the primary concern compared to the property damage. Thus the weighting factors for the four factors are adjusted for each module in the SFSEM.

6.6.1.1. Magnitude of Acceptable Loss (MAL)

The weighting factors used to assign a MAL rating to each compartment considering flame movement only are shown in the following expression:

$$\mathbf{MAL = 0.1*LS + 0.3*PP + 0.4*PM + 0.2*SM}$$

The MAL rating for each factor is permitted to be one of the following four integer values:

1. Established Burning (EB) is not acceptable
2. EB is acceptable but Full Room Involvement (FRI) is not
3. FRI is acceptable but Compartment Burnout (CBO) is not
4. CBO is acceptable

A rating of 1-4 is assigned to each factor for each compartment, then the overall MAL rating is calculated according to the algebraic expression shown above and the truncated MAL rating is assigned to the compartment. For example, if the results of the calculation is 3.37, a MAL of 3 is assigned.

The ratings are assigned for each factor using engineering judgment and considering the effect flame movement has on each factor. Compartments whose total loss (CBO) would not significantly affect the ship's primary or secondary mission are typically assigned a rating of 4 for factors PM and SM. For example, most sanitary spaces, gear lockers, passageways, voids, water tanks, ladders, cofferdams, and certain storerooms, if totally lost, would not prevent the ship from performing its primary or secondary mission. Note, a compartment may contain a significant fuel load and contribute materially to the spread of a fire, but if its loss does not significantly affect the ship's mission, it receives a rating of 4. At the other extreme, flammable materials storage lockers, paint lockers, and other compartments containing extremely flammable materials

representing a significant fire hazard are normally assigned a rating of 1 for the factors PM and SM.

The balance of the compartments are normally assigned a rating of 2 or 3 for the factors PM and SM. In general, if the compartment contains equipment vital to the ship's primary or secondary mission, and if its loss would likely result in the ship aborting its patrol and returning to homeport for repairs, it would be assigned a 2. On the other hand, if the compartment's loss would degrade, but not prevent, the ship's ability to perform its mission, it would receive a 3 rating. Examples of compartments typically rated 2 for the factors PM or SM are the Engine Room, Bridge, and Galley. Berthing Areas, Ship's Offices and Labs/Workshops are typically assigned a 3 rating for the factors PM and SM.

A compartment's cost to replace is the primary consideration for assigning a rating to the property protection (PP) factor. Obviously, Engineering Spaces such as the Engine Room, Emergency Generator Room, Auxiliary Machinery Rooms contain very expensive machinery not only from an acquisition point of view but the costs involved in the labor to install and align the equipment is significant as well. Thus these spaces are typically assigned a rating of 2 for the PP factor. A rating of 1 is assigned for those spaces such as paint lockers and flammable materials storage lockers for the property protection factor that would undoubtedly lead to additional property damage in other adjacent spaces. A rating of 4 is assigned for the PP factor to those spaces whose total loss would be considered minimal (compared to other spaces). Finally, a rating of 3 is assigned for the PP factor to those compartments whose cost is not minimal but is considered far less than major engineering spaces. Examples of spaces assigned a 3 rating for the PP factor include the Galley, Scullery and spaces with some minor machinery such as sewage machinery spaces and potable water equipment rooms.

Ratings for the life safety (LS) factor take into account the likelihood that personnel will be injured by the fire (not the smoke or toxic gases). This probability is affected by the likelihood that the space will be occupied, the accessibility of the space, the quantity of personnel likely to be in the space, and the likelihood that the occupants will be sleeping. Thus spaces such as the Paint Locker where personnel would be in danger even if EB occurs are assigned a rating of 1 for the LS factor. If EB can occur but personnel are not likely to be in serious danger unless FRI occurs receive a rating of 2 for the LS factor. If FRI can be tolerated but the entire compartment would have to be lost before personnel are in danger of being injured, a rating of 3 would be appropriate for the LS factor. Finally, if a compartment can be totally lost and still not endanger personnel, a rating of 4 can be assigned to the LS factor. After a rating has been assigned to all four factors the overall MAL rating for the compartment is calculated. This value is then used in the calculation for the FAL as described in the next paragraph.

6.6.1.2. Frequency of Acceptable Loss (FAL)

The FAL is coupled to the MAL. For example, it may be considered acceptable to lose a compartment with a MAL = 4 once a year but compartments with a MAL = 1 may be lost only once in a ship's lifetime (30 years). Based on MAL and FAL ratings established by engineering judgment for similar compartments in several classes of cutters, a correlation between MAL and FAL was determined by fitting a curve to the data points. The following algebraic relationship

expresses this correlation and is now used to establish the FAL based on the MAL rating for each compartment:

$$\mathbf{FAL = 32.25 - (1.766*MAL) - (0.214*MAL^2) - (0.222*MAL^3)}$$

This formula was derived from a regression analysis of the FAL ratings assigned using engineering judgment to compartments in the Small Cutter Fire Protection project.

The approach described above for establishing fire safety objectives has been referred to as the "traditional" approach primarily because it has been used on many of the ships analyzed to date. Bahadori documented an alternative approach in 1987 which was used in the PIR analysis.[2] This approach utilizes a mission-oriented approach to establish minimal "cut sets". Cut sets represent a group of compartments which must be lost simultaneously before the ship's mission is adversely affected. The approach has technical merit, but also requires cognizant authorities to establish tolerable mission failure rates. As encountered in the traditional approach, cognizant authorities are not used to thinking in this manner and would require some appropriate training in order to realistically use either approach.

6.6.2. Comparison of Ship's Performance with Objectives

The SFSEM calculates the probabilities that the fire will be limited in a compartment before involving the next compartment in a fire path given that EB was established in a specific room of origin. In order to evaluate the performance of the ship relative to the fire safety objectives established for each compartment, it is necessary to express the results from SFSEM in terms of the frequency of expected loss of each compartment. To evaluate these frequencies, it is necessary to determine the cumulative probability of loss of each compartment in the ship from all possible fire paths from all possible rooms of origin. The notation, L, indicating limiting the fire, is relative to the allowable magnitude of loss established for each compartment. For example, if a compartment has an allowable magnitude of loss equal to EB, it is only considered "lost" if the fire growth in that room reaches FRI. Another example of a room which would be considered lost is a room with an allowable magnitude of loss of FRI which reaches CBO.

The cumulative probability of loss (or not limiting the fire, Lbar) of target compartment, k, given EB in room of origin, i, is found by summing over all possible fire paths, j:

$$\mathbf{P_k(LbarEB_i) = sum_j\ P_k(Lbar_jEB_i)}$$

The frequency of loss of target compartment, k, is found by multiplying this probability by the frequency of EB in the room of origin, i:

$$\mathbf{F_k(LbarEB_i) = P_k(LbarEB_i)F(EB_i)}$$

The total frequency of loss of target compartment, k, is then found by repeating this process for all the possible rooms of origin, i, and summing the results:

$$\mathbf{F_k(Lbar) = sum_i\ F_k(LbarEB_i)}$$

This total frequency can be compared directly to the allowable frequency of loss established for each compartment. If these two frequencies are divided the relative loss factor for the compartment can be calculated:

Relative Loss Factor = F_k(Lbar)/Allowable Frequency of Loss

If the relative loss factor is greater than 1.0 the fire safety objectives are not met and an improvement in fire protection is required. If the relative loss factor is equal to 1.0 the fire safety objectives have been met and no change in fire protection is required. If the relative loss factor is less than 1.0 the fire safety objectives have been exceeded and the compartment is considered "over-protected". The SFSEM could be used to analyze alternatives to reduce fire safety levels in a compartment.

7. SMOKE MOVEMENT ANALYSIS

Some progress in the development of the smoke movement analysis module has been accomplished by Dolph.[4] Further development and integration into the methodology is required in the future.

8. STRUCTURAL FRAME ANALYSIS

To be developed in the future.

9. PEOPLE MOVEMENT ANALYSIS

To be developed in the future.

10. SFSEM APPLICATIONS

The SFSEM is an analytical tool designed to evaluate the performance of a ship as a fire safety system and compare this performance to the fire safety objectives established for the ship. This section will discuss the various applications where the methodology has been successfully used in the past and suggest additional applications where it may be used to serve the needs of ship owners and operators.

The SFSEM has been used in the past to analyze the following vessels:

- Preliminary Design of the Polar Icebreaker Replacement (1987) [6]
- Nine classes of small U.S. Coast Guard Cutters (1990-1993) [7, 8, 9]
- Preliminary Design of the 175' Coastal Buoy Tender Replacement (1994) [10]
- 225' Coast Guard Cutter VINDICATOR (1995) [32]
- 210' Coast Guard Cutter VIGOROUS (1990) [33]
- Dinner Cruise Vessel (1995) [13]

In addition the SFSEM is presently being used to analyze the fire safety on five additional Coast Guard Cutters, scheduled for completion in 1996 and 1997.

The SFSEM has thus demonstrated significant utility as a valuable analytical tool to document and support an analysis of ship fire safety. The following sections will discuss this utility in the context of these projects.

10.1. SHIP FIRE SAFETY DESIGN ANALYSIS

The SFSEM permits an evaluation of individual fire protection components within a ship. It can compare alternative fire protection measures against a baseline or in a relative sense to each other. The basic flowchart for this process is illustrated in Figure 10-1 and discussed in the following sections.

10.1.1. Comparison of Alternatives

The SFSEM can be used to compare alternative fire protection components that are in the same category such as evaluating the effectiveness of different firefighting agents. Components in different categories can also be compared such as evaluating the relative effectiveness of a barrier and a firefighting agent. This sort of comparison is especially useful to answer "what-if" questions often raised by decision-makers. Note that either actual or proposed components can be evaluated on actual or proposed ships. Furthermore the SFSEM and the reports generated by the SAFE computer programs provides the necessary documentation to support a serious study of the fire safety of these vessels.

10.1.2. The SCFP Project

Small Cutters have traditionally fought fires with "big ship" firefighting techniques. This reflects the training personnel receive in damage control; it also reflects the fact that no other guidance is provided. The SCFP project was tasked with taking a zero-based approach in considering the fire protection of these cutters. Using the flow chart shown in Figure 10-1, the baseline fire protection levels are determined with the techniques and equipment presently employed on the Cutter. Then alternative fire protection equipment, strategies and techniques are "tried" by running the model again evaluating each alternative in turn. Some of these alternatives are as drastic as removing the fire hoses and substituting fixed fire protection systems in designated spaces. This concept could never be tried on an actual cutter, but the SFSEM provides the vehicle for identifying the benefits of truly innovative ideas. The following example from the SCFP illustrates how the SFSEM was used to compare various alternatives to identify a cost-effective solution for a class of cutter which failed to meet fire safety objectives.

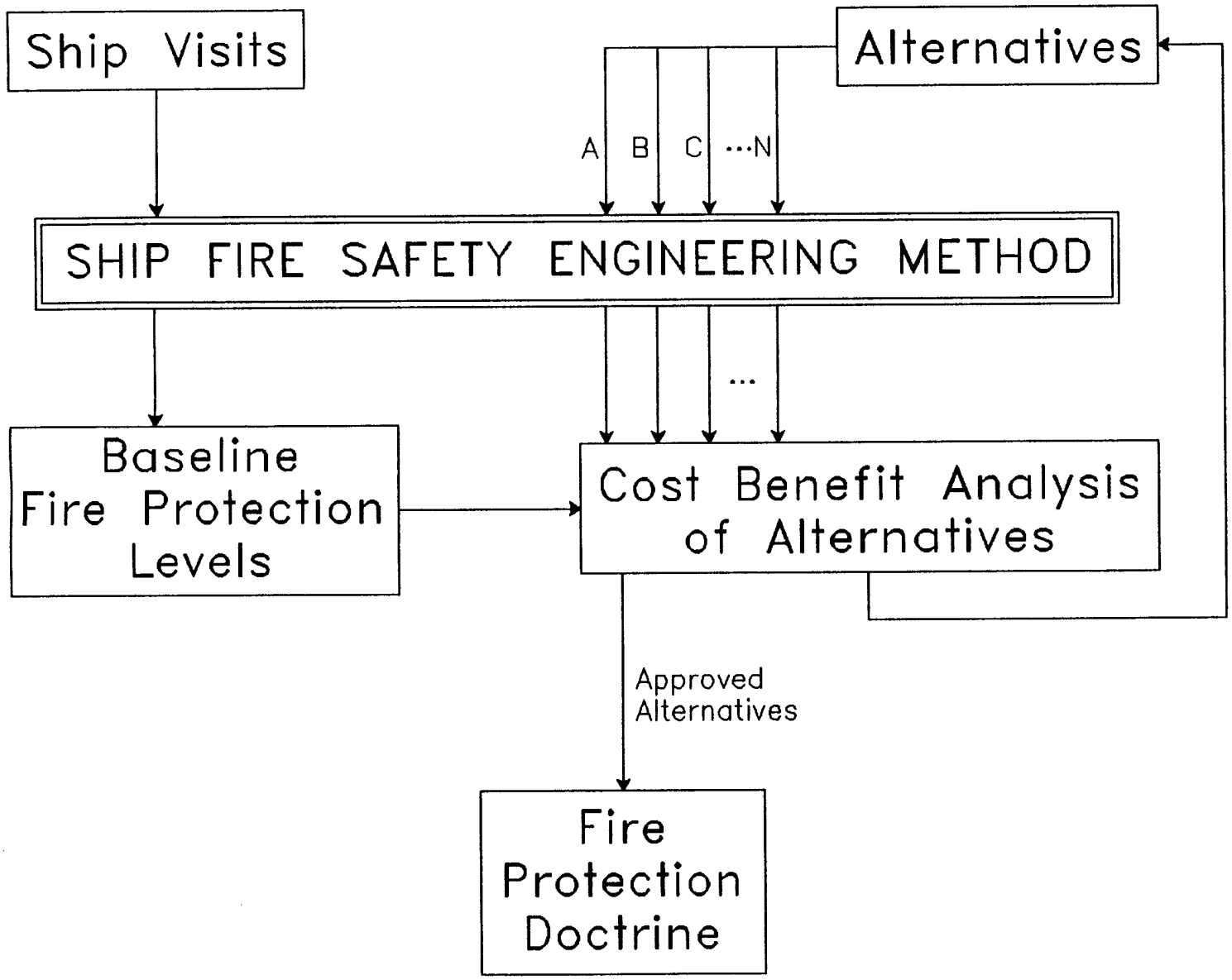

Figure 10-1. Comparison of Alternatives Using the SFSEM

The Coast Guard's 110' Island Class Patrol Boat was one of the nine classes of small cutters analyzed in the SCFP. This cutter had a "one-shot" Halon 1301 total flooding system protecting the Engine Room. Analysis using the SFSEM revealed that the Pilot House failed to meet fire safety objectives. Detailed analysis showed that the primary reason for this failure was fire spreading from the Engine Room to the Crews Mess, up a ladder to the 01 Deck Passageway and then up another ladder to the Pilot House. One alternative was to install a fire-rated door at the base of the ladder in the Mess Deck. While this had the desired effect of improving fire safety in the Pilot House it had no beneficial effect in the Engine Room. The existing Halon flooding system was converted to a two-shot system as another alternative. This not only resulted in the Pilot House meeting fire safety objectives but fire safety in the Engine Room was significantly improved as well. After taking into account the costs of these alternatives the two-shot Halon system was considered the most cost-effective. The Commandant (G-ENE) subsequently issued a Shipalt to convert the existing Halon system on all Island Class Patrol Boats to a two-shot system. One of the major goals in the SCFP was to develop a fire protection doctrine tailored for each small cutter. The following paragraph describes the results from this effort and demonstrates the capability of the SFSEM to deal with this issue.

Small cutters in the Coast Guard have a fire protection doctrine which was originally designed for much larger ships and adapted for use by each cutter to suit their individual needs. The doctrine addressed only class B fires in the machinery spaces. The SFSEM was used to evaluate the techniques and equipment installed on small cutters to develop a fire protection doctrine for all classes of fires in all types of compartments.

10.1.3. Performance-Benefit Studies

The current state of development of the SFSEM allows flame movement to be analyzed in detail. The SFSEM with its implementing computer programs, SAFE, can be used as a research tool with practical application in the design and analysis of ship fire protection systems. In addition, it can also be used to gain an insight into the costs and effectiveness of fire protection features employed on ships. The I, A and M-values and barrier performance in response to established burning can be evaluated and quantified; the costs of these features can be calculated. Therefore, the SFSEM provides the information needed to conduct cost-benefit analyses for alternative fire protection features. Since a ship is usually weight and volume sensitive, these features should be incorporated into the cost-benefit studies.

10.2. EXAMPLES

As noted above the SFSEM has been used extensively to analyze fire safety of ships. The following are examples where the SFSEM was used to analyze particular aspects of a ship for specific purposes. This demonstrates additional applications of the SFSEM.

10.2.1. The CGC VIGOROUS Fire

The Coast Guard Medium Endurance Cutter VIGOROUS experienced a multi-compartment fire in June 1989. This fire was the subject of a mishap report filed by the Commanding Officer.[34] It was also the subject of an ALDIST message to the Coast Guard

fleet concerning "lessons learned".[35] The VIGOROUS is one of sixteen medium Endurance Cutters in the 210 class. Specified portions of the VIGOROUS was also the subject of a fire safety analysis using the Ship Fire safety Engineering Methodology as a class project at Worcester Polytechnic Institute under the tutelage of Professor Fitzgerald in the fall semester 1990.[33] The following sections will discuss the results and highlights of this fire safety analysis with particular emphasis on the fire in 1989. The VIGOROUS as well as all other cutters in the 210' Medium Endurance Cutter Class has been overhauled during a major maintenance availability at the Coast Guard Yard. This availability included many changes to modernize and improve the cutter including compartmentation changes and changes to the ship's fire detection and suppression equipment. Therefore the results of the analysis described in the following sections does not apply to the VIGOROUS class cutter today.

10.2.1.1. Fire in June 1989

This fire started in Engineer's Stores and spread upward through an uninsulated portion of the overhead into the Galley Dry Stores. From there it spread forward into the Galley, where it was finally extinguished. The fire was able to spread, despite early detection by a watchstander, because the damage control team responded to the location of the fire announced by the Bridge. The "Reefer Flats" was reported as the location of the fire to the Bridge by the watchstander making hourly rounds. Indeed, there was white smoke in the passageway outside Engineer's Stores which is commonly referred to on the ship as the reefer flats. The responding fire party assumed incorrectly that the fire was in the Reefer Machinery Room (because this room is also commonly referred to as the "Reefer Flats"). The Reefer Machinery Room is below, aft, and to starboard of the Engineer's Stores. The VIGOROUS fire doctrine calls for a fire in the Reefer Machinery Room to be fought by admitting AFFF foam through a hole cut in the ventilation ductwork; the fire party wasted forty valuable minutes accessing the duct and pumping foam into a compartment where there was no fire.

If the SFSEM had been used to conduct a fire safety analysis on the VIGOROUS prior to the fire, it certainly would not have predicted this unique series of events to occur. However the engineer/analyst accomplishing the fire safety audit would have undoubtedly discovered the missing insulation on the overhead below the Galley Dry Stores. This missing insulation results in higher than normal probabilities for Tbar failure of that deck. When the actual fire was analyzed, the spread of the fire was determined to be caused, in part, by the lack of insulation, and corrective action was indicated. The SFSEM would serve the same useful purpose - without damaging the ship!

10.2.1.2. Fire Safety Analysis

The fire safety analysis of the Main Deck and below was conducted as a class project at WPI.[33] It identified the major weakness in the fire protection of the vessel to be the general lack of fire detection systems. The analysis also identified several compartments as having the potential to cause either severe damage to the vessel or a severe loss of life, or both. These compartments were identified as: Flammable Liquids Storeroom, Forward Crews Berthing, Main Deck Passageway, Engine Room, and After Steering. The following sections will first address the general problem areas and then the specific compartments will be discussed along with alternative

recommendations to correct the problems. The purpose of this discussion is to illustrate the level of detail and recommendations that a fire safety analysis using the SFSEM typically produces.

10.2.1.2.1. General Problem Areas

The ship has only two compartments which are continuously manned at sea and one in port. All other spaces are visited hourly by watchstanders. Therefore it is estimated that the majority of spaces are unattended 55 minutes out of every 60. Yet there are no automatic fire or smoke detection systems, in general, on this ship. An analysis of this ship clearly shows that alleviating this problem provides the maximum improvement in the fire protection of the vessel. An algorithm in SAFE will provide a rank ordered list of compartments which should be protected by fire detectors if there are limited funds for protecting all compartments.

A second area of general concern is the lack of initial ability to apply first aid or fight a fire immediately upon discovery. This is because the ship operates with the firemain system normally dry and unpressurized. Furthermore, there is a general lack of portable fire extinguishers throughout the ship. Problems and alternative recommendations are discussed for specific compartments in subsequent sections.

10.2.1.2.2. Flammable Liquids Storeroom

This compartment is protected by a fixed CO_2 system which is manually activated from one of two locations. Due to the extremely high fuel loads, the densely packed fuel packages on open shelves, and the lack of automatic fire detection and suppression system, a fire in this compartment is predicted to grow to full room involvement in less than two minutes. The overhead of this compartment is uninsulated, therefore a Tbar failure is likely to initiate EB in the lower Boatswains Stores above. An open ladder in lower Boatswains Stores connects to the upper Boatswains Stores above. These three compartments form a highly probable fire path which would render the forward half of the ship out of commission. The primary recommendation to improve the fire protection in Flammable Stores is to convert the installed CO_2 system to a fully automatic fire suppression system. Alternatively, the installation of an automatic fire detection system would at least decrease the time to manual activation of the present CO_2 system. These recommendations significantly improve the A and M-values in an analysis of flame movement with the SFSEM.

10.2.1.2.3. Forward Crews Berthing

This compartment is actually two compartments separated by a vertical open ladder. Due to the lack of automatic fire and/or smoke detectors, sleeping occupants are in great peril. The primary recommendation is to install an automatic smoke detector in both compartments. Alternatively, the two compartments could be separated by installing a normally closed hatch and scuttle over the existing open ladder. The first recommendation significantly reduces time to notification, therefore improving the M-values. The alternative recommendation enhances the passive fire protection resulting in improved I-values. In addition, the installation of this hatch dramatically improves the strength of the barrier between the two compartments. This will improve the L-curve for all fire paths that include this barrier.

10.2.1.2.4. Main Deck Passage

The main deck passage is the main passage for all personnel traffic on the main deck. All traffic from the chief petty officer staterooms and officer staterooms on the second deck must use this passageway to reach other parts of the vessel. The passage is open to the mess deck aft and has an open ladder leading up into the superstructure. It is also connected to the crew's berthing by a normally open ladder when underway. The passage connects 13 other compartments of some fire risk. The Main Deck Passage is subject to being blocked by fire and smoke from any of its adjoining compartments. It is likely that this may trap personnel in the staterooms on the second deck, Wardroom, CPO mess, Sickbay, and Ships office. The primary recommendation again, is to install an automatic smoke alarm system to improve A and M-values. In addition, open ladders should be enclosed with bulkheads and doors, or hatches and scuttles. As noted above, this would improve I-values and add barriers to help limit the flame spread. Magnetic holdbacks and door closures should be installed on all doors leading to this passage (including compartment joiner doors). The doors should be configured so that they are closed by the smoke detection and alarm system. This would improve the passive fire protection resulting in improved I-values. Alternatively, automatic smoke curtains (tied into the smoke detection and alarm system) could be installed.

10.2.1.2.5. Engine Room

The worst case fire scenario in this compartment is a diesel oil spray fire. A three-dimensional fire is the toughest to extinguish because of the difficulty in applying the agent. For this reason a total flooding CO_2 system is recommended. The A-values in this compartment are presently zero due to lack of fixed fire protection systems. Therefore this recommendation would significantly improve the probability of limiting the flame in the engine room before full room involvement. Halon 1301 would be preferred but is not a viable option due to environmental considerations. Alternatively, the ship could rely on strict observance of good housekeeping practices and the training of the crew in first aid procedures for fire.

10.2.1.2.6. After Steering

The loss of this compartment could cause major structural damage, as well as severely hamper the maneuverability of the vessel. There is a significant amount of hydrocarbon fuels present, as well as several sources of ignition. The primary recommendation is to install an automatic detection and suppression system to improve the A and M-values. Because of the potential for a 3-D fire, a total flooding CO_2 system is recommended. This is a normally unmanned space, therefore CO_2 is not as significant a concern to life safety as it is in the Engine Room. Alternatively an automatic detection system and an automatic or manual deluge sprinkler system could be installed. This recommendation would improve A and M-values also, but not quite as much as the primary recommendation. Water is not normally recommended for oil fires or where significant electrical equipment is located. However it will provide cooling and the volume of the space is small enough that the compartment could be flooded quickly with minimal impact on stability.

10.2.1.3. Cost-Benefit Analysis

A cost benefit analysis was accomplished on alternative recommendations in the compartments analyzed above. The analysis is summarized in Table 10-1. In this table, a

relatively greater cost-benefit is indicated by a greater number of stars. The magnitude of funding required to effect the recommended solutions is also provided in Table 10-1.

Table 10-1. Cost/Benefit of Recommended Solutions

Problem/Solution(s)	Relative Cost Benefit	Relative Cost	
		Low	High
1. Lack of Auto Detection Systems			
Primary: Install throughout	****	X	
Alt. A: Install in isolated spaces	**½	X	
2. Lack of First Aid Capability			
Primary: Install fire ext. throughout	****	X	
3. Flammable Liquid Storeroom			
Primary: Configure CO_2 system for automatic operation	**½	X	
Alt. A: Install automatic detection system	**½	X	
4. Forward Crew's Berthing Areas			
Primary: Install smoke alarm and enclose ladder	**		X
Alt. A: Install smoke alarm and add hatch	*	X	
Alt. B.: Install smoke alarm	**½	X	
5. Main Deck Passage			
Primary: Install smoke alarm and doors	**		X
Alt. A: Install smoke alarm and smoke curtains	*½	X	
Alt. B: Install smoke alarm	*	X	
6. Engine Room			
Primary: Install CO_2 system	***		X
Alt. A: Rely on housekeeping, training, and first aid	½	X	
7. After Steering			
Primary: Install auto. Detection and CO2 system	***½		X
Alt. A: Install auto. Detection and auto. manual deluge sprinkler system	**½		X
Alt. B: Install auto. detection	**½	X	

½ = one half of a star

10.2.2. The CGC SEAHAWK Fire

The U.S. Coast Guard had three surface effect ships classified as Patrol Boats. These vessels were 110 ft long and constructed entirely of aluminum. They were homeported in Key West, FL, where they participated in anti-drug smuggling operations. All three ships have subsequently been decommissioned and are no longer in the Coast Guard inventory of cutters. The ships were equipped with two electric fire pumps installed in the port and starboard pump rooms which were integrated with the ship service generator space. The port and starboard engine rooms were actually one large compartment and contained the port and starboard diesel lift engines as well as the port and starboard main diesel propulsion engines. The engine rooms, pump rooms, and generator spaces were all protected by a single 300 pound bottle of Halon 1301 which was designed to simultaneously flood all spaces if activated. Since internal combustion engines are automatically secured prior to flooding a space with Halon, the ship's fire doctrine called for the P-250 pump to be rigged and energized before releasing the Halon. The purpose of this delay was to ensure that an alternative source of firefighting water was available when the generators were secured (thus disabling the electric fire pumps).

On 6 December 1987, a serious fire occurred in the starboard engine room of the surface effect ship SEA HAWK while the ship was underway. The fire started as a result of a fuel leak in copper tubing gage lines spraying on the hot exhaust for the starboard main engine. The Commanding Officer made the decision not to use the installed Halon system because the P-250 pump failed to start, therefore the ship had to rely on the electric fire pumps as their only source of firefighting water. The fire was attacked with water and successfully extinguished in less than ten minutes before spreading to any other compartments. According to the Coast Guard investigation into the fire, a contributing factor to the extent of damage was the fact that the diesel engines could not be instantly secured. Due to the design of the trip mechanisms, the engines continued to run at idle for 10 to 15 minutes after the trips were activated.[36]

The results from an analysis with the SFSEM would not have predicted that the P-250 would have failed to start resulting in the decision not to use the Halon. In fact the engineer/analyst would most likely have judged a high probability of success in extinguishing the fire with the installed total flooding Halon system, because it is inherently reliable and remarkably effective in extinguishing class B fires. Therefore in this case, results from the SFSEM would have given the Coast Guard a false sense of security. On the other hand, a knowledgeable engineer conducting a fire safety audit would have inspected the existing Halon system. It is reasonable to expect that the engineer would have noted the poor design of the Halon system. With hindsight it is easy to say that the probabilities in the A-curve would have been remarkably lower than normal due to the poor design.

It is considered unlikely that the engineer would have noted the extraordinarily long shutdown times for the diesel engines while conducting the fire safety audit. Of course if this fact were to be discovered, a knowledgeable engineer would have listed this as a major problem in the report of the fire safety audit. Furthermore, if this condition were not rectified, the resulting I, A, and M-values in the detailed fire safety analysis would reflect this hazardous condition in extremely low probabilities of success in suppressing the fire.

In summary, there are benefits to be derived from conducting the fire safety audit in addition to using the methodology to analyze the fire safety on a ship. Moreover, if the engineer/analyst is fortunate to be cognizant of actual fires on the class of ship being analyzed, it certainly enhances the engineering judgment of probabilities that are fundamental in this methodology.

10.2.3. The PIR Analysis

The fire safety analysis of the Polar Icebreaker Replacement (PIR) design was the first major developmental application of the SFSEM. The project clearly demonstrated the utility of the methodology. Results included recommendations to improve the fire safety design of the vessel and enhance the SFSEM.[6] Passive and active fire protection were analyzed for every compartment in the vessel. The major improvement recommended for passive fire protection was to provide an additional barrier in the boiler room. With this change the passive fire protection of the vessel was considered adequate to meet the established fire safety objectives. The most significant recommendation for active fire protection was to improve and integrate automatic fire detection in the ship. Smoke control was identified as the area where the most significant gains could be made in fire protection and life safety.

The SFSEM proved to be an effective method for integrating and analyzing all levels of fire protection in the PIR. The analysis of the PIR also led to the development of an extensive database in SAFE. This repository of information includes barrier materials, frequency of EB for various types of compartments, fuel loads, etc., which is available for fire safety analyses of other vessels.

10.3. FIRE INVESTIGATIONS

Unfortunately, the focus of fire investigations is usually a search for the cause or the origin of a fire and often includes a search for negligence or dereliction of duty. Certainly, the loss of valuable property and lives warrants an investigation and a determination of responsibility, but the performance of the ship as a fire safety system is often overlooked. Moreover, there has been a lack of analytical tools with which to assess this performance. The SFSEM is not the proper tool to conduct a forensic type of fire reconstruction analysis. There are deterministic computer fire models which are more appropriate for this type of analysis. However, the SFSEM can be used to analyze the possible fire paths compared to the actual fire path to gain insight into the ship response to the fire. Furthermore most ships are one vessel in a class of similar ships. An analysis of a fire may yield valuable information which would benefit the rest of the class.

10.4. FUTURE APPLICATIONS

10.4.1. "Indexing" of Ships

The question has been asked "How safe are my ships?" This question implies all aspects of safety such as personal injury due to accidents, property damage due to conducting the ship's primary missions, as well as the fire safety of ships. Fire safety can imply damage due to fire, lives lost, or injuries sustained due to fire and smoke.

The concept of "indexing" ships for fire safety, involves rank-ordering ships from best to worst. First, the criteria for fire safety must be defined. For example, the military may consider a warship as a platform for weapons. Therefore, the availability of an operational ship in a combat zone may be its criteria (mission protection paramount). The merchant marine may consider the cargo or tanker ship as a vehicle to transport cargo. Therefore it may index ships according to their relative ability to deliver the cargo in tact and on time (property protection paramount). Concern for life safety of the paying passengers is probably the criteria for indexing passenger liners (life safety paramount). Mission protection, property protection and life safety are all valid criteria for defining fire safety. It is quite likely that a ship will index differently depending on the criteria. For example, a polar icebreaker may have a mean time between mission failure of 137 years - much higher than other ships. This number does not take into account the berthing areas on the ship because berthing areas have little material impact on the availability of the ship to prosecute its missions. The berthing areas, however, are where deaths occur due to smoke inhalation of sleeping occupants. Therefore, if life safety is considered, this ship may index much lower than other ships.

Fire safety objectives will be established in the SFSEM based on a mission-oriented approach when the problems identified in Section 1.1.1 have been resolved. At that time it may be possible to index ships according to the mean time between mission failures. As noted above, this does not take into account the life safety aspects of fire safety. Therefore, additional research and development is required before a valid approach can be suggested to account for life safety aspects in indexing ships.

10.4.2. Training Damage Control Teams

The effectiveness of damage control teams in response to shipboard fires varies from ship to ship considerably. Even within a ship, the response can vary from night to day time operations. The evaluation of the time between initial notification of the bridge and agent application (in the engine room, for example) is one of the significant variables. This can be used, for example, as a basic standard of measurement for damage control firefighting teams. Evaluation of this base measure, combined with other measures of firefighting agent delivery, can provide evaluation of levels of fire protection for different compartments within the ship or a comparison of different ships in the same ship class. This would serve to point out deficient areas of training for a damage control team and identify ships which are deficient in providing firefighting training. Ships conduct training in accordance with their own approved fire protection doctrine. Preliminary analysis with the SFSEM dramatically points out the benefits of the flying squad in larger ships who immediately respond to the scene of the fire and take appropriate action to extinguish the fire. In the case of a small cutter, the person sent to verify the alarm could theoretically substitute for the flying squad on a larger ship.

10.4.3. Identifying Gaps and Redundancies

The SFSEM is a useful tool to document and support the development of various marine regulations concerning fire safety. It is also useful as explained in other parts of Section 10.0 to identify areas of improvement in marine regulations issued by the Coast Guard for its own cutters. The U.S. Coast Guard issued a Commandant Instruction on the approved allowance of damage control (including firefighting) equipment for all classes of Coast Guard Cutters. This allowance

specifies what each ship must have on board in its inventory, and unless the equipment is on the allowance list the ship is prohibited from having the equipment on board. The SFSEM served a valuable purpose to evaluate this inventory which led to the identification of gaps and/or redundancies.

[BLANK]

REFERENCES

[1] Clouthier, E., Rich, D., and Romberg, B., "SAFE User Manual, version 2.2", Submitted to Marine Fire and Safety Research Branch, U.S. Coast Guard Research and Development Center, Groton, CT, March, 1996.

[2] Bahadori, H., "A Quantification Procedure for Fire Risk Assessment of U.S. Coast Guard Vessels", Master's Thesis, submitted to Worcester Polytechnic Institute, October, 1987.

3] Bahadori, H., Beyler, C., Richards, R., and Romberg, B., "Using the Ship Fire Safety Engineering Method with Mission Oriented Objectives", Draft Paper, Submitted to Journal of Fire Protection Engineering, June, 1991.

[4] Dolph, B., "Quantitative Target Space Smoke Curve Analysis and Procedures", Master's Thesis, submitted to Worcester Polytechnic Institute, May 1995.

5] "The SFPE Handbook of Fire Protection Engineering", First Edition, Published by Society of Fire Protection Engineers and the National Fire Protection Association, Section 2/Chapter 2, Pages 2-16 through 2-32.

6] Richards, R., "Fire Safety Analysis of the Polar Icebreaker Replacement Design", 3 Volumes, Final Report, October, 1987.

[7] Sprague, C., "Fire Safety Analysis of Three Small Coast Guard Cutter Classes", 4 Volumes, Interim Technical Report, July 1992.

[8] Holmstedt, H, "Fire Safety Analysis of Six Small Coast Guard Cutter Classes", 7 Volumes, Interim Technical Report, September 1993.

[9] Sprague, C., "Small Cutter Fire Protection Project', 2 Volumes, Final Report, November 1994.

[10] Sprague, C., Holmstedt, H., and Romberg, B, "Fire Safety Analysis of the 175' WLM (R) Coastal Buoy Tender, Final Report, December 1994.

11] Nelson, H., "Building Fire safety Criteria, Appendix D", General Services Administration, 1972.

[12] Farley, D., "A Software Engineering Programming System for Fire safety Analysis", Master's Thesis, submitted to Worcester Polytechnic Institute, May 1985.

[13] Maguire, P. "An Analysis of Ship Fire Safety Assessment Codes and Their Application to Commercial Vessels", Master's Thesis, submitted to Worcester Polytechnic Institute, May 1995.

14] Fitzgerald, R., "The Anatomy of Building Fire safety", Preliminary Draft, Worcester Polytechnic Institute, 1982.

15] Fitzgerald, R. and Wilson, R., "Building Fire safety Evaluation", Preliminary Draft, Worcester Polytechnic Institute, 1983.

16] "NAVFIRE User Manual", Navware Canada, Inc., 1990.

[17] Naval Ship's Technical Manual, S9086-S3-STM-010, Chapter 555, "Shipboard Firefighting", First Revision, Naval Sea Systems Command, 1 June 1993.

[18] Drysdale, D., "An Introduction to Fire Dynamics", John Wiley and Sons, page 67, 1985.

[19] Lowrance, W., "Of Acceptable Risk", William Kaufmann Inc., 1976.

[20] Koen, B., "Definition of the Engineering Method", American Society for Engineering Education, Washington, D.C., 1985.

[21] Fitzgerald, R., "Risk Management for Fire and Explosions", Worcester Polytechnic Institute, January 1989.
[22] Ramachandran, G., "Non-Deterministic Modeling of Fire Spread", Journal of Fire Protection Engineering, Volume 3, Number 2, 1991, pp 37-48.
[23] Commander, Naval Safety Center, ltr 5100 Ser 302/0239, 20 January 1987.
[24] Commander, Naval Sea Systems Command, letter 9000 Opr 55W14 Ser 55W1/033, 3 June 1987.
[25] "Software User's Guide for HAZARD I, Fire Hazard Assessment Model", National Institute of Standards and Technology, NIST Handbook 146, June 1989.
[26] Ingberg, S.H., "Tests of the Severity of Building Fires", NFPA Quarterly, Vol 42, 1928.
[27] "The SFPE Handbook of Fire Protection Engineering", First Edition, Published by Society of Fire Protection Engineers and the National Fire Protection Association, Section 1/Chapter 9, Page 1-141.
[28] Sprague, C.M., "Critical Parameters for SAFE", CompuCon letter report, 11 June 1991.
[29] Drysdale, D., "An Introduction to Fire Dynamics", John Wiley and Sons, section 10.1, 1985.
[30] Mahoney, J., "Development of a Procedure for Construction of Barrier Performance Curves", Master's Thesis, submitted to Worcester Polytechnic Institute, October 1995.
[31] Kawagoe, K., and T. Sekine, "Estimation of Fire Temperature-Time Curve in Rooms", manuscript received on April 25, 1963, Building Research Institute, Occasional Report No-11, Tokyo, Japan (1973).
[32] Sprague, C., Holmstedt, H., Romberg, B, and LT Dolph, B., "Fire Safety Analysis of the USCGC VINDICATOR", Technical Report, Pending approval for publication in the NTIS, June 1995.
[33] Sprague, C.M., Cummings, M., and Nash, L., "Fire Safety Analysis of CGC VIGOROUS", Class Project submitted to Worcester Polytechnic Institute, December 1990.
[34] Commanding Officer, CGC VIGOROUS Mishap Report dated 1 June 1989.
[35] U.S. Coast Guard Commandant Message, Aldist 153/89 dated 4 August 1989.
[36] Informal Investigation into the U.S. Coast Guard Cutter SEA HAWK Fire, Letter 5830 dated 27 Jan 1988, with Final Endorsement by RADM Thorsen dated 13 May 1988.

BIBLIOGRAPHY

Articles Published in Professional Journals:

1. Fitzgerald, R., "An Engineering Method for Building Fire Safety Analysis", Fire Safety Journal, Vol 9, No. 2, page 233, July 1985.
2. Fitzgerald, R., "Risk Analysis Using the Engineering Method for Building Fire Safety", Proceedings of the First International Symposium of Fire Safety Science, Hemisphere Publishing Corporation, Washington, DC, November 1985.
3. Deal, S., and Beyler, C., "Correlating Preflashover Room Fire Temperatures", Journal of Fire Protection Engineering, Vol 2, No. 2, Page 33, April 1990.
4. Dorsey, M., "Fire on the Water", W.P.I. Journal, Fall 1990.
5. Fitzgerald, R., Richards, R., and Beyler, C., "Fire Safety Analysis of the Polar Icebreaker Replacement Design", Journal of Fire Protection Engineering, Vol 3, No. 4, page 137, October 1991.
6. Sprague, C., Richards, R., and Blanchard, M., "A Methodology for Evaluation of Ship Fire Safety", Naval Engineers Journal, May 1992.
7. Peatross, M., and Beyler, C., "Thermal Environment Prediction in Steel-Bounded Preflashover Compartment Fires", Fire Safety Science - Proceedings of the Fourth International Symposium, pp. 205-216, 1994.
8. Dolph, B., and Barnett, J., "Quantitative Target Space Smoke Curve Analysis and Procedures", Proceedings - International Conference on Fire Research and Engineering, pp. 489-494, September 1995.
9. Sprague, C. and Dolph, B. "Performance-Based Fire Safety Analysis of the USCGC VINDICATOR (WMEC 3)", Accepted for Publication by the Society of Naval Architects and Marine Engineers, Fall 1996.

Technical Notes in SHRD Library:

1. Sprague, C., "Analysis of Cutter Standard Repair Locker Inventory", Letter Report, December 1990.
2. Sprague, C., "Critical Parameter Values for SAFE", Letter Report, June 1991.
3. Sprague, C., "Preliminary Fire Safety Analysis of Three Small Coast Guard Cutters", Interim Technical Report, June 1991.
4. Sprague, C., "Network Diagrams for Flame Movement Analysis on Ships", Interim Technical Report, January 1992.
5. Sprague, C., "Fire Growth Factors in the Analysis of Ship Fire Safety", Interim Report, April 1992.

6. Sprague, C., "Fire Safety Analysis of Three Small Coast Guard Cutter Classes", Interim Technical Report, July 1992.
7. Holmstedt, H., "Fire Safety Analysis of Six Small Coast Guard Cutter Classes", Technical Report, September 1993.

Reports in NTIS:

1. Richards, R., "Fire Safety Analysis of the Polar Icebreaker Replacement Design", 3 volumes, Final Report, 1987.
2. Peatross, M., Beyler, C., and Back, G., "Validation of Full Room Involvement Time Correlation Applicable to Steel Ship Compartments", Report CG-D-16-94, November 1993.
3. Sprague, C., Holmstedt, H., Romberg, B, and LT Dolph, B., "Fire Safety Analysis of the 175' WLM (R) Coastal Buoy Tender", Technical Report, Pending approval for publication in the NTIS, December 1994.
4. Sprague, C., "Small Cutter Fire Protection Project", Period Covered: June 1990 - October 1993, Final Report, Pending approval for publication in the NTIS, December 1994.
5. Sprague, C., Holmstedt, H., Romberg, B, and LT Dolph, B., "Fire Safety Analysis of the USCGC VINDICATOR", Technical Report, Pending approval for publication in the NTIS, June 1995.
6. Clouthier, E., Rich, D., and Romberg, B., "Ship Applied Fire Engineering (SAFE) User Manual Version 2.2", Report CG-D-10-96, March 1996.

Master of Science Theses Submitted to the Faculty of WPI:

1. Melanson, D., "A Simulation of Flame/Heat Movement in a Burning Building", December 1982.
2. Van Anne, C., "Managing Risk Through Decision Analysis to Evaluate Fire Safety Hazards and Extent of Probable Loss by Use of an Engineering Method", January 1985.
3. Farley, D., "A Software Engineering Programming System for Fire Safety Analysis", May 1985.
4. O'Brien, K., "Thermal Conductivity Calculation Using Experimental Furnace Data and Finite Difference/Finite Element Unsteady State Heat Transfer Program Analysis", December 1985.
5. Bahadori, H., "A Quantification Procedure for Fire Risk Assessment of U. S. Coast Guard Vessels", September 1987.
6. Chutoransky, R., "An Engineering Method for Predicting Smoke Movement in Buildings", January 1988.

7. Hill, J., "A Database Programming System for the WPI Fire Safety Simulation Project", May 1988.

8. LaSalle, J, "Assessment of the Relative Risk of Compartment Fire Flashover", June 1988.

9. Deal, S., "Estimating Temperatures & Flashover in Room Fires", September 1988.

10. Pizzano, W., "An Application of the Engineering Method for Evaluating Building Fire Performance and Developing Associated Construction and Life-Cycle Costs: A Case Study", December 1988.

11. White, D., "Computer Modeling of Smoke Transport Onboard Ships", July 1990.

12. Fitzgerald, J., "Development of the WPI Fire Simulation Program, Version 3.0", August 1990.

13. McGreal, M., "Risk Assessment of Compartment Fire Flashover Utilizing Computer Modeling, Subjective Theory and the Engineering Method", September 1990.

14. Nash, R., "Analysis of Egress System Design on International Passenger Ships", May 1991.

15. Cable, E., "An Analysis of Delay in Staff Response to Fire Alarm Signals in Health Care Occupancies", January 1993.

16. Mui, E., "Fire Protection Practices for Structural Steel Design", January 1993.

17. Falsafi, E., "Risk Assessment of Compartment Flashover", December 1993.

18. Ferreira, M., "Barrier Performance Utilizing Normalized Heat Load, as Part of an Engineering Based Building Fire Protection Analysis Method", December 1993.

19. Bland, K., "Behavior of Wood Exposed to Fire: A Review and Expert Judgment Procedure for Predicting Assembly Failure", May 1994.

20. Till, R., "A Critique of the Engineering Method as Implemented in the SAFE Computer Code", May 1994.

21. Crompton, M., "Smoke Generation and Movement Analysis in the Building Fire Safety Engineering Method", May 1994.

22. Ghosh, G., "Lifesafety Analysis in the Building Fire Safety Engineering Method", August 1994.

23. Ruchala, K., "Quantification of Manual Fire Suppression", December 1994.

24. Newton, B., "Analysis of Common Fire Severity Methods and Barrier Performance", December 1994.

25. Dolph, B., "Quantitative Target Space Smoke Curve Analysis and Procedures", May 1995.

26. Maguire, P., "An Analysis of Ship Fire Safety Assessment Codes and Their Application to Commercial Vessels", May 1995.

27. Mahoney, J., "Development of a Procedure for Construction of Barrier Performance Curves", October 1995.

Graduate Projects Submitted to the Faculty of WPI:

1. Ley, M., "Grading Method of Building Fire safety", August 1987.
2. Isner, M., "The Evaluation of Egress System Based upon Human Behavior, Building Characteristics, and Threat Description", May 1988.
3. Cummings, R., "A Method for Analyzing the Fire Protection of Commercial Cooking Equipment", April 1989.
4. Roque, R., "Integration of Smoke Control on HVAC System for Tall Buildings", December 1990.
5. Capaul, T., "Fire Risk Management for an Industrial Plant", May 1991.
6. Corbett, G., "Water Supply Evaluation for Firefighting ", May 1991.

Major Qualifying Project Submitted to the Faculty of WPI:

1. Weitz, E., "Fire Simulation", A Major Qualifying Project submitted to the Faculty of WPI, May 1983.
2. Doerschler, G., "The Fire Service's Reaction to Structural Change", A Major Qualifying Project submitted to the Faculty of WPI, January 1986.
3. Donovan, D., "Fire Simulation", A Major Qualifying Project submitted to the Faculty of WPI, May 1986.
4. Sluicer, G., "Fire Simulation", A Major Qualifying Project submitted to the Faculty of WPI.
5. Childs, F., and Marshall, E., "Expert System for the Development of an I-curve", A Major Qualifying Project submitted to the Faculty of WPI, April 1987.
6. Ratal, H., and Jolicoeur, M., "Graphical Input Program for the Fire Simulation Program", A Major Qualifying Project submitted to the Faculty of WPI, April 1987.
7. Calway, W., and Gouin, D., "An Expert System for Analysis of One Room Fires", A Major Qualifying Project submitted to the Faculty of WPI, May 1987.
8. Laprise, B., Sedor, J., and Stiles, P., "Structural Response of a Steel Beam: Effect of a Non-uniform Temperature Change", A Major Qualifying Project submitted to the Faculty of WPI, May 1987.
9. Fitzgerald, J., "Graphical Input Program for the Fire Simulation Program", A Major Qualifying Project submitted to the Faculty of WPI, December 1987.
10. Delusky, S., "Graphical Input Program for the Fire Simulation Project", A Major Qualifying Project submitted to the Faculty of WPI, April 1988.

11. Bangrazi, A., and Cardani, L., "Expert System: M-curve", A Major Qualifying Project submitted to the Faculty of WPI, May 1988.

12. Rando, A., and Wessel, E., "Display of Intersected Building for Fire Simulation Purpose", A Major Qualifying Project submitted to the Faculty of WPI, April 1989.

13. Trevisani, X., and Trevisani, J., "Floor Plan Input Program", A Major Qualifying Project submitted to the Faculty of WPI, April 1989.

14. Marrino, H., and Nunnemacher, J., "Fire Suppression", A Major Qualifying Project submitted to the Faculty of WPI, April 1994.

15. Garabedian, A., "A Comparative Analysis of Building Systems: Fire Protection", A Major Qualifying Project submitted to the Faculty of WPI, May 1994.

Interactive Qualifying Project Submitted to the Faculty of WPI:

1. Cullin, P., Kuchachik, J., and Maynard, S., "Home Fire Safety", An Interactive Qualifying Project submitted to the Faculty of WPI, March 1977.

2. Ruthven, G., and Shulyak, I., "Building Construction and Fire Safety", An Interactive Qualifying Project submitted to the Faculty of WPI, March 1977.

3. Bleakie, H., "Time Estimation for Agent Application by Fire Departments", An Interactive Qualifying Project submitted to the Faculty of WPI, 1978.

4. Fortin, F., Lambert, E., Martin, G., and Schab, D., "Analysis of Egress System in Buildings", An Interactive Qualifying Project submitted to the Faculty of WPI, March 1979.

5. Gagnon, A., Schoonmaker, P., Storey, T., and Woodard, R., "Fire Department Operations and Capabilities", An Interactive Qualifying Project submitted to the Faculty of WPI, May 1979.

6. Kelley, K., Davenport, M., and Hennessy, R., "Hazard Analysis of Furniture with Applications to I-curve Analysis", An Interactive Qualifying Project submitted to the Faculty of WPI, May 1979.

7. Welsh Jr., T., "Industrial Hazard Analysis: Sprinkler System Evaluation", An Interactive Qualifying Project submitted to the Faculty of WPI, January 1980.

8. Cabral, A., and Nicholson Jr., J., "Reliability Analysis of NFPA Fire Codes: A Suggested Approach", An Interactive Qualifying Project submitted to the Faculty of WPI, May 1980.

9. Fralley Jr., R., and doCurral, M., "A Life Safety for Building Designs", An Interactive Qualifying Project submitted to the Faculty of WPI, May 1981.

10. Allessio, M., and Mara, B., "Building Safety", An Interactive Qualifying Project submitted to the Faculty of WPI, May 1982.

11. Meacham, B., Moseley, F., and Stoodt, R., "Evaluation of Fire Department Initial Attack and Extinguishment Capabilities", An Interactive Qualifying Project submitted to the Faculty of WPI, March 1983.

12. Smith, R., "Evaluation Fire Department Communications", An Interactive Qualifying Project submitted to the Faculty of WPI, December 1983.

13. Bates, R., and Bulette, J., "A Procedure for Computer Aided Fire Investigations", An Interactive Qualifying Project submitted to the Faculty of WPI, May 1984.

14. Penta, C., Weidner, G., and Alves, L., "Fire Risk Evaluation", An Interactive Qualifying Project submitted to the Faculty of WPI, May 1984.

15. Mah, B., and McCarthy, D., "Smoke Movement", An Interactive Qualifying Project submitted to the Faculty of WPI, May 1985.

16. Vessie, M., Robblee, G., and Colangelo, M., "Building Construction for the Fire Service", An Interactive Qualifying Project submitted to the Faculty of WPI, May 1985.

17. Barnes, K., and Swedick, D., "Firefighting Economics in High-rise Buildings", An Interactive Qualifying Project submitted to the Faculty of WPI, April 1994.

18. Berkov, A., "Building Features and Manual Suppression", An Interactive Qualifying Project submitted to the Faculty of WPI, May 1995.

19. Gagnon, B., "Building Comparisons for Manual Fire Suppression", An Interactive Qualifying Project submitted to the Faculty of WPI, March 1996.

20. Gervais, R., Montague, L., Stark, M., and Ward, J., "Auburn Fire Department Dispatching", An Interactive Qualifying Project submitted to the Faculty of WPI, May 1996.

21. McConnell, D., "Building Life Safety Analysis ", An Interactive Qualifying Project submitted to the Faculty of WPI , Project No. RWF-7780.

22. Pashoian, S., Schultz, R., and Waite, A., "Ship Fire Performance", An Interactive Qualifying Project submitted to the Faculty of WPI.

Preliminary Qualifying Project Submitted to the Faculty of WPI:

1. Andretta, M., LaRoche, J., Matthews, O., and Rupp, M., "Smoke Detector Evaluation", PQP Project Proposal.

Miscellaneous:

1. Nelson, H., General Services Administration, "Building Fire Safety Criteria, Appendix D: Interim Guide for Goal-Oriented Systems Approach to Building Fire Safety", 1972.
2. Apostolakis, G., "Probability and Risk Assessment: The Subjectivistic Viewpoint and Some Suggestions", Nuclear Safety, Vol 19, No. 3, page 305, May/June 1978.
3. Fitzgerald, R., "The Anatomy of Building Fire Safety", Preliminary Draft, Worcester Polytechnic Institute, 1982.
4. Fitzgerald, R. and Wilson, R., "Building Fire Safety Evaluation", Preliminary Draft, Worcester Polytechnic Institute, 1983.
5. Boule, R., "Fire Simulation", A Major Qualifying Project submitted to the Faculty of WPI, May 1986.
6. Fitzgerald, R., "An Integration Method for Translating Research into Engineering Practice", report from "The Workshop on Analytical Methods for Designing Buildings for Fire Safety", Building Research Board of the National Research Council, Washington, DC., 1987.
7. Lappi, Esa Ilmari, "An Analysis Method for Fire Safety", Fire Technology Laboratory, Technical Research Centre of Finland, November 1991.
8. Fitzgerald, R., "Workbook for the Building Fire Safety Engineering Method", Preliminary Draft, March 1993.
9. Cappuccio, J., "Predicting Fire Safety in Industrial Structure", Industrial Fire World, Vol 8, No. 5, page 9, September/October 1993.
10. Wikman, J., "Ship Fire Safety Engineering", A Thesis submitted to the Faculty of Lund University, Sweden, 1995.

[BLANK]

GLOSSARY

A-curve - The resulting curve when A-values for increasing areas of a compartment are plotted on a graph with probability of flame limitation on the ordinate axis (logarithmic scale) with the origin at the top left and the deck area of the compartment on the abscissa axis (linear scale). See "A-value".

A-value (%) - The probability that an automated fixed fire protection system installed in a compartment will successfully extinguish the fire before FRI occurs given that the fire did not self-terminate and was not extinguished by manual fire extinguishment efforts. Each compartment is assigned three A-values: the probability of flame limitation given EB in the room of origin, the probability of flame limitation given EB has occurred in the room as a result of a thermal (Tbar) failure of a barrier, and the probability of flame limitation given EB has occurred in the room as a result of a durability (Dbar) failure of a barrier. In SAFE, these values are abbreviated OA, TA and DA respectively

Active Fire Protection - Fire protection features designed to limit flame movement by automatic detection, fixed fire protection systems, and manual fire extinguishment systems or equipment. Examples of active fire protection features are: automatic sprinkler systems, fire extinguishers, and trained firefighting teams. See "Passive Fire Protection".

AFFF - Aqueous Film Forming Foam. A firefighting agent particularly effective against class B fires.

Alpha (kilowatts per second squared) - The fire growth coefficient in the pre-FRI heat release rate algorithm. Generally, alpha is set to .001 for slow growth, .01 for moderate growth, .1 for fast growth and 1.0 for ultra-fast fire growth. Engineering judgment is used to select an appropriate alpha for the combustibles in a compartment and intermediate values are frequently used. See "Pre-FRI Heat Release Rate".

Alternative Data Set - Data sets identified as "Alternative" have had the baseline input values to SAFE adjusted as necessary to reflect the impact of the proposed alterations or modifications which affect the ships' fire safety system. See "Baseline Data Set".

ASTM E119 Test Rating (hours and minutes) - A rating in hours and minutes specifying time to failure of a material in the standard fire test conducted in accordance with the requirements of ASTM standard test E119.

AutoCAD - Commercially available software used to display the plan views of a ship's compartmentation on each deck level.

Automatic Detection Priority - A compartment's priority of need for fire detection systems based on its frequency of EB, the percentage of time it is monitored, and its acceptable loss rating. See SAFE User Manual for a description of the algorithm.

Barrier - Any vertical or horizontal surface which tends to impede, slow, or stop the spread of heat, flames, and combustion products from one space to another. In a ship, barriers may be bulkheads (joiner, watertight, or structural), decks or overheads. See "Zero-Strength Barrier".

Baseline Data Set - Data sets identified as "Baseline" utilize input values to the SAFE program based on the physical condition of the ship found during the ship visit and are not influenced by any modifications or alterations which may be proposed as a result of an analysis. See "Alternative Data Set".

Beyler/Peatross Algorithm - The algorithm used in SAFE, version 2.2, to calculate FRI-time for compartment fires. Primary variables include heat release rate, heat loss through the boundaries and the incoming air. See "FRI-Time".

Blackout - The cessation of visible flaming (not to be mistaken for extinguishment which is the cessation of combustion).

Bulkhead - The equivalent in a ship to a wall in a building. Bulkheads can be structural or joiner, insulated or bare. They may be constructed of aluminum, steel, or composite such as marinite or nomex. Together with overheads, they serve to segment the ship into various compartments.

CBO (minutes) - Compartment Burnout - The point in the fire growth curve where exhaustion of all fuel due to pyrolysis occurs.

Ceiling Point - The point in growth of a compartment fire when the flames first touch or involve the ceiling.

Cellulosics - One of two classifications of fuel on board ship. Cellulosics are characterized as ash-producing; examples are wood, paper, and textile products. See "Fuel Load and Petro-Chemicals".

Class A Fire - A fire involving cellulosic type products (wood, cotton, paper, etc.) that produce ash as a combustion product. Water is the primary firefighting agent and extinguishes the fire by cooling the fuel below the ignition point. See "Class B Fire" and "Class C Fire".

Class B Fire - A fire involving flammable liquids (fuel oil, lube oil, gasoline, etc.) that burn vigorously without producing ash. AFFF is the primary firefighting agent and extinguishes the fire by smothering the fire with a thick layer of foam that floats on the surface of the fuel. See "Class A Fire" and "Class C Fire".

Class C Fire - A fire involving energized electrical equipment. Class A fires frequently involve class A or B fires as well. Electrical fires are usually extinguished when the electrical power to the affected equipment is secured, however the associated class A or B fire may continue to burn. CO_2 is the primary firefighting agent and extinguishes the fire by smothering the fire without damaging electrical or electronic components. See "Class A Fire" and "Class B Fire".

CO_2 - Carbon Dioxide. A firefighting agent particularly effective against class C fires.

Combustion - Rapid oxidation in which a fuel pyrolizes or turns into a vapor and mixes with oxygen at an extremely rapid rate accompanied by the release of intense heat and light visible as flames. See "Fire" and "Pyrolysis".

Compartment - An enclosed space in a ship usually identified with a unique identifying number consisting of deck, forward frame, relation to centerline, and a letter designating the function or type of compartment. See "Plan ID".

Condition of Readiness - One of three material conditions of readiness set by the Commanding Officer of a military ship. All accesses such as doors, hatches and scuttles, and other fittings having damage controL-value, are labeled X, Y, or Z. In condition Xray all Yoke and Zebra accesses and fittings are open and Xray are closed; in condition Yoke all Zebra accesses and fittings are open and Xray and Yoke are closed; in condition Zebra, all accesses and fittings are closed.

Configuration - The type of fire protection under consideration in a given fire scenario for a SAFE computer model run. Options include Passive only (I), Passive and Fixed Fire

Protection System Extinguishment (I and A), Passive and Manual Fire Extinguishment (I and M), or all three (I, A, and M)

COR - Circular of Requirements. A document that describes the specifications for a proposed ship design.

CSRLI - Cutter Standard Repair Locker Inventory. The allowance for damage control equipment on board a Cutter as specified in a U.S. Coast Guard Commandant Instruction.

CUI - Compartment Use Indicator - An abbreviated designation for a compartment selected from a list provided in SAFE used to define the type or function of the compartment and establish default values for various fire parameters.

Cum L (%) - The accumulated probability that a fire will be limited (thus points on an "L-curve") in this or some previous compartment in a particular fire path. "1 - Cum L", therefore, is the probability that the fire will spread.

D-Adjust (%) - A user-specified parameter that can range from 0 to -99% to modify the Dbar values for a barrier. Usually used to account for deterioration of the barrier. An open door is not considered a derating of the barrier. See "Dbar".

Data Set - A data set describes those characteristics of a ship which affect its performance as a fire safety system. It includes information describing particular aspects of a compartment such as geometry, construction, fuel type and load, automatic detection and monitoring systems, ventilation and fire protection systems. See "Alternative Data Set" and "Baseline Data Set".

Dbar (%) - The probability of a durability failure of a barrier which would permit massive transfer of heat into the adjacent compartment.

Dbar Control Points (BTUS/sq ft) - Three values of heat energy impact plotted on the abscissa axis corresponding to probabilities of durability barrier failure of 0, 0.5 and 1.0 plotted on the ordinate axis. These points define a barrier's Dbar curve.

DCA - Damage Control Assistant. A designated ship's officer who is responsible for the damage control organization on the ship.

Deck - The equivalent in a ship to a floor in a building. Decks can be continuous or stepped, insulated or bare. They can be constructed of aluminum, steel, or composite such as nomex. They can be covered with tile, carpet, or a poured floor covering such as terrazzo on one side and sheathing, insulation or both on the other. Together with overheads and bulkheads they serve to segment the ship into various compartments.

Destroyed Barrier - When a barrier is "destroyed" in a model run, heat from the burning compartment is transferred to the adjacent compartment if that room is not at full room involvement. The amount of heat transferred is a function of the barrier material and is referred to as residual heat transfer. See "Residual Heat Transfer".

Door - An opening through a bulkhead providing access to a compartment. If a door is open it is equivalent to a durability failure of the associated bulkhead.

Dur IAM (%) - The probability of terminating a fire originating in a compartment due to a durability barrier failure. The probability is calculated from a combination of the I, A, and M-curves for that room. If the room is a room of origin, Dur IAM is not applicable.

EB - Established Burning - The point in the fire growth curve between ignition and FRI when the fire starts to grow exponentially with respect to time. In SAFE, it is assumed that this exponential growth varies with the 2nd power of time. EB is usually considered

equivalent to a flame 10" high. EB also signifies the demarcation between fire prevention and the beginning of the ship's response to the fire.

EEBD - Emergency Escape Breathing Device. This self contained device provides 15 minutes of oxygen to an individual for the purpose of escaping from a fire.

Enclosure Point - The point in the fire growth curve where the fire starts to become influenced by a barrier.

Extinguishment - The cessation of combustion (not to be confused with blackout which is the cessation of visible flaming.)

Failed Barrier - When a barrier has "failed" in a SAFE computer model run, EB is assumed in the adjacent compartment, if that room is not already burning. The failure mode is thermal (Tbar) if the barrier's Tbar > Dbar; conversely if Dbar is >= Tbar, the failure mode is Dbar.

FAL - Frequency of Acceptable Loss. The frequency with which a compartment can sustain a given Magnitude of Acceptable Loss (MAL). The FAL and MAL together establish the fire safety objectives (FSOs) for a given compartment. See "MAL" and "FSO".

FFS - Fire Free State. The status of a compartment relative to fire before ignition has occurred.

Fire - Combustion. Usually destructive and undesirable in a ship. See "Combustion" and "Pyrolysis".

Fire Growth Model - One of 16 models of fire growth defined in SAFE that describe the characteristics of the fuel load in a compartment. The fire growth model determines the fire growth coefficient, alpha, and the maximum heat release rate, Qmax. See "Alpha" and "Qmax".

Fire Path - The sequential spread of fire from the compartment of origin through a failed barrier into an adjacent compartment, then through another barrier into another space and so on until the fire is limited. Multiple fire paths indicate simultaneous failure of more than one barrier permitting the fire to spread into multiple compartments.

Fire Safety System - A term used to address the overall performance of a ship as it relates to fire safety. It considers the ship as a whole and accounts for such things as compartment geometry, construction, fuel type and load, automatic detection and monitoring systems, ventilation and fire protection systems.

Flashover - A phenomena characteristic of compartment fires denoted by the rapid and sudden propagation of flame through the unburned gases and vapors collected at the top of the enclosure. Flashover is invariably accompanied by full room involvement (FRI). FRI conditions are untenable for humans without self-contained breathing devices.

FLLR - Flammable Liquid Line Rupture. A scenario used in SAFE to model a class B spray fire. The key user defined variables include the amount of fuel due to the rupture that is added to the compartment's fuel load, the room of origin and its associated FRI time and I-value.

Frequency of EB (losses per compartment year) - A frequency based on historic fire casualty data compiled from data provided by the U.S. Naval Safety Center and the Coast Guard's MISREP mishap reporting system.

FRI - Full Room Involvement - The point in the fire growth curve when the temperature in a compartment has increased 500C above ambient. FRI conditions include surface burning of all combustibles and survival for unprotected personnel is not possible.

FRI Time (minutes) - The elapsed time from EB to FRI calculated in SAFE using the Beyler-Peatross algorithm. See "FRI".

FSOs - Fire Safety Objectives - Performance standard, ideally established by cognizant authorities, for a compartment accounting for mission protection, property protection and life safety. The SFSEM is designed to analyze, quantify and compare the ship's performance as a fire safety system to achieve the established FSOs on a compartment basis. The FAL and MAL together establish the FSOs for a given compartment. See "FAL" and "MAL".

FTA - Fault Tree Analysis. An approach for establishing fire safety objectives that takes into account the effect losing one compartment has on another ; useful for situations where redundancies require multiple simultaneous losses before the ship's mission is affected. See "FSOs".

Fuel-Controlled Burning - When sufficient ventilation is available, fuel controlled burning will occur. The fire is limited by the fuel surface available for combustion. See "Ventilation-Controlled Burning".

Fuel Load (BTU's/sq ft) - The total heat energy available for release from combustible materials in a compartment. In SAFE, fuel loads are expressed as fuel load density, where the total fuel load in a compartment is divided by the compartment area. Fuel loads are entered in SAFE for: cellulosics, plastics, and petroleum-based flammable liquids. Cellulosics and plastics are entered in lbs/sq ft while flammable liquids are entered as gallons. The heat energy content of cellulosics is approximately 8000 BTU's/lb; plastics and flammable liquids are approximately 16000 Btu's/lb (flammable liquids are assumed to weigh 8 lbs/gallon).

FY - Fiscal Year (For example, FY96 is Oct. 1, 1995 to Sept. 30, 1996).

Halon - Halogenated Hydrocarbon. A firefighting agent particularly effective against all classes of fires, but presently banned from further production in accordance with the Montreal Protocol due to its atmospheric ozone-depleting characteristics.

Hatch - An opening through a deck providing access to a compartment. If a hatch greater than or equal to 400 square inches is open, it is equivalent to a durability failure of the associated barrier.

Heat Energy Impact (HEI) (BTUs/sq ft) - The thermal heat flux to which the barrier is subjected during a fire. See "Pre-FRI Heat Release Rate" and "Post-FRI Heat Release Rate".

HVAC - Heating Ventilation and Air Conditioning system. The system on board a ship which supplies and/or exhausts warm and/or cool conditioned air to interior compartments.

I-curve - The resulting curve when I-values for a compartment reaching the enclosure point, the ceiling point, and the room point are plotted on a graph with probability of flame limitation on the ordinate axis (logarithmic scale), with the origin at the top left, and the area of fire involvement on the abscissa axis (linear scale). See "I Value"

Ignition - Point in the fire growth curve that denotes the beginning of pyrolysis of combustible fuel.

Ign Mode - Ignition Mode. In SAFE one of three ways a compartment can reach EB: orig (as room of origin), therm (due to a thermal (Tbar) failure), or dur (due to a durability (Dbar) failure).

Incombustible - Not subject to combustion under ordinary conditions of temperature and and normal oxygen content of atmosphere.

Intermediate Barrier Value (IBV) - The probability that the barrier will be successful in limiting the spread of fire. In SAFE, IBV is calculated as IBV = P(FPC)*P(BF), where P(FPC) is the probability of failure in limiting the fire in the previous compartment (1-Cum L in the previous compartment) and P(BF) is the probability of this barrier failing to limit the fire (1- (Tbar + Dbar)). See Figure 6-10 for a graphic representation of the L-curve for a fire path. In this figure, IBV of barriers are denoted by the height of the vertical portions of the L-curve.

Intumescent - A special coating, typically used on electrical cables, which is activated by elevated temperatures and that provides an insulating effect against high temperatures.

I-value (%) - The probability that the fire will self-extinguish at some point between EB and FRI given that the fire was not extinguished by fixed fire protection systems or by manual fire extinguishment efforts. Each compartment is assigned three I-values: the probability of flame limitation given EB in the room of origin, the probability of flame limitation given EB has occurred in the room as a result of a thermal (Tbar) failure of a barrier, and the probability of flame limitation given EB has occurred in the room as a result of a durability (Dbar) failure of a barrier. In SAFE, these values are abbreviated OI, TI and DI respectively.

L-curve - A graph which plots the cumulative probability of limiting the flame on the Y axis against time or some other suitable parameter on the X axis such as the number of rooms in a fire path or the deck area of a particular compartment. Convention calls for plotting 0 as the probability of limiting the flame at the top of the Y axis and 100% as the probability of limiting the flame on the X axis. See "Cum-L"

L-value (%) - The probability that a fire will be limited in a given compartment calculated from the I, A, and M-values for that compartment. See Figure 6-9 for a graphic representation of the L-curve for a compartment.

MAL - Magnitude of Acceptable Loss - The severity of damage that can be tolerated in a compartment. FAL and MAL together establish the FSOs for a given compartment. See "FAL" and "FSOs".

Material ID - A three-character identifier to describe one of a compartment's barriers selected from the catalog of available barrier materials.

M-curve - The resulting curve when M-values for increasing areas of a compartment are plotted on a graph with probability of flame limitation on the ordinate axis (logarithmic scale) with the origin at the top left and the deck area of the compartment on the abscissa axis (linear scale). See "M-value".

Minimal Cut Sets ("j" sets) - All sets of compartments containing the smallest combination of components which, if lost in the same model run, can cause a mission failure. Minimal cut sets can contain one or more compartments. In the SFSEM, fault tree analysis is used to identify the minimal cut sets.

M-value (%) - The probability that manual fire extinguishment efforts will successfully extinguish the fire before FRI occurs given that the fire did not self-terminate and was not extinguished by automated fire protection systems. Each compartment is assigned three M-values: the probability of flame limitation given EB in the room of origin, the probability of flame limitation given EB has occurred in the room as a result of a thermal (Tbar) failure of a barrier, and the probability of flame limitation given EB has occurred in

the room as a result of a durability (Dbar) failure of a barrier. In SAFE, these values are abbreviated OM, TM and DM respectively

NAVSEA - U.S. Naval Sea Systems Command.

NFTI - Naval Firefighting Thermal Imager. A hand held device used to locate the source of flames in a compartment by sensing the temperature of the fire.

Non-Standard Scenario - Similar in all respects to a Standard Scenario except that it considers reduced levels of available fire protection systems.

NSTM - Naval Ship's Technical Manual. A set of regulations and guidelines issued by the U.S. Navy and frequently cited in U.S. Coast Guard regulations.

NWP - Naval Warfare Publication. A U.S. Navy publication.

OBA - Oxygen Breathing Apparatus. A self contained device that supplies oxygen to facilitate firefighting in untenable atmospheres.

One-Shot Halon System - A total flooding system with the capability to completely flood the protected space one time with the required concentration level of Halon 1301.

Overhead - The equivalent in a ship to a ceiling in a building. Overheads can be continuous or stepped, insulated or bare. They can be constructed from steel, aluminum, or a composite material such as nomex or celotex. They can be covered with sheathing, insulation, or both on one side and covered with carpet, tile or a poured floor such as terrazzo on the other. Together with bulkheads, they serve to segment the ship into various compartments.

P-250 - A portable gasoline-powered pump used for firefighting and dewatering.

Passive Fire Protection - Fire protection features designed to limit flame movement by their presence alone. Barriers are the best example of passive fire protection, intumescent coatings, fire doors, fuel load distribution, and insulation of hot surfaces are other examples. See "Active Fire Protection".

Percent Heat Release (%) - A percentage of the remaining heat in a burning compartment that is transferred to an adjacent compartment as a result of a durability (Dbar) failure of the barrier. The percent heat release is a function of the barrier material and can be found in the catalog of barrier materials. See "Residual Heat Transfer".

Percent Monitored At Sea (%) - An estimate of the percentage of time around the clock while a ship is underway that a compartment is monitored to detect the presence of smoke and flames. Both personnel and fire/smoke/heat detectors can serve to monitor a compartment.

Percent Monitored In Port (%) - An estimate of the percentage of time around the clock while a ship is in port that a compartment is monitored to detect the presence of smoke and flames. Both personnel and fire/smoke/heat detectors can serve to monitor a compartment.

Petro-Chemicals - One of two classifications of fuel on ships. Petroleum-based chemical products are characterized by having twice the heat energy per pound than cellulosics type of fuel. Examples of petro-chemicals include: flammable liquids and synthetic polymers such as plastics and polyester. See "Fuel Load and Cellulosics".

PIR - Polar Icebreaker Replacement - Design for the replacement of the Coast Guard's Polar Icebreaker class. The PIR project in 1987 was the first time the SFSEM was utilized to analyze the fire safety performance of a Coast Guard Cutter.

PKP - Potassium Bicarbonate. A dry chemical firefighting agent frequently used in portable fire extinguishers. The only authorized dry chemical portable fire extinguisher permitted on board Coast Guard Cutters.

Plan ID - A unique identifier for compartments as used in the Booklet of General Plans and other ship's drawings. The four fields that make up the identifier are: deck number, forward frame number, relationship to the centerline (1 for starboard, 2 for port, 0 for centerline), and compartment use indicator. Examples are 3-66-0-E, and 01-40-2-L.

Post-FRI Heat Release Rate (kW) - The rate that heat is released from the burning fuel in a compartment during the fully developed fire realm and calculated according to: $Q = 1500 * A * H^{.5}$ In SAFE, the ventilation factor, $A * H^{.5}$, takes into account the height and area of all ventilation openings. Open doors, hatches, windows, etc. are assumed to be ventilation openings. The numerical coefficient, 1500, assumes stoichiometric burning conditions.

Pre-FRI Heat Release Rate (kW) - The rate that heat is released from the burning fuel in a compartment during the fire growth realm and calculated according to: $Q = Alpha * t^2$. The heat energy produced is used as a key variable in the Beyler-Peatross algorithm for calculating compartment fire temperatures; when the temperature exceeds ambient by 500 degrees Celsius, full room involvement (FRI) is assumed to exist in the compartment. See Appendix B.

Pyrolysis - The conversion of solid fuel into flammable vapor by the application of heat.

Qmax - The maximum permissible value of the heat release rate. Qmax is the upper limit for Q in the Beyler-Peatross algorithm and is a function of the fire growth model. See "Fire Growth Model".

Radiation Point - The transition point between smoldering combustion and the point where a fire grows proportionally to time squared. This point (beginning of exponential fire growth) is also referred to as Established Burning (EB) since this is the point where radiational feedback to the fuel bed becomes the predominant mode of heat transfer.

Relative Frequency of Acceptable Loss|Fire Free State - Relative Frequency of Acceptable Loss of a compartment given Fire Free State, calculated in SAFE by summing the probabilities of a target compartment or set failing to meet its FSOs over all fire paths, from all possible rooms of origin, multiplied by the frequency of EB in each room of origin.

Residual Heat Transfer (%) - The amount of unburned fuel that is transferred from a burning compartment to an adjacent room upon barrier failure if the adjacent compartment is not at full room involvement. This parameter is a function of the barrier material and can be found in the catalog of available barrier materials. See "Percent Heat Release".

RLF - Relative Loss Factor - RLFs are calculated in SAFE as a means of assessing whether a target compartment or set meets FSOs. A Relative Loss Factor > 1 indicates that a target compartment has failed to meet its FSOs. This factor is determined by multiplying the target's Relative Frequency of Acceptable Loss given Fire Free State of the target in failures/year (calculated during a given run of SAFE) by the assigned frequency of acceptable loss in years. A target is considered lost if its level of fire involvement in a given path exceeds the level specified by its MAL rating.

Room of Origin - The compartment in a fire path where EB first occurs.

Room Point - The point in the growth of a compartment fire where flames fully involve the compartment. See "Full Room Involvement".

SAFE - Ship Applied Fire Engineering - The computerized implementation of the SFSEM. SAFE is actually an integrated series of computer programs utilizing AutoCAD and the INFORMIX relational database management system

Scenario - A situation defined by the user before executing a SAFE probabilistic model run. Such parameters as run time, ship location, material condition of readiness and firefighting configuration are specified.

SCFP - Small Cutter Fire Protection. Project sponsored by Commandant (G-ENE) to analyze fire safety on cutters less than 180' in length.

SFSEM - The Ship Fire Safety Engineering Methodology. A probabilistic-based risk analysis methodology used to analyze all aspects of the ship's performance in response to a fire compared to pre-established FSOs.

Shell Plating - The ship's hull consisting of the underwater body and the freeboard Main Deck and below. The ship's superstructure is above the Main Deck. Shell plating can be steel or aluminum.

SHIPALT - Ship Alteration. A document that describes an authorized change to the configuration, compartmentation, or other major alteration to a ship. The purpose of SHIPALTS is to standardize the configuration of all ships in a class.

Ship Location - A ship is either "at sea" or "in port" for the purpose of setting up a model run in SAFE.

SOLAS - Safety of Life at Sea. An international convention prompted by the Titanic disaster and amended several times since that time that establishes international regulations for building ships to ensure the safety of passengers.

Standard Scenario - Scenarios that describe a ship's location and material condition of readiness with passive, fixed fire protection systems, and manual fire extinguishment capabilities in effect. Since this describes a ship under normal operating conditions, these scenarios are referred to as standard scenarios. See "Non-Standard Scenario"

Stepped Deck - That portion of a deck which is not in the same horizontal plane as the majority of the deck.

Stoichiometric - A term that describes ideal burning which assumes there is sufficient oxygen to ensure 100% combustion of available fuel. Stoichiometric burning produces the hottest fire temperatures, therefore sufficient ventilation to produce stoichiometric conditions is assumed in the SFSEM where fire protection systems should be designed for worst case conditions.

Superstructure - The ship's structure above the Main Deck. The superstructure can be steel or aluminum.

T-Adjust (%) - A-value that can range from 0 to -99% that is applied to the Tbar value of a specified barrier to account for cracks of other flaws that would reduce it's ability to resist a thermal or hot spot failure. An open door or window is not considered a derating of the barrier.

T-AGOS - Designation for a class of Auxiliary General Ocean Surveillance Ships operated by the Military Sealift Command for the U. S. Navy.

Target - A compartment or set of compartments which are analyzed in a probabilistic model run for the frequency and magnitude of fire loss due ti fires started in every possible room of origin. A target set of compartments may be selected because they contain components

necessary to perform a ship's mission. In this manner the likelihood of mission failure can be ascertained.

Tbar (%) - The probability of a thermal failure of a barrier which would permit a small, hot spot ignition in the adjacent compartment.

Tbar Control Points (BTUs/sq ft) - Three values of heat energy impact plotted on the abscissa axis corresponding to probabilities of thermal barrier failure of 0, 0.5 and 1.0 plotted on the ordinate axis. These points define a barrier's Tbar curve.

TBD - To Be Determined. A term often used to describe information not presently available.

Therm IAM (%) - The probability of terminating a fire originating in a compartment due to a thermal barrier failure. The probability is calculated from a combination of the I, A, and M-curves for that room. If the room is a room of origin, Therm IAM is not applicable.

Two-Shot Halon System - A total flooding system with the capability to completely flood the protected space two times with the required concentration level of Halon 1301. This system is designed such that each shot of Halon is released from a different location in the vessel.

USCGC - United States Coast Guard Cutter

Vent Area (sq in) - The sum of all the ventilation openings in a compartment, excluding doors and hatches but including ventilation grates in a door. Used to calculate the post-FRI heat release rate. See "Post-FRI Heat Release Rate".

Vent Height (in) - The average of the vertical height of all vent openings in a compartment. The height of the compartment itself is used for horizontal vents.

Ventilation Controlled Burning - When insufficient ventilation is available, ventilation controlled burning occurs. The fire is limited by the air supply available for combustion. See "Fuel Controlled Burning".

Ventilation Factor - A factor, $A*H^{.5}$, that describes the primary variables in the post-FRI heat release rate calculation in SAFE. These variables are the area and height of the ventilation opening(s) in a compartment. In compartments with multiple vents, areas are summed and heights are averaged.

WLB (R) - Seagoing Buoy Tender. The "R" indicates that this is a replacement for an existing class of buoy tender.

WLM (R) - River Buoy Tender. The "R" indicates that this is a replacement for an existing class of buoy tender.

WMEC - Medium Endurance Cutter

XRAY, YOKE and ZEBRA - Material Conditions of Readiness. Successively increasing levels of watertight integrity for controlling damage. At each level, additional access closures, valves and fittings are required to be closed to limit fire and flooding.

Zero-Strength Barrier - An imaginary boundary used to model extremely long passageways and multiple deck compartments. The barrier is presumed to have no thermal resistance.

Index

A

A value 67

American Society for Testing and Materials ..... *See* ASTM

ASTM ..... x, 44, 45, 66, 73

ASTM E-119 ..... x, 44, 45

B

Barrier

Heat Energy Impact ..... vii, viii, 2, 43, 73

Materials

Aluminum 5, 20, 43, 73, 86

Joiner 5, 46, 84

Steel 5, 43, 73

Structural ..... v, 2, 3, 5, 7, 16, 28, 29, 30, 44, 46, 74, 78, 84

Watertight 5, 13, 46, 73

C

Class A Fire ..... vi, 19

Class B Fire ..... vi, 19

Class C Fire ..... vi, 19

Class D Fire ..... vi, 20

CO2 ..... *See* Firefighting Agents

Combustion

Smoldering 17, 18, 56

Stoichiometric 22, 40, 42, 43, 51, 62

Compartment of Origin ..... *See* Room of Origin

Continuity of Operations ..... *See* Fire Safety Objectives

D

Durability Failure ..... *See* DBar Failure

E

Established Burning

Frequency

Adjusted 36, 37, 38, 75

Reported 36, 37, 38, 56, 82
Historical Data
U.S. Naval Safety Center 36, 37

F

Fire Doctrine ..... v, 6
Fire Extinguishing Agents ..... *See* Firefighting Agents
Fire Growth
Blackout 55, 60
Ceiling Point 51
Compartment Burnout 75
Enclosure Point 51
Fully Developed ..... vii, 62
Ignition ..... xi, 2, 4, 16, 20, 24, 27, 29, 31, 41, 46, 60, 63, 84
Overheat 4
Fire Hazard Factors ..... vii, 14, 46
Fire Paths
Multiple 43, 51, 62, 63, 67, 72
Probable 24, 70, 83
Fire Prevention
Principles 1, 12, 17, 22, 29
Fire Protection
Alternatives ..... viii, 6, 40, 71, 78, 79, 81
Factors
Active Fire Protection ..... vi, x, 15
Passive Fire Protection ..... vi, x, 16
Fire Protection Doctrine ..... *See* Fire Doctrine
Fire Safety Objectives
Life Safety 75
Mission Protection 2
Property Protection 2, 75
Traditional Approach
Frequency of Acceptable Loss ..... viii, 74, 76
Magnitude of Acceptable Loss ..... viii, 74, 75
Firefighting Agents
AFFF 14, 15, 20, 21, 55, 82

Carbon Dioxide 23
Halon 1301 ..... 14, 15, 55, 81, 84, 86
Water 14, 19, 20, 21, 28, 38, 51, 75, 76, 84, 86
Firefighting Equipment
Hose Reels
AFFF 14, 15, 20, 21, 55, 82
CO2 ..... 14, 15, 19, 20, 21, 22, 23, 55, 83, 84, 85
Portable Extinguishers
Reliability 54, 55, 56
Total Flooding Systems
CO2 ..... 14, 15, 19, 20, 21, 22, 23, 55, 83, 84, 85
Halon 14, 15, 19, 20, 21, 55, 81, 84, 86
Flashover ..... *See* Full Room Involvement
FRI ..... *See* Full Room Involvement
Fuel
Fuel Load
Calculation ..... ix, 4, 25, 27, 28, 36, 43, 44, 61, 63, 66, 72, 75, 76
Full Room Involvement ..... vii, 41, 75

H

Heat Release Rate
Alpha 63
Heat Transfer
Coefficient 25, 42, 43
Conduction ..... vi, 24, 25
Convection ..... vi, 24, 25, 40
Radiation ..... vi, x, 17, 22, 24, 25, 26, 40

L

Limiting Flame Movement xi

M

Main Space Fire Doctrine ..... *See* Fire Doctrine
Material Condition of Readiness
XRAY 13, 43, 70
YOKE 13, 14, 43, 70

P

PIR Analysis ..... ix, 87
Prevent Established Burning ..... v, xi, 2, 3, 4, 7

S

SAFE ..... *See* Ship Applied Fire Engineering
SFSEM ..... *See* Ship Applied Fire Engineering
Ship Applied Fire Engineering
  Inputs ..... viii, 10, 70
  Output Options ..... viii, 71
Ship Fire Safety Engineering Methodology
  Flame Movement ..... v, xi, 2, 3, 4, 7, 49
  People Movement ..... v, 2, 3, 5, 7
  Prevent Established Burning ..... v, xi, 2, 3, 4, 7
  Smoke Movement ..... v, 2, 3, 5, 7
  Structural Frame ..... v, 2, 3, 5, 7

T

Thermal Failure ..... *See* TBar Failure
Toxic Gases
  CO 22, 23

V

Ventilation
  Factor 25, 44, 49, 60, 62, 63, 71, 72, 75, 76, 78, 86
  Fans 62, 72
  Openings
    Height 30, 40, 62, 63, 70, 72, 73
  Securing 18, 54, 55, 59

APPENDIX A

NETWORK DIAGRAM CALCULATIONS

Network Diagrams are used extensively in the Ship Fire Safety Engineering Methodology to evaluate the probability of certain events. Calculations of the associated probabilities are in general accordance with the rules for calculation of conditional probabilities. Figure A-1 illustrates the definitions, construction conventions, and rules for calculations explained in the following sections.

DEFINITIONS:

- **Event** - An unambiguous action or occurrence that can be easily stated in binomial terms. For example ignition occurs (IG), or it does not occur (IGbar).
- **Initial Event** - The first event in a network diagram. Since it is assumed to have occurred, the probability of this event is always 1.0.
- **Terminal Event** - The final event in a network diagram. The outcome of all intermediate events shown on the network diagram.
- **Intermediate Events** - All events shown on a network diagram between the initial and terminal events.
- **Conditional Event** - An event that can only occur if another event occurs first. In a network diagram this is described as the probability of an event given another event. For example the probability of Established Burning given Ignition. This is written: P(EB | IG).
- **Independent Event** - Events which can result in a given outcome but are not conditional on each other. For example for the outcome: flame limitation (L), the independent events are IGbar | FFS, EBbar | IG, I | EB, A | Ibar, and M | Ibar.
- **Outcome** - The result of a series of events. For example the terminal event is an outcome resulting from all intermediate events.

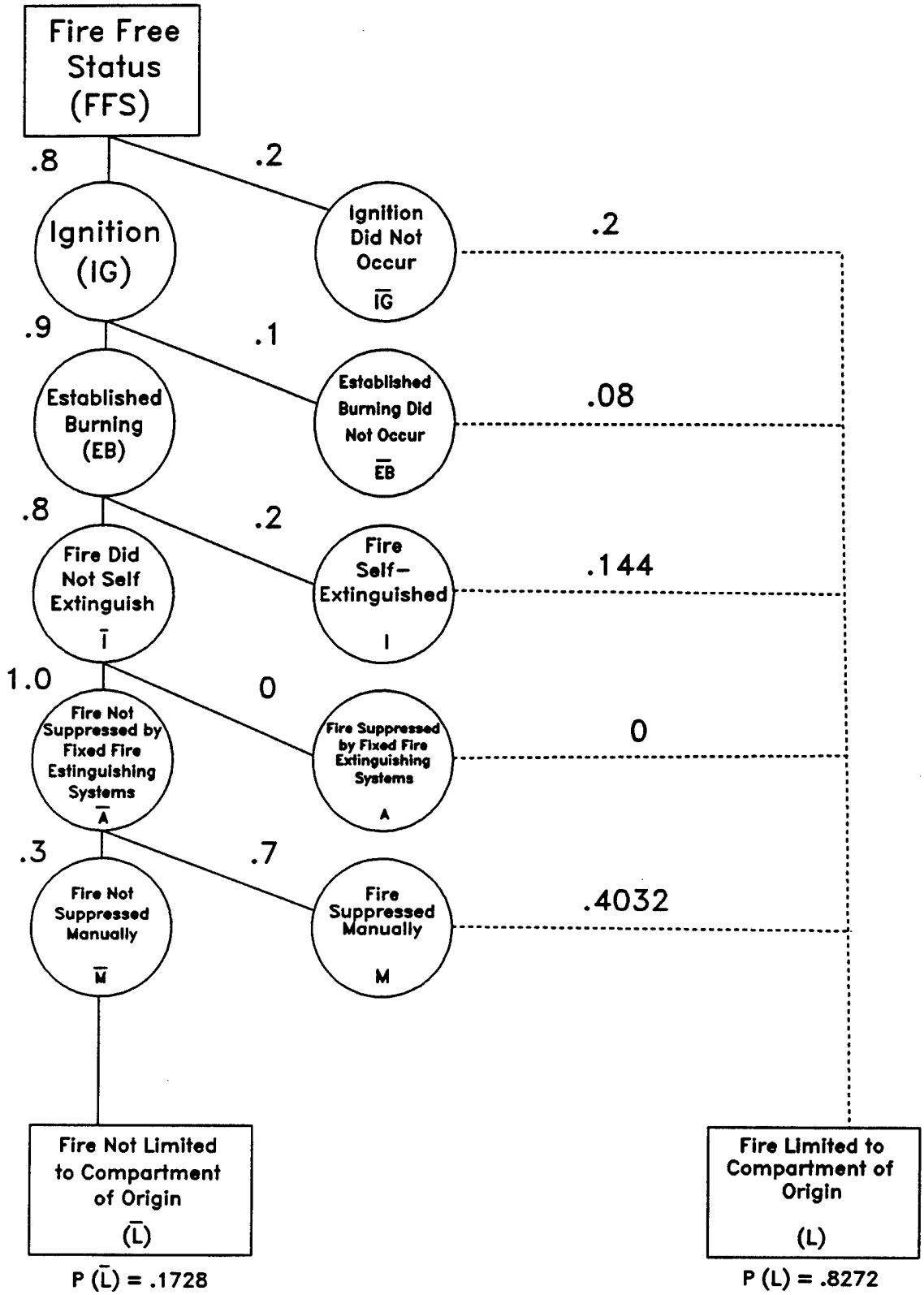

Figure A-1. Network Diagram for Fire Limitation to the Compartment of Origin

CONSTRUCTION CONVENTIONS:

1. A sequential path of events is connected by solid lines. Thus these events are similar to "AND" gates in Boolean algebra. Similarly, "OR" gates are indicated by dashed lines.

2. Networks show all possible outcomes, both success and failure, on the same diagram for all intermediate events.

3. The sequence of intermediate events may or may not be important. If sequence is important the order of the events must be sequential. If sequence is unimportant the intermediate events are listed in a logical sequence if appropriate.

4. Initial and terminal events are shown in boxes while intermediate events are shown in circles or ovals. The associated probabilities are shown on the lines leading to the event and as close to the event as practical. The events are labeled with a short description, defined acronym, or both.

RULES FOR CALCULATIONS:

There are four basic rules of calculating probabilities in network diagrams. Example calculations for these rules shown here are based on probabilities assigned to the events in Figure A-1 which are fictitious but realistic.

1. The initial event in any network diagram is assigned a probability of 1.0.

$$P(FFS) = 1.0$$

2. The sum of all probabilities for the outcomes from any given event must equal 1.0.

$$P(IG) + P(Igbar) = 1.0$$
$$0.8. + 0.2 = 1.0$$

$$P(EB) + P(Ebbar) = 1.0$$
$$0.9. + 0.1 = 1.0$$

3. The probability of an outcome along a continuous path is the <u>product</u> of the probabilities of the associated intermediate events ("AND" Gates).

$$P(Lbar) = P(FFS) * P(IG) * P(EB) * P(Ibar) * P(Abar) * P(Mbar)$$
$$= 1.0 * 0.8 * 0.9 * 0.8 * 1.0 * 0.3$$
$$= .1728$$

4. The probability of an outcome resulting from independent events is the <u>sum</u> of probabilities of all similar outcomes in the network diagram ("OR" Gates). For example, as shown here, Igbar | FFS, Ebbar | IG, I | EB, A | Ibar, and M | Abar are all similar t" "L" in that each outcome describes the limitation of flame movement.

$$P(L) = P(IGbar \mid FFS) + P(EBbar \mid IG) + I(I \mid EB) + P(A \mid Ibar) + P(M \mid Abar)$$

$$p(IGbar \mid FFS) = 0.2 * 1.0 = 0.2$$
$$p(EBbar \mid IG) = 0.1 * 0.8 * 1.0 = .08$$
$$P(I \mid EB) = 0.2 * 0.9 * 0.8 * 1.0 = 0.144$$
$$P(A \mid Ibar) = 0 * 0.8 * 0.9 * 0.8 * 1.0 = 0$$
$$P(M \mid Abar) = 0.7 * 1.0 * 0.8 * 0.9 * 0.8 * 1.0 = .4032$$

$$P(L) = 0.2 + .08 + .144 + 0 + .4032$$
$$P(L) = .8272$$

This example points out the complexity of calculating the probability of limiting the flame, P(L). Since P(L)+P(Lbar) = 1, in practice, P(L) is determined by subtracting P(Lbar) from 1.0 as follows:

$$P(L) = 1.0 - P(Lbar)$$
$$= 1.0 - .1728$$
$$= .8272$$

APPENDIX B
CALCULATION OF FRI TIME

Full Room Involvement (FRI) is an important concept, not only in fire science, but in the way it is applied in the Ship Fire Safety Engineering Methodology (SFSEM). As the name implies, FRI indicates the beginning of the fully developed fire as shown in Figure B-1. Moreover, it suggests that all combustibles in the compartment are surface burning. The fully developed fire generates the greatest heat release rates. Since fires in this stage of fire growth are often distinguished by the pyrolysis of more fuel than can be burned with the available oxygen, fully developed fires are usually ventilation controlled.

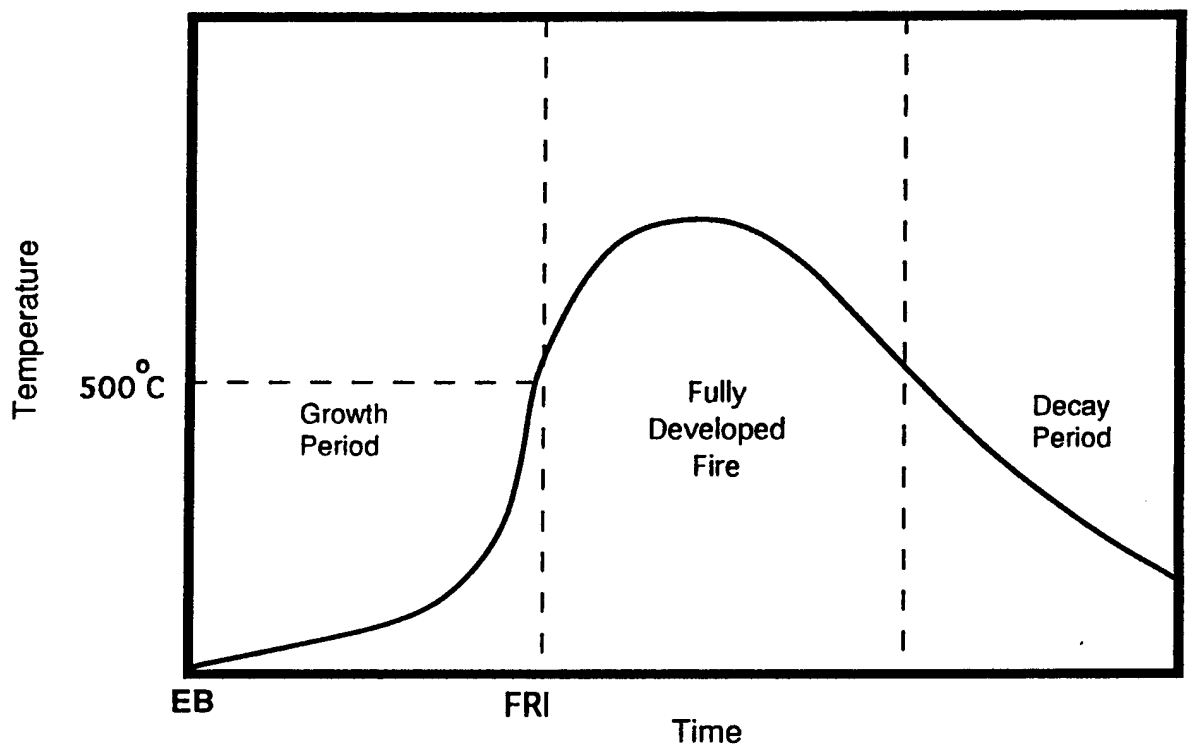

Figure B-1. Stages of Fire Growth in a Typical Compartment Fire

One of the fundamental assumptions in the SFSEM is that barriers are attacked with the heat energy generated by the burning fuel when the compartment first reaches full room involvement. In the SFSEM, FRI is assumed to occur when the temperature in the compartment rises 500C above ambient as shown in Figure B-1. FRI time is the elapsed time from the point of Established Burning (EB) to the point when Full Room Involvement occurs. This calculation is particularly troublesome because of the difficulty in dealing with several variables such as fire growth rate, ventilation, fuel loading, fuel distribution, thermal properties of composite bulkheads etc. Consequently, much effort has been devoted to research for predicting time to FRI.

There are seven correlational methods for predicting full room involvement in a compartment. Five of the seven methods use a temperature correlation for predicting FRI, the other two methods by Babrauskas [1] and Thomas [2] consider only the rate of heat release and the ventilation factor. In addition the wall heat losses are not considered.

The five temperature correlational methods are:

(1) McCaffrey, Quintiere, Harkleroad (MQH).[3]
(2) Mowrer and Williamson (MW).[4]
(3) Foote, Pagni, Alvares (FPA).[5]
(4) Beyler and Deal (BD).[6]
(5) Beyler and Peatross (BP). [7]

The MQH method is applicable for naturally ventilated fires from a single ventilation opening in a vertical wall. The BD and BP methods modify the basic MQH approach to account for forced exhaust and supply to the bottom of the compartment, in addition the BD and BP methods modify the MQH approach for the case of unknown ventilation. Note there is NO method that accounts for forced exhaust and supply to the top of the compartment.

The MW method was intended to improve the MQH method by accounting for wall and corner effects. Beyler and Deal make a convincing argument that the MW method has exactly the opposite effect.[8]

The FPA method accounts for forced ventilation fires where the exhaust was from the top of the compartment. Beyler and Deal again make an argument based on experimental data that the errors in the FPA method are significant.[8]

The five methods described above are applicable under certain conditions as defined in Table B-1. The Beyler/Peatross algorithm is most applicable to shipboard conditions, therefore it is used in the SFSEM, as shown in Table B-1, to calculate compartment fire temperatures. Then, using the criteria for full room involvement described above, the FRI times for each compartment are determined. In the Beyler/Deal and Beyler/Peatross algorithms, boundary areas are decreased by an amount equal to the ventilation area; this results in an increase in compartment temperature and therefore a decrease in FRI times with all other variables constant. A key variable in the Beyler/Peatross algorithm is the heat release rate, Q. This parameter is calculated according to the pre-FRI heat release rate formula given in Section 6.3.4.1.1.

Table B-1: METHODS FOR CALCULATING COMPARTMENT FIRE TEMPERATURES		
ALGORITHM	**TERMS**	**LIMITATIONS**
MQH $\Delta T = 6.85\left(\frac{\dot{Q}^2}{h_k A_T (A_o\sqrt{H_o})}\right)^{1/3}$ where: $h_k = \begin{cases} \sqrt{\frac{k\rho c}{t}} & \text{for } t \le \frac{k\delta^2}{4\rho c} \\ \frac{k}{\delta} & \text{for } t > \frac{k\delta^2}{4\rho c} \end{cases}$	$\dot{Q}$ = Heat Release Rate h_k = Heat Loss Coeff. ΔT = Temperature Diff. A_T = Bounding Area A_o = Vent Area H_o = Vent Height k = Thermal Conduct. ρ = Barrier Matl. Density c_p = Spec. Heat of Air c = Spec. Heat of Matl. t = Time δ = Barrier Thickness $\dot{m}_o$ = Mass Vent Rate	1. Naturally vented 2. Single opening 3. Wall vent only 4. Thermally thick barriers 5. Fire in center of room
MW $\Delta T_{walls} = 1.3(\Delta T_{MQH})$ $\Delta T_{corners} = 1.7(\Delta T_{MQH})$		1. Same as MQH except fire in corner or near wall instead of center of room.
FPA $\Delta T = \frac{\dot{Q}}{\dot{m}_o c_p} \exp\left[.53\left(\frac{h_k A_T}{\dot{m}_o c_p}\right)^{.43}\right]$		1. Same as MQH except forced ventilation instead of natural
BD $\Delta T = \frac{\dot{Q}}{\dot{m}_o c_p + h_k A_T}$ where: $h_k = \begin{cases} .4 \max\left(\sqrt{\frac{k\rho c}{t}}, \frac{k}{\delta}\right) & \text{for } k < \frac{40W}{m^\circ K} \left(\text{thermally thick}\right) \\ 91 - 61\left[1 - \exp\frac{-136t}{\rho\delta c}\right] & \text{for } k > \frac{40W}{m^\circ K} \left(\text{thermally thin}\right) \end{cases}$		1. Natural or forced ventilation 2. Thermally thick barriers 3. Fire in center of room
BP $\Delta T = \frac{\dot{Q}}{\dot{m}_o c_p + h_k A_T}$ where: $h_k = \begin{cases} .4 \max\left(\sqrt{\frac{k\rho c}{t}}, \frac{k}{\delta}\right) & \text{for } k < \frac{40W}{m^\circ K} \left(\text{thermally thick}\right) \\ 30 - 18\left[1 - \exp\frac{-136t}{\rho\delta c}\right] & \text{for } k > \frac{40W}{m^\circ K} \left(\text{thermally thin}\right) \end{cases}$		1. Natural or forced ventilation 2. Thermally thick or thin barriers 3. Fire in center of room

Appendix B References

1. Babrauskas, V., "Estimating Room Flashover Potential", Fire Technology, [16], Number 2, 1980, pp 94-103.

2. Thomas, P., "Testing Products and Materials for their Contribution to Flashover in a Room", Fire and Materials, [5], 1981, pp 103-111.

3. McCaffrey, B., Quintiere, J., and Harkleroad, M., "Estimating Room Fire Temperatures and the Likelihood of Flashover using Fire Test Data Correlations", Fire Technology, [17], Number 2, 1981, pp 98-119.

4. Mowrer, F., and Williamson, B., "Estimating Room Temperatures from Fires along Walls and in Corners", Fire Technology, [23], Number 2, 1987, pp 133-145.

5. Foote, K., Pagni, P., and Alvares, N., "Temperature Correlations for Forced-Ventilated Compartment Fires", First International Symposium on Fire Safety Science, Hemisphere Publishing Co., 1986, pp 139-148.

6. Beyler, C., "Analysis of Compartment Fires with Overhead Forced Ventilation", Accepted for publication in the Third International Symposium on Fire Safety Science, 1991.

7. Peatross, M., Beyler, C., and Back, G., "Validation of Full Room Involvement Time Correlation Applicable to Steel Ship Compartments", Final Report, November, 1993.

8. Deal, S. and Beyler, C., "Correlating Temperatures in Preflashover Room Fires", Journal of Fire Protection Engineering, [2], Number 2, 1990, pp 33-48.

[BLANK]

APPENDIX C
FIRE GROWTH MODELS

The purpose of this appendix is to provide guidance to the engineer/analyst in selecting appropriate values for critical fire parameters used in the determination of the rate of heat release in the pre-FRI period of fire growth. During this period the fire is assumed to grow proportionally with the second power of time. The proportionality constant is called the fire growth rate and given the symbol alpha. The fire growth rate is highly dependent on the fuel type and distribution as shown in Table C-1. Qmax is the term for the maximum rate of heat release that can be produced in the compartment fire. Numerous experiments have been conducted at the National Institute of Standards and Technology and other places to determine appropriate values for Qmax and alpha. References are listed in Table C-1 to document the source of the data that was used as guidance in determining the default values shown. The engineer/analyst is cautioned that these default values were determined using engineering judgment and the data from the listed references as a guide, therefore they are representative but not necessarily exact values for these parameters. Additional guidance is available in the appropriate reference for each fire growth model.

Table C-1
Fire Growth Models

No.	Fire Growth Model	Applicable CUI	Alpha (kW/sec^2
1	Stacked wood pallets	AA, AS, AG	.1
2	Storage of stacked paper/lignocellulosics	AA, AS, AG	.01
3	Storage of stacked paper in cartons	AA, AS, AG	.2
4	Stacked mail bags 5 ft high	AA, AS, AG	.01
5	Storage of unstacked cellulosics & plastics	AA, AS, AG	.1 for F > 6 psf .04 for F < 6 psf .01 for Vent limited
6	Paper-filled polyethylene letter trays	C, QO, QE	.01
7	Polyethylene wire insulation; polysynthetics	QO, QF, C	.01
8	Office spaces	QO, QE	.7 for F > 6 .3 for F < 6 .1 for Vent limited
9	Lounge spaces	L1, LL	.3 for F > 4 .2 for F < 4 .01 for Vent limited
10	Berthing areas	L1 - L5	.1 for F> 4 .01 for F < 4 .01 for Vent limited
11	Hanging polyurethanes	L1 - L5, AG, AS	1.0
12	Hanging cellulosics	L1 -L5, AG, AS	.1
13	Greasy, sooty spaces	QF, QE, QG, TU, TH	.2
14	Stairways	LP	.01
15	Passageways	LP	.01
16	Very low density storage	LP, LW, AS, V, QF, TH, AR, W	.001

where: H = Height of fuel stack in feet
F = Fuel load density in lbs_m/ft^2 (psf)
A = Area of deck occupied by fuel in ft^2

Table C-1
(continued)
Fire Growth Models

No.	Fire Growth Model	Qmax (kW)
1	Stacked wood pallets	[57.79 H + 42.2] * A
2	Storage of stacked paper/lignocellulosics	[100 + 18 (H - 5)] *A
3	Storage of stacked paper in cartons	[122.2 + 21.95 (H - 5)] * A
4	Stacked mail bags 5 ft high	36.93 * A
5	Storage of unstacked cellulosics & plastics	6 * A for F > 6, 3.5 * A for F ≤ 6
6	Paper-filled polyethylene letter trays	791.25 * A
7	Polyethylene wire insulation; polysynthetics	13 * A * F
8	Office spaces	7.5 * A for F > 6, 5 * A for 6 ≥ F > 3, 3 * A for F ≤ 3
9	Lounge spaces	5 * A for F > 4, 2.25 * A for F ≤ 4 1.2 * A for Vent limited
10	Berthing areas	3.75 * A for F > 4, 2.9 * A for F < 4, 1.2 * A for Vent limited
11	Hanging polyurethanes	18.3 * A * F
12	Hanging cellulosics	16.9 * A * F
13	Greasy, sooty spaces	80 * A * F
14	Stairways	2.8 * A * F
15	Passageways	2 * A * F
16	Very low density storage	.5 * A * F

Table C-1
(continued)
Fire Growth Models

No.	Fire Growth Model	Reference
1	Stacked wood pallets	NFPA 72E Items 1-4
2	Storage of stacked paper/lignocellulosics	NFPA 72E Item 10
3	Storage of stacked paper in cartons	NFPA 72E Item 15
4	Stacked mail bags 5 ft high	NFPA 72E Item 5
5	Storage of unstacked cellulosics & plastics	NBSIR 80-2120
6	Paper-filled polyethylene letter trays	Deal, S., "Heat Release Rate Library" 1987
7	Polyethylene wire insulation; polysynthetics	Deal, S., "Heat Release Rate Library" 1987
8	Office spaces	NBSIR 80-2120
9	Lounge spaces	NBSIR 80-2120 NBSIR 83-2787
10	Berthing areas	Factory Mutual: OAOR2.BU- 2&7 NBSIR 82-246
11	Hanging polyurethanes	NBSIR 82-2649, NBSIR 83-2787 VTT Research Report 285
12	Hanging cellulosics	Same as 11
13	Greasy, sooty spaces	Engineering Judgement
14	Stairways	Engineering Judgement
15	Passageways	Engineering Judgement
16	Very low density storage	Engineering Judgement

APPENDIX D

FUEL LOAD FORMULAS

The purpose of this appendix is to provide the engineer/analyst with guidance in determining the fuel loads in various compartments on board ships. This guidance is based primarily on the research accomplished in conjunction with applications of the methodology. In particular, this includes the Polar Icebreaker Replacement (PIR) Fire Safety Analysis accomplished in 1987 and the Small Cutter Fire Protection (SCFP) project completed in 1993.

The types of fuel that are typically encountered in ships are cellulosics, plastics, and flammable liquids. Default values and ranges of theoretical and normally encountered values of these fuel types is provided in SAFE. The engineer/analyst however, could benefit from rules of thumb used in the PIR and SCFP projects in order to develop a realistic estimate of the fuel load on other ships. This estimate could then be compared to the default values as a cross-check for reasonableness. The formulas for the fuel loads are shown in Table D-1. A word of caution is in order; the formulas for storerooms, cargo holds and gear lockers are functions of the density, height, and area occupied by the fuel packs. The fuel load estimate is very sensitive to the fuel load density, therefore this parameter should be carefully estimated. Similarly, in engineering spaces the fuel loading due to a ruptured flammable liquid line assumes a certain leakage rate for an assumed period of time. Notes concerning these assumptions are provided in Table D-1 to facilitate adjustment where necessary.

TABLE D-1
FUEL LOAD FORMULAS

CUI	DESCRIPTION	FUEL LOAD	NOTES
AA	Cargo Holds	Equation 1	Note 1
AG	Gear Locker	Equation 1	Note 1
AR	Refrigerated Storage	Equation 1	Note 1
AS	Storeroom	Equation 1	Note 1
C	Ship Control Area		Note 2
EM	Main Prop Machinery	Equation 2	Note 6
K	Hazardous Material		Note 2
L1	CO's Cabin	Equation 3	Note 3
L2	Officer/CPO Quarters	Equation 3	Note 3
L5	Crews Berthing	Equation 4	Note 3
LL	Wardrm/Mess/Lounge		Note 2
LP	Passage/Stairs/Vestib		Note 4
LW	Sanitary Spaces		Note 4
QE	Engrg/Aux Machy Spaces	Equation 2	Note 6
QF	Fan Room		Note 4
QG	Galley/Pantry/Scullery		Note 4
QL	Laundry		Note 2
QO	Office Spaces		Note 2
QS	Shops/Wet & Dry Labs		Note 2
TH	Trunks/Hoists/Dumbwtrs		Note 5
TU	Stacks/Engine Uptakes		Note 5
V	Voids/Cofferdams		Note 7
W	Water/Peak/Ballast Tks		Note 7

TABLE D-1
(continued)

FUEL LOAD FORMULAS/EQUATIONS

Equation 1: Fuel Load = (Density of fuel pack * Average height of fuel stack * Average deck area occupied by fuel pack) / Compt Area
(psf) (lb/ft^3) (ft) (ft^2) (ft^2)

Equation 2: Fuel Load = Leakage rate * Duration of leak
(gals) (gpm) (mins)

Equation 3: Fuel Load = # of persons in compt * 200 / Compt Area
(psf) (lbs/person) (ft^2)

Equation 4: Fuel Load = # of persons in compt * 160 / Compt Area
(psf) (lbs/person) (ft^2)

NOTES

Note 1: CUI categories: AA, AG, AR, and AS are commonly used to store either plastics, cellulosics or both. Equation 1 should be used for each type of fuel. Densities typically range from 15 to 25 pounds per cubic foot. Storerooms in ships at sea are typically fully loaded such that 75% of the available deck space is occupied and 90% of available deck height is utilized.

Note 2: CUI categories: C, K, LL, QL, QO, and QS are spaces that typically contain a mix of cellulosics, plastics, and flammable liquids. Estimate weight in pounds of cellulosics and plastics (separately) and divide each by the area of the compartment to obtain the fuel loads in pounds per square foot. Estimate the total number of gallons of flammable liquids (typically found in CUI category K only).

Note 3: CUI categories: L1, L2 and L5 are berthing areas for officers, chief petty officers and enlisted crewmembers. A rule of thumb for calculating fuel loads in these compartments is to multiply the number of people in the compartment by 160 (pounds of combustible personal effects) for enlisted, and 200 (pounds of combustible personal effects) for officers and chiefs, divided by the compartment area to obtain the fuel load in pounds per square foot as shown in equations 3 and 4.

Note 4: CUI categories: LP, LW, QF, and QG are areas that typically have very low fuel loads of .5 pounds per square foot or less.

Note 5: CUI categories: TH and TU are areas that typically have low fuel loads of 1.0 pounds per square foot or less.

Note 6: CUI categories: EM and QE are engineering spaces and typically contain little cellulosics; plastics are frequently present in the form of electrical cable insulation and pipe insulation. In addition, consoles and gages may contain plastic components. Finally, these spaces frequently contain low pressure (0 - 100 psi), medium pressure (100 - 300 psi), and/or high pressure (> 300 psi) oil or fuel piping. Equation 2 may be used to estimate an additional fuel load due to a casualty (assumed leakage rate) for an assumed period of time. Typical leakage rates are 1.2 gpm for low pressure, 5 - 10 gpm for medium pressure and 30 - 40 gpm for high pressure liquids. 6 minutes is typically used as the length of time it takes to secure a fuel or oil leak.

Note 7: CUI categories V and W are usually considered to have no fuel load.