AD-A092 076 SERTECH LABS INC SALEM MA F/G 9/1

BURN-IN OF UNCASED SEMICONDUCTORS. A FEASIBILITY STUDY.(U)

NOV 79 J E HEARL, S C LUKENS N00163-78-C-0332

UNCLASSIFIED NL

1 of 1

AD A
092076

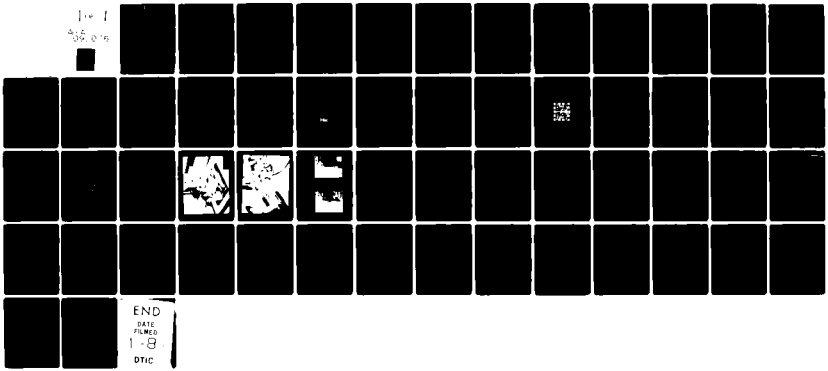

LEVEL II

2

Report N00163-78-C-0332

AD A092076

BURN IN OF UNCASED SEMICONDUCTORS

A Feasibility Study

James E. Hearl
Samuel C. Lukens
Sertech Laboratories, Inc.
1 Peabody Street
Salem, MA 01970

DTIC
NOV 25 1980

November, 1979

Prepared for

NAVAL AVIONICS CENTER
21st Street and Arlington Avenue
Indianapolis, Indiana 46218

DISTRIBUTION STATEMENT A
Approved for public release;
Distribution Unlimited

8011 21 036

SECURITY CLASSIFICATION OF THIS PAGE (When Data Entered)

REPORT DOCUMENTATION PAGE

READ INSTRUCTIONS BEFORE COMPLETING FORM

1. REPORT NUMBER: N00163-78-C-0332

2. GOVT ACCESSION NO.: AD-A092 076

3. RECIPIENT'S CATALOG NUMBER:

4. TITLE (and Subtitle): Burn-In of Uncased Semiconductors, A Feasibility Study

5. TYPE OF REPORT & PERIOD COVERED: FINAL

6. PERFORMING ORG. REPORT NUMBER:

7. AUTHOR(s): James E. Hearl, Samuel C. Lukens

8. CONTRACT OR GRANT NUMBER(s): N00163-78-C-0332

9. PERFORMING ORGANIZATION NAME AND ADDRESS: Sertech Laboratories Inc., 1 Peabody Street, Salem, MA 01970

10. PROGRAM ELEMENT, PROJECT, TASK AREA & WORK UNIT NUMBERS:

11. CONTROLLING OFFICE NAME AND ADDRESS: Naval Avionics Center, 21st Street and Arlington Avenue, Indianapolis, Indiana 46218

12. REPORT DATE: November 1979

13. NUMBER OF PAGES: 55

14. MONITORING AGENCY NAME & ADDRESS (if different from Controlling Office):

15. SECURITY CLASS. (of this report):

15a. DECLASSIFICATION/DOWNGRADING SCHEDULE:

16. DISTRIBUTION STATEMENT (of this Report)

"Approved for Public Release"
Distribution Unlimited

17. DISTRIBUTION STATEMENT (of the abstract entered in Block 20, if different from Report)

18. SUPPLEMENTARY NOTES

19. KEY WORDS (Continue on reverse side if necessary and identify by block number)

Semiconductor, Burn-in, Uncased, Carrier

20. ABSTRACT (Continue on reverse side if necessary and identify by block number)

ABSTRACT FOR DD1473

The feasibility of burning-in uncased semiconductors has been demonstrated. Twelve quad 2-input NAND gates (type 5400) have been burned-in for 168 hours at +125°C in accordance with MIL-STD-883, Method 1005-1, Test Condition A. Eleven of the devices were retrieved in a physical condition suitable for

DD FORM 1 JAN 73 1473 EDITION OF 1 NOV 65 IS OBSOLETE

SECURITY CLASSIFICATION OF THIS PAGE (When Data Entered)

ABSTRACT FOR DD1473 - Continued

subsequent use in conventional assembly operations, the twelfth having a corner broken off.

The design of the carrier assembly and the special tooling required for assembly are described.

Accession For
NTIS GRA&I
DTIC TAB
Unannounced
Justification
By
Distribution/
Availability Codes
Dist
A

INTRODUCTION

The semiconductor chip content of a complex multichip hybrid is the main determining factor in the overall yield and long-term reliability of the hybrid circuit.

There have been a number of government and industry studies[1,2] relating to in-process yields and causes of failure in hybrid microcircuits, which have established that a significant portion of in-process rework and field failure of complex hybrid microcircuits is directly related to the active devices.

In the referenced paper by R. P. Himmel of Hughes Aircraft Co., the distribution of in-process and failure-cause categories is estimated as follows:

A. In-process rework causes (low power microcircuits)

Active devices	60%
Wires	23%
Resistors	9%
Passive Discretes	5%
Other	3%

B. Failure categories (low power microcircuits)

Active device failures	31.3%
Wire bond failures	23.2%
Contamination failures (see note)	21.4%
Substrate failures	8.0%
Device attach failures	1.8%
Package sealing failures	6.3%
Unknown	8.0%

NOTE: Contamination failures include chemical (25%) and particulate (75%) and do not relate to the active devices. Wire bonding, however, is a contributor to contamination failures.

In-process and hybrid microcircuit failures related to the active devices can be reduced with existing screening techniques such as SEM analysis, high-temperature probing and chip lot qualifications.

---

[1]Himmel, R. P. Components and Materials Laboratories, Hughes Aircraft Co. and I. H. Pratt, Electronics Technology and Devices Laboratory, ECOM, For Monmouth, N. J. "Analysis of Hybrid Microcircuit Failure Modes" (Proc. of the 1976 International Microelectronics Symposium), pp. 347-352.

[2]Turner, Timothy E., ITT Research Institute "Microcircuit Device Reliability Hybrid Circuit Data" Winter 1976-77, Cat. No. MDR-5 (Spons. by Reliability Analysis Center, RADC).

However, the inability to screen out those devices that will succumb to early failure (infant mortalities), before they are built into circuits, is a major problem for the manufacturer of military hybrid microcircuits.

Thus, the desirability of burning-in uncased semiconductors (dice) to reduce in-situ failure and thereby increase hybrid circuit reliability has been recognized for some time. The problem has been to find a way to make adequate temporary electrical connections without causing mechanical damage to the die.

Work now being done in the development of automated assembly methods for semiconductor devices[3] has resulted in the availability of "bumped testable tape", a reeled polyimide tape carrying a metalized conductor pattern and bumped contact points. The concept of metal patterns with contact bumps suggests a solution to the problem.

Extending the technology made available by the bumped tape system to allow acceleration of latent failure through thermal and electrical stress and then to retrievethe devices undamaged is the purpose of the work described in this feasibility study. 'Feasibility' in this case implies the following:

1. The semiconductors are 'as produced', with no special metalization or mechanical modification;
2. The semiconductors are not constrained as to size, number of connections, passivation (or lack thereof), nor are unconventional separation techniques required of the wafer form die;
3. Subsequent to the burn-in process, the semiconductors will be readily available for insertion in conventional packages, substrates or carriers, with no special techniques required for their interconnection with other circuit elements.

---

[3]Kanz, John and Cuneo, Edward A.. General Dynamics, Pomona, CA, "Chip on Tape/Materials and Processes". 24th SAMPE National Symposium, San Francisco, CA, May, 1979.

Methods

The methods employed to select, position, connect and handle the semiconductor devices for burn-in are similar to a system proposed for beam-lead device testing[4]. (See Figure 1).

The selection of die to be screened follows normal industry practice, including electrical test probing in wafer form, scribing or sawing, separation and visual inspection. Good electrical (and visual) die are placed in conventional waffle packs for storage and handling prior to committment to the carrier system.

Positioning and connection of the semiconductors for testing requires a specially designed carrier, with either a modified bumped tape in a pattern suitable for the specific die type to be tested, or with the metalized pattern and bumps fabricated directly on the carrier.

Alignment of the die with the bumps on the carrier is accomplished through the use of a special tool described in some detail later in this report. Once the die is aligned, a mechanical force is applied through a system of pressure plates and spring members so as to hold the die securely in place during subsequent testing.

In our early attempts to assemble carrier systems, we followed the methods shown in Figure 1 quite closely. A single retainer spring clip was to serve the dual purpose of providing suitable pressure to the contact points and holding the entire assembly together. However, we found that the two functions are too dissimilar to be accomplished by a single member. Holding the entire assembly together during the burn-in procedure requires a fairly large force on which the magnitude tolerance is quite broad. In fact, it is doubtful that a spring clip of the type shown could be made to apply "too much" force for this function. On the other hand, the force applied to achieve suitable contact pressure must be relatively light and within reasonably tight tolerances. The total contact

---

[4]Robinson, L. A. "Carrier System for Testing and Conditioning of Beam Lead Devices", Bendix Corporation, Kansas City Division (Proc. 27th Electronic Components Conference).

area between the contact bumps and the semiconductor die (for a 14 pin device) is approximately equal to 14 X (.002 X .002) or .00056 square inches, so that what may be perceived as a "light" force results in a very high pressure. For example, an applied force of 1 ounce results in a contact pressure of more than 1000 pounds per square inch.

We thus arrived at the design shown in Figures 2,3 and 4, in which the spring retainer clip serves to hold the assembly together, but has no effect on the force applied to the die. The force applied to the die is obtained from a separate spring member, with a relatively high deflection to force ratio over a fairly long deflection range, thus minimizing force variation due to thickness tolerances.

In this design we have attempted to minimize the number of members whose dimensional tolerance would directly affect the force applied to the die. This has been accomplished by creating a chamber above the contact bumps whose height is a function of the thickness of the bumped tape and the support plate. Within this chamber the semiconductor rests upon the contact bumps, with pressure applied from the pressure spring through the pressure plate. An o-ring, with nominal dimensions of .063 X .016 inches is compressed to a thickness of approximately .008 inches to serve as the pressure spring.

The carrier itself is designed to be compatible with the widely known Barnes carrier system for 14 pin flat pack devices, so that standard fixtures may be used for performing electrical tests and making contact during burn-in. This carrier was fabricated for us by AMP Incorporated of Harrisburg, PA.

Component Details

Drawings of each of the parts called out in the assembly drawings Figures 2,3 and 4 are reproduced as Figures 5 through 12.

Detail dimensions on the several parts are based upon the assemblies shown in Figure 2 and 4, in which the bumped tape is used to provide electrical paths and contact points, rather than the system shown in Figure 3, in which the metal pattern and contact bumps are fabricated directly on the carrier. This

reflects an early decision that for the purposes of this feasibility study we would follow one avenue at a time, and should not be considered as a decision against the Figure 3 approach. Early experimentation with the pattern fabricated on the carrier did show promise, but it was decided to follow the bumped tape approach first because it was felt that the slight adjustability of its contact bump location provided by the cantilevered contact arms might be advantageous.

Assembly Tooling

The key to making the proposed burn-in system workable was to obtain suitable tools and fixtures. To this end we worked with the J & A Keller Company, Tonawanda, New York, an experienced producer of machine tools.

In order to mate the die contact areas with the contact bumps on the carrier, a special optical and chip placement system is required.

The optical system is shown schematically in Figure 13. The beam splitter cube causes the image perceived through the microscope to be the superimposed images of the semiconductor metalization pattern and the contact points of the carrier, so that by manipulating the horizontal placement of the carrier chuck the contact points may be made to appear properly centered in the semiconductor die bonding pads.

The chip placement systems must be able to (a) pick up the chip from a surface, (b) transfer it to, and place it in position on the contactor and (c) hold the assembly in place while a spring clip is put into place.

Based upon these requirements, a simple laboratory type of tool was developed and subsequently fabricated by the J & A Keller Co. Some of the features of this tool are described in outline form below.

I. Stage
   A. Two Position Manual Operation
      1. First position - chip pick up. (chip pick-up platform with height adjustment)
      2. Second position - chip placement onto carrier.
   B. Stage shall have micro X-Y positioning capability

1. Pantagraph (joy-stick) operation.
2. Positive locking mechanism.

C. Carrier holding station

1. Fixture to hold carrier per Figure 5.
2. Spring clip positioning mechanism.

II. Die pick-up

A. Manually activated up/down motion for placing die.

B. Manual rest height adjustment.

C. Provision for vacuum pick-up with on-off.

D. Provision for θ adjustment for die orientation.

III. Optical System

A. Per Figure 13, as described above.

B. Light sources with variable controls to adjust light intensity at the pick-up and at the carrier surface.

Figure 15 and 16 are photographs of the assembly tool. The cube in the center is the beam-splitting mirror arrangement. A top plate can be seen suspended from the vacuum pick-up tube, and a carrier in the carrier holding station.

Chip-to-Carrier Assembly Procedure

Equipment Required

1. Keller chip placement tool.

Supplies Required

1. Chips to be tested.
2. Carriers Figure 5.
3. Bumped tape Figure 6.
4. Retainer spring clip Figure 8.
5. Support plates Figure 9.
6. Top plates Figure 10.
7. Pressure plates Figure 11.
8. .063 X .016 70 BN O-Rings Figure 12.
9. Glue.
10. Paper cutter.

Procedure

1. Trim width of bumped tape (19mm wide as received) so that it will fit into carrier.
2. Glue tape to carrier with center line of tape contact area coincident with center line of carrier.
3. Place carrier in fixture mounted on chip placement tool.
4. Place cover plate on pickup platform.
5. Using optical alignment system, move pickup platform so that hole in vacuum tip is aligned with hole in cover plate.
6. With vacuum applied, lower pickup tool and pick up cover plate.
7. Place pressure plate on pickup platform and then place O-Ring on top of pressure plate so that hole in pressure plate is in center of O-Ring.
8. Using optical alignment system, move pickup platform so that hole in cover plate is directly in line with hole in pressure plate.
9. Lower pickup tool and pick up pressure plate and O-Ring.
10. Place chip to be tested on pickup platform, pattern side down.
11. Move pickup platform so that die is directly below hole in pressure plate.
12. Lower pickup tool and pick up die.
13. Slide carrier fixture into position under chip, and lock in place.
14. Using the optical alignment system and the micropositioning controls, align the bonding pads on the chip with the bumps on the tape.
15. Lower chip pickup tool so that the cover plate is resting on the support plate. Lock into position.
16. Place retainer spring clip in clip applicator.
17. Slide spring clip into position and release.
18. Unlock and raise the pickup tool.
19. Remove carrier assembly from fixture.

Test Fixtures, Test Equipment and Burn-In Equipment

The integrated circuit selected as the vehicle for this study is the National Semiconductor Type 5400 Quad 2-Input NAND Gate (See Figure 7).

This choice was made for several reasons. First, it is a well-known device from a mature process, so that we could be reasonably certain that any anomalous readings obtained on dc parametric measurements could be attributed to conditions external to the die itself. And since it includes four essentially independent

gates, a missed contact on one of the gates would probably not affect the operation of the other three.

A simple functional tester was designed and built that would allow us to determine immediately whether or not a carrier assembly had been completed successfully. (See Figure 14).

We also built up a twelve position burn-in board with contactors that would accept the carrier assembly. The board was wired for High Temperature Reverse Bias burn-in per MIL-STD-883 Method 1015, Test Condition A.

To obtain variables data, samples were tested using a Fairchild Sentry VII.

Results

Following a period of learning and developing techniques for assembly of the semiconductors into carriers, the program outlined below was undertaken to determine whether or not we had a 'feasible' means for burning in uncased devices.

1. A. Assemble 5 working units (functional test).
   B. Disassemble .
   C. Analyze results.
2. A. Assemble 5 additional working units (functional test).
   B. Store at 48 hours at +125°C.
   C. Disassemble.
   D. Analyze results.
3. A. Assemble 12 additional working units (functional test).
   B. Read/record I/O parameters.
   C. B/I 168 hours in +125°C.
   D. Read/record I/O parameters.
   E. Disassemble.
   F. Analyze results.

The analysis of results included at each step above was aimed primarily at determining two things:

1. Was electrical contact maintained?

2. Was there any physical damage being done to the die that would preclude subsequent use in a conventional assembly operation?

In addition to the obvious physical damage that might occur (i.e., cracked die or smeared aluminum), we were looking for evidence of physical bonding between the aluminum of the contact pads on the die and the gold plated contact points on the carrier. It was felt that such bonding might occur through the simultaneous application of heat and pressure (a "thermo-compression" bond) or by formation of silicon-gold-aluminum intermetalics at the bond.

Observations made during the completion of these tasks may be summarized as follows:

A. There is no evidence that a physical bond had been formed between the aluminum contact pads and the contact points.

B. It is visibly apparent that the aluminum of the contact pads has been disturbed by contact with the carrier contact points, but in all cases where contact was properly made in the center of the contact pad there was no evidence of damage that would preclude subsequent assembly using standard wire-bonding techniques. In those cases where imperfect alignment during assembly caused contact to occur at some point other than the center of a pad, there was evidence of destructive damage (i.e., smeared aluminum or cracked glass.

C. Contact between the carrier (tape) metalization and the commercial flat pack contactor is less than perfect. In many cases poor electrical contact could be attributed to the contactor interface rather than to the interface between the die and the carrier tape metalization. In some cases this appeared to be due to interference between the contactor and the spring clip that holds the assembly together.

D. Electrical measurements of DC input and output parameters (prior to burn-in) are comparable to those obtained on finished devices, indicating that good electrical contact is being made and that there are no extraneous leakage paths between conductors.

Figure 17A is a photograph taken from a Scanning Electron Microscope, showing the condition of the bonding pads "as received". The areas of disturbed metal are the result of normal wafer probing.

Figure 17B shows a similar device, following assembly into a carrier. The bonding pad metalization has been further disturbed, but there is no exposure of oxide.

After burn-in it was found that one of the carriers had broken in half. Of the eleven assemblies remaining intact, only three were still making electrical contact. When the open units were taken apart and examined it was found that the O-rings being used as pressure springs had failed under the elevated temperature conditions, in that they had taken on a permanent set and had stuck to the top plate and pressure plate. It is felt that this is the cause of loss of contact.

The material used for these O-rings is "70 BN", with a data sheet temperature range of -54°C to +150°C. Other materials available include "70 S" (Silicone) with a temperature range of -65°C to +250°C "70 V" (Flurocarbon) with a temperature range of -54°C to +260°C, and "70 FS" (Flurosilicone) with a temperature range of -80°C to +275°C.

Out of the twelve dice, one had a corner broken off. The remaining eleven looked as described above.

Additional Work Needed

Feasibility of burning-in uncased semiconductors has been shown. However, before this can be considered a practical process, the following problems must be solved.

1. O-rings used for pressure springs must be fabricated from a material that will not only survive exposure to elevated temperature, but will maintain elasticity while at +125°C.

2. Some additional work needs to be done to assure positive contact between the device leads and the commercially available contactor.

3. A way must be found to transfer the principals used in this study to devices with more than 14 contact points.

Conclusions

Feasibility of burning-in and testing uncased semiconductor devices has been demonstrated. A number of dice have been assembled into carriers and then electrically tested, baked, burned-in under electrical stress and otherwise handled in a manor similar to packaged devices, and have then been recovered in condition suitable for normal die processing and assembly. There is no evidence of bonding between the carrier contacts and the die bonding pads.

The carrier assembly design described herein requires a number of small parts and is difficult to assemble. Every device configuration would require tooling for the bumped testable tape or the metalized carriers, and would be subject to the usual problems of tooling obsolescence with a change in suppliers, or with a change in mask design by a single supplier. Therefore, it does not seem likely that this method of increasing reliability will be applicable to any but the most extreme cases of high reliability requirements coupled with the need for absolute minimum size and weight. Other methods, such as the use of hermetic chip carriers, may be more applicable to the general case.

Recommendations

We continue to believe that there are cases where the use of uncased devices that have been burned-in and tested would be advantageous. We therefore recommend that the work initiated under this contract be extended. Emphasis should be placed on improved tooling, with an eye to automation, and to extending the technique to larger devices with up to 48 contact points.

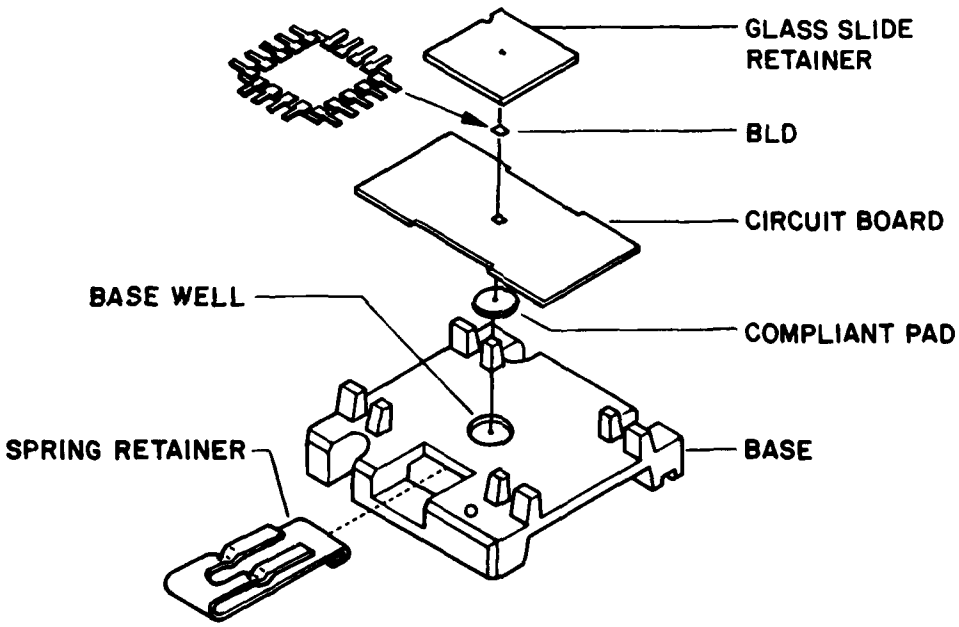

(Figure 1)

BEAM LEAD DEVICE CARRIER SYSTEM

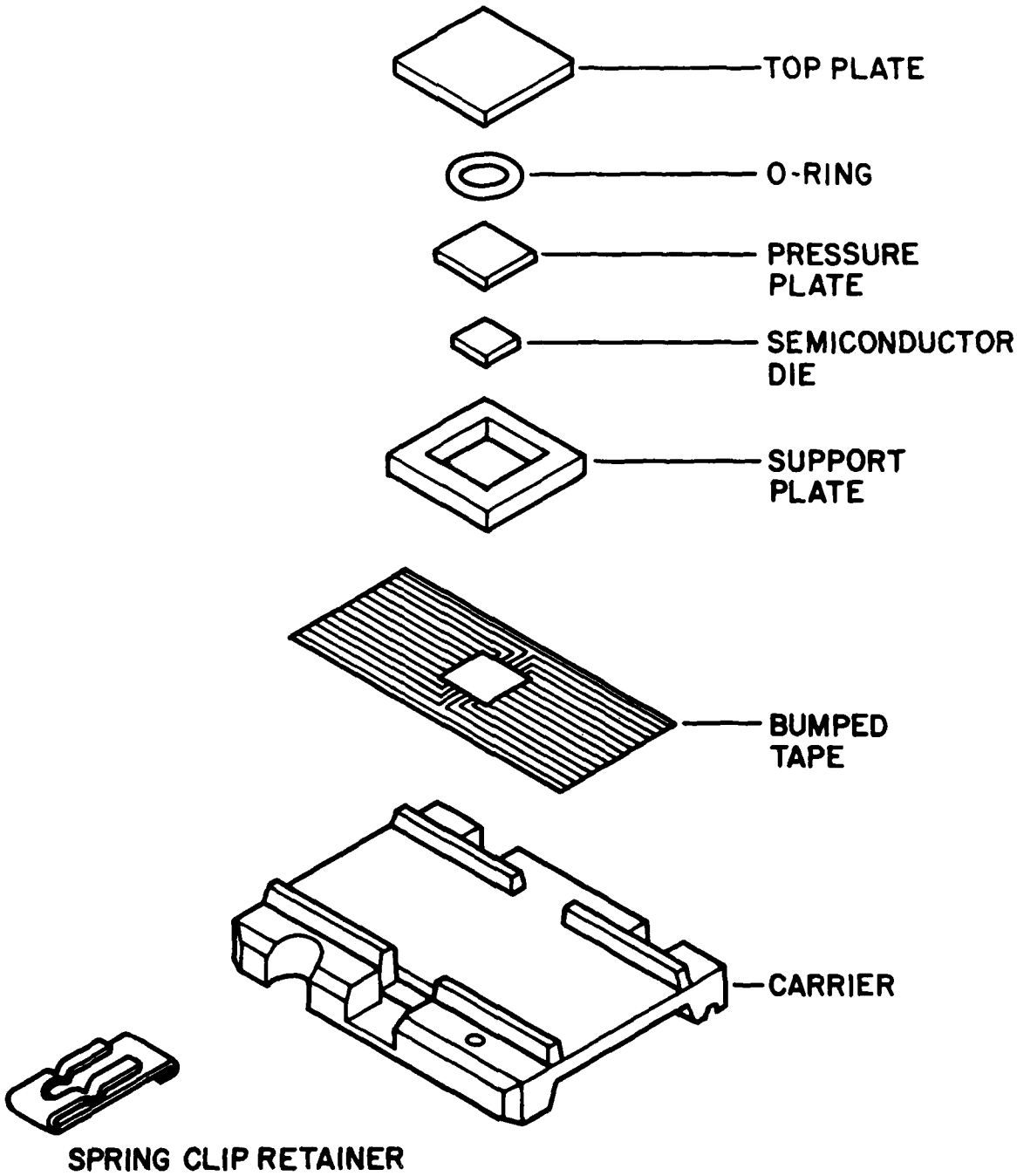

(Figure 2)

CARRIER SYSTEM-EXPLODED VIEW

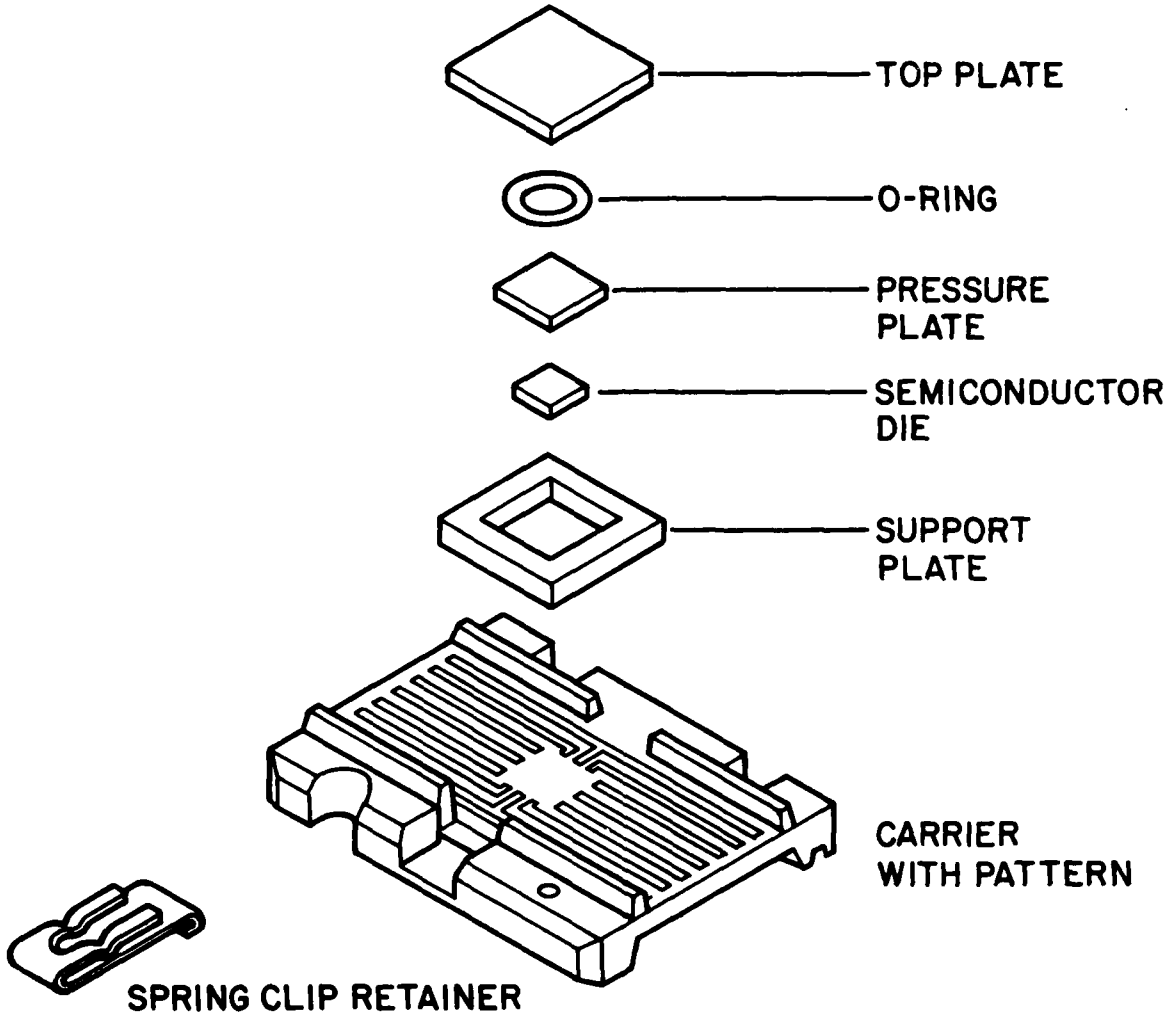

(Figure 3)

CARRIER SYSTEM-EXPLODED VIEW

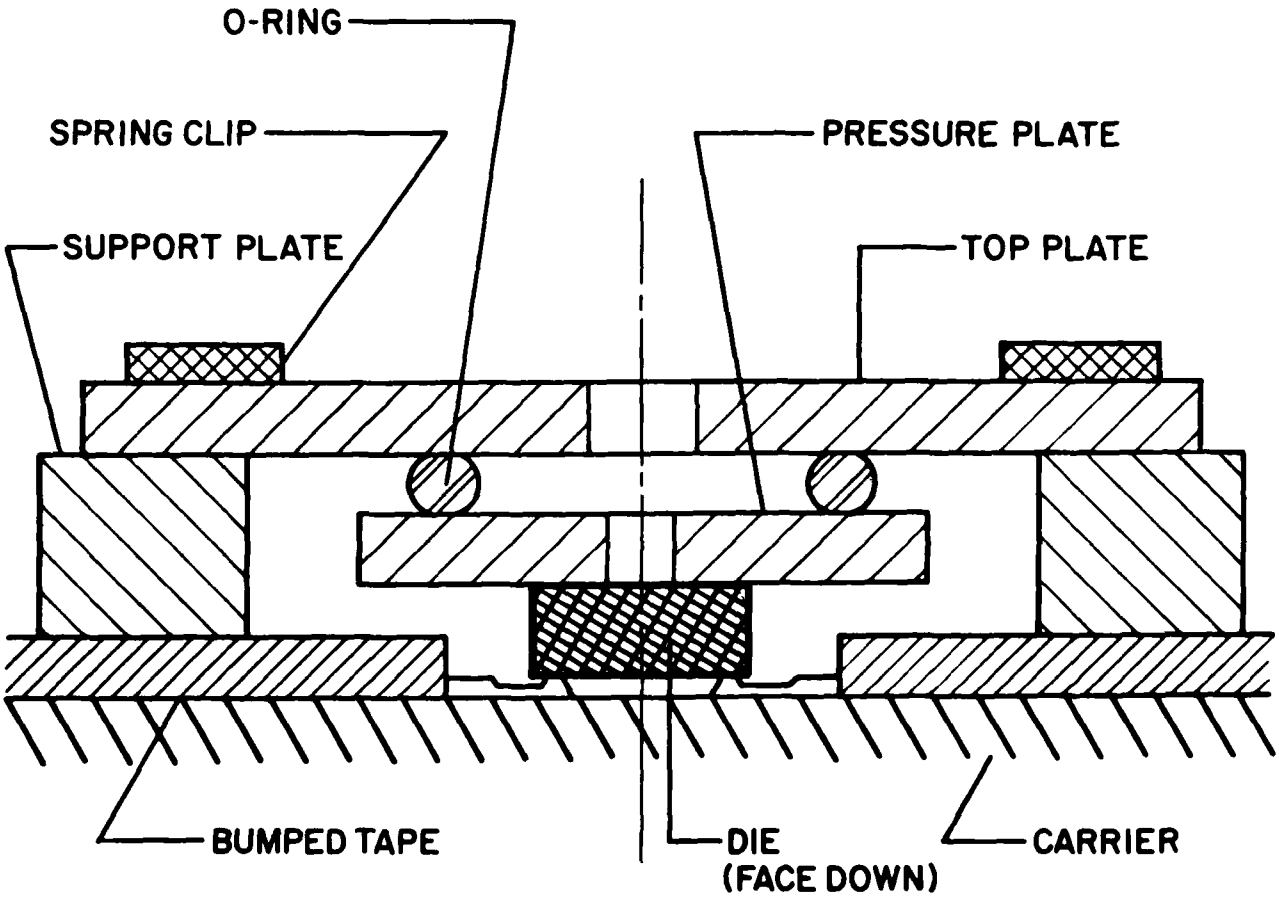

(Figure 4)

CARRIER SYSTEM

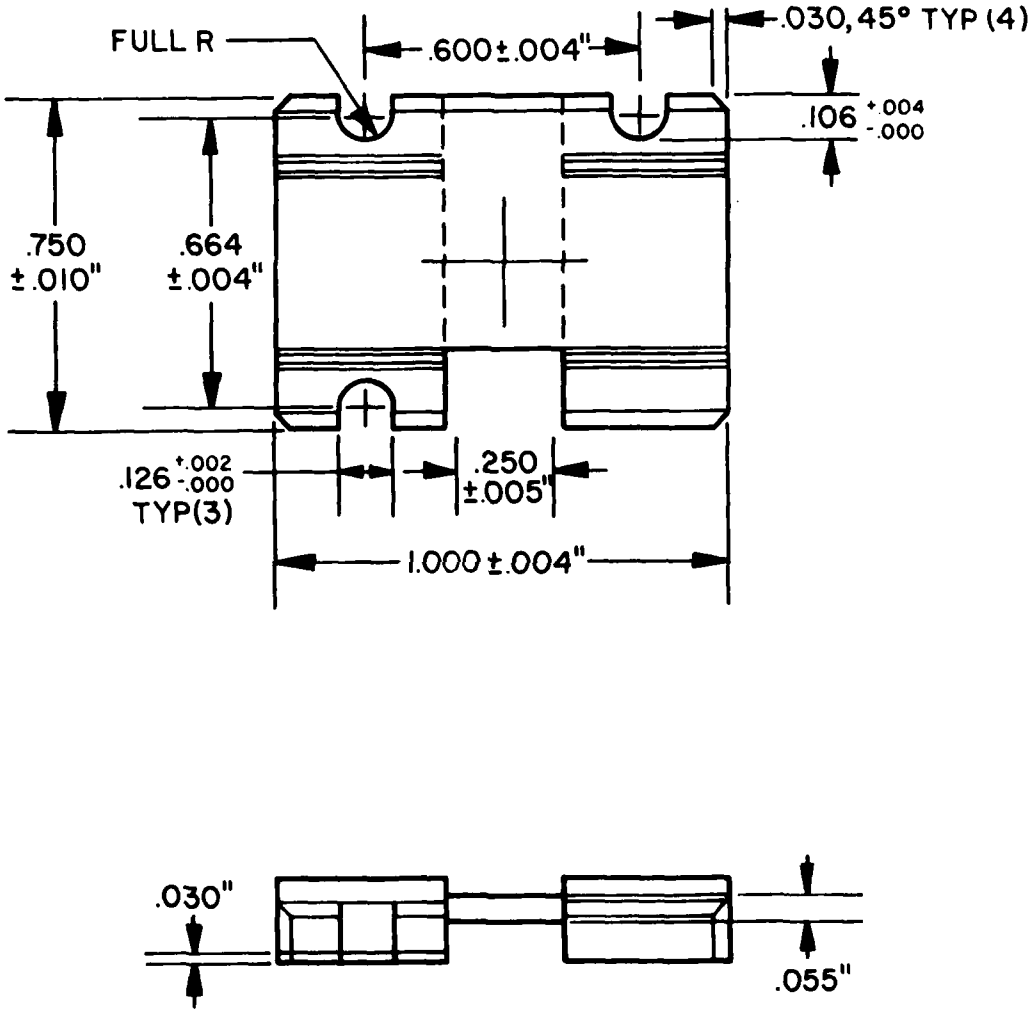

(FIGURE 5A) CARRIER

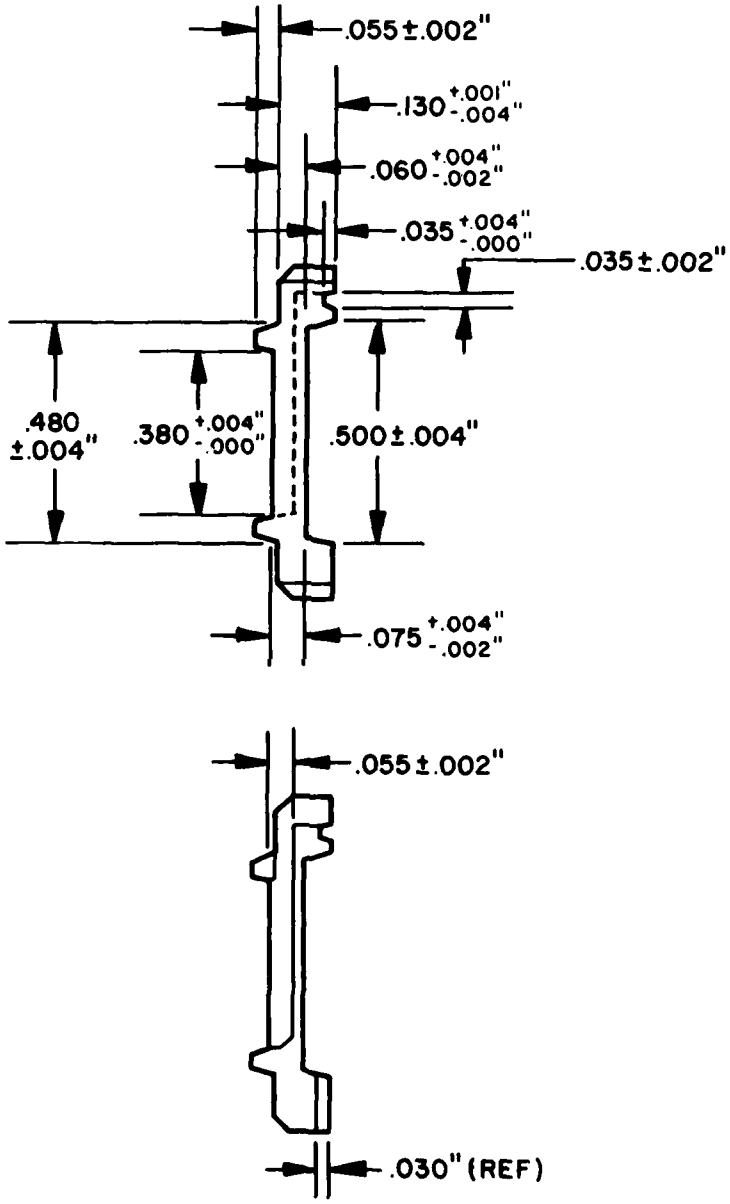

(FIGURE 5B) CARRIER

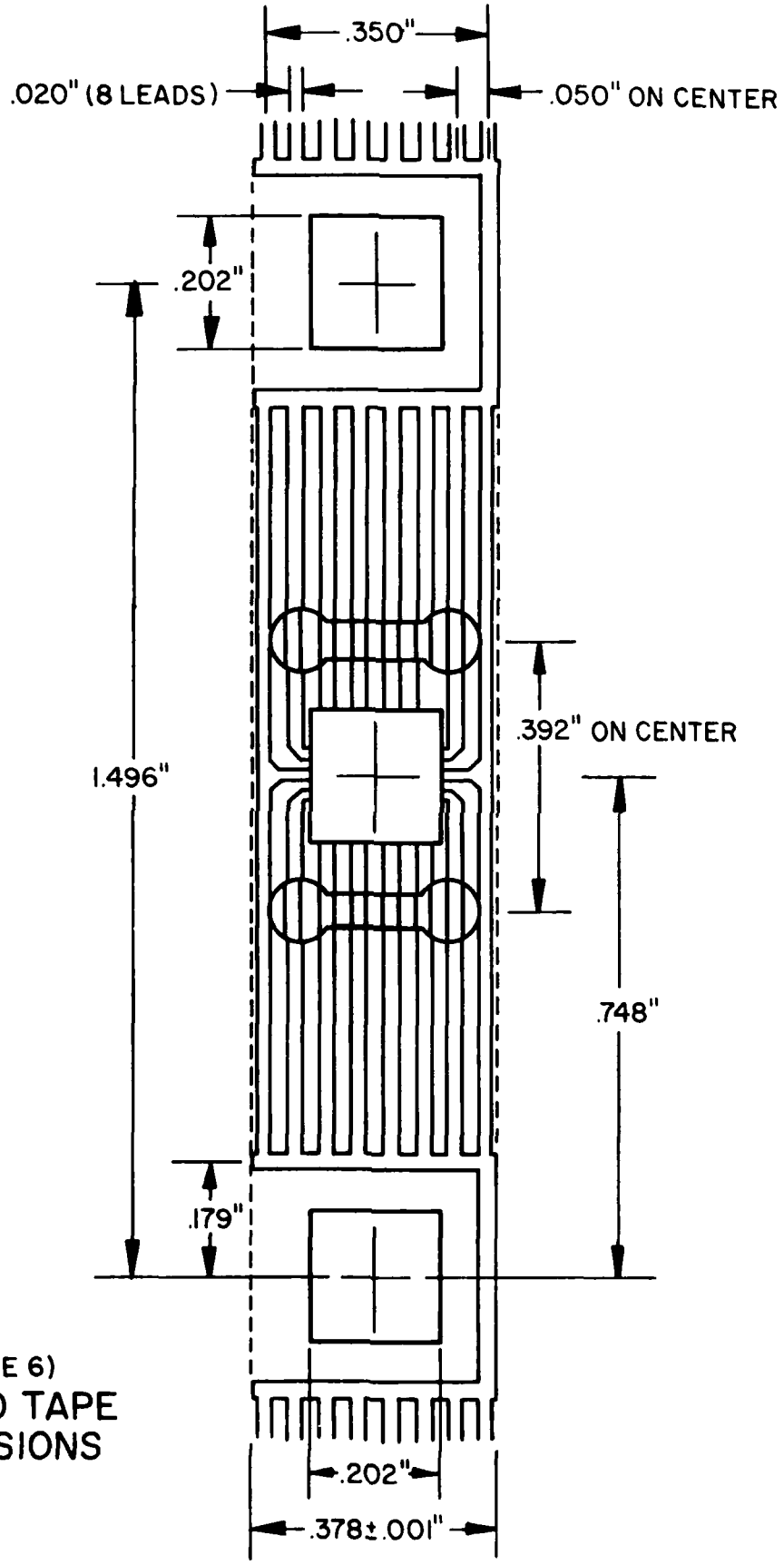

(FIGURE 6)
BUMPED TAPE
DIMENSIONS

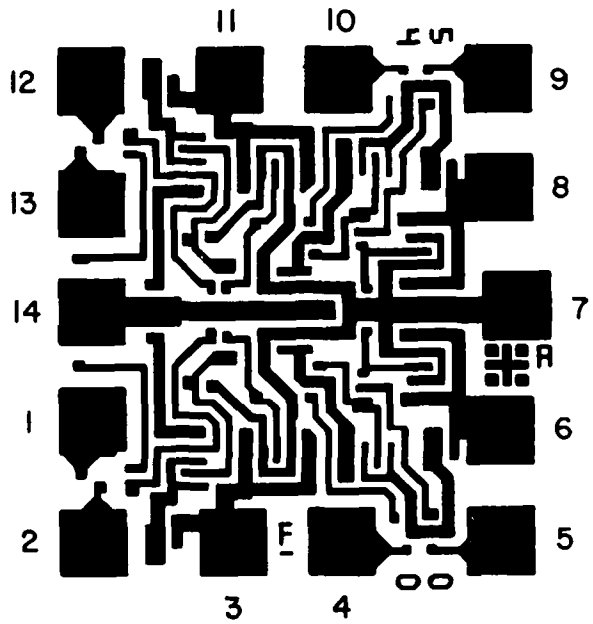

(FIGURE 7) METALIZATION PATTERN
NATIONAL SEMICONDUCTOR 5400 REV. F

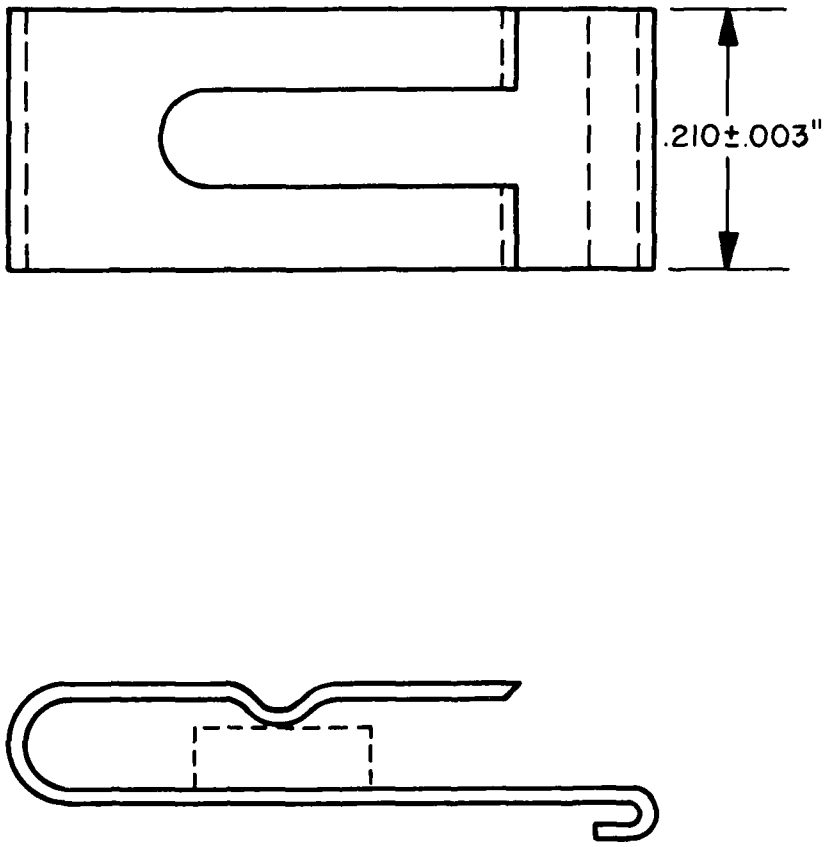

(FIGURE 8) SPRING CLIP

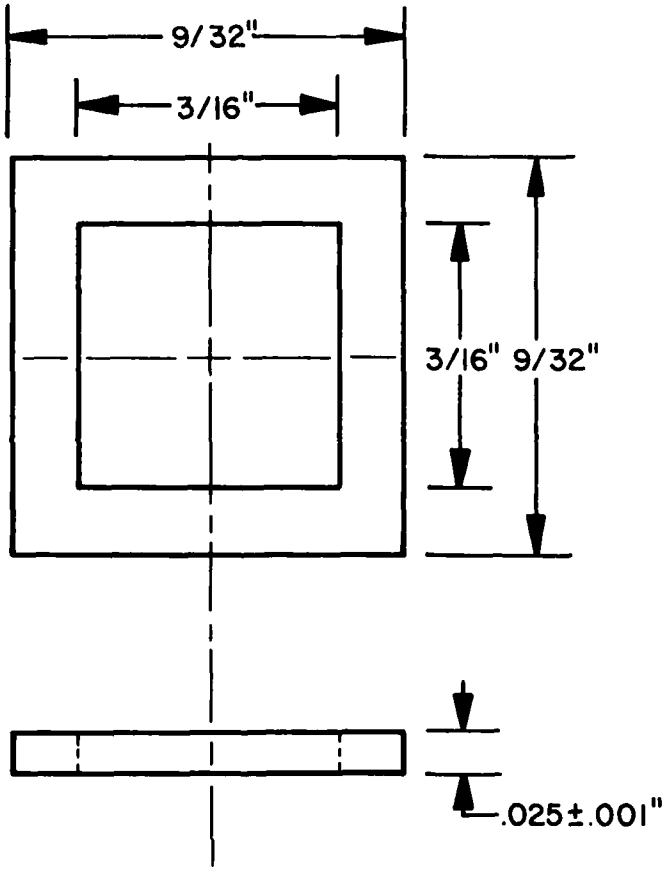

MATERIAL: BRASS

(FIGURE 9) SUPPORT PLATE

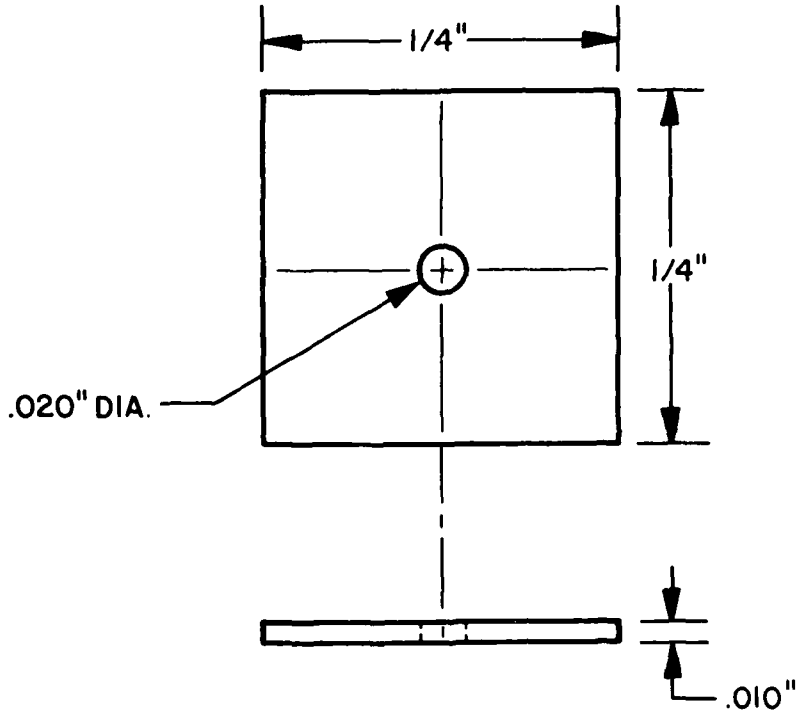

MATERIAL: BRASS

(FIGURE 10) TOP PLATE

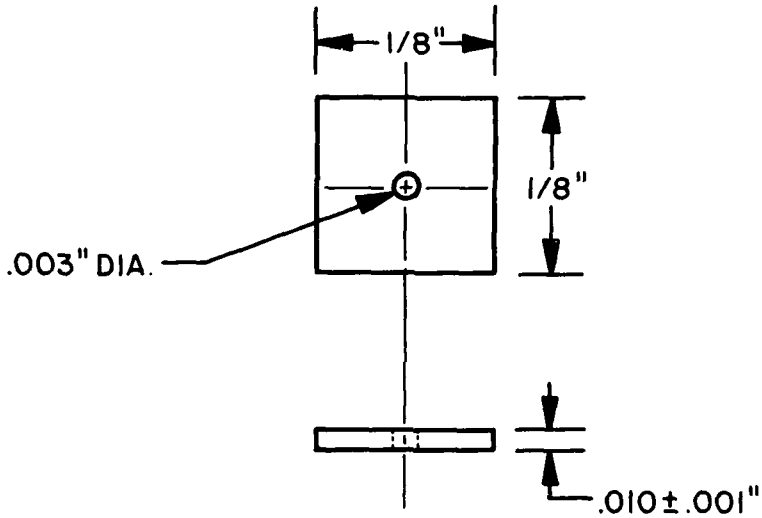

MATERIAL: BRASS

(FIGURE 11) PRESSURE PLATE

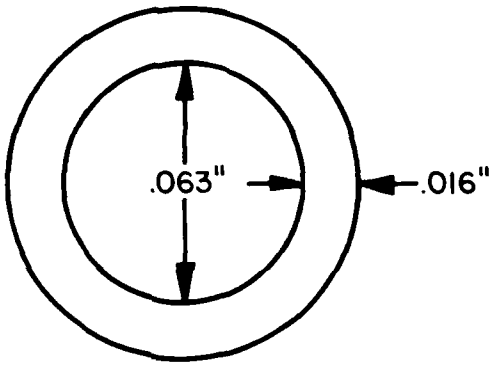

MATERIAL : 70 BN

(FIGURE 12) O-RING

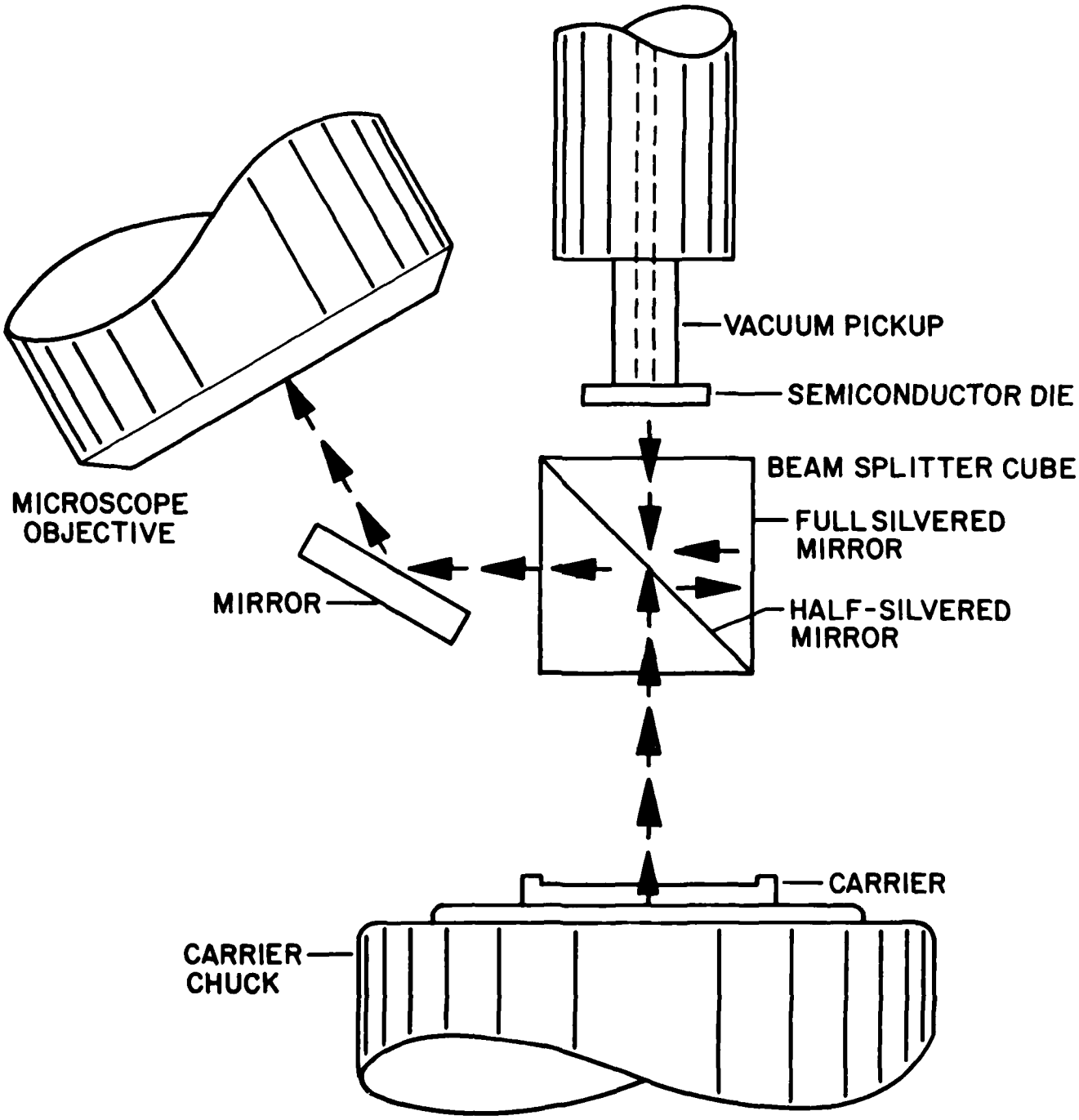

(Figure 13)

OPTICAL SYSTEM FOR CHIP PLACEMENT

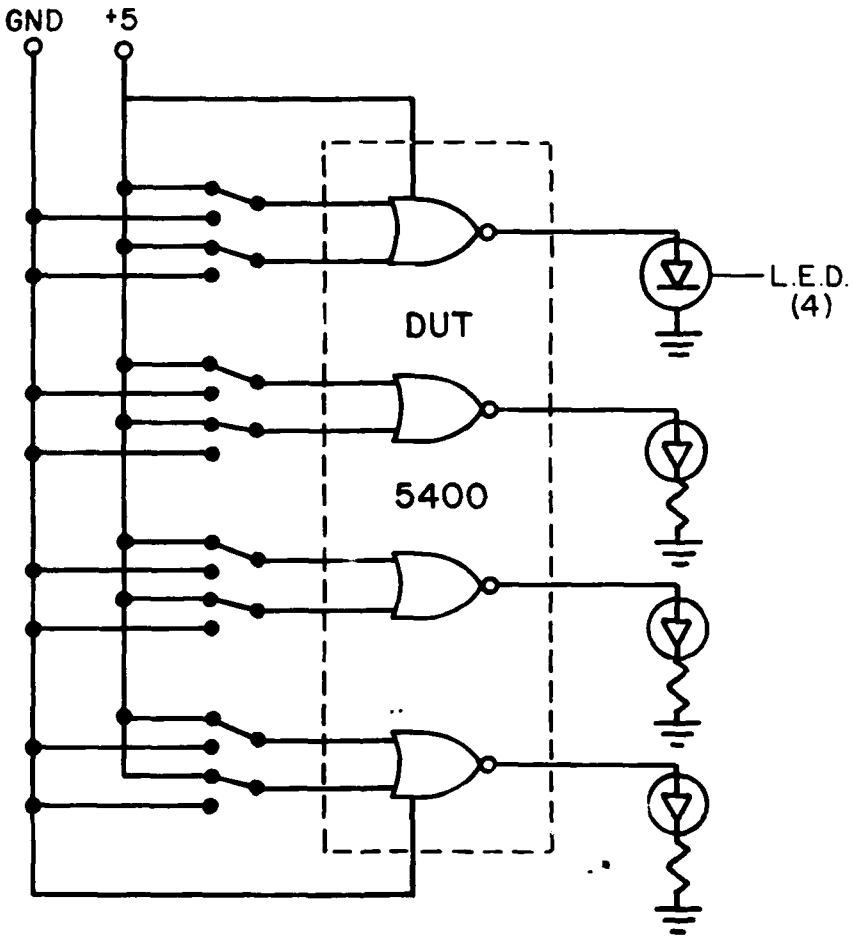

(FIGURE 14) FUNCTIONAL TESTER FOR 5400 QUAD NAND GATE

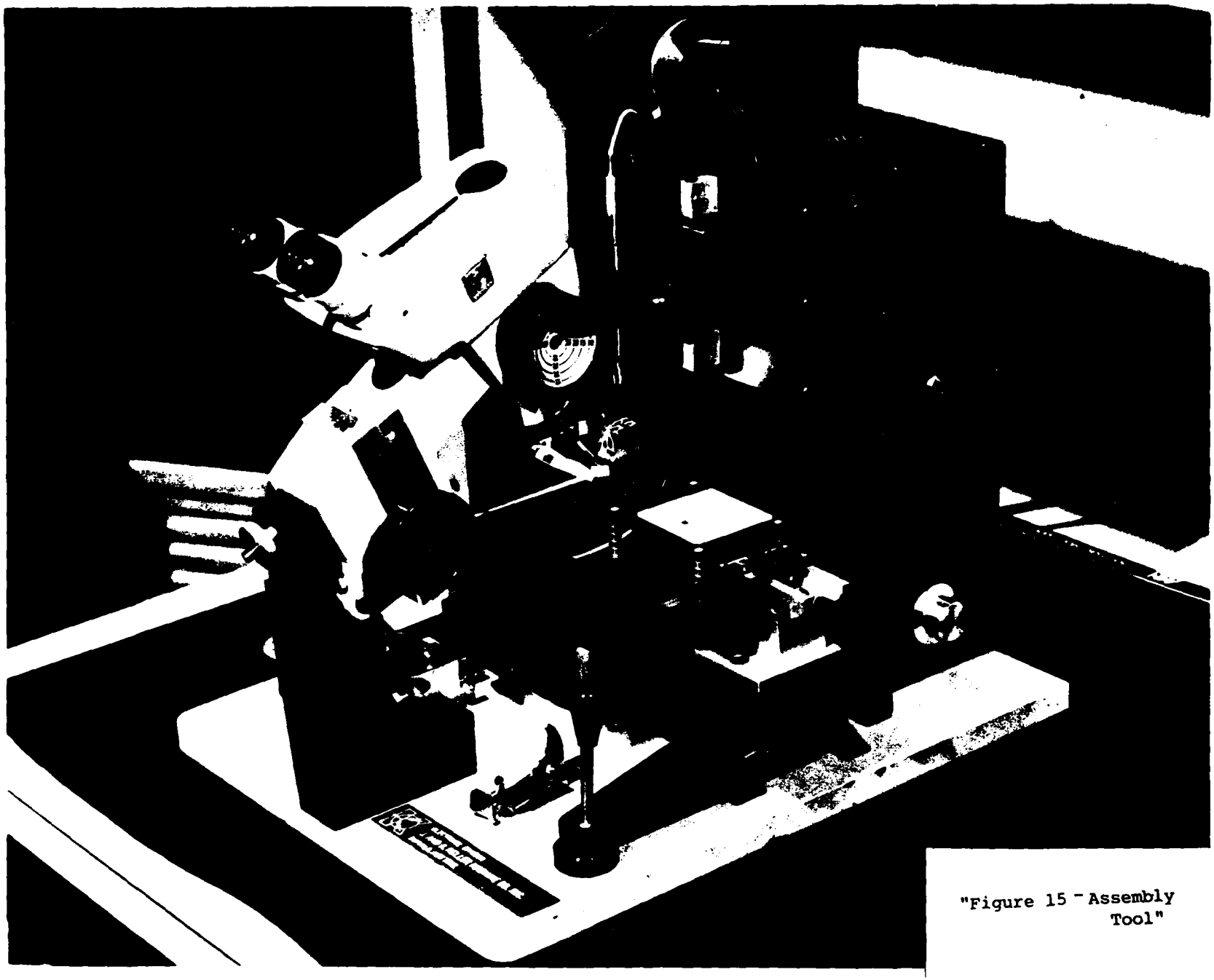

"Figure 15 - Assembly Tool"

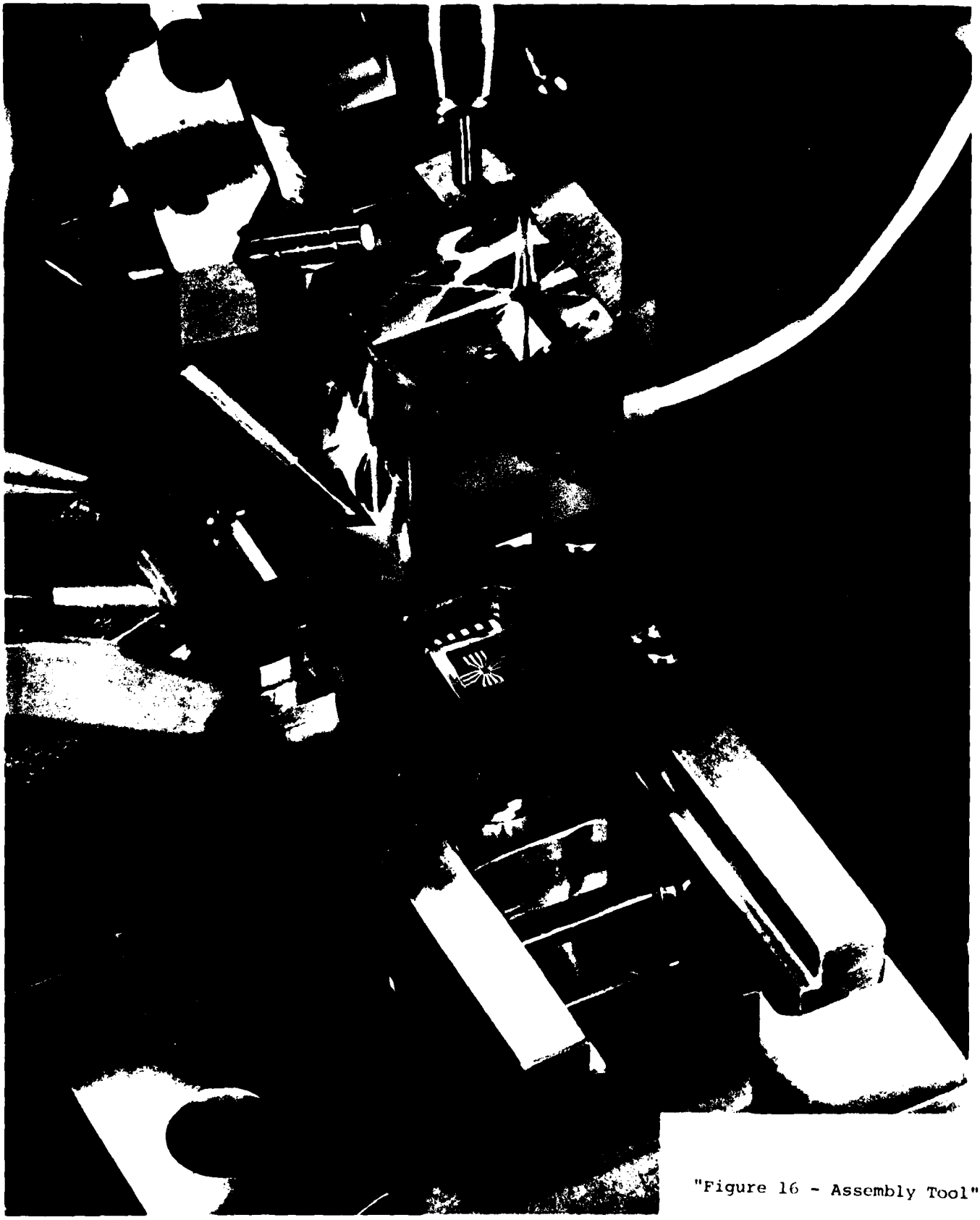

"Figure 16 - Assembly Tool"

TILT = 20°
DIE # 201

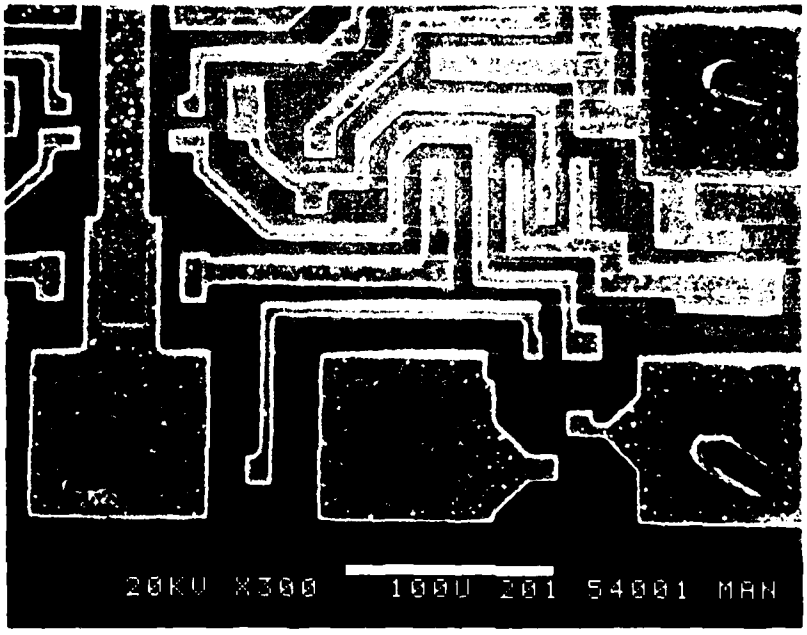

Figure 17A Before

TILT = 20°
DIE # 101

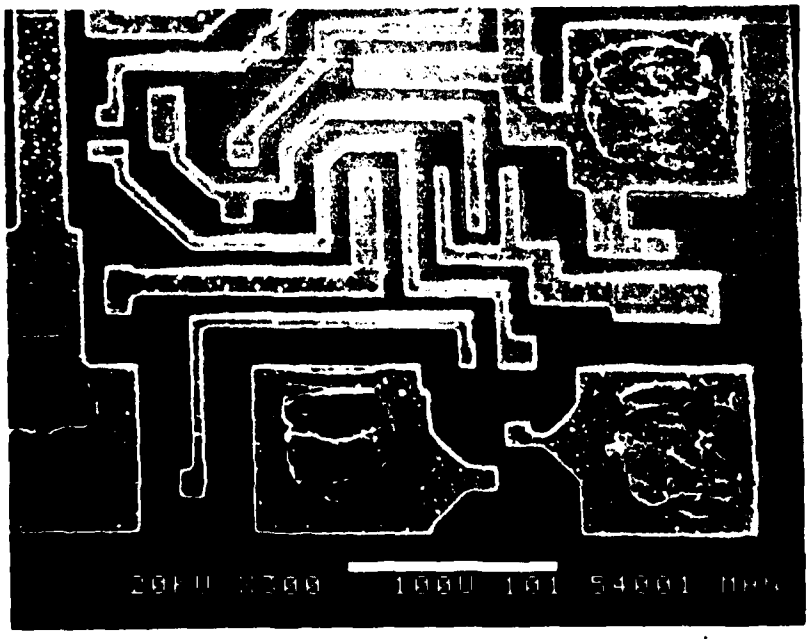

Figure 17B After

APPENDIX

Variables Electrical Data

Data for the preburn-in measurements is mostly self-explanatory, except that the statement "Passes Functional Tests" is printed even on devices that obviously do not. This is because of a "bug" in the test program that shows up when the fast binning of bad devices is overriden.

Data for post burn-in measurements is of two types. On those devices where no measurements could be made, only the "contact check" measurements are recorded. Normal readings for the contact check are on the order of 600 mV.

STAT3 05:29
TEST PLAN 0D0054 S/N 1
[illegible]

PASSES FUNCTIONAL TESTS
TPLH = 16.32 NS
FAIL TPHL = 22.24 NS
ICCH = 5.519 MA
ICCL = 5.439 MA

PARAMETER	PIN#	READING	UNITS
FAIL			
IIH	1	102.3	UA
IIH	2	0	UA
IIH	4	1.600	UA
IIH	5	1.600	UA
IIH	9	1.600	UA
IIH	10	1.600	UA
IIH	12	-99.97E-03	UA
FAIL			
IIH	13	102.3	UA
IIHHI	1	102.3	UA
IIHHI	2	0	UA
IIHHI	4	2.199	UA
IIHHI	5	2.299	UA
IIHHI	9	2.199	UA
IIHHI	10	2.199	UA
IIHHI	12	0	UA
IIHHI	13	102.3	UA
IIL	1	-1.140	MA
FAIL			
IIL	2	-10.24	MA
IIL	4	-939.9E-03	MA
IIL	5	-939.9E-03	MA
IIL	9	-939.9E-03	MA
IIL	10	-939.9E-03	MA
FAIL			
IIL	12	-10.24	MA
IIL	13	-1.140	MA
VOH	3	2.680	VOLTS
VOH	6	2.700	VOLTS
VOH	8	2.670	VOLTS
VOH	11	2.670	VOLTS
VOL	3	242.0E-03	VOLTS
VOL	6	307.0E-03	VOLTS
VOL	8	363.0E-03	VOLTS
VOL	11	247.0E-03	VOLTS
ISC	3	-31.20	MA
ISC	6	-32.00	MA
ISC	8	-31.40	MA
ISC	11	-31.70	MA

STAT3 05:41
TEST PLAN 0D0054 S/N 2
PRC BURN IN

PASSES FUNCTIONAL TESTS
TPLH = 14.88 NS
TTIME FOUND FAIL ON 1ST SEARCH TRY
FAIL TPHL = 1.999E+09 NS
FAIL ICC
ICCH = 10.23 MA
ICCL = 10.23 MA

PARAMETER	PIN#	READING	UNITS
IIH	1	3.799	UA
IIH	2	3.499	UA
IIH	4	2.599	UA
IIH	5	2.599	UA
FAIL			
IIH	9	102.3	UA
IIH	10	2.599	UA
IIH	12	2.999	UA
IIH	13	3.099	UA
IIHHI	1	5.099	UA
IIHHI	2	4.799	UA
IIHHI	4	3.599	UA
IIHHI	5	4.299	UA
IIHHI	9	102.3	UA
IIHHI	10	3.399	UA
IIHHI	12	4.199	UA
IIHHI	13	4.399	UA
IIL	1	-1.020	MA
IIL	2	-1.040	MA
IIL	4	-1.090	MA
IIL	5	-1.060	MA
IIL	9	10.23	MA
IIL	10	-1.090	MA
IIL	12	-889.9E-03	MA
IIL	13	-889.9E-03	MA
VOH	3	2.720	VOLTS
VOH	6	2.750	VOLTS
VOH	8	2.750	VOLTS
FAIL			
VOH	11	1.100	VOLTS
VOL	3	315.0E-03	VOLTS
VOL	6	310.0E-03	VOLTS
FAIL			
VOL	8	1.023	VOLTS
VOL	11	314.0E-03	VOLTS
ISC	3	-33.30	MA
ISC	6	-34.20	MA
ISC	8	-35.19	MA
ISC	11	-33.80	MA

STAT3 04:57
TEST PLAN 0D0054 S/N 3
PRE BURN IN

PASSES FUNCTIONAL TESTS
TPLH = 16.16 NS
TPHL = 17.28 NS
ICCH = 5.039 MA
ICCL = 5.119 MA

PARAMETER	PIN#	READING	UNITS
IIH	1	2.199	UA
IIH	2	2.199	UA
IIH	4	1.600	UA
IIH	5	1.600	UA
IIH	9	0	UA
IIH	10	1.600	UA
IIH	12	1.600	UA
IIH	13	-99.97E-03	UA
IIHHI	1	2.999	UA
IIHHI	2	2.999	UA
IIHHI	4	2.299	UA
IIHHI	5	2.299	UA
IIHHI	9	0	UA
IIHHI	10	1.899	UA
IIHHI	12	1.800	UA
IIHHI	13	0	UA
IIL	1	-959.8E-03	MA
IIL	2	-969.8E-03	MA
IIL	4	-1.010	MA
IIL	5	-999.8E-03	MA
IIL	9	-9.998E-03	MA
IIL	10	-979.8E-03	MA
IIL	12	-939.9E-03	MA
IIL	13	-9.998E-03	MA
VOH	3	2.700	VOLTS
VOH	6	2.720	VOLTS
VOH	8	2.700	VOLTS
VOH	11	2.670	VOLTS
VOL	3	264.0E-03	VOLTS
VOL	6	254.0E-03	VOLTS
VOL	8	336.0E-03	VOLTS
VOL	11	272.0E-03	VOLTS
ISC	3	-32.40	MA
ISC	6	-33.80	MA
ISC	8	-32.79	MA
ISC	11	-32.79	MA

TEST PLAN UD0054 S/N 4
POST BURN IN

PASSES FUNCTIONAL TESTS
TPLH = 15.04 NS
TPHL = 16.80 NS
ICCH = 5.469 MA
ICCL = 5.439 MA

PARAMETER	PIN#	READING	UNITS
IIH	1	3.099	UA
IIH	2	3.099	UA
IIH	4	2.199	UA
IIH	5	2.299	UA
IIH	9	1.899	UA
IIH	10	1.899	UA
IIH	12	2.699	UA
IIH	13	2.699	UA
IIHHI	1	4.599	UA
IIHHI	2	4.299	UA
IIHHI	4	3.099	UA
IIHHI	5	3.099	UA
IIHHI	9	2.999	UA
IIHHI	10	2.699	UA
IIHHI	12	3.799	UA
IIHHI	13	3.799	UA
IIL	1	-979.8E-03	MA
IIL	2	-979.8E-03	MA
IIL	4	-1.040	MA
IIL	5	-1.040	MA
IIL	9	-1.050	MA
IIL	10	-1.050	MA
IIL	12	-979.8E-03	MA
IIL	13	-979.8E-03	MA
VOH	3	2.720	VOLTS
VOH	6	2.750	VOLTS
VOH	8	2.740	VOLTS
VOH	11	2.720	VOLTS
VOL	3	268.0E-03	VOLTS
VOL	6	247.0E-03	VOLTS
VOL	8	248.0E-03	VOLTS
VOL	11	262.0E-03	VOLTS
ISC	3	-33.30	MA
ISC	6	-34.80	MA
ISC	8	-35.19	MA
ISC	11	-33.99	MA

TEST PLAN 08054 S/N

PASSES FUNCTIONAL TESTS
TTIME FOUND FAIL ON 1ST SEARCH TRY
FAIL TPLH = 1.999E+09 NS
TPHL = 15.68 NS
ICCH = 7.745 MA
ICCL = 7.999 MA

PARAMETER	PIN#	READING	UNITS
IIH	1	-99.97E-03	UA
IIH	2	-99.97E-03	UA
IIH	4	2.399	UA
IIH	5	2.399	UA
IIH	9	2.399	UA
IIH	10	2.399	UA
IIH	12	3.499	UA
IIH	13	3.299	UA
IIHHI	1	0	UA
IIHHI	2	0	UA
IIHHI	4	3.199	UA
IIHHI	5	3.499	UA
IIHHI	9	3.399	UA
IIHHI	10	3.399	UA
IIHHI	12	7.498	UA
IIHHI	13	4.599	UA
IIL	1	-9.998E-03	MA
IIL	2	-9.998E-03	MA
IIL	4	-979.8E-03	MA
IIL	5	-979.8E-03	MA
IIL	9	-979.8E-03	MA
IIL	10	-979.8E-03	MA
IIL	12	-939.9E-03	MA
IIL	13	-929.8E-03	MA
FAIL			
VOH	3	-570.0E-03	VOLTS
VOH	6	2.680	VOLTS
VOH	8	2.680	VOLTS
VOH	11	2.670	VOLTS
FAIL			
VOL	3	403.0E-03	VOLTS
VOL	6	398.0E-03	VOLTS
VOL	8	234.0E-03	VOLTS
VOL	11	254.0E-03	VOLTS
FAIL			
ISC	3	-1.800	MA
ISC	6	-30.40	MA
ISC	8	-33.30	MA
ISC	11	-32.40	MA

STAT3 05:46
TEST PLAN DD0054 S/N 6
PRE BURN IN

PASSES FUNCTIONAL TESTS
TPLH = 14.08 NS
TTIME FOUND FAIL ON 1ST SEARCH TRY
FAIL TPHL = 1.999E+09 NS
ICCH = 7.599 MA
ICCL = 7.679 MA

PARAMETER	PIN#	READING	UNITS
IIH	1	1.600	UA
IIH	2	1.800	UA
IIH	4	-99.97E-03	UA
IIH	5	-99.97E-03	UA
IIH	9	1.600	UA
IIH	10	1.400	UA
IIH	12	1.800	UA
IIH	13	1.600	UA
IIHHI	1	2.499	UA
IIHHI	2	2.399	UA
IIHHI	4	0	UA
IIHHI	5	0	UA
IIHHI	9	2.599	UA
IIHHI	10	2.199	UA
IIHHI	12	2.399	UA
IIHHI	13	2.199	UA
IIL	1	-929.8E-03	MA
IIL	2	-929.8E-03	MA
IIL	4	-9.998E-03	MA
IIL	5	-9.998E-03	MA
IIL	9	-969.8E-03	MA
IIL	10	-969.8E-03	MA
IIL	12	-899.8E-03	MA
IIL	13	-899.8E-03	MA
FAIL			
VOH	3	-10.24	VOLTS
FAIL			
VOH	6	-10.24	VOLTS
VOH	8	2.630	VOLTS
VOH	11	2.590	VOLTS
FAIL			
VOL	3	1.023	VOLTS
FAIL			
VOL	6	1.023	VOLTS
VOL	8	384.0E-03	VOLTS
VOL	11	370.0E-03	VOLTS
FAIL			
ISC	3	-99.98E-03	MA
FAIL			
ISC	6	0	MA
ISC	8	-36.10	MA
ISC	11	-34.89	MA

STAT3 05:09
TEST PLAN 0D0054 S/N 7
PRE BURN IN

PASSES FUNCTIONAL TESTS
TPLH = 15.36 NS
FAIL TPHL = 18.24 NS
ICCH = 5.139 MA
ICCL = 5.119 MA

PARAMETER	PIN#	READING	UNITS
IIH	1	2.199	UA
IIH	2	2.199	UA
IIH	4	1.400	UA
IIH	5	-99.97E-03	UA
IIH	9	1.600	UA
IIH	10	1.600	UA
IIH	12	2.199	UA
IIH	13	2.299	UA
IIHHI	1	2.999	UA
IIHHI	2	2.799	UA
IIHHI	4	1.600	UA
IIHHI	5	0	UA
IIHHI	9	2.299	UA
IIHHI	10	2.199	UA
IIHHI	12	2.999	UA
IIHHI	13	3.099	UA
IIL	1	-939.9E-03	MA
IIL	2	-939.9E-03	MA
IIL	4	-979.8E-03	MA
IIL	5	-9.998E-03	MA
IIL	9	-979.8E-03	MA
IIL	10	-979.8E-03	MA
IIL	12	-939.9E-03	MA
IIL	13	-939.9E-03	MA
VOH	3	2.680	VOLTS
VOH	6	2.720	VOLTS
VOH	8	2.720	VOLTS
VOH	11	2.700	VOLTS
VOL	3	334.0E-03	VOLTS
VOL	6	262.0E-03	VOLTS
VOL	8	262.0E-03	VOLTS
VOL	11	275.0E-03	VOLTS
ISC	3	-32.49	MA
ISC	6	-34.20	MA
ISC	8	-34.09	MA
ISC	11	-32.19	MA

STAT3 04:59
TEST PLAN 0D0054 S/N 8
RNC BURN IN

PASSES FUNCTIONAL TESTS
TPLH = 15.36 NS
TPHL = 16.96 NS
ICCH = 5.019 MA
ICCL = 5.119 MA

PARAMETER	PIN#	READING	UNITS
IIH	1	2.599	UA
IIH	2	2.399	UA
IIH	4	1.899	UA
IIH	5	1.899	UA
IIH	9	1.899	UA
IIH	10	1.899	UA
IIH	12	2.399	UA
IIH	13	2.399	UA
IIHHI	1	3.999	UA
IIHHI	2	3.399	UA
IIHHI	4	2.699	UA
IIHHI	5	2.699	UA
IIHHI	9	2.699	UA
IIHHI	10	2.599	UA
IIHHI	12	3.399	UA
IIHHI	13	3.399	UA
IIL	1	-899.8E-03	MA
IIL	2	-899.8E-03	MA
IIL	4	-969.8E-03	MA
IIL	5	-969.8E-03	MA
IIL	9	-969.8E-03	MA
IIL	10	-969.8E-03	MA
IIL	12	-899.8E-03	MA
IIL	13	-899.8E-03	MA
VOH	3	2.700	VOLTS
VOH	6	2.720	VOLTS
VOH	8	2.660	VOLTS
VOH	11	2.660	VOLTS
VOL	3	250.0E-03	VOLTS
VOL	6	248.0E-03	VOLTS
VOL	8	238.0E-03	VOLTS
VOL	11	258.0E-03	VOLTS
ISC	3	-32.19	MA
ISC	6	-33.99	MA
ISC	8	-34.39	MA
ISC	11	-33.30	MA

STAT3 04:50
TEST PLAN 0D0054 S/N 9
Re [illegible]

PASSES FUNCTIONAL TESTS
TPLH = 15.36 NS
TPHL = 17.12 NS
ICCH = 4.989 MA
ICCL = 5.119 MA

PARAMETER	PIN#	READING	UNITS
IIH	1	1.600	UA
IIH	2	1.899	UA
IIH	4	1.600	UA
IIH	5	1.400	UA
IIH	9	1.600	UA
IIH	10	0	UA
IIH	12	1.800	UA
IIH	13	1.600	UA
IIHHI	1	2.399	UA
IIHHI	2	2.699	UA
IIHHI	4	2.299	UA
IIHHI	5	1.899	UA
IIHHI	9	1.899	UA
IIHHI	10	99.97E-03	UA
IIHHI	12	2.599	UA
IIHHI	13	2.299	UA
IIL	1	-899.8E-03	MA
IIL	2	-899.8E-03	MA
IIL	4	-969.8E-03	MA
IIL	5	-969.8E-03	MA
IIL	9	-969.8E-03	MA
IIL	10	-9.998E-03	MA
IIL	12	-899.8E-03	MA
IIL	13	-899.8E-03	MA
VOH	3	2.620	VOLTS
VOH	6	2.700	VOLTS
VOH	8	2.680	VOLTS
VOH	11	2.650	VOLTS
VOL	3	222.0E-03	VOLTS
VOL	6	203.0E-03	VOLTS
VOL	8	203.0E-03	VOLTS
VOL	11	214.0E-03	VOLTS
ISC	3	-37.30	MA
ISC	6	-37.80	MA
ISC	8	-37.60	MA
ISC	11	-35.70	MA

STAT3 05:24
TEST PLAN 0D0054 S/N 10
PRL BOARD IN

PASSES FUNCTIONAL TESTS
TTIME FOUND FAIL ON 1ST SEARCH TRY
FAIL TPLH = 1.999E+09 NS
FAIL TPHL = 22.56 NS
FAIL ICC
ICCH = 10.23 MA
ICCL = 10.23 MA

PARAMETER	PIN#	READING	UNITS
IIH	1	2.199	UA
IIH	2	2.199	UA
IIH	4	1.600	UA
IIH	5	1.600	UA
FAIL			
IIH	9	102.3	UA
FAIL			
IIH	10	102.3	UA
IIH	12	0	UA
FAIL			
IIH	13	102.3	UA
IIHHI	1	2.999	UA
IIHHI	2	2.699	UA
IIHHI	4	2.299	UA
IIHHI	5	2.199	UA
IIHHI	9	102.3	UA
IIHHI	10	0	UA
IIHHI	12	25.59	UA
IIHHI	13	102.3	UA
IIL	1	-799.9E-03	MA
IIL	2	-799.9E-03	MA
IIL	4	-839.9E-03	MA
IIL	5	-849.9E-03	MA
IIL	9	8.959	MA
FAIL			
IIL	10	-10.24	MA
FAIL			
IIL	12	-10.24	MA
IIL	13	-1.040	MA
VOH	3	2.590	VOLTS
VOH	6	2.620	VOLTS
FAIL			
VOH	8	-70.00E-03	VOLTS
VOH	11	2.620	VOLTS
FAIL			
VOL	3	590.0E-03	VOLTS
FAIL			
VOL	6	447.0E-03	VOLTS
VOL	8	382.0E-03	VOLTS
FAIL			
VOL	11	403.0E-03	VOLTS
ISC	3	-29.00	MA
ISC	6	-31.60	MA
FAIL			
ISC	8	4.799	MA
ISC	11	-30.40	MA

STATS 05:06
TEST PLAN 0D0054 S/N 11
[illegible]

PASSES FUNCTIONAL TESTS
TPLH = 15.68 NS
FAIL TPHL = 18.07 NS
ICCH = 5.209 MA
ICCL = 5.119 MA

PARAMETER	PIN#	READING	UNITS
IIH	1	1.600	UA
IIH	2	1.800	UA
IIH	4	1.500	UA
IIH	5	1.400	UA
IIH	9	1.400	UA
IIH	10	1.100	UA
IIH	12	1.800	UA
IIH	13	1.600	UA
IIHHI	1	2.399	UA
IIHHI	2	2.599	UA
IIHHI	4	2.199	UA
IIHHI	5	1.899	UA
IIHHI	9	2.199	UA
IIHHI	10	1.800	UA
IIHHI	12	2.699	UA
IIHHI	13	2.399	UA
IIL	1	-939.9E-03	MA
IIL	2	-959.8E-03	MA
IIL	4	-979.8E-03	MA
IIL	5	-979.8E-03	MA
IIL	9	-1.010	MA
IIL	10	-1.010	MA
IIL	12	-969.8E-03	MA
IIL	13	-969.8E-03	MA
VOH	3	2.630	VOLTS
VOH	6	2.660	VOLTS
VOH	8	2.660	VOLTS
VOH	11	2.630	VOLTS
VOL	3	254.0E-03	VOLTS
VOL	6	247.0E-03	VOLTS
VOL	8	238.0E-03	VOLTS
VOL	11	254.0E-03	VOLTS
ISC	3	-38.19	MA
ISC	6	-39.19	MA
ISC	8	-39.19	MA
ISC	11	-38.99	MA

STAT3 05:08
TEST PLAN 0D0054 S/N 12
PRE BURN IN

PASSES FUNCTIONAL TESTS
TPLH = 15.36 NS
TPHL = 16.80 NS
ICCH = 5.029 MA
ICCL = 5.119 MA

PARAMETER	PIN#	READING	UNITS
IIH	1	1.500	UA
IIH	2	-99.97E-03	UA
IIH	4	1.899	UA
IIH	5	1.600	UA
IIH	9	2.199	UA
IIH	10	-99.97E-03	UA
IIH	12	1.899	UA
IIH	13	1.800	UA
IIHHI	1	1.800	UA
IIHHI	2	0	UA
IIHHI	4	2.699	UA
IIHHI	5	2.299	UA
IIHHI	9	2.399	UA
IIHHI	10	0	UA
IIHHI	12	2.799	UA
IIHHI	13	2.599	UA
IIL	1	-929.8E-03	MA
IIL	2	-9.998E-03	MA
IIL	4	-969.8E-03	MA
IIL	5	-969.8E-03	MA
IIL	9	-979.8E-03	MA
IIL	10	-9.998E-03	MA
IIL	12	-939.9E-03	MA
IIL	13	-939.9E-03	MA
VOH	3	2.700	VOLTS
VOH	6	2.750	VOLTS
VOH	8	2.740	VOLTS
VOH	11	2.700	VOLTS
VOL	3	247.0E-03	VOLTS
VOL	6	194.0E-03	VOLTS
VOL	8	195.0E-03	VOLTS
VOL	11	278.0E-03	VOLTS
ISC	3	-36.79	MA
ISC	6	-37.80	MA
ISC	8	-37.69	MA
ISC	11	-34.99	MA

PARAMETER	PINS	READING	UNITS
IIH	1	14.50	UA
IIH	2	299.9E-03	UA
IIH	4	1.800	UA
IIH	5	1.800	UA
IIH	7	1.600	UA
IIH	10	0	UA
IIH	12	2.399	UA
IIH	13	2.399	UA
IIHHI	1	102.3	UA
IIHHI	2	399.9E-03	UA
IIHHI	4	2.599	UA
IIHHI	5	2.599	UA
IIHHI	9	1.999	UA
IIHHI	10	199.9E-03	UA
IIHHI	12	3.299	UA
IIHHI	13	3.299	UA
IIL	1	-1.140	MA
FAIL			
IIL	2	-10.24	MA
IIL	4	-929.8E-03	MA
IIL	5	-929.8E-03	MA
IIL	9	-919.9E-03	MA
IIL	10	0	MA
IIL	12	-869.9E-03	MA
IIL	13	-879.9E-03	MA
VOH	3	2.690	VOLTS
VOH	6	2.710	VOLTS
VOH	8	2.700	VOLTS
VOH	11	2.670	VOLTS
VOL	3	275.0E-03	VOLTS
VOL	6	359.0E-03	VOLTS
VOL	8	385.0E-03	VOLTS
VOL	11	375.0E-03	VOLTS
ISC	3	-30.80	MA
ISC	6	-30.30	MA
ISC	8	-30.60	MA
ISC	11	-30.20	MA

[illegible] PLAN [illegible]

[illegible] BURNIN

[illegible] #	PTS	MEASURED		LT				
34	1	-3.280 V					-200.0MV	
37	1	-3.280 V	-	2 V	F			****
34	2	-3.280 V					-200.0MV	
37	2	-3.280 V	-	2 V	F			****
34	3	-3.280 V					-200.0MV	
37	3	-3.280 V	-	2 V	F			****
34	4	-3.280 V					-200.0MV	
37	4	-3.280 V	-	2 V	F			****
34	5	-3.280 V					-200.0MV	
37	5	-3.280 V	-	2 V	F			****
34	6	-3.280 V					-200.0MV	
37	6	-3.280 V	-	2 V	F			****
34	8	-3.280 V					-200.0MV	
37	8	-3.280 V	-	2 V	F			****
34	9	-3.280 V					-200.0MV	
37	9	-3.280 V	-	2 V	F			****
34	10	-3.280 V					-200.0MV	
37	10	-3.280 V	-	2 V	F			****
34	11	-3.280 V					-200.0MV	
37	11	-3.280 V	-	2 V	F			****
34	12	-3.280 V					-200.0MV	
37	12	-3.280 V	-	2 V	F			****
34	13	-3.280 V					-200.0MV	
37	13	-3.280 V	-	2 V	F			****
34	14	-2.240 V					-200.0MV	
37	14	-3.280 V	-	2 V	F			****

STATE [illegible] 01 57
TEST TIME [illegible] S/N 3

POST BURNIN

PASSES FUNCTIONAL TESTS
TIME FOUND FAIL ON 1ST SEARCH TRY
FAIL TPLH = 1.997E+09 NS
IDDL = 11.80 NS
ICCH = 7.775 MA
ICCL = 7.255 MA

PARAMETER	PIN#	READING	UNITS
IIH	1	2.399	UA
IIH	2	2.299	UA
IIH	4	1.899	UA
IIH	5	1.800	UA
IIH	9	99.97E-03	UA
IIH	10	1.800	UA
IIH	12	0	UA
IIH	13	99.97E-03	UA
IIHHI	1	3.699	UA
IIHHI	2	3.599	UA
IIHHI	4	2.999	UA
IIHHI	5	2.999	UA
IIHHI	9	599.8E-03	UA
IIHHI	10	2.599	UA
IIHHI	12	599.8E-03	UA
IIHHI	13	599.8E-03	UA
IIL	1	-919.9E-03	MA
IIL	2	-929.8E-03	MA
IIL	4	-969.8E-03	MA
IIL	5	-969.8E-03	MA
IIL	9	0	MA
IIL	10	-949.9E-03	MA
IIL	12	0	MA
IIL	13	0	MA
VOH	3	2.700	VOLTS
VOH	6	2.740	VOLTS
VOH	8	2.720	VOLTS
FAIL			
VOH	11	-540.0E-03	VOLTS
VOL	3	266.0E-03	VOLTS
VOL	6	257.0E-03	VOLTS
VOL	8	315.0E-03	VOLTS
VOL	11	277.0E-03	VOLTS
ISC	3	-30.00	MA
ISC	6	-32.10	MA
ISC	8	-31.30	MA
FAIL			
ISC	11	-1.200	MA

[illegible] #	[illegible]	[illegible]	[illegible]	[illegible]	[illegible]	[illegible]	[illegible]
34	1	[illegible] V				200. 0MV	
37	1	[illegible] V	-	2 V	F		****
34	2	-3.280 V				-200. 0MV	
37	2	-3.280 V	-	2 V	F		****
34	3	-3.280 V				-200. 0MV	
37	3	-3.280 V	-	2 V	F		****
34	4	-680. 0MV				-200. 0MV	
37	4	-680. 0MV	-	2 V			
34	5	-720. 0MV				-200. 0MV	
37	5	-720. 0MV	-	2 V			
34	6	-3.280 V				-200. 0MV	
37	6	-3.280 V	-	2 V	F		****
34	8	-640. 0MV				-200. 0MV	
37	8	-640. 0MV	-	2 V			
34	9	-3.280 V				-200. 0MV	
37	9	-3.280 V	-	2 V	F		****
34	10	-3.280 V				-200. 0MV	
37	10	-3.280 V	-	2 V	F		****
34	11	-3.280 V				-200. 0MV	
37	11	-3.280 V	-	2 V	F		****
34	12	-3.280 V				-200. 0MV	
37	12	-3.280 V	-	2 V	F		****
34	13	-3.280 V				-200. 0MV	
37	13	-3.280 V	-	2 V	F		****
34	14	-2.240 V				-200. 0MV	
37	14	-3.280 V	-	2 V	F		****

INST #	PIN	MEASURED		LT		GT	
34	1	-3.280 V				-200.0MV	
37	1	-3.280 V		2 V	F		****
34	1	-3.280 V				-200.0MV	
37	2	-3.280 V	-	2 V	F		****
34	2	-3.280 V				-200.0MV	
37	3	-3.280 V	-	2 V	F		****
34	4	-3.280 V				-200.0MV	
37	4	-3.280 V	-	2 V	F		****
34	5	-3.280 V				-200.0MV	
37	5	-3.280 V	-	2 V	F		****
34	6	-3.280 V				-200.0MV	
37	6	-3.280 V	-	2 V	F		****
34	8	-3.280 V				-200.0MV	
37	8	-3.280 V	-	2 V	F		****
34	9	-3.280 V				-200.0MV	
37	9	-3.280 V	-	2 V	F		****
34	10	-3.280 V				-200.0MV	
37	10	-3.280 V	-	2 V	F		****
34	11	-3.280 V				-200.0MV	
37	11	-3.280 V	-	2 V	F		****
34	12	-3.280 V				-200.0MV	
37	12	-3.280 V	-	2 V	F		****
34	13	-3.280 V				-200.0MV	
37	13	-3.280 V	-	2 V	F		****
34	14	-3.280 V				-200.0MV	
37	14	-3.280 V	-	2 V	F		****

[illegible] FLAT [illegible] S/N [illegible]

FOOT BURNER

INST #	PIN	MEASURED		LT		CT	
34	1	-3.320 V				-200. OMV	
37	1	-3.280 V	-	2 V	F		****
34	2	-3.280 V				-200. OMV	
37	2	-3.280 V	-	2 V	F		****
34	3	-3.280 V				-200. OMV	
37	3	-3.280 V	-	2 V	F		****
34	4	-3.280 V				-200. OMV	
37	4	-3.280 V	-	2 V	F		****
34	5	-3.280 V				-200. OMV	
37	5	-3.280 V	-	2 V	F		****
34	6	-3.280 V				-200. OMV	
37	6	-3.280 V	-	2 V	F		****
34	8	-3.280 V				-200. OMV	
37	8	-3.280 V	-	2 V	F		****
34	9	-3.280 V				-200. OMV	
37	9	-3.280 V	-	2 V	F		****
34	10	-3.280 V				-200. OMV	
37	10	-3.280 V	-	2 V	F		****
34	11	-3.280 V				-200. OMV	
37	11	-3.280 V	-	2 V	F		****
34	12	-3.280 V				-200. OMV	
37	12	-3.280 V	-	2 V	F		****
34	13	-3.280 V				-200. OMV	
37	13	-3.280 V	-	2 V	F		****
34	14	-2.240 V				-200. OMV	
37	14	-3.280 V	-	2 V	F		****

INST #	PIN	MEASURED		I3			O1	
[illegible]	[illegible]	[illegible] V					-200. OMV	
[illegible]	[illegible]	[illegible] V	-	2	V	F		****
[illegible]	[illegible]	[illegible] V					200. OMV	
[illegible]	[illegible]	[illegible] V	-	2	V	F		****
[illegible]	[illegible]	[illegible] V					-

[illegible] 8/14/79 02 08
TEST PLAN [illegible] S/N 9

BURNIN

SLOT #	PIN	MEASURED		LT		PT	
34	1	-3.280 V				-200.0MV	
37	1	-3.280 V	-	2 V	F		****
34	2	-640.0MV				-200.0MV	
37	2	-680.0MV	-	2 V			
34	3	-3.280 V				-200.0MV	
37	3	-3.280 V	-	2 V	F		****
34	4	-680.0MV				-200.0MV	
37	4	-680.0MV	-	2 V			
34	5	-680.0MV				-200.0MV	
37	5	-680.0MV	-	2 V			
34	6	-640.0MV				-200.0MV	
37	6	-640.0MV	-	2 V			
34	8	-640.0MV				-200.0MV	
37	8	-640.0MV	-	2 V			
34	9	-680.0MV				-200.0MV	
37	9	-680.0MV	-	2 V			
34	10	-3.280 V				-200.0MV	
37	10	-3.280 V	-	2 V	F		****
34	11	-640.0MV				-200.0MV	
37	11	-640.0MV	-	2 V			
34	12	-680.0MV				-200.0MV	
37	12	-680.0MV	-	2 V			
34	13	-680.0MV				-200.0MV	
37	13	-680.0MV	-	2 V			
34	14	-2.240 V				-200.0MV	
37	14	-3.280 V	-	2 V	F		****

[illegible] #	[illegible]	MEASURED		[illegible]		C1		
34	1	-680. OMV				-200. OMV		
37	1	-680. OMV	-	2 V				
34	2	-660. OMV				-200. OMV		
37	2	-680. OMV		2 V				
34	3	-640. OMV				-200. OMV		
37	3	-640. OMV	-	2 V				
34	4	-680. OMV				-200. OMV		
37	4	-680. OMV	-	2 V				
34	5	-680. OMV				-200. OMV		
37	5	-680. OMV	-	2 V				
34	6	-120. OMV				-200. OMV	F	****
37	6	-120. OMV		2 V				
34	7	-40. OMV				-200. OMV	I	****
37	8	-40. OMV	-	2 V				
34	9	-600. OMV				-200. OMV		
37	9	-600. OMV	-	2 V				
34	10	-3.280 V				-200. OMV		
37	10	-3.280 V	-	2 V	F			****
34	11	-640. OMV				-200. OMV		
37	11	-640. OMV	-	2 V				
34	12	-640. OMV				-200. OMV		
37	12	-640. OMV	-	2 V				
34	13	-2.320 V				-200. OMV		
37	13	-2.320 V	-	2 V	F			****
34	14	-2.240 V				-200. OMV		
37	14	-3.280 V	-	2 V	F			****

CROSS FUNCTIONAL FAILURE

[illegible]

FIRST BURNIN

TEST #	PIN	MEASURED		LT		GT	
34	1	-3.280 V				-200.0MV	
37	1	-3.280 V	-	2 V	F		****
34	2	-3.280 V				-200.0MV	
37	2	-3.280 V	-	2 V	F		****
34	3	-3.280 V				-200.0MV	
37	3	-3.280 V	-	2 V	F		****
34	4	-3.280 V				-200.0MV	
37	4	-3.280 V	-	2 V	F		****
34	5	-3.280 V				-200.0MV	
37	5	-3.280 V	-	2 V	F		****
34	6	-3.280 V				-200.0MV	
37	6	-3.280 V	-	2 V	F		****
34	6	-3.280 V				-200.0MV	
37	8	-3.280 V	-	2 V	F		****
34	9	-3.280 V				-200.0MV	
37	9	-3.280 V	-	2 V	F		****
34	10	-3.280 V				-200.0MV	
37	10	-3.280 V	-	2 V	F		****
34	11	-3.280 V				-200.0MV	
37	11	-3.280 V	-	2 V	F		****
34	12	-3.280 V				-200.0MV	
37	12	-3.280 V	-	2 V	F		****
34	13	-3.280 V				-200.0MV	
37	13	-3.280 V	-	2 V	F		****
34	14	-2.240 V				-200.0MV	
37	14	-3.280 V	-	2 V	F		****

PARAMETER	PINS	READING	UNITS
[illegible]	1	1.99[illegible]	[illegible]
[illegible]	2	2.0[illegible]	[illegible]
[illegible]	4	2.0[illegible]	[illegible]
[illegible]	1	1.8[illegible]	UA
[illegible]	2	2.19[illegible]	UA
[illegible]	16	0	UA
[illegible]	17	2.199	UA
[illegible]	1[illegible]	1.9[illegible]	UA
[illegible]	1	2.965	UA
[illegible]	2	3.299	UA
[illegible]	4	3.297	UA
[illegible]	5	2.899	UA
[illegible]	9	2.999	UA
[illegible]	10	399.9E-03	UA
[illegible]	12	3.299	UA
[illegible]	13	3.099	UA
[illegible]	1	-879.9E-03	MA
[illegible]	2	-879.9E-03	MA
[illegible]	4	-919.9E-03	MA
[illegible]	5	-919.9E-03	MA
[illegible]	9	-939.9E-03	MA
[illegible]	10	0	MA
[illegible]	12	-749.9E-03	MA
[illegible]	13	-739.9E-03	MA
VOH	3	2.690	VOLTS
VOH	6	2.720	VOLTS
VOH	8	2.740	VOLTS
[illegible]			
VOH	11	580.0E-03	VOLTS
VOL	3	234.0E-03	VOLTS
VOL	6	332.0E-03	VOLTS
VOL	8	236.0E-03	VOLTS
VOL	11	230.0E-03	VOLTS
[illegible]	3	-3[illegible].00	MA
[illegible]	6	-3[illegible].15	MA
[illegible]	8	-34.[illegible]	MA
[illegible]	11	-32.65	MA