ADA-086-737

COOL STICK PROPELLANT FOR 155MM M203 PROPELLING CHARGE

A. Grabowski, et al

Army Armament Research and Development Command
Dover, CO

APR 80

ES 1A-9-8357

COOL STICK PROPELLANT FOR

155MM M203 PROPELLING CHARGE

BY

AARON GRABOWSKY, STANLEY WEINER AND ANTHONY J. BEARDELL

APPLIED SCIENCES DIVISION

APRIL 1980

SUBMITTED BY: A. J. Beardell
Anthony J. Beardell
Chief, Form & Processing Section

REVIEWED BY:
DR. HARRY D. FAIR, JR.
Chief, Propulsion Technology Branch

APPROVED BY: W R Benson
WILLARD R. BENSON
Chief, Applied Sciences Division
~~Large Caliber Weapons System Division~~
ARRADCOM, Dover New Jersey 07 01

PREFACE

The Engineering Study was initiated in November 1979 by the Propulsion Technology Branch, Applied Sciences Division, Large Caliber Weapons Systems Laboratory. The work was sponsored by PM-CAWS and monitored by Mr. Fred Menke and Mr. R. DeKleine.

Acknowledgment is given to Mr. Robert Baumann and Mr. Norm Baron of the Manufacturing Technology Directorate, LCWSL and Mr. L. Laibson, PM-PBM, for contributing valuable information on propellant manufacture charge LAP.

TABLE OF CONTENTS

LIST OF TABLES

TABLE

LIST OF FIGURES

FIGURES

I. SUMMARY

A. A study was conducted to determine the benefits to be derived by replacing the M30A1 granular propellant in the M203 propelling charge by M31E1 stick-type propellant. Results of the study are

(1) The required projectile velocity and chamber pressure can be achieved using 29.3 lbs of M31E1 slotted stick propellant,

(2) The pressure wave generation is at or below 1500 psi negative differential pressure,

(3) Calculations show that flash will be eliminated,

(4) Calculations show that blast overpressure reduction of about 12% can be achieved as a result of reduced muzzle energy due to the lower flame temperature propellant. Elimination of secondary flash may result in further blast reduction,

(5) Gun tube wear life can be increased by as much as 100% based on the steel tube M199 cannon used in the M198 weapon,

(6) Recoil momentum (RM) is only slightly affected by the use of the cool M31E1 stick propellant charge. Calculations based on actual pressure-time traces show no increase in RM (relative to the M203 charge) while the standard calculation shows an increase of 1.5%. The maximum allowable recoil is approximately 10% above the calculated values.

B. The cost of M31E1 stick propellant is $8.13/lb (FY80 dollars) using the batch process. This cost is reduced to $3.55/lb by utilizing a medium risk automated process. The current price of M30A1 granular propellant is $2.83/lb (including the cost of nitroguanidine). The LAP of the stick charge is simpler and less costly (approximately by half) than the granular M203 charge. A complete stick propelling charge is estimated to cost $300.00 (near term) and $165.00 (long term) in FY80 dollars. The current cost of the M203 charge is $180.00 A price of $395.00 was recently quoted for the comparable UK Cartridge III Charge.

II. INTRODUCTION

The objective of this study is to determine the potential benefits that may be derived from the use of low-flame temperature M31E1 stick propellant for the 155mm M203 charge and to analyze the economics of stick propellant charge manufacture.

Stick propellant has been advocated for a backup propelling charge for a number of years, but has never gotten beyond the development stage for artillery because of the high costs resulting from additional handling in the batch process. Limited development studies were conducted in fiscal years 1974, 1975 and 1976, in which the objectives were essentially to duplicate the UK Cartridge III Charges. Feasibility of using M30A1 stick propellant was demonstrated (XM208), but funds were terminated when type classification of the M203 charge became imminent.

In 1978, an advanced development program was initiated which focused on the use of short stick/stacked charges. If short stick charges could be used, it was believed that manufacturing costs could be reduced substantially because only minimal plant modification would be required. It was also recognized that LAP facilities, especially with regard to a stacking mechanism, would have to be addressed.

More recent data indicate that the 3" stacked charges (9 stacks) in an M203 configuration produce pressure-time traces which are not as smooth as desired in the M185 cannon. For this reason, and for reasons of the possible difficulty of designing a stacking machine, the development of full length (27") stick charges is currently favored. However, the stacking approach is still under consideration.

There are four important findings from ballistic testing of stick propellant:

1. Reduced negative pressure wave generation (and enhanced safety) is observed with stick propellant relative to 7-perforated granular propellant.

2. Zone 8 muzzle velocity and peak pressure can be achieved with less stick propellant as compared to 7-perforated grains of the <u>same propellant</u>.

3. Ignition delay of the stick propellant charges is about <u>30% less</u> using a base pad igniter than with the M203 charge using the center core igniter.

4. The loading density of stick propelling charges is higher than for granular charges. For the 155mm systems, this permits use of lower flame temperature propellant, such as M31E1 in place of the M30A1 now used in the M203 propelling charge.

In the 8" system, M31E1 propellant was used in granular form to reduce flash. Approximately 5 lbs more of this cool burning propellant was used to meet ballistic requirements. With this substitution, flash is eliminated, the blast overpressure

is reduced by 10 to 15% and the wear life of the gun tube is doubled. These results could essentially be duplicated in the 155mm system, if the same substitution could take place. Unfortunately, the 155mm system has a relatively smaller chamber and the amount of M31E1 granular propellant required to meet ballistic performance will not fit. However, by eliminating the center core igniter and making the M31E1 in long stick of smaller diameter, it is possible to make the substitution to the lower flame temperature propellant.

III. PERFORMANCE ANALYSIS

A. XM - Stick Propelling Charge Design

The charge (Figure 1) consists of a 28-inch long bundle of slotted, single-perforated (SSP) M31E1 stick propellant. This propellant module weighs 29.3 pounds, is 28 inches long, and is assembled as a unit using tape overwraps in five places. A sheet of lead foil is wrapped around the module on the forward end and is secured by tape.

The base pad end igniter consists of a base pad bag containing 2 oz. Class I Black Powder which is tacked to the propellant bag after the charge module is inserted.

It will be noted that the propelling charge does not contain the following elements which are part of the current M203 propelling charge (Figure 2).

- Lacing Jacket
- Center Core Igniter (Snake Bag Plus Tube)
- Wear Additive Liner (Wax Titanium Dioxide)
- Flash Reducer

The absence of these elements has significant implications in potential cost reduction, improved reliability, and inspectability (elimination of center core igniter), and residue (reduced quantity of inert material).

The charge design has been fabricated and six firings conducted using an 80 mil web M31E1 propellant. The test results show that this charge will fit the M185 chamber (M109A3 weapons) and the M199 chamber (M198 weapon); also the required ballistics are achievable.

Previous tests conducted during the development of the XM208 propelling charge included extensive tests of the various ignition systems and materials suitable for stick charge ignition. These included center core black powder, with black powder base pad, black powder base pad only, CBI base pad, CBI with black powder spot and various sizes of black powder. Results of these tests showed that the least ignition delay and best ballistic uniformity were obtained with the black powder, Class I base pad ignition system. In contrast, the CBI igniters, however augmented, provided almost twice the ignition delay and appeared to increased shot to shot variability. Residue from the igniter was substantially reduced using CBI. To enhance RSI, additional testing must be conducted to provide the best trade offs.

Figure 1

STICK PROPELLANT CHARGE DESIGN

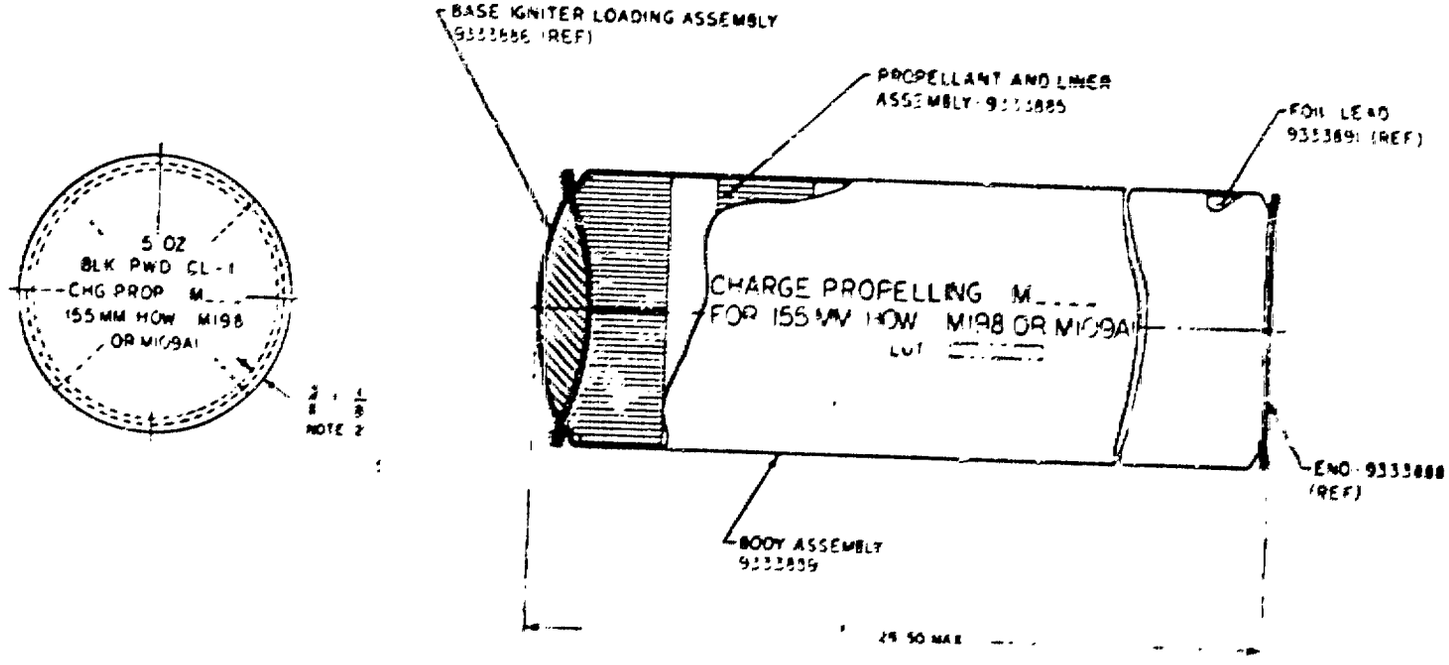

NOTES:

1 - SPEC MIL-A-2550 AND ANSI Y14.5-1973 APPLY

2 - SEAM, TYPE 301-SS, 2.8 TO 12 STITCHES PER INCH, FED-STD 751, USING THREAD, POLYESTER, TYPE I, CLASS 1, SIZE OR E SIZE M[illegible] 83032 NOTE 3

3 - ALTERNATIVE THREAD, THREAD, SILK, SEWING CLASS 1, SPEC MIL-T-[illegible]05

4 - ONE IGNITER PROTECTOR CAP 8849912-1 OR ALTERNATIVE MUST BE PLACED OVER IGNITER END OF CHARGE WHEN PACKED FOR SHIPMENT AND REMOVED BEFORE FIRING

CHARGE, PROPELLING, 155MM, M203
(RED BAG, ZONE 8S)

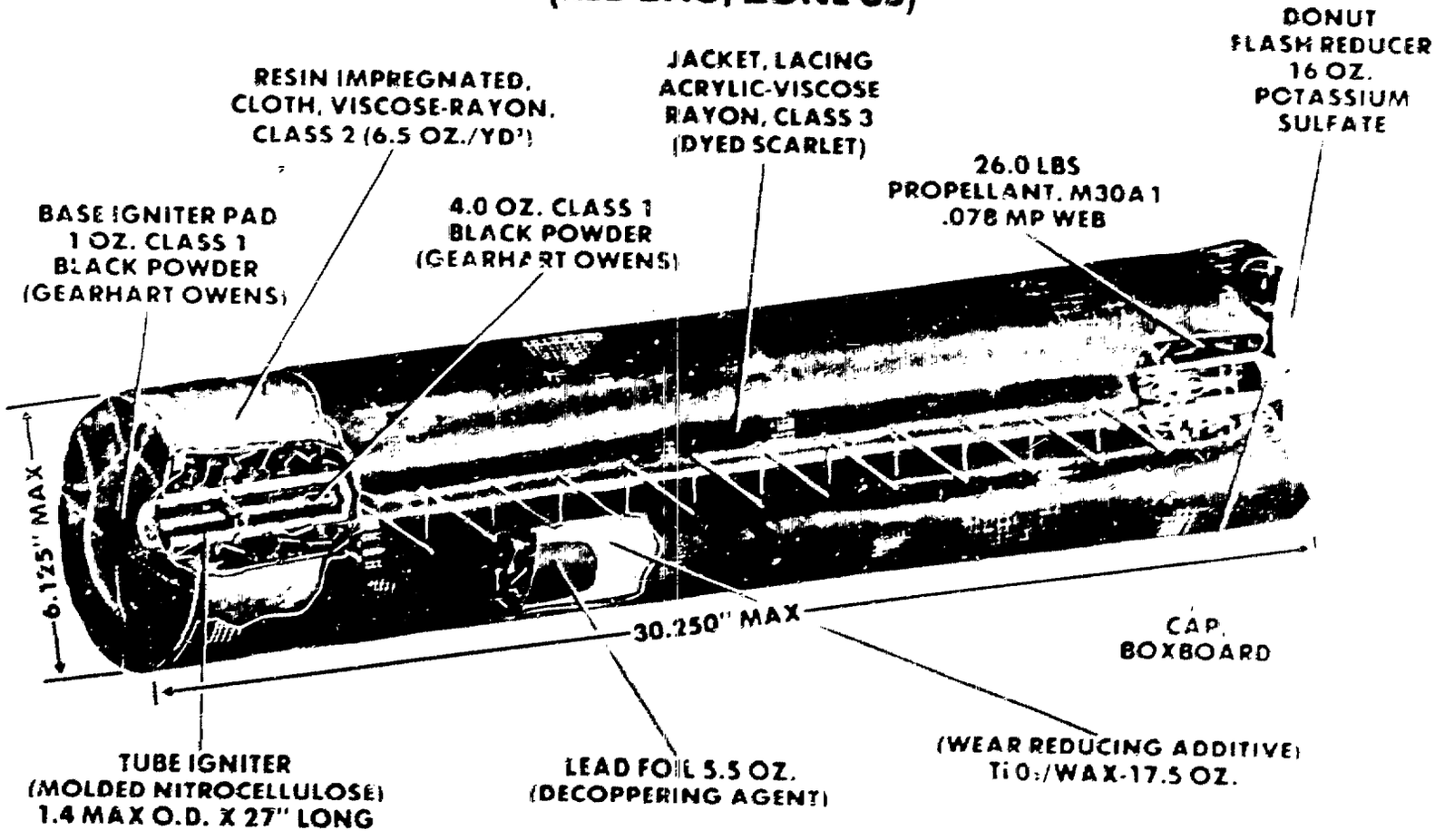

PM-CAWS-AM
JAN 1979

B. Wear and Erosion Analysis

The current 155mm M198 weapon system has a demonstrated wear life of 1750 rounds. Substantial cost savings can be achieved if the number of rounds that can be fired before condemnation are increased. Previous work has shown that gun tube wear is closely related to the flame temperature of the propellant. Although the wear life can be improved through the use of wear additives such as wax-titanium dioxide mixtures, talc, or gels containing entrained water, the erosion rate is still primarily dependent on the temperature and quantity of the gases flowing over the tube metal.

The theoretical semi-empirical method used for predicting the wear rate for this study used Smith and O'Brasky equations (see Appendix A). In addition to using demonstrated gun wear estimates, actual wear data from firing tests were used for these predictions. A summary of the demonstrated wear life and the values calculated is provided in the following table. Calculations and formulas are contained in Appendix A.

TABLE I - WEAR LIFE PREDICTION OF M31E1 STICK PROPELLING CHARGE

Charge	M203	XM208	M31E1 Stick	UK LTC III
Wt lb	26	25	29.3	26.22
Propellant	M30A1	M30A1	M31E1 type	NQ
Flame T°K	3050	3050	2600	2800
Chamber Pres. MPa	324.1	324.1	317.2	344.8
Wear/id $\frac{mm}{rd} \times 10^4$	4..379	38.714	19.593	28.679
Wear Life Rds	1750*			3000*[1]
Calculated	1750	1860	3680	2427

Calculated Life Based on M203
*Demonstrated from firing test data
Based on the foregoing tables, the M31E1 stick propellant should double the life of the gun tube.

[1]Page, T., Private Communication, RARDE United Kingdom Visit to USA, Oct 1979.

C. Flash and Blast Overpressure

1. Flash Analysis

The theoretical calculations for determining gun muzzle flash were based on methodology developed by I. W. May and S. E. Einstein in "Prediction of Gun Muzzle Flash"[2] and F. Carfagno in his Handbook on Gun Flash.[3]

Secondary flash and blast effects are dependent on the residual energy in the exhaust gases exiting the muzzle and the quantity of the relatively high percentage of combustible gaseous products of propellant combustion. Ignition of these products of combustion results from heating to the ignition point the combustible products and entrained air by the shock wave compression. Most gun propellants provide concentrations of 40% to 70% combustibles. In this concentration, critical ignition temperatures are almost constant, approximately 900°K. Salts of potassium supresses ignition via a free radical chain breaking mechanism, in effect raising the critical ignition temperature. Carfagno's predictions, based on shock tube data, show that flash will occur if physical heating of the gas, due to shock wave compressive heating, exceeds the chemical ignition limits.

For this study, the muzzle gas temperature and pressure were computed given the total propellant energy and the energy lost in acceleration of the projectile. The gases were expanded to atmospheric conditions and mixed with an arbitrary ratio of air. The temperature of the gases were computed through the shock wave fronts. The resultant temperatures were then compared to the critical temperature and the amount of flash reducer required for complete suppression of flash was calculated. The equations for these calculations are shown in Appendix B.

Based on the results from Table II, there is a distinct tendency for flash using M30E1 propellant. Although it contains 1% potassium sulfate, excessive smoke is produced and other thermomechanical effects preclude using more than 2% potassium sulfate in any propellant, therefore, the remainder must be added in a flash reducer bag. As the potassium sulphate added in the bag is only partially utilized, 16 oz is required in the M203 charge to provide flash reduction. Under dry air conditions, flash is still observed when firing the M203 propelling charge. M31E1 propellant which also contains 1% potassium sulfate shows no secondary flash when used in 8-inch 188A1 propelling charges. Table III provides a comparison of results obtained in the 8-inch howitzer.

[2] May, I. W. and Einstein, S. I., "Prediction of Gun Muzzle Flash", 1979.

[3] Carfagno, F. P., Handbook on Gun Flash, The Franklin Institute, Nov 1961.

TABLE II - FLASH ANALYSIS

Weapon 155mm

Charge	M203	XM208	UK CTG III	Low Flame Temp Propelling Charge
Propellant	M30A1	M30A1	Cordite NQ	M31E1
Geometry	MP7	Stick	Stick	Stick
Propellant Force K-ft/lbs/lb	359	359	353	329
Propellant Wt. (lbs)	26	25	27.2	29.3
Flame Temp	3,033°K	3,033°K	2,836°K	2,550°K
Shock Temp Max*	1,287	1,277	1,182	1,022

*Critical Temperature for Ignition to Produce Secondary Flash is 1125°K

TABLE III - ZONE 8 M188A1 FLASH TEST RESULTS

Propellant	Flash Reducer: Bag	Flash Reducer: In Propellant	Peak Candle Power ($x10^6$)
M30A1	4 oz BP; 12 oz K_2SO_4	1% K_2SO_4	2.3 to 4.1
M30	-	2.7% KNO_3	0.35 to 1.3
M30	-	3.6% KNO_3	1.6 to 2.1
M31	-	-	0.84
M31E1	-	1% K_2SO_4	0

2. Blast Overpressure Analysis

Recent reports by the Project Manager for Blast Overpressure show that crew members may be subjected to physical damage by repeated exposure to excessive blast overpressure. A statement of the problem is given in a recent ARRADCOM Report.[4] Standards[5] set by the Army indicate that both peak pressure and duration of the blast wave are contributing factors to this damage. Figure 3 shows the blast overpressure limits in the crew area. A trade-off study previously conducted shows that reductions in charge weight will provide sufficient blast overpressure reduction to meet the current standards, but resulting velocity reductions and loss in range are unacceptable for weapon system survivability.

In 1976 and 1977, tests were performed on the 8-inch howitzer in which M188A1 charges containing M31E1 propellant were evaluated for muzzle flash and blast overpressure and compared to ballistically similar charges containing M30A1 propellant. The data presented in Table IV demonstrate that, for ballistically similar charges, a low-flame temperature propellant M31E1 containing 1% flash suppressant (K_2SO_4), a 15% reduction in blast overpressure occurs and secondary muzzle flash is suppressed. Analysis of the blast overpressure waves with M30A1 propellant shows two peaks at approximately 4 and 5 msec, respectively. The second overpressure peak, in all cases, is most affected by reduction in secondary flash. On the average, the first peak is reduced by 7% and the second by approximately 15%. Appendix C shows the gage positions at which data were taken. By analogy a similar reduction can be expected through the same replacement in the 155mm weapons. Further, the use of the higher efficiency stick form of M31E1 propellant may further reduce the blast overpressure since less stick propellant is needed compared to the granular to achieve ballistics.

The computation of blast overpressure for 155mm weapons was based on a model described in a report by T. D. Taylor and T. C. Lin[6]. The equation for this model is shown in Appendix D. Since the blast overpressure fields around the gun resulting from muzzle blast are quite complex and components of the blast wave can arrive at a particular point at different times from various directions, muzzle brakes and ground reflections were not included in the calculated analysis. The latter complications make the problem far too complex for this analysis and would result in inaccurate prediction of blast overpressure. Therefore, this analysis applies to a 155mm weapon (without muzzle brake) mounted on a towed howitzer bed.

[4]Radsky, P. B. Capt., "A Report on Muzzle Blast Overpressure", ARRADCOM Report No. ARSEM 79.6.

[5]MIL-STD-1474B (M1), "Noise Limits for Army Materiel", 18 June 1979.

[6]Firing Report No. P-82634, "Assessment of M31E1 Propellant for 188E1 Charge for 8" Howitzer", 21 Dec 1977.

Figure 3

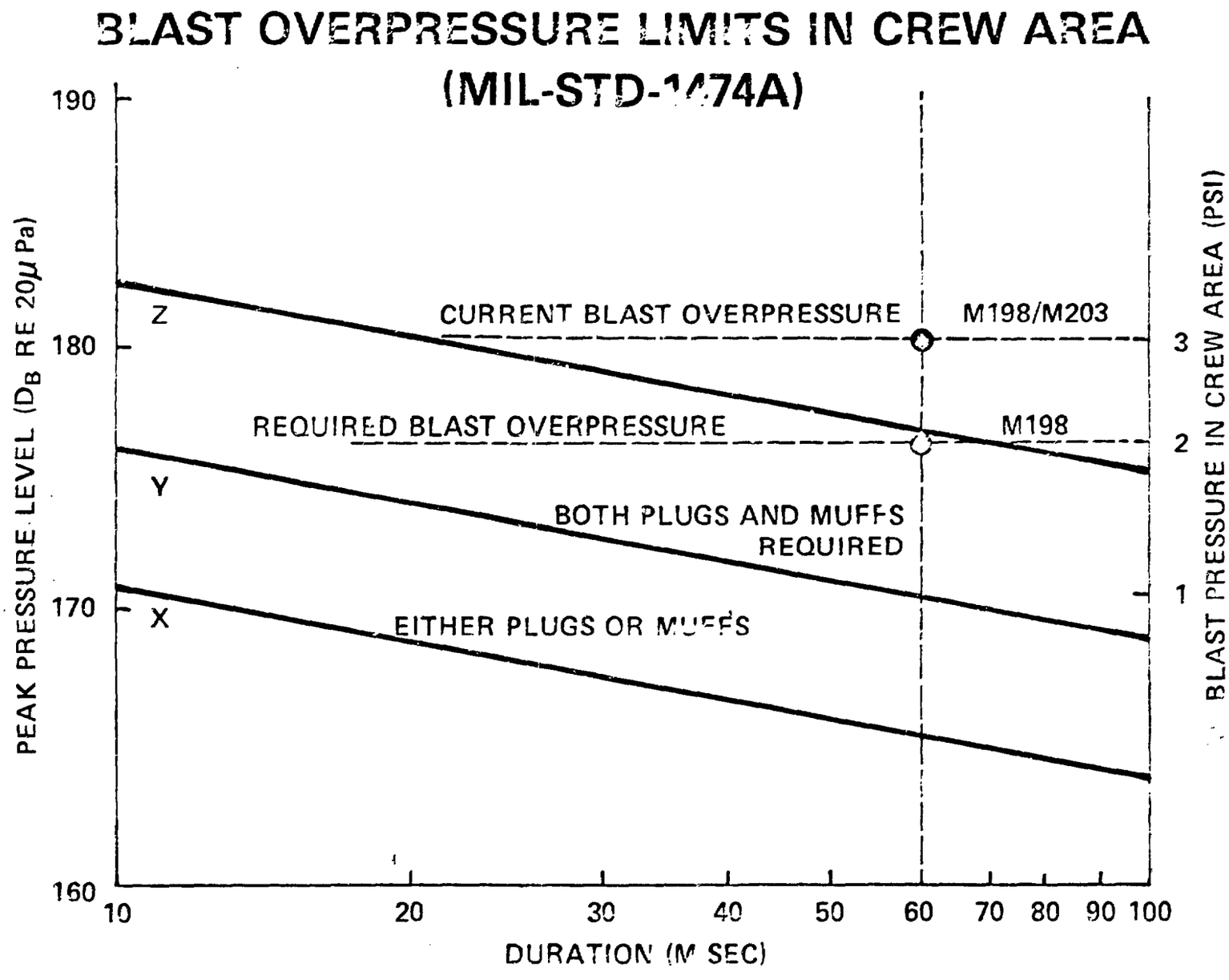
BLAST OVERPRESSURE LIMITS IN CREW AREA
(MIL-STD-1474A)
PEAK PRESSURE LEVEL (D_B RE 20μ Pa)
190
180
170
160
Z
Y
X
CURRENT BLAST OVERPRESSURE
M198/M203
REQUIRED BLAST OVERPRESSURE
M198
BOTH PLUGS AND MUFFS REQUIRED
EITHER PLUGS OR MUFFS
10
20
30
40
50
60
70
80
90
100
DURATION (M SEC)
BLAST PRESSURE IN CREW AREA (PSI)
3
2
1

In the past, good correlation of actual blast measurements with calculated values were achieved for a number of weapons. This correlation, however, was found to break down under certain atmospheric conditions, e.g. low cloud ceiling, high air density and high humidity. Corrections for variability in atmospheric conditions have not been developed. There also may be variability of data from different test sites because of height above sea level, differences in terrain features (including structures) as well as the prevailing climatic conditions.

Based on the results shown in Table V, the M31E1 type stick propellant can provide a reduction in blast overpressure at the crew position of approximately 12%. A further blast reduction may be realized via elimination of secondary flash. Extensive flash is observed particularly in the M109A2/A3 howitzers using the M185 cannon and less so in the M198 howitzer using the M199 cannon. The muzzle brake on the M185 cannon is considered to be of greater efficiency than the M199. The higher efficiency muzzle brake directs the blast to the vicinity of the crew positions. Thus, muzzle brake design must be considered in any attempt to reduce blast overpressure to acceptable levels.

Tests conducted in the M198 weapon with and without muzzle brake show that the crew area blast overpressure with a muzzle brake is approximately 2.5 times the overpressure without a muzzle brake. Using the calculated value of 0.66 psi at the crew position (Table V), the blast overpressure then calculates to 1.65 psi which is about 1 psi lower than the measured value. Thus, the calculated results can only be viewed on a relative basis.

TABLE IV

SUMMARY OF MUZZLE BLAST OVERPRESSURE DATA ASSESSMENT OF M31E1 PROPELLANT FOR M188E2 CHARGE FOR 8-INCH HOWITZER

Type Rd	No. of Rds	Zone	Temp °F	Muzzle Brake	Mean Maximum Muzzle Blast Overpressure, Side-on, psi						Mean "B" Duration Time, ms						Mean Maximum Sound Pressure Level, db					
					Pos 1	Pos 2	Pos 3	Pos 4	Pos 5	Pos 6	Pos 1	Pos 2	Pos 3	Pos 4	Pos 5	Pos 6	Pos 1	Pos 2	Pos 3	Pos 4	Pos 5	Pos 6
[a]REF	5	[illegible]	70	OFF	0.96	0.96	0.89	0.74	0.48	0.51	65	68	56	60	74	85	170.4	170.4	169.7	168.1	164.4	164.9
REF	5	8	70	ON	1.49	1.57	1.38	1.12	0.87	0.87	62	58	56	64	53	63	174.2	174.7	173.6	171.7	169.5	169.5
T1	7	8	70	ON	1.47	1.42	1.25	0.91	0.88	0.83	46	46	42	49	33	59	174.1	173.8	172.7	169.9	169.6	169.1
REF	5	9	70	ON	1.73	1.79	1.57	1.12	0.84	0.91	54	44	47	58	39	66	175.5	175.8	174.7	171.7	169.2	169.9
T1	7	9	70	ON	1.51	1.50	1.38	1.07	0.81	0.89	51	45	39	50	37	60	174.4	174.3	173.6	171.3	168.9	169.7
REF	5	8	145	ON	1.53	1.61	1.58	1.10	0.84	0.89	55	61	53	58	33	57	174.5	174.9	174.7	171.6	169.2	169.7
T1	7	8	145	ON	1.40	1.34	1.30	0.99	0.80	0.83	54	55	39	50	36	60	173.7	173.3	173.0	170.7	168.8	169.1
REF	5	9	145	ON	1.70	1.72	1.51	1.08	0.85	0.91	58	63	48	60	44	42	175.4	175.5	174.4	171.4	169.3	169.9
T1	7	9	145	ON	1.38	1.60	1.40	1.04	0.82	0.88	59	52	40	54	36	60	173.6	174.9	173.7	171.1	169.0	169.6
REF	5	8	-50	ON	1.35	1.53	1.38	1.05	0.84	0.87	74	55	53	62	50	55	173.4	174.5	173.6	171.2	169.2	169.5
T1	7	8	-50	ON	1.28	1.35	1.28	0.94	0.78	0.79	74	51	39	47	33	57	172.9	172.4	172.9	170.2	168.6	168.7
REF	5	9	-50	ON	1.41	1.50	1.43	1.05	0.83	0.90	58	53	43	55	41	56	173.8	174.3	173.9	171.2	169.1	169.8
T1	7	9	-50	ON	1.21	1.46	1.40	1.08	0.80	0.90	63	58	40	54	41	60	172.4	174.1	173.7	171.4	168.8	169.8

Materiel

Howitzer: 8-in., M2A1, No. 5856
Tube: Howitzer, 8-in., M201, No. 29 (With Muzzle Brake)
Carriage: Howitzer, 8-in., M110A1E1
Recoil Mount: 8-in., M158, No. 186

Ammunition

Projectile: M106
Propellant Lot:
Reference Rds (REF): RAD 69716
Test Rds (T1): RAD-PE-472-33

Fuze: M78
Primer: M82

[a]Data were averaged for each reference group even though charge weights varied ± 0.1 lb from 41.8 lb within each group.

TABLE V - COMPARISON OF BLAST OVERPRESSURE

Charge	M203	XM208	M31E1 Stick
Propellant	M30A1	M30A1	M31E1
Form	7 MP	Stick	Stick
Overpressure PSI	ΔP	ΔP	ΔP
Breech	3.924	3.029	2.92
Gage 9	15.56	9.20	8.87
Gage 7	3.60	3.39	3.26
Gage 5	1.51	1.41	1.36
Gage 3 (crew position)	.73	.69	.66
Gage 4 (crew position)	.52	.48	.47
Decibels	DB	DB	DB
Gage 9	194	190	189
Gage 7	181	181	181
Gage 5	174	174	173
Gage 3 (crew)	168	168	167
Gage 4 (crew)	165	164	164
Blast Duration Miliseconds	t	t	t
Gage 9	135	92	91
Gage 7	93	91	90
Gage 5	84	82	80
Gage 3 (crew)	70	68	67
Gage 4 (crew)	74	73	72

D. Recoil Momentum

A charge assessment firing test was conducted at ARRADCOM, Dover site. The propellant evaluated was Radford Lot RAD-PE-472-80, the first lot of M31E1 stick propellant manufactured by RAAP. All rounds were fired in a 155mm howitzer M185 tube without a muzzle break. The projectiles used were 95 lb inert-filled M101 projectiles.

The Weapons Division of LCWSL has stated that the maximum allowed raw impulse (tubes without muzzle breaks) is 13,500 lb-secs.

The pressure-time traces generated during the firing test were integrated to yield the momentum (expressed as K lbs-secs). In addition to the two M31E1 stick propellant charges, three charges containing M30A1 granular propellant were fired as controls.

The momentum results are in Table VI.

TABLE VI
RECOIL MOMENTUM COMPARISON

Round No.	Charge	Prop Wt. lbs	Momentum (K#-secs)
645	M31E1 Stick	29	12.30
646	M31E1 Stick	29	12.05
647	M30 Granular	26	12.05
648	M30 Granular	26	12.45
649	M30 Granular	26	12.18

None of these test rounds exceeded the maximum allowed raw impulse of 13,500 lb-sec for both the M109A3 and M198 systems.

IV. STICK PROPELLING CHARGE MANUFACTURE

A. Stick Propellant Manufacture

Stick propellant manufacturing capacity currently is 30,000 to 900,000 lbs a month at Radford AAP depending on product mix and facility commitments. The material is made in a batch process, tray-board dried, saw cut to length (the limiting operation) and costs about $10/lb. The manufacturing requirements for the M203 charge between 1982 and 1986 at initiation of this Engineering Study (November 1979) was 120,000 charges per year. Since then, the value has increased to 150,000 charges/year and further, to 184,000 charges/year, depending on the year. Using the 120,000 charge/year figure, the requirement for the M203 charge using the M30A1 propellant or the M31 propellant is as follows:

M30A1 - 260,000 lbs/month
M31E1 - 300,000 lbs/month

Efforts were therefore initiated to (1) determine and evaluate the various approaches that might be used to manufacture stick propellant, (2) determine the feasibility and potential facilitization cost of each approach and (3) estimate propellant cost for the various techniques.

Radford AAP was requested to provide information on the various approaches which are briefly discussed below:

Current Batch Process - Radford C line capacity for granular, multi-base propellant is 2.1 million pounds/month with an additional single-base capacity of 1.5 million pounds/month. Of the 2.1 million lbs, 300,000 lbs are committed to the manufacture of special items, such as; Tow, Dragon, 155mm RAP, etc. Currently, Radford can with some tooling costs produce 150,000 lb/month of long stick propellant. For approximately $300K, 300,000 lb/month could be produced at a cost of $8.86/lb FY81 dollars.

Reactivation of CAMBL Prototype Line - Radford Army Ammo Plant recommended that no development program be pursued on the prototype line since the cost to reactivate would exceed $1 million; its reactivation will also pose safety problems with the remainder of the plant. The re-establishment of the CAMBL pilot line goes beyond the immediate concerns of the study.

SINA Viscosa - Radford AAP specifically objected to the installation of this process as extensive facility modification would be required. Further, high material line loss providing high costs were inherent to the operations and new OSHA requirements for reduced operator exposure to the propellant would not be alleviated. The cost associated is not applicable. However, the process is commercially proven.

ATS* Process - This process incorporates automated equipment to cut and classify propellant sticks, eliminating the need for blending propellant and downstream handling, thus reducing operator exposure. A rough order of magnitude cost by RAAP shows the stick propellant costs would be equal to granular; facilities costs would be approximately $3 million and require two to three years to develop and approximately four years to bring into full-scale operation. Propellant cost on the basis of full-scale operation of the ATS* Process is estimated to be $3.87/lb.

The facilitization cost and propellant cost estimates are presented in Table VII.

B. Stick Propelling Charge Load Assembly and Pack (LAP)

The M203 charge LAP consists of the following:

1. Additive Liner + Lead
2. Bag Manufacture with Lacing Jacket
3. Flash Reducer LAP
4. Igniter LAP
5. Finish Line LAP
6. Pallet LAP

A description of each of these steps follows:

1. Additive Liner - This liner consists of a cloth coated on one side with titanium dioxide in a wax base and with lead foil. The purpose of the titanium dioxide is to reduce gun tube wear. The lead foil is used to de-copper the gun tube.

2. Bag and Lacing Jacket Manufacture - These operations require the following steps:

a. Assembly of kidney bag
b. Assembly of tube body and strap
c. Assembly of body and liner assembly (9278973)
d. Assembly of base pad and igniter core bag (9278985)
e. Assembly of flash reducer bag
f. Manufacture of lacing jacket
g. Assembly of body and end (9278967)

3. Flash Reducer - One pound of potassium sulfate is placed in a small cloth bag.

*Automated Take-Away & Sorting

TABLE VII

STICK PROPELLANT MANUFACTURING METHODS

COST COMPARISON

	FACILITY COSTS (millions)		TIME TO COMPLETE		PROPELLANT COST $/LB*	
	Existing Facility	New Facility	Pilot	Full Scale	Pilot	Full Scale
Current Process	$ 0	$0.2	0	2 yrs	$9.56	$8.86
SINA Viscosa (automated)	$2.5	$3.5	2 yrs	6 yrs	$10.07	$9.16
Automated Take-Away & Sorting (ATS)	$1.9	$4.2	2 yrs	6 yrs	$4.16	$3.87

*Includes cost of nitroguanidine; FY81 dollars.

4. Igniter LAP - A snake bag is loaded with four ounces of black powder. The filled snake is placed inside a nitrocellulose-based igniter tube and tied to the tube. The tube is fastened to the base igniter pad which also contains black powder. (9281940)

5. Finish Line LAP - The following steps are required for final charge assembly:

a. The body and end assembly bag is loaded with propellant using an inert core rod vibrated and aligned to assure a tight load.

b. The igniter assembly is inserted and the igniter bag tacked to the propellant bag.

c. The flash reducer donut bag is placed on the muzzle end and the tie straps tied down.

d. The lacing jacket is pulled over the charge, centered and pulled tight. (9281897)

e. The charge is wrapped in paper, placed in the charge can and sealed in place.

6. Pallet LAP - The charge cans are assembled horizontally to a wooden pallet and strapped for shipment.

The LAP of the stick propelling charge is expected to require a machine to bundle the stick. The operation may be conducted at either the stick manufacturing plant or at the LAP facility. The former is preferred in the initial analysis, because of potential reduced packaging costs. Drawings are contained in Appendix E.

LAP items and operations which are expected to be eliminated, relative to the M203 charge are:

a. Wear Reducing Liner
b. Lacing Jacket
c. Center Core Igniter
d. Flash Reducer

Each of these steps also eliminates the attendant finishing line operation and/or assembly. Table VIII is an example of the number of steps required to assemble the M203 charge. Steps 2, 5, 7, 9, 10, 11 and 12 are no longer required and steps 4 and 6 are reduced. The man-hour requirements are reduced by over 60%. Cost of the LAP operations for the M203 charge and estimated LAP costs for stick propelling charges are shown in Table IX.

TABLE VIII

LABOR STANDARDS
155MM M203A1 - SCHEDULE 465/DAY
LOAD LINE 6B

		MAN-HR 100 CHS	PCS/HR	PCS/ 6.83 HR	MAN-MING	% UTIL
1.	Transfer Powder & Inerts to Line	.7149	139.9	955	1	44
2.	Dump Powder into Hopper	.3078	324.9	2218	1	19
3.	Weigh Powder & Sew Booths 3 & 7	1.4784	67.7	462	2	45
4.	Load Powder into Bag Booths 3 & 7	2.6746	37.4	255	2	82
5.	Assemble Igniter to Charge Booths 4 & 8	3.4883	28.7	196	3	71
6.	Sew Igniter to Charge Booths 4 & 8	1.3603	73.5	502	2	42
7.	Distribute Igniters & Inerts to Booths & Repair Charges	.2502	399.7	2729	1	-
8.	Material Handling in the Aisle	1.0788	92.7	633	1	66
9.	Supply Charge to the Lacers & Clip Threads	1.1982	83.4	570	1	74
10.	Tie Flash Reducer	2.4550	40.7	278	2	76
11.	Lace Charge	7.1870	13.9	95	5	88
12.	Attach Cap & Wrap Charge & Secure Tape	2.1382	46.7	319	2	66
13.	Supply Cans & Lids, Distribute Packing Material	1.3584	73.6	502	1	84
14.	Stuff Charge in Cans	1.0114	98.9	675	1	62
15.	Pack Cans & Assemble Lids	1.2811	78.1	533	1	79
16.	Air Test and Assemble Wire and Plugs to Can	0.7659	130.6	891	1	47
17.	Stencil the Cans	0.4670	214.1	1462	1	29
18.	Repair Rejected Cans	-	-	-	-	-
19.	Load Finished Cans in Trailer	0.2594	385.5	2632	1	16
20.	CHIEF OPERATOR	-	-	-	2	-
	TOTAL				31	

TABLE IX

M203 AND STICK PROPELLING CHARGE LAP COSTS

	M203A1	Stick Propelling Charge
Liner (Lead + Wear Reducer)	4.75	2.50
Bag Mfg. Lacing Jacket	23.00	12.00
Flash Reducer	2.00	0
Igniter LAP	12.25	2.10
Finish Line LAP	45.60	26.00
Pallet LAP	9.00	9.00
Maintenence	0.40	0.40
	97.00	52.00

The costs shown in Table IX also include the cost of black powder, nitrocellulose for the center core and quality control.

Facilitization costs, mainly to provide an automated assembly of the stick bundles is as follows:

175,000 charges/year - $1.22 million
236,000 charges/year - $1.72 million

The above effort requires a two-year MMT effort of approximately $1 million.

C. Stick Propelling Charge Cost Estimates

The current cost of the M203 charge as reported by ARRCOM is $230 and includes the cost of all transportation, that is, transportation from the propellant manufacturing plant to the LAP facility, transportation within the LAP facility and finally, transportation of the product to its point of destination. The value quoted by ARRCOM for this service is $50. The costs provided by ARRCOM for M203 charge costs are as follows:

	W/Transportation	W/O Transportation
LAP	121.52	95.12
Propellant	69.50	54.39
Nitroguanidine	24.50	19.17
Black Powder	0.75	0.59
Nitrocellulose	0.76	0.60
Engineering	6.59	5.13
QC	0.71	0.56
Proof & Acceptance	5.67	4.44
	230.00	180.00

On the basis of the above, the current cost of the propellant ($54.39+ $19.17 per 26 lb charge was determined to be $2.83/lb. The nitroguanidine is delivered GFM to Radford and costs $1.55 a lb ($19.17/12.4lbs per charge). The granular M30A1 propellant cost is $2.83/lb or $73.56/charge.

The stick propellant costs, shown in Table VII, are in FY81 dollars. The costs were normalized to FY80 dollars using a 9% inflation rate. The M31A1 stick propellant cost is then estimated to be $8.13/lb (batch) or $3.55 (automated take-away). These costs include the cost of the nitroguanidine. The propellant cost for each charge then becomes $239 for the batch process ($8.13 x 29.3 lb)and $104 for the automated ($3.55 x 29.3).

The cost estimate for the stick propellant is shown in Table X. These estimates are based on the use of a cloth bag to package the stick propellant. Table XI summarizes the costs for a charge which uses a combustible case, the UK Cartridge III and the data shown in Table X. Also, there is a projected reduction in the cost of the M30A1 granular propellant manufacture on the CAMBL plant ($0.50/lb reduction) and an additional M203 propelling charge reduction related to the automated LAP facility (~ $20.00 reduction).

Automation of stick propelling charge LAP is estimated to reduce projected LAP costs by $21. It is generally maintained that the facilitization of CAMBL, automated LAP and automated take-away and sorting of stick propellant are 7 to 10 years in the future.

The original design of the stick propelling charge contains a cloth bag without the corsetting jacket. In the course of this study, it was deemed worthwhile to consider the use of a combustible case. This approach offers advantages for a near term charge and growth potential relating to automated load of artillery charges for ESPAWS.

The potential near term advantages are (1) ability to incorporate a wear additive into the case to further increase wear life, (2) a potential low peak pressure temperature sensitivity of the charge and (3) ease of handling and rigidity. The reduced temperature sensitivity has been reported through a "Report of Visit" by BRL personnel to Europe in June 1979. Further details on the data have been requested. The observations on reduced temperature sensitivity have recently been confirmed, however, in discussions with Mr. T. Page of the U. K.

The cost impact on the use of a spiral wrap combustible case is an approximate $13 increase. This is based on the use of a spiral wrap combustible case in which a manufacturing cost of $25 is projected, as opposed to the bag, which is approximately $12. The projected manufacturing cost of the cartridge case via the felting process is approximately $45.

TABLE X

STICK PROPELLING CHARGE COST ESTIMATE*

	M203	COOL STICK PROPELLANT (CLOTH BAG) A	COOL STICK PROPELLANT (CLOTH BAG) B
1. Liner (Lead & Wear Reducer)	$4.75	2.50 (lead only)	2.50
2. Bag Mfg	23.00	12.00	12.00
3. Flash Reducer LAP	2.00	0	0
4. Igniter LAP (Snake & NC Tube)	12.25	2.10	2.10
5. Finish Line LAP	45.60	26.00	26.00
6. Pallet LAP	9.00	9.00	9.00
7. Maintenance	.40	.40	.40
	97.00	52.00	52.00
8. Propellant Mfg & NQ	74.00	239.00	104.00
9. Proof & Acceptance	4.00	4.00	4.00
10. Eng	5.00	5.00	5.00
Total	180.00	300.00	165.00

*FY80 Dollars; 8500 chgs/mo
A Propellant - Manual Handling
B Propellant - Automated Take-Away

TABLE XI

SUMMARY OF STICK PROPELLANT CHARGE COST ESTIMATE*

CHARGE	PROP MFG PROCESS	PROP COST	LAP & MISC	TOTAL COST
M203	Batch	$74	$106	$180**
M203	CAMBL	62***	106	168
Stick - Bag	Batch	239	61	300
Stick - Bag	Automated	104	61	165
Stick - Comb Case	Batch	239	74	313
Stick - Comb Case	Automated	104	74	178
Cartridge III	-	-	-	395

*Basis - 8500 chg/mo; FY80 dollars
**Transportation cost is $50 for a total of $230
***Propellant is about $.50/lb cheaper by CAMBL

APPENDIX A - WEAR LIFE CALCULATION

$$TW = 1,096 \left(Tf - \frac{TC}{d} - 600\right) (cp)^{\frac{1}{2}}$$

TW = Tube Wear Rate

Tf = Flame Temperature ^{o}K

TC = Correction for additive; $300^{o}K$ for bag charge

C = Charge Mass (Kg) Kilograms

P = Peak Pressure (MPA) mega pascals

d = Bore Diameter Inches (in)

$$W = .4216 \, (Exp) \, (.0049TN) \, \frac{mm}{rd} \times 10^{4}$$

APPENDIX B

1. Compute muzzle temperature, T_m, and pressure, P_m, using a standard interior ballistic code. Gas velocity, U_m, at projectile exit is given by the projectile muzzle velocity.

2. Compute stagnation temperature, T_s, at muzzle exit:

$$T_s = T_m + U_m^2/(2C_{pm}) \qquad C_{pm} = \text{specific heat of muzzle gases.}$$

3. Compute temperature, T_2, after isentropic expansion to atmospheric pressure, P_a:

$$T_2 = T_m(P_a/P_m)^{(\gamma-1)/\gamma} \qquad \gamma = \text{specific heat ratio}$$

4. Compute Mach Number, M_2 of flow entering shock:

$$M_2^2 = [2T_s/T_2(\gamma-1)] - 2/(\gamma-1)$$

5. Compute after shock conditions, M_6, T_6, P_6:

$$M_6^2 = (M_2^2 + \frac{2}{\gamma-1})/(\frac{2\gamma}{\gamma-1} M_2^2 - 1)$$

$$T_6 = T_2 (1 + \frac{\gamma-1}{2} M_2^2)/(1 + \frac{\gamma-1}{2} M_6^2)$$

$$P_6 = P_a[1 + \frac{2}{\gamma+1} (M_2^2 - 1)]$$

6. Expand isentropically to atmospheric pressure and compute temperature, T_6:

$$T_7 = T_6 (P_a/P_6)^{(\gamma-1)/\gamma}$$

7. Compute the flow velocity, U_7, after expansion:

$$U_7 = [(T_s - T_7)2C_{pm}]^{1/2}$$

8. Compute specific heat, C_{p8}, and velocity, U_8, of mixture as function of mass mixture ratio, r:

$$C_{p8} = rC_{p1} + (1-r)C_{pm} \qquad C_{p1} = \text{specific heat of air}$$

$$U_8 = rU_1 + (1-r)U_7 \qquad U_1 = \text{velocity of air} = 0$$

9. Compute stagnation temperature, T_{s8} of mixture:

$$T_{s8} = r\,(C_{p1}/C_{p8})\,T_{s1} + (1-r)\,(C_{pm}/C_{p8})T_s$$

T_{s1} = stagnation temperature of air = T_a

10. Definition of T_{s8} is:

$$T_{s8} = T_8 + (U_8^2/2C_{p8})$$

11. Compute temperature, T_8, for Case C analysis:

$$T_8 = r(C_{p1}/C_{p8})\,T_a + (1-r)(C_{pm}/C_{p8})\,T_s - (1-r)^2U_7^2/2C_{p8}$$

These equations give results virtually identical to the corrected, but more cumbersome Carfagno equations.

APPENDIX C

GAGE POSITIONS FOR BLAST PRESSURE READINGS
M203 - 155MM SYSTEM

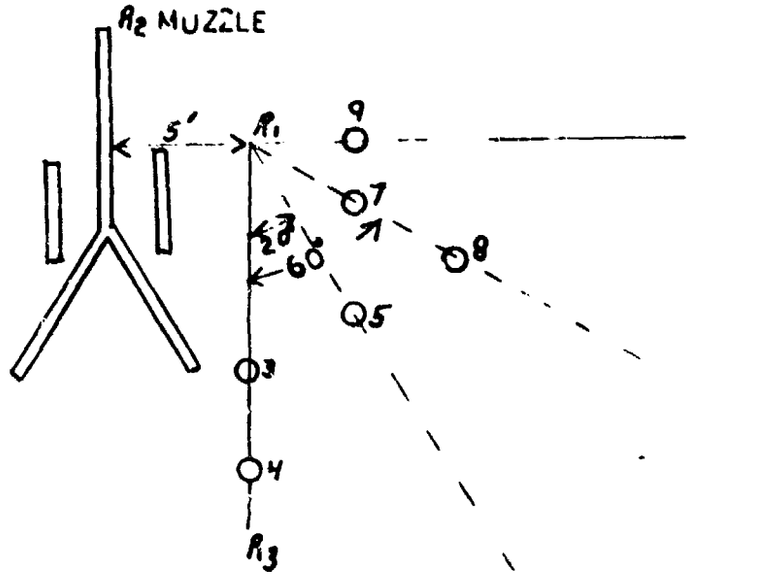

Gage Position	Gage Number	Gage Calibration (volts/psi)	Angle from R1/R3 Vector	Distance from Muzzle (R2) @ Zero Elevation
9	29	.26	90°	13.5 ft
7	26	.22	60°	20.0 ft
5	22	.265	30°	26.50 ft
8	31	.24	60°	34.0 ft
3	28	.21	0°	29.6 ft
4	27	.22	0°	44.1 ft

Center of pencil gage crystals were 5 ft above ground.

GAGE POSITION - M110 HOWITZER

Muzzle-blast overpressures were recorded using pencil-type gages with piezoelectric crystals (MOD LC33 pressure transducers). See figure 1 for blast-gage locations.

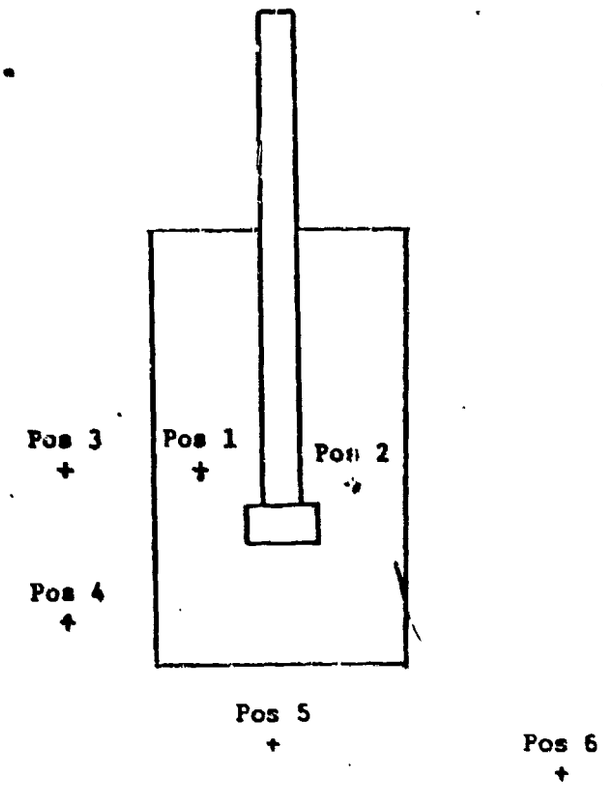

Position 1: Center of No. 1 gunner's seat, 30 inches above horizontal surface of seat (23 feet, 7-1/2 inches from muzzle).

Position 2: Center of No. 2 gunner's seat, 30 inches above horizontal surface of seat (24 feet, 2-1/2 inches from muzzle).

Position 3. On center line of trunnions, 5 feet out from left side of vehicle, 6 feet above ground (26 feet, 4-1/2 inches from muzzle).

Position 4: On center line of rear roadwheel, 5 feet out from left side of vehicle, 6 feet above ground (30 feet, 4 inches from muzzle).

Position 5: Twenty feet to the rear of the weapon on its center line, 6 feet, 6 inches above ground (50 feet from muzzle).

Position 6: Twenty feet to the rear of the weapon on its center line and 30 feet right, 6 feet, 6 inches above ground (57 feet, 6 inches from muzzle).

Figure 1. Blast gage locations.

APPENDIX D

GENERAL BLAST FIELD SOLUTION FOR ALL CLOSED BREECH WEAPONS

1. Overpressure (P) = $\dfrac{K\,E_T}{C^2\,L}$ (psi)

where C = bore diameter (in)

L = inbore shot travel (in)

K = dimensionless isobar constant

E_T = thermal energy (in.lbs.)

$= \left[E_A - \dfrac{E_p}{.85}\right] \times 12$ (ft. lbs.)

where E_A = total energy available in propellant

$= 1.4 \times 10^3\,(H_C)\,(W_C)$ (ft. lbs.)

H_C = heat of explosion of propellant (cal/gm)

W_C = weight of charge (lbs.)

E_p = kinetic energy of projectile

$= \dfrac{M_p\,(V_o)^2}{2}$

M_p = mass of projectile (ft.lbs.)

V_o = muzzle velocity (ft.sec.)

2. Blast Duration (T)

$$T = \left[\frac{10(E_T)^{1/3}\, C^{5/2}}{L^{5/2}}\right]\left[\frac{(a + b\theta)\frac{X}{C}}{(d + \frac{X}{C})}\right] + (e - f\theta^2) \qquad (\text{msec})$$

where a, b, d, e, f are dimensionless coefficients given in Table below as functions of tube elevation angle

C = given in equation (1) (ft.)

L = given in equation (1) (ft.)

E_T = given in equation (1) (ft. lbs.)

X = standoff distance of crew from muzzle (ft.)

θ = angular offset of crew from line of fire (radius)

Coefficients for Duration Equation

(radians)	a	b	d	e	f
0	0.1192	-0.02346	28.0	0.03224	-0.001215
0.293	0.0971	-0.04871	42.0	0.04200	0.0
1.197	0.05603	-0.000228	42.0	0.05617	+0.004501

APPENDIX D CONT.

GENERAL BLAST FIELD SOLUTION
FOR ALL CALIBERS

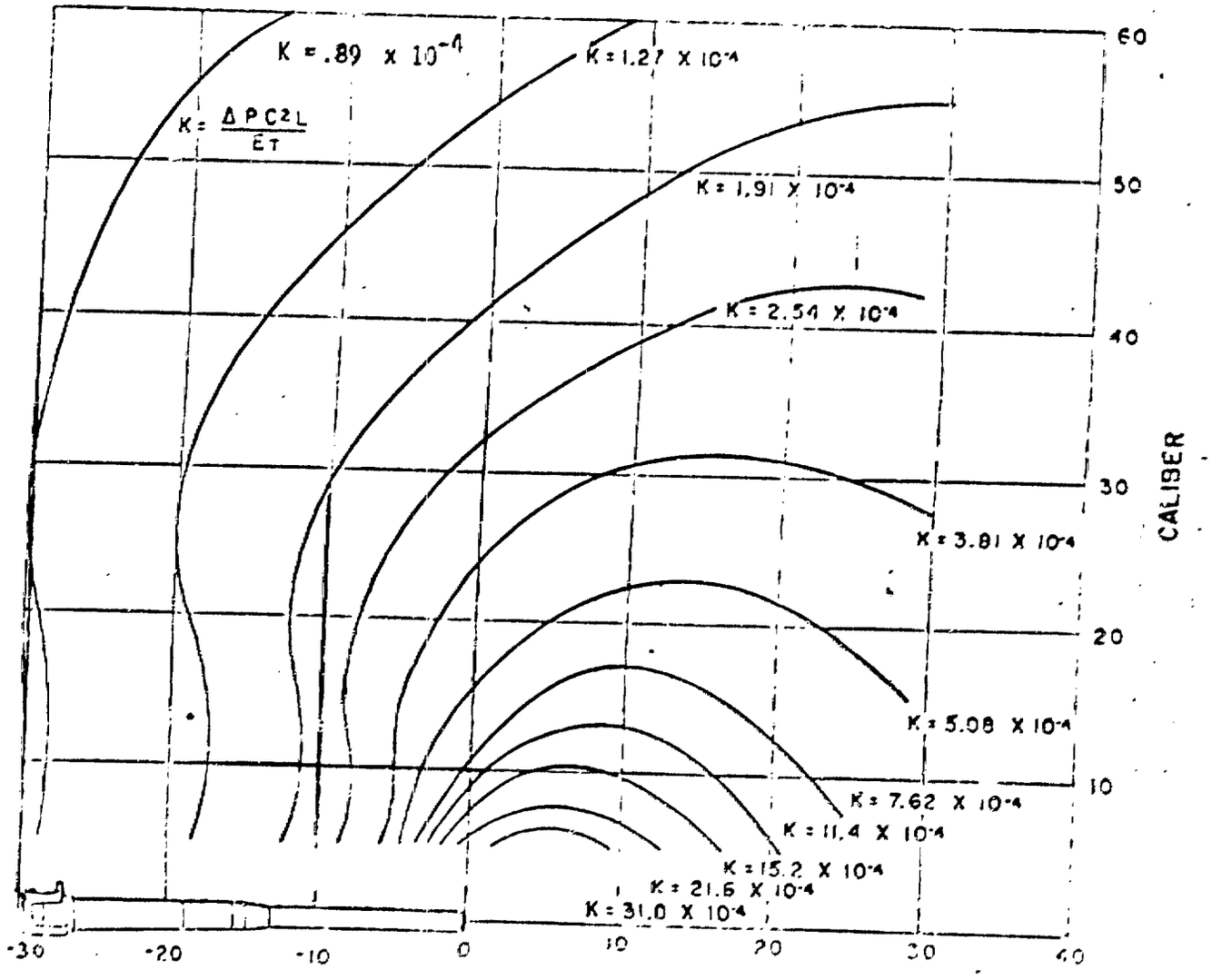

APPENDIX E

M201 CHARGE ASSEMBLY DRAWINGS

1. Body and Line Assembly
2. Base Igniter Assembly
3. Body and End Assembly
4. Complete Igniter Assembly
5. Charge Prop for 155MM Howitzer M198

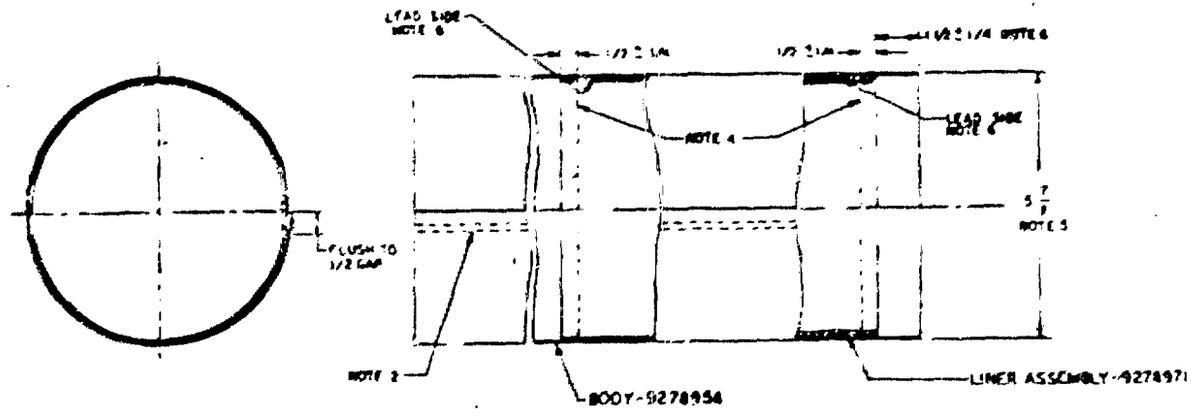

NOTES:

1-SPEC MIL-A-2550 AND ANSI Y14.5-1973 APPLY.

2-SEAM, TYPE 301-SS-2, 8 TO 12 STITCHES PER INCH, FED-STD-751 USING THREAD, POLYESTER, TYPE I, CLASS 1, SIZE 5B, SPEC V-T-285. NOTE 3.

3-ALTERNATIVE THREAD: THREAD, SILK, SEWING, CLASS 1, SPEC MIL-T-13505.

4-SEAM, TYPE 301-SS-1, 8 TO 12 STITCHES PER INCH, FED-STD-751, USING THREAD, POLYESTER, TYPE I, CLASS 1, SIZE 5B, SPEC V-T-285. NOTE 3.

5-DIMENSIONS OF BODY ARE CALCULATED TO GIVE AN ASSEMBLED CHARGE OF DESIRED DIMENSION AND MAY BE RE-ESTABLISHED, IF NECESSARY, TO PROVIDE A FIRM ASSEMBLED CHARGE.

6-ASSEMBLE AND LOCATE LINER ASSY SHOWN WITH LEAD SIDE FACING INWARD. THE FOLDED EDGE OF THE LEAD FOIL SHALL BE SUNWARD THE POWDER OPENING, SEE DWG NO. 9278947.

7-UNTOLERANCED DIMENSIONS NEED NOT BE GAGED.

FOR ASSOCIATED LISTS SEE 9278973

PART NO. 9278973

BODY AND LINER ASSEMBLY

F 18235 9278973

SHEET 2

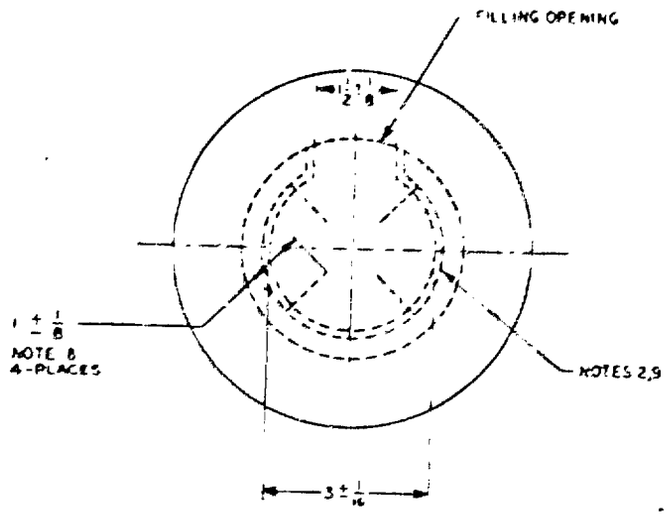

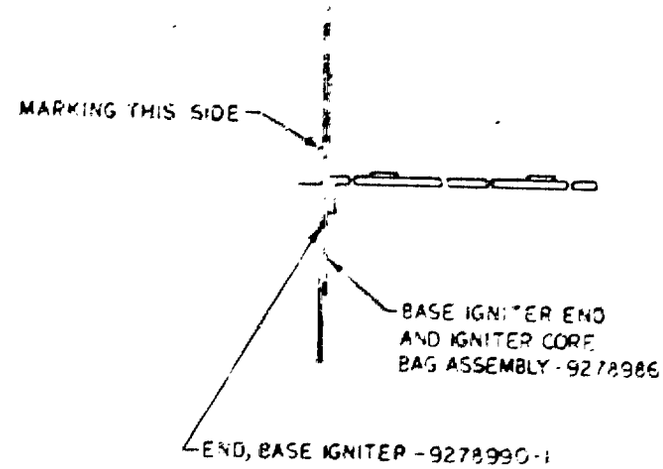

NOTES:

1 - SPEC MIL - A - 2550 AND ANSI Y14.5-1973 APPLY.
2 - SEAM, TYPE 301-SS1-2, 8 TO 12 STITCHES PER INCH FED-STD-751. NOTE 3.
3 - USE THREAD, POLYESTER, TYPE 1, CLASS 1, SIZE 5A SPEC V-T-285. NOTE 4.
4 - ALTERNATIVE THREAD: THREAD, SILK, SEWING CLASS 1, SPEC MIL - T - 13505.
6 - MARKING ON BASE IGNITER END NEED NOT BE ORIENTED WITH FILLING OPENING BUT MUST BE VISIBLE.
7 - UNTOLERANCED DIMENSIONS NEED NOT BE GAGED.
8 - LOCATE APPROX AS SHOWN AND APPLY SINGLE STITCH, TYPE 301 - SS1-1, 8 TO 12 STITCHES PER INCH, FED-STD-751, NOTE 3. A MINIMUM BACK-TACK OF 3 STITCHES IS REQUIRED.
9 - CAUTION SHOULD BE USED TO CENTER THE BASE IGNITER END TO THE BASE IGNITER END AND IGNITER CORE BAG ASSEMBLY IN ORDER TO ASSURE MEETING REQUIREMENT OF LATER ASSEMBLIES.

9278985

PART NO 9278985

27 NOV 1972

BASE IGNITER ASSEMBLY

H. HASSMANN

D. KATZ

D 19203 9278985

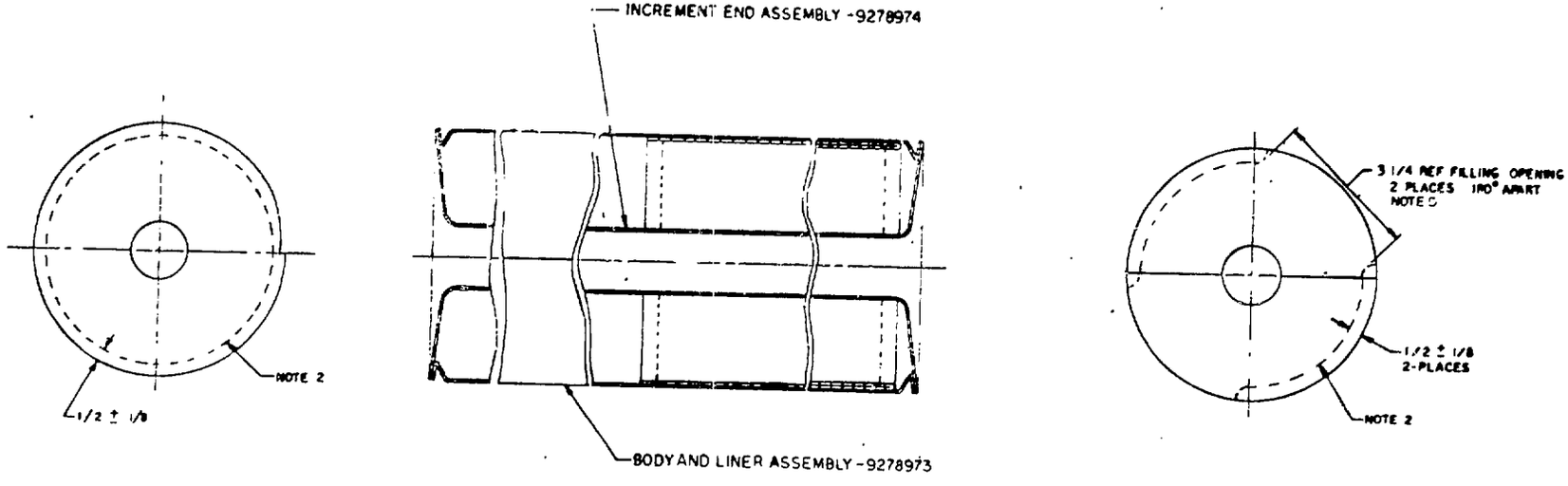

NOTES.-

1-SPEC MIL-A-2550 AND ANSI Y14.5-1973 APPLY.
2-SEAM, TYPE 301-SSa-1 OR 401-SSa-1, 8 TO 12 STITCHES PER INCH; FED-STD 751, NOTE 4.
3-USE THREAD, POLYESTER, TYPE I, CLASS 1, SIZE 50, SPEC V-T-285.
4-ALTERNATIVE THREAD: THREAD, SILK, SEWING, CLASS I, SPEC MIL-T-13505.
5-ALTERNATE METHOD: ONE FILLING OPENING.

FOR ASSOCIATED LISTS 9278967

27 NOV 1972	PART NO. 9278967		
H.HASSMANN	BODY AND END ASSEMBLY		
D.KATZ	F	19203	9278967

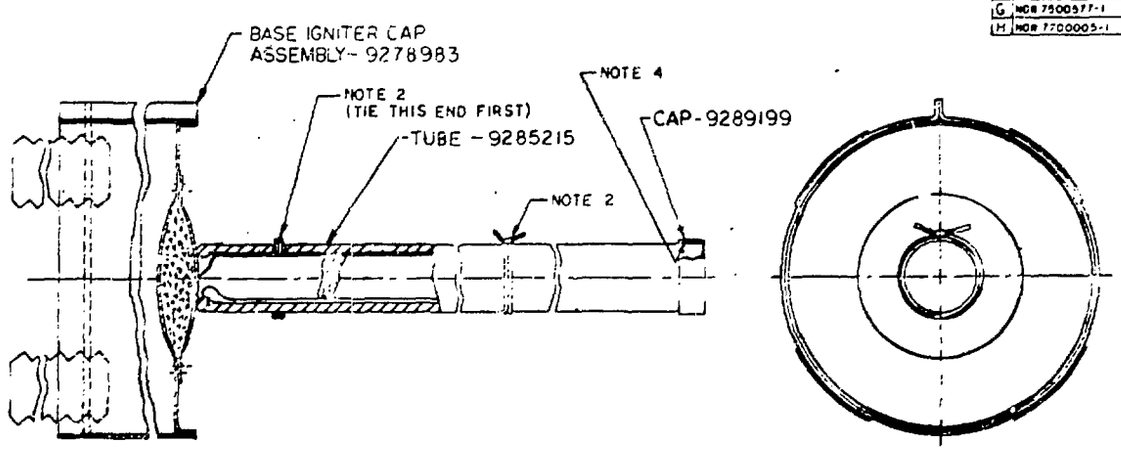

NOTES: —

1 - SPEC MIL-A-2550 AND ANSI Y14.5-1973 APPLY.
2 - THREAD TAPE LOOP DESIGN OF IGNITER CORE LOADING ASSEMBLY INSIDE TUBE THROUGH HOLE. CUT LOOPS, WRAP EACH END 360° AROUND TUBE IN OPPOSITE DIRECTIONS AND TIE SECURELY WITH A SQUARE KNOT AS SHOWN. TIE BASE END OF IGNITER CORE FIRST. TRIM EXCESSIVE TAPE. NOTE 5.
3 - IGNITER CORE SHOULD NOT BE TWISTED WHEN INSERTED OR TIED TO TUBE.
4 - APPLY ADHESIVE, TYPE II, SPEC MMM - A - 105 TO THE MATING SURFACE AS INDICATED, 360°.
5 - ALTERNATE:- FOLLOW SAME PROCEDURE AS NOTE 2 EXCEPT SUBSTITUTE SURGEONS KNOT FOR SQUARE KNOT.

FOR ASSOCIATED LISTS SEE 9281940

PART NO. 9281940

JUL 1973

H HASSMANN
D KATZ

COMPLETE IGNITER ASSEMBLY

D 11203 9281940

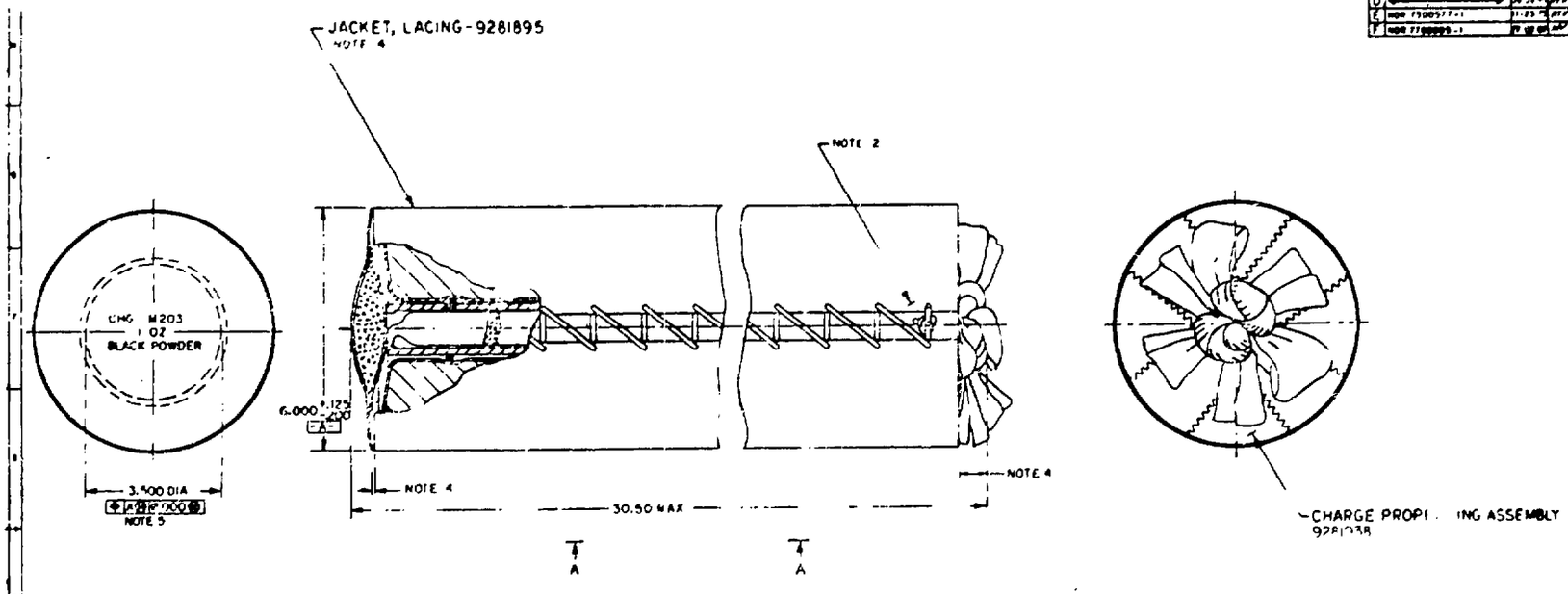

CHARGE PROPELLING M203
FOR 155MM HOW M198
LOT

VIEW A-A
(MARKING INFORMATION, REF)

NOTES:

1- SPEC MIL-A-2550, ANSI Y14.5-1973 AND MIL-C-48243 APPLY.
2- SLIP LACING JACKET OVER CHARGE PROPELLING ASSEMBLY AND LACE TIGHTLY USING SILK LACING CORD, TYPE B, CLASS C, SPEC MIL-C-453. LACING TO BE TIED AT THE ENDS.
3- ONE IGNITER PROTECTOR CAP 8R49912-1 OR ALTERNATIVE MUST BE PLACED OVER IGNITER END OF CHARGE WHEN PACKED FOR SHIPMENT AND REMOVED BEFORE FIRING
4- JACKET MUST BE FLUSH (0.00 INCH) BELOW FUSE IN BASE END OF ASSEMBLED CHARGE
5- DIMENSION APPLIES TO INNER SEAM OF BASE PADDING (NOT INCLUDING CLOSING SEAM)
6- TRIM ALL THREADS AT BASE END OF CHARGE TO 0.25 INCH MAX AND REMOVE ALL LOOSE THREADS ADHERING TO OUTER SURFACE OF THE COMPLETE CHARGE ASSEMBLY.

FOR ASSOCIATED LISTS SEE 9281897

PART NO. 9281897

11 JULY 1973

H. HASSMANN
D. KATZ

CHARGE PROP M203
FOR
155MM HOW. M198

F 19203 9281897

DISTRIBUTION LIST

No. of Copies	Organization
1	Commander US Army Training and Doctrine Command ATTN: ATCD-FA Ft. Monroe, VA 22202
1	Commander US Army Logistics Evaluation Agency ATTN: DALO-LEI New Cumberland, PA
13	Commander US Army Materiel Development and Readiness Command ATTN: DRCDE DRCCP DRCBSI DRCGC DRCMT DRCPA DRCPA DRCPM DRCQA DRCMM DRCRE DRCFS DRCSG 5001 Eisenhouwer Ave. Alexandria, VA 23333
3	Headquarters Dept. of the Army DASAS-CSK Office of Deputy Chief of Staff for Research Development and Acquisition ATTN: DAMA-CSM DAMA-ARZ DAMA-WSW Washington, DC 20301

No. of Copies	Organization
1	Commander US Army Armament Research & Development Command ATTN: DRDAR-TSS Dover, NJ 07801
23	Commander US Army Armament Research & Development Command ATTN: DRDAR-LC, Dr. Frasier DRDAR-LCA-G, Dr. Fair DRDAR-LCA-G, Mr. Bernstein DRDAR-LCA-G, Mr. Durzel DRDAR-LCA-G, Mr. Ellington DRDAR-LCA-G, Mr. Westley DRDAR-LCA-G, Mr. Russell DRDAR- SEC, Mr. Sitlick DRDAR-TDA, Mr.Blick DRDAR-LCU, Mr. Moss DRDAR-LCE, Dr. Walker DRDAR-LCE, Mr. Stearn DRDAR-LCU-CP, Mr. Corn DRDAR-LCS-D, Mr. Smolin DRDAR-LCS-D, Mr. Houle DRDAR-LCA-G, Dr. Lannon DRDAR-LCU-CA, Mr. Costa

(cont.)

No. of Copies	Organization
	DRDAR-OAR, S. Kong DRDAR-LCW-S, G. Gaughan DRDAR-SC, B. Brodman L. Stiefel DRDAR-LCM, R. Baumann N. Baron Dover, NJ 07801
6	Project Manager US Army Armament Research & Development Command Cannon Artillery Weapons Systems ATTN: DRCPM-CAWS-AM/WP, Maj. White DRCPM-CAWS-AM, F. Menke R. DeKleine DRCPM-CAWS-SI DRCPM-CAWS-CM DRCPM-CAWS-PM Dover, NJ 07801
1	Director US Army Equipment Authoritation Review Activity ATTN: DRXEA Alexandria, VA 22333
1	Director Weapons System Concepts Team Bldg E3516, EA ATTN: DRDAR-ACW Aberdeen, MD 21005

No. of Copies	Organization
4	Commander US Army Test & Evaluation Command ATTN: DRSTE-CM-F DRSTE-AR DRSTE-AD DRSTE-TO-F Aberdeen Proving Ground Aberdeen, MD 21005
2	Commander US Army Armament Research & Development Command ATTN: DRDAR-MAC-C DRDAR-TSE-O Dover, NJ 07801
1	Commander US Army Materiel Development & Readiness Command ATTN: DRCDMD-ST 5001 Eisenhower Ave. Alexandria, VA 22333
3	Project Manager Smoke Obscurance US Army Materiel Systems Analysis Agency ATTN: DRXSY-D DRXSY-MP, H. Cohen DRXSY-GS Aberdeen Proving Ground Aberdeen, MD 21005
1	Deputy Director US Army Armament Research & Development Command Selected Ammo ATTN: DRCPM-SA Dover, NJ 07801

No. of Copies	Organization
2	Commander US Army Field Artillery School ATTN: B. Meyer J. Porter Fort Sill, OK 73503
3	Commander US Naval Surface Weapons Center ATTN C. Smith L. Russell T. W. Smith Dahlgren, VA 22448
2	Commander US Naval Ordnance Station ATTN: C. Christianson S. Mitchell Indianhead, MD 20640
1	President US Army Armor & Engineering Board Fort Knox, KY 40121
1	President US Army Maintenance Management Center Lexington, KY 40507
1	Director US Army Materials & Mechanics Research Center ATTN: J. W. Johnson Watertown, MA 02172
1	Project Manager ATTN: J. Turkeltaub Rock Island, IL 61299
1	Project Manager - XM1 Tank Tank Main Armament Development Division Dover, NJ 07801

No. of Copies	Organization
1	Project Manager - XM1 Tank US Army Tank Automotive Development Command 28150 Dequindre Road Warren, MI 48090
1	Director US Army Training & Doctrine Command Systems Analysis Activity ATTN: ATAA-SL, Tech Lib White Sands Missile Range, NM 88002
1	Commander US Army Air Defense Center ATTN: ATSA-SM-L Fort Bliss, TX 79916
2	Commander Radford Army Ammo Plant ATTN: SARRA-EN SARRA, Tech Lib Radford, VA
2	Project Manager US Army Armament Research & Development Command Munitions Production Base Modernization & Expansion ATTN: DRCPM-PBM-LT, D. Koppenaal DRCPM-PBM-P, L. Laibson Dover, NJ 07801
2	Project Manager US Army Armament Research & Development Command Nuclear Munitions ATTN: DRCPM-NUC, E. Wakefield DRCPM-NUC-A, M. Morgan Dover, NJ 07801

No. of Copies	Organization
3	Chief Benet Weapon Laboratory US Army Research & Development Command ATTN: DRDAR-LCB, I. Ahmad DRDAR-LCB, J. Santini DRDAR-LCB-TL
1	Commander US Army Watervliet Arsenal ATTN: SARWV-RD, R. Thierry Watervliet, NY 12189
2	Commander US Army Armament Materiel Readiness Command ATTN: DRSAR-LEP-L, Tech Lib DRCPM-TM Rock Island, IL 61299
2	Director Institute for Defense Analyses ATTN: H. Wolfhard R.T. Oliver 400 Army-Navy Dr. Arlington, VA 22202
2	Commander Naval Weapons Center ATTN: R. Derr C. Thelen China Lake, CA 93555
2	Commander Defense Technical Information Center ATTN: DDC-DDA Alexandria, VA 22314
1	Director of Defense Research & Engineering ATTN: R. Thorkildsen The Pentagon Arlington, VA 20301

No. of Copies	Organization
6	Director US Army Ballistic Research Laboratories ATTN: DRDAR-BLP, L. Watermeier T. Minor J. R. Ward I. W. May J. M. Frankle A. Horst Aberdeen Proving Ground, MD 21005
6	Commander US Army Armament Materiel Readiness Command ATTN: DRSAR-ASM, R. Hagen DRSAR-IRC, G. Cowan DRSAR-MAD-C, H. Klapper DRSAR-TM-CCB, L. Ambrosini DRSAR-LE DRSAR-IL Rock Island, IL 61299
1	Defense Advanced Research Projects Agency Director, Materials Div 1400 Wilson Blvd. Arlington, VA 22209
4	Director US Army Research Office ATTN: P. Parrish E. Saibel R. Husk D. Squire P.O. Box 12211 Research Triangle Park, NC 27709

No. of Copies	Organization
2	Calspan Corp. ATTN: G. Sturbutzel F. Vassallo P.O. Box 235 Buffalo, NY 14221
2	Director Chemical Propulsion Information Agency Johns Hopkins Univ. ATTN: T. Christian Johns Hopkins Rd. Laurel, MD 20810
2	Hercules, Inc. Alleghany Ballistic Lab ATTN: R. Miller Tech Lib Cumberland, MD 21501
1	Hercules, Inc. Bacchus Works ATTN: B. Isom Magna, UT 84044
1	Director Graduate Center of Applied Science New York University ATTN: M. Summerfield 26-36 Stuyvesant New York, NY 10003
1	Pennsylvania State Univ. Applied Research Lab ATTN: G.M. Faeth P.O. Box 30 State College, PA 16801
1	Pennsylvania State Univ. Dept. of Mechanical Engineering ATTN: K. Kuo University Park, PA 16802