USARTL-TR-78-49

(12) LEVEL II

# MINI-RPV LAUNCH SYSTEM CONCEPTUAL STUDY

H. E. Dickard
Teledyne Ryan Aeronautical
2701 Harbor Drive
San Diego, CA 92138

December 1978

Final Report

DDC
RECEIVED
JAN 8 1979
B

Approved for public release;
distribution unlimited.

Prepared for
APPLIED TECHNOLOGY LABORATORY
U. S. ARMY RESEARCH AND TECHNOLOGY LABORATORIES (AVRADCOM)
Fort Eustis, Va. 23604

78 12 26 093

## APPLIED TECHNOLOGY LABORATORY POSITION STATEMENT

This report is a review of the existing and possible concepts which could be used by the Army for launching 120- to 200-pound RPV's from forward combat areas. The scope of this effort was to document the concepts and perform assessments of these systems for the specific mission conditions that are anticipated. The detailed final system assessment and selection has not been accomplished because of the changing scenarios that exist.

The reader is advised that this effort and its results are to provide an initial foundation which can serve as the basis and framework, when the mission parameters are known, to reach a final system selection.

Thomas B. Allardice of the Aeronautical Systems Division served as project engineer for this effort.

UNCLASSIFIED

SECURITY CLASSIFICATION OF THIS PAGE (*When Data Entered*)

## REPORT DOCUMENTATION PAGE

READ INSTRUCTIONS BEFORE COMPLETING FORM

| | | |
|---|---|---|
| 1. REPORT NUMBER 19<br>18 USARTL-TR-78-49 | 2. GOVT ACCESSION NO. | 3. RECIPIENT'S CATALOG NUMBER |
| 4. TITLE (*and Subtitle*)<br>6 MINI-RPV LAUNCH SYSTEM CONCEPTUAL STUDY, | | 5. TYPE OF REPORT<br>9 Final Report. |
| | | 6. PERFORMING ORG. REPORT NUMBER<br>14 TRA-29318-07 |
| 7. AUTHOR(s)<br>10 H.E./Dickard | | 8. CONTRACT OR GRANT NUMBER(s)<br>15 DAAJ02-77-C-0048 |
| 9. PERFORMING ORGANIZATION NAME AND ADDRESS<br>Teledyne Ryan Aeronautical✓<br>2701 Harbor Drive<br>San Diego, California 92138 | | 10. PROGRAM ELEMENT, PROJECT, TASK AREA & WORK UNIT NUMBERS<br>16 62209A IL262209AH76<br>17 00 209 EK |
| 11. CONTROLLING OFFICE NAME AND ADDRESS<br>Applied Technology Laboratory, U.S. Army<br>Research and Technology Laboratories (AVRADCOM)<br>Fort Eustis, Virginia 23604 | | 12. REPORT DATE<br>11 Dec[redacted]978 |
| | | 13. NUMBER OF PAGES<br>221 |
| 14. MONITORING AGENCY NAME & ADDRESS (*if different from Controlling Office*)<br>12 216p. | | 15. SECURITY CLASS. (*of this report*)<br>Unclassified |
| | | 15a. DECLASSIFICATION/DOWNGRADING SCHEDULE |

16. DISTRIBUTION STATEMENT (*of this Report*)

Approved for public release, distribution unlimited.

DISTRIBUTION STATEMENT A
Approved for public release;
Distribution Unlimited

17. DISTRIBUTION STATEMENT (*of the abstract entered in Block 20, if different from Report*)

DDC
RECEIVED
JAN 8 1979
B

18. SUPPLEMENTARY NOTES

19. KEY WORDS (*Continue on reverse side if necessary and identify by block number*)

| | | | |
|---|---|---|---|
| Mini-RPV | Hydraulic | Falling Weight | Linear Induction |
| Launch Concept | Rocket Boost | Rotary Carrousel | Rail Launcher |
| Neg'ator Spring | Flywheel | Tethered Aerial | Zero Length Launcher |
| Pneumatic | Inclined Ramp | Secondary Aerodynamic Devices | Energy Absorber |

20. ABSTRACT (*Continue on reverse side if necessary and identify by block number*)

This study investigates and evaluates Mini-RPV launch concepts potentially suitable for the U. S. Army tactical environment. The air vehicle on which the launch study is based is the U. S. Army/Lockheed Aquila XMQM-105 Mini-RPV at a nominal gross weight of 120 pounds. A hypothetical RPV counterpart at 200 pounds gross weight is also used to bound the upper weight limit for Mini-RPVs.

389 357

DD FORM 1 JAN 73 1473 EDITION OF 1 NOV 65 IS OBSOLETE

0 12 26

UNCLASSIFIED

SECURITY CLASSIFICATION OF THIS PAGE (*When Data Entered*)

1

20. Abstract (Continued)

The study is divided into three phases. Phase I, Initial Search and Selection, includes: (1) a data survey conducted for the purpose of obtaining as much information as possible on concepts, designs and data pertinent to Mini-RPV launch; (2) categorization of launch concepts; (3) descriptions of launch concepts, cursory analysis, and concluding remarks; and (4) a largely subjective evaluation of the concepts to establish concept credibility and to provide a basis for the selection of five concepts for further study.

Phase II, Final Concept Selection, treats the five concepts surviving Phase I in terms of physical concepts for field deployment. Some additional analysis is performed as required. A quantitative evaluation is conducted in which parameters are established, values are weighed, ranked, and scored, and two concepts are selected for further study.

Phase III, Preferred System Selection, provides additional technical data and cost information on the two concepts carried over from Phase II. The concepts are: (1) pneumatic launchers and (2) rocket-boosted launchers. These two concepts are comprised of two subconcepts each. Further breakdown in selecting a single concept is beyond the scope of this conceptual study.

As a result of the Mini-RPV concept investigations and evaluations, conducted in this study, ~~it~~ is recommended that in-depth studies be initiated to provide information for higher level evaluations based on detailed technical definitions, including systems implications and tactical employment problems related to both the pneumatic and the rocket-boosted systems.

Additionally, information on the effects of parachute recovery on RPV and launcher design parameters is provided.

# PREFACE

This report was prepared by Teledyne Ryan Aeronautical, under the cognizance of the Applied Technology Laboratory, U.S. Army Research and Technology Laboratories (AVRADCOM), Fort Eustis, Virginia, Contract DAAJ02-77-C-0048. Mr. Thomas B. Allardice was the COTR and point of contact for this effort.

The author acknowledges the technical assistance furnished by Messrs. T.C. Nietz, A.J. Navoy, G.C. Noonan, Jr., R.W. Armstrong, L.C. Pico, Jr., T. McDowell; the help of many other members of the Teledyne Ryan staff; and the response to Teledyne Ryan inquiries by industry and Government agencies.

## CONTENTS

## CONTENTS (Continued)

SECTION PAGE

## CONTENTS (Continued)

CONTENTS (Continued)

## LIST OF ILLUSTRATIONS

## LIST OF ILLUSTRATIONS (Continued)

## LIST OF ILLUSTRATIONS (Continued)

## LIST OF ILLUSTRATIONS (Continued)

## LIST OF TABLES

# 1.0 INTRODUCTION

The Mini-RPV is emerging as a military air vehicle candidate having a potential use by U.S. Army battlefield units for the collection and dissemination of intelligence information. The associated support elements for the RPV system should be developed concurrently with the air vehicle.

An important support element, the subject of this study, is a field deployable launch system that can be integrated into the existing U. S. Army logistical structure and can be operated in a tactical environment. The launch phase of the RPV mission is subject to many constraints, but in general the equipment employed must be simple, easy to handle in the field, and reliable. It must also interface with the ground forces by being usable at alternate locations and should not provide unusual or unique radar, optical, acoustical, or electronic signatures that could be identified with the specific operational mission.

The overall objective of this study is to identify, investigate, and evaluate Mini-RPV launch concept candidates with a view to selecting a preferred candidate judged to meet the general requirements stated above.

The study is structured in three phases. Phase I, Initial Search and Selection, begins with a data survey to identify all possible launch concept candidates. The data survey included: (1) the standard Defense Documentation Center literature search, and research of Teledyne Ryan Aeronautical in-house sources to establish a bibliography; and (2) letters of solicitation mailed to U.S. and foreign industry, and U.S. Government agencies. The 21 concepts identified are categorized in Table 2.

The launch concepts are described, a cursory analysis is performed where feasible, and the concept is then reviewed. An evaluation of the concept is then conducted, resulting in five concepts considered to be sufficiently credible to be carried forward for further study. The evaluation is based partly on quantitative data and some subjective engineering judgement. The concepts set aside are listed, along with the reasons for rejection, in Section 8.0.

In Phase II, Final Concept Selection, the studies generally emphasize the physical aspects of field deployment of the five credible candidate launch concepts carried over from Phase I. However, in some instances, additional analysis is conducted where it was determined that some effort was needed to implement the intent of Phase II.

The Phase II evaluation procedure begins with the development of a detailed list of physical, operational, tactical, cost, and risk parameters describing the launch concepts. Values for the parameters are based on a quantitative number, if available, or the item is weighted on a scale of one through ten, with ten being best. The results of the Phase II evaluations indicate that the pneumatic concepts score highest, the next highest is the rocket-boosted concepts,and the neg'ator spring motor is third. These concepts are then carried forward to Phase III for further study.

In Phase III, Preferred System Selection, the two remaining basic concepts are investigated, principally from the systems point of view, including preliminary cost and development schedule information. A parametric evaluation based on more detailed quantitative data than used in the Phase II evaluations is conducted. The results of the Phase III evaluations still rate the pneumatic and rocket-boosted concepts as being more advantageous than the other candidate concepts.

In consideration of the fact that the entire study is conducted at the conceptual level only, and that the quantification of the evaluation prodedure still depends to a large extent on the judgement of the evaluators, it is concluded that the final ranking of the pneumatic and rocket-boosted concepts should be viewed as a very close rather than as a clear-cut mandate for the selection of the pneumatic concepts.

Therefore, it is recommended that detailed system studies and operations analyses be conducted to refine existing parameters and to identify and accurately analyze additional parameters required for conducting evaluations beyond the conceptual level.

The pneumatic launch system would be defined to provide detailed design definitions for the pneumatic launch system, the pressure requirements, launcher configuration with respect to folding joints, materials, erecting, dismantling, actuation, and primary pneumatic pressure supply requirements. Truck modification design details for accommodating the pneumatic launch system would be required. Detailed weights, cost data, and operational requirements would be outputs of the refined studies.

The rocket system effort would begin with analysis and trade-off studies to optimize rocket motors with respect to RPV interface, aerodynamic configurations, specific impulse/thrust, burn time, rocket propellant materials, and case construction. Consideration of utilizing existing U. S. Government inventory rocket motors or modifying existing rocket motors for this application would be evaluated.

For the pneumatic and rocket launch systems, launch acceleration and burn time trade-off studies should be conducted to determine the most suitable system. Ground support equipment and any safety requirements related to the launch systems should be identified and technical descriptions provided.

## 2.0 OPERATIONAL CONCEPT

The primary consideration in the evaluation of a Mini-RPV launch system is the environment in which the system will be operated. The system must fit into the current structure of the Army, and be operated in a tactical environment by readily available officers and enlisted personnel. The following is a summary of the operational concept for the use of Mini-RPVs within the Army, with emphasis on the launch system.

The RPV platoon is organic to the Combat Electronic Warfare Intelligence Battalion (CEWIBn), Division (proposed). The platoon functions under the staff supervision of the division G2 or brigade S2. The platoon is composed of five organic sections normally deployed as follows:

(1) One section attached to each of the three brigades

(2) One section attached to division artillery

(3) One section in general support of the division

Each RPV section is composed of a Ground Control Station (GCS) and a Launch and Recovery Team (L/R Team). Each RPV section is capable of operating independently and of receiving missions, launching aircraft, obtaining required data, disseminating the information, recovering the aircraft, and performing required organizational maintenance. The RPV section leader advises on the employment of RPVs and responds directly to the supported commander's requirements.

Deployment of the RPV section is made in close coordination with the supported unit. The GCS-to-RPV line of sight is critical. The GCS is located so as to ensure maximum navigational and target location accuracy. If not colocated with the L/R team, the GCS will be in line of sight of both the primary and secondary launch and recovery area. The RPV Section will be located in the proximity of other units in order to provide for its security. Launch and retrieval sites are not necessarily colocated, but they are selected according to the tactical situation. The launch site is any unprepared area capable of access by an M135 truck.

The launch system is deployed from a 2-1/2 ton vehicle or smaller. On reaching the launch area, the system will be made operationally ready by no more than two men in less than 1 hour. Maximum use is made of the mobility of the launch system. After launch, unless immediate reuse is required, the launch system is removed from the area to minimize the possibility of its position being compromised. It will take two men less than 30 minutes to make the launch system ready for transportation. When in the transportation mode, the launch system must not protrude beyond the confines of the M135 bed or canvas cover. In this way, the M135 launcher equipped vehicle will not exhibit any peculiar visual signature. Additional launch system operational stipulations are given in Section 3.

Organizational maintenance of the launch system is performed by personnel organic to the RPV section. Maintenance beyond the organizational capability is accomplished by direct support (DS) maintenance units operating in the forward area.

# 3.0 STUDY GUIDELINES AND CRITERIA

## 3.1 Introduction

The study guidelines discussed below consist of a review of the stipulations made in the study contract and notes added to cover deviations and for clarification.

## 3.2 Stipulations from the Contract Statement of Work and Notes

Stipulations taken from the study contract are quoted below:

> "1. The systems, whether totally vehicle mounted, or ground based, or a combination of both, shall be capable of launching a fixed-wing RPV of the same general configuration as the 'Aquila.' It shall be a swept-wing, pusher propeller RPV with a weight range of 120 to 200 pounds with launch velocities of 45 to 70 knots. Acceleration forces during launch of 6 g and 12 g shall be considered.
>
> 2. The launcher system shall provide for tactical employment from unimproved locations in the forward battle area (approximately 2-5 km from the Forward Edge of the Battle Area (FEBA)). The system shall be transportable by a vehicle no larger than the M135 2-1/2 ton truck. It should require a maximum of two men no more than 1 hour to completely erect it at the launch site and make it operationally ready to launch the RPV; and it should require no more than 30 minutes from a ready condition until it can be transported out of the area.
>
> 3. The system shall provide for launch in 0- to 20-knot winds with 10-knot gusts and must be able to accommodate shifting wind directions (90° through 180° wind shifts in 5 minutes as a minimum).
>
> 4. The launch of several RPVs in a short time from a single launcher is necessary. It should require no more than 15 minutes to prepare the launcher for subsequent launches and the goal shall be 5 minutes.
>
> 5. During launch operations, the system shall have a minimum detectability to radar, acoustic, optical, and electronic sensors.
>
> 6. Loss of or substantial damage to a complete RPV and sensor package caused by the launch operation shall not exceed one per 200 missions.
>
> 7. The system shall be capable of operation worldwide as defined in MIL-STD-210B."

Contractor's notations related to the above paragraphs are as follows:

Note 1 A three-view of the Aquila (XMQM-105) RPV is shown in Figure 1. Adaptability of the launch system to accommodate either the 120-pound or 200-pound RPV will be considered in the studies of this report.

Note 2 The launch system equipment should create minimum encumbrance and no peculiar visual signature for the M135 transport vehicle while traveling to and from the launch area (Figure 2). Thus, the launch system must fit within the confines of the truck bed and the canvas cover in the transport mode.

Note 3 The deployed launch system should be as mobile as possible to be able to meet the wind shift requirement, and, if possible, should be able to run for short distances with the launch system deployed.

Note 4 No comment

Note 5 No comment

Note 6 The assessment of the frequency of occurrence of possible damage to an RPV during the launch operation is believed to be beyond the depth of information available in this conceptual study.

Note 7 The principal atmospheric criterion used in the study is a hot day condition of 4,000 feet altitude, 95 degrees Fahrenheit. This set of conditions, shown in terms of standard and hot day atmospheres in Figure 3, corresponds to increases in velocities from 45 to 50 knots and 70 to 78 knots, respectively, for the 120- and 200-pound RPVs. The energy level increase is approximately 24 percent over sea level standard conditions.

## 3.3 Goals

The following goals represent desired conditions offered as unofficial modifications or additions to the stipulations of subsection 3.2 above.

1. Reference Item 2 under 3.2:

   - Stipulation: 1 hour to erect; goal: 25 minutes including checkout.

   - Stipulation: 30 minutes to put launcher system in transportable condition; goal: 10 minutes.

2. Reference Item 4 under 3.2

- Stipulation: 15 minutes to prepare for subsequent launches; goal: 5 minutes.

3. "Pre-preparation," meaning advance work to prepare a site for a launch system is not permissible.

"Preparation," meaning limited effort to improve a site is permissible within the time limits specified for readying the launch system for operation.

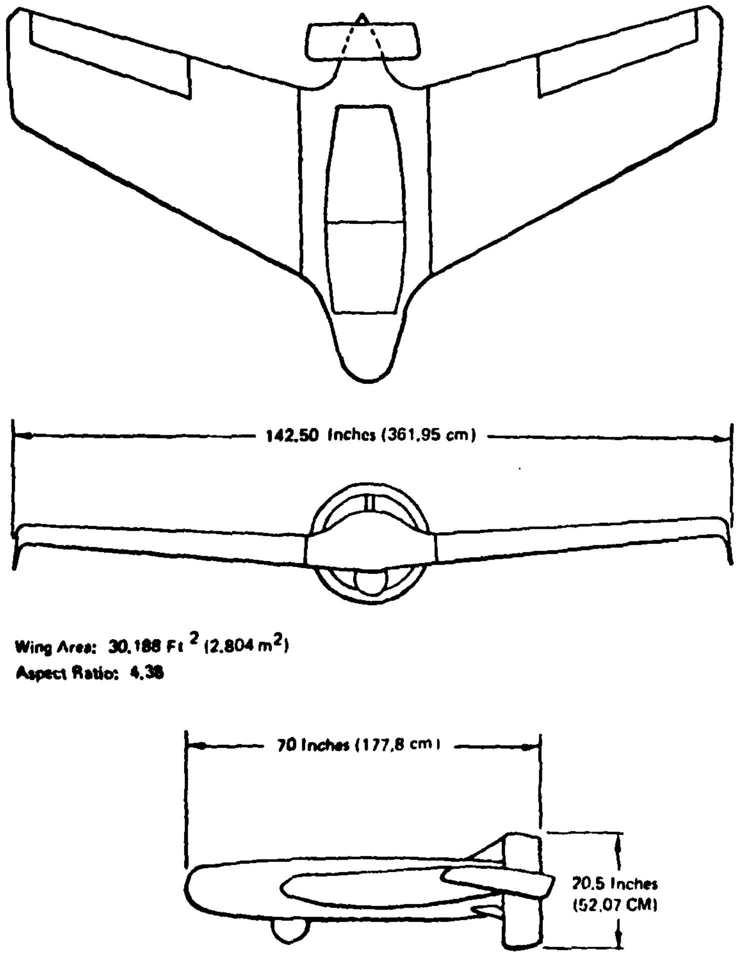

Figure 1. U.S. Army/Lockheed Aquila, XMQM-105 RPV

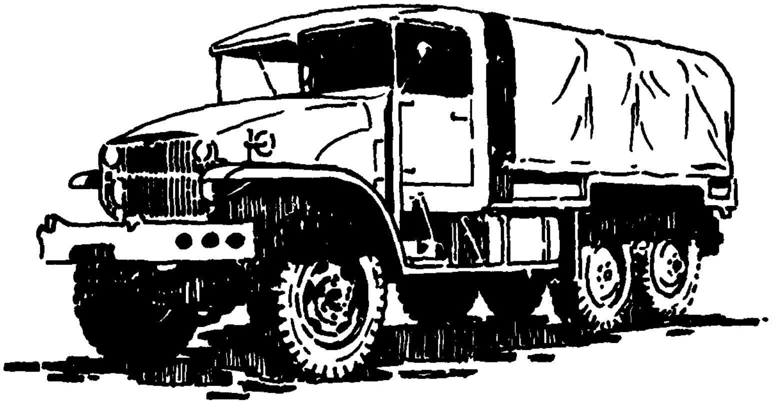

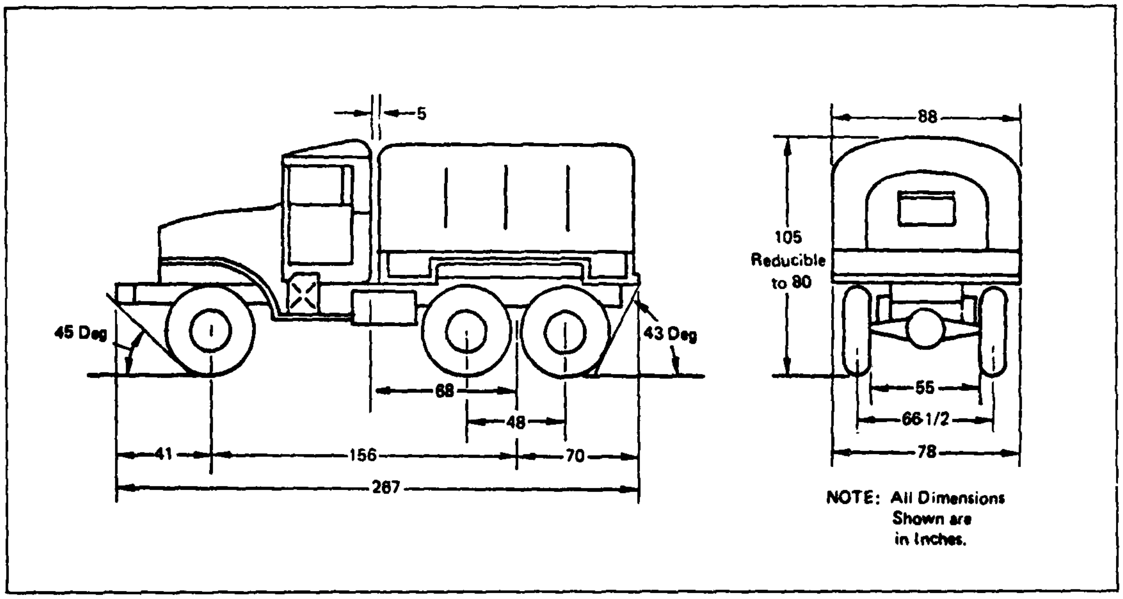

Figure 2. M-135 2-1/2 Ton Cargo Truck

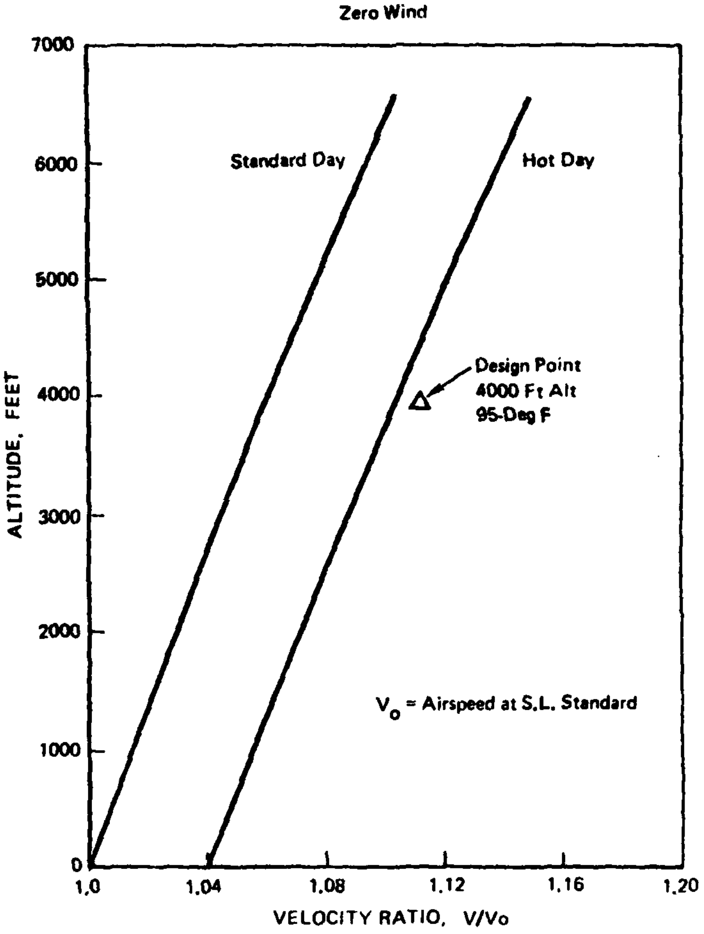

Figure 3. Altitude/Temperature Criteria for Mini-RPV Launch

## 4.0 BASIC LAUNCH CONSIDERATION

### 4.1 General

Given the weight of a mini-RPV, the desired launch end-velocity, and the allowable acceleration limits, it is relatively easy to determine on an ideal basis the required acceleration force and the distance and time required to reach the desired end-velocity.

Ideal conditions provide baseline information only since actual mechanisms rarely conform to ideal assumptions and performance predictions.

However, for the purposes of a study of this nature, which is mainly to compare mini-RPV launchers on a conceptual basis, the ideal approach with appropriate modifications for individual cases appears to be adequate.

Ideal launch parameters shown in Table 1 are based on RPV weights (120 and 200 pounds) specified for this study. The data is therefore baseline information, which is corrected upward to account for force increments where required for individual launcher concepts. In the majority of instances the force increment is due to the weight of the RPV launch shuttle. However, it should be noted that with the end-velocity and with the acceleration factor n (the number of g's) stated, the length of launch $\ell$ is independent of weight where the acceleration is assumed to be constant as will be noted in Equation (3). The time interval is also independent of weight as shown by Equation (4).

Thus, the significant variations from the baseline data of Table 1 due to weight increments occur in the launch force energy required.

For the several rail type launcher concepts in this study there are other incremental forces involved that could increase the launch force (energy) required by an estimated 12 percent.

The first group of incremental forces that act parallel to the launcher rail are (1) a rearward acting component of weight of the RPV/shuttle due to the inclination of the launcher rail, (2) the forward-acting force of the RPV propeller thrust, and (3) the aerodynamic drag of the RPV/shuttle, which is initially zero and has a very low average value. The algebraic sum of these groups of forces can be covered by an allowance of 2 percent against the launch force where the rail inclination angle is 15 degrees.

The second group of forces are related to generating friction between the shuttle and the rail on which it travels; these are

(4) a downward-acting component of weight of the RPV/shuttle, (5) aerodynamic lift, and (6) couple forces (acting perpendicular to the rails at the points of contact of the shuttle) due to the pitching moment created by the center of gravity of the RPV being above the shuttle. The friction-related forces are not as amenable to a lump estimate as the first group of forces above since they would depend on the actual geometry of the shuttle, the RPV, and the coefficient of friction, all of which can vary appreciably. However, estimates for the Aquila type vehicle, assuming the shuttle geometry and a coefficient of friction of .10, indicate the resistance to be of the order of 10 percent of the launch force. Thus, in lieu of accurate information and analysis, the net launch force required for the more or less conventional rail type launchers of this study is estimated to be 2 + 10 = 12 percent.

## 4.2 Basic Equations

The basic equations most often used in this study and which are pertinent to Table 1 are discussed on the following pages.

TABLE 1

IDEAL HORIZONTAL LAUNCH PARAMETERS

| RPV WEIGHT | W | 120 LB | | 200 LB | |
|---|---|---|---|---|---|
| ACCELERATION FACTOR | n | 6g | 12g | 6g | 12g |
| Launch End-Velocity | $V_1$, knots | 50.0 | 50.0 | 78.0 | 78.0 |
| | ft/sec | 84.50 | 84.50 | 131.82 | 131.82 |
| Energy | ft-lb | 13305 | 13305 | 53964 | 53964 |
| Required Force | F, lb | 720.0 | 1440.0 | 1200.0 | 2400.0 |
| Distance to Launch | $\ell$, ft | 18.42 | 9.24 | 44.97 | 22.49 |
| Time to Launch | t, sec | .437 | .218 | .682 | .341 |
| Total Impulse | I,lb/sec | 314.9 | 314.9 | 818.6 | 818.6 |

With the weights and end-velocities known, the energy involved can be computed as the equivalent change in kinetic energy:

$$\Delta KE = \frac{1}{2} m \left(V_1^2 - V_o^2\right) \tag{1}$$

where

$m$ = mass = $W/g$ = slugs

$V_1$ = final velocity, ft/sec

$V_o$ = initial velocity, ft/sec

$W$ = weight, lb

$g$ = gravitational constant, ft/sec$^2$

and with work (force times distance) being equal to $\Delta KE$ and eliminating $V_o = 0$ from equation (1) we can write

$$F\ell = \frac{1}{2} \frac{W}{g} (V_1)^2 \tag{2}$$

where

$F$ = accelerating force (constant, lb)

$\ell$ = distance to accelerate, ft

The weight term can be eliminated by writing Equation (2) as

$$Wn\ell = \frac{1}{2} \frac{W}{g} V_1^2$$

and

$$\ell = \frac{V_1^2}{2gn}$$

$$\ell = \frac{V_1^2}{64.4n} \tag{3}$$

where

$n$ = acceleration factor (or number of g's) = $F/W = a/g$

$a$ = acceleration in ft/sec$^2$

Thus, for cases in this study where the motion is horizontal, or nearly so, the distance for the RPV to accelerate can be determined as a function of the end-velocity and the acceleration factors as shown in Figure 4. The time to accelerate under the assumption of constant acceleration is:

$$t = 2\,\ell/V_1 \tag{4}$$

where

$t$ = time, sec

$\ell$ = distance to accelerate, ft

$V_1$ = end-velocity, ft/sec

## 4.3 Work/Energy Curves

Typical qualitative examples of the difference between the ideal launch parameters discussed above and some real-world situations are illustrated in the sketches below.

Sketch (a) is representative of a case where the acceleration distance $\ell$ (launch stroke) has been fixed in terms of ideal conditions to which the actual launcher performance cannot unnecessarily conform.

In this case the actual curve has to reach a momentary peak acceleration higher than desired in order to supply the same total energy as defined by this ideal rectangle F x $\ell$.

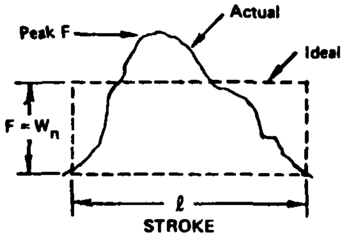

(a)

If exceeding the acceleration defined by the ideal rectangle is not acceptable, the launch stroke $\ell$ will have to be increased as indicated in sketch (b):

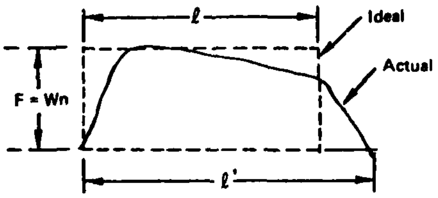

(b)

It follows that combinations of the effects of sketches (a) and (b) can occur in which both the force and the length are greater than desired.

In any event, the area under the actual curve has to equal that defined by the rectangle in order to produce the required amount of energy.

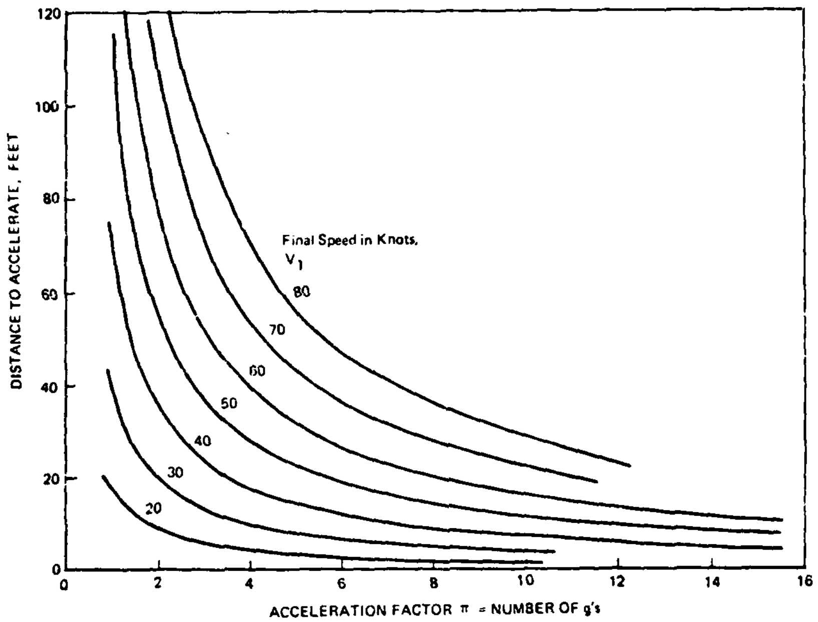

Figure 4. Ideal Distance to $V_1$ vs Acceleration Factor in g's

## Impulse/Momentum Equation

In the analysis of rocket-boosted launchers it is usually more convenient to use the impulse = momentum equation of motion.

$$I = F(\Delta t) = m\,(V_1 - V_0) \qquad (5)$$

where

$I$ = total impulse, lb/sec

$\Delta t$ = time interval, sec

(see notations above for other symbols)

This equation relates rocket performance to the end-velocity required. Otherwise, the work/kinetic energy equations discussed above would apply to determining launch stroke length $\ell$ and $\Delta t$.

### Miscellaneous

Other equations, all of which relate to basic linear motion or angular motion equations and F = ma are developed for special launcher concepts as required in the study.

### Computer Analysis

A Teledyne Ryan Aeronautical in-house computer program was used to determine flight trajectories for a mini-RPV dropped from an aerostat for launch purposes, as noted in subsection 7.9.2.

# 5.0 DATA SURVEY

## 5.1 General

A survey was conducted to seek available information on concepts, designs, and other data pertinent to the launch of mini-RPVs in the 120-pound and 200-pound weight class for launch speeds up to 78 knots.

The survey, discussed in the following paragraphs, consisted of two major elements:

- Literature Search
- Letters of Solicitation

## 5.2 Literature Search

DDC Bibliography: The usual first step in literature searches in Aerospace, a request for a report bibliography from the Defense Documentation Center, was taken for the mini-RPV Launch Study. The resulting bibliography is:

- Title: Mini RPV Launchers
- Search Control No. 061144 (S)
- Number of References: 174

Among the 174 documents listed, the descriptor "Remotely Piloted Vehicle" appears frequently, but almost invariably relates to vehicles larger and faster than the Mini-RPV.

The key description "Mini"-Remotely Piloted Vehicle appears once. Programs such as the Harassment Drone and the Navy/TRA Model 262 STAR vehicles are, of course, recognized as related to the Mini-RPV.

In all, it appears that documentation pertinent to the subject of Mini-RPV launchers is very limited as indicated by the DDC literature search.

In-House Sources: In addition to the DDC bibliography, available TRA in-house literature on RPV launch was reviewed. This included reports, technical papers, proposals, intercompany communications and accumulated worksheets held by individuals.

## 5.3 Letter of Solicitation

A Letter of Solicitation requesting concepts and ideas applicable to the launch of mini-RPVs was mailed to organizations selected because of Mini-RPV and/or related launch system interests. The distribution and results of this part of the data survey are listed below.

| | Solicitations | Replies | Contributions |
|---|---|---|---|
| U. S. Industry | 3 | 4* | 4* |
| Foreign Industry | 9 | 6 | 3 |
| U. S. Government Agencies | 5 | 4 | 4 |
| | 17 | 14 | 11 |

*One unsolicited contribution

It should be noted that the above number of written contributions of U. S. industry and U. S. Government agencies listed do not cover information received through telephone conversations with TRA, or direct communications on the subject of Mini-RPV launch between Government agencies.

Contributions applied to the study are identified in the technical section of this report as reference material.

## 5.4 Survey Overview

In view of the relative newness of the subject and very limited scope of Mini-RPV launch experience, the data survey was as productive as could be expected at this time.

Newness is partly evidenced by the low capture rate of the DDC literature search, which generally provides a much higher return where a technology and its nomenclature are well established.

The scope of this survey, as far as direct solicitation to industry is concerned, is limited to very few U. S. and foreign aerospace firms, most of whom may have proprietary interests that may preclude revealing new and innovative concepts.

## 6.0 LAUNCHER CONCEPT CATEGORIZATION

### 6.1 Introduction

In order to investigate a series of propositions such as presented by the presently known and some newly identified Mini-RPV launch concepts, a system of nomenclatures is needed. For this purpose the launch concepts identified for this study are categorized in Table 2. In the tab listing of Table 2 the basic concepts are identified as I-1 through I-11, totaling 11.

The three columns A, B, and C include the basic and/or spin-off concepts totaling 18. It will be noted that where no spin-off concepts are identified, the basic concept designation is repeated in Column A. (Example: I-5 Flywheel and I-8 Rotary/Carrousel). In this way, the concept spectrum for study appears within the Columns A, B, and C.

Also, two of the spin-off concepts (Neg'ator Spring I-B and Pneumatic Piston I-2A) are divided into subconcepts as noted in Table 2. The total number of concepts to be investigated then totals 21.

The relative newness of the Mini-RPV and associated launch schemes does not yet afford a standard set of nomenclature; therefore Table 2 is largely improvisation.

### 6.2 Concept Glossary

A brief definition of each concept listed in Table 2 is as follows:

#### Elastic I-1

A generic term for launchers that utilize stored elastic energy to accelerate a Mini-RPV to a desired launch velocity.

#### I-1A Elastomeric

A rail-type launcher powered by means of the energy stored in elongated shock cords (similar to a slingshot).

#### I-1B Neg'ator Spring

A rail-type launcher powered by means of the energy stored in several strips of metal formed into coils. The springs act in parallel and produce a nearly constant force as they re-coil. Note that in Table 2 there are two Neg'ator spring subconcepts listed.

## Pneumatic I-2

Launch concepts that utilize compressed air as the stored energy source.

### I-2A Piston

A rail-type launcher that transmits power from a pneumatic piston to accelerate the RPV/shuttle thru cable systems or directly. Note that in Table 2 there are three piston subconcepts listed.

### I-2B Free Piston

A rail-type launcher incorporating a free piston that travels the full length of a slotted cylinder (the rail). A blade-like member attached to the piston projects through the slot in the cylinder to provide the means of applying force to accelerate the RPV/shuttle.

### I-2C Inflatable Tube

A rail-type launcher powered by means of a plyable tube (fire hose) flattened between two rollers attached to a shuttle. When the tube is pressurized the rollers/shuttle/ RPV are forced to accelerate toward the end of the launcher.

## Hydraulic I-3

A launch concept that utilizes hydraulic and pneumatic pressure as energy sources.

### I-3A Hydraulic Engine

A rail-type launcher powered by a reeved cable system actuated by a sheave mounted on the end of the piston rod of a hydraulic cylinder. High pressure gas (air or $GN_2$), separated from the hydraulic fluid by floating pistons or elastomeric bladders in accumulators, is the primary source of stored energy.

## Rocket I-4

Concepts utilizing solid propellant pyrotechnics to provide the force required to launch mini-RPVs.

### I-4A Zero Length

A concept in which the direct thrust of a rocket motor booster accelerates the RPV along a ballistic trajectory to flight velocity, at which time the rocket burns out and drops free. The RPV/rocket assembly travels essentially zero distance along the launcher fixture that supports it.

### I-4B Finite Length

A rail-type launcher of about the same length as the other rail-type launchers, where the RPV/shuttle unit is propelled by a rocket motor booster.

### I-4C Pyrotechnic Motor

A rail-type launcher powered by a rotary motor consisting of one or more rocket nozzles so disposed as to produce torque about a shaft that drives a reel on which a cable that tows (accelerates) the RPV/shuttle unit is wound.

## Flywheel I-5A

A rail-type launcher concept that uses an inertia wheel to store kinetic energy. The energy is transferred from the wheel to a reel/cable assembly via a programmed power transmission system. The RPV is accelerated along the rails until flight velocity is attained.

## Inclined Ramp I-6A

A launch concept utilizing an inclined ramp. The RPV would slide down the incline under the influence of gravity and the propeller thrust of the RPV until the required flight velocity was attained.

## Falling Weight I-7A

A launch concept also utilizing an inclined ramp. The RPV would be towed up the ramp to reach flight velocity. A large free-falling weight attached to a cable/sheave system and the propeller thrust of the RPV would provide the accelerating force required.

## Rotory, Carrousel I-8A

A launch concept that whirls the RPV around in a near-horizontal circular path using the RPV propeller thrust and/or other additional mechanical assist. The RPV and a diametrically opposed counterweight are released simultaneously when the tangential velocity of the carrousel reaches the desired RPV flight velocity.

## Tethered Aerial I-9

Launch concepts that lift the RPV to a sufficient altitude so that it could be launched by a free drop.

### I-9A Aerostat

A launch concept employing an aerostat (balloon or blimp) as a tethered launch platform. The RPV would be attached to the lighter-than-air device with engine running. It would then be lifted to a sufficient altitude to be released to dive nose down and execute a pullup trajectory in free flight.

### I-9B Kite

A launch concept in which a kite device would serve as the tethered launch platform from which the RPV would be released to execute a pullup trajectory in free flight.

## Secondary Aerodynamic Devices, I-10

### I-10A Auxiliary Wing

A launch concept in which a light auxiliary wing is attached to the RPV for the purpose of reducing the launch end-velocity for the RPV/auxiliary wing unit. As a consequence, the launcher length would be reduced. The RPV/auxiliary wing unit, propelled by the thrust of the RPV, would climb and accelerate slowly until a safe free-flight speed for the RPV is reached, at which point the auxiliary wing would be jettisoned.

### I-10B Launch Shuttle

A launch concept in which a launch vehicle consisting of a parafoil flexible fabric wing powered by a propeller-driven shuttle vehicle carries the RPV to a safe altitude for releasing the RPV to continue on its mission.

## Linear Induction Motor I-11A

A variant of the high-speed train transportation system. The launcher would consist of a specially constructed launch rail, containing a multipole linear induction motor, a magnetic levitation system, and a short magnetic braking section. The shuttle transporting the RPV, supported by rollers at the outset, is supported by magnetic levitation during the launch stroke.

## TABLE 2

## LAUNCH CONCEPT CATEGORIES

| BASIC | | A | B | C |
|---|---|---|---|---|
| I-1 | Elastic | Elastomeric | Neg'ator Spring(1) | |
| I-2 | Pneumatic | Piston(2) | Free Piston | Inflatable Tube |
| I-3 | Hydraulic | Engine | - | - |
| I-4 | Rocket | Zero Length | Finite Length | Pyrotechnic Motor |
| I-5 | Fly-wheel | Flywheel | - | - |
| I-6 | Inclined Ramp | Inclined Ramp | - | - |
| I-7 | Falling Weight | Falling Weight | - | - |
| I-8 | Rotary (Carrousel) | Rotary (Carrousel) | - | - |
| I-9 | Tethered Aerial | Aerostat | Kite | - |
| I-10 | Secondary Aero Device | Aux. Wing | Launch Shuttle | - |
| I-11 | Linear Induction | Linear Induction | - | - |

(1) Includes:

I-1B-1 Neg'ator Extension Spring
I-1B-2 Neg'ator Spring Motor

(2) Includes:

I-2A-1 Piston/Reeved Cable
I-2A-2 Piston/Closed-Loop Cable
I-2A-3 Piston/Full Extension

# 7.0 PHASE I LAUNCH CONCEPT STUDIES

The following Phase I studies are designed to provide an understanding of the various Mini-RPV launch concepts categorized in subsection 6.0 for the purposes of preliminary evaluation and selection.

## 7.1 Elastic, Concept I-1

### 7.1.1 Introduction

Two launch concepts that are totally dependent upon the elastic properties of the materials used to propel the RPV to free flight speeds are discussed in this subsection.

The first of these employs shock cord, which consists of an elastometic material encased in a woven fabric braid. An appreciable length of the cord stretched in slingshot fashion would provide enough stored energy to launch an RPV. The second concept, the Neg'ator, makes use of the energy stored by a strip of flat spring material formed such that it produces a constant force when unwound.

Both the shock cord and the Neg'ator materials are employed well within their elastic limits.

The launch concepts discussed in this subsection are identified as:

7.1.2 Elastomeric (Shock Cord), Concept I-1A
7.1.3 Neg'ator Extension Spring, Concept I-1B-1
7.1.4 Neg'ator Motor Spring, Concept I-1B-2

### 7.1.2 Elastomeric (Shock Cord), Concept I-1A

a. General

Shock cord material is basically a sophisticated rubber band of appreciable strength. Each cord contains a large number of small elastomeric strands of rectangular cross section encased in a woven fabric braid. The name, shock cord, probably derives from one of its principal uses in times past (even now to a limited extent) as an energy absorbing medium for aircraft landing gears.

Shock cord has been used to launch low speed, man-carrying training gliders, "fire" people out of a cannon in the circus, propel telephone poles into barriers for test purposes, tether blimps, suspend electron microscopes, secure lines under water, and may become the energy source for an elastic engine. Shock cord is sometimes referred to as bungee cord, which generally denotes applications where it is used as an auxiliary spring booster or dampening device. A shock cord application more pertinent to the subject (Reference 1) is a small mini-RPV launcher seen in Figure 5.

The load developed by stretching a piece of shock cord is a function of the percent stretch and is independent of the actual length dimension. However, the amount of energy stored is proportional to the stretched length dimension.

For the purpose of preliminary shock cord launcher analysis, the load/elongation curve is assumed to be a straight line. The actual curve forms are discussed later.

Although shock cord has not found extensive use in aerospace in recent years, the technology of elastomers and braids has advanced considerably beyond the off-the-shelf material (MIL-C-5651B) on which this study is based. Special elastomers, such as silicone rubber, and braid materials can greatly improve shock cord's resistance to environmental effects such as near vacuum conditions, ultra-violet rays, and temperatures as low as -80°F. Materials of this type are presently custom order items not covered by military specifications, and are more costly than off-the-shelf products.

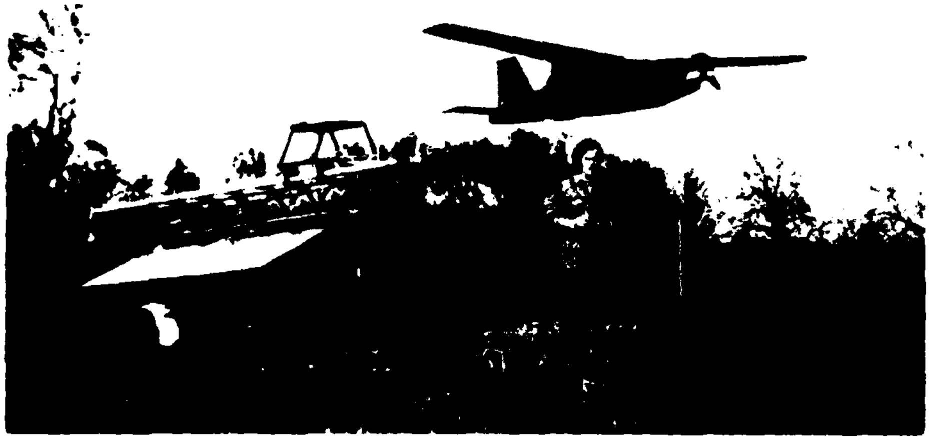

AIR VEHICLE

| | |
|---|---|
| Aero Electronics (AEL) | SNIPE |
| All-Up Weight | 40 Lbs. |
| Wing Span | 8 Ft. 3 In. |
| Length | 7 Ft. |
| Engine | 56 cc Glo-Plug Type |
| Maximum Speed | 111 Kts. |

LAUNCHER ESTIMATED

| | |
|---|---|
| Overall Length, Launcher | 15 Ft. |
| Maximum Stroke Available | 12.5 Ft. |
| Overall Length, Trailer | 16.5 Ft. |

Figure 5. AEL Launcher

The folded cord arrangement illustrated in Figure 6 (c) is similar to the AEL Snipe launcher. The Snipe is a small RPV with an all-up weight of 40 pounds and is probably airborne at 30 to 35 knots.

The energy required to launch the Snipe is estimated to be about 16 percent of the 120-pound RPV and 4 percent of the 200-pound class RPV of this study. In this case, the relatively longer cord length occasioned by the triangular force/stroke-length characteristics of the shock cord becomes less objectionable than for the higher energy cases. The trailer support vehicle with launcher installed is a compact unit 16.5 feet long with a height of 6 feet to the top of the launcher carriage.

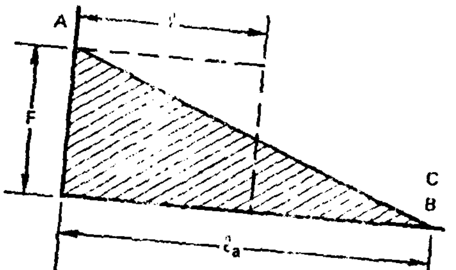

(a) Force/Stroke Diagram Triangular Work Curve

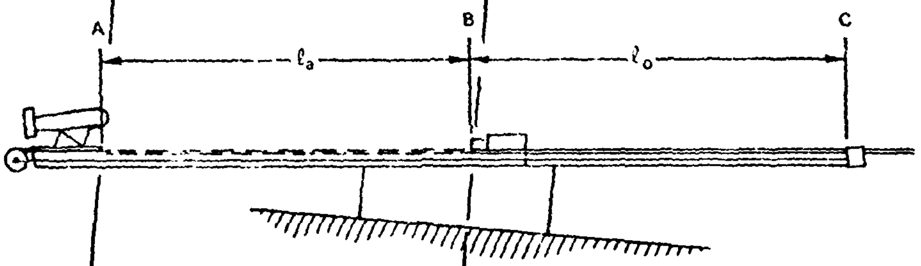

(b) Straight Line Configuration

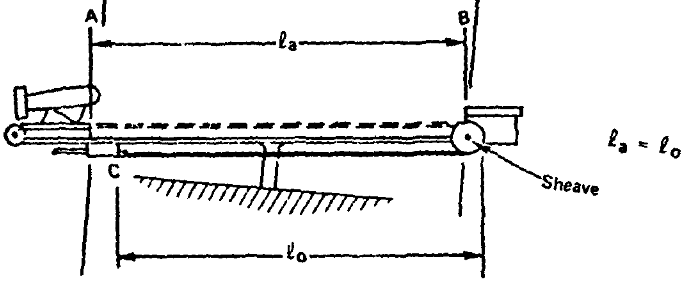

(c) Folded Cord Configuration

Figure 6. Shock Cord Launcher Principles

## b. Analysis

Force/Stroke Characteristics. Figure 6 (a) compares the triangular force/stroke-length characteristics to a rectangular force/stroke-length diagram produced by a constant force F acting over the distance $\ell$ . It follows that in order to provide the same total work or change in kinetic energy, the enclosed area of the triangle would be equal to that of the rectangle, and that $\ell_a = 2\ell$ and $F\ell = \frac{F}{2}\ell_a$. Thus, the launch stroke, and nominally the overall length, of the shock cord-propelled launcher employing the triangular force/stroke distribution would be twice those shown in Table 3 for a comparable launcher based on a rectangular force/stroke-length diagram.

| | Triangular Force/Stroke Data | | | |
|---|---|---|---|---|
| RPV Class Weight, pounds | 120 | | 200 | |
| Peak Acceleration Factor, $\eta$ | 6g | 12g | 6g | 12g |
| Launch Stroke, feet | 36.8 | 18.4 | 89.9 | 45.0 |

The 89.9-foot stroke distance for the 200-pound RPV at 6g is arbitrarily ruled out for further consideration because of its inordinate size.

In Figure 6, configurations for the use of shock cord as the propulsive medium for launching a Mini-RPV are shown. Figure 6 (b) depicts a linear configuration in which a length of cord CB is elongated 100 percent to produce the peak force required at Point A. A folded configuration, Figure 6 (c), employing the same total cord length would therefore develop the same peak force at Point A except for possible efficiency losses due to friction in the system.

For either configuration, the propelling force is assumed to diminish linearly from its peak at A to zero at B, thus forming a triangular force/stroke-length diagram.

It should be noted that the acceleration, along with the cord force, diminishes linearly along the stroke distance. With the launcher designed for the 78-knot, 4000-foot, 95°F hot day at altitude criteria, the launch stroke can, of course, be shortened for sea level standard or other lesser conditions. The stroke in this case is proportional to the square root of the energy ratio. For example: the energy for the 78 knot hot day case = 62,100 foot-pounds and for the 70-knot sea level standard case = 49,982-foot-pounds. The stroke required is:

$$45\sqrt{\frac{49982}{62100}} = 45\ (.897) = 40.37 \text{ feet}$$

The RPV shuttle could then be pulled back to a position about 4.6 feet short of the maximum available stroke. The peak force would also be proportional to energy in the same manner and would be 2760 (.897) = 2476 pounds = 2476/230 = 10.8 g.

---

1. DATA PACKAGE, Aero Electronics (AEL) Ltd., Surrey, England, 20 September 1977 .

## c. Design Considerations

Cord Configurations. The selection of the number and size of the shock cord(s) required to provide the maximum force F for the range of launch parameters of this study would be governed by the sizes and properties of the commercially available cords. Peak forces required are repeated below for reference.

| RPV Class Weight, Pounds | 120 | | 200 | |
|---|---|---|---|---|
| Acceleration, n | 6g | 12g | 6g | 12g |
| Force F, pounds (Based on RPV class weight x 1.15) | 828 | 1656 | 1380 | 2760 |

A single cord is desirable, but several cords working in parallel would be required in many cases. For the minimum force of 828 pounds at 100-percent elongation, one 1-inch cord (Figure 7 (a)) would appear to be sufficient, with two 1-inch cords required for the 1656-pound force.

The 1380-pound force for the 200-pound RPV at 6g would conform closely to three 3/4-inch cords at 100-percent elongation, and the 2760-pound force at 12g would appear to nearly match three 1-inch cords (extrapolating Figure 7 (a)). Thus, by coincidence, one-, two-, and three-cord combinations of commercial sizes at 100-percent elongation appear to closely fit the requirements of this study. The requirement for more than one cord in side-by-side configurations would appear to present only moderate design and fabrication problems for the launcher concept of Figure 6 (c).

A limiting shock cord elongation of 100 percent has been used in this study as an arbitrary design parameter. Where necessary to match available cords, the elongation could be increased to about 125 percent and, of course, any amount less than 100 percent could be used.

Cord Physical Properties. The curves of Figure 7 are taken from References 2 and 3. The set of curves (a) shows load/elongation data for several sizes of off-the-shelf commercially available shock cord. Figure 7 (b) shows the tolerance limits specified in Reference 3 (lower limit $A_1$ and upper limit $A_2$) for the 3/4-inch cord. The A curve (3/4-inch) of Figure 7 (a) happens to closely follow the specification's lower curve, $A_1$, shown in Figure 7 (b). Designing for the lower $A_1$ curve would appear to be the logical approach. Stiffer shock cord conforming to the upper limit $A_2$ would reach the peak design load at much less elongation. However, the area under the two curves, and consequently the stored energy, would probably be about the same.

---

2. DATA PACKAGE, Fenner America Ltd., Middletown, Connecticut, 12 October 1977.
3. MIL-C-5651B CORD; ELASTIC, EXERCISER AND SHOCK ABSORBER FOR AERONAUTICAL USE, Amendment 1, 29 September 1966.

Designing to the upper limit $A_2$ would currently call for source-selected material. Weaker material would then have to be elongated considerably beyond the desired maximum elongation to get the area under the $A_1$ curve equal to the $A_2$ curve.

The straight-line load/elongation assumption used thus far in the analyses of shock cord launchers provides a reasonably good approximation (area under the curve) for the curves of Figure 7 (a) and (b). However, a hysteresis effect exists whereby the output load/elongation curve represents less energy than was required to elongate the cord. Corrections for the hysteresis effect are not made in this study due to the lack of substantiative data on the subject. Thus, the launcher stroke distances based on the straight line assumption are nominally optimistic.

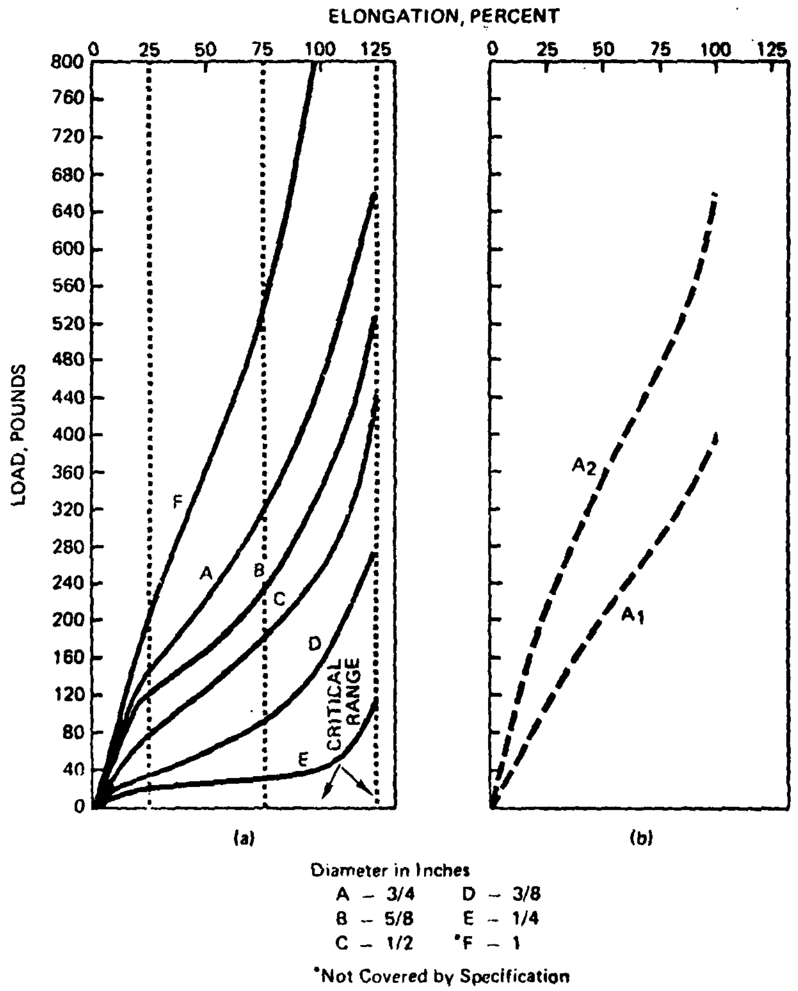

Figure 7. Shock Cord Load/Elongation Data

The shelf life of shock cord material is another consideration in that it appears to be much less than would be desired for military applications. Reference 3 states "elastic cord furnished under this specification shall not be more than 6 months old from date of delivery". Commercially available shock cord is generally color coded in order to track its age.

### Shock Cord Launcher Concept

A conceptual shock cord launcher general arrangement is shown in Figure 8. The nominal stroke of the launcher, disregarding the hysteresis effect and inertia of the cord mass, which would add to the stroke length, is 45 feet. Length deltas for the shock absorbers and sheaves at one end and for the shuttle and winch equipment at the other could increase the overall length to over 50 feet. The weight of such a launcher based on aluminum alloy construction, including 3/4-inch cords, is estimated at 700 pounds.

### Adaptability

A key question in the assessment of the launchers of this study for tactical employment is how one launcher design might serve for both the 200-pound and 120-pound class RPVs.

The type of launcher represented by Figure 8, designed for the 200-pound RPV at 12g, could also be used for the 120-pound class RPV. This could be achieved by elongating the cord to only about 22.3 feet out of the 45 feet available. The peak acceleration factor would be about 9.9g.

### d. Conclusions

Shock cord is being successfully used as the propulsive medium for small Mini-RPV launchers. Larger shock cord launchers similar to the concept shown in Figure 8 appear to be mechanically feasible for the 200-pound-class RPV at 12g acceleration and would be adaptable to the launch requirements of the 120-pound-class RPVs. The unit cost of the shock cord launcher would be less than comparative pneumatic or hydraulic types because of relatively unsophisticated design and manufacturing requirements.

The shock cord launcher's major disadvantages relate to the inordinately large overall dimensions involved and peculiarities of the shock cord itself. On a theoretical basis, the triangular load/elongation (force/stroke length) characteristic of the cord makes the launcher nominally twice the length of and hence more unwieldy than other types, which have a nearly rectangular force/stroke characteristic. In addition, there is an energy output loss for shock cord due to a hysteresis effect, which will also require additional stroke length.

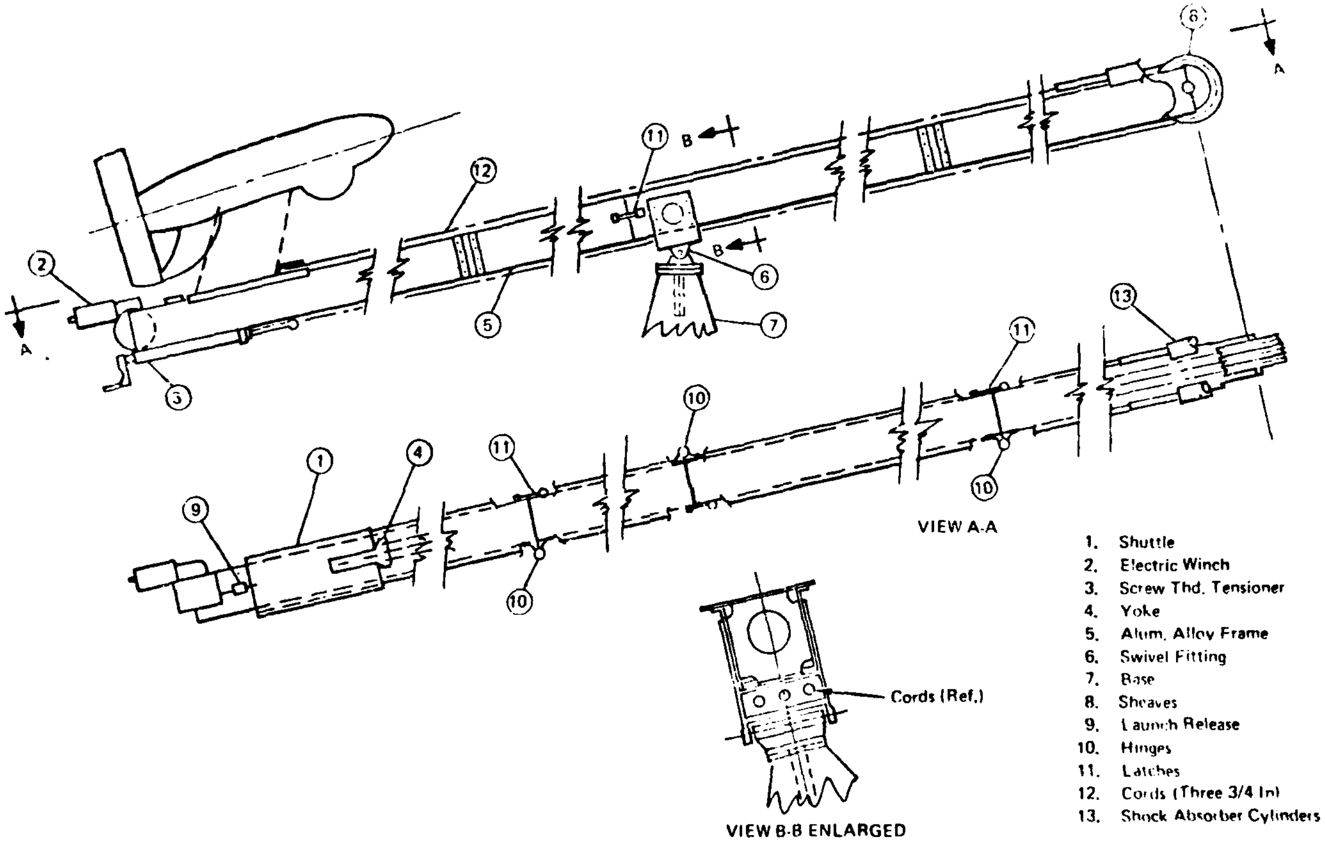

Figure 8. Shock Cord Launcher General Arrangement

Shock cord material is now covered by military specifications, is allowed considerable variation in load/elongation properties, and has a relatively short life expectancy due to a large extent to ultraviolet ray emissions. The short life would aggravate logistic supply problems, especially for a 10-year life cycle consideration.

As noted earlier in this subsection, technological advancements show promise of greatly improving the consistency and quality of shock cord. However, for the present, shock cord characteristics viewed in terms of the existing MIL-C-5561B specification indicate that inconsistent properties and vulnerability to environmental effects place it in the high risk category for the intended U.S. Army tactical operations.

### 7.1.3 Neg'ator Extension Spring, Concept I-1B-1

#### a. General

The Neg'ator is a strip of flat spring material that has been given a curvature by continuous heavy forming so that in its relaxed or unstressed condition it is in the form of a tightly wound spiral (Reference 4).

A spring in "as formed" condition is shown in Figure 9 (a). Also shown in the figure is an illustration of the spring being extended. The force F at any extension is determined only by the work required to straighten the material in Zone X. The force F will then remain constant with extension as long as each incremental length of Neg'ator has an equal increase in stress as it is straightened.

Generally only the inside coil of a relaxed Neg'ator has the natural radius of curvature $R_n$, the condition for constant stress. The radii of succeeding coils are greater due to some expansion as the material coils upon itself. However, unless there are a large number of coils involved, the effect of material buildup is negligible.

Figure 9 (b) compares the nondimensional force/deflection characteristics of the Neg'ator extension spring to that of a spiral spring made of the same material. Another application of the Neg'ator spring, discussed later in subsection 7.1.4, is in the form of a spring motor.

A major constraint on Neg'ator spring applications is the dimensional limitations of readily available spring steel. Currently, the maximum thickness appears to be about .032 inch and the maximum width is 4 inches (Reference 5). This limitation means that a great number of springs working in parallel are needed to produce total launch forces sufficient to launch mini-RPV's.

---

4. Votta, F. A. Jr.; THE THEORY AND DESIGN OF LONG DEFLECTION, CONSTANT FORCE SPRING ELEMENTS, Transaction of the ASME, May 1952

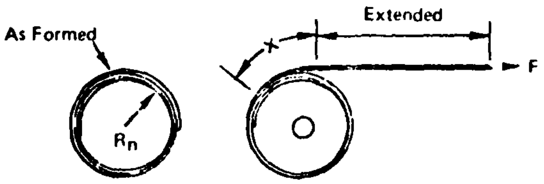

(a) Neg'ator Extension Spring

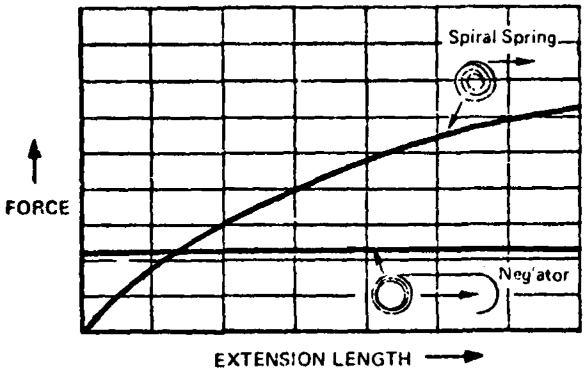

(b) Comparable Neg'ator And Spiral Springs Made of Same Material

Figure 9. Neg'ator Spring Characteristics

## b. Analysis

Utilization of the Neg'ator extension spring to launch a Mini-RPV by directly towing the RPV through the launch stroke is illustrated in Figure 10 (a). Spring parameters related to this mode of operation are discussed in the following paragraphs.

The natural radius of the formed spring coil is a function of the thickness of the spring material and a stress factor $S_f$ that defines an endurance limit.

$$R_n = \frac{t}{S_f} \qquad (6)$$

Figure 10 (b) shows $S_f$ versus the endurance limit in number of cycles for 1095 high carbon steel and 301 stainless steel. The data for these curves was derived from information found in Reference 5.

A review of spring design parameters presented in Reference 5 indicates that the maximum performance available is based on spring material 4.0 x .031 inches in cross section, which corresponds to a force per spring of about 82 pounds achieved with 301 stainless steel spring stock at an endurance limit of 2500

---

5. DATA PACKAGE, Ametek Hunter Spring Division, Hatfield, Pa.

cycles. In this instance the natural spring radius is given as 1.13 inches, in which case the corresponding stress factor is:

$$S_f = \frac{t}{R_n}$$

$$= \frac{.031}{1.13}$$

$$= .0274$$

which is the upper limit of the stainless steel curve on Figure 10 (b). As the design endurance limit is increased the allowable stress factor decreases, hence $R_n$ increases and, in turn, the force exerted by the spring decreases as indicated by the equation for determining the extension spring force (Reference 4):

$$F = \frac{Eb\ t^3}{26.4\ R_n^2} \qquad (7)$$

where E = modulus of elasticity, $lb/in^2$

b = spring width, in

t = spring thickness, in

$R_n$ = natural springs radius, in

Equation (7) seems to give answers somewhat higher than the tabulated data of Reference 5. However, the tabular data will be used for the purposes of comparative analysis.

The weight of the Neg'ator extension spring defined above would be:

$$w = .031\ (4)\ .283$$

$$= .0351\ lb/in$$

$$= .421\ lb/ft$$

The number and approximate length of the extension springs required to meet the maximum criteria of the study are discussed below. A major consideration here is the effect of the inertia of the spring mass on the net force it can produce.

In the analysis following, the assumption is made that the spring's inertia is based on its total length regardless of the amount of its extension. The premise in this instance is that each element of spring mass is accelerating at the same linear rate whether it is traveling in a straight line or in a circular path as it winds around the storage drum.

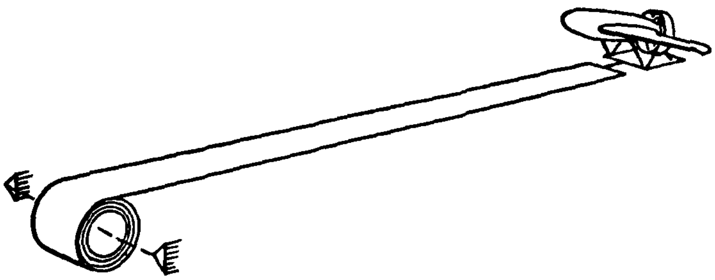

(a) Schematic Neg'ator Extension Spring Launcher Principle

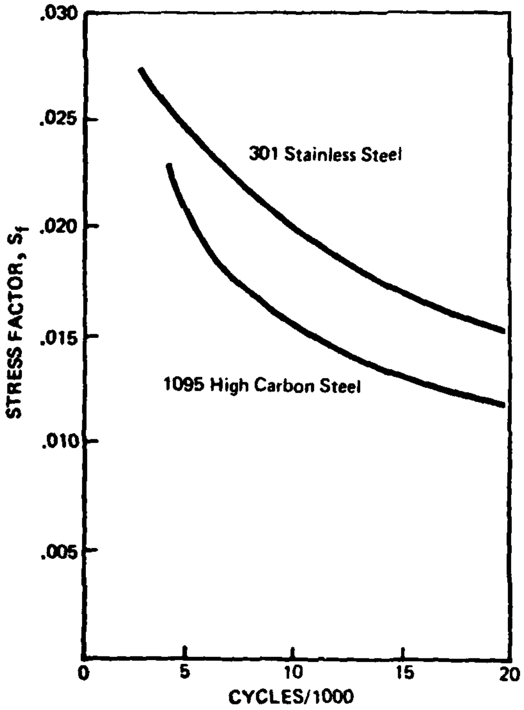

(b) Extension Spring Endurance vs Stress Factor

Figure 10. Neg'ator Extension Spring Data

The net acceleration that can be developed by the spring towing an RPV/shuttle weight of 230 pounds is:

$$a = \frac{F}{m} \qquad (8)$$

$$= \frac{F}{(W_1 + 230)/g}$$

where
$F$ = spring force, lb
$W_1$ = weight of spring, lb
$g$ = gravitational constant, ft/sec$^2$

The constant force required to accelerate the 230-pound weight to 78 knots in 22.5 feet is 2760 pounds and the corresponding acceleration is 12 g. For a first iteration to determine the acceleration produced by the Neg'ator extension spring we will assume that the total spring force required is 2760 pounds and the spring stroke length is 22.5 feet. The number of springs required would be:

$$N = 2760/82$$
$$= 33.7 = 34$$

Then the total force corrected to the nearest whole number of springs is:

$$F = 82\ (34)$$
$$= 2788 \text{ lb}$$

The total spring length, including 1-1/2 turns on the take-up drum and an allowance at the far end for attachments, is set at 23.5 feet. The weight for the springs is:

$$W_1 = 23.5\ (.421)\ 34$$
$$= 336.4 \text{ lb}$$

With a 15$^0$ ramp angle for the launcher and a spring weight component of:

$$W_2 = 336.4\ (\sin 15°)$$
$$= 87 \text{ lb}$$

The acceleration of the total mass including the RPV is:

$$
\begin{aligned}
a &= \frac{F - W_2}{m} \\
&= \frac{2788 - 87}{(336.4 + 230)/32.2} \\
&= \frac{2701}{17.5} \\
&= 153.6 \text{ ft/sec} = 4.77 \text{ g}
\end{aligned}
$$

The launch end-velocity from the above condition is:

$$
\begin{aligned}
V &= \sqrt{\ell \ (2g) \ 4.77} \\
&= 22.5 \ (64.4) \ 4.77 \\
&= 83.1 \text{ ft/sec} \\
&= 49.2 \text{ knots}
\end{aligned}
$$

For the second iteration the stroke length of the Neg'ator extension spring is doubled (22.5 x 2 = 45 feet). In this instance the acceleration would decrease to 2.90 g. However, since the length was increased by a factor of 2.0, but the acceleration is .61 of that before the springs were lengthened, the end velocity actually increases to:

$$
\begin{aligned}
V &= 49.2 \sqrt{2.0 \times .61} \\
&= 54.3 \text{ knots}
\end{aligned}
$$

Continuing the above process, the number of springs was doubled (34 to 68) and analyzed for stroke lengths of 22.5 and 45 feet. The results of the four iterations are listed in Table 3.

Although this limited matrix is far from a complete analysis, it appears that the desired 78-knot end velocity for the 200-pound-class RPV is out of range of the Neg'ator extension spring.

However, similar approximations made for the 120-pound-class RPV show that, in theory at least, the 50-knot end speed criterion could be approached.

A mechanical concept for such an extension spring launcher is shown in Figure 11. The launcher would consist of 20 Neg'ator extension springs with a nominal stroke length of 22.5 feet. The overall length of the launcher would be about 28 feet and its width about 8 feet. The springs would weigh about 200 pounds; the overall weight is estimated at 500 to 600 pounds. The springs would be cocked by a motor driven winch that would pull the shuttle back to battery position.

If carried to the design stage it would be found that performance of the Neg'ator extension spring launcher as estimated above would be further reduced due to such items as the mass of the header beam required to accumulate the individual spring loads, additional spring length for the "X" distance required to achieve the initial load on the spring, and probably additional length to account for the length displaced by a shock absorber.

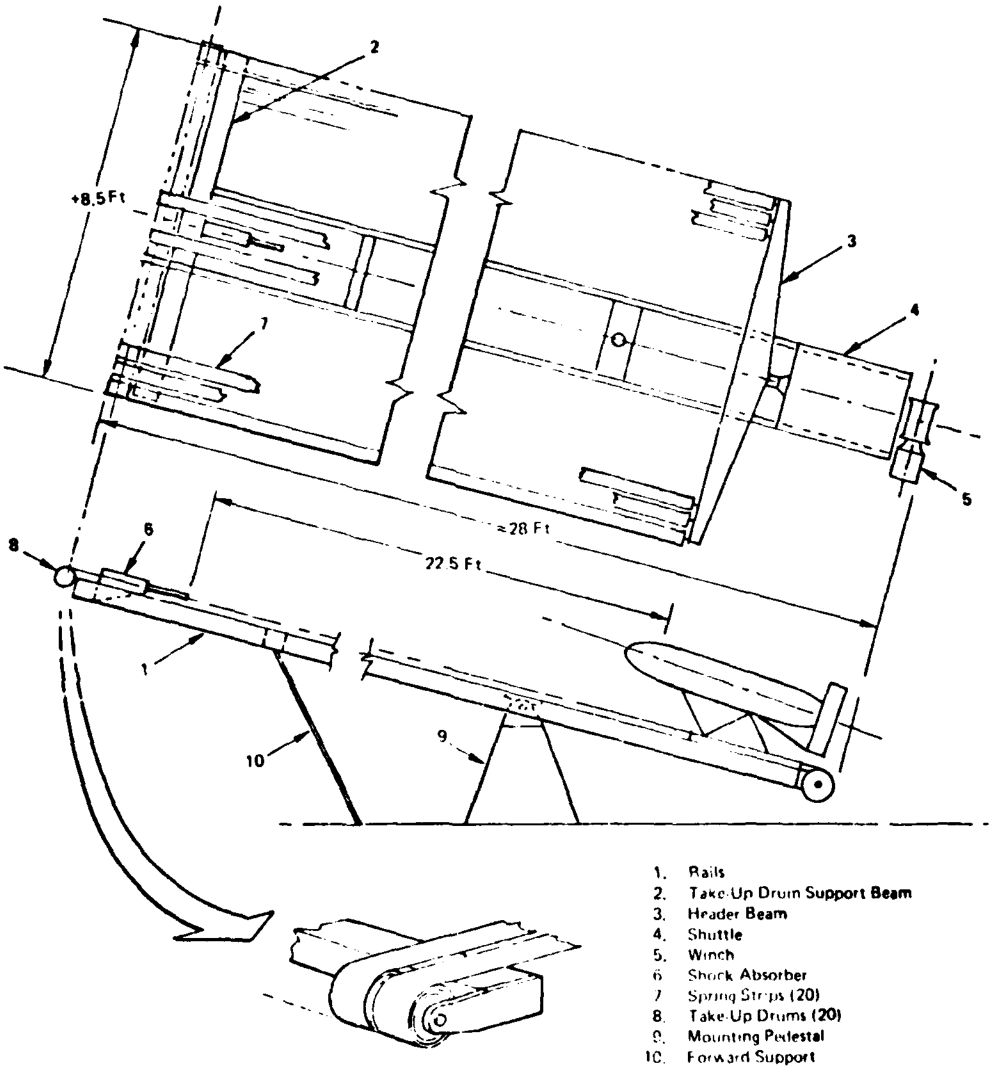

Figure 11. Neg'ator Extension Spring Concept, 120-Pound-Class RPV

Should larger size strips of spring steel be made available, the width of the extension spring platform would decrease accordingly. A single strip of steel about .25 inches thick and 33 inches wide would theoretically be about the same as iteration 4 in Table 3. The multiple strips would still have the weight advantage in that the "X" distance needed for the single spring to initially achieve the rated load as the spring is unwound would be greater. Thus the mass of the single spring would be more than the total mass of multiple springs of equivalent force capacity.

TABLE 3

NEG'ATOR EXTENSION SPRING LAUNCHER PARAMETERS

| ITERATION NO. | 1 | 2 | 3 | 4 |
|---|---|---|---|---|
| Number of Springs | 34 | 34 | 68 | 68 |
| Spring Weight, lb | 336 | 673 | 673 | 1346 |
| Spring Force, lb | 2788 | 2788 | 5576 | 5576 |
| Acceleration, g's | 4.77 | 2.90 | 5.98 | 3.32 |
| End Velocity, knots | 49.2 | 54.3 | 55.1 | 58.0 |
| Length, ft | 22.5 | 45 | 22.5 | 45 |
| (1) Total Width of Springs, ft | 12 | 12 | 24 | 24 |

(1) Based on a 4" spring width with .25" gaps between springs.

## c. Conclusions

A launcher powered by the Neg'ator extension spring is initially attractive because a wound-up spring is basically a simple device, and the promise of a constant force output is a desirable condition for a launcher.

It appears, though, that the inertia of the mass of the spring material (the moving parts) is disproportionately high with respect to the force produced by the spring. Cursory computations indicate that the desired 78-knot end velocity for the 200-pound-class RPV is not attainable. However, similar computations indicate that the 50-knot end velocity for the 120-pound-class RPV could theoretically be reached. Thus it is possible that the Neg'ator extension spring principle could satisfy the energy requirements of the smaller type RPV's.

Within the bounds of the technical information available at this time the Neg'ator extension spring launcher concept appears to have inherent capacity limitations against the criteria set for the 200-pound-class RPV. The concept in general also presents an unwieldy configuration for the intended field operations in the Army tactical environment.

### 7.1.4 Neg'ator Spring Motor, Concept I-1B-2

#### a. General

As opposed to the Neg'ator extension spring, the Neg'ator spring motor offers a different approach to the use of the Neg'ator principle as the propulsive medium for a launcher.

The chief difference between the two spring applications is that the spring motor is able to develop and transmit a greater quantity of energy to the launch system with less total spring mass involved than with the extension spring.

The Neg'ator spring motor Figure 12 (a) consists of a storage drum, an output drum and the Neg'ator flat spring material wound on the drums in opposite directions. The energy stored by the Neg'ator is delivered as a counterclockwise torque T about the axis of the output bushing. The motor is charged by winding the Neg'ator onto the output drum which, when released, will deliver the torque as the Neg'ator runs onto the storage drum. About 1-1/2 turns of spring material is left on the storage drum when the system is charged.

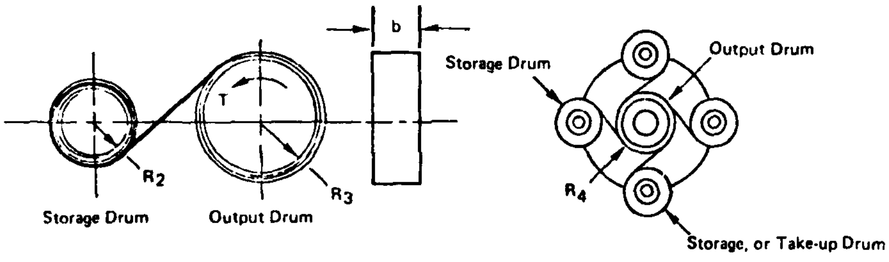

(a) Spring Motor (Constant-Torque)

(b) Multiple Spring Motor

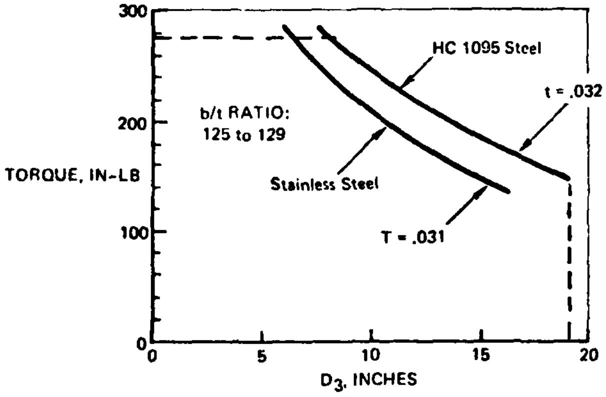

(c) Torque vs $D_3$ For 2500-Cycle Endurance Limit

Figure 12. Neg'ator Spring Motor Characteristics

Usually the radius $R_2$ or the storage drum is made about 1.2 times its natural radius $R_N$, and the spring material is not physically attached to the drum. However, the end of the spring must be attached to the output drum.

The Neg'ator spring motor can be configured with multiple storage drums feeding one output drum. This arrangement provides more work capacity per unit volume. Figure 12 (b) shows an example of an output drum fed by four radially disposed storage drums. Thus the torque output is nominally four times that of a single storage drum. It follows that the outside radius $R_4$ of the coil on the output drum builds up rapidly, which may result in a positive gradient; that is, the torque output will be greater when the system is fully wound up than at run-down. For the purposes of this study, constant torque will be assumed.

### Neg'ator Spring Motor Powered Launcher

A Neg'ator spring motor assembly concept intended to match the maximum criteria of this study (the 200-pound-class RPV at 78 knots launch speed)(Reference 6) is illustrated in Figure 13.

The proposed motor design consists of two rows of motors, one above the other, to conserve space. The bottom row has nine in-line motors and the top row has eight in-line motors. Each motor, in a row, is attached to a common output shaft by a shaft coupling. Thus the output energy of the motor assembly can be reduced by decoupling motors from their output shaft. The output shafts of the two motor rows are coupled by a chain sprocket, which is used to drive the cable drum.

A general arrangement for a twin-rail launcher employing the spring motor assembly described above is shown in Figure 14. Included is a routing schematic for the cable system that charges the spring motor and then tows the RPV shuttle to launch speed. As indicated in the figure an energy absorption mechanism required to bring the shuttle to rest would be incorporated. Presumably a cable tensioner mechanism and a tension sensor would be required to make the final adjustments to obtain the proper launch force.

---

6. <u>DATA PACKAGE</u>, Prototype Development Associates, Inc., Santa Ana, California

## b. Analysis

### Basic Equations

The torque output of a motor consisting of one storage drum and one output drum is (Reference 4):

$$T = \frac{Ebt^3R_3}{24}\left(\frac{1}{R_N} + \frac{1}{R_3}\right)^2 \qquad (9)$$

where the symbols are the same as found in subsection 7.1.3 except:

$T$ = Torque, in -lb

$R_3$ = Radius of output drum, in.

Equation (9) checks tabular data of Reference 5 with reasonable accuracy where $R_3 = 1.667$ and $R_2 = 2\ R_N$. Envelope curves plotted from the data are presented in Figure 12 (c). The same material dimension limits of 4-inch width and .031-inch thickness apply. The stress factor for the motor is expressed as:

$$S_f = t\left(\frac{1}{R_N} + \frac{1}{R_3}\right) \qquad (10)$$

Using the $R_N$ and $R_3$ values tabulated in Reference 5 that correspond to the envelope curves of Figure 10 in Equation (2) we find that the $S_f$ values for the motor spring and those for the extension springs are essentially identical for a given endurance cycle limit.

### Launcher Parameters

Preliminary computations furnished with the Reference 6 data package for the purpose of determining the size of the Neg'ator motor required for the launcher of Figure 14 are quoted below.

"The motor required to launch a 200-lb RPV at a speed of 78 knots in 20 feet must have an energy output of approximately 60,000 ft-lb. Assuming a cable spool diameter of 16 in. the number of revolutions required to launch the RPV is equal to:

$$N = \frac{20}{4.3\pi} = 4.8 \approx 30 \text{ rad} \qquad (11)$$

where: $\omega_{Max} = 195$ rad/sec

Assuming each motor consists of eight take-up drums and one output drum, the inertia of the motor is then equal to:

$$I_{Motor} = I_{Spring} + I_{Drum} = 400 + 100 = 500 \text{ lb-in}^2$$

The energy absorbed by the motor is derived as follows:

$$E_{\text{Absorbed}} = \frac{I\omega^2}{2} = \frac{500}{2(32.2)} \times \frac{(195)^2}{144} = 2050 \text{ ft-lb}$$

The torque available from .031-inch-thick by 4.0-inch-wide stainless steel bands is 276 in-lb. One motor produces the following energy:

$$E_{\text{Motor}} = \frac{276 \times 8 \times 30}{12} = 5520 \text{ ft-lb}$$

The net energy/motor is equal to:

$$\begin{aligned} E_{\text{Available}} &= E_{\text{Motor}} - E_{\text{Absorbed}} \\ &= 5520 - 2050 \\ &= 3470 \text{ ft-lb} \end{aligned}$$

The quantity of motors required to produce 60,000 ft-lb of energy is:

$$\text{Motors Req'd} = \frac{60{,}000}{3470} = 17 \text{ each}$$

It will be noted that criteria for the 200-pound-class RPV are based on a nominal RPV/shuttle weight of 230 lb. and an end velocity of 78 knots, or 62,059 foot-pounds of work (energy).

However, a separate analysis approach by TRA using a launch length of 22.5 ft. instead of 20 and the 62,059 foot-pounds as a goal showed an estimated deficit of 5.6 percent as compared to the 3.4 percent. In view of the present uncertainties in the technology of Neg'ator springs and the assumptions that must be made in an application of this type, accurate performance predictions are precluded. Thus it could be conjectured that 17 or 18 motors may be required.

The Neg'ator spring motor could be charged by applying a torque directly to the motor or by pulling the shuttle back to battery position with a winch. The latter is proposed in Reference 6. A manually powered boat-type winch would be employed.

The force required to pull the shuttle back would be:

$$\begin{aligned} F &= \frac{276\ (8)\ 17}{8} \qquad \text{(Radius of reel = 8 in.)} \\ &= 4692 \text{ lb} \end{aligned}$$

This force defines the work stored in the spring motor

$$\begin{aligned} W &= 4692\ (22.5) \\ &= 105{,}570 \text{ ft-lb} \end{aligned}$$

of which about 44 percent is lost during the power stroke due to the inertia of the spring mass and the rotating parts.

### c. Design Considerations

#### Adaptability

The adaptability of the Neg'ator motor launcher to conditions other than the maximum output for which it was designed might be handled in several ways.

If the Neg'ator motor assembly is designed for a 78-knot launch speed, which corresponds to a hot day at altitude (4000 feet, 95 degrees Fahrenheit), the required velocity at sea level standard atmospheric conditions would be 70 knots. If there is no objection to an increase (about 24 percent) in dynamic pressure on the RPV then the 78-knot speed could be maintained. If, however, it is desired to launch at 70 knots, or even lower, the proper velocity could be achieved by shortening the launch run.

It is assumed that a motor that produced torque on the high or low side of the expected tolerances would be 'tuned' before delivery. However, in the more usual case, performance deteriorating in service could be compensated for to some extent by providing extra length in the launch rails. Theoretically, the same launch energy output could be achieved by increasing the stroke length 10 percent for a 10 percent loss in the applied force.

For the much lower requirements of the 120-lb- class RPV at 50 knots launch velocity, motors could be decoupled as indicated in Figure 13.

### d. Conclusions

Here again, as noted previously for the Neg'ator extension spring, the Neg'ator motor powered launcher is also initially attractive because a wound-up spring is basically a simple device, and the promise of a constant torque (force) output is a desirable condition for a launcher. Unlike the Neg'ator extension spring, the motor application, based on preliminary analysis, appears to come closer to a convergent solution that falls within practical limits of size and weight amenable to a field deployed mini-RPV launcher.

Apparent disadvantages of the Neg'ator motor for this particular application include a multiplicity of components that would be inherently unfavorable in the area of reliability and maintenance (17 output drums and 136 storage drums and springs).

The multiplicity of components is aggravated by a boot-strap situation in which the number of springs, and hence the design static torque of the motor, has to be increased by over 40 percent to offset the energy loss due to inertia during the launch cycle. The spring weight of over 700 pounds is the major contributor to the inertia.

A separate consideration is the likelihood of dynamic instability in a series of springs driving a common shaft where the torsion increases step-by-step toward the output end of the shaft.

Overall concern for technological uncertainties associated with the subject type motor is found in Reference 5:

"Wherever high speed operation, sudden stopping, or sudden release are predictable service, experimental models should be employed to verify performance and endurance characteristics." Pertinent to this statement is that in the acceleration phase of launch, the spring for the Mini-RPV launcher would have to accelerate from 0 to about 1870 RPM in .341 seconds and decelerate (assuming a 1-foot stroke for the shuttle shock absorbers) in about .015 second in less than one-fourth revolution.

Despite these limitations, the Neg'ator motor concept may have potential. Problems and uncertainties not yet identified could conceivably be cleared up satisfactorily in an appropriate development program. However, at this time, sufficient data is not available to predict with confidence the overall behavior, and consequently the performance, of the spring motor.

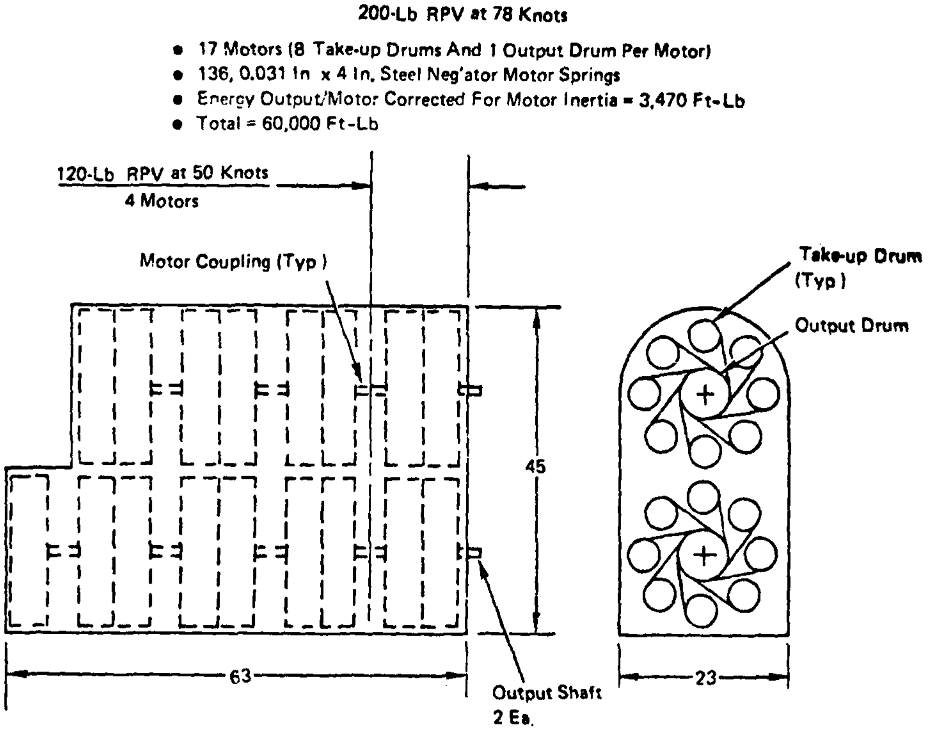

200-Lb RPV at 78 Knots

- 17 Motors (8 Take-up Drums And 1 Output Drum Per Motor)
- 136, 0.031 In x 4 In. Steel Neg'ator Motor Springs
- Energy Output/Motor Corrected For Motor Inertia = 3,470 Ft-Lb
- Total = 60,000 Ft-Lb

Figure 13. PDA Neg'ator Spring Launch Motor Concept

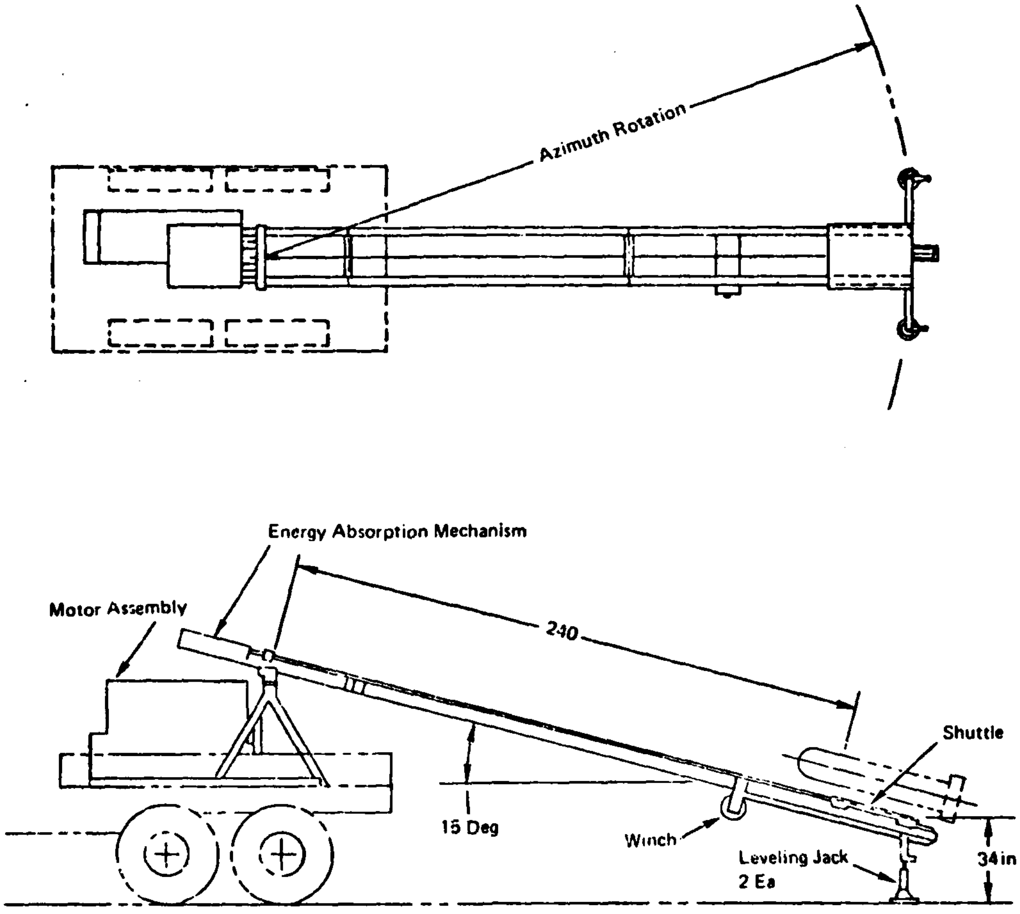

Figure 14. PDA Neg'ator Spring Powered Launcher, General Arrangement

## 7.2 Pneumatic, Concept I-2

7.2.1 Introduction. Pneumatic propulsion for launching Mini-RPVs, although not new, came into prominence about 4 years ago in the U.S. Army's MQM-105 Aquila program and a little later in the flight test program for the Navy/TRA STAR Mini-RPV. Both vehicles were successfully launched with similar versions of the All American Engineering LP-20 pneumatic piston-type launcher.

Another piston-type Mini-RPV pneumatic launcher, now in the development stage, is the Fairchild/Stratos free-piston/slotted cylinder type. The background for this launcher includes military applications for launching flares, miscellaneous stores, sonobuoys, etc. In addition, a brief conceptual study of a free-piston/slotted cylinder type launcher by the Naval Air Engineering Center is shown in Appendix A.

An apparently unique type of pneumatic launcher discussed in this subsection is the inflatable tube type designed and built experimentally by the Naval Surface Weapons Center at Dahlgren, Virginia. This launcher was used with the Navy/APL RPD-2 delta wing Mini-RPV.

It will be noted below that the pneumatic piston concept, I-2A, is divided into three subconcepts. The basic piston concepts under consideration are summarized pictorially in the brief schematics of Figure 15.

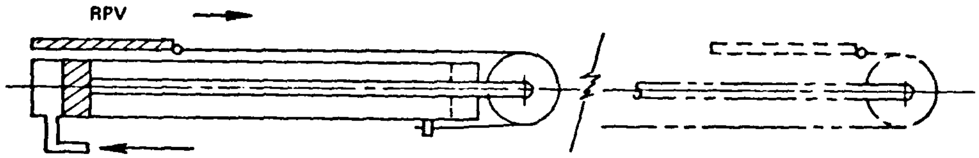

(a) Piston/Reeved Cable

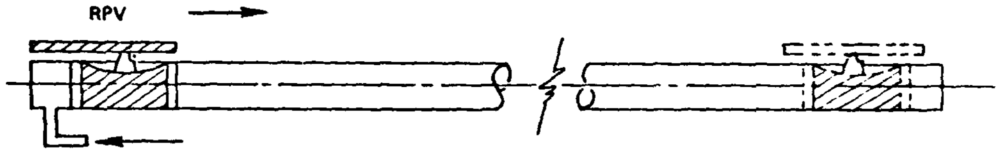

(b) Free Piston/Slotted Cylinder

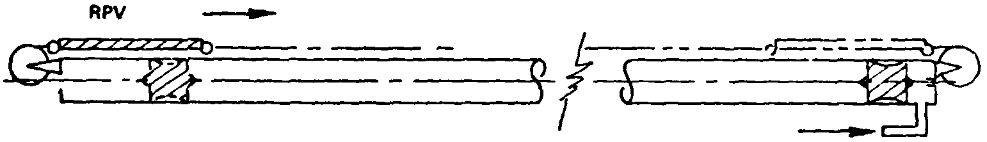

(c) Piston/Closed Loop Cable

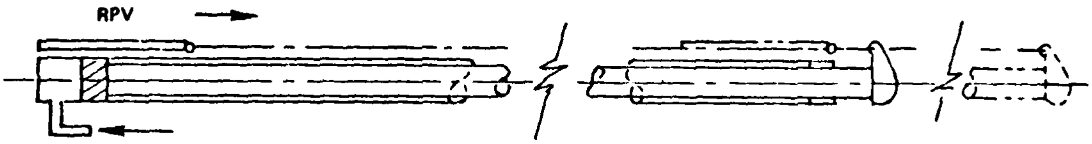

(d) Piston/Full Extension

Figure 15. Pneumatic Launcher Principles

Before discussing the individual concepts some basic parameters applicable to all of the pneumatic launcher concepts under consideration will be reviewed.

The contents of the remainder of this subsection are:

7.2.2 Pneumatic Parameters. The parameters of concern here are the basic considerations that will help compare one launcher concept to another.

a. Effects of Pressure/Volume Relationships

All of the pneumatic concepts of Figure 15 depend on stored energy in the form of compressed air contained in a reservoir. When the compressed air is released to actuate the launcher, the pressure in the reservoir drops as the volume exposed in the launcher increases in an unregulated, or blow-down system. The relationship between pressure and volume in this case can be estimated with the isentropic expression

$$\frac{P_2}{P_1} = \left(\left(\frac{V_1}{V_2}\right)\right)^{1.4} \qquad (12)$$

where $P_1$ = initial pressure, lb/ft$^2$
$P_2$ = final pressure
$V_1$ = initial volume, ft$^3$
$V_2$ = final volume

Since the final volume is actually the sum of the reservoir volume $V_1$ and the launcher actuator or cylinder volume, Equation (12) may also be written

$$\frac{P_2}{P_1} = \left(\frac{V_1}{V_1 + V_c}\right)^{1.4} \qquad (13)$$

where $V_c$ = volume of the launcher actuator. Equation (13) is used to plot the pressure ratio versus stroke length data of Figure 16. In this instance, the stroke is directly proportional to the launcher volume. In the figure the data is normalized by plotting the pressure ratio $P_2/P_1$ as a fraction of 1.0, and the stroke length in terms of percent for various reservoir-to-launcher volume ratios, $V_1/V_c$.

Figure 17, derived from the data of Figure 16, defines the mean pressure acting over the launcher stroke length as a fraction of $P_1$ versus various reservoir-to-launcher volume ratios. The significance of this information is illustrated in the diagrams of Figure 18, which compare different force/stroke distributions with the ideal constant force (minimum stroke) condition. The comparative effects of pressure have been interchanged with force here by assuming that the piston area A over which the pressure acts is the same for all cases.

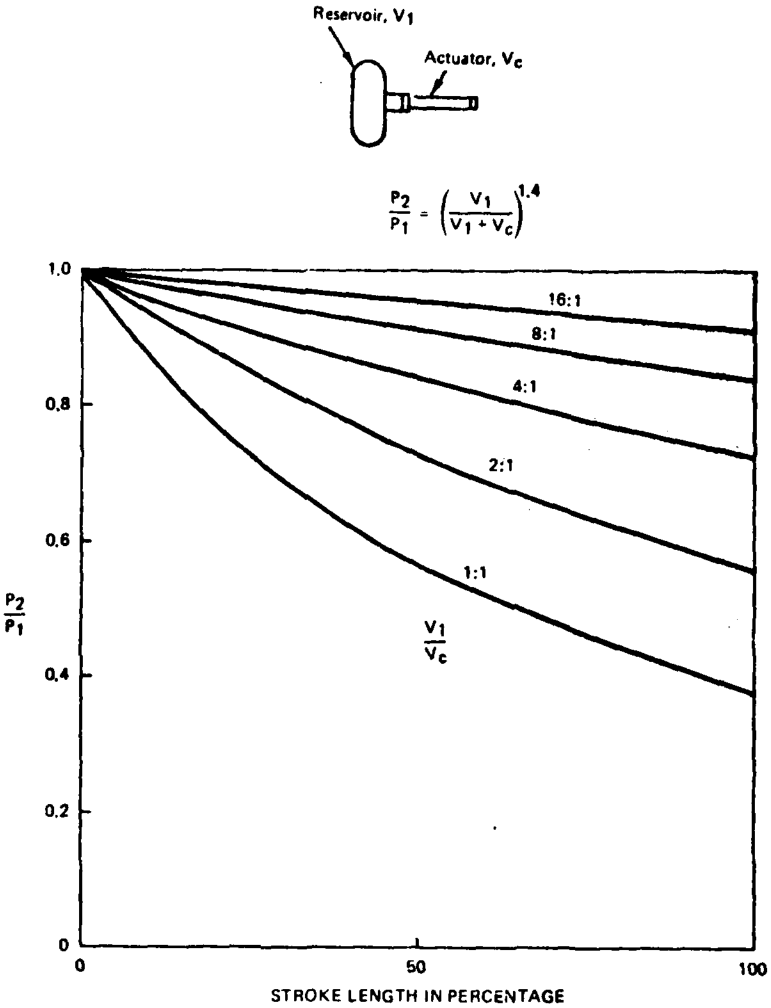

Figure 16. Pressure Ratio vs. Piston Stroke for Various Volume Ratios

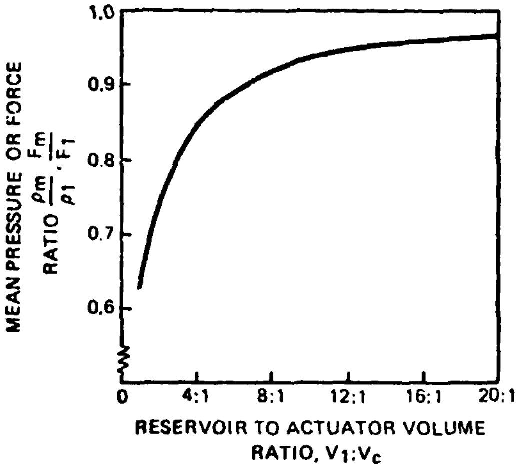

Figure 17. Mean Pressure (Force) Ratio vs. Volume Ratio

In Figure 18, diagram (a) represents a system in which the reservoir pressure "blows down" from a value $F_1$ to $F_2$ over the launcher stroke length $\ell$. It is assumed that the area under the $F_1$, $F_2$ curve is equal to $F\ell$; therefore the stroke distance $\ell$ is maintained. Starting with a 1:1 reservoir-to-launcher volume ratio, the $F_1$ value would be 1.0/.63 = 1.59. Thus if the mean force F corresponds to a reference acceleration of 12 g the initial acceleration due to $F_1$ would be about 19g. Referring back to Figure 17, it is seen that the situation can be rapidly improved by increasing the Vl/Vc ratio.

Comparative numbers based on a reference of 12 g are:

| $V_1/V_c$ | 1:1 | 4:1 | 8:1 | 16:1 |
|---|---|---|---|---|
| Initial g | 19 | 14 | 13 | 12.5 |

Another option is shown in Figure 18 (b) where $F_1$ is not allowed to exceed the referenced 12 g and the launcher length is increased by $\Delta\ell$ to maintain the area under the $F_1$, $F_2$ curve equal to $F\ell$. Representative lengths based on the ideal stroke = 22.5 feet for 12 g would be:

| $V_1/V_c$ | 1:1 | 4:1 | 8:1 | 16:1 |
|---|---|---|---|---|
| Stroke distance, ft | 35.7 | 24.4 | 24.5 | 23.4 |

An arrangement alternate to the pure blow-down system is one that keeps the effective value of F from exceeding a prescribed limit by employing a pressure regulation system, such as depicted by diagram (c). The reservoir is charged up to a pressure equivalent to $F_1$ but the regulation system maintains the force (pressure) at F as a maximum.

Diagram (c) shows the $F_1$, $F_2$ curve cutting off the corner of the ideal $F\ell$ rectangle near the end of the stroke distance, which would require a slight increase, $\Delta\ell$, in stroke length. This situation is representative of the fact that pressure regulation systems do not necessarily maintain a constant force throughout the launch stroke.

Based on the above review, it is seen that (1) the force (acceleration) pattern and the stroke length of the blow-down type pneumatic launcher are controlled principally by the ratio of reservoir-to-launcher actuator volume, $V_1/V_c$, and the reservoir's maximum pressure, and (2) that pressure regulation can maintain a maximum force not to exceed that corresponding to the desired maximum acceleration.

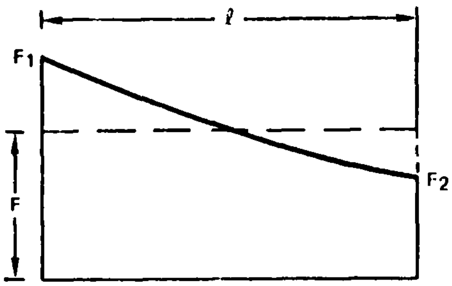

a. Blow-Down System With Low $V_1$:$V_c$ Ratio and $F_1 > F$

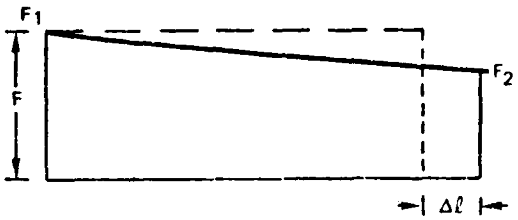

b. Blow-Down System With High $V_1$:$V_c$ Ratio and $F = F_1$

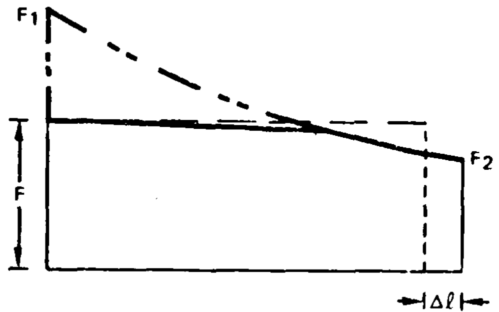

c. Pressure Regulated System With Low $V_1$:$V_c$ Ratio and With $F_1$ Limited to F

Figure 18. Force/Stroke Length Diagrams for Blow-Down and Pressure-Regulated Systems

b. <u>Compressor Parameters</u>

The important parameters in selecting a compressor for the pneumatic launcher are the pressure rating required to actuate the launcher system, and the delivery rate (usually specified in cubic feet per minute (CFM)). These parameters determine the time required to charge a reservoir as computed from Equations (14) and (15) on the following page.

The time required to initially charge the reservoir, beginning at atmospheric pressure, is

$$t = \frac{V_1 \, (P_1)}{P_a} \frac{1}{w} \tag{14}$$

and the time for subsequent charges where pressure above atmospheric remains in the reservoir is

$$t = \frac{V_1 \, (P_1 - P_2)}{P_a} \frac{1}{w} \tag{15}$$

where

$t$ = time, min.
$V_1$ = reservoir vol, $ft^3$
$P_1$ = reservoir charge pressure, psig (or compressor rating)
$P_2$ = reservoir residual press., psig
$P$ = ambient pressure, psi
$w$ = delivery rate, CFM

Figure 19, developed by means of equation (14), graphically relates compressor delivery rate and time to initially charge a volume of 1 cubic foot to 500 and 1000 psig. Referenced to the 1000 psig curve for convenience of interpolation, the total time $t_t$ for any pressure and volume other than unity may be computed as

$$t = \frac{P_1 V_1 t}{1000} \tag{16}$$

where t is the unit time read from the curve for a given delivery rate and $P_1$ and $V_1$ are defined as noted above.

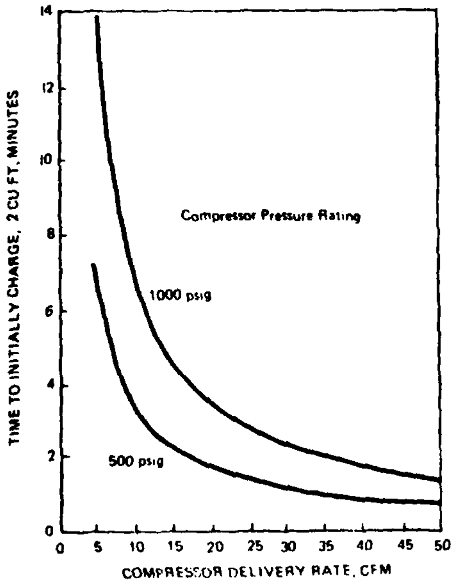

Figure 19. Time to Charge Unit Volume Reservoir

The nominal relationship of power to compressor performance is shown in Figure 20 by the statistical curves derived from Table 4. The curves indicate that the power required increases much more rapidly with delivery (CFM) than with pressure increases.

TABLE 4

COMPRESSOR DATA

| 2 STAGE | | | | |
|---|---|---|---|---|
| Pressure, psi | 500 | 500 | 600 | 1000 |
| HP | 2 | 10 | 5 | 5 |
| CFM | 7.4 | 36 | 15.2 | 12.7 |
| **3 STAGE** | | | | |
| Pressure, psi | 500 | 800 | 1000 | 3000 |
| HP | 15 | 10 | 15 | 5 |
| CFM | 49.5 | 30.3 | 41.2 | 9.55 |
| **4 STAGE** | | | | |
| Pressure, psi | 3500 | 3500 | 3500 | - |
| HP | 10 | 15 | 20 | - |
| CFM | 22 | 25.6 | 36.8 | - |

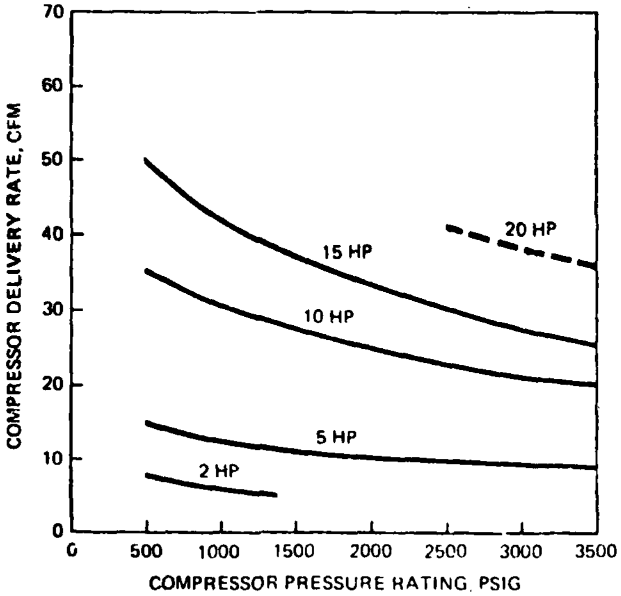

Figure 20. Nominal Power Compressor Requirements

### 7.2.3 Piston/Reeved Cable, Concept I-2A-1

a. General

The piston/reeved cable type of pneumatic launcher is typified by the LP-20 series of launchers (Reference 7). This series includes the LP-20-214 used for the U.S. Navy/TRA STAR Mini-RPV, the LP-20-219 used by the U.S. Army Aquila Mini-RPV, and a launcher for a friendly foreign nation. An increased capacity version, the LP-20-206, was built and factory-tested, but not deployed.

A later launcher concept, the stowable LP-20, aimed at the field deployment criteria of this study, is discussed in subsection 9.3.2.

The schematic of Figure 21 depicts the general arrangement of the launcher power system. The 2-to-1 force ratio of the reeved-cable system permits the piston/rod/sheave assembly to travel half as far as the RPV shuttle. This, of course, means that the piston force F is twice that applied to the RPV shuttle.

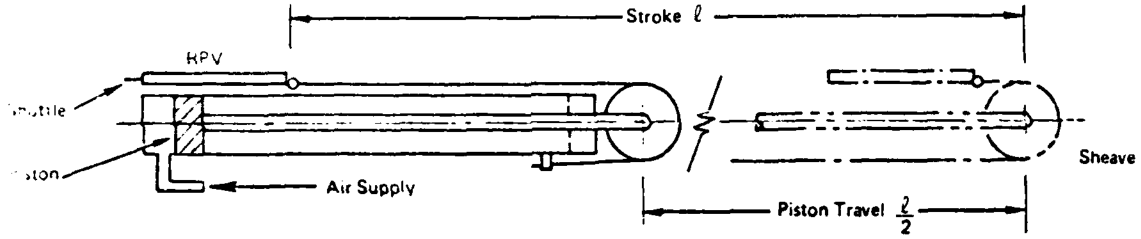

Figure 21. Piston (Reeved) Cannister Schematic

The general arrangement of the LP-20-214 launcher is shown in Figure 22. Outwardly, the appearance of the LP-20-206 is much the same as the LP-20-214 except for a header tank added to the LP-20 to increase the total reservoir volume. It will be noted in Figure 22 that there are actually twin side-by-side cables and sheaves sharing the piston force.

The basic structural members for these launchers are two extruded aluminum alloy tube-like shapes, which include the launcher guide rails and also serve as reservoirs for compressed air. The tubes, a manifold or header tank connecting the tubes at the battery end of the launcher, and a short section containing a ball valve between the manifold and the power cylinder define the reservoir capacity. With the ball valve closed, the reservoir is charged with compressed air to the appropriate pressure level. The launch sequence begins with opening the ball valve manually, which applies the reservoir pressure to the piston cavity.

---

7. DATA PACKAGE, All American Engineering, subsidiary of all American Industries, Wilmington, Del., 14 December 1977.

After the ball valve is opened, the additional volume exposed between the valve and the piston causes the reservoir pressure to drop until the compressor builds the pressure up again to its automatic cutoff level.

Firing is accomplished by actuating a small pneumatic cylinder that unlocks the hold-back latch. The release stroke of this latch is hydraulically damped to provide a controlled onset rate of about 400g per second, which, if linear, would reach 12g in about 30 milliseconds.

Near the end of the launch stroke, the shuttle is decelerated by a pair of linear pneumatic/hydraulic shock absorbers. The RPV leaves the shuttle to proceed to free flight during the shuttle deceleration interval. The shuttle is returned to battery position manually after the pressure in the cylinder cavity is released.

The overall stroke distance of the LP-20-214 is 264 inches (22 feet). The effective stroke, assumed to terminate at the point the shuttle contacts the extended shock absorber, is 21.2 feet.

Figure 22. AAE LP-20-214 Pneumatic Launcher

b. Analysis

## Pneumatic Definitions

Nomenclature for the designation of volumes for the LP-20 type launchers involves three distinct steps. These steps are identified by the sketches below:

1. Initial Reservoir Volume
   - Valve closed
   - Reservoir charged to $P_1$

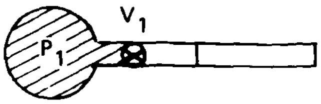

2. Intermediate Reservoir Volume
   - Valve open
   - Piston restrained
   - $P_1$ level is reinstated

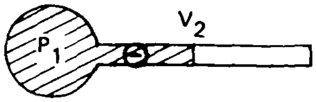

3. Final Volume
   - Piston released

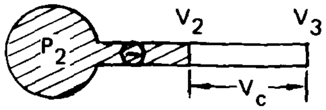

For a blow-down ratio of $V_2/V_c = 7.28$, the pressure change factor due to the piston travel during launch is approximately .835 with a mean of about .91 as read from Figure 17.

## LP-20-214/STAR Launch Performance

Eight sets of launch test data for the LP-20-214 launcher and the Navy TRA STAR Mini-RPV for atmospheric conditions near sea level standard are listed in Table 5.

Choosing Run number 4 as representing the maximum energy case we can estimate the mean accelerating force $F_m$ and the acceleration factor, n, as follows: The weight of the RPV + shuttle, W, is: 167.8 + 40 = 207.8 pounds. The change in kinetic energy is:

$$\Delta KE = \frac{W\,V_1^2}{2g}$$

$$= \frac{207.8\,(68.9 \times 1.69)^2}{64.4}$$

$$= 43749 \text{ ft-lb}$$

and the required mean accelerating force is:

$$F_M = \Delta KE/\ell$$
$$= 43749/21.2$$
$$= 2073 \text{ lb}$$

where $\ell$ is the effective stroke in feet. The mean acceleration factor is:

$$n = F_m/W$$
$$= 2073/207.8$$
$$= 9.98 \text{ g}$$

TABLE 5

LP-20-214 LAUNCHER/STAR FLIGHT TEST DATA

| Run | RPV Wt, Lb | $V_1$, Knots | Launcher Angle θ, Deg | Ambient Temp, Deg F | Launcher Pressure, psig | Energy $\Delta KE$(1), Ft-Lb |
|---|---|---|---|---|---|---|
| 1 | 170 | 66 | 10.5 | 68 | 410 | 40570 |
| 2 | 170 | 63 | 10.5 | 64 | 400 | 36965 |
| 3 | 168.8 | 68.1 | 13.0 | 75 | 440 | 42945 |
| 4 | 167.8 | 68.9 | 13.0 | 85 | 450 | 43749 |
| 5 | 168 | 68.0 | 13.0 | 70 | 450 | 42655 |
| 6 | 168.8 | 68.3 | 13.0 | 85 | 440 | 43198 |
| 7 | 167.6 | 67.7 | 13.0 | 67 | 450 | 42198 |
| 8 | 164.3 | 69.4 | 13.0 | 79 | 450 | 43639 |

(1) Based on Wt = RPV + 40 lb

## Launch Parameters, Maximum Criteria

Launch parameters for the maximum criteria of this study, projected from the LP-20-214 design, are estimated as follows. Based on a stroke of 22.5 feet and a mean force of 2760 pounds, corresponding to 12g acceleration for a 230-pound launch weight, the initial reservoir pressure would have to be increased to about:

$$P_1 = \frac{2760}{2073} \quad (450)$$

$$= 599 \text{ psi}$$

for an increase of about 33 percent.

## Energy Absorption

One of the problems for most launchers is bringing the moving parts to rest at the end of the launch stroke. For the LP-20 type launcher, the piston assembly and the shuttle develop appreciable energy over their respective strokes that must be attenuated in a short distance.

For example, the energy level of the shuttle alone for the LP-20-214 used for the STAR operation, at a weight of about 40 pounds at the end of its run, is approximately:

$$\Delta KE = \frac{W_V}{2g}$$

$$= \frac{40\ (68.9 \times 1.69)^2}{64.4}$$

$$= 8421 \text{ ft - lb}$$

with a shock absorber stroke of 10 inches, the mean force is about

$$F_m \ell = 8421$$

$$F_m .838 = 8421$$

$$F_m = 10049 \text{ lb}$$

which is the equivalent of about 251g and the time interval is estimated at 14 milliseconds. Peak loads may of course be higher than the mean values estimated above.

The load is divided between two pneumatic/hydraulic linear shock absorbers at 5025 pounds each. The shock absorbers have adequate capacity for handling such loads. The principal effect is observed in tendencies of the launcher frame to deflect and "strain at the leash" as the moving parts are brought to rest. Assuming that the shuttle impact load affects a total launcher weight of 1,000 pounds the momentary acceleration of the whole assembly is about 10g. In the very short time interval involved, this seemingly drastic effect is manifested mostly as a shudder in the launcher framework, but the launcher does tend to move enough that secure attachments to a base are required. The eccentricity of the shock absorber axis with respect to the launcher frame tubes aggravates the dynamic effects by subjecting the frame to a bending moment.

### LP-20-206 Launcher

A later version of the LP-20 launcher family, the LP-20-206 incorporates a larger reservoir volume that gives a 12.73:1 volume ratio ($V_2/V_c$).

This increase would make the estimated mean force (pressure) about .95 times the maximum (Reference 17), which would contribute to shortening the stroke length slightly.

### Adaptability

The performance chart, Figure 23, indicates that the LP-20 type launcher could be employed for the lower weight RPVs (120-pound RPV, launch weight = 138 pounds, 50 knot end velocity, n = 6g), by adjusting the reservoir pressure.

## c. Conclusions

In view of the fact that the LP-20 type pneumatic launcher has been employed successfully in the TRA/Navy STAR and the Lockheed/Army Aquila programs, it represents a viable launcher concept with appreciable operational background.

The pneumatic launcher concept is usually capable of some growth in capacity by increasing the nominal reservoir pressure and is adaptable to a wide range of launch energy requirements less than its maximum capacity.

Areas of concern at this time relate to life expectancy of components such as the reeved cable system and those elements affected by the energy absorption system.

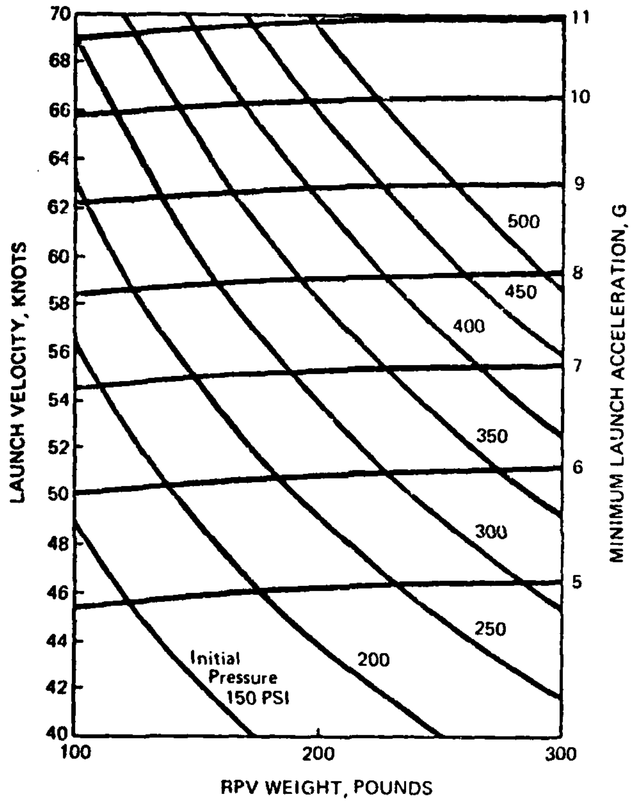

Figure 23. Performance Chart, LP-20-214 Launcher

### 7.2.4 Piston/Closed-Loop Cable, Concept I-2A-2

#### a. General

The piston/closed-loop cable pneumatic launcher concept is shown in Figure 15 (b). In this case the piston travels from the far end of the cylinder toward the battery end. A closed-loop cable system passing over sheaves at each end of the cylinder is attached to both ends of the piston. As the piston is forced down the cylinder under pressure from a compressed air supply, the shuttle is accelerated forward to launch the RPV. The closed-loop cable concept was employed by the NSWC in shipboard launch and recovery trials employing the Falcon type Mini-RPV, which has a gross weight of about 60 pounds. In this application the cylinder assembly was a commercially available component with a 20-foot total stroke, about 16 feet of which is the effective stroke.

The piston/closed-loop cable concept is by definition a one-cable-per-cylinder arrangement. However, if a launch capacity larger than could be logically incorporated in one cylinder is foreseen, it could conceivably be achieved by mounting two or more cylinders in a side-by-side arrangement. However, coordinating the force applied to the shuttle by multiple cables may require force sensing elements to modulate pneumatic pressure in the cylinders.

#### b. Analysis

Although the energy output required of the piston/cable type launcher in the shipboard operations with the Falcon is estimated at about one-tenth that required for a 200-pound RPV at 78 knots, it is reported to have appreciable additional capability.

Nominal parameters for the piston/cable type concept which would satisfy the maximum criteria of this study (200-pound RPV, 230-pound launch weight, and 78 knots end speed), would be the same as for the projected performance of the LP-20-214 launcher (subsection 7.2.3)except for the following: The piston area would be halved, and the piston stroke would be twice that of the LP-20-214 type. The final volume and the piston pressure would each be identical to that of the LP-20-214 type.

One of the potential problems that comes to mind is the slackening of the cable on the unloaded half of the loop. The loaded half of the loop, under tension from the piston load and the inertia of the RPV/shuttle mass, will stretch to some extent. For example, assume a .25-inch-7x19 strand stainless steel aircraft cable that has a breaking strength of about 6400 pounds is used. For a maximum 12 g acceleration of the RPV at a 230-pound launch weight the load is 2760 pounds. With an elongation of .006 inches per inch, the total stretch over 22 feet would be about .006 (22x12) = 1.58 inches. Pretensioning the cable system could alleviate the stretch problem to some degree. Possible trade-offs are: cable size versus sheave size versus spring-loaded sheave mounts versus system overall stiffness.

Another potential problem that may diminish in significance due to the short time element involved in the launch operation is the pneumatic seal where the loaded cable enters the pneumatic cylinder. This is a rubbing seal problem with a final speed of about 131 feet/second (7860 feet per minute).

The shock absorbing system to arrest the shuttle at the end of the stroke could be a derivative of the arrangements used for the other pneumatic launchers of this study. However, every effort should be made to design a system with as little load eccentricity as possible.

c. Concluding Remarks

The piston/closed-loop cable pneumatic concept has technical credibility in that it has been employed to launch a moderate weight mini-RPV.

A few apparent problems have been discussed, none which are judged to be beyond solution within the state of the art and with normal engineering practices. Moderate technical risks in developing this concept could be expected.

One major unknown at this time is how the concept in general would translate to the size and energy levels required for the maximum criteria of this study.

There is no substantiative evidence indicating that the piston/closed-loop cable concept could not eventually be developed into a workable piece of hardware. On the other hand, there appear to be no potentially outstanding advantages over other, more highly developed pnuematic concepts in this study.

### 7.2.5 Piston/Full Extension, Concept I-2A-3

a. General

The piston/full-extension concept depicted in Figure 15 (c) has been employed in one instance, at least, in a small size (about a 6-foot stroke) to launch a flexwing, or parawing, RPV of approximately 70 pounds gross weight at a launch speed of about 30 knots. The subject vehicle was the TRA FLEXBEE, built and flown for the U.S. Marine Corps. This particular launcher was powered by a hot gas pyrotechnic charge. However, it could have been readily adapted to pneumatics.

Later, a full-extension type pneumatic type launcher was proposed for the STAR Mini-RPV. It became evident in the early stages of study and design that the fully extended piston posed some dynamic problems such as "whipping" as the piston tube neared the end of its stroke and during the energy absorption phase. It appears that this concept is size sensitive, in that it worked well in a small size but severe problems surfaced when the size was three times as great or larger.

One other unique potential problem with this type launcher is that an RPV that is sluggish in starting its climb may collide with the extended piston.

b. Conclusions

It is concluded that any of the other pneumatic concepts discussed in this study would be preferable to the extended piston concept sized for the maximum criteria of this study.

### 7.2.6 Free Piston/Slotted Cylinder, Concept I-2B

a. General

A free-piston pneumatic launcher basic concept is shown schematically in Figure 24 and a general arrangement drawing of a Fairchild, Stratos Division application (Reference 8) is presented in Figure 25. The essence of the launcher is the launch tube, which is a longitudinally slotted cylinder with a steel ribbon nested inside the bore to seal the slot. The ribbon is restrained at both ends so that it does not travel along the cylinder. The piston contains several broached ramps that guide the ribbon away from (and towards) its sealing position as the piston travels along the cylinder. The piston includes a projection that extends through the slotted cylinder wall so that the force generated by internal pressure may be applied externally. Cup seals are attached to both ends of the piston to prevent blow-by. Thus, launch pressure may be applied to one end of the piston and, at the proper time, deceleration pressure may be applied to the opposite end. In addition, return pressure may be applied so that after launching, the piston may easily be returned to the "ready" position.

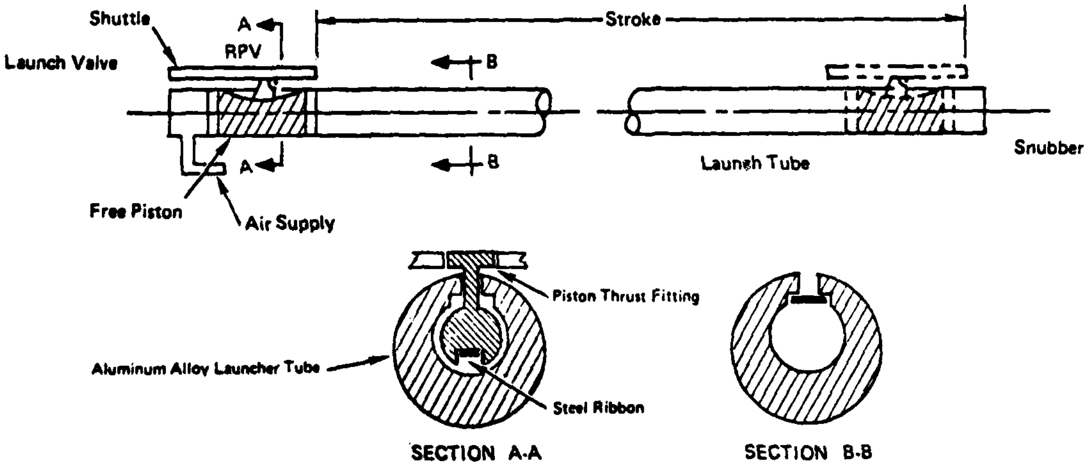

Figure 24. Free-Piston Launcher Schematic

---

8. DATA PACKAGE, Fairchild, Stratos Division, Manhattan Beach, Calif.

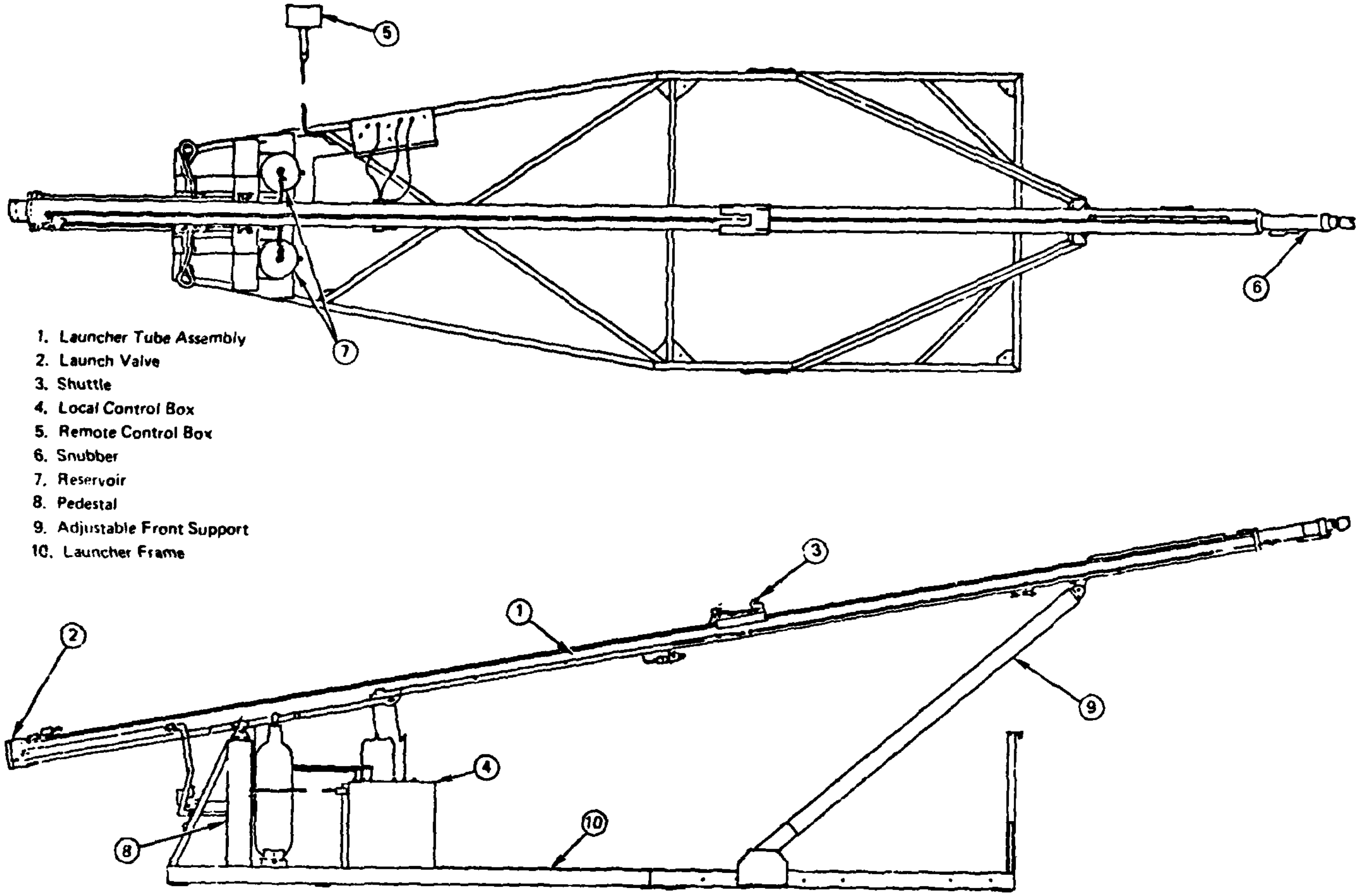

Figure 25. Free-Piston/Slotted Cylinder General Arrangement

As the RPV/shuttle assembly, propelled by the free piston, approaches the end of its stroke a ramp on the upper surface of the guide rail lifts a latch release roller to open the latch and allow the RPV to fly free as the shuttle is decelerated.

The kinetic energy of the free piston and the shuttle is absorbed at the end of the launch stroke by an internal pressurized pneumatic piston snubber.

After the launch cycle is completed, a return valve permits low regulated pressure to enter the end of the launch tube and return the free piston to the "ready" position. This opens a return switch and a return lockout circuit to prepare the system for subsequent launchings. The return valve can be operated manually or selected as an automatic function.

## b. Analysis

### Free Piston Launcher Performance

Information available at this time on the performance of the free-piston launcher is shown in Table 6. These data record a series of seven development test runs using ballast weights instead of a flight article RPV. Accelerations vary from about 6 g for run #1 and about 10.5 g for run #6.

The energy levels shown can be determined as the change in kinetic energy. Using run #7 as a typical case

$$\begin{aligned} \Delta KE &= \frac{W}{2g} (V_1)^2 \\ &= \frac{215.3\ (69.4 \times 1.69)^2}{64.4} \\ &= 45989 \text{ ft-lb} \end{aligned}$$

The mean accelerating force required is estimated from

$$\begin{aligned} Fm &= \Delta KE/\ell \\ &= 45989/22.5 \\ &= 2044 \text{ lb} \end{aligned}$$

where $\ell$ is the effective stroke length, ft; the mean acceleration factor is then

$$\begin{aligned} n &= Fm/w \\ &= 2044/215.3 \\ &= 9.49 \text{ g} \end{aligned}$$

The maximum energy output occurs in run #7 at about 45,989 foot-pounds. To meet the maximum criteria of this study (230-pound RPV-plus-shuttle weight at an end-velocity of 78 knots) the energy required is about 62,059 foot-pounds; corresponding working pressures for this amount of energy would be about

| | Reservoir | Final Pressure | Launch |
|---|---|---|---|
| psig | 1840 | 1208 | 920 |

## Energy Absorption

The pneumatic snubber as indicated in the schematic of Figure 24 is an integral part of the pneumatic system. The snubber system absorbs the energy of the free piston and the shuttle at the end of the stroke. The piston is concentric with the snubber and the shuttle is slightly eccentric.

In the tests from which the data of Table 6 was recorded the effects of absoring the energy of the piston and the 13-pound shuttle at the end of the stroke could be noticeable in that the foot pads at the aft end of the trailer "walked" forward a fraction of an inch. In high-speed movies the slotted cylinder, the rail, was noted to incur a wave-like motion.

TABLE 6

FAIRCHILD FREE-PISTON LAUNCHER DEVELOPMENT TEST DATA

| RUN | TEST WT & CARRIAGE, lb | $V_1$, KNOTS | LAUNCHER ANGLE $\theta$, DEG | RESERVOIR PRESSURE, psig | FINAL PRESSURE, psig | LAUNCH PRESSURE, psig | ENERGY $\Delta KE$, ft - lb |
|---|---|---|---|---|---|---|---|
| 1 | 215.3 | 55.6 | 10 | 1100 | 830 | 400 | 29518 |
| 2 | 189.3 | 59.0 | 10 | 1000 | 750 | 400 | 29224 |
| 3 | 189.3 | 62.6 | 10 | 1000 | 700 | 450 | 32899 |
| 4 | 189.3 | 66.8 | 10 | 1100 | 700 | 500 | 37462 |
| 5 | 154.3 | 70.3 | 10 | 1100 | 780 | 450 | 33819 |
| 6 | 154.3 | 73 | 10 | 1100 | 750 | 500 | 36467 |
| 7 | 215.3 | 69.4 | 10 | 1200 | 800 | 600 | 45989 |

This particular launch tube design is patented by Fairchild Stratos. However, a similar principle is employed in industrial applications for moving or positioning work, usually at rather low speeds, and in the steam catapults on Navy aircraft carriers.

The free piston system, as indicated by the drawings, incorporates a launch valve which is, in effect, a pressure regulator. It controls the pressure in the launch tube, and hence, the piston force, within relatively narrow limits. Compressed air is supplied from two reservoirs totaling 2000 cubic inches in volume.

A reference pressure for the launch valve (regulator) is established by a manually adjustable launch pressure regulator. The correct setting of the regulator is correlated with applicable launch parameters.

To initiate the launch cycle, regulated pressure is supplied that causes the launch valve to open, thereby introducing the launch supply pressure into the volume behind the launch valve. Thus, at the proper pressure, the launch valve will tend to close and thereby modulate the pressure in the volume behind the launch piston as it proceeds through its stroke.

Development plans for the free-piston launcher call for a launch shuttle that will interface with the XMQM-105 Aquila Mini-RPV. The shuttle will weigh about 34 pounds. In this case, and assuming the free piston to weigh about 5 pounds, the energy to be dissipated at the end of the stroke would be about the same as under "Energy Absorption" in subsection 7.2.3.

### Adaptability

The pressure-regulated free-piston launcher can be adapted to the requirements of the lesser RPV criteria of this study (120-pound RPV, launch weight = 138 pounds, 50-knot end velocity, $\eta$ = 6 g) with lower reservoir pressures and appropriate regulator adjustments.

### Concluding Remarks

The free-piston pneumatic launcher has appreciable background in successful applications smaller in capacity than would be required to meet the criteria of this study. However, as noted earlier, a full-scale launcher is undergoing development tests. There appear to be no physical reasons why the development-test hardware could not be projected upward in size to meet the maximum launch criteria of this study (200-pound RPV, 78-knot end velocity). A launcher designed for those launch criteria could also be adjusted down to the launch parameters of the criteria of this study (120-pound RPV and 50-knot end velocity).

The free-piston launcher concept will be investigated further in Phase II of this report to determine its suitability to mobility and other requirements of the U. S. Army tactical environment.

An area of concern in connection with the free-piston launcher as depicted in Figure 25 is the relatively small size of the RPV carriage or shuttle. With the center of mass of the RPV displaced a distance above the shuttle, the inertia loads of the launch mass will cause relatively high reaction couple loads where the shuttle contacts the surface that it slides on. The concern is that any nonuniformity in the inertia load and/or the friction resistance caused by the couple load could lead to unfavorable "lurching" of the RPV. Also of interest is the life expectancy of the free piston and the slotted cylinder due to the eccentric loads imposed on the piston by the shuttle during the launch stroke.

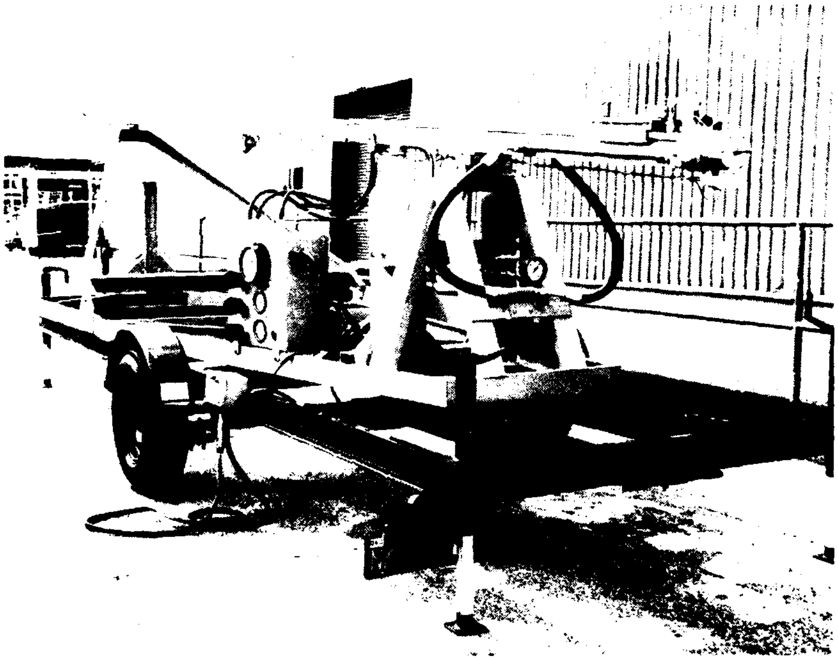

Figure 26. Free-Piston Launcher Hardware

### 7.2.7 Inflatable Tube, Concept I-2C

#### a. General

The inflatable tube pneumatic launcher, so named because a length of inflatable tube is the basic propulsion element of the system, is illustrated in Figure 27. As will be seen in the figure, the launch motive force is created by pressurizing an inflatable tube flattened between two rollers that are an integral part of the launcher shuttle. Actually, the inflatable tube for this particular launcher was a 3-inch high-pressure polyester fire hose. When the hose expands as pressure is applied, an accelerating "piston" propels the rollers and consequently the shuttle to the desired end-velocity for launching. Near the end of the stroke, slits in the hose vent the pressure in the hose, and a wedge-shaped fence decelerates the shuttle.

The launcher (Reference 9) shown in Figure 27 has been used to successfully launch the Navy/Applied Physics Lab (John Hopkins University) Mini-RPV, known as the RPD-2, characteristics of which are tabulated in Figure 28 (a).

#### b. Analysis

Figure 28 (b) shows a representative acceleration versus time curve for this particular inflatable tube launcher with a peak of about 10g. The sudden decay of acceleration with time leaves an estimated mean acceleration of about 3.6 g. Other information shows a similar curve of pressure versus time, which shows a launcher peak of about 275 pounds per square inch from a bottle (reservoir) pressure of 600 pounds per square inch.

The peaks and sudden pressure and acceleration decays shown are not necessarily an inherent characteristic of the inflatable tube concept. In this case, they are probably due more to (1) a rather small reservoir volume compared to the hose volume (low blow-down ratio) and (2) nonoptimum pneumatic plumbing.

The energy output of the NSWC launcher in its present configuration is estimated to be from 10 to 15 percent of that required for the 200-pound-class RPV at 78 knots. If we enlarge the system to meet such requirements about seven of the same size hoses would be needed. However, it appears that the system could be improved considerably with relatively larger storage volume capacity and better plumbing, which could cut down the number of hoses required. Other options would be larger hose diameters.

Technical information available on the inflatable tube launcher is insufficient to adequately define design parameters and to predict

---

9. DATA PACKAGE, Naval Weapons Center, Dahlgren, Va., 21 October 1977

performance for the criteria of this study. A major uncertainty is how the "piston force" relates to the net horizontal accelerating force component. Factors involved are indicated in the sketch.

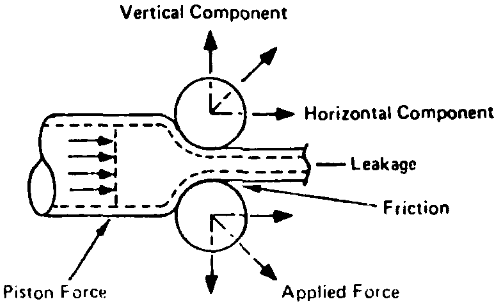

Assuming that an applied force acts on the rollers as shown, the resulting vertical components would react to each other through the structure linking the rollers together. Rolling friction forces would also result from the vertical forces imposed on the rollers by the inflatable tube. Tube leakage in the part of the hose compressed by the rollers can be considered as a trade-off between force reductions due to pressure loss and too much grip between the rollers, increasing the friction.

### c. Concluding Remarks

The inflatable tube launcher discussed above, which can be described as an ingenious device, was put together within the confines of a low budgeted effort to perform a special task. Technical information in greater depth, including development test results, will be required to satisfactorily evaluate the inflatable tube launcher in terms of the criteria set for this study.

## 7.3 Hydraulic, Concept I-3

### 7.3.1 Introduction

Hydraulic power units in the form of linear actuators and motors have been used in aerospace applications for several decades. Hydraulic "engine" systems powered by compressed gas (air or $GN_2$), usually employed in stationary applications, are also recognized as a viable concept. A mini-RPV launcher built by Dornier of West Germany based on what appears to be the hydraulic engine principle is discussed in this subsection.

In considering hydraulic power systems in general for Mini-RPV applications, the linear actuator powered by a stored gas source is probably the most logical choice since a hydraulic motor system would have to deliver a peak power of about 660 net horsepower to accelerate the RPV/ shuttle weight for the 200-pound-class RPV to 78 knots end velocity.

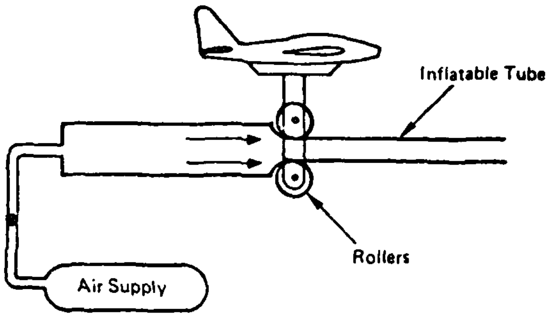

(a) Inflatable Tube Launcher Principle

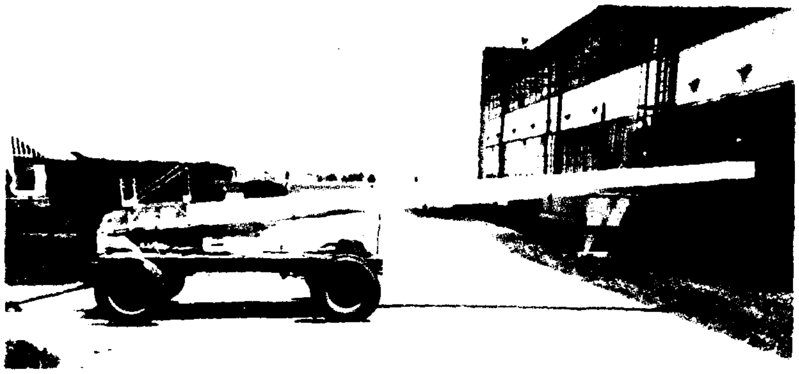

(b) Launcher Side View

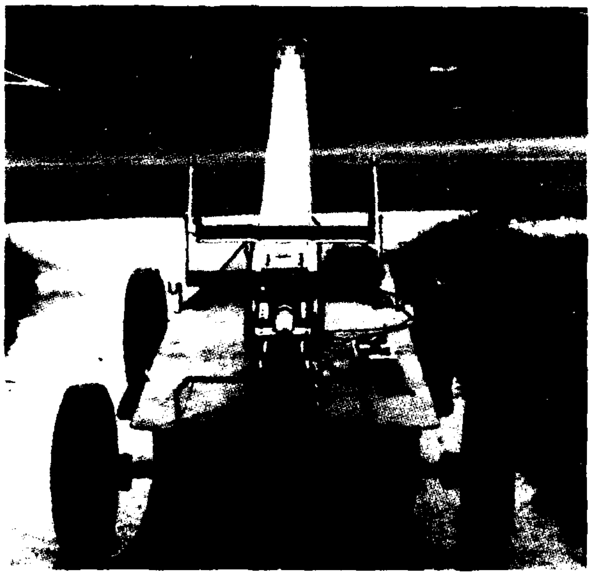

(c) Launcher End View

Figure 27. NSWC Inflatable Tube Launcher

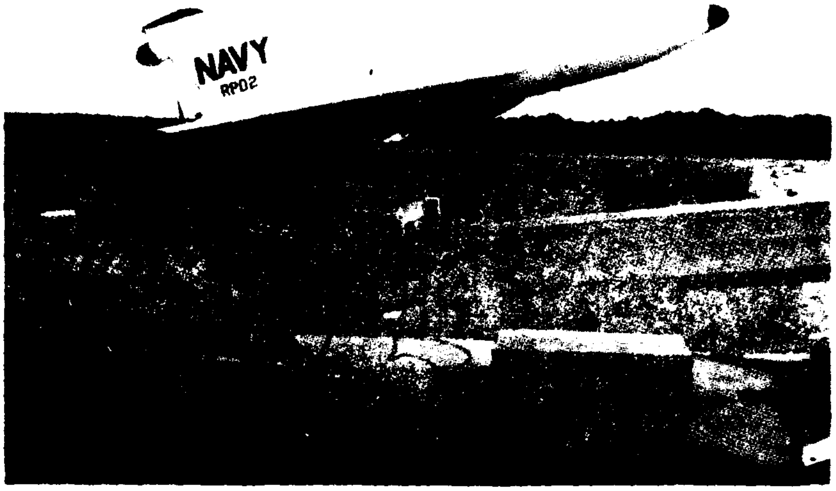

(a) Characteristics, RPD 2 Navy/APL Mini-RPV

| | |
|---|---|
| Wing Span | 80 in. |
| Length | 79 in. |
| Height | 26 in. |
| Wing Area | 19.5 $ft^2$ |
| Launch Weight | 70 lb |
| Engine, McCulloch 101A | 12 hp |
| Cruise Speed | 65 knots |
| Max. Speed | 150 knots |

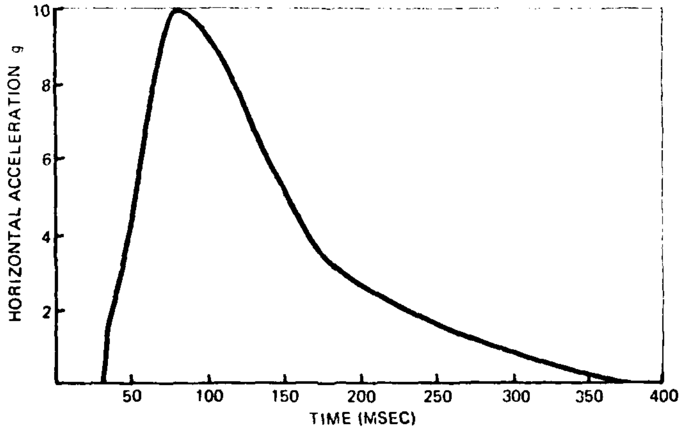

(b) Acceleration vs Time, NWSC Launcher

Figure 28. RPD-2 Mini-RPV Launcher Characteristics

## 7.3.2 Hydraulic Engine, Concept I-3A

### a. General

A hydraulically powered mini-RPV launcher built by Dornier GmbH of West Germany (Reference 10) is shown in Figure 29. A general arrangement sketch of the launcher, designated as the DO KA 01, is presented in Figure 30 (a). The numbered components identified in the figure were translated from the German language and hopefully the launcher design was not maligned in the process. A tension-type hydraulic piston/rod assembly in a cylinder drives a reeved (4:1) cable system that tows the RPV shuttle, to its final final launch speed. Details of the Dornier hydraulic system are not available at this writing. However, a schematic of the hydraulic system devised by conjecture and believed to be a similar concept is shown in Figure 31.

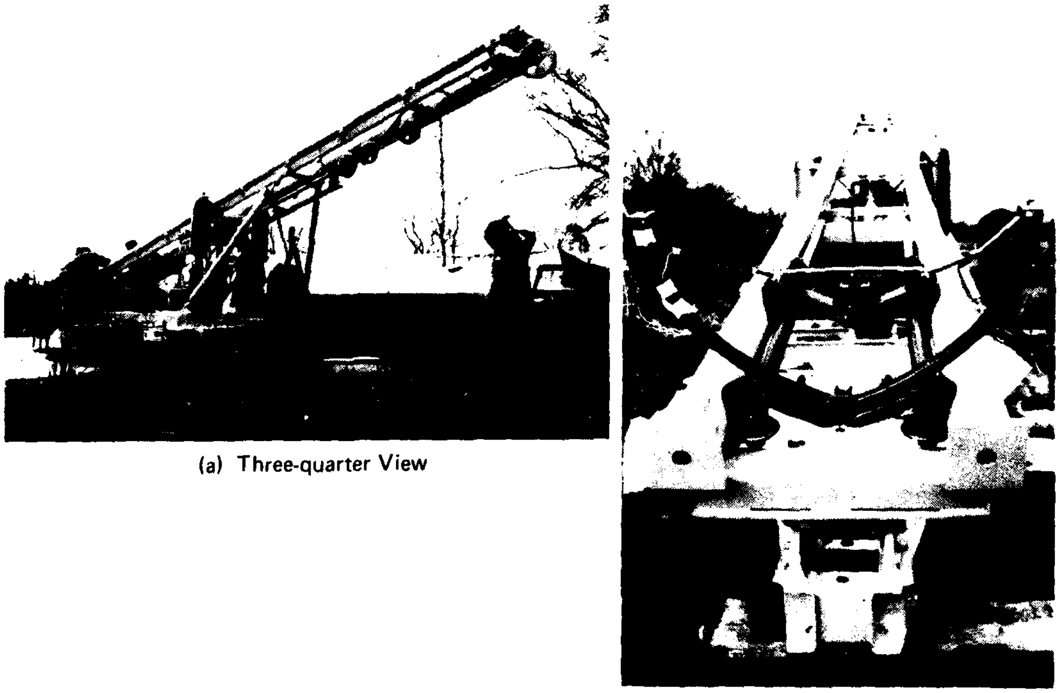

(a) Three-quarter View

(b) View Looking Along Launcher from Start Position

Figure 29. Dornier Hydraulic Launcher

---

10. DATA PACKAGE, Dornier GmbH, Friedrichshafen, West Germany

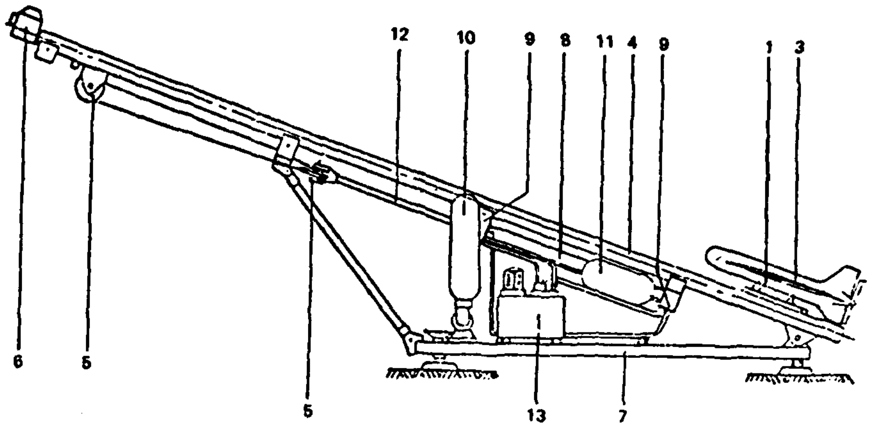

1. Shuttle
* 3. Mini-RPV
4. Launch Ramp
5. Pulley
6. Hydraulic Brake
7. Launch Carriage
8. Hydraulic Cylinder
9. Shutoff Valve
10. High Pressure Reservoir
11. Low Pressure Reservoir
12. Piston Rod
13. Hydraulic Unit

NOTE: * No. 2 is deleted.

(a) Hydraulic Launcher General Arrangement

| | |
|---|---|
| Mini-RPV Weight | 70 kg |
| Shuttle Weight | 17 kg |
| Ramp Angle | 15 Deg |
| Launch Velocity | 120 km/h = 33.3 m/s |
| Acceleration | 10 g |
| Launch Time | 0.34 sec |
| Launch Stroke | 5.66 m |
| Onset Time | 0.024 sec |
| Pulley Ratio | 4:1 |
| Cylinder Force | 5000 kp |
| Onset Distance | 0.40 m |

(b) Launcher Performance

Figure 30. Dornier Hydraulic Launcher Characteristics

In this system, the source of energy is high pressure gas (air or $GN_2$) stored in a reservoir (Item 1). The high pressure gas, released by a control valve (2), passes thru a pressure regulator (3) into a high pressure pneumatic/hydraulic cylinder (4). A free piston (or elastomeric bladder) in this cylinder transfers the gas pressure to hydraulic fluid pressure. The pressurized fluid flows through a throttle valve (5) into the hydraulic power cylinder (7), applying force to the piston/rod assembly (6), which tensions the reeved cable system. As the piston travels (A to B) along the hydraulic cylinder (7), fluid in the cylinder ahead of the piston is forced into a low pressure hydraulic/pneumatic cylinder (8), which transfers the hydraulic pressure to pneumatic pressure. The pneumatic pressure generated in the low pressure system charges a reservoir (9). To reset the system, gas in the high pressure cylinder (4) is released at the control valve (2). A check valve (11) bypasses the pressure regulator (3) in this reverse flow process. The high pressure reservoir (1) is of course sealed off at this time. The pneumatic pressure in the reservoir (9) now forces the hydraulic fluid in the low pressure cylinder back into the power cylinder (7) forcing the piston to travel back to battery position. As the piston travels from B to A, hydraulic fluid flows back into the high pressure cylinder (4) forcing the free piston back to its initial position.

By closing the pressure relief port of the control valve (2), the system is ready to "fire" again. The rapidity of sequential launch operations would depend on (1) the performance of a compressor system chosen to recharge the high pressure reservoir or (2) the availability of additional precharged reservoirs.

### b. Analysis

Using the Dornier launcher performance information given in Figure 30, we can deduce other information of interest.

With the given Mini-RPV and shuttle weight total of 87 kilograms (191.4 pounds) and the launch velocity of 33.3 meters/second (109.2 ft/sec) the change in kinetic energy exerted by the launcher is:

$$\Delta KE = \frac{W}{2g} (V_1^2 - V_0^2)$$

$$= \frac{191.4}{2(32.2)} (109.25)^2$$

$$= 35473 \text{ ft-lb}$$

The mean launch force corresponding to the above energy level is:

$$F_m = 35473/\ell$$

$$= 35473/18.57$$

$$= 1910 \text{ lb}$$

where $\ell = 5.68$ M, (18.57 ft)

The nominal piston force for the linear hydraulic actuator, considering the 4:1 cable reeving ratio, is

$$F = 1910\ (4)$$

$$= 7640 \text{ lb.}$$

In terms of the maximum criteria for this study, the kinetic energy output estimated above would have to be increased from 35,473 to about 62,059 foot-pounds or by about 75 percent. The mean launch force of 1910 pounds, which corresponds to about 10g for the 191.4-pound launch weight, would have to be increased to the equivalent of 12g for 230 pounds, or 2760 pounds, an increase of 45 percent. The hydraulic actuator force would have to be (neglecting friction, etc.) 2760 x 4 = 11,040 pounds. And the length of launch stroke would have to be increased to 22.5 feet minimum.

### c. Conclusions

The differences noted above between the numbers deduced for the DO KA 01 launcher performance and the maximum criteria for this study should have no particular significance insofar as the viability of this concept is concerned. The increased performance desired could possibly be achieved by (1) increasing the working pressure along with some design changes or (2) redesigning to the more demanding criteria.

There appear to be no particular points of preference for the DO KA 01 pneumatic launcher system for the intended U.S. Army field operations. Dual-system (pneumatic and hydraulic) operation in the field environment would also probably complicate maintenance requirements.

An apparent disadvantage of significance for the DO KA 01 as presently configured appears to be in the area of assembly and disassembly for field operations by two men in accordance with the guidelines stated in subsection 3.0 of this study.

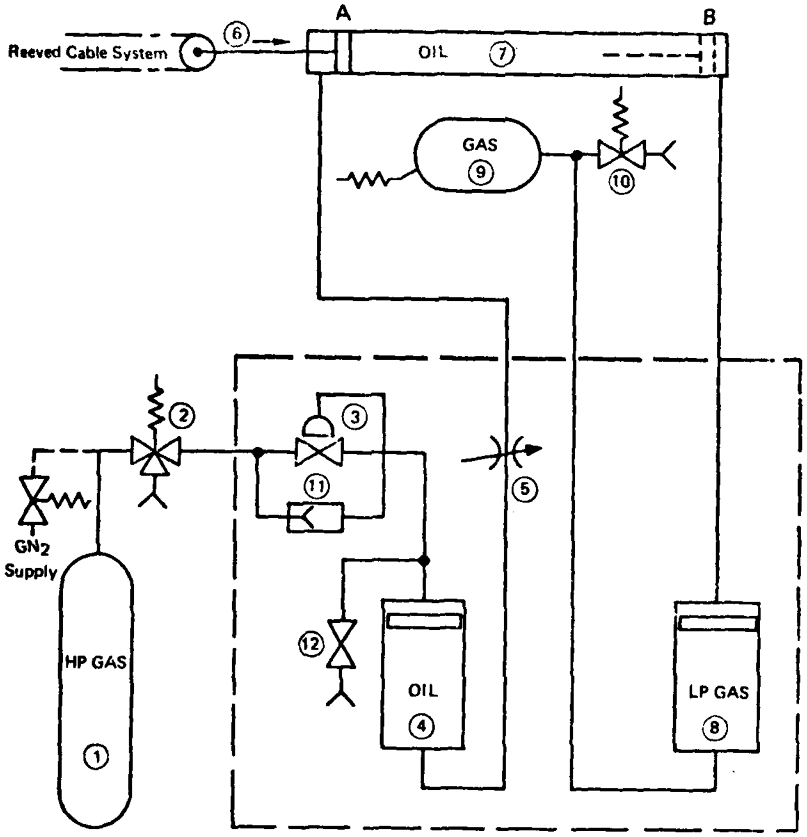

1. High Pressure GN2 Reservoir
2. Control Valve
3. Pressure Regulator
4. High Pressure Pneu./Hyd. Cylinder
5. Throttle Valve
6. Piston/Rod Assem.
7. Hydraulic Cylinder
8. Low Pressure Hyd./Pneu. Cylinder
9. Low Pressure GN2 Reservoir
10. Recharge of Vent Valve
11. Check Valve
12. Relief Valve

Figure 31. Hypothetical Hydraulic Engine Launcher

## 7.4 Rocket, Concept I-4

### 7.4.1 Introduction

The three concepts for using the rocket to launch Mini-RPVs are discussed in this subsection. The first of these, the zero length launcher, has been employed routinely for some time for RPVs of about 300 pounds to 3,000 pounds gross weight, and in the past much larger aircraft have also been rocket launched by this method. In the zero length method the RPV is rocket boosted from rest upward along a more or less ballistic path to a safe speed for controllable flight, where the rocket booster drops away.

The second concept is the finite length launch, so called because the RPV is rocket boosted along a ramp (or rail), which guides the RPV until it reaches a safe controllable flight speed.

A possible combination of the zero length and finite length concepts is one where the RPV is guided by rails for a short distance before attaining its desired launch speed, then continues to be boosted in free air until the desired end velocity is reached.

A third concept discussed is the pyrotechnic motor, which is basically a rotary device. It derives power from two or more rocket nozzles or motors so disposed about the axis of rotation that torque is produced as the rockets are fired, and the torque is converted to a linear force by means of a cable (or tape) reel driven by the pyro-motor. The cable tows the RPV until flight speed is reached. The pyro-motor would use less propellant to launch than the zero length or finite concepts, for given RPV weight and speed goals.

Since the zero length launch method has considerable background in operational equipment it is assumed to be a satisfactory concept.

The finite length launch concept, although operationally simpler than the zero length type due to the fact that precise alignment of rocket thrust is not required, has not been used extensively. One reason for this is perhaps the fact that the larger, faster RPVs would have required rather long launch stroke (rail) distances. For example, for a 3,000 pound RPV required to reach 150 knots the distance would be about 80 feet with 12g acceleration. For the more common acceleration levels now used with zero length launch (4 to 6 g) the distance would be in the order of 150 to 300 feet. On the other hand, with 12g permitted, the Mini-RPV launch stroke length for the maximum criteria of this study would be only about 22.5 feet, which should present no objections to overall length.

The pyrotechnic motor, though basically simple when compared to the other concepts of this study involving rotating machinery, is more complex than either of the direct rocket boost concepts discussed above and would undoubtedly involve greater maintenance problems.

The three powered launch concepts, discussed further in the following paragraphs, are designated as:

7.4.2 Zero Length Rocket Launcher, Concept I-4A

7.4.3 Finite Length Rocket Launcher, Concept I-4B

7.4.4 Pyrotechnic Motor Launcher, Concept I-4C

### 7.4.2 Zero Length, Concept I-4A

#### a. General

The zero length launcher is usually configured in one or two basic geometries as shown in Figure 32. The in-line thrust scheme (a), as the name implies, has the rocket booster thrust parallel, or nearly so, to the longitudinal axis of the RPV. A typical in-line type launcher for Mini-RPVs (Reference 11) is shown in Figure 33.

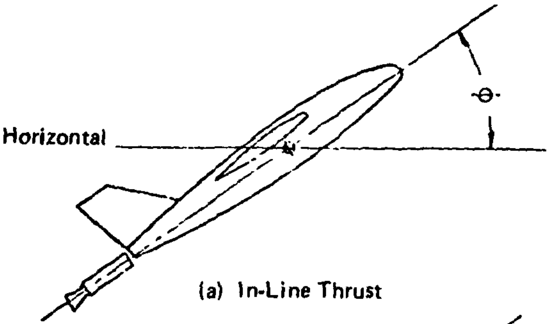

(a) In-Line Thrust

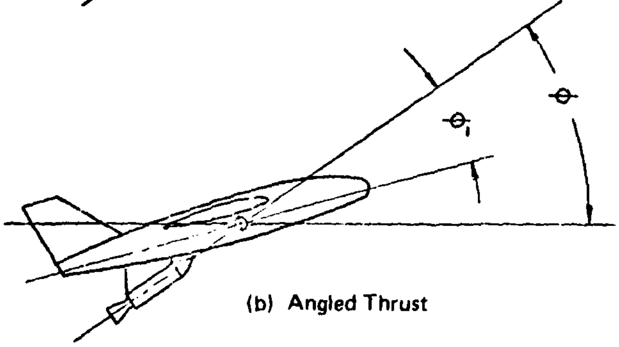

(b) Angled Thrust

Figure 32. Zero Length In-Line and Angled Thrust Geometry

---

11. DATA PACKAGE, Messerschmitt-Bolkow-Blohm GmbH, Muenchen West Germany 10 October 1977

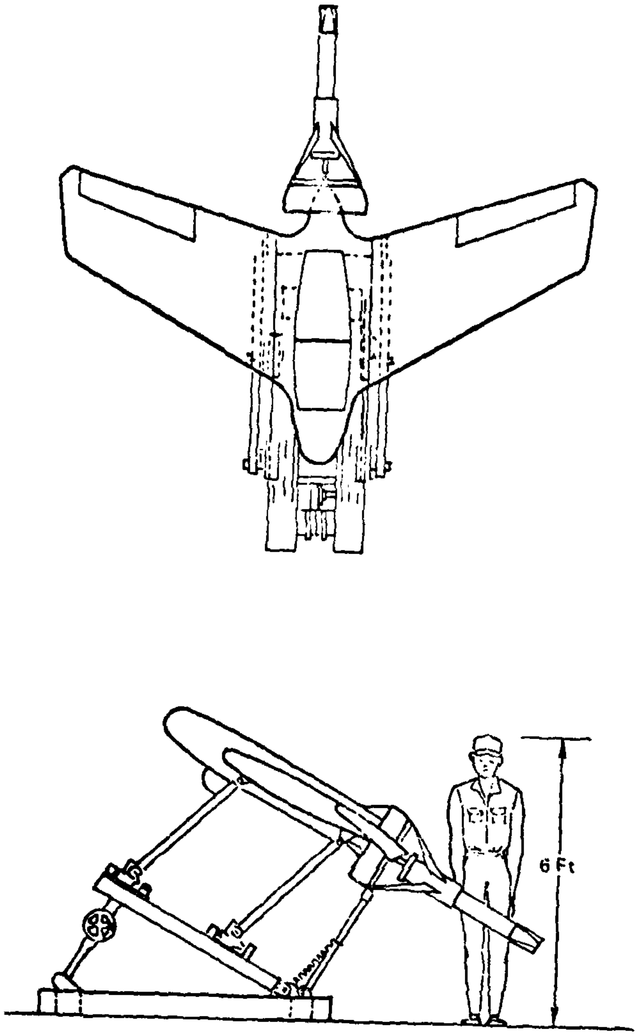

Figure 33. Messerschmitt-Bolkow-Blohm Zero Length Launcher

For the angled thrust scheme (b) the thrust axis of the rocket booster is angled with respect to the longitudinal axis of the RPV.

Typical variations of the two basic arrangements are shown in Figure 34. These involve canted nozzles; that is, the nozzles are canted with respect to the booster bottle.

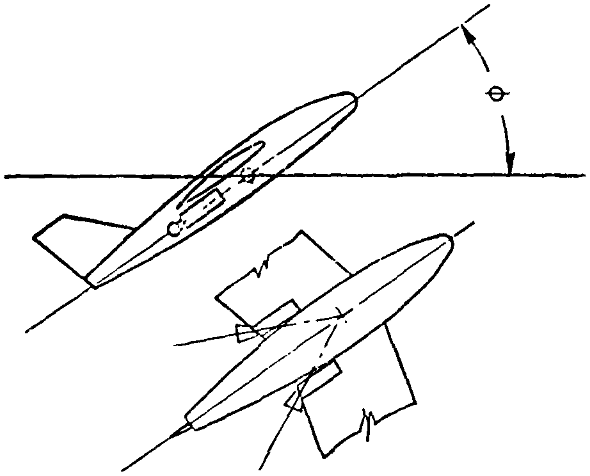

(a) In-Line Thrust, Canted Nozzles

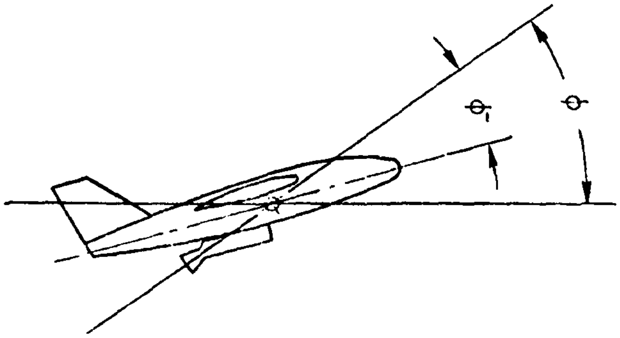

(b) Angled Thrust, Canted Nozzle

Figure 34. Zero Length Canted Nozzle Geometry

Referring now to Figure 35, it will be seen that for either case, if the booster thrust, weight and angle Θ are the same, the mass of the RPV would initially travel along the same initial trajectory path at the angle β. The principal difference is the initial angle of attack that the two different geometries imply.

With the booster thrust and the longitudinal axis coincident as in the in-line geometry the RPV would lift off along the initial trajectory path at an appreciable positive angle of attack. Since the aerodynamic forces are small in the initial stages of lift-off the initial angle of attack is not necessarily significant insofar as the behavior of the RPV during the boost phase is concerned, because the RPV can be programmed to decrease the angle of attack as the aerodynamic forces increase.

The initial angle of attack can also be decreased, as is evident from Figure 35, by increasing the boost-thrust-to-RPV weight ratio and/or increasing the angle θ.

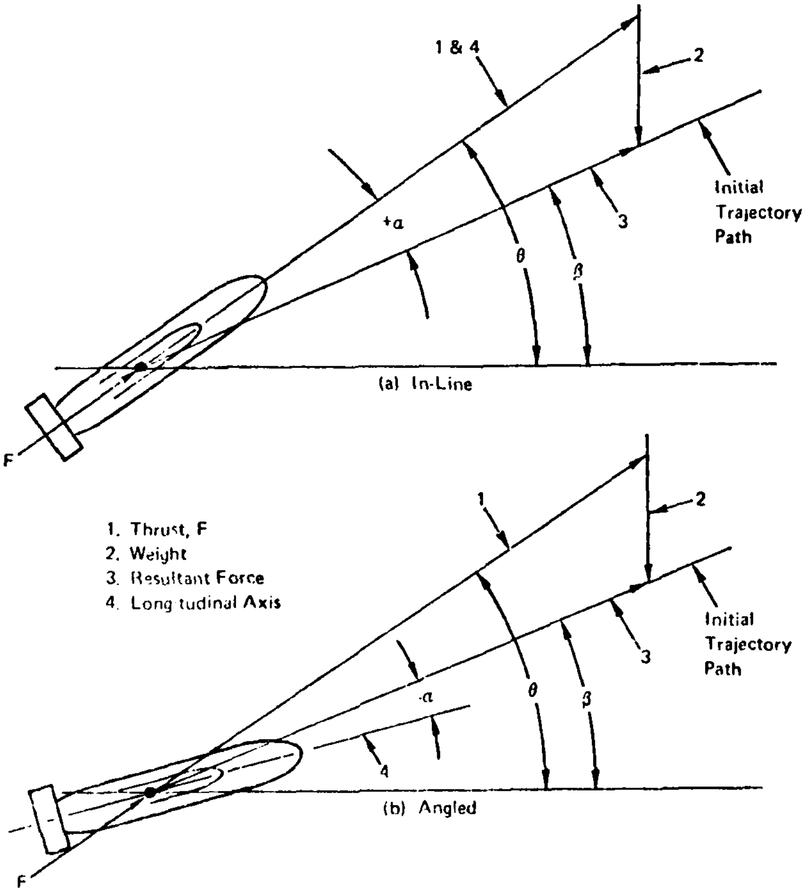

(a) In-Line

(b) Angled

Figure 35. Zero Length Launch Vector Diagrams

### b. Analysis

Approximate Trajectories at Burn-Out

Making use of the vector diagrams of Figure 35 we can obtain approximate comparative initial trajectory information for various boost thrust levels in terms of thrust and weight expressed in g's. For this purpose we will assume a boost-thrust angle θ of 35 degrees and an end velocity of 78 knots. The sketch below illustrates an example for rocket boost thrust equivalent to 6.0 g.

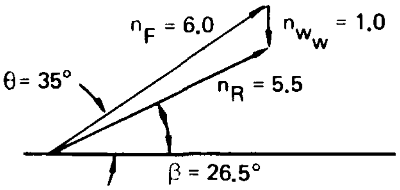

Where $n_F$ = boost thrust in g's

$n_W$ = weight in g's

$n_R$ = resultant force in g's

The trajectory angle β is measured graphically.

Repeating the process for other boost-thrust levels and solving for the distance along the trajectory with

$$\ell = \frac{V_1^{\,2}}{2gn_R} \tag{17}$$

and for the time with

$$t = 2\ell/V_1$$

The effects of the propeller thrust and the drag of the RPV [illegible] included in the above approximate analysis since the thrust [illegible] nates the drag up to the launch end velocity, thus making [illegible] conservative.

Results of the trajectory analysis, tabulated on the [illegible] and plotted in Figure 36, show the approximate [illegible] at the end of burn-out for the various boost-thrust [illegible] levels. The RPVs would of course have [illegible] burn-out and would continue travelling upward. [illegible] measurements and simulator studies for ground launch vehicles configured like Figure 28(b) for the BQM-34A and similiar RPVs show that the RPV is not completely wing borne until an appreciable time interval after burn-out.

| | | | | | |
|---|---|---|---|---|---|
| $n_F$ | 3 | 4.5 | 6 | 9 | 12 |
| $n_R$ | 2.6 | 4.0 | 5.5 | 8.5 | 11.5 |
| $\ell$, ft | 104 | 67 | 49 | 32 | 23 |
| $\beta$, deg | 17 | 23.5 | 26.5 | 29.5 | 31 |
| t, sec | 1.57 | 1.02 | .74 | .48 | .36 |
| $\frac{n_F}{n_R}$ | 1.15 | 1.125 | 1.091 | 1.058 | 1.04 |

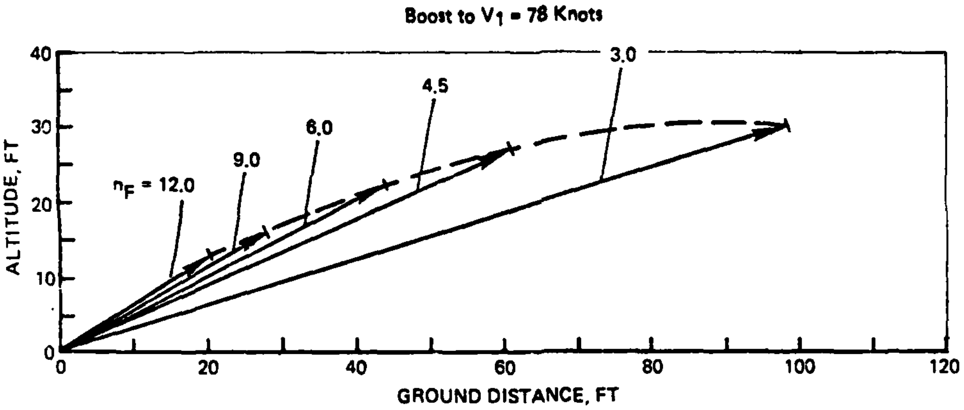
Boost to $V_1$ = 78 Knots

Figure 36. Approximate Trajectories to Burn-Out

Booster Data

It would be desirable to define a single booster to meet the criteria of this study for both the 200- and 120-pound-class RPVs. However, it does not appear feasible to employ a booster with a discrete total impulse value for this purpose. Alternatives are:

1. Two boosters, separate and distinct in performance and dimensions, designed to meet the exact requirements of each class of RPV.
2. A basic booster with a given nozzle configuration and chamber diameter, with variable lengths of propellant available. Such a configuration would have a common thrust level, but different burn times.
3. One booster of a given type for the small class RPV and a pair of the same for the large class RPV.

Alternative 1 is presumed to be technically sound and in need of no further discussion.

Considering alternative 2, a booster designed for the larger RPV at its limit of 12 g would impose acceleration of 20 g on the smaller RPV, but a booster designed for the smaller RPV at its maximum allowable acceleration of 12 g could be used for the larger RPV if the burn time could be increased from .22 to .54 seconds in order to reach its end speed of 78 knots. The acceleration for the larger class RPV would be about 7.5 g and the distance at burn-out about 36 feet.

Figure 37 is presented as an aid to exploring various other combinations of resultant boost force and burn times for the two classes of RPVs at their respective launch weights of 129 and 215 pounds (launch weight = 1.075 x class weight) and end velocities of 50 and 78 knots. The computations are simplified by using the resultant boost force $F_R$ as a variable in place of the actual boost thrust F. After a combination of variables is selected from the curves they can be refined by a second iteration made to determine the actual booster thrust and thrust angle $\theta$ (See vector diagram, subsection 7.2.4.b, above).

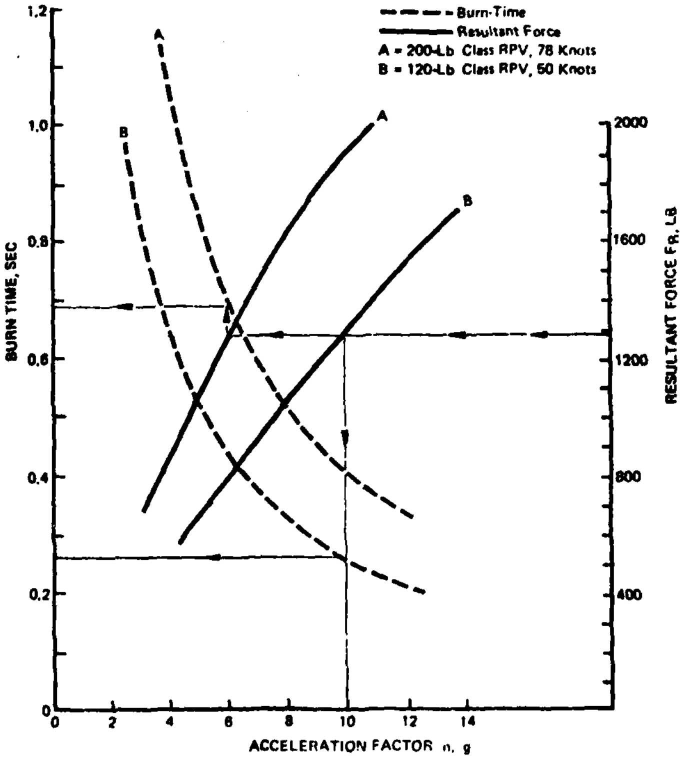

Figure 37. Resultant Force, Burn Time, and Acceleration Curves

An example case satisfying the requirements for both the small and the large vehicles is indicated in Figure 37. In this case the resultant thrust is 1290 pounds and the respective burn times and accelerations are .26 and .68 seconds, 10 and 6 g.

Alternative (3) is examined as follows: For the larger RPV, twin rockets could conceivably be arranged in a double-barreled configuration for the geometry of Figure 32 (a) or in an arrangement similar to Figure 34 (a).

To determine the characteristics of a booster for alternative 3, we begin by satisfying the requirements of the 200-pound-class vehicle. The total impulse required in this case is:

$$I = \frac{W}{g} V_1$$

$$= \frac{215}{32.2} (131.82), \text{ (78 knots)}$$

$$= 880.16 \text{ lb/sec}$$

Assuming a resultant boost acceleration of $n = 11.5$ g, the total resultant boost force $F_r$ (to boosters) would be 2472.5 pounds, and the burn time would be .356 seconds.

The resultant boost force for the 120-pound-class RPV (one booster) is:

$$F_r = 2472.5/2$$

$$= 1236.25 \text{ lb.} \quad (n_r = 9.6\text{ g})$$

and the total impulse for the smaller RPV is:

$$I = 880.16/2$$

$$= 440.1 \text{ lb/sec}$$

and its end velocity becomes:

$$V_1 = I/m$$

$$= 440.1/(129/32.2)$$

$$= 109.85 \text{ ft/sec}$$

$$= 65 \text{ knots}$$

Although the 65-knot end velocity for the smaller RPV exceeds the criterion of 50 knots, it would probably make for satisfactory launch operations. Thus, the concept of one booster being used as a single and in pairs appears, analytically at least, to be a reasonable substitute for alternative 1 stated above.

It should be noted that the actual booster thrust required would be about 1.04 times the resultant force, $F_r$, for the 200-pound-class vehicle (reference tabulated data above).

### c. Conclusions

The zero length launcher concept has considerable background and is currently in operational use with the three U.S. military services. The concept is therefore qualified as a candidate for launching Mini-RPVs. Advantages of the concept are the relatively simple and small launcher required and less restrictive choices for boost acceleration values since the boosted distance occurs in free air rather than along a ramp or rail. As indicated in the studies above, accelerations below the minimum of 6.0 g criteria of this study would be satisfactory.

Three booster options appear to satisfy the Mini-RPV zero length launch concept: (1) two boosters, separate and distinct in performance and dimensions, to meet the requirements of each class RPV; (2) a basic booster with a given nozzle configuration and chamber diameter, available with variable lengths of propellant, i.e., with a common thrust level, but different burn times; and (3) one booster of a given type for the small class RPV and a pair of the same for the larger class RPV.

Disadvantages of the concept focus on a major potential problem; the necessity for precise alignment of the rocket booster thrust with respect to the center of gravity of the RPV during the boost phase. This problem will be discussed further in Phase II of this study.

The cost per launch, logistic problems, and the handling and safety issues involved with pyrotechnics would also have to be resolved.

### 7.4.3 Finite Length, Concept I-4B

#### a. General

The rocket-boosted finite length Mini-RPV launcher concept has in common with the pneumatic and similar launchers the use of a ramp or rails to guide the RPV until it has reached its prescribed end velocity. In general, the finite length launcher is basically simpler than most other ramp or rail type launchers in that it involves few system and support components.

Figure 38 illustrates two versions of the finite length launcher concept taken from Reference 7. In the first of these, (a), the rocket booster is arrested by a linear coaxial shock absorber at the end of the launch stroke length. In the second version, (b), the booster would not be arrested and could therefore leave the launcher as a projectile, thus eliminating the need for a shock absorbing system.

Both of these launcher concepts assume a flat-bottomed Mini-RPV on which sliding elements would be mounted, eliminating the need for a shuttle. For Mini-RPVs not so configured, a shuttle of some sort would be required.

In either case, as can be seen in the figure, the booster motor would be inserted into a cylindrical case. Attached to the case are slide fittings to guide the booster and a vertical arm, or horn, to impart force to the RPV or shuttle.

#### b. Analysis

Booster Performance Variations

Examples of booster performance variations and their approximate effects on launch parameters are given below. The weights used for this particular comparative study are the nominal 230- and 138-pound weights with additional weight for the boosters.

The thrust of a solid propellant booster varies with the conditioned temperature of the propellant, increasing as the temperature increases. Figure 39 shows qualitative variations for a typical rocket motor. Generally, as the thrust increases with temperature, the burn time decreases and conversely, as the thrust decreases, the burn time increases such that the total impulse is about constant throughout. The end velocity, a function of total impulse, would therefore remain essentially constant. The variations in thrust would of course be reflected in different launch acceleration rates. For example, if the nominal mean thrust for the 200-pound class were to decrease 5 percent due to miscellaneous tolerances and/or atmospheric effects plus another 5 percent due to propellant temperature, the launch parameters would appear as shown in Table 7 (a). In this sequence it is seen that a decrease of about 5 percent in end velocity occurs (10 percent in dynamic pressure). The results of taking the same sequence of events in the plus direction are also presented in the table.

The above arbitrary examples of booster performance are a preliminary indication of the allowances that would have to be made in launcher parameters for a given nominal booster design. For the arbitrary thrust variations chosen, the maximum end speed variations are plus or minus 4 knots and an increase in launcher stroke length of about 1 foot is indicated.

## Adaptability

Booster performance presents much the same basic problem as for the zero length launcher in terms of attempting to make a discrete booster serve both the 120- and the 200-pound-class Mini-RPVs.

The nominal maximum desired stroke length for the 200-pound-class RPV is 22.5 feet, which corresponds to the following parameters:

W, lb = 247 (RPV + shuttle) x 1.075*

$V_1$, knots = 78

l, ft = 22.5

t, sec = .341

$\pi$, g's = 12

F, lb = 2964 (Mean Force)

I, lb/sec = 1011.17

The mean booster force of 2964 pounds would impose excessive accelerations on the 120-pound-class RPV (20 g at its launch weight of 138 X 1.075 = 148 pounds). The maximum permissible force based on 12 g for the smaller vehicle is:

148 (12) = 1776 lb

In the finite length launch case the thrust requirements for the large and small RPVs cannot be compromised at a common, lower thrust level as was possible for the zero length launch, since the stroke length for the 200-pound-class RPV would greatly exceed the desired 22.5-foot limit, if based on a force of 1776 pounds (7.2 g).

---

* 1.075 factor is allowance for booster, support structure, and airborne structure.

An alternate solution, mentioned earlier in subsection 7.4.2, would be to use two rocket boosters to launch the 200-pound-class RPV and to use one of these boosters to launch the 120-pound-class RPV. Assuming that the boosters are rated at 1482 pounds thrust each (2 x 1482 = 2964 pounds), the 200-pound-class RPV would reach its 78-knot end velocity in the nominal 22.5-foot stroke length.

With the single 1482-pound thrust booster, and at a launch weight of 148 pounds, the smaller RPV would reach its end speed goal of 50 knots in about 11 feet. At burn-out the RPV would travel 18.7 feet and reach a velocity of 65 knots. Thus with some reserve available the RPV could be launched at higher gross weights at velocities between 50 and 62.5 knots.

## C. Conclusions

The rocket-boosted finite length launcher is a mechanically simple concept comparable in size but lighter than the other ramp type launchers of this study.

The projectile - booster version, if used in conjunction with an RPV that does not require a shuttle, would undoubtedly be shorter than the other ramp-type launchers because of the absence of a shock absorbing system at the end of the launcher.

Subsystem and support equipment for the launcher would be minimal and high reliability is anticipated.

The disadvantages of the finite length launcher relate to (1) the use of pyrotechnics: the cost per launch, logistic supply problems, and handling the safety issues; and (2) booster options that appear to be limited to the choice of separate and distinct boosters, or to the use of two boosters of a given design for the larger class RPV and one of the same boosters for the smaller class RPV.

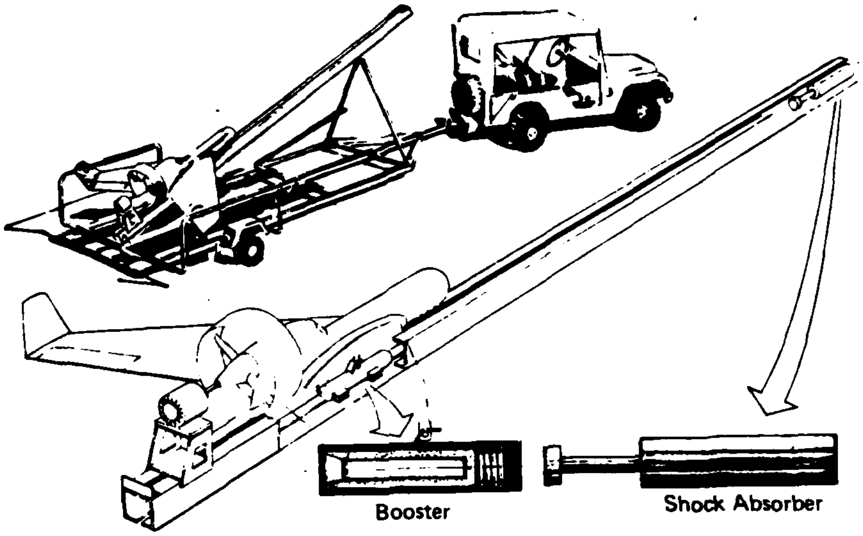

(a) Arrested Booster

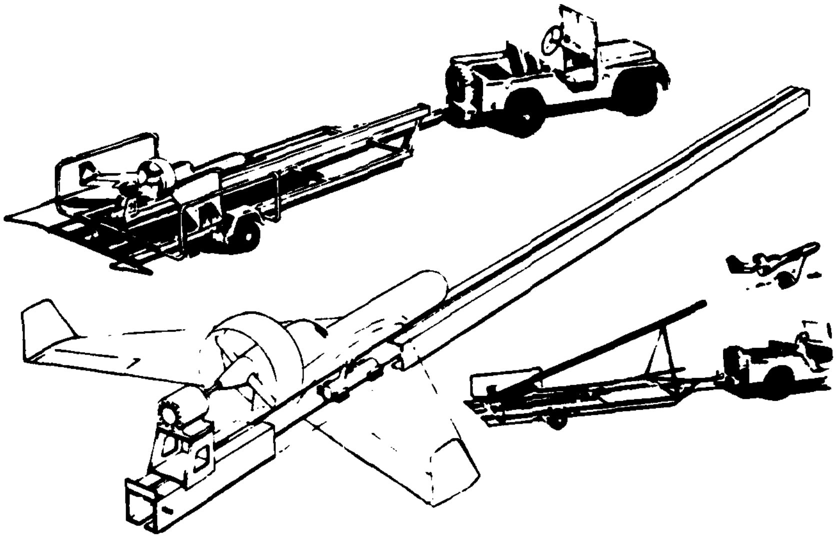

(b) Free Booster

Figure 38. AAE Finite Length Rocket-Boosted Launch Concepts

## TABLE 7

## LAUNCH PARAMETER VARIATIONS

| | | | | | | |
|---|---|---|---|---|---|---|
| (1) Nominal | 2760 | .341 | 941 | 78 | 12 | 22.5 |
| (2) -5%, Total | 2622 | .341 | 894 | 74 | 11.4 | 21.34 |
| (3) -5%, Temperature | 2491 | .359 | 894 | 74 | 10.8 | 22.4 |

(a) Booster Performance Below Nominal

| | | | | | | |
|---|---|---|---|---|---|---|
| (1) Nominal | 2760 | .341 | 941 | 78 | 12 | 22.5 |
| (2) +5%, Total | 2898 | .341 | 988 | 82 | 12.6 | 23.6 |
| (3) +5%, Temperature | 3043 | .325 | 988 | 82 | 13.2 | 22.5 |

(b) Booster Performance Above Nominal

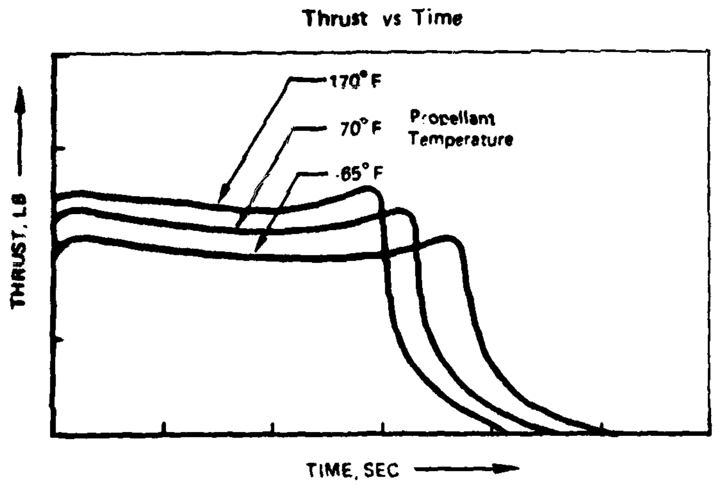

Figure 39. Typical Rocket Variation with Temperature

### 7.4.4 Pyrotechnic Motor, Concept I-4C

#### a. General

A launcher concept for the Mini-RPV based on a pyrotechnic motor is illustrated in Figure 40. The motor would consist of one (if properly balanced) or more rocket nozzles disposed to produce torque about an axis as shown in the figure. A single pyrotechnic charge located in a breech-loaded chamber along the axis of rotation would furnish the hot gas for the thrust nozzles. An alternate and simpler arrangement would be to employ individual rockets of the nozzleless type, thus eliminating the problem of nozzle erosion and probably component replacement.

Wire cable or a high-strength, light-weight tape like Kevlar, wound on a reel, would convert the motor torque to a linear force to propel the RPV/shuttle to the desired launch velocity.

A shock absorbing system would bring the shuttle to rest at the end of the launch stroke. A friction-type clutch set for torque slightly above the required launch condition would alleviate overloading the cable or tape system due to the inertia of the pyromotor. The shuttle could be returned to battery position by means of a lanyard pulled by hand or by a simple hand-cranked winch.

A shield installed around the motor would protect personnel and equipment from the rocket blast, and minimize the visual signature of the exhaust gases.

The pyrotechnic motor concept represents a piece of rotating machinery that would, with a minimum of sophistication, be capable of providing nearly constant force at any rotational speed from zero to its maximum design RPM. The desired duration and the launch force would be governed within narrow limits by the weight of the pyrotechnic charge used.

Turn-around time for sequential launches would be paced by returning the shuttle and mounting the RPV on the shuttle. Reloading a pyrotechnic charge should take less than 5 minutes. The motor assembly could be folded back against the bottom of the launcher and the frame could also be hinged for stowage purposes.

#### b. Analysis

To develop the cable force required (2760 pounds) to launch the 200-pound-class RPV within the ideal stroke length of 22.5 feet at 12 g acceleration, the pyrotechnic motor with two diametrically opposed nozzles positioned 1.5 feet from the axis of rotation, propelling a reel 12 inches in diameter, would have to supply 460 pounds thrust to each nozzle:

$$
\begin{aligned}
\text{Torque } T &= 2760\ (12/2) \\
&= 16560 \text{ in-lb} \\
&= 1380 \text{ ft-lb} \\
F &= 1380/2(1.5) \\
&= 460 \text{ lb}
\end{aligned}
$$

As discussed in subsection 7.4.3, in actual practice the launcher stroke length would have to be longer than the ideal 22.5 feet to account for the decrease in rocket thrust realized when the solid propellant is conditioned at lower temperatures, and for thrust variations due to manufacturing tolerances.

The weight of propellant required per launch for the pyromotor with two nozzles can be estimated from

$$W_p = \left(\frac{F}{I_s}\ (t)\right)2 \qquad (19)$$

where

$W_p$ = propellant weight, lb

$F$ = thrust/nozzle, lb

$I_s$ = specific impulse, sec

$t$ = time, sec

Thus, depending on the propellant chosen as a result of trade-offs to get reasonable performance with lower temperature gases, sample propellant weights at a nominal burn time of .341 are:

| $I_s$, sec | 50 | 100 | 150 | 200 |
|---|---|---|---|---|
| $W_p$, lb | 6.3 | 3.1 | 2.09 | 1.59 |

## Adaptability

In order to adapt the pyromotor concept described above to the launch parameters of the 120-pound-class RPV the torque output of the motor would have to be reduced to about 39 percent of its capacity. Assuming that it would be desirable to use only one type pyrotechnic charge for the launcher, the reduced torque could be achieved by canting the rocket nozzles away from the plane of rotation or by replacing the manifold, or arms, with a shorter set.

With the same burn time, the force required to accelerate the 120-pound-class RPV (138 pounds RPV/shuttle weight) to 50 knots would be:

$$F\ (\Delta t) = \frac{WV}{g}$$

$$F\ .341 = \frac{138\ (50 \times 1.69)}{32.2}$$

$$F = 1062 \text{ pounds}$$

This force would correspond to 7.7 g. The launch stroke length required would be 14.4 feet.

### c. Conclusion

The pyrotechnic motor is a simple rotating machinery concept that provides theoretically desirable launch performance parameters. With a rocket exhaust collector shield installed to direct the rocket motor exhaust downward to the ground the visual and perhaps acoustical signature of the pyromotor could be minimized.

Based on engineering judgement alone, it can be surmised that the pyromotor launcher would be appreciably lighter than a comparable pneumatic launcher.

The principal disadvantages for the pyromotor launcher, like the rocket boosted zero length and finite length launchers, would relate to the logistic, handling, and safety problems inherent with pyrotechnic applications. However, for comparable propellant specific impulse values the pyromotor would burn less propellant per launch than the other rocket-boosted launchers.

Although the pyromotor concept would be simpler and lighter than most rotating machinery used for the purpose of launching Mini-RPVs,it is nonetheless more complex than the linearly actuated rocket-powered finite length launcher of subsection 7.4.3.

## 7.5 Flywheel Launcher, Concept I-5A

### a. General

The flywheel, a well-balanced rotating mass, can be used to absorb energy from, or to impart energy to,mechanical systems, usually in the form of shaft torque. In either case the wheel must change rotational speed to effect a change in energy.

The flywheel (and of course the output shaft) of a reciprocating engine is actually continuously fluctuating in rotational speed, although by infinitesimal amounts, in order to dampen the engine's pulsations, even at what appears to be constant RPM conditions.

Stored energy power systems employing the flywheel have been used to drive land vehicles and for other purposes, such as ground launching of aircraft. In the launch regime, design work and some applications have been generally directed toward aircraft much larger than the Mini-RPV, which implies an entirely different set of conditions. The larger systems may involve launch stroke

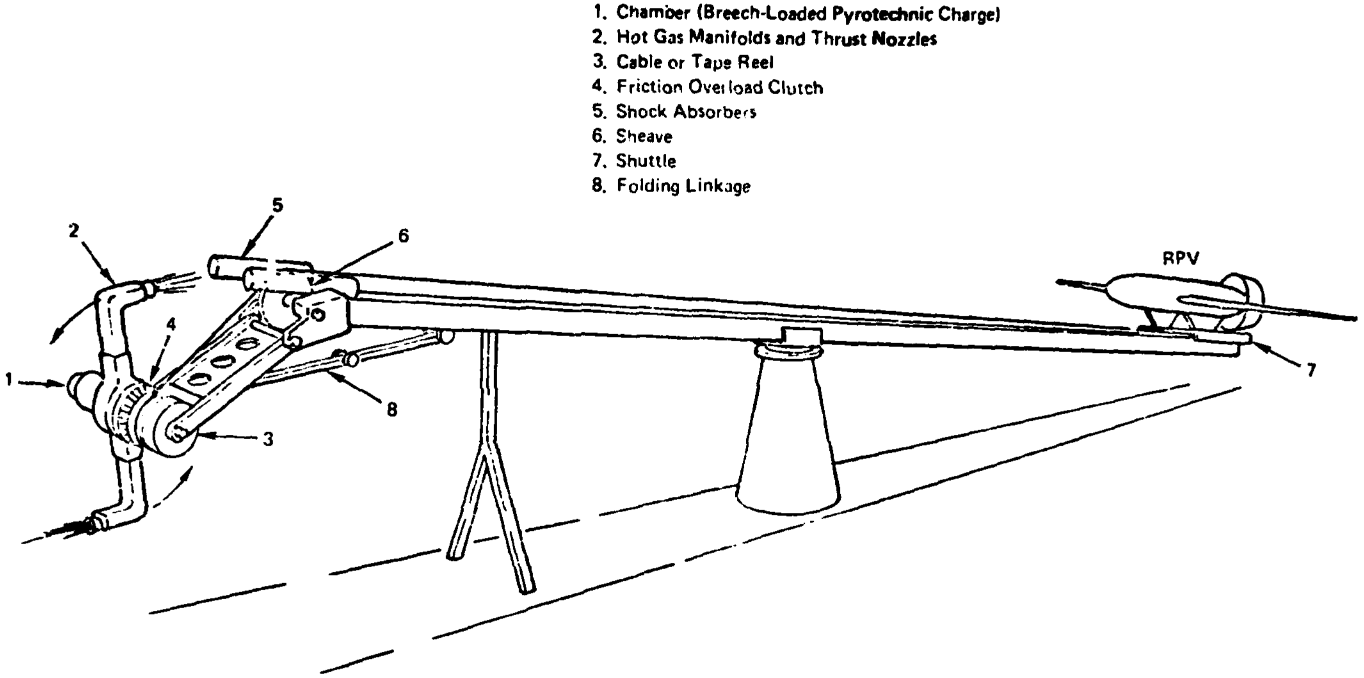

Figure 40. Pyrotechnic Motor Launcher

distances of 600 to 1500 feet and time intervals of 3 to 10 seconds at accelerations of 4.0 to 1.5 g. In contrast, the most severe mini-RPV requirement relates to a distance of about 22.5 feet, .341 seconds, and 12 g. Also, where the larger systems may allow 100 to several hundred feet to decelerate the launcher shuttle mass, the Mini-RPV system is generally allowed about 1 foot.

The mini-RPV flywheel system is basically comprised of three major elements: (1) the input subsystem, that is, those components requested to spin the wheel up to speed, and (2) the output subsystem, those components involved in extracting and modulating the power from the wheel to the launcher tow cable that accelerates the RPV, and may also include (3) a decelerating system for the flywheel, if necessary.

In this discussion of the flywheel launcher we will assume that a breakaway holdback link restrains the shuttle until full torque is developed, and that the mean launch force F (or torque) required to accelerate the RPV to launch speed would occur in a small time interval and would then continue unchanged throughout the stroke, just as has been assumed for the basic ideal launch situations of this study.

### b. Analysis

#### Flywheel/Reel Launch Characteristics

The conditions to be met by the flywheel system are based on the ideal launch parameters for the 200-pound-class RPV, which are:

| | |
|---|---|
| Launch weight, lb | 230 (RPV + shuttle) |
| End-velocity, knots | 78 |
| Launch stroke $\ell$, ft | 22.5 |
| Accel factor n, g | 12 |
| Accel time, sec | .341 |
| Launch force, lb | 2760 |
| Launch energy, ft-lb | 62,059 |

Viewed in terms of the flywheel system schematic, Figure 41(a), the tangential velocity of the reel builds up to equal the end velocity of 78 knots (131.82 feet/second) as the shuttle reaches point B. Thus if we assume a radius r of .5 foot for the reel, the final angular velocity of the reel is:

$$\begin{aligned}\omega_2 &= V_1/r \\ &= 131.82/.5 \\ &= 263.64 \text{ rad/sec (2518 RPM)}\end{aligned}$$

The torque required to launch the RPV during the velocity buildup is:

$$T_1 = Fr$$
$$= 2760(.5)$$
$$= 1380 \text{ ft-lb}$$

Assuming that the rotational moment of inertia of the 1.0-foot-diameter reel and associated rotating parts is equivalent to an aluminum alloy disc 2 inches thick, its I value would be about .09 slug-feet squared, and the angular acceleration of the reel would be

$$\omega_2 = \omega_1 + \alpha t$$
$$263.64 = 0 + \alpha(.341)$$
$$.341\alpha = 263.64$$
$$\alpha = 773.14 \text{ rad/sec}^2$$

the torque to accelerate the reel from rest to the end velocity of 2518 RPM would be:

$$T_2 = I\alpha$$
$$= .09(773.14)$$
$$= 70 \text{ ft-lb}$$

Thus the total torque required during the RPV launch stroke is

$$T = T_1 + T_2$$
$$= 1380 + 70$$
$$= 1450 \text{ ft-lb}$$

A small additional amount of torque, $T_3$, would be needed to break the holdback link at the initiation of the launch stroke. Assuming a 1000 pound breakaway load $F_b$, the torque required would amount to:

$$T_3 = F_b\, r$$
$$= 1000(.5)$$
$$= 500 \text{ ft-lb}$$

the torque $T_3$, less than 1.0 percent of the total energy, will be disregarded in the computation below.

The number of revolutions required for the reel to wind in the 22.5-foot tow cable is:

$$N = \frac{\ell}{\pi d}$$

$$= \frac{22.485}{\pi\ 1.0}$$

$$= 7.157 \text{ rev}$$

and the angular displacement is

$$\theta = N\ 2\pi$$

$$= 7.157(2)\pi$$

$$= 44.969 \text{ rad}$$

where: $N$ = number of revolutions

$\ell$ = stroke length, ft

$d$ = reel diameter, ft

$\theta$ = angular displacement, rad

the work to be supplied by the flywheel to drive the reel amounts to

$$W = T\theta$$

$$= 1450\ (44.969)$$

$$= 65{,}205 \text{ ft-lb}$$

The configuration of the flywheel system is arbitrary in that any number of combinations of rotational inertia I and angular velocities $\omega$ could satisfy the requirements. The principal criterion is that the angular velocity of the flywheel should be at least equal to ( preferably greater,considering the slip in a fluid power transmission system) that of the reel at the end of the launch stroke. In this case the final velocity of the reel is $\omega = 263.64$ radians per second. The theoretical initial velocity for the flywheel to produce the energy required for the launch stroke, neglecting unknowns such as windage and friction, would be:

$$\Delta KE = 65{,}209 = \frac{I}{2}\ (\omega_1^2 - 263.64)$$

$$65{,}209 = \frac{4.0}{2}(\omega_1^2 - 69{,}506)$$

$$65{,}209 = 2.0\omega_1^2 - 139{,}012$$

$$-2.0\ \omega_1^2 = -204{,}221$$

$$\omega_1^2 = 102{,}110.5$$

$$\omega_1 = 319.5 \text{ rad/sec (3052 RPM)}$$

where the rotational inertia of the flywheel is arbitrarily chosen as 4.0 slug feet required.

A solid aluminum alloy disc flywheel that would answer the description of the rotational inertia of 4.0 slug-feet squared would be 33.6 inches in diameter by 1.48 inches thick and would weigh about 130 pounds.

Figure 41 (b) compares the angular velocities of the flywheel and the reel versus energy. It will be noted that the total energy available from the flywheel is over three times that required to launch the Mini-RPV.

Time To Charge The Flywheel

The approximate time required to spin the flywheel up to its initial velocity of 319.5 radians per second (3502 RPM), assuming a 1-horsepower source, would be about 12 minutes, computed as follows:

$$\begin{aligned} T &= 550\ HP/\omega \\ &= 550(1)/319.5 \\ &= 1.721\ \text{ft-lb} \end{aligned}$$

The angular acceleration is

$$\begin{aligned} \alpha &= T/I \\ &= 1.721/4.0 \\ &= .430\ \text{rad/sec}^2 \end{aligned}$$

The time to spin-up the wheel is

$$\begin{aligned} t &= \omega/\alpha \\ &= 319.5/.430 \\ &= 743\ \text{sec} = 12.4\ \text{min} \end{aligned}$$

The spin-up time can of course be reduced in proportion to the horsepower applied.

For subsequent spin-ups, if recharging of the flywheel was begun as the wheel reached $\omega_2$, the time required would be approximately

$$\begin{aligned} t &= \frac{\omega_1 - \omega_2}{\alpha} \\ &= \frac{319.5-263.64}{.430} \\ &= 130\ \text{sec} = \approx 2\ \text{min} \end{aligned}$$

In the analysis of an actual flywheel system, losses such as windage, bearing friction and heat losses due to slip would have to be accounted for. In some cases the windage loss can be greater than the power required to accelerate the flywheel. The windage loss can be greatly reduced by shrouding the flywheel. For some of the more sophisticated systems for land vehicles the flywheel is assumed to operate in vacuum conditions.

c. Conclusions:

From the technological point of view, it appears that a flywheel launcher could be designed and constructed to generally meet the criteria of this study. However, its practical limitations, related mostly to the sophistication of the machinery involved, would seem to make it less desirable than some of the simpler types of launchers that also meet the study criteria.

The previous simplified calculations assume that torque could be applied instantaneously and removed instantaneously and that its value would be constant no matter what the RPM of the motive source might be. Such conditions are of course not necessarily practical in terms of real-world hardware. The mechanisms used to apply the stored energy of the flywheel to the reel would have to be of high quality to minimize the differences between the idealistic assumptions and what today's technology can actually support.

The major concern for a flywheel launch system that would meet the criteria for the 200-pound-class RPV would be the time and cost involved to develop the machinery. The high degree of automation in the flywheel energy transfer system would undoubtedly reflect unfavorably in the cost.

It is interesting to note that, mechanically, the pyrotechnic motor of subsection 7.4.4 would convert rotational to linear energy in a more straightforward and simple manner than the flywheel. However, the direct cost per launch for the pyromotor in terms of rockets expended would have to be traded off against the program cost for developing and producing the flywheel system.

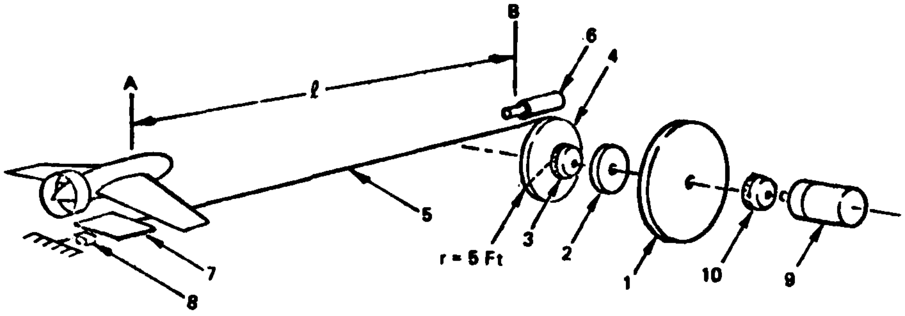

1. Flywheel
2. Power Transmission
3. Overload Clutch
4. Reel
5. Tow Cable
6. Shock Absorber
7. Shuttle
8. Hold-Back and Release Mechanism
9. Wheel Spin-Up Power Source
10. Clutch

(a) Flywheel Launcher Schematic

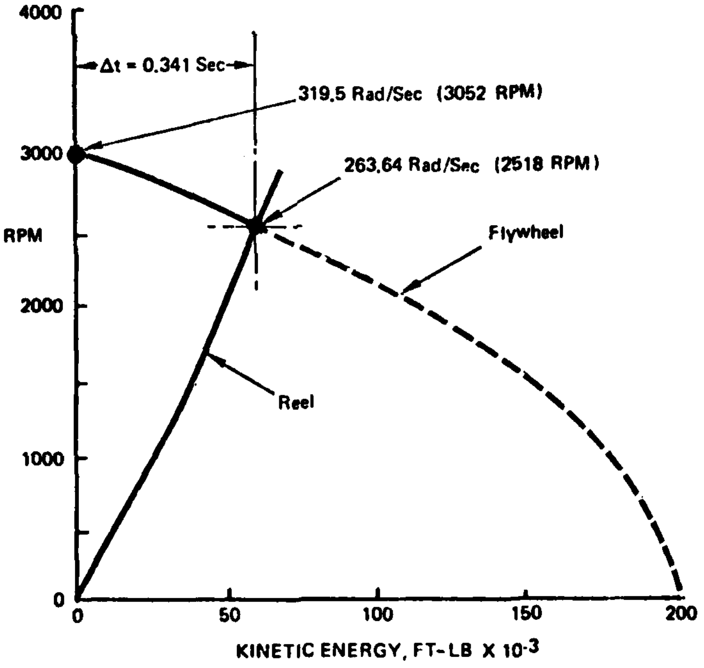

(b) Angular Velocity vs Kinetic Energy

Figure 41. Flywheel Launcher Characteristics

## 7.6 Inclined Ramp, Concept I- 6A

### a. General

Perhaps one of the simplest mechanical schemes for launching a Mini-RPV would be to let it slide down an incline until it reached a desired end velocity.

Figure 42 shows a diagram of an inclined ramp launcher. In addition to the ramp along which the RPV gains velocity, a curved section at the lower end would probably be necessary to direct the RPV to a suitable flight path for free flight unless the end of the ramp was high enough above the ground that the RPV could gradually change its flight path.

It is assumed that the RPV rides on a simple carriage or shuttle during the launch sequence. The shuttle could be arrested at the end of the run by a shock absorbing system similar to that of other launchers discussed in this study, or it could be expended.

The propulsive force is produced by a component of the pull of gravity and the propeller thrust of the RPV.

### b. Analysis

For the purposes of this analysis, we will consider only the ramp from A to B to estimate the overall size of the inclined ramp. Actually, the RPV would lose some velocity due to the change in direction and increased friction due to centrifugal force as it passes through the curved ramp from B to C.

The length of the ramp is determined by the 200-pound-class RPV and its end velocity of 78 knots. At a weight of 230 pounds, including the shuttle, and a ramp angle of 30 degrees, the force components parallel to the ramp would be:

$$F_1 = W \sin \theta$$

$$= 230 (\sin 30)$$

$$= 115 \text{ lb}$$

and the component normal to the ramp would be:

$$F_2 = W \cos \theta$$

$$= 230 (\cos) \theta$$

$$= 199 \text{ lbs}$$

With an average propeller thrust of 45 pounds and using a nominal friction coefficient of $\mu = .10$, the effective propulsive force would be:

$$F = F_1 + T - F_2 \mu$$

$$= 115 + 45 - 199 (.10)$$

$$= 160 - 19.9$$

$$= 140.01$$

The acceleration along the ramp would then be the equivalent of:

$$n = 140.1/230 = .609 \text{ g}$$

The length to achieve the end velocity of 78 knots (131.82 feet/second) is estimated at:

$$\ell = \frac{V^2}{2gn}$$

$$= \frac{131.82^2}{64.4(.609)}$$

$$= 443 \text{ feet}$$

with zero friction, the length $\ell$ is 387 feet, the height (h) of the straight part of the ramp, (AD) is:

$$h = 443 (\sin 30)$$

$$= 222 \text{ feet}$$

To this height, the distance ($h_O$) would have to be added.

The smaller 120-pound-class RPV with its 50-knot end velocity could be started at an intermediate position on the ramp.

c. Conclusion

Although the above analysis is cursory and involves arbitrary assumptions, it is believed to be sufficient to approximate the order of magnitude of the size of an inclined ramp launcher.

The inordinate size of the inclined ramp launcher and associated problems such as the inability of a two-man crew to handle such a structure, and a very large visual signature, would make it incompatible with the intent of the Mini-RPV operations in the tactical environment.

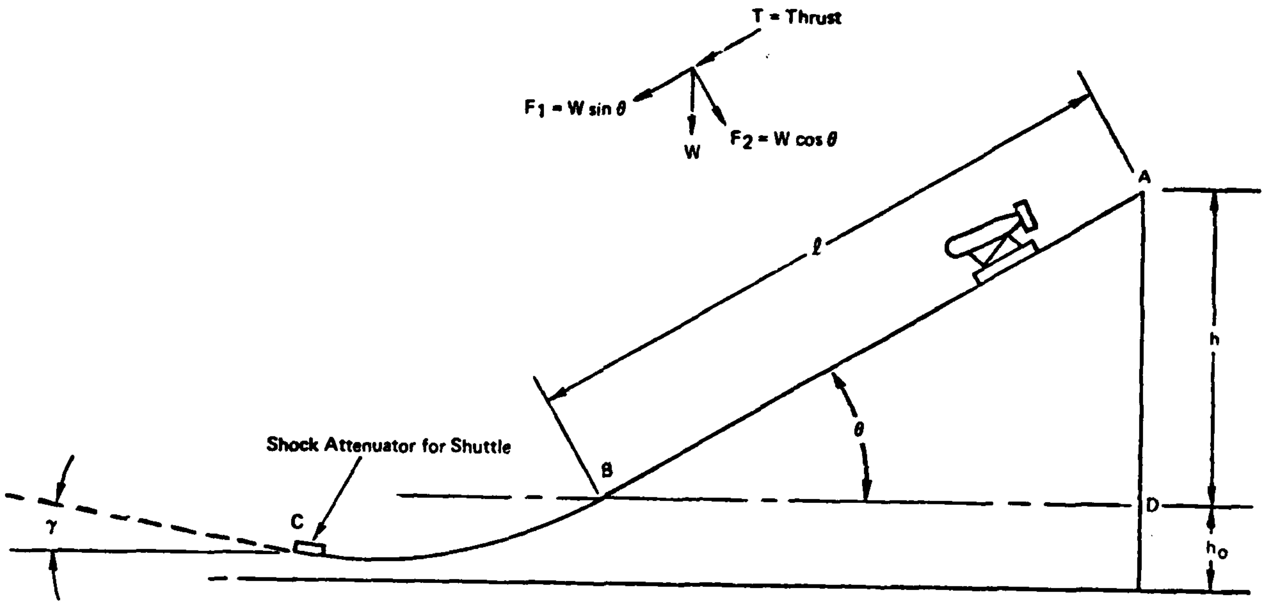

Figure 42. Inclined Ramp Launcher

## 7.7 Falling Weight Launch, Concept I-7A

### a. General

The falling weight concept for launching mini-RPVs has in common with the inclined ramp launch (Subsection 7.6) the fact that gravity and the propeller thrust of the RPV furnish the propulsive force.

A similar system has been seen in historical documents that show one of the Wright brothers' aircrafts being rail launched with a boost provided by a falling weight that dropped within a tripod-type tower. A cable and sheave system transmitted the energy of the falling weight to the aircraft.

The diagrams of Figure 43 (a) and (b) schematically depict the falling weight concept in direct cable pull and reeved configurations.

### b. Analysis

The theoretical limit acceleration for the falling weight is, of course, that of gravity (32.2 feet per second squared, or 1 g), which portends a rather long run to accelerate the RPV to its launch end-velocity.

Making the same RPV weight, thrust, and coefficient of friction assumptions as for the inclined ramp of subsection 7.6, the following approximations are made to determine the launch acceleration and dimensions of the falling weight launch configuration.

$$\begin{aligned} F_1 &= W \sin \theta \\ &= 230 (\sin 15^\circ) \\ &= 59.5 \text{ lb} \end{aligned}$$

and

$$\begin{aligned} F_2 &= W \cos \theta \\ &= 230 (\cos 15^\circ) \\ &= 222 \text{ lb} \end{aligned}$$

The effective accelerating force can be expressed as:

$$\begin{aligned} F &= W_0^1 - F_1 + T - F_2 u \\ &= 1000 - 59.5 + 45 - 222 (.10) \\ &= 963.3 \text{ lb} \end{aligned}$$

The acceleration of the weight and the RPV would then be:

$$n = \frac{963.3}{1000} = .963 \text{ g}$$

The length of the run to achieve an end velocity of 78 knots is:

$$\ell = \frac{V^2}{2gn}$$

$$= \frac{131.82^2}{64.4(.963)}$$

$$= 280 \text{ ft}$$

The height (h) amounts to:

$$h = 280 (\sin 15°)$$

$$= 72.5 \text{ ft}$$

In this case, the falling weight would have to drop about 280 - 72.5 or 207.5 feet below the surface ($h_1$).

A possible solution to such a problem is to reeve the cable so that the weight won't have to fall below the surface. For example, if a system of sheaves is used to reeve the cable 4 to 1, the weight would fall only 1/4 as far, but would have to be increased by 4 times - in this case, to 4,000 pounds. Neglecting losses in the reeving system, we can then say that the acceleration of the RPV would be the same. In this instance, the weight would drop about 280/4 = 70 feet, which would be a reasonable match for the height (h) of 72.5 feet, determined above.

In the diagrams of Figure 43, a shock absorber system for the purpose of arresting the shuttle at the end of its run is indicated. It appears to be imperative that the energy of the falling weight should be attenuated before the shuttle impacts the shock absorber system. Otherwise, the shock absorber system would have to be designed for an enormous capacity to preclude very high loads being imparted to the cable system and ramp structure.

### c. Conclusions

The falling weight launch concept is fundamentally simple, except perhaps for a shock attenuation scheme to dissipate the kinetic plus potential energy of the falling weight. However, the size of a falling weight launcher, the handling of the weight, and the launcher itself are incompatible with the criteria for a mini-RPV suitable for field deployment in the tactical environment.

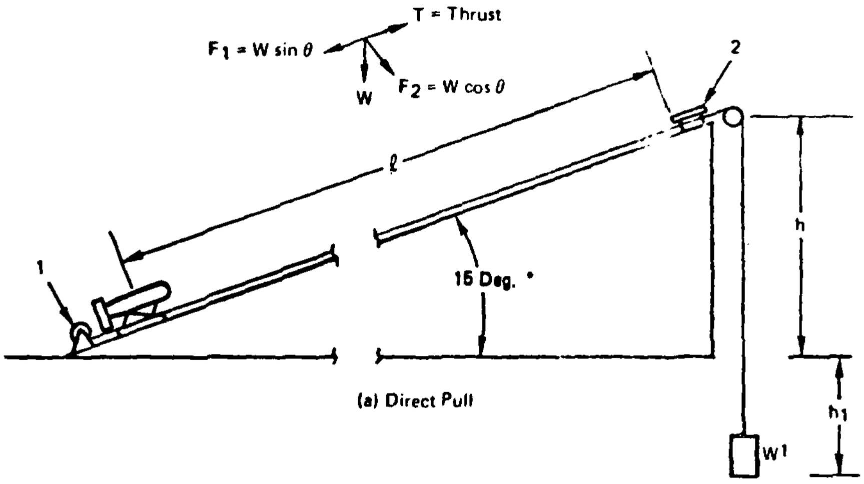

(a) Direct Pull

1. Winch
2. Shock Absorber
3. 4 to 1 Reeved Cable

* Not to Scale

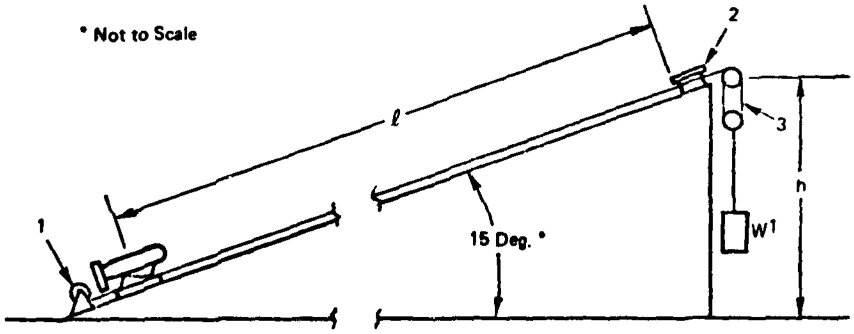

(b) Reeved Cable

Figure 43. Falling Weight Launch Diagrams

### 7.8 Rotary (Carrousel), Concept I-8A

#### a. General

Achieving linear free-body velocity by rotating a mass about a fixed axis and releasing the mass after the appropriate angular velocity is attained is recognized as a viable principle. A Mini-RPV launcher concept incorporating this principle is shown by Figure 44. This concept (Reference 12) is patented.

As will be seen in the illustration, the plane of rotation is oblique to the horizontal. In this way, the altitude at which the RPV is released is increased. And before launching, with the RPV positioned at the low part of the arc, it would be more accessible for installation and maintenance.

A counterweight located on the end of the rotating arm opposite to the RPV balances the centrifugal force created by the RPV and would thereby eliminate oscillatory motions that would otherwise occur in the system. The counterweight is released near the low part of the arc at the same instant the RPV is released.

The thrust of the Mini-RPV's propeller is sufficient to accelerate the rotating arm to the desired angular velocity for release in a few seconds.

A velocity sensor determines the desired launch velocity of the RPV. Information from the sensor on the rotating arm or the RPV is transmitted either directly or by means of a radio-frequency signal to a receiver in a remote control center. The release sequence for the RPV and counterweight is "armed" by a manual switch in the control center, but a switch operated by a cam on the rotary arm triggers the release at the proper instant.

RPVs launched by the rotary mechanism would have to be designed for lateral g forces higher than usual due to the centrifugal force generated by the angular motion of the rotary arm. The fuel system and perhaps other subsystems of the RPV would have to be specially designed for the higher than usual lateral loads.

#### b. Analysis

The 200-pound class RPV would require larger dimensions for the rotary arm than the 120-pound class because of its higher launch end velocity (tangential velocity). Assuming the maximum acceleration criterion for this study, $(n = 12 \text{ g})$ and making use of the following equations:

---

12. DATA PACKAGE, Gregory, T. J., NASA Ames Research Center, Moffett Field, California, 7 October 1971.

$$F_c = \frac{W}{g} r\omega^2 \qquad (20)$$

where $W$ = weight of RPV, lb

$F_c$ = centrifugal force, lb

$r$ = radius, ft

$\omega$ = angular velocity, rad/sec

$g$ = gravitational constant, ft/sec$^2$

since $F = W_n$ and $\omega = \frac{V_t}{r}$

$$W_n = \frac{W}{g} \quad \frac{V_t^2}{r}$$

$$r = \frac{V_t^2}{g}$$

with $V_t$ = the desired launch speed = 131.82 ft/sec (78 knots)

$$r = \frac{131.82^2}{32.2(12)} \qquad (21)$$

$$= 44.97 \text{ ft}$$

the distance between the centers of gravity of the RPV and the center balance weight is determined to be

$$d = 2(44.97)$$

$$= 89.9 \text{ ft}$$

Approximate rotor diameters for the 120-pound and the 200-pound class RPVs are tabulated below for various acceleration factors:

|  | 120-lb class | 200-lb class |
|---|---|---|
| n,g's | Rotor Diameter, ft |  |
| 6 | 74 | 180 |
| 12 | 37 | 90 |
| 20 | 22 | 54 |

Since n = 12 g is the limit criterion for acceleration in this study, the minimum rotor diameter, set by the 200-pound class RPV, is about 90 feet.

The time to spin up the 90-foot rotor is estimated as follows. Using only the mass of the RPV and counterweight, the moment of inertia is:

$$I = 2\ (mr^2)$$

$$= 2\ \frac{200}{32.2}\quad (44.97)^2$$

$$= 25121.8 \text{ slug ft}^2$$

$$\omega = \frac{V_t}{r}$$

$$= \frac{131.82}{45}$$

$$= 2.93 \text{ rad/sec}$$

Assuming the rotor to be accelerated by the propeller thrust of the RPV where the thrust to weight ratio of the RPV is about .20, averaged between $V_t = 0$ and 78 knots (131.82 feet/second), the thrust force is:

$$F_t = 200\ (.2)$$

$$= 40 \text{ lb}$$

and the torque would be

$$T = F_t r$$

$$= 40\ (45)$$

$$= 1800 \text{ ft-lb}$$

The time to accelerate to the desired tangential velocity of 78 knots can be estimated from the angular impulse = momentum equation

$$T(\Delta t) = I\ (\omega_1 - \omega_0)$$

$$1800\ \ t = 25121.8\ (2.93 - 0)$$

$$\Delta t = 40.9 \text{ sec}$$

In the above computation, the aerodynamic drag of the rotor and the counterweight have not been accounted for. And, of course, if including such factors should double the time, it still would not be a significant amount.

A rotor designed for the 200-pound-class RPV could also be used alternately for the 120-pound class. For example, the 120-pound RPV on the 90-foot rotor would develop about 5.0 lateral g and the time to spin up, computed as above, would be about 26 seconds.

The tilted plane of rotation of the rotor causes a component of the weight of the RPV, counterweight, and rotating arm to apply a load perpendicular to the axle, or spindle. This load is relatively small (about 100 pounds total for the RPV and counterweight only at a tilt angle of 15°). For steady state conditions, such loads are probably insignificant. However, the release of the RPV and counterweight almost instantaneously could cause a snap-back effect loading to gyroscopic perturbations in the behavior of the rotor.

### c. Conclusions

Whereas the physical principle on which the rotary (carrousel) type launcher is based is sound, the application of this principle to launching the 200-pound-class vehicle of this particular study appears to result in an unwieldly mechanism. The concept is apparently better suited to the smaller RPVs with lower launch velocities.

Specific areas of concern are (1) the ability of two men to erect and dismantle the launcher rotor in the time allotted (the rotor would have to be stowed in 8 sections not longer than about 11 feet each), (2) safety implications of releasing the counterweight, even though its path may be angled toward the ground, and (3) a moderately large visual signature.

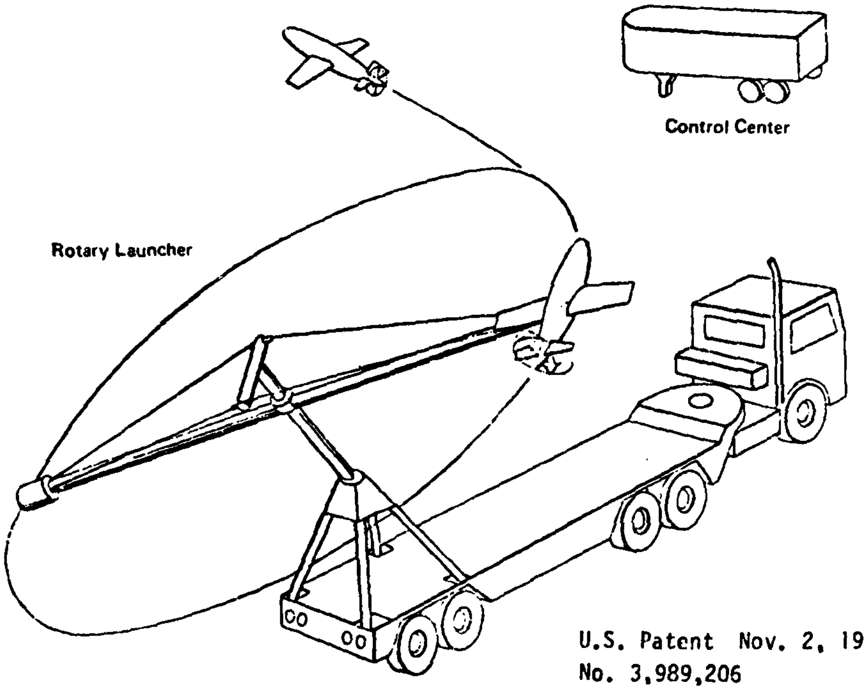

U.S. Patent Nov. 2, 1976
No. 3,989,206

Figure 44. Rotating Launch Device for a Remotely Piloted Vehicle

## 7.9 Tethered Aerial, Concept I-9

### 7.9.1 Introduction

The proposition of lifting a mini-RPV by means of an aerostat high enough above the surface that it could be launched by a free drop is investigated in this subsection.

Two concepts are considered. The first makes use of an aerostat/balloon or blimp as a tethered launch platform and the second one would employ a kite for the launch platform. These two concepts are identified as:

7.9.2 Tethered Aerial Aerostat, Concept I-9A

7.9.3 Tethered Aerial Kite, Concept I-9B

### 7.9.2 Tethered Aerial Aerostat, Concept I-9A

#### a. General

The use of the aerostat in the form of a balloon to carry people and miscellaneous items aloft has precedent in years of experience before the heavier-than-air craft came into being. This is so fundamental that there would be no question about designing or perhaps locating an existing aerostat that could indeed lift an object like a Mini-RPV to a suitable height for launching.

The problems that arise with this concept are, of course, those related to the specific application in the Army tactical environment. A conceivable series of events for a launch sequence is: the RPV would be placed on a checkout stand mounted on the bed of an M-135 truck (Figure 45). Preflight checks would be made and a balloon-borne fixture that carries the RPV aloft would be attached. The balloon would then be inflated, presumably by means of helium bottles. The RPV with engine running would then be hoisted aloft by the balloon, under the control of a winch mounted on the checkout stand.

The fixture that carries the RPV would also contain a command and control unit that would monitor the vital "signs" before release. On command the RPV would be released to dive nose down to assume a pullup trajectory in free flight. One of the design problems with such a system is to eliminate any possibility of the RPV fouling the tether line as it drops away. A blimp configuration may be better suited to accomplishing this purpose.

A much more elaborate balloon-supported fixture for the RPV than envisaged here could probably position the RPV with less chance of fouling the line.

### b. Analysis

The balloon size would be determined by the total weight to be carried, including some ballast, a buoyancy allowance to make up for the increase in tether line load due to being vectored by wind, and the operating environment.

With the 200-pound RPV, about 50 pounds of negative lift due to propeller thrust, and an allowance of 170 pounds for all else, the estimated weight is 420 pounds. At the design environment of 4,000 feet altitude and 45 degrees Fahrenheit the balloon volume required would be

$$\begin{aligned} V &= 420/.0533 \\ &= 7880\ \text{ft}^3 \end{aligned}$$

where the net buoyancy of helium is .0533 pounds/cubic foot.

The equivalent diameter of a spherical shape is 25 feet.

The RPV is assumed to be launched nose down as the least risk approach to getting the RPV to flight speed without encountering instability problems.

In Figure 45(b) power-on trajectories are plotted from a two degree of freedom computer analysis for the 120-pound-class Aquila type RPV. Two conditions are represented, one for a fixed pitch trim angle of attack of 10 degrees and the other for 5 degrees. A point on each curve in the leveling-out region is annotated for reference purposes ( $\gamma$ = flight path angle; $N_Z$ = flight load factor). Here it is seen that it takes about 200 feet to get leveled off for the $\alpha = 10$ degrees case. The 200-pound-class RPV would of course require more drop height to get leveled out.

As indicated in the Figure 45 (a), it is possible that in wind conditions the RPV would have to be launched downwind. However, this is probably not significant in this case since it would only lengthen the "takoff" distance, which is in free air.

### c. Conclusions

From the technical point of view it appears that the tethered aerial launch concept based on the aerostat (balloon) could be made to work.

Some areas of concern are: (1) the likelihood of damage to the balloon during layout and inflation in unprepared area, (2) logistic supply problems with the bottled gas (helium) required to inflate the balloon, and (3) the delays incurred where malfunctions of the RPV occur after being hoisted aloft.

The overriding difficulty with the system appears to be the visual signature displayed by a tethered balloon placed several hundred feet in the air. Also, there are some implications for undesirable acoustic, IR, and radar signatures at the anticipated launch heights.

### 7.9.3 Kite, Concept I-9B

#### a. General

Launching a mini-RPV from a tethered kite in the form of a flexible fabric wing such as the parafoil or volplane would be similar to the aerostat launch discussed in subsection 7.9.2.

The overriding objection to a kite type launcher is the fact that it is wind dependent, which makes it incompatible with worldwide operations of the tactical mini-RPV system, since wind conditions, including the total absence of wind, are not predictable.

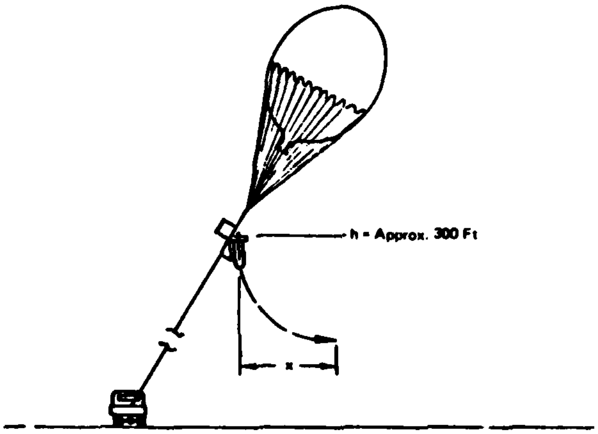

(a) Balloon Launch

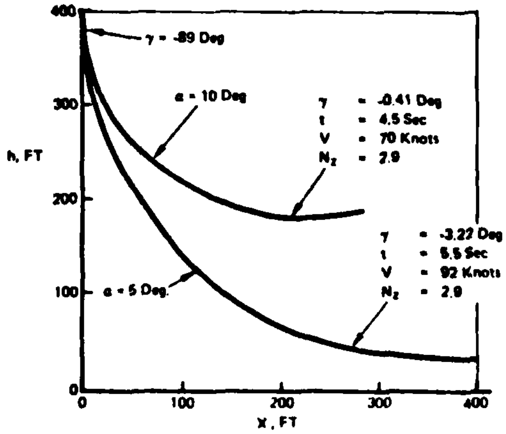

(b) Launch Trajectories, 120-Pound-Class RPV

Figure 45. Aerostat Launch Concept

## 7.10 Secondary Aerodynamic Device, Concept I-10

### 7.10.1 Introduction

In this subsection of the study two types of secondary aerodynamic devices employed for launch purposes are examined. The first of these would incorporate an auxiliary wing temporarily attached to the Mini-RPV. In the post-launch flight sequence, the auxiliary wing would be jettisoned when a safe flight speed for the RPV alone is reached.

The second concept is a shuttle system in which a powered parafoil carries the RPV to an altitude high enough for dropping the RPV to attain flight speed by diving. The parafoil vehicle then returns to its starting point. The concepts examined in this subsection are identified as:

7.10.2 Auxiliary Wing Launch, Concept I-10A

7.10.3 Launch Shuttle Vehicle, I-10B

### 7.10.2 Auxiliary Wing Launch, Concept I-10A

#### a. General

The physical concept of the auxiliary wing launch is illustrated by the schematic of Figure 46 (a). The objective of this concept is to decrease the launch end velocity to such an extent that the launch energy, and consequently the size, and perhaps complexity, of the launcher could be greatly reduced.

By incorporating a light auxiliary wing that provides a low wing loading for the total weight of the RPV, plus the wing, the launch end velocities can be of the order of 20 knots. The major trade-off, of course, is that the lower the end-velocity (lower wing loadings), the more difficult it would be for the RPV/auxiliary wing combination to reach a proper release speed where the RPV could jettison the wing and continue on its mission.

In Figure 46 (b) qualitative performance goals for the auxiliary wing launch sequence are shown. Curve A is the drag versus velocity curve for the RPV flying on the auxiliary wing. The velocity $V_o$ is the launch end-velocity, which would be slightly higher than the stall speed of the auxiliary wing. With appreciable excess thrust available the vehicle could climb and/or accelerate until it reached the $V_1$ band of speeds. The auxiliary wing could be released anywhere between $V_1$ minimum and $V_1$ maximum.

Typical candidate auxiliary wings are shown in Figure 47 (a) in approximate scale to the 120-pound-class Aquila type RPV. For the 200-pound-class RPV the wing spans of the candidate wings, at the same wing loading of 2.0 pounds per square foot, would increase by

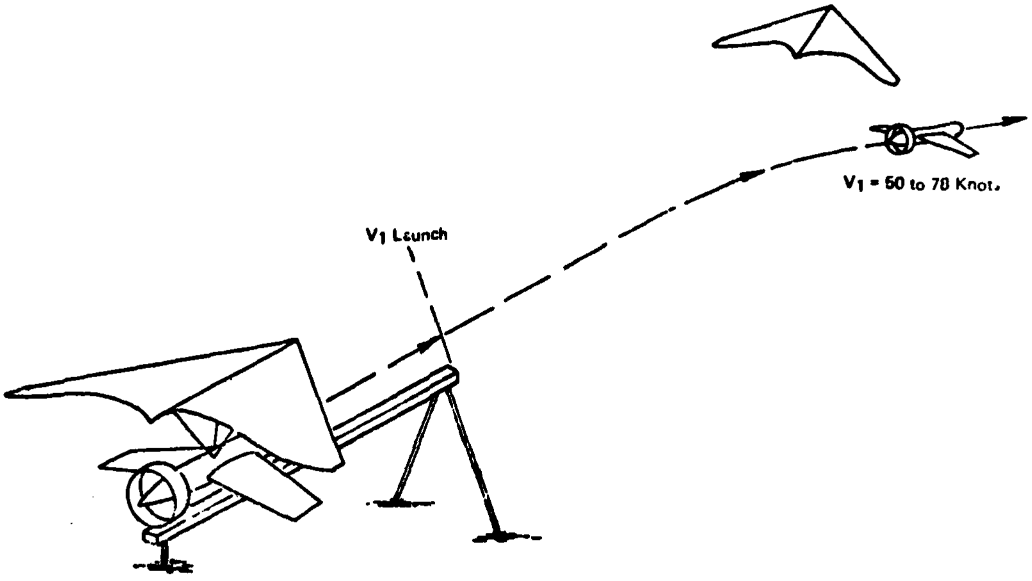

(a) Physical Concept

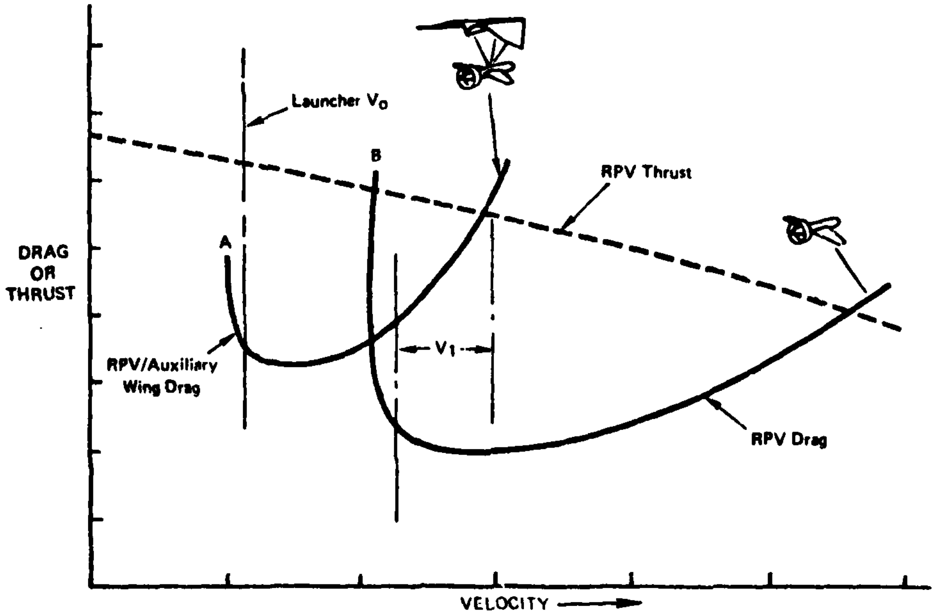

(b) Qualitative Performance Goals

Figure 46. Auxiliary Wing/RPV Launch Concept

a factor of 1.29. The smooth double-surface wing A of aspect ratio 8 would represent a more sophisticated type of construction than the other candidates. Wing B is a single-surface fabric wing (parawing) with a minimum number of structural members patterned after several existing hang type gliders. Wing C is a lower aspect ratio version of the parawing types taken from Reference 13.

The type wing probably best suited to field operations is the flexible fabric type with leading-edge and cross-bar stiffeners to maintain the shape of the wing, similar to the Rogallo and other types used for hang gliders. Such wings could conceivably be folded in a smaller package less susceptible to handling and transporting damage than rigid type fixed wings.

### b. Analysis

#### Auxiliary Wing/RPV Performance

Estimated performance for the aspect ratio 5.2 and 8.0 auxiliary wing supporting the 120-pound-class Aquila type RPV is shown in Figure 47(b) for the 4000 feet, 95 degrees Fahrenheit ambient condition. The performance is presented in terms of thrust and drag versus velocity in knots. Two thrust levels are presented to cover uncertainties in available information. The methods used to compute the performance estimates, shown in Appendix B, are taken from Reference 14. A launch weight of 155 pounds is assumed for the 120-pound-class RPV.

Launch velocities, ideal launch stroke distances, and mean forces F required are tabulated below for the parawing and the smooth auxiliary wings with RPV attached.

The desired final nominal release speed $V_1$ is 50 knots in all cases.

| | n = 6g Acceleration | | | |
|---|---|---|---|---|
| | AR = 5.2 Parawing | | AR = 8.0 Smooth Wing | |
| | W/S = 2.0 | W/S = 3.0 | W/S = 1.0 | W/S = 2.0 |
| V minimum, knots | 25.8 | 31.6 | 16.2 | 22.9 |
| $V_0$ launch - Vmin x 1.1 | 28.4 | 34.8 | 17.8 | 25.2 |
| Launch energy, ft lb | 5543 | 8329 | 2178 | 2583 |
| Mean force F, lb | 930 | 930 | 930 | 930 |
| Launch stroke $\ell$ , ft. | 5.96 | 8.95 | 2.34 | 2.78 |
| Launch energy to 50 knots w/o aux. wing, ft-lb | 17185 | 17185 | 17185 | 17185 |

---

13. Chambers, Dr. J. R.; Boisseau, P.C.; A THEORETICAL ANALYSIS OF THE DYNAMIC LATERAL STABILITY AND CONTROL OF A PARAWING VEHICLE, NASA TN D-3461, Langley Research Center, Hampton, VA.
14. Perkins, C.D.; Hage, R.E.; AIRPLANE PERFORMANCE STABILITY AND CONTROL, John Wiley & Sons, N. Y.

An acceleration of 6 g is assumed. Higher accelerations up to 12g as permitted by the criteria of this study would theoretically correspond to launch strokes, $\ell$, much less than those shown. However, the lengths for 6 g are moderate, and there is probably a minimum length below which the practical considerations of real-world hardware would begin to appreciably modify the lengths computed theoretically. Another consideration in connection with the higher accelerations is that the inertia force created by the auxiliary wing placed above the RPV would result in an appreciable pitching moment during the launch stroke. This moment, aggravated by higher accelerations, would have to be reacted by vertical loads applied to the shuttle slides. The friction resistance would be increased thereby, but more important is the possibility of encountering an instability problem manifested by lurching of the RPV/auxiliary wing mass about the pitch axis.

The curves of Figure 47(b) indicate that the wing loading for the aspect ratio 5.2 parawing would have to be greater than 2.0 as initially assumed. A value of 3.0 appears to almost satisfy the requirement. Increasing the aspect ratio of the parawing (which hang glider technology now seems to support up to about 8.5) would very probably increase $V_1$ to a satisfactory value. A limitation for the aspect ratio 5.2 parawing, noted in Figure 47(b), is the minimal excess thrust available for climbout. With the wing loading of 3.0, and hopefully with the thrust curve A, the maximum rate of climb would be less than 200 feet per minute at a climb angle of about 3°. Here again, a higher aspect ratio wing would improve performance.

The aspect ratio 8.0 wing would provide adequate high speed and climb performance with a wing loading of 1.0 or slightly less while lowering the minimum speed below 20 knots.

Performance of the 200-pound-class RPV with the auxiliary wing is not attempted here since the launch criteria of this study (78 knots end velocity at 4000 feet altitude, 95 degrees Fahrenheit) do not necessarily correspond to an aerodynamically defined Mini-RPV. However, if the thrust-to-weight ratio of the fictitious vehicle could be kept about the same as for the 120-pound-class vehicle, it is assumed that the problems of getting up to the launch release speed would be similar, but slightly more severe for the 200-pound-class vehicle, and probably would be achieved at some expense of higher $V_0$ velocities.

A performance problem common to all wing configurations will be the in-flight stability and control of the auxiliary wing/RPV combination. The aerodynamic control power of the Aquila type RPV may be relatively ineffective at launch speeds of around 20 knots. Control and stability type analysis is beyond the scope of this conceptual study; however, should the problem lead to additional control subsystems for the RPV and/or the auxiliary wing, additional complexity and cost would weigh heavily against the auxiliary wing concept.

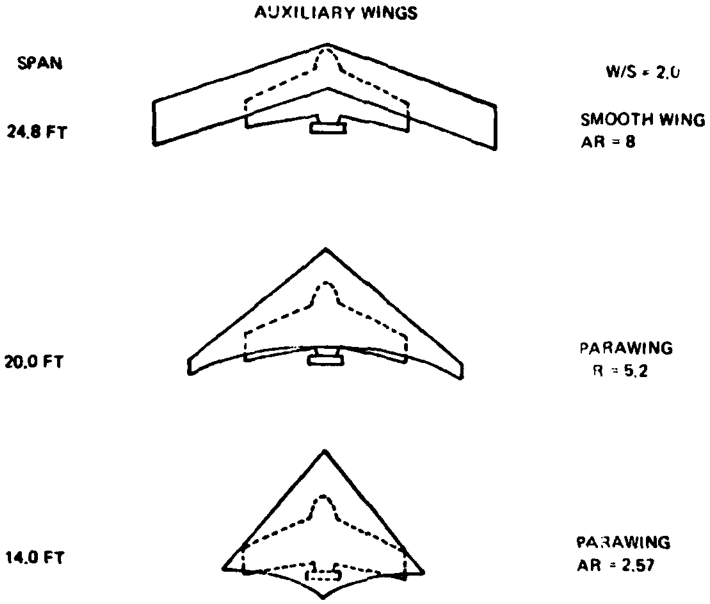

(a) Candidate Auxiliary Wings

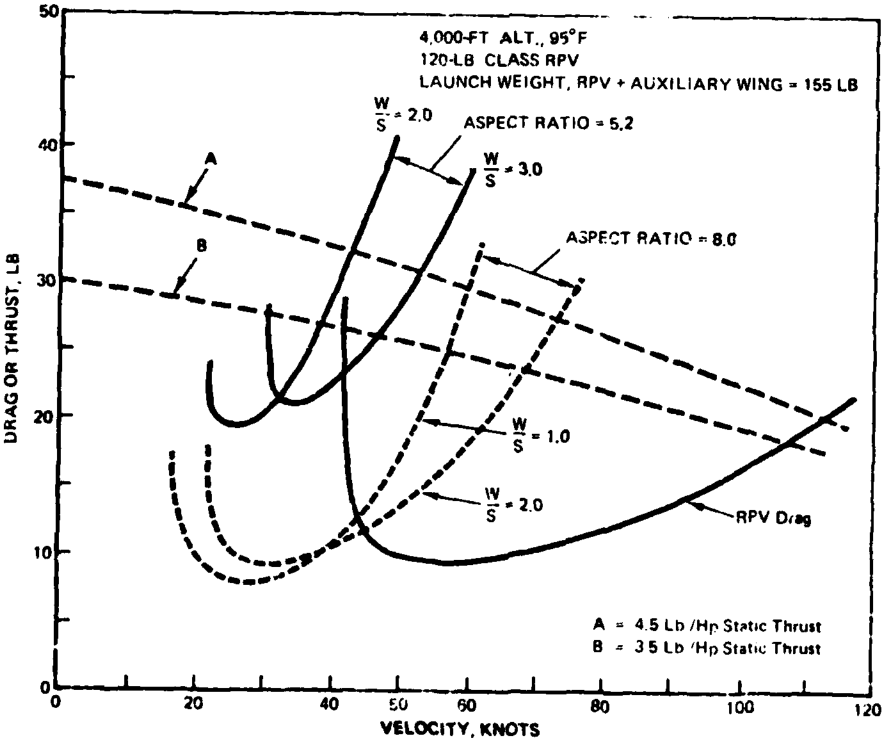

(b) Auxiliary Wing/RPV Thrust Drag Curves

Figure 47. Auxiliary Wing/RPV Performance

c. Conclusions

The secondary aerodynamic device described as the auxiliary wing, discussed above, appears to be a physically viable concept for launching an RPV and achieving the objective of reducing launcher total energy required, and consequently the length of the launcher. The mean force required to accelerate the RPV/auxiliary wing unit at a given "g" level would, however, be greater than for the conventional launcher because the launch weight of the RPV and wing (and shuttle) is greater than that of the RPV plus shuttle only.

Some areas of concern relative to the concept include (1) the installation of the light wing on the RPV by two men in wind conditions, (2) the effects of pitching inertia during launch, (3) free-flight stability and control, (4) the attrition rate and cost of wings that cannot be retrieved, or are damaged after being jettisoned, (5) visual signature created during the climbout of the RPV with the auxiliary wing attached.

In summary, it appears that the disadvantages of the auxiliary wing would offset the gains realized by shortening the launcher.

### 7.10.3 Launch Shuttle Vehicle, Concept I-10B

a. General

The launch shuttle vehicle concept (Reference 15) would employ a powered parafoil flexible fabric wing to carry a mini-RPV to a safe altitude from which it would be released to continue on its mission. The launch vehicle would then return to the launch site as shown in Figure 48. The major components of the launch shuttle vehicle concept are the parafoil wing, the shuttle vehicle and the RPV being launched. For the purposes of this study the parafoil/shuttle vehicle assembly will be referred to as the launch vehicle. If the shuttle vehicle is intended as a dedicated component only, it could be configured in various ways to enhance its functional capabilities.

Maneuvering control of the launch vehicle could be effected by warping the surfaces of the parafoil by means of lines actuated by electrically powered units within the shuttle vehicle or by means of the aerodynamic surfaces on the shuttle vehicle itself. A vehicle designed specifically for the launch shuttle operation could be configured with control surfaces larger than would be normal for free-flight RPVs to enhance the control power of the launch vehicle.

Recent flight tests of a USAF BQM-106 Mini-RPV/parafoil combination are reported to have shown that adequate flight control could be provided by the control surfaces of the RPV alone. The BQM-106, a pusher-propeller type configuration in which the propeller slipstream passes over the pitch and yaw control surfaces, is thereby well suited as the propulsion unit for a launch vehicle.

---

15. DATA PACKAGE, All American Engineering Co., subsidiary of All American Industries, Wilmington, Del., 12 January 1978.

Due to the short range required of the launch vehicle, which keeps it well in sight of a ground station, only a relatively unsophisticated remotely controlled radio system would be needed for the guidance link.

Propulsion for the launch vehicle/RPV combination during the launch sequence could presumably be furnished by the shuttle vehicle alone, or with assistance from the RPV. The truck-mounted tubular framework that supports the launch vehicle/RPV unit during the takeoff run (Figure 48) would have to be constructed so that it could be broken down into several demountable sections, or employ hinged joints or telescoping sections in order for it to be stowed on the bed of an M-135 truck. It appears that the framework would have to be mostly assembled on the ground before being put in place on the truck.

It may be found expedient to provide some form of truck-mounted guide rail to prevent undesired changes in attitude or heading until the launch vehicle/RPV unit has cleared the truck.

An essential ingredient for the system is very low friction between the parafoil slides and the tubular horizontal rails. In order to get the parafoil to move forward, the shuttle vehicle/RPV unit would have to move ahead first to provide a component of force to the parafoil in the forward direction. The less the friction, the less the likelihood there would be for oscillating motions occurring. An operating sequence for the launch system is indicated in Figure 48.

## D. Analysis

The sketches of Figure 48 indicate that the parafoil is a twin configuration presumably for the purpose of increasing the aspect ratio, consequently the flight performance of the system.

It appears that a major trade-off area exists in establishing an optimum aspect ratio and wing loading for the parafoil. The higher aspect ratio would presumably be beneficial for in-flight performance for any wing loading. In favor of a higher wing loading is (1) getting the cruise velocity of the launch vehicle/RPV closer to the desired release velocity for the RPV, and (2) whatever other benefits accrue from small parafoil dimensions.

In favor of a lower wing loading is (1) a low launch vehicle/RPV minimum velocity and consequently a shorter takeoff distance (length of the horizontal rails or tubes), and (2) a low landing velocity for the launch vehicle.

Attempting to sort out the parameters discussed above is beyond the scope of this study. However, some brief speculation can be done to get an indication of the length of the takeoff run, which is pertinent to establishing the length dimensions of the horizontal members of the launcher framework.

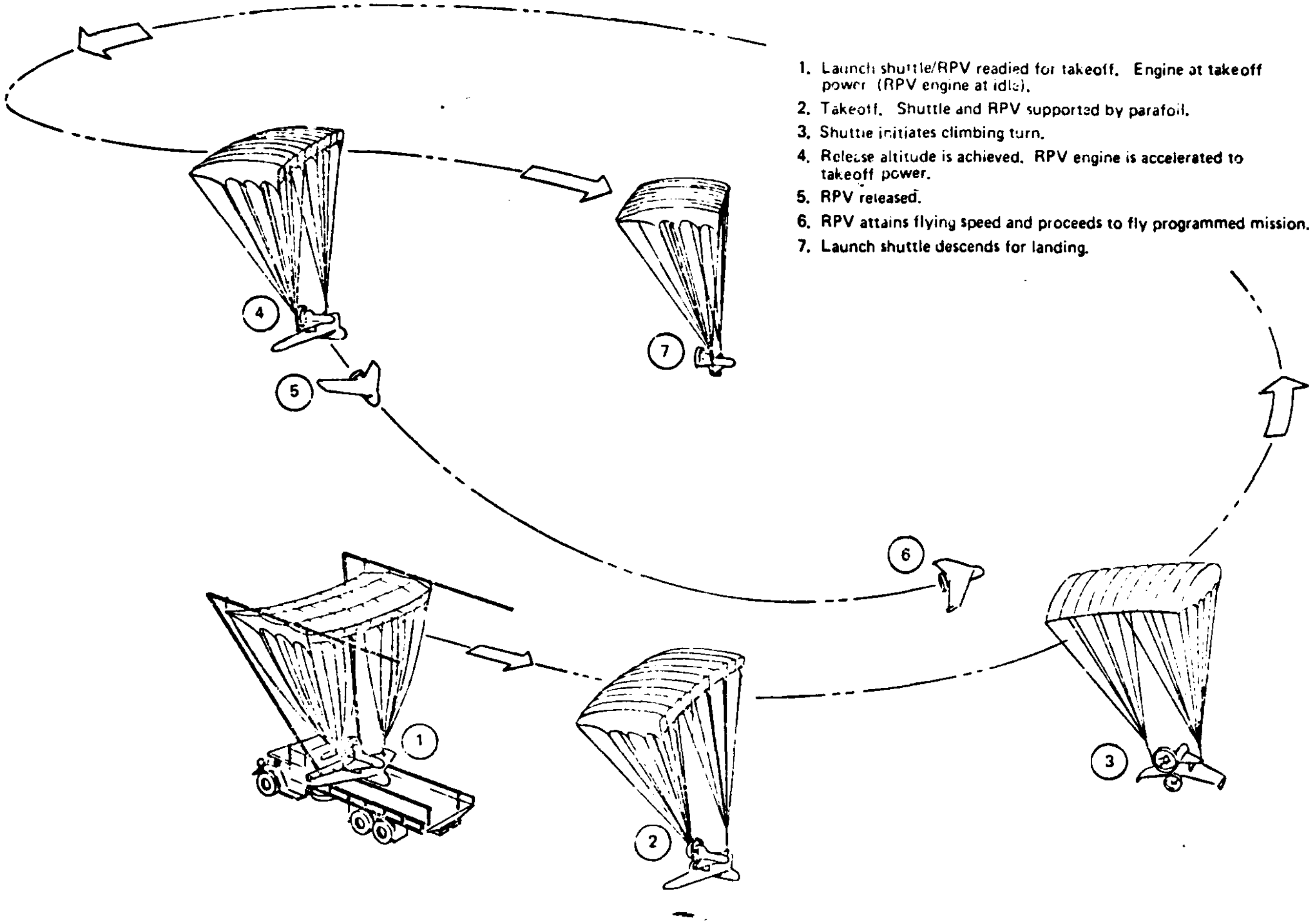

1. Launch shuttle/RPV readied for takeoff. Engine at takeoff power (RPV engine at idle).
2. Takeoff. Shuttle and RPV supported by parafoil.
3. Shuttle initiates climbing turn.
4. Release altitude is achieved. RPV engine is accelerated to takeoff power.
5. RPV released.
6. RPV attains flying speed and proceeds to fly programmed mission.
7. Launch shuttle descends for landing.

Figure 48. Launch Shuttle Vehicle Concept

Approximate numbers, based on three assumed wing loadings, are tabulated below.

| | | | |
|---|---|---|---|
| Wing loading, $lb/ft^2$ | .50 | 1.0 | 2.0 |
| Launch vehicle/RPV wt, lb | 350 | 323 | 311 |
| Minimum velocity, knots | 15.9 | 22.9 | 31.7 |
| Takeoff length, ft | 37 | 74 | 149 |

The weights listed above are derived from:

$$1.0\ W = .071 \frac{W}{W/S} + 200 + 100$$

where

$W$ = Weight, lb

$.071$ = Unit weight for parafoil, $lb/ft^2$

$W/S$ = Wing loading, $lb/ft^2$

200 = Weight of RPV, lb

100 = Weight of launch vehicle, lb

the minimum velocities are based on a maximum lift coefficient of .73 such that

$$V_{min} = 17.2 \sqrt{\frac{W/S}{C_L}} \sqrt{\frac{\rho}{\rho_0}} \text{ , knots}$$

where

$\frac{\rho}{\rho_0}$ is the density ratio correction for 4000-ft altitude, 95°F

and the distance to accelerate the launch vehicle/RPV to the minimum velocity is estimated by

$$\ell = \frac{V^2_{min}}{2g\ (T/W)}$$

and using an estimated thrust-to-weight ratio of $T/W = .3$ the takeoff lengths tabulated above were computed.

Here we see the essence of a conflict between flight performance and takeoff run distance in terms of wing loading. The higher wing loading may be desirable for cruise flight, but it also stretches the takeoff run.

Yet another wing loading consideration is the fact that the launch vehicle/RPV of lower wing loading would have to climb to a higher altitude to release the RPV because the RPV would have to be released at a steeper dive angle due to the greater mismatch in cruise velocity of the launch vehicle/RPV and the desired free-flight minimum velocity for the RPV.

Some of the trade-off factors discussed above are illustrated qualitatively in Figure 49.

### c. Conclusions

The shuttle launch concept could conceivably be converted to hardware after appropriate in-depth study to optimize the system for numerous trade-offs, some of which are noted above.

Some areas of concern for the concept relate to (1) the potential for rather large dimensions of the launcher framework, which could lead to problems in erecting and dismantling and repeat launch capability where the crew is limited to two men,and (2) the visual signature presented by the launch vehicle flying at appreciable altitudes above the ground. (3) Even though the launch vehicle, after releasing the RPV, would land at very low velocities, some landing space would be needed and in many cases some ground preparation (adverse to the criteria of this study) would be required. An alternative would, of course, be a recovery system such as a net.

It appears that the launch shuttle concept would not be as well suited to operations in the tactical environment specified for this study as would other, more compact, less complex truck-mounted launchers discussed in this study.

## 7.11 Linear Induction Motor, Concept I-11A

### a. General

In this subsection of the Mini-RPV conceptual launcher study the linear induction motor (LIM) is examined.

In its simplest form, the linear electric motor is an "inside out" design of either a conventional induction or synchronous machine. The electric motor is "laid out" in a flat form. The key attributes include accelerating forces available throughout the length of the motor and quasi-levitation forces present in the reaction member when under conditions of relative motion. Many variations of linear machines have been proposed and studied for tracked vehicle applications, notably high-speed trains. The two basic LIM types are:

- Fixed-primary
- Moving-primary

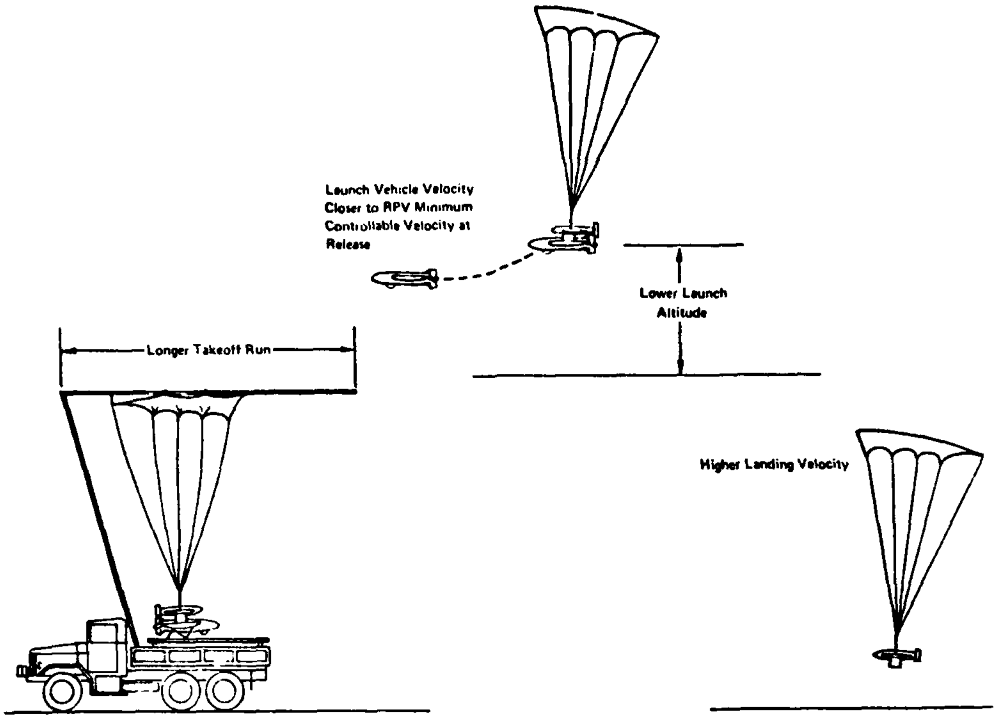

(a) Higher Parafoil Wing Loading

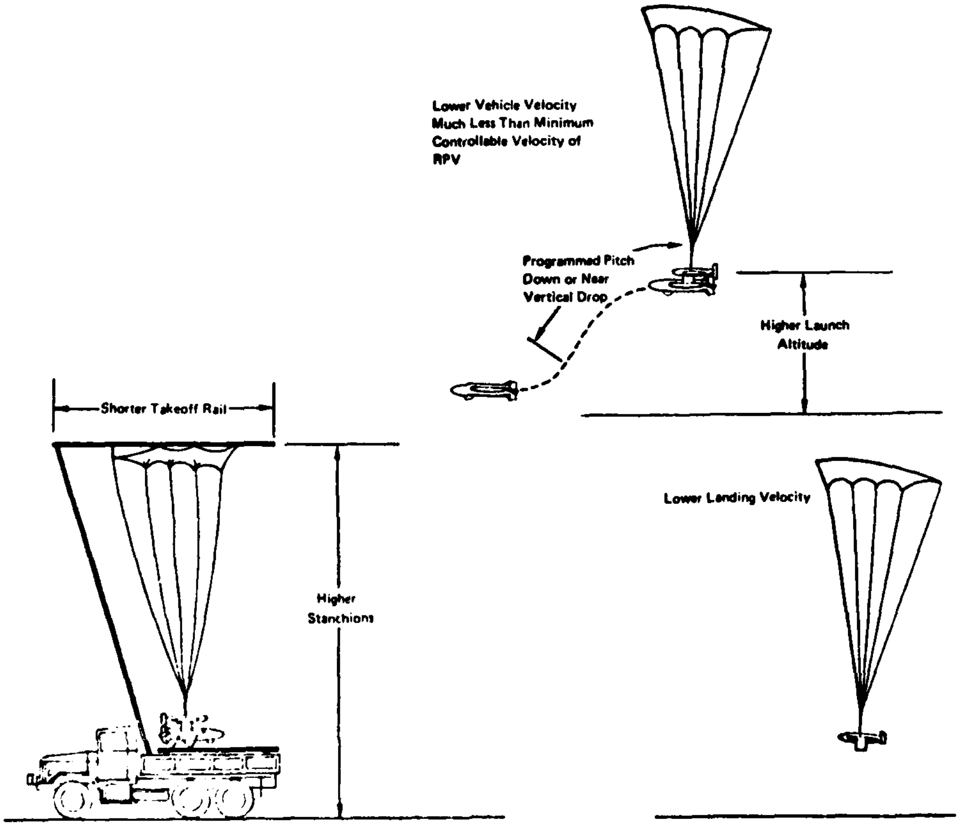

(b) Lower Parafoil Wing Loading

Figure 49. Launch Shuttle Vehicle Concept Trade-Offs

In the fixed-primary configuration, the stationary member (roadbed, or launch rails) contains the electrical windings and stator that provides the rotating or accelerating magnetic propulsion field, and the moving or reaction member is passive.

In the moving-primary configuration the stationary member is passive and the moving member contains the electrical windings and stator.

Intuitively the fixed-primary arrangement is chosen for the launcher role in order to minimize the weight and complexity of the moving element, which in this case is the shuttle that transports the RPV in the launch sequence.

A conceptual LIM launcher based on the fixed-primary principle is shown in Figure 50. The launcher system provides levitation to support the shuttle and propulsive forces to accelerate the RPV/shuttle combination.

The launcher motor features a double-sided arrangement of the reaction elements on the shuttle and the rotating field windings on the fixed primary or rail part of the launcher.

The shuttle is relatively long (about 7.5 feet) for this application in order to minimize the fringe magnetic end-field effects. The basic shuttle structure would be made of nonmagnetic material and the lift strips of aluminum alloy.

### b. Analysis

The linear induction motor, like the well-understood rotating machine counterpart, obeys classical parametric laws; torque/thrust, current, power factor, and efficiency as a function of "slip". Slip is defined as the difference between the virtual electrical rotating field and the actual rotor position. Further, because of the launcher/accelerator application, the shuttle assembly must start at battery position and at zero velocity. At zero velocity, the slip is maximum and the available thrust lowest. At "end speed", the slip will approach the minimum value, while the developed thrust will become maximum. At minimum slip, the smallest differential between virtual and actual rotor position, the losses in the reaction rail are minimum and most of the power is available for propulsion.

Figure 51 shows normalized linear induction motor performance data (Reference 21). Values on the figure are not necessarily typical for all machines, loads or power factors. Intra-machine variations are usually not large. Therefore, these values can be viewed as representative.

In Figure 51 an estimated curve of electrical power required versus acceleration distance $\ell$ is shown for the 200-pound-class RPV with an end-velocity of 78 knots. Mean acceleration factors $\eta$ in

---

21. Dannan, J., Day, R., Alman, G. K., A LINEAR INDUCTION MOTOR PROPULSION SYSTEM FOR HIGH SPEED GROUND VEHICLES, Proceedings, IEEE, Vol. Gl, No. 5, May 1973

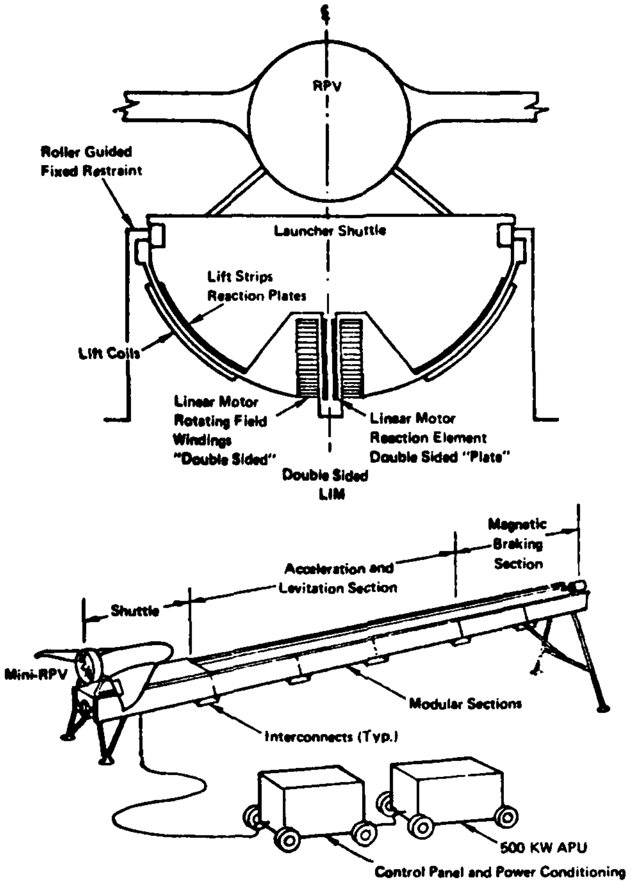

Figure 50. Double-Sided LIM Conceptual Launcher

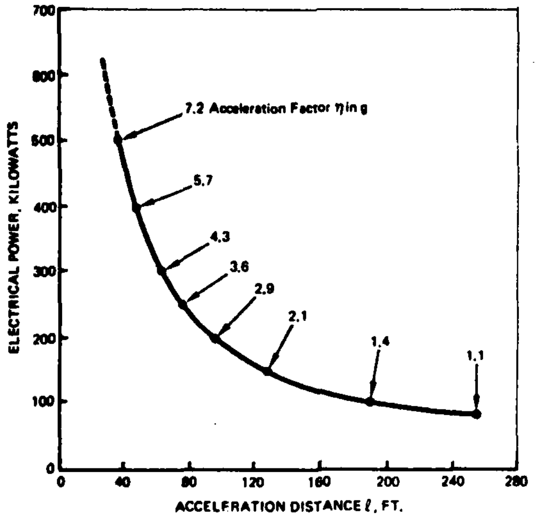

Figure 51. Electrical Power vs Acceleration Distance

g's are spotted on the curve. The weight of the mass being accelerated, the RPV plus the shuttle (the passive reaction member) is estimated at 310 pounds. Three-phase current at 440/480 volts delta, and 175 hertz is assumed.

It will be noted that computations for the curve were not carried beyond 500 kilowatts where the mean acceleration factor $\eta$ is 7.2. Since the peak acceleration (force) would be much higher, approaching $\eta = 12$ g, the 500-kilowatt point, which corresponds to a minimum accelerating length $\ell$ of about 40 feet, appears to be a reasonable cutoff.

The accelerating length plus the shuttle plus a magnetic braking section of about 20 ft gives a total length of about 67.5 feet. At an estimated unit weight of about 50 pounds per foot the induction motor primary would weigh about:

$$W = (40 + 20)\ 50$$

$$= 3000 \text{ lb}$$

A large capacity power conditioning unit required for the inductio motor would be a rather large heavy item that would dissipate up 150 kilowatts.

Power for the linear induction motor launch concept could be furnished by an auxiliary power unit such as a diesel motor/generator set similar to the MA-6.

An alternative to a direct motor/alternator hookup is a stored energy system based on the flywheel principle. In this way a relatively small power source (electric motor or gasoline engine) could, in a few minutes, spin up a wheel or rotor from which the power required could be extracted in the fraction of a second required to launch with relatively small changes in angular velocity of the rotor.

### c. Conclusions

Although the principles involved are viable, the linear induction motor concept does not appear to offer an appropriate solution to the Mini-RPV launch criteria of this study. The size and weights of the linear induction motor launcher components would make the concept incompatible with the handling criteria of this study.

Other areas of concern are (1) personnel safety based on the high electrical voltage and energy levels, the transients produced by the pulsed electromagnetic field, (2) the effects of the transients on avionic, navigation, or sensor equipment onboard the RPV, (3) the signature provided by the short duration high intensity magnetic field, and (4) the effects of heat accumulation in the primary system related to short duty cycles.

# 8.0 PRELIMINARY EVALUATION AND CONCEPT SELECTION

Descriptions, analysis, and comments on the advantages and disadvantages of each of the Mini-RPV launch concepts categorized in Table 2 are presented in subsection 7.0 of this report. Sixteen of the concepts were set aside by agreement of a joint Army/TRA Committee on 2 February 1978. A list of those concepts that were set aside, and a summary of the reasons is presented in Table 8. Data on which these reasons were based vary among the concepts from good quantitative information to purely subjective engineering judgements. Therefore some of the reasons for setting aside a given launch concept are heuristic in nature. However, it is felt that those concepts chosen for further evaluation are significantly better than those that were set aside.

The five concept categories to be carried over for Phase II studies are

| | |
|---|---|
| Neg'ator Spring Motor | I-1B-2 |
| Pneumatic Piston | I-2A-1 |
| Pneumatic-Free Piston | I-2B |
| Rocket, Zero Length | I-4A |
| Rocket, Finite Length | I-4B |

## TABLE 8

## PRELIMINARY
## EVALUATION AND CONCEPT SELECTION

### ELASTIC I-1

#### I-1A ELASTOMERIC (SHOCK CORD)

- Inordinate length of launcher
- Inconsistent properties of shock cord material
- Sensitivity to environmental factors
- Short shelf life

#### I-1B-1 NEG'ATOR EXTENSION SPRING

- Inertia of spring mass disproportionately high for 200-pound-class RPV
- Launcher configuration unwieldy

### PNEUMATIC I-2

#### I-2A-2 PISTON/CLOSED-LOOP CABLE

- Believed to be technically credible but shows no particular advantage over more highly developed pneumatic launchers

#### I-2A-3 PISTON/FULL EXTENSION

- Appears to involve severe dynamic problems that increase with capacity of the launcher

#### I-2C INFLATABLE TUBE

- Appears to be less efficient than other pneumatic launchers
- Technical data insufficient for even cursory analysis

### HYDRAULIC I-3

#### I-3A ENGINE

- Concept validated by test hardware
- No particular points or preference over other candidate launchers in evidence
- Dual energy systems (pneumatic and hydraulic) would complicate maintenance requirements

## ROCKET I-4

### I-4C PYROTECHNIC MOTOR

- Apparently valid concept less complex than other candidates involving rotating machinery, but more complex than linear type pyrotechnic launcher candidates

## FLYWHEEL I-5

### I-5A FLYWHEEL

- A viable concept based on experience with larger aircraft where a run of several hundred feet is used to launch
- Mini-RPV requirements (short distances and small time interval) imply machinery sophistication level higher than for other Mini-RPV candidate launchers

## INCLINED RAMP I-6

### I-6A INCLINED RAMP

- Inordinate size incompatible with Mini-RPV operations in the tactical environment

## FALLING WEIGHT I-7

### I-7A FALLING WEIGHT

- Inordinate size incompatible with Mini-RPV operations in the tactical environment

## ROTARY CARROUSEL I-8

### I-8A ROTARY CARROUSEL

- Size of rotary assembly based on criteria of this study is unwieldy for launching 200-pound RPV
- Releasing counterweight with RPV presents hazard potential
- Presents moderately large visual signature

## TETHERED AERIAL I-9

### I-9A AEROSTAT

- Visual signature of aerostat 200 to 300 feet above Mini-RPV section's operating site is unacceptable

### I-9B KITE

- The kite concept is wind dependent and therefore is unacceptable for tactical operations

## SECONDARY AERODYNAMIC DEVICE I-10

### I-10A AUXILIARY WING

- Concept is physically viable but disadvantages appear to offset gains realized thru a shorter launcher rail

  Major disadvantages are: installing auxiliary wing in wind conditions, free-flight stability and control problems and visual signature created during climbout

### I-10B LAUNCH SHUTTLE VEHICLE

- Concept is credible but appears to be less compatible with the intended tactical operations than less complex truck-mounted launchers

## LINEAR INDUCTION MOTOR I-11

### I-11A LINEAR INDUCTION MOTOR

- Size, power, and weight to be handled in the field preclude consideration of the linear induction motor for Mini-RPV launch operations

# 9.0 PHASE II LAUNCH CONCEPT STUDIES

## 9.1 Introduction

The end product of Phase II, Final Concept Selection, is to select two Mini-RPV launch concepts from the group of five concepts carried over from Phase I. The two concepts selected will then be carried over to Phase III for further study and evaluation for the purpose of arriving at a preferred system. The final subtask of Phase II is to establish an evaluation procedure that numerically weighs and ranks the five candidate launch systems against an overall set of criteria as set forth in subsection 10.0 of this study.

The studies of Phase II generally emphasize the physical aspects of field deployment of the candidate launch systems carried over from Phase I. However, in some instances, additional analysis is done in the manner of Phase I investigations where it was felt that such work was needed to implement the intent of Phase II.

The concepts that will be studied are:

9.2.2 Neg'ator Spring Motor, Concept I-1B-2

9.3.2 Pneumatic, Piston/Reeved Cable, Concept I-2A-1

9.3.3 Pneumatic, Free Piston, Concept I-2B

9.4.2 Rocket, Zero Length, Concept I-4A

9.4.3 Rocket, Finite Length, Concept I-4B

It will be noted that the goal of stowing a launcher under the canvas cover of an M-135 Army truck is emphasized in the following Phase II studies. This goal does not necessarily override the basic but less constrictive mobility criterion (subsection 3.0), which states: "Launcher system transportable by vehicle no larger than M-135 2-1/2 ton truck." However, it stands to reason that the capability to meet the objectives of the goal without incurring undue complexity and cost would weigh heavily in favor of a given launcher concept.

### 9.1.1 Launcher Emplacement and Displacement Considerations

The common denominator of the Phase II launch studies for this study is the overall utility quotient of a launch concept in the tactical environment at 2-5 km from the FEBA. Utility would be determined by the criteria and guidelines of subsection 3.0 of this study.

In essence, the criteria of this study require that a launcher be transported to the field stowed in an M-135 U.S. Army truck, put in ready condition, then to be stowed again ready for transport; all to be done by two men in a relatively short time. In the interim the launcher has to be easily adjusted for wind direction and angular elevation, and readied for repeated launch operations, also in a short time.

Within the bounds of this study, the total weight of a viable launcher will not come near taxing the capacity of an M-135 truck and in this respect is relatively unimportant. It is how weight affects handling (erection, dismantling, adjusting, etc.) of a launcher by two men that is of importance. It is desirable that a launcher in the stowed configuration would fit within an envelope that does not extend beyond the truck bed dimensions or the top of canvas cover of an M-135 truck. To meet such a requirement, the weight of a simple launcher that incorporates demountable joints would preferably be low enough that its components can be conveniently handled manually under unfavorable conditions. A step forward in mechanizing the launcher to make it easier to handle would be to use hinged rather than demountable joints where possible. Hinged components should, as a minimum, be restrained in some manner such that free swinging masses do not constitute a hazard to personnel. In some launcher configurations, mechanical aids may be required to handle hinged components.

The choice of demountable, telescoping, or hinged joints, or none at all will depend on individual circumstances. In any event basic simplicity per se has to be weighed against safe and rapid handling qualities in the tactical environment.

Conceptual mechanizations of folding and demountable type launchers are examined in paragraphs following,with a view to implementing later discussions relative to the implacement and displacement of individual launcher concepts. For purposes of the study all launchers are assumed to be 28 feet in length, overall.

In the following discussions, reference to horizontally folded launchers alludes to the fact that the launcher sections are mounted on hinges with vertical axes and therefore, they swing in a more or less horizontal plane while being stowed or unfolded to ready the launcher. Conversley, reference to vertically folding launchers alludes to those folding and unfolding in a vertical plane about hinges with horizontal axes.

### a. Horizontal Folding

Figure 52 shows schematic illustrations of a typical three-section, single-rail, horizontally folding launcher mounted on an M-135 U. S. Army truck. The launcher is shown in (a) as stowed for transport, in (b) the assembly has been rotated about its base to a position where the hinged members can be unfolded. The unfolding sequence is completed in (c) after the hinged joints are secured. During the unfolding operation the hinged launcher members are swung in a horizontal plane where the effort required by the ground crew would be minimal. In (d) the launcher has been rotated to the desired launch angle, auxiliary supports assembled, and is in "ready" position. The launcher could be rotated about the vertical axis of its base to more than 180° from the position shown in (d) in order to accommodate wind shifts or for other reasons.

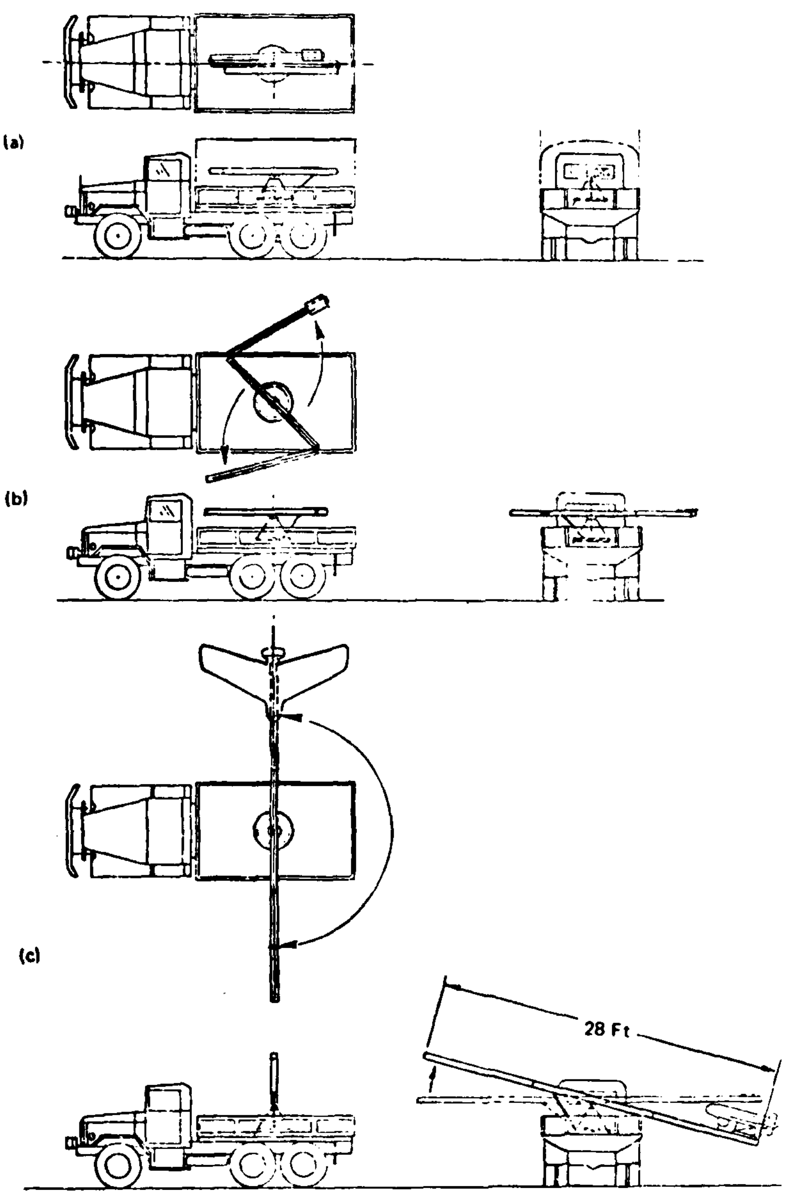

Figure 52. Truck-Mounted 3-Section Launcher, Horizontal Folding

It follows that the twin (or multi-rail) type launcher could also be designed to swing horizontally (Figure 53). In this case, some structural duplication of cross members and increases in member cross sectional area would be necessary in order to assure structural integrity of the separate launcher sections while supported on one edge only. The total width of the sections in the stowed configuration should also preferably fall within the width of the truck bed.

Figure 54 illustrates how it would be possible to mechanize a longer launcher comprised of four sections. However, it appears that three sections will suffice for this study.

### b. Vertical Folding

The vertical folding principle applied to a multi-rail, three-section launcher is shown in Figure 55. In (a) the launcher is shown stowed for transport. In (b) the assembly has been rotated 90° about its base to begin the unfolding sequence. In (c) the launcher has been angularly elevated so that the forward section B can clear the truck bed as it swings down, and then upward to position. The aft section C is similarly rotated into position. In (d) the launcher is in the ready position and, like the horizontal folding type launcher previously discussed, may be rotated more than 180° about the vertical axis of its base.

Vertical folding is probably less desirable for either the single-or multi-rail launchers in that it involves handling the weight (partially) of the launcher sections against gravity to fold or unfold them where manual operation is under consideration.

Hand-powered screw jacks for each hinged joint could serve to actuate the hinged components and electric or hydraulic actuators would, of course, accomplish the folding and unfolding of launcher components in a short time interval and in a safer manner.

From the point of view of structure only, the vertically folding principle would probably be simpler and lighter for the multi-rail launcher than horizontal folding because of the inherent structural continuity afforded by the vertical arrangement.

For the single-rail launcher there are no apparent benefits to be realized from vertical folding.

### c. Demountable Launcher Sections

Demountable joints can be employed to break a launcher into smaller sections for stowage purposes, and in most cases would be simpler to design and fabricate than a hinged joint. The major problem with the demountable concept is that the weight of each component that can be handled satisfactorily in the field by two men would have to

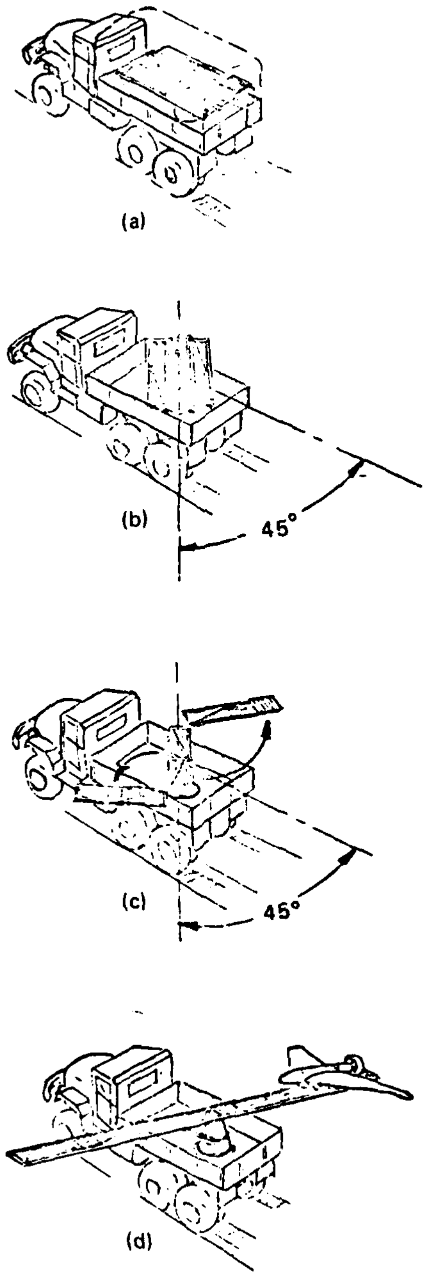

Figure 53. Truck-Mounted Twin-Rail 3-Section Launcher, Horizontal Folding

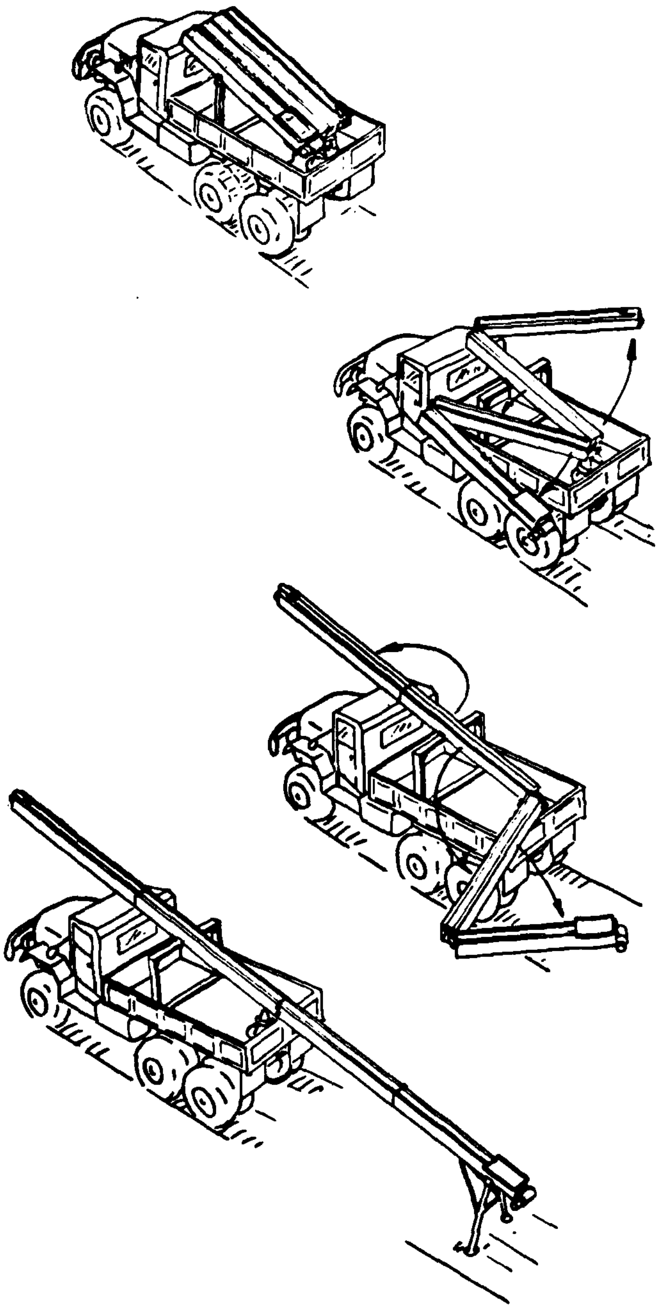

Figure 54. Truck-Mounted 4-Section Launcher, Horizontal Folding

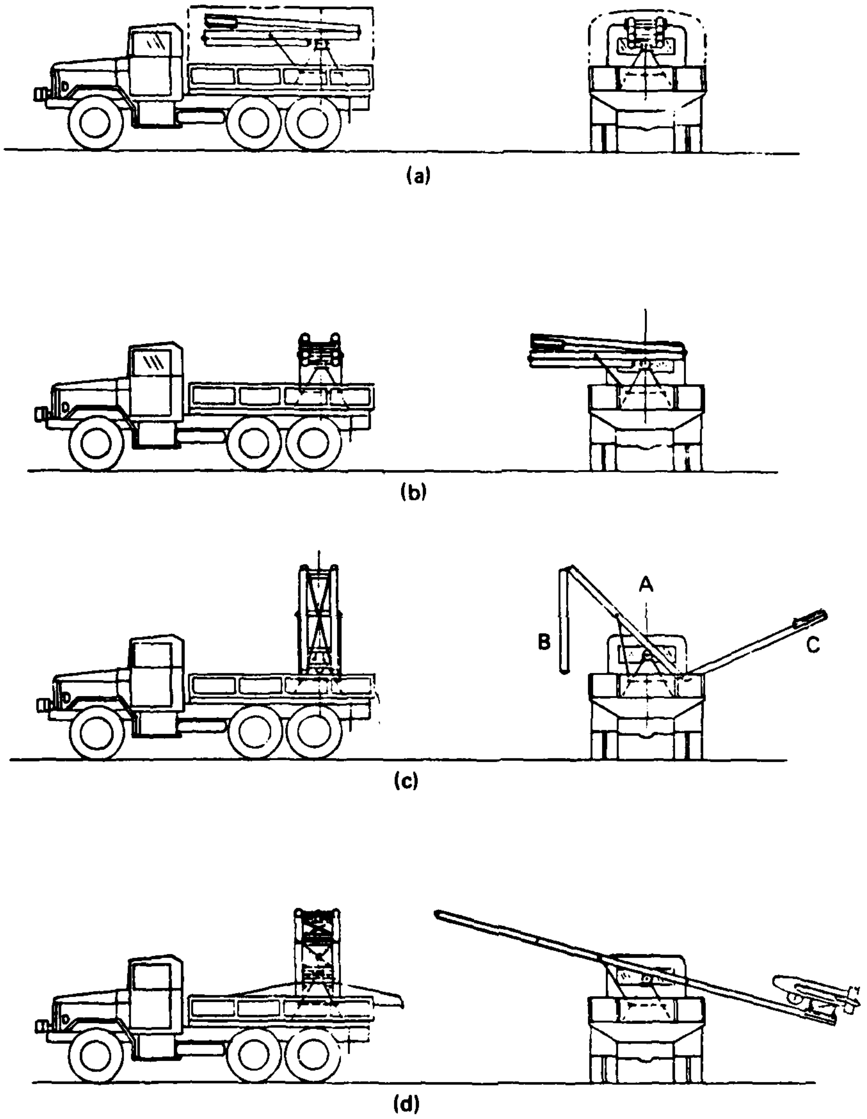

Figure 55. Truck-Mounted 3-Section Twin-Rail Launcher, Vertical Folding

be much less than a hinged section. The assumption is made here that one man would be required to support the weight of the section while another assembled, or disassembled the connecting joints. In Reference 18 recommendations for a person lifting weights with two hands range from 142 pounds for a 1-foot lift to 36 pounds to a 5-foot lift, with these figures being reduced as the objects being lifted increase in width. With such limitations it appears that a cable hoist or another form of assist mechanism would be required to handle the demountable launcher sections of the size envisaged in this study.

### d. Launch Site Considerations

One of the many unpredictable factors that will occur in the worldwide deployment of the Mini-RPV in the tactical environment is the terrain conditions in various areas where it will be necessary to conduct launch operations. As stated in the criteria for this study, pre-preparation of a ground site is deemed infeasible, but limited on-site preparation would be permitted. The ideal is no preparation.

The launcher configurations studied above would probably incorporate, by necessity, a gimballed pedestal such that the launcher could be properly oriented even though the truck on which it is mounted is sitting on ground that is uneven in more than one plane.

## 9.2 Elastic, Concept I-1

### 9.2.1 Introduction

Of the three concepts under "Elastic" studied in Phase I of this study, the Neg'ator spring motor (subsection 7.1) is brought forward as a more likely launcher candidate than the shock-cord or Neg'ator extension spring concepts.

### 9.2.2 Neg'ator Spring Motor, Concept I-1B-2

### a. General

Figure 56 presents the Neg'ator spring motor powered launcher concept (Ref. 7.1.4) studied by Prototype Developments Associates. The figure shows suggested modifications to the launcher concept to accommodate stowage on an M-135 truck. As will be noted, the spring motor unit has been placed on its side to eliminate interference with the remainder of the launcher in the stowed configuration, and that the launcher stroke has been lengthened. The folding scheme shown is essentially the same as the basic vertical fold concept of Figure 55.

---

18. Human Factors Engineering, Chapter 2, AFSC DH 1-3, Third Edition.

b. Launcher Operation

Operation of Neg'ator spring motor launcher would be relatively simple. After the spring motor is charged, the shuttle latched in place, and correct tension in the system determined, the RPV/ shuttle unit would be ready for "firing".

Remote control of the launcher operation would be preferable for the safety of personnel because of the energy stored in the cable system. A motor-driven charging winch (discussed below), a remote cable tension indicator, and a remotely operated latch release with appropriate safety overrides could be incorporated in the system.

c. Launcher Charging

The criteria of this study allow 15 minutes for repeat-launches with a goal of 5 minutes. Assuming that as little of this time as possible should be spent by the launch crew in effort directly associated with charging the launcher, it appears that manually charging the Neg'ator spring motor is not a practical solution as suggested in Reference 6 (PDA). For example, a lever-powered winch geared 5:1 with 3-foot levers actuated by two people supplying 50 pounds each through a stroke angle of 30 degrees would take about 10.7 minutes (one per second rate) or about 21.4 minutes (one per two seconds rate) to charge the launcher by pulling the shuttle, working against the spring motor, back to battery position.

The launcher could be charged in 5 minutes or less with a winch driven by an electric motor of about .64 HP output.

d. External Power

The only external power identified for the Neg'ator spring control concept is the electrical energy required for the winch to charge the launcher.

With shaft power of about .64 HP required it is assumed that the electrical input would be about 1 HP or 746 watts. Assuming a truck-supplied 28-volt DC source, the power required per 5-minute charge would be 2.2 ampere-hours.

e. Weights

Estimated weights for the truck-mounted Neg'ator spring motor launcher of Figure 56, taken from Reference 6, are:

| | Weight, Lb |
|---|---|
| Vertical support structure | 300 |
| Energy absorption | 100 |
| Rail assembly | 100 |
| Rail support | 50 |
| Winch | 50 |
| | 600 |
| Motor assembly | 900 |

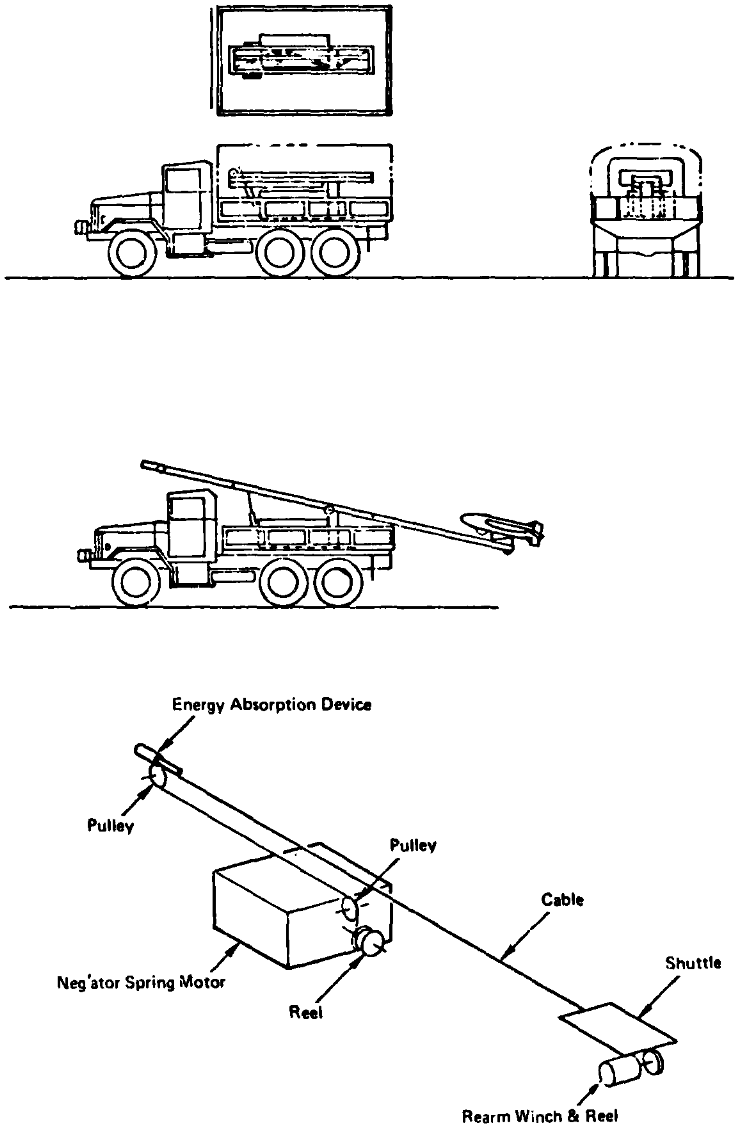

Figure 56. Truck-Mounted Neg'ator Spring Motor Launcher

f. Signatures

With no actual experience with Neg'ator spring motors or the size and power proposed for the launcher, it is not possible to speculate on their acoustic output. However, being encased as shown earlier, it appears that noises from the spring motor could be readily suppressed. And, again, the RPV/propeller noise could conceivably predominate the launcher noises in both magnitude and certainly in duration.

The launcher should be relatively benign with respect to IR and electromagnetic emissions.

g. Conclusions

Insofar as operations in the field are concerned, the Neg'ator spring motor launcher concept appears to be relatively simple and straightforward and could be made to generally meet the criteria of subsection 3.0 of this study.

The major uncertainties for this concept go back to those stated in the conclusions of subsection 7.1.4, which relate to an insufficient technical base to confidently predict the performance of a large multispring motor.

## 9.3 Pneumatic, Concept I-2

### 9.3.1 Introduction

Two of five pneumatic launcher concepts investigated in Phase I (subsection 7.2) are brought forward to Phase II for further study related principally to the aspects of field deployment. The concepts are:

a. Piston/Reeved Cable, Concept I-2A-1.

b. Free Piston/Slotted Cylinder, Concept I-2B.

These concepts will be treated in paragraphs following.

### 9.3.2 Piston/Reeved Cable, Concept I-2A-1

a. General

The All American Engineering Co. LP-20 series of pneumatic launchers pioneered launch operations for the Army/Lockheed Aquila, MQM-105 and the Navy/TRA STAR Mini-RPV.

Performance data for the LP-20-214 launcher used in the STAR flight test program is presented in subsection 7.2.3.

Figure 57 shows the LP-20-219 launcher used for the Aquila RPV mounted on an Army vehicle. The LP-20-219 is similar to the

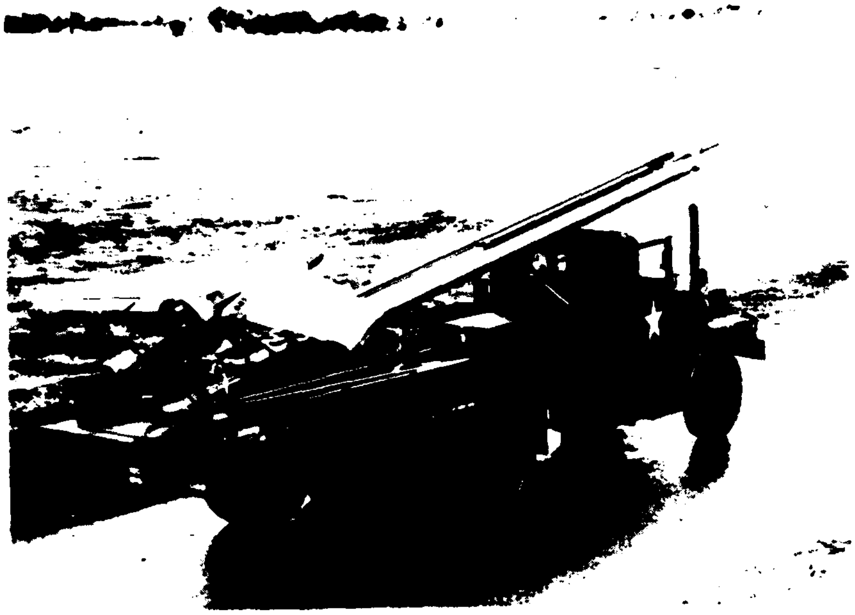

Figure 57. Truck-Mounted AAE LP-20 Type Launcher

LP-20-214 launcher. A later concept for the launcher, designated as the stowable LP-20, is seen in Figure 58. A concept for mounting the stowable launcher on an M-135 truck is presented in Figure 59.

### b. Launch Operation

The launcher system logic diagram, sequence control steps, and the launcher control panel presentation used for the LP-20-214 in the STAR flight test program are seen in Figure 60. The launcher control panel is located remotely from the launcher and the final override in the form of a guarded switch is located in a control center.

Additional information on the mechanical sequence of operations is reviewed in subsections 7.2.3 and 11.2.

### c. Launcher Charging

One of the features of the pneumatic launcher in general is that the choice of a compressor to charge the launcher is optional over a wide range of performance characteristics. The compressor's maximum rated pressure should be high enough to have a comfortable margin over the maximum reservoir pressure requirement. The time to charge the launcher's reservoir is then a function of the delivery rate (cubic feet per minute) of the compressor chosen.

In the test operations of the LP-20-214 with the STAR RPV, a compressor with a continuous duty rating of 16.7 cubic feet per minute at 200 pounds per square inch was used. However, in pushing the pressure up to about 450 pounds per square inch, the average delivery rate was apparently less than 16.7 cfm and the time to charge was greater (about 25 minutes) than would be desired in field operations.

The parametric curves of Figure 61, derived from equations in subsection 7.2.2, show the time to charge a 7.81-cubic-foot reservoir, such as the LP-20-214, against the delivery rate in cubic feet per minute. Assuming a compressor pressure rating of 1000 pounds per square inch and returning to Figure 20, it is seen that compressors in the 5-to 10-HP range would amply cover the 15-minute time criterion. Reducing the time to 5 minutes would shift the power requirements into the 15 to over 20 HP class, to cover the range of reservoir pressures shown in the curves of Figure 61.

If a gasoline engine is used as the power source, the higher power engines would still be relatively inexpensive to operate compared to compressors with increased delivery rating. It is interesting to note that if doubling the power at a constant specific fuel consumption rate to the compressor relates to a similar increase in delivery rate, that the energy (fuel) consumed per launch would not increase since the time to charge the reservoir would be cut in half.

In the particular operating sequence used for the LP-20-214 launcher for the STAR flights, when the ball valve was opened additional

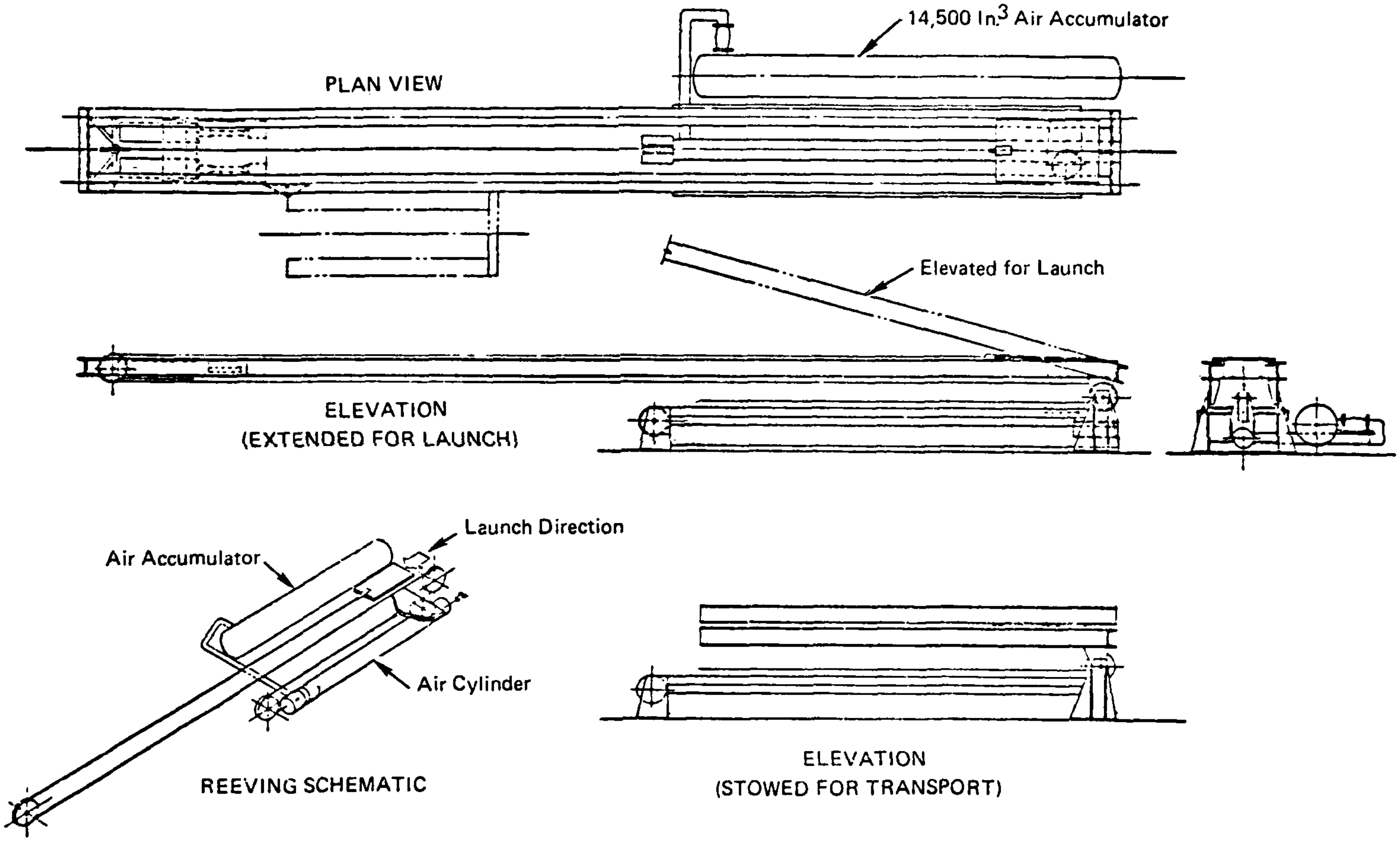

Figure 58. Stowable AAE LP-20 Type Launcher

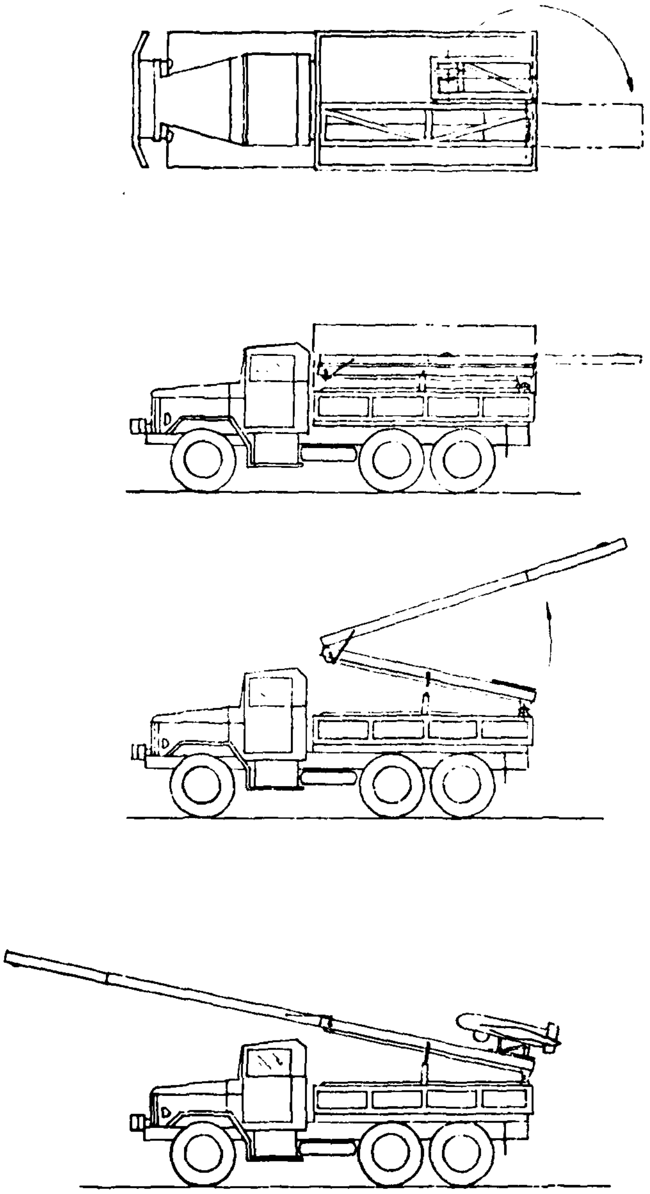

Figure 59. Truck-Mounted AAE LP-20 Stowable Launcher

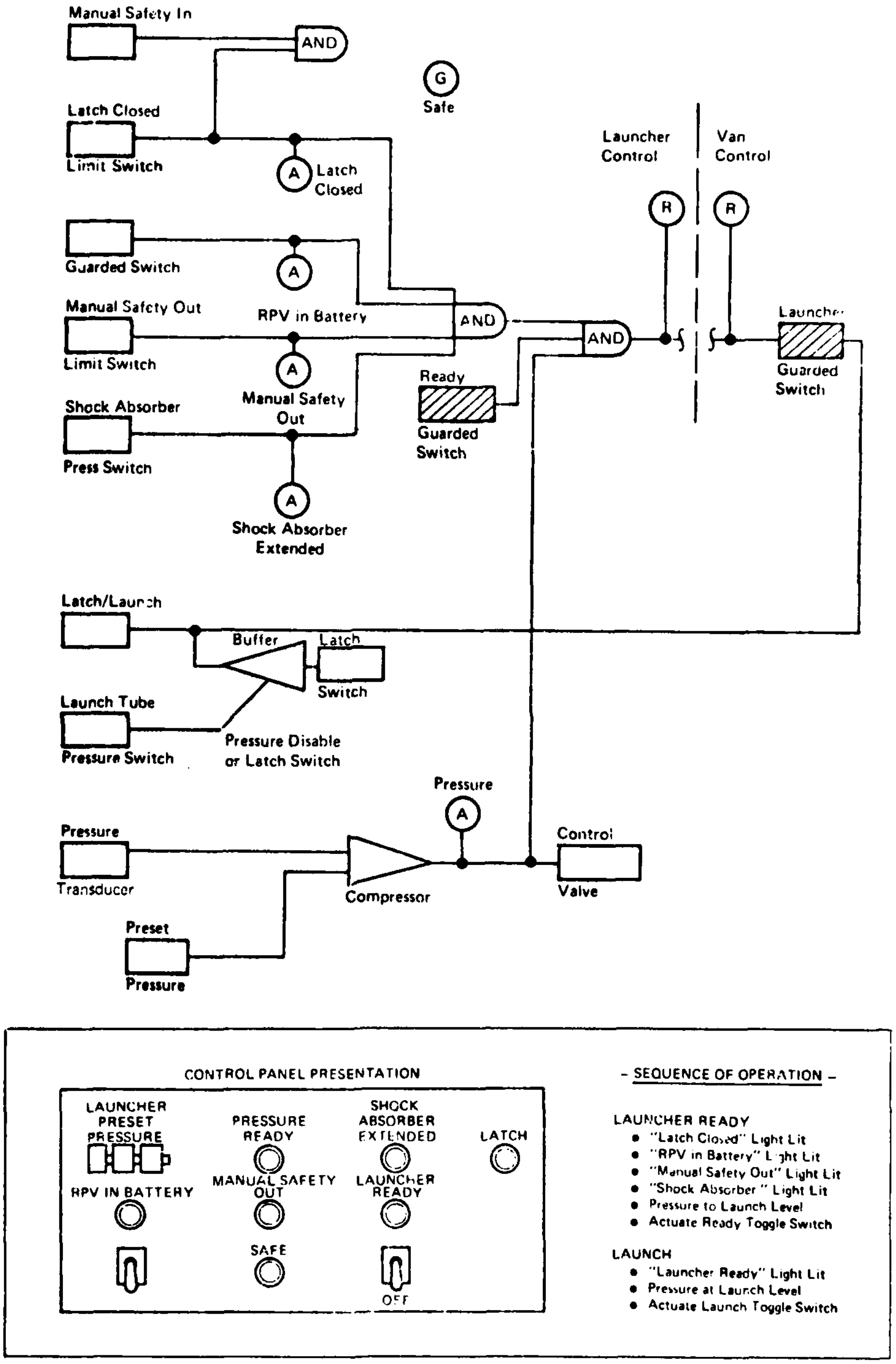

– SEQUENCE OF OPERATION –

LAUNCHER READY
- "Latch Closed" Light Lit
- "RPV in Battery" Light Lit
- "Manual Safety Out" Light Lit
- "Shock Absorber" Light Lit
- Pressure to Launch Level
- Actuate Ready Toggle Switch

LAUNCH
- "Launcher Ready" Light Lit
- Pressure at Launch Level
- Actuate Launch Toggle Switch

Figure 60. LP-20 Launcher Logic Diagram and Controls

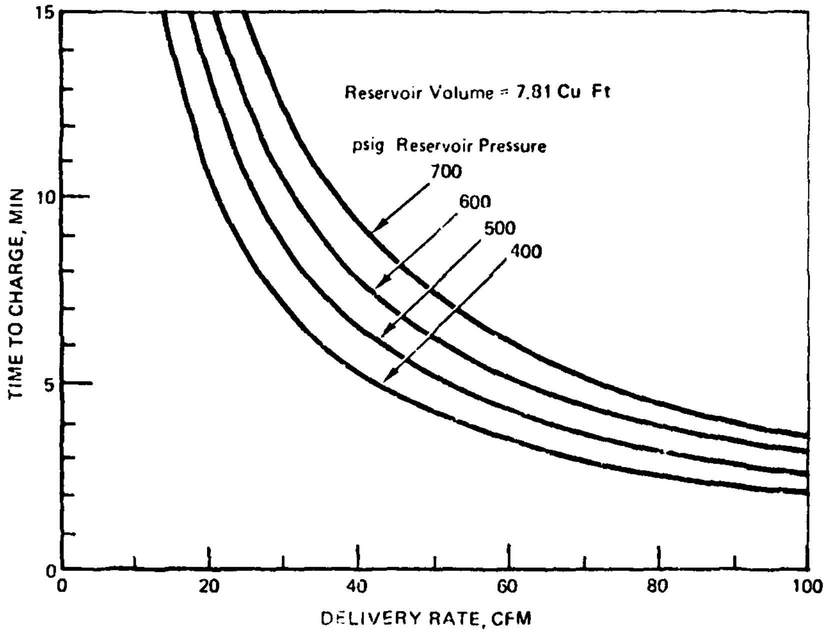

Figure 61. Initial Time to Charge 7.81-Cu Ft Reservoir

volume between the valve and the piston was exposed, which reduced the pressure about 16 percent. Then the compressor automatically brought the pressure back to the desired level. The time involved for this additional operation is estimated at about 3 minutes, which is additive to the initial time to charge the reservoir. In future operations, it would appear that if the reservoir were charged to a pressure level about 16 percent above its nominal level that the additional charge time could be eliminated.

Subsequent launches after the reservoir is initially charged require considerably less time since residual pressure is retained in the reservoir after each launch operation.

### d. External Power

A 28-volt DC source of electrical power is required to operate the LP-20-214 type launcher.

### e. Weights

Estimated weights for the piston/reeved cable pneumatic launcher are:

| | Weight, Lb |
|---|---|
| Launcher | 850 |
| Pedestal | 128 |
| Front support | 50 |
| | 1028 |

A truck-mounted compressor unit would weigh approximately 600 pounds.

### f. Signatures

With the truck-mounted launcher implaced in the field, its visual appearance would be about the same as other twin-rail launchers.

In operation, most of the acoustic output of the launcher would probably be masked by the RPV engine/propeller noise. If not, that emanating from the compressor unit and air exhausing from the launcher could be readily suppressed. The noise due to the shuttle impacting the shock absorbers and accompanying noises are significant but of short duration.

In all, it is not known at this time how the noise level of the entire RPV section in the field would compare to the operation of a pneumatic launcher. No IR signature that could not be easily attenuated, or electromagnetic emissions of significance are foreseen.

### g. Conclusions

The piston/reeved cable pneumatic launcher such as the LP-20 stowable type appears to meet the general criteria of this study.

Areas of concern for field operations are (1) achieving accurate alignment of the launcher after unfolding (both vertical and horizontal folding is involved), (2) life expectancy of the moving parts of the system, especially the reeved cable system and the energy absorption installation.

### 9.3.3 Free-Piston/Slotted Cylinder, Concept I-2B

#### a. General

The Fairchild Stratos Division free-piston/slotted cylinder pneumatic launcher, now in the test phase of development, has not been employed operationally as of this writing. A series of typical performance data points observed during part of the test phase are presented in subsection 7.2.6, where approaches to increasing performance to comply with the maximum launch energy criteria of this study were discussed.

Figure 62 shows a truck-mounted version of the free-piston/slotted cylinder launcher and indicates how the launcher would fold for stowage. The discussion under subsection 9.1.1 for the horizontal folding type launcher would apply to this particular free-piston launcher.

#### b. Launcher Operation

An overall sequence of operations for the Fairchild free-piston/slotted cylinder pneumatic launcher is presented in subsection 7.2.6. Controls for the launcher are contained in a local control panel located on the launcher assembly and in a remote control panel (Figure 26) with a 50-ft extension cable. Using the remote panel, the operator may control all power to the launcher so that it may be made completely inert prior to anyone approaching it. The remote panel also contains all the controls necessary for determining if the unit is ready to launch and for launch initiation.

As will be noted in the electropneumatic diagram, Figure 63, the free-piston launcher system contains several override and double-check circuits intended to provide safe and largely automatic operation.

#### c. Launcher Charging

In test operations to date the Fairchild free-piston launcher has been operated with a reservoir pressure of about 1500 psi. Higher energy level demands than have been demonstrated corresponding to the maximum criteria for this study (200-pound class RPV launched at 78 knots) may require higher reservoir pressures. However, some additional energy is available in the system by adjusting the regulated pressure to a higher level, without increasing the reservoir pressure.

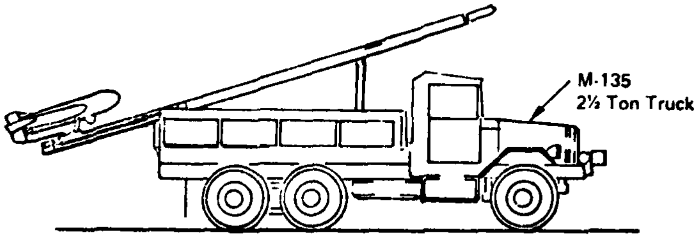

(a) Truck Mounted for Horizontal Folding

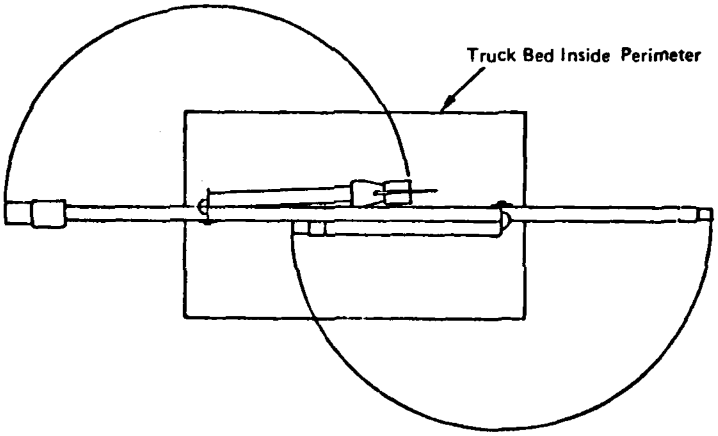

(b) Plan View, Horizontal Folding

Figure 62. Truck-Mounted Fairchild Free-Piston Launcher

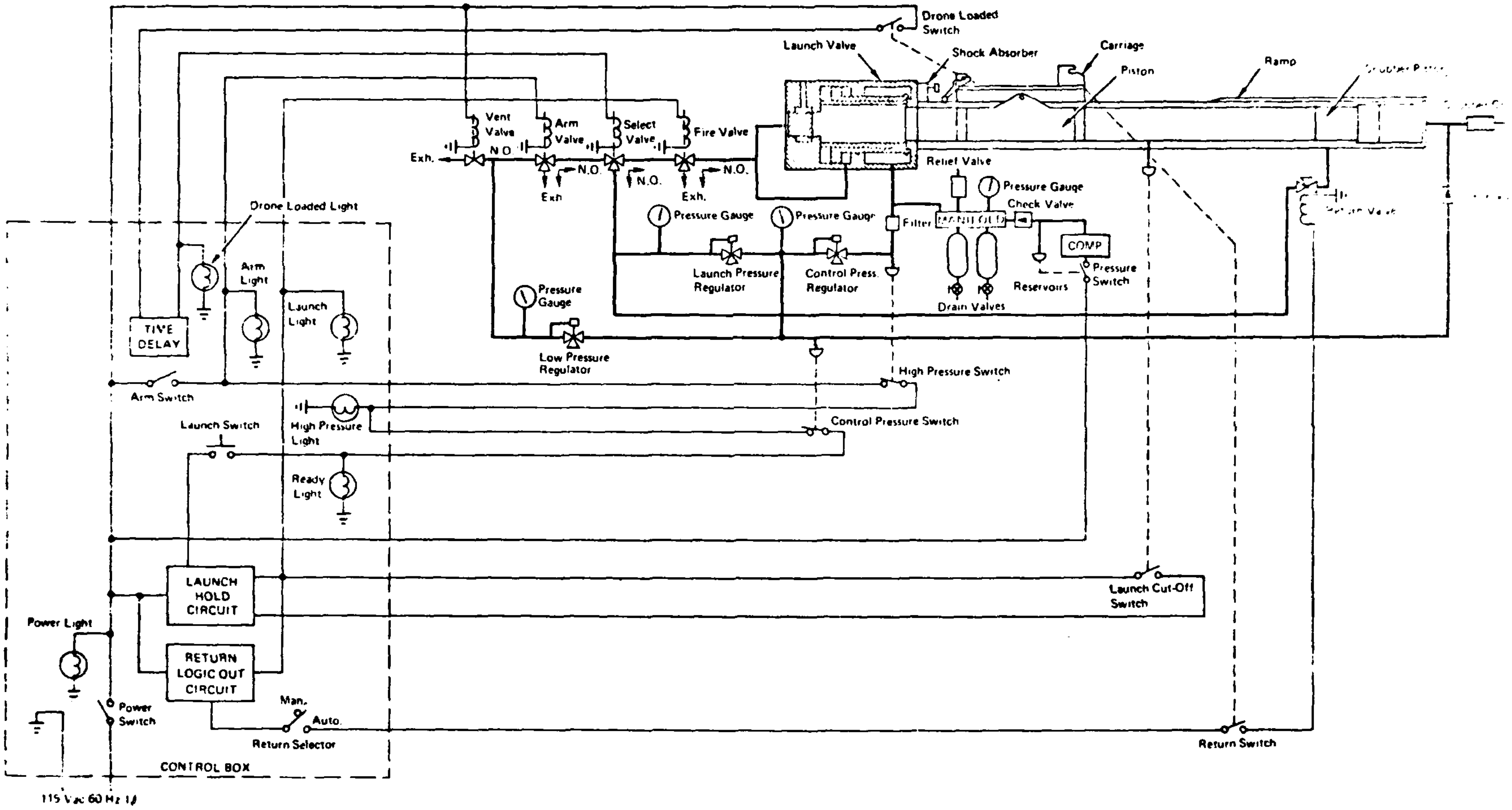

Figure 63. Electropneumatic Diagram, Free Piston Launcher

In any event, the curves of Figure 64, based on Equation (14) of subsection 7.2.2, will give an idea of the time required to initially charge the 1.16-cubic-foot reservoir in terms of compressor delivery rate. The curves show that within a likely range of working pressures that a 15-minute time-to-charge criterion could be met with a delivery rate of less than 10 cubic feet per minute and that a rate of less than 20 cubic feet per minute would be adequate for the goal of 5 minutes to charge. Figure 20 indicates that the power required would be amply covered in the 5 to 10 HP compressor range.

The time for subsequent launches would be much less than that for the initial charge since appreciable residual pressure would remain in the reservoir after each launch operation.

d. External Power

A 115-volt AC, 60 Hz, 1 Ø source of electrical power is required to operate the free-piston launcher.

e. Weights

Estimated weights for the free-piston launcher are:

| | Weight, Lb | |
|---|---|---|
| Launcher | 650 | |
| Pedestal | 98 | (15%) |
| Front Support | 50 | |
| | 798 | |

A truck-mounted compressor unit would weigh approximately 600 pounds.

f. Signatures

The capability of being folded and stowed within the envelope of the canvas cover of an M-135 truck would eliminate visual clues for the free-piston launcher during transport. Emplaced for operation, it would be observable much the same as most other launchers, with possibly some advantage due to its slender configuration.

No significant acoustic, IR, or electromagnetic signatures are evident for the free-piston launcher.

g. Conclusions

The free-piston/slotted-cylinder pneumatic launcher concept appears to meet the criteria of this study.

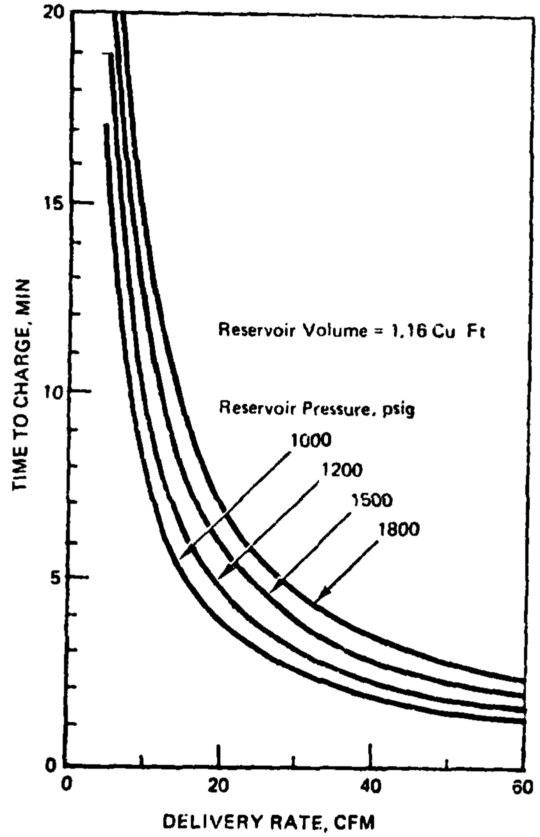

Figure 64. Initial Time to Charge
1.16 Cu Ft Reservoir

Matters of concern with respect to field operations include (1) achieving accurate alignment and sealing of the launcher cylinder barrel after it is unfolded and the joints secured, (2) life expectancy of the moving parts, (3) reliability of the electropneumatic systems in terms of the number of components involved, and (4) the rather small dimensions of the shuttle "feet" with respect to the height of the RPV above the shuttle.

## 9.4 Rocket, Concept I-4

### 9.4.1 Introduction

The rocket-boosted zero length and the finite length mini-RPV launchers discussed in Phase I of this study are brought forward to examine conceptually in terms of field deployment. These two concepts are identified as:

- Rocket, Zero Length Launch, Concept I-4A
- Rocket, Finite Length Launch, Concept I-4B

Out of the zero length and finite length launch studies of subsections 9.4.2 and 9.4.3 (following) comes the question of an intermediate launch concept. That is, one in which the RPV is initially guided by a rail and then proceeds in the manner of a zero length launched vehicle to the desired free flight velocity. It follows that the RPV/booster unit would have to be configured the same as for the pure zero length mode, and would therefore have the rocket booster alignment problem to contend with, but hopefully to a lesser degree.

The intermediate concept would appear to dilute the good features of either of the other types, and incorporate most of the problems of both. For example, the small, simpler launcher for the zero length concept would not apply. The main feature of the finite length launcher, getting the RPV to a safe, controllable velocity before leaving the launcher, would also be lost.

However, the intermediate type launch concept may provide a solution where employing a rocket booster motor already in military inventory that is not tailored to the specific needs of either the zero length or the finite length concepts. A case in point is the use of the FFAR, 2.75 inch rocket motor, discussed in paragraphs following.

### 9.4.2 Rocket, Zero Length, Concept I-4A

a. General

The Mini-RPV zero length launcher would occupy less space on an M-135 truck bed than any of the other candidate launchers of this study. However, its height will probably be about the same as the other launchers in the stowed condition. Figure 65 shows a typical truck-mounted zero length launcher. The launcher design should

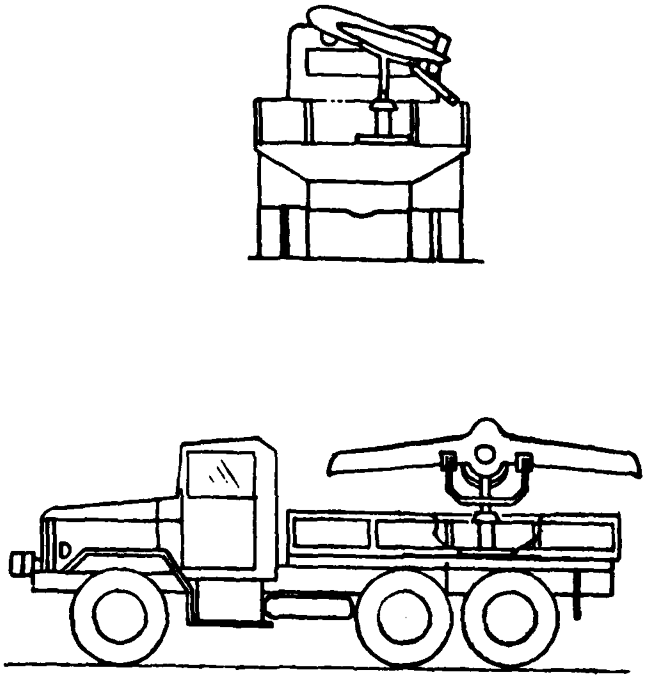

Figure 65. Truck-Mounted Zero Length Launcher

include a swivel base and preferably a gimbaled base. With the arrangement shown in the figure, the RPV in ready position is much higher off the ground than the ramp or rail-type launchers, which would require a mechanical aid (hand operated winch, etc.) to safely lift the RPV onto the launcher. Portable or demountable work stands attached to the side of the truck would probably be needed.

The subject of rocket boosters was treated parametrically in subsection 7.4.2 of this report. In paragraphs following, the boosters suitable for rocket launch are discussed in terms of specific types of rocket motors.

b. Boosters Designed for Mini-RPV Launch

In subsection 7.4.2, three booster options were envolved for the zero length launcher. The first of these was separate and distinct boosters for each class RPV. The second was to select a booster with an intermediate thrust level, but available in two different burn times to suit both the large and small class RPVs.

The third booster solution was to use a pair of boosters with an intermediate thrust level to launch the larger RPV and to use only one of the same boosters for the smaller RPV.

A basic rocket motor design described below, proposed for rail launching the USAF XBQM-106 Mini-RPV, could presumably be modified to satisfy the options noted above. Data for the rocket, a nozzleless type, is taken from Reference 19.

| | | |
|---|---|---|
| Weight Initial, lb | 4.83 | (estimated) |
| Weight, burn-out, lb | 1.83 | |
| Burn time, sec | .44 | |
| Thrust, avg, lb | 1224 | |
| Specific impulse, sec | 179.5 | |
| Total impulse, lb-sec | 539.0 | |
| Length, in. | 13.7 | |
| Diameter, in. | 2.5 | |

It will be noted that the characteristics of this booster, as they stand, are very close to the parametric booster investigated in subsection 7.4.2 for the concept of using a given booster for the 120-pound-class RPV and a pair of the same boosters for the 200-pound-class RPV.

---

19. UNSOLICITED PROPOSAL FOR THE DEMONSTRATION OF A NOZZLELESS, SOLID PROPELLANT LAUNCH ROCKET FOR THE XBQM 106 MINI-RPV, Atlantic Research Corporation, 21 October 1977.

### c. Inventory Booster Rocket

The cost per launch for the zero length concept could probably be reduced by using a booster in military inventory. The Messerschmitt-Bolkow-Blohm launcher concept (subsection 7.4.2) is intended to make use of the rocket motor of the 2.75-inch folding fin aerial rocket (FFAR) system. Pertinent characteristics of the MK4/40 version of the motor are:

| | |
|---|---|
| Weight, initial, lb | 11.3 |
| Weight, burn-out, lb | 5.57 |
| Burn time, sec | 1.58 |
| Thrust, avg, lb | 747 |
| Specific impulse, sec | 183 |
| Total impulse, lb-sec | 1180 |
| Length, in. | 39.2 |

With the aid of the vector diagrams of Figure 66, the zero length boost performance for the 2.75-inch rocket is tabulated below for the 200-pound and 120-pound-class RPVs.

It should be noted that the launch weights of the Mini-RPVs are increased to 220 pounds and 134 pounds, respectively, due to the higher weight of the 2.75-inch rocket motor.

| | | |
|---|---|---|
| Launch weight, lb | 220 | 134 |
| Thrust, avg, lb | 747 | 747 |
| Resultant force, $F_R$, lb | 645 | 675 |
| Acceleration, g | 2.93 | 5.03 |
| Burn time, sec | 1.58 | 1.58 |
| End velocity, knots | 88 | 168 |
| Distance $\ell$, along flight path, ft | 118 | 224 |
| Flight path angle, $\beta$, deg | 18.5 | 25 |

In the above tabulation the effects of propeller thrust and RPV drag were neglected. For the 200-pound-class RPV this omission would probably have negligible effect on the end velocity and the flight path distance since the propeller thrust would dominate the drag, with booster included, up to about 85 knots. For the 120-pound-class both the end velocity and the flight path distance are unconservative approximations.

Both end velocities shown above happen to exceed the criteria of this study. But this does not mean that the higher end velocities would not be finally acceptable. However, since it is being boosted beyond its free flight maximum speed, along with a much longer than needed burn time, the 120-pound-class RPV may experience flight control and stability problems during the boost phase. Another RPV control and stability-related problem peculiar to the

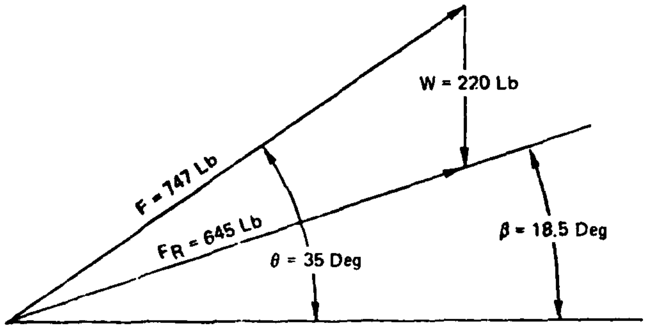

(a) Launch Vectors, 200-Pound-Class RPV

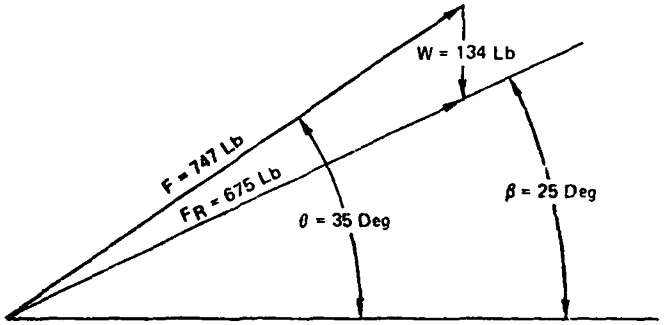

(b) Launch Vectors, 120-Pound-Class RPV

Figure 66. Launch Vector Diagrams, 2.75-In. Rocket Booster

2.75-inch rocket could result from the spin-torque produced by the four canted nozzles of some versions of the MK4 rocket motor.

It should be noted that reducing the burn time for the propellant charge for the 2.75-inch rocket to match the desired end speed of the 200-pound-class RPV (78 knots) would still give about 128 knots for the 120-pound-class RPV. Although the 2.75-inch rocket is an inventory item, it is doubtful that changing the amount of propellant to reduce the burn time, along with the associated development cost and time, would be practical.

Another possibility for controlling the burn time, hence the effective total impulse of the 2.75-inch rocket, is to restrain the RPV until the amount of burn time remaining is that which is appropriate for launching the RPV. This method would of course involve additional complexity to sense the proper time and initiate the launch sequence.

### d. Thrust Alignment

Perhaps the most complex problem associated with the otherwise simple, straightforward zero length launch concept is achieving the proper alignment of the rocket thrust with respect to the center of gravity of the RPV. There are two parts to the problem. First, the determination by analysis and simulation of what the alignment should be to keep the launch trajectory in bounds, and secondly, achieving repeatability of the proper alignment in field operations.

As pointed out in Reference 16 where the rocket was investigated in the retro configuration, the higher deceleration forces applied actually resulted in less angular displacement of the RPV due to a given amount of thrust misalignment. This same effect would occur for boosted launch. Even though the angular acceleration is directly proportional to the boost thrust, the angular displacement is a function of time squared. For example, for a misalignment of boost thrust of .10 inch about the center of gravity of the RPV in pitch, the following displacements are estimated:

| | | | |
|---|---|---|---|
| Boost acceleration (g's) | 12 | 6 | 3 |
| Burn time, t, seconds | .341 | .682 | 1.365 |
| Angular displacement, deg | 7.3 | 14.7 | 29.4 |

The computations are based on a pitch inertia for the RPV of 10 slug-feet squared.

In some cases, RPVs have been equipped with a rocket nozzle thrust vectoring system to compensate for thrust misalignment. This complex expediency is sometimes found necessary where the burn-time is long.

Satisfactory answers to the problem of thrust alignment have been derived since there are several military RPVs routinely launched by this method. However, it is evident that precise construction and accurate information on the center of gravity location of each individual RPV is required as a minimum.

### e. Launcher Operation

After loading the Mini-RPV on the launcher, with the aligned rocket booster in place, the engine would be started and final checkout procedures completed.

Some form of detent or break-away link will be required to resist the propeller thrust and to make sure the booster thrust is holding the booster against the RPV. The booster would be ignited by a remotely switched low wattage pulsed electrical current. The booster can be made to drop away from the RPV as its thrust approximates zero after burnout.

Safety considerations would demand a clear area ahead of the launcher since the booster will fly some distance as a projectile after dropping away from the RPV.

### f. Weights

The weight of the zero length launcher shown in subsection 7.4.2 (Figure 33) is unknown at this writing. However, if aluminum alloy were used extensively and certain members such as the structural channels were reduced in size, a weight of approximately 350 pounds is estimated.

### g. Signature

The principal signatures emitted by the rocket booster are smoke and IR from the intense heat of the exhaust. Timewise, the IR would be significant during the burn time of the rocket but the smoke would linger longer. Both of these offenders would be reduced thru the use of the higher acceleration boosts where the time and distance of flightpath exposure are minimized.

The so-called smokeless type solid propellant formulations would also decrease the visual signature at the expense of booster performance. However, since the rocket boosters involved are relatively small anyhow, the weight penalty for smokeless propellant would not be significant. The term "smokeless" is not always just that. Some are smokeless only under certain conditions such as a very low humidity environment.

The visual signature of the zero length launcher, per se, ready for operation, would most probably be the least of all the truck-mounted launchers discussed in this study.

### h. Conclusions

As previously stated, the zero length launch concept is in operational use and is therefore a viable launch concept overall. The zero length launcher can be made small and relatively easily managed in the field.

A basic booster such as the nozzleless rocket motor described above could presumably be modified to meet the three parametric booster options for the zero length concept discussed in subsection 7.4.2. A particular inventory booster, the MK4/40 2.75-inch rocket motor, investigated could also conceivably satisfy the zero length launch requirements if a moderate increase in end velocity for the 200-pound-class RPV and an inordinately high end velocity for the 120-pound-class RPV are acceptable.

Areas of concern for this concept as applied to the Mini-RPV in the tactical environment are (1) the proper alignment of the booster thrust axis with the RPV (overall this concern is viewed in comparison to the other launchers of this study for which alignment is not a concern),(2) the signatures associated with the rocket booster exhaust, and (3) the logistic supply and safety factors related to handling pyrotechnics (munitions).

## 9.4.3 Rocket, Finite Length, Concept I-4B

### a. General

The two types of finite length launchers discussed in subsection 7.4.3, one with an arrested booster and the other with a free projectile booster, could also be constructed in a manner shown in Figure 67. This construction features a U-shaped sheet metal torque box arrangement that would provide structural rigidity, especially needed for the horizontally folding, hinged members, and a more direct exit for the rocket exhaust products. This construction concept for a finite length launcher could be adapted to the "arrested" or the "free" booster schemes. In the truck-mounted configuration, it would appear much the same as the three-section, horizontally folded concept of Figure 52.

To provide for Mini-RPVs that are not designed with a flat-bottom surface, some form of shuttle would presumably be required to support the RPV with either the arrested or the free-type booster.

For the free projectile type launch concept, it appears that a means of positive separation between the booster and RPV would be required at the end of the launch stroke to preclude the possibility of collision between the booster and the RPV.

Although it was not intended to meet the criteria of this study, a combination transport and launcher vehicle concept (Reference 20)

---

20. DATA PACKAGE, Mini-RPV Group Flight Vehicle Branch, AFFDL, WPAFB, Ohio, 29 September 1977.

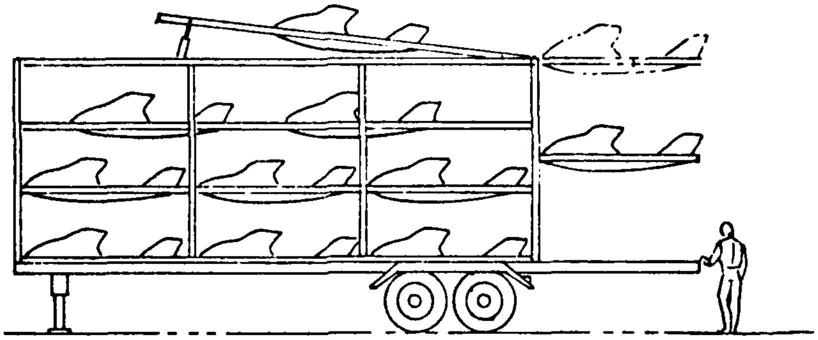

(a) Multiple-Launch, Special Vehicle

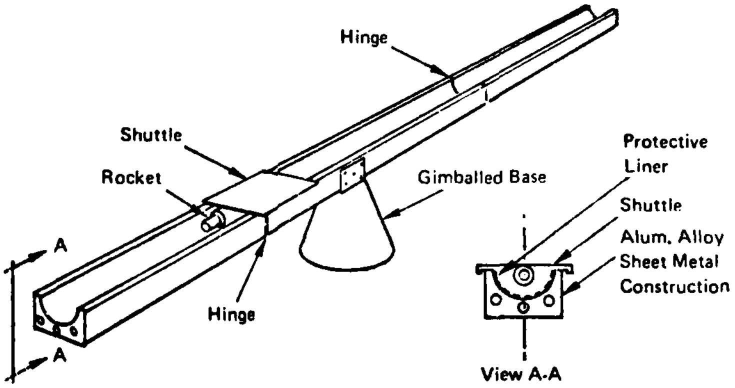

(b) Launcher for Truck Mounting

Figure 67. Finite Length Launchers for Field Development

is shown in Figure 67(a). This launcher would also employ the free-booster principle in which a saddle type carriage or shuttle is expended.

b. Boosters Designed for Mini-RPV Launchers

Referring back to the subsection 7.4.3, it will be seen that a pair of rockets designed to launch the 200-pound-class RPV and using one of the same rockets to launch the 120-pound-class RPV appears to be a plausible solution to the booster selection problem. The booster requirements for this purpose (1482 pounds thrust, with a burn-time of .341 second ) could most certainly be converted to a hardware design by numerous rocket manufacturers.

The nozzleless rocket booster design proposed for the XMQM-106 (Ref. Section 9.4.2) could be readily tailored to meet the desired thrust and burn time requirements noted above. As it stands, this particular nozzleless booster is low on thrust (stroke length would be appreciably longer than 22.5 feet), and high on burn time (total impulse is greater therefore, the end velocities are greater than desired).

c. Inventory Booster Rocket

Putting the characteristics of the MK4/40 2.75-inch rocket motor against the finite length launch criteria of this study, it will be found that the 200-pound-class RPV would attain a velocity of only about 40 knots (78 desired) at the end of the 22.5-foot stroke under the action of one 2.75-inch booster. It should also be noted that as many as three 2.75-inch boosters would not achieve the end velocity goal.

For the smaller 120-pound-class RPV, the velocity at the end of the 22.5-foot run would be very close to the 50-knot goal. However, the booster would be less than half burned out at the end of the launch stroke. But, for the finite length launcher, excess burn time would almost be eliminated as a problem automatically. In the case of the arrested booster (shuttle) type the rocket could continue to burn after it had been brought to rest at the end of the stroke by the shock absorber system. In the case of the free projectile booster, the booster (shuttle) would separate from the RPV at the end of the stroke. Some design finesse would be required here to make sure the booster (shuttle) and RPV didn't collide after separation.

d. Launcher Operations

The operation of the finite length launcher would be much the same as for the zero length launcher except that the rocket alignment procedure would not be required.

The shuttle/burned-out booster unit would be brought to rest at the end of its run by an energy absorbing system for the arrested booster type in much the same manner as for several other ramp (rail) type launchers of this study.

The free projectile booster type, which would eliminate the energy absorption system, would allow the booster and/or shuttle/booster unit to fly as a projectile at the end of the run. This poses somewhat the same safety problem as when the booster drops away in the zero length launch operation. A drogue parachute would alleviate this problem.

An operating problem to be considered is the possibility of corrosion on the launcher structure caused by the rocket exhaust gases.

### e. Signatures

Ideally, the rocket booster burn time for the finite length launcher would closely match the time it takes to accelerate the RPV to the end of the launcher to minimize visual acoustic and IR signatures from the rocket exhaust plume. All of which would generally be less than 1/2 second in duration.

Thus, a booster with excess burn time such as the 2.75-inch rocket motor, especially when used with the free-booster finite length launcher concept, would display a plume pattern over a longer trajectory and for greater duration.

The visual signature of the launcher ready for operation would be similar to the free-piston pneumatic launcher of subsection 7.2.6.

### f. Conclusions

The finite length launcher's basic simplicity and ease of operation would appear to make it physically well suited to operations in the tactical environment.

The two booster options determined parametrically and discussed in subsection 7.4.3 in terms of a basic booster design that could be modified would apply here. The additional investigations of this subsection for the 2.75-inch inventory rocket indicate that it could not practically meet the end velocity requirements of the 200-pound-class RPV.

The finite length launcher shares some of the disadvantages of the zero length launcher with respect to the signatures generated by the rocket booster and the logistic supply and safety considerations in handling pyrotechnics.

Operating areas of concern to be considered are (1) the possibility of corrosion of the launcher structure caused by the booster in field operations, and (2) additional logistic supply problems involved where expendable projectile type shuttles are used. Also, objects of any type projected beyond the launcher may constitute a safety hazard.

## 10.0 FINAL EVALUATION AND CONCEPT SELECTION

Of the multiplicity of Mini-RPV launcher systems analyzed, five were chosen for further evaluation. The other systems were set aside for the reasons given in section 8.0. The launch systems chosen for evaluation are:

| | Concept |
|---|---|
| Neg'ator Spring Motor | I-1B-2 |
| Pneumatic Piston | I-2A-1 |
| Pneumatic-Free Piston | I-2B |
| Rocket, Zero Length | I-4A |
| Rocket, Finite Length | I-4B |

The results of the evaluation procedure described below, conducted for these five Mini-RPV launcher concepts are depicted in Figure 68.

In view of the fact that there are inherent inequities in the evaluation procedure that have been bolstered by subjective judgements, further judgements lead to the conclusions that (1) the results of Figure 68 are within the "noise level" of accuracy of the procedure and (2) that the "pneumatic" and "rocket" concepts should be carried forward and henceforth be treated as generic classes rather than as specific applications, where possible. This subject is discussed further in section 11. Final selection can only be done with specific criteria and performance parameters.

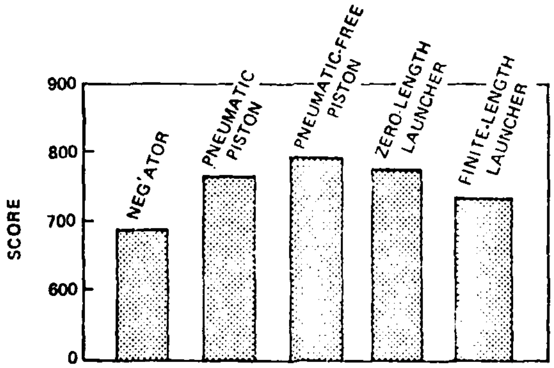

Figure 68. Launcher Concept Evaluation Results

The procedure for performing the evaluation begins with the development of a detailed list of parameters describing the Mini-RPV launch system. Such a list is shown in Table 10. This list should be detailed enough to account for all of the relevant design considerations. The list will contain many items that are incommensurable, either individually or in combination with other items. Hence, classical methods of cost effectiveness evaluation are not applicable. These parameters can be made commensurate in the following manner.

On a table such as that shown in Table 9, values for each of the parameters for which they are available are entered. If values are not available, or if the parameter does not lend itself to a quantitative number (e.g., crew skill or safety), the item is scored on a scale of 10 being best. Those items not already scored on a scale of 10 being best then are scored on the basis of the values of the parameters. This scoring can involve the ingenuity of the evaluator. However, most scores in this evaluation were computed from

$$S = 10 \frac{Vmin}{V}$$

or

$$S = 10 \frac{V}{Vmax}$$

where V is the value of the parameter for the system in question and Vmin and Vmax are the minimum and maximum values of the parameters indicating the "best" system in that regard. For example, low weight is considered "good." Hence, the parameter "Weight of the largest major assembly" was scored

$$S = 10 \frac{200}{W}$$

where the 200 pounds is the weight of system with the lightest largest major assembly (finite length launcher in this instance). Table 10 presents the results of this scoring. These values were then combined to the second level parameters as shown in Table 11. As an example

Setup size of launch system - weight

| | |
|---|---|
| Neg'ator | 1500 lb |
| Pneu./Piston | 1300 lb |
| Pneu. Free Piston | 1130 lb |
| Zero length | 380 lb |
| Finite length | 400 lb |

Lightweight is good. Lightest weight is zero-length launcher at 380 lbs. Therefore:

$$S = 10 \times \frac{380}{\text{weight}}$$

Neg'ator $S = 10 \times \frac{380}{1500} = 2.53$

Pneu./Piston $S = 10 \times \frac{380}{1300} = 2.92$

Pneu. Free Piston $S = 10 \times \frac{380}{1130} = 3.36$

Zero Length $S = 10 \times \frac{380}{380} = 10$

Finite Length $S = 10 \times \frac{380}{400} = 9.50$

Now combine these scores with the scores of "Dimensions (ht/wt/l)" to determine average score of setup size of launch system.

However, by the accident of the development of the list of parameters, it is noted that the category "Operational Parameters" has a possible score of 90 points, while the category "Cost and Risk" has a possible score of only 50 points. The result is an uncontrollable bias weighting operation as almost twice as important as cost. To delete this bias, each of the major first-level categories is assumed to have equal weight (200 points possible). The second level scores are then adjusted accordingly. The results are shown in Table 12.

## TABLE 9

## LAUNCH CONCEPTS EVALUATION PARAMETERS

| EVALUATION PARAMETER | LAUNCH CONCEPT | | | | |
|---|---|---|---|---|---|
| | NEG'ATOR | PNEUMATIC PISTON | PNEU-FREE PISTON | ZERO LENGTH LAUNCHER | FINITE LENGTH LAUNCHER |
| PHYSICAL PARAMETERS | | | | | |
| IMPACT ON RPV DESIGN | | | | | |
| SETUP SIZE | | | | | |
| HEIGHT/WIDTH/LENGTH, FT | 9/2.3/27 | 12/4.6/29 | 12/3/27 | 5.2/3.3/6.3 | 10/2/27 |
| WEIGHT, LB | 1500 | 1028 | 800 | 300 | 400 |
| MAJOR COMPONENTS | | | | | |
| NUMBER | 5 | 5 | 7 | 2 | 4 |
| WEIGHT OF LARGEST, LB | 900 | 850 | 600 | 360 | 200 |
| VOL. OF LARGEST, CF | 43 | 194 | 14 | 50 | 27 |
| OPERATIONAL PARAMETERS | | | | | |
| RUN-FOR-COVER CAPABILITY | 9 | 8 | 9 | 10 | 9 |
| LOGISTICS COMPATIBILITY | 10 | 10 | 10 | 5 | 5 |
| COMPLEXITY OF OPERATIONS | 10 | 9 | 8 | 10 | 10 |

## TABLE 10

## MINI-RPV LAUNCH SYSTEM, RAW DATA SCORES

| ITEM NO. | PARAMETER | LAUNCH CONCEPT | | | | |
|---|---|---|---|---|---|---|
| | | I-1B Neg'ator Spring Motor | I-2A Pneumatic Piston | I-2B Pneumatic Free Piston | I-4A Zero Length | I-4B Finite Length |
| 1.0 | PHYSICAL PARAMETERS | | | | | |
| 1.1 | Impact on RPV Design | | | | | |
| 1.2 | Setup size of launch system | 2.23 | 1.80 | 2.24 | 10.00 | 5.75 |
| 1.2.1 | Dimensions (Ht/Wt/L) | 1.93 | 0.68 | 1.11 | 10.00 | 2.00 |
| 1.2.2 | Weight | 2.53 | 2.92 | 3.36 | 10.00 | 9.50 |
| 1.3 | Major Assemblies | 3.16 | 2.36 | 5.40 | 6.12 | 6.73 |
| 1.3.1 | Number | 4.00 | 4.00 | 2.86 | 10.00 | 5.00 |
| 1.3.2 | Weight of Largest | 2.22 | 2.35 | 3.33 | 5.56 | 10.00 |
| 1.3.3 | Volume of Largest | 3.26 | 0.72 | 10.00 | 2.80 | 5.19 |
| 1.4 | Electrical Power Requirements | 10.00 | 8.00 | 7.00 | 9.00 | 9.00 |
| 1.5 | Reduced Dimensions | 6.00 | 9.00 | 7.00 | 10.00 | 9.00 |
| 1.6 | M-135 Truck Compatibility | 10.00 | 10.00 | 10.00 | 10.00 | 10.00 |
| 1.6.1 | Truck Mod Costs | 10.00 | 10.00 | 10.00 | 10.00 | 10.00 |
| 1.6.2 | Number of Trucks | 10.00 | 10.00 | 10.00 | 10.00 | 10.00 |
| 2.0 | OPERATIONAL PARAMETERS | | | | | |
| 2.1 | Launcher Adaptability | 7.00 | 9.00 | 9.00 | 7.00 | 5.00 |
| 2.2 | Crew Size | 10.00 | 10.00 | 10.00 | 10.00 | 10.00 |
| 2.3 | Crew Skills | 10.00 | 9.00 | 9.00 | 4.00 | 9.00 |
| 2.4 | Site Preparation Time | 9.00 | 9.00 | 9.00 | 0.00 | 9.00 |
| 2.5 | Reliability and Maintainability | 5.46 | 5.48 | 5.94 | 10.00 | 9.50 |
| 2.5.1 | MTBF | 7.00 | 6.00 | 7.00 | 10.00 | 9.50 |
| 2.5.2 | MITR | 4.00 | 5.00 | 5.00 | 10.00 | 9.50 |
| 2.5.3 | Availability | 5.38 | 5.45 | 5.83 | 10.00 | 9.50 |
| 2.6 | Self Mobility | 10.00 | 10.00 | 10.00 | 10.00 | 10.00 |
| 2.7 | Run-for-Cover Capability | 9.00 | 8.00 | 9.00 | 10.00 | 9.00 |
| 2.8 | Logistics Compatibility | 10.00 | 10.00 | 10.00 | 2.00 | 5.00 |
| 2.9 | Complexity of Operation | 10.00 | 10.00 | 10.00 | 2.00 | 7.00 |
| 3.0 | TACTICAL PARAMETERS | | | | | |
| 3.1 | Airborne Signature | 10.00 | 10.00 | 10.00 | 6.50 | 6.50 |
| 3.1.1 | Size | 10.00 | 10.00 | 10.00 | 5.00 | 5.00 |
| 3.1.2 | Time | 10.00 | 10.00 | 10.00 | 8.00 | 8.00 |

TABLE 10 (Continued)

MINI-RPV LAUNCH SYSTEM, RAW DATA SCORES

| ITEM NO. | PARAMETER | LAUNCH CONCEPT | | | | |
|---|---|---|---|---|---|---|
| | | I-1B-1 Neg'ator Spring Motor | I-2A-1 Pneumatic Piston | I-2B Pneumatic Free Piston | I-4A Zero Length | I-4B Finite Length |
| 3.2 | Times | 9.00 | 8.17 | 8.83 | 6.50 | 7.00 |
| 3.2.1 | Set up Launcher | 9.00 | 8.00 | 9.00 | 10.00 | 9.00 |
| 3.2.2 | Dismantle Launcher | 9.00 | 8.00 | 9.00 | 10.00 | 9.00 |
| 3.2.3 | Set up to first launch | 9.00 | 8.00 | 9.00 | 3.00 | 7.00 |
| 3.2.4 | Reorient for Wind Shift | 9.00 | 8.00 | 9.00 | 10.00 | 9.00 |
| 3.2.5 | Mate RPV to launcher | 9.00 | 9.00 | 9.00 | 3.00 | 7.00 |
| 3.2.6 | Launch subsequent RPV | 8.00 | 8.00 | 8.00 | 3.00 | 7.00 |
| 3.3 | Detectability | 5.97 | 5.34 | 5.56 | 7.00 | 4.25 |
| 3.3.1 | Concealment | 1.93 | .68 | 1.11 | 10.00 | 2.00 |
| 3.3.2 | Unusual Launch signature | 10.00 | 10.00 | 10.00 | 4.00 | 6.50 |
| 3.4 | Safety | 9.00 | 9.00 | 9.00 | 6.00 | 6.00 |
| 4.0 | COST AND RISK | | | | | |
| 4.1 | Development Costs | 5.00 | 9.00 | 8.00 | 10.00 | 5.00 |
| 4.2 | Production costs (unit/100 prod) | 5.00 | 3.41 | 3.28 | 10.00 | 5.56 |
| 4.3 | Support Cost (per division) | 9.41 | 8.91 | 7.91 | 5.27 | 9.00 |
| 4.3.1 | Training (Initial + per year) | 10.00 | 9.00 | 7.00 | 4.00 | 8.00 |
| 4.3.2 | Spares and expendables | 8.81 | 8.81 | 8.81 | 6.54 | 10.00 |
| 4.4 | Life-Cycle Costs (10-year) | 6.47 | 7.11 | 6.40 | 8.42 | 6.52 |
| 4.4.1 | Development | 5.00 | 9.00 | 8.00 | 10.00 | 5.00 |
| 4.4.2 | Procurement (per division) | 5.00 | 3.41 | 3.28 | 10.00 | 5.56 |
| 4.4.3 | Operating and Support | 9.41 | 8.91 | 7.91 | 5.27 | 9.00 |
| 4.5 | Risk | 5.50 | 7.50 | 8.50 | 8.50 | 8.50 |
| 4.5.1 | Technical | 4.00 | 8.00 | 9.00 | 10.00 | 9.00 |
| 4.5.2 | Cost | 2.00 | 7.00 | 8.00 | 10.00 | 10.00 |

## TABLE 11

## MINI-PPV LAUNCH SYSTEM, RAW SCORE

| ITEM NO. | PARAMETER | LAUNCH CONCEPT | | | | |
|---|---|---|---|---|---|---|
| | | I-1B Neg'ator Spring Motor | I-2A Pneumatic Piston | I-2B Pneumatic Free Piston | I-4A Zero Length | I-4B Finite Length |
| | TOTAL SYSTEM | 188.70 | 188.08 | 194.06 | 188.81 | 184.17 |
| 1.0 | PHYSICAL PARAMETERS | 45.39 | 39.16 | 44.64 | 54.12 | 50.48 |
| 1.1 | Impact on RPV Design | 10.00 | 10.00 | 10.00 | 9.00 | 9.00 |
| 1.2 | Setup size of launch system | 2.23 | 1.80 | 2.24 | 10.00 | 5.75 |
| 1.3 | Major assemblies | 3.16 | 2.36 | 5.40 | 6.12 | 6.75 |
| 1.4 | Electrical power requirements | 10.00 | 8.00 | 7.00 | 9.00 | 9.00 |
| 1.5 | Reduced dimensions | 6.00 | 4.00 | 7.00 | 10.00 | 9.00 |
| 1.6 | M-135 Truck compatibility | 10.00 | 10.00 | 10.00 | 10.00 | 10.00 |
| 2.0 | OPERATIONAL PARAMETERS | 80.46 | 80.48 | 81.94 | 65.00 | 73.50 |
| 2.1 | Launcher Adaptability | 7.00 | 9.00 | 9.00 | 7.00 | 5.00 |
| 2.2 | Crew Size | 10.00 | 10.00 | 10.00 | 10.00 | 10.00 |
| 2.3 | Crew skills | 10.00 | 9.00 | 9.00 | 4.00 | 9.00 |
| 2.4 | Site preparation time | 9.00 | 9.00 | 9.00 | 10.00 | 9.00 |
| 2.5 | Reliability and Maintainability | 5.46 | 5.48 | 5.94 | 10.00 | 9.50 |
| 2.6 | Self mobility | 10.00 | 10.00 | 10.00 | 10.00 | 10.00 |
| 2.7 | Run-for-Cover Capability | 9.00 | 8.00 | 9.00 | 10.00 | 9.00 |
| 2.8 | Logistics compatibility | 10.00 | 10.00 | 10.00 | 2.00 | 5.00 |
| 2.9 | Complexity of operations | 10.00 | 10.00 | 10.00 | 2.00 | 7.00 |
| 3.0 | TACTICAL PARAMETERS | 33.97 | 32.51 | 33.39 | 26.00 | 24.61 |
| 3.1 | Airborne Signature | 10.00 | 10.00 | 10.00 | 6.50 | 6.50 |
| 3.2 | Operating Times | 9.00 | 8.17 | 8.83 | 6.50 | 7.86 |
| 3.3 | Detectability | 5.97 | 5.34 | 5.56 | 7.00 | 4.25 |
| 3.4 | Safety | 9.00 | 9.00 | 9.00 | 6.00 | 6.00 |
| 4.0 | COST AND RISK | 28.88 | 35.93 | 34.09 | 43.69 | 32.25 |
| 4.1 | Development Costs | 5.00 | 9.00 | 8.00 | 10.00 | 5.00 |
| 4.2 | Production Costs | 5.00 | 3.41 | 3.28 | 10.00 | 5.56 |
| 4.3 | Support Costs | 9.41 | 8.91 | 7.91 | 5.27 | 9.00 |
| 4.4 | 10-Year Life-Cycle Costs | 6.47 | 7.11 | 6.40 | 8.42 | 6.52 |
| 4.5 | Risk | 3.00 | 7.50 | 8.50 | 10.00 | 9.50 |

## TABLE 12

## MINI-PPV LAUNCH SYSTEM, ADJUSTED SCORE

| ITEM NO. | PARAMETER | LAUNCH CONCEPT | | | | |
|---|---|---|---|---|---|---|
| | | I-1B Neg'ator Spring Motor | I-2A Pneumatic Piston | I-2B Pneumatic Free Piston | I-4A Zero Length | I-4B Finite Length |
| | TOTAL SYSTEM | 752.68 | 757.07 | 780.27 | 796.57 | 737.00 |
| 1.0 | PHYSICAL PARAMETERS | 172.47 | 150.67 | 173.51 | 225.50 | 206.17 |
| 1.1 | Impact on RPV Design | 41.67 | 41.67 | 42.67 | 37.50 | 37.50 |
| 1.2 | Setup size of launch system | 9.29 | 7.50 | 9.33 | 41.67 | 23.96 |
| 1.3 | Major assemblies | 13.17 | 9.82 | 22.50 | 25.50 | 29.04 |
| 1.4 | Electrical power requirements | 41.67 | 33.33 | 29.17 | 37.50 | 37.50 |
| 1.5 | Reduced dimensions | 25.00 | 16.67 | 29.17 | 41.67 | 37.50 |
| 1.6 | M-135 Truck compatibility | 41.67 | 41.67 | 41.67 | 41.67 | 41.67 |
| 2.0 | OPERATIONAL PARAMETERS | 223.50 | 223.56 | 227.62 | 180.12 | 204.13 |
| 2.1 | Launcher adaptability | 19.44 | 29.00 | 25.00 | 19.44 | 13.89 |
| 2.2 | Crew size | 27.78 | 27.78 | 27.78 | 27.78 | 27.78 |
| 2.3 | Crew skills | 27.78 | 25.00 | 25.00 | 11.11 | 25.00 |
| 2.4 | Site preparation time | 25.00 | 25.00 | 25.00 | 27.78 | 25.00 |
| 2.5 | Reliability and Maintainability | 15.17 | 15.22 | 16.50 | 27.78 | 26.39 |
| 2.6 | Self Mobility | 27.78 | 27.78 | 27.78 | 27.78 | 27.78 |
| 2.7 | Run-for-cover capability | 25.00 | 22.22 | 25.00 | 27.78 | 25.00 |
| 2.8 | Logistics compatibility | 27.78 | 27.78 | 27.78 | 5.56 | 13.85 |
| 2.9 | Complexity of operations | 27.78 | 27.78 | 27.78 | 5.56 | 19.44 |
| 3.0 | TACTICAL PARAMETERS | 212.31 | 203.19 | 208.69 | 162.50 | 153.80 |
| 3.1 | Airborne signature | 62.50 | 62.50 | 62.50 | 40.63 | 40.63 |
| 3.2 | Operating times | 3.25 | 51.06 | 53.19 | 40.63 | 49.13 |
| 3.3 | Detectability | 37.31 | 33.38 | 34.75 | 43.75 | 26.56 |
| 3.4 | Safety | 56.25 | 56.25 | 56.25 | 37.50 | 37.50 |
| 4.0 | COST AND RISK | 144.40 | 179.65 | 170.45 | 218.45 | 172.90 |
| 4.1 | Development costs | 25.00 | 45.00 | 40.00 | 50.00 | 25.00 |
| 4.2 | Production Costs | 25.00 | 17.05 | 16.40 | 50.00 | 22.80 |
| 4.3 | Support costs | 47.05 | 49.55 | 39.55 | 26.35 | 45.00 |
| 4.4 | 10-year life-cycle cost | 32.35 | 35.55 | 32.00 | 42.10 | 32.60 |
| 4.5 | Risk | 15.00 | 37.50 | 42.50 | 50.00 | 47.50 |

Each of the first- and second-level categories is now weighted according to its presumed importance in determining the design of the system. The assumed weights used are:

| | |
|---|---|
| Total System | 1000 |
| PHYSICAL PARAMETERS | 150 |
| Impact on RPV Design | 25 |
| Setup Size of Launch System | 25 |
| Major Assemblies | 25 |
| Electrical Power Requirements | 25 |
| Reduced Dimensions | 25 |
| M-135 Truck Compatibility | 25 |
| OPERATIONAL PARAMETERS | 200 |
| Launch Adaptability | 20 |
| Crew Size | 15 |
| Crew Skills | 30 |
| Site Preparation Time | 15 |
| Reliability and Maintainability | 25 |
| Self Mobility | 15 |
| Run-for-Cover Capability | 15 |
| Logistics Compatibility | 35 |
| Complexity of Operation | 30 |
| TACTICAL PARAMETERS | 250 |
| Airborne Signature | 50 |
| Operating Times | 75 |
| Detectability | 50 |
| Safety | 75 |
| COST AND RISK | 400 |
| Development Costs | 25 |
| Production Costs | 25 |
| Support Costs | 50 |
| 10-Yr Life-Cycle Cost | 100 |
| Risk | 200 |

These weights are, of course, judgment factors. Care must be taken that they are not developed to bias one candidate over another. They should be based on an assessment of the weights that the Army will give to each of these factors in its evaluation. The results of this weighting are shown in Figure 68 and in Table 13.

# TABLE 13

## MINI-RPV LAUNCH SYSTEM, WEIGHTED SCORES

| ITEM NO. | PARAMETER | LAUNCH CONCEPT | | | | |
|---|---|---|---|---|---|---|
| | | I-1B Neg'ator Spring Motor | I-2A Pneumatic Piston | I-2B Pneumatic Free Piston | I-4A Zero Length | I-4B Finite Length |
| | TOTAL SYSTEM | 694.02 | 774.44 | 799.23 | 781.12 | 761.51 |
| 1.0 | PHYSICAL PARAMETERS | 103.47 | 90.40 | 104.10 | 135.3 | 123.70 |
| 1.1 | Impact on RPV design | 25.00 | 25.00 | 25.00 | 22.50 | 22.50 |
| 1.2 | Setup size of launch system | 5.57 | 4.50 | 5.60 | 25.00 | 14.38 |
| 1.3 | Major assemblies | 7.90 | 5.90 | 13.50 | 15.30 | 16.82 |
| 1.4 | Electrical power requirements | 25.00 | 20.00 | 17.50 | 22.50 | 22.50 |
| 1.5 | Reduced dimensions | 15.00 | 10.00 | 17.50 | 25.00 | 22.50 |
| 1.6 | M-135 truck compatibility | 25.00 | 25.00 | 25.00 | 25.00 | 25.00 |
| 2.0 | OPERATIONAL PARAMETERS | 179.65 | 181.88 | 181.85 | 124.01 | 156.20 |
| 2.1 | Launcher adaptability | 14.00 | 20.88 | 18.00 | 14.00 | 10.00 |
| 2.2 | Crew size | 15.00 | 15.00 | 15.00 | 15.00 | 15.00 |
| 2.3 | Crew skills | 30.00 | 27.00 | 27.00 | 12.00 | 27.00 |
| 2.4 | Site preparation time | 13.50 | 13.50 | 13.50 | 15.00 | 13.50 |
| 2.5 | Reliability and Maintainability | 13.65 | 13.50 | 14.85 | 25.00 | 23.75 |
| 2.6 | Self mobility | 15.00 | 15.00 | 15.00 | 15.00 | 15.00 |
| 2.7 | Run-for-cover capability | 13.50 | 12.00 | 13.50 | 15.00 | 13.50 |
| 2.8 | Logistics compatibility | 35.00 | 35.00 | 35.00 | 7.01 | 17.45 |
| 2.9 | Complexity of operation | 30.00 | 30.00 | 30.00 | 6.00 | 21.00 |
| 3.0 | TACTICAL PARAMETERS | 214.85 | 205.48 | 211.53 | 161.26 | 157.51 |
| 3.1 | Airborne signature | 50.00 | 50.00 | 50.00 | 32.50 | 32.50 |
| 3.2 | Operating times | 67.50 | 61.28 | 66.23 | 48.26 | 58.96 |
| 3.3 | Detectability | 29.85 | 26.70 | 27.80 | 35.00 | 21.25 |
| 3.4 | Safety | 67.50 | 67.50 | 67.50 | 45.00 | 45.00 |
| 4.0 | COST AND RISK | 196.05 | 296.68 | 301.75 | 360.55 | 324.10 |
| 4.1 | Development costs | 12.50 | 22.50 | 20.00 | 25.00 | 12.50 |
| 4.2 | Production costs | 12.50 | 8.53 | 8.20 | 25.00 | 11.40 |
| 4.3 | Support costs | 47.05 | 44.55 | 39.55 | 26.35 | 45.00 |
| 4.4 | 10-year life-cycle costs | 64.70 | 71.10 | 64.00 | 84.20 | 65.20 |
| 4.5 | Risk | 60.00 | 150.00 | 170.00 | 20.00 | 190.00 |

# 11.0 PHASE III, PREFERRED SYSTEM SELECTION

## 11.1 Introduction

The Mini-RPV launch concepts brought forward from the evaluations of Phase II are the pneumatic, Concept I-2, and the rocket, Concept I-4, categories. The basic concepts, as noted earlier, break down into two subconcepts each:

Pneumatic (Reference subsections 7.2 and 9.3)

Piston/Reeved Cable, Concept I-2A-1
Free-Piston/Slotted Cylinder, Concept I-2B

Rocket (Reference subsections 7.4 and 9.4)

Zero length, Concept I-4A
Finite Length, Concept I-4B

As noted in Section 10, where the final evaluation and concept selection process is conducted, the pneumatic and rocket concepts are to be treated as generic classes, where possible.

In the paragraphs following, summary data is presented for these two launcher classes including systems definitions, operational sequences and preliminary cost sensitivity comparisons.

### 11.1.1 Pneumatic Launchers

a. General

At this point in the study, as noted earlier in Section 10, we are obliged to consider the "pneumatic launcher" more as one concept - a class of equipment - rather than specific pieces of hardware.

In one instance the All American LP-20 prototype launchers have served in development type launch programs for the Aquila and STAR Mini-RPVs.

However, a radically different conceptual arrangement (Figure 58) that would meet the criteria for stowage on an M-135 truck is now proposed for the LP-20 type. The new arrangement has a strong "related experience" background but has not been worked out in enough detail yet to appraise it as a distinct piece of hardware.

In the other instance, the Fairchild Stratos free-piston type launcher has worked well in development tests.

Neither of the above pneumatic launcher concepts were designed to provide the energy levels required by the criteria of this study for the 200-pound-class RPV (78 knots end velocity). Both have the potential to do so.

Also, neither have actually been designed for the folding features indicated as necessary for stowage and transport in an M-135 truck since this was not one of their initial objectives.

Thus, within the bounds of a conceptual study of this nature the pneumatic launcher is viewed broadly as a viable mechanical concept rather than hardware A versus hardware B.

Within this point of view, approximate cost and schedule data are assumed to describe a pneumatic launcher encompassing both hardware candidates.

### b. Systems and Operating Aspects

A block diagram showing the principal elements of a Mini-RPV pneumatic launch system is shown in Figure 69. This diagram is generally representative of the two pneumatic concepts under discussion.

In Table 14 a preliminary overall launcher operation sequence is presented. A typical line of direct events is indicated along with parallel action.

In the guidelines and criteria of subsection 3.2 (item 2 under 3.2) a stipulation reads: "It should require a maximum of two men no more than 1 hour to completely erect it (launcher) at the launch site and make it operationally ready to launch the RPV;"... and later, under subsection 3.3 a goal of 25 minutes to complete the same set of tasks is noted. The launch sequence is assumed to begin with sequence number 2 in Table 14 at minus 60 minutes, or minus 25 minutes for the goal. It follows that supportive action in parallel functions would involve more than the two people assigned to the launcher erection and readying task.

Two arbitrary sets of countdown times, one for the 60-minute stipulation, the other for the 25-minute goal, are divided into estimated intervals of about the same percentage. On the basis of these estimates it appears that the 25-minute goal could be achieved after some "polishing" of the operations, provided the launcher presents no undue erection problems, and the environmental conditions (rain, sleet, snow, ice, sand, etc.) are not excessively detrimental to the operations.

## TABLE 14

## PNEUMATIC LAUNCHER OPERATING SEQUENCE

| NO. | TIME, MINUTES | | LAUNCH OPERATIONS | PARALLEL RPV OPERATIONS |
|---|---|---|---|---|
| | Criteria | Goal | | |
| 1 | | | ● LAUNCHER TRUCK ON SITE | |
| 2 | -60 | -25 | ● LAUNCHER ERECTION<br>Uncover Launcher<br>Remove Hold-Down Fittings<br>Unfold Launcher<br>Check Launcher Alignment<br>▽ Orient & Set Launch Angle | ● Inspect RPV<br>● Prepare Payload<br>● Install Battery<br>● Conduct Preflight Check<br>● Prepare for Transfer |
| 3 | -41 | -17 | ● LAUNCHER CHECKS<br>Charging System Operation<br>▽ Low-Energy Shuttle Runs<br>Secure Shuttle in Battery Position | NOTES:<br>▽ Compressor Operation - Shorter Elapsed Time Implies Higher Capacity Compressor |
| 4 | -26 | -11 | ● UP-LOAD RPV<br>Transfer RPV to Launcher<br>Secure RPV to Shuttle<br>Connect Electrical Interfaces | |
| 5 | -12 | -5 | ● FUEL RPV | |
| 6 | -7 | -3 | ▽ ● POWER-UP & PRELAUNCH CHECKS<br>Start RPV Engine<br>NAV Program Via RF Link<br>Conduct Prelaunch Checks<br>Remove Power Connections<br>Remove Safeties | |
| 7 | 0 | 0 | ▽ ● LAUNCH | |

Following the countdown to step 7, launch, the details of the logic and controls involved to initiate the launch for the STAR Mini-RPV/LP-20 launcher are found in Figure 60 (subsection 9.3.2). And Figure 63 (subsection 9.3.3) indicates, less directly, the elements of logic and control for the Fairchild Starter free-piston pneumatic launcher concept.

### c. Efficiency

The gas cycles for launcher operations are first a compression process to charge the reservoir and then an expansion process to actuate the launcher.

The cycle efficiency of the compression process, per se, appears to be academic. The working fluid can be considered "free". The significant factors are the amount of energy required to compress the air. If we assume that a 5-horsepower gasoline engine drives the compressor and that 22 minutes is required to charge the reservoir initially with 7 minutes required for each subsequent launch, the fuel consumed for the initial launch would be about 1.83 pounds (.22 gallon ) and .070 gallon each for the successive launches.

The time to initiate the launch and to perform subsequent launches is of course very important to tactical operations. Thus if we upgraded the compressor to double the compressed air delivery rate at the expense of doubling the horsepower rating (10 horsepower), the times would be reduced to 11 minutes and 3.50 minutes for initial and subsequent launches, respectively.

Thus, at the same specific fuel consumption rate, the fuel consumed would be the same for either the 5 or 10 horsepower ratings, in view of the time being cut in half.

In the expansion cycle where the compressed air is released to actuate the launcher, the cycle efficiency depends mostly on losses thru the system flow paths, which are usually moderate.

The major losses in the pneumatic launchers appear to be attributable to the inertia and friction of the moving parts in the system. An indication of this is obtained by comparing the nominal piston force (rated pressure times piston area) to the actual force related to accelerating the RPV/shuttle unit. It will be found that the efficiency on this basis is 70 percent or less. Numbers of this order are probably significant only as an indication that some energy is being dissipated as "wear" to the mechanism.

### d. Energy Absorption

It appears that one of the inherent problems to be reckoned with for the pneumatic launchers (also most other rail-type launchers) is attenuating the energy of the shuttle and the end of the launch run. Although the pneumatic launchers of this study have solutions for the problem, reducing the impact energies involved would undoubtedly reflect in increased MTBF. Energy absorption is discussed in subsections 7.2.3 and 7.2.6.

## 11.1.2 Rocket Launchers

### a. General

The rocket launch concepts of this study, the zero length and the finite length are not as amenable to stereotyping as the pneumatic launchers. The zero length type is unique in that it is initially guided only by a judicious balance of applied and gravity forces acting on it as a free body, which sets it apart to some extent from the rail-guided finite length launcher concept. From the point of view of overall systems and operational data the zero length and the finite length launchers are treated as one concept with minor exceptions pointed out. For purposes of preliminary cost comparison, the zero length and the finite length concepts are kept separate.

For the purpose of discussing systems and operating aspects, a system block diagram, Figure 70, and an operating sequence, Table 15, with footnotes to distinguish between the zero length and the finite length types, are presented.

No detailed time sequences, such as those assumed for the pneumatic launchers in Table 14, are offered for the rocket launchers. However, having completed the parallel rocket launch functions before the actual launch sequence starts, the following qualitative assessment of the time to launch can be made intuitively:

Pneumatic > Finite Length> Zero Length

As noted earlier in this study, the zero length rocket launcher, in various configurations, has been, and is being used routinely in military operations and, therefore, has considerable experience to recommend it as a launch concept. Normally the operational zero length launchers are located at military bases where the facilitites and appropriate personnel skill levels are available. The zero length launcher brings with it a potential problem mentioned before, which is the proper alignment of the rocket booster's thrust vector with respect to the center of gravity of the RPV. With

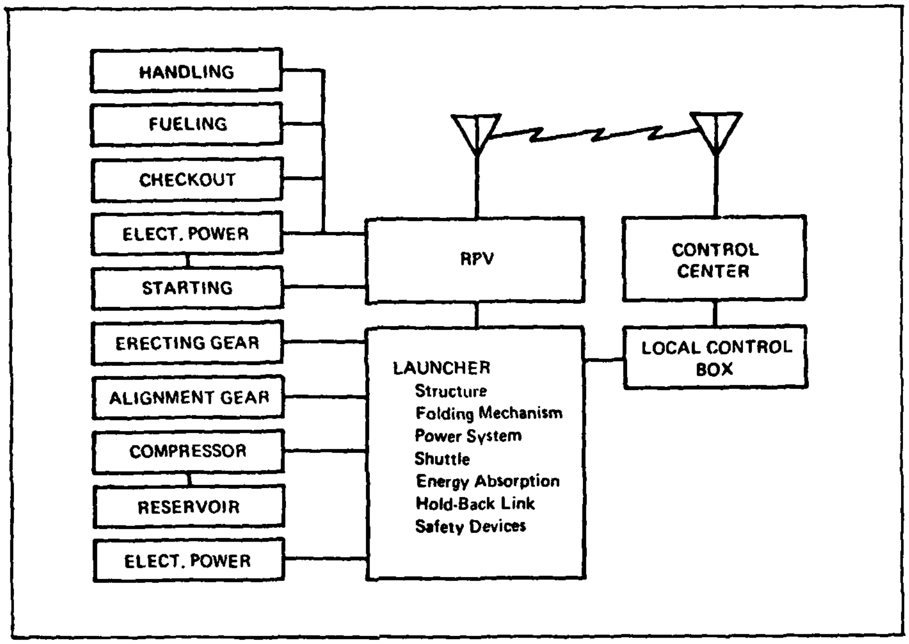

Figure 69. Pneumatic Launcher System Diagram

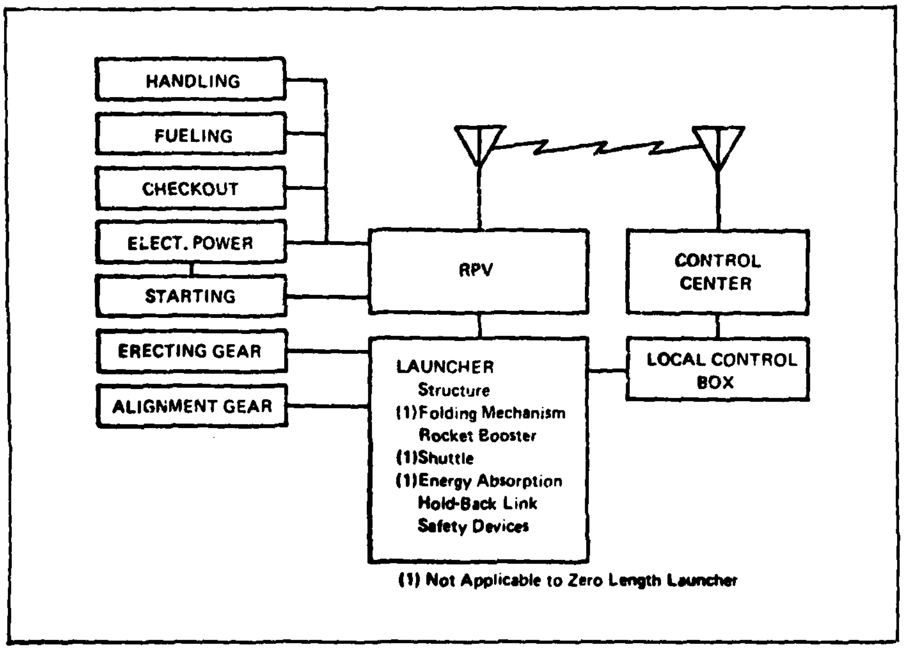

Figure 70. Rocket Boosted Launcher System Diagram

## TABLE 15

## ROCKET LAUNCHER OPERATING SEQUENCE

| NO. | LAUNCH OPERATIONS | PARALLEL RPV OPERATIONS |
|---|---|---|
| 1 | ● LAUNCHER TRUCK ON SITE | |
| 2 | ● LAUNCHER ERECTION<br>Uncover Launcher<br>(1)Unfold Launcher<br>Check Launcher Alignment<br>Orient & Set Launcher Angle | ● Inspect RPV<br>● Prepare Payload<br>● Install Battery<br>● Conduct Preflight Check<br>● Prepare for Transfer |
| 3 | ● LAUNCHER CHECKS<br>(1)Manual Shuttle Run<br>(2)Secure Shuttle in Battery Position | |
| 4 | ● UPLOAD RPV<br>Transfer RPV, Inspection Area to Launcher<br>Install Rocket Booster<br>Connect Electrical Interfaces<br>Install Safeties | NOTES<br>ZERO-LENGTH LAUNCHER |
| 5 | ● FUEL RPV | (1) Not Applicable<br>(2) Secure to F.L. Launcher |
| 6 | ● POWER-UP & PRELAUNCH CHECKS<br>Start RPV Engine<br>NAV Program Via RF Link<br>Conduct Prelaunch Checks<br>Remove Power Connections<br>Remove Safeties | |
| 7 | ● LAUNCH | |

appropriate design attention, and quality of construction the problem can eventually disappear. However, changes of any type that reposition the RPV's center of gravity must be again coordinated with the booster alignment. Thus the Mini-RPV section in the field must be provided with "known quantities" at all times in this respect, since adjustments of this nature in the tactical environment may not be practical.

The finite length launcher, a rail type, is less subject to alignment problems and perhaps changing rocket booster types since the shuttle on which the RPV is carried would compensate. Also the RPV would attain flight velocity while it is still in the guided mode. The two sub-concepts for the finite length launcher, the arrested shuttle type and the projectile booster/shuttle arrangement, bring their own areas of concern. For the arrested shuttle type, the energy absorption problem is much the same as for the pneumatic launchers as discussed in subsection 11.2. Where the projectile booster/shuttle is allowed to fly free beyond the end of the launcher after the RPV separates from the shuttle the major concerns are: retrievable versus expendable elements and provisions to assure that no possibility of post-launch collision between the RPV and the shuttle assembly.

### 11.1.3 Launcher Operational Cost Sensitivity Comparisons

Preliminary cost sensitivity comparison studies for operating the pneumatic and rocket boost launch concepts are conducted below.

The pneumatic launch concepts are treated generically, but a distinction is made between the zero length and finite length rocket booster launchers in the cost sensitivity comparisons because of distinct peculiarities of the two concepts.

Trucks, enclosures, trailers, and communications are considered as government-furnished equipment, hence their costs are not included.

Prototype development cost of a pneumatic launcher is estimated at about 150 thousand dollars, and the prototype development for a small rocket booster is about 300 thousand dollars, about 1/3 of which would be for qualification tests peculiar to pyrotechnics. Development of the pneumatic and rocket prototypes could be accomplished in 6 to 8 months. Initial production costs for the pneumatic launcher is expected to be considerably higher than the initial production cost of boost rockets. However, the difference in the sum of developemnt and initial production between the two concepts is expected to be small.

Hence, the cost sensitivity and comparison analysis is focused on the operating cost, in particular the operation cost per launch.

The following guidelines pertaining to cost and launch operations are used in the analysis:

1. Constant 1978 dollars
2. Manpower based on a dedicated team for launch and recovery
3. Operation rate for three 3-hour sorties within a 12-hour period
4. One launcher per RPV section
5. Five sections per division
6. All years of operations similar
7. Trucks, enclosures, trailers, and communications equipment GFE

To facilitate the analysis, the launcher utilization (number of launches) is used as the independent variable for the operating cost sensitivity to utilization and for a comparison between the launch concepts. The cost per launch is used as the measure of merit. This greatly reduces dependence on the scenarios.

The operating cost breakdown for the launch system analysis is as follows:

1. Expendables
2. Consumables
3. Logistics
4. Reliability
5. Manpower

The expendable item is the rocket as appropriate for the concept. The consumables include the energy necessary to start the RPV engine, to unfold the launcher, and to compress the air to charge the launcher. The logistics consist of the spare parts required for maintenance (assume 10 percent annually), rocket transportation, and rocket storage. The reliability cost is the estimated RPV replacement cost accounting for rocket or pneumatic launcher reliability and alignment (human factor), especially for the zero length type. The manpower cost is the payroll for the team members plus a share of the recovery system payroll.

The operating cost sensitivity to utilization is shown in Figure 71. The greatest reduction in cost per launch occurs in the first 25 launches. Initially, the manpower cost dominates. Then as the number of launches increases, the dedicated manpower cost is prorated over an increasing number of launches, and hence reduces the cost per launch. Although the pneumatic launcher has the highest initial cost per launch, it very quickly crosses over and becomes the lowest cost per launch for increased utilization.

Figure 72 shows the estimated cost distribution for the rocket and pneumatic concepts at 100 launches per launcher.

Since the launch team is essentially the same, the manpower costs are the same for all concepts. A difference does occur in the fraction

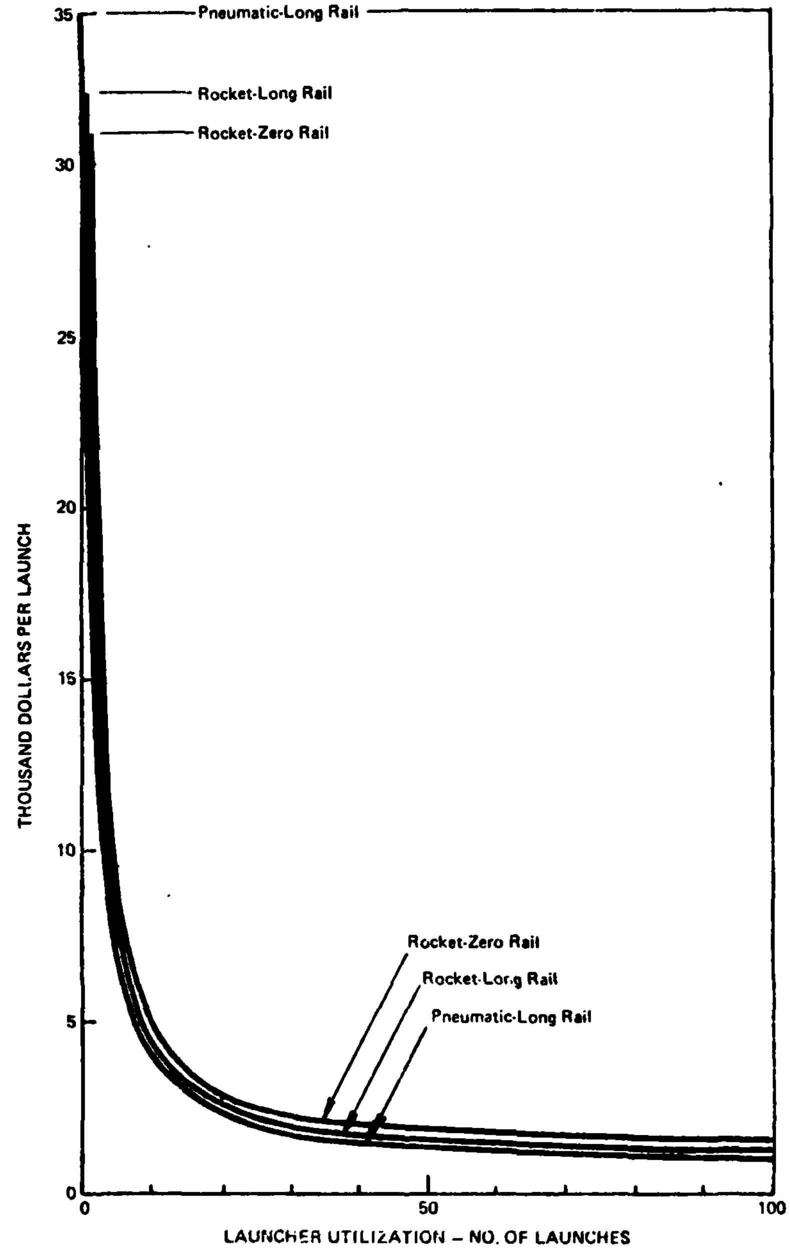

Figure 71. Operating Cost Sensitivity to Utilization

of RPV replacement cost due to the variation in expected reliability. The logistic costs are small even though they are higher for the more complicated pneumatic launcher. The rockets make the biggest difference in costs. If the lot size for the rockets is increased to a very large number, it is possible to reduce the rocket cost from 400 to 200 dollars per unit. The dashed line shows the effect of this assumption.

A further reduction in rocket cost is also possible by making use of an inventory rocket motor such as the 2.75-inch FFAR, which is represented by an estimated unit cost of 100 dollars on Figure 72.

It follows that as the number of launches increases, the total cost per launch would decrease across the board due chiefly to the proration of manpower and logistics costs. Thus, at 1000 launches, all concepts would decrease by about 230 dollars average. Beyond 1000 launches, cost reductions due to the number of launches would be insignificant.

Recognizing the inequities inherent in the rough order of magnitude (ROM) cost-per-launch sensitivity studies above, it can be tentatively concluded that at 100 launches, the cost per launch would run from about 1500 dollars for the zero length rocket concept (where the rocket unit cost is 400 dollars) to less than 1000 dollars for the pneumatic types. Based on 1000 launches, the zero length launcher would be about $1250, the finite length launcher slightly over $1000, and the pneumatic type about $700 per launch. In the case of being able to utilize the inventory boost rocket, the rocket types would drop to $950 for the zero length and $700 for the finite length launches. In this instance, the finite length launcher cost would be about the same as for the pneumatic launches.

### 11.1.4 Study Overview

The declared purpose of this conceptual study is to arrive at a preferred Mini-RPV launcher concept to meet the criteria set forth in Section 3.0, which relate to operating a Mini-RPV section in a tactical environment 2-5 kilometers from the FEBA.

As indicated earlier, the inherent limitations of the study preclude clearly identifying one concept only as the preferred system. Rather, two concepts (pneumatic and rocket boost), each with sub-concepts, are left in a gray area as the most promising concepts. Much more detailed information (on a consistent basis, concept-to-concept), and an in-depth study would be required to break this final group of concepts down into a single preferred system.

As time goes on and the development data base for certain of the other concepts examined in this study increases, present limiting areas of concern may lessen or disappear, which may greatly increase the confidence level for each concept.

A case in point is the Neg'ator Spring Motor Concept (subsection 7.1.4), one of the five candidate concepts brought forward from Phase II. The basic principles for this concept are simple and straightforward, but available technology does not provide sufficient confidence in obtaining the desired results for the type of multi-spring motor required for the 200-pound-class RPV.

Viewed in terms of the criteria of this study, an issue to be considered in comparing the pneumatic and rocket launcher types is what has been referred to in this study as "adaptability". That is, the ability of the various launcher concepts to accommodate the energy requirements of the smaller 120-pound-class RPV as well as of the 200-pound-class RPV where the required energy varies by a factor of about 4.0. (Reference Table 1.) The pneumatic launchers afford the widest range of adaptability because the pressure in the reservoir can be set at the level required for a given energy demand. The zero length launcher is next in adaptability, although considerably more restricted than the pneumatic types. Launch distances (in free air) are not particularly critical, therefore a wider range of boost accelerations is acceptable. The finite length rocket-boosted launcher is the least adaptable to off-design conditions chiefly because, here, it is restricted to a given maximum length of launcher.

With physical design criteria involving less spread than stipulated for this study the problems of adaptability for the rocket-boosted launchers would, of course, diminish.

In summary, it is recommended that the pneumatic and rocket-boosted launcher concepts be furthered by bringing them to a common level of engineering preliminary design and analysis necessary to conducting final trade-off studies, which will result, if possible, in the selection of a preferred system for U.S. Army tactical operations.

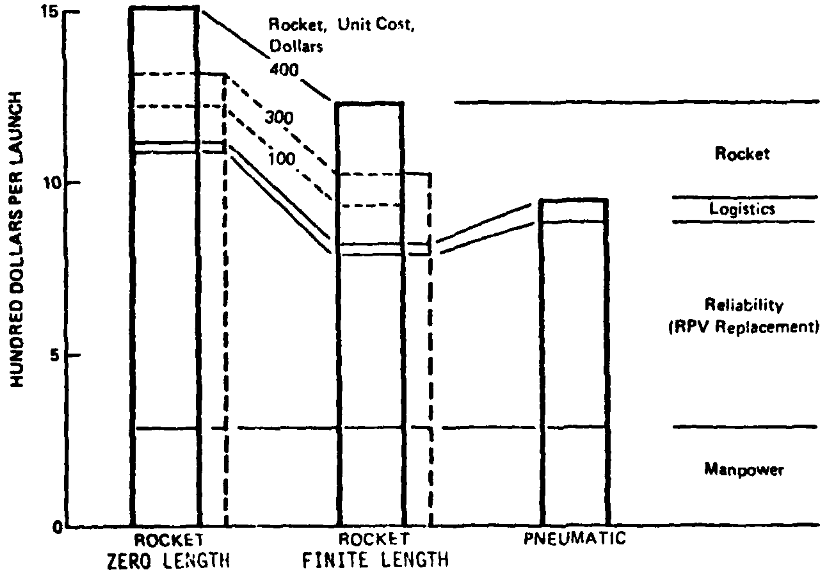

Figure 72. Cost per Launch Breakdown Comparison at 100 Launches/Launcher

# 12.0 REFERENCES

1. DATA PACKAGE, Aero Electronics (AEL) Ltd., Surrey, England, 20 September 1977.
2. DATA PACKAGE, Fenner America Ltd., Middletown, Connecticut, 12 October 1977.
3. MIL-C-5651B CORD; ELASTIC, EXERCISER AND SHOCK ABSORBER FOR AERONAUTICAL USE, Amendment 1, 29 September 1966.
4. Votta, F. A., Jr., THE THEORY AND DESIGN OF LONG DEFLECTION, CONSTANT FORCE SPRING ELEMENTS, Transactions of the ASME, May 1952.
5. DATA PACKAGE, Ametek Hunter Spring Division, Hatfield, Pennsylvania.
6. DATA PACKAGE, Prototype Development Associates, Inc., Santa Ana, California, 6 December 1977.
7. DATA PACKAGE, All American Engineering Co., Subsidiary of All American Industries, Wilmington, Delaware, 14 December 1977.
8. DATA PACKAGE, Fairchild Corporation, Stratos Division, Manhattan Beach, California, 5 October 1977.
9. DATA PACKAGE, Naval Surface Weapons Center, Dahlgren, Virginia, 21 October 1977.
10. DATA PACKAGE, Dornier GmbH, Friedrichshafen, West Germany, 11 November 1977.
11. DATA PACKAGE, Messerschmitt - Bolkow-Blohm, Muenchen, West Germany, 10 October 1977.
12. Gregory, T.J., DATA PACKAGE, NASA Ames Research Center, Moffett Field, California, 7 October 1977.
13. Chambers, Dr., J. R. Boisseau, P. C., A THEORETICAL ANALYSIS OF THE DYNAMIC LATERAL STABILITY AND CONTROL OF A PARAWING VEHICLE, NASA TN-D3461, Langley Research Center, Hampton, Virginia, June 1966.
14. Perkins, C. D., Hage, R. E., AIRPLANE PERFORMANCE, STABILITY AND CONTROL, New York, John Wiley & Sons,
15. DATA PACKAGE, All American Engineering Company, Subsidiary of All American Industries, Wilmington, Delaware, 12 January 1978.

16. Dickard, H. E., MINI-RPV RECOVERY SYSTEM CONCEPTUAL STUDY, Teledyne Ryan Aeronautical; USAAMRDL Technical Report 77-24, Eustis Directorate, U. S. Army Air Mobility Research and Development Laboratory, Fort Eustis, Virginia, August 1977, AD A046177.

17. Speelman, R. J., III, et. al., PARA-FOIL STEERABLE PARACHUTE, EXPLORATORY DEVELOPMENT FOR AIRDROP SYSTEM APPLICATION, AFFDL Technical Report 71-37, Air Force Flight Dynamics Laboratory, Wright-Patterson Air Force Base, Ohio, April 1972, AD 742294.

18. HUMAN FACTORS ENGINEERING, AFSC DH 1-3, Chapter 2, Third Edition.

19. UNSOLICITED PROPOSAL FOR THE DEMONSTRATION OF A NOZZLELESS SOLID PROPELLANT LAUNCH ROCKET FOR THE XBQM-106 MINI RPV, Atlantic Research Corporation, 21 October 1977.

20. DATA PACKAGE, Mini-RPV Group, Flight Vehicle Branch, Air Force Flight Dynamics Laboratory, Wright-Patterson AFB, Ohio,

21. Dannan, J., Day, R., Kalman, G., A LINEAR INDUCTION MOTOR PROPULSION SYSTEM FOR HIGH SPEED GROUND VEHICLES, Proceedings, IEEE, VOL 61, No. 5, May 1973.

22. RECOVERY SYSTEMS FLIGHT TESTS, FINAL REPORT, Report 14021-FR, Developmental Sciences, Inc., 15747 E. Valley Blvd., City of Industry, CA, 5 May 1978.

# APPENDIX A

# NAVAL AIR ENGINEERING CENTER

# COMPRESSED AIR/FIBERGLASS

# MINI-RPV LAUNCHER

# DESCRIPTION & REQUIREMENTS

1. The fiberglass Mini-RPV Launcher is a C-Type compressed air launcher. The "C" designation denotes a slotted cylinder. The RPV rides a shuttle guided by tracks mounted at the top of the launcher. A sealing strip is cammed in place, sealing the slot in the launch tube after the passage of the piston/shuttle connector and before the passage of the pressure face of the piston. The brake at the end of the launch stroke consists of a hydraulic buffer.

2. The design and operational requirements of the system are as follows:

   A. LAUNCHER

      1. Type - Slotted cylinder
      2. Construction - Glass fiber reinforced plastic
      3. Launch Capacity - 200 Lb
      4. Power Stroke - 19 Ft
      5. Length - 25 Ft
      6. Width - 1-1/2 Ft
      7. Height - 2 Ft
      8. Weight - 600 Lb
      9. Recycle Time - 5 Min

   B. AIR COMPRESSOR

      1. Power - 15 HP
      2. Weight - 600 Lb
      3. Operating Pressure - 150 PSI

3. The projected cost of the prototype is $20K with expected production costs under $15K per copy.

# APPENDIX B

## AERODYNAMIC ESTIMATES FOR AUXILIARY WING, CONCEPT I-10A

Performance for the auxiliary wing launch, Concept I-10A of subsection 7.10, was derived as shown by the typical example below for the aspect ratio 5.2 parawing using the generalized methods of Reference 14.

### WING PLANFORM, 120-POUND-CLASS RPV, WING LOADING = 2.0 PSF

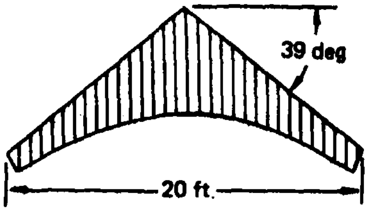

$$\text{Wing ref area, } S = 77.5 \text{ ft}^2$$

$$\text{Wetted area, } S_W = 155 \text{ ft}^2$$

$$\begin{aligned}\text{Aspect ratio, } AR &= b^2/S \\ &= 20^2/77.5 \\ &= 5.2 \qquad \text{(B-1)}\end{aligned}$$

### Equivalent Drag Areas

### Wing

The equivalent drag area of the wing is based on an equivalent skin friction coefficient $C_{fe}$ of .025 extrapolated from data in Reference 13.

$$\begin{aligned}f_1 &= C_{fe} \ (Sw) \\ &= .025 \ (155) \\ &= 3.816 \text{ ft}^2 \qquad \text{(B-2)}\end{aligned}$$

### Aquila RPV

Based on a $C_{Do}$ of .02 and a reference wing area of 30.2 $ft^2$

$$\begin{aligned}f_2 &= C_{Do} \ S \\ &= .02 \ (30.2) \\ &= .604 \text{ ft}^2 \qquad \text{(B-3)}\end{aligned}$$

## Struts and Attachments

A value of .3 $ft^2$ is assumed

$$f_3 = .3 \ ft^2 \qquad \text{(B-4)}$$

## Total Equivalent Drag Area

$$\begin{aligned} f &= f_1 + f_2 + f_3 \\ &= 3.816 + .604 + .3 \\ &= 4.72 \ ft^2 \qquad \text{(B-5)} \end{aligned}$$

## Drag Curve Data

Using the generalized performance method of Reference 14, $L/_D$ max is determined.

$$\begin{aligned} \frac{L}{D}_{max} &= .8862 \ (b) \ \sqrt{\frac{e}{f}} \\ &= .8862 \ (20.07) \sqrt{\frac{.94}{4.72}} \\ &= 7.94 \end{aligned}$$

$$\text{Drag at } \frac{L}{D}_{max} = \frac{W}{L/_{Dmax}} = \frac{155}{7.94} = 19.52 \text{ lb} \qquad \text{(B-6)}$$

and the velocity for $L/_D$ max is

$$\begin{aligned} V_{L/_{Dmax}} &= \frac{12.9066}{\sqrt[4]{fe}} \sqrt{\frac{W}{\sigma b}} \\ &= \frac{12.9066}{\sqrt[4]{4.72 \ (.94)}} \sqrt{\frac{155}{1.0 \ (20.07)}} \\ &= \frac{12.9066}{1.451} \sqrt{7.72} \\ &= 8.89 \ (2.778) \\ &= 24.7 \text{ Knots S.L. STD} \qquad \text{(B-7)} \end{aligned}$$

From the generalized curves of Figure 4-11 of Reference 14, drag values may be estimated as follows:

| $V/V_{L/D\ max}$ | $D/D_{L/D\ max}$ | Drag, lb | VELOCITY, KNOTS | |
|---|---|---|---|---|
| | | | SL Std | 4000 ft, 95° F |
| .7 | 1.265 | 24.7 | 17.29 | 19.25 |
| .8 | 1.101 | 21.5 | 19.76 | 22.00 |
| 1.0 | 1.0 | 19.52 | 24.7 | 27.51 |
| 1.5 | 1.347 | 26.3 | 37.1 | 41.31 |
| 1.8 | 1.774 | 34.6 | 44.5 | 49.56 |
| 2.0 | 2.125 | 41.5 | 49.4 | 55.01 |

Minimum Speed

The $C_L$ max for the aspect ratio 5.2 parawing, extrapolated from data in Reference 13, is 1.1. The minimum speed would then be

$$V_s = 17.2 \sqrt{\frac{W/S}{C_{L\ max}}}$$

$$= 17.2 \sqrt{\frac{2.0}{1.1}}$$

$$= 23.19 \text{ knots} = 25.82 \text{ knots, 4000 ft, 95° F} \qquad \text{(B-8)}$$

It will be noted that the drag versus velocity curve as plotted in Figure 47, subsection 7.10, uses the minimum speed point shown above instead of the computed points for speeds below $V_{L/D\ min}$.

In the above computations the Aquila RPV is assumed to fly at zero lift.

# APPENDIX C

## EFFECTS OF PARACHUTE RECOVERY ON RPV AND LAUNCHER DESIGN

### GENERAL

Design integration among the elements of an air vehicle system should be an axiomatic proposition.

However, in the early stages of some programs, it is not possible to completely define the system elements, much less achieve the desired degree of integration. To some extent, the Mini-RPV effort has been this way.

With better visibility of the RPV situation now available, integration of three important system elements of concern here can be given attention in detail. The elements are: (1) the RPV air vehicle, (2) the launch system and (3) the recovery system. The configuration of the RPV can affect both the launch and the recovery system, and in some instances, system optimization will indicate some "give" in air vehicle performance in deference to launch and recovery operational reliability and maintainability.

### LAUNCH

Typical design integration factors for the air vehicle that could aid the launch problem in general are (1) maintaining a launch "end-velocity" as low as possible for the RPV, since the energy required to launch varies as velocity squared, and (2) getting the vertical position of the center-of-gravity of the air vehicle as close to the interface points between the shuttle slides (rollers) and the rail as possible to minimize vertical reactions affecting friction and the potential for lurching due to unfavorable slide conditions.

Some "stoppers" for getting the vertical center of gravity closer to the shuttle are first, a transparent dome required for an electro-optical sensor and second, a propeller and/or shroud.

The air vehicle configuration can have a small effect on the launcher energy output where the vehicle's gross weight is increased, if necessary, to accommodate a parachute and air bag impact system. For example, an increase of 7 percent in gross weight corresponds to a similar increase in launch force and launch distance to be accounted for in the launcher design.

### RECOVERY

The recovery net concept has been used successfully for Mini-RPV operations, and the parachute has also been employed, but most often as a backup system. A first step in advancing the chute recovery concept toward an operational type system is summarized in Addendum 1.

Examples of design integration considerations for the RPV and the recovery net occur in making the external configuration and structure of the RPV compatible with the recovery net configuration and characteristics. For instance, an RPV with a high aspect ratio wing certainly demands a wider net to provide the necessary lateral tolerance for error in the terminal guidance. Whereas a tractor type propeller might meet all other requirements, its use would be questionable for both the recovery net and the RPV from the point of view of the probability of damage during recovery.

With the RPV configuration otherwise designed for compatibility with recovery nets, it is probable that only a small amount of structural beefup would be required to handle impact and abrasion.

The parachute recovery system is more demanding in the matter of design integration in that it definitely constitutes an additional subsystem. The challenge is to configure the chute package to minimize the volume required in a manner creating minimum drag increments. The cruciform chute described in Addendum 1 weighed 7.1 pounds and was loose packed, requiring a volume of about 600 cubic inches. Assuming that lighter chute materials could optimize the chute weight at 6 pounds and that a moderate packing density of 35 pounds per cubic foot was used, the volume required would be about 300 cubic inches. Several unobtrusive configurations for stowing a chute with volumes this small are imaginable.

An existing military system analogous to the parachute recovery system with regard to benefits versus penalties is the carrier-based aircraft. The carrier-based aircraft is part of a launch and recovery system design integration problem encompassing the ship's catapult and arresting systems. The weight penalty chargeable to the airframe to achieve carrier launch and recovery capability is roughly equivalent to that of an additional landing gear system for a land-based aircraft of the same gross weight. The added weight theoretically exacts performance penalties and adds cost. However, the task performed by the carrier-based aircraft for its user has been regarded as an acceptable trade-off for the penalties involved.

The weight and performance penalties associated with parachute recovery for the Mini-RPV may likewise be acceptable if the system provides sufficient benefits for the user overall.

Ideally, a Mini-RPV designed for operation in the tactical environment would be capable of recovery by either the parachute or the net technique.

The dual capability is suggested by the fact that in some scenarios, the recovery net system can become a burden in the operations, or the RPVs may have to be diverted to other areas where no net provisions exist.

On the other hand, at greater distances from the FEBA, the net system may be operationally preferable.

## IMPACT ATTENUATION

The subject of impact attenuation for the chute-recovered Mini-RPV is perplexing in that some RPVs operate with only structural beefup provisions, others with crushable components and others with an inflatable impact bag subsystem (Reference 16, subsection 11.2.6).

Experiences with chute recovery for the Navy/TRA STAR Mini-RPV with no special impact provisions and the MQM-105 Aquila DSI tests (Reference 22) where the impact bag failed to deploy on three flights, show small amounts of impact damage. The dividing line occurs between "some" impact damage and "no" impact damage. The impact bag is probably a reasonable answer for the latter case.

If the impact bag is selected, the next question is how much bag? Here again, the configuration of the RPV becomes a factor. The depth of the inflatable bag for the Aquila recovery tests (Reference 22) was made deeper than originally planned (18 inches versus 12 inches) in order to provide for the protrusion of the propeller duct.

Intuitively, it seems that somewhere between no impact bag, and a rather shallow bag, RPV configuration permitting, that chute recovery could be accomplished without damage to the RPV, high g predictions notwithstanding.

# ADDENDUM 1
# APPENDIX C
# SYNOPSIS OF AQUILA PARACHUTE RECOVERY SYSTEM FLIGHT TEST PROGRAM
# DEVELOPMENTAL SCIENCES, INC.

## INTRODUCTION

In the TRA Mini-RPV Recovery System Conceptual Study, USAAMRDL-TR-77-24, August 1977 (Reference 16), performed for the U.S. Army Air Mobility R & D Laboratory, Fort Eustis, Virginia, one of the recommendations offered was that a concerted effort be made to design parachutes specifically for Mini-RPVs with a view to optimizing weights and costs. Also, the investigations of the subject study pointed to the use of a cruciform (cross) chute as a prime candidate because of its basic simplicity, lower weight, minimal oscillating tendencies, and potential for lower fabrication costs.

The conclusions of TR-77-24 relative to the cruciform chute for the Mini-RPV were supported by prior recovery flight tests conducted by Johns Hopkins University Applied Physics Laboratory (APL) for the Navy RPD-2 Mini-RPV (about 80 pounds gross weight).

Part of the success of the chute recovery concept for Mini-RPVs in the tactical environment anticipated by the U. S. Army would hinge on an ability to deploy the chute at very low altitudes to reduce the total recovery sequence to a few seconds. Data to substantiate the possibility of low deployment altitudes was acquired from the APL trials and from a few chute recoveries (lowest altitude about 170 feet) for the TRA/Navy STAR Mini-RPV.

As a result of the work at APL and under TR-77-24, AVRADCOM initiated a small program to evaluate parachute recoveries utilizing the Aquila XMQM-105 Mini-RPV equipped with cruciform chute and pneumatic impact bag installations (Reference 22). Developmental Sciences, Incorporated (DSI) was responsible for the impact bag design, fabrication and systems integration of both chute and the bag. DSI conducted the flight test evaluation at Mojave, California. The cruciform chute system was designed and fabricated by Paranetics, Inc.

A total of 16 flights were conducted that culminated in 11 successful chute recoveries with little or no damage to the air vehicle at weights from 140 to 175 pounds, with deployment velocities of 50 to 75 knots. The deployment altitude matrix included successful recovery from 130 feet AGL, at 82 knots deployment velocity. As in most flight test programs, unexpected difficulties were encountered early in the program. It was determined

---

22. Recovery Systems Flight Tests, Final Report, Report 14021-FR, Developmental Sciences, Inc., 5 May 1978.

that the chute had to be deployed about 2 seconds ahead of the impact bag to avoid an undesirable negative g pitch down, believed to be caused by aerodynamic interference between the bag and the inboard section of the wing. The negative g effect apparently prevented proper chute deployment.

It should be noted that in this particular recovery system, the parachute attaches to the bottom of the RPV and the impact bag is on top. Thus, the RPV lands upside down, giving maximum protection against damage to the optical dome that protrudes from the bottom of the vehicle.

## CHUTE DATA

A sketch of the cruciform chute used in the Aquila recovery tests is shown in Figure C-1. The width/length ratio of the panels is .323. This ratio, plus or minus a few percent, has been found to provide a chute whose overall shape closely resembles a circular chute when inflated. The drag coefficient for such a configuration is about .65. It should be noted that the drag coefficient for the cruciform chute increases below design sink velocities of 40 ft/sec, thus putting the Mini-RPV in a favorable rate of sink area of 20 to 25 ft/sec.

The two main panels of the chute are constructed of 1.1 ounces/square yard rip-stop nylon. Five 300-pound-strength shroud lines attach to the ends of each panel. The weight of the chute, risers, and deployment bag (473 cubic inches) is 7.1 pounds. The weight of the chute could be reduced by using lighter canopy fabric (3/4 oz/yd or less), using smaller shroud lines, and perhaps other refinements in the risers and attachments. A standard pilot chute used with a personnel type canopy was utilized for the flight tests. A lighter (about 2 ounces) 36-inch-diameter cruiciform chute is believed to be a candidate extraction chute. The chute was soft-packed at about 20 pounds/cubic ft.

The Paranetics cruciform chute deploys (as indicated in movie film) with low shock forces, exhibiting somewhat the same appearance as a reefed chute as it inflates.

## IMPACT BAG

The fabric inflatable impact bag incorporates several fabric vertical [illegible]s to maintain a near-rectangular shape.

Dimensions of the bag are L = 4, W = 2, H = 1.5 feet (12 cubic feet). For test purposes, the bag was inflated by an off-the-shelf 1500 pounds per square inch gaseous nitrogen system. Blow-out flaps were provided in the bag to regulate energy absorption and to maintain a minimum final pressure of 2.0 pounds per square inch. The bag system weighed 9.0 pounds including bag, valve, plumbing, and pressure vessel.

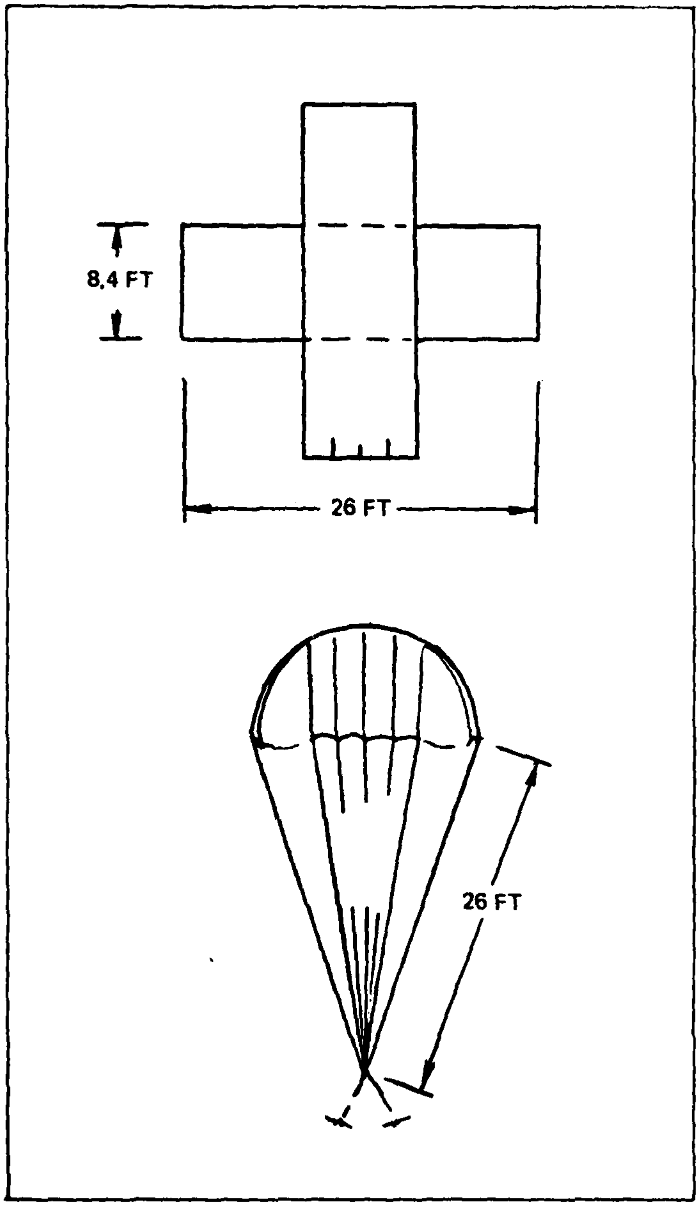

Figure C-1. Curciform Chute

## CHUTE/BAG INSTALLATION

Figure C-2 shows a schematic of the flight test chute/bag installation. Space between two existing fuselage bulkheads as utilized to pack the bag in the upper half and the chute in the lower half of the compartment. As previously noted, the RPV lands upside down.

On command, a pyrotechnic device releases the forward edge of the lower door, which swings back against the propeller shroud support strut, protecting the chute from fouling the shroud. After a two-second delay, the upper compartment door is jettisoned, releasing the inflatable bag. The chute risers are attached to the four corners of the chute compartment.

## CONCLUDING REMARKS

The experimental chute/bag recovery system demonstrated during the Aquila flight test trials is seen to be a potentially successful system that will not require a net system and/or terminal guidance system for recovery.

With chute deployed and the impact bag failing to deploy, which occurred during the test program, the RPV was put back in service by straightening out the propeller shroud and patching the nose of the RPV with fiberglass.

Additional effort toward optimizing the recovery system would reduce the system weight and volume. A recovery system weight goal of 7 percent of the RPV's gross weight should be achievable.

The chief disadvantage existing for the chute/bag system is its weight and volume requirement even when optimized, as compared to an RPV to be net recovered. However, these objections can be reduced appreciably for an RPV designed for the chute system at the outset, rather than as a retrofit.

In an operational system, a chute release, whether by command, or automatic on impact, may be required to prevent damage to the RPV in the event it would be dragged along the ground by winds. Cross chutes are less susceptible to remaining inflated when the suspending load is relieved. Operationally, a parachute recovery system provides a capability for vertical descent into small areas which would be difficult to net recover an RPV. While the RPV is under control of the ground control station, it could be immediately redirected to any alternate recovery site within radar line of sight of the ground control station. This option would be available at any time and would provide the utmost in recovery location flexibility.

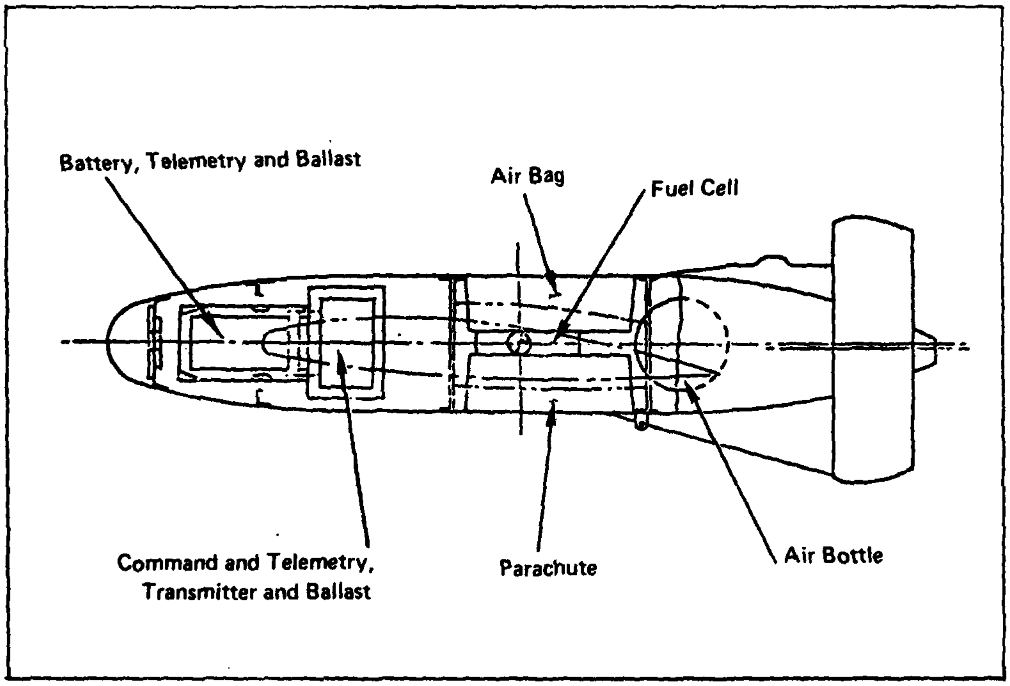

Figure C-2. Aquila Recovery System Installation