AD-A049 281 WENTWORTH INST BOSTON MASS F/G 13/7

DESIGN AND FABRICATION OF COMPACT PORTABLE VACUUM SYSTEMS FOR F--ETC(U)

AUG 75 M MCDONALD F19628-74-C-0014

UNCLASSIFIED SCIENTIFIC-2 AFGL-TR-77-0250 NL

| OF |

AD
A049281

END
DATE
FILMED
2-78
DDC

AD A049281

AFGL-TR-77-0250

DESIGN AND FABRICATION OF COMPACT PORTABLE VACUUM SYSTEMS FOR FIELD USE

Martin McDonald

Wentworth Institute [of Technology]
550 Huntington Avenue
Boston, Massachusetts 02115

AD No.
DDC FILE COPY

Scientific Report No. 2

Approved for public release; distribution unlimited

This research was sponsored by the Defense Nuclear Agency under Subtask K11BZXHX504, Work Unit 04, entitled "Mechanical Research."

AIR FORCE GEOPHYSICS LABORATORY
AIR FORCE SYSTEMS COMMAND
UNITED STATES AIR FORCE
HANSCOM AFB, MASSACHUSETTS 01731

DDC
RECEIVED
FEB 1 1978
D

Qualified requestors may obtain additional copies from the Defense Documentation Center. All others should apply to the National Technical Information Service.

Unclassified

SECURITY CLASSIFICATION OF THIS PAGE (When Data Entered)

(19) REPORT DOCUMENTATION PAGE

READ INSTRUCTIONS BEFORE COMPLETING FORM

1. REPORT NUMBER: (18) AFGL-TR-77-0250
2. GOVT ACCESSION NO.
3. RECIPIENT'S CATALOG NUMBER: (9)
4. TITLE (and Subtitle): (6) DESIGN AND FABRICATION OF COMPACT PORTABLE VACUUM SYSTEMS FOR FIELD USE.
5. TYPE OF REPORT & PERIOD COVERED: Scientific - Interim rept.,
6. PERFORMING ORG. REPORT NUMBER: Scientific Report #2
7. AUTHOR(s): (10) Martin McDonald
8. CONTRACT OR GRANT NUMBER(s): (15) F19628-74-C-0014
9. PERFORMING ORGANIZATION NAME AND ADDRESS: Wentworth Institute of Technology, 550 Huntington Avenue, Boston, Massachusetts 02115
10. PROGRAM ELEMENT, PROJECT, TASK AREA & WORK UNIT NUMBERS: 61102F, 66870301, (17) 03, X504
11. CONTROLLING OFFICE NAME AND ADDRESS: Air Force Geophysics Laboratory, Hanscom AFB, Massachusetts 01731, Monitor/Capt Robert V. Pieri/LKD
12. REPORT DATE: (11) 31 August 1975
13. NUMBER OF PAGES: 26
14. MONITORING AGENCY NAME & ADDRESS (if different from Controlling Office): (12) 14p. (16) 6687, K11BAXH
15. SECURITY CLASS. (of this report): Unclassified
15a. DECLASSIFICATION/DOWNGRADING SCHEDULE

16. DISTRIBUTION STATEMENT (of this Report)

Approved for public release; distribution unlimited

(14) SCIENTIFIC-2

17. DISTRIBUTION STATEMENT (of the abstract entered in Block 20, if different from Report)

18. SUPPLEMENTARY NOTES

62710H

This research was sponsored by the Defense Nuclear Agency under Subtask K11BAXHX504, Work Unit 04, entitled "Mechanical Research."

19. KEY WORDS (Continue on reverse side if necessary and identify by block number)

Portable table
Portable vacuum pumping stand
Gondola frame
Switched ion neutral instrument
Machinable glass ceramic

20. ABSTRACT (Continue on reverse side if necessary and identify by block number)

The material delineated in this manuscript describes the design and construction of ultra-high portable vacuum systems intended for field application.

DD FORM 1 JAN 73 1473 EDITION OF 1 NOV 65 IS OBSOLETE

Unclassified

SECURITY CLASSIFICATION OF THIS PAGE (When Data Entered)

373 800

LB

TABLE OF CONTENTS

1.0	INTRODUCTION	1
2.0	DESCRIPTION	1
2.1	Portable Field Station	3
2.2	Portable Vacuum Pumping Stand	3
2.3	Whole Air Cryogenic Gas Distillation Stand	6
2.4	Switched Ion/Neutral Housing	6
2.5	Satellite Calibration System	9
2.6	Liaison Results	9
3.0	CONCLUSION	9

LIST OF ILLUSTRATIONS

Figure	Description	
1	Whole Air Sample Stand	2
2	Portable Field Station	4
3	Pumping Stand (Portable)	5
4	Whole Air Cryogenic Gas Distillation Stand	7
5	Housing	8
6	Satellite Leak System	10

ACCESSION for
NTIS White Section ☒
DDC Buff Section ☐
UNANNOUNCED ☐
JUSTIFICATION.....
BY.....
DISTRIBUTION/AVAILABILITY CODES
Dist. AVAIL. and/or SPECIAL
A

DDC
RECEIVED
FEB 1 1978
D

LIST OF CONTRIBUTORS

The following individuals have contributed in various ways to this report:

Otto Molter, Sr. Exp. Machinist

Amy Gaiennie, Secretary

Design and Fabrication of Compact
Portable Vacuum Systems for Field Use

1.0 INTRODUCTION

During this period, support was given in the design and fabrication of components, assemblies, and special equipment, particularly compact, portable vacuum systems, used in the study of atmospheric composition. This support includes conducting engineering liaison with the composition branch, Air Force Geophysics Laboratory (AFGL), for the purpose of establishing design parameters and requirements of equipment and/or instruments; designing mechanical components and assemblies; fabricating items resulting from these designs; determining needs for possible re-design; and making recommendations for further modifications.

2.0 DESCRIPTION

The whole air sampling program, which had recently been initiated, required some special equipment to be used in the laboratory as well as associated portable field apparatus. The first requirement was to design suitable movable stands capable of supporting heavy analysis equipment within the confines of the laboratory (see figure 1). Accordingly, the necessary drawings were generated, and the required materials purchased for the fabrication of two movable laboratory stands. The stands were fabricated from heavy gage aluminum angle, using all welded construction, supported and braced in a manner to insure a durable rigid frame. The top was of 1" thick plywood bolted to the angle frame. Cemented to the plywood was a formica laminate 1/8" thick and extending 2" down all four sides of the stand. The stand frame was mounted on four roller bearing casters for ease of mobility.

BEST AVAILABLE COPY

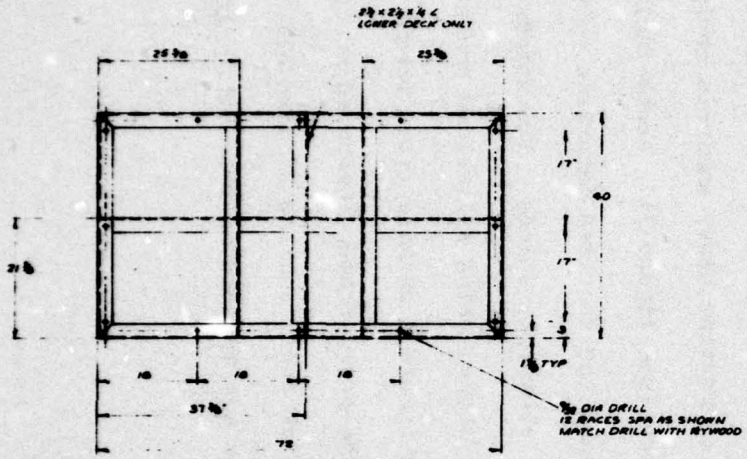

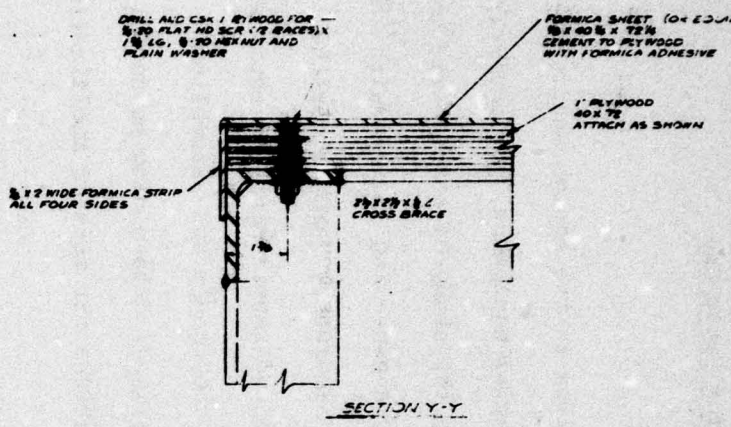

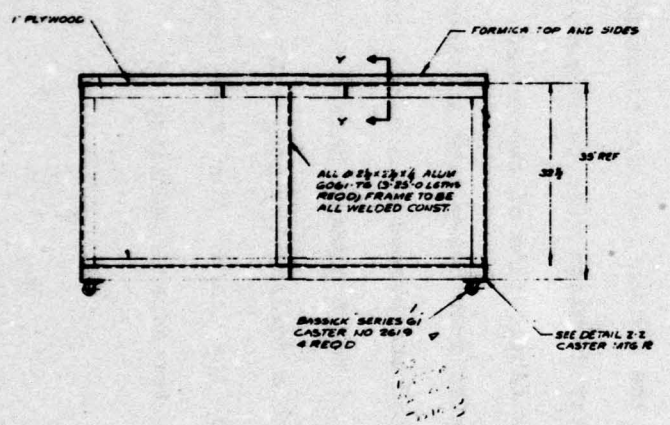

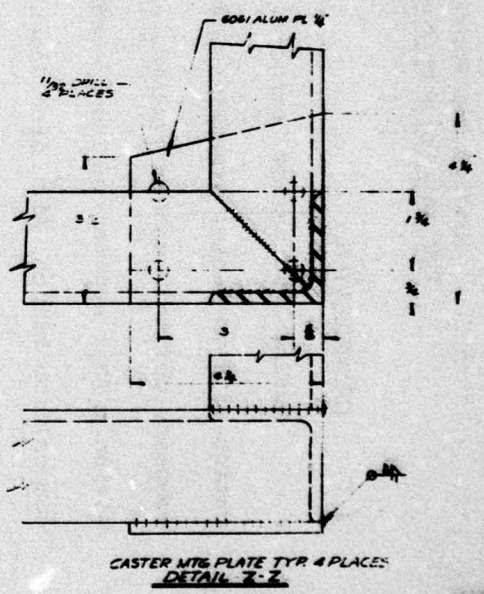

Figure 1

2.1 Portable Field Station

A portable vacuum field station is illustrated in figure 2. The primary criteria for its design was to produce as clean a system as possible to minimize effects on parts per million analysis methods. The necessary layouts and detail drawings were made to accomplish this end. The metal frame was fabricated from heavy gage aluminum angle. Supported within this frame by means of angle braces and "U" bolts was a 4" diameter 316 SST vacuum manifold with a 1½" diameter cross mounted to the manifold, and a number of Granville-Phillips "Gold Seal" valves. Two L N_2 molecular sieve sorbion pumps were also supplied. Provision was made to support a large LHe cryo-pump mounted to a six-inch gate valve. Additional equipment supplied included a vacuum pump for roughing, magnetic ion pump for maintenance pumping and ion and thermo-couple pressure gauges. This station was mounted on roller bearing castors for mobility. The completed field station was shipped to AFGL where it underwent vacuum tests and refinements prior to field use.

Because the portable field station was designed and built to be used at field sites, a shipping container was also fabricated. It was lined with shock absorbing material and supplied with supports and anchors to securely hold the unit during transit.

2.2 Portable Vacuum Pumping Stand

There was need of a small compact, portable vacuum pumping stand for mass spectrometers, figure 3. This could be used for either laboratory or field work. Drawings were made and such a stand was fabricated. The aluminum frame was of all welded construction of heavy aluminum angle. Supporting members were added to accommodate the vacuum manifold, valves, LN_2 sorbion pumps, mechanical vacuum pumps and ion guages, etc. All

BEST AVAILABLE COPY

BEST AVAILABLE COPY

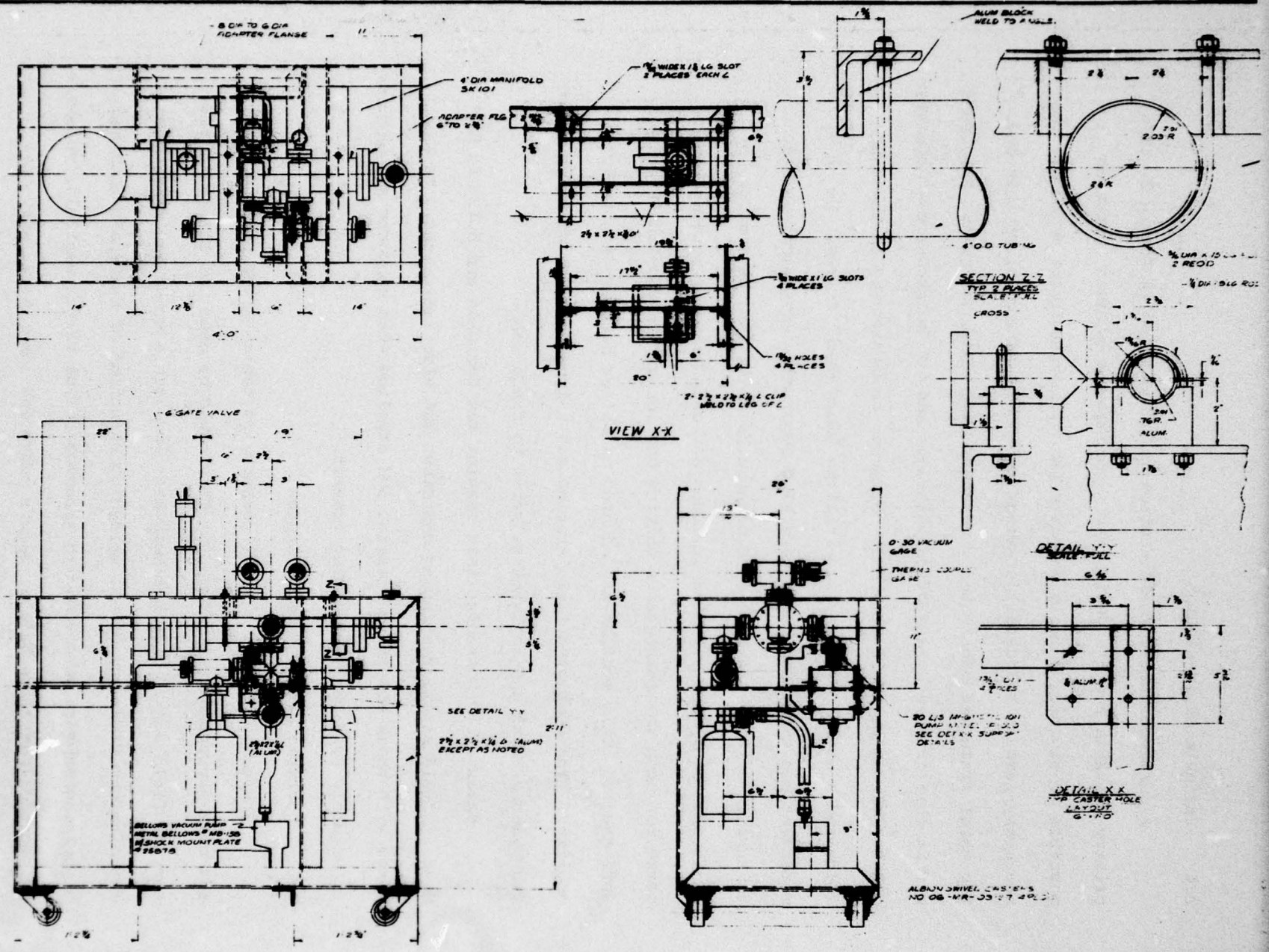

Figure 2

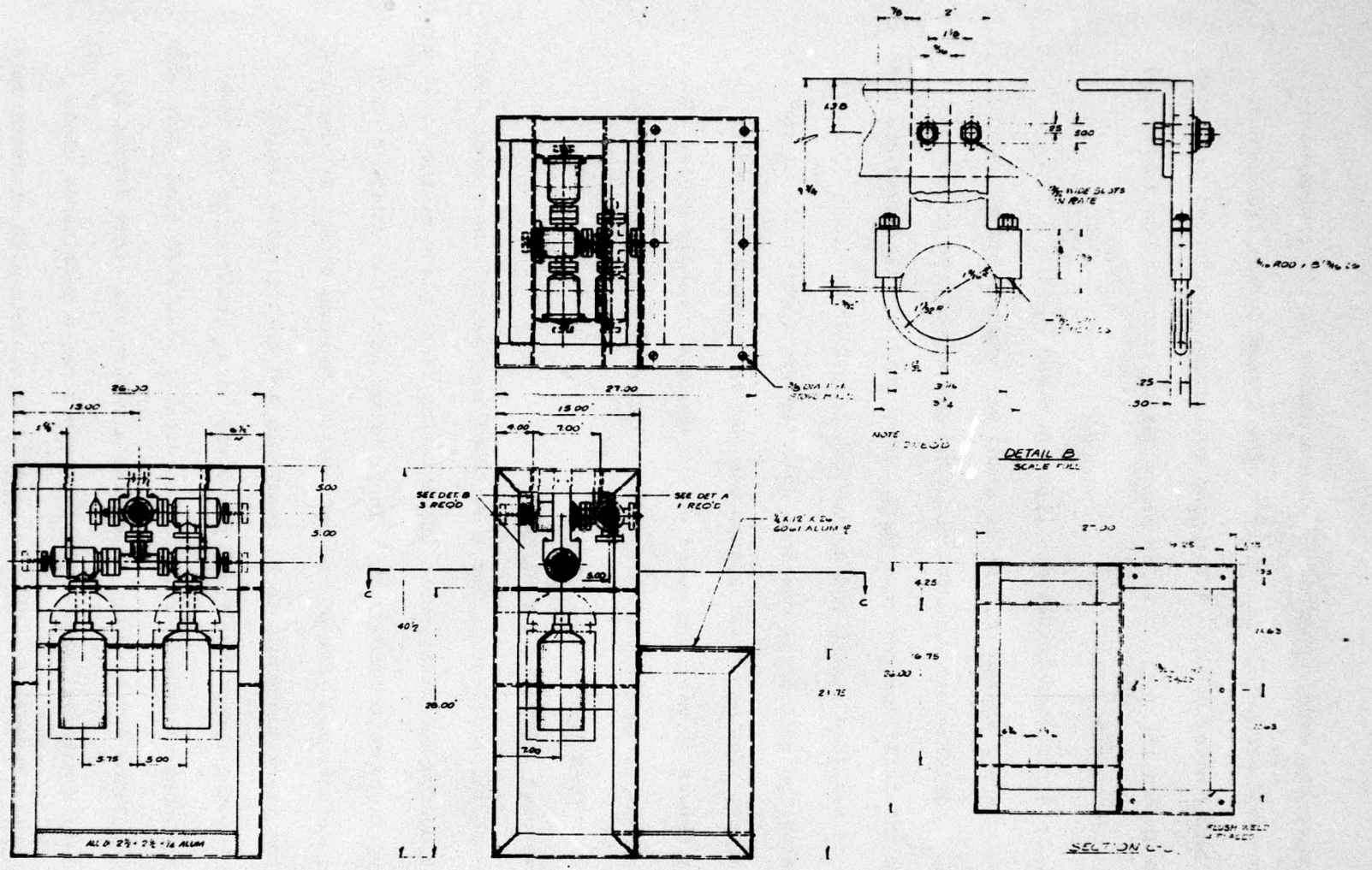

BEST AVAILABLE COPY

Figure 3

vacuum components were supported in such a manner as to provide maximum support and mechanical integrity of the system during field service and when being moved about. A shipping container, designated to absorb shock and anchor the field unit in place during transit, was fabricated and delivered to the laboratory.

2.3 Whole Air Cryogenic Gas Distillation Stand

A whole air system cryo-still stand was constructed as shown in figure 4. Provision was made for mounting and supporting an existing cryogenic gas still and LHe cryo-pump. Supported on this stand are six sections of manifold piping and a six-inch Granville Phillips "Gold Seal" vacuum valve, as well as 12 one-inch gold sealing right angle ultra-high vacuum valves. To this basic system was added, as required, additional pumps and gauges to meet the needs of the whole air sample tests. The cryo stand was permanently mounted in the laboratory area and is used to handle gas sample spheres.

2.4 Switched Ion/Neutral Housing

A special application for a switched ion/neutral instrument necessitated a design modification to the existing front plate of the housing containing a gas entrance orifice. In previous units the entire front was a welded integral part of the cylindrical housing body. In the new design, the front plate was to be removable and electrically isolated from the housing body. The front plate was to be attached to the body housing by means of machine screws electrically insulated from plate and housing. A Viton "O" ring would provide a vacuum seal (see figure 5). The insulating material used under the screws was a machinable glass ceramic. This ceramic material is readily machinable with standard metal working tools, using minimal precautions. However coolants must be used

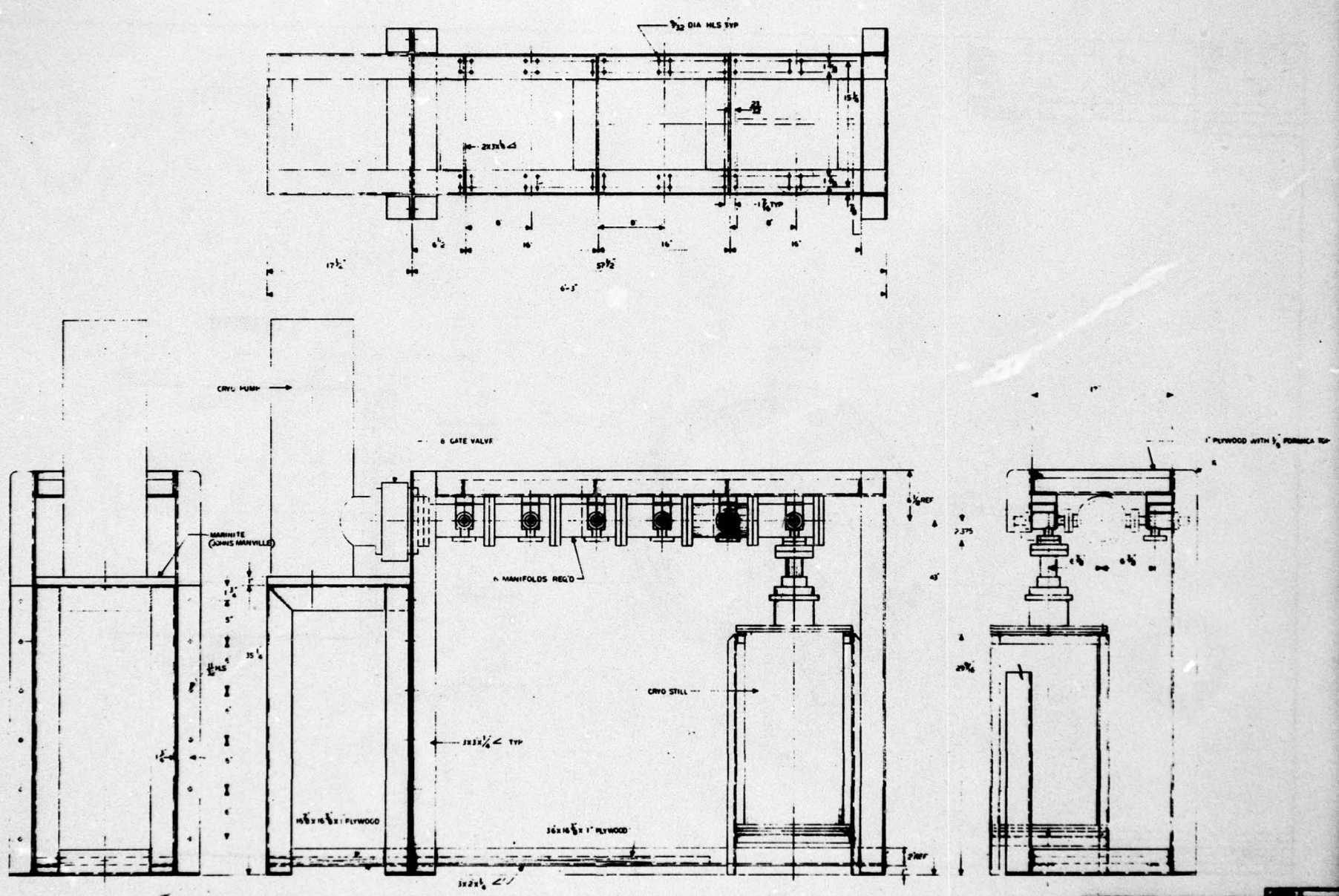

BEST AVAILABLE COPY

Figure 4

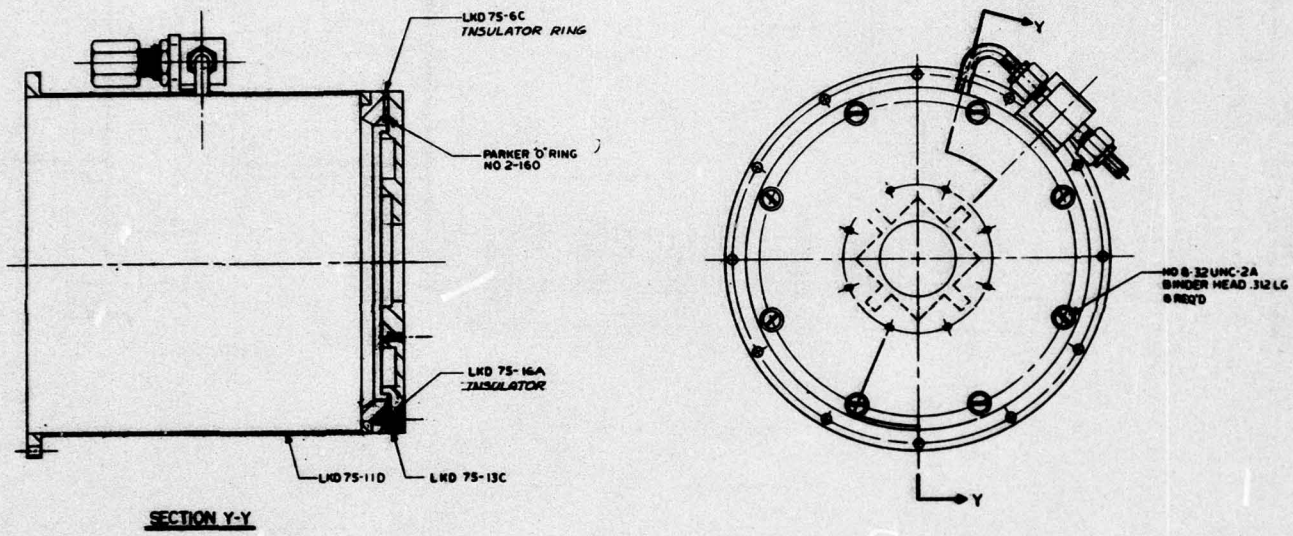

Figure 5

HOUSING SUB-ASSY

AFCRL

LKD 75-9D

to dissipate tool heat and flush the powder that comes off during machining. Small insulating tubes for binder head screws and a large plate washer were machined from this material. No problem was encountered in maintaining dimensional tolerances.

2.5 Satellite Calibration System

Mechanical vacuum plumbing components were fabricated for a satellite calibration leak system. A pictorial view of these items is shown in figure 6. This system allows for more precise calibration of mass spectrometers by using either gas leak, knowing their respective gas flow rates.

2.6 Liaison Results

The engineering liaison with AFGL personnel has led to some design modification of existing instruments, specifically in the weld joint area. Electron beam welding was used to an increasing degree and it has been found that its additional cost was offset by its high reliability, clean, oxide free surfaces, deep penetration and low distortion properties.

3.0 CONCLUSION

This report has described some of the work done in the areas of design, fabrication, test and analysis of components, assemblies and associated equipment to be used in aerospace studies of atmospheric phenomenon conducted by the composition branch of AFGL.

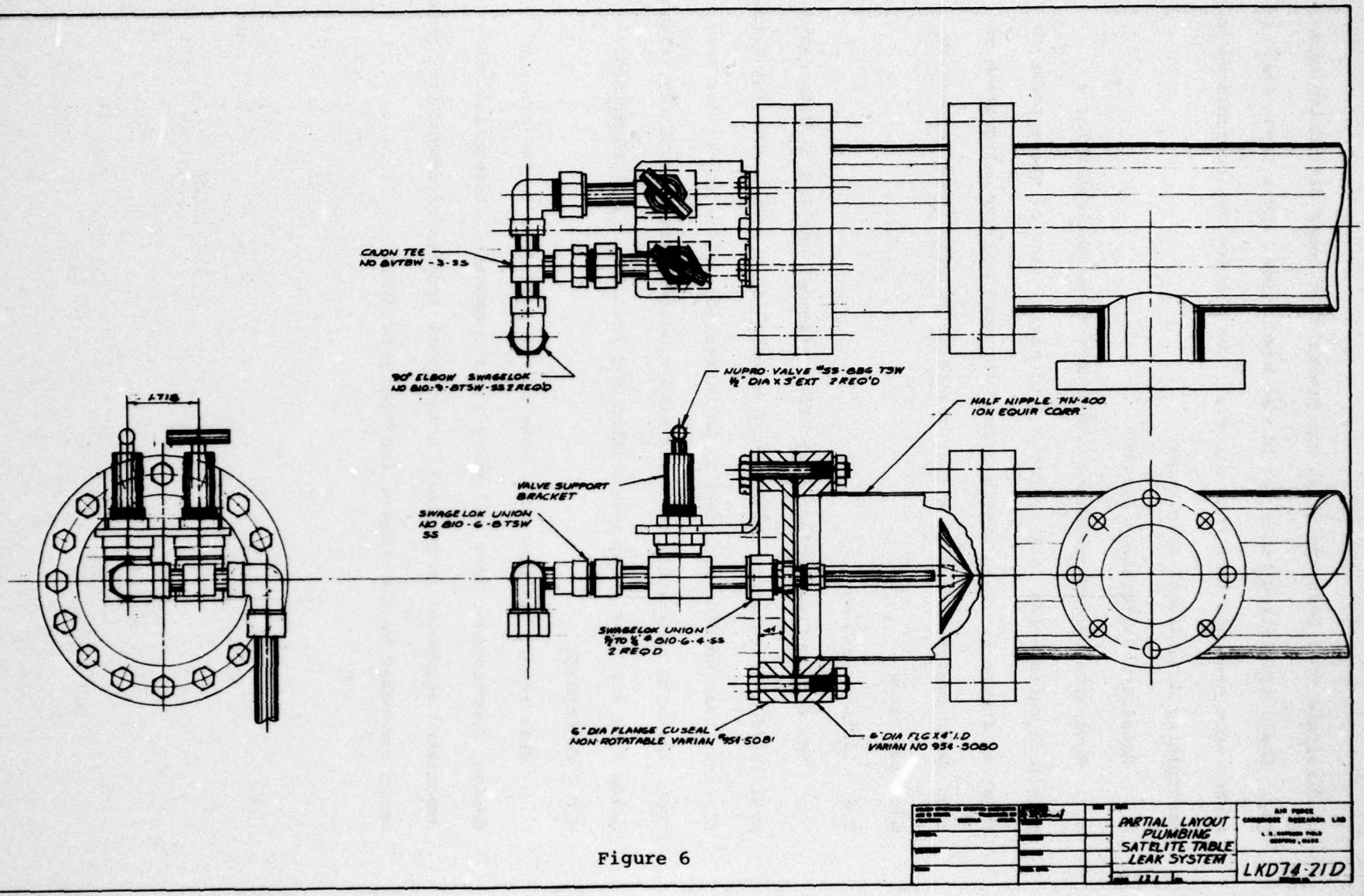
CAJON TEE
NO 6VTBW-3-SS
90° ELBOW SWAGELOK
NO 810-9-6TSW-SS 2 REQ'D
NUPRO VALVE #SS-6BG TSW
1/2" DIA X 3" EXT 2 REQ'D
HALF NIPPLE MN-400
ION EQUIP CORP
VALVE SUPPORT
BRACKET
SWAGELOK UNION
NO 810-6-6TSW
SS
SWAGELOK UNION
1/2 TO 1/4 # 810-6-4-SS
2 REQ'D
6" DIA FLANGE CUSEAL
NON-ROTATABLE VARIAN #954-5081
6" DIA FLG X 4" I.D
VARIAN NO 954-3080
PARTIAL LAYOUT
PLUMBING
SATELITE TABLE
LEAK SYSTEM
AIR FORCE
CAMBRIDGE RESEARCH LAB
L. G. HANSCOM FIELD
BEDFORD, MASS
LKD74-21D

Figure 6

DISTRIBUTION LIST

Director
Defense Advanced Rsch Proj Agency
Architect Building
1400 Wilson Blvd.
Arlington, VA 22209
01CY Attn Sto Kent Kresa
01CY Attn Ltc W A Whitaker
01CY Attn STO Capt J Justice
01CY Attn TTO Fred A Koether

Defense Documentation Center
Cameron Station
Alexandria, VA 22314
(12 copies if open public)
12CY Attn TC

Director
Defense Intelligence Agency
Washington, DC 20301
01CY Attn DT-1 Mr Knoll
01CY Attn DT-1C

Director
Defense Nuclear Agency
Washington DC 20305
03CY Attn STTI Tech Library
01CY Attn RAAF P Fleming
03CY Attn RAAF Charles A Blank
01CY Attn STST Archives
01CY Attn STRA
01CY Attn RAAF Maj John Clark
01CY Attn RAAF Harold C Fitz Jr

Commander
Field Command
Defense Nuclear Agency
Kirtland AFB, NM 87115
01CY Attn FCT William S Isengard
01CY Attn FCPR

Director
Interservice Nuclear Weapons School
Kirtland AFB, NM 87115
01CY Attn Document Control

Director
Joint Strat TGT Planning Staff JCS
OFFUTT AFB
Omaha, NB 68113
01CY Attn JPST Maj J S Green

Chief
Livermore Division Fld Command DNA
Lawrence Livermore Laboratory
P.O. Box 808
Livermore, CA 94550
01CY Attn FCPRL

Commander/Director
Atmospheric Sciences Laboratory
U S Army Electronics Command
White Sands Missile Range, NM 88002
01CY Attn F Butterfield DRSEL-BL-SY-R
01CY Attn R Olsen
01CY Attn M Diamond
01CY Attn H Ballard
01CY Attn DRSFL-BL-SY-S F E Niles

Director
BMD Advanced Tech Ctr
Huntsville Office
P.O. Box 1500
Huntsville, AL 35807
01CY Attn ATC-T Melvin T Capps
01CY Attn ATC-O W Davies

Chief C-E Services Division
U S Army Communications CMD
Pentagon Rm 1B269
Washington, DC 20310
01CY Attn CC-OPS-CE

Dep Chief of Staff for Rsch Dev & ACQ
Department of the Army
Washington, DC 20310
01CY Attn ARMDA-OO
01CY Attn Safeguard and Space Div

Commander
Harry Diamond Laboratories
2800 Powder Mill Road
Adelphi, MD 20783
02CY Attn DRXDO-NP
01CY Attn Mildred H Weiner DRXDO
(CNWDI-INNER ENVELOPE
ATTN: DRXDO-RBH)

Commander
Trasana
White Sands Missile Range NM 88002
01CY Attn R E Dekinder Jr

Director
U S Army Ballistic Research Labs
Aberdeen Proving Ground, MD 21005
01CY Attn DRXBR-AM D Snider
01CY Attn J A Vanderhoff
01CY Attn DRXBR-CA T J OBrien
01CY Attn DRXBR-AM J S Batten
01CY Attn I L Chidsey
01CY Attn DRXBR-AM G E Keller
01CY Attn J Heimerl DRXRD-BSP
01CY Attn John C Mester
01CY Attn Mark D Kregel
01CY Attn Tech Lib Edward Baicy

Commander
U S Army Electronics Command
Fort Monmouth, NH 07703
01CY Attn DRSFL-PI-ENV Hans A Bo

Commander
U S Army Foreign Science & Tech Ctr

Charlottesville, VA 22901
01CY Attn R Jones

Commander
U S Army Materiel Dev & Readiness CMD

Alexandria, VA 22333
01CY Attn DRCDF-D Lawrence Flynn

Commander
U S Army Nuclear Agency
Fort Bliss, TX 79916
01CY Attn MONA-WE J Berberet

Chief
U S Army Research Office
P.O. Box 12211
Triangle Park, NC 27709
01CY Attn CRDARD-P Robert Mace

Chief of Naval Operations
Navy Department
Washington, DC 20350
01CY Attn OP 985

Chief of Naval Research
Navy Department
Arlington, VA 22217
01CY Attn Code 464 Thomas P Quinn
01CY Attn Code 464 R Gracen Joiner
01CY Attn Code JTU Joh G Dardis
01CY Attn Code 427 Cdr Ronald J Oberle

Commander
Naval Electronics Laboratory Center
San Diego, CA 92152
01CY Attn William F Moler
01CY Attn Code 2200 Jurgen Richter
01CY Attn Code 2200 Herbert Hughes
01CY Attn Code 2200 Richard Pappert
01CY Attn Code 2200 Ilan Rothmuller

Superintendent (Code 1424)
Naval Postgraduate School
Monterey, CA 93940
(Destres No CNWDT Documents)
01CY Attn Code 61 MN E A Milne

Director
Naval Research Laboratory
Washington, DC 20375
01CY Attn Code 7701 Jack D Brown
01CY Attn Code 7127 Charles Y Johnson
01CY Attn Code 7750 J Davis
01CY Attn Code 7750 Wahar Ali
01CY Attn Code 7700 Timothy P Coffey
01CY Attn Code 7750 Klaus Hain
01CY Attn Code 7750 Paul Juluenne
01CY Attn Code 7730 Edgar A McClean
01CY Attn Code 2027 Tech Lib
01CY Attn Code 7750 Darrell F Strobel

Commander
Naval Surface Weapons Center
White Oak, Silver Spring, MD 20910
01CY Attn Code WA501 Navy Nuc Prgms Off
01CY Attn L Rudlin
01CY Attn D J Land

AF Geophysics Laboratory, AFSC
Hanscom AFB, MA 01731
01CY Attn LKB A Faire
01CY Attn OPR Alva T Stair
01CY Attn OPR J Rodgers
01CY Attn LKD Rocco S Narcisi
01CY Attn LKB John Paulson
01CY Attn LKB L Weeks
01CY Attn OPR James C Ulwick
01CY Attn LKB Edmond Murad
01CY Attn LKC D Golomb
01CY Attn LKB Kenneth S W Champion
01CY Attn LKB T J Keneshea
01CY Attn LKB William Swider Jr
01CY Attn LKD C R Philbrick
01CY Attn OP John S Garing
01CY Attn LKS F R Innes
01CY Attn LKS R A Van Tassel
01CY Attn LKO Robert E Huffman
01CY Attn OPR J Kennealy
01CY Attn OPR F Delgreco
01CY Attn OPR Harold Gardner
01CY Attn OPR J H Schummers
01CY Attn OPR R ONeill
01CY Attn OPR R E Murphy
01CY Attn SUDL AFGL Rsch LIB

AF Weapons Laboratory, AFSC
Kirtland AFB, NM 87117
01CY Attn DYT Capt Richard A Harris
01CY Attn 01DYT Lt John Lillis
01CY Attn DYT Capt Daniel A Matusk
01CY Attn DYT Capt Gary D Cable
01CY Attn DYT Capt David W Goetz
01CY Attn DYT Capt Hollars
01CY Attn DYT Joseph Janni
01CY Attn Sul

AFTAC
Patrick AFB, FL 32925
01CY Attn TF/Maj Wiley
01CY Attn TF/Maj E Hines
01CY Attn TN

Headquarters
Air Force Systems Command
Andrews AFB
Washington, DC 20331
01CY Attn SDR

Headquarters
Electronic Systems Division, (AFSC)
Hanscom AFB, MA 01731
01CY Attn FSTI

Commander
Foreign Technology Division, AFSC
Wright-Patterson AFB, OH 45433
01CY Attn TD-RTA Library
01CY Attn Maj E Frey

HQ USAF/IN
Washington, DC 20330
01CY Attn INS

HQ USAF/RD
Washington, DC 20330
01CY Attn RDQ H F Kerr
01CY Attn RD DCS D Rand
01CY Attn RDQPN

Commander
Rome Air Development Center, AFSC
Griffiss AFB, NY 13440
01CY Attn V Coyne
01CY Attn EMTLD Doc Library
01CY Attn OCSF J J Simons
01CY Attn TDR

Samso/SZ
Post Office Box 92960
Worldway Postal Center
Los Angeles, CA 90009
(Space Defense Systems)
01CY Attn SZJ Major Lawrence Doan

Commander in Chief
Strategic Air Command
OFFUTT AFB, NB 68113
01CY Attn XPFS Maj Brian G Stephan

Sandia Laboratories
P.O. Box 5800
Albuquerque, NM 87115
01CY Attn Doc Con For D A Dahlgren Org 1722
01CY Attn Doc Con For Frank P Hudson Org 1722
01CY Attn Doc Con for Org 3422-1 Sandia RPT Coll
01CY Attn Doc Con for Clarence R Mehl Org 5230

U S Energy Rsch & Dev Admin
Division of Headquarters Services
Library Branch G-043
Washington, DC 20545
01CY Attn Doc Con for Class Tech Lib

Argonne National Laboratory
Records Control
9700 South Cass Avenue
Argonne, IL 60439
01CY Attn Doc Con for Gerald T Reedy
01CY Attn Doc Con for Len Leibowitz
01CY Attn Doc Con for David W Green
01CY Attn Doc Con for S Gabelnick
01CY Attn Doc Con for Lib Svcs Rpts Sec
01CY Attn Doc Con for A C Wahl

Division of Military Application
U. S. Energy Rsch & Dev Admin
Washington, DC 20545
01CY Attn Doc Con for Maj D A Haycock

University of California
Lawrence Livermore Laboratory
P.O. Box 808
Livermore, CA 94550
01CY Attn D J Wuebbles L-142
01CY Attn W H Duewer Gen L-404
01CY Attn G R Haugen L-404
01CY Attn Julius Chang L-71

Los Alamos Scientific Laboratory
P.O. Box 1663
Los Alamos, NM 87545
01CY Attn Doc Con for John S Malik
01CY Attn Doc Con for Groud CMR-T
01CY Attn Doc Con for T Bieniewski CMB-1
01CY Attn Doc Con for Herman Hoerlin
01CY Attn Doc Con for J Judd
01CY Attn Doc Con for John Zinn
01CY Attn D M Rohrer MS 518
01CY Attn Doc Con for E A Bryant (No DASIAC)
01CY Attn Doc Con for W M Hughes MS 559
01CY Attn Doc Con for W D Barfield
01CY Attn Doc Con for Marge Johnson
01CY Attn Doc Con for William Maier
01CY Attn Doc Con for Martin Tierney J-10
01CY Attn Doc Con for David W Steinhaus

Albany Metallurgy Research Center
U. S. Bureau of Mines
P.O. Box 70
Albany, OR 97321
01CY Attn Eleanor Abshire

Central Intelligence Agency
Attn: RD/SI Rm 5G48 Hq Bldg
Washington, DC 20505
01CY Attn NED/OSI - 2G48 HQS

Department of Commerce
National Bureau of Standards
Washington, DC 20234
(All Corres: Attn SFC Off)
01CY Attn K Kessler
01CY Attn George A Sinnatt
01CY Attn J Cooper
01CY Attn Stanley Abramowitz
01CY Attn M Krauss
01CY Attn Lewis H Gevantman

Department of Commerce
Office of Telecommunications
Institute for Telecom Science
Boulder, CO 80302
01CY Attn L A Berry
01CY Attn William F Utlaut

Department of Transportation
Transportation Rsch System Center
Kendall Square
Cambridge, MA 02142
01CY Attn E Marmo

Department of Transportation
Office of the Secretary
TAD-44.1, Room 10402-B
400 7th Street S.W.
Washington, D.C. 20590
01CY Attn Richard L Strombotne TST-8

01CY Attn R Underwood

NASA
Goddard Space Flight Center
Greenbelt, MD 20771
01CY Attn A Tempkin
01CY Attn S J Bauer
01CY Attn Technical Library
01CY Attn A C Aiken

NASA
600 Independence Avenue S W
Washington, DC 20546
01CY Attn R Fellows
01CY Attn D P Cauffman
01CY Attn LTC D R Hallenbeck Code SG
01CY Attn A Gessow

NASA
Langley Research Center
Langley Station
Hampton, VA 23365
01CY Attn Charles Schexnayder MS-168

NASA
Ames Research Center
Moffitt Field, CA 94035
01CY Attn N-254-3 Neil H Farlow
01CY Attn N-254-4 Walter L Starr
01CY Attn M-254-4 R Whitten Uncl Only
01CY Attn N-245-4 Ilia G Poppoff

National Oceanic & Atmospheric Admin
Environmental Research Laboratories
Department of Commerce
Boulder, CO 80302
01CY Attn Fred Fehsenfeld
01CY Attn Eldon Ferguson
01CY Attn J W Pope
01CY Attn George C Reid Aeronomy Lab

National Science Foundation
1800 G Street, N.W.
Washington, DC 20556
(No classified to this address)
01CY Attn E P Todd
01CY Attn R S Zapolsky
01CY Attn W D Adams
01CY Attn Rolf Sinclair
01CY Attn R Manka
01CY Attn Fred D White
01CY Attn M K Wilson

Aero-Chem Research Laboratories, Inc.
P.O. Box 12
Princeton, NJ 08540
01CY Attn A Fontijn
01CY Attn H Pergament
01CY Attn Hartwell F Calcote

Aerodyne Research, Inc.
Bedford Research Park
Crosby Drive
Bedford, MA 01730
01CY Attn E Bien
01CY Attn M Camac

Aeronomy Corporation
217 S Neil Street
Champaign, IL 61820
01CY Attn S A Bowhill

Aerospace Corporation
P.O. Box 92957
Los Angeles, CA 90009
01CY Attn N Cohen
01CY Attn R J McNeal
01CY Attn Sidney W Kash
01CY Attn R Grove
01CY Attn T Widhoph
01CY Attn R D Rawcliffe
01CY Attn Julian Reinheimer
01CY Attn Irving M Garfunkel
01CY Attn V Josephson
01CY Attn Harris Mayer
01CY Attn T Taylor

Avco-Everett Research Laboratory, Inc.
2385 Revere Beach Parkway
Everett, MA 02149
01CY Attn George Sutton
01CY Attn C W Von Rosenberg Jr.
01CY Attn Technical Library

Battelle Memorial Institute
505 King Avenue
Columbus, OH 43201
01CY Attn Richard K Thatcher
01CY Attn Stotac
01CY Attn Donald J Hamman

The Trustees of
Boston College
Chestnut Hill Campus
Chestnut Hill, MA 02167
02CY Attn Chairman Dept of Chem

Brown Engineering Company, Inc.
Cummings Research Park
Huntsville, AL 35807
01CY Attn N Passino
01CY Attn Ronald Patrick

California at Riverside, Univ of
Riverside, CA 92502
01CY Attn James N Pitts Jr
01CY Attn Alan C Lloyd

California at San Diego, Univ of
Bldg. 500 Matthews Campus
3175 Miramar Road
1 A Jolla, CA 92037
01CY Attn S C LIN

California Institute of Technology
Jet Propulsion Laboratory
4800 Oak Park Grove
Pasadena, CA 91103
01CY Attn Joseph Ajello

California University of
Berkeley, Campus, Room 8
2543 Channing Way
Berkeley, CA 94720
(Class Mail to: Attn Sec Off)
01CY Attn F Mozer
01CY Attn Harold Johnston
01CY Attn Dept of Chem W H Miller

California, State of
Air Resources Board
9528 Telstar Avenue
El Monte, CA 91731
01CY Attn Leo Zafonte

Calspan Corporation
P.O. Box 235
Buffalo, NY 14221
01CY Attn Robert A Fluegge
01CY Attn M G Dunn
01CY Attn W Wurster
01CY Attn C E Treanor
01CY Attn G C Valley

Colorado, University of
Office of Contracts and Grants
380 Administrative Annex
Boulder, CO 80302
01CY Attn C Lineberger JILA
01CY Attn A Phelps JILA
01CY Attn C Beaty JILA
01CY Attn Charles A Barth LASP

Columbia University, The Trustees
in the City of New York
1A Mont Doherty Geological
Observatory - Torrey Cliff
Palisades, NY 10964
01CY Attn B Phelan

Columbia University, The Trustees of
City of New York
116th Street & Broadway
New York, NY 10027
01CY Attn Sec Officer H M Foley
01CY Attn Richard N Zarf

Concord Sciences
P.O. Box 119
Concord, MA 01742
01CY Attn Emmett A Sutton

Denver, University of
Colorado Seminary
Denver Research Institute
P.O. Box 10127
Denver, CO 80210
(Only 1 copy of class Rpts)
01CY Attn Sec Officer for Mr Van Zyl
01CY Attn Sec Officer for David Murcray

Ecometrics
718 Willow Glen Road
Santa Barbara, CA 93105
01CY Attn Nyle G Otterback

Epsilon Laboratories, Inc.
Preston Court
Bedford, MA 01730
01CY Attn John Calchines
01CY Attn Henry Miranda
01CY Attn Carl Accardo

FSL, Inc.
495 Java Drive
Sunnyvale, CA 94086
01CY Attn James Marshall
01CY Attn W R Bell

General Electric Company
Space Division
Valley Forge Space Center
Goddard Blvd King of Prussia
P.O. Box 8555
Philadelphia, PA 19101
01CY Attn T Baurer
01CY Attn Robert H Edsall
01CY Attn P Zavitsanos
01CY Attn M H Bortner Space Sci Lab
01CY Attn E Alyfa
01CY Attn J Burns
01CY Attn M Linevsky

General Electric Company
Tempo-Center for Advanced Studies
816 State Street (P.O. Drawer QQ)
Santa Barbara, CA 93102
01CY Attn Dasiac Art Feryok
01CY Attn Tim Stephens
01CY Attn Don Chandler
01CY Attn Warren S Knapp
01CY Attn B Gambill
01CY Attn Dasiac

General Motors Corporation
Delco Electronics Division
Santa Barbara Operations
6767 Hollister Avenue
Goleta, CA 93107
01CY Attn Robin I Primich

General Research Corporation
P.O. Box 3587
Santa Barbara, CA 93105
01CY Attn H H Lewis
01CY Attn John Ise Jr

General Research Corporation
Washington Operations
Westgate Research Park
7655 Old Springhouse Road, Suite 700
McLean, VA 22101
01CY Attn Thomas M Zakrzewski

Geophysical Institute
University of Alaska
Fairbanks, AK 99701
(All Class Attn: Security Officer)
01CY Attn Henry Cole
01CY Attn R Parthasarathy
01CY Attn Neal Brown (Uncl only)
01CY Attn B J Watkins
01CY Attn I N Davis (Uncl only)
01CY Attn J S Wagner Physics Dept
01CY Attn D J Henderson

Govt Fiscal Relations & Patent Off
27[illegible] Admin Building AG-70
University of Washington
Seattle, WA 98195
01CY Attn Kenneth C Clark
01CY Attn R Geballe

Harvard University
Department of Atmospheric Sciences
Pierce Hall
Cambridge, MA 02138
01CY Attn Michael B McElroy

Howard University
Department of Chemistry
Washington, DC 20059
01CY Attn: William Jackson

HSS, Inc.
2 Alfred Circle
Bedford, MA 01730
01CY Attn H Stewart
01CY Attn M P Shuler
01CY Attn Donald Hansen

TIT Research Institute
10 West 35th Street
Chicago, IL 60616
01CY Attn Technical Library

Institute for Defense Analyses
400 Army-Navy Drive
Arlington, VA 22202
01CY Attn Ernest Bauer
01CY Attn Hans Wolfhard
01CY Attn Joel Bengston
01CY Attn Philip A Selwyn

IRT Corporation
P.O. Box 81087
San Diego, CA 92138
01CY Attn D A Vroom
01CY Attn J A Rutherford
01CY Attn R H Neynaber

Jaycor
1401 Camino Del Mar
Del Mar, CA 92014
01CY Attn H B Levine

Johns Hopkins University
Applied Physics Laboratory
Johns Hopkins Road
Laurel, MD 20810
01CY Attn Document Librarian

John Hopkins University
34th & Charles Streets
Baltimore, MD 21218
01CY Attn Joyce J Kaufman

Kaman Sciences Corporation
P.O. Box 7463
Colorado Springs, CO 80933
01CY Attn Frank H Shelton
01CY Attn B J Bittner
01CY Attn P Jesson

Kent State University
Dept of Chemistry
Kent, OH 44242
01CY Attn W C Fernelius

Lockheed Missiles and Space Company
3251 Hanover Street
Palo Alto, CA 94304
01CY Attn Billy M McCormac Dept 52-54
01CY Attn Martin Walt Dept 52-10
01CY Attn Richard G Johnson Dept 52-12
01CY Attn Tom James
01CY Attn Robert C Gunton Dept 52-14
01CY Attn Robert D Sears Dept 52-14
01CY Attn J B Reagan D/52-12
01CY Attn John Kumer
01CY Attn John L Kulander Dept 52-14

Lowell, University of
Center for Atmospheric Research
450 Aiken Street
Lowell, MA 01854
01CY Attn G T Best

Maryland, University of
Administration Building
College Park, MD 21030
01CY Attn Dept of Physics H Griem
01CY Attn J Vanderslice Chem Dept
01CY Attn Robert J Munn Dept of Chem
01CY Attn T J Rosenberg

Maxwell Laboratories, Inc.
9244 Balboa Avenue
San Diego, CA 02123
01CY Attn Victor Fargo

McDonnell Douglas Corporation
5301 Bolsa Avenue
Huntington Beach, CA 92647
01CY Attn A D Goedeke
01CY Attn William Olsen
01CY Attn J Moule

Midwest Research Institute
425 Volker Boulevard
Kansas City, MO 64110
01CY Attn Physics SFC Frank T Greene
01CY Attn Physics Sec Thomas H Milne

Minnesota, University of
2030 University Avenue, S.F.
Minneapolis, MN 55414
(No classified to this address)
01CY Attn J R Winkler

Minnesota, University of
Morris Campus
Morris, MN 56267
01CY Attn Merle Hirsch

Mission Research Corporation
735 State Street
Santa Barbara, CA 93101
01CY Attn Dave Sowle
01CY Attn Ralph Kilb
01CY Attn W F Crevier
01CY Attn Conrad L Longmire
01CY Attn Neal J Carron
01CY Attn R Hendrick
01CY Attn R N Wilson
01CY Attn R Bogusch
01CY Attn M Scheibe
01CY Attn D Archer
01CY Attn D Sappenfield
01CY Attn P Fischer

Mitre Corporation, The
P.O. Box 208
Bedford, MA 01730
01CY Attn S A Morin M/S
01CY Attn J N Freedman

National Academy of Sciences
Attn: National Materials Advisory
2101 Constitution Avenue
Washington, DC 20418
02CY Attn Edward R Dyer
01CY Attn J R Stevers
01CY Attn William C Bartley

New York at Buffalo, State Univ of
Buffalo, NY 14214
01CY Attn Gilbert O Brink

Pacific-Sierra Research Corp.
1456 Cloverfield Blvd.
Santa Monica, CA 90404
01CY Attn F C Field Jr

Pennsylvania State University
Industrial Security Office
Room 5, Old Main Building
University Park, PA 16802
01CY Attn L Hale
01CY Attn J S Nisret

Photometrics, Inc.
442 Marrett Road
Lexington, MA 02173
01CY Attn Irving L Kofsky

Physical Dynamics Inc.
P.O. Box 1069
Berkeley, CA 94701
01CY Attn A Thompson
01CY Attn Joseph B Workman

Physical Sciences, Inc.
30 Commerce Way
Woburn, MA 01801
01CY Attn Kurt Wray
01CY Attn R L Taylor

Physics International Company
2700 Merced Street
San Leandro, CA 94577
01CY Attn Doc Con for Tech Lib

Pittsburgh, University of
the Commonwealth System of Higher Educ
Cathedral of Learning
Pittsburgh, PA 15213
01CY Attn Wade L Fite
01CY Attn Manfred A Biondi
01CY Attn Frederick Kaufman
01CY Attn Edward Gerjudy

Princeton Univ., The Trustees of
Forrestal Campus Library
Box 710
Princeton University
Princeton, NJ 08540
01CY Attn Arnold J Kelly
(Use P.O. Box 36 for Unclass only)

R & D Associates
P.O. Box 9695
Marina Del Rey, CA 90291
01CY Attn R P Turco
01CY Attn Richard Latter
01CY Attn Robert F Lelevier
01CY Attn D Dee
01CY Attn R G Lindgren
01CY Attn Charles H Humphrey
01CY Attn Bryan Gabbard
01CY Attn H A Dry
01CY Attn Forrest Gilmore
01CY Attn Albert I Latter

R & D Associates
1815 N. Ft. Myer Drive
11th Floor
Arlington, VA 22209
01CY Attn Herbert J Mitchell
01CY Attn J W Rosengren

Rand Corporation, The
1700 Main Street
Santa Monica, CA 90406
01CY Attn Culien Crain

Rice University
Department of Space Science
Houston, TX 77058
01CY Attn Ronald E Stebrings

Rice University, William Marsh
P.O. Box 2692
Houston, TX 77001
(All Corres Attn: Industiral Sec Sup)
01CY Attn J Chamberlain

Riverside Research Institute
80 West End Avenue
New York, NY 10023
01CY Attn J B Minkoff
01CY Attn G Glaser
01CY Attn Donald H Koppel

Science Applications, Inc.
P.O. Box 2351
La Julla, CA 92038
01CY Attn Daniel A Hamlin
01CY Attn Robert W Lowen
01CY Attn Ben Myers

Science Applications, Inc.
Huntsville Division
2109 W. Clinton Avenue
Suite 700
Huntsville, AL 35805
01CY Attn Noel R Byrn

Sechrist, Professor Chalmers F.
155 Electrical Enginnering Bldg.
University of Illionois
Urbana, IL 61801
01CY Attn C Sechrist

Southern California, Uiv of
University Park
Los Angeles, CA 90007
01CY Attn S W Benson

Stanford Research Institute
333 Ravenswood Avenue
Menlo Park, CA 94025
01CY Attn Felix T Smith (Uncl Only)
01CY Attn D J Hildenbrand
01CY Attn L E Cobb
01CY Attn G Black
01CY Attn J T Moseley
01CY Attn Burt R Gasten
01CY Attn J Lomax
01CY Attn R D Hake Jr
02CY Attn Walter G Chestnut
01CY Attn James R Peterson
01CY Attn Arthur Lee Whitson
01CY Attn Ray L Leadabrand
01CY Attn Allen M Peterson
01CY Attn T G Slanger
01CY Attn Ronald White

Stanford Research Institute
1611 North Kent Street
Arlington, VA 22209
01CY Attn Warren W Berning

Stanford Research Institute
306 Wynn Drive, N. W.
Huntsville, AL 35805
01CY Attn MacPherson Morgan

Systems, Science and Software, Inc.
P.O. Box 1620
La Jolla, CA 92038
01CY Attn Ralph C SKlarew

Technology International Corporation
75 Wiggins Avenue
Bedford, MA 01730
01CY Attn W P Boquist

TRW Systems Group
One Space Park
Redondo Beach, CA 90278
01CY Attn R Watson R1/1096
01CY Attn J F Friitchtenich R1-1196
01CY Attn R K Plebuch
01CY Attn Tech Info Center/S-1930

Science Applications, Inc.
P.O. Box 2351
La Jolla, CA 92038
01CY Attn Daniel A Hamlin
01CY Attn Robert W Lowen
01CY Attn Ben Myers

Science Applications, Inc.
Huntsville Division
2109 W. Clinton Avenue
Suite 700
Huntsville, AL 35805
01CY Attn Noel R Byrn

Sechrist, Professor Chalmers F.
155 Electrical Engineering Bldg.
University of Illionois
Urbana, IL 61801
01CY Attn C Sechrist

Southern California, Univ of
Universty Park
Los Angeles, CA 90007
01CY Attn S W Benson

Stanford Research Institute
333 Ravenswood Avenue
Menlo Park, CA 94025
01CY Attn Felix T Smith (Uncl only)
01CY Attn D J Hildenbrand
01CY Attn L E Cobb
01CY Attn G Black
01CY Attn J T Moseley
01CY Attn Burt R Gasten
01CY Attn J Lomax
01CY Attn R D Hake Jr
01CY Attn Walter G Chestnut
01CY Attn James R Peterson
01CY Attn Arthur Lee Whitson
01CY Attn Ray L Leadabrand
01CY Attn Allen M Peterson
01CY Attn T G Slanger
01CY Attn Ronald White

Stanford Research Institute
1611 North Kent Street
Arlington, VA 22209
01CY Attn Warren W Berning

Stanford Research Institute
306 Wynn Drive, N.W.
Huntsville, AL 35805
01CY Attn MacPherson Morgan

Systems, Science and Software, Inc.
P.O. Box 1620
lA Jolla, CA 92038
01CY Attn Ralph C Sklarew

Technology International Corporation
75 Wiggins Avenue
Bedford, MA 01730
01CY Attn W P Boquist

TRW Systems Group
One Space Park
Redondo Beach, CA 90278
01CY Attn R Watson R1/1096
01CY Attn J F Friichtenicht R1-1196
01CY Attn R K Pleruch
01CY Attn Tech Info Center/S-1930

United Technologies Corporation
755 Main Street
Hartford, CT 06103
01CY Attn Tobert H Bullis
01CY Attn H Michels

Utah State University
Logan, UT 84321
01CY Attn William M More Chemistry Dept
01CY Attn Kay Baker
01CY Attn C Wyatt
01CY Attn D Burt
01CY Attn Doran Baker

Visidyne, Inc.
19 Third Avenue
North West Industiral Park
Burlington, MA 01803
01CY Attn T C Degges
01CY Attn J W Carpenter
01CY Attn Oscar Manley
01CY Attn R Waltz

Wayne State University
1064 MacKenzie Hall
Detroit, MI 48202
01CY Attn R H Kummler
01CY Attn Pieter K Rol Chem Engrg
& Mat Sci

United Technologies Corporation
755 Main Street
Hartford, CT 06103
01CY Attn Robert H Bullis
01CY Attn H Michels

Utah State University
Logan, UT 84321
01CY Attn William M More
Chemistry Dept.
01CY Attn Kay Baker
01CY Attn C Wyatt
01CY Attn D Burt
01CY Attn Doran Baker

Visidyne, Inc.
19 Third Avenue
North West Industrial Park
Burlington, MA 01803
01CY Attn T C Degges
01CY Attn J W Carpenter
01CY Attn Oscar Manley
01CY Attn R Waltz

Wayne State University
1064 MacKenzie Hall
Detroit, MI 48202
01CY Attn R H Kummler
01CY Attn Pieter K Rol Chem Engrg
& Mat Sci

Wayne State University
Dept. of Physics
Detroit, MI 48202
01CY Attn Walter F Kauppila

Yale University
New Haven, CT 06520
01CY Attn Engrg Dept George J Schultz