ADA020729

AD

AVSCOM TECHNICAL REPORT 76-3, VOL 1

UH-1H FLAT RATE MANUAL

PARKS COLLEGE OF ST. LOUIS UNIVERSITY
CAHOKIA, ILLINOIS 62206

JULY 1975

FINAL REPORT FOR PERIOD 1 APR 71 - 31 DEC 73

APPROVED FOR PUBLIC RELEASE;
DISTRIBUTION UNLIMITED.

PREPARED FOR

US ARMY AVIATION SYSTEMS COMMAND
SYSTEMS PERFORMANCE ASSESSMENT DIVISION (DRSAV-LS)
P.O. Box 209
ST. LOUIS, MO 63166

DDC
RECEIVED
FEB 18 1976
A

DISCLAIMER

THE FINDINGS IN THIS REPORT ARE NOT TO BE CONSTRUED AS AN OFFICIAL DEPARTMENT OF THE ARMY POSITION UNLESS SO DESIGNATED BY OTHER AUTHORIZED DOCUMENTS.

DISPOSITION INSTRUCTIONS

DESTROY THIS REPORT WHEN NO LONGER NEEDED. DO NOT RETURN IT TO THE ORIGINATOR.

UNCLASSIFIED

SECURITY CLASSIFICATION OF THIS PAGE (When Data Entered)

REPORT DOCUMENTATION PAGE

READ INSTRUCTIONS BEFORE COMPLETING FORM

1. REPORT NUMBER: 76-3

2. GOVT ACCESSION NO.

3. RECIPIENT'S CATALOG NUMBER

4. TITLE (and Subtitle): UH-1H Flat Rate Manual, Vol. 1

Volume I.

5. TYPE OF REPORT & PERIOD COVERED: Final Report, 1 Apr 71 — 31 Dec 73

6. PERFORMING ORG. REPORT NUMBER

7. AUTHOR(s): Al Holfeldt, Bernie Perant

8. CONTRACT OR GRANT NUMBER(s): DAAJ01-72-A-0027 (P6C)

9. PERFORMING ORGANIZATION NAME AND ADDRESS: Parks College of St. Louis University, Cahokia, IL 62206

10. PROGRAM ELEMENT, PROJECT, TASK AREA & WORK UNIT NUMBERS

11. CONTROLLING OFFICE NAME AND ADDRESS: US Army Aviation Systems Command, Systems Performance Assessment Div (DRSAV-LS), PO Box 209, St Louis, MO 63166

12. REPORT DATE: July 1975

13. NUMBER OF PAGES: 271

272 p.

14. MONITORING AGENCY NAME & ADDRESS (if different from Controlling Office): USAAVSCOM

15. SECURITY CLASS. (of this report): UNCLASSIFIED

15a. DECLASSIFICATION/DOWNGRADING SCHEDULE

TR-76-3

16. DISTRIBUTION STATEMENT (of this Report): Approved for Public Release; Distribution Unlimited.

17. DISTRIBUTION STATEMENT (of the abstract entered in Block 20, if different from Report)

18. SUPPLEMENTARY NOTES

19. KEY WORDS (Continue on reverse side if necessary and identify by block number)

Flat Rate Data
Maintenance Man-hour Times
Man-hour Frequencies
Man-hour Distributions
Task Times
TAMMS 2407 Data

20. ABSTRACT (Continue on reverse side if necessary and identify by block number)

The purpose of this Flat Rate Manual is to provide statistical man-hour parameters for the performance of tasks involved at the Organizational, Direct, and General maintenance levels for the UH-1H aircraft. It is intended for evaluating and predicting maintenance requirements and/or comparing the performance of an activity against a recognized standard.

DD FORM 1 JAN 73 1473 EDITION OF 1 NOV 65 IS OBSOLETE

409200

UNCLASSIFIED

SECURITY CLASSIFICATION OF THIS PAGE (When Data Entered)

PREFACE

This publication is the fourth of a series of Flat Rate Manuals resulting from three years of data editing and validation procedures of TAERS/TAMMS data through development of ADP programs within the RAMMIT system. Manuals have been published for the AH-1G (July, 1973), OH-58A (August, 1973), and CH-47A (December, 1974). Similar manuals will be presented on other rotary and fixed wing fleets as the data becomes available.

ACCESSION for
NTIS White Section
DDC Buff Section
UNANNOUNCED
JUSTIFICATION
BY
DISTRIBUTION/AVAILABILITY CODES
Dist. SPECIAL
A

TABLE OF CONTENTS

SECTION I
INTRODUCTION

1.1 Purpose

The purpose of this Flat Rate Manual is to provide statistical manhour parameters for the performance of tasks involved at the Organizational, Direct and General Support maintenance levels. A total (Summation of Organizational and Direct Support) maintenance manhour parameter is also given.

This manual specifies a standard hour parameter set for each type maintenance action reported at these levels. It should be understood that these are actual times, and may include some non-productive hours caused by a number of problems which may arise during the performance of maintenance. Also, since ideal conditions do not exist in maintenance, the data presented does not represent the most efficient time possible to perform the work in question. It is intended that this information will provide a basis for:

a. Evaluating and predicting maintenance requirements.

b. Comparing the performance of an activity against a recognized standard.

1.2 Scope and Limitations

The data provided in this manual is for the UH-1H fleet. The information includes data on the number of manhours required to perform specific maintenance actions.

The data used in the statistical analysis portion of the manual was extracted from DA Forms 2407 and 2408-3. All data provided at the Support Level was extracted from DA Form 2407 and all data for the Organizational Level was from DA Form 2408-3. The Total Level combines the two sources of reporting to provide an overall view of maintenance actions.

This data is limited to the degree of accurate reporting of manhour times by field personnel. Also, as mentioned before, the data does include non-productive hours resulting from a number of factors.

1.3 Methods

Data from DA Forms 2407 and 2408-3 were assigned a nine digit Work Unit Code (WUC). The WUC presents a system, subsystem, component and part breakdown of those items upon which a specific maintenance actions had been reported. Also provided was the noun nomenclature of the items, and the manhour frequencies at the Organization and Support Levels; and a total figure set of these frequencies.

The WUC also provided Federal Stock Numbers (FSN's) and Part Numbers (PN's) of those items selected. The basis for selection was made on the following criteria:

a. Sufficient data to establish manhour parameters.

b. Valid FSN or PN should accompany the item for the purpose of identification. Exceptions were made in cases where an item could easily be identified on the illustration without the use of PN or FSN.

After selecting those items to be presented in the Flat Rate Manual, the next step was to set high and low limits on the manhour frequencies at all levels of maintenance. The purpose of setting limits on the data was to eliminate some of the more widely scattered manhour frequency samples.

The majority of limitations were made on the basis of an "engineering decision." With this technique, those samples which had an obviously erroneous manhour entry or seemed abnormal in comparison to the other data within the sample were eliminated. An example of this procedure is as follows:

Manhour Valve	Frequency
Lower Limit ⟶ 1.0	3
1.5	4
2.0	5
Upper limit ⟶ 3.0	2
10.0	1

Note that the manhours show an approximately normal distribution up to 3 manhours where it then jumps to 10. The data for this item would be limited at the lower end by 1.0 and the upper end by 3.0. Since there was only one "hit" at the 10 manhour interval, a decision was made that this entry was abnormally high for the maintenance action performed and should not be included to determine statistical parameters.

For those items with large manhour frequencies that could not be limited by the previous method, an alternate method of statistical computation was available. In this method, the mean and standard deviation of the sample is found. From these parameters, one can calculate manhour

limits by adding either two or three standard deviations to the mean, depending upon the distribution of the samples and natural breaks in the sequence of values.

Considering only the data between the high and low limits, the following statistical parameters were caluclated for each item selected and its corresponding action codes for each level of maintenance (total, organizational, direct and general support):

a. Mean - Average manhours to perform the maintenance actions in question. This parameter is calculated by the following formula:

$$\text{(Mean)}\ \bar{x} = \frac{\Sigma fx}{N}$$

where;

Σfx = Summation of manhour frequency products

N = Number of observations

b. Median - The manhour value which divides the frequency distribution so that one-half of the items are equal to or greater than it. The advantage of this parameter over the mean is that the extreme large or small values do not influence its value as much as they would the mean.

Example: Considering the following distribution:

1, 2, 5, 6, 8, 10, 20

the Median would be (6) since there is an equal number of items on both sides.

c. Mode - Manhour value most frequently encountered for any particular maintenance action. Again, the extreme values of the distribution would not effect this parameter.

Example: Given the following manhour frequency distribution:

Manhour Value	Frequency
1.0	10
Mode ⟶ 1.5	25
2.0	14
2.5	11
10.0	4

The Mode would be 1.5 manhours since it is the value with the largest number of encounters.

d. Standard Deviation - This parameter is the measure of the spread of the manhour distribution about the mean. A small standard deviation in comparison to the mean indicates that the average manhour value does not fluctuate greatly among the reported samples, and the mean value is a relatively accurate representation of the time required to perform the given task.

If the standard deviation is large in comparison to the mean, it indicates that the reported manhour values are widely dispersed, and the mean value should be used conservatively when estimating manpower requirements. This latter condition will occur when the manhour distributions are skewed to the right or left of the mean.

The standard deviation is calculated by the following formula:

$$\sigma = \sqrt{\frac{\Sigma f(x)^2}{N-1} - \frac{(\Sigma fx)^2}{N(N-1)}}$$

e. Sample Size - Sample Size is the total number of maintenance encounters in each level within the limits set for the item. Since the limits for the Total, Organizational and Support levels do not necessarily

coincide due to the scattered distribution of the manhour frequencies, the sum of the Organizational and Support samples may not equal the sample size of the Total. Though some samples are extremely small, the parameters are used with the intention that the manual will be updated with more data.

Section II presents the data for scheduled maintenance actions (daily, intermediate, and periodic inspections) against End Item Aircraft. Subsequent sections are presented in functional group order. An illustration, pointing out the items selected precedes its corresponding statistical information.

An index arranged in Federal Stock Number (FSN) and Part Number (PN) sequence is provided in Appendix A and Appendix B, respectively, for ease in locating a particular item's parameters.

SECTION II

SCHEDULED MAINTENANCE ACTIONS AGAINST END ITEM AIRCRAFT

DAILY, INTERMEDIATE AND PERIODIC

UH-1H FLAT RATE DATA

SCHEDULED MAINTENANCE ACTIONS AGAINST END ITEM AIRCRAFT

DAILY, INTERMEDIATE AND PERIODIC

	MAINT LEVEL	MEAN	MEDIAN	MODE	STD. DEV.	SAMPLE SIZE
DAILY	TOTAL	2.416	2.000	2.000	1.135	161585
	ORG	2.416	2.000	2.000	1.135	161391
	SUPP.	2.483	2.000	2.000	1.043	194
INTERMEDIATE	TOTAL	5.528	4.000	4.000	2.815	1364
	ORG.	5.547	4.000	4.000	2.814	1352
	SUPP.	3.416	3.000	2.0 + 4.0	2.079	12
PERIODIC	TOTAL	122.991	115.000	120.000	72.649	3640
	ORG	122.529	115.000	120.000	73.103	2828
	SUPP.	124.603	120.000	150.000	71.018	812

SECTION III

FUNCTIONAL GROUP 01

AIRFRAME SYSTEM

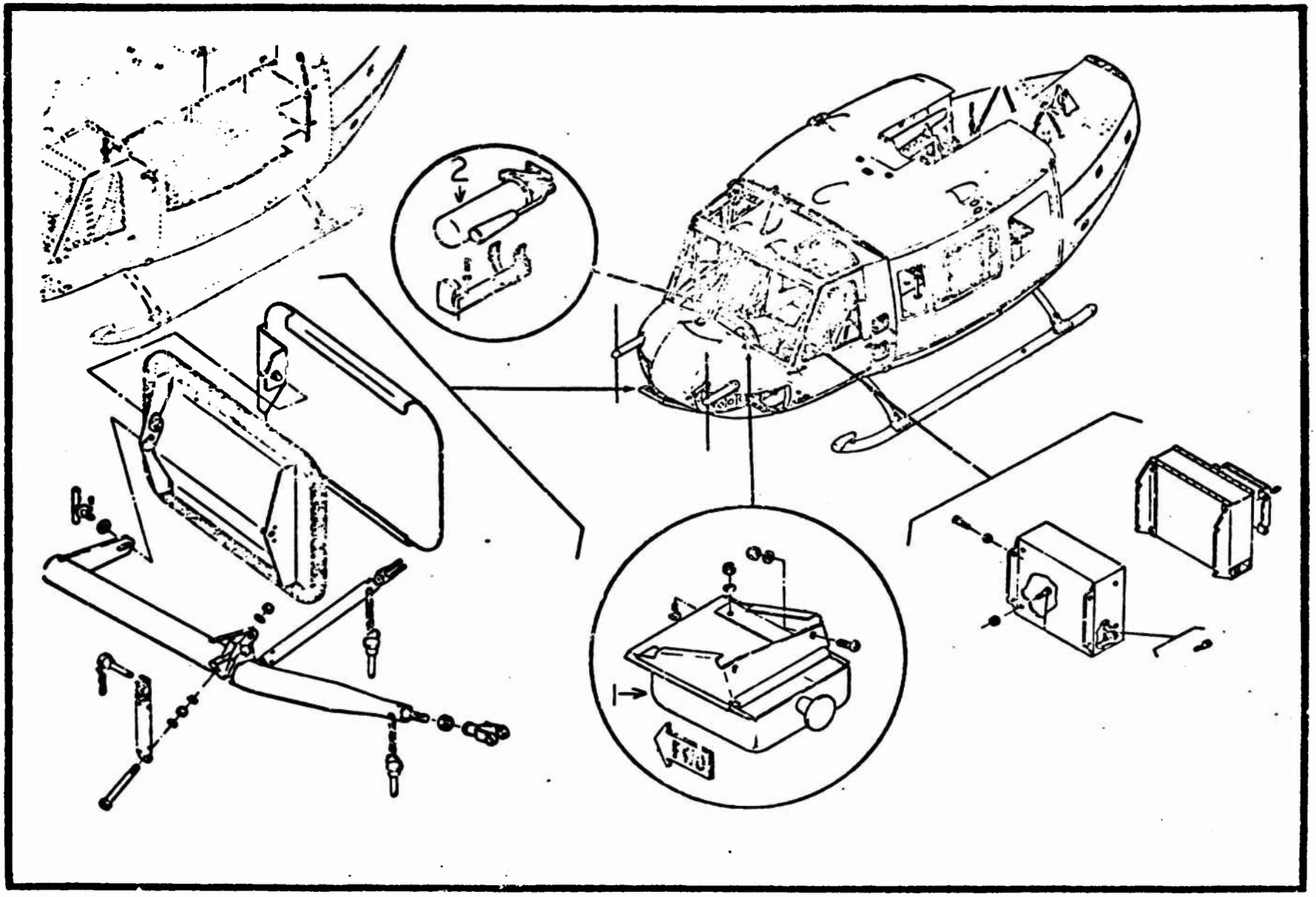

Figure 1 Section Assembly, Helicopter Forward

UH-1H FLAT RATE DATA
FUNCTIONAL GROUP 01
REFERENCE FIGURE 1

ITEM NO.	NOMEMCLATURE	FSN/PN	ACTION CODE	MAINT. LEVEL	MEAN	MEDIAN	MODE	STD. DEV.	SAMPLE SIZE
1	Ash Tray	16807093035	Replace	Total	0.7	0.5	0.5	0.310	59
				Org.	0.7	0.5	0.5	0.306	49
				Supp.	0.7	0.5	0.5	0.345	10
			Installed	Total	1.0	1.0	1.0	0.182	16
				Org.	1.0	1.0	1.0	0.189	15
				Supp.	*	*	*	*	*
2	Fire Extinguisher	42105558837	Replace	Total	0.7	0.5	0.5	0.345	280
				Org.	0.6	0.5	0.5	0.341	254
				Supp.	0.8	1.0	1.0	0.305	26
			Initial Inspection	Total	0.7	0.5	0.5	0.274	5
				Org.	0.7	0.5	0.5	0.274	5
				Supp.	*	*	*	*	*
			Removed and Installed	Total	0.8	0.5	0.5	0.567	79
				Org.	0.9	0.5	0.5	0.683	45
				Supp.	0.7	0.5	0.5	0.420	34
				Total					
				Org.					
				Supp.					
				Total					
				Org.					
				Supp.					
				Total					
				Org.					
				Supp.					
				Total					
				Org.					
				Supp.					
				Total					
				Org.					
				Supp.					

*Insufficient Data

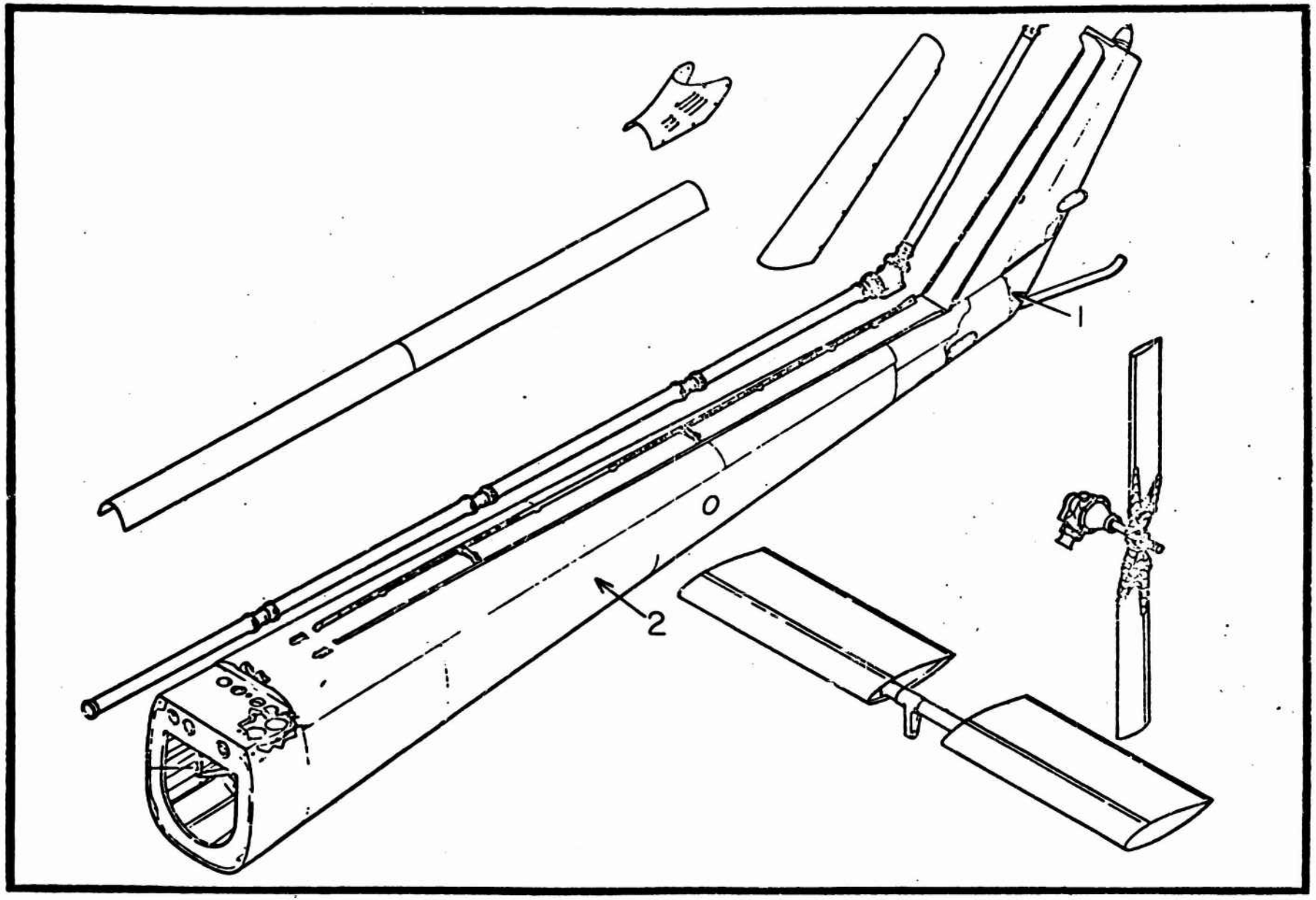

Figure 2 Section Assembly, Helicopter Aft

UH-1H FLAT RATE DATA
FUNCTIONAL GROUP 01
REFERENCE FIGURE 2

ITEM NO.	NOMENCLATURE	FSN/PN	ACTION CODE	MAINT. LEVEL	MEAN	MEDIAN	MODE	STD. DEV.	SAMPLE SIZE
1	Fairing Assy	15607015657 15608727847	Replace	Total	1.2	1.0	1.0	0.691	194
				Org.	1.1	1.0	1.0	0.663	169
				Supp.	1.5	1.0	1.0	0.769	25
			Repair	Total	1.9	2.0	2.0	0.801	43
				Org.	*	*	*	*	*
				Supp.	1.8	2.0	2.0	0.785	38
2	Tail Boom Assy	15600152983 15600738702 15604464390 15604831273 15606732090	Replace	Total	1.6	2.0	2.0	0.789	51
				Org.	*	*	*	*	*
				Supp.	1.6	1.5	2.0	0.791	46
			Adjust	Total	1.4	1.0	2.0	0.653	30
				Org.	*	*	*	*	*
				Supp.	1.3	1.0	2.0	0.645	22
			Repair	Total	3.5	2.5	1.0	2.653	990
				Org.	*	*	*	*	*
				Supp.	3.5	2.5	1.0	2.666	959
			Service	Total	2.1	2.0	2.0	1.309	135
				Org.	1.2	1.0	1.0	0.559	40
				Supp.	2.3	2.0	2.0	1.378	81
			Initial Inspection	Total	0.9	1.0	0.5	0.551	34
				Org.	*	*	*	*	*
				Supp.	0.9	0.5	0.5	0.503	31
			Final Inspection	Total	0.7	0.5	0.5	0.302	29
				Org.	*	*	*	*	*
				Supp.	0.6	0.5	0.5	0.259	28
				Total					
				Org.					
				Supp.					
				Total					
				Org.					
				Supp.					

*Insufficient Data

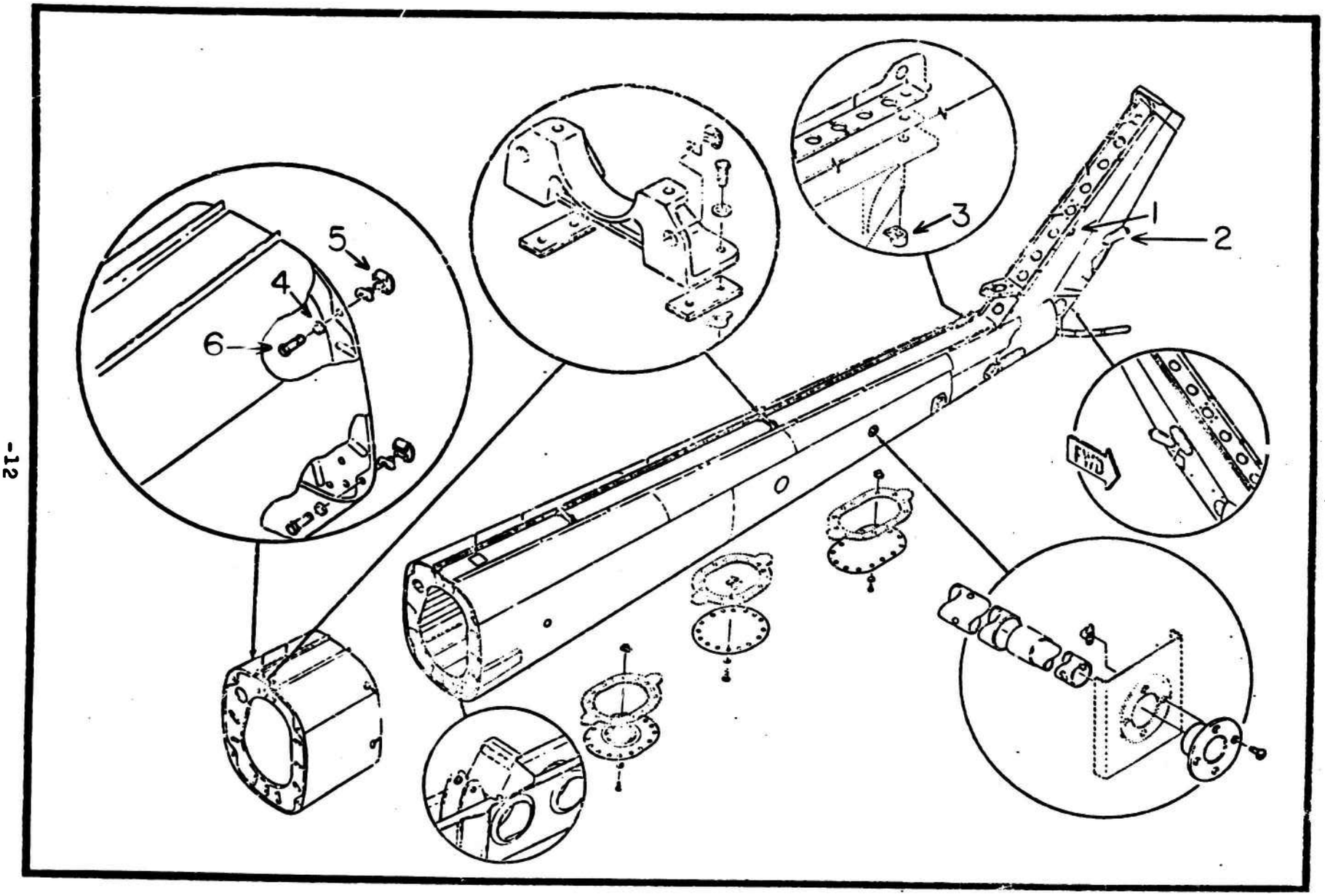

Figure 3 Boom Assembly, Tail

UH-1H FLAT RATE DATA
FUNCTIONAL GROUP 01
REFERENCE FIGURE 3

ITEM NO.	NOMENCLATURE	FSN/PN	ACTION CODE	MAINT. LEVEL	MEAN	MEDIAN	MODE	STD. DEV.	SAMPLE SIZE
1	Fin Rivet	53406632996	Replace	Total	2.0	1.8	2.0	1.248	17
				Org.	*	*	*	*	*
				Supp.	2.1	2.0	2.0	1.221	16
			Repair	Total	2.3	2.0	2.0	1.025	46
				Org.	*	*	*	*	*
				Supp.	2.3	2.0	2.0	1.005	45
2	Bracket Assy	15609869931	Replace	Total	1.9	2.0	2.0	0.675	9
				Org.	*	*	*	*	*
				Supp.	2.0	2.0	2.0	0.583	7
3	Nut	53101119394 53108021268 53108108956 53108201560 53108991725	Replace	Total	1.2	1.0	1.0	0.702	45
				Org.	*	*	*	*	*
				Supp.	1.2	1.0	1.0	0.731	38
				Total					
				Org.					
				Supp.					
4	Washer	53101499116 53101499146	Replace	Total	0.7	0.5	0.5	0.366	22
				Org.	0.7	0.6	1.0	0.260	5
				Supp.	0.7	0.5	0.5	0.398	17
5	Retainer	53408094388 53408936728	Replace	Total	1.4	1.0	0.5	1.047	20
				Org.	*	*	*	*	*
				Supp.	1.5	1.0	2.0	1.054	18
6	Bolt	53068053573 53068163233 53068515171 59356815685 59358134716 59358350508	Replace	Total	1.2	1.0	1.0	0.581	78
				Org.	1.3	1.0	1.0	0.469	14
				Supp.	1.1	1.0	1.0	0.603	64
				Total					
				Org.					
				Supp.					
				Total					
				Org.					
				Supp.					

*Insufficient Data

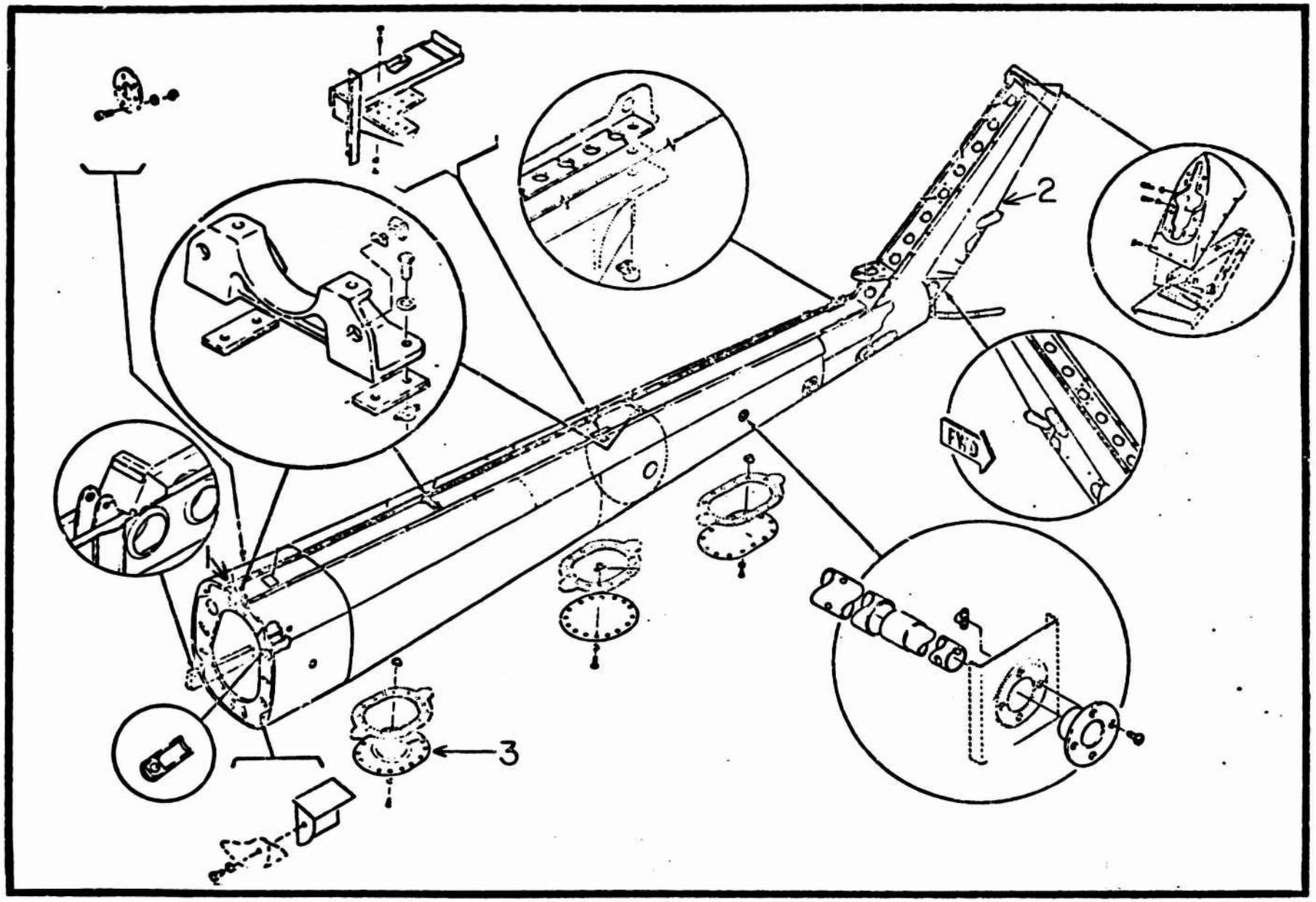

Figure 4 Tail Boom Assembly, 48 FT. System

UH-1H FLAT RATE DATA
FUNCTIONAL GROUP 01
REFERENCE FIGURE 4

ITEM NO.	NOMENCLATURE	FSN/PN	ACTION CODE	MAINT. LEVEL	MEAN	MEDIAN	MODE	STD. DEV	SAMPLE SIZE
1	Fitting	15600426645 15600426646 15600798931 15601182196 15601336167 15601362401 15606744185 15607376607 15607547416 15609222712	Replace	Total	1.5	1.0	1.0	0.857	24
				Org.	*	*	*	*	*
				Supp.	2.6	2.5	4.0	1.184	12
				Total Org. Supp.					
				Total Org. Supp.					
				Total Org. Supp.					
				Total Org. Supp.					
2	Fairing Assy	15601336994 15609279513 15609283856	Replace	Total	1.1	1.0	1.0	0.545	12
				Org.	0.9	1.0	0.5	0.529	9
				Supp.	*	*	*	*	*
			Repair	Total	1.5	1.5	1.0	0.635	14
				Org.	*	*	*	*	*
				Supp.	1.5	1.5	1.0	0.635	14
3	Door Assy	15609875192	Repair	Total	2.3	2.0	2.0	1.178	20
				Org.	*	*	*	*	*
				Supp.	2.3	2.0	2.0	1.178	20
--	Antenna Support Mount	15607385953 15608790850 15609298420	Replace	Total	2.5	2.0	1.0	1.480	76
				Org.	*	*	*	*	*
				Supp.	3.0	3.0	4.0	1.682	48
			Repair	Total	4.3	4.0	4.0	2.191	171
				Org.	*	*	*	*	*
				Supp.	4.3	4.0	4.0	2.158	167

*Insufficient Data

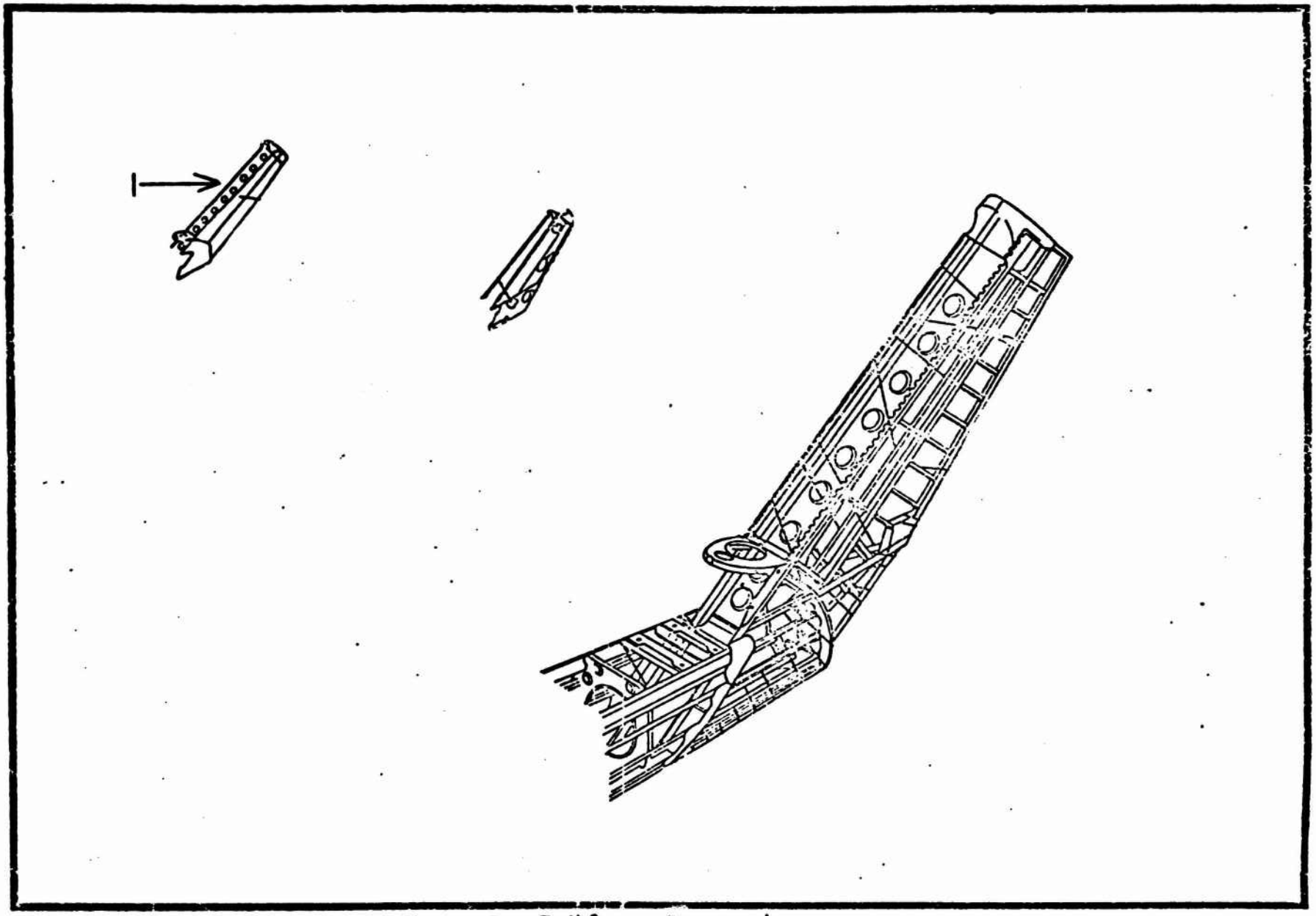

Figure 5 Tail Boom, Structural

UH-1H FLAT RATE DATA
FUNCTIONAL GROUP 01
REFERENCE FIGURE 5

ITEM NO.	NOMENCLATURE	FSN/PN	ACTION CODE	MAINT. LEVEL	MEAN	MEDIAN	MODE	STD. DEV.	SAMPLE SIZE
1	Fin Assy	15600213636 15604829100	Replace	Total	1.9	1.5	1.0	1.022	60
				Org.	*	*	*	*	*
				Supp.	1.9	1.5	1.0	1.020	59
			Repair	Total	3.3	3.0	2.0	2.285	634
				Org.	*	*	*	*	*
				Supp.	3.4	3.0	2.0	2.286	622
				Total					
				Org.					
				Supp.					
				Total					
				Org.					
				Supp.					
				Total					
				Org.					
				Supp.					
				Total					
				Org.					
				Supp.					
				Total					
				Org.					
				Supp.					
				Total					
				Org.					
				Supp.					
				Total					
				Org.					
				Supp.					
				Total					
				Org.					
				Supp.					

*Insufficient Data

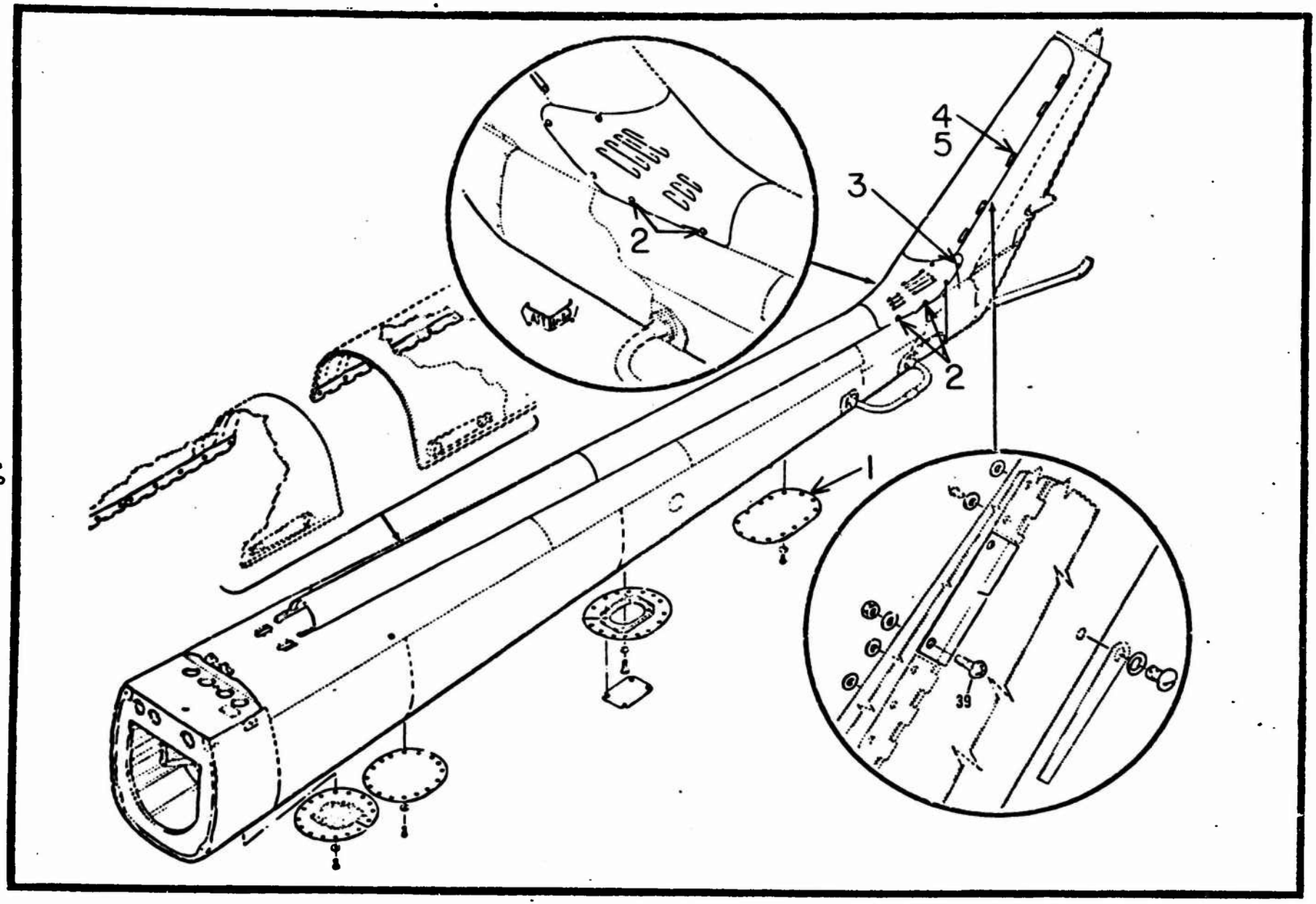

Figure 6 Door Installation, Access, Tail, Rotor Shaft

UH-1H FLAT RATE DATA
FUNCTIONAL GROUP 01
REFERENCE FIGURE 6

ITEM NO.	NOMENCLATURE	FSN/PN	ACTION CODE	MAINT. LEVEL	MEAN	MEDIAN	MODE	STD. DEV.	SAMPLE SIZE
1	Door	15607356557	Replace	Total	2.6	2.0	1.0	2.715	117
				Org.	1.6	1.0	1.0	1.114	61
				Supp.	3.8	2.0	1.0	3.402	56
			Adjust	Total	1.1	1.0	1.0	0.574	42
				Org.	1.2	1.0	1.0	0.559	30
				Supp.	1.0	1.0	1.0	0.623	12
			Repair	Total	3.1	2.0	2.0	2.466	312
				Org.	*	*	*	*	*
				Supp.	3.3	3.0	2.0	2.471	261
			Service	Total	2.3	1.0	0.5	2.540	60
				Org.	*	*	*	*	*
				Supp.	3.0	2.0	2.0	2.916	37
			Removed and Installed	Total	1.6	1.0	0.5	1.394	123
				Org.	1.4	1.0	1.0	1.365	51
				Supp.	1.8	1.5	0.5	1.404	72
			Installed	Total	1.2	1.0	1.0	0.656	24
				Org.	*	*	*	*	*
				Supp.	1.3	1.0	1.0	0.642	17
2	Stud	53252815072 53252820615 53256396283 53257709340	Replace	Total	1.7	1.5	1.0	1.128	39
				Org.	*	*	*	*	*
				Supp.	1.8	1.5	1.0	1.161	34
				Total					
				Org.					
				Supp.					
				Total					
				Org.					
				Supp.					
				Total					
				Org.					
				Supp.					

*Insufficient Data

UH-1H FLAT RATE DATA
FUNCTIONAL GROUP 01
REFERENCE FIGURE 6

ITEM NO.	NOMEMCLATURE	FSN/PN	ACTION CODE	MAINT. LEVEL	MEAN	MEDIAN	MODE	STD. DEV.	SAMPLE SIZE
3	Stud	53252811552 53252811916 53252814399 53252815073 53258976757	Replace	Total	1.2	1.0	1.0	0.602	126
				Org.	*	*	*	*	*
				Supp.	1.2	1.0	1.0	0.606	94
				Total					
				Org.					
				Supp.					
4	Stud	53258388803	Replace	Total	1.1	1.0	0.5	0.674	74
				Org.	1.2	1.0	0.5	0.721	25
				Supp.	1.0	1.0	1.0	0.650	49
5	Spring Assy	15608156681	Replace	Total	1.2	1.0	1.0	0.613	53
				Org.	1.2	1.0	1.0	0.630	19
				Supp.	1.2	1.0	0.5	0.612	34
--	Door Assy	15607376434 15607753821 15607753823 15607753824	Replace	Total	2.6	2.0	1.0	1.502	128
				Org.	2.1	2.0	1.0	1.339	36
				Supp.	2.8	2.5	1.0	1.524	92
			Repair	Total	1.9	1.5	1.0	1.319	362
				Org.	*	*	*	*	*
				Supp.	2.0	1.5	1.0	1.329	352
				Total					
				Org.					
				Supp.					
				Total					
				Org.					
				Supp.					
				Total					
				Org.					
				Supp.					
				Total					
				Org.					
				Supp.					

*Insufficient Data

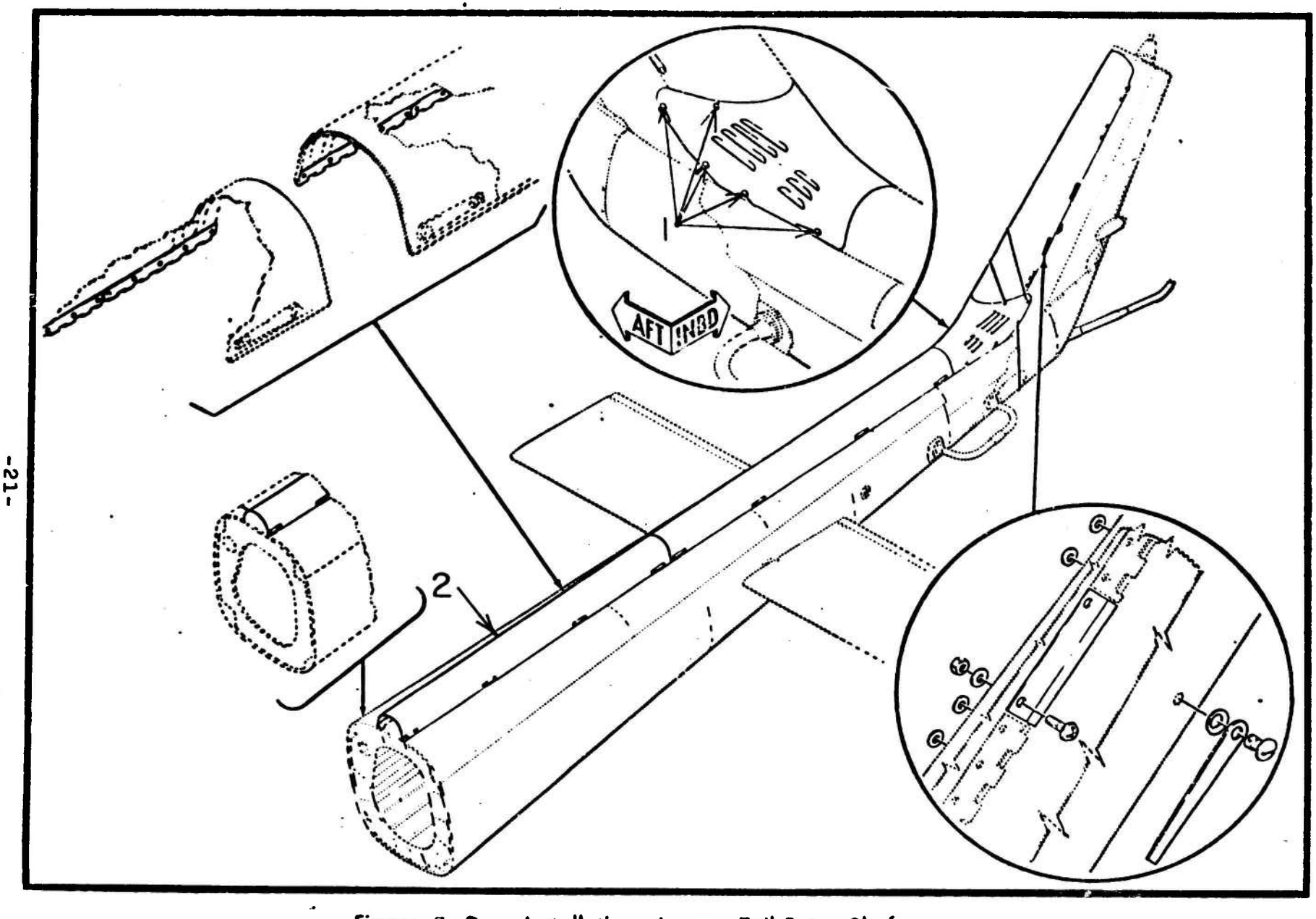

Figure 7 Door Installation, Access, Tail Rotor Shaft

UH-1H FLAT RATE DATA
FUNCTIONAL GROUP 01
REFERENCE FIGURE 7

ITEM NO.	NOMEMCLATURE	FSN/PN	ACTION CODE	MAINT. LEVEL	MEAN	MEDIAN	MODE	STD. DEV.	SAMPLE SIZE
1	Eyelet	53251414002	Replace	Total	1.0	1.0	1.0	0.531	32
				Org.	1.1	1.0	1.0	0.484	18
				Supp.	1.0	1.0	1.0	0.604	14
2	Access Cover	15606599903 15606916008	Replace	Total	3.1	2.1	1.0	2.217	75
				Org.	*	*	*	*	*
				Supp.	3.3	2.2	2.0	2.298	64
			Repair	Total	3.2	3.0	3.0	1.782	69
				Org.	*	*	*	*	*
				Supp.	3.2	3.0	3.0	1.765	67
				Total					
				Org.					
				Supp.					
				Total					
				Org.					
				Supp.					
				Total					
				Org.					
				Supp.					
				Total					
				Org.					
				Supp.					
				Total					
				Org.					
				Supp.					
				Total					
				Org.					
				Supp.					
				Total					
				Org.					
				Supp.					

*Insufficient Data

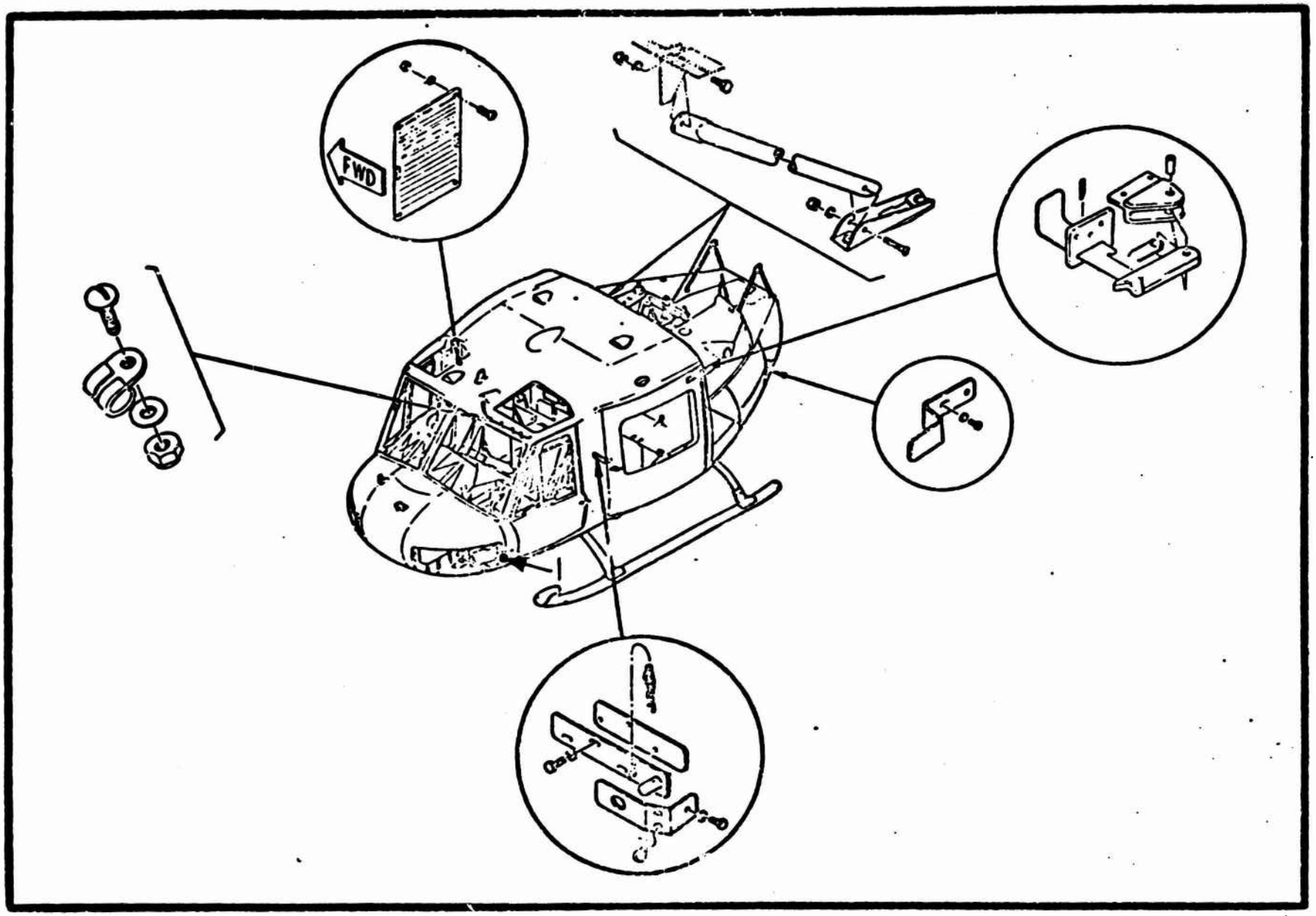

Figure 8 Fuselage Assembly, Helicopter Forward

UH-1H FLAT RATE DATA
FUNCTIONAL GROUP 01
REFERENCE FIGURE 8

ITEM NO.	NOMEMCLATURE	FSN/PN	ACTION CODE	MAINT. LEVEL	MEAN	MEDIAN	MODE	STD. DEV.	SAMPLE SIZE
1	Seal	15608727883	Repair	Total	1.0	1.0	1.0	0.526	34
				Org.	*	*	*	*	*
				Supp.	1.2	1.0	1.0	0.564	13
				Total Org. Supp.					
				Total Org. Supp.					
				Total Org. Supp.					
				Total Org. Supp.					
				Total Org. Supp.					
				Total Org. Supp.					
				Total Org. Supp.					
				Total Org. Supp.					
				Total Org. Supp.					

*Insufficient Data

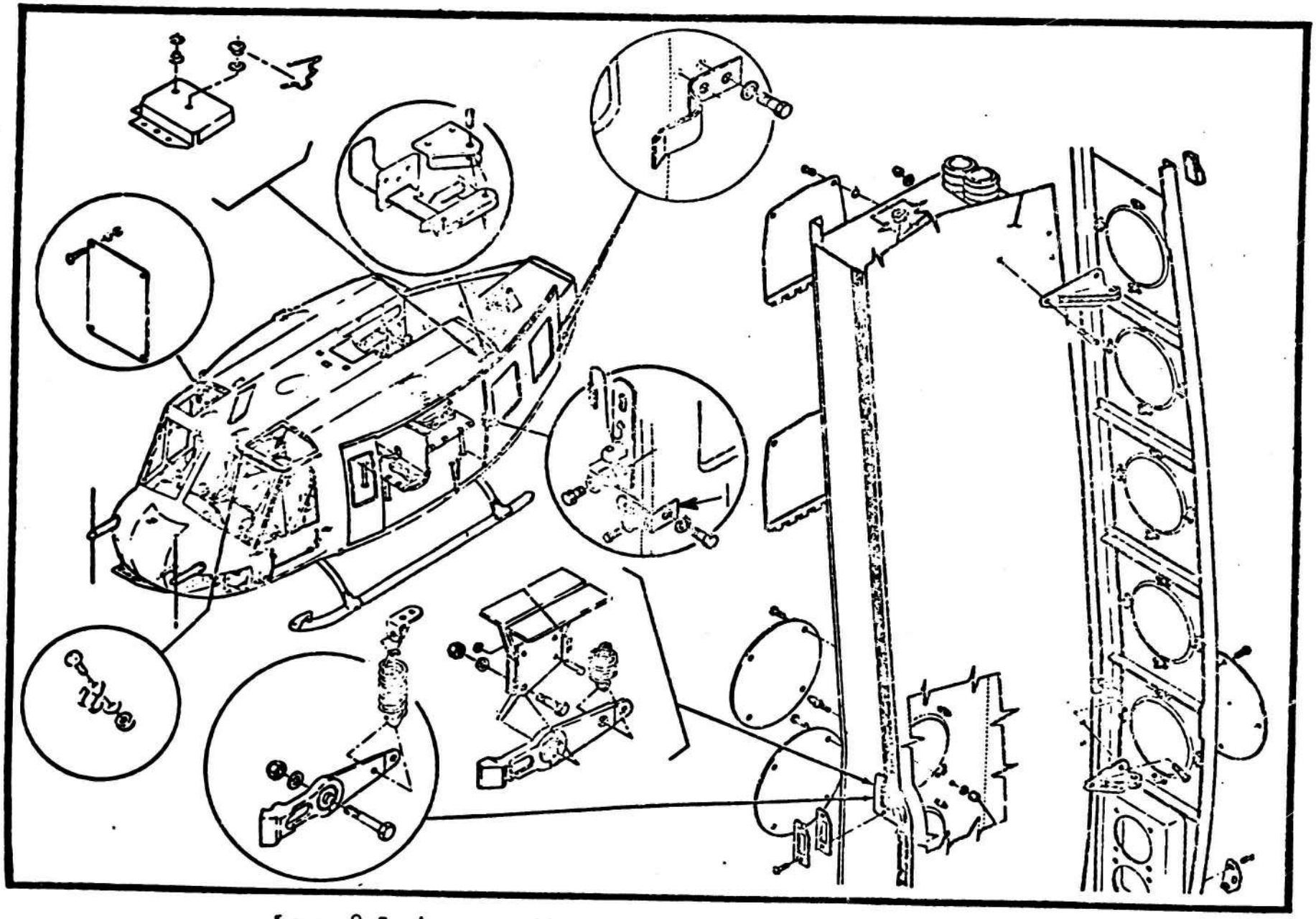

Figure 9 Fuselage Assembly, Helicopter Forward

UH-1H FLAT RATE DATA
FUNCTIONAL GROUP 01
REFERENCE FIGURE 9

ITEM NO.	NOMENCLATURE	FSN/PN	ACTION CODE	MAINT. LEVEL	MEAN	MEDIAN	MODE	STD. DEV	SAMPLE SIZE
1	Retainer	53309830122 53409716350	Replace	Total Org. Supp.	1.2 0.9 1.8	1.0 1.0 1.0	1.0 1.0 1.0	0.770 0.401 1.024	21 14 7
				Total Org. Supp.					
				Total Org. Supp.					
				Total Org. Supp.					
				Total Org. Supp.					
				Total Org. Supp.					
				Total Org. Supp.					
				Total Org. Supp.					
				Total Org. Supp.					
				Total Org. Supp.					

*Insufficient Data

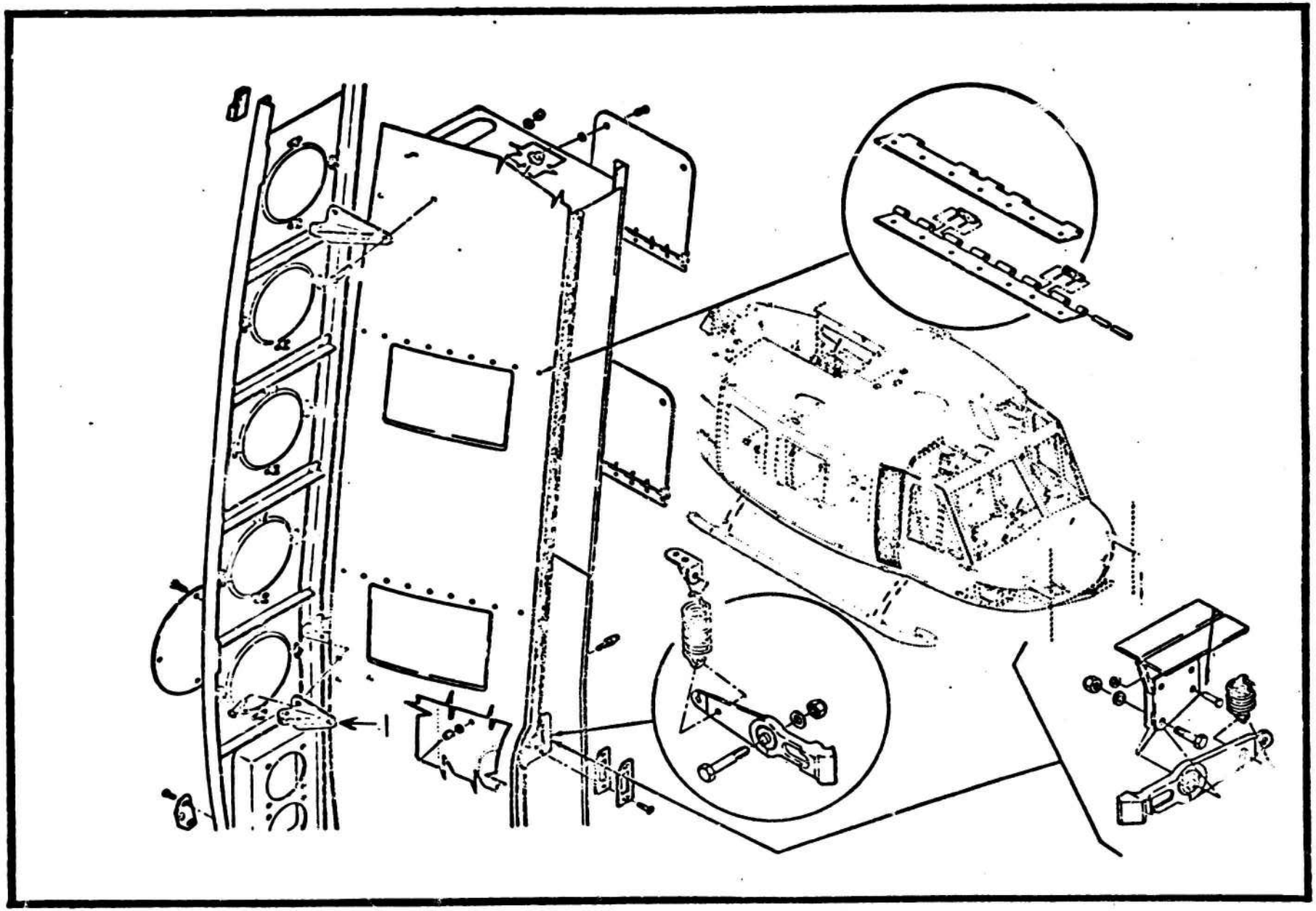

Figure 10 Fuselage Assembly, Helicopter Forward

UH-1H FLAT RATE DATA
FUNCTIONAL GROUP 01
REFERENCE FIGURE 10

ITEM NO.	NOMEMCLATURE	FSN/PN	ACTION CODE	MAINT. LEVEL	MEAN	MEDIAN	MODE	STD. DEV.	SAMPLE SIZE
1	**Hinge Leaf**	53409673376 53409673377 53409673378 53409673379	Replace	Total	1.0	1.0	1.0	0.483	71
				Org.	1.0	1.0	1.0	0.481	55
				Supp.	0.9	1.0	0.5	0.505	16
				Total					
				Org.					
				Supp.					
				Total					
				Org.					
				Supp.					
				Total					
				Org.					
				Supp.					
				Total					
				Org.					
				Supp.					
				Total					
				Org.					
				Supp.					
				Total					
				Org.					
				Supp.					
				Total					
				Org.					
				Supp.					
				Total					
				Org.					
				Supp.					
				Total					
				Org.					
				Supp.					

*Insufficient Data

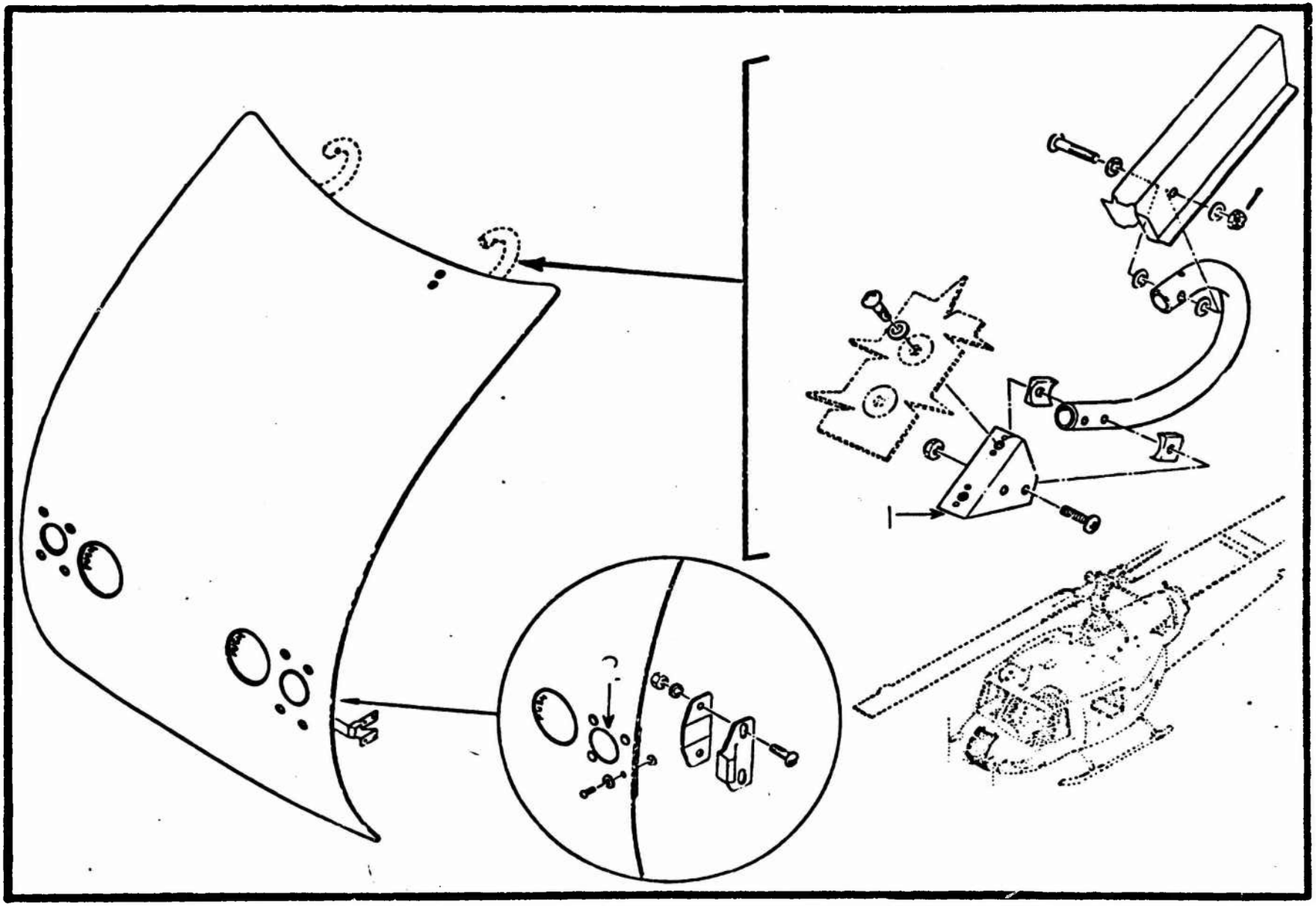

Figure 11 Door Installation, Nose

UH-1H FLAT RATE DATA
FUNCTIONAL GROUP 01
REFERENCE FIGURE 11

ITEM NO.	NOMENCLATURE	FSN/PN	ACTION CODE	MAINT. LEVEL	MEAN	MEDIAN	MODE	STD. DEV.	SAMPLE SIZE
1	Bracket	15608758000 15608758001	Replace	Total	1.3	1.0	0.5	0.722	24
				Org.	*	*	*	*	*
				Supp.	1.6	1.5	2.0	0.582	10
			Repair	Total	2.2	2.5	2.5	0.566	9
				Org.	*	*	*	*	*
				Supp.	2.2	2.5	2.5	0.566	9
2	Latch Assy	53408727939	Replace	Total	1.3	1.0	1.0	0.721	182
				Org.	1.3	1.0	1.0	0.775	59
				Supp.	1.3	1.0	1.0	0.697	123
			Repair	Total	1.4	1.0	1.0	0.728	9
				Org.	*	*	*	*	*
				Supp.	1.4	1.0	1.0	0.728	9
				Total					
				Org.					
				Supp.					
				Total					
				Org.					
				Supp.					
				Total					
				Org.					
				Supp.					
				Total					
				Org.					
				Supp.					
				Total					
				Org.					
				Supp.					
				Total					
				Org.					
				Supp.					

*Insufficient Data

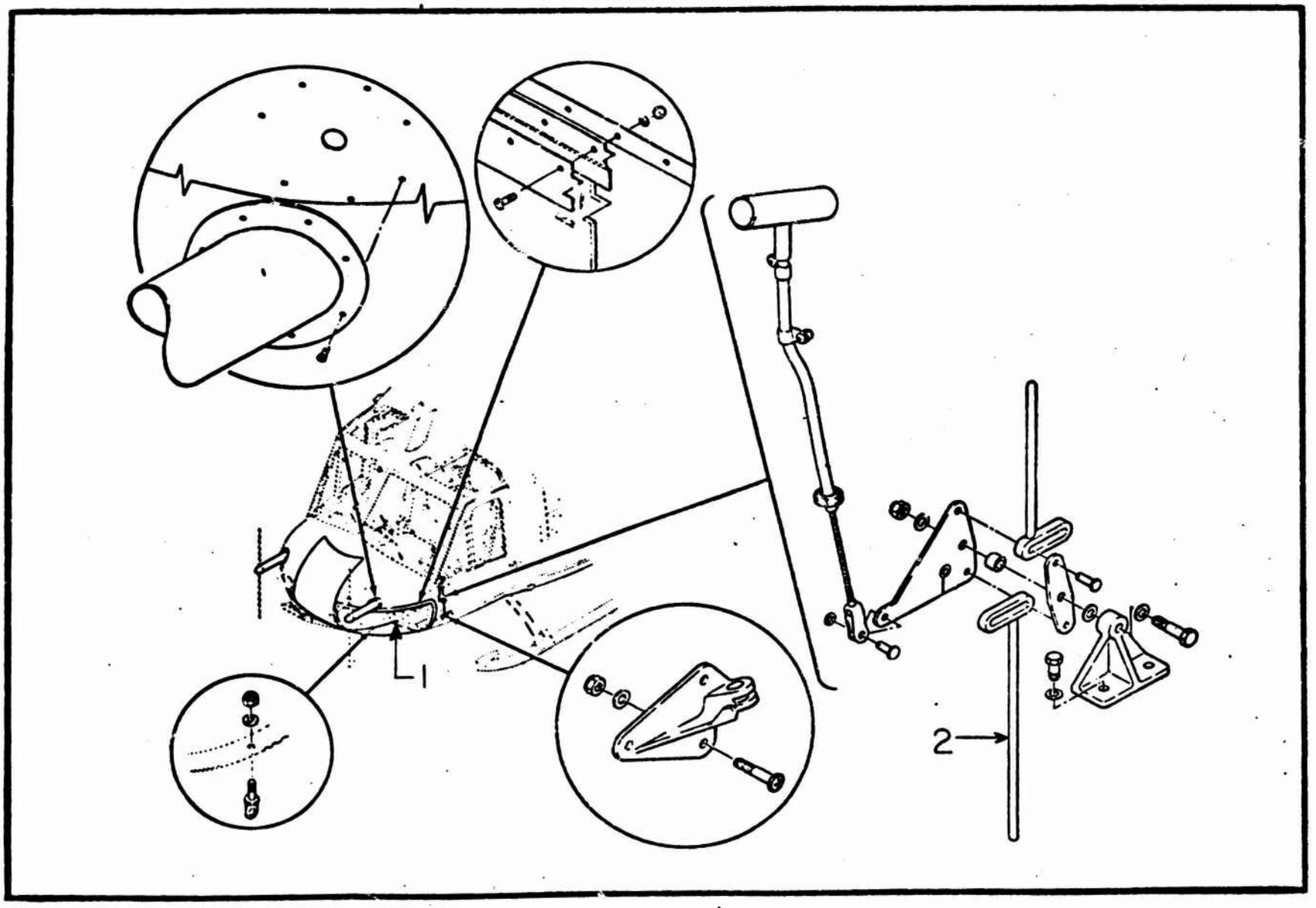

Figure 12 Nose Installation, Cabin

UH-1H FLAT RATE DATA
FUNCTIONAL GROUP 01
REFERENCE FIGURE 12

ITEM NO.	NOMEMCLATURE	FSN/PN	ACTION CODE	MAINT. LEVEL	MEAN	MEDIAN	MODE	STD. DEV.	SAMPLE SIZE
1	Button	53402055253	Replace	Total	0.6	0.5	0.5	.430	155
				Org.	0.5	0.5	0.5	.380	119
				Supp.	0.9	1.0	1.0	.449	36
2	Pin	15607388353 53158790337 53150790338	Replace	Total	1.1	1.0	1.0	0.505	70
				Org.	1.0	1.0	1.0	0.557	42
				Supp.	1.1	1.0	1.0	0.423	28
				Total					
				Org.					
				Supp.					
				Total					
				Org.					
				Supp.					
				Total					
				Org.					
				Supp.					
				Total					
				Org.					
				Supp.					
				Total					
				Org.					
				Supp.					
				Total					
				Org.					
				Supp.					
				Total					
				Org.					
				Supp.					
				Total					
				Org.					
				Supp.					

*Insufficient Data

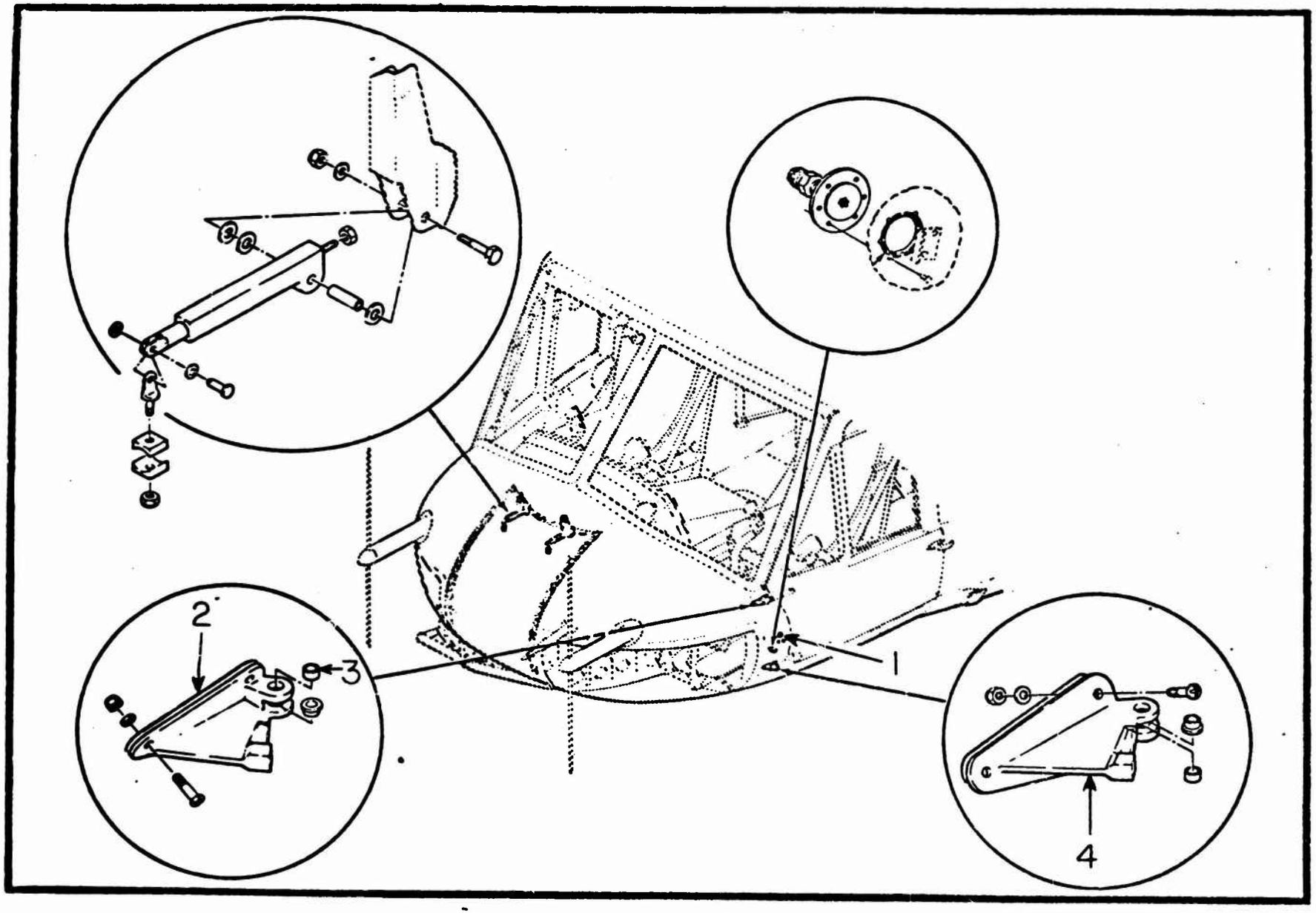

Figure 13 Nose Assembly, Cabin

UH-1H FLAT RATE DATA
FUNCTIONAL GROUP 01
REFERENCE FIGURE 13

ITEM NO.	NOMEMCLATURE	FSN/PN	ACTION CODE	MAINT. LEVEL	MEAN	MEDIAN	MODE	STD. DEV	SAMPLE SIZE
1	Button	53400519769	Replace	Total	0.7	0.5	0.5	0.252	24
				Org.	0.6	0.5	0.5	0.231	15
				Supp.	0.8	1.0	1.0	0.252	9
2	Hinge Assy	15607574848 15607574849 53406714421	Replace	Total	5.0	3.5	1.0	4.241	323
				Org.	2.1	2.0	1.0	1.185	120
				Supp.	6.6	5.0	10.0	4.546	174
			Repair	Total	2.5	2.5	4.0	1.335	29
				Org.	2.3	3.0	3.5	1.440	5
				Supp.	2.6	2.5	4.0	1.341	24
			Service	Total	1.5	1.0	2.0	0.579	14
				Org.	1.6	2.0	2.0	0.577	5
				Supp.	1.5	1.0	1.0	0.612	9
3	Bushing	31206705310 31206705322 31207572924	Replace	Total	1.0	1.0	1.0	0.415	72
				Org.	0.9	1.0	1.0	0.388	62
				Supp.	1.1	1.0	1.0	0.546	10
4	Hinge Assy	15607574847 15608732262 15608732263	Replace	Total	1.6	1.5	1.0	0.811	87
				Org.	1.5	1.0	1.0	0.839	53
				Supp.	1.7	2.0	2.0	0.767	34
				Total					
				Org.					
				Supp.					
				Total					
				Org.					
				Supp.					
				Total					
				Org.					
				Supp.					
				Total					
				Org.					
				Supp.					

*Insufficient Data

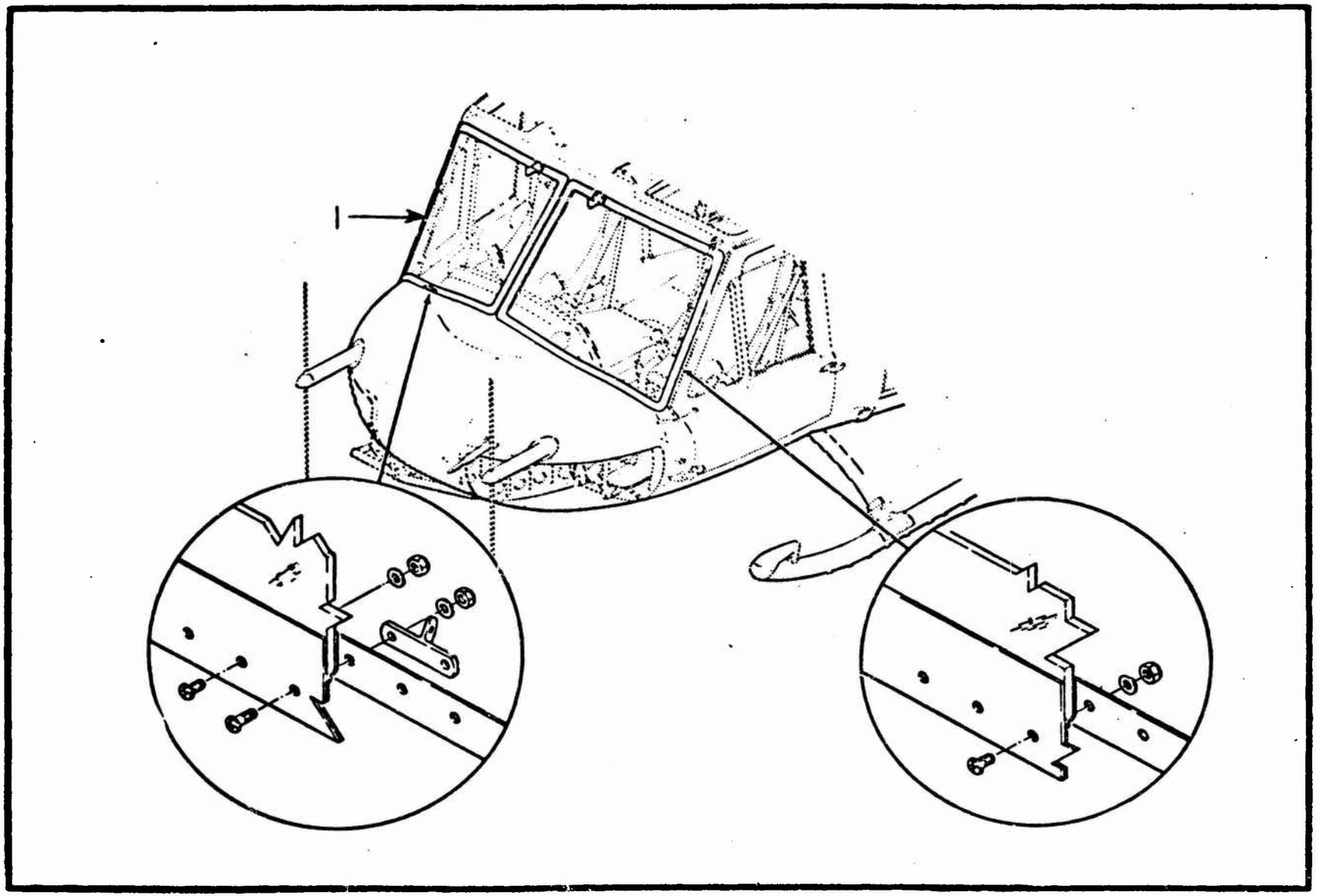

Figure 14 Windshield Installation, Cabin

UH-1H FLAT RATE DATA
FUNCTIONAL GROUP 01
REFERENCE FIGURE 14

ITEM NO.	NOMEMCLATURE	FSN/PN	ACTION CODE	MAINT. LEVEL	MEAN	MEDIAN	MODE	STD. DEV	SAMPLE SIZE
1	Windshield Assy	15607657825 15608687003 15608687004	Replace	Total Org. Supp.	6.6 6.2 7.1	6.0 6.0 7.9	10.0 8.0 10.0	2.312 2.140 2.406	150 75 75
				Total Org. Supp.					
				Total Org. Supp.					
				Total Org. Supp.					
				Total Org. Supp.					
				Total Org. Supp.					
				Total Org. Supp.					
				Total Org. Supp.					
				Total Org. Supp.					
				Total Org. Supp.					

*Insufficient Data

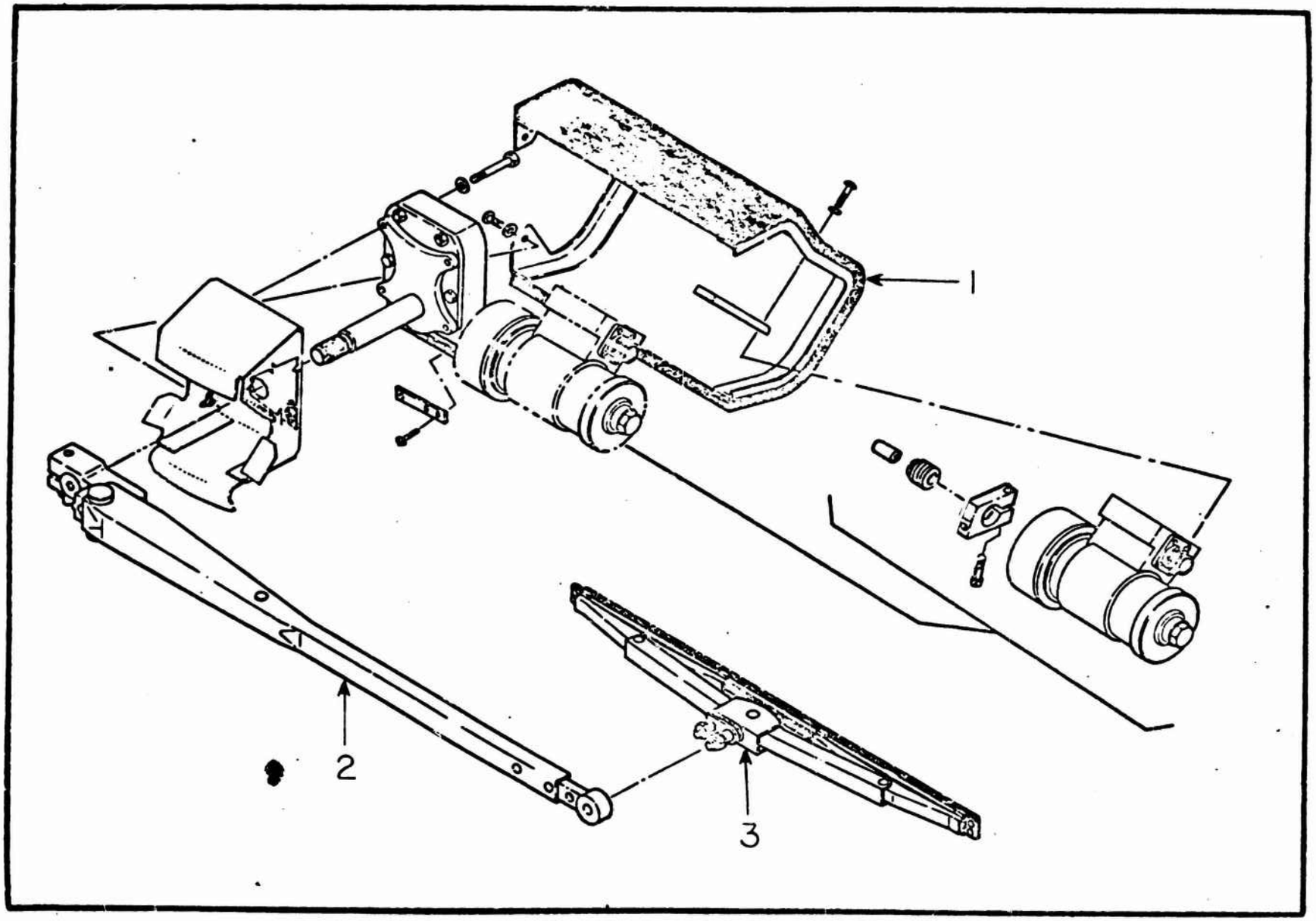

Figure 15 Wiper Installation, Windshield

UH-1H FLAT RATE DATA
FUNCTIONAL GROUP 01
REFERENCE FIGURE 15

ITEM NO.	NOMEMCLATURE	FSN/PN	ACTION CODE	MAINT. LEVEL	MEAN	MEDIAN	MODE	STD. DEV	SAMPLE SIZE
1	Headguard	16800678251 16808790789	Replace	Total	0.9	1.0	1.0	0.482	1036
				Org.	0.8	1.0	0.5	0.465	780
				Supp.	1.0	1.0	1.0	0.523	256
			Repair	Total	1.2	1.0	1.0	0.497	77
				Org.	1.2	1.0	1.0	0.530	19
				Supp.	1.2	1.0	1.0	0.491	58
2	Wiper Arm Assy	16806707978 16807814031	Replace	Total	0.9	1.0	1.0	0.308	47
				Org.	0.9	1.0	1.0	0.308	37
				Supp.	1.1	1.0	1.0	0.289	10
3	Wiper Blade Assy	16806708026 16807338302	Replace	Total	1.0	1.0	1.0	0.524	331
				Org.	1.0	1.0	1.0	0.516	295
				Supp.	1.2	1.0	1.0	0.553	36
--	Motor Converter Assy	16809466624 16809466677	Replace	Total	1.0	1.0	1.0	0.045	6
				Org.	1.0	1.0	1.0	0.045	6
				Supp.	*	*	*	*	*
				Total					
				Org.					
				Supp.					
				Total					
				Org.					
				Supp.					
				Total					
				Org.					
				Supp.					
				Total					
				Org.					
				Supp.					
				Total					
				Org.					
				Supp.					

*Insufficient Data

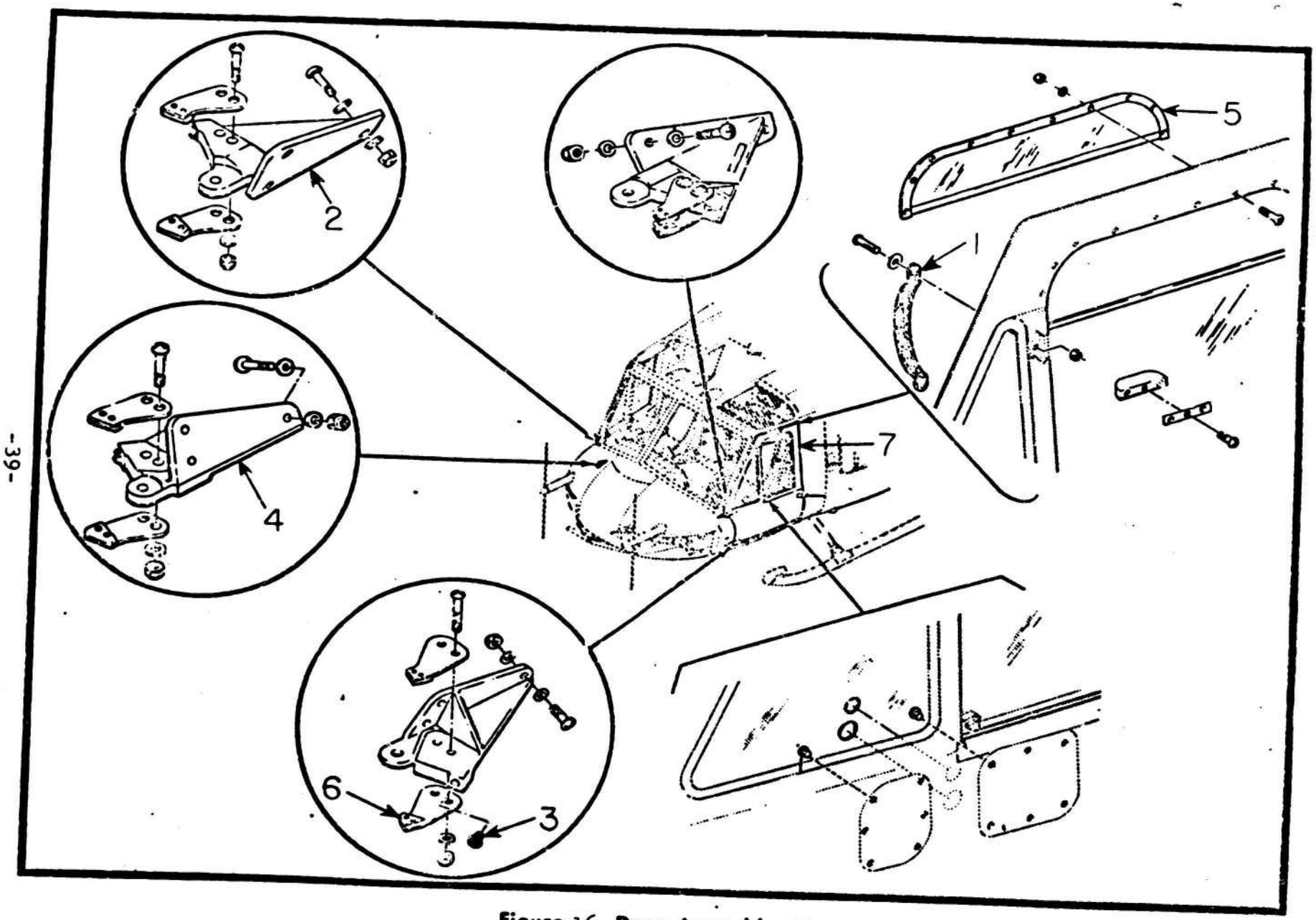

Figure 16 Door Assembly, Crew

UH-1H FLAT RATE DATA
FUNCTIONAL GROUP 01
REFERENCE FIGURE 1E

ITEM NO.	NOMENCLATURE	FSN/PN	ACTION CODE	MAINT. LEVEL	MEAN	MEDIAN	MODE	STD. DEV	SAMPLE SIZE
1	Handle	15607015662	Replace	Total	0.9	0.6	0.5	0.556	86
				Org.	0.9	0.5	0.5	0.557	74
				Supp	*	*	*	*	*
2	Leaf Hinge Assy	15607014134 15607014135 15607364033 15607376567 15608933441	Replace	Total	1.9	1.5	1.0	1.184	303
				Org.	1.7	1.0	1.0	1.072	188
				Supp.	2.2	2.0	2.0	1.294	115
				Total					
				Org.					
				Supp.					
3	Bumper	53404990073	Replace	Total	0.7	0.5	0.5	0.261	1081
				Org.	0.7	0.5	0.5	0.261	798
				Supp.	0.7	0.5	0.5	0.259	283
4	Leaf Hinge Assy	15607364034	Replace	Total	1.3	1.0	1.0	0.574	80
				Org.	1.3	1.0	1.0	0.529	56
				Supp.	2.6	2.0	2.0	1.038	18
5	Window Assy	15606907288 15606907289 15606907290	Replace	Total	1.9	2.0	1.0	1.191	434
				Org.	1.5	1.0	1.0	0.779	290
				Supp.	2.6	2.0	2.0	1.314	117
6	Spring Assy	15607014138 15607388354 15607388355 15607932040	Replace	Total	1.2	1.0	1.0	0.663	410
				Org.	1.2	1.0	1.0	0.676	316
				Supp.	1.2	1.0	1.0	0.621	94
				Total					
				Org.					
				Supp.					
7	Crew Door Assy	15607364013	Replace	Total	1.6	1.2	1.0	.984	85
				Org.	1.4	1.0	1.0	.805	63
				Supp.	2.3	2.0	2.0	1.142	22
			Repair	Total	3.2	3.5	4.0	1.095	64
				Org.	*	*	*	*	*
				Supp.	3.3	3.5	4.0	1.089	62

*Insufficient Data

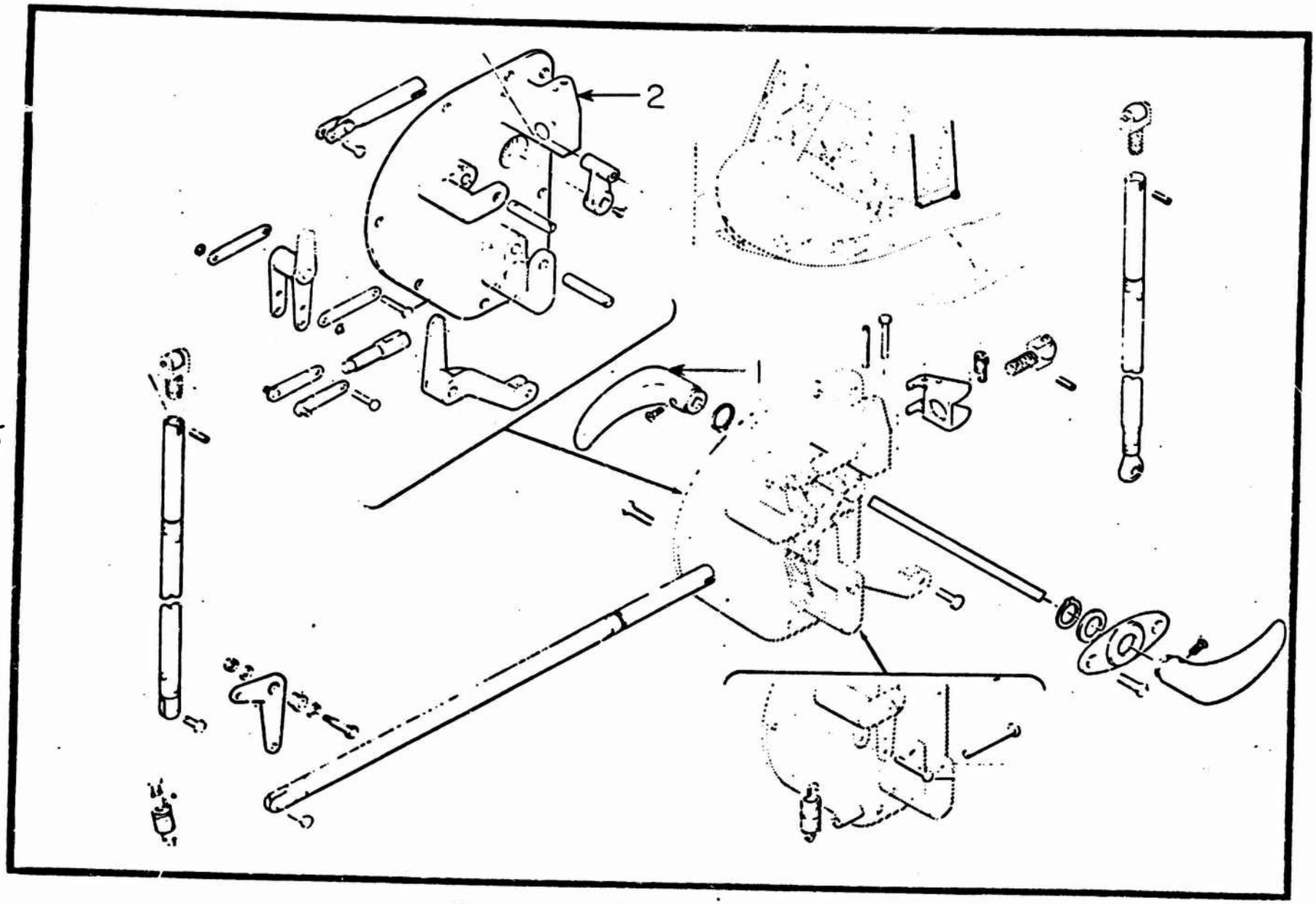

Figure 17 Latch Installation, Crew Door

UH-1H FLAT RATE DATA
FUNCTIONAL GROUP 01
REFERENCE FIGURE 17

ITEM NO.	NOMEMCLATURE	FSN/PN	ACTION CODE	MAINT. LEVEL	MEAN	MEDIAN	MODE	STD. DEV.	SAMPLE SIZE
1	Handle	16804110041	Replace	Total	1.1	1.0	1.0	0.555	84
				Org.	1.0	1.0	1.0	0.540	70
				Supp.	*	*	*	*	*
2	Support	15608055110 15609800239	Replace	Total	3.6	3.0	3.0	1.580	16
				Org.	3.8	4.0	3.0	1.613	13
				Supp.	*	*	*	*	*
--	Crew Door Latch Assy	15607950896 15607950970	Replace	Total	2.1	2.0	2.0	0.980	39
				Org.	2.1	2.0	2.0	0.993	28
				Supp.	2.2	2.0	3.0	0.984	11
				Total					
				Org.					
				Supp.					
				Total					
				Org.					
				Supp.					
				Total					
				Org.					
				Supp.					
				Total					
				Org.					
				Supp.					
				Total					
				Org.					
				Supp.					
				Total					
				Org.					
				Supp.					
				Total					
				Org.					
				Supp.					

*Insufficient Data

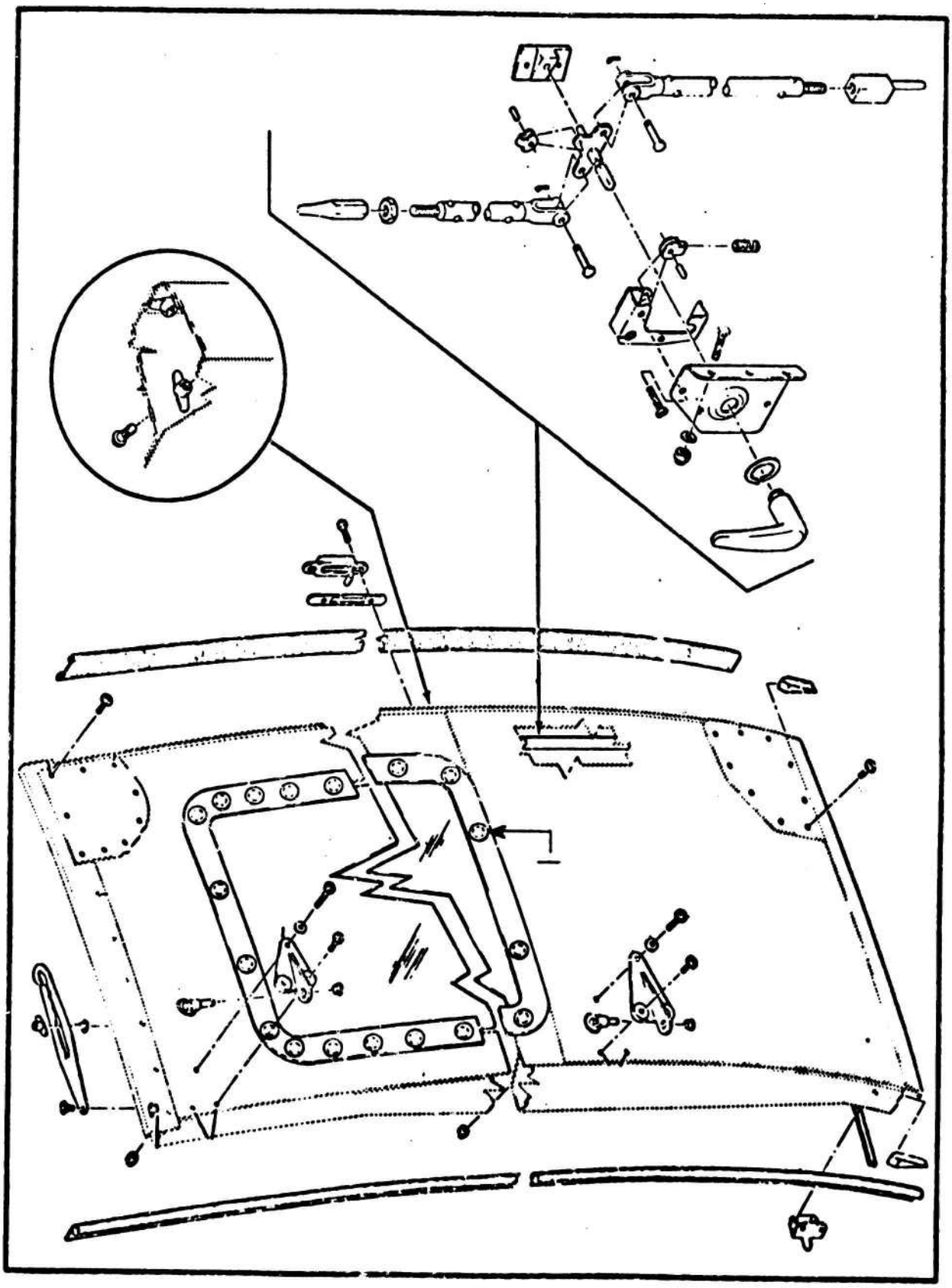

Figure 18 Panel Installation

UH-1H FLAT RATE DATA
FUNCTIONAL GROUP 01
REFERENCE FIGURE 18

ITEM NO.	NOMEMCLATURE	FSN/PN	ACTION CODE	MAINT. LEVEL	MEAN	MEDIAN	MODE	STD. DEV.	SAMPLE SIZE
1	Stud	53251742923	Replace	Total	1.5	1.0	1.0	1.346	33
				Org.	*	*	*	*	*
				Supp.	1.6	1.0	1.0	1.408	28
--	Panel Assy	15601336259 15601336260 15609398444 15609398447	Replace	Total	1.6	1.0	1.0	0.409	72
				Org	0.9	1.0	1.0	0.456	40
				Supp.	2.2	1.6	1.0	1.557	29
			Repair	Total	2.4	2.0	2.0	0.576	15
				Org.	*	*	*	*	*
				Supp.	2.3	2.0	2.0	0.560	11
			Installed	Total	0.7	0.5	0.5	0.261	6
				Org.	*	*	*	*	*
				Supp.	0.7	0.5	0.5	0.261	6
				Total					
				Org.					
				Supp.					
				Total					
				Org.					
				Supp.					
				Total					
				Org.					
				Supp.					
				Total					
				Org.					
				Supp.					
				Total					
				Org.					
				Supp.					
				Total					
				Org.					
				Supp.					

*Insufficient Data

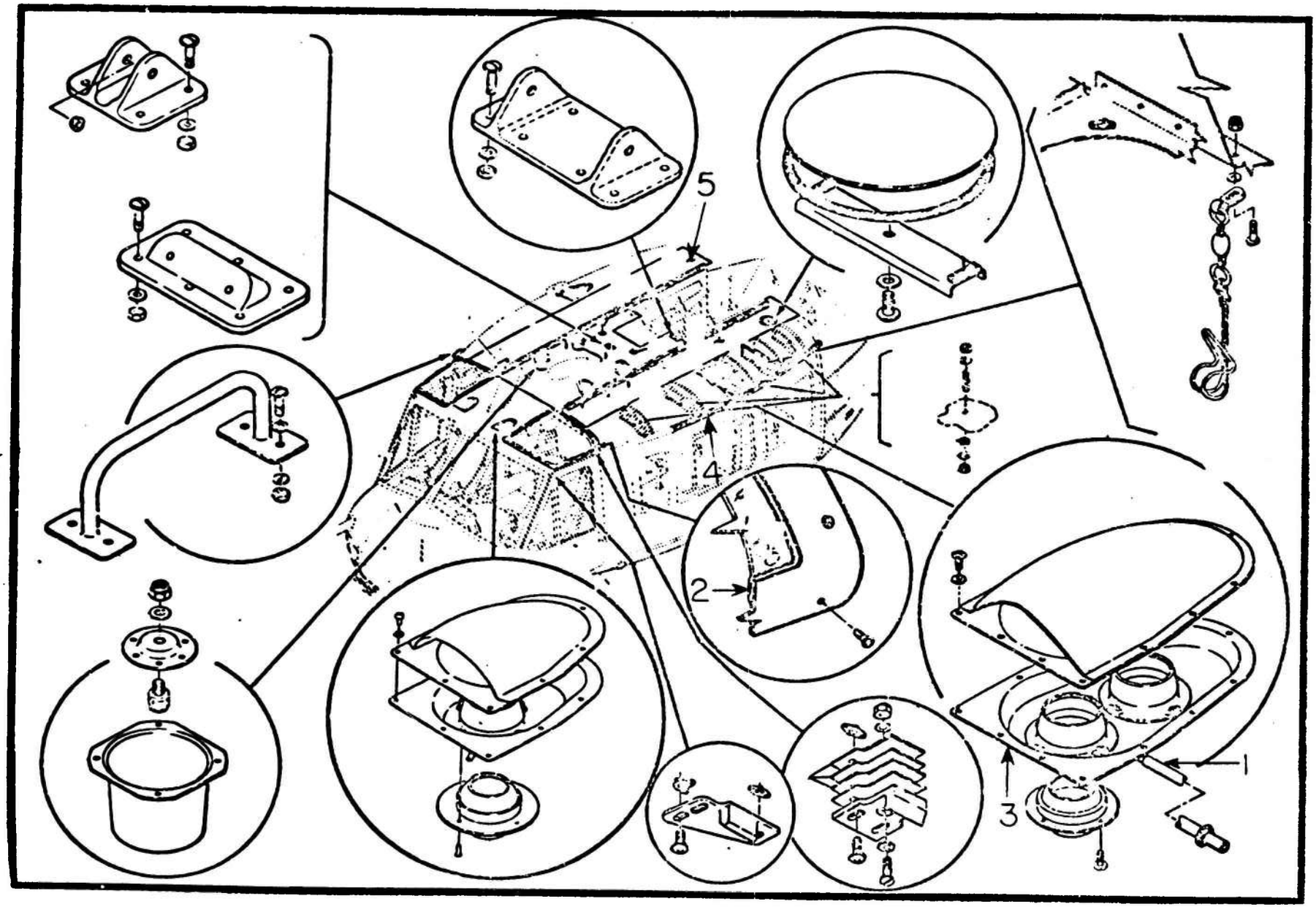

Figure 19 Roof Installation, Cabin

UH-1H FLAT RATE DATA
FUNCTIONAL GROUP 01
REFERENCE FIGURE 19

ITEM NO.	NOMEMCLATURE	FSN/PN	ACTION CODE	MAINT. LEVEL	MEAN	MEDIAN	MODE	STD. DEV.	SAMPLE SIZE
1	Tube	15609869964	Replace	Total	1.0	1.0	1.0	0.354	11
				Org.	0.9	1.0	1.0	0.323	8
				Supp.	1.0	1.0	1.5	0.500	3
2	Window Assy	15606724800 15607874251 15609990307 15609990308	Replace	Total	5.7	5.5	8.0	2.609	329
				Org.	5.1	4.5	4.0	2.239	140
				Supp.	6.2	6.0	10.0	2.762	189
				Total					
				Org.					
				Supp.					
3	Pan Assy	15601141210 15604752532 15608139357 15608696311 15609180720 15609987645 16607406509 16607406510	Replace	Total	1.8	2.0	2.0	0.382	8
				Org.	*	*	*	*	*
				Supp.	1.8	2.0	2.0	0.382	8
			Repair	Total	1.2	1.0	1.0	0.468	16
				Org.	*	*	*	*	*
				Supp.	1.2	1.0	1.0	0.468	16
				Total					
				Org.					
				Supp.					
4	Seal	15607572903 15607572904 15609664369	Replace	Total	1.3	1.0	1.0	0.494	12
				Org.	1.0	1.0	1.0	0.000	5
				Supp.	1.6	2.0	2.0	0.535	7
5	Panel Assy	15600693413 15601028574 56809248250 56809248252 56809509853	Repair	Total	1.6	2.0	2.0	0.486	9
				Org.	*	*	*	*	*
				Supp.	1.6	2.0	2.0	0.486	9
				Total					
				Org.					
				Supp.					
				Total					
				Org.					
				Supp.					

*Insufficient Data

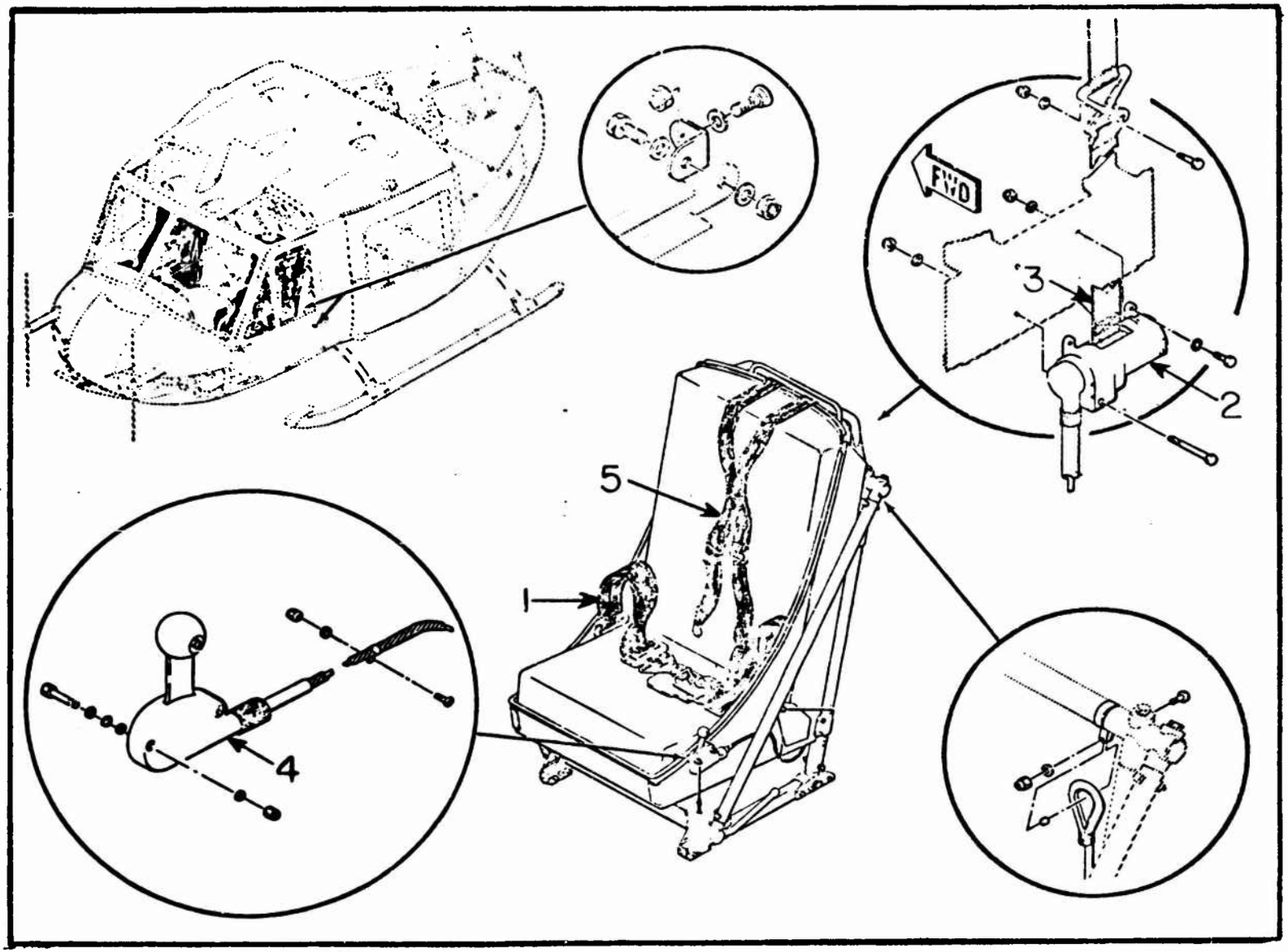

Figure 20 Seat Installation

UH-1H FLAT RATE DATA
FUNCTIONAL GROUP 01
REFERENCE FIGURE 20

ITEM NO.	NOMEMCLATURE	FSN/PN	ACTION CODE	MAINT. LEVEL	MEAN	MEDIAN	MODE	STD. DEV.	SAMPLE SIZE
1	Belt	16805166543 16809671831	Replace	Total Org. Supp.	1.3 1.3 1.6	1.0 1.0 2.0	1.0 1.0 2.0	0.682 0.688 0.617	198 [illegible] [illegible]
2	Harness Reel	16807101844 16807754182	Replace	Total Org. Supp.	1.5 1.5 2.4	1.0 1.0 2.0	1.0 1.0 2.0	0.702 0.696 0.757	213 178 23
			Repair	Total Org. Supp.	0.8 * 0.7	0.5 * 0.5	1.0 * 0.5	0.265 * 0.268	14 * 7
3	Strap Assy	16806329608	Replace	Total Org. Supp.	1.2 1.2 *	1.0 1.0 *	1.0 2.0 *	0.603 0.639 *	48 37 *
4	Control Assy	16800131279	Replace	Total Org. Supp.	1.0 1.0 1.0	1.0 1.0 1.0	1.0 1.0 1.0	0.291 0.329 0.000	24 19 5
5	Harness, Shoulder	16805552938	Replace	Total Org. Supp.	1.7 1.4 2.5	1.0 1.0 2.0	1.0 1.0 2.0	1.414 1.222 1.636	191 141 50
				Total Org. Supp.					
				Total Org. Supp.					
				Total Org. Supp.					
				Total Org. Supp.					

*Insufficient Data

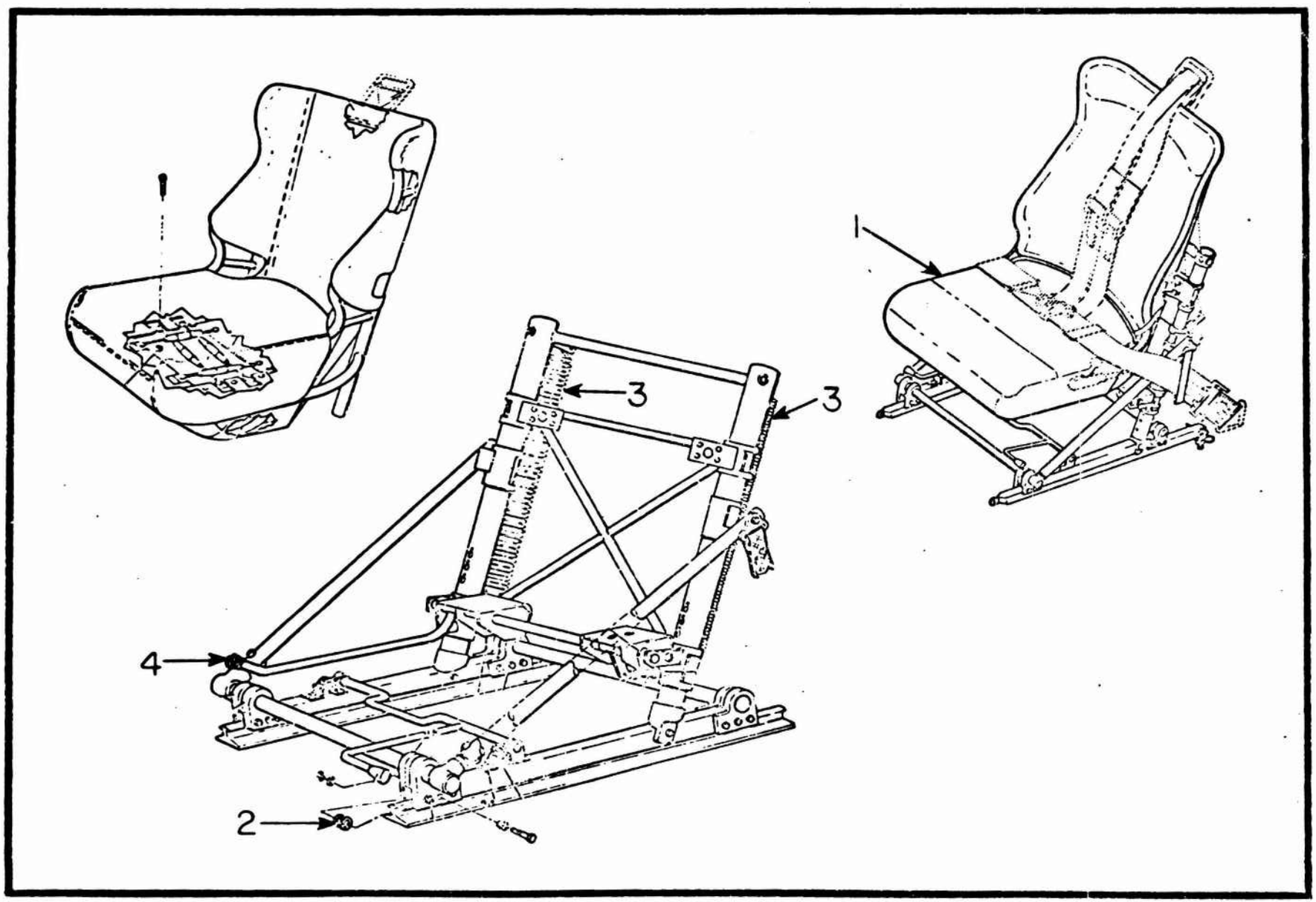

Figure 21 Seat Assembly

UH-1H FLAT RATE DATA
FUNCTIONAL GROUP 01
REFERENCE FIGURE 21

ITEM NO.	NOMENCLATURE	FSN/PN	ACTION CODE	MAINT. LEVEL	MEAN	MEDIAN	MODE	STD. DEV	SAMPLE SIZE
1	Seat Assy	16800218997 16807666366 16809339385	Repair	Total	1.0	1.0	1.0	0.527	9
				Org.	*	*	*	*	*
				Supp.	1.0	1.0	1.0	0.316	6
			Removed and Installed	Total	1.1	1.0	1.0	0.509	46
				Org	0.9	1.0	1.0	0.454	31
				Supp.	1.3	1.0	1.0	0.552	15
2	Carriage Roller	16808721241 31206758827	Replace	Total	1.0	1.0	0.5	0.544	17
				Org.	1.0	1.0	0.5	0.542	11
				Supp.	0.9	0.5	0.5	0.477	6
3	Spring	16808723282	Replace	Total	0.9	1.0	1.0	0.345	46
				Org.	0.9	1.0	1.0	0.334	43
				Supp.	*	*	*	*	*
4	Rubber Tip	53407206327	Replace	Total	0.6	0.5	0.5	0.330	78
				Org.	0.6	0.5	0.5	0.334	52
				Supp.	0.7	0.5	0.5	0.307	25
				Total					
				Org.					
				Supp.					
				Total					
				Org.					
				Supp.					
				Total					
				Org.					
				Supp.					
				Total					
				Org.					
				Supp.					
				Total					
				Org.					
				Supp.					

*Insufficient Data

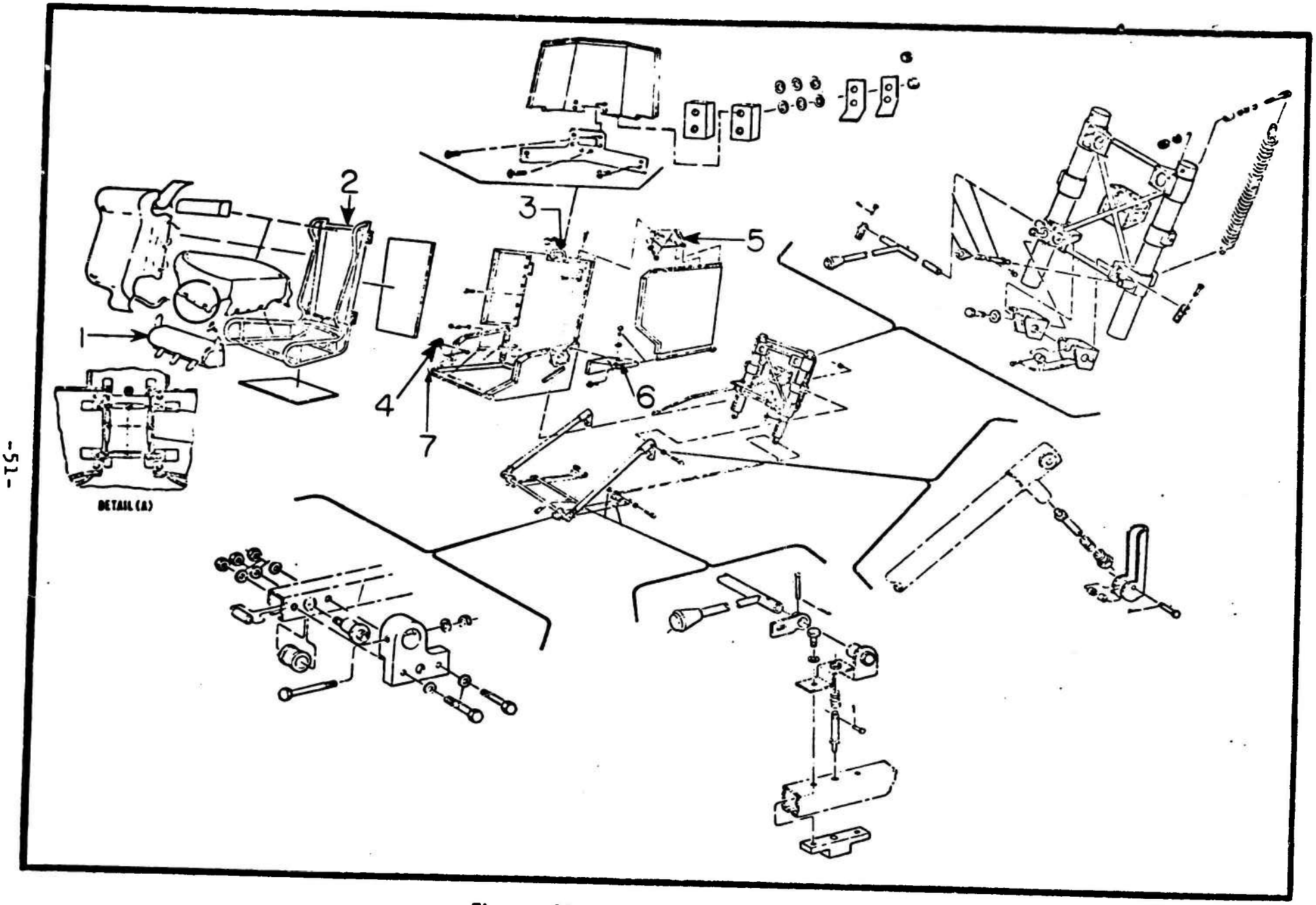

Figure 22 Armor Seat Installation

UH-1H FLAT RATE DATA
FUNCTIONAL GROUP 01
REFERENCE FIGURE 22

ITEM NO.	NOMEMCLATURE	FSN/PN	ACTION CODE	MAINT. LEVEL	MEAN	MEDIAN	MODE	STD. DEV.	SAMPLE SIZE
1	Cover	16802477230 16804535677 16804535678	Replace	Total	1.8	2.0	2.0	0.746	329
				Org.	1.9	2.0	2.0	0.757	249
				Supp.	5.0	5.0	5.0	0.000	8
				Total					
				Org.					
				Supp.					
2	Seat	16801685768	Service	Total	1.3	0.7	0.5	0.970	12
				Org.	*	*	*	*	*
				Supp.	1.3	0.7	0.5	1.039	8
			Removed and Installed	Total	1.5	1.5	2.0	0.672	30
				Org.	*	*	*	*	*
				Supp.	1.6	1.9	2.0	0.781	15
3	Guide	16801761107	Replace	Total	0.6	0.5	0.5	0.258	19
				Org.	0.6	0.5	0.5	0.196	13
				Supp.	0.8	1.0	1.0	0.316	6
4	Bracket	16801813592 16801813593 16809771964	Replace	Total	1.2	1.0	1.0	0.559	151
				Org.	1.1	1.0	1.0	0.527	70
				Supp.	1.3	1.0	1.0	0.574	81
			Repair	Total	1.7	2.0	2.0	0.442	9
				Org.	*	*	*	*	*
				Supp.	1.7	2.0	2.0	0.442	9
5	Bracket	16802512523 16809750242 16809771823 16809771824	Replace	Total	0.9	1.0	0.5	0.541	35
				Org.	0.8	0.5	0.5	0.467	29
				Supp.	1.4	1.0	2.0	0.665	6
				Total					
				Org.					
				Supp.					
				Total					
				Org.					
				Supp.					

*Insufficient Data

UH-1H FLAT RATE DATA
FUNCTIONAL GROUP 01
REFERENCE FIGURE 22

ITEM NO.	NOMEMCLATURE	FSN/PN	ACTION CODE	MAINT. LEVEL	MEAN	MEDIAN	MODE	STD. DEV.	SAMPLE SIZE
6	Latch	16808831673	Replace	Total	1.6	1.5	2.0	0.746	44
				Org.	1.3	1.0	1.0	0.933	12
				Supp.	1.7	2.0	2.0	0.641	32
7	Panel	16809750193 16809750196 16809750197 16809750200 16809750201 16809771971 16809771973 16809771977 16809772019	Replace	Total	1.7	1.5	2.0	1.005	17
				Org.	1.1	1.0	1.0	0.486	9
				Supp.	2.4	2.0	2.0	1.054	8
				Total Org. Supp.					
				Total Org. Supp.					
				Total Org. Supp.					
				Total Org. Supp.					
				Total Org. Supp.					
				Total Org. Supp.					
				Total Org. Supp.					
				Total Org. Supp.					

*Insufficient Data

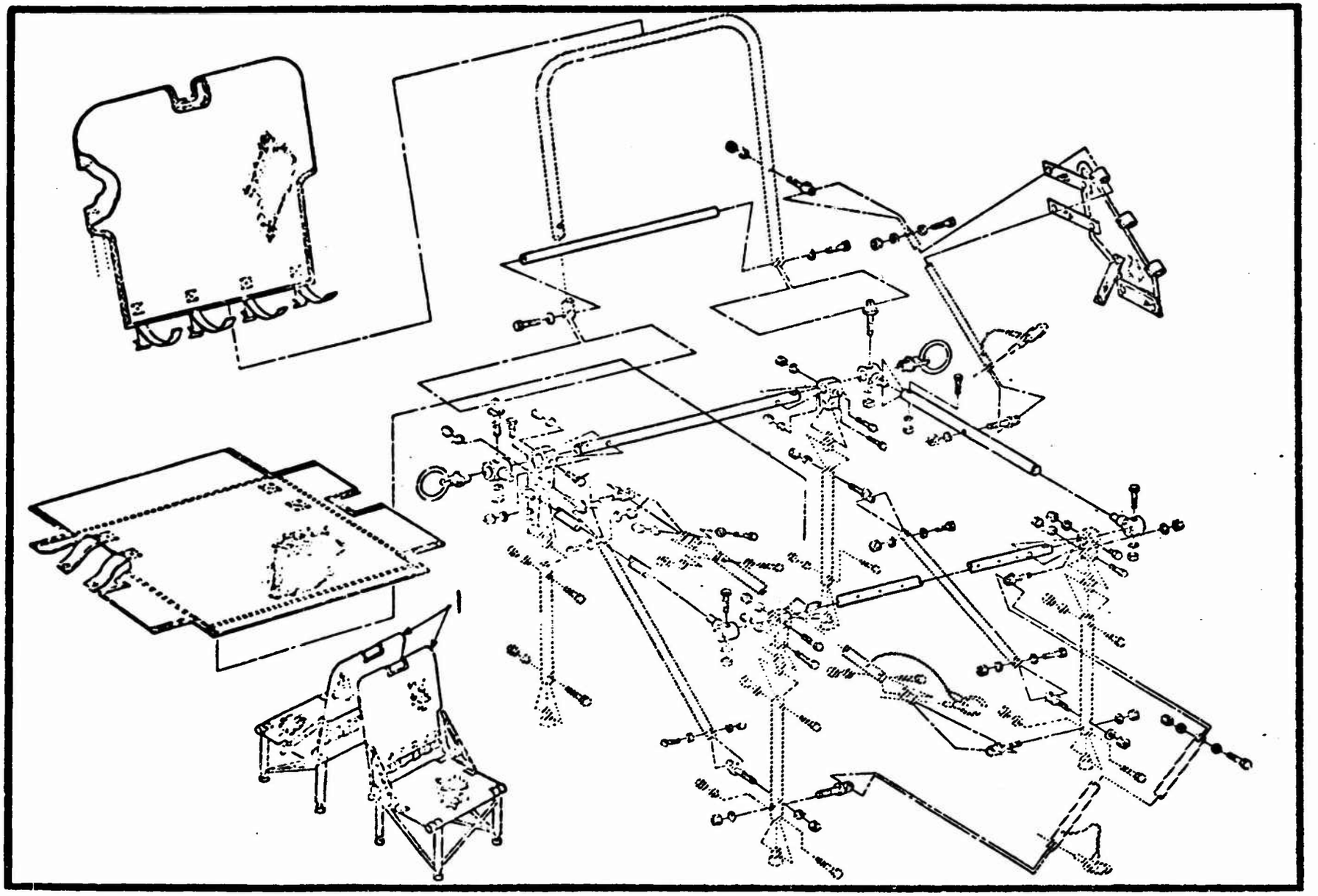

Figure 23 Seat Installation, Passenger

UH-1H FLAT RATE DATA
FUNCTIONAL GROUP 01
REFERENCE FIGURE 23

ITEM NO.	NOMEMCLATURE	FSN/PN	ACTION CODE	MAINT. LEVEL	MEAN	MEDIAN	MODE	STD. DEV.	SAMPLE SIZE
1	Seat Assy	16800442239	Replace	Total	0.8	1.0	1.0	0.267	14
				Org.	0.7	0.5	1.0	0.275	12
				Supp.	*	*	*	*	*
				Total					
				Org.					
				Supp.					
				Total					
				Org.					
				Supp.					
				Total					
				Org.					
				Supp.					
				Total					
				Org.					
				Supp.					
				Total					
				Org.					
				Supp.					
				Total					
				Org.					
				Supp.					
				Total					
				Org.					
				Supp.					
				Total					
				Org.					
				Supp.					
				Total					
				Org.					
				Supp.					

*Insufficient Data

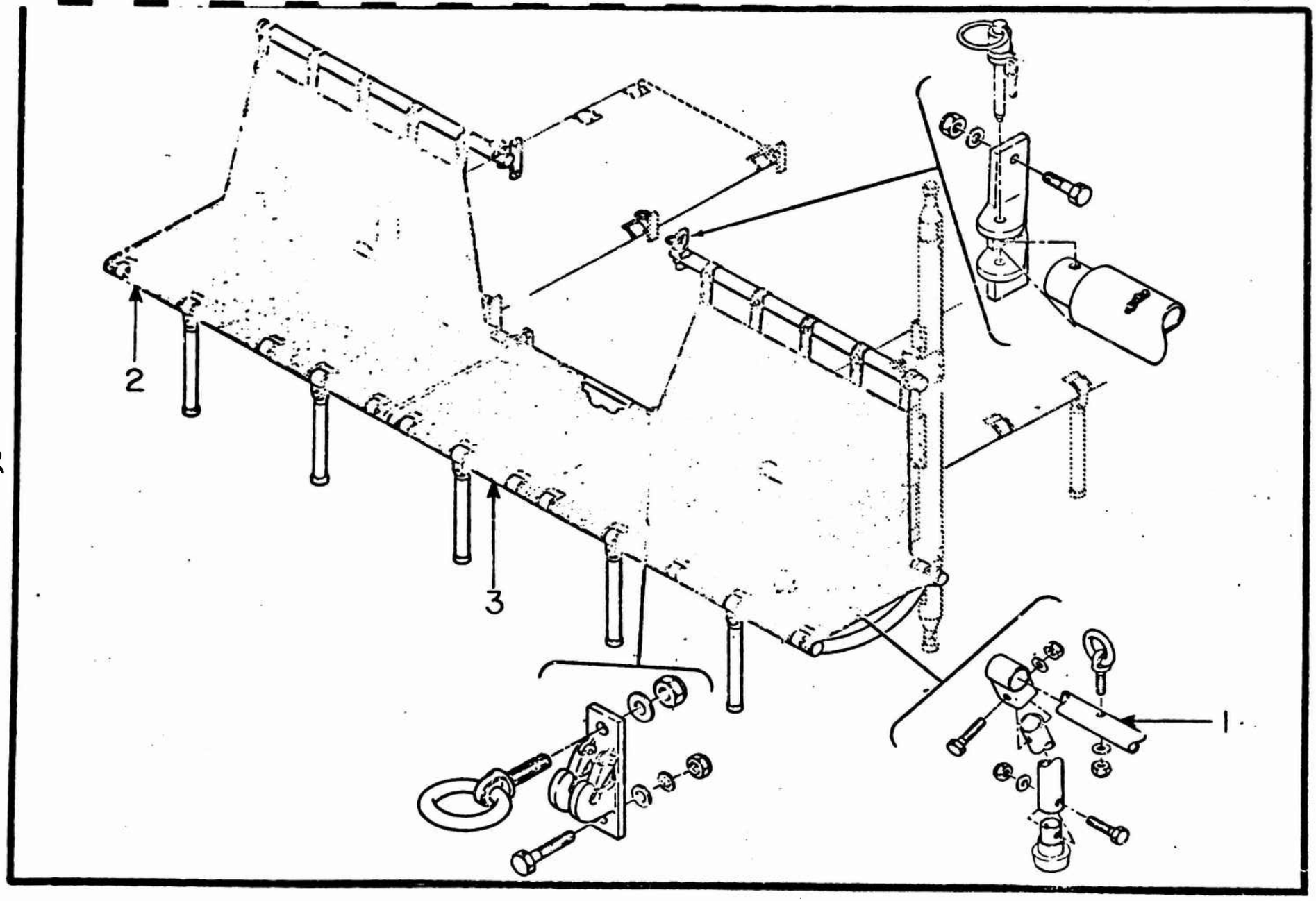

Figure 24 Seat Installation, Passenger

UH-1H FLAT RATE DATA
FUNCTIONAL GROUP 01
REFERENCE FIGURE 24

ITEM NO.	NOMENCLATURE	FSN/PN	ACTION CODE	MAINT. LEVEL	MEAN	MEDIAN	MODE	STD. DEV.	SAMPLE SIZE
1	Aft Tube Assy	16800140697 16809671766 53069671776	Replace	Total	0.8	0.5	0.5	0.356	17
				Org.	0.8	0.5	0.5	0.373	15
				Supp.	*	*	*	*	*
				Total					
				Org.					
				Supp.					
2	Seat Assy	16808242083	Replace	Total	0.8	0.5	0.5	0.311	27
				Org.	0.8	0.5	0.5	0.311	27
				Supp.	*	*	*	*	*
3	One-Man Seat Assy	16800142039	Replace	Total	0.7	0.5	0.5	0.312	25
				Org.	0.7	0.5	0.5	0.487	24
				Supp.	*	*	*	*	*
				Total					
				Org.					
				Supp.					
				Total					
				Org.					
				Supp.					
				Total					
				Org.					
				Supp.					
				Total					
				Org.					
				Supp.					
				Total					
				Org.					
				Supp.					
				Total					
				Org.					
				Supp.					

*Insufficient Data

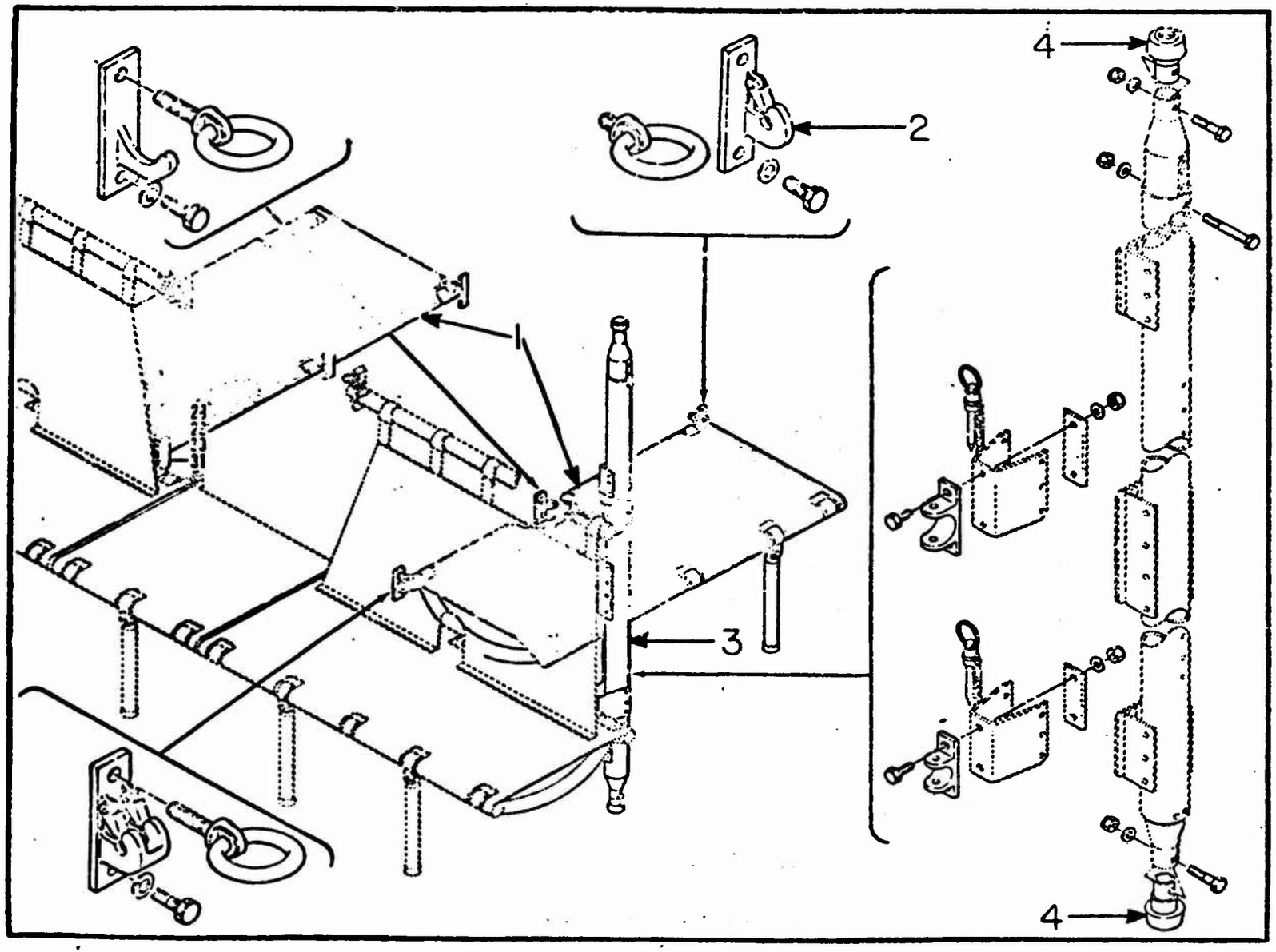

Figure 25. Seat Installation, Passenger

UH-1H FLAT RATE DATA
FUNCTIONAL GROUP 01
REFERENCE FIGURE 25

ITEM NO.	NOMEMCLATURE	FSN/PN	ACTION CODE	MAINT. LEVEL	MEAN	MEDIAN	MODE	STD. DEV	SAMPLE SIZE
1	Seat Assy	16809671762	Replace	Total	0.9	1.0	1.0	0.503	40
				Org.	0.9	1.0	1.0	0.514	39
				Supp.	*	*	*	*	*
			Removed and Installed	Total	2.2	1.5	1.0	1.648	20
				Org.	*	*	*	*	*
				Supp.	3.3	3.0	5.0	1.945	8
2	Fitting	16809671773	Replace	Total	0.9	1.0	1.0	0.312	60
				Org.	0.9	1.0	1.0	0.321	55
				Supp.	*	*	*	*	*
3	Stanchion Assy	16809418708	Replace	Total	0.6	0.5	0.5	0.336	16
				Org.	0.6	0.5	0.5	0.305	13
				Supp.	*	*	*	*	*
4	Fitting Assy	16805924878 16809671769 16809671770	Replace	Total	0.9	1.0	1.0	0.414	59
				Org.	0.9	1.0	1.0	0.426	46
				Supp.	1.0	1.0	1.0	0.382	13
				Total					
				Org.					
				Supp.					
				Total					
				Org.					
				Supp.					
				Total					
				Org.					
				Supp.					
				Total					
				Org.					
				Supp.					
				Total					
				Org.					
				Supp.					

*Insufficient Data

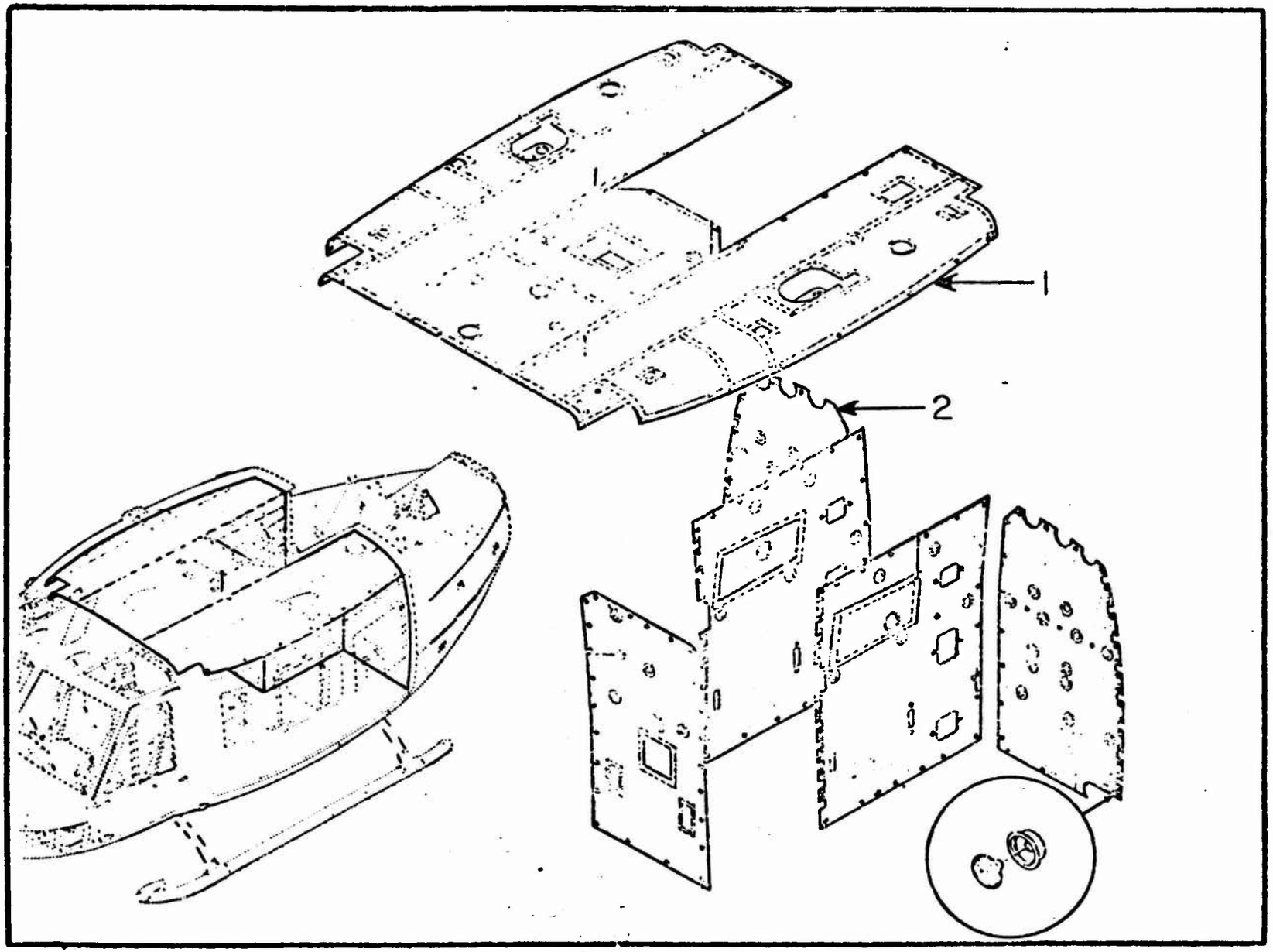

Figure 26 Blanket Installation, Soundproofing

UH-1H FLAT RATE DATA
FUNCTIONAL GROUP 01
REFERENCE FIGURE 26

ITEM NO.	NOMEMCLATURE	FSN/PN	ACTION CODE	MAINT. LEVEL	MEAN	MEDIAN	MODE	STD. DEV.	SAMPLE SIZE
1	Blanket Assy	15600100392 15600513362 16809079695 16809079696 16809079697 16809277351 56400100393 56400140655 56407708287	Replace	Total	1.1	1.0	1.0	0.631	449
				Org.	1.0	1.0	1.0	0.625	372
				Supp.	1.3	1.0	1.0	0.595	76
			Removed and Installed	Total	1.5	2.0	2.0	0.764	22
				Org.	*	*	*	*	*
				Supp.	1.5	2.0	2.0	0.750	21
				Total					
				Org.					
				Supp.					
2	Sound Absorbing Blanket	56407828502 56407828503 56407828505 56407828507 56407965173 56409234075	Replace	Total	1.0	1.0	0.5	0.662	91
				Org.	1.0	1.0	0.5	0.652	89
				Supp.	*	*	*	*	*
				Total					
				Org.					
				Supp.					
				Total					
				Org.					
				Supp.					
				Total					
				Org.					
				Supp.					
				Total					
				Org.					
				Supp.					
				Total					
				Org.					
				Supp.					
				Total					
				Org.					
				Supp.					

*Insufficient Data

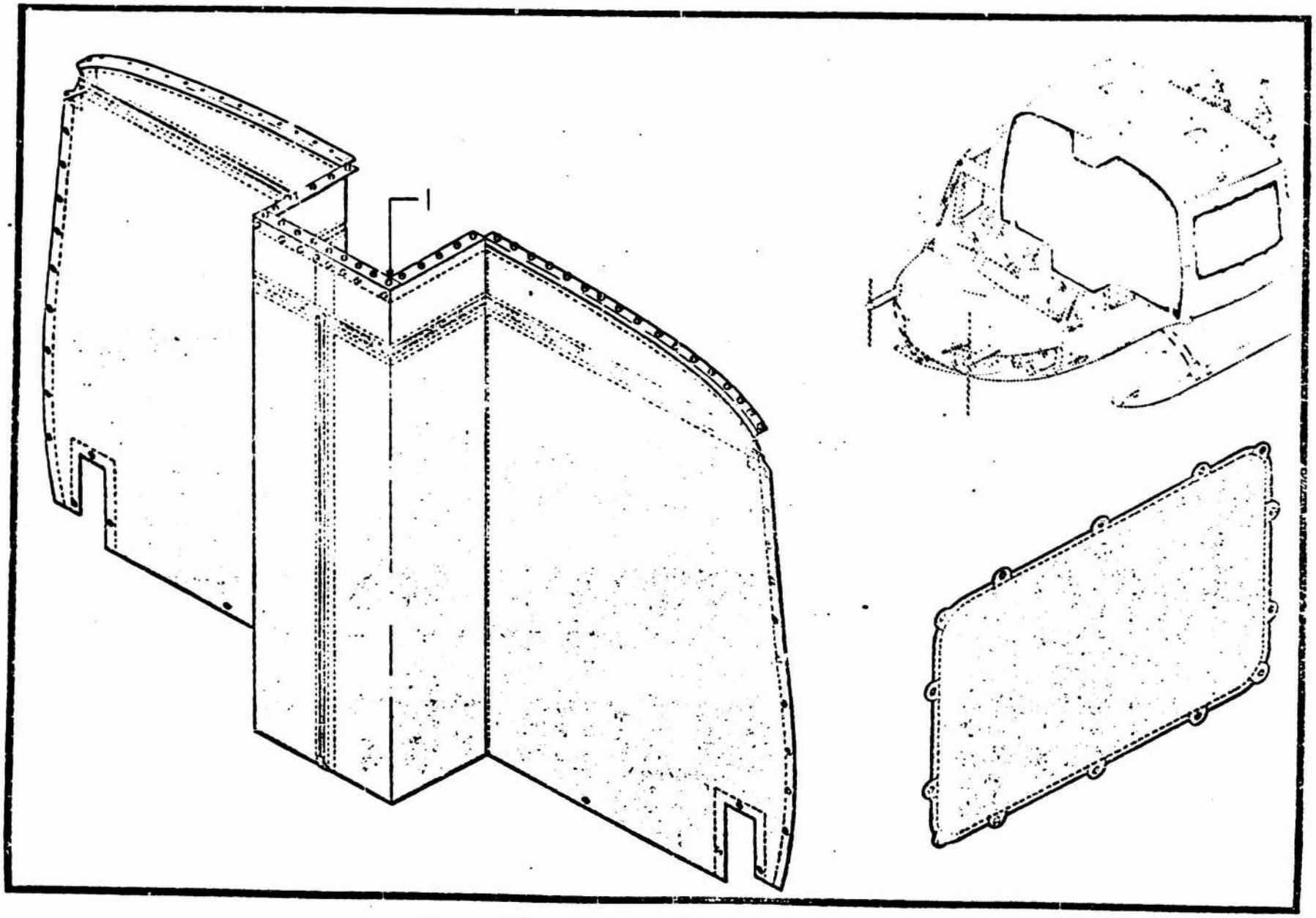

Figure 27 Curtain Installation, Blackout

UH-1H FLAT RATE DATA
FUNCTIONAL GROUP 01
REFERENCE FIGURE 27

ITEM NO.	NOMEMCLATURE	FSN/PN	ACTION CODE	MAINT. LEVEL	MEAN	MEDIAN	MODE	STD. DEV	SAMPLE SIZE
1	Stud	53252764931 53252853278	Replace	Total Org. Supp.	1.5 * 1.6	1.5 * 1.5	1.0 * 1.0	0.598 * 0.603	31 * 29
				Total Org. Supp.					
				Total Org. Supp.					
				Total Org. Supp.					
				Total Org. Supp.					
				Total Org. Supp.					
				Total Org. Supp.					
				Total Org. Supp.					
				Total Org. Supp.					
				Total Org. Supp.					

*Insufficient Data

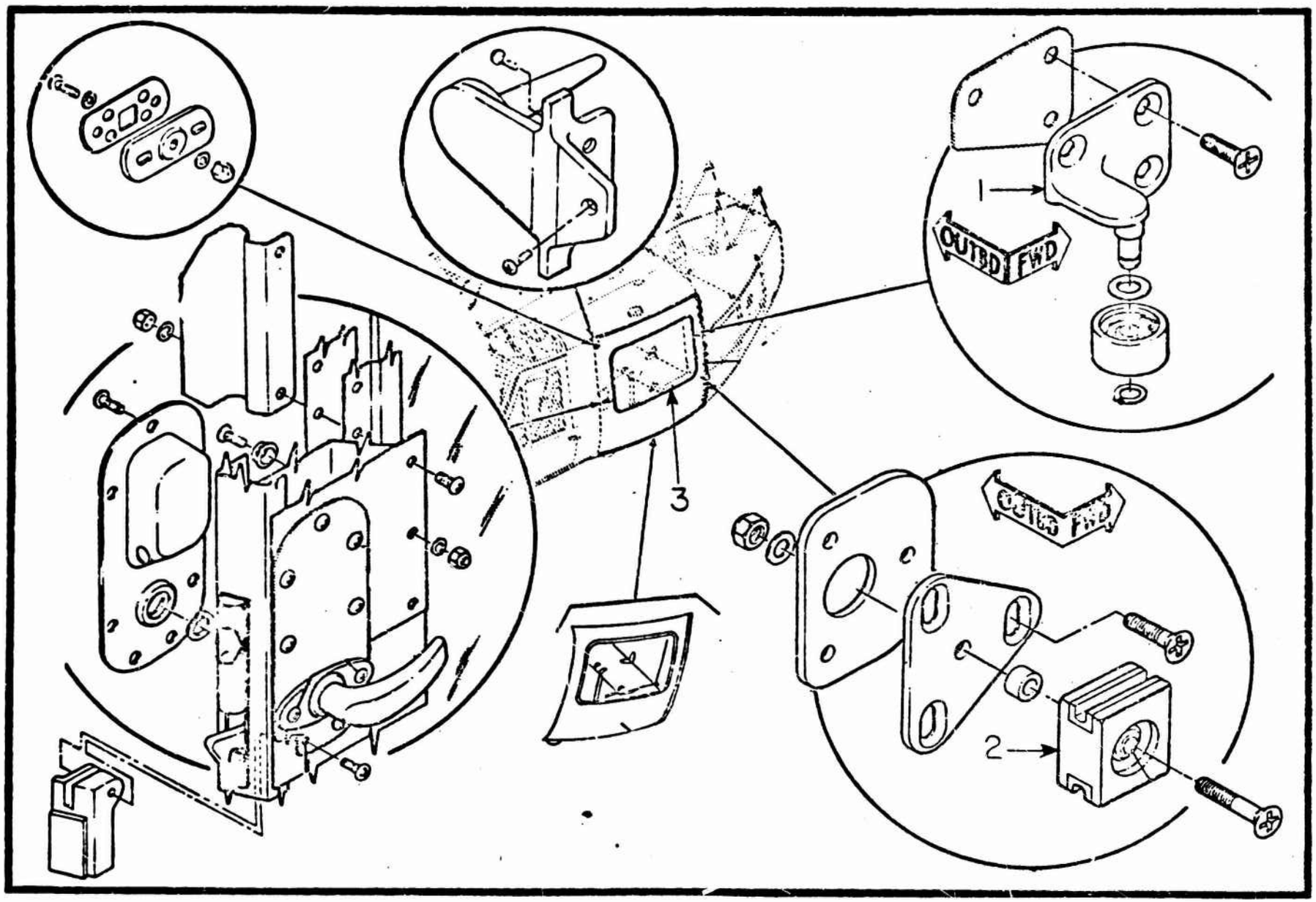

Figure 28 Door Assembly, Cargo

UH-1H FLAT RATE DATA
FUNCTIONAL GROUP 01
REFERENCE FIGURE 23

ITEM NO.	NOMEMCLATURE	FSN/PN	ACTION CODE	MAINT. LEVEL	MEAN	MEDIAN	MODE	STD. DEV.	SAMPLE SIZE
1	Bracket Assy	15606534328 15606534357 15608718687 15608727863	Replace	Total	1.0	1.0	1.0	0.441	93
				Org.	1.0	1.0	1.0	0.443	92
				Supp.	*	*	*	*	*
				Total					
				Org.					
				Supp.					
2	Slide Assy	15608727860	Replace	Total	1.2	1.0	1.0	0.558	1691
				Org.	1.2	1.0	1.0	0.553	1256
				Supp.	1.1	1.0	1.0	0.571	435
3	Window Assy	15606720064 15609671797	Replace	Total	6.8	6.0	4.0	2.630	54
				Org.	*	*	*	*	*
				Supp.	6.9	6.0	10.0	2.813	36
				Total					
				Org.					
				Supp.					
				Total					
				Org.					
				Supp.					
				Total					
				Org.					
				Supp.					
				Total					
				Org.					
				Supp.					
				Total					
				Org.					
				Supp.					
				Total					
				Org.					
				Supp.					

*Insufficient Data

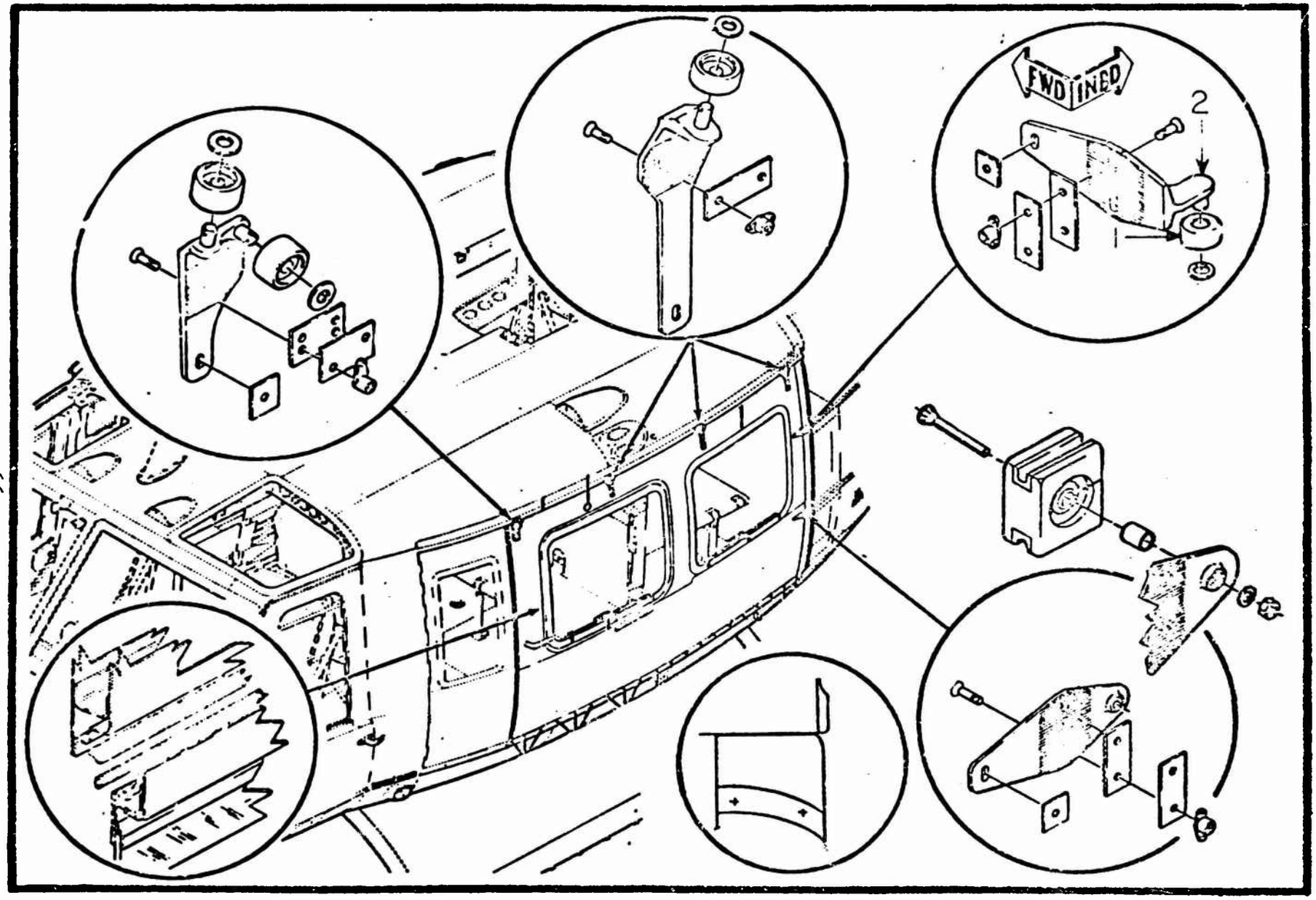

Figure 29 Door Assembly, Cargo

UH-1H FLAT RATE DATA
FUNCTIONAL GROUP 01
REFERENCE FIGURE 29

ITEM NO.	NOMEMCLATURE	FSN/PN	ACTION CODE	MAINT. LEVEL	MEAN	MEDIAN	MODE	STD. DEV.	SAMPLE SIZE
1	Door Roller	31209671798 31209671799	Replace	Total Org. Supp.	1.2 1.2 1.4	1.0 1.0 1.5	1.0 1.0 1.0	0.612 0.601 0.622	229 185 44
2	Roller Support	15609669366 15609669368 15609673380 15609673381	Replace	Total Org. Supp.	1.3 * 2.1	1.0 * 2.0	2.0 * 2.0	 1.441	30 * 15
				Total Org. Supp.					
--	Cargo Door Assy	15609279514 15609279515	Replace	Total Org. Supp.	1.5 1.5 1.5	1.5 1.0 1.5	1.0 1.0 1.0	0.700 0.766 0.623	76 41 35
			Repair	Total Org. Supp.	2.3 * 2.3	2.0 * 2.0	2.0 * 2.0	1.239 * 1.289	356 * 328
			Removed and Installed	Total Org. Supp.	2.6 * 2.5	2.0 * 2.0	2.0 * 2.0	0.978 * 0.973	55 * 41
			Installed	Total Org. Supp.	0.5 * 0.6	0.5 * 0.5	0.5 * 0.5	0.213 * 0.209	29 * 19
				Total Org. Supp.					
				Total Org. Supp.					
				Total Org. Supp.					

*Insufficient Data

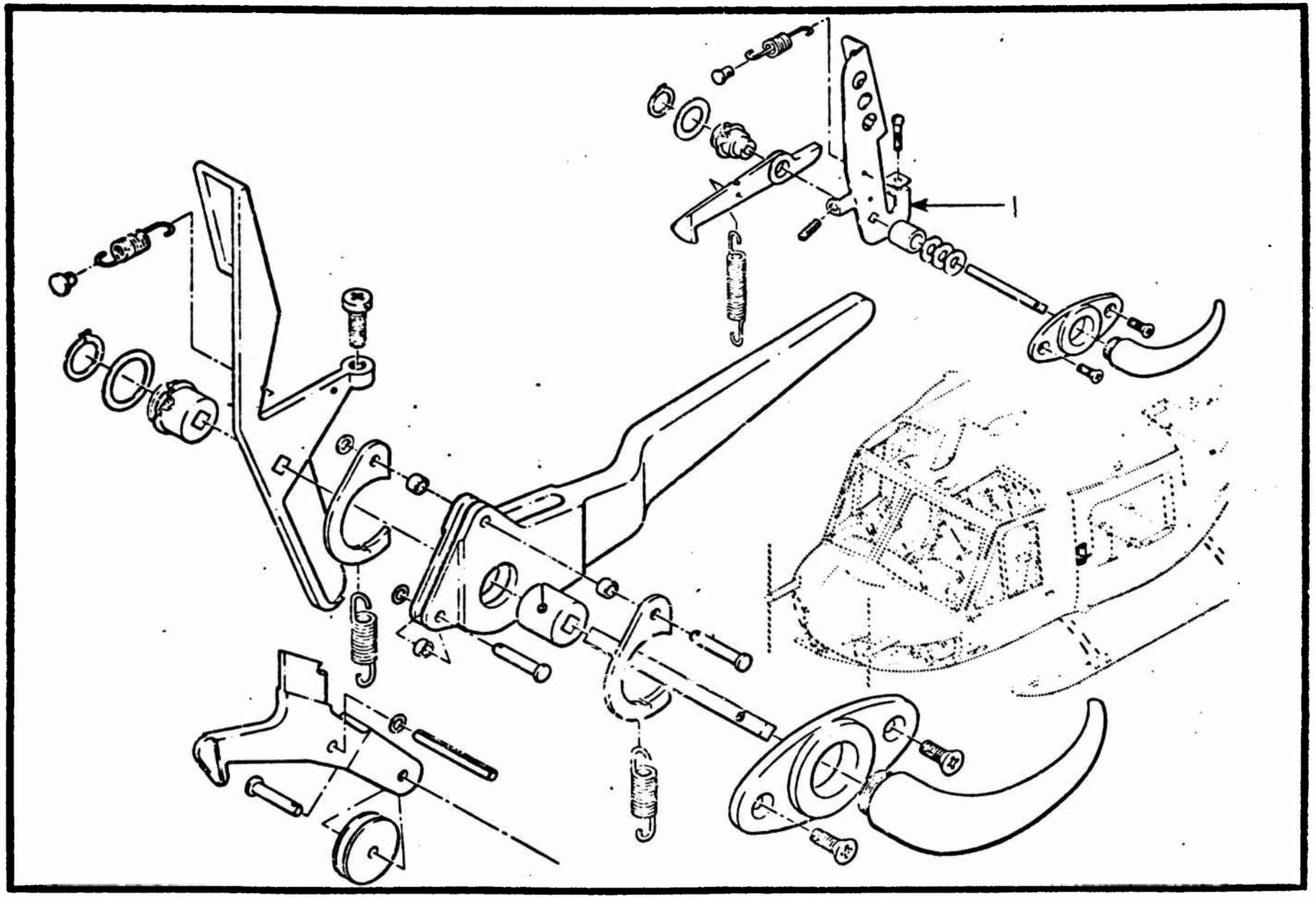

Figure 30 Latch Installation, Cargo Door

UH-1H FLAT RATE DATA
FUNCTIONAL GROUP 01
REFERENCE FIGURE 39

ITEM NO.	NOMEMCLATURE	FSN/PN	ACTION CODE	MAINT. LEVEL	MEAN	MEDIAN	MODE	STD. DEV.	SAMPLE SIZE
1	Handle	15608946538 15609669360 53400735435	Replace	Total	0.7	0.6	1.0	0.314	66
				Org.	0.7	0.5	1.0	0.302	59
				Supp.	1.0	1.0	1.0	0.289	7
			Repair	Total	1.7	2.0	2.0	0.518	6
				Org.	*	*	*	*	*
				Supp.	1.8	2.0	2.0	0.503	4
				Total					
				Org.					
				Supp.					
				Total					
				Org.					
				Supp.					
				Total					
				Org.					
				Supp.					
				Total					
				Org.					
				Supp.					
				Total					
				Org.					
				Supp.					
				Total					
				Org.					
				Supp.					
				Total					
				Org.					
				Supp.					
				Total					
				Org.					
				Supp.					

*Insufficient Data

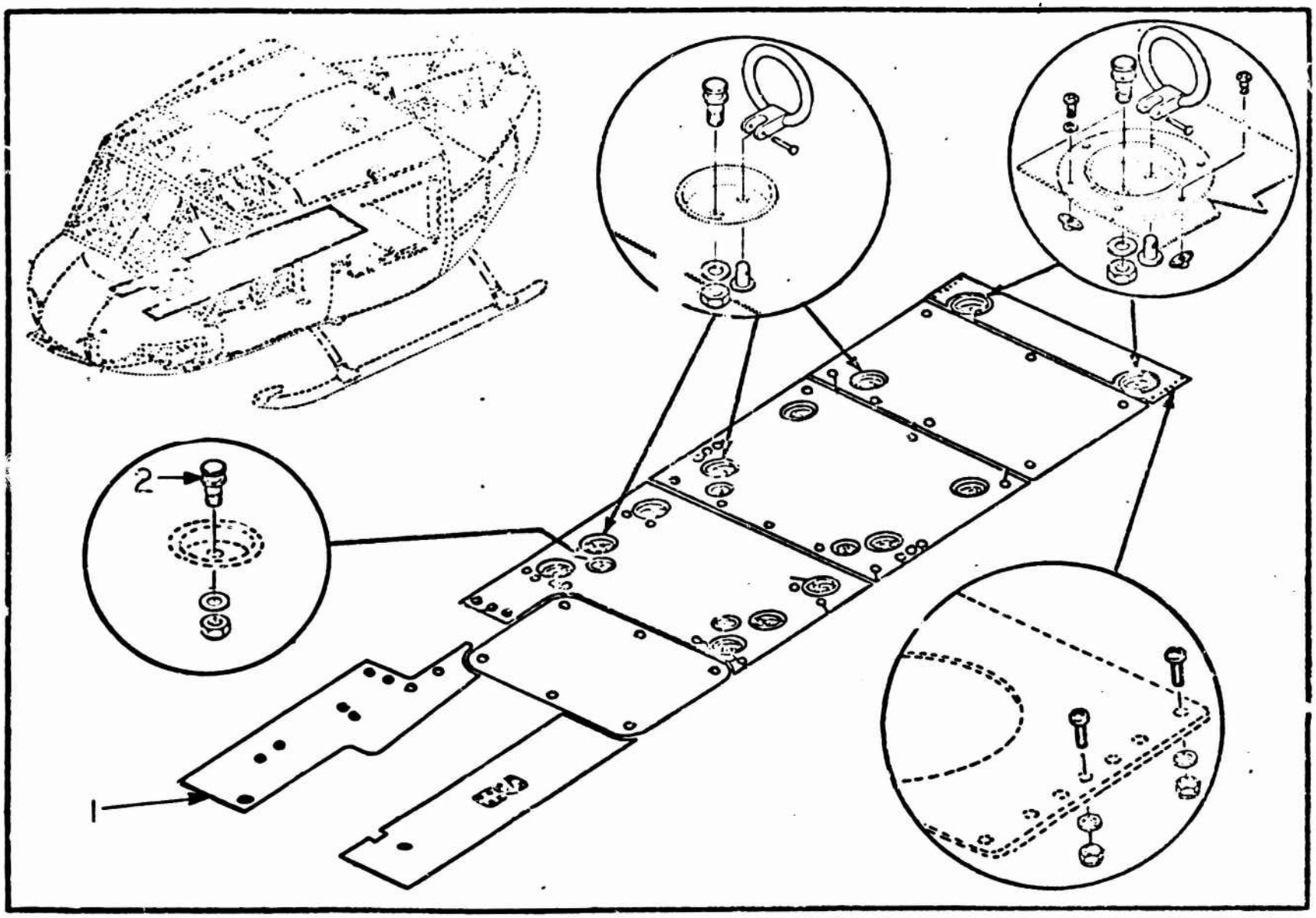

Figure 31 Fuselage Assembly, Structure Aft

UH-1H FLAT RATE DATA
FUNCTIONAL GROUP 01
REFERENCE FIGURE 31

ITEM NO.	NOMENCLATURE	FSN/PN	ACTION CODE	MAINT. LEVEL	MEAN	MEDIAN	MODE	STD. DEV	SAMPLE SIZE
1	Floor Assy	15601762103 1560179543 3 15602031168 15602031178 15608669544 15608764319 15608826480 15609222713 15609228248 15609228249 15609809558 15609875171 15609875176	Replace	Total	11.4	12.0	12.0	0.976	7
				Org.	*	*	*	*	*
				Supp.	11.6	12.0	12.0	0.894	5
				Total					
				Org.					
				Supp.					
				Total					
				Org.					
				Supp.					
				Total					
				Org.					
				Supp.					
				Total					
				Org.					
				Supp.					
2	Screw	53057289975	Replace	Total	0.9	1.0	1.0	0.494	28
				Org.	0.8	1.0	1.0	0.461	19
				Supp.	1.2	1.0	1.0	0.501	9
			Repair	Total	1.5	1.0	2.0	0.846	35
				Org.	*	*	*	*	*
				Supp.	1.5	1.3	2.0	0.863	33
			Removed	Total	1.3	1.0	2.0	0.697	11
				Org.	*	*	*	*	*
				Supp.	1.3	1.0	2.0	0.697	11
			Installed	Total	1.1	1.0	1.0	0.522	22
				Org.	*	*	*	*	*
				Supp.	1.1	1.0	1.0	0.566	16
				Total					
				Org.					
				Supp.					

*Insufficient Data

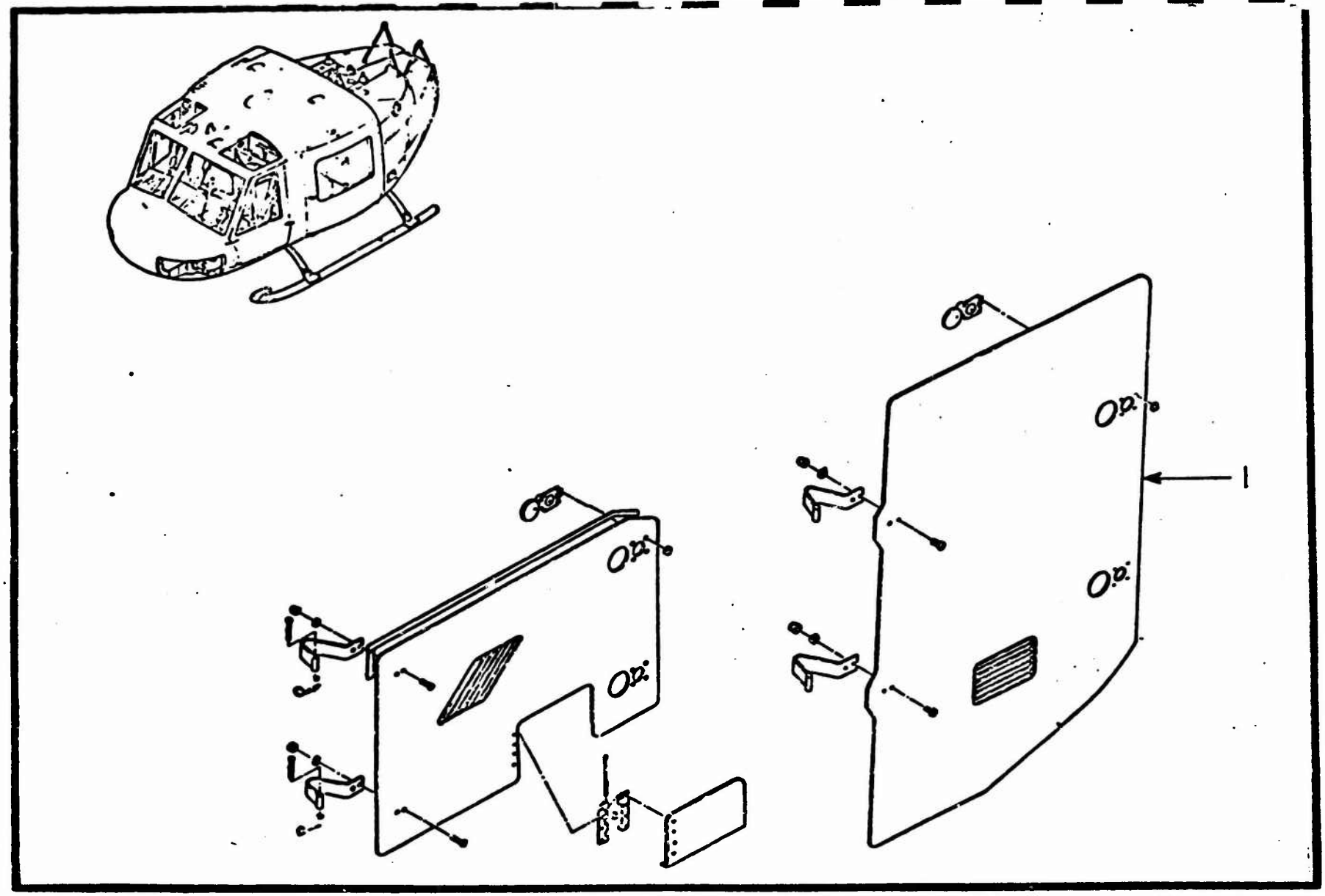

Figure 32 Door Assembly, Equipment

UH-1H FLAT RATE DATA
FUNCTIONAL GROUP 01
REFERENCE FIGURE 32

ITEM NO.	NOMEMCLATURE	FSN/PN	ACTION CODE	MAINT. LEVEL	MEAN	MEDIAN	MODE	STD. DEV.	SAMPLE SIZE
1	Door Assy	15607364029 15607364030 15607596616 15607657854 15608431224 15609077652 15609155928 15609530218 15609666126 15609733346 15609809548 15609873307 15609875212 15609875213 99994002746 99994002747 99994002748 99994002749	Replace	Total	2.0	2.0	2.0	0.156	15
				Org.	*	*	*	*	*
				Supp.	2.0	2.0	2.0	0.151	12
			Repair	Total	4.4	4.0	4.0	1.076	18
				Org.	*	*	*	*	*
				Supp.	4.3	4.0	4.0	1.034	17
				Total					
				Org.					
				Supp.					
				Total					
				Org.					
				Supp.					
				Total					
				Org.					
				Supp.					
				Total					
				Org.					
				Supp.					
				Total					
				Org.					
				Supp.					
				Total					
				Org.					
				Supp.					
				Total					
				Org.					
				Supp.					
				Total					
				Org.					
				Supp.					

*Insufficient Data

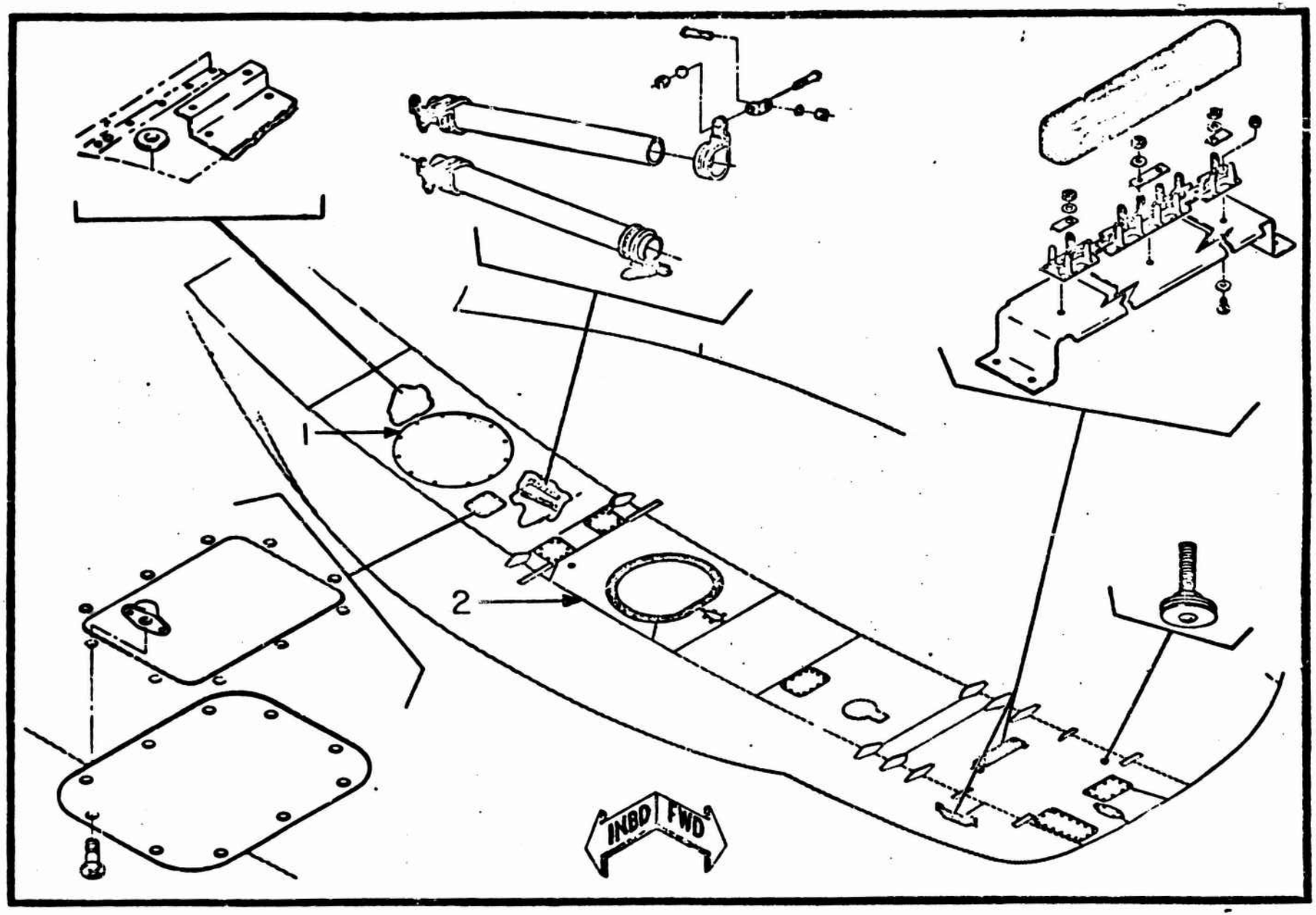

Figure 33 Fuselage Assembly, Lower Center

UH-1H FLAT RATE DATA
FUNCTIONAL GROUP 01
REFERENCE FIGURE 33

ITEM NO.	NOMENCLATURE	FSN/PN	ACTION CODE	MAINT. LEVEL	MEAN	MEDIAN	MODE	STD. DEV.	SAMPLE SIZE
1	Access Cover	15609667523	Replace	Total	0.9	1.0	1.0	0.231	10
				Org.	0.8	1.0	1.0	0.252	7
				Supp.	1.0	1.0	1.0	0.000	3
2	Panel Assy	15601761091 15604115897	Repair	Total	2.6	2.0	2.0	0.887	11
				Org.	*	*	*	*	*
				Supp.	2.8	2.5	3.0	0.967	8
			Service	Total	2.0	2.0	3.0	0.871	33
				Org.	*	*	*	*	*
				Supp.	2.0	2.0	3.0	0.873	23
				Total					
				Org.					
				Supp.					
				Total					
				Org.					
				Supp.					
				Total					
				Org.					
				Supp.					
				Total					
				Org.					
				Supp.					
				Total					
				Org.					
				Supp.					
				Total					
				Org.					
				Supp.					
				Total					
				Org.					
				Supp.					

*Insufficient Data

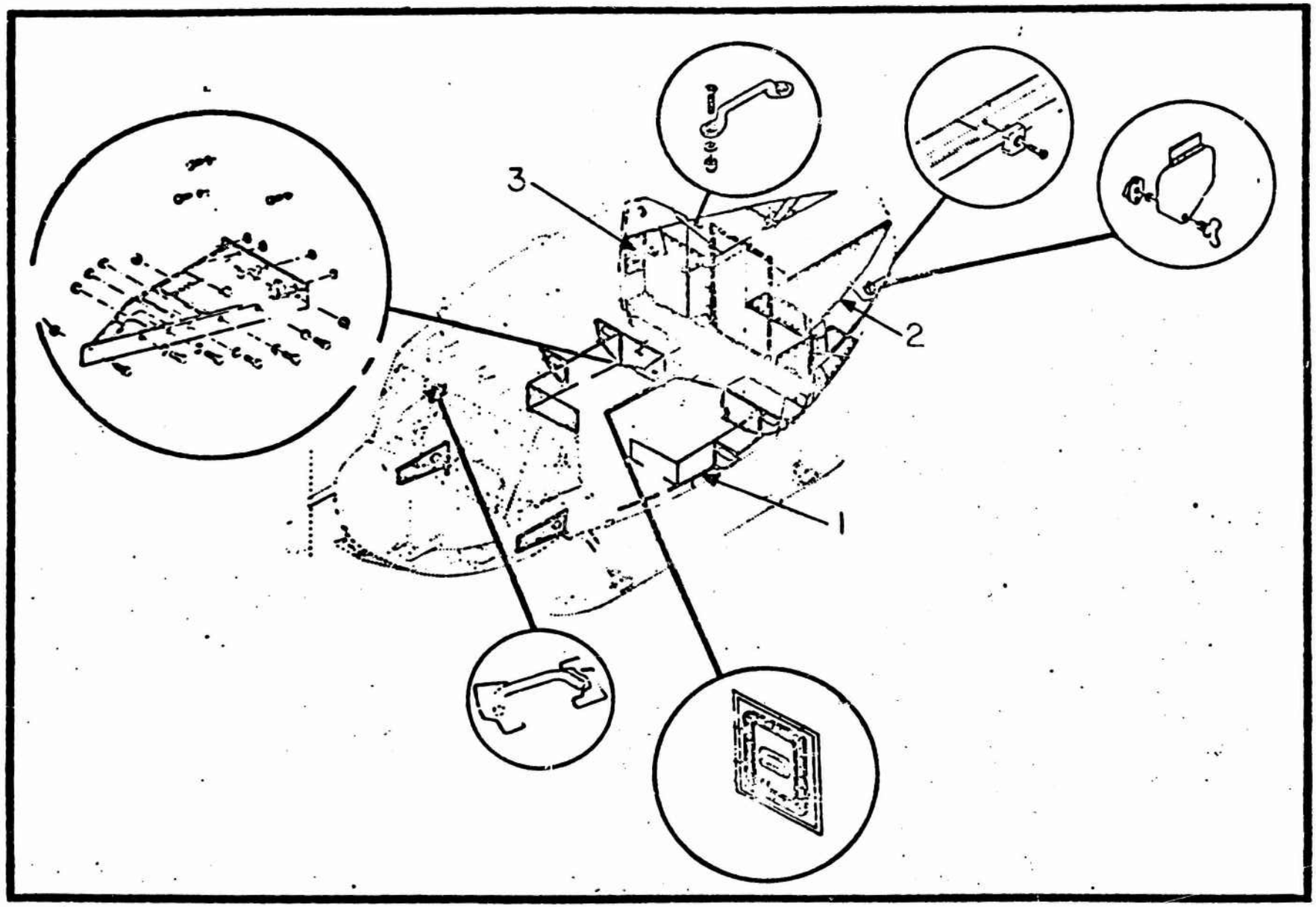

Figure 34 Fuselage Assembly, Structure Aft Section

UH-1H FLAT RATE DATA
FUNCTIONAL GROUP 01
REFERENCE FIGURE 34

ITEM NO.	NOMEMCLATURE	FSN/PN	ACTION CODE	MAINT. LEVEL	MEAN	MEDIAN	MODE	STD. DEV.	SAMPLE SIZE
1	Track	15607597524 15609967486 53401042591 53407951157 53408669531 53408675507 53409314802 53409880244 53409894254	Repair	Total Org. Supp.	2.3 * 2.3	2.0 * 2.0	1.0 * 1.0	1.250 * 1.271	30 * 29
				Total Org. Supp.					
				Total Org. Supp.					
2	Deck Assy	15601794097 15607880162 15609880163	Replace	Total Org. Supp.	32.0 * 32.0	30.0 * 30.0	40.0 * 40.0	5.755 * 5.755	29 * 29
			Repair	Total Org. Supp.	1.2 * 1.2	1.0 * 1.0	1.0 * 1.0	0.521 * 0.514	32 * 31
3	Panel Assy	15600718278 15600720814 15600897631 15600899080 15601732322 15601761089 15602031144 15602243686 15604357912 15608669545 15608810273 15608810300 15609362374 15609443167 15609976561	Repair	Total Org. Supp.	3.7 * 3.7	4.0 * 4.0	4.0 * 4.0	0.755 * 0.755	9 * 9
				Total Org. Supp.					
				Total Org. Supp.					
				Total Org. Supp.					
				Total Org. Supp.					

*Insufficient Data

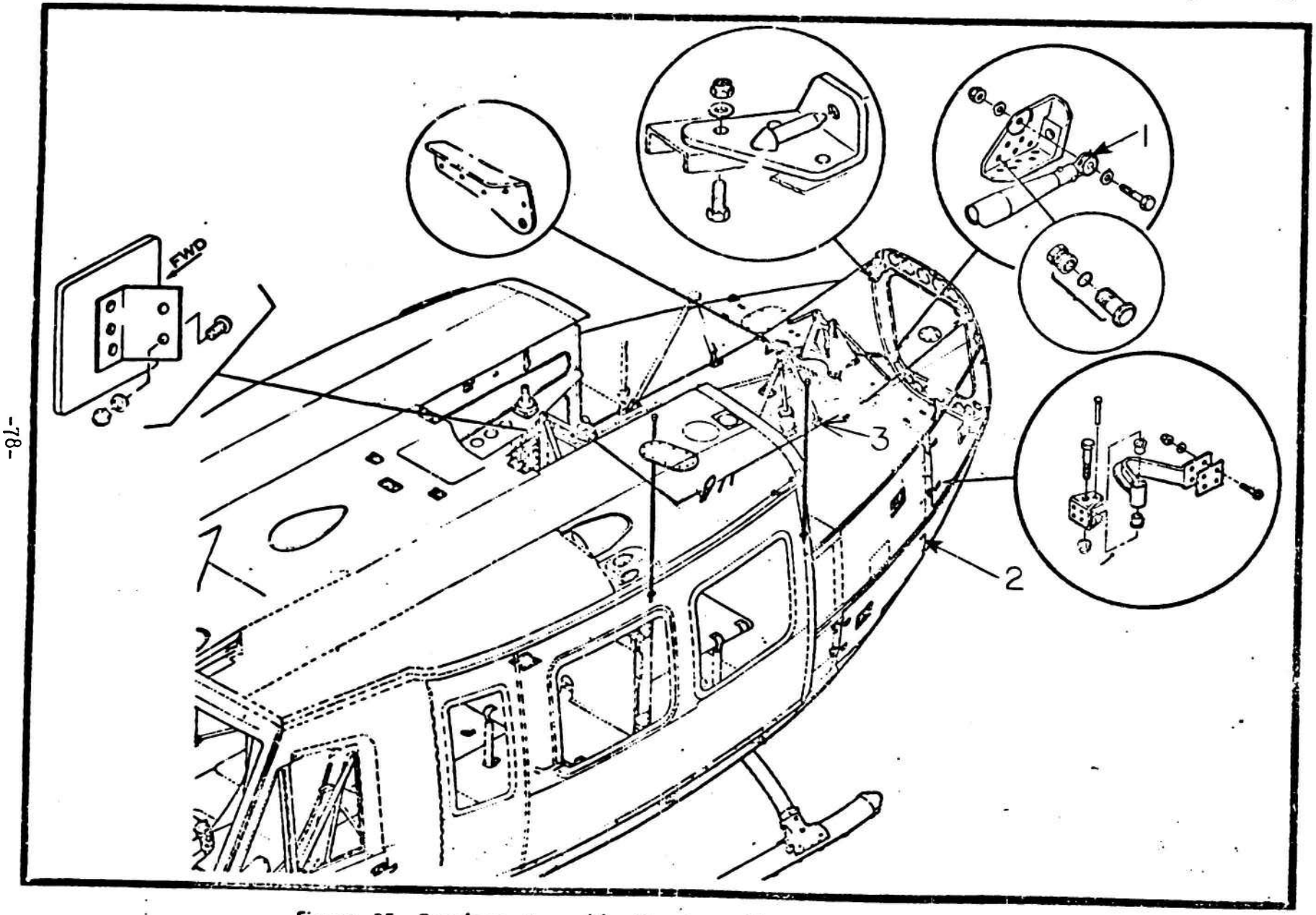

Figure 35 Fuselage Assembly, Structure Aft Section

UH-1H FLAT RATE DATA
FUNCTIONAL GROUP 01
REFERENCE FIGURE 35

ITEM NO.	NOMENCLATURE	FSN/PN	ACTION CODE	MAINT. LEVEL	MEAN	MEDIAN	MODE	STD. DEV.	SAMPLE SIZE
1	Connecting Link	30401796806	Replace	Total	0.9	1.0	1.0	0.267	37
				Org.	0.9	1.0	1.0	0.240	23
				Supp.	0.8	1.0	1.0	0.295	14
2	Catch Assy	53408727937	Replace	Total	1.3	1.0	1.0	0.674	406
				Org.	1.3	1.0	1.0	0.636	112
				Supp.	1.3	1.0	1.0	0.689	294
3	Bracket	15609673371	Replace	Total	4.4	4.0	4.0	1.327	12
				Org.	*	*	*	*	*
				Supp.	4.4	4.0	6.0	1.386	11
				Total					
				Org.					
				Supp.					
				Total					
				Org.					
				Supp.					
				Total					
				Org.					
				Supp.					
				Total					
				Org.					
				Supp.					
				Total					
				Org.					
				Supp.					
				Total					
				Org.					
				Supp.					
				Total					
				Org.					
				Supp.					

*Insufficient Data

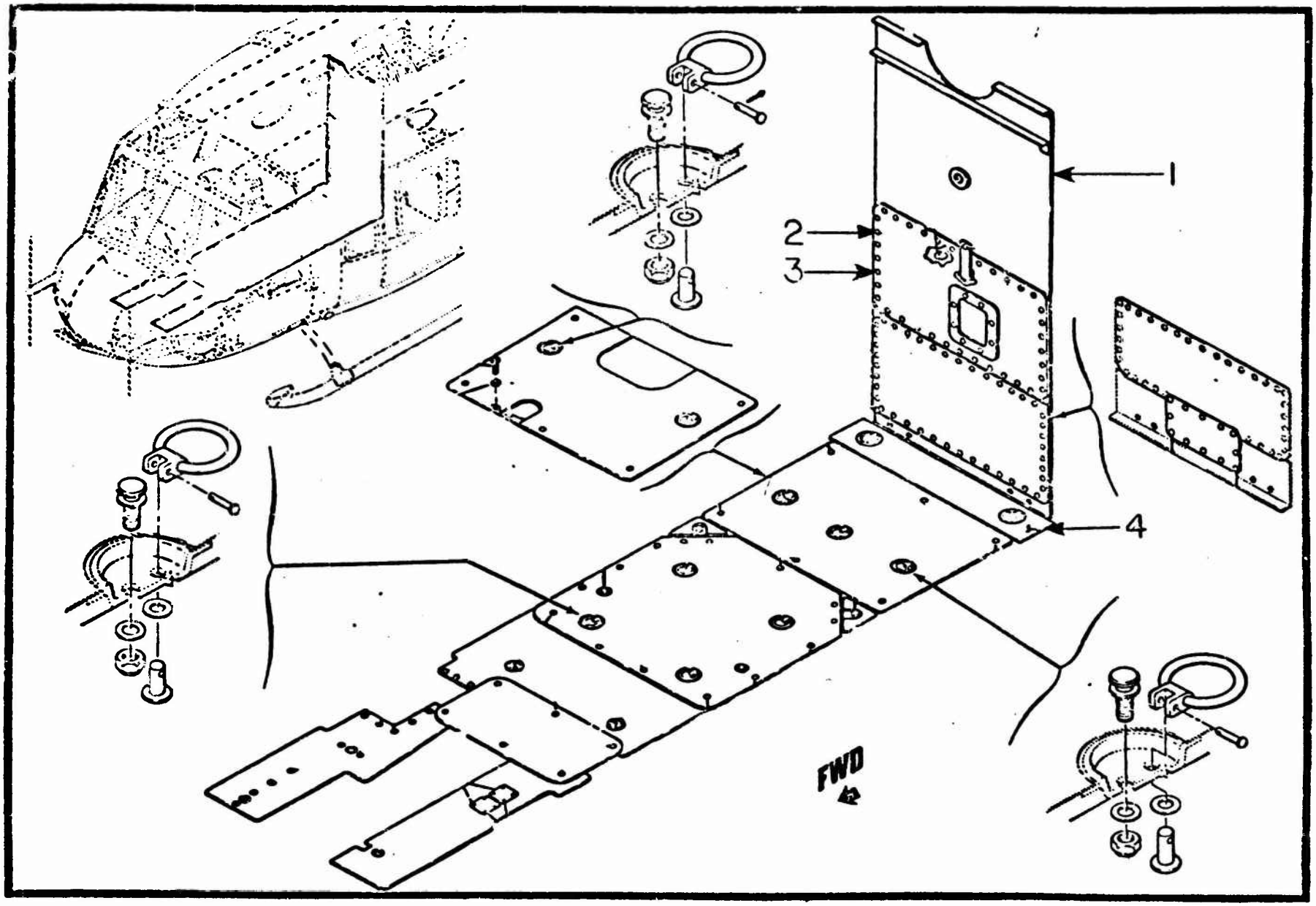

Figure 36 Fuselage Assembly, Structure

UH-1H FLAT RATE DATA
FUNCTIONAL GROUP 01
REFERENCE FIGURE 35

ITEM NO.	NOMENCLATURE	FSN/PN	ACTION CODE	MAINT. LEVEL	MEAN	MEDIAN	MODE	STD. DEV.	SAMPLE SIZE
1	Cover Assy	15600721076 15604614365	Replace	Total	0.8	1.0	1.0	0.254	19
				Org.	*	*	*	*	*
				Supp.	1.0	1.0	1.0	0.166	10
2	Bolt	53060659659	Replace	Total	1.0	1.0	1.0	0.500	46
				Org.	0.9	1.0	1.0	0.434	26
				Supp.	1.1	1.0	0.5	0.568	20
3	Ring	53408302139 53409963945	Replace	Total	1.0	1.0	0 5	0.529	43
				Org.	0.8	0.5	0.5	0.440	24
				Supp.	1.2	1.0	1.0	0.558	19
4	Floor Assy	15601796253 15601814560 15604421679 15607357542	Repair	Total	0.8	1.0	1.0	0.400	4
				Org.	*	*	*	*	*
				Supp.	1.0	1.0	1.0	0.000	3
				Total					
				Org.					
				Supp.					
				Total					
				Org.					
				Supp.					
				Total					
				Org.					
				Supp.					
				Total					
				Org.					
				Supp.					
				Total					
				Org.					
				Supp.					
				Total					
				Org.					
				Supp.					

*Insufficient Data

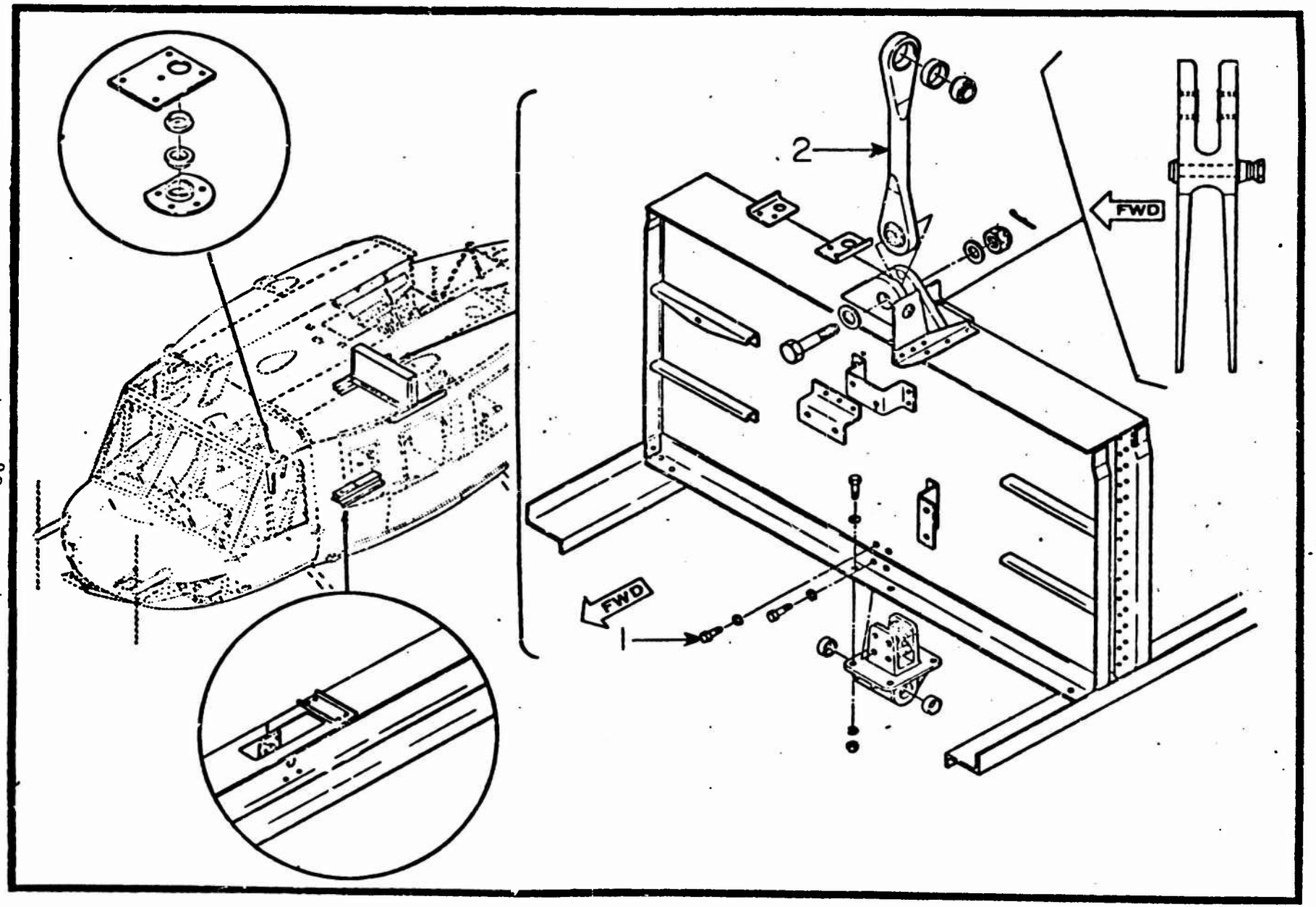

Figure 37 Fuselage Assembly, Structure

UH-1H FLAT RATE DATA
FUNCTIONAL GROUP 01
REFERENCE FIGURE 37

ITEM NO.	NOMEMCLATURE	FSN/PN	ACTION CODE	MAINT. LEVEL	MEAN	MEDIAN	MODE	STD. DEV.	SAMPLE SIZE
1	Bolt	53061562533 53068472226	Replace	Total Org. Supp.	0.8 * 0.9	1.0 * 1.0	1.0 * 1.0	0.260 * 0.237	15 * 11
2	Link Assy	15602215691	Replace	Total Org. Supp.	2.1 2.0 2.2	2.0 1.5 2.0	1.0 1.0 2.0	1.317 1.274 1.341	106 34 72
				Total Org. Supp.					
				Total Org. Supp.					
				Total Org. Supp.					
				Total Org. Supp.					
				Total Org. Supp.					
				Total Org. Supp.					
				Total Org. Supp.					
				Total Org. Supp.					

*Insufficient Data

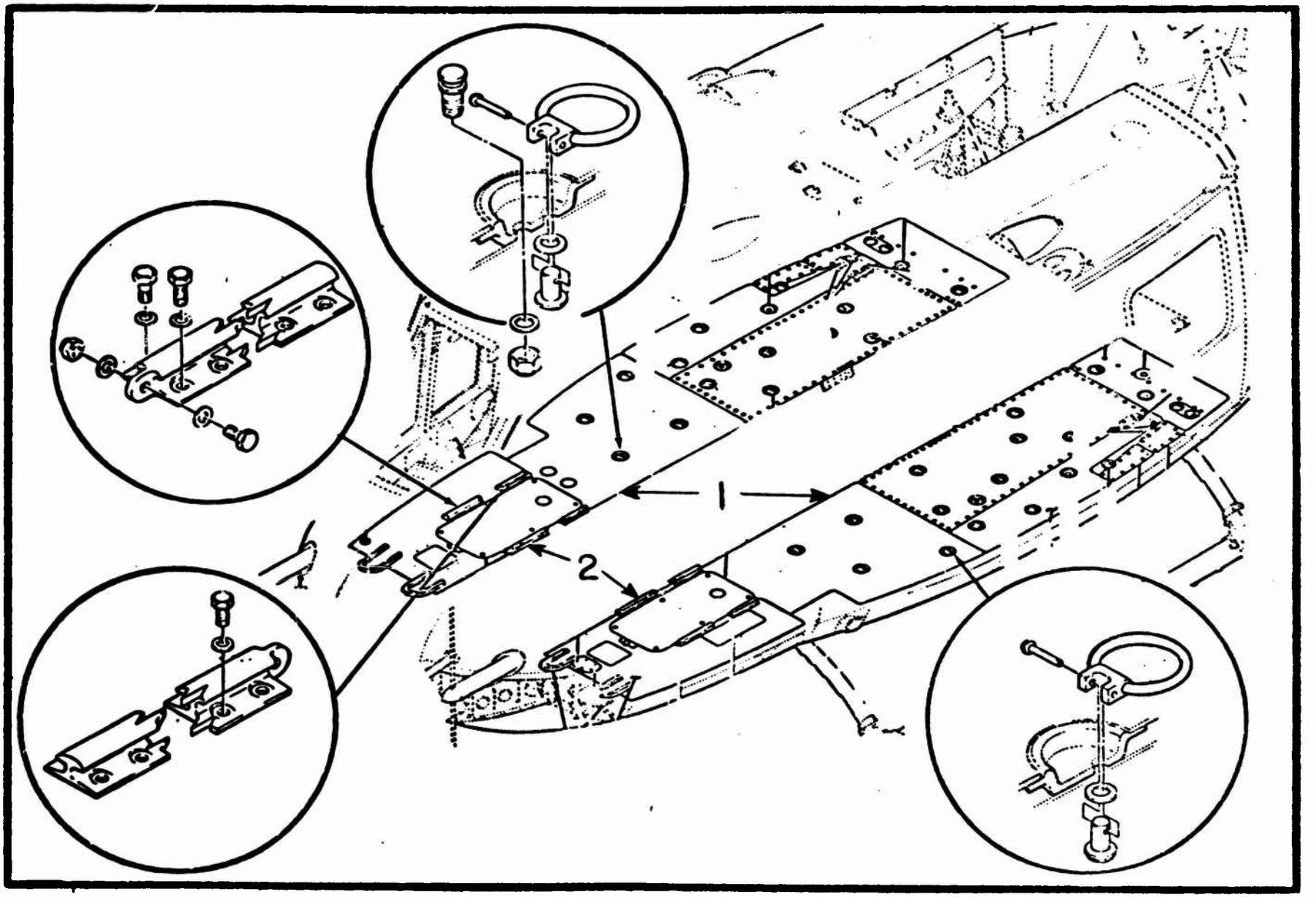

Figure 38 Floor Installation

UH-1H FLAT RATE DATA
FUNCTIONAL GROUP 01
REFERENCE FIGURE 33

ITEM NO.	NOMEMCLATURE	FSN/PN	ACTION CODE	MAINT. LEVEL	MEAN	MEDIAN	MODE	STD. DEV.	SAMPLE SIZE
1	Floor Panel	15600665307 15600750137 15600863567 15601032416 15601032417 15601336322 15608265631 15608288140 15608288142 15608447910 15609072256 15609097048 15609385972 15609397624	Repair	Total	3.4	2.5	1.0	2.574	226
				Org.	*	*	*	*	*
				Supp.	3.5	2.5	1.0	2.584	223
			Removed and Installed	Total	4.9	6.0	7.0	2.513	163
				Org.	*	*	*	*	*
				Supp.	5.1	6.0	7.0	2.505	158
				Total Org. Supp.					
				Total Org. Supp.					
				Total Org. Supp.					
2	Track Assy	15609671784 15609671785	Replace	Total	3.9	3.0	1.0	2.942	84
				Org.	2.7	2.0	1.0	1.979	45
				Supp.	5.2	4.5	10.0	3.287	39
				Total Org. Supp.					
				Total Org. Supp.					
				Total Org. Supp.					
				Total Org. Supp.					

*Insufficient Data

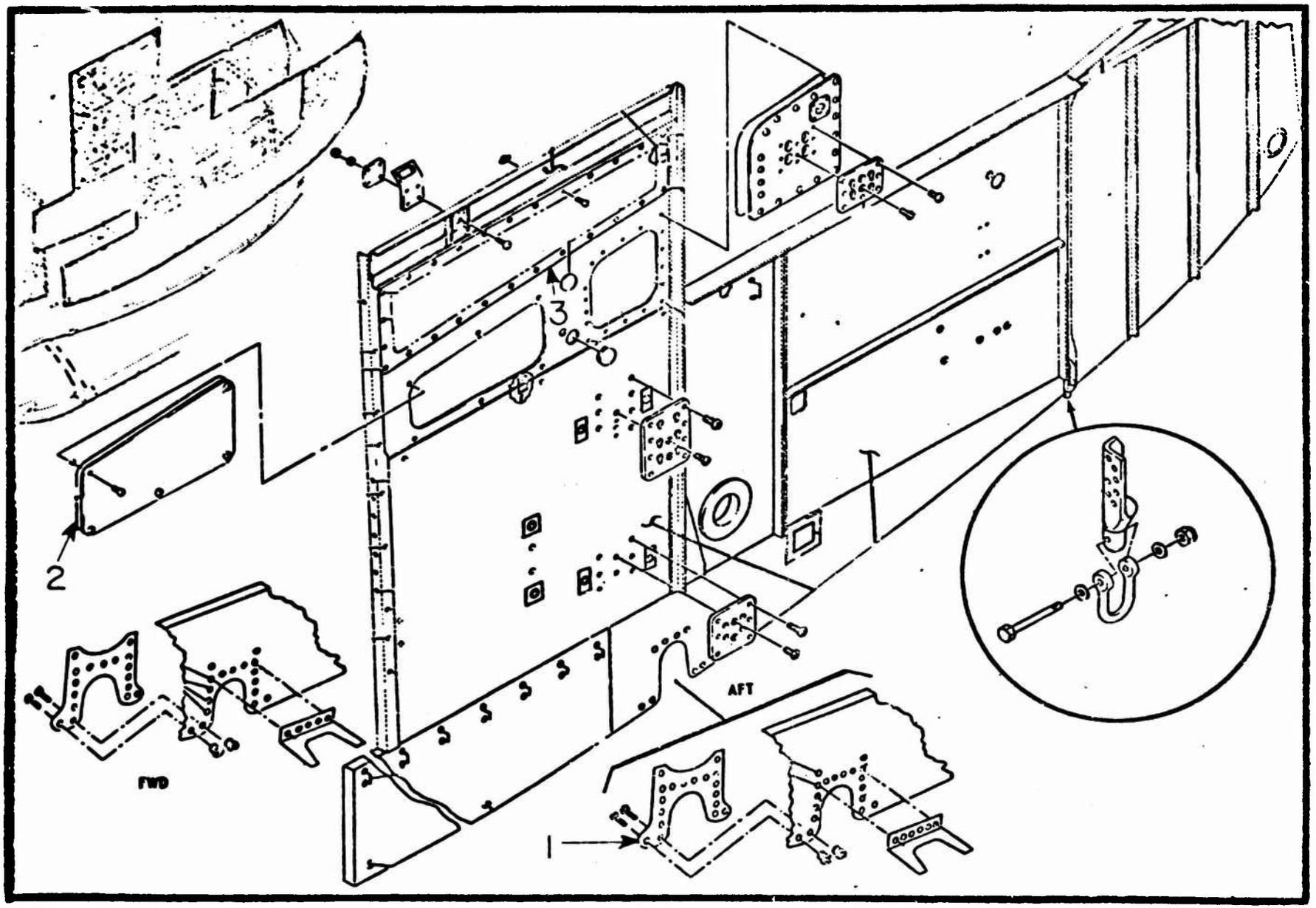

Figure 39 Beam Assembly

UH-1H FLAT RATE DATA
FUNCTIONAL GROUP 01
REFERENCE FIGURE 39

ITEM NO.	NOMENCLATURE	FSN/PN	ACTION CODE	MAINT. LEVEL	MEAN	MEDIAN	MODE	STD. DEV.	SAMPLE SIZE
1	Support	15601191178 15601191179 15606676801 15609476224 15609480445 15609875162	Replace	Total	2.1	2.5	3.0	0.899	7
				Org.	*	*	*	*	*
				Supp.	2.1	2.5	3.0	0.899	7
			Repair	Total	8.0	10.0	10.0	2.739	5
				Org.	*	*	*	*	*
				Supp.	8.0	10.0	10.0	2.739	5
2	Seal	53307612218 53307612219	Replace	Total	1.8	1.5	1.0	0.973	36
				Org.	*	*	*	*	*
				Supp.	2.0	2.0	2.0	0.962	21
3	Door Assy	15609875174 15609875175 15609875178	Replace	Total	1.9	2.0	2.0	0.857	12
				Org.	*	*	*	*	*
				Supp.	1.9	2.0	2.0	0.641	8
				Total					
				Org.					
				Supp.					
				Total					
				Org.					
				Supp.					
				Total					
				Org.					
				Supp.					
				Total					
				Org.					
				Supp.					
				Total					
				Org.					
				Supp.					
				Total					
				Org.					
				Supp.					

*Insufficient Data

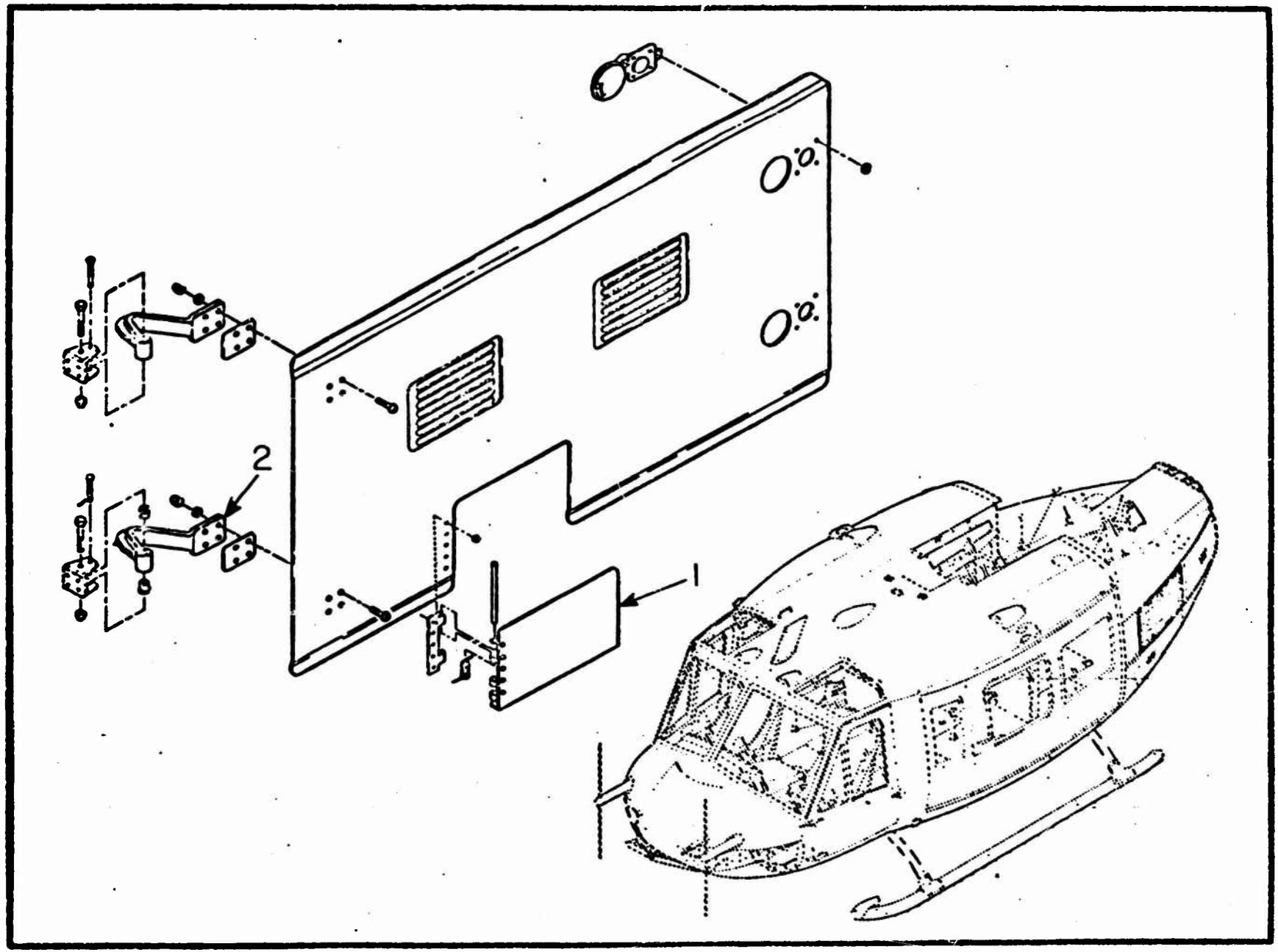

Figure 40 Door Installation

UH-1H FLAT RATE DATA
FUNCTIONAL GROUP 01
REFERENCE FIGURE 40

ITEM NO.	NOMEMCLATURE	FSN/PN	ACTION CODE	MAINT. LEVEL	MEAN	MEDIAN	MODE	STD. DEV.	SAMPLE SIZE
1	Door Assy	15609666124 15609875211 99994002750 99994002751	Replace	Total	1.6	1.5	2.0	0.614	17
				Org.	*	*	*	*	*
				Supp.	1.7	1.5	2.0	0.560	14
			Repair	Total	1.1	1.0	1.0	0.530	23
				Org.	*	*	*	*	*
				Supp.	1.1	1.0	1.0	0.536	20
2	Hinge	53409430833 53409430851	Replace	Total	1.5	1.5	2.0	0.555	14
				Org.	1.4	1.0	2.0	0.583	8
				Supp.	1.7	2.0	2.0	0.518	6
				Total					
				Org.					
				Supp.					
				Total					
				Org.					
				Supp.					
				Total					
				Org.					
				Supp.					
				Total					
				Org.					
				Supp.					
				Total					
				Org.					
				Supp.					
				Total					
				Org.					
				Supp.					
				Total					
				Org.					
				Supp.					

*Insufficient Data

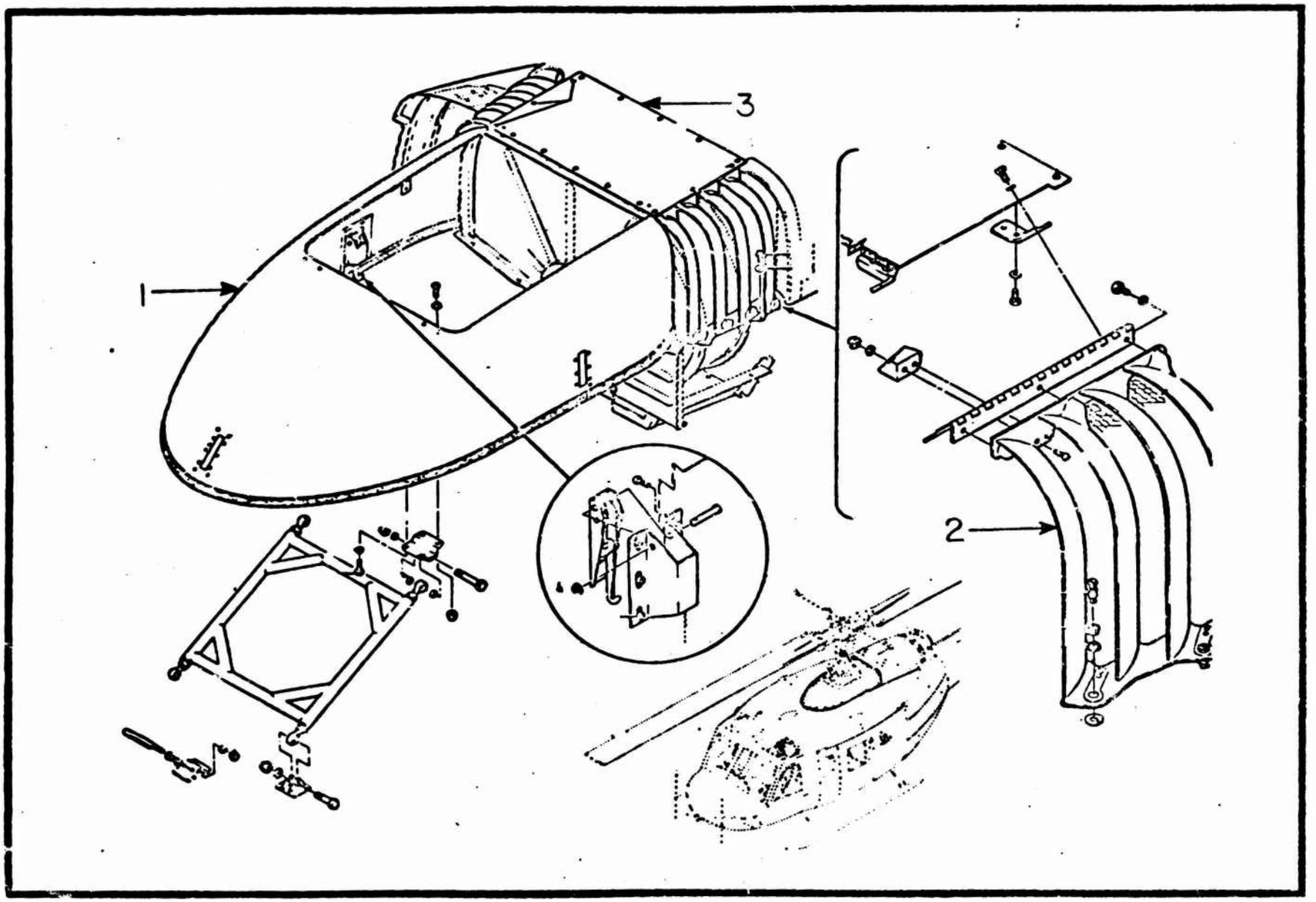

Figure 41 Cowl Installation, Forward

UH-1H FLAT RATE DATA
FUNCTIONAL GROUP 01
REFERENCE FIGURE 41

ITEM NO.	NOMENCLATURE	FSN/PN	ACTION CODE	MAINT. LEVEL	MEAN	MEDIAN	MODE	STD. DEV.	SAMPLE SIZE
1	Fairing Assy	15600730333	Replace	Total	1.4	1.0	1.0	0.434	12
				Org.	1.3	1.0	1.0	0.422	10
				Supp.	1.8	1.5	2.0	0.361	2
			Repair	Total	4.4	3.0	1.0	3.592	24
				Org	*	*	*	*	*
				Supp.	4.5	3.5	1.0	3.583	21
			Removed and Installed	Total	0.8	0.7	0.3	0.621	68
				Org.	*	*	*	*	*
				Supp.	1.4	1.0	1.0	0.646	6
2	Louver Assy	15600730341	Adjust	Total	1.5	0.5	0.5	1.683	4
				Org.	4.0	4.0	4.0	0.000	1
				Supp.	0.7	0.5	0.5	0.292	3
			Removed and Installed	Total	1.4	1.0	0.5	1.211	27
				Org.	0.8	0.5	0.5	0.408	17
				Supp.	2.4	2.0	2.0	1.449	10
3	Filter Assy	29450273016 29450273022 29450273025 29458718708 29458718710 29459162620 29459162621 29459162622	Replace	Total	0.9	0.5	0.5	0.651	741
				Org.	0.8	0.5	0.5	0.575	603
				Supp.	1.3	1.0	1.0	0.817	138
			Repair	Total	3.1	2.0	2.0	2.364	42
				Org.	*	*	*	*	*
				Supp.	3.4	2.0	2.0	2.438	36
			Removed and Installed	Total	1.3	0.5	0.5	1.284	79
				Org.	0.7	0.5	0.5	0.595	48
				Supp.	2.1	2.0	2.0	1.570	31
				Total Org. Supp.					
				Total Org. Supp.					

*Insufficient Data

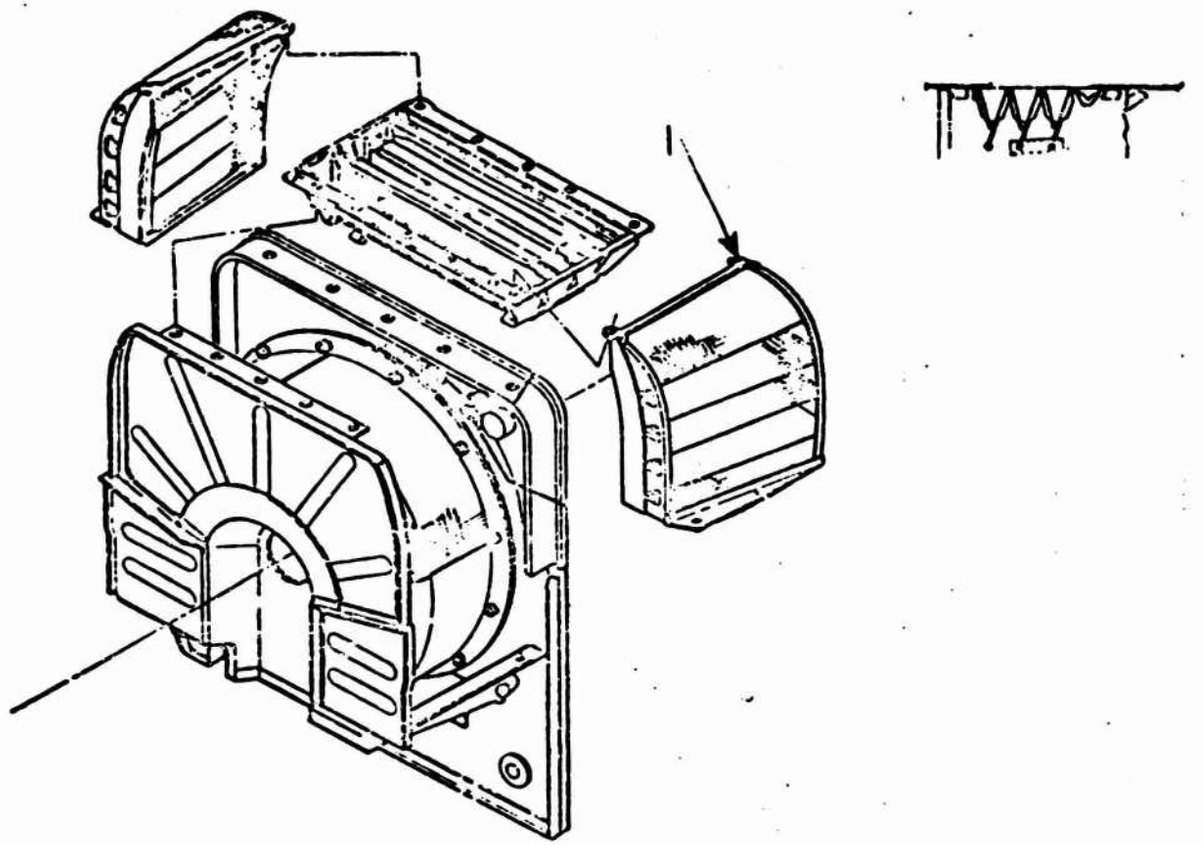

Figure 42 Engine Air Inlet Filter Installation

UH-1H FLAT RATE DATA
FUNCTIONAL GROUP 01
REFERENCE FIGURE 42

ITEM NO.	NOMEMCLATURE	FSN/PN	ACTION CODE	MAINT. LEVEL	MEAN	MEDIAN	MODE	STD. DEV	SAMPLE SIZE
1	Stud	53252853405	Replace	Total Org. Supp.	0.8 0.7 0.9	1.0 0.5 1.0	1.0 0.5 1.0	0.338 0.265 0.418	16 9 7
				Total Org. Supp.					
				Total Org. Supp.					
				Total Org. Supp.					
				Total Org. Supp.					
				Total Org. Supp.					
				Total Org. Supp.					
				Total Org. Supp.					
				Total Org. Supp.					
				Total Org. Supp.					

*Insufficient Data

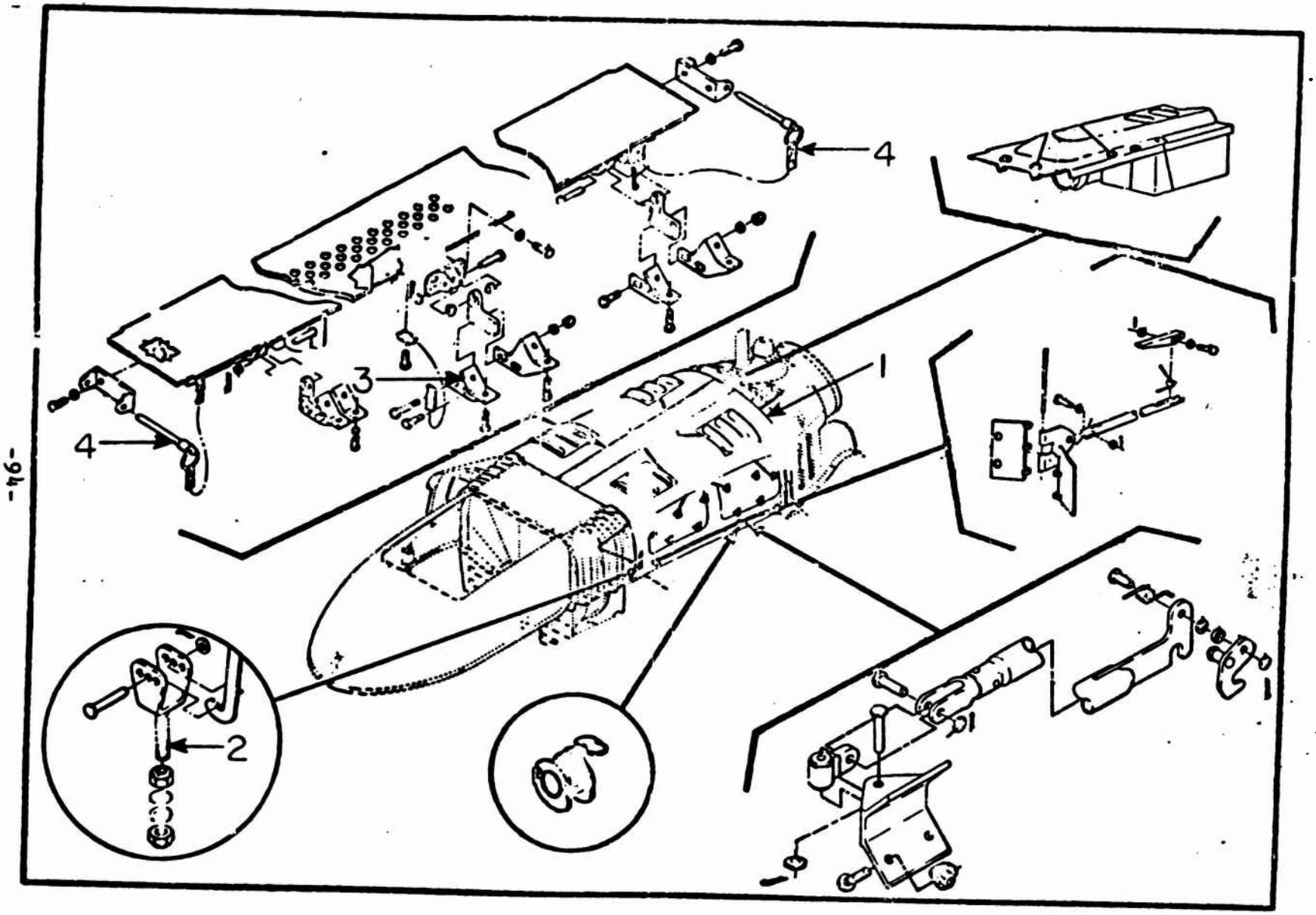

Figure 43 Cowl Installation

UH-1H FLAT RATE DATA
FUNCTIONAL GROUP 01
REFERENCE FIGURE 43

ITEM NO.	NOMENCLATURE	FSN/PN	ACTION CODE	MAINT. LEVEL	MEAN	MEDIAN	MODE	STD. DEV.	SAMPLE SIZE
1	Cowl Assy	15607577118 15607577130 15608311100 15608447964 15609684660	Replace	Total	2.1	2.0	1.0	1.333	16
				Org.	1.7	1.0	1.0	1.104	11
				Supp.	3.0	3.0	3.0	0.612	5
			Repair	Total	2.6	2.0	1.0	2.065	61
				Org.	*	*	*	*	*
				Supp.	2.6	2.0	1.0	1.966	59
			Removed and Installed	Total	2.6	2.0	1.0	1.765	17
				Org.	*	*	*	*	*
				Supp.	2.9	3.0	5.0	1.775	14
2	Clevis	53400735438 53409708588	Replace	Total	1.3	1.0	1.0	1.146	40
				Org.	0.7	0.5	0.5	0.368	12
				Supp.	1.6	1.0	1.0	1.262	28
3	Fitting	15609631062 15609631063 15609631064 15609631065 15609631066 15609631069 15609631070 15609671809 15609992272	Replace	Total	1.8	1.0	1.0	1.552	31
				Org.	1.4	1.0	1.0	1.203	18
				Supp.	2.4	1.5	1.0	1.849	13
				Total					
				Org.					
				Supp.					
				Total					
				Org.					
				Supp.					
4	Pin	53409516903	Replace	Total	0.8	1.0	1.0	0.441	29
				Org.	0.8	1.0	1.0	0.310	19
				Supp.	0.9	0.5	0.5	0.631	10
				Total					
				Org.					
				Supp.					
				Total					
				Org.					
				Supp.					

*Insufficient Data

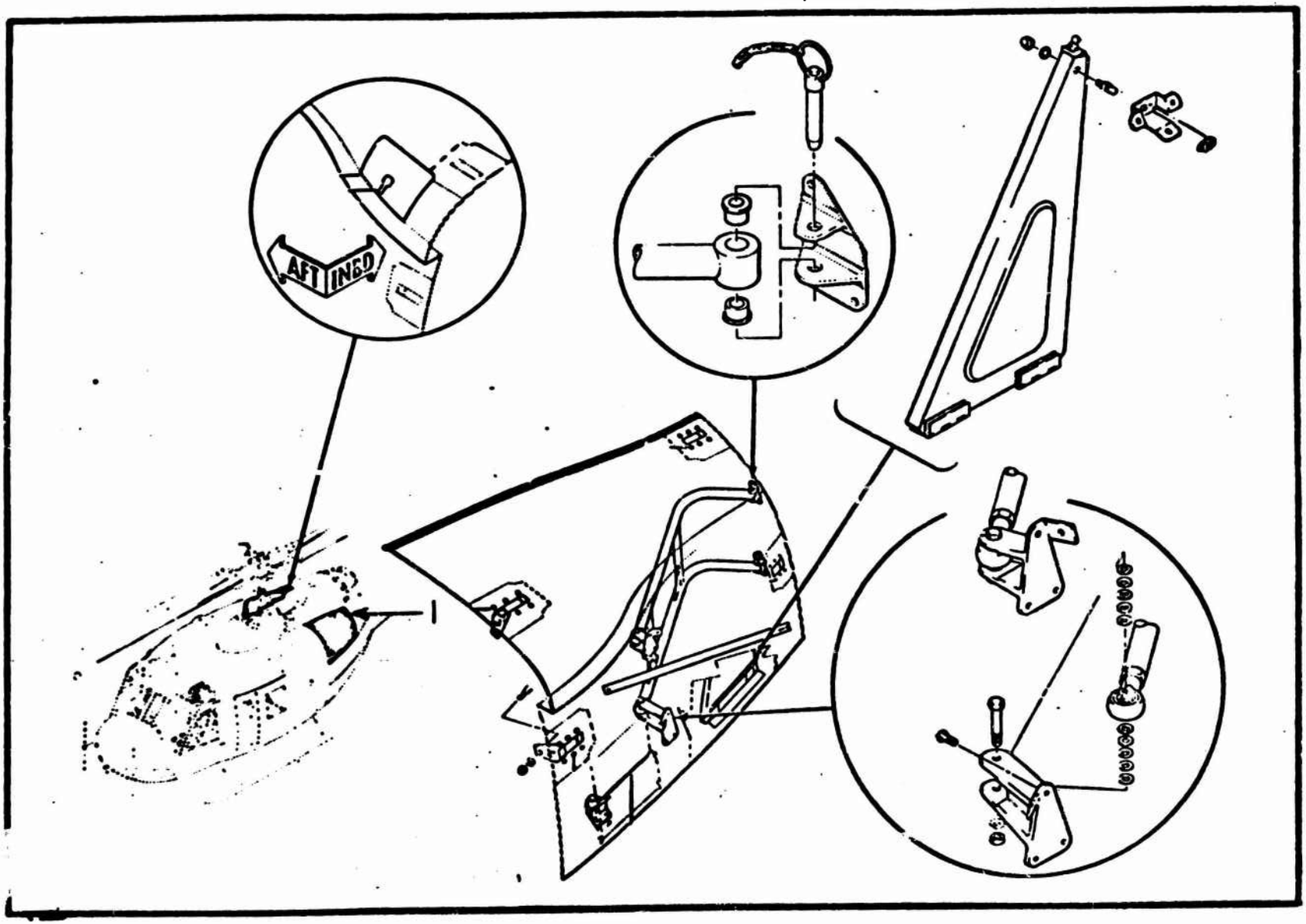

Figure 44 Cowl Installation

UH-1H FLAT RATE DATA
FUNCTIONAL GROUP 01
REFERENCE FIGURE 44

ITEM NO.	NOMENCLATURE	FSN/PN	ACTION CODE	MAINT. LEVEL	MEAN	MEDIAN	MODE	STD. DEV.	SAMPLE SIZE
1	Cowl Assy	15600730337 15601154913 15601154928 15601514081 15607019886	Replace	Total	2.6	2.0	1.0	1.555	26
				Org.	1.8	1.5	1.0	1.107	14
				Supp.	3.4	3.0	3.0	1.593	12
			Repair	Total	2.8	2.5	1.0	2.043	124
				Org.	*	*	*	*	*
				Supp.	2.8	2.5	1.0	2.047	122
			Removed and Installed	Total	3.3	4.0	5.0	2.120	13
				Org.	*	*	*	*	*
				Supp.	3.5	4.0	5.0	2.034	12
				Total					
				Org.					
				Supp.					
				Total					
				Org.					
				Supp.					
				Total					
				Org.					
				Supp.					
				Total					
				Org.					
				Supp.					
				Total					
				Org.					
				Supp.					
				Total					
				Org.					
				Supp.					
				Total					
				Org.					
				Supp.					

*Insufficient Data

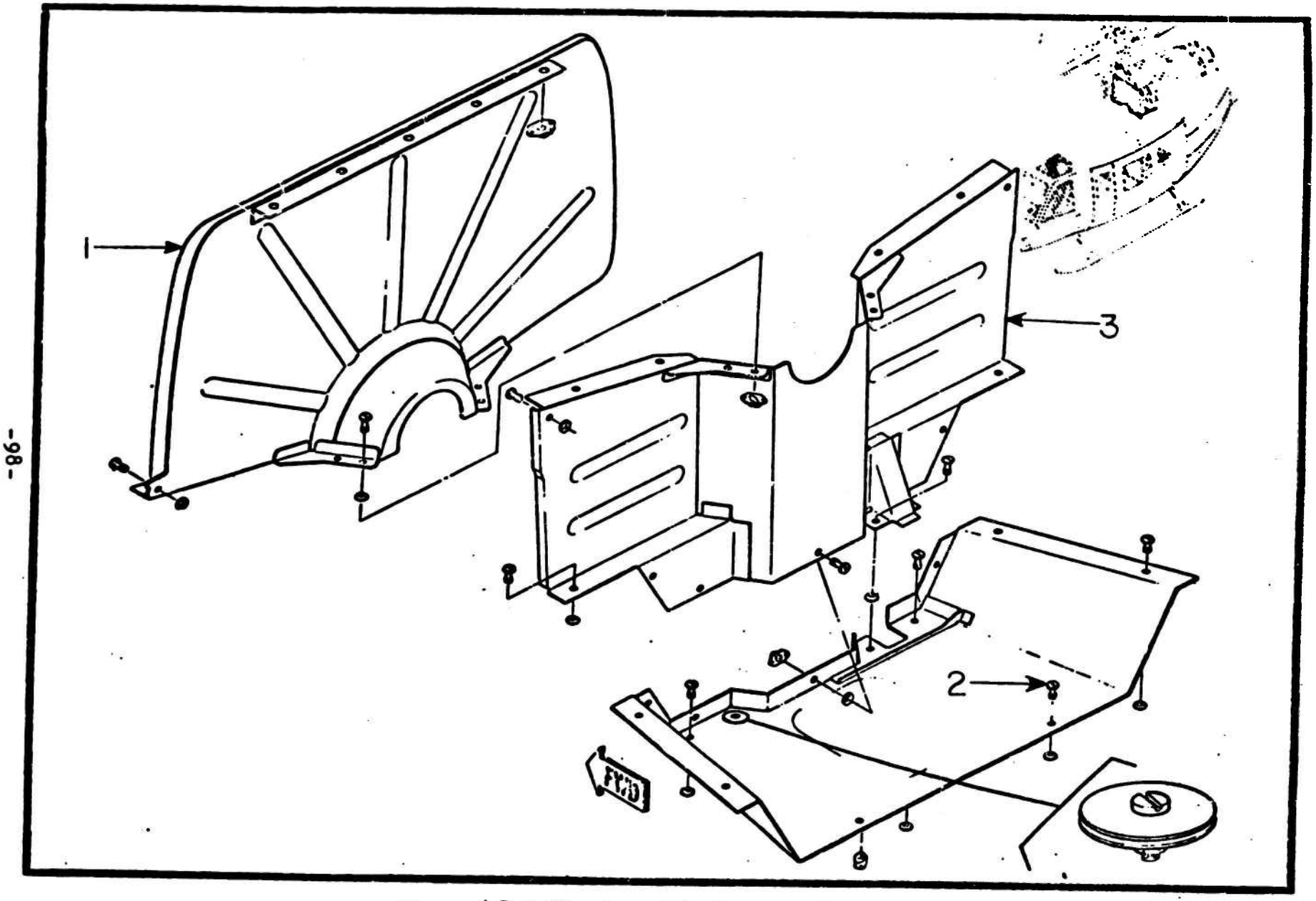

Figure 45 Baffle Assembly, Engine Induction

UH-1H FLAT RATE DATA
FUNCTIONAL GROUP 01
REFERENCE FIGURE 45

ITEM NO.	NOMENCLATURE	FSN/PN	ACTION CODE	MAINT. LEVEL	MEAN	MEDIAN	MODE	STD. DEV.	SAMPLE SIZE
1	Baffle Assy	15600190291 15601508918 15601509018 15601509019 15609080918 15609442530	Replace	Total	1.8	1.0	1.0	1.291	32
				Org.	1.5	1.0	1.0	1.222	15
				Supp.	2.1	1.5	1.0	1.334	17
			Repair	Total	2.6	1.5	0.5	1.992	13
				Org.	*	*	*	*	*
				Supp.	2.7	1.5	3.0	1.984	12
2	Stud	15609631078 15609631079 53252815066	Replace	Total	1.1	1.0	1.0	0.585	9
				Org.	0.7	0.5	0.5	0.292	3
				Supp.	1.3	1.0	1.0	0.625	6
3	Baffle Assy	15609080919 15609926504	Replace	Total	1.6	1.0	1.0	1.253	18
				Org.	1.6	1.0	0.5	1.322	8
				Supp.	1.7	1.0	1.0	1.266	10
			Repair	Total	2.2	2.0	1.0	1.409	13
				Org.	*	*	*	*	*
				Supp.	2.2	2.0	1.0	1.409	13
				Total					
				Org.					
				Supp.					
				Total					
				Org.					
				Supp.					
				Total					
				Org.					
				Supp.					
				Total					
				Org.					
				Supp.					
				Total					
				Org.					
				Supp.					

*Insufficient Data

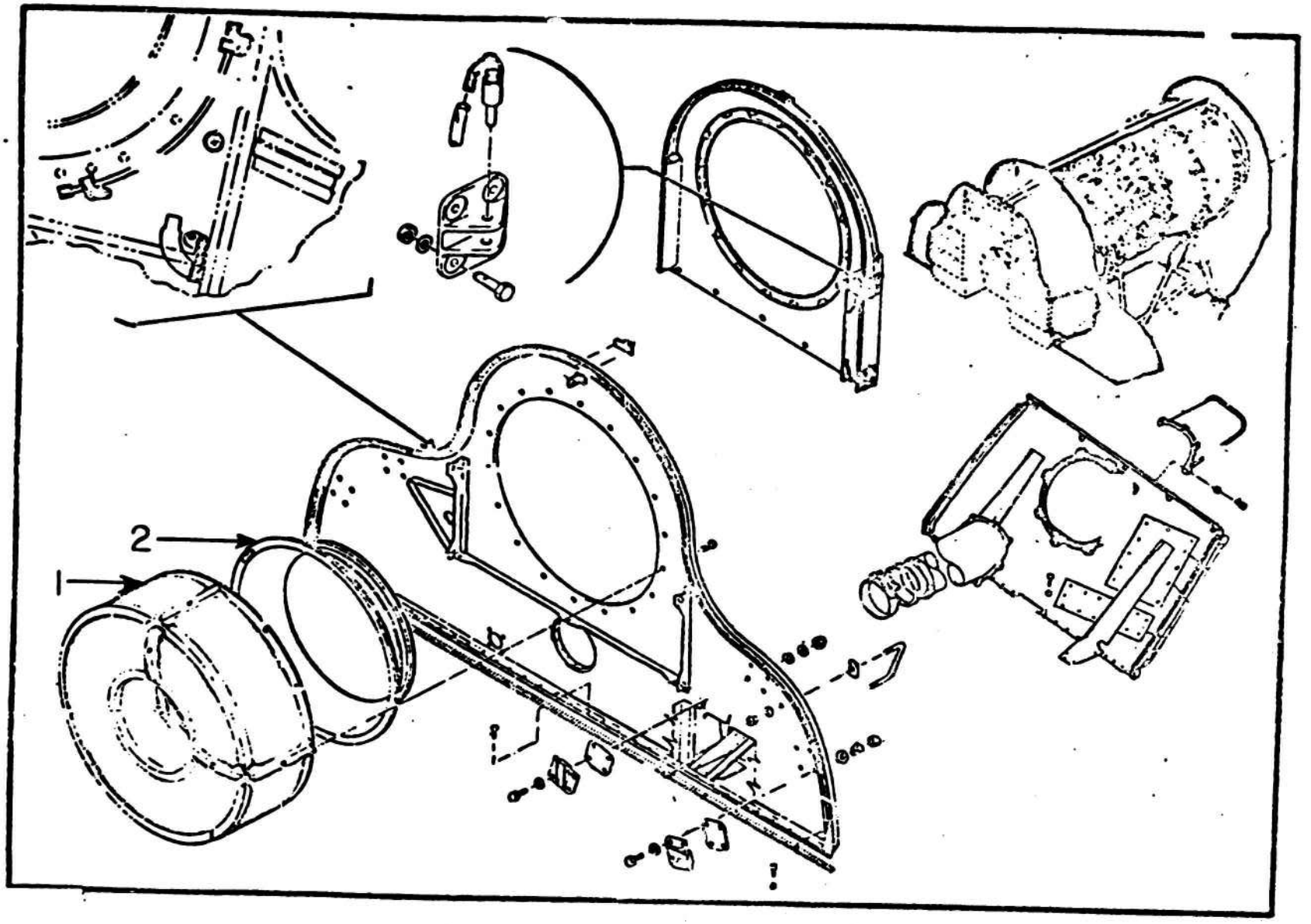

Figure 46 Firewall Assembly, Power Plant

UH-1H FLAT RATE DATA
FUNCTIONAL GROUP 01
REFERENCE FIGURE 46

ITEM NO.	NOMEMCLATURE	FSN/PN	ACTION CODE	MAINT. LEVEL	MEAN	MEDIAN	MODE	STD. DEV	SAMPLE SIZE
1	Screen Assy	15600728317 15604885002 15609569920	Replace	Total	1.1	1.0	1.0	0.599	8
				Org.	1.1	1.0	1.0	0.599	8
				Supp.	*	*	*	*	*
2	Bellmouth Assy	15607580290	Replace	Total	4.1	3.0	2.0	3.062	19
				Org.	2.3	2.0	2.0	0.0876	6
				Supp.	5.0	4.5	10.0	3.367	13
			Repair	Total	3.4	2.0	8.0	2.836	6
				Org.	*	*	*	*	*
				Supp.	3.4	2.0	8.0	2.836	6
--	Firewall	15601508902	Repair	Total	2.3	2.0	2.0	1.505	54
				Org.	*	*	*	*	*
				Supp.	2.3	2.0	2.0	1.534	50
				Total					
				Org.					
				Supp.					
				Total					
				Org.					
				Supp.					
				Total					
				Org.					
				Supp.					
				Total					
				Org.					
				Supp.					
				Total					
				Org.					
				Supp.					
				Total					
				Org.					
				Supp.					

*Insufficient Data

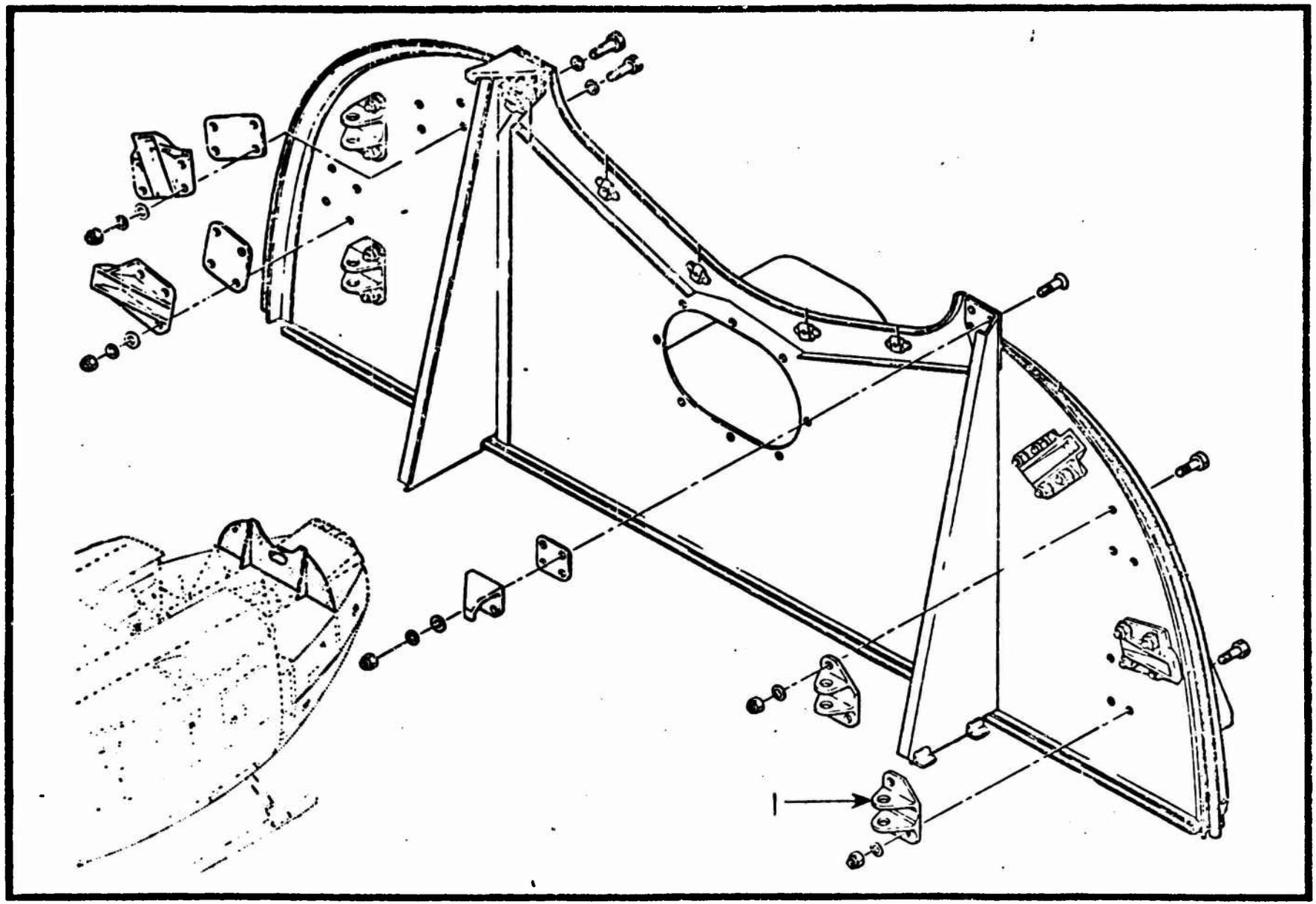

Figure 46A Firewall Assembly, Lower Aft

UH-1H FLAT RATE DATA
FUNCTIONAL GROUP 01
REFERENCE FIGURE 46A

ITEM NO.	NOMEMCLATURE	FSN/PN	ACTION CODE	MAINT. LEVEL	MEAN	MEDIAN	MODE	STD. DEV	SAMPLE SIZE
1	Hinge Fitting	15609926512 15609926514 15609926515 15609926516	Replace	Total Org. Supp.	1.0 1.0 1.1	1.0 1.0 1.0	0.5 0.5 0.5	0.792 0.725 0.891	46 26 20
				Total Org. Supp.					
				Total Org. Supp.					
				Total Org. Supp.					
				Total Org. Supp.					
				Total Org. Supp.					
				Total Org. Supp.					
				Total Org. Supp.					
				Total Org. Supp.					
				Total Org. Supp.					
				Total Org. Supp.					

*Insufficient Data

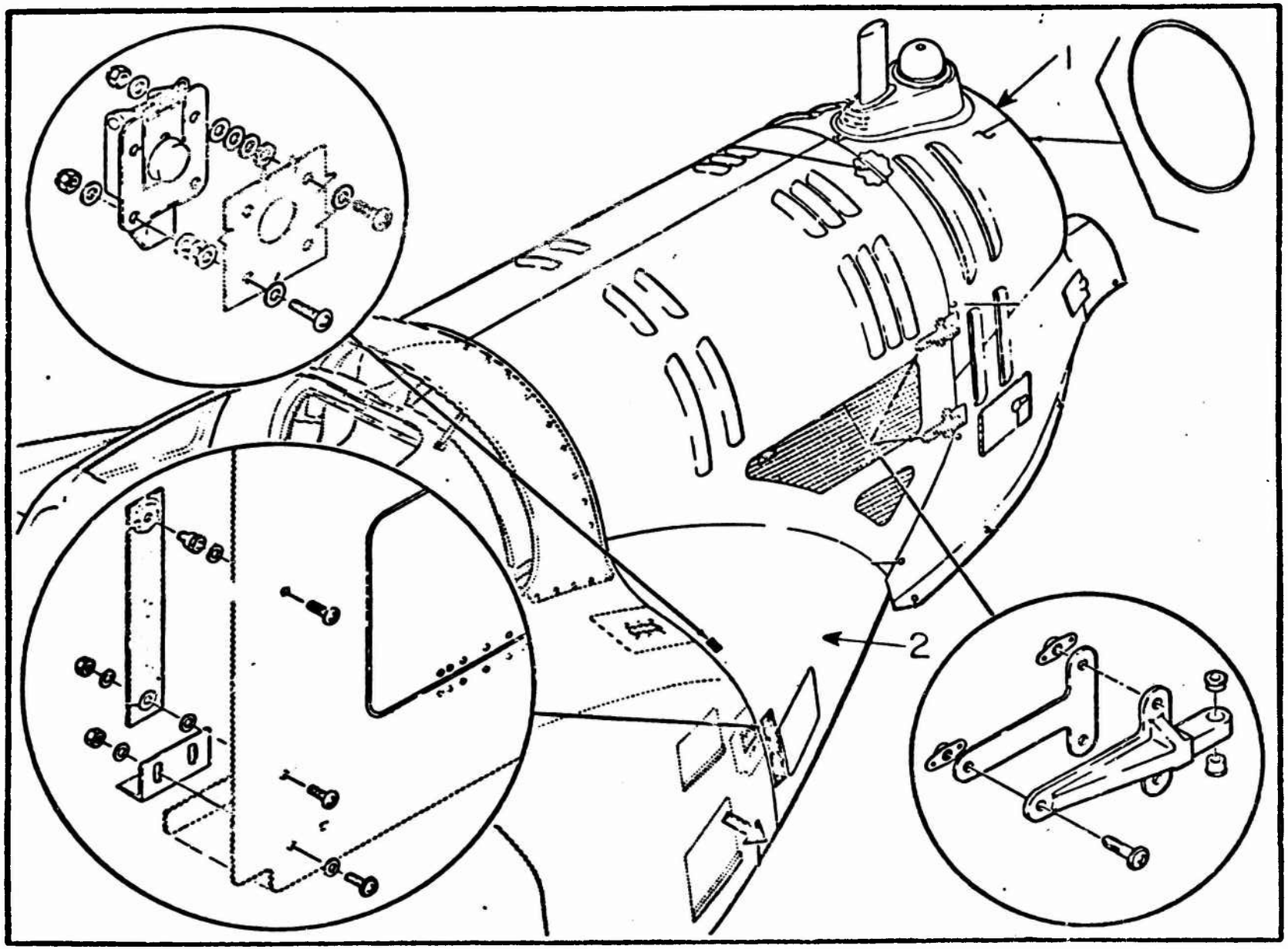

Figure 47 Cowl Assembly, Engine

UH-1H FLAT RATE DATA
FUNCTIONAL GROUP 01
REFERENCE FIGURE 47

ITEM NO.	NOMEMCLATURE	FSN/PN	ACTION CODE	MAINT. LEVEL	MEAN	MEDIAN	MODE	STD. DEV.	SAMPLE SIZE
1	Fairing Assy	15608757990 15609118603 15609197993 15609361057 15609361058	Replace	Total	2.1	1.0	1.0	1.659	29
				Org.	0.9	1.0	1.0	0.511	15
				Supp.	3.4	4.0	5.0	1.496	14
			Repair	Total	3.0	2.5	1.0	1.863	37
				Org.	*	*	*	*	*
				Supp.	3.0	2.5	1.0	1.863	37
			Removed and Installed	Total	2.3	0.9	0.3	2.572	36
				Org.	*	*	*	*	*
				Supp.	4.9	5.0	5.0	2.516	11
2	Cowl Assy	15606753254	Repair	Total	3.2	3.0	1.0	2.351	193
				Org.	*	*	*	*	*
				Supp.	3.4	3.0	1.0	2.404	170
			Service	Total	1.9	1.5	1.0	1.135	14
				Org.	1.4	1.0	2.5	0.854	4
				Supp.	2.1	1.5	1.0	1.213	10
			Removed and Installed	Total	4.9	4.0	5.0	3.567	192
				Org.	*	*	*	*	*
				Supp.	5.2	5.0	5.0	3.654	161
			Installed	Total	2.1	2.0	2.0	1.102	18
				Org.	*	*	*	*	*
				Supp.	2.2	2.0	2.0	1.236	13
				Total					
				Org.					
				Supp.					
				Total					
				Org.					
				Supp.					
				Total					
				Org.					
				Supp.					

*Insufficient Data

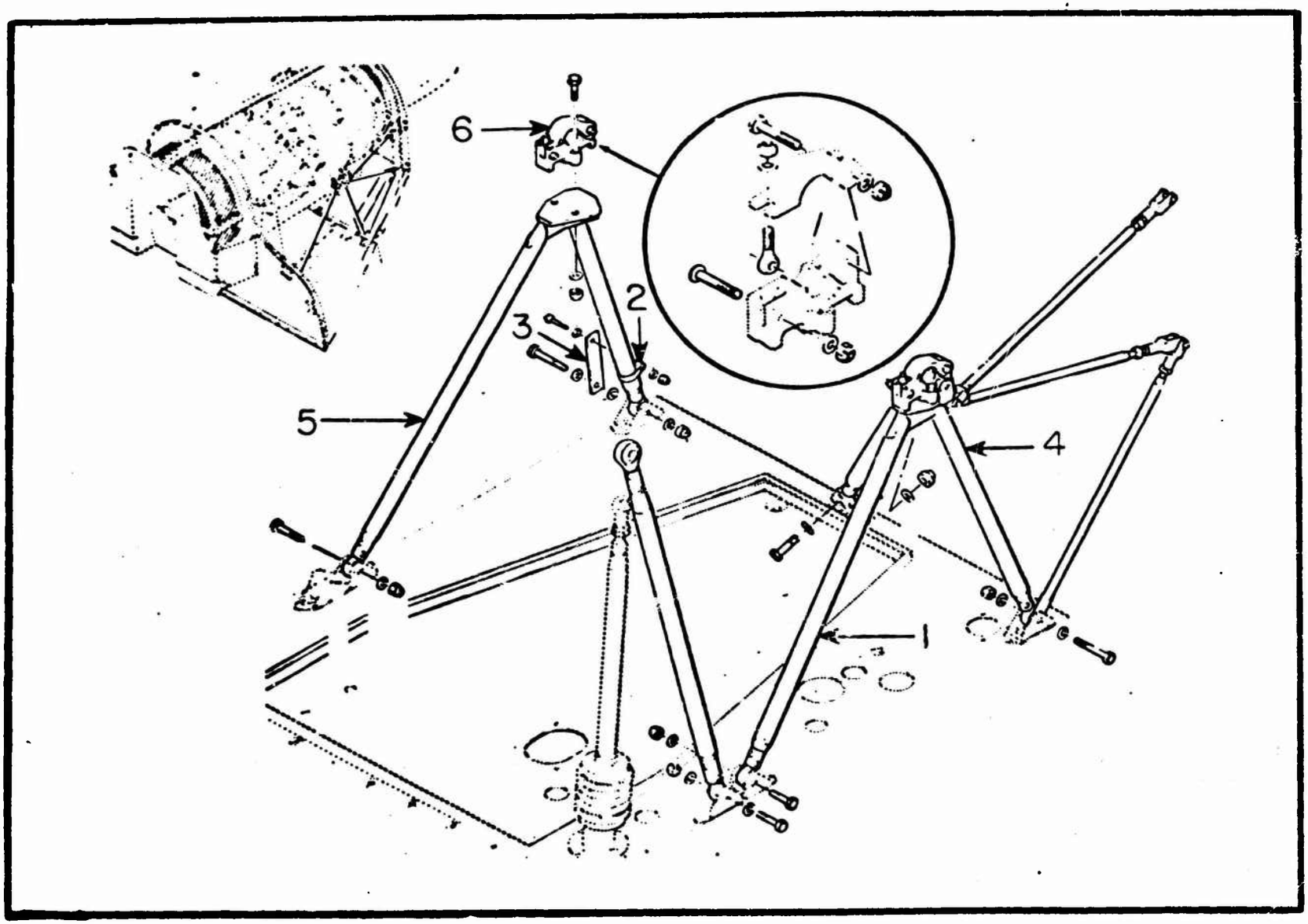

Figure 48 Mount Installation, Engine

UH-1H FLAT RATE DATA
FUNCTIONAL GROUP 01
REFERENCE FIGURE 43

ITEM NO.	NOMEMCLATURE	FSN/PN	ACTION CODE	MAINT. LEVEL	MEAN	MEDIAN	MODE	STD. DEV.	SAMPLE SIZE
1	Connecting Ling	15600788693 15608732269	Replace	Total	2.1	2.0	1.0	1.433	402
				Org.	2.0	2.0	2.0	1.229	213
				Supp.	2.3	2.0	1.0	1.619	189
2	Clamp	53405933392	Replace	Total	1.0	1.0	0.5	0.757	105
				Org.	0.9	0.5	0.5	0.493	74
				Supp.	1.2	1.0	1.0	1.138	31
3	Spring	53607318070	Replace	Total	1.1	1.0	1.0	0.522	21
				Org.	1.0	1.0	1.0	0.462	15
				Supp.	1.2	1.0	2.0	0.684	6
4	Tripod Assy	15607318021 15609671751 15609873317	Replace	Total	3.9	3.0	2.0	2.993	440
				Org.	3.4	3.0	2.0	2.614	192
				Supp.	4.2	3.0	3.0	3.217	248
			Adjust	Total	1.6	1.5	3.0	1.284	17
				Org.	*	*	*	*	*
				Supp.	2.0	1.5	3.0	1.270	12
			Repair	Total	1.7	2.0	2.0	1.071	13
				Org.	*	*	*	*	*
				Supp.	1.8	2.0	2.0	1.054	12
			Service	Total	2.0	2.0	2.0	1.420	15
				Org.	*	*	*	*	*
				Supp.	2.0	2.0	2.0	1.420	15
			Removed and Installed	Total	3.7	3.0	4.0	2.620	16
				Org.	*	*	*	*	*
				Supp.	4.3	4.0	5.0	2.902	11
			Checked	Total	1.4	0.5	0.5	1.652	7
				Org.	*	*	*	*	*
				Supp.	1.5	0.5	0.5	1.761	6
				Total					
				Org.					
				Supp.					

*Insufficient Data

UH-1H FLAT RATE DATA
FUNCTIONAL GROUP 01
REFERENCE FIGURE 43

ITEM NO.	NOMEMCLATURE	FSN/PN	ACTION CODE	MAINT. LEVEL	MEAN	MEDIAN	MODE	STD. DEV.	SAMPLE SIZE
5	Bipod Assy	15607318011 15609671752	Replace	Total	3.2	2.5	2.0	2.380	443
				Org.	2.8	2.0	2.0	1.990	218
				Supp.	3.6	3.0	2.0	2.649	225
			Removed and Installed	Total	3.1	3.0	2.0	1.801	13
				Org	1.8	1.0	1.0	1.170	6
				Supp.	4.1	4.0	6.0	1.574	7
			Checked	Total	0.8	0.5	1.0	0.361	2
				Org.	*	*	*	*	*
				Supp.	0.8	0.5	1.0	0.361	2
6	Pillow Block Assy	15604099146	Replace	Total	1.5	1.5	2.0	0.751	104
				Org.	1.4	1.0	1.0	0.721	66
				Supp.	1.7	2.0	2.0	0.785	38
			Service	Total	0.8	0.5	1.0	0.390	6
				Org.	0.8	0.5	1.0	0.390	6
				Supp.	*	*	*	*	*
				Total					
				Org.					
				Supp.					
				Total					
				Org.					
				Supp.					
				Total					
				Org.					
				Supp.					
				Total					
				Org.					
				Supp.					
				Total					
				Org.					
				Supp.					

*Insufficient Data

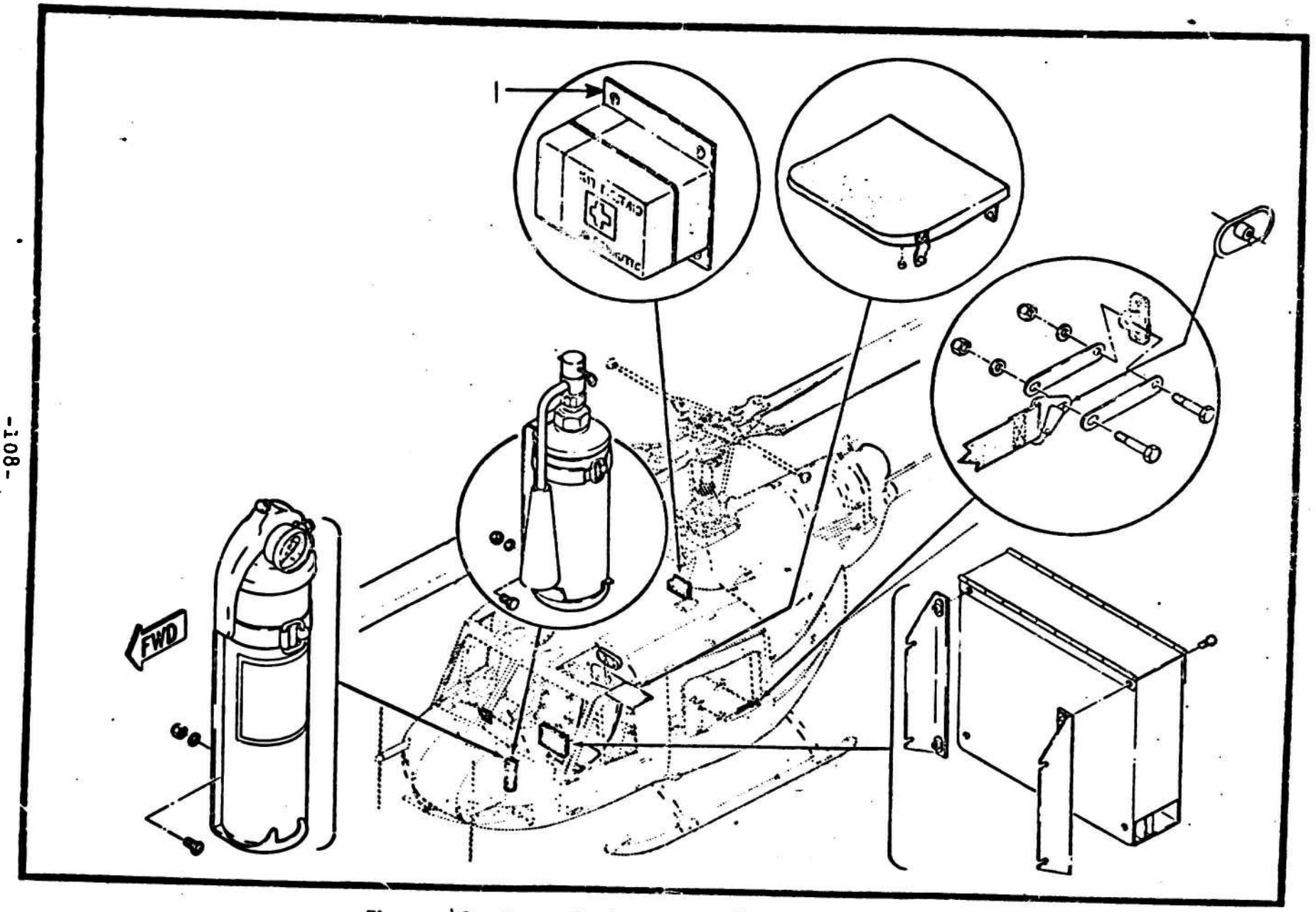

Figure 49 Loose Equipment Installation, Installed

UH-1H FLAT RATE DATA
FUNCTIONAL GROUP 01
REFERENCE FIGURE 49

ITEM NO.	NOMENCLATURE	FSN/PN	ACTION CODE	MAINT. LEVEL	MEAN	MEDIAN	MODE	STD. DEV.	SAMPLE SIZE
1	First Aid Kit	65459196650	Replace	Total Org. Supp.	0.7 0.6 *	0.5 0.5 *	0.5 0.5 *	0.263 0.255 *	144 132 *
			Service	Total Org. Supp.	1.1 1.1 *	1.0 1.0 *	1.0 1.0 *	0.551 0.560 *	58 55 *
			Removed and Installed	Total Org. Supp.	0.7 0.8 *	0.5 0.5 *	0.5 0.5 *	0.386 0.394 *	54 49 *
				Total Org. Supp.					
				Total Org. Supp.					
				Total Org. Supp.					
				Total Org. Supp.					
				Total Org. Supp.					
				Total Org. Supp.					
				Total Org. Supp.					

*Insufficient Data

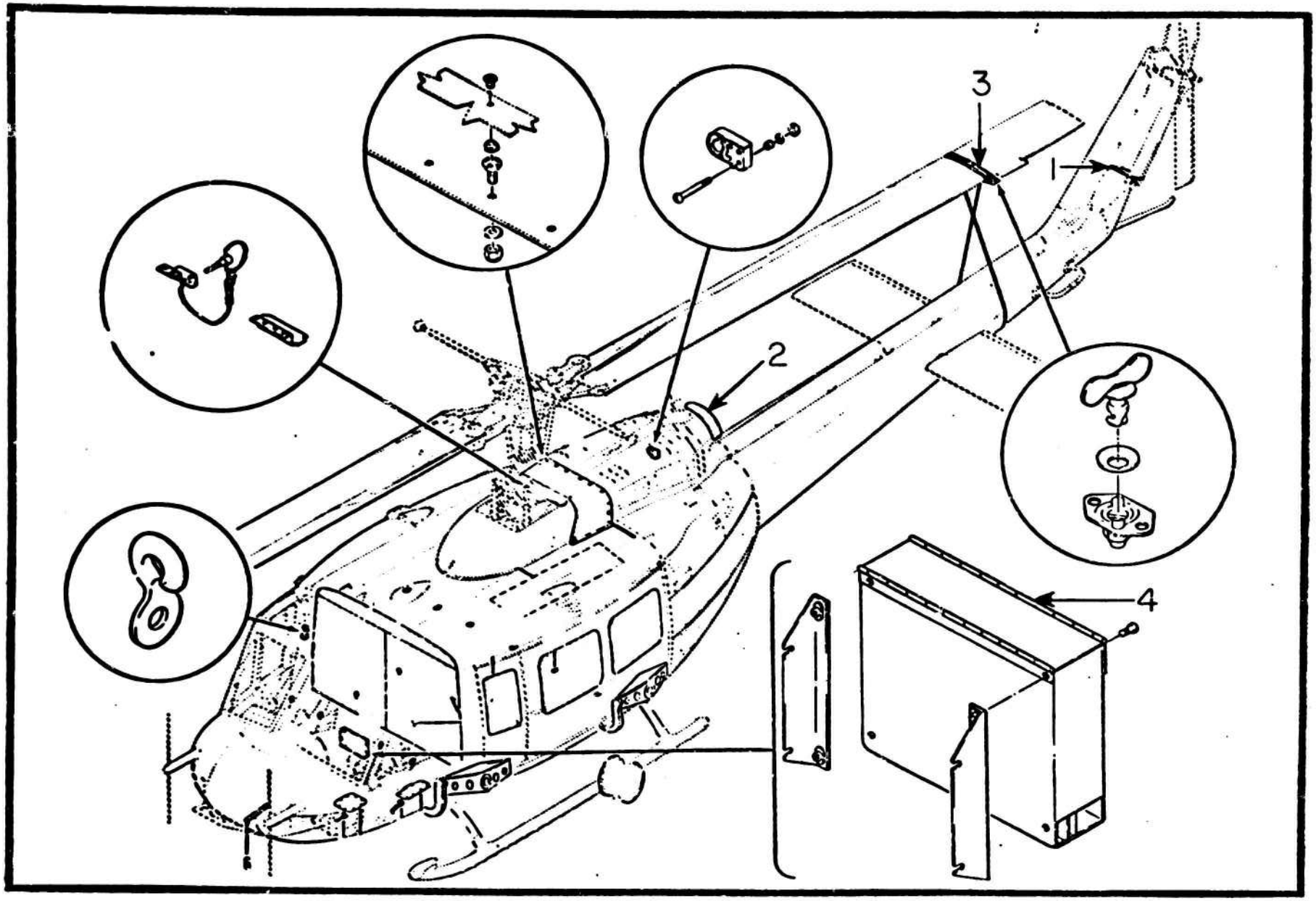

Figure 50 Loose Equipment Installation, Installed and Packaged

UH-1H FLAT RATE DATA
FUNCTIONAL GROUP 01
REFERENCE FIGURE 50

ITEM NO.	NOMENCLATURE	FSN/PN	ACTION CODE	MAINT. LEVEL	MEAN	MEDIAN	MODE	STD. DEV.	SAMPLE SIZE
1	Strap	16809671821	Replace	Total	0.6	0.5	0.5	0.469	32
				Org.	0.6	0.5	0.5	0.469	32
				Supp.	*	*	*	*	*
2	Cover Assy	15606753215 17308419919 17309671737	Replace	Total	0.6	0.5	0.5	0.407	171
				Org.	0.6	0.5	0.5	0.390	165
				Supp.	*	*	*	*	*
3	Tiedown Assy	17304277937	Replace	Total	0.8	0.5	0.5	0.290	52
				Org.	0.8	0.5	0.5	0.294	47
				Supp.	*	*	*	*	*
4	Flight Case	16801988613	Replace	Total	0.9	1.0	1.0	0.406	28
				Org.	1.0	1.0	1.0	0.465	16
				Supp.	0.9	1.0	1.0	0.322	12
				Total					
				Org.					
				Supp.					
				Total					
				Org.					
				Supp.					
				Total					
				Org.					
				Supp.					
				Total					
				Org.					
				Supp.					
				Total					
				Org.					
				Supp.					
				Total					
				Org.					
				Supp.					

*Insufficient Data

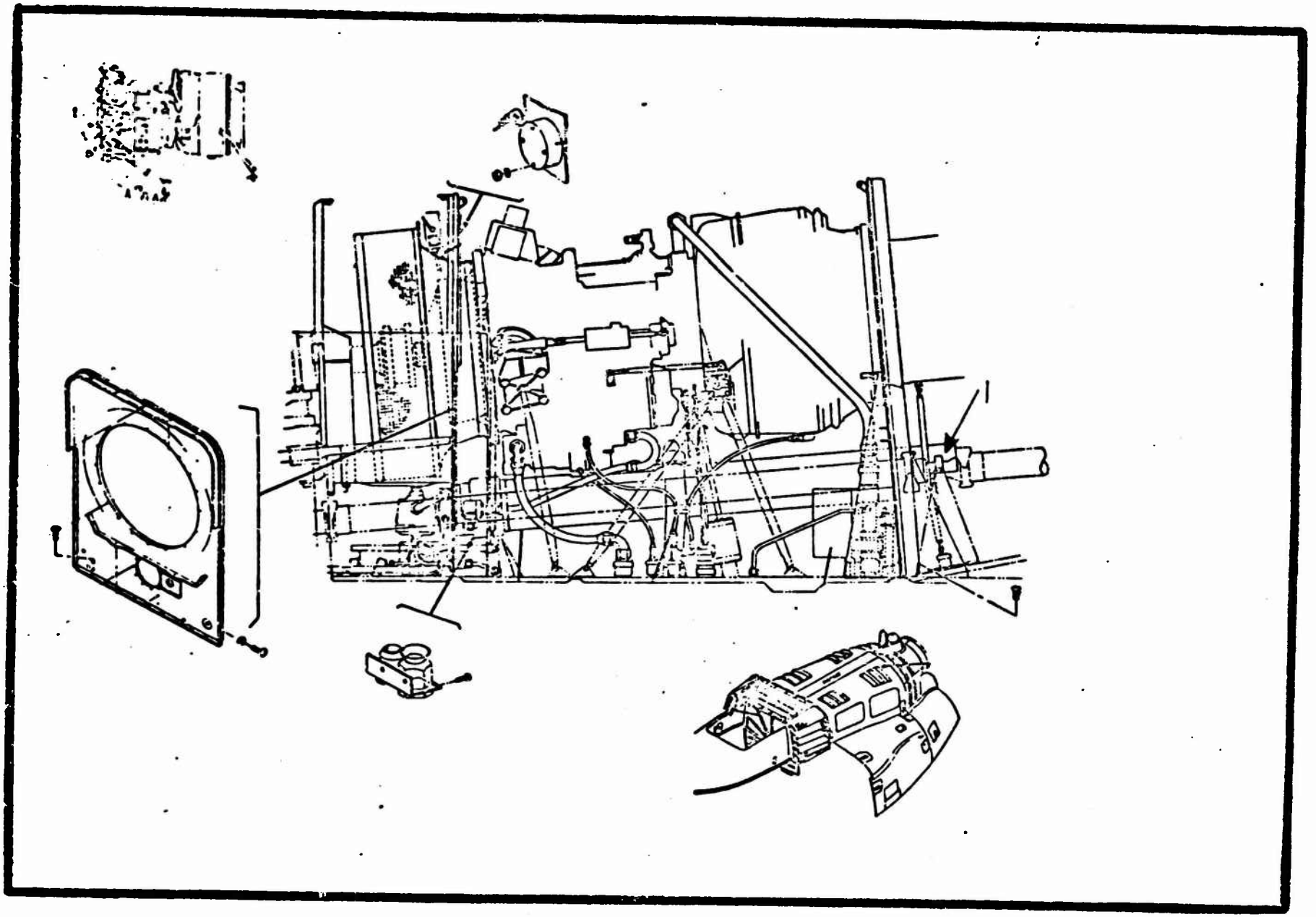

Figure 51 Power Plant Installation

UH-1H FLAT RATE DATA
FUNCTIONAL GROUP 01
REFERENCE FIGURE 51

ITEM NO.	NOMEMCLATURE	FSN/PN	ACTION CODE	MAINT. LEVEL	MEAN	MEDIAN	MODE	STD. DEV.	SAMPLE SIZE
1	Shield Assy	15609926501	Repair	Total	1.9	2.0	0.5	1.155	21
				Org.	*	*	*	*	*
				Supp.	1.9	2.0	0.5	1.142	19
				Total Org. Supp.					
				Total Org. Supp.					
				Total Org. Supp.					
				Total Org. Supp.					
				Total Org. Supp.					
				Total Org. Supp.					
				Total Org. Supp.					
				Total Org. Supp.					
				Total Org. Supp.					

*Insufficient Data

SECTION IV

FUNCTIONAL GROUP 02

LANDING GEAR SYSTEM

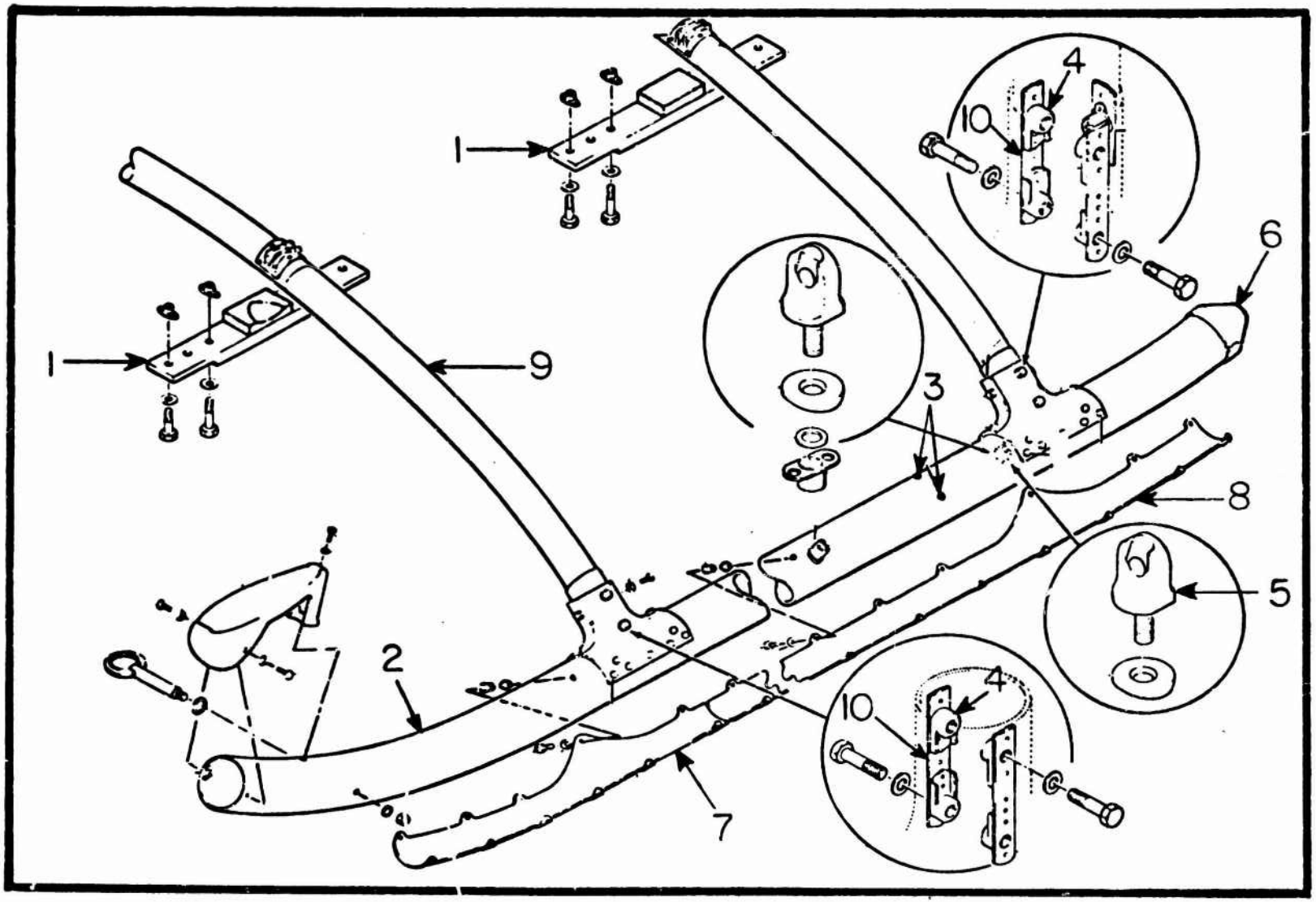

Figure 52 Landing Gear Assembly, Skid

UH-1H FLAT RATE DATA
FUNCTIONAL GROUP 02
REFERENCE FIGURE 52

ITEM NO.	NOMEMCLATURE	FSN/PN	ACTION CODE	MAINT. LEVEL	MEAN	MEDIAN	MODE	STD. DEV.	SAMPLE SIZE
1	Cap	15608346623 15608346624 15608346636 15608346637 15609667539	Replace	Total	1.4	1.0	1.0	1.105	855
				Org.	1.2	1.0	1.0	0.908	602
				Supp.	1.7	1.0	1.0	1.426	253
				Total					
				Org.					
				Supp.					
2	Skid Assembly	16207942624 16207950678	Replace	Total	3.5	3.0	2.0	2.384	898
				Org.	3.2	2.5	2.0	2.071	644
				Supp.	4.4	4.0	1.0	2.864	254
			Repair	Total	2.2	2.0	2.0	0.502	16
				Org.	*	*	*	*	*
				Supp.	2.1	2.0	2.0	0.516	10
			Service	Total	2.1	1.5	1.0	1.457	42
				Org.	1.6	1.5	2.0	0.817	23
				Supp.	2.5	2.0	1.0	1.830	17
			Removed and Installed	Total	5.6	6.0	6.0	1.145	18
				Org.	*	*	*	*	*
				Supp.	5.5	6.0	6.0	1.008	17
			Install	Total	0.9	1.0	1.0	0.210	11
				Org.	*	*	*	*	*
				Supp.	0.9	1.0	1.0	0.229	9
3	Bumper	53405920792	Replace	Total	0.6	0.5	0.5	0.256	67
				Org.	0.6	0.5	0.5	0.256	67
				Supp.	*	*	*	*	*
4	Nut	53107738649 53108889552	Replace	Total	1.3	1.0	1.0	0.443	12
				Org.	1.4	1.2	1.0	0.424	8
				Supp.	*	*	*	*	*
				Total					
				Org.					
				Supp.					

*Insufficient Data

UH-1H FLAT RATE DATA
FUNCTIONAL GROUP 02
REFERENCE FIGURE 52

ITEM NO.	NOMEMCLATURE	FSN/PN	ACTION CODE	MAINT. LEVEL	MEAN	MEDIAN	MODE	STD. DEV.	SAMPLE SIZE
5	Bolt	53068834462	Replace	Total	0.7	0.5	1.0	0.283	8
				Org.	0.7	0.5	1.0	0.324	5
				Supp.	0.8	0.8	1.0	0.255	3
			Adjust	Total	0.6	0.5	0.5	0.295	11
				Org.	*	*	*	*	*
				Supp.	0.5	0.5	0.5	0.309	8
6	Cap	16300707858	Replace	Total	1.0	1.0	1.0	0.479	86
				Org.	0.9	1.0	1.0	0.440	61
				Supp.	1.2	1.0	1.0	0.520	25
			Repair	Total	1.0	1.0	1.5	0.456	6
				Org.	*	*	*	*	*
				Supp.	1.0	1.0	1.5	0.456	6
7	Forward Shoe, Skid Assembly	16209671803 16204699210	Replace	Total	1.7	1.0	1.0	1.167	1135
				Org.	1.6	1.0	1.0	1.133	991
				Supp.	2.4	2.0	2.0	1.200	144
8	Aft Shoe, Skid Assembly	16209671804 16209671806	Replace	Total	1.8	1.3	1.0	1.166	908
				Org.	1.7	1.0	1.0	1.099	814
				Supp.	2.5	2.0	1.0	1.459	94
9	Cross Tube Assy	16200769036 16206746078	Replace	Total	3.8	3.0	2.0	2.494	465
				Org.	2.4	2.5	2.0	1.253	247
				Supp.	4.3	4.0	2.0	2.845	171
			Repair	Total	3.0	3.0	3.0	0.856	15
				Org.	*	*	*	*	*
				Supp.	3.0	3.0	3.0	0.856	15
10	Nut Assy	15608980002	Replace	Total	1.0	1.0	1.0	0.000	1
				Org.	*	*	*	*	*
				Supp.	1.0	1.0	1.0	0.000	1
				Total					
				Org.					
				Supp.					

*Insufficient Data

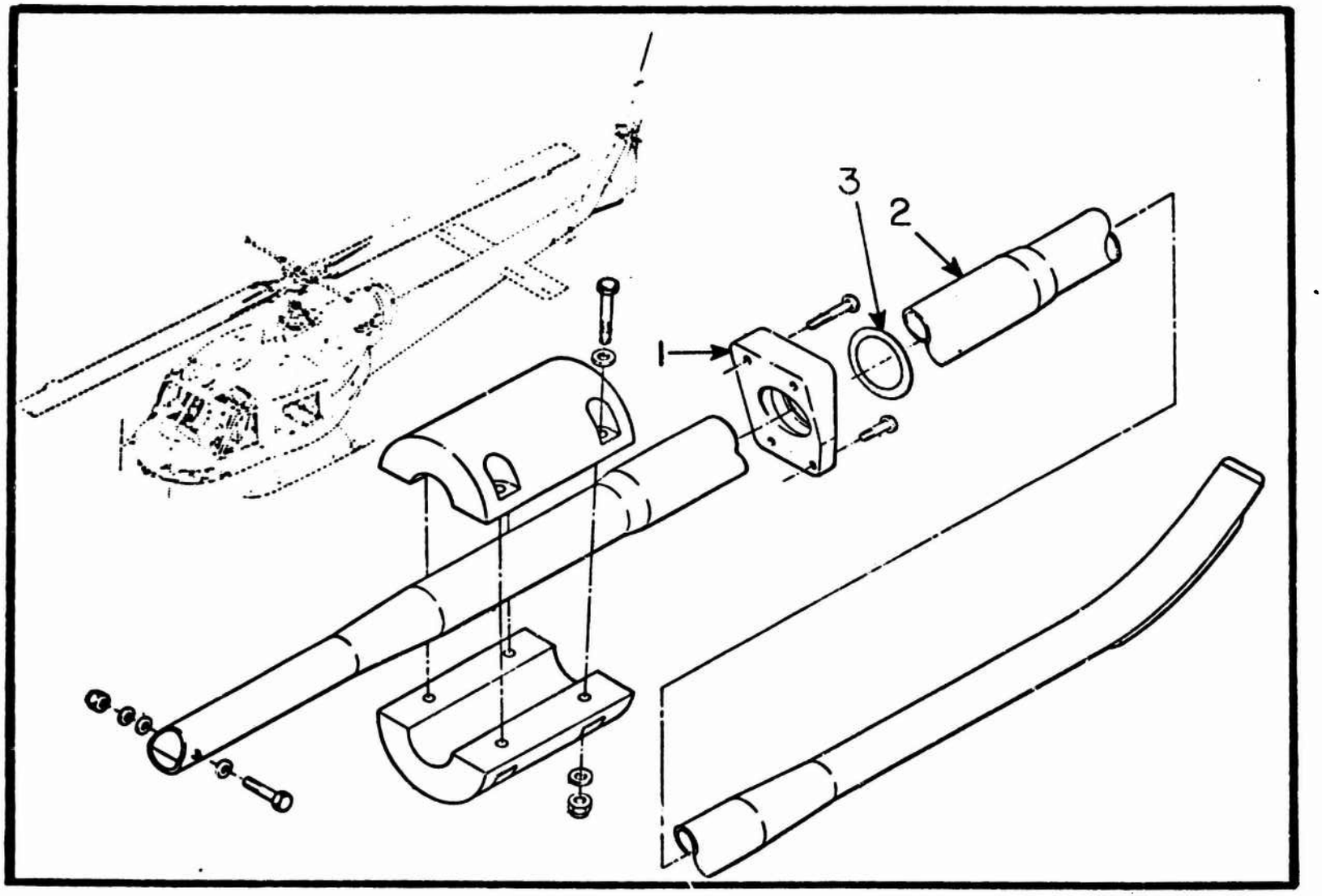

Figure 53 Skid Installation, Aft Fuselage

UH-1H FLAT RATE DATA
FUNCTIONAL GROUP 02
REFERENCE FIGURE 53

ITEM NO.	NOMEMCLATURE	FSN/PN	ACTION CODE	MAINT. LEVEL	MEAN	MEDIAN	MODE	STD. DEV.	SAMPLE SIZE
1	Skid Support Block	15607656253 15608718667	Replace	Total	1.4	1.5	1.0	0.545	86
				Org.	1.5	1.5	2.0	0.569	51
				Supp.	1.4	1.0	1.0	0.512	35
			Adjust	Total	0.9	1.0	1.0	0.224	5
				Org.	0.8	1.0	1.0	0.294	3
				Supp.	*	*	*	*	*
			Repair	Total	2.3	2.0	1.0	1.280	85
				Org.	*	*	*	*	*
				Supp.	2.4	2.0	1.0	1.310	74
			Service	Total	1.5	1.0	2.0	0.548	6
				Org.	1.7	2.0	2.0	0.579	3
				Supp.	*	*	*	*	*
			Removed and Installed	Total	1.8	2.0	2.0	0.742	12
				Org.	*	*	*	*	*
				Supp.	2.1	2.0	2.0	0.644	9
2	Tube Assembly	15606498266	Replace	Total	1.6	1.5	2.0	0.698	56
				Org.	1.6	1.5	2.0	0.690	51
				Supp.	1.8	2.0	2.0	0.837	5
			Repair	Total	1.9	2.0	2.0	0.861	11
				Org.	*	*	*	*	*
				Supp.	1.9	2.0	2.0	0.861	11
3	Packing	53305851067	Replace	Total	1.3	1.0	1.0	0.761	297
				Org.	1.3	1.0	1.0	0.771	196
				Supp.	1.4	1.0	1.0	0.716	101
				Total					
				Org.					
				Supp.					
				Total					
				Org.					
				Supp.					

*Insufficient Data

SECTION V

FUNCTIONAL GROUP 03

POWERPLANT SYSTEM

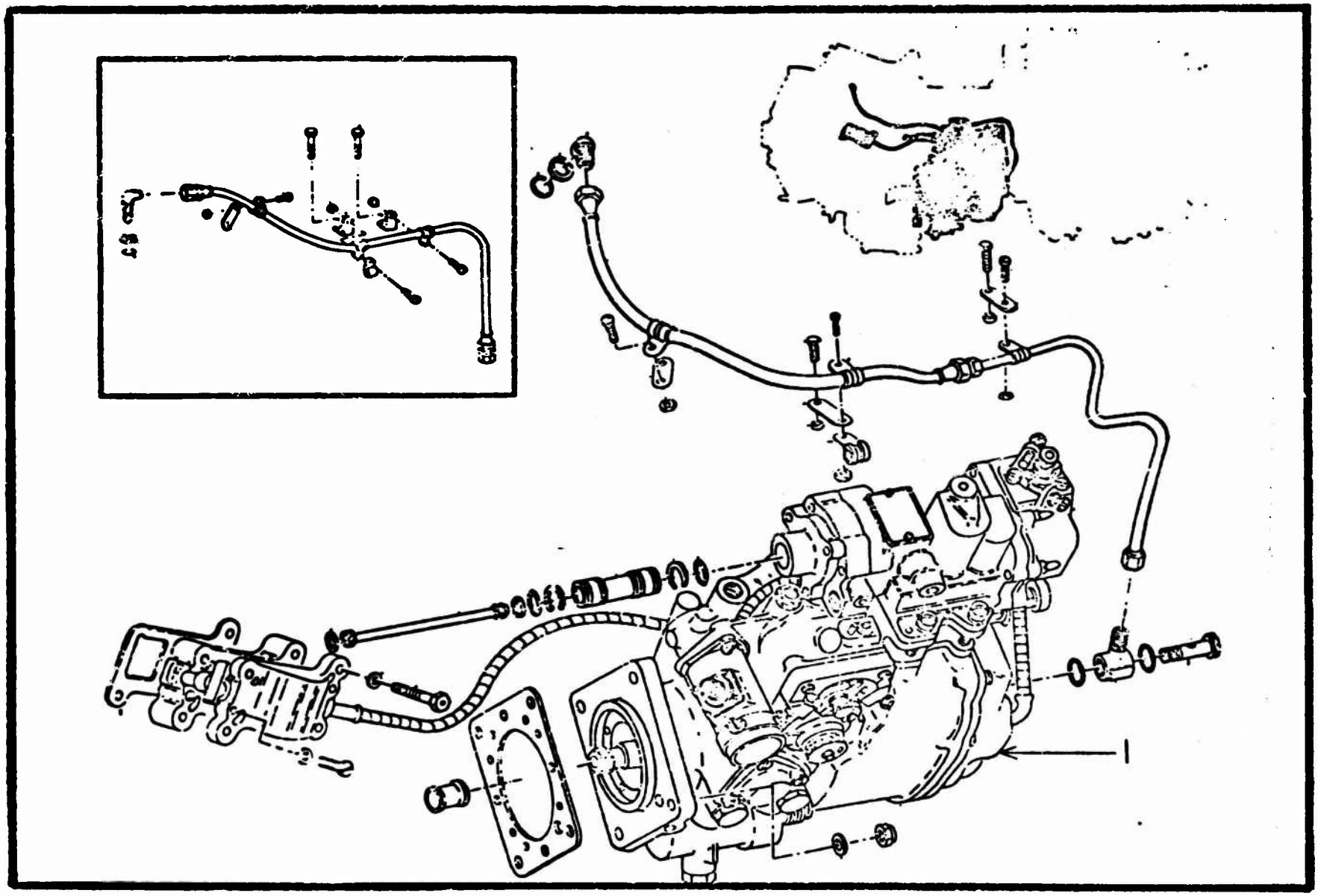

Figure 54 Fuel Control and Related Parts

UH-1H FLAT RATE DATA
FUNCTIONAL GROUP 03
REFERENCE FIGURE 54

ITEM NO.	NOMEMCLATURE	FSN/PN	ACTION CODE	MAINT. LEVEL	MEAN	MEDIAN	MODE	STD. DEV.	SAMPLE SIZE
1	Governor Assy	29159921149 29159942016	Replace	Total Org. Supp.	4.6 4.8 4.7	4.0 4.0 4.0	2.0 2.0 2.0	2.686 2.555 2.824	158 79 79
				Total Org. Supp.					
				Total Org. Supp.					
				Total Org. Supp.					
				Total Org. Supp.					
				Total Org. Supp.					
				Total Org. Supp.					
				Total Org. Supp.					
				Total Org. Supp.					
				Total Org. Supp.					

*Insufficient Data

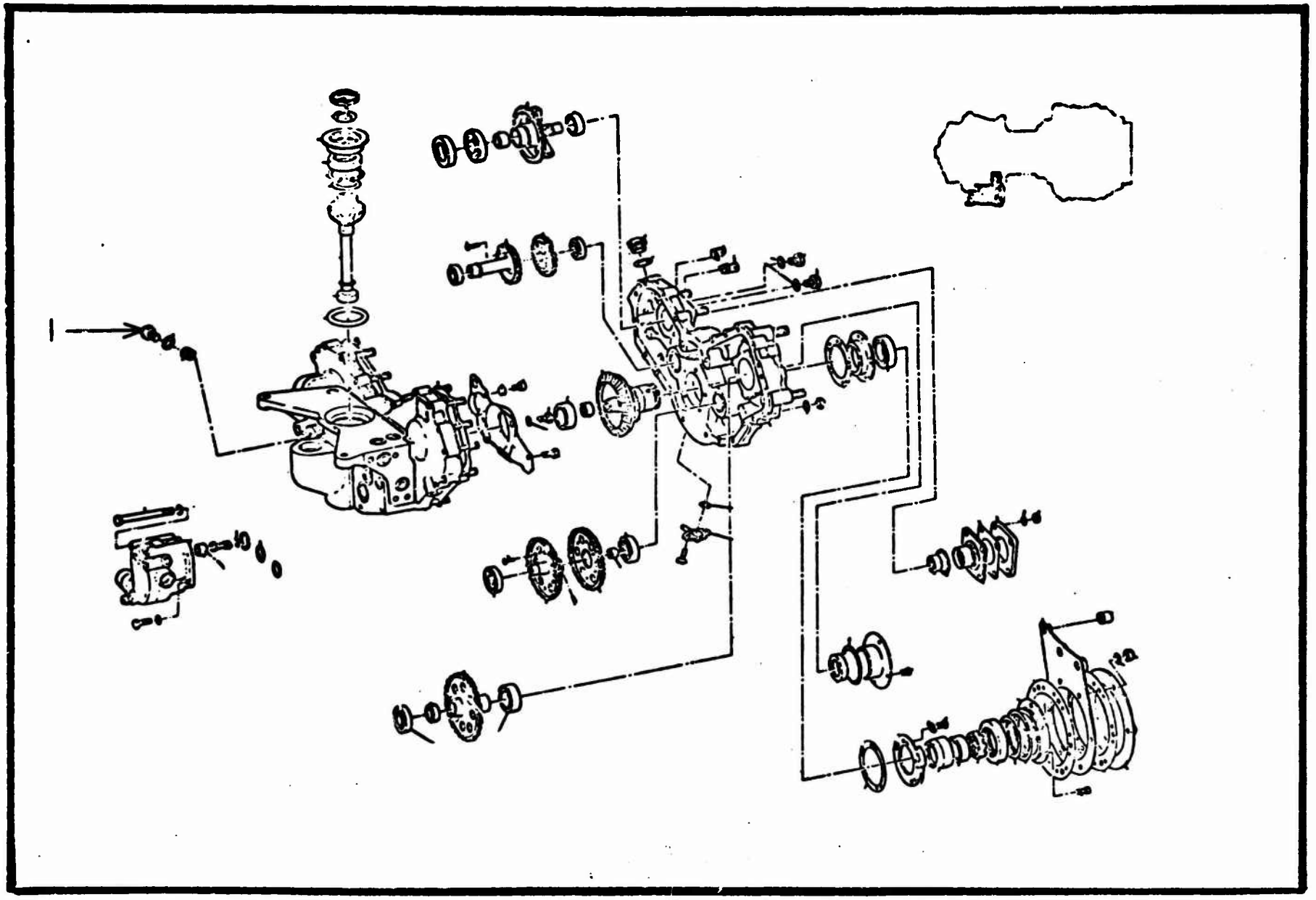

Figure 55 Accessory Drive Gearbox Assembly

UH-1H FLAT RATE DATA
FUNCTIONAL GROUP 03
REFERENCE FIGURE 55

ITEM NO.	NOMEMCLATURE	FSN/FN	ACTION CODE	MAINT. LEVEL	MEAN	MEDIAN	MODE	STD. DEV.	SAMPLE SIZE
1	Chip Detector	47307862992	Replace	Total	1.0	1.0	1.0	0.551	314
				Org.	1.0	1.0	1.0	0.556	272
				Supp.	1.0	1.0	1.0	0.521	42
				Total					
				Org.					
				Supp.					
				Total					
				Org.					
				Supp.					
				Total					
				Org.					
				Supp.					
				Total					
				Org.					
				Supp.					
				Total					
				Org.					
				Supp.					
				Total					
				Org.					
				Supp.					
				Total					
				Org.					
				Supp.					
				Total					
				Org.					
				Supp.					
				Total					
				Org.					
				Supp.					

*Insufficient Data

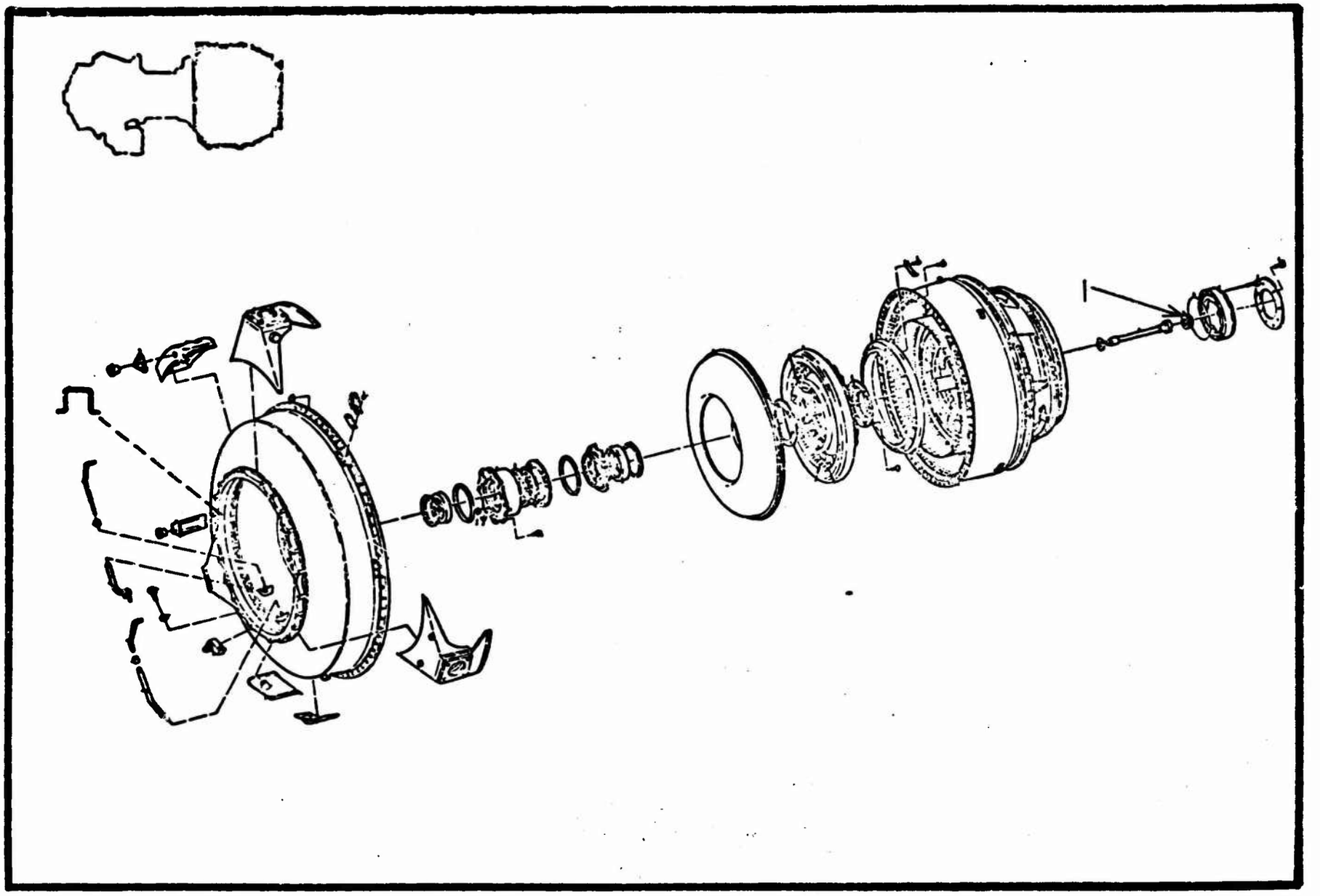

Figure 56 Diffuser Housing, Rear Bearing Cover, Combustion Turbine Assembly and Related Parts

UH-1H FLAT RATE DATA
FUNCTIONAL GROUP 03
REFERENCE FIGURE 56

ITEM NO.	NOMEMCLATURE	FSN/PN	ACTION CODE	MAINT. LEVEL	MEAN	MEDIAN	MODE	STD. DEV.	SAMPLE SIZE
1	Power Shaft Nut	28401568958	Replace	Total Org. Supp.	1.0 * 1.0	1.0 * 1.0	1.0 * 1.0	0.515 * 0.515	55 * 55
				Total Org. Supp.					
				Total Org. Supp.					
				Total Org. Supp.					
				Total Org. Supp.					
				Total Org. Supp.					
				Total Org. Supp.					
				Total Org. Supp.					
				Total Org. Supp.					
				Total Org. Supp.					

*Insufficient Data

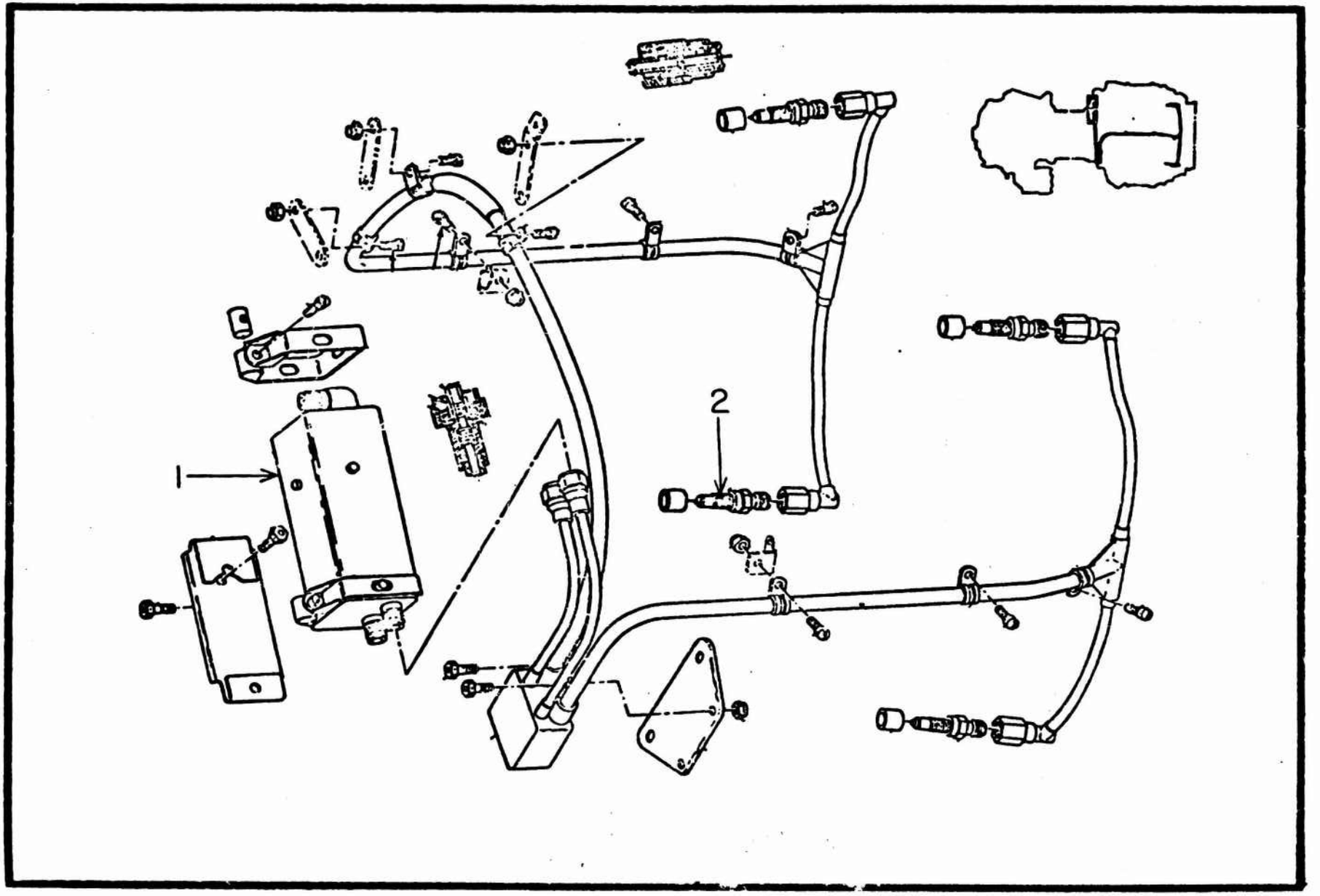

Figure 57 Ignition System

UH-1H FLAT RATE DATA
FUNCTIONAL GROUP 03
REFERENCE FIGURE 57

ITEM NO.	NOMEMCLATURE	FSN/PN	ACTION CODE	MAINT. LEVEL	MEAN	MEDIAN	MODE	STD. DEV.	SAMPLE SIZE
1	Exciter Box	29259502516	Replace	Total Org. Supp.	1.1 1.1 1.1	1.0 1.0 1.0	1.0 1.0 1.0	0.184 0.166 0.252	14 10 4
2	Igniter Plug	29259579947	Replace	Total Org. Supp.	1.6 1.8 1.4	2.0 2.0 1.0	2.0 2.0 1.5	0.801 0.875 0.674	80 41 39
				Total Org. Supp.					
				Total Org. Supp.					
				Total Org. Supp.					
				Total Org. Supp.					
				Total Org. Supp.					
				Total Org. Supp.					
				Total Org. Supp.					
				Total Org. Supp.					

*Insufficient Data

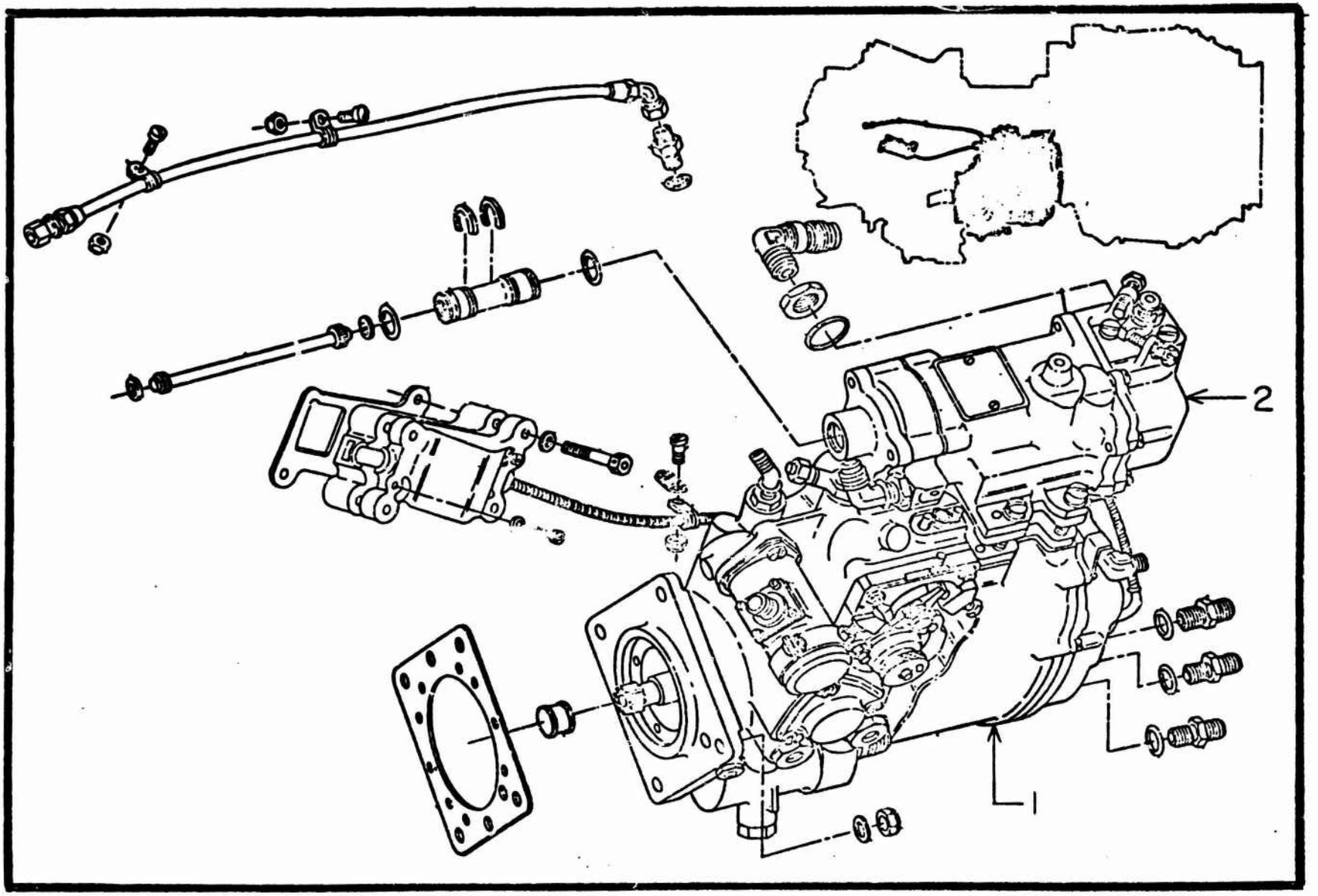

Figure 58 Fuel Control and Related Parts

UH-1H FLAT RATE DATA
FUNCTIONAL GROUP 03
REFERENCE FIGURE 53

ITEM NO.	NOMEMCLATURE	FSN/PN	ACTION CODE	MAINT. LEVEL	MEAN	MEDIAN	MODE	STD. DEV.	SAMPLE SIZE
1	Fuel Control Assy	29152237004	Replace	Total	11.7	10.0	10.0	6.400	212
				Org.	7.1	6.0	10.0	3.435	81
				Supp.	13.3	12.0	10.0	6.666	115
			Adjust	Total	7.3	6.0	5.0	3.011	6
				Org.	*	*	*	*	*
				Supp.	*	*	*	*	*
			Service	Total	1.0	1.0	1.0	0.445	25
				Org.	0.8	1.0	1.0	0.279	16
				Supp.	1.6	1.5	1.5	0.529	9
			Removed and Installed	Total	6.7	6.0	16.0	5.961	17
				Org.	*	*	*	*	*
				Supp.	6.2	6.0	6.0	5.536	12
2	Governor	29159942016	Replace	Total	3.3	3.0	2.0	1.442	26
				Org.	3.1	2.3	2.0	1.267	16
				Supp.	3.6	3.0	3.0	1.709	10
			Adjust	Total	1.3	1.0	1.0	0.572	51
				Org.	1.5	1.5	1.0	0.456	19
				Supp.	1.4	1.0	1.0	0.566	25
			Service	Total	1.5	1.0	1.0	1.000	12
				Org.	*	*	*	*	*
				Supp.	1.4	1.0	1.0	0.016	8
			Removed and Installed	Total	1.4	1.0	2.0	0.800	16
				Org.	*	*	*	*	*
				Supp.	1.5	1.0	2.0	0.880	11
				Total					
				Org.					
				Supp.					
				Total					
				Org.					
				Supp.					

*Insufficient Data

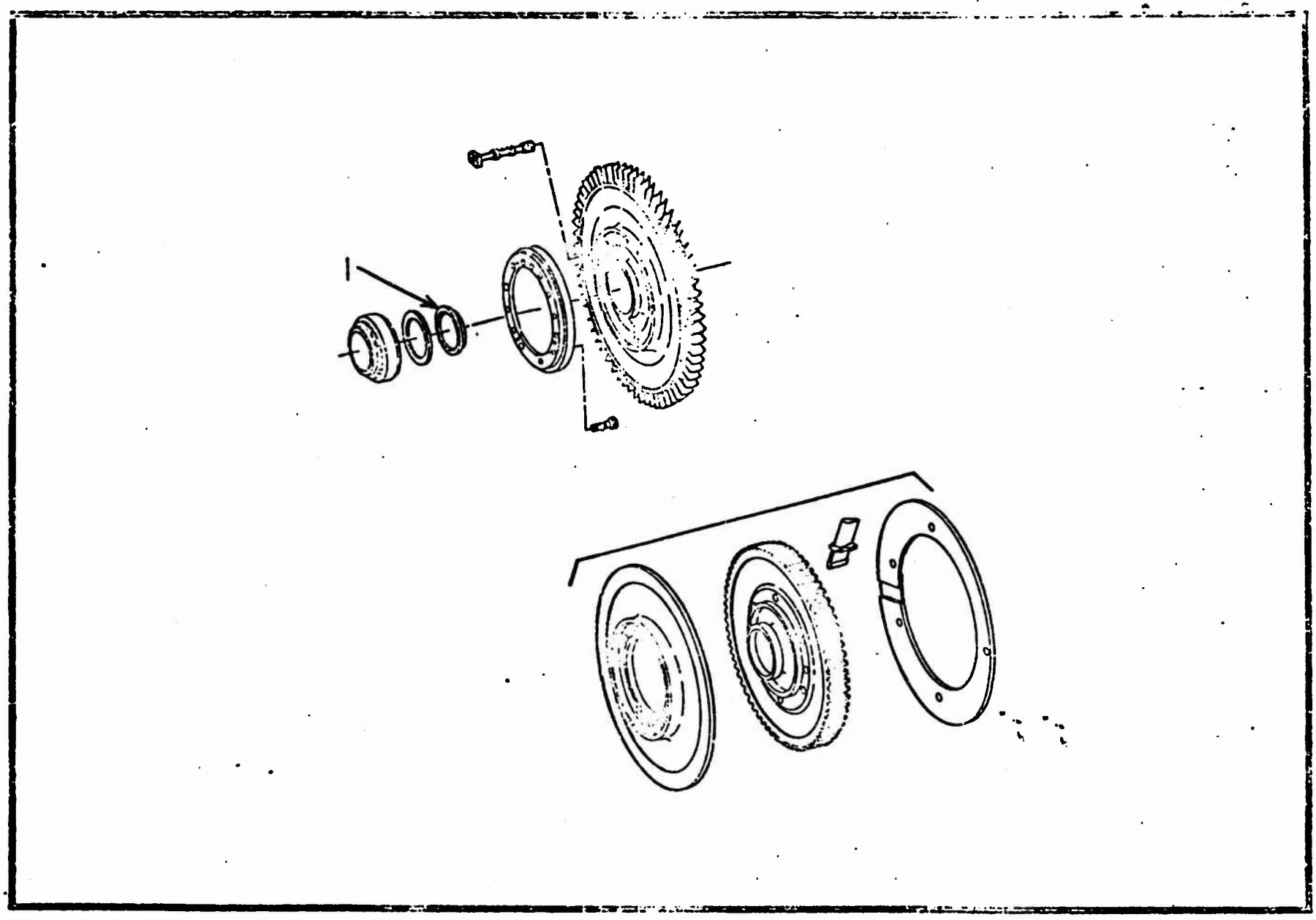

Figure 59 Rotor Assemblies, Gas Producer Nozzle and Cylinder

UH-1H FLAT RATE DATA
FUNCTIONAL GROUP 03
REFERENCE FIGURE 59

ITEM NO.	NOMEMCLATURE	FSN/PN	ACTION CODE	MAINT. LEVEL	MEAN	MEDIAN	MODE	STD. DEV.	SAMPLE SIZE
1	Cone	28409247985	Replace	Total	1.3	1.5	1.5	0.570	5
				Org.	*	*	*	*	*
				Supp.	1.3	1.5	1.5	0.570	5
				Total Org. Supp.					
				Total Org. Supp.					
				Total Org. Supp.					
				Total Org. Supp.					
				Total Org. Supp.					
				Total Org. Supp.					
				Total Org. Supp.					
				Total Org. Supp.					
				Total Org. Supp.					

*Insufficient Data

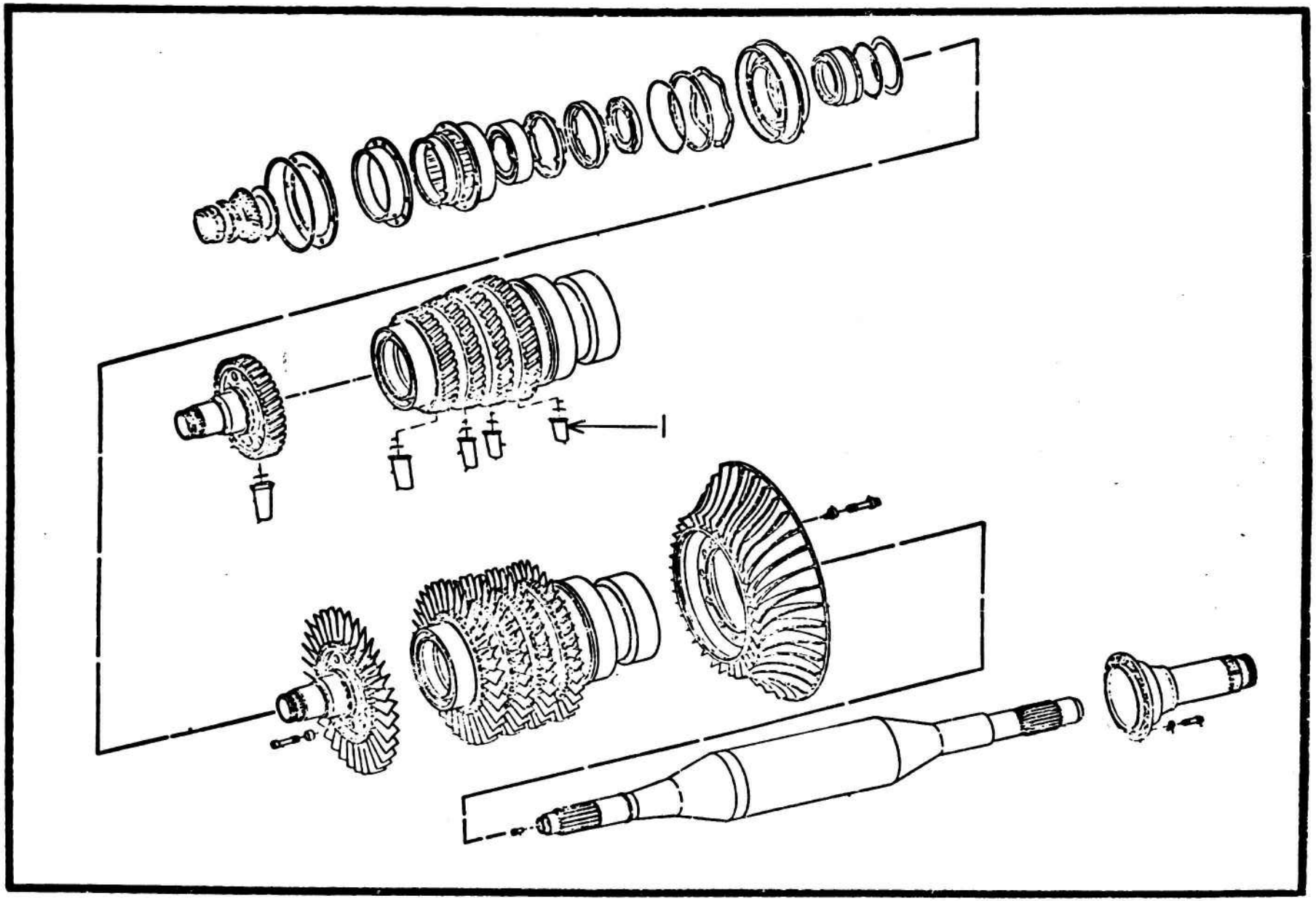

Figure 60 Compressor Rotor Assembly

UH-1H FLAT RATE DATA
FUNCTIONAL GROUP 03
REFERENCE FIGURE 60

ITEM NO.	NOMEMCLATURE	FSN/PN	ACTION CODE	MAINT. LEVEL	MEAN	MEDIAN	MODE	STD. DEV	SAMPLE SIZE
1	Blade	23401763752 23401763756 23401763780 23401763782 23401763791	Replace	Total	6.6	7.3	10.0	3.914	9
				Org.	*	*	*	*	*
				Supp.	6.6	7.3	10.0	3.914	9
			Repair	Total	10.0	6.0	6.0	7.077	28
				Org.	*	*	*	*	*
				Supp.	10.0	6.0	6.0	7.077	28
			Service	Total	7.6	8.0	8.0	4.999	9
				Org.	*	*	*	*	*
				Supp.	8.3	8.0	8.0	4.847	8
--	Compressor	28409798418	Repair	Total	9.8	8.0	8.0	6.393	37
				Org.	*	*	*	*	*
				Supp.	0.1	9.0	8.0	6.464	35
			Service	Total	5.4	4.0	4.0	4.078	21
				Org.	*	*	*	*	*
				Supp.	5.5	4.0	4.0	4.483	19
			Removed and Installed	Total	8.9	10.0	15.0	4.483	23
				Org.	*	*	*	*	*
				Supp.	8.9	10.0	15.0	4.483	23
			Removed	Total	6.2	5.0	10.0	3.061	6
				Org.	*	*	*	*	*
				Supp.	6.2	5.0	10.0	3.061	6
				Total					
				Org.					
				Supp.					
				Total					
				Org.					
				Supp.					
				Total					
				Org.					
				Supp.					

*Insufficient Data

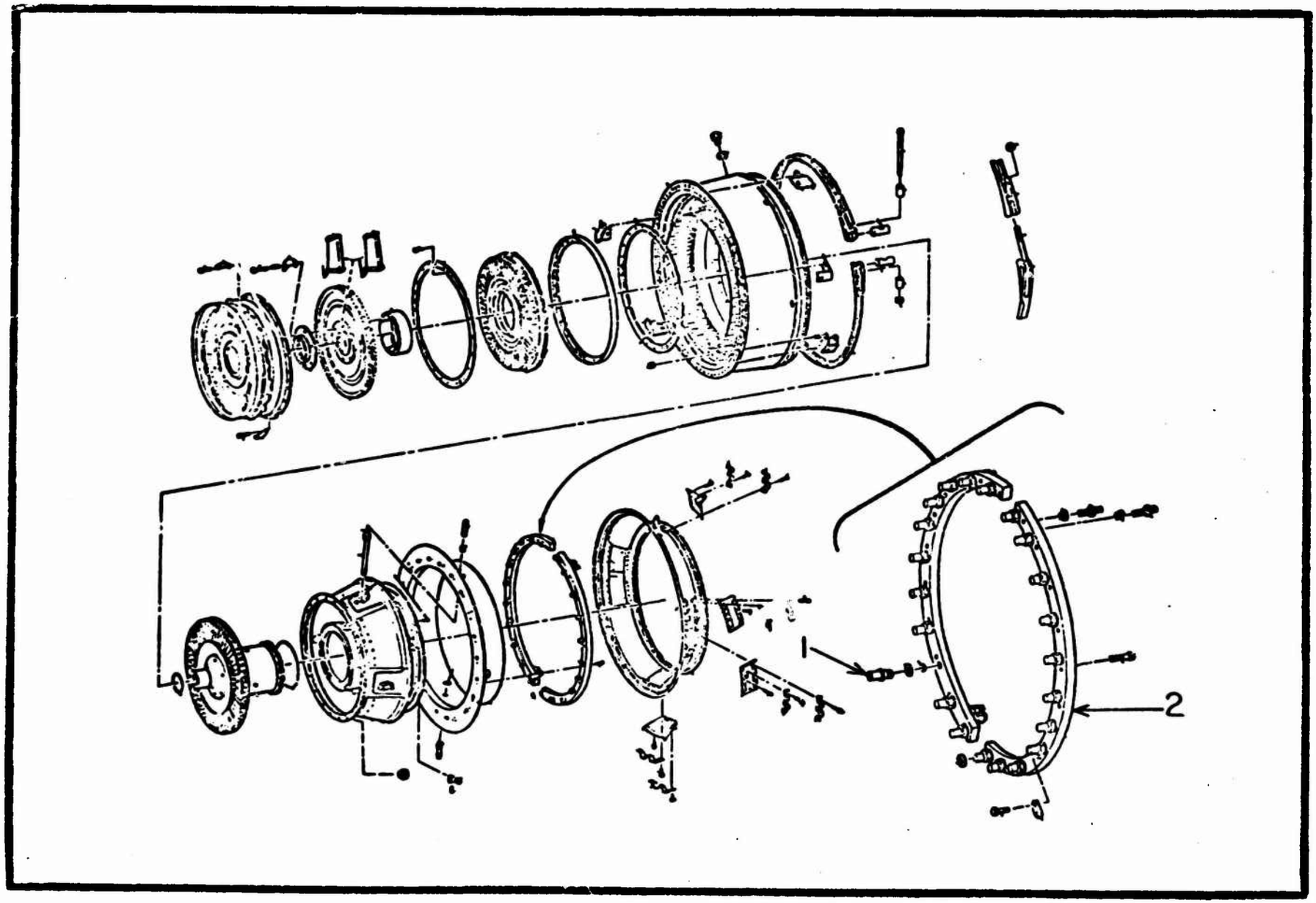

Figure 61 Combustion Turbine Assembly

UH-1H FLAT RATE DATA
FUNCTIONAL GROUP 03
REFERENCE FIGURE 61

ITEM NO.	NOMEMCLATURE	FSN/PN	ACTION CODE	MAINT. LEVEL	MEAN	MEDIAN	MODE	STD. DEV.	SAMPLE SIZE
1	Fuel Nozzle	29159447295	Replace	Total	2.4	2.0	1.0	1.250	25
				Org.	2.7	3.0	4.0	1.130	13
				Supp.	2.0	1.5	1.0	1.323	12
			Removed and Installed	Total	1.5	1.5	1.0	0.479	13
				Org.	*	*	*	*	*
				Supp.	1.5	1.5	1.0	0.479	13
2	Manifold	28409600174	Replace	Total	3.7	4.0	5.0	1.494	10
				Org.	3.0	2.0	2.0	1.732	3
				Supp.	4.0	5.0	5.0	1.414	7
			Removed and Installed	Total	1.7	2.0	2.0	0.447	5
				Org.	*	*	*	*	*
				Supp.	1.6	1.5	2.0	0.480	4
				Total					
				Org.					
				Supp.					
				Total					
				Org.					
				Supp.					
				Total					
				Org.					
				Supp.					
				Total					
				Org.					
				Supp.					
				Total					
				Org.					
				Supp.					
				Total					
				Org.					
				Supp.					

*Insufficient Data

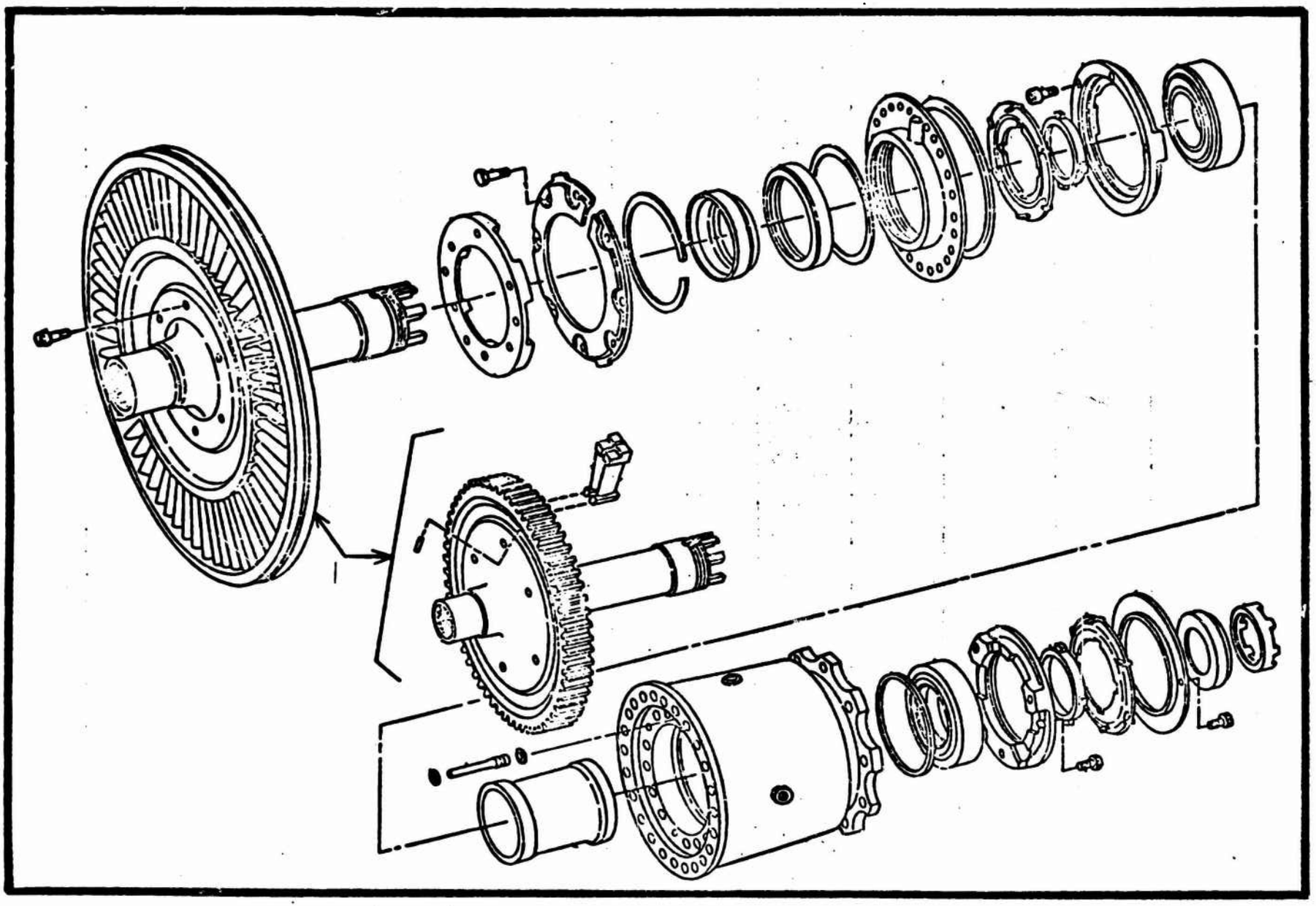

Figure 62 Turbine Rotor and Bearing Housing Assembly

UH-1H FLAT RATE DATA
FUNCTIONAL GROUP 03
REFERENCE FIGURE E2

ITEM NO.	NOMEMCLATURE	FSN/PN	ACTION CODE	MAINT. LEVEL	MEAN	MEDIAN	MODE	STD. DEV.	SAMPLE SIZE
1	Turbine Rotor	28400543608 28401768753 28409228282 28409255813 28409432381	Replace	Total	14.9	16.0	20.0	6.451	17
				Org.	*	*	*	*	*
				Supp.	14.8	15.0	20.0	6.656	16
				Total					
				Org.					
				Supp.					
				Total					
				Org.					
				Supp.					
				Total					
				Org.					
				Supp.					
				Total					
				Org.					
				Supp.					
				Total					
				Org.					
				Supp.					
				Total					
				Org.					
				Supp.					
				Total					
				Org.					
				Supp.					
				Total					
				Org.					
				Supp.					
				Total					
				Org.					
				Supp.					

*Insufficient Data

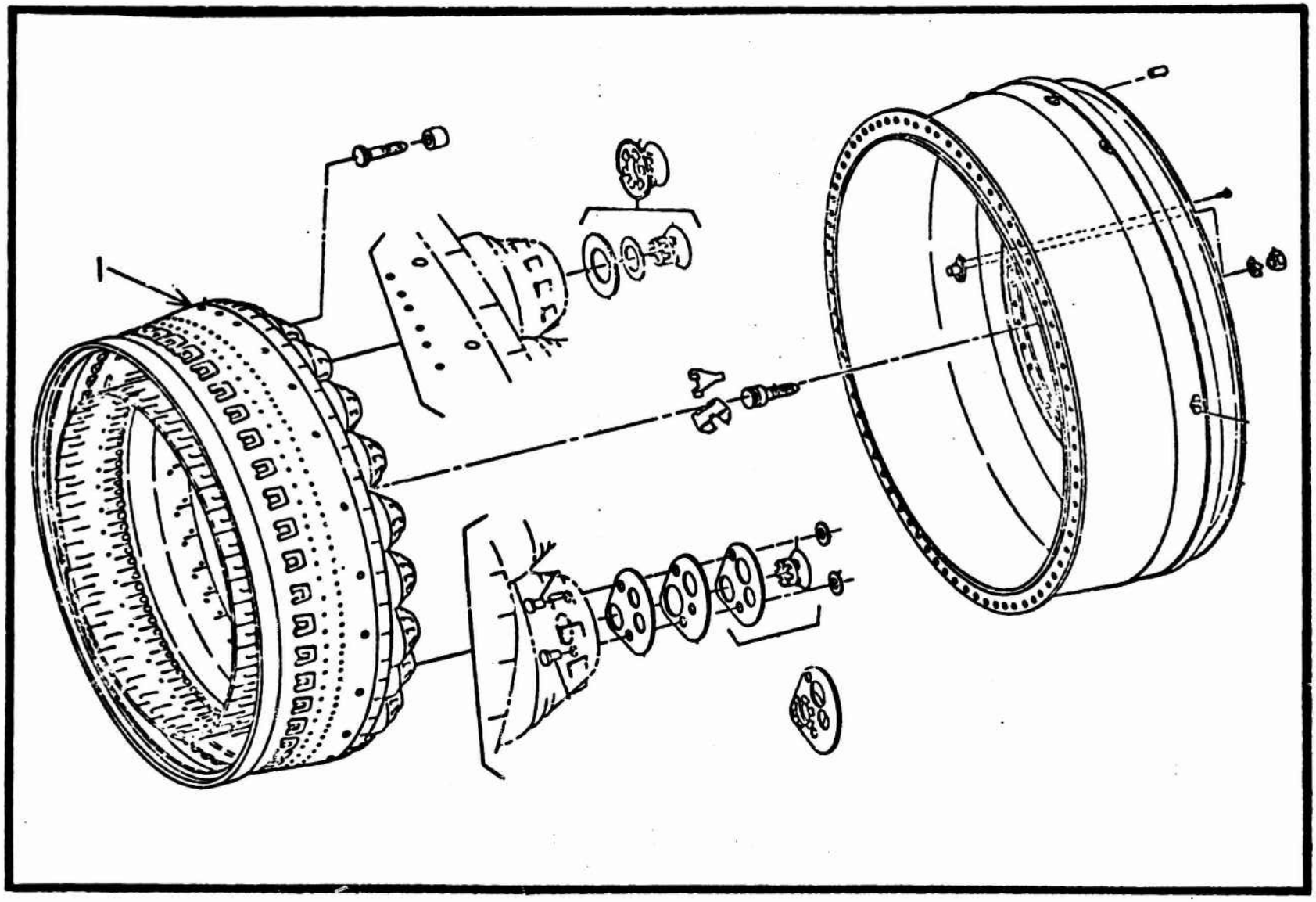

Figure 63 Combustion Chamber Assembly

UH-1H FLAT RATE DATA
FUNCTIONAL GROUP
REFERENCE FIGURE 63

ITEM NO.	NOMEMCLATURE	FSN/PN	ACTION CODE	MAINT. LEVEL	MEAN	MEDIAN	MODE	STD. DEV.	SAMPLE SIZE
1	Combustion Chamber	28409432375	Service	Total	22.0	18.5	18.5	5.576	6
				Org.	*	*	*	*	*
				Supp.	22.0	18.5	18.5	5.576	6
			Removed and Installed	Total	23.0	24.0	24.0	10.717	36
				Org.	*	*	*	*	*
				Supp.	23.0	24.0	24.0	10.717	36
				Total					
				Org.					
				Supp.					
				Total					
				Org.					
				Supp.					
				Total					
				Org.					
				Supp.					
				Total					
				Org.					
				Supp.					
				Total					
				Org.					
				Supp.					
				Total					
				Org.					
				Supp.					
				Total					
				Org.					
				Supp.					
				Total					
				Org.					
				Supp.					

*Insufficient Data

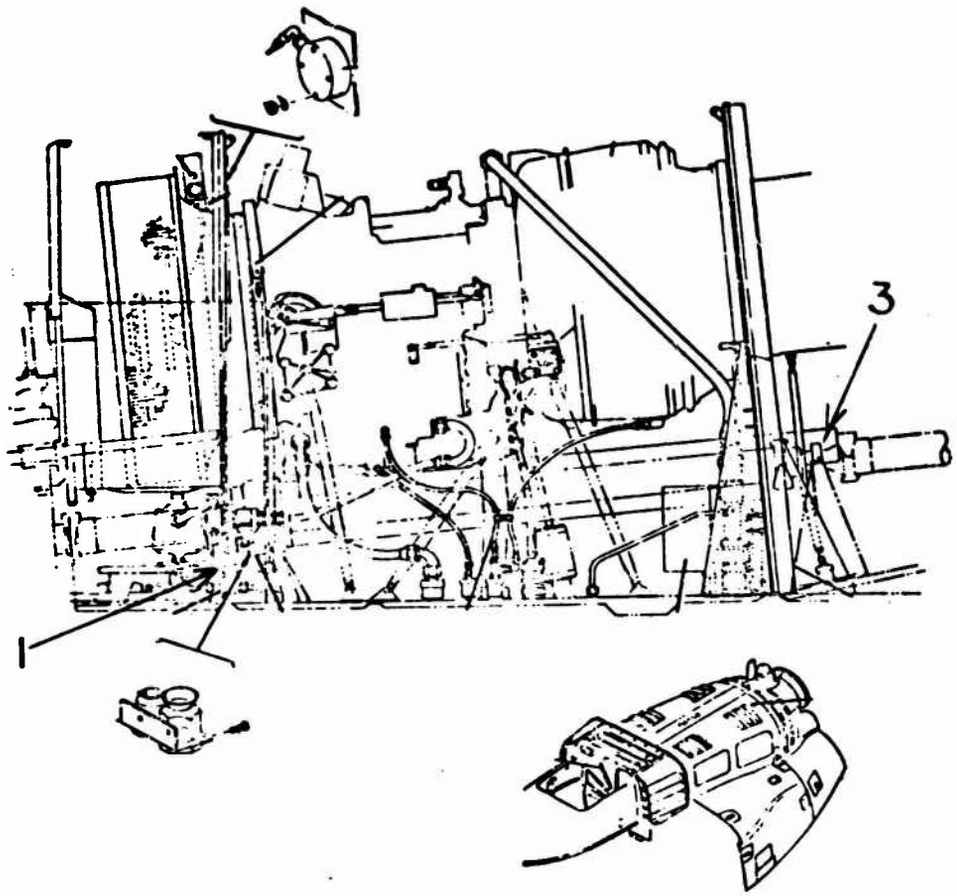

Figure 64 Power Plant Installation (Sheet 1 of 2)

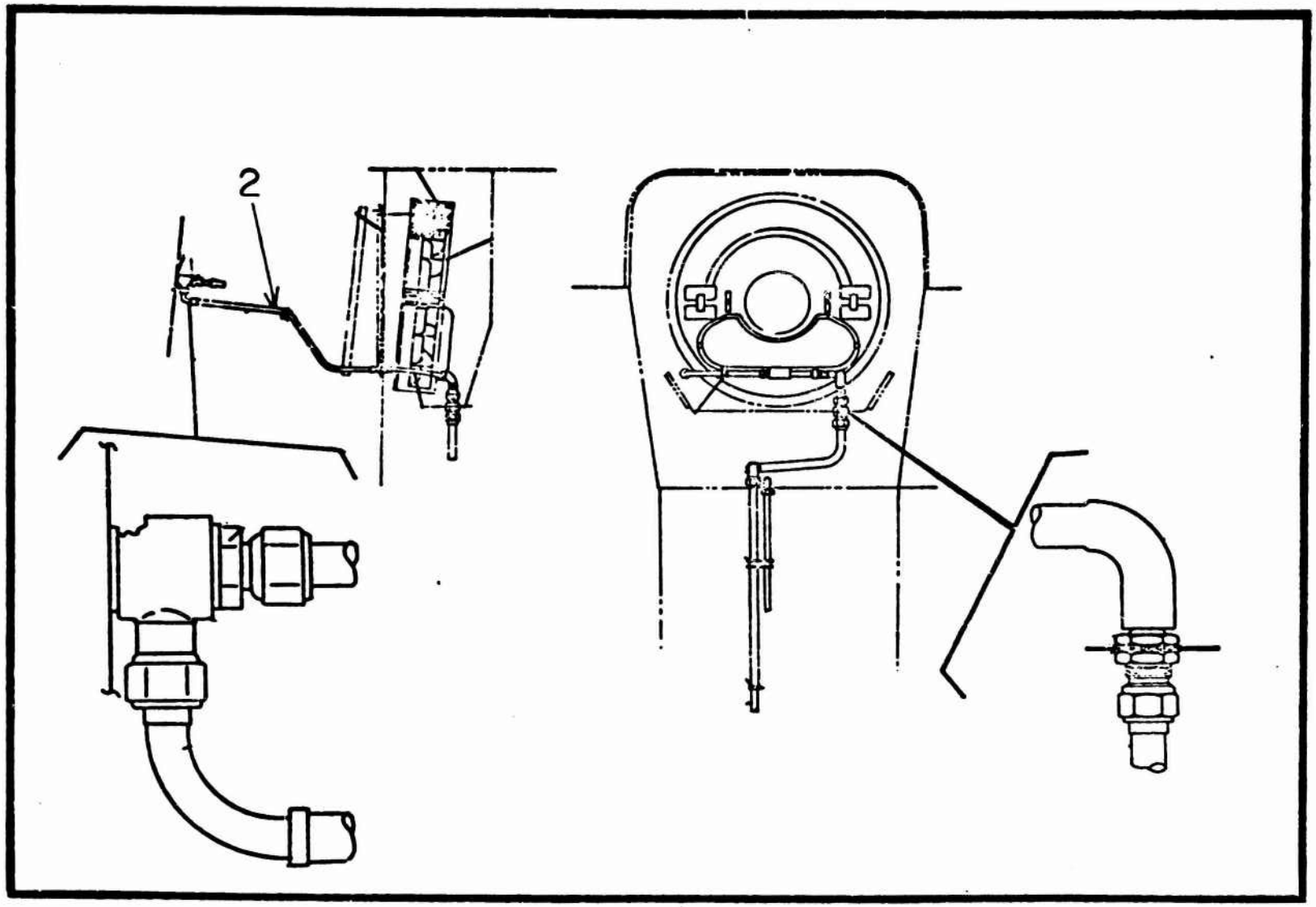

Figure 64 Power Plant Installation (Sheet 2 of 2)

UH-1H FLAT RATE DATA
FUNCTIONAL GROUP 03
REFERENCE FIGURE 64

ITEM NO.	NOMEMCLATURE	FSN/PN	ACTION CODE	MAINT. LEVEL	MEAN	MEDIAN	MODE	STD. DEV.	SAMPLE SIZE
1	Firewall Assy	15600767296 15601508902 15601508913 15601815266 15606023428 15609181894 15609926502	Replace	Total	1.8	2.0	2.0	0.822	15
				Org.	1.9	2.0	1.0	0.901	7
				Supp.	2.9	2.1	2.0	1.210	7
			Repair	Total	2.1	1.5	1.0	1.457	14
				Org.	*	*	*	*	*
				Supp.	2.1	1.5	1.0	1.457	14
				Total					
				Org.					
				Supp.					
2	Hose Assembly	47201829085 47204105860 47204576715 47207385877	Replace	Total	1.2	1.0	1.0	0.619	39
				Org.	1.1	1.0	0.5	0.615	24
				Supp.	1.4	1.0	1.0	0.587	15
				Total					
				Org.					
				Supp.					
3	Shield	15609926501	Removed and Installed	Total	0.8	1.0	1.0	0.257	16
				Org.	*	*	*	*	*
				Supp.	0.8	1.0	1.0	0.257	16
				Total					
				Org.					
				Supp.					
				Total					
				Org.					
				Supp.					
				Total					
				Org.					
				Supp.					
				Total					
				Org.					
				Supp.					

*Insufficient Data

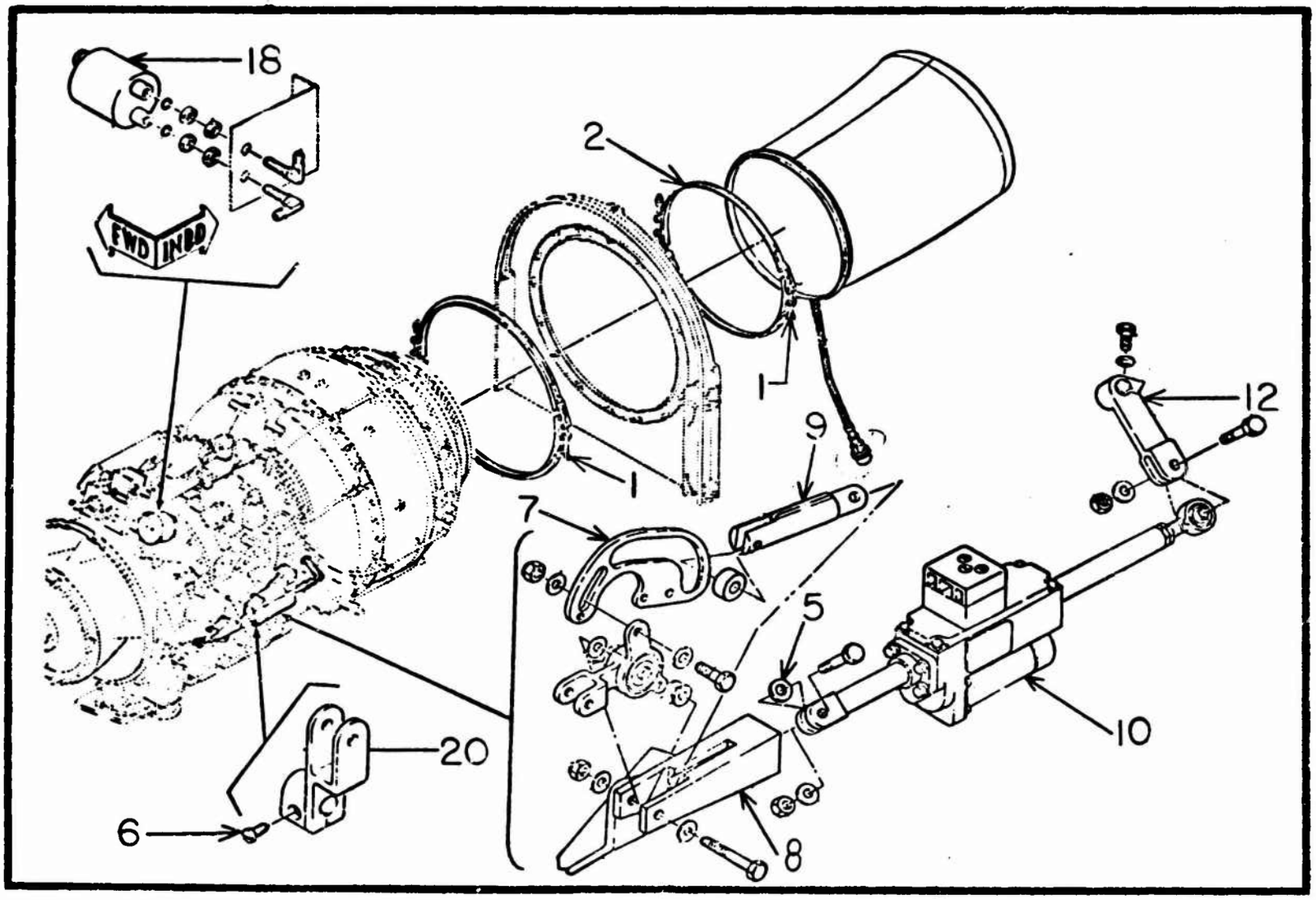

Figure 65 Engine Assembly (Sheet 1 of 3)

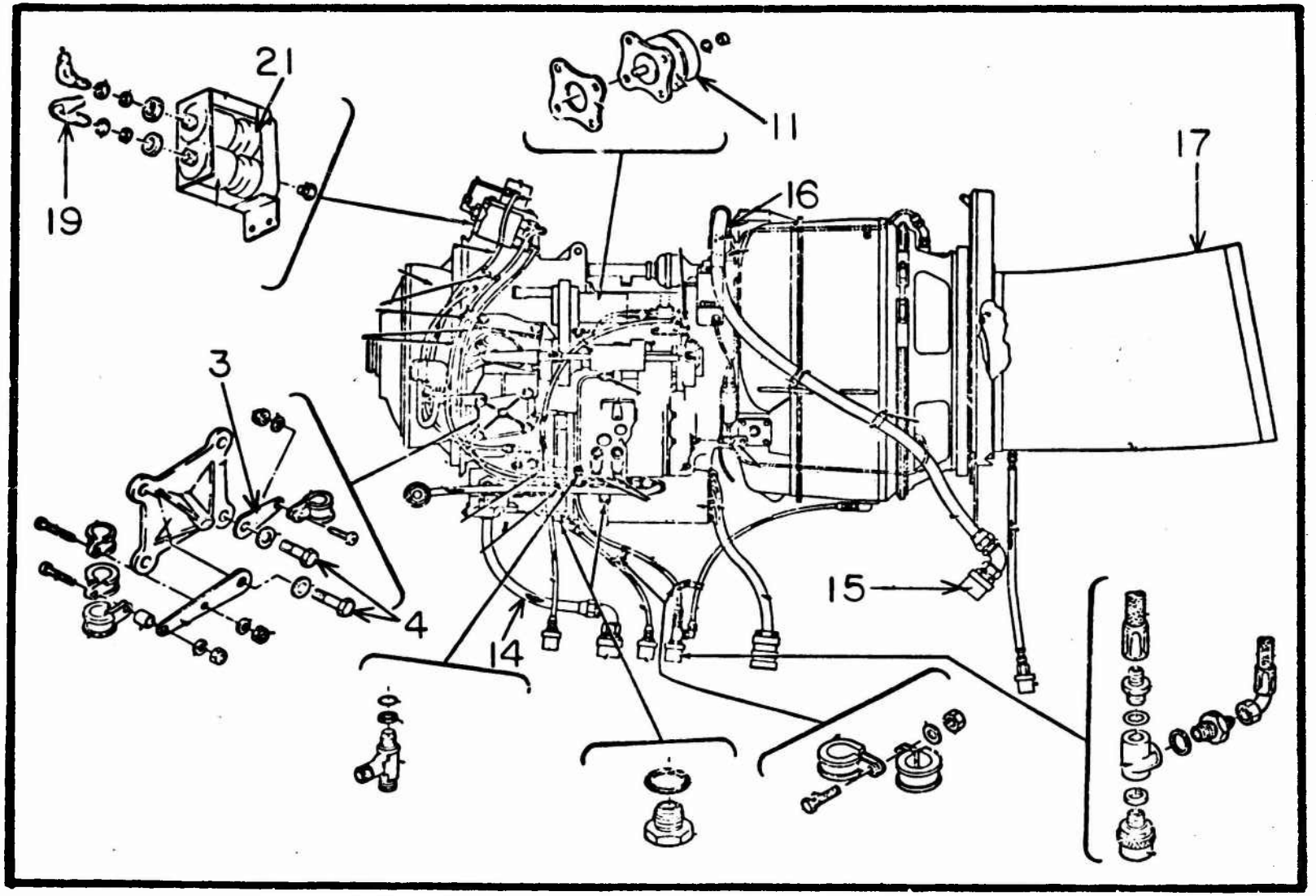

Figure 65 Engine Assembly (Sheet 2 of 3)

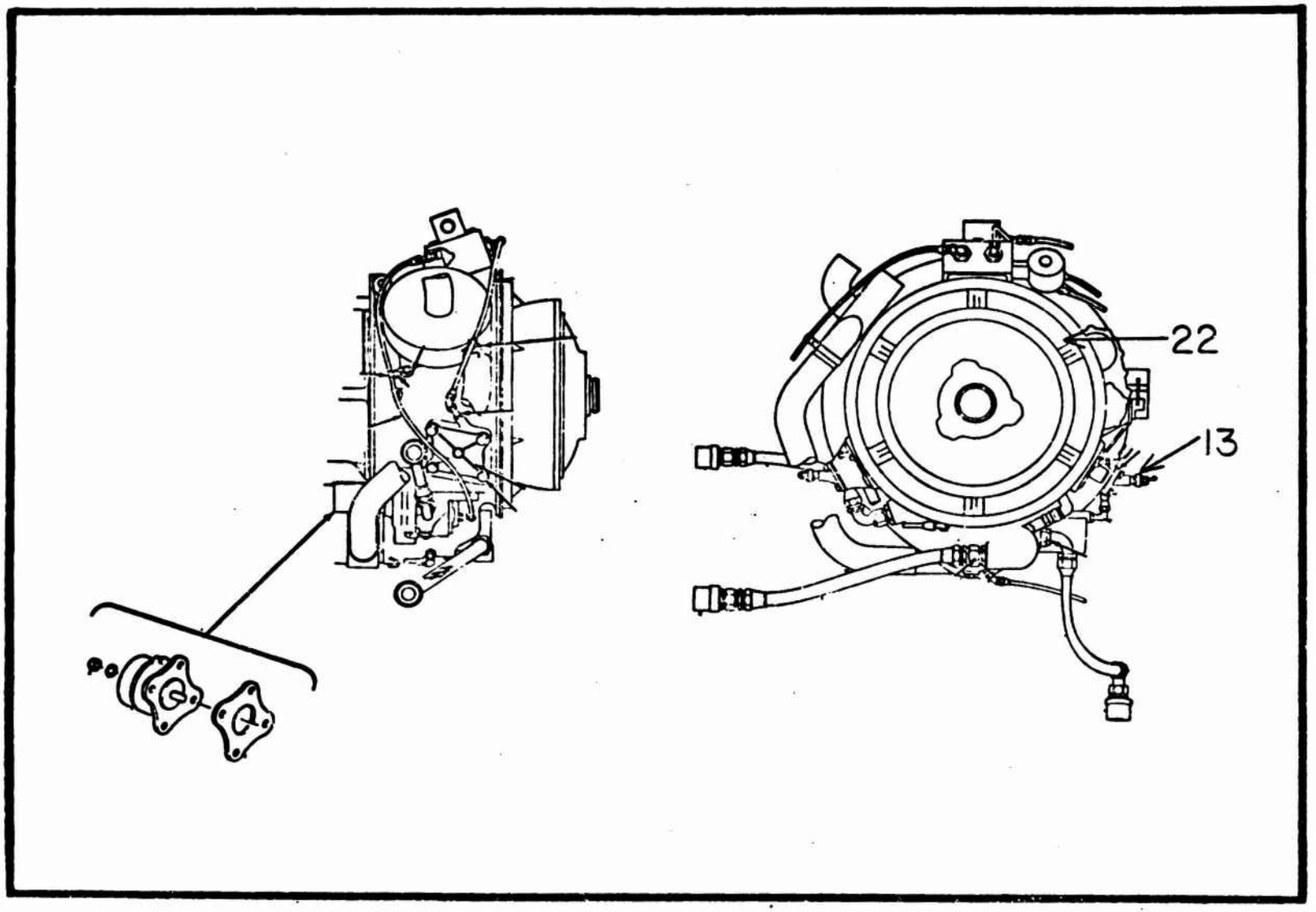

Figure 65 Engine Assembly (Sheet 3 of 3)

UH-1H FLAT RATE DATA
FUNCTIONAL GROUP 03
REFERENCE FIGURE 65

ITEM NO.	NOMEMCLATURE	FSN/PN	ACTION CODE	MAINT. LEVEL	MEAN	MEDIAN	MODE	STD. DEV.	SAMPLE SIZE
1	Nut	53101984759 53106017515 53109824971	Replace	Total	0.6	0.5	0.5	0.215	27
				Org.	0.5	0.5	0.5	0.144	13
				Supp.	0.7	0.5	0.5	0.251	14
2	Clamp	53406586170	Replace	Total	1.4	1.0	0.5	1.022	31
				Org.	1.0	1.0	0.5	0.698	20
				Supp.	2.0	1.5	4.0	1.253	11
3	Support Assy	29159671738 29159671739 29159671740	Replace	Total	1.6	1.0	2.0	0.764	10
				Org.	*	*	*	*	*
				Supp.	1.6	1.0	1.0	0.744	8
4	Bolt	53061457037 53061802744 53065826911 53065829020	Replace	Total	1.4	1.0	1.0	0.599	11
				Org.	*	*	*	*	*
				Supp.	1.6	1.0	1.0	0.665	8
				Total					
				Org.					
				Supp.					
5	Washer	53108600642	Replace	Total	1.3	1.0	1.0	0.467	29
				Org.	1.4	1.0	1.0	0.467	20
				Supp.	1.2	1.0	1.0	0.442	9
6	Bolt	53061510323 53061821854	Replace	Total	0.7	0.5	0.5	0.275	38
				Org.	0.6	0.5	0.5	0.266	32
				Supp.	0.9	1.0	1.0	0.205	6
7	Cam Droop	15608980008	Replace	Total	2.3	2.0	1.0	1.254	49
				Org.	*	*	*	*	*
				Supp.	2.8	3.0	3.0	1.368	22
8	Housing	15608954435	Replace	Total	1.6	1.5	1.0	0.728	14
				Org.	*	*	*	*	*
				Supp.	1.4	1.0	1.0	0.713	9
			Adjust	Total	1.4	1.0	0.5	0.919	67
				Org.	1.2	0.5	0.5	0.992	26
				Supp.	1.5	1.0	2.0	0.862	41

*Insufficient Data

UH-1H FLAT RATE DATA
FUNCTIONAL GROUP 03
REFERENCE FIGURE 65

ITEM NO.	NOMENCLATURE	FSN/PN	ACTION CODE	MAINT. LEVEL	MEAN	MEDIAN	MODE	STD. DEV.	SAMPLE SIZE
8	Housing (Cont'd)	15608954435	Service	Total	0.7	0.5	0.5	0.363	21
				Org.	0.9	0.5	0.5	0.415	10
				Supp.	0.6	0.5	0.5	0.295	11
9	Slider Assy	16809935195	Replace	Total	1.8	2.0	3.0	0.994	7
				Org.	*	*	*	*	*
				Supp.	1.3	1.0	2.0	0.671	5
10	Linear Actuator	29950617302 29958768751 29959903163	Replace	Total	2.3	2.0	2.0	1.207	735
				Org.	2.2	2.0	2.0	1.070	542
				Supp.	2.4	2.0	2.0	1.250	166
			Adjust	Total	1.4	1.0	1.0	0.795	183
				Org.	1.2	1.0	1.0	0.605	93
				Supp.	1.3	1.0	1.0	0.816	76
			Service	Total	1.6	1.0	1.0	1.103	42
				Org.	1.6	1.0	1.0	1.151	22
				Supp.	1.7	1.5	2.0	1.075	20
			Removed and Installed	Total	1.6	2.0	2.0	0.918	54
				Org.	1.9	2.0	2.0	0.912	28
				Supp.	1.3	1.0	0.5	0.838	26
11	Tachometer Generator	66205851503	Replace	Total	1.6	1.5	1.0	0.907	337
				Org.	1.4	1.0	1.0	0.698	252
				Supp.	1.8	2.0	1.0	0.971	69
			Service	Total	0.7	0.5	1.0	0.292	9
				Org.	0.7	0.5	0.5	0.292	3
				Supp.	0.7	0.5	1.0	0.319	6
			Removed and Installed	Total	1.3	1.0	1.0	0.726	72
				Org.	*	*	*	*	*
				Supp.	1.4	1.0	1.0	0.793	47
12	Lever	29958931216	Replace	Total	1.1	1.0	1.0	0.568	29
				Org.	1.1	1.0	0.5	0.640	16
				Supp.	1.2	1.0	1.0	0.480	13

*Insufficient Data

UH-1H FLAT RATE DATA
FUNCTIONAL GROUP 03
REFERENCE FIGURE 65

ITEM NO.	NOMEMCLATURE	FSN/PN	ACTION CODE	MAINT. LEVEL	MEAN	MEDIAN	MODE	STD. DEV.	SAMPLE SIZE
13	Bearing	31208784389	Replace	Total	1.7	1.5	1.0	0.960	271
				Org.	1.7	1.5	1.0	0.956	123
				Supp.	1.7	1.0	1.0	0.967	148
14	Hose Assembly	47201828962 47201828966 47201828969 47202759470	Replace	Total	1.1	1.0	1.0	0.562	122
				Org.	1.1	1.0	1.0	0.576	88
				Supp.	1.3	1.0	1.0	0.482	34
				Total					
				Org.					
				Supp.					
15	Coupling Half	47307732622 47307732623 47309918552	Replace	Total	1.1	1.0	1.0	0.578	28
				Org.	0.9	1.0	1.0	0.471	19
				Supp.	1.4	1.9	2.0	0.674	9
16	Adapter	47300343722 47306846917	Replace	Total	2.2	2.0	2.0	0.501	9
				Org.	*	*	*	*	*
				Supp.	2.2	2.0	2.0	0.410	6
17	Tail Pipe Assy	29907679212	Replace	Total	1.4	1.0	1.0	0.818	34
				Org.	1.4	1.0	1.0	0.837	26
				Supp.	1.5	1.0	1.0	0.802	8
18	Pressure Switch	59300769835 59307381640	Replace	Total	1.6	1.5	1.0	0.764	254
				Org.	1.6	1.5	1.0	0.733	184
				Supp.	1.7	1.9	1.0	0.844	70
19	Elbow	47302313026 47307200288	Replace	Total	0.7	0.5	0.5	0.357	9
				Org.	*	*	*	*	*
				Supp.	0.8	0.5	0.5	0.422	6
20	Droop Compensator	29959273549	Replace	Total	1.5	1.0	1.0	0.734	32
				Org.	1.6	2.0	2.0	0.846	13
				Supp.	1.5	1.0	1.0	0.664	19
21	Pressure Transmitter	66200674945 66205538854 66205538988	Replace	Total	1.9	1.5	1.0	0.970	344
				Org.	1.8	1.5	1.0	0.960	267
				Supp.	1.9	2.0	2.0	1.003	77

*Insufficient Data

UH-1H FLAT RATE DATA
FUNCTIONAL GROUP 03
REFERENCE FIGURE 65

ITEM NO.	NOMEMCLATURE	FSN/PN	ACTION CODE	MAINT. LEVEL	MEAN	MEDIAN	MODE	STD. DEV.	SAMPLE SIZE
21	Pressure Transmitter (Cont'd)	66205568341 66206262604	Replace	Total	1.9	1.5	1.0	0.970	3[illegible]
				Org.	1.8	1.5	1.0	0.960	267
				Supp.	1.9	2.0	2.0	1.003	[illegible]
22	Aircraft Turboshaft Engine	28401023968 28401344803 28407666401	Replace	Total	30.1	30.0	40.0	16.232	1095
				Org.	*	*	*	*	*
				Supp.	31.7	30.0	40.0	15.951	912
			Adjust	Total	4.4	4.0	1.0	3.007	221
				Org.	3.6	3.0	1.0	2.448	26
				Supp.	4.6	4.0	2.0	3.081	185
			Repair	Total	4.1	3.0	2.0	3.134	229
				Org.	*	*	*	*	*
				Supp.	4.4	3.0	1.0	3.323	17[illegible]
			Service	Total	1.6	1.0	1.0	1.828	3598
				Org.	1.1	1.0	1.0	0.917	2771
				Supp.	3.6	3.0	2.0	2.605	82[illegible]
			Initial Inspection	Total	1.4	1.0	0.5	1.167	365
				Org.	*	*	*	*	*
				Supp.	1.4	1.0	0.5	1.148	356
			Final Inspection	Total	1.4	1.0	0.5	1.219	393
				Org.	*	*	*	*	*
				Supp.	1.4	1.0	0.5	1.208	383
			Tested	Total	2.7	2.0	2.0	1.466	305
				Org.	*	*	*	*	*
				Supp.	2.9	2.5	2.0	1.440	273
			Removed and Installed	Total	10.6	8.0	1.0	8.903	309
				Org.	*	*	*	*	*
				Supp.	11.2	10.0	20.0	8.924	275
			Checked-Serviceable	Total	2.0	2.0	1.0	1.191	155
				Org.	*	*	*	*	*
				Supp.	2.3	2.0	2.0	1.376	73

*Insufficient Data

UH-1H FLAT RATE DATA
FUNCTIONAL GROUP 03
REFERENCE FIGURE C5

ITEM NO.	NOMEMCLATURE	FSN/PN	ACTION CODE	MAINT. LEVEL	MEAN	MEDIAN	MODE	STD. DEV	SAMPLE SIZE
22	Aircraft Turboshaft Engine (Cont'd)	28401023968 28401344803 28407666401	Removed	Total	6.8	6.0	10.0	3.151	113
				Org.	*	*	*	*	*
				Supp.	7.0	6.5	10.0	3.091	101
			Installed	Total	12.8	11.0	10.0	8.257	139
				Org.	*	*	*	*	*
				Supp.	12.6	11.0	10.0	8.190	133
				Total					
				Org.					
				Supp.					
				Total					
				Org.					
				Supp.					
				Total					
				Org.					
				Supp.					
				Total					
				Org.					
				Supp.					
				Total					
				Org.					
				Supp.					
				Total					
				Org.					
				Supp.					
				Total					
				Org.					
				Supp.					
				Total					
				Org.					
				Supp.					

*Insufficient Data

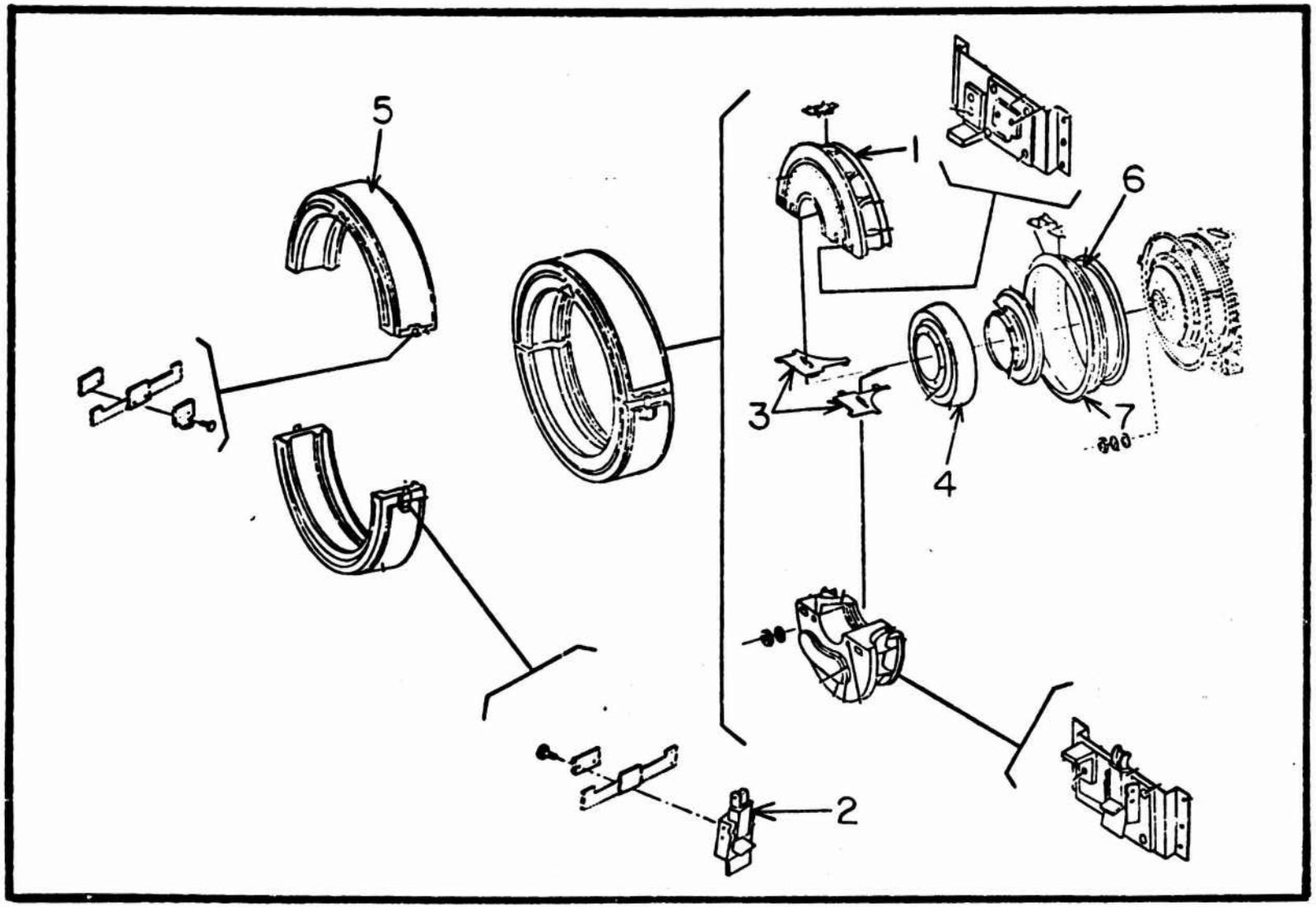

Figure 66 Particle Separator

UH-1H FLAT RATE DATA
FUNCTIONAL GROUP 03
REFERENCE FIGURE 66

ITEM NO.	NOMEMCLATURE	FSN/PN	ACTION CODE	MAINT. LEVEL	MEAN	MEDIAN	MODE	STD. DEV.	SAMPLE SIZE
1	Air Filter Assy	29451681464 29454422539 29454422544	Replace	Total	1.1	1.0	1.0	0.651	294
				Org.	1.0	1.0	1.0	0.629	199
				Supp.	1.2	1.0	1.0	0.695	95
			Repair	Total	1.4	1.0	1.0	0.497	8
				Org.	*	*	*	*	*
				Supp.	1.3	1.0	1.0	0.518	6
			Removed and Installed	Total	1.9	1.5	1.0	1.057	54
				Org.	1.8	1.5	1.0	1.157	33
				Supp.	2.1	2.0	2.0	0.875	21
2	Latch	29459177072	Replace	Total	1.5	1.0	1.0	1.000	17
				Org.	0.6	0.5	0.5	0.671	5
				Supp.	1.8	1.0	1.0	0.988	12
3	Gasket	29459171802 29459171804 53304559704	Replace	Total	0.9	1.0	1.0	0.463	132
				Org.	0.8	0.8	0.5	0.458	90
				Supp.	1.1	1.0	1.0	0.625	42
4	Deflector Assy	29454561910 29459177077	Replace	Total	1.9	2.0	2.0	0.890	28
				Org.	1.8	2.0	2.0	0.814	16
				Supp.	2.1	2.0	2.0	0.996	12
5	Screen Assy	29951104364	Replace	Total	1.1	1.0	0.5	0.976	120
				Org.	0.8	0.5	0.5	0.515	75
				Supp.	1.5	1.0	1.0	1.367	44
			Repair	Total	1.2	1.0	1.0	0.489	15
				Org.	*	*	*	*	*
				Supp.	1.3	1.0	1.5	0.543	10
			Service	Total	2.3	1.7	5.0	1.852	25
				Org.	*	*	*	*	*
				Supp.	3.5	4.0	5.0	1.809	13
			Removed and Installed	Total	1.1	1.0	0.5	0.692	45
				Org.	*	*	*	*	*
				Supp.	1.4	1.0	1.0	0.792	16

*Insufficient Data

UH-1H FLAT RATE DATA
FUNCTIONAL GROUP 03
REFERENCE FIGURE 66

ITEM NO.	NOMENCLATURE	FSN/PN	ACTION CODE	MAINT. LEVEL	MEAN	MEDIAN	MODE	STD. DEV.	SAMPLE SIZE
6	Flange Assy	2945917[illegible]847	Replace	Total	1.7	1.5	1.0	0.819	11
				Org.	*	*	*	*	*
				Supp.	2.0	2.0	1.0	1.186	7
7	Seal	29458526721	Replace	Total	2.2	1.2	1.0	2.028	208
				Org.	1.6	1.0	1.0	1.030	102
				Supp.	2.2	2.0	1.0	1.464	94
--	Particle Separator	29451094678	Replace	Total	0.9	1.0	1.0	0.221	9
				Org.	0.9	1.0	1.0	0.248	7
				Supp.	1.0	1.0	1.0	*	2
			Repair	Total	1.4	1.0	1.0	0.787	90
				Org.	1.1	1.0	1.0	0.606	43
				Supp.	1.7	1.5	1.0	0.845	47
			Service	Total	1.3	1.0	1.0	0.825	156
				Org.	1.1	1.0	1.0	0.366	97
				Supp.	1.7	1.4	1.0	1.094	58
			Removed and Installed	Total	1.2	1.0	1.0	0.627	486
				Org.	0.9	1.0	1.0	0.438	338
				Supp.	1.6	2.0	2.0	0.719	148
			Removed	Total	1.4	1.0	1.0	0.879	21
				Org.	1.2	1.0	1.0	0.890	13
				Supp.	1.7	1.5	2.0	0.843	8
			Installed	Total	3.1	2.0	2.0	1.400	12
				Org.	*	*	*	*	*
				Supp.	3.4	4.0	4.0	1.370	10
				Total					
				Org.					
				Supp.					
				Total					
				Org.					
				Supp.					

*Insufficient Data

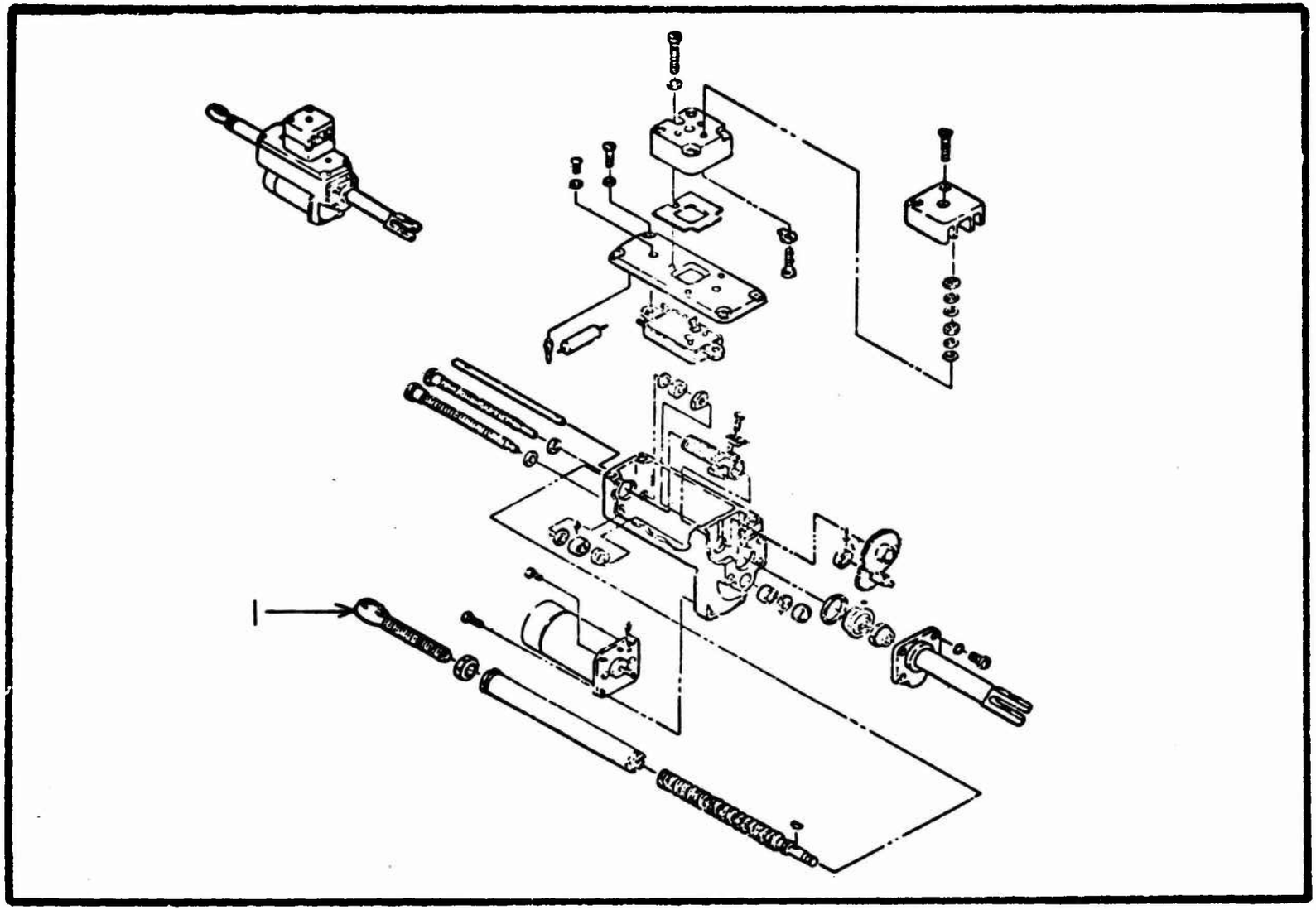

Figure 67 Actuator, Linear

UH-1H FLAT RATE DATA
FUNCTIONAL GROUP 03
REFERENCE FIGURE 67

ITEM NO.	NOMEMCLATURE	FSN/PN	ACTION CODE	MAINT. LEVEL	MEAN	MEDIAN	MODE	STD. DEV.	SAMPLE SIZE
1	Bearing-	16800455273	Replace	Total	1.3	1.0	1.0	0.579	36
				Org.	1.2	1.0	1.0	0.553	26
				Supp.	*	*	*	*	*
				Total Org. Supp.					
				Total Org. Supp.					
				Total Org. Supp.					
				Total Org. Supp.					
				Total Org. Supp.					
				Total Org. Supp.					
				Total Org. Supp.					
				Total Org. Supp.					
				Total Org. Supp.					

*Insufficient Data

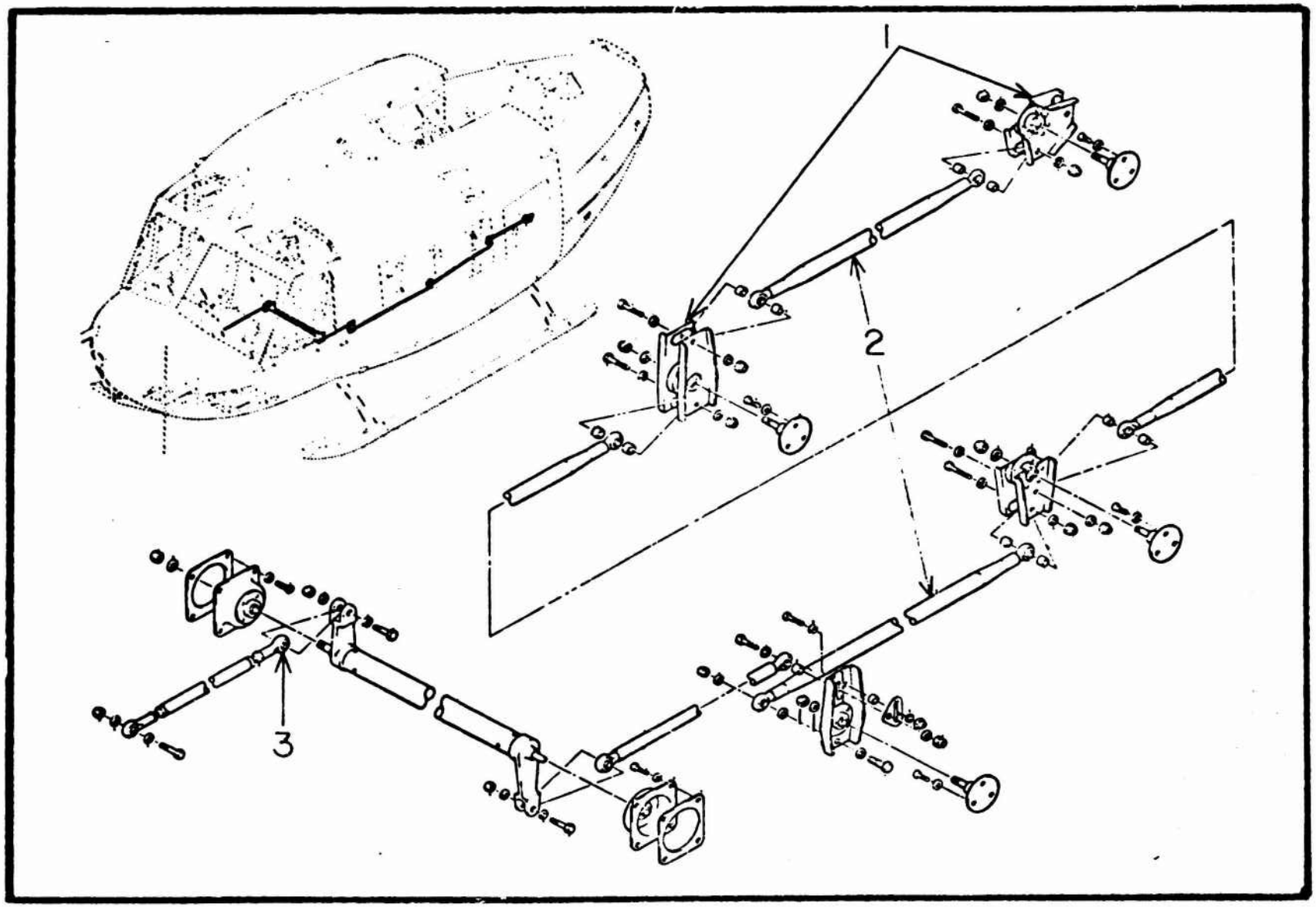

Figure 68 Control Installation, Power Lever

UH-1H FLAT RATE DATA
FUNCTIONAL GROUP 03
REFERENCE FIGURE 68

ITEM NO.	NOMEMCLATURE	FSN/PN	ACTION CODE	MAINT. LEVEL	MEAN	MEDIAN	MODE	STD. DEV.	SAMPLE SIZE
1	Bellcrank Assy	15609245745 15609245747 15609245748 15609245757	Replace	Total	2.2	1.6	1.0	1.467	22
				Org.	1.8	1.5	1.0	1.078	16
				Supp.	3.3	2.0	5.0	1.862	6
				Total					
				Org.					
				Supp.					
2	Connecting Link	15608563986 15608866002 15609527149 15609527150 15609527152 15609527153 15609529754 15609529755 16809397531	Replace	Total	1.5	1.5	2.0	0.490	26
				Org.	1.5	1.5	1.0	0.486	19
				Supp.	1.6	2.0	2.0	0.535	7
				Total					
				Org.					
				Supp.					
				Total					
				Org.					
				Supp.					
3	Bearing	31101735072	Replace	Total	0.7	0.5	1.0	0.295	20
				Org.	0.8	1.0	1.0	0.257	12
				Supp.	0.6	0.5	1.0	0.332	8
				Total					
				Org.					
				Supp.					
				Total					
				Org.					
				Supp.					
				Total					
				Org.					
				Supp.					
				Total					
				Org.					
				Supp.					

*Insufficient Data

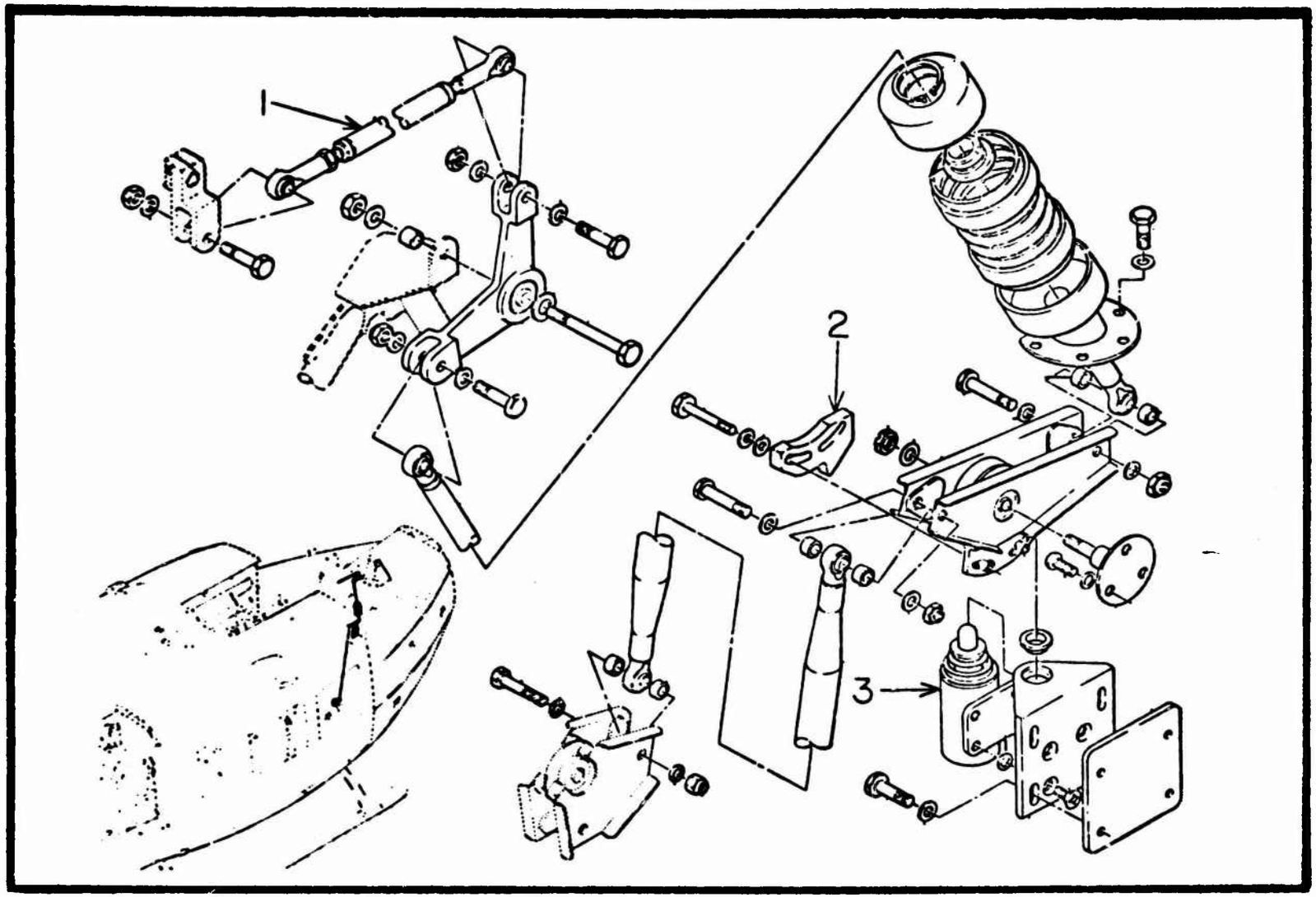

Figure 69 Control Installation, Power Lever

UH-1H FLAT RATE DATA
FUNCTIONAL GROUP 03
REFERENCE FIGURE 69

ITEM NO.	NOMEMCLATURE	FSN/PN	ACTION CODE	MAINT. LEVEL	MEAN	MEDIAN	MODE	STD. DEV.	SAMPLE SIZE
1	Connecting Link	15609527147	Replace	Total Org. Supp.	1.1 1.1 1.1	1.0 1.0 1.0	0.5 0.5 2.0	0.608 0.578 0.657	66 38 28
2	Stop	15608732278	Replace	Total Org. Supp.	1.0 1.0 1.1	1.0 1.0 1.0	1.0 1.0 1.0	0.158 0.000 0.252	11 7 4
3	Solenoid	29254008297 59457682781	Replace	Total Org. Supp.	1.9 1.8 2.1	2.0 2.0 2.0	1.0 1.0 3.0	0.786 0.872 0.842	35 27 8
				Total Org. Supp.					
				Total Org. Supp.					
				Total Org. Supp.					
				Total Org. Supp.					
				Total Org. Supp.					
				Total Org. Supp.					
				Total Org. Supp.					

***Insufficient Data**

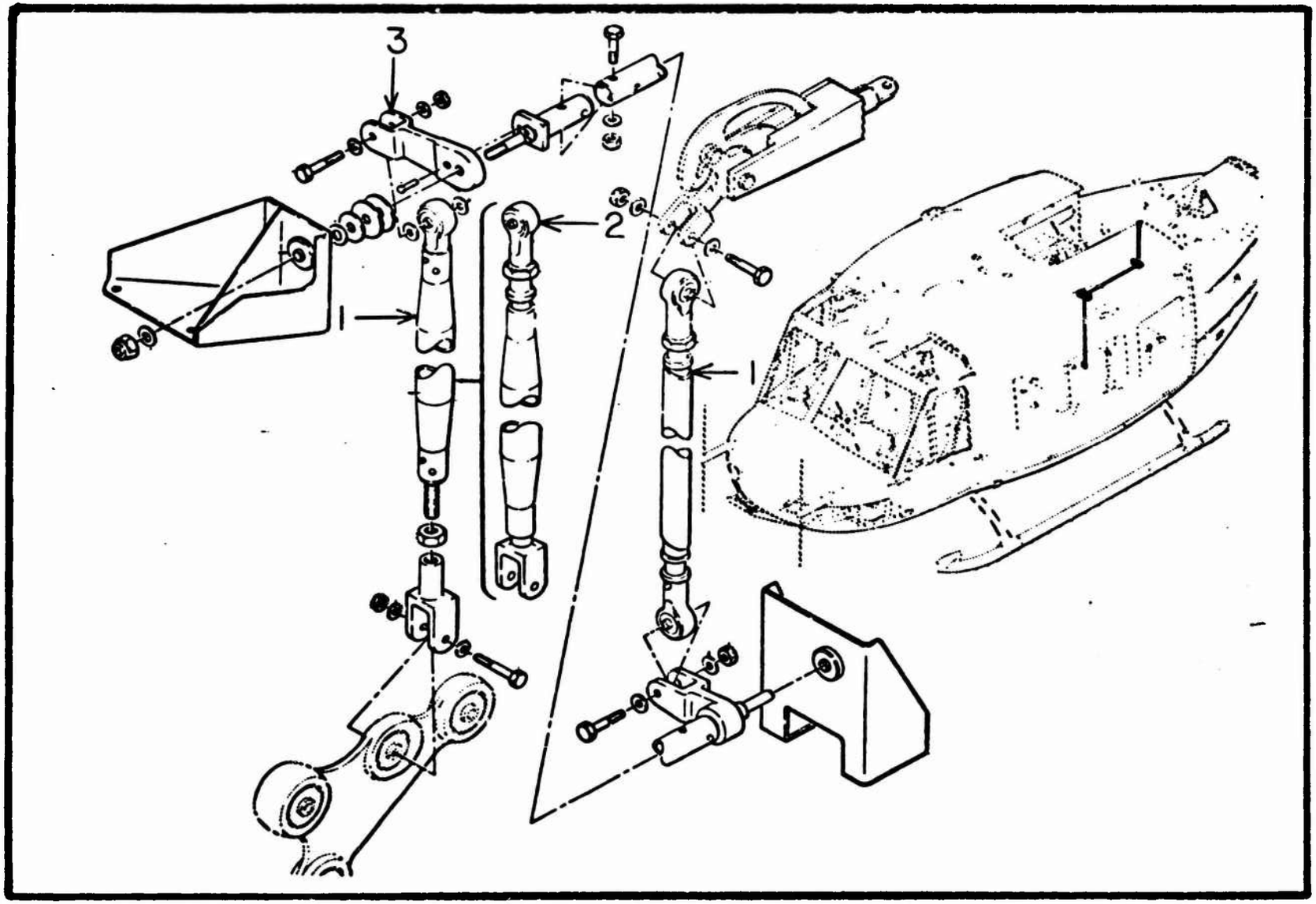

Figure 70 Compensator Installation, Droop

UH-1H FLAT RATE DATA
FUNCTIONAL GROUP 03
REFERENCE FIGURE 70

ITEM NO.	NOMEMCLATURE	FSN/PN	ACTION CODE	MAINT. LEVEL	MEAN	MEDIAN	MODE	STD. DEV.	SAMPLE SIZE
1	Connecting Link	15607921494 15609677678 15609677679	Replace	Total Org. Supp.	1.6 1.6 1.6	1.0 1.0 1.0	1.0 1.0 1.0	0.949 0.964 0.938	83 52 31
2	Bearing	31101735075 31101981010 31209156059	Replace	Total Org. Supp.	0.8 0.8 0.9	1.0 1.0 1.0	1.0 1.0 1.0	0.258 0.268 0.252	17 13 4
3	Bellcrank	30401813184	Replace	Total Org. Supp.	1.4 1.4 1.3	1.0 1.0 1.5	1.0 1.0 1.5	0.539 0.570 0.518	18 12 6
				Total Org. Supp.					
				Total Org. Supp.					
				Total Org. Supp.					
				Total Org. Supp.					
				Total Org. Supp.					
				Total Org. Supp.					
				Total Org. Supp.					

*Insufficient Data

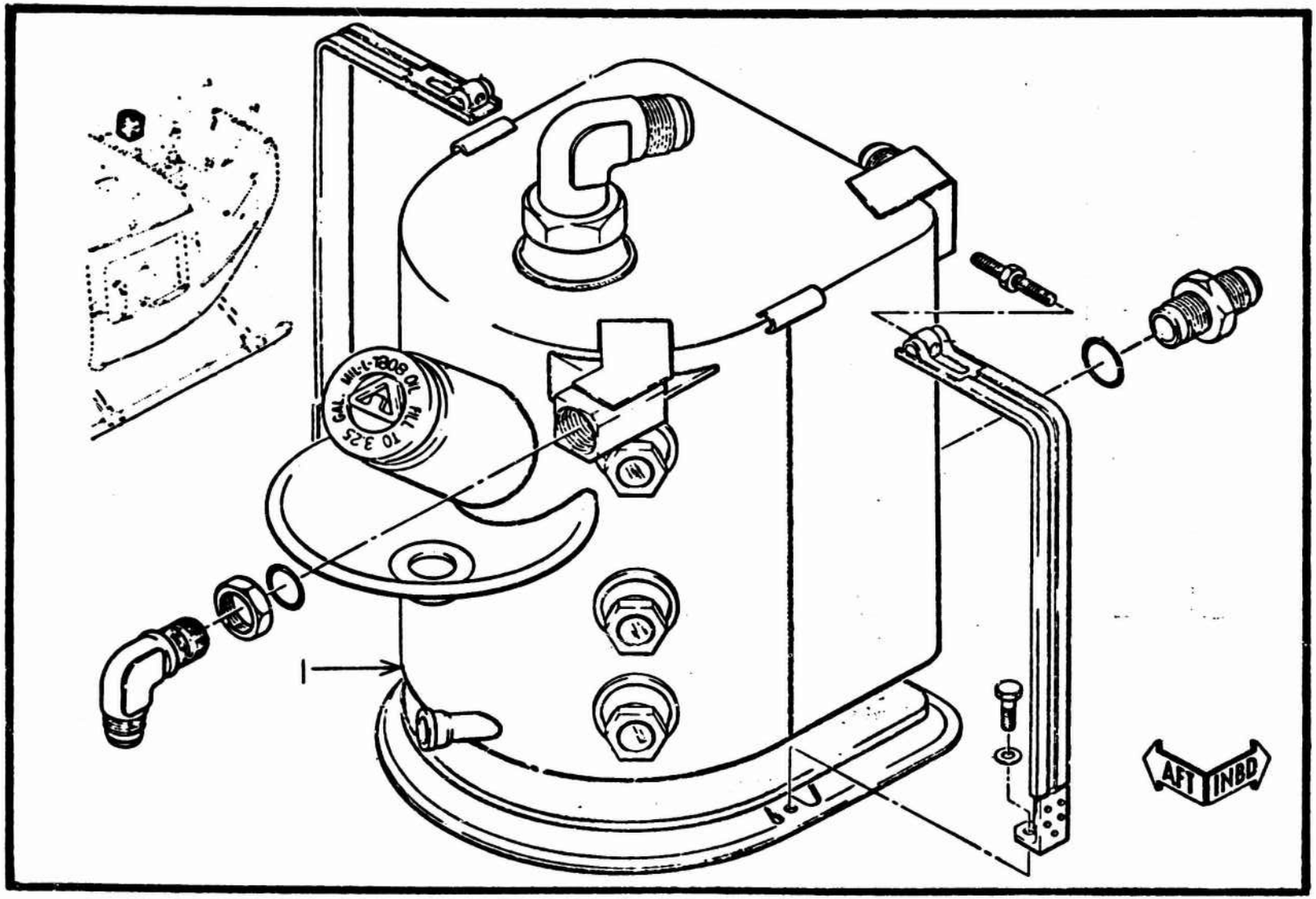

Figure 71 Oil System Installation

UH-1H FLAT RATE DATA
FUNCTIONAL GROUP 03
REFERENCE FIGURE 71

ITEM NO.	NOMEMCLATURE	FSN/PN	ACTION CODE	MAINT. LEVEL	MEAN	MEDIAN	MODE	STD. DEV.	SAMPLE SIZE
1	Oil Tank Assy	15600707837 15608740866	Replace	Total Org. Supp.	2.0 2.0 1.9	2.0 2.0 2.0	2.0 2.0 2.0	0.683 0.692 0.641	103 90 13
				Total Org. Supp.					
				Total Org. Supp.					
				Total Org. Supp.					
				Total Org. Supp.					
				Total Org. Supp.					
				Total Org. Supp.					
				Total Org. Supp.					
				Total Org. Supp.					
				Total Org. Supp.					

*Insufficient Data

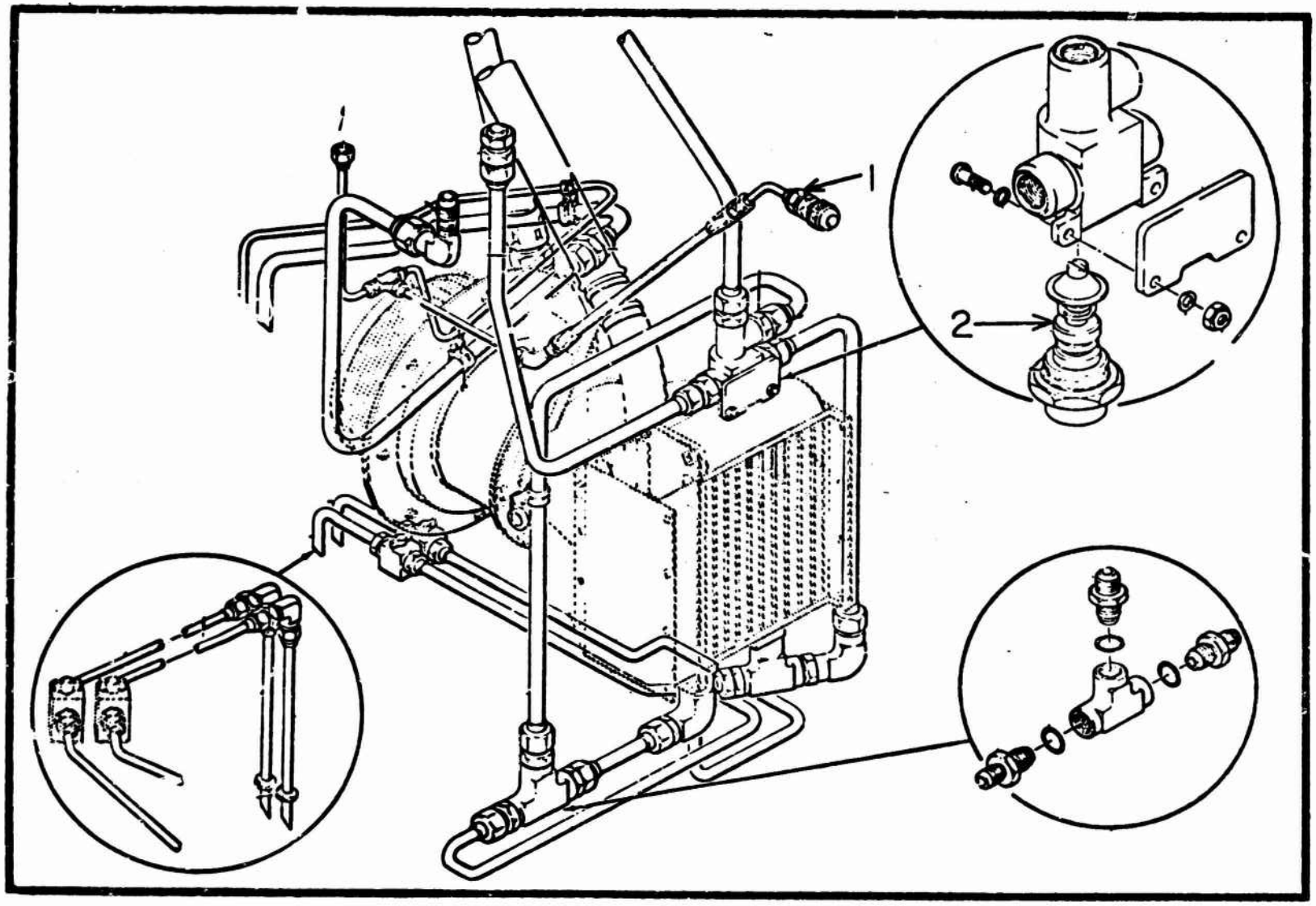

Figure 72 Oil. System Installation

UH-1H FLAT RATE DATA
FUNCTIONAL GROUP 03
REFERENCE FIGURE 72

ITEM NO.	NOMEMCLATURE	FSN/PN	ACTION CODE	MAINT. LEVEL	MEAN	MEDIAN	MODE	STD. DEV.	SAMPLE SIZE
1	Coupling	47308972530	Replace	Total Org. Supp.	0.7 0.7 0.7	0.5 0.5 0.5	0.5 0.5 0.5	0.253 0.253 0.254	135 92 43
2	Thermostat	66206009595	Replace	Total Org. Supp.	1.6 1.6 1.6	1.5 1.5 1.0	1.0 1.0 1.0	0.757 0.746 0.506	51 35 16
				Total Org. Supp.					
				Total Org. Supp.					
				Total Org. Supp.					
				Total Org. Supp.					
				Total Org. Supp.					
				Total Org. Supp.					
				Total Org. Supp.					
				Total Org. Supp.					
				Total Org. Supp.					

*Insufficient Data

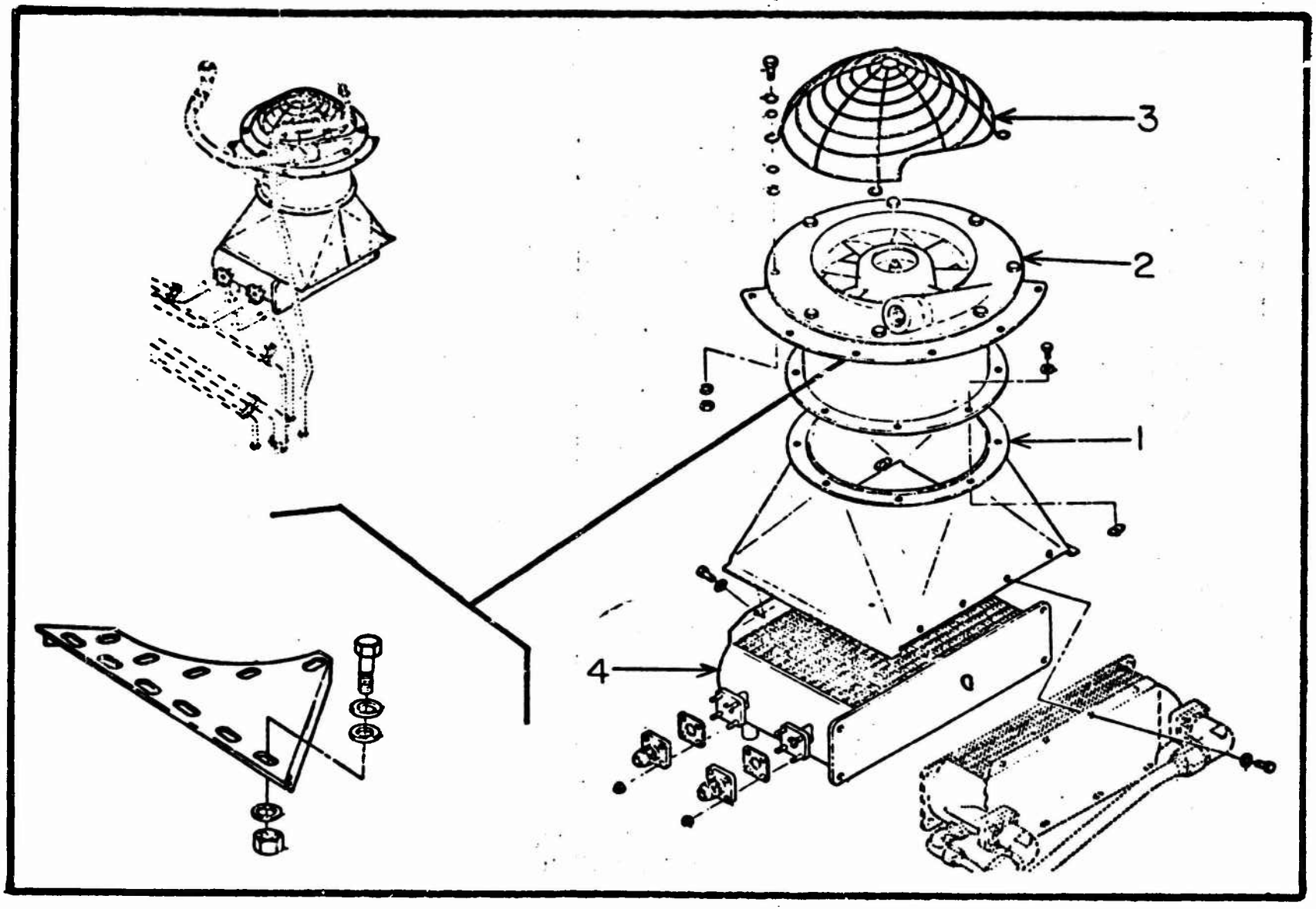

Figure 73 Oil System Installation, Cooler

UH-1H FLAT RATE DATA
FUNCTIONAL GROUP 03
REFERENCE FIGURE 73

ITEM NO.	NOMENCLATURE	FSN/PN	ACTION CODE	MAINT. LEVEL	MEAN	MEDIAN	MODE	STD. DEV.	SAMPLE SIZE
1	Duct Assembly	15609569925	Replace	Total	2.7	2.5	2.0	0.834	9
				Org.	2.1	2.0	2.0	1.094	8
				Supp.	*	*	*	*	*
2	Turbine Fan	29350660300	Replace	Total	2.9	3.0	2.0	1.386	215
				Org.	3.0	3.0	2.0	1.337	182
				Supp.	2.6	2.0	2.0	1.623	33
3	Screen Assembly	15601678113 29350660301	Replace	Total	0.8	1.0	1.0	0.232	92
				Org.	0.8	1.0	1.0	0.234	79
				Supp.	0.8	1.0	1.0	0.231	13
4	Oil Cooler System	29354105884	Replace	Total	0.9	1.0	1.0	0.202	11
				Org.	0.9	1.0	1.0	0.202	11
				Supp.	*	*	*	*	*
			Service	Total	0.5	0.5	0.5	0.288	886
				Org.	0.5	0.5	0.5	0.286	838
				Supp.	0.6	0.5	0.5	0.295	48
			Tested	Total	0.8	0.7	0.5	0.330	98
				Org.	*	*	*	*	*
				Supp.	1.0	1.0	1.0	0.354	11
			Removed and Installed	Total	0.6	0.5	0.5	0.270	24
				Org.	0.6	0.5	0.5	0.261	22
				Supp.	0.7	0.3	1.0	0.500	2
				Total					
				Org.					
				Supp.					
				Total					
				Org.					
				Supp.					
				Total					
				Org.					
				Supp.					

*Insufficient Data

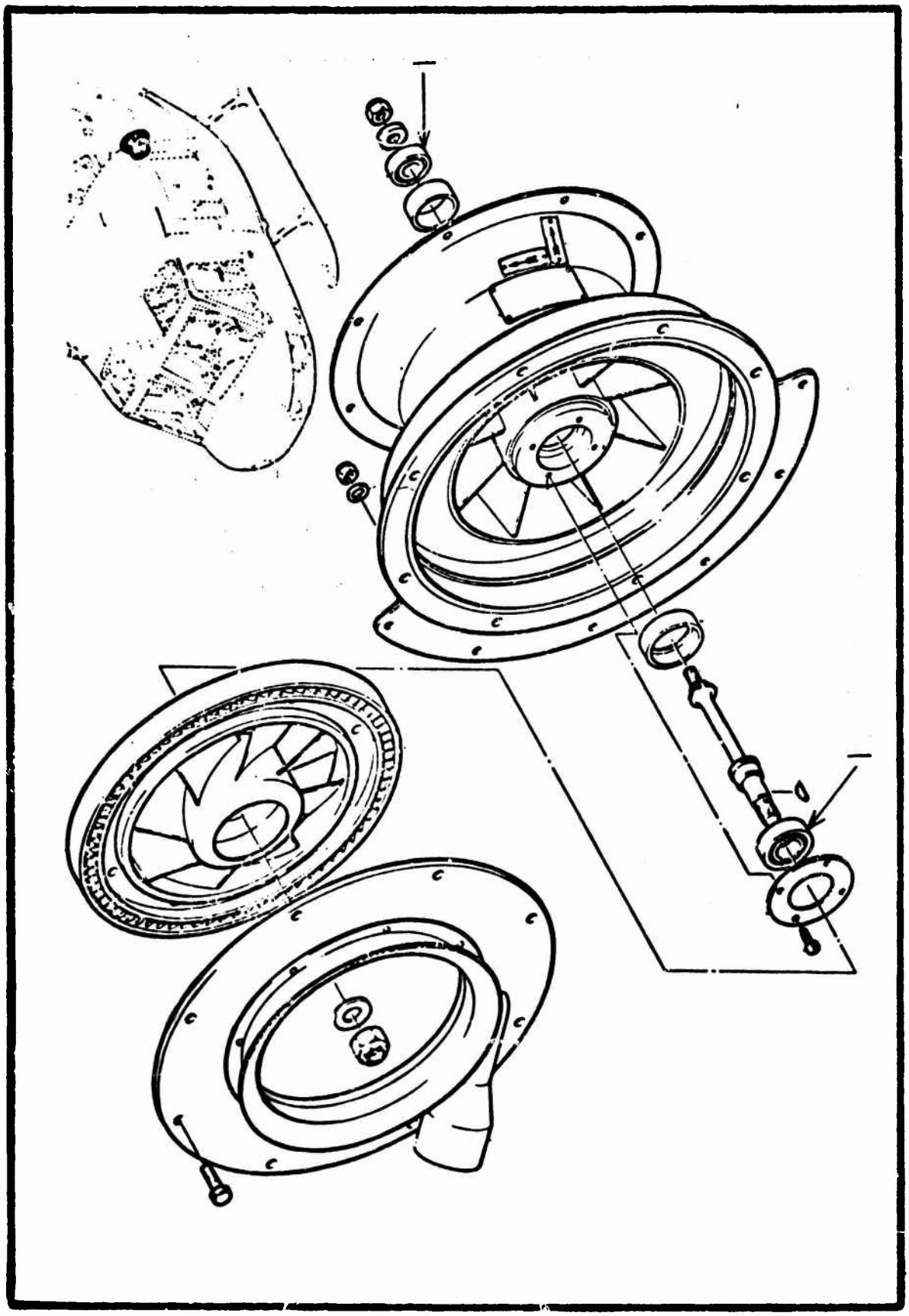

Figure 74 Blower, Turbine

UH-1H FLAT RATE DATA
FUNCTIONAL GROUP 03
REFERENCE FIGURE 74

ITEM NO.	NOMEMCLATURE	FSN/PN	ACTION CODE	MAINT. LEVEL	MEAN	MEDIAN	MODE	STD. DEV.	SAMPLE SIZE
1	Bearing	31100680079 31101091103 31101909288 31101980176	Replace	Total	1.3	1.3	2.0	0.697	18
				Org.	*	*	*	*	*
				Supp.	1.0	0.5	2.0	0.736	10
				Total					
				Org.					
				Supp.					
				Total					
				Org.					
				Supp.					
				Total					
				Org.					
				Supp.					
				Total					
				Org.					
				Supp.					
				Total					
				Org.					
				Supp.					
				Total					
				Org.					
				Supp.					
				Total					
				Org.					
				Supp.					
				Total					
				Org.					
				Supp.					
				Total					
				Org.					
				Supp.					

*Insufficient Data

SECTION VI

FUNCTIONAL GROUP 04

TRANSMISSIONS, DRIVES AND ROTORS

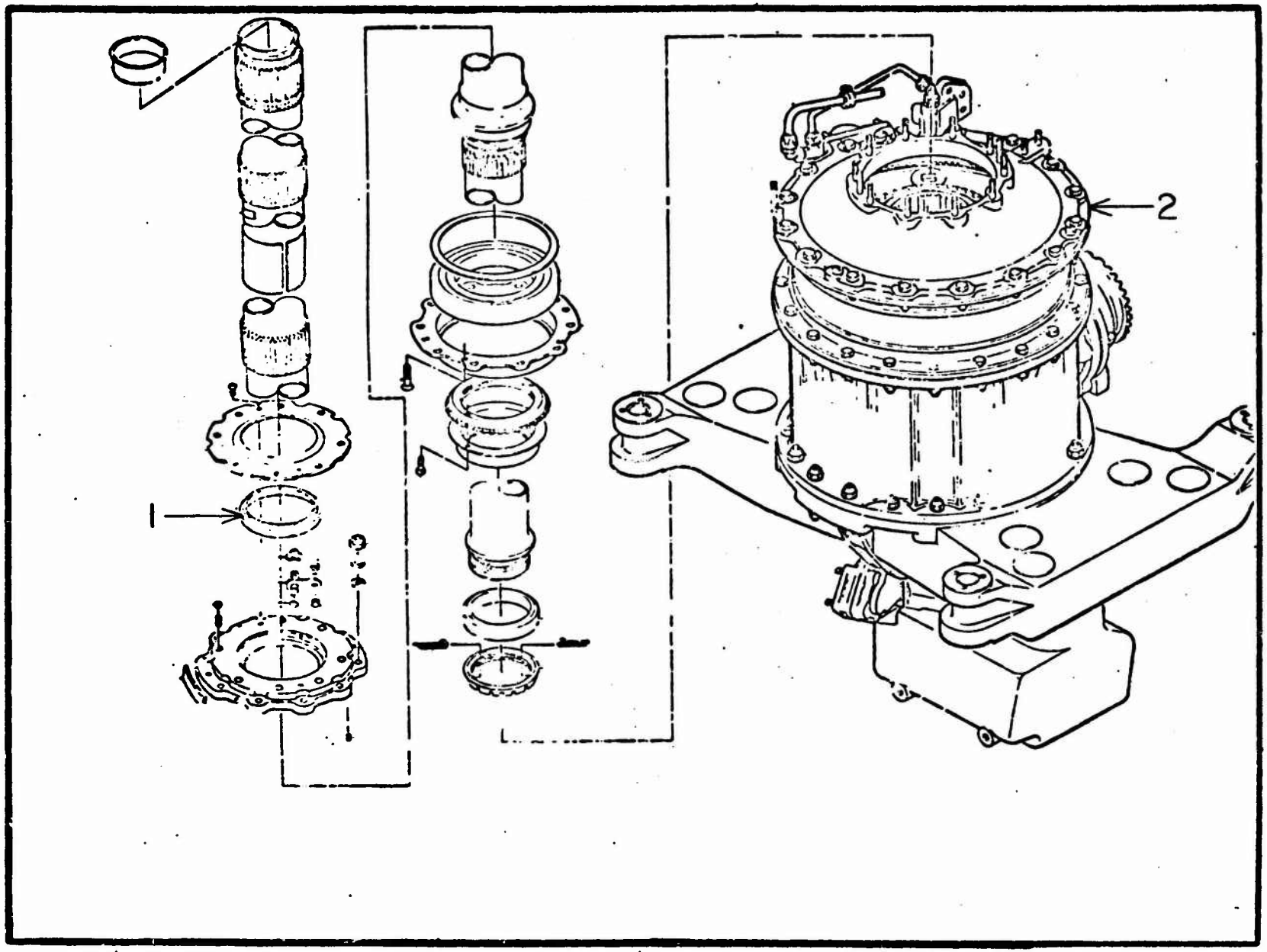

Figure 75 Transmission and Mast Assembly

UH-1H FLAT RATE DATA
FUNCTIONAL GROUP 04
REFERENCE FIGURE 75

ITEM NO.	NOMEMCLATURE	FSN/PN	ACTION CODE	MAINT. LEVEL	MEAN	MEDIAN	MODE	STD. DEV.	SAMPLE SIZE
1	Seal	16158757988	Replace	Total	3.4	2.0	1.0	2.746	81
				Org.	2.8	2.0	2.0	1.627	14
				Supp.	3.5	2.0	1.0	2.917	67
2	Transmission Assy	16151830834 16156744201	Replace	Total	33.3	30.0	40.0	22.106	491
				Org.	24.3	20.0	40.0	20.577	92
				Supp.	35.3	32.1	50.0	21.958	399
			Adjust	Total	3.8	2.0	2.0	3.456	29
				Org.	*	*	*	*	*
				Supp.	4.4	2.0	2.0	3.707	18
			Repair	Total	2.8	2.0	1.0	2.348	78
				Org.	2.3	1.5	1.0	1.659	20
				Supp.	3.0	2.0	1.0	2.535	58
			Service	Total	2.0	1.5	0.5	1.569	235
				Org.	1.2	0.5	0.5	1.229	83
				Supp.	2.4	2.0	3.0	1.565	152
			Initial Inspection	Total	0.8	0.7	0.5	0.389	33
				Org.	*	*	*	*	*
				Supp.	0.8	0.7	0.5	0.337	29
			Final Inspection	Total	0.8	0.5	0.5	0.497	32
				Org.	*	*	*	*	*
				Supp.	0.8	0.5	0.5	0.510	30
			Removed and Installed	Total	14.4	10.0	0.5	12.769	162
				Org.	2.1	1.0	0.5	2.438	34
				Supp.	17.3	16.0	30.0	12.607	121
			Checked Serviceable	Total	3.1	2.0	2.0	2.826	18
				Org.	*	*	*	*	*
				Supp.	4.1	2.0	8.0	3.429	10
			Removed	Total	8.1	6.2	15.0	4.795	27
				Org.	*	*	*	*	*
				Supp.	8.5	6.5	15.0	4.710	23

*Insufficient Data

UH-1H FLAT RATE DATA
FUNCTIONAL GROUP 04
REFERENCE FIGURE 75

ITEM NO.	NOMEMCLATURE	FSN/PN	ACTION CODE	MAINT. LEVEL	MEAN	MEDIAN	MODE	STD. DEV.	SAMPLE SIZE
2	Transmission Assy (cont'd)	16151830834 16156744201	Installed	Total	7.2	5.0	1.0	6.003	29
				Org.	*	*	*	*	*
				Supp.	7.7	6.0	1.0	6.121	26
--	Mast Assy	15600738203 16150738203 16150784274 16157872491 16158666032	Replace	Total	10.7	8.0	4.0	7.806	337
				Org.	7.8	6.0	8.0	5.603	76
				Supp.	11.6	10.0	20.0	8.160	261
			Repair	Total	2.8	3.0	1.0	1.449	40
				Org.	*	*	*	*	*
				Supp.	3.2	3.0	5.0	1.446	25
			Service	Total	2.1	2.0	2.0	1.309	53
				Org.	2.0	1.5	1.5	1.137	30
				Supp.	2.3	2.0	2.0	1.513	23
			Final Inspection	Total	0.7	0.5	0.5	0.351	16
				Org.	*	*	*	*	*
				Supp.	0.7	0.5	0.5	0.364	14
			Removed and Installed	Total	7.2	6.0	3.0	4.729	96
				Org.	*	*	*	*	*
				Supp.	7.6	6.0	3.0	4.818	80
			Removed	Total	9.8	10.0	10.0	4.988	90
				Org.	*	*	*	*	*
				Supp.	10.0	10.0	10.0	4.940	88
			Installed	Total	5.1	5.0	6.5	1.558	210
				Org.	*	*	*	*	*
				Supp.	5.1	5.0	6.5	1.558	210
				Total					
				Org.					
				Supp.					
				Total					
				Org.					
				Supp.					

*Insufficient Data

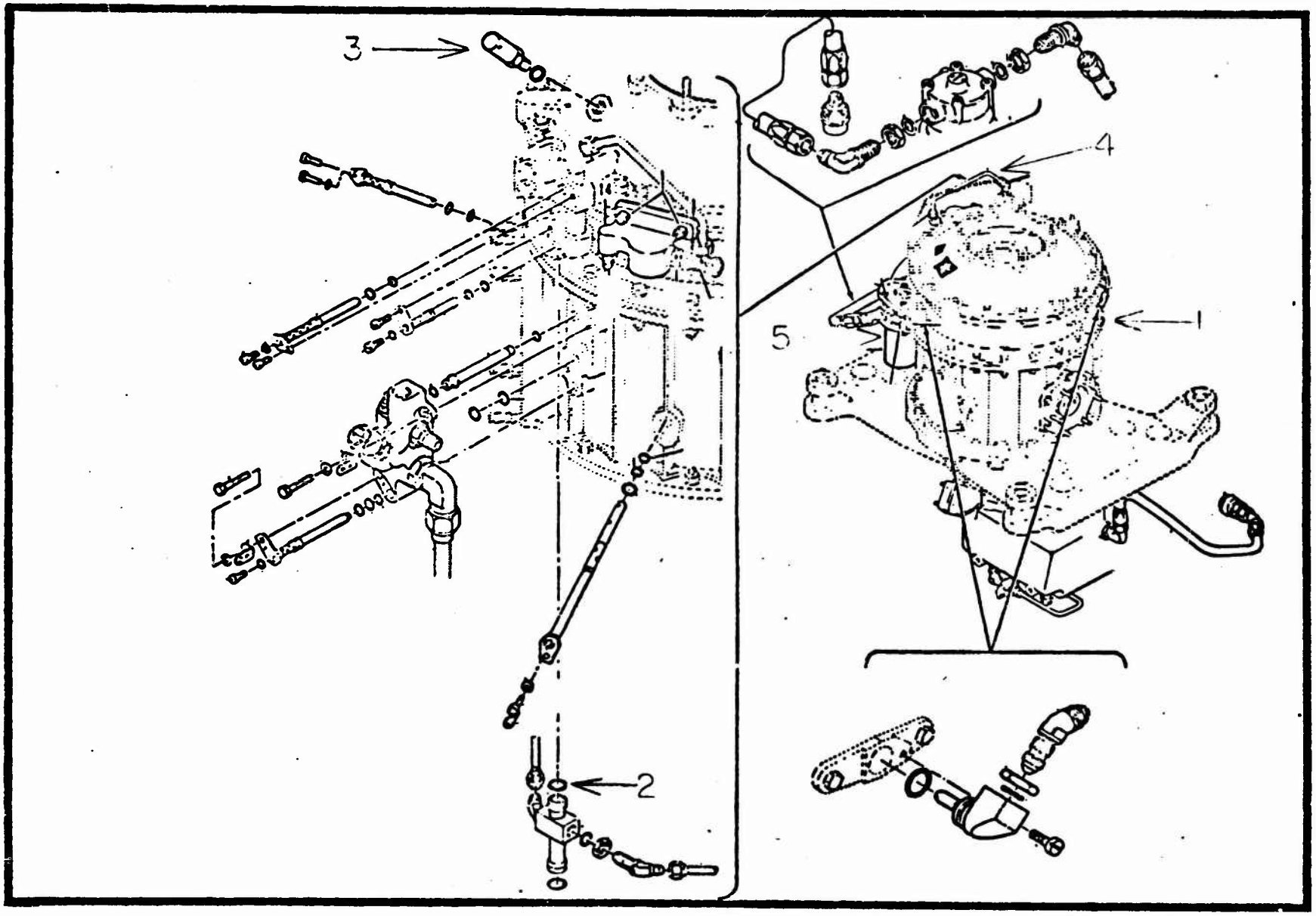

Figure 76 Transmission Assembly, External Components

UH-1H FLAT RATE DATA
FUNCTIONAL GROUP 04
REFERENCE FIGURE 76

ITEM NO.	NOMENCLATURE	FSN/PN	ACTION CODE	MAINT. LEVEL	MEAN	MEDIAN	MODE	STD. DEV.	SAMPLE SIZE
1	Packing	53305421420 53305421421 53307264152	Replace	Total	1.2	1.0	1.0	0.819	632
				Org.	1.1	1.0	1.0	0.677	393
				Supp.	1.3	1.0	1.0	0.884	231
2	Packing	53305851066	Replace	Total	1.3	1.0	0.5	0.755	14
				Org.	1.4	1.0	1.0	0.736	6
				Supp.	1.1	0.5	0.5	0.791	8
3	Air Pressure Valve	48200914720	Replace	Total	1.3	1.0	1.0	0.803	20
				Org.	1.3	1.0	1.0	0.880	15
				Supp.	1.1	1.0	1.0	0.548	5
4	Tube Assy	16158246848 16158309764 16158740864 16159581320	Replace	Total	1.7	2.0	2.0	0.851	41
				Org.	1.5	1.2	2.0	0.682	20
				Supp.	1.9	2.0	2.0	0.965	21
				Total					
				Org.					
				Supp.					
5	Filter Assy	16157965004	Replace	Total	1.2	1.0	1.0	0.753	157
				Org.	1.1	1.0	1.0	0.763	136
				Supp.	1.6	1.0	1.0	0.676	21
			Service	Total	1.1	1.0	1.0	0.567	30
				Org.	1.0	1.0	1.0	0.597	18
				Supp.	1.2	1.0	1.0	0.538	12
			Removed and Installed	Total	1.0	1.0	1.0	0.536	91
				Org.	0.9	1.0	0.5	0.505	75
				Supp.	1.3	1.0	2.0	0.608	16
				Total					
				Org.					
				Supp.					
				Total					
				Org.					
				Supp.					

*Insufficient Data

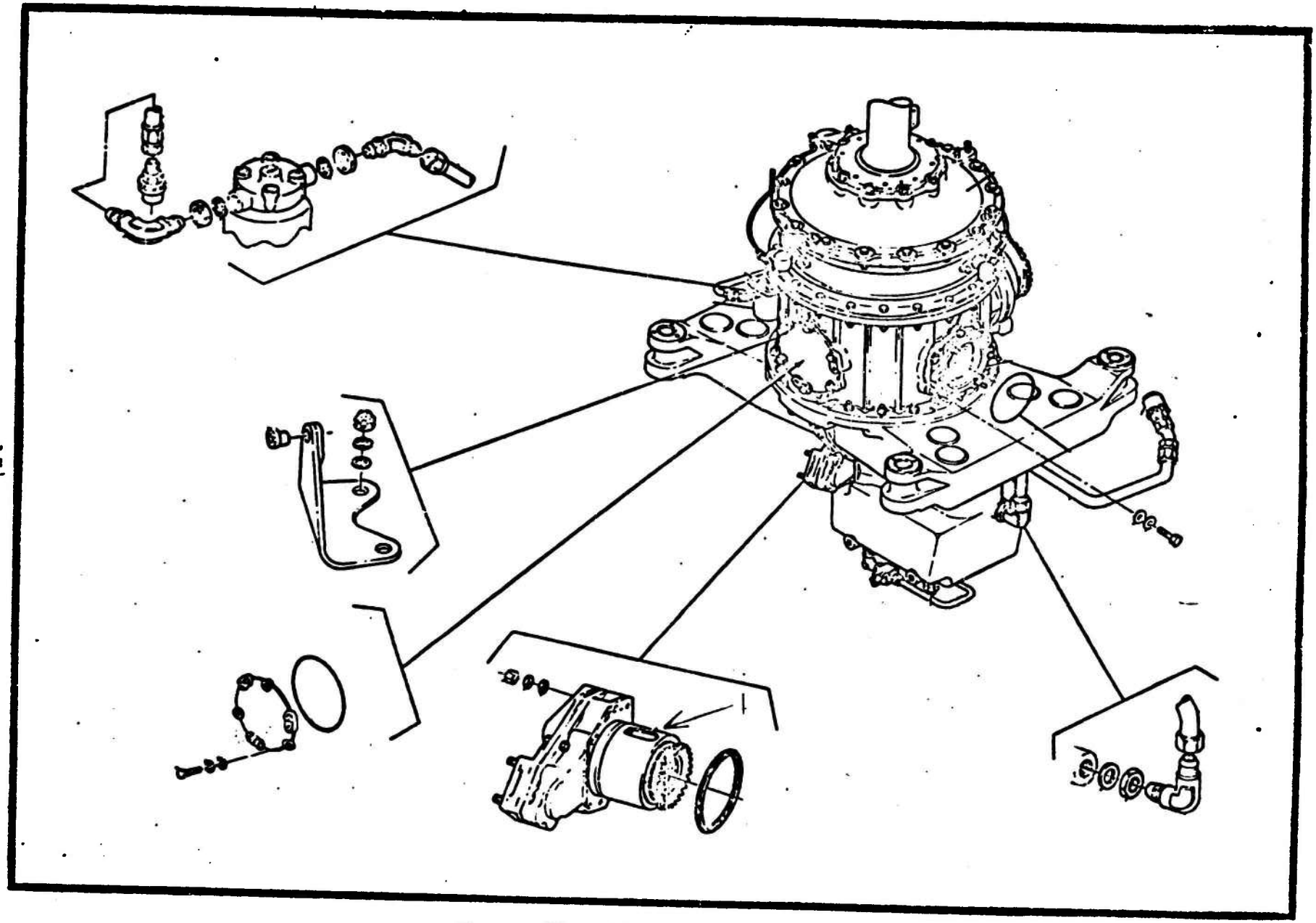

Figure 77 Transmission, Assembly

UH-1H FLAT RATE DATA
FUNCTIONAL GROUP 04
REFERENCE FIGURE 77

ITEM NO.	NOMEMCLATURE	FSN/PN	ACTION CODE	MAINT. LEVEL	MEAN	MEDIAN	MODE	STD. DEV.	SAMPLE SIZE
1	Accessory Quill Assy	16158296845 16808718736	Replace	Total Org. Supp.	3.4 3.8 3.2	3.0 3.5 3.0	2.0 6.0 2.0	1.506 1.557 1.496	41 8 33
				Total Org. Supp.					
				Total Org. Supp.					
				Total Org. Supp.					
				Total Org. Supp.					
				Total Org. Supp.					
				Total Org. Supp.					
				Total Org. Supp.					
				Total Org. Supp.					
				Total Org. Supp.					

*Insufficient Data

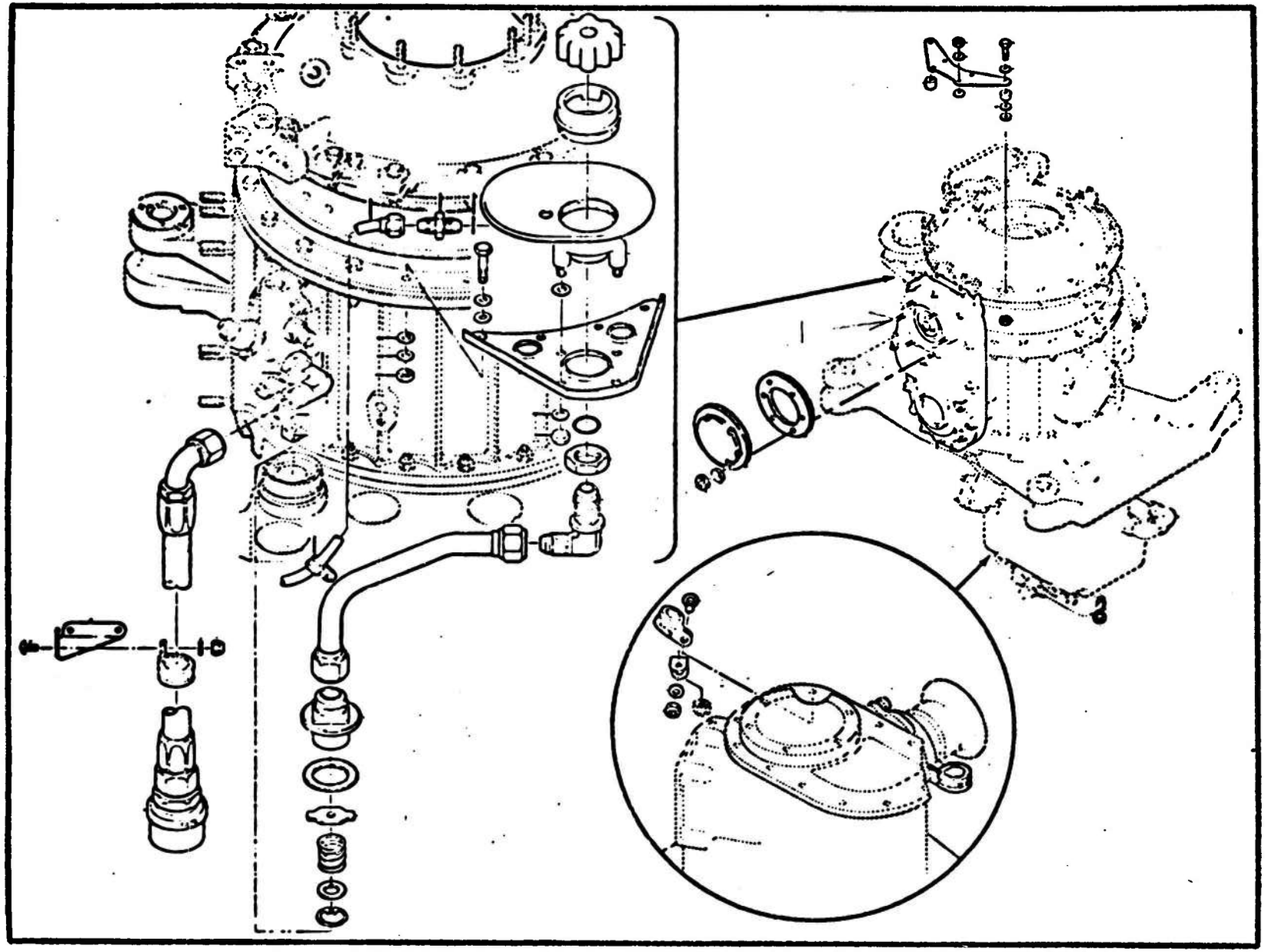

Figure 78 Transmission Assembly, External Components

UH-1H FLAT RATE DATA
FUNCTIONAL GROUP 04
REFERENCE FIGURE 78

ITEM NO.	NOMEMCLATURE	FSN/PN	ACTION CODE	MAINT. LEVEL	MEAN	MEDIAN	MODE	STD. DEV.	SAMPLE SIZE
1	Generator Quill Assy	16150564869 16151343087 16159875152	Replace	Total Org. Supp.	5.2 5.8 4.9	5.0 6.0 4.0	4.0 8.0 3.0	2.645 2.754 2.549	260 86 174
				Total Org. Supp.					
				Total Org. Supp.					
				Total Org. Supp.					
				Total Org. Supp.					
				Total Org. Supp.					
				Total Org. Supp.					
				Total Org. Supp.					
				Total Org. Supp.					
				Total Org. Supp.					

*Insufficient Data

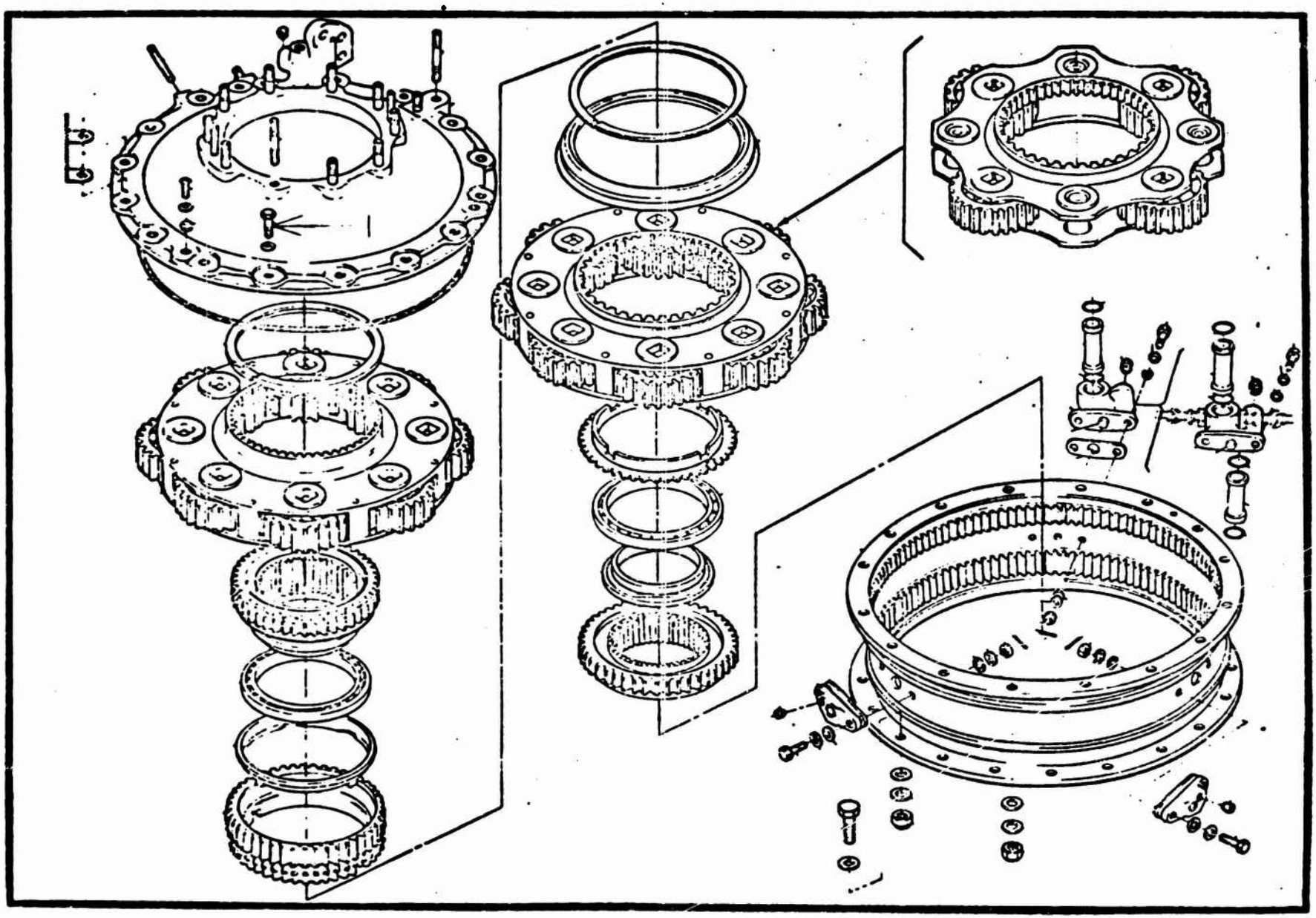

Figure 79 Upper Transmission and Case Assembly

UH-1H FLAT RATE DATA
FUNCTIONAL GROUP 04
REFERENCE FIGURE 79

ITEM NO.	NOMENCLATURE	FSN/PN	ACTION CODE	MAINT. LEVEL	MEAN	MEDIAN	MODE	STD. DEV.	SAMPLE SIZE
1	Bolt	53061821527 53062819995	Replace	Total Org. Supp.	1.8 * 2.0	1.5 * 1.5	1.0 * 1.0	1.267 * 1.323	14 * 10
				Total Org. Supp.					
				Total Org. Supp.					
				Total Org. Supp.					
				Total Org. Supp.					
				Total Org. Supp.					
				Total Org. Supp.					
				Total Org. Supp.					
				Total Org. Supp.					
				Total Org. Supp.					

*Insufficient Data

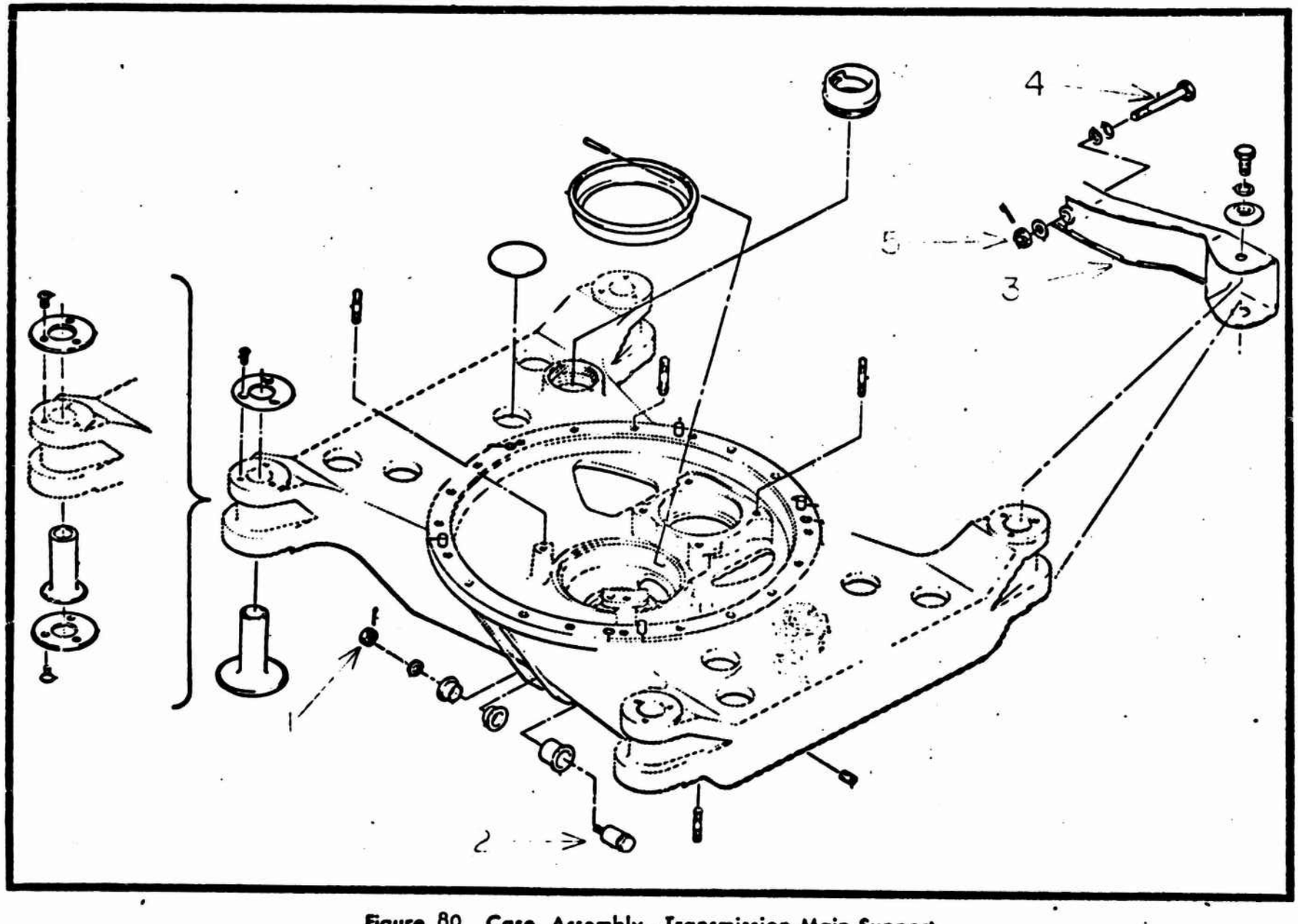

Figure 80 Case Assembly, Transmission Main Support

UH-1H FLAT RATE DATA
FUNCTIONAL GROUP 04
REFERENCE FIGURE 80

ITEM NO.	NOMENCLATURE	FSN/PN	ACTION CODE	MAINT. LEVEL	MEAN	MEDIAN	MODE	STD. DEV.	SAMPLE SIZE
1	Nut	53101768113 53108773038	Replace	Total Org. Supp.	1.7 * 2.0	1.0 * 1.0	1.0 * 1.0	1.528 * 1.651	14 * 11
2	Bolt Assy	16159980448	Replace	Total Org. Supp.	1.7 1.8 1.7	1.0 1.0 1.0	1.0 1.0 1.0	1.423 1.333 1.471	39 9 30
3	Support Assy	16155713675	Replace	Total Org. Supp.	4.9 * 5.4	4.0 * 4.0	10.0 * 10.0	3.427 * 3.414	21 * 14
4	Bolt	53061511793 53068861454	Replace	Total Org. Supp.	1.5 1.1 1.7	1.0 1.0 1.0	1.0 1.0 1.0	1.167 0.531 1.286	87 23 64
5	Nut	53101816798	Replace	Total Org. Supp.	1.1 * 1.2	1.0 * 1.0	1.0 * 1.0	0.674 * 0.678	17 * 16
				Total Org. Supp.					
				Total Org. Supp.					
				Total Org. Supp.					
				Total Org. Supp.					
				Total Org. Supp.					

*Insufficient Data

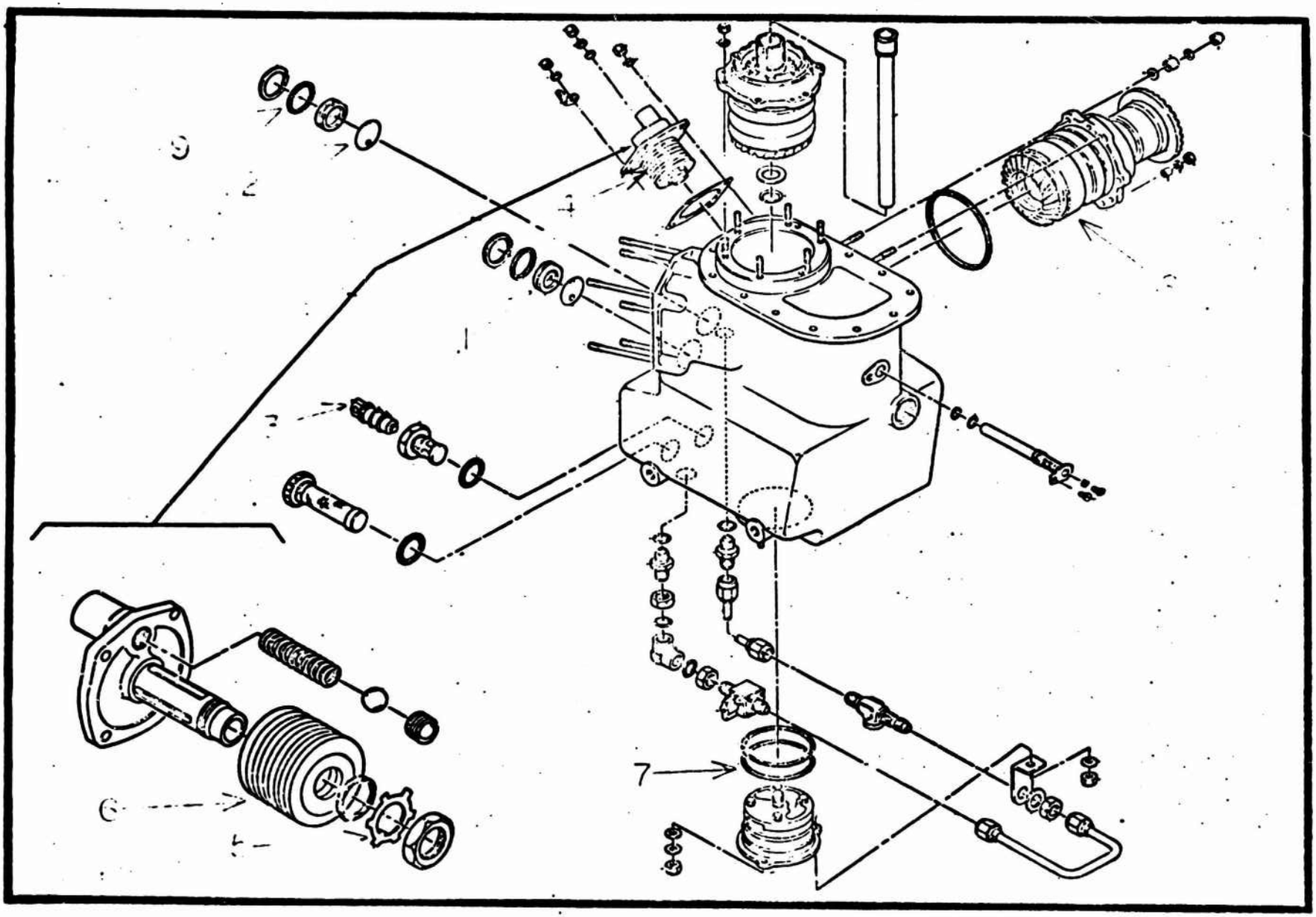

Figure 81 Drive and Sump Assembly

UH-1H FLAT RATE DATA
FUNCTIONAL GROUP 04
REFERENCE FIGURE 31

ITEM NO.	NOMENCLATURE	FSN/PN	ACTION CODE	MAINT. LEVEL	MEAN	MEDIAN	MODE	STD. DEV.	SAMPLE SIZE
1	Sight Glass	66807652855	Replace	Total	1.4	1.0	1.0	0.934	1600
				Org.	1.3	1.0	1.0	0.901	1295
				Supp.	1.4	1.0	1.0	1.059	305
2	Indicator	16156744208 16156744209	Replace	Total	1.4	1.0	1.0	0.849	38
				Org.	1.0	1.0	1.0	0.384	23
				Supp.	1.9	2.0	2.0	1.033	15
3	Chip Detector	16154776304 29959302608	Replace	Total	0.8	1.0	1.0	0.344	124
				Org.	0.8	1.0	1.0	0.370	96
				Supp.	0.8	1.0	1.0	0.241	28
			Removed and Installed	Total	1.2	1.0	1.0	0.328	66
				Org.	1.2	1.0	1.0	0.307	60
				Supp.	1.3	1.0	1.0	0.518	6
4	Filter	15607727714 29450947982	Replace	Total	1.4	1.0	1.0	0.896	81
				Org.	1.4	1.0	1.0	0.913	65
				Supp.	1.4	1.0	1.0	0.855	16
			Removed and Installed	Total	1.4	1.0	0.5	1.159	200
				Org.	1.4	1.0	0.5	1.152	197
				Supp.	2.0	1.0	1.0	1.732	3
5	Washer	53109817031	Replace	Total	0.7	0.5	0.5	0.278	182
				Org.	0.8	0.5	0.5	0.283	160
				Supp.	0.7	0.5	0.5	0.247	22
6	Filter Element	29108039525	Replace	Total	1.1	1.0	1.0	0.509	152
				Org.	1.1	1.0	1.0	0.526	124
				Supp.	1.0	1.0	1.0	0.410	28
7	Packing	53308038120 53308039889	Replace	Total	1.4	1.0	1.0	1.043	126
				Org.	*	*	*	*	*
				Supp.	1.3	1.0	1.0	0.987	79
8	Tail Rotor Quill Assy	16157950661	Replace	Total	4.3	4.0	4.0	2.174	32
				Org.	*	*	*	*	*
				Supp.	4.6	4.0	4.0	2.311	22

*Insufficient Data

UH-1H FLAT RATE DATA
FUNCTIONAL GROUP 04
REFERENCE FIGURE 31

ITEM NO.	NOMENCLATURE	FSN/PN	ACTION CODE	MAINT. LEVEL	MEAN	MEDIAN	MODE	STD. DEV.	SAMPLE SIZE
8	Tail Rotor Quill Assy (Cont'd)	16157950661	Service	Total	1.9	2.0	2.0	0.892	24
				Org.	*	*	*	*	*
				Supp.	1.9	2.0	2.0	0.892	24
			Final Inspection	Total	0.8	0.5	1.0	0.294	4
				Org.	*	*	*	*	*
				Supp.	0.8	0.5	1.0	0.294	4
9	Packing	53306182516	Replace	Total	0.9	1.0	1.0	0.505	540
				Org.	0.9	1.0	1.0	0.503	420
				Supp.	1.0	1.0	1.0	0.504	120
				Total					
				Org.					
				Supp.					
				Total					
				Org.					
				Supp.					
				Total					
				Org.					
				Supp.					
				Total					
				Org.					
				Supp.					
				Total					
				Org.					
				Supp.					
				Total					
				Org.					
				Supp.					
				Total					
				Org.					
				Supp.					

*Insufficient Data

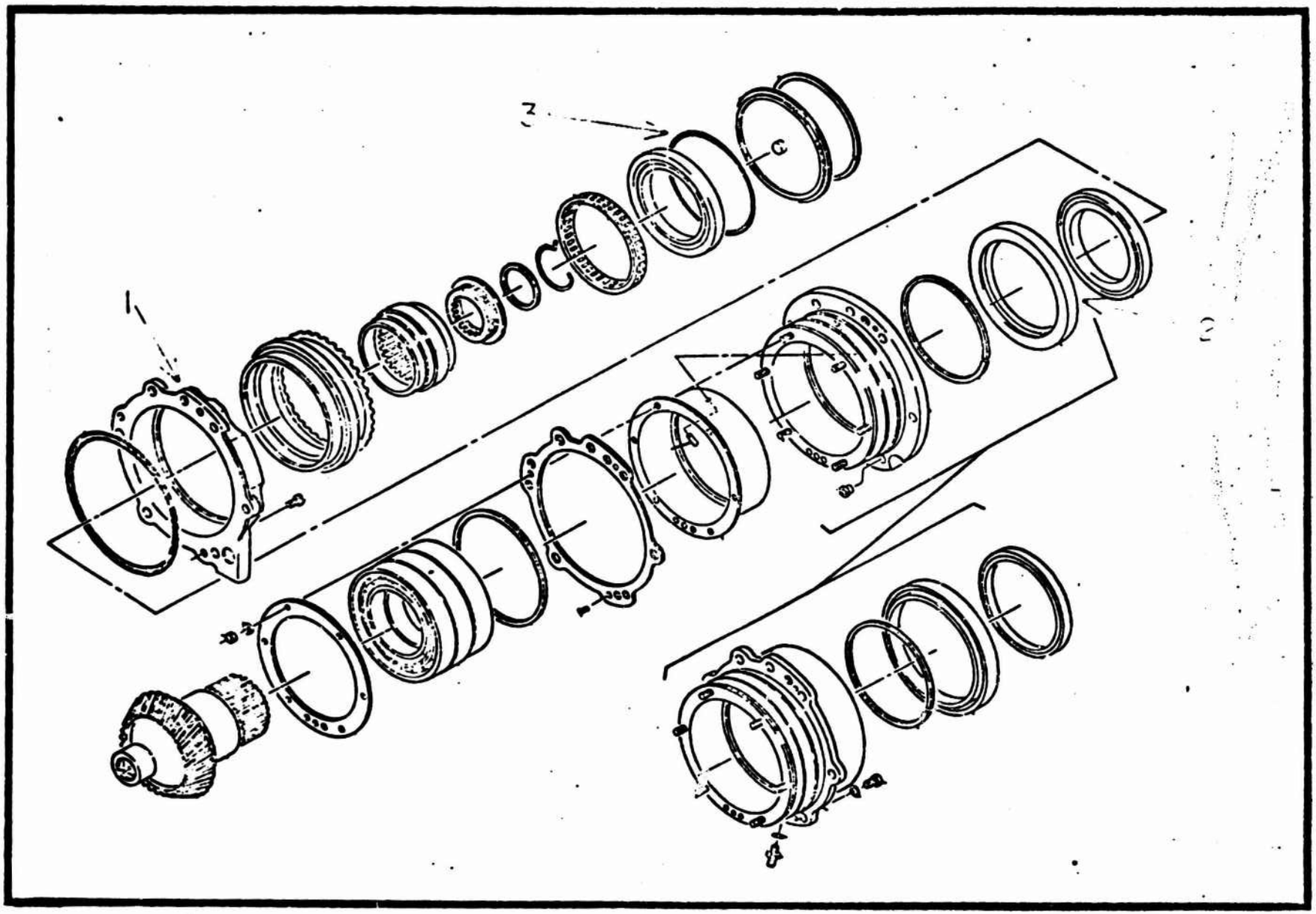

Figure 82 Quill Assembly.

UH-1H FLAT RATE DATA
FUNCTIONAL GROUP 04
REFERENCE FIGURE 82

ITEM NO.	NOMENCLATURE	FSN/PN	ACTION CODE	MAINT. LEVEL	MEAN	MEDIAN	MODE	STD. DEV.	SAMPLE SIZE
1	Ring	1615829684 2	Replace	Total	2.5	2.0	1.0	1.581	20
				Org.	*	*	*	*	*
				Supp.	2.1	1.5	1.0	1.525	14
2	Seal	53301514238 53307631473	Replace	Total	3.9	3.0	2.0	2.618	705
				Org.	4.2	4.0	4.0	2.578	179
				Supp.	3.9	3.0	2.0	2.630	526
3	Packing	53305805801	Replace	Total	1.2	1.0	0.5	0.957	480
				Org.	1.3	1.0	1.0	0.980	145
				Supp.	1.2	1.0	0.5	0.946	335
				Total					
				Org.					
				Supp.					
				Total					
				Org.					
				Supp.					
				Total					
				Org.					
				Supp.					
				Total					
				Org.					
				Supp.					
				Total					
				Org.					
				Supp.					
				Total					
				Org.					
				Supp.					
				Total					
				Org.					
				Supp.					

*Insufficient Data

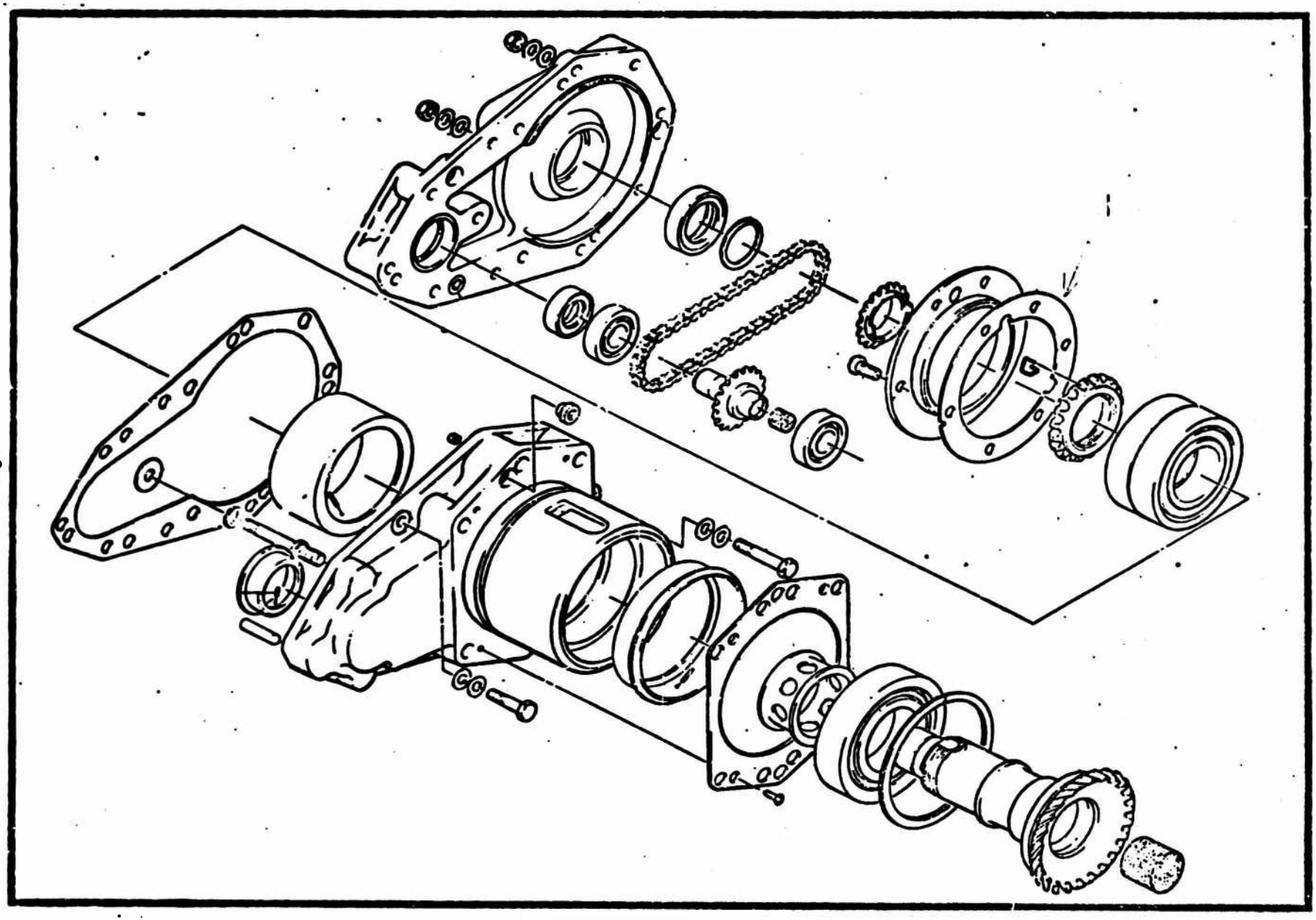

Figure 83 Quill Assembly, Accessory Drive

UH-1H FLAT RATE DATA
FUNCTIONAL GROUP 04
REFERENCE FIGURE 83

ITEM NO.	NOMEMCLATURE	FSN/PN	ACTION CODE	MAINT. LEVEL	MEAN	MEDIAN	MODE	STD. DEV.	SAMPLE SIZE
1	Spacer	16156330839 16158309727	Replace	Total Org. Supp.	0.9 0.9 *	1.0 1.0 *	1.0 1.0 *	0.487 0.446 *	20 14 *
				Total Org. Supp.					
				Total Org. Supp.					
				Total Org. Supp.					
				Total Org. Supp.					
				Total Org. Supp.					
				Total Org. Supp.					
				Total Org. Supp.					
				Total Org. Supp.					
				Total Org. Supp.					

*Insufficient Data

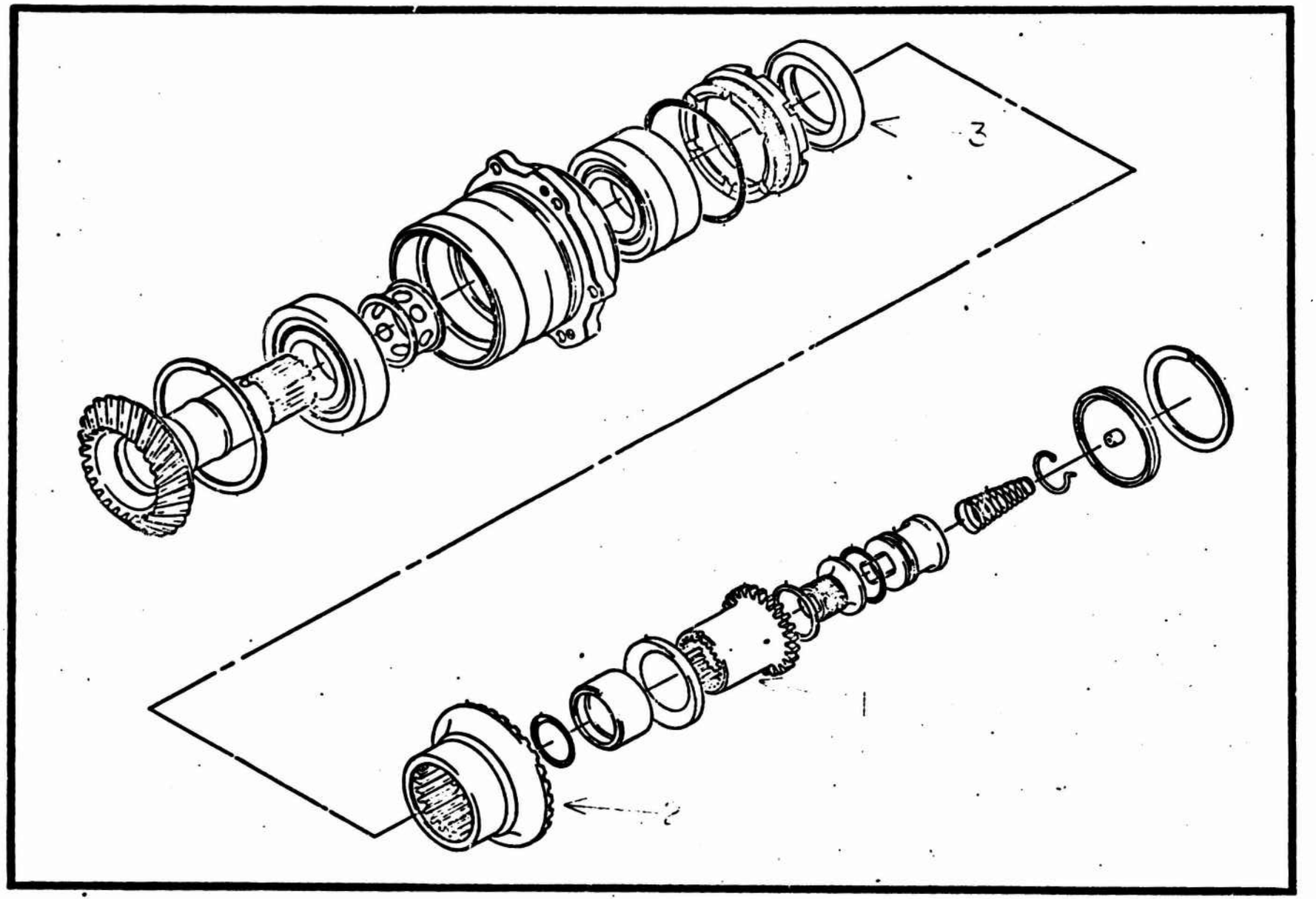

Figure 84 Quill Assembly, Tail Rotor

UH-1H FLAT RATE DATA
FUNCTIONAL GROUP 04
REFERENCE FIGURE 84

ITEM NO.	NOMEMCLATURE	FSN/PN	ACTION CODE	MAINT. LEVEL	MEAN	MEDIAN	MODE	STD. DEV.	SAMPLE SIZE
1	Coupling	16157916073	Replace	Total	1.2	1.0	1.0	0.534	50
				Org.	*	*	*	*	*
				Supp.	1.3	1.0	1.0	0.533	30
2	Drive Shaft Coupling	15607014142	Replace	Total	1.5	1.0	1.0	0.807	59
				Org.	1.8	1.5	1.0	0.844	18
				Supp.	1.4	1.0	1.0	0.771	41
			Service	Total	3.3	3.0	3.0	1.371	12
				Org.	*	*	*	*	*
				Supp.	3.3	3.0	3.0	1.371	12
3	Seal	53307534432	Replace	Total	2.7	2.0	1.0	2.050	1484
				Org.	1.6	1.5	2.0	0.800	283
				Supp.	2.6	2.0	1.0	1.994	1005
				Total					
				Org.					
				Supp.					
				Total					
				Org.					
				Supp.					
				Total					
				Org.					
				Supp.					
				Total					
				Org.					
				Supp.					
				Total					
				Org.					
				Supp.					
				Total					
				Org.					
				Supp.					

*Insufficient Data

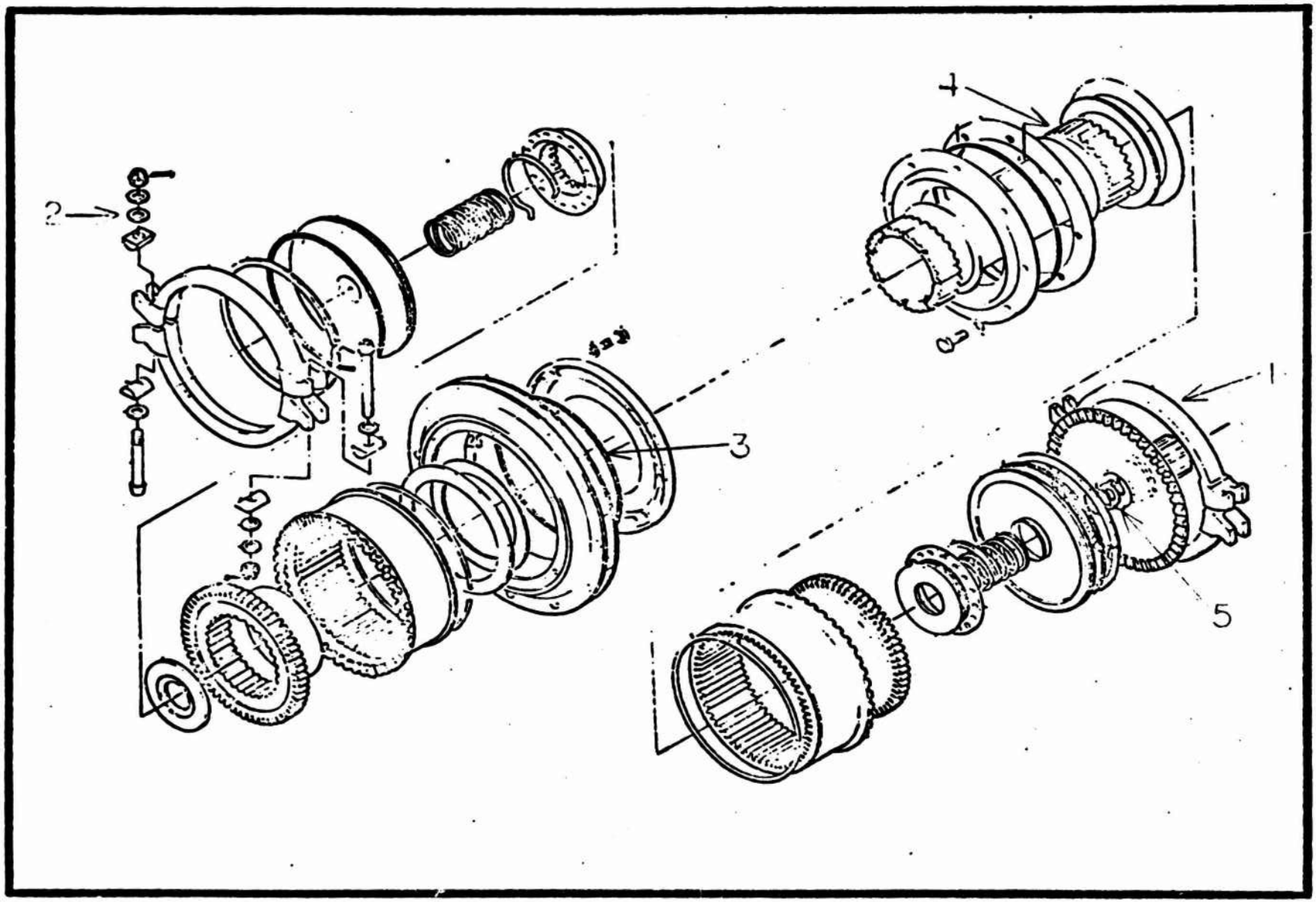

Figure 85 Drive Shaft Installation, Engine To Transmission

UH-1H FLAT RATE DATA
FUNCTIONAL GROUP 04
REFERENCE FIGURE 35

ITEM NO.	NOMENCLATURE	FSN/PN	ACTION CODE	MAINT. LEVEL	MEAN	MEDIAN	MODE	STD. DEV.	SAMPLE SIZE
1	Coupling Set	16157612532	Replace	Total	2.2	2.0	2.0	1.198	48
				Org.	1.8	1.5	1.0	0.970	25
				Supp.	2.7	2.0	2.0	1.250	23
2	Washer	53105957078	Replace	Total	0.7	0.5	1.0	0.338	19
				Org.	0.8	1.0	1.0	0.384	9
				Supp.	0.6	0.5	0.5	0.296	10
3	Packing	53306254611 53308418711	Replace	Total	1.0	1.0	0.5	0.622	121
				Org.	*	*	*	*	*
				Supp.	1.1	1.0	0.5	0.619	76
4	Drive Shaft	16156055100	Removed and Installed	Total	2.3	2.0	2.0	0.537	10
				Org.	*	*	*	*	*
				Supp.	2.2	2.0	2.0	0.518	6
5	Washer	53107318112 53109025423	Replace	Total	1.3	1.0	1.0	0.902	13
				Org.	*	*	*	*	*
				Supp.	1.3	1.0	1.0	0.930	11
--	Drive Shaft Assy	16150686635	Replace	Total	3.5	3.0	2.0	2.293	721
				Org.	2.6	2.1	2.0	1.175	385
				Supp.	3.7	3.0	2.0	2.522	258
			Repair	Total	2.0	2.0	2.0	0.136	33
				Org.	*	*	*	*	*
				Supp.	2.0	2.0	2.0	*	28
			Service	Total	3.4	3.0	2.0	2.074	496
				Org.	2.7	2.0	1.0	1.833	63
				Supp.	3.5	3.0	2.0	2.088	433
			Initial Inspection	Total	0.8	0.5	0.5	0.466	113
				Org.	*	*	*	*	*
				Supp.	0.8	0.5	0.5	0.463	112
			Final Inspection	Total	0.6	0.5	0.5	0.201	92
				Org.	*	*	*	*	*
				Supp.	0.6	0.5	0.5	0.202	91

*Insufficient Data

UH-1H FLAT RATE DATA
FUNCTIONAL GROUP 04
REFERENCE FIGURE 85

ITEM NO.	NOMEMCLATURE	FSN/PN	ACTION CODE	MAINT. LEVEL	MEAN	MEDIAN	MODE	STD. DEV.	SAMPLE SIZE
--	Drive Shaft Assy (Cont'd)	16150686635	Removed and Installed	Total	4.0	3.0	2.0	2.565	601
				Org.	2.4	2.0	1.0	1.255	146
				Supp.	4.2	4.0	2.0	2.594	421
			Removed	Total	1.3	1.0	1.0	0.527	69
				Org.	1.2	1.0	1.0	0.579	37
				Supp.	1.3	1.0	1.0	0.454	32
			Installed	Total	1.4	1.0	1.0	0.582	51
				Org.	*	*	*	*	*
				Supp.	1.4	1.0	1.0	0.587	33
				Total					
				Org.					
				Supp.					
				Total					
				Org.					
				Supp.					
				Total					
				Org.					
				Supp.					
				Total					
				Org.					
				Supp.					
				Total					
				Org.					
				Supp.					
				Total					
				Org.					
				Supp.					
				Total					
				Org.					
				Supp.					

*Insufficient Data

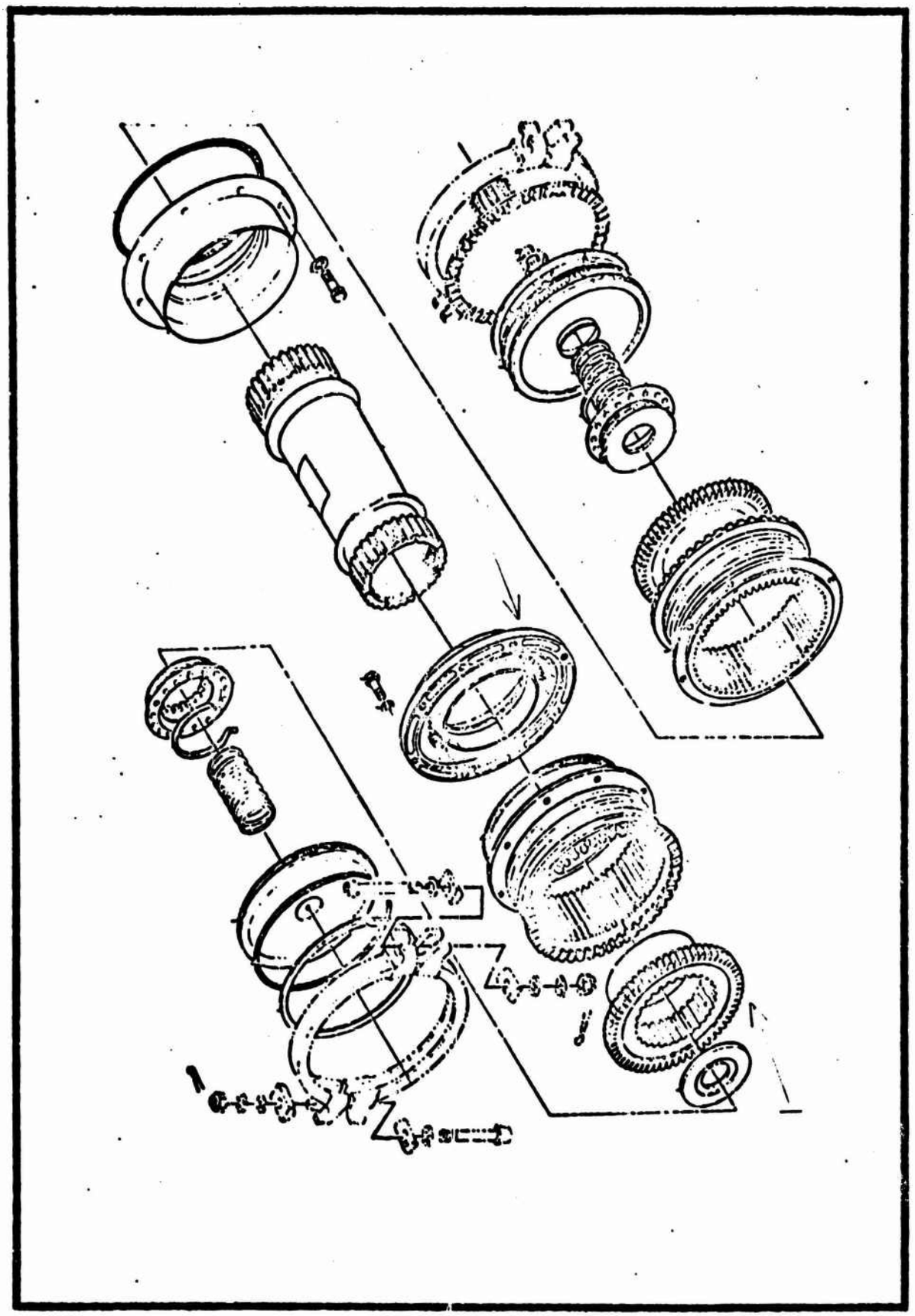

Figure 86 Drive Shaft Assembly

UH-1H FLAT RATE DATA
FUNCTIONAL GROUP 04
REFERENCE FIGURE 36

ITEM NO.	NOMEMCLATURE	FSN/PN	ACTION CODE	MAINT. LEVEL	MEAN	MEDIAN	MODE	STD. DEV.	SAMPLE SIZE
1	Coupling	16150693327 16150761486 16157243591 16158310330	Replace	Total	1.3	1.0	1.0	0.480	13
				Org.	*	*	*	*	*
				Supp.	1.3	1.0	1.0	0.494	12
				Total					
				Org.					
				Supp.					
2	Boot	15607922324 16151410076	Replace	Total	2.5	2.0	2.0	1.537	175
				Org.	3.1	3.0	4.0	1.535	61
				Supp.	2.2	2.0	2.0	1.463	114
				Total					
				Org.					
				Supp.					
				Total					
				Org.					
				Supp.					
				Total					
				Org.					
				Supp.					
				Total					
				Org.					
				Supp.					
				Total					
				Org.					
				Supp.					
				Total					
				Org.					
				Supp.					
				Total					
				Org.					
				Supp.					

*Insufficient Data

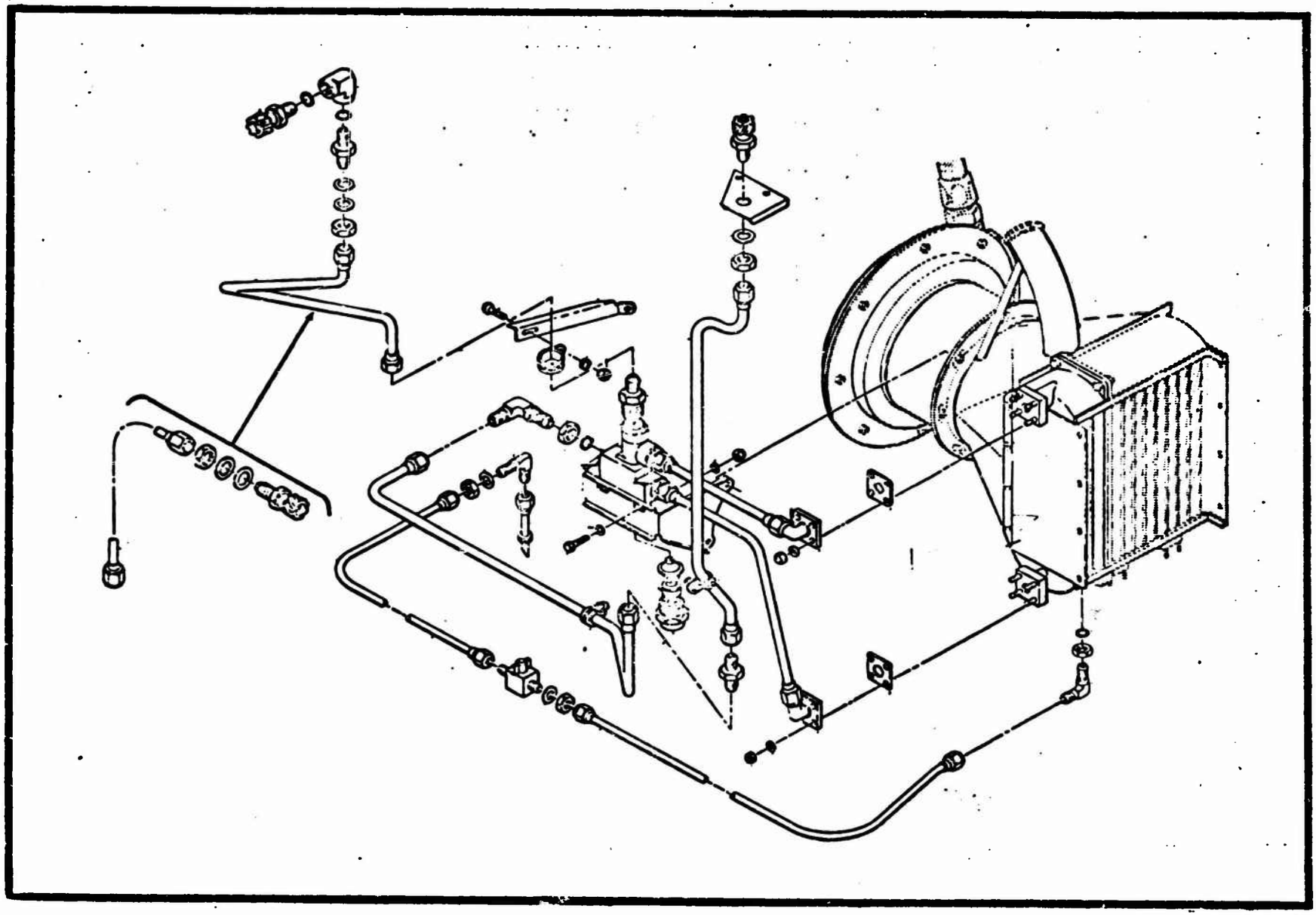

Figure 87 Transmission Oil Cooler Installation

UH-1H FLAT RATE DATA
FUNCTIONAL GROUP 04
REFERENCE FIGURE 37

ITEM NO.	NOMEMCLATURE	FSN/PN	ACTION CODE	MAINT. LEVEL	MEAN	MEDIAN	MODE	STD. DEV.	SAMPLE SIZE
1	Oil Cooler	16151336226	Replace	Total	5.4	5.0	8.0	2.715	76
				Org.	4.2	4.0	4.0	2.183	25
				Supp.	6.0	6.0	8.0	2.760	51
			Service	Total	1.6	2.0	2.0	0.470	11
				Org.	*	*	*	*	*
				Supp.	1.5	1.5	2.0	0.500	7
				Total					
				Org.					
				Supp.					
				Total					
				Org.					
				Supp.					
				Total					
				Org.					
				Supp.					
				Total					
				Org.					
				Supp.					
				Total					
				Org.					
				Supp.					
				Total					
				Org.					
				Supp.					
				Total					
				Org.					
				Supp.					
				Total					
				Org.					
				Supp.					

*Insufficient Data

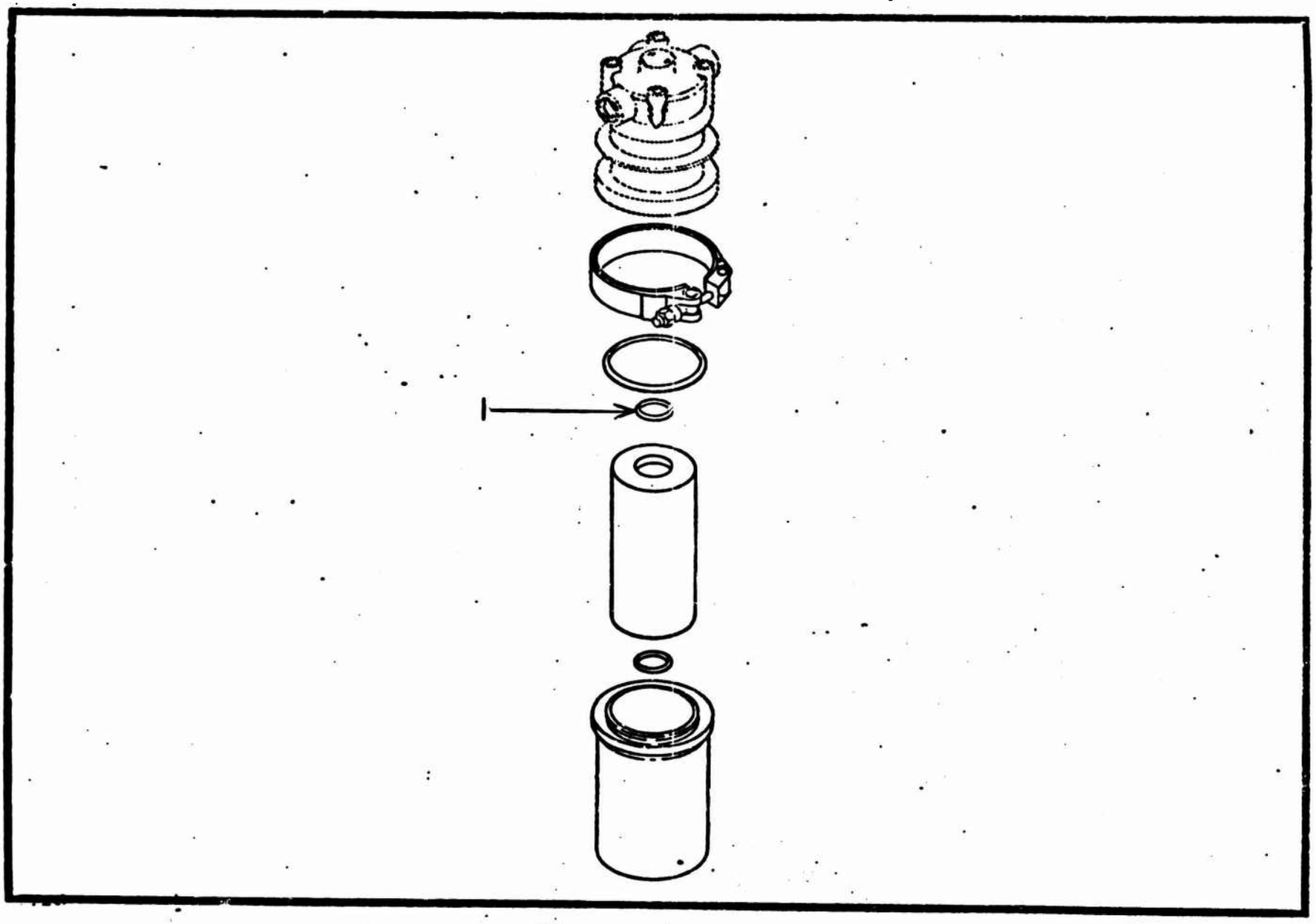

Figure 88 Filter Assembly, Transmission Oil

UH-1H FLAT RATE DATA
FUNCTIONAL GROUP 04
REFERENCE FIGURE 38

ITEM NO.	NOMENCLATURE	FSN/PN	ACTION CODE	MAINT. LEVEL	MEAN	MEDIAN	MODE	STD. DEV.	SAMPLE SIZE
1	Packing	53307295254 53309640058	Replace	Total Org. Supp.	0.9 1.1 0.9	1.0 1.0 0.5	0.5 1.0 0.5	0.579 0.588 0.567	103 35 68
				Total Org. Supp.					
				Total Org. Supp.					
				Total Org. Supp.					
				Total Org. Supp.					
				Total Org. Supp.					
				Total Org. Supp.					
				Total Org. Supp.					
				Total Org. Supp.					
				Total Org. Supp.					

*Insufficient Data

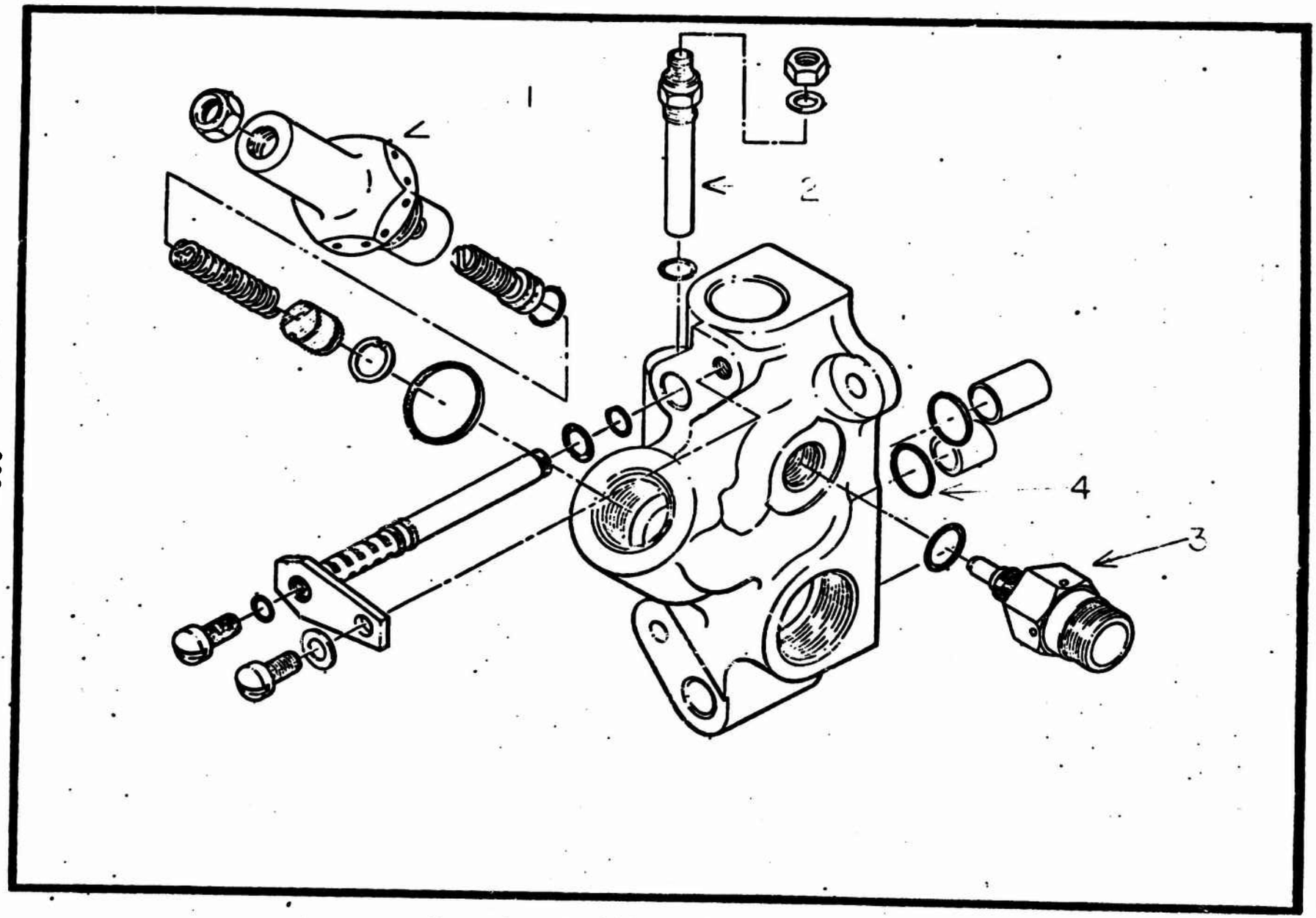

Figure 89 Manifold Assembly, Transmission

UH-1H FLAT RATE DATA
FUNCTIONAL GROUP 04
REFERENCE FIGURE 39

ITEM NO.	NOMENCLATURE	FSN/PN	ACTION CODE	MAINT. LEVEL	MEAN	MEDIAN	MODE	STD. DEV.	SAMPLE SIZE
1	Fitting	47309884533	Replace	Total	1.5	1.0	1.0	0.580	24
				Org.	1.5	1.0	1.0	0.584	23
				Supp.	*	*	*	*	*
2	Switch	59302991066	Replace	Total	1.2	1.0	1.0	0.573	87
				Org.	1.2	1.0	1.0	0.577	75
				Supp.	1.5	1.5	2.0	0.477	12
3	Temperature Transmitter	66855809651	Replace	Total	1.6	1.5	1.0	0.646	41
				Org.	1.6	1.5	1.0	0.661	36
				Supp.	*	*	*	*	*
4	Packing	53308005180	Replace	Total	0.9	1.0	1.0	0.248	29
				Org.	0.8	1.0	1.0	0.254	19
				Supp.	1.0	1.0	1.0	0.179	10
				Total					
				Org.					
				Supp.					
				Total					
				Org.					
				Supp.					
				Total					
				Org.					
				Supp.					
				Total					
				Org.					
				Supp.					
				Total					
				Org.					
				Supp.					
				Total					
				Org.					
				Supp.					

*Insufficient Data

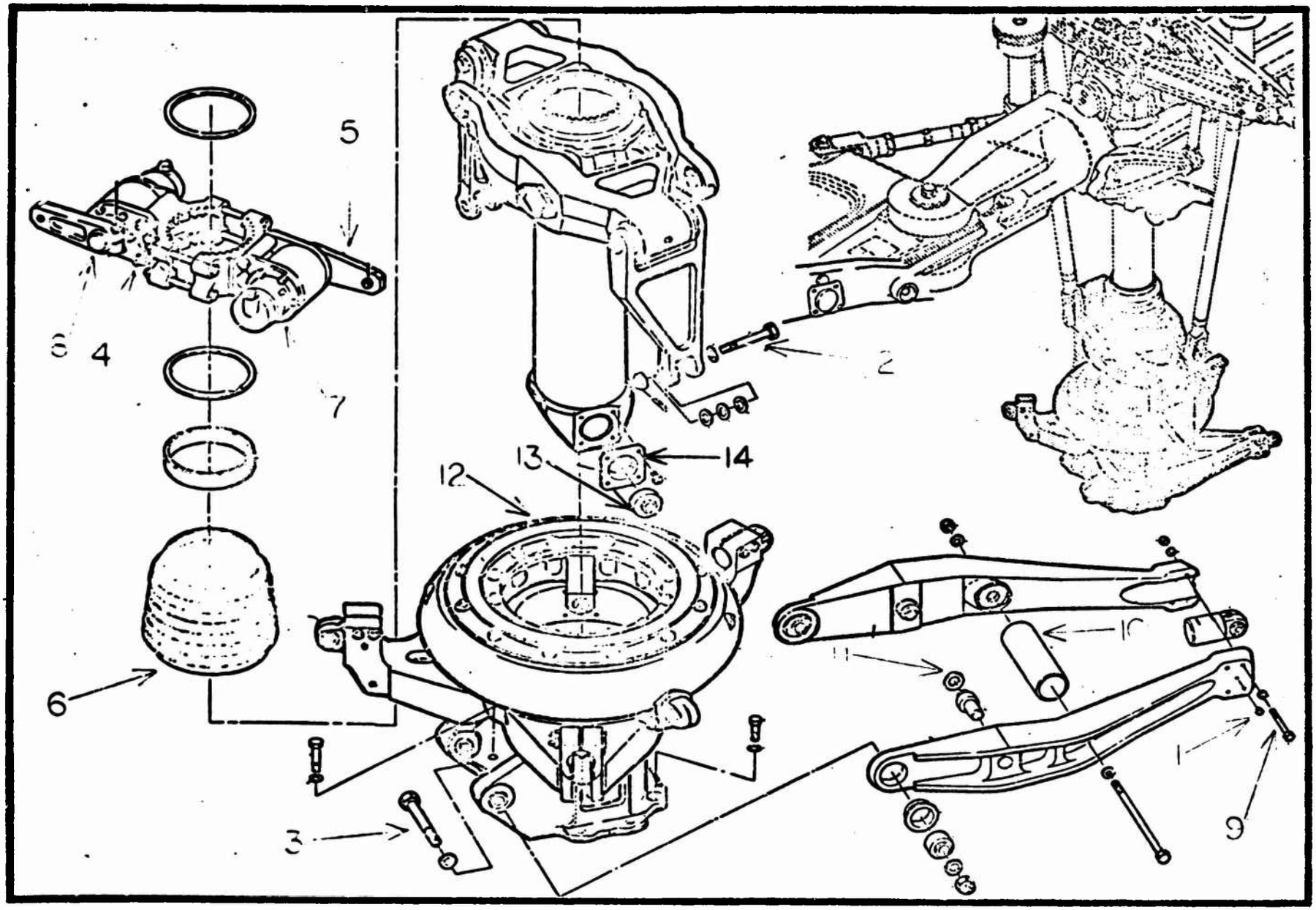

Figure 90 Pylon Installation, Lower Section

UH-1H FLAT RATE DATA
FUNCTIONAL GROUP 04
REFERENCE FIGURE 90

ITEM NO.	NOMENCLATURE	FSN/PN	ACTION CODE	MAINT. LEVEL	MEAN	MEDIAN	MODE	STD. DEV.	SAMPLE SIZE
1	Fitting	47302774780	Replace	Total	1.8	2.0	2.0	0.698	28
				Org.	1.8	2.0	2.0	0.696	21
				Supp.	1.7	2.0	2.0	0.756	7
			Adjust	Total	2.6	3.0	3.0	0.535	7
				Org.	*	*	*	*	*
				Supp.	2.6	3.0	3.0	0.535	7
2	Bolt	53060526322 53068806399 53069056790	Replace	Total	1.2	1.0	1.0	0.626	194
				Org.	1.3	1.0	1.0	0.558	140
				Supp.	0.8	1.0	1.0	0.277	43
3	Bolt	53061513092 53062066379 53062089089	Replace	Total	1.0	1.0	1.0	0.408	10
				Org.	1.1	1.0	1.0	0.451	7
				Supp.	*	*	*	*	*
4	Bolt	53061822021 53066385766	Replace	Total	1.1	1.0	1.0	0.597	11
				Org.	*	*	*	*	*
				Supp.	1.4	1.0	2.0	0.628	7
5	Lever	16158309745	Replace	Total	2.4	2.0	1.0	2.293	69
				Org.	2.0	1.5	2.0	1.943	48
				Supp.	3.3	2.0	1.0	2.836	20
6	Boot	16154195944	Replace	Total	1.8	1.0	1.0	1.287	490
				Org.	1.8	1.0	1.0	1.255	336
				Supp.	1.8	1.0	1.0	1.358	154
7	Damper Assy	16501576843	Replace	Total	3.0	2.0	2.0	2.123	1098
				Org.	2.7	2.0	2.0	1.808	773
				Supp.	3.7	3.0	2.0	2.596	325
			Removed and Installed	Total	4.0	3.5	2.0	2.962	87
				Org.	*	*	*	*	*
				Supp.	4.7	4.0	2.0	3.047	51
8	Ring	53658042025	Replace	Total	1.1	1.0	1.0	0.516	30
				Org.	0.9	1.0	1.0	0.418	14
				Supp.	1.2	1.0	1.0	0.562	16

*Insufficient Data

UH-1H FLAT RATE DATA
FUNCTIONAL GROUP 04
REFERENCE FIGURE 90

ITEM NO.	NOMEMCLATURE	FSN/PN	ACTION CODE	MAINT. LEVEL	MEAN	MEDIAN	MODE	STD. DEV.	SAMPLE SIZE
9	Bolt	53061822033 53066379166	Replace	Total	1.1	1.0	0.5	0.575	16
				Org.	1.2	1.0	1.0	0.593	13
				Supp.	*	*	*	*	*
10	Spacer	16157318078 53407767004	Replace	Total	1.4	1.0	1.0	0.733	7
				Org.	*	*	*	*	*
				Supp.	1.6	2.0	2.0	0.822	5
11	Shim	16808384774	Replace	Total	1.9	2.0	1.0	1.123	107
				Org.	2.0	2.0	1.0	1.172	69
				Supp.	1.8	2.0	2.0	1.037	38
12	Swashplate and Support	16150601062 16157753807 16159119292	Replace	Total	9.6	8.0	10.0	6.142	498
				Org.	5.9	6.0	4.0	2.668	167
				Supp.	10.4	10.0	10.0	6.303	280
			Service	Total	1.0	1.0	1.0	0.575	18
				Org.	*	*	*	*	*
				Supp.	1.1	1.0	1.0	0.553	10
			Removed and Installed	Total	9.6	10.0	10.0	5.102	93
				Org.	*	*	*	*	*
				Supp.	10.0	10.0	10.0	5.165	82
			Removed	Total	8.2	8.0	10.0	2.039	18
				Org.	*	*	*	*	*
				Supp.	8.2	10.0	10.0	2.101	17
13	Bearing and Liner Assy	16158309756	Replace	Total	2.6	2.0	2.0	1.569	127
				Org.	2.6	2.0	2.0	1.515	75
				Supp.	2.6	2.0	2.0	1.659	52
14	Plate	16157874278 31108309757	Replace	Total	1.4	1.0	1.0	0.459	14
				Org.	*	*	*	*	*
				Supp.	1.4	1.5	1.0	0.466	9
				Total					
				Org.					
				Supp.					

*Insufficient Data

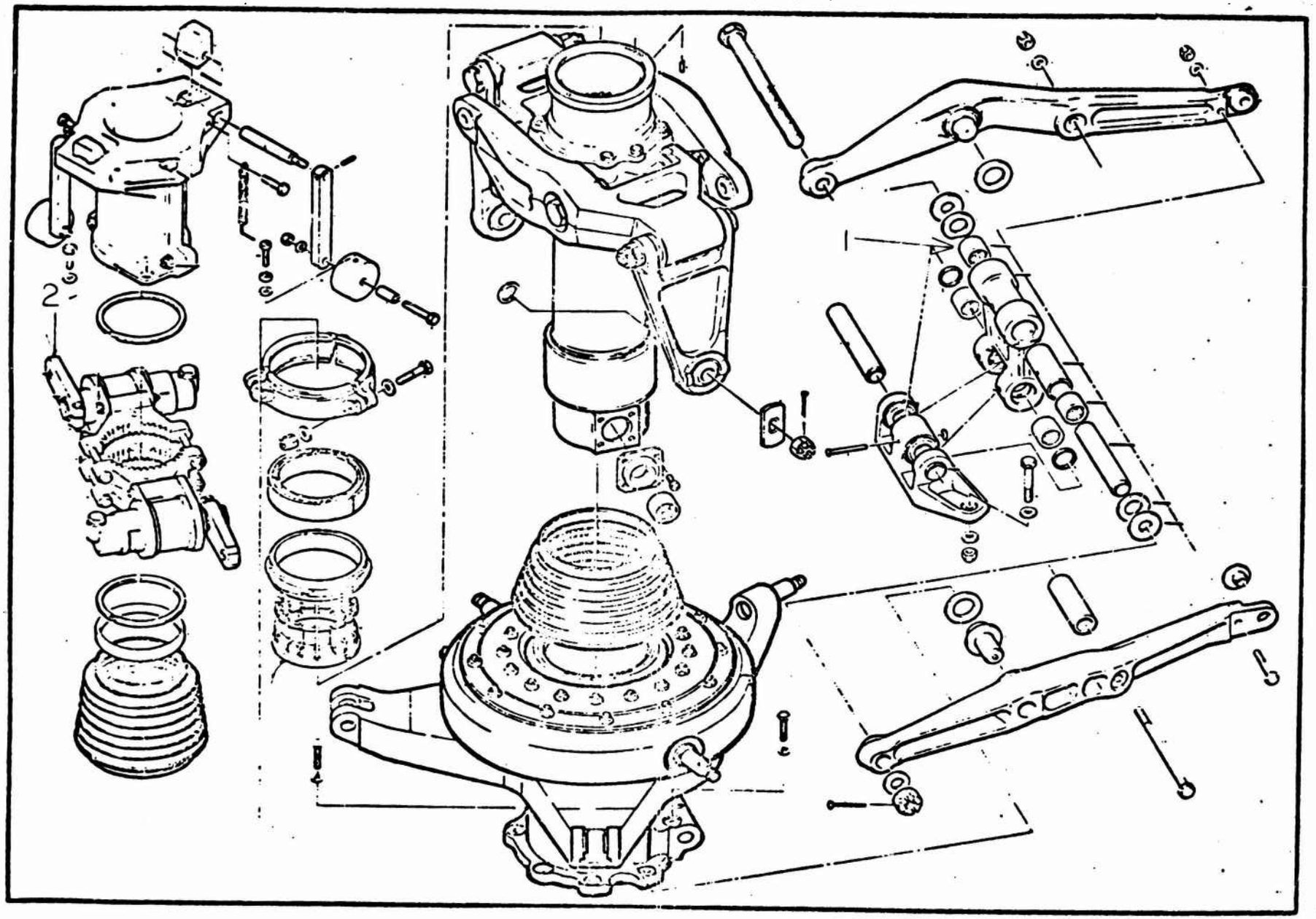

Figure 91 Pylon Installation, Lower Section

UH-1H FLAT RATE DATA
FUNCTIONAL GROUP 04
REFERENCE FIGURE 91

ITEM NO.	NOMEMCLATURE	FSN/PN	ACTION CODE	MAINT. LEVEL	MEAN	MEDIAN	MODE	STD. DEV.	SAMPLE SIZE
1	Bearing	31102272159 31109264549	Replace	Total	2.3	2.0	2.0	1.117	78
				Org.	2.4	2.0	1.0	1.228	44
				Supp.	2.1	2.0	2.0	0.956	34
2	Lever Assy	16159066427 16159216163	Replace	Total	2.9	2.5	2.0	1.493	191
				Org.	2.9	2.5	2.0	1.469	139
				Supp.	3.2	3.0	2.0	1.548	52
			Removed and Installed	Total	4.7	4.0	4.0	0.992	19
				Org.	*	*	*	*	*
				Supp.	4.9	5.0	4.0	1.038	13
				Total					
				Org.					
				Supp.					
				Total					
				Org.					
				Supp.					
				Total					
				Org.					
				Supp.					
				Total					
				Org.					
				Supp.					
				Total					
				Org.					
				Supp.					
				Total					
				Org.					
				Supp.					
				Total					
				Org.					
				Supp.					

*Insufficient Data

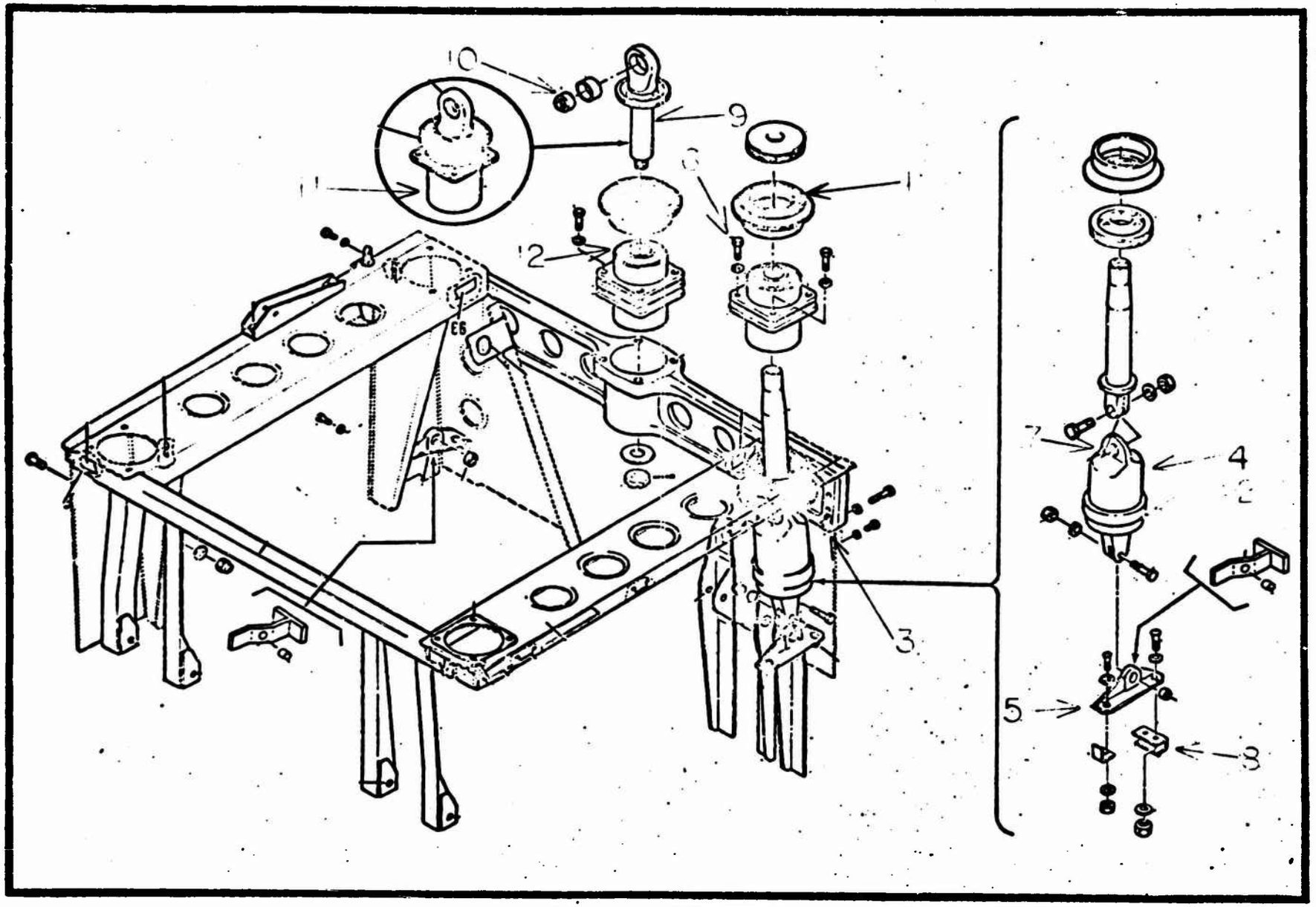

Figure 92 Pylon Mount Installation

UH-1H FLAT RATE DATA
FUNCTIONAL GROUP 04
REFERENCE FIGURE 92

ITEM NO.	NOMEMCLATURE	FSN/PN	ACTION CODE	MAINT. LEVEL	MEAN	MEDIAN	MODE	STD. DEV.	SAMPLE SIZE
1	Boot	15606330856	Replace	Total	1.4	1.0	1.0	0.787	214
				Org.	1.3	1.0	1.0	0.742	96
				Supp.	1.6	1.5	1.0	0.800	118
			Adjust	Total	0.8	0.5	1.0	0.374	10
				Org.	*	*	*	*	*
				Supp.	0.8	0.5	0.5	0.394	7
			Repair	Total	1.7	1.0	0.5	1.308	8
				Org.	*	*	*	*	*
				Supp.	2.3	2.0	2.0	1.304	5
2	Boot	16151771959	Replace	Total	1.7	1.0	1.0	1.123	37
				Org.	1.5	1.0	1.0	1.289	15
				Supp.	1.8	1.5	1.0	1.014	22
3	Shim	15609168324	Replace	Total	1.8	1.0	1.0	1.722	11
				Org.	1.6	1.0	1.0	1.281	6
				Supp.	2.1	1.5	0.5	2.275	5
4	Damper	15607394567	Replace	Total	4.1	3.5	2.0	2.753	350
				Org.	1.6	1.8	2.0	0.478	53
				Supp.	4.3	4.0	2.0	2.789	225
			Adjust	Total	1.6	1.0	1.0	0.937	32
				Org.	1.6	1.5	3.0	1.007	20
				Supp.	1.3	1.0	1.0	0.566	9
			Service	Total	0.7	0.5	0.5	0.317	47
				Org.	0.7	0.5	0.5	0.318	35
				Supp.	0.7	0.5	1.0	0.330	12
			Removed and Installed	Total	2.2	2.0	2.0	1.179	67
				Org.	1.9	2.0	2.0	1.115	29
				Supp.	2.5	2.0	2.0	1.137	36
5	Damper Mount	15600721077 15600721078	Replace	Total	3.0	3.0	2.0	1.472	194
				Org.	2.7	2.5	2.0	1.170	82
				Supp.	2.5	2.0	2.0	1.110	86

*Insufficient Data

UH-1H FLAT RATE DATA
FUNCTIONAL GROUP 04
REFERENCE FIGURE 92

ITEM NO.	NOMEMCLATURE	FSN/PN	ACTION CODE	MAINT. LEVEL	MEAN	MEDIAN	MODE	STD. DEV.	SAMPLE SIZE
5	Damper Mount (Cont'd)	15600721077 15600721078	Repair	Total	3.7	3.0	5.0	1.146	11
				Org.	*	*	*	*	*
				Supp.	3.7	3.0	5.0	1.146	11
			Service	Total	1.2	1.0	1.0	0.602	21
				Org.	1.5	1.5	2.0	0.500	9
				Supp.	1.1	1.0	0.5	0.601	10
			Removed and Installed	Total	2.1	2.0	2.0	1.140	35
				Org.	*	*	*	*	*
				Supp.	1.8	2.0	2.0	0.675	19
6	Bolt	53061744118 53067388384	Replace	Total	1.0	1.0	0.5	0.625	17
				Org.	*	*	*	*	*
				Supp.	1.3	1.0	2.0	0.624	12
7	Bearing	31205405077	Replace	Total	1.6	2.0	2.0	0.482	40
				Org.	1.7	2.0	2.0	0.469	32
				Supp.	*	*	*	*	*
8	Clip	15608713333 53400898575 53400898576 53400898577	Replace	Total	1.4	1.0	1.0	0.437	12
				Org.	*	*	*	*	*
				Supp.	1.4	1.2	1.0	0.421	9
				Total					
				Org.					
				Supp.					
9	Bolt Assy	15601796308	Replace	Total	1.0	1.0	1.0	0.456	38
				Org.	0.9	1.0	1.0	0.211	10
				Supp.	1.0	1.0	1.0	0.515	28
10	Bearing	31206617115	Replace	Total	1.6	2.0	2.0	0.742	23
				Org.	1.8	2.0	2.0	0.632	10
				Supp.	1.5	1.5	2.0	0.816	13
11	Mount Assy	15609031018	Replace	Total	3.9	4.0	4.0	2.164	39
				Org.	*	*	*	*	*
				Supp.	3.5	3.0	4.0	1.106	20

*Insufficient Data

UH-1H FLAT RATE DATA
FUNCTIONAL GROUP 04
REFERENCE FIGURE 92

ITEM NO.	NOMEMCLATURE	FSN/PN	ACTION CODE	MAINT. LEVEL	MEAN	MEDIAN	MODE	STD. DEV.	SAMPLE SIZE
12	Mount	53407394568 53407394569	Replace	Total Org. Supp.	4.2 * 4.5	4.0 * 4.0	2.0 * 2.0	2.837 * 2.861	355 * 221
				Total Org. Supp.					
				Total Org. Supp.					
				Total Org. Supp.					
				Total Org. Supp.					
				Total Org. Supp.					
				Total Org. Supp.					
				Total Org. Supp.					
				Total Org. Supp.					
				Total Org. Supp.					

*Insufficient Data

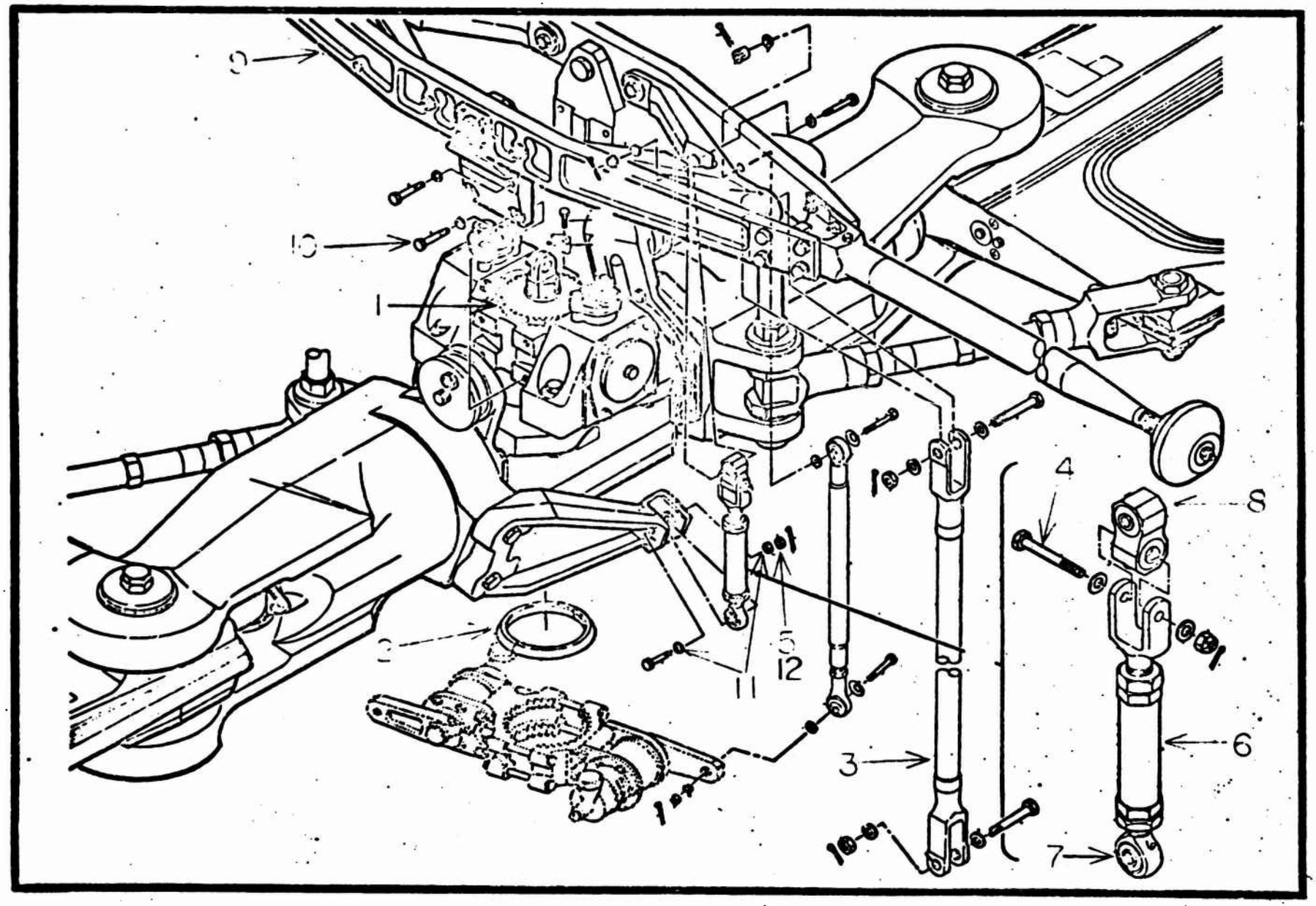

Figure 93 Pylon Assembly, Upper Section

UH-1H FLAT RATE DATA
FUNCTIONAL GROUP 04
REFERENCE FIGURE 93

ITEM NO.	NOMEMCLATURE	FSN/PN	ACTION CODE	MAINT. LEVEL	MEAN	MEDIAN	MODE	STD. DEV.	SAMPLE SIZE
1	Mast Nut	16156245116	Replace	Total	1.1	1.0	1.0	0.438	32
				Org.	*	*	*	*	*
				Supp.	1.1	1.0	1.0	0.507	17
2	Cone Set	16156250038	Replace	Total	2.6	1.9	1.0	2.513	193
				Org.	2.7	2.0	1.0	2.645	63
				Supp.	2.5	1.5	1.0	2.453	130
3	Connecting Link	30404973445	Replace	Total	1.7	1.5	1.0	0.875	147
				Org.	1.6	1.5	1.0	0.815	111
				Supp.	1.7	2.0	2.0	1.047	36
4	Bolt	53068518928 53069643124	Replace	Total	1.2	1.0	1.0	0.789	43
				Org.	1.2	1.0	1.0	0.743	18
				Supp.	1.3	1.0	1.0	0.895	15
5	Nut	53109618391	Replace	Total	0.9	1.0	1.0	0.420	59
				Org.	0.8	1.0	1.0	0.343	26
				Supp.	1.0	1.0	1.0	0.476	33
6	Turnbuckle	53408657927	Replace	Total	2.4	2.0	2.0	1.275	47
				Org.	2.3	2.0	2.0	1.224	35
				Supp.	2.5	2.0	2.0	1.462	12
7	Bearing	31208390971	Replace	Total	2.5	2.0	2.0	1.858	1034
				Org.	2.5	2.0	2.0	1.878	797
				Supp.	2.5	2.0	2.0	1.790	237
8	Universal Assy	16158296855	Replace	Total	1.9	2.0	1.0	1.097	488
				Org.	1.9	2.0	1.0	1.037	385
				Supp.	2.2	2.0	2.0	1.269	103
9	Stabilizer Bar Assy	16155709771 16156896307 16157872511	Replace	Total	4.9	4.0	4.0	2.968	112
				Org.	4.3	4.0	4.0	2.736	72
				Supp.	6.1	6.0	10.0	3.046	40
			Adjust	Total	3.6	3.0	2.0	2.249	123
				Org.	*	*	*	*	*
				Supp.	3.9	3.5	2.0	2.294	101

*Insufficient Data

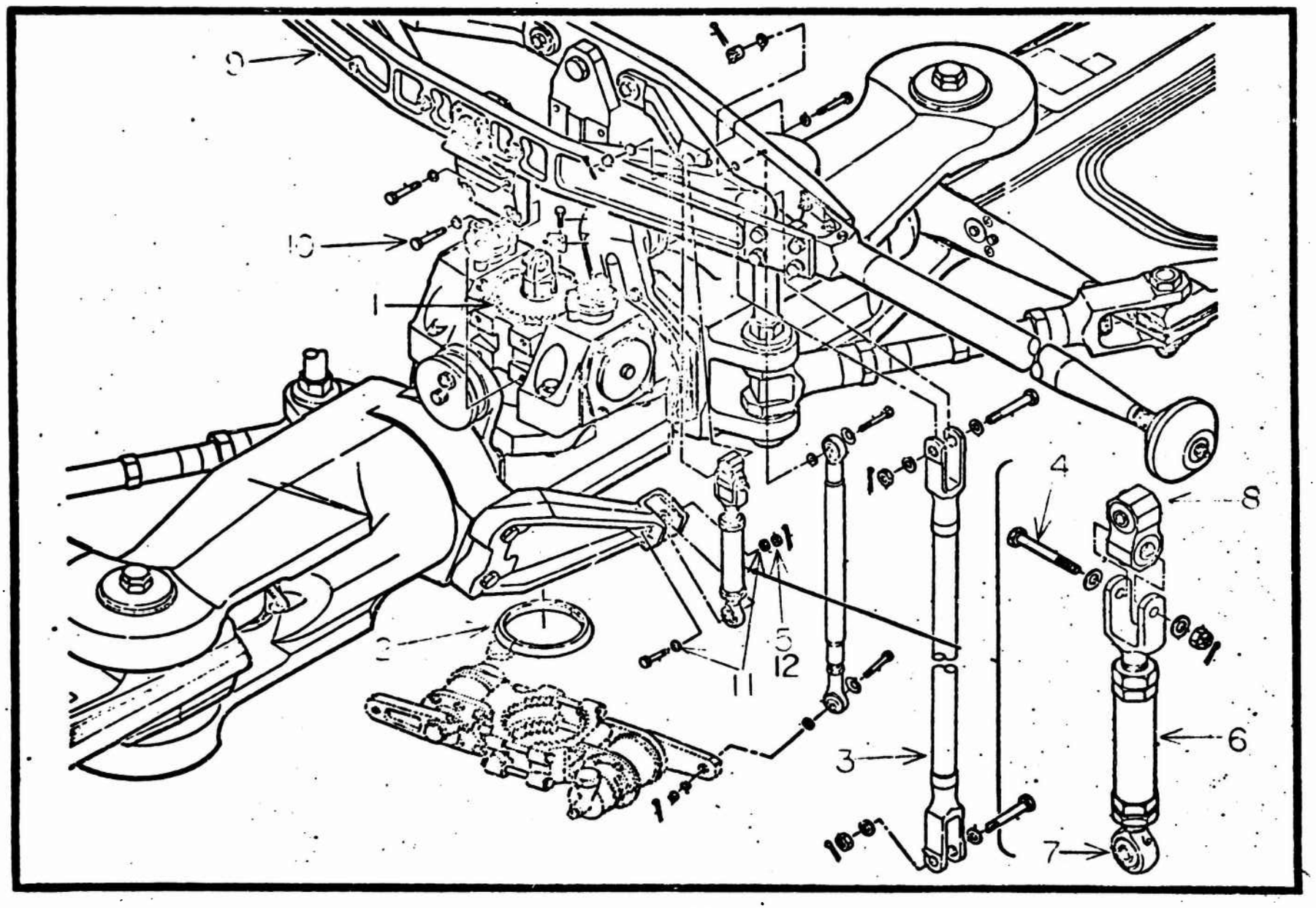

Figure 93 Pylon Assembly, Upper Section

UH-1H FLAT RATE DATA
FUNCTIONAL GROUP 04
REFERENCE FIGURE 93

ITEM NO.	NOMENCLATURE	FSN/PN	ACTION CODE	MAINT. LEVEL	MEAN	MEDIAN	MODE	STD. DEV.	SAMPLE SIZE
1	Mast Nut	16156245116	Replace	Total	1.1	1.0	1.0	0.438	32
				Org.	*	*	*	*	*
				Supp.	1.1	1.0	1.0	0.507	17
2	Cone Set	16156250038	Replace	Total	2.6	1.9	1.0	2.513	193
				Org.	2.7	2.0	1.0	2.645	63
				Supp.	2.5	1.5	1.0	2.453	130
3	Connecting Link	30404973445	Replace	Total	1.7	1.5	1.0	0.875	147
				Org.	1.6	1.5	1.0	0.815	111
				Supp.	1.7	2.0	2.0	1.047	36
4	Bolt	53068518928 53069643124	Replace	Total	1.2	1.0	1.0	0.789	43
				Org.	1.2	1.0	1.0	0.743	18
				Supp.	1.3	1.0	1.0	0.895	15
5	Nut	53109618391	Replace	Total	0.9	1.0	1.0	0.420	59
				Org.	0.8	1.0	1.0	0.343	26
				Supp.	1.0	1.0	1.0	0.476	33
6	Turnbuckle	53408657927	Replace	Total	2.4	2.0	2.0	1.275	47
				Org.	2.3	2.0	2.0	1.224	35
				Supp.	2.5	2.0	2.0	1.462	12
7	Bearing	31208390971	Replace	Total	2.5	2.0	2.0	1.858	1034
				Org.	2.5	2.0	2.0	1.878	797
				Supp.	2.5	2.0	2.0	1.790	237
8	Universal Assy	16158296855	Replace	Total	1.9	2.0	1.0	1.097	488
				Org.	1.9	2.0	1.0	1.037	385
				Supp.	2.2	2.0	2.0	1.269	103
9	Stabilizer Bar Assy	16155709771 16156896307 16157872511	Replace	Total	4.9	4.0	4.0	2.968	112
				Org.	4.3	4.0	4.0	2.736	72
				Supp.	6.1	6.0	10.0	3.046	40
			Adjust	Total	3.6	3.0	2.0	2.249	123
				Org.	*	*	*	*	*
				Supp.	3.9	3.5	2.0	2.294	101

*Insufficient Data

UH-1H FLAT RATE DATA
FUNCTIONAL GROUP 04
REFERENCE FIGURE 93

ITEM NO.	NOMEMCLATURE	FSN/PN	ACTION CODE	MAINT. LEVEL	MEAN	MEDIAN	MODE	STD. DEV.	SAMPLE SIZE
9	Stabilizer Bar Assy (Cont'd)	16155709771 16156896307 16157872511	Repair	Total	2.6	2.0	1.0	1.814	49
				Org.	*	*	*	*	*
				Supp.	2.8	2.0	1.0	1.874	35
			Service	Total	2.6	2.0	2.0	1.285	46
				Org.	*	*	*	*	*
				Supp.	2.8	2.5	2.0	1.233	37
			Initial Inspection	Total	1.1	1.0	1.0	0.579	62
				Org.	*	*	*	*	*
				Supp.	1.1	1.0	1.0	0.583	61
			Final Inspection	Total	0.9	1.0	0.5	0.483	57
				Org.	*	*	*	*	*
				Supp.	0.9	1.0	0.5	0.487	56
			Removed and Installed	Total	3.8	4.0	4.0	2.139	344
				Org.	3.1	2.5	2.0	1.911	136
				Supp.	4.3	4.0	4.0	2.149	208
			Removed	Total	5.0	4.0	2.0	2.840	49
				Org.	*	*	*	*	*
				Supp.	5.7	5.0	10.0	2.850	30
			Installed	Total	3.5	3.0	1.0	2.930	219
				Org.	*	*	*	*	*
				Supp.	3.5	3.0	1.0	2.956	204
10	Bolt	53062066266 53069265572	Replace	Total	1.9	2.0	2.0	1.149	33
				Org.	1.4	1.5	1.5	0.418	5
				Supp.	2.0	2.0	2.0	1.217	28
11	Bearing	31107168570 31109264538	Replace	Total	2.6	2.0	2.0	1.402	283
				Org.	2.6	2.0	2.0	1.327	64
				Supp.	2.6	2.0	2.0	1.426	219
12	Nut	53109618394	Replace	Total	1.0	1.0	1.0	0.522	34
				Org.	1.0	1.0	1.0	0.565	19
				Supp.	1.0	1.0	1.0	0.482	15

*Insufficient Data

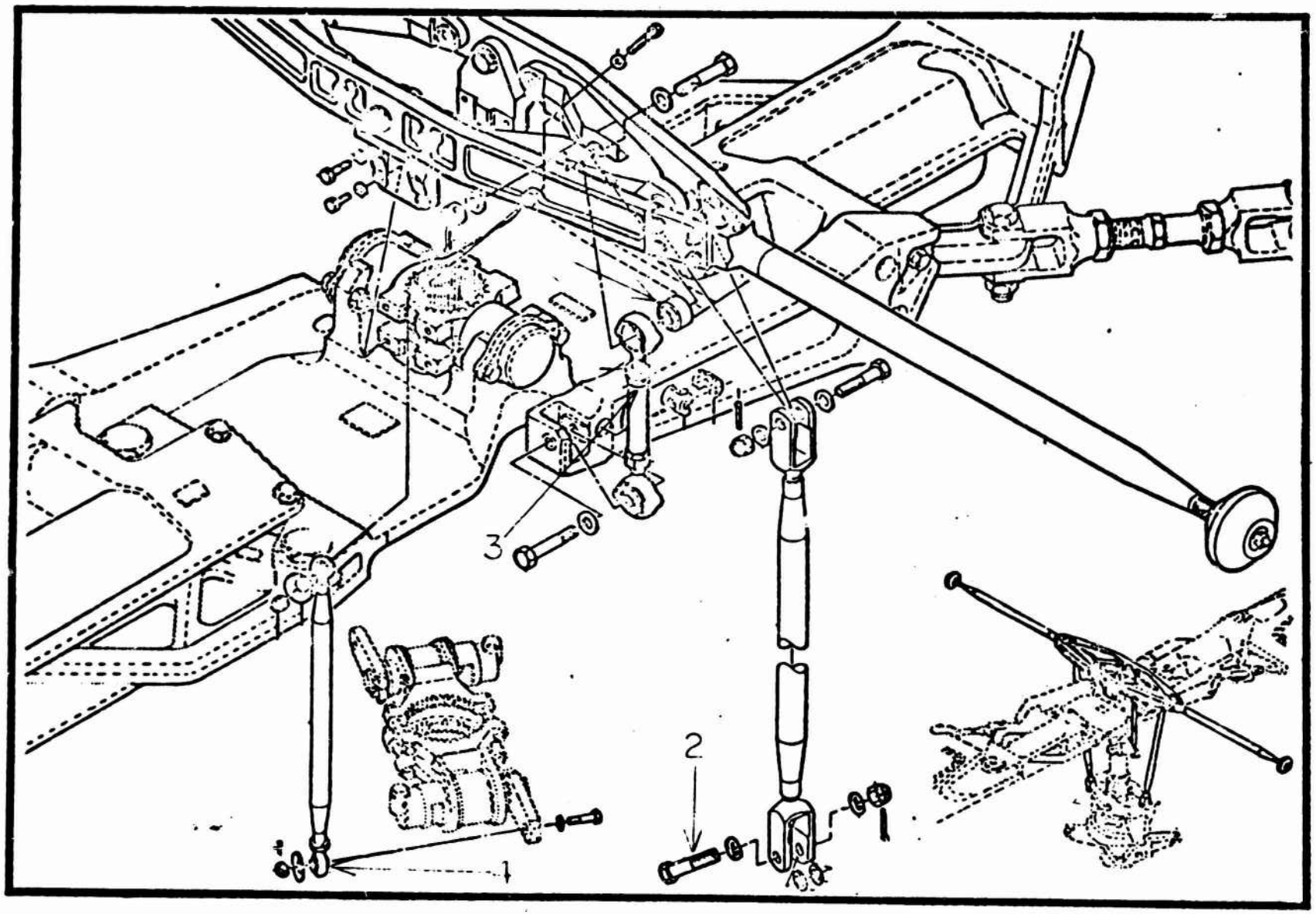

Figure 94 Pylon Assembly, Upper Section

UH-1H FLAT RATE DATA
FUNCTIONAL GROUP 04
REFERENCE FIGURE 94

ITEM NO.	NOMENCLATURE	FSN/PN	ACTION CODE	MAINT. LEVEL	MEAN	MEDIAN	MODE	STD. DEV.	SAMPLE SIZE
1	Bearing	31207716032 31207716033	Replace	Total Org. Supp.	2.7 2.8 2.2	2.0 2.0 2.0	2.0 2.0 2.0	1.606 1.673 1.148	68 57 11
2	Bolt	53061414765 53068249863 53069035806 53069643125	Replace	Total Org. Supp.	1.5 1.5 1.5	1.0 1.0 1.0	1.0 1.0 2.0	1.203 1.235 1.093	59 49 10
				Total Org. Supp.					
3	Pitch Link Barrel	16158671139	Replace	Total Org. Supp.	2.6 2.4 *	1.0 1.0 *	1.0 1.0 *	1.690 1.663 *	12 10 *
4	Bearing	31208477531	Replace	Total Org. Supp.	1.6 1.6 *	1.5 1.5 *	1.0 1.0 *	0.710 0.703 *	26 20 *
				Total Org. Supp.					
				Total Org. Supp.					
				Total Org. Supp.					
				Total Org. Supp.					
				Total Org. Supp.					

*Insufficient Data

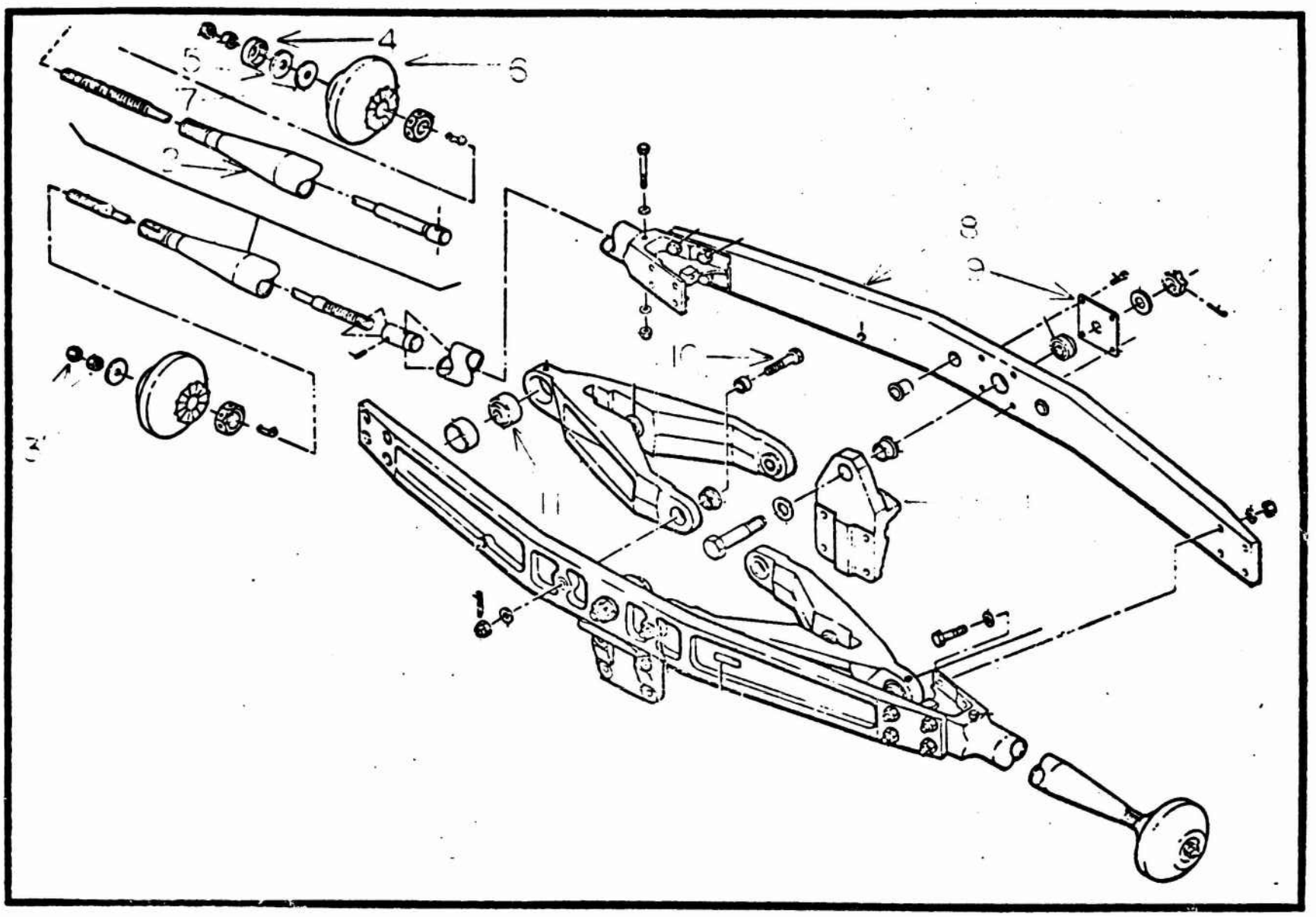

Figure 95 Stabilizer Bar Assembly

UH-1H FLAT RATE DATA
FUNCTIONAL GROUP 04
REFERENCE FIGURE 95

ITEM NO.	NOMEMCLATURE	FSN/PN	ACTION CODE	MAINT. LEVEL	MEAN	MEDIAN	MODE	STD. DEV.	SAMPLE SIZE
1	Stabilizer Support Assy	15608309741 16159308508	Replace	Total Org. Supp.	1.6 * 1.6	1.5 * 1.0	2.0 * 1.0	0.783 * 0.857	25 * 18
2	Tube	16151695085	Replace	Total Org. Supp.	2.8 * 2.9	3.0 * 3.0	2.0 * 2.0	1.542 * 1.504	61 * 51
3	Nut	53101671332 53101671342	Replace	Total Org. Supp.	1.3 * 1.3	1.0 * 1.0	1.0 * 1.0	0.463 * 0.488	11 * 7
4	Retainer	53307810991	Replace	Total Org. Supp.	1.0 * 1.0	1.0 * 1.0	1.0 * 1.0	0.267 * 0.289	8 * 7
5	Bushing	53409358811	Replace	Total Org. Supp.	1.1 * 1.1	1.0 * 1.0	1.0 * 1.0	0.503 * 0.493	22 * 18
6	Weight	16158296857	Replace	Total Org. Supp.	1.8 * 1.8	1.0 * 1.0	1.0 * 1.0	0.925 * 0.949	20 * 19
7	Washer	53108164927 53109258641	Replace	Total Org. Supp.	1.6 1.1 1.9	1.0 1.0 1.0	0.5 1.0 0.5	1.587 0.630 1.827	14 4 10
8	Center Frame Assy	16158309743 16158666010 16159306110	Replace	Total Org. Supp.	2.5 3.3 2.4	2.0 4.0 2.0	1.0 4.0 1.0	1.351 1.204 1.349	51 5 46
9	Gasket	53308930447	Replace	Total Org. Supp.	3.6 3.9 3.5	3.0 3.0 3.0	1.0 1.0 1.0	2.488 2.606 2.422	457 154 303
10	Bolt	53062928575	Replace	Total Org. Supp.	1.2 1.2 1.2	1.0 1.0 1.0	0.5 2.0 1.0	0.724 0.705 0.784	26 15 11

*Insufficient Data

UH-1H FLAT RATE DATA
FUNCTIONAL GROUP 04
REFERENCE FIGURE 95

ITEM NO.	NOMEMCLATURE	FSN/PN	ACTION CODE	MAINT. LEVEL	MEAN	MEDIAN	MODE	STD. DEV.	SAMPLE SIZE
11	Bearing	31107021453 31108408610 31108408611 31208395431	Replace	Total	2.0	2.0	2.0	1.307	594
				Org.	2.1	2.0	2.0	1.306	287
				Supp.	1.9	1.5	2.0	1.302	307
				Total					
				Org.					
				Supp.					
[illegible]	[illegible]	[illegible]	[illegible]	Total					
				Org.	[illegible]	[illegible]	[illegible]	[illegible]	[illegible]
				Supp.					
[illegible]	[illegible]	[illegible]	[illegible]	Total					
				Org.	[illegible]	[illegible]	[illegible]	[illegible]	[illegible]
				Supp.					
				Total					
				Org.					
				Supp.					
[illegible]	[illegible]	[illegible]	[illegible]	Total					
				Org.	[illegible]	[illegible]	[illegible]	[illegible]	[illegible]
				Supp.					
				Total					
				Org.	[illegible]	[illegible]	[illegible]	[illegible]	[illegible]
				Supp.					
[illegible]	[illegible]	[illegible]	[illegible]	Total					
				Org.					
				Supp.					
				Total					
				Org.					
				Supp.					
				Total					
				Org.					
				Supp.					

*Insufficient Data

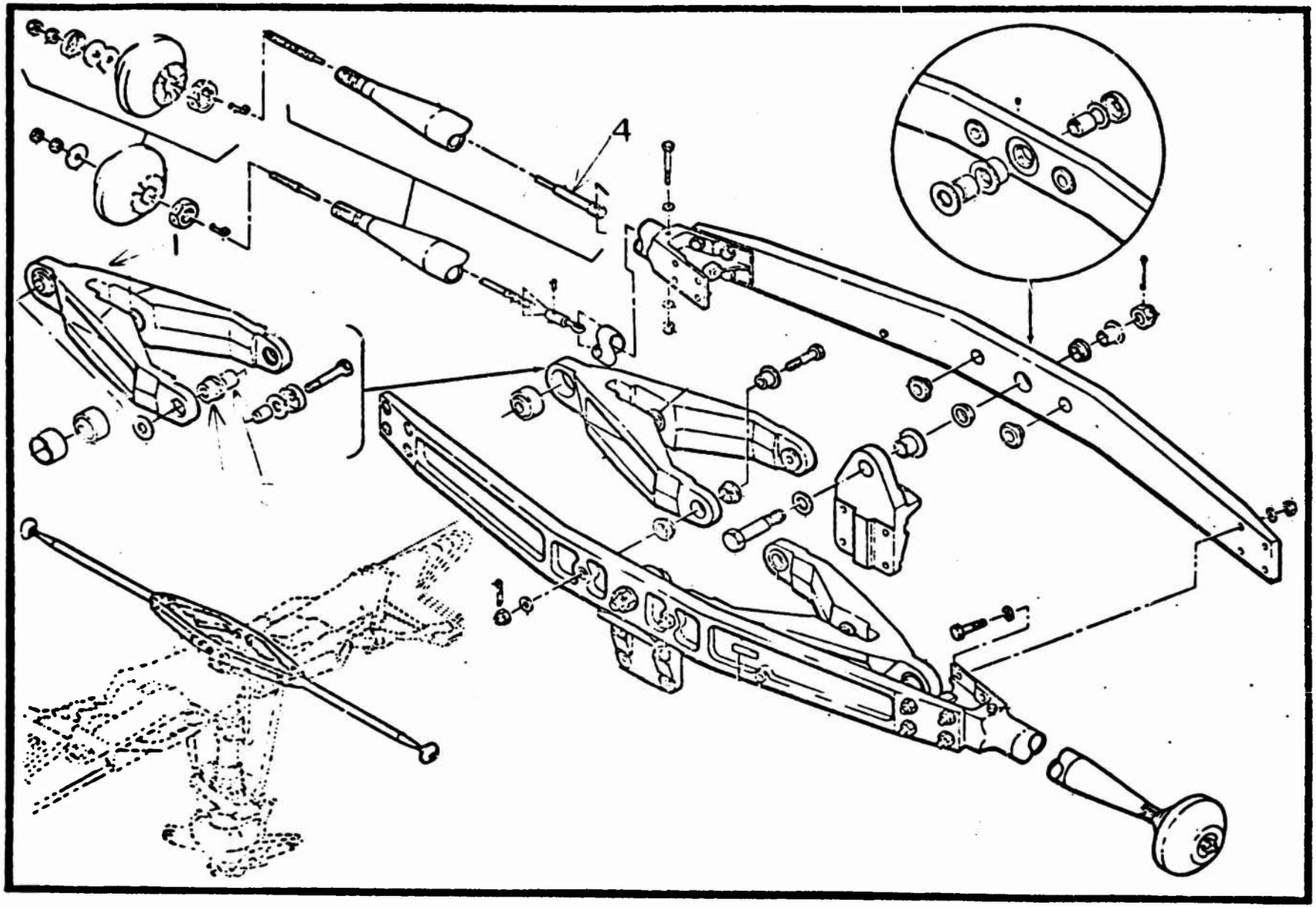

Figure 96 Stabilizer Bar Assembly

UH-1H FLAT RATE DATA
FUNCTIONAL GROUP 04
REFERENCE FIGURE 96

ITEM NO.	NOMEMCLATURE	FSN/PN	ACTION CODE	MAINT. LEVEL	MEAN	MEDIAN	MODE	STD. DEV.	SAMPLE SIZE
1	Lever Assy	16150782764 16158309740	Replace	Total Org. Supp.	2.6 2.5 2.8	2.0 2.0 2.5	2.0 2.0 2.0	1.424 1.355 1.567	929 670 259
2	Bearing Liner	31306896317 31307073534	Replace	Total Org. Supp.	2.2 2.4 1.9	2.0 2.0 2.0	2.0 2.0 1.0	1.197 1.189 1.185	49 28 21
3	Bearing	31109264537 31109305356	Replace	Total Org. Supp.	2.6 2.3 3.3	2.0 2.0 4.0	2.0 2.0 5.0	1.600 1.468 1.862	23 17 6
4	Wire Rope Assy	16157648673	Replace	Total Org. Supp.	2.2 * 2.2	2.0 * 2.0	1.0 * 1.0	1.592 * 1.637	33 * 31
				Total Org. Supp.					
				Total Org. Supp.					
				Total Org. Supp.					
				Total Org. Supp.					
				Total Org. Supp.					
				Total Org. Supp.					

*Insufficient Data

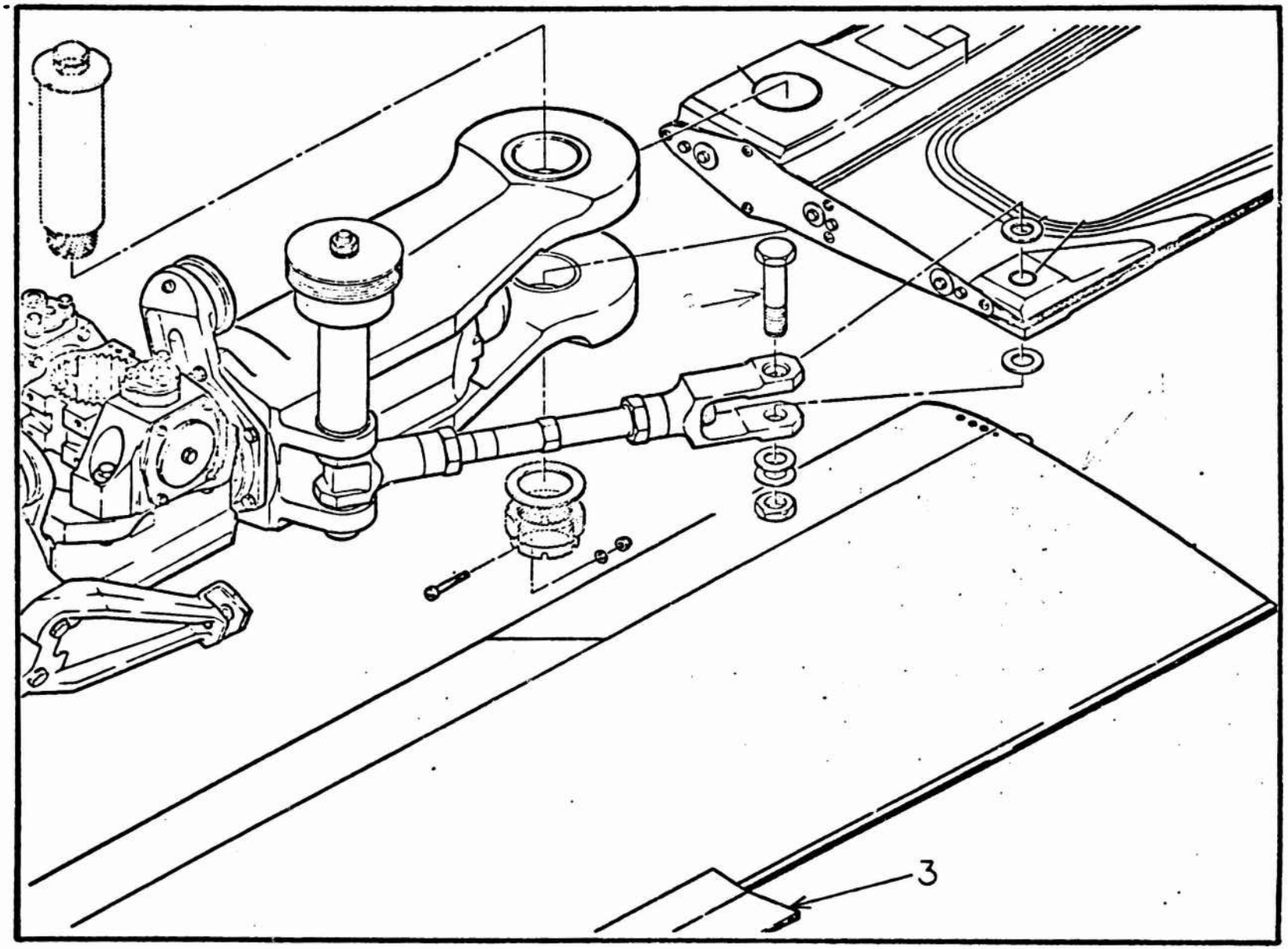

Figure 97 Hub and Blade Assembly

UH-1H FLAT RATE DATA
FUNCTIONAL GROUP 04
REFERENCE FIGURE 97

ITEM NO.	NOMEMCLATURE	FSN/PN	ACTION CODE	MAINT. LEVEL	MEAN	MEDIAN	MODE	STD. DEV.	SAMPLE SIZE
1	Blade Assy	16150725799 16151789680 16156534336	Replace	Total	8.2	6.0	4.0	6.103	933
				Org.	5.5	5.0	4.0	3.073	393
				Supp.	8.9	7.5	10.0	6.387	461
			Adjust	Total	3.1	3.0	1.0	2.129	357
				Org.	2.5	2.0	1.0	1.677	203
				Supp.	3.0	3.0	2.0	1.586	124
			Repair	Total	2.3	2.0	1.0	1.733	141
				Org.	*	*	*	*	*
				Supp.	2.8	2.0	1.0	1.858	78
			Service	Total	2.4	2.0	2.0	1.402	348
				Org.	2.4	2.0	2.0	1.380	255
				Supp.	2.5	2.0	1.0	1.463	93
			Initial Inspection	Total	0.8	1.0	1.0	0.369	29
				Org.	*	*	*	*	*
				Supp.	0.6	0.5	0.5	0.306	17
			Final Inspection	Total	0.8	0.5	0.5	0.346	32
				Org.	*	*	*	*	*
				Supp.	0.7	0.5	0.5	0.388	22
			Removed and Installed	Total	7.7	6.0	10.0	5.296	165
				Org.	5.3	4.0	4.0	3.675	47
				Supp.	8.6	8.0	10.0	5.559	118
			Removed	Total	14.3	12.0	15.0	6.500	86
				Org.	*	*	*	*	*
				Supp.	14.2	12.0	15.0	6.474	81
			Installed	Total	6.0	6.4	6.4	1.757	200
				Org.	*	*	*	*	*
				Supp.	6.0	6.4	6.4	1.728	195
2	Bolt	53068296856	Replace	Total	1.9	1.0	1.0	1.368	19
				Org.	*	*	*	*	*
				Supp.	2.1	1.0	1.0	1.692	9

*Insufficient Data

UH-1H FLAT RATE DATA
FUNCTIONAL GROUP 04
REFERENCE FIGURE 97

ITEM NO.	NOMEMCLATURE	FSN/PN	ACTION CODE	MAINT. LEVEL	MEAN	MEDIAN	MODE	STD. DEV.	SAMPLE SIZE
3	Trim Tab	16158309729	Adjust	Total	2.4	2.0	1.0	1.435	40
				Org.	2.1	2.0	1.0	1.348	32
				Supp.	3.2	3.0	5.0	1.577	8
				Total					
				Org.					
				Supp.					
				Total					
				Org.					
				Supp.					
				Total					
				Org.					
				Supp.					
				Total					
				Org.					
				Supp.					
				Total					
				Org.					
				Supp.					
				Total					
				Org.					
				Supp.					
				Total					
				Org.					
				Supp.					
				Total					
				Org.					
				Supp.					
				Total					
				Org.					
				Supp.					
				Total					
				Org.					
				Supp.					

*Insufficient Data

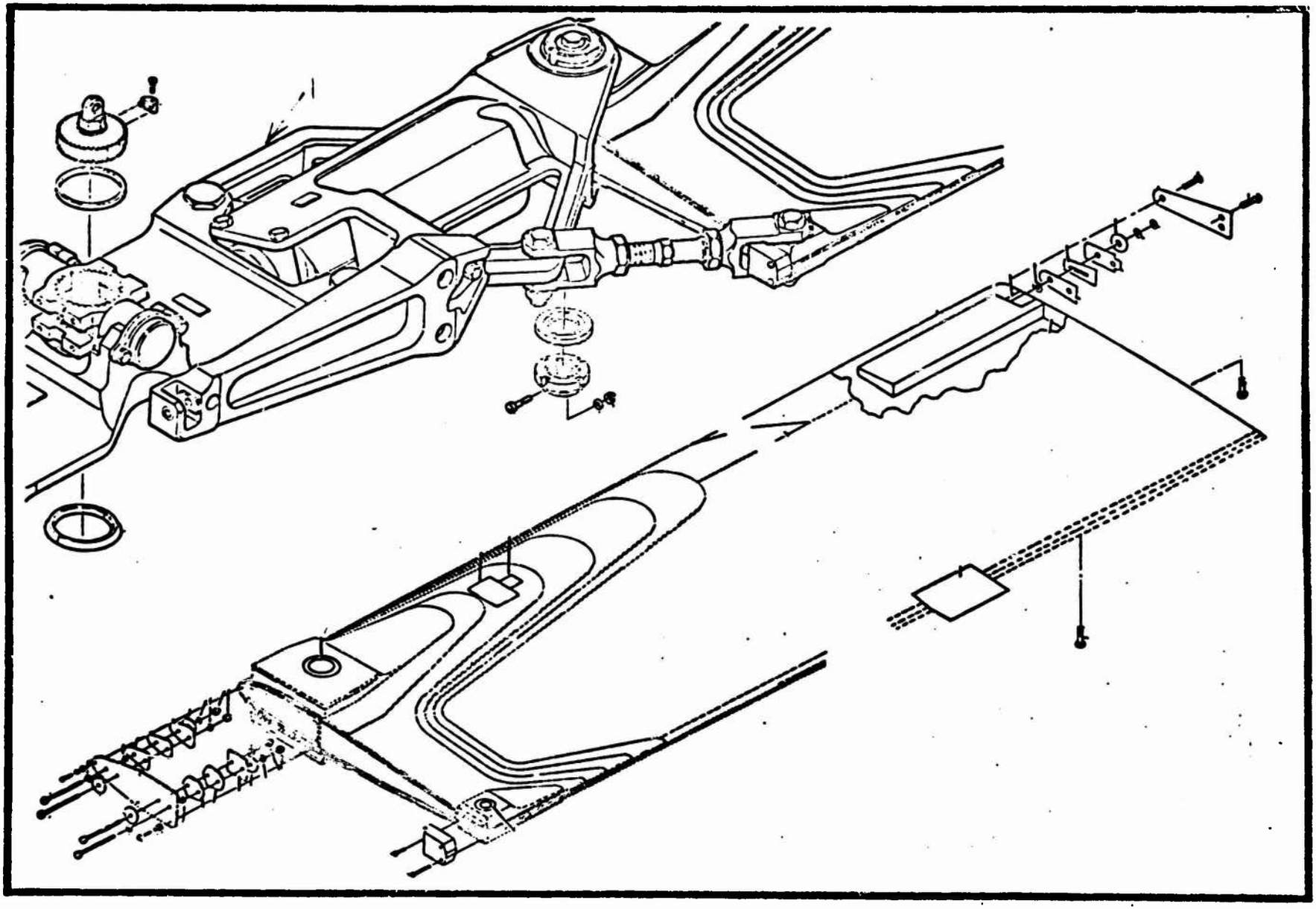

Figure 98 Hub and Blade Assembly

UH-1H FLAT RATE DATA
FUNCTIONAL GROUP 04
REFERENCE FIGURE 98

ITEM NO.	NOMEMCLATURE	FSN/PN	ACTION CODE	MAINT. LEVEL	MEAN	MEDIAN	MODE	STD. DEV.	SAMPLE SIZE
1	M/R Hub Assy	16157658597 16158477462 16158861778 16159216821 16159308352 16159336823	Replace	Total	13.8	10.0	4.0	11.265	1005
				Org.	8.9	8.0	10.0	5.303	377
				Supp.	15.4	12.0	20.0	12.446	572
			Adjust	Total	5.4	5.0	4.0	2.891	175
				Org.	*	*	*	*	*
				Supp.	5.5	5.0	4.0	2.905	152
			Service	Total	2.2	2.0	2.0	1.185	170
				Org.	1.6	1.0	1.0	1.096	61
				Supp.	2.5	2.0	2.0	1.102	109
			Initial Inspection	Total	1.0	1.0	1.0	0.529	75
				Org.	*	*	*	*	*
				Supp.	1.0	1.0	1.0	0.533	74
			Final Inspection	Total	1.0	1.0	1.0	0.543	67
				Org.	*	*	*	*	*
				Supp.	1.0	1.0	1.0	0.544	66
			Removed and Installed	Total	8.3	6.5	4.0	5.421	343
				Org.	6.9	5.0	4.0	4.875	120
				Supp.	9.1	8.0	6.0	5.550	223
			Removed	Total	6.6	7.0	10.0	3.090	104
				Org.	*	*	*	*	*
				Supp.	7.1	8.0	10.0	2.957	85
			Installed	Total	5.1	4.0	4.0	2.096	208
				Org.	*	*	*	*	*
				Supp.	5.1	4.0	4.0	2.100	200
--	Main Rotor Parts Kit	16150784584 16150784585 16152255111 16159230067	Replace	Total	6.5	5.0	4.0	4.779	879
				Org.	3.6	4.0	4.0	1.569	336
				Supp.	7.3	6.0	4.0	5.223	427
				Total					
				Org.					
				Supp.					

*Insufficient Data

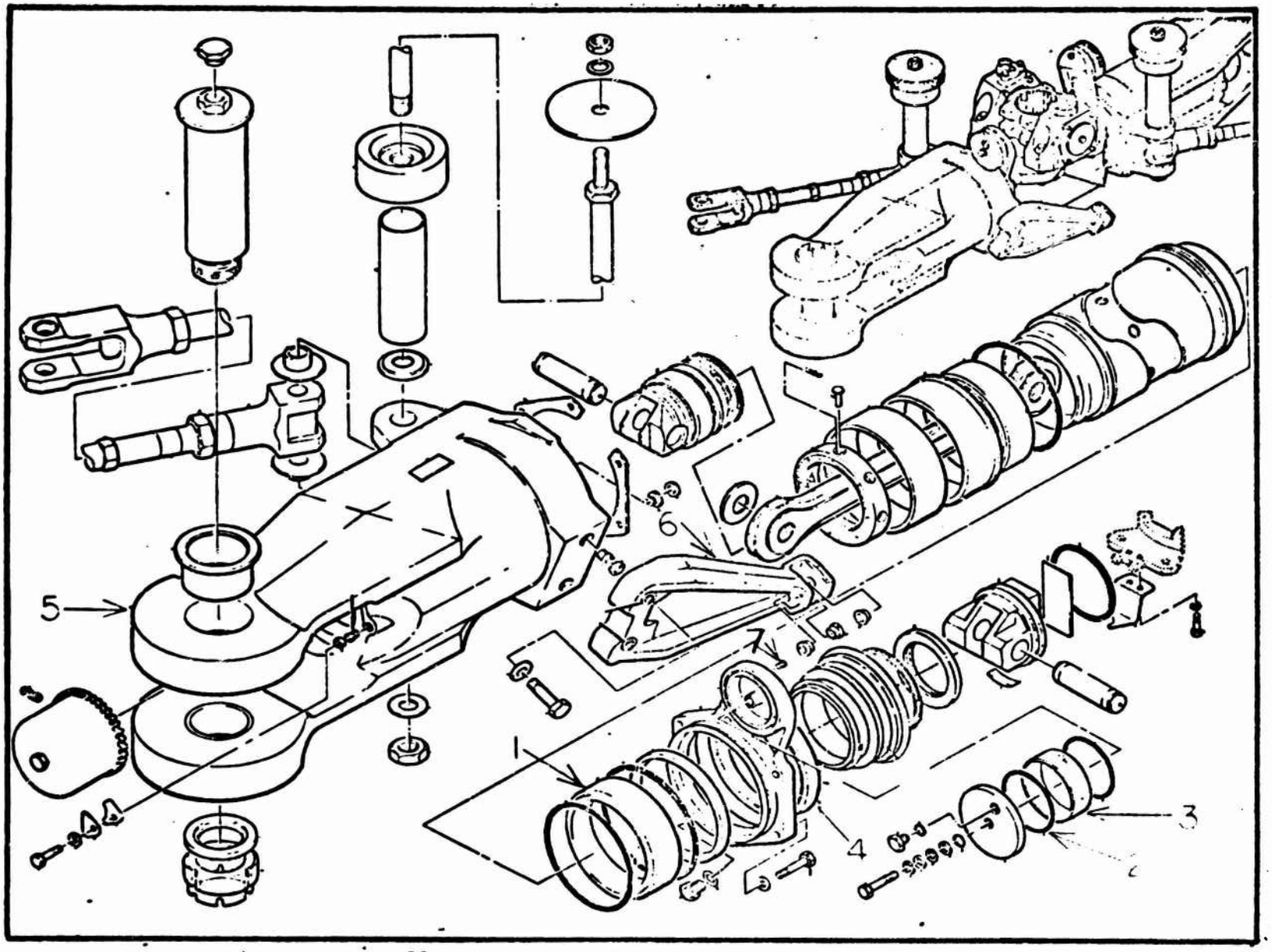

Figure 99 . Hub Assembly, Main Rotor, Outboard Section

UH-1H FLAT RATE DATA
FUNCTIONAL GROUP 04
REFERENCE FIGURE 99

ITEM NO.	NOMENCLATURE	FSN/PN	ACTION CODE	MAINT. LEVEL	MEAN	MEDIAN	MODE	STD. DEV.	SAMPLE SIZE
1	Bearing	31104467575 31104749232	Replace	Total	1.0	1.0	1.0	0.000	6
				Org.	1.0	1.0	1.0	0.000	3
				Supp.	1.0	1.0	1.0	0.000	3
2	Packing	53305421422 53305840150 53308113281	Replace	Total	1.1	1.0	1.0	0.544	259
				Org.	1.0	1.0	1.0	0.507	152
				Supp.	1.2	1.0	1.0	0.578	107
3	Slight Glass	16158732260	Replace	Total	1.5	1.0	1.0	0.989	239
				Org.	1.5	1.0	1.0	0.937	173
				Supp.	1.6	1.0	1.0	1.119	66
			Removed and Installed	Total	2.4	2.1	3.0	0.619	7
				Org.	*	*	*	*	*
				Supp.	2.8	3.0	3.0	0.503	4
4	Seal	53307534409	Replace	Total	3.1	3.0	2.0	1.710	64
				Org.	3.1	2.0	4.0	1.875	10
				Supp.	3.0	3.0	2.0	1.696	54
5	M/R Grip Assy	16150571827	Service	Total	3.5	3.0	3.0	1.107	11
				Org.	*	*	*	*	*
				Supp.	3.8	3.0	3.0	1.286	7
6	Pitch Horn Assy	16150853887	Replace	Total	2.0	2.0	2.0	1.158	23
				Org.	1.6	1.0	1.0	1.121	15
				Supp.	*	*	*	*	*
7	Fitting	47308266465	Replace	Total	0.8	1.0	1.0	0.257	18
				Org.	0.8	1.0	1.0	0.260	15
				Supp.	*	*	*	*	*
				Total					
				Org.					
				Supp.					
				Total					
				Org.					
				Supp.					

*Insufficient Data

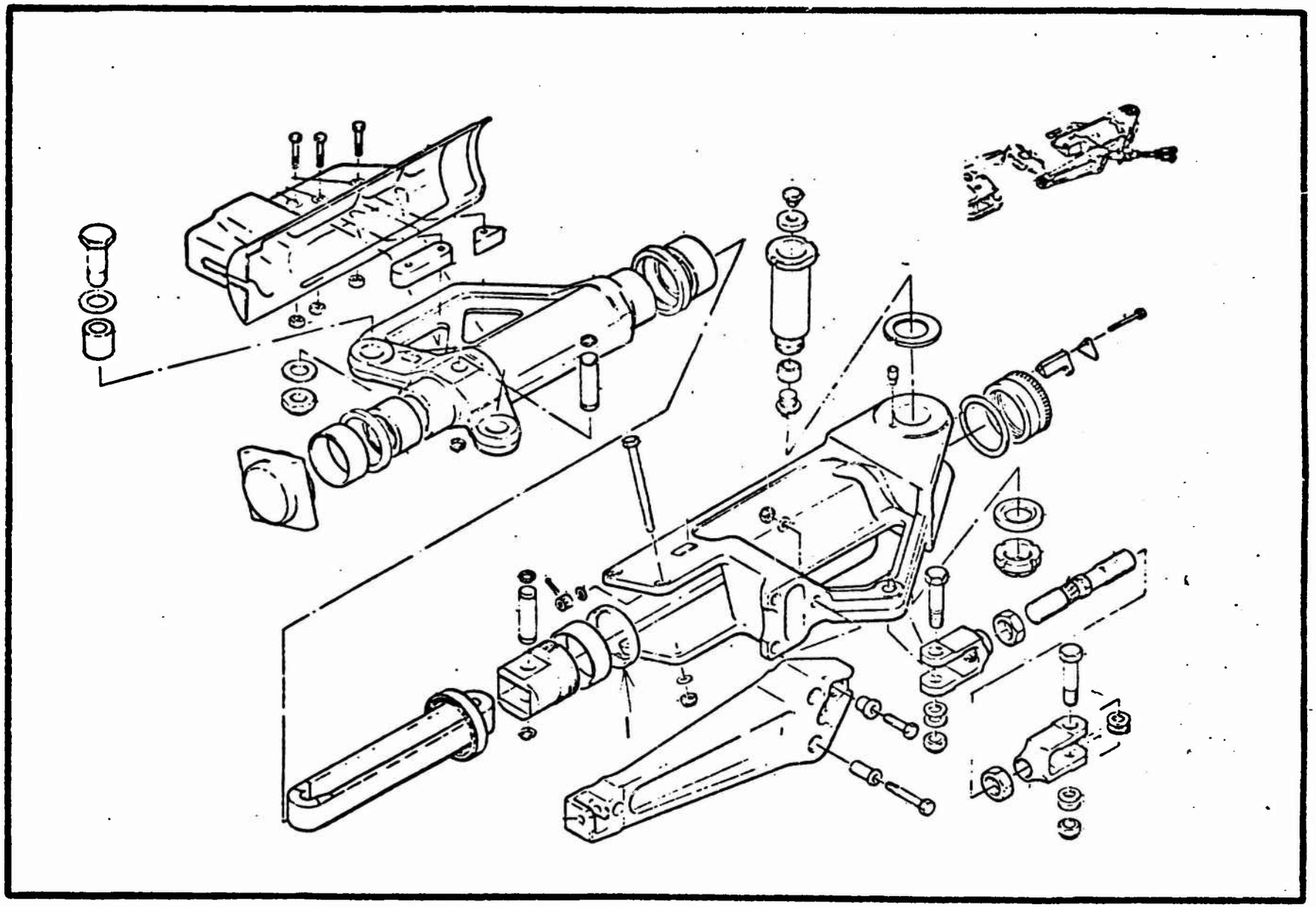

Figure 100 Hub Assembly, Main Rotor

UH-1H FLAT RATE DATA
FUNCTIONAL GROUP 04
REFERENCE FIGURE 100

ITEM NO.	NOMEMCLATURE	FSN/PN	ACTION CODE	MAINT. LEVEL	MEAN	MEDIAN	MODE	STD. DEV.	SAMPLE SIZE
1	Ring	16158665998 31108402716 53402866600 53409128344	Replace	Total	1.7	1.0	2.0	1.163	46
				Org.	1.5	1.0	1.0	0.651	16
				Supp.	1.7	1.5	0.5	1.341	29
				Total					
				Org.					
				Supp.					
				Total					
				Org.					
				Supp.					
				Total					
				Org.					
				Supp.					
				Total					
				Org.					
				Supp.					
				Total					
				Org.					
				Supp.					
				Total					
				Org.					
				Supp.					
				Total					
				Org.					
				Supp.					
				Total					
				Org.					
				Supp.					
				Total					
				Org.					
				Supp.					

*Insufficient Data

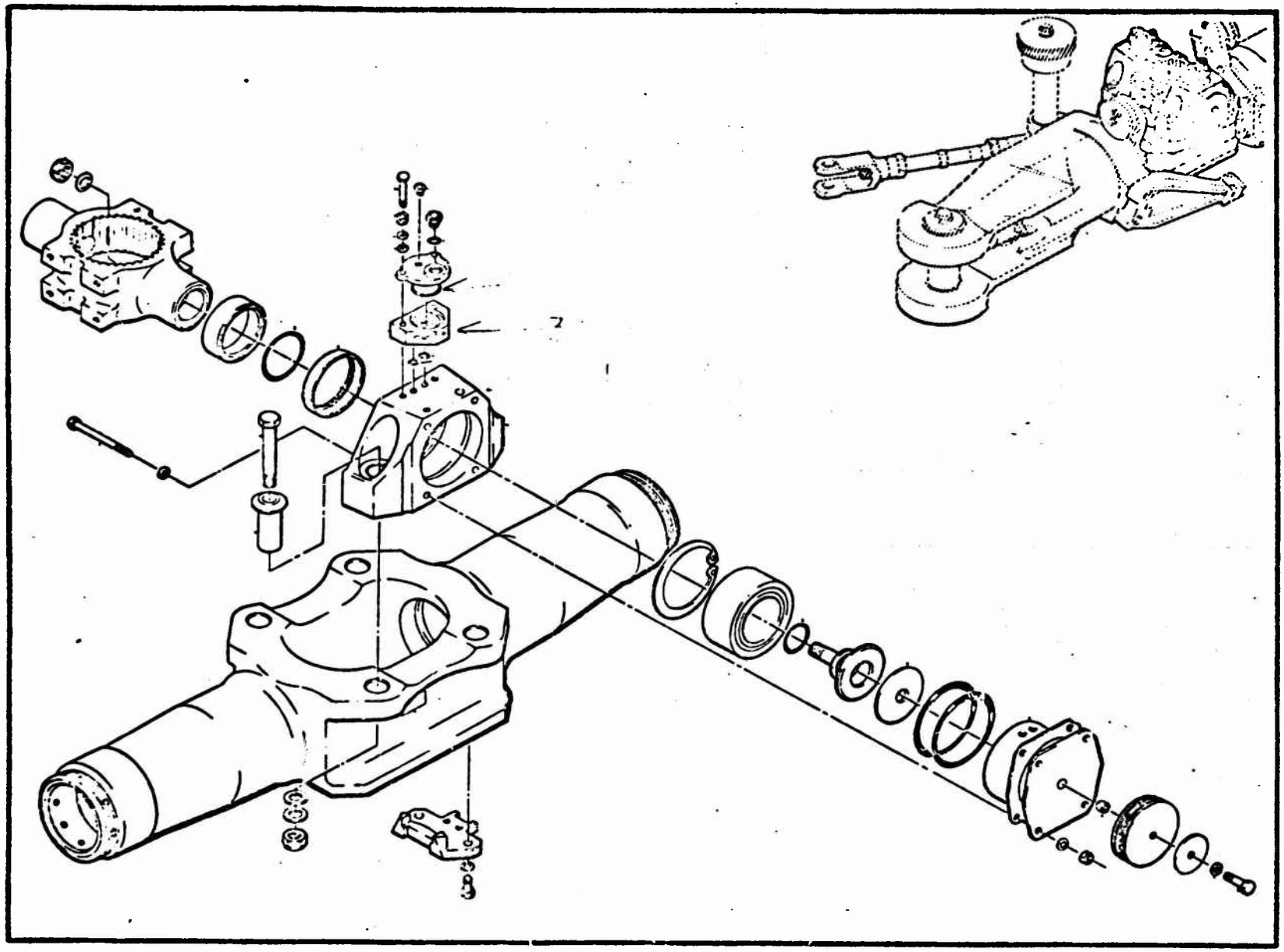

Figure 101 Hub Assembly, Main Rotor, Inboard Section

UH-1H FLAT RATE DATA
FUNCTIONAL GROUP 04
REFERENCE FIGURE 101

ITEM NO.	NOMEMCLATURE	FSN/PN	ACTION CODE	MAINT. LEVEL	MEAN	MEDIAN	MODE	STD. DEV.	SAMPLE SIZE
1	Pillow Block	16154067717	Service	Total	1.8	2.0	2.0	0.839	93
				Org.	1.5	1.5	2.0	0.663	51
				Supp.	2.2	2.0	2.0	0.871	42
			Removed and Installed	Total	2.5	2.0	2.0	0.844	14
				Org.	2.7	2.0	2.0	0.902	11
				Supp.	*	*	*	*	*
2	Packing	53306182514	Replace	Total	1.1	1.0	1.0	0.539	210
				Org.	1.0	1.0	1.0	0.509	136
				Supp.	1.2	1.0	1.0	0.573	74
3	Reservoir	16156245151	Replace	Total	1.6	1.0	1.0	0.963	367
				Org.	1.7	1.5	1.0	0.956	259
				Supp.	1.5	1.0	1.0	0.967	108
			Removed and Installed	Total	3.3	3.0	2.0	1.410	27
				Org.	3.3	3.0	5.0	1.442	25
				Supp.	*	*	*	*	*
				Total					
				Org.					
				Supp.					
				Total					
				Org.					
				Supp.					
				Total					
				Org.					
				Supp.					
				Total					
				Org.					
				Supp.					
				Total					
				Org.					
				Supp.					

*Insufficient Data

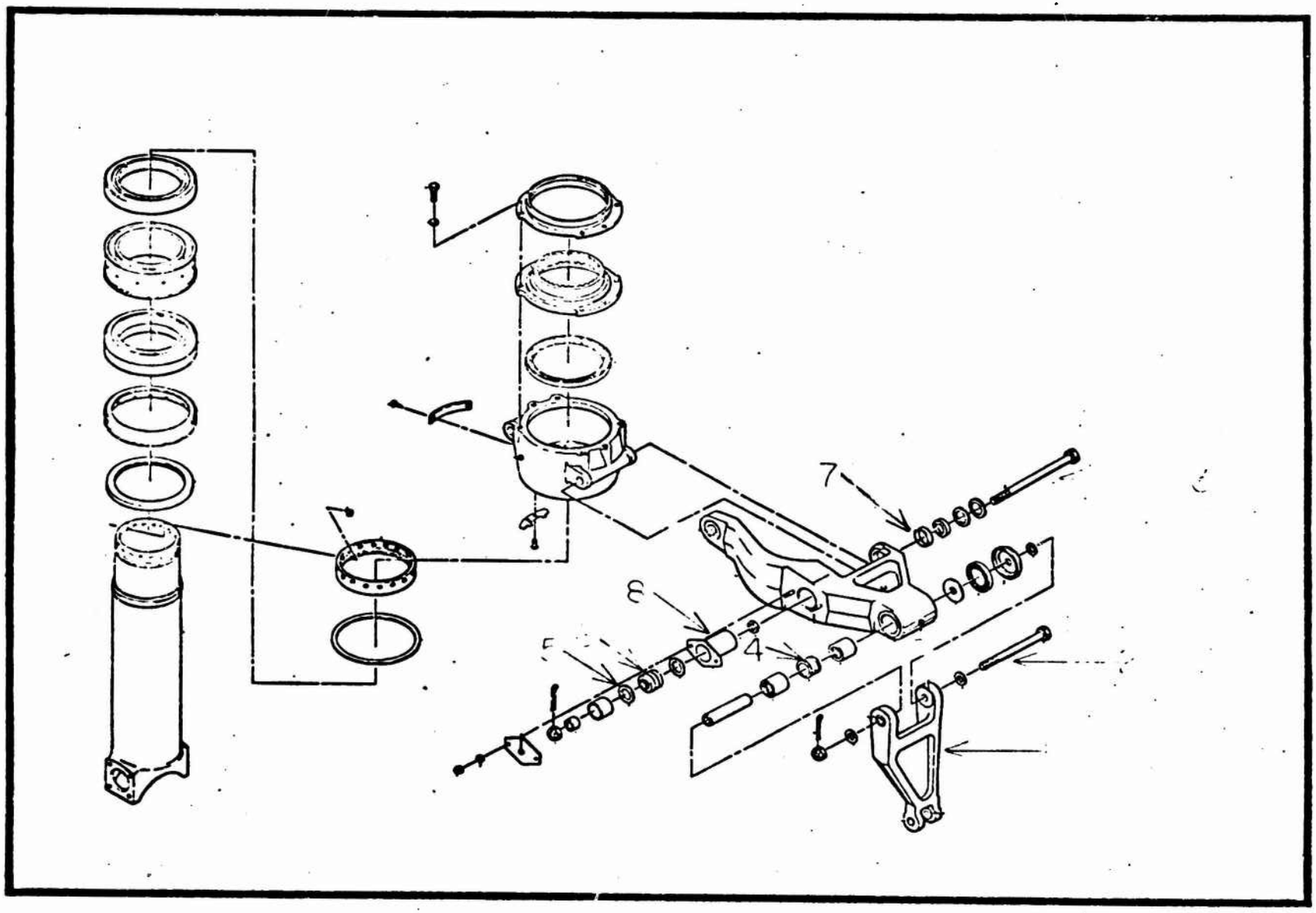

Figure 102 Scissors and Sleeve Assembly

UH-1H FLAT RATE DATA
FUNCTIONAL GROUP 04
REFERENCE FIGURE 102

ITEM NO.	NOMEMCLATURE	FSN/PN	ACTION CODE	MAINT. LEVEL	MEAN	MEDIAN	MODE	STD. DEV.	SAMPLE SIZE
1	Link Assy	16158309750 16158665996 16159305211	Replace	Total	2.2	2.0	1.0	1.438	230
				Org.	4.1	4.0	3.0	1.116	51
				Supp.	2.1	1.5	0.5	1.631	43
			Initial Inspection	Total	2.0	2.0	2.0	0.000	12
				Org.	*	*	*	*	*
				Supp.	2.0	2.0	2.0	0.000	12
2	Bolt	53067716031 53069008700	Replace	Total	0.7	1.0	1.0	0.340	37
				Org.	0.8	1.0	1.0	0.350	30
				Supp.	0.6	0.5	0.5	0.274	7
3	Bolt	53067675050 53068808678	Replace	Total	1.1	1.0	1.0	0.745	30
				Org.	1.1	1.0	1.0	0.798	20
				Supp.	1.3	1.0	2.0	0.632	10
4	Spacer	16158309752 53408381598 53408419950	Replace	Total	1.1	1.0	1.0	0.664	43
				Org.	1.3	1.0	2.0	0.713	18
				Supp.	1.0	1.0	1.0	0.613	25
5	Shim	53400836016 53407828511 53408420669	Replace	Total	1.7	1.5	1.0	1.135	170
				Org.	1.2	1.0	1.0	0.556	76
				Supp.	1.3	1.0	1.0	0.573	56
6	Bearing Set	31107317977	Replace	Total	2.3	2.0	2.0	1.320	288
				Org.	2.1	2.0	2.0	1.256	142
				Supp.	2.4	2.0	2.0	1.374	146
7	Sleeve	31207593797	Replace	Total	2.0	2.0	1.0	1.381	41
				Org.	*	*	*	*	*
				Supp.	1.7	1.0	2.0	1.353	27
8	Liner	16158309726	Replace	Total	1.4	1.0	1.0	0.562	28
				Org.	1.4	1.0	1.0	0.608	12
				Supp.	1.4	1.0	2.0	0.545	16
				Total					
				Org.					
				Supp.					

*Insufficient Data

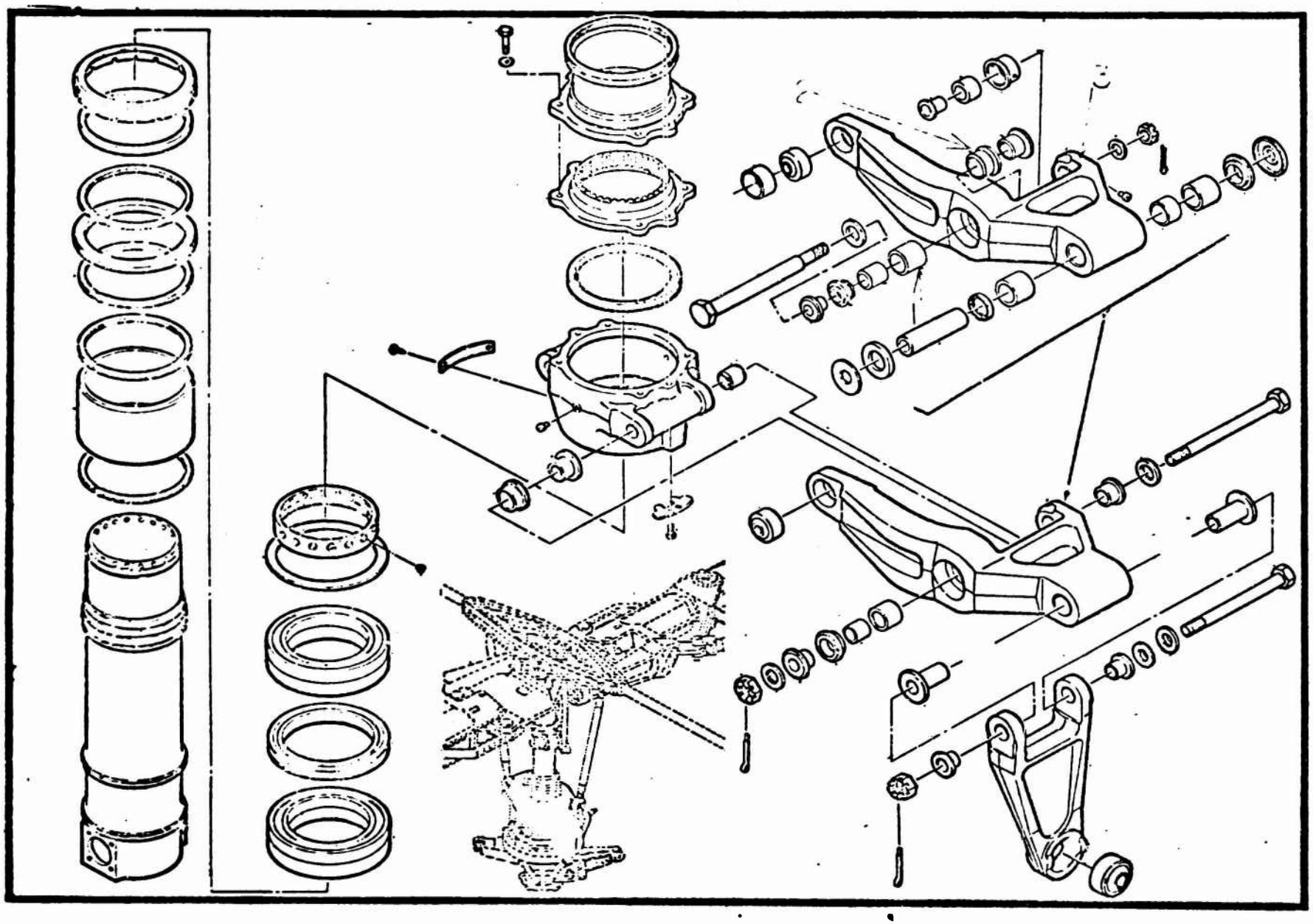

Figure 103 Scissors and Sleeve Assembly

UH-1H FLAT RATE DATA
FUNCTIONAL GROUP 04
REFERENCE FIGURE 103

ITEM NO.	NOMENCLATURE	FSN/PN	ACTION CODE	MAINT. LEVEL	MEAN	MEDIAN	MODE	STD. DEV.	SAMPLE SIZE
1	Bearing	31108329179	Replace	Total	2.2	1.5	1.0	1.420	42
				Org.	2.3	2.0	1.0	1.444	38
				Supp.	1.1	1.0	1.0	0.252	4
2	Bearing Assy	16159196054	Replace	Total	3.2	3.0	4.0	1.557	8
				Org.	3.2	3.0	4.0	1.557	8
				Supp.	*	*	*	*	*
3	Scissors Assy	16151837733 16158666011 16159389784	Replace	Total	4.0	3.5	2.0	2.577	398
				Org.	3.1	3.0	4.0	1.547	235
				Supp.	4.5	4.0	2.0	2.965	134
			Adjust	Total	2.1	2.0	4.0	1.340	42
				Org.	2.5	3.0	4.0	1.356	21
				Supp.	1.7	1.0	0.5	1.241	21
			Repair	Total	3.6	3.5	6.0	1.678	49
				Org.	*	*	*	*	*
				Supp.	3.7	4.0	6.0	1.680	43
			Service	Total	2.3	2.0	1.0	1.225	30
				Org.	2.4	3.0	3.0	1.209	12
				Supp.	2.3	2.0	1.0	1.270	18
			Final Inspection	Total	0.6	0.5	0.5	0.170	33
				Org.	*	*	*	*	*
				Supp.	0.6	0.5	0.5	0.170	33
			Removed and Installed	Total	3.8	3.0	2.0	2.175	91
				Org.	2.6	2.0	2.0	1.279	36
				Supp.	4.3	4.0	4.0	2.338	49
			Checked Serviceable	Total	1.1	1.0	1.0	0.604	14
				Org.	1.3	1.0	2.0	0.754	6
				Supp.	1.0	1.0	1.0	0.463	8
			Removed	Total	4.9	5.0	5.0	0.599	7
				Org.	*	*	*	*	*
				Supp.	4.9	5.0	5.0	0.599	7

*Insufficient Data

UH-1H FLAT RATE DATA
FUNCTIONAL GROUP 04
REFERENCE FIGURE 103

ITEM NO.	NOMEMCLATURE	FSN/PN	ACTION CODE	MAINT. LEVEL	MEAN	MEDIAN	MODE	STD. DEV.	SAMPLE SIZE
--	Scissor and Sleeve	15604361835	Replace	Total	7.5	6.0	4.0	5.380	463
				Org.	5.9	4.5	4.0	4.439	240
				Supp.	9.2	8.0	10.0	5.791	223
			Removed and Installed	Total	5.8	5.0	2.0	3.830	106
				Org.	*	*	*	*	*
				Supp.	6.4	5.0	10.0	3.887	84
			Installed	Total	1.9	2.0	2.0	0.294	12
				Org.	*	*	*	*	*
				Supp.	1.9	2.0	2.0	0.294	12
				Total					
				Org.					
				Supp.					
				Total					
				Org.					
				Supp.					
				Total					
				Org.					
				Supp.					
				Total					
				Org.					
				Supp.					
				Total					
				Org.					
				Supp.					
				Total					
				Org.					
				Supp.					
				Total					
				Org.					
				Supp.					

***Insufficient Data**

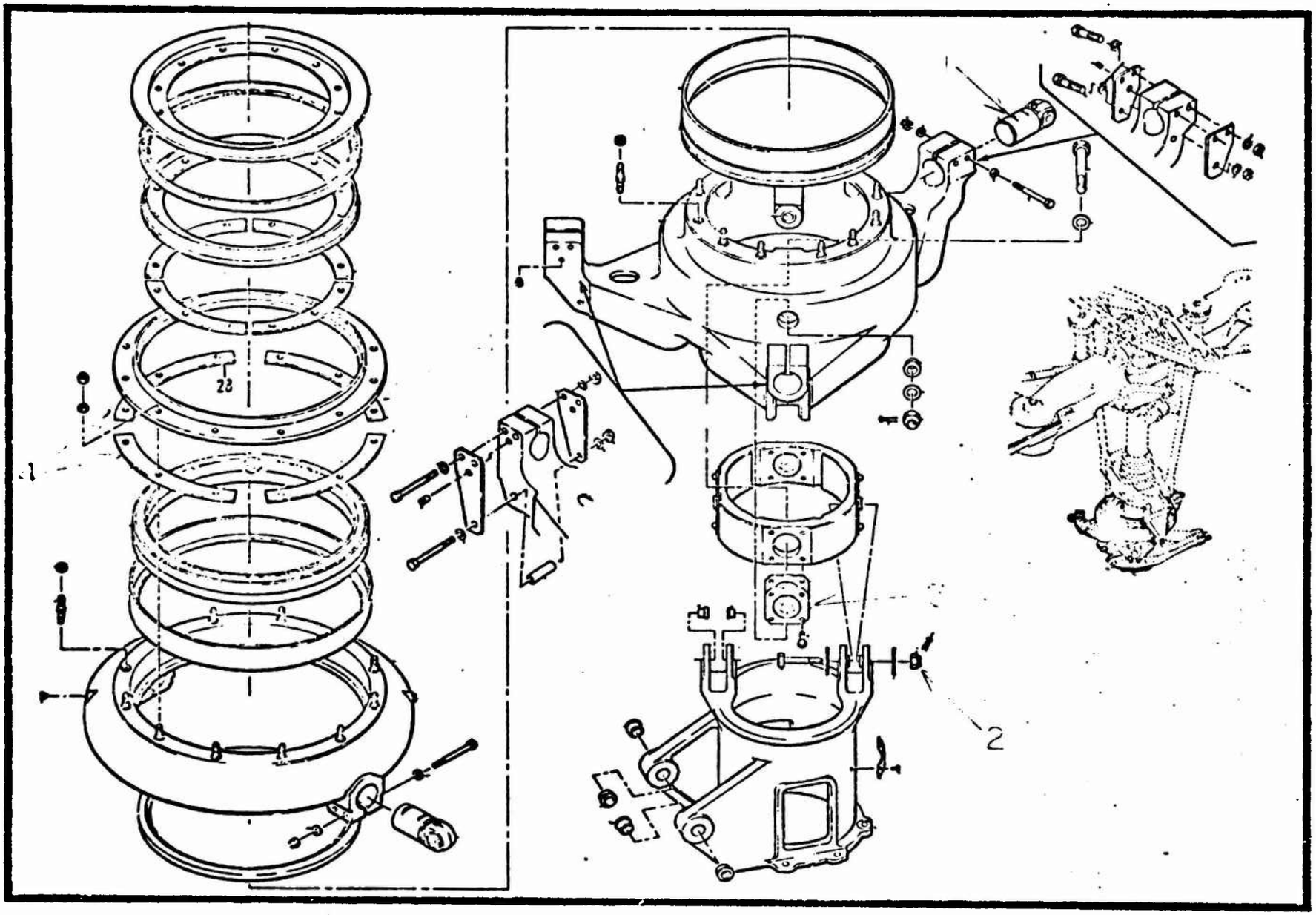

Figure 104 Swashplate and Support Assembly

UH-1H FLAT RATE DATA
FUNCTIONAL GROUP 04
REFERENCE FIGURE 104

ITEM NO.	NOMEMCLATURE	FSN/PN	ACTION CODE	MAINT. LEVEL	MEAN	MEDIAN	MODE	STD. DEV.	SAMPLE SIZE
1	Trunnion Assy	16151575729	Replace	Total	2.2	2.0	1.0	1.733	2,157
				Org.	2.0	1.5	1.0	1.553	1,714
				Supp.	2.8	2.0	1.0	2.185	443
2	Nut	53109618393	Replace	Total	0.8	0.5	0.5	0.469	265
				Org.	0.7	0.5	0.5	0.348	131
				Supp.	0.8	0.5	0.5	0.498	132
3	Bearing Liner	16156498227	Replace	Total	2.0	2.0	2.0	0.144	13
				Org.	3.0	3.0	2.0	1.127	13
				Supp.	*	*	*	*	*
4	Shim	15606907600 16154466387 16154466388 16156247019	Replace	Total	3.6	3.0	3.0	1.506	8
				Org.	3.9	3.0	3.0	1.465	7
				Supp.	*	*	*	*	*
				Total					
				Org.					
				Supp.					
				Total					
				Org.					
				Supp.					
				Total					
				Org.					
				Supp.					
				Total					
				Org.					
				Supp.					
				Total					
				Org.					
				Supp.					
				Total					
				Org.					
				Supp.					

*Insufficient Data

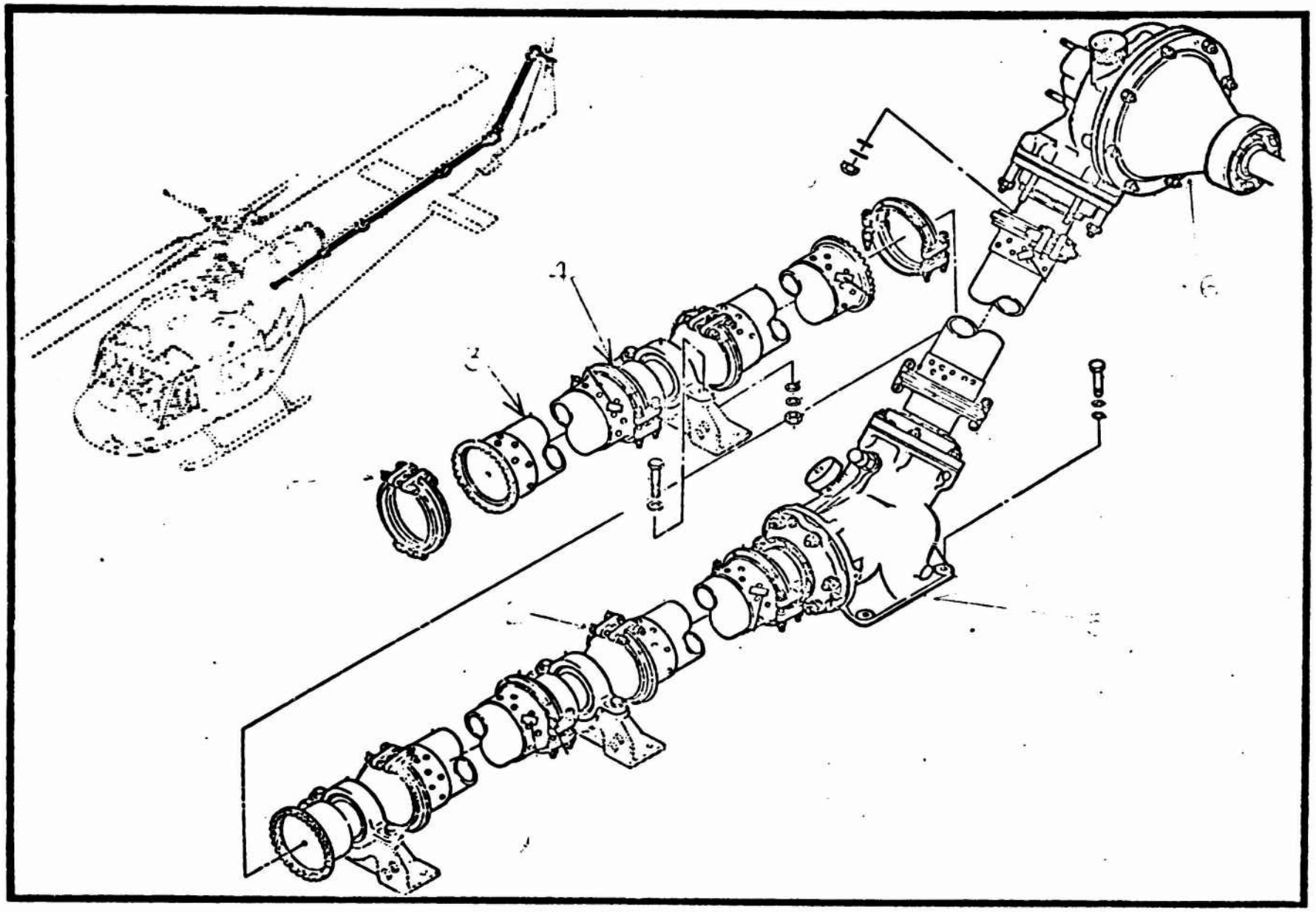

Figure 105 Shaft Installation, Tail Rotor Drive

UH-1H FLAT RATE DATA
FUNCTIONAL GROUP 04
REFERENCE FIGURE 105

ITEM NO.	NOMEMCLATURE	FSN/PN	ACTION CODE	MAINT. LEVEL	MEAN	MEDIAN	MODE	STD. DEV.	SAMPLE SIZE
1	Nut	53106882069	Replace	Total	1.6	1.0	1.0	1.015	111
				Org.	*	*	*	*	*
				Supp.	1.7	1.5	1.0	1.059	47
2	Bolt	53060678027 53067577157 53068941067	Replace	Total	1.6	1.5	1.0	1.050	61
				Org.	*	*	*	*	*
				Supp.	1.8	1.5	2.0	0.890	32
3	Tail Rotor Shaft Assy	15606785414 16150190217	Replace	Total	3.0	2.0	1.0	2.456	360
				Org.	1.7	1.5	1.0	0.691	171
				Supp.	3.8	3.0	1.0	2.782	120
			Repair	Total	3.1	3.0	5.0	1.530	35
				Org.	*	*	*	*	*
				Supp.	3.1	3.0	5.0	1.678	26
			Installed	Total	1.4	1.0	2.0	0.556	50
				Org.	*	*	*	*	*
				Supp.	1.5	2.0	2.0	0.525	38
4	Clamp	30109576866 53400847780	Replace	Total	1.6	1.0	1.0	1.045	204
				Org.	1.3	1.0	1.0	0.769	127
				Supp.	2.3	2.0	1.0	1.698	76
5	42 Degree Gear Box Assy	16159182676	Replace	Total	3.8	3.0	2.0	2.378	473
				Org.	4.0	3.5	2.0	2.193	292
				Supp.	5.2	4.0	2.0	3.991	171
			Service	Total	1.5	1.5	2.0	0.839	53
				Org.	*	*	*	*	*
				Supp.	1.6	2.0	2.0	0.878	43
			Removed and Installed	Total	5.4	4.0	4.0	3.075	46
				Org.	*	*	*	*	*
				Supp.	5.7	4.5	10.0	3.206	31
			Removed	Total	4.9	2.0	2.0	3.805	7
				Org.	*	*	*	*	*
				Supp.	4.7	2.0	2.0	4.131	6

*Insufficient Data

UH-1H FLAT RATE DATA
FUNCTIONAL GROUP 04
REFERENCE FIGURE 105

ITEM NO.	NOMEMCLATURE	FSN/PN	ACTION CODE	MAINT. LEVEL	MEAN	MEDIAN	MODE	STD. DEV.	SAMPLE SIZE
5	42 Degree Gear Box Assy (Cont'd)	16159182676	Installed	Total	2.9	2.0	2.0	1.070	7
				Org.	*	*	*	*	*
				Supp.	3.2	4.0	4.0	1.095	5
6	90 Degree Gear Box Assy	16159182677 16159763113	Replace	Total	7.3	5.0	4.0	5.766	915
				Org.	5.0	4.5	4.0	2.672	518
				Supp.	8.4	6.0	4.0	6.542	312
			Repair	Total	2.6	2.0	2.0	0.722	33
				Org.	*	*	*	*	*
				Supp.	2.3	2.0	2.0	0.475	21
			Service	Total	1.0	0.6	0.5	0.808	393
				Org.	0.6	0.5	0.5	0.385	192
				Supp.	1.9	1.5	0.5	1.507	201
			Initial Inspection	Total	0.8	0.5	0.5	0.454	92
				Org.	*	*	*	*	*
				Supp.	0.8	0.5	0.5	0.438	88
			Final Inspection	Total	0.7	0.5	0.5	0.269	84
				Org.	*	*	*	*	*
				Supp.	0.7	0.5	0.5	0.271	76
			Removed and Installed	Total	4.5	4.0	4.0	2.804	167
				Org.	*	*	*	*	*
				Supp.	4.7	4.0	2.0	2.924	101
			Installed	Total	4.0	4.0	6.0	1.620	11
				Org.	*	*	*	*	*
				Supp.	4.0	4.0	6.0	1.732	7
				Total					
				Org.					
				Supp.					
				Total					
				Org.					
				Supp.					

*Insufficient Data

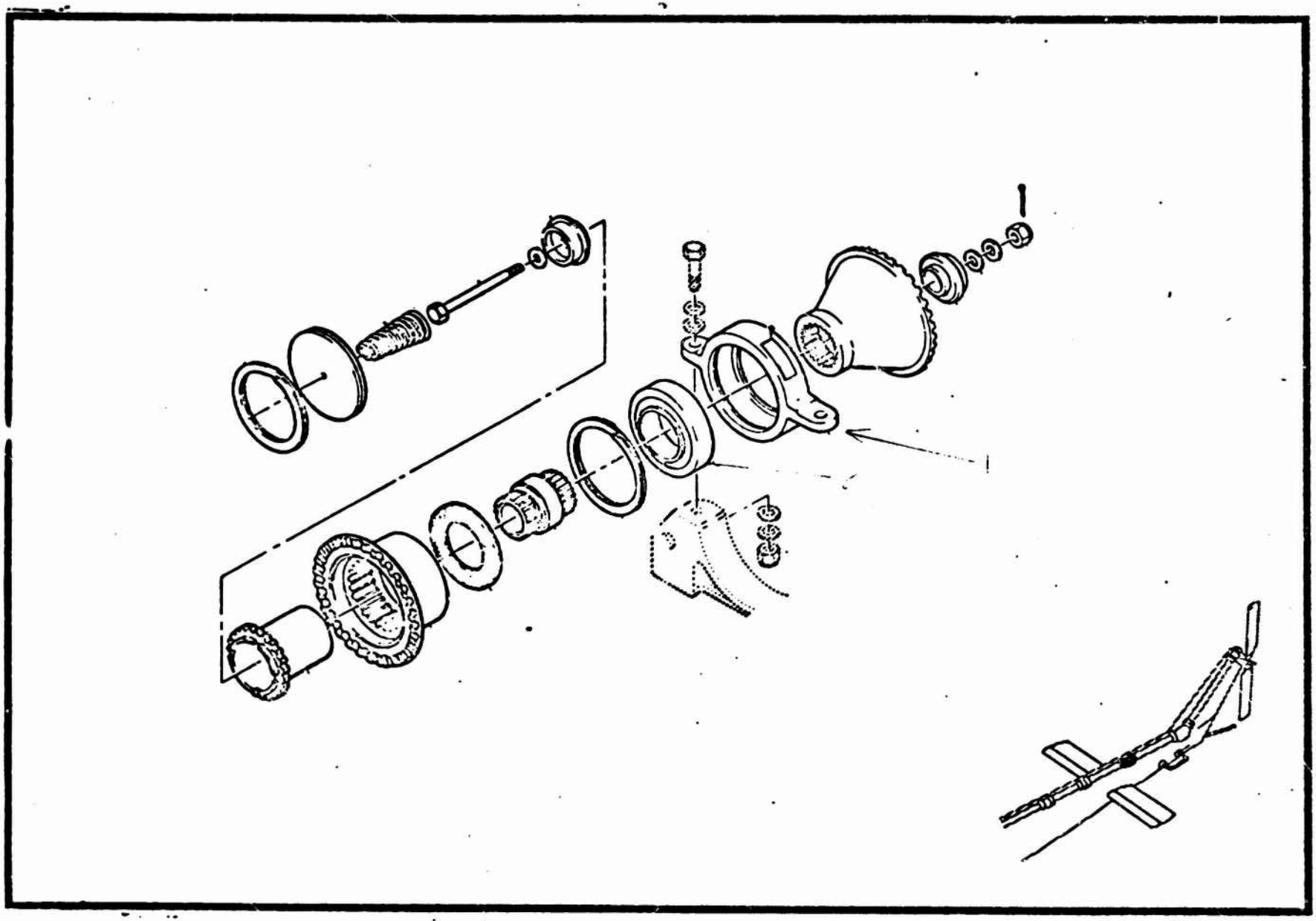

Figure 106 . Hanger Assembly,Driveshaft

UH-1H FLAT RATE DATA
FUNCTIONAL GROUP 04
REFERENCE FIGURE 106

ITEM NO.	NOMEMCLATURE	FSN/PN	ACTION CODE	MAINT. LEVEL	MEAN	MEDIAN	MODE	STD. DEV.	SAMPLE SIZE
1	Hanger Assy	16156330820 16157652416 16158328951	Replace	Total	3.3	2.5	2.0	2.535	1129
				Org.	3.0	2.0	2.0	2.155	799
				Supp.	3.5	3.0	2.0	2.567	307
			Service	Total	2.9	2.0	2.0	1.600	78
				Org.	*	*	*	*	*
				Supp.	3.0	3.0	2.0	1.606	71
			Initial Inspection	Total	0.5	0.5	0.5	0.000	5
				Org.	*	*	*	*	*
				Supp.	0.5	0.5	0.5	0.000	5
			Final Inspection	Total	0.7	0.5	0.5	0.247	10
				Org.	*	*	*	*	*
				Supp.	0.7	0.5	0.5	0.247	10
			Removed and Installed	Total	7.9	6.0	15.0	4.051	78
				Org.	*	*	*	*	*
				Supp.	8.5	8.0	15.0	4.310	51
2	Bearing	31109118384	Replace	Total	2.4	2.0	1.0	1.618	262
				Org.	2.0	2.0	2.0	1.095	55
				Supp.	2.4	2.0	1.0	1.540	178
			Adjust	Total	3.4	3.2	5.0	1.783	17
				Org.	*	*	*	*	*
				Supp.	3.6	4.0	5.0	1.850	13
			Repair	Total	1.7	1.5	1.0	0.716	22
				Org.	*	*	*	*	*
				Supp.	1.7	1.5	1.0	0.842	14
			Service	Total	2.5	2.0	2.0	1.486	230
				Org.	*	*	*	*	*
				Supp.	2.6	2.0	2.0	1.501	214
			Initial Inspection	Total	0.9	0.5	0.5	0.479	69
				Org.	*	*	*	*	*
				Supp.	0.9	0.5	0.5	0.480	68

*Insufficient Data

UH-1H FLAT RATE DATA
FUNCTIONAL GROUP 04
REFERENCE FIGURE 106

ITEM NO.	NOMEMCLATURE	FSN/PN	ACTION CODE	MAINT. LEVEL	MEAN	MEDIAN	MODE	STD. DEV.	SAMPLE SIZE
2	Bearing (Cont'd)	31109118384	Final Inspection	Total	0.8	0.5	0.5	0.380	64
				Org.	*	*	*	*	*
				Supp.	0.8	0.5	0.5	0.382	63
			Removed and Installed	Total	3.7	3.0	2.0	2.705	86
				Org.	1.7	2.0	2.0	0.665	20
				Supp.	3.8	3.0	1.0	2.860	56
				Total					
				Org.					
				Supp.					
				Total					
				Org.					
				Supp.					
				Total					
				Org.					
				Supp.					
				Total					
				Org.					
				Supp.					
				Total					
				Org.					
				Supp.					
				Total					
				Org.					
				Supp.					
				Total					
				Org.					
				Supp.					
				Total					
				Org.					
				Supp.					

*Insufficient Data

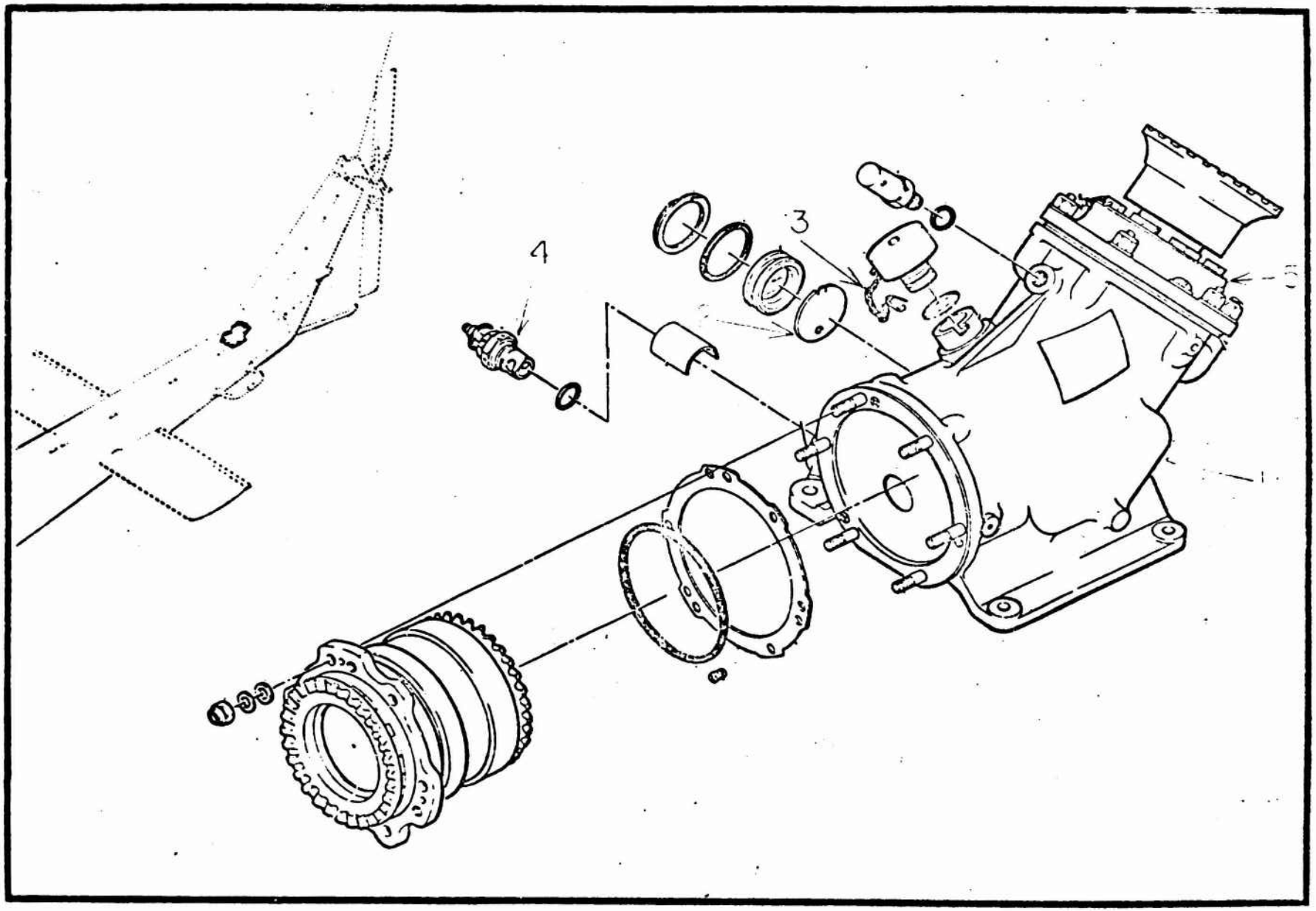

Figure 107 Gear Box Assembly, 42 Degree

UH-1H FLAT RATE DATA
FUNCTIONAL GROUP 04
REFERENCE FIGURE 107

ITEM NO.	NOMEMCLATURE	FSN/PN	ACTION CODE	MAINT. LEVEL	MEAN	MEDIAN	MODE	STD. DEV.	SAMPLE SIZE
1	Case Assy	16157356560	Replace	Total	2.9	2.0	2.0	1.186	11
				Org.	3.3	3.0	4.0	1.166	8
				Supp.	*	*	*	*	*
2	Sight Indicator	66805800724	Replace	Total	0.8	1.0	1.0	0.244	146
				Org.	0.8	1.0	1.0	0.243	110
				Supp.	0.8	1.0	1.0	0.251	36
3	Chain	40102621551	Replace	Total	0.7	0.5	1.0	0.311	36
				Org.	0.7	0.5	0.5	0.311	34
				Supp.	*	*	*	*	*
4	Chip Detector	16159181893	Replace	Total	1.1	1.0	1.0	0.642	972
				Org.	1.1	1.0	1.0	0.649	814
				Supp.	1.0	1.0	1.0	0.610	158
			Repair	Total	0.7	0.5	0.5	0.260	17
				Org.	0.7	0.5	0.5	0.258	10
				Supp.	0.8	1.0	1.0	0.268	7
			Service	Total	0.8	0.5	0.5	0.296	26
				Org.	0.6	0.5	0.5	0.240	17
				Supp.	1.3	1.0	1.0	0.442	9
			Removed and Installed	Total	0.5	0.5	0.5	0.414	610
				Org.	0.5	0.5	0.5	0.404	587
				Supp.	0.8	0.5	0.5	0.500	23
			Checked Serviceable	Total	0.7	0.5	0.5	0.334	12
				Org.	*	*	*	*	*
				Supp.	0.8	0.5	0.5	0.422	6
5	42 Degree Quill Assy	16157603313 16157603314	Replace	Total	4.2	4.0	6.0	1.475	15
				Org.	4.2	4.0	6.0	1.529	12
				Supp.	*	*	*	*	*
			Service	Total	1.3	0.5	2.0	0.823	6
				Org.	*	*	*	*	*
				Supp.	1.3	0.5	2.0	0.823	6

*Insufficient Data

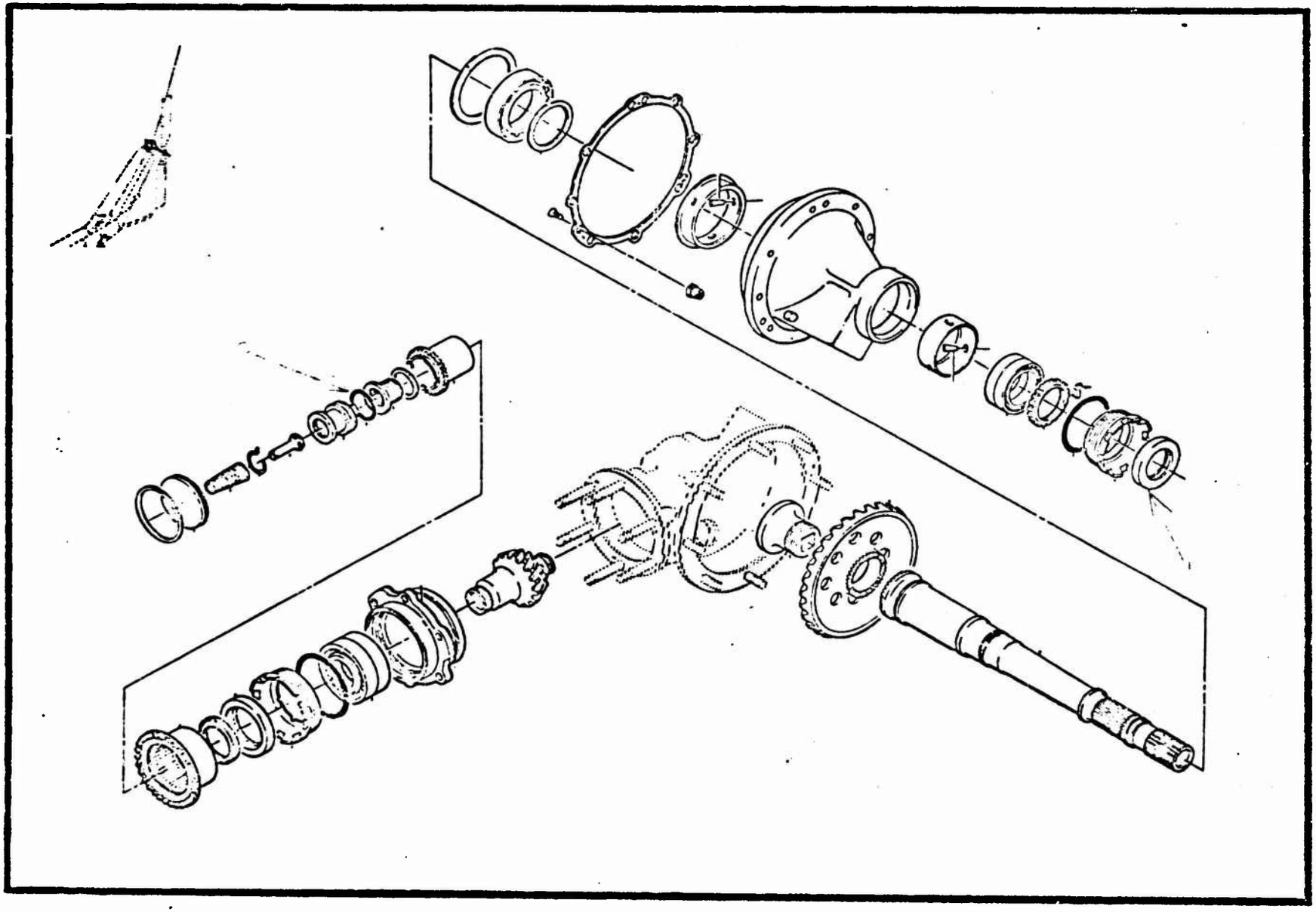

Figure 108 Quill Assembly, Gear Box, 90 Degree

UH-1H FLAT RATE DATA
FUNCTIONAL GROUP 04
REFERENCE FIGURE 103

ITEM NO.	NOMEMCLATURE	FSN/PN	ACTION CODE	MAINT. LEVEL	MEAN	MEDIAN	MODE	STD. DEV.	SAMPLE SIZE
1	Seal	53307951315	Replace	Total	1.6	1.5	1.0	0.815	169
				Org.	1.7	2.0	1.0	0.743	55
				Supp.	1.6	1.5	1.0	0.811	105
2	Packing	53305421456 53306180334 53308153508	Replace	Total	1.7	1.0	1.0	0.912	87
				Org.	2.5	2.0	2.0	0.892	20
				Supp.	1.5	1.0	1.0	0.856	45
				Total					
				Org.					
				Supp.					
				Total					
				Org.					
				Supp.					
				Total					
				Org.					
				Supp.					
				Total					
				Org.					
				Supp.					
				Total					
				Org.					
				Supp.					
				Total					
				Org.					
				Supp.					
				Total					
				Org.					
				Supp.					
				Total					
				Org.					
				Supp.					

*Insufficient Data

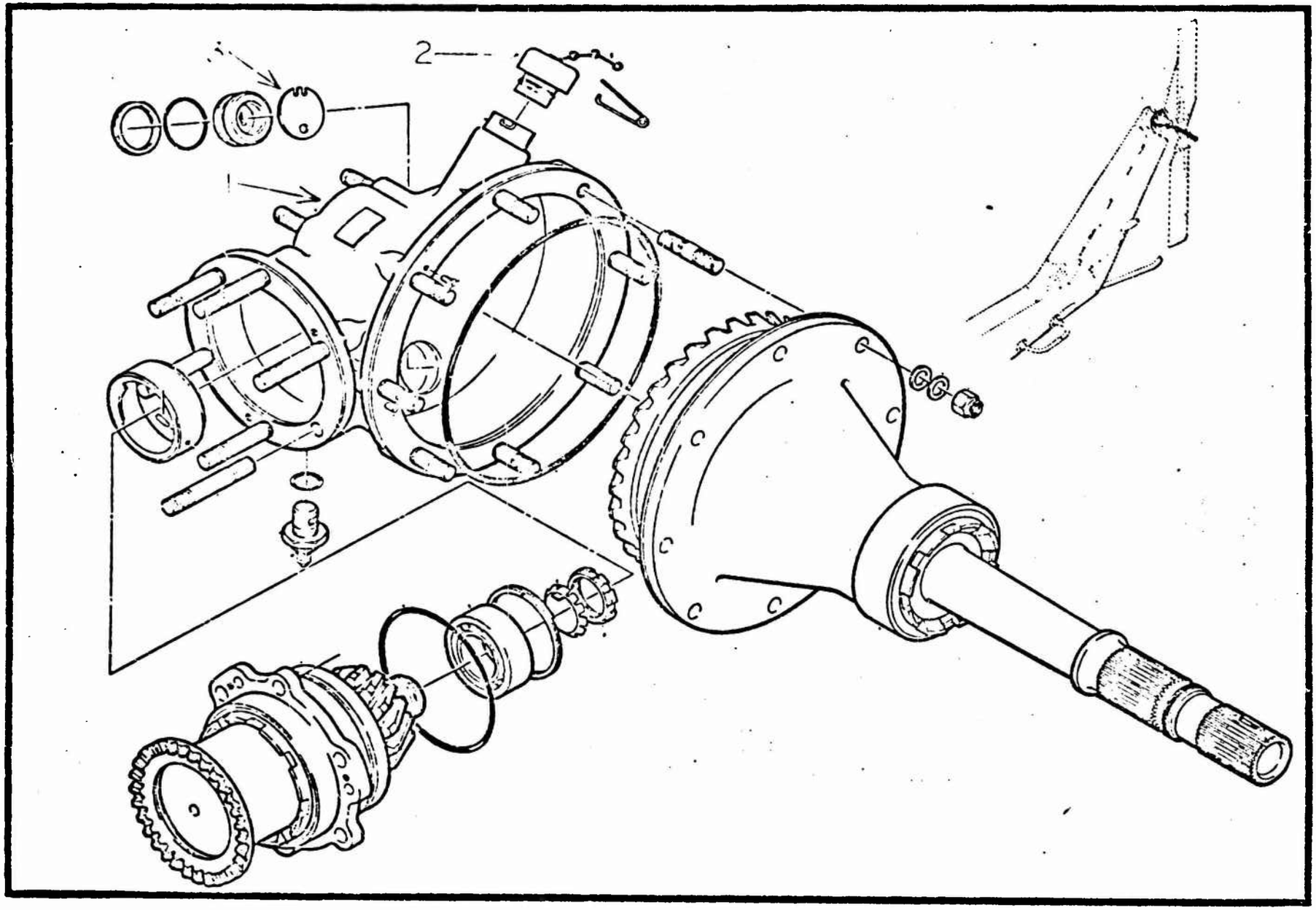

Figure 109 Gear Box Assembly, 90 Degree

UH-1H FLAT RATE DATA
FUNCTIONAL GROUP 04
REFERENCE FIGURE 109

ITEM NO.	NOMEMCLATURE	FSN/PN	ACTION CODE	MAINT. LEVEL	MEAN	MEDIAN	MODE	STD. DEV.	SAMPLE SIZE
1	Case Assy	16157394574	Replace	Total Org. Supp.	3.0 3.0 *	2.0 2.0 *	4.0 4.0 *	1.549 1.549 *	6 6 *
2	Cap	16156907280	Replace	Total Org. Supp.	0.9 0.9 0.7	1.0 1.0 0.5	0.5 0.5 1.0	0.467 0.451 0.285	71 58 11
3	Disk	16159757131	Replace	Total Org. Supp.	1.0 0.8 0.8	1.0 1.0 1.0	1.0 1.0 1.0	0.538 0.301 0.284	164 97 39
				Total Org. Supp.					
				Total Org. Supp.					
				Total Org. Supp.					
				Total Org. Supp.					
				Total Org. Supp.					
				Total Org. Supp.					
				Total Org. Supp.					

*Insufficient Data

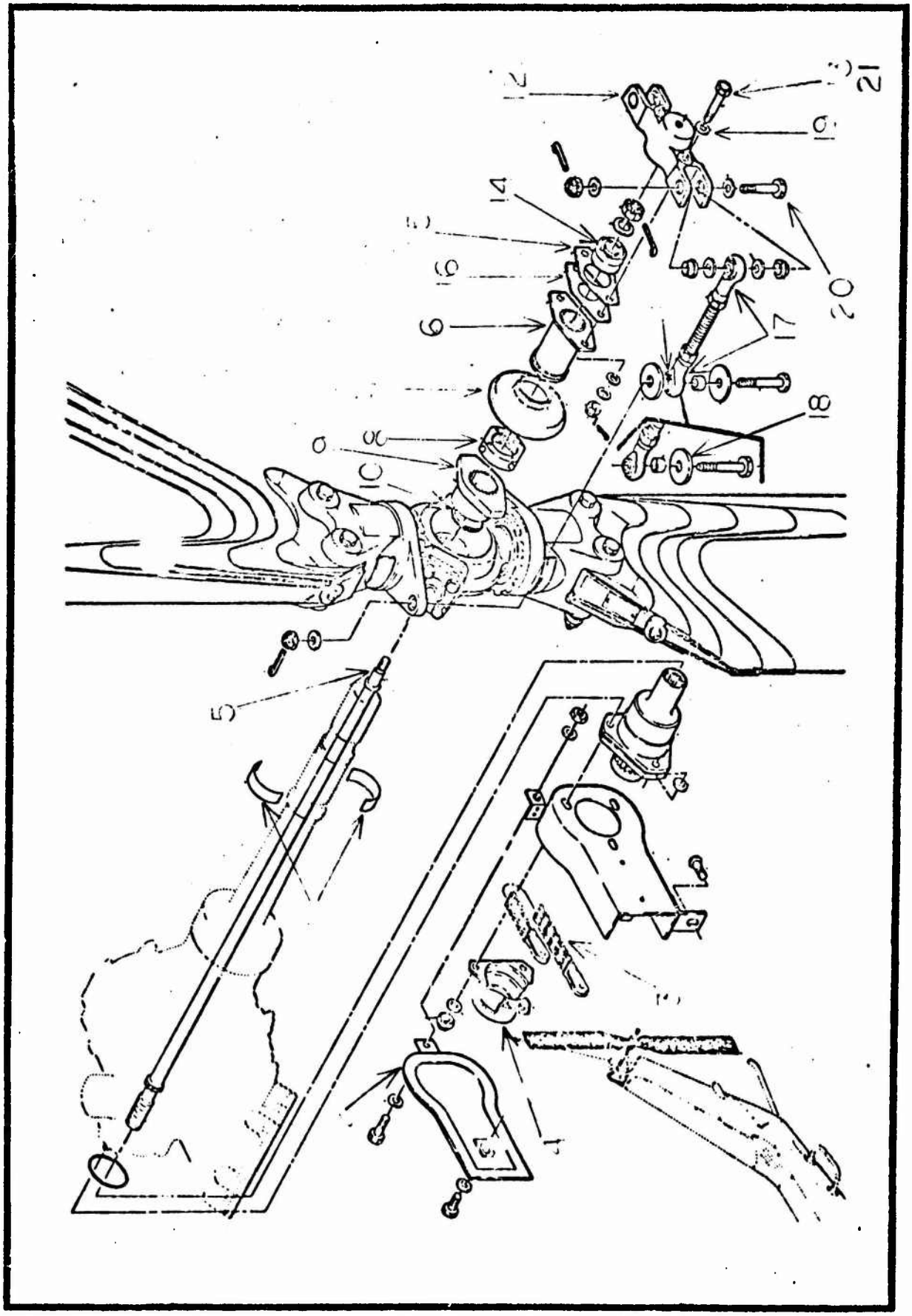

Figure 110 Tail Rotor Installation

UH-1H FLAT RATE DATA
FUNCTIONAL GROUP 04
REFERENCE FIGURE 110

ITEM NO.	NOMEMCLATURE	FSN/PN	ACTION CODE	MAINT. LEVEL	MEAN	MEDIAN	MODE	STD. DEV.	SAMPLE SIZE
1	Bearing	31209800344	Replace	Total	1.8	1.0	1.0	1.231	157
				Org.	1.6	1.0	1.0	0.971	110
				Supp.	1.3	1.0	1.0	0.712	36
2	Cover	16150749014 16152347299	Replace	Total	1.6	1.0	1.0	1.418	168
				Org.	1.3	1.0	1.0	1.007	80
				Supp.	2.0	1.0	1.0	1.654	87
			Repair	Total	1.8	2.0	2.0	0.779	33
				Org.	*	*	*	*	*
				Supp.	1.9	2.0	2.0	0.755	32
3	Chain	16151724508	Replace	Total	2.3	2.0	1.0	1.868	640
				Org.	1.7	1.5	1.0	1.010	391
				Supp.	2.9	2.0	2.0	2.296	226
			Adjust	Total	3.0	3.0	3.0	0.000	6
				Org.	*	*	*	*	*
				Supp.	3.0	3.0	3.0	0.000	6
			Service	Total	1.3	1.0	1.0	0.494	13
				Org.	*	*	*	*	*
				Supp.	1.5	1.0	2.0	0.535	8
			Removed and Installed	Total	2.0	1.6	1.0	1.495	42
				Org.	*	*	*	*	*
				Supp.	2.2	2.0	1.0	1.713	24
4	Sprocket Guard	16156246719	Replace	Total	1.3	1.0	1.0	0.672	63
				Org.	1.3	1.0	0.5	0.764	32
				Supp.	1.3	1.0	1.0	0.576	31
5	Tail Rotor Control Tube	16158865998	Replace	Total	1.9	1.6	1.0	1.265	248
				Org.	1.9	1.5	1.0	1.176	175
				Supp.	2.1	1.6	1.0	1.430	73
			Removed and Installed	Total	1.0	1.0	1.0	0.565	36
				Org.	0.9	0.5	0.5	0.523	14
				Supp.	0.9	1.0	1.0	0.489	19

*Insufficient Data

UH-1H FLAT RATE DATA
FUNCTIONAL GROUP 04
REFERENCE FIGURE 110

ITEM NO.	NOMEMCLATURE	FSN/PN	ACTION CODE	MAINT. LEVEL	MEAN	MEDIAN	MODE	STD. DEV.	SAMPLE SIZE
5	Tail Rotor Control Tube (Cont'd)	16158865998	Installed	Total	1.7	2.0	2.0	0.468	11
				Org.	*	*	*	*	*
				Supp.	1.8	2.0	2.0	0.422	10
6	Tail Rotor Slider	16158596111	Replace	Total	2.0	1.5	1.0	1.796	823
				Org.	1.7	1.5	1.0	1.140	603
				Supp.	2.4	1.5	1.0	2.586	219
			Service	Total	0.6	0.5	0.5	0.309	10
				Org.	*	*	*	*	*
				Supp.	0.6	0.5	0.5	0.297	6
			Removed and Installed	Total	1.2	1.0	1.0	0.603	11
				Org.	1.1	1.0	1.0	0.585	9
				Supp.	*	*	*	*	*
7	Boot	16155031896	Replace	Total	1.2	1.0	1.0	0.671	698
				Org.	1.2	1.0	1.0	0.696	440
				Supp.	1.3	1.0	1.0	0.439	179
8	Nut	53106246714	Replace	Total	1.0	1.0	1.0	0.522	67
				Org.	1.0	1.0	1.0	0.567	46
				Supp.	0.8	1.0	1.0	0.309	20
			Adjust	Total	1.0	1.0	1.0	0.571	82
				Org.	1.0	1.0	1.0	0.519	75
				Supp.	*	*	*	*	*
			Service	Total	0.8	0.8	0.5	0.321	92
				Org.	0.8	0.5	0.5	0.316	90
				Supp.	*	*	*	*	*
9	Static Stop	16150830468 16157015655 16158966267	Replace	Total	1.2	1.0	1.0	0.742	47
				Org.	1.2	1.0	1.0	0.852	24
				Supp.	1.1	1.0	1.0	0.619	23
10	Shim	53409509395	Replace	Total	2.1	2.0	1.0	1.531	81
				Org.	1.6	1.5	1.0	0.717	33
				Supp.	1.4	1.0	1.0	0.602	30

*Insufficient Data

UH-1H FLAT RATE DATA
FUNCTIONAL GROUP 04
REFERENCE FIGURE 110

ITEM NO.	NOMEMCLATURE	FSN/PN	ACTION CODE	MAINT. LEVEL	MEAN	MEDIAN	MODE	STD. DEV.	SAMPLE SIZE
10	Shim (Cont'd)	53409509395	Removed and Installed	Total	3.0	3.0	3.0	0.000	7
				Org.	*	*	*	*	*
				Supp.	3.0	3.0	3.0	0.000	7
11	Cone Set	16157753846	Replace	Total	1.5	1.0	1.0	1.084	48
				Org.	1.6	1.0	2.0	1.107	[illegible]
				Supp.	0.9	1.0	1.0	0.348	18
12	Crosshead Assy	16150513646 16157364002	Replace	Total	2.2	2.0	1.0	1.923	[illegible]
				Org.	1.8	1.5	1.0	1.131	56[illegible]
				Supp.	2.2	2.0	1.0	1.553	247
			Service	Total	1.1	1.0	1.0	0.550	14
				Org.	1.2	1.0	1.0	0.628	10
				Supp.	*	*	*	*	*
			Removed and Installed	Total	1.1	1.0	1.0	0.592	64
				Org.	1.1	1.0	1.0	0.513	47
				Supp.	1.2	1.0	2.0	0.649	15
13	Bolt	53066805284	Replace	Total	1.2	1.0	1.0	0.690	54
				Org.	1.5	1.5	1.0	0.470	13
				Supp.	1.3	1.0	1.0	0.728	32
14	Bearing	31101350563	Replace	Total	1.6	1.0	1.0	1.104	410
				Org.	1.2	1.0	1.0	0.525	221
				Supp.	1.2	1.0	1.0	0.564	120
15	Shim	16155842082	Replace	Total	1.3	1.0	1.0	0.722	73
				Org.	0.9	1.0	1.0	0.392	22
				Supp.	1.5	1.0	1.0	0.991	41
16	Plate	31109733512	Replace	Total	1.2	1.0	1.0	0.460	30
				Org.	*	*	*	*	*
				Supp.	1.0	1.0	1.0	0.213	12
17	Pitch Link Assy	16151575087	Replace	Total	2.4	2.0	2.0	1.798	1170
				Org.	2.0	2.0	2.0	1.121	838
				Supp.	2.4	2.0	2.0	1.345	265

*Insufficient Data

UH-1H FLAT RATE DATA
FUNCTIONAL GROUP 04
REFERENCE FIGURE 110

ITEM NO.	NOMEMCLATURE	FSN/PN	ACTION CODE	MAINT. LEVEL	MEAN	MEDIAN	MODE	STD. DEV.	SAMPLE SIZE
17	Pitch Link Assy (Cont'd)	16151575087	Removed and Installed	Total	0.7	0.5	0.5	0.265	257
				Org.	0.7	0.5	0.5	0.264	254
				Supp.	*	*	*	*	*
			Checked Serviceable	Total	0.9	0.5	0.5	0.695	8
				Org.	0.8	0.5	0.5	0.671	5
				Supp.	1.0	0.5	0.5	0.866	3
18	Washer	53102265533	Replace	Total	0.8	1.0	1.0	0.269	32
				Org.	0.8	1.0	1.0	0.239	14
				Supp.	0.8	1.0	1.0	0.299	18
19	Spacer	53652694457 53655803641	Replace	Total	1.4	1.0	0.5	1.076	89
				Org.	1.2	1.0	1.0	0.710	42
				Supp.	1.3	1.0	0.5	0.894	41
20	Bolt	53061509954 53061509955 53061509956 53061509957	Replace	Total	0.9	0.5	0.5	0.599	68
				Org.	*	*	*	*	*
				Supp.	0.9	0.5	0.5	0.643	57
				Total					
				Org.					
				Supp.					
21	Bolt	53069200695	Replace	Total	1.1	1.0	1.0	0.625	85
				Org.	0.9	0.5	0.5	0.592	32
				Supp.	2.1	2.0	2.0	0.195	12
				Total					
				Org.					
				Supp.					
				Total					
				Org.					
				Supp.					
				Total					
				Org.					
				Supp.					

*Insufficient Data

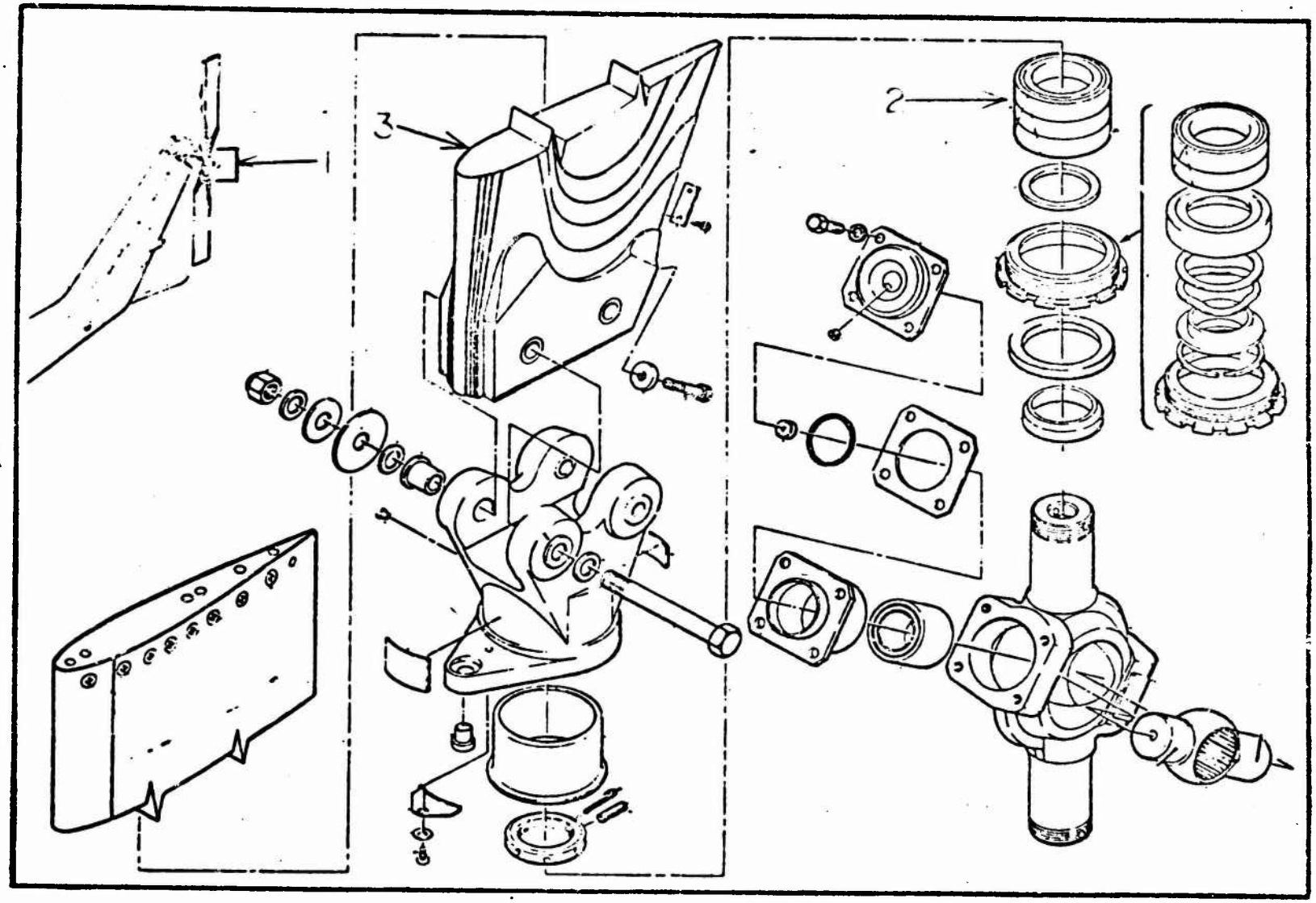

Figure 111 Hub and Blade Assembly, Tail Rotor

UH-1H FLAT RATE DATA
FUNCTIONAL GROUP 04
REFERENCE FIGURE 111

ITEM NO.	NOMENCLATURE	FSN/PN	ACTION CODE	MAINT. LEVEL	MEAN	MEDIAN	MODE	STD. DEV.	SAMPLE SIZE
1	Tail Rotor Hub Assy	16150179616 16151336872 16151761797 16154727309 16159336824 16159336825	Replace	Total	3.5	3.0	2.0	2.492	656
				Org.	2.7	2.0	2.0	1.272	215
				Supp.	3.5	2.5	1.0	2.552	398
			Adjust	Total	2.9	2.5	1.0	1.651	286
				Org.	*	*	*	*	*
				Supp.	2.9	2.5	1.0	1.663	255
			Service	Total	3.0	3.0	4.0	2.113	827
				Org.	0.7	0.5	0.5	0.359	83
				Supp.	3.3	3.0	4.0	2.089	723
			Initial Inspection	Total	0.7	0.5	0.5	0.270	175
				Org.	*	*	*	*	*
				Supp.	0.7	0.5	0.5	0.271	171
			Final Inspection	Total	0.7	0.5	0.5	0.369	184
				Org.	*	*	*	*	*
				Supp.	0.7	0.5	0.5	0.371	180
			Removed and Installed	Total	3.9	4.0	4.0	2.468	379
				Org.	2.3	2.0	1.0	1.122	104
				Supp.	4.1	4.0	4.0	2.476	225
			Checked Serviceable	Total	1.0	1.0	1.0	0.301	12
				Org.	*	*	*	*	*
				Supp.	1.0	1.0	1.0	0.301	12
			Installed	Total	3.4	4.0	4.6	1.391	169
				Org.	*	*	*	*	*
				Supp.	3.5	4.0	4.6	1.370	148
2	Bearing	31106250019 31107840227 31108726968	Replace	Total	2.3	2.0	2.0	1.134	91
				Org.	*	*	*	*	*
				Supp.	2.3	2.0	2.0	1.134	82
3	Tail Rotor Blade Assy	16154727308 16159070842	Replace	Total	3.1	2.0	2.0	2.510	644
				Org.	3.3	3.0	2.0	2.096	243
				Supp.	2.9	2.0	2.0	2.519	391

*Insufficient Data

UH-1H FLAT RATE DATA
FUNCTIONAL GROUP 04
REFERENCE FIGURE 111

ITEM NO.	NOMENCLATURE	FSN/PN	ACTION CODE	MAINT. LEVEL	MEAN	MEDIAN	MODE	STD. DEV.	SAMPLE SIZE
3	Tail Rotor Blade Assy (Cont'd)	16154727308 16159070842	Adjust	Total	1.5	1.5	1.0	0.499	71
				Org.	*	*	*	*	*
				Supp.	1.6	1.5	2.0	0.445	36
			Service	Total	1.2	1.0	2.0	0.630	162
				Org.	0.8	0.7	0.5	0.308	46
				Supp.	1.3	1.0	2.0	0.641	103
			Removed and Installed	Total	2.4	2.0	2.0	0.436	88
				Org.	1.4	1.3	1.0	0.464	22
				Supp.	2.7	2.0	1.3	1.509	61
			Removed	Total	10.1	10.0	10.0	4.671	71
				Org.	*	*	*	*	*
				Supp.	10.1	10.0	10.0	4.671	71
			Installed	Total	2.8	3.0	3.0	0.810	173
				Org.	*	*	*	*	*
				Supp.	2.9	3.0	3.0	0.778	168
--	T/R Hub and Blade Assy	16151337238	Replace	Total	2.3	2.0	2.0	1.179	74
				Org.	1.9	2.0	2.0	0.839	37
				Supp.	*	*	*	*	*
			Adjust	Total	2.4	2.0	1.0	1.624	1,206
				Org.	1.7	1.5	1.0	1.150	431
				Supp.	2.6	2.0	1.0	1.655	760
			Repair	Total	2.2	2.0	1.0	1.455	69
				Org.	*	*	*	*	*
				Supp.	2.5	2.8	1.0	1.490	47
			Service	Total	2.1	1.5	1.0	1.738	1,927
				Org.	1.1	1.0	1.0	0.669	863
				Supp.	2.9	2.0	2.0	1.858	1016
			Initial Inspection	Total	0.8	0.5	0.5	0.462	474
				Org.	*	*	*	*	*
				Supp.	0.8	0.5	0.5	0.463	460

*Insufficient Data

UH-1H FLAT RATE DATA
FUNCTIONAL GROUP 04
REFERENCE FIGURE 111

ITEM NO.	NOMEMCLATURE	FSN/PN	ACTION CODE	MAINT. LEVEL	MEAN	MEDIAN	MODE	STD. DEV.	SAMPLE SIZE
--	T/R Hub and Blade Assy (Cont'd)	16151337238	Final Inspection	Total	0.7	0.5	0.5	0.440	473
				Org.	0.7	0.5	0.5	0.268	7
				Supp.	0.8	0.5	0.5	0.437	453
			Removed and Installed	Total	4.0	3.0	2.0	2.800	788
				Org.	2.3	2.0	2.0	1.088	280
				Supp.	4.6	4.0	2.0	3.028	429
			Checked Serviceable	Total	1.6	2.0	2.0	0.909	64
				Org.	*	*	*	*	*
				Supp.	1.6	2.0	2.0	0.998	38
			Removed	Total	2.0	2.0	1.0	1.261	155
				Org.	2.1	2.0	2.0	1.126	80
				Supp.	1.8	1.0	1.0	1.334	74
			Installed	Total	1.7	2.0	1.0	0.816	119
				Org.	*	*	*	*	*
				Supp.	1.6	1.0	1.0	0.779	82
				Total					
				Org.					
				Supp.					
				Total					
				Org.					
				Supp.					
				Total					
				Org.					
				Supp.					
				Total					
				Org.					
				Supp.					
				Total					
				Org.					
				Supp.					

*Insufficient Data

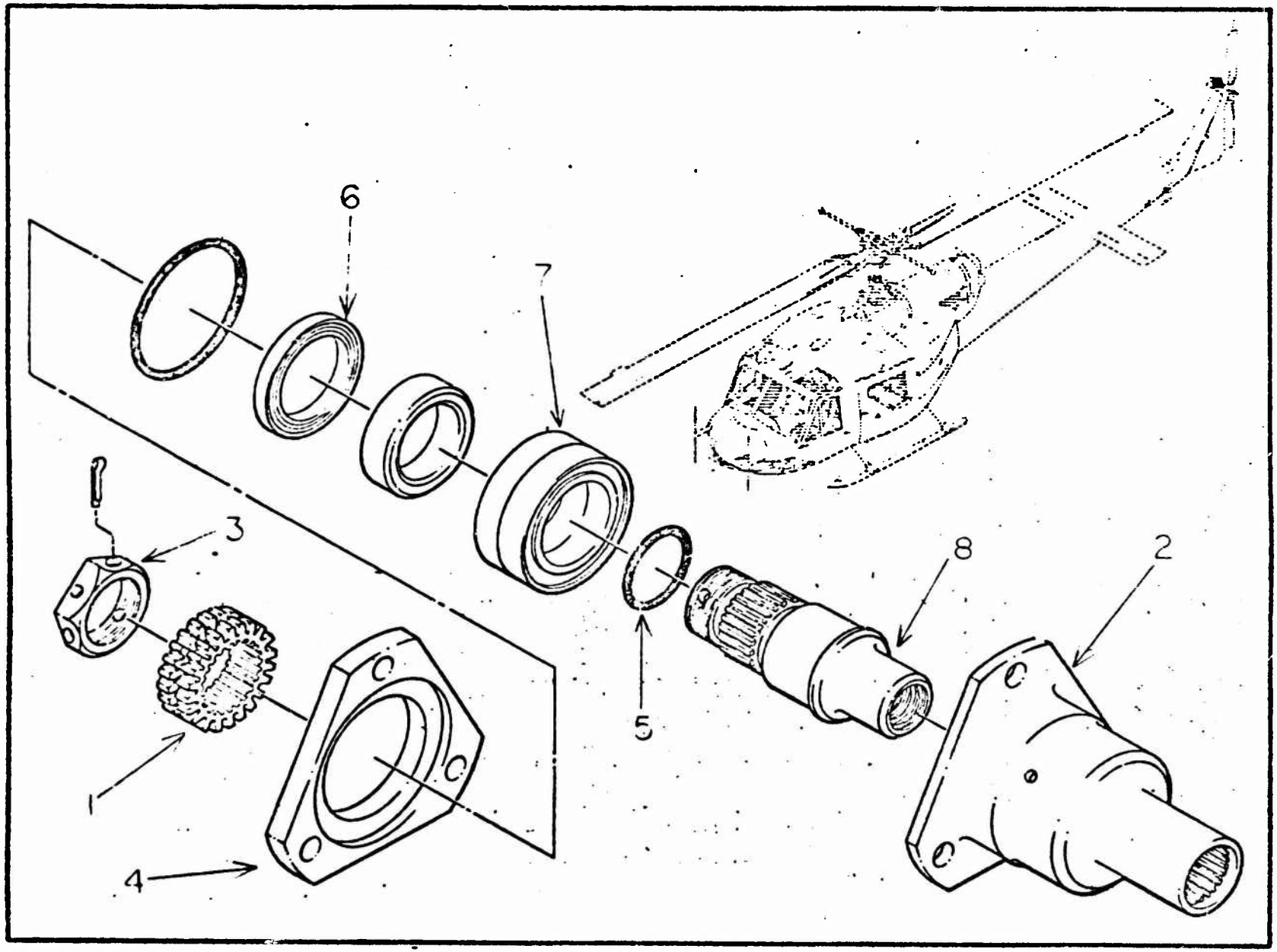

Figure 112 Control Quill Assembly

UH-1H FLAT RATE DATA
FUNCTIONAL GROUP 04
REFERENCE FIGURE 112

ITEM NO.	NOMEMCLATURE	FSN/PN	ACTION CODE	MAINT. LEVEL	MEAN	MEDIAN	MODE	STD. DEV.	SAMPLE SIZE
1	Sprocket Wheel	16156246956	Replace	Total	2.1	1.5	1.0	1.828	672
				Org.	1.6	1.0	1.0	1.004	404
				Supp.	2.1	2.0	2.0	1.389	234
2	Tail Rotor Quill Housing	16158156682	Replace	Total	1.9	1.0	1.0	1.696	82
				Org.	1.2	1.0	1.0	0.809	45
				Supp.	2.5	2.0	1.0	1.767	33
			Repair	Total	1.6	1.5	1.5	0.377	6
				Org.	*	*	*	*	*
				Supp.	1.6	1.5	1.5	0.377	6
3	Nut	16156744233	Replace	Total	0.8	1.0	1.0	0.363	18
				Org.	0.5	0.5	0.5	0.238	7
				Supp.	1.0	1.0	1.0	0.274	11
4	Retainer	16158062439	Replace	Total	1.0	1.0	1.0	0.487	41
				Org.	0.7	0.5	0.5	0.273	17
				Supp.	1.1	1.0	1.0	0.460	23
5	Packing	53305421457 53305851068	Replace	Total	1.4	1.0	1.0	1.149	294
				Org.	1.2	1.0	1.0	0.987	157
				Supp.	1.6	1.0	1.0	1.289	137
6	Seal	53305154742	Replace	Total	1.9	1.0	1.0	1.480	186
				Org.	1.1	1.0	1.0	0.597	78
				Supp.	2.1	2.0	1.0	1.569	92
7	Bearing	31100796387 31201681473	Replace	Total	1.4	1.0	1.0	0.767	87
				Org.	1.6	1.0	1.0	0.711	40
				Supp.	1.2	1.0	1.0	0.519	34
8	Control Nut Assy	16156912141	Replace	Total	1.3	1.0	1.0	0.731	107
				Org.	1.4	1.0	1.0	0.784	56
				Supp.	1.3	1.0	1.0	0.672	51
--	Control Quill Assy	16158156682	Service	Total	1.2	1.0	1.0	0.691	18
				Org.	*	*	*	*	*
				Supp.	1.2	1.0	1.0	0.711	17

*Insufficient Data