AFFDL-TR-70-25

AD704124

A Translation of
THE STABILITY OF ELASTIC EQUILIBRIUM

By

WARNER TJARDUS KOITER

Sponsored by
Lockheed Missiles & Space Company
Sunnyvale, Calif.

TECHNICAL REPORT AFFDL-TR-70-25

FEBRUARY 1970

Distribution of this document is unlimited.

AIR FORCE FLIGHT DYNAMICS LABORATORY
AIR FORCE SYSTEMS COMMAND
WRIGHT-PATTERSON AIR FORCE BASE, OHIO

NOTICE

When Government drawings, specifications, or other data are used for any purpose other than in connection with a definitely related Government procurement operation, the United States Government thereby incurs no responsibility nor any obligation whatsoever; and the fact that the Government may have formulated, furnished, or in any way supplied the said drawings, specifications, or other data, is not to be regarded by implication or otherwise as in any manner licensing the holder or any other person or corporation, or conveying any rights or permission to manufacture, use, or sell any patented invention that may in any way be related thereto.

This document has been approved for public release and sale; its distribution is unlimited.

Copies of this report should not be returned unless return is required by security considerations, contractual obligations, or notice on a specific document.

500 - March 1970 - CO455 - 112-2466

A Translation of
THE STABILITY OF ELASTIC EQUILIBRIUM

By

WARNER TJARDUS KOITER

FOREWORD

This dissertation for a degree of doctor in the technical sciences at the Techische Hooge School at Delft was granted on the authority of Rector Magnificus Dr. Ir. H. H. Van Der Maas, Professor in the Department of Mechanics, Shipbuilding, and Airplane Building on November 14, 1945.

The dissertation was approved by the sponsor Professor Dr. Ir. C. B. Biezeno.

This translation was performed by Edward Riks, Stanford University. The work was funded by the Independent Research Program at Lockheed Missiles & Space Company, Sunnyvale, California.

The publication of this report was administered under the Structures Division of the Air Force Flight Dynamics Laboratory.

Publication of this report does not constitute Air Force approval of the reports fundings or conclusions. It is published only for the exchange and stimulation of ideas.

FRANCIS J. JANIK, JR.
Chief, Solid Mechanics Branch
Structures Division
Air Force Flight Dynamics Laboratory

ABSTRACT

A general theory of elastic stability is presented. In contrast to previous works in the field, the present analysis is augmented by an investigation of the behavior of the buckled structure in the immediate neighborhood of the bifurcation point. This investigation explains why some structures, e.g., a flat plate supported along its edges and subjected to thrust in its plane, are capable of carrying loads considerably above the buckling load, while other structures, e.g., an axially loaded cylindrical shell, collapse at loads far below the theoretical critical load.

CONTENTS

SUMMARY

The theory of elastic stability has already been the subject of numerous investigations. Of the researches dealing with the general theory those made by Bryan [3], Southwell [4], Biezeno and Hencky [5], Trefftz [7, 8], Marguerre [9], Kappus [10] and Biot [11 – 14] may be mentioned. For a survey of the many special problems that have been discussed, reference may be made to Timoshenko's well-known book [43].

Hitherto the general theories of stability have been restricted, however, to the investigation of neutral equilibrium; they aim particularly at the determination of the stability limit. The phenomena occurring on reaching and possibly on surpassing this limit were left out of account. This restriction as to the extent of the investigations is caused by two circumstances. First of all, there must be mentioned the great mathematical difficulties that obstruct the theoretical treatment of elastic behaviour after surpassing the stability limit. Whereas the investigation of states of neutral equilibrium is still possible by means of linear differential equations, the equations describing elastic behaviour after surpassing the stability limit are no longer linear. Moreover engineering has long been satisfied with the knowledge of the stability limit (critical or buckling load). The recognized principle, based on considerations of safety, was that the load on a structure should always be kept below this limit so that an investigation of the phenomena occurring above this limit seemed superfluous.

However, it has been known for a long time that some structures, e.g., a flat plate supported along its edges and subjected to thrust in its plane, are capable of sustaining considerably larger loads than the buckling one without exceeding the elastic limit at any point of the structure; in modern engineering, especially in aircraft engineering where saving on structural weight is of paramount importance, these higher loads are actually allowed. The theoretical treatment of this plate problem has among others

been given by Marguerre and Trefftz [19, 20]. Their results agree very well with experience if the excess of the buckling load is not too great.

On the other hand, it has been noted that the experimentally determined buckling loads of some shell structures, e.g., axially compressed thin-walled cylinders, lie considerably below the theoretical stability limit. Moreover the experimental results are widely divergent. Flügge's [21] and Donnell's [22] explanation, based on initial deviations of the test specimen from the true cylindrical form in consequence of which the yield point of the material would soon be reached, is called in question by Cox [23] and Von Kármán and Tsien [24]. The latter authors remark that the initial deviations should have to amount to a multiple of the wall thickness; such deviations could scarcely have escaped the notice of the investigators. Besides, Cox as well as Von Kármán and Tsien point out that Flügge's and Donnell's explanation requires a gradual appearance of buckles with increasing load whereas in the experiments a sudden, almost explosive buckling occurs; neither does this explanation satisfactorily account for the great divergency of the experimental results. Cox, on the other hand, has suggested a strut model to illustrate the possibility that the behaviour of the cylinder may be explained purely elastically; in a somewhat modified form this model has also been suggested by Von Kármán, Dunn and Tsien [25].

From the above-mentioned examples it clearly appears that the general theories of stability framed so far do not suffice. They have to be completed in such a way that the so divergent behaviour of various structures in the case of loads in the neighbourhood of the theoretical buckling load can be described as well. The present treatise aims at such an extension.

The loads acting upon a structure can usually be represented by the product of a unit load system and a load parameter λ, as yet indeterminate. It is then required to find the states of equilibrium that occur at a given value of λ and also to investigate the stability of these states. Of particular importance in engineering is the state of equilibrium that is obtained continuously from the unstrained state by monotonously

increasing λ from zero. For sufficiently small values of λ this so-called fundamental state is always stable, in agreement with Kirchhoff's theorem on the uniqueness of solution (cf. [39] and Sect. 31 of the present paper). On the other hand, in many cases the fundamental state becomes unstable on exceeding a critical value λ_1. The load belonging to this value λ_1, for which the equilibrium is at the stability limit and hence neutral as well (cf. [10]), is called the buckling or critical load. Consequently at this buckling load there exist, in addition to the fundamental state, neighbouring infinitesimally deviating states of equilibrium. It is then to be expected that likewise at loads differing slightly from the buckling load, neighbouring states of equilibrium exist that are obtained from the fundamental state by means of small but now finite displacements.[1] Next the presumption arises that the discrepancy in elastic behaviour of various structures in the case of loads in the neighbourhood of the critical load is connected with a discrepancy in character of the possible states of equilibrium going with these loads. From a preliminary tentative investigation it appeared that the character of these states of equilibrium is essentially dependent on the stability of equilibrium at the buckling load, i.e., on the question whether the limiting case of equilibrium at the critical load should still be reckoned among the stable or already among the unstable states of equilibrium.[2]

First of all, therefore, the equilibrium at the stability limit had to be subjected to a closer examination. Before entering upon this, however, it seemed advisable to give a brief survey of the theory of elasticity for finite deformations (Ch. 1); for the investigation of stability belongs essentially to the domain of the non-linear theory of elasticity.

---

[1] For an illustration of this possibility see Fig. 1a–d (p. 93). Here a is a measure of the displacements from the fundamental state to a neighbouring state of equilibrium.

[2] Some possibilities for neighbouring states of equilibrium are given in Figs. 1a–d (p. 93). Figures 1a, b, d relate to cases in which the equilibrium at the buckling load is unstable; Fig. 1c relates to a case in which this equilibrium is stable. The characteristic difference is that neighbouring states of equilibrium in the former cases do exist at loads below the buckling load whereas in the latter case they do not.

Following Thomson [2] the general equations of motion are derived by means of Hamilton's principle, using the elastic potential or strain energy function to describe the elasticity of the body. The equations of equilibrium are obtained by putting zero all inertia forces. They are in complete agreement with Kappus's equations [10], obtained by equating to zero the resultant of all forces acting upon an element of the elastic body.

In Chapter 2 the general theory of stability is dealt with. Section 21 gives a precise definition of stability by means of the energy criterion, while Sect. 22 treats of its practical application. In accordance with Trefftz it leads to two conditions of stability. The first condition is that the first variation of the potential energy is zero for any kinematically possible variation of displacement; it is identical with the well-known principle of virtual displacements. The second condition requires that the second variation of the energy cannot be negative for any kinematically possible variation of displacement. After a reproduction of Trefftz's treatment of the latter condition in Sect. 22, some assumptions introduced along with it are looked into more closely in Sect. 23; it appears that these assumptions are justified for all practical purposes. In the following articles the equilibrium at the stability limit is considered in more detail (Sect. 24 – 27). It appears that the equilibrium at the stability limit is "generally" unstable (Sect. 25). In Sect. 28 the method of investigation developed here is connected with Mayer's researches [31] on minima of functions of a finite number of variables. Finally in Sect. 29 some formulae are given that are necessary for the application of the general theory of stability to problems of elasticity.

In Chapter 3 the states of equilibrium at loads in the neighbourhood of the buckling load are investigated. The approximative method used to this purpose gives better results accordingly as the load differs less from the critical one. The character of these states actually appears to be governed by the stability at the buckling load (Sect. 35, 36). However, a restriction regarding the type of problems treated must be made that is inherent to the method of investigation. This method exclusively enables to deal with buckling problems corresponding with a so-called point of

bifurcation; so-called oilcanning problems[1] are left out of account (Sect. 37). Finally in Sect. 38 an extension of the theory to loads further removed from the buckling load is discussed. The most important result of Chapter 3 is that with stability of the equilibrium at the critical load (the buckling or critical state) neighbouring states of equilibrium exist only for larger loads; these states are stable. Therefore, apart from the possibility of exceeding the elastic limit of the material, larger loads than the buckling load can be sustained. With an unstable buckling state, on the contrary, neighbouring states of equilibrium do occur at loads smaller than the buckling load; these states are unstable. Though in some cases with unstable buckling state there also exist stable states of equilibrium at larger loads, these loads can only be reached by passing the unstable buckling state so that their practical importance is, to say the least of it, doubtful.

The theory of Chapter 3 does not yet give an explanation of the fact that for some structures the experimental buckling loads are considerably smaller than the theoretical buckling load. To come to such an explanation the influence of small deviations of a real structure from the simplified model, designed to represent the structure, is considered in Chapter 4. The necessity of this consideration is demonstrated on the basis of the example of the prismatic bar subjected to combined bending and compression. The method of investigation is similar to that of Chapter 3, the only modification being the allowance for small deviations; the smallness of these deviations is expressed by neglecting all second order terms in these deviations. The most important result of this investigation is that with an unstable buckling state of the model the buckling load of the structure may be considerably lower in consequence of very small differences between structure and model (Sect. 455).[2] Hence the discrepancy between theoretical and experimental critical loads can be explained

---

[1] This term was introduced by Von Kármán and Tsien [24].

[2] This drop of the critical load is illustrated by Fig. 2 (p. 137). Here ϵ is a measure of the magnitude of the initial deviations, λ_1 is the buckling load of the model, λ^* the buckling load of the structure. Note the vertical tangent to the $\epsilon - \lambda^*$ curve in the point of transition of structure to model $\epsilon = 0$, $\lambda^* = \lambda_1$.

purely elastically by assuming small deviations of such a structure from the corresponding model; moreover, the great sensibility of the buckling load of the structure for small variations in the magnitude of the deviations explains too the wide divergency of experimental results. It is self-evident that the collapse is precipitated by elastic failure of the material; this complication, however, is not further considered.

The most interesting example for application of the theory developed here is the axially compressed thin-walled cylinder; for in this technically important case the great discrepancy between the theoretical and experimental buckling loads has up to now not been accounted for satisfactorily. To apply the general theory it is necessary to dispose of the knowledge of the elastic energy of the thin-walled cylindrical shell for finite displacements. With a view to the possibility of application to other shell structures as well, a general theory of thin shells for finite displacements is given in Chapter 5. It is based on the same assumptions as the well-known technical theory of shells for infinitesimal displacements (Sect. 51). After calculating the strains and the elastic potential (Sect. 53, 54) the consequences of these assumptions are looked into more closely in Sect. 55. The most important conclusion to which they lead is that the elastic energy is the sum of stretching energy and bending energy. Finally, in Sect. 57 the influence of small deviations is again considered.

Before passing on to the already rather complicated theory of the thin-walled cylinder it seemed advisable to deal first with some simpler applications to elucidate the general theory (Ch. 6). The well-known problem of the elastica was chosen as a first example (Sect. 61). Next, in Sect. 62 Cox's problem [23] is dealt with. Finally, in Sect. 63 the problem of equivalent width of compressed flat rectangular plates is considered. In this case the general theory supplies a justification of the theory of Marguerre – Trefftz [19], based on more arbitrary assumptions.

The last application is Chapter 7 concerns the axially compressed cylindrical shell. Neglect of boundary conditions leads to the same result for the buckling load as known from existing literature (Sect. 74). The same neglect leads to the conclusion

that equilibrium in the buckling state is unstable (Sect. 75). In Sect. 76 the neighbouring states of equilibrium at loads in the neighbourhood of the critical load are investigated. It is found that all existing neighbouring states of equilibrium are unstable. As far as possible the results obtained are compared with a paper by Von Kármán and Tsien (Sect. 51), which became available during the compilation of the present treatise. Because the displacements assumed by the above-mentioned authors are less general their results are less good at least for loads in the neighbourhood of the critical load. In Sect. 77 the influence of small deviations from the true cylindrical form is discussed. As the investigation is rather complicated, the detailed calculations are restricted to one form of deviations. In this case a very marked decrease of the buckling load is found already with very small deviations. This result is in striking contrast to that of Donnell [22] as the amplitude of the initial deviations, required to explain the discrepancy between the mean value of the experimental buckling loads and the theoretical buckling load, according to the present theory amounts to about 10% of the amplitude required by Donnell. Although of course it is desirable to extend the investigation to other forms of deviations, at this stage already the conclusion may be drawn that the theory given here supplies an explanation of the large discrepancy between theoretical and experimental critical loads. The wide divergency of experimental results is likewise satisfactorily accounted for by the extreme sensibility of the critical load for small variations in the magnitude of the deviations.

INTRODUCTION

For a long time various investigators have been interested in the problem of elastic stability. Euler's pioneering investigations of the elastica [1] have probably become most widely known.

If some brief remarks by Thompson [2] are disregarded, the first attempt to derive a general stability theory seems to have been undertaken by Bryan [3]. His considerations are based on the energy criterion according to which an equilibrium state is stable or unstable depending on whether or not the potential energy possesses a true minimum in that state. However, when calculating the elastic energy, he takes into account only terms which are quadratic in the displacements. In that case the second variation is of the same form as the energy itself, and thus is always positive. If the displacements are prescribed at all points where forces are acting on the body, in which case the constant energy of the applied forces can be equated to zero, then it follows that the variation of the total potential energy is equal to the variation of elastic energy. Hence, the second variation of the total potential energy is always positive so that instability would be excluded in such cases.[1] This conclusion is contradicted by experience, for instance, in the example of the axially compressed prismatic bar which is subjected to a prescribed end shortening.

Southwell [4] has derived equations which govern the so-called neutral equilibrium of the uniform state of stress and deformation. He considers a neighboring deformed state which is derived from the uniform state by infinitesimal additional displacements u, v, w. Apart from the loads given by the initial force field, which are required for the maintenance of the initial state, additional loads should be applied to the body

[1] Thomson [2] pointed already at this circumstance.

in order that it is again in equilibrium. On account of the smallness of the displacements u, v, w these extra loads are homogeneous in and linearly dependent on u, v, w and their derivatives. Equilibrium in the initial uniform state is called neutral if a neighboring state exists for which the required additional loads are supplied by the initial force field. The equations and boundary conditions which hold for the neighboring state are linear and homogeneous in the displacements u, v, w and their derivatives. The equilibrium of the initial state will be neutral only when the equations admit a nontrivial solution — which in that case is determined apart from a constant factor on account of the homogenity of the equations and boundary conditions.[1] For the description of the state of stress and deformation, Southwell chooses as independent variables the coordinates of a point of the undeformed body. He also relates the stresses to the surface elements of this state.

Biezeno and Hencky [5] have made an extension of Southwell's considerations in dealing with the general state of stress with a corresponding force field acting on the body. Consideration is given to a body in a supposedly known state of stress I, and to a stress state II that has been derived from I by means of infinitesimal displacements. Equilibrium in state I is again neutral if there exists a state of equilibrium II such that the required additional loads, which are homogeneous and linear in the additional displacements, are again supplied by the external force field. Again, the equations of neutral equilibrium are homogeneous and linear. The coordinates of a point in state I are chosen as independent variables while the stresses are always related to the surface elements of the corresponding state. Consequently, it is not necessary to know the manner in which state I has been obtained from the undeformed state. It is only necessary to formulate an elasticity law for the transition of state I to state II.

[1] In some cases the equations possess several independent solutions (u_j, v_j, w_j). The general solution ($\sum c_j u_j$, etc.) possesses in that case a corresponding number of undetermined coefficients. Such a case can occur for an axially compressed, elastically supported bar (see [52]). For some ratios of the stiffness of the elastic supports to the bending stiffness, the bar possesses at the same load two buckling modes which differ in the number of waves.

Reissner [6] has tried to improve on Bryan's argument which utilized the energy criterion.

Trefftz [7, 8] has developed a stability theory based on the theory of elasticity for finite deformations. He also makes use of the energy criterion for the prediction of stability. A sufficient condition for stability is that the second variation of the total potential energy should be positive for every kinematically possible variation of the displacements. The stability limit will be reached if the second variation becomes positive semi-definite; i.e., that the second variation is zero for one or more suitably chosen displacement variations, but non-negative for any other possible displacement variation. In his first paper, Trefftz chooses as independent variables the coordinates of a point in the undeformed state. In his second publication he chooses as independent variables the coordinates of a point in the deformed state I the stability of which is to be investigated. In agreement with this, the stresses in state II which deviate from state I are in his first publication related to the surface elements of the undeformed state and in his second publication to the surface element of state I. The tractions in state II are decomposed in the directions of those line elements which are parallel to the coordinate axes in the undeformed state and state I, respectively. The stability equations (derived from state II which deviates from state I in an infinitesimal sense) then take a rather simple form.

In connection with the treatise of Trefftz, Marguerre [9] has examined the relation between the various minimum principles as they are applied to stability problems in engineering, and the general principle of the minimum of the potential energy. He also gives a detailed illustration by means of the example of the axially compressed bar.

A further development of the theory of elasticity for finite displacements, only briefly indicated by Trefftz, has been given by Kappus [10].[1] He derives the equations for neutral equilibrium from the general equations of equilibrium. It appears along with this, that the equilibrium state is neutral in the sense of Southwell and Biezeno-Hencky when the stability limit, as defined by Trefftz, is reached.

Also Biot [11–14] has derived equations for neutral equilibrium from a theory of elasticity for finite deformation.[1] For simplicity he introduces a new way to describe the deformed state. With this, he succeeds in bringing the stability equations to such a form that it is possible to render a mechanical meaning of the various terms in the equations. This improved lucidity can be of much value in the search for those terms which may be neglected in the application of these equations to a special problem.

The stability considerations which have so far been established and which were discussed in the foregoing, are restricted to the analysis of neutral equilibrium. They aim in particular at the determination of the stability limit. The phenomena which occur as this limit is reached or possibly exceeded were not considered. This limitation of the extent of the investigations was caused by two circumstances. First, the great mathematical difficulties should be mentioned which obstruct the theoretical treatment of the elastic behavior beyond the stability limit. While it is still possible to analyze the neutral equilibrium states with linear differential equations, the equations describing the elastic behavior beyond the stability limit are no longer linear. In addition, for a long time engineering science was satisfied with the knowledge of the stability limit (buckling load) alone. The point of view had been adopted that for safety

[1] Neither Kappus nor Biot seem to have been acquainted with the older literature about finite deformations of an elastic body. Already in 1839 Green expressed the assumption of the existence of an elastic potential for finite deformations; by use of this assumption, Kirchhoff [16] and Thomson [2] derived the equilibrium equations. Other publications in the field of finite deformations are of minor importance for the stability analysis following here, but those by Hamel [17] and Murnaghan [18] should still be mentioned.

reasons the load on the structure should always be kept below this limit, so that an investigation of what occurs beyond this limit seemed superfluous. However, it has been known for some time that certain structures are able to withstand loads significantly above the buckling load, and this without stresses in excess of the elastic limit of the material. (For instance, the flat plate simply supported along its edges and subjected to an inplane thrust.) Indeed, in modern engineering – especially in aeronautics where economy of weight is of primary importance – loading in excess of the buckling load has already been tolerated. The theoretical treatment of this plate problem is presented by Marguerre and Trefftz [19,20]. The agreement of their results with experimental results is very good if the loads are not too far in excess of the buckling load. On the other hand, it has been established that experimentally determined buckling loads of several shell structures (such as axially compressed thin-walled cylinders) are considerably below the theoretical stability limit. Moreover, the experimental results show much scatter. An explanation for this given by Flügge [21] and by Donnell [22] has been questioned by Cox [23] and by Von Kármán and Tsien [24]. The explanation is based on the initial deviation of the test model geometry from that of the perfect cylinder, which deviations will cause stresses beyond the yield limit at moderate loads. The last two of these authors remark that the initial imperfections must be several times the wall thickness of the cylinder in order to serve as an explanation of the low experimental values; such a deviation would not have escaped the attention of the investigators. Further, Cox, Von Kármán and Tsien point out that the explanation given by Flügge and by Donnell implies a gradual occurrence of buckles, while experiments have shown that buckling takes place in a sudden, almost explosive manner. Also, the great scatter in the test results has not been cleared up satisfactorily by this explanation. On the other hand, the possibility to explain the behavior of the cylinder from a purely elastic point of view was illustrated by Cox [23] by means of a suggestive bar model. Von Kármán, Dunn and Tsien also proposed this model but in a somewhat different form [25].

The examples mentioned above show clearly that the stability theories so far established do not suffice. They should be supplemented with a theory which describes also

the different behavior of the structure at loads in the neighborhood of the theoretical buckling load. The present treatise intends to give such an extension. It is assumed that the loads which act on the structure can be represented by a product of a unit load system and an as yet undetermined load parameter λ. One seeks equilibrium states corresponding to a given value of λ as well as the stability of these states. Of particular importance in engineering are those equilibrium states which are obtained by continuous deformation from the undeformed state as λ is monotonically increased from zero. This so-called fundamental state is always stable for sufficiently small values of λ, in agreement with the uniqueness theorem of Kirchoff (see [39], and Sect. 31). On the other hand, the fundamental state in many cases becomes unstable as λ exceeds a certain critical value λ_1. The load corresponding to this limit value, (equilibrium is at the stability limit and hence also neutral, see [10]) is called the buckling load or critical load. Consequently, apart from the fundamental state, infinitesimally near states of equilibrium exist at the buckling load. It is then to be expected that neighboring equilibrium states also exist, which are obtained by small but now finite displacements, at loads slightly differing from the buckling load.[1] Further, the suspicion arises that the difference in elastic behavior of various structures is connected with the different nature of the neighboring equilibrium states corresponding to these loads. From a preliminary tentative investigation, it appears that the character of the equilibrium states is essentially dependent on the stability of equilibrium at the buckling load; i.e., on the question as to whether the limiting case of equilibrium should still be reckoned among the stable or among the unstable states of equilibrium.[2]

---

[1]For an illustration of this concept see figures 1a-d (page 93). Here (a) is a measure of the displacements from the fundamental state to an adjacent state of equilibrium.

[2]Some possibilities for neighboring equilibrium states are shown in figures 1a-d (page 93). The figures 1a, b, d relate to cases in which equilibrium is unstable at the buckling load, fig. 1c relates to the case in which equilibrium is stable at the buckling load. The characteristic difference is that in the cases first mentioned, adjacent states of equilibrium for loads smaller than the buckling load do exist, while in the latter case such adjacent states do not exist.

Therefore, in the first place, equilibrium at the stability limit should be examined more closely. However, it seemed desirable to give first a brief summary of the theory of elasticity for finite deformations as the stability analysis belongs essentially to the domain of the nonlinear theory of elasticity (Chapter 1).

In Chapter 2 the general stability theory is treated. After an account of the theory of Trefftz in the first two sections, some of its assumptions are examined more closely in Sect. 23. The following sections consider equilibrium at the stability limit (Sect. 24-27); it appears that "in general" this equilibrium is unstable (Sect. 25). In Sect. 28 the method of analysis developed is related to Mayer's investigations on the minima of functions of a finite number of variables [31].

In Chapter 3, the equilibrium states at loads in the neighborhood of the buckling load are investigated; the approximate method used for this purpose yields better results accordingly as the load is closer to the buckling load. The nature of these states of equilibrium indeed appears to be governed by the stability of equilibrium at the buckling load (Sect. 35, 36). However, a restriction should be made with respect to the nature of the problems treated which is inherent in the method of investigation (Sect. 37). By this method one is only able to treat buckling problems corresponding to a so-called branching point of equilibrium; consequently the so-called snapthrough problems are not considered. Finally an extension of the theory is possible, with loads further removed from the buckling load. This is treated in Sect. 38. The most important result of Chapter 3 is that for stable equilibrium at the buckling load (the critical state), neighboring states of equilibrium can exist only for loads greater than the buckling load; these states are stable. Therefore, disregarding the possibility of stresses in excess of the elasticity limit, loads above the buckling load can be sustained. For an unstable critical state on the other hand, neighboring equilibrium states do exist at loads smaller than the buckling load; these states are unstable. It is true that in some cases stable equilibrium states also exist at loads greater than the buckling load, but these states can only be reached by passing through the unstable critical state, so that their practical significance is to say the least doubtful.

The theory of Chapter 3 does not yet give an explanation of the fact that for some structures the experimental buckling loads are considerably smaller than the theoretical buckling loads. Such an explanation is obtained in Chapter 4 through a study of the influence of small imperfections in the actual structure in comparison to an idealized model. The necessity of this consideration is illustrated by the example of the straight bar subjected to combined bending and compression. The most important result of this analysis is, that if the critical state is unstable, the buckling load of the structure may be considerably smaller than that of the idealized model due to the presence of small deviations; consequently the difference between theoretical and experimental buckling loads can in principle be explained under purely elastic conditions by use of the assumption of small deviations between the real structure and the model. It goes without saying that the collapse of the structure will be precipitated if there are stresses in excess of the elastic limit. This complication will not be further considered.

The most interesting application for the theory developed is given by the example of an axially compressed thin-walled cylinder, as the great difference between theoretical and experimental buckling loads for this very important case in engineering has never been explained satisfactorily. The application of the general theory requires an expression for the elastic energy of a thin-walled cylindrical shell undergoing finite displacements. In view of a possible application to other shell structures, a general shell theory for finite displacements is given in Chapter 5. This theory is based on the assumptions of the well-known shell theory for infinitesimal displacements (Sect. 51). After calculation of the deformations and the elastic potential (Sect. 53 and 54) the consequences of these assumptions are studied more closely in Sect. 55. The most important consequence is that the elastic energy is the sum of the membrane and bending energies. Finally, in Sect. 57 consideration is again given to the influence of small imperfections.

As the analysis of the thin-walled cylinder is already rather complicated, it seemed desirable to treat first some simpler cases for illustration of the general theory (Chapter 6). The first example chosen is the well-known problem of the elastica

(Sect. 61). Further, in Sect. 62 the problem of Cox is dealt with. Chapter 6 is concluded in Sect. 63 with consideration of the problem of the simply supported flat plate subjected to a uniformly distributed in-plane edge thrust. In this case the general theory gives a justification of the theory of Marguerre-Trefftz [9] which was based on more intuitive assumptions. As a last application, the axially compressed cylindrical shell is treated in Chapter 7. The "classical" result for the buckling load, as is well known from the literature, is found if boundary effects are neglected. For this case the equilibrium is unstable in the critical state (Sect. 75). The equilibrium states at loads in the neighborhood of the buckling load are investigated in Sect. 76. It is found that all neighboring states of equilibrium are unstable. The results obtained are, as far as possible, compared to those published by Von Kármán and Tsien [52] which became available during the preparation of this treatise. As the displacements assumed by these writers are less general, their results are less accurate, at least for loads in the neighborhood of the buckling load. The influence of small deviations from the true cylindrical form are investigated in Sect. 77. As this analysis is rather complicated, the evaluation remains restricted to one form of imperfection. It is found that a very marked decrease of the buckling load occurs even for small imperfections. Although it is of course desirable to extend the analysis to other forms of imperfections, at present it can already be concluded that the theory presented gives an explanation for the large discrepancy between theoretical and experimental results; also the great scatter of the experimental results is satisfactorily explained by the sensitivity of the buckling load to small differences in the magnitude of the imperfections.

Chapter 1
THEORY OF ELASTICITY FOR FINITE DISPLACEMENTS

11. DEFORMATIONS BY FINITE DISPLACEMENTS

In this section a short summary will be given of the theory of deformations [26, 27].

The cartesian coordinates x_1, x_2, x_3 of a point in the undeformed body are introduced as independent variables.

Every point $P(x_i)$ is subject to a displacement with components u_i in the direction of the coordinate axes. Hence, the coordinates of this point in the deformed state will be $x_i + u_i$. The deformations in the immediate neighborhood of the point P are completely described by

$$\gamma_{ij} = \gamma_{ji} = \frac{\partial u_i}{\partial x_j} + \frac{\partial u_j}{\partial x_i} + \sum_{h=1}^{3} \frac{\partial u_h}{\partial x_i} \frac{\partial u_h}{\partial x_j} \qquad \begin{array}{l} i = 1, 2, 3. \\ j = 1, 2, 3. \end{array} \tag{11.1}$$

The new length $d\ell'$ of a line element through P, which originally had the length $d\ell$, and whose orientation in space is given by the angles α_i, can be expressed by

$$(d\ell')^2 = (d\ell)^2 \Big\{ (1 + \gamma_{11}) \cos^2 \alpha_1 + (1 + \gamma_{22}) \cos^2 \alpha_2 + (1 + \gamma_{33}) \cos^2 \alpha_3 + 2\gamma_{12} \cos\alpha_1 \cos\alpha_2 + 2\gamma_{23} \cos\alpha_2 \cos\alpha_3 + 2\gamma_{31} \cos\alpha_3 \cos\alpha_1 \Big\}. \tag{11.2}$$

The number $e = (d\ell' - d\ell)/d\ell$ corresponding to the direction of $d\ell$ is called the specific strain. If this direction is parallel to one of the coordinates axes, it follows that

$$e_i = \sqrt{1 + \gamma_{ii}} - 1. \tag{11.3}$$

In the deformed state the line elements which originally were parallel to the coordinate axes x_i and $x_j (i \neq j)$ will enclose the angles $\varphi_{ij} = \varphi_{ji}$ determined by

$$\cos \varphi_{ij} = \frac{\gamma_{ij}}{\sqrt{(1 + \gamma_{ii})(1 + \gamma_{jj})}} \qquad (i \neq j). \tag{11.4}$$

The relations (11.3) and (11.4) describe geometrically the components of deformation.

In the literature mentioned before, proofs are given that there exists at least one system of mutually perpendicular directions at the point P for which among the six deformation components the quantities $\gamma_{hk} (h \neq k)$ are identically zero. These axes are called principal axes and the corresponding deformation quantities $\Gamma_{hk} = 0$ for $h \neq k$ and $\Gamma_{hh} = \Gamma_h$ determine the principal extensions E_h. The latter quantities are determined by

$$E_h = \sqrt{1 + \Gamma_h} - 1, \tag{11.5}$$

while the Γ_h represent the three real roots of the cubic equation

$$\begin{vmatrix} \gamma_{11} - \Gamma & \gamma_{12} & \gamma_{13} \\ \gamma_{21} & \gamma_{22} - \Gamma & \gamma_{23} \\ \gamma_{31} & \gamma_{32} & \gamma_{33} - \Gamma \end{vmatrix} = 0. \tag{11.6}$$

The magnitude of the principal strains is independent of the choice of the coordinates. This leads to the conclusion that the following three invariants exist

$$\left.\begin{aligned}
I_1 &= \gamma_{11} + \gamma_{22} + \gamma_{33} = \Gamma_1 + \Gamma_2 + \Gamma_3, \\
I_2 &= \gamma_{11}\gamma_{22} + \gamma_{22}\gamma_{33} + \gamma_{33}\gamma_{11} - \left(\gamma_{12}^2 + \gamma_{33}^2 + \gamma_{31}^2\right) \\
&= \Gamma_1\Gamma_2 + \Gamma_2\Gamma_3 + \Gamma_3\Gamma_1, \\
I_3 &= \gamma_{11}\gamma_{22}\gamma_{33} + {}^2\gamma_{12}\gamma_{23}\gamma_{31} - \left(\gamma_{11}\gamma_{23}^2 + \gamma_{22}\gamma_{31}^2 + \gamma_{33}\gamma_{12}^2\right) = \Gamma_1\Gamma_2\Gamma_3.
\end{aligned}\right\} \quad (11.7)$$

12. THE ELASTIC POTENTIAL

In general, the law of elasticity offers a relation between the deformation and the internal stresses. However, it can also be formulated in an indirect way by means of the introduction of the elastic potential. It is assumed that each volume element of the body possesses a potential energy which depends on the local state of deformation. As the state of deformation is completely described by the components of deformation (11.1), the elastic potential energy per unit of volume can be written as

$$A = A(\gamma_{ij}) \tag{12.1}$$

where thermo-elastic phemonena are left out of consideration.

Experiments have shown that the elastic behavior of most construction materials is described with sufficient accuracy by an elasticity law of the form (12.1). For infinitesimal deformations, A is a homogeneous and positive definite quadratic function of its arguments. With some exceptions, for instance cast iron, for small but finite deformations it has so far not appeared that terms of order higher than the second play a significant role; this should not be surprising as in the elastic range the components of deformation are very small for most materials (order of magnitude 0.001). Consequently, in the following it will be assumed that the elastic potential is a homogeneous and positive-definite function of the deformation components. It follows from (11.1) that it will be a function of the fourth order of the

displacement derivatives. Alternatively to the use of the deformation components γ_{ij}, the deformed state can be completely described by the direction and magnitude of the principal stresses. For an isotropic material, the elastic potential must be independent of the directions of the principal strains. Furthermore, the magnitude of the principal stresses is fully determined by the invariants (1.7), which leads to the proposition

$$A = A(I_1, I_2, I_3). \tag{12.2}$$

The only homogeneous quadratic function of the deformation components of the form (12.2) is given by

$$A = \alpha_1 I_1^2 + \alpha_2 I_2, \tag{12.3}$$

in which α_1 and α_2 are material constants in the case of a homogeneous material. If the material is inhomogeneous the quantities α_1 and α_2 will generally be functions of the coordinates x_i. By use of (11.7), it is possible to write (12.3) in the form

$$A = \alpha_1 \left\{ \Gamma_1^2 + \Gamma_2^2 + \Gamma_3^2 + \frac{2\alpha_1 + \alpha_2}{\alpha_1} (\Gamma_1\Gamma_2 + \Gamma_2\Gamma_3 + \Gamma_3\Gamma_1) \right\}.$$

This expression is positive definite if and only if [33]

$$\alpha_1 > 0 \quad , \quad -1 < \frac{2\alpha_1 + \alpha_2}{\alpha_1} < 2,$$

from which follows that

$$\alpha_1 > 0 \quad , \quad 0 > \alpha_2 > -3\alpha_1. \tag{12.4}$$

For infinitesimal deformations, (12.3) must reduce to the elastic potential of the linear theory of elasticity. Comparison of (12.3) with [34] yields with the usual definition of the constants of elasticity G and m

$$\alpha_1 = \frac{1}{4} G \frac{m - 1}{m - 2} \quad , \quad \alpha_2 = - \frac{1}{2} G .$$

It follows then that with $G > 0$ and $m > 2$ inequalities (12.4) are satisfied. Thus, the elastic potential takes the following form

$$A = \frac{1}{4} G \frac{1}{m - 2} \left\{ (m - 1) I_1^2 - 2(m - 2) I_2 \right\} . \tag{12.5}$$

13. HAMILTON'S PRINCIPLE AND THE EQUATIONS OF MOTION

The equations of motion can be derived from Hamilton's principle [2]. Following this principle, the natural motion of holonomic mechanical system between the time points t_0 and t_1 is determined in such a way that

$$\delta \int_{t_0}^{t_1} (T - V)\, dt + \int_{t_0}^{t_1} \delta W\, dt = 0 . \tag{13.1}$$

This variation corresponds to the variation of the natural motion to a neighboring motion which differs from the original one in an infinitesimal sense and which yields the real configuration at the points t_0 and t_1. The neighboring motion, as well as the natural one, should satisfy the kinematical conditions imposed on the mechanical system. The quantities T and V are the kinetic and potential energy of the system respectively; δW is the work that would have been done by the external forces at the time t if the mechanical system were brought into the corresponding state, which differs from the original state in infinitesimal sense.

The kinetic energy of the elastic body is given by

$$T = \iiint \frac{1}{2}\rho \sum_{i=1}^{3} \left(\frac{\partial u_i}{\partial t}\right)^2 dx_1 dx_2 dx_3 . \tag{13.2}$$

In this expression ρ stands for the mass density of the undeformed body and integration should be carried out over the volume of the undeformed body.

According to (12.1), the elastic potential energy is determined by

$$V = \iiint A(\gamma_{ij})\, dx_1 dx_2 dx_3 , \tag{13.3}$$

where integration should be carried out over the volume of the undeformed body.

If ρX_i are the components of body forces in the deformed state which are related to the volume elements of the undeformed body, then the work done by these forces on transition to the neighboring state is given by

$$\delta W_1 = \iiint \rho \sum_{i=1}^{3} X_i \delta u_i dx_1 dx_2 dx_3 . \tag{13.4}$$

In this expression δu_i represents the variation of the displacement to the neighboring state.

It is assumed that surface tractions are working on a part 0 of the surface, of which the components p_i are related to the surface elements of the undeformed state. On the remaining part 0' of the surface the displacements are supposed to be prescribed. During transition to a neighboring configuration the surface tractions perform the work

$$\delta W_2 = \iint_0 \sum_{i=1}^{3} p_i \delta u_i df . \tag{13.5}$$

The work done by the surface tractions acting on the part $0'$ of the surface is zero because the displacement variations δu_i of that part of the surface are zero.

Hamilton's principle is now formulated

$$\int_{t_0}^{t_1} dt \iiint \rho \sum_{i=1}^{3} \frac{\partial u_i}{\partial t} \delta \frac{\partial u_i}{\partial t} dx_1 dx_2 dx_3 - \int_{t_0}^{t_1} dt \iiint \sum_{i,j} \frac{\partial A}{\partial \gamma_{ij}} \delta \gamma_{ij} dx_1 dx_2 dx_3 +$$

$$+ \int_{t_0}^{t_1} dt \iiint \rho \sum_{i=1}^{3} X_i \delta u_i dx_1 dx_2 dx_3 + \int_{t_0}^{t_1} dt \iint_0 \sum_{i=1}^{3} p_i \delta u_i df = 0 . \tag{13.6}$$

In the second integral, summation should be carried out over the six combinations of i and j.

After the use of

$$\delta u_i = 0 \quad \text{for} \quad t = t_0 \quad \text{and} \quad t = t_1$$

and of integration by parts, the first integral reduces to

$$\int_{t_0}^{t_1} dt \iiint \rho \sum_{i=1}^{3} \frac{\partial u_i}{\partial t} \delta \frac{\partial u_i}{\partial t} dx_1 dx_2 dx_3 = - \int_{t_0}^{t_1} dt \iiint \rho \sum_{i=1}^{3} \frac{\partial^2 u_i}{\partial t^2} \delta u_i dx_1 dx_2 dx_3 . \tag{13.7}$$

Here use was made of the interchangeability of the sequence of the operations δ and $\partial/\partial t$.

For the reduction of the second integral the following expression is derived from (11.1)

$$\delta\gamma_{ij} = \delta\frac{\partial u_i}{\partial x_j} + \delta\frac{\partial u_j}{\partial x_i} + \sum_{h=1}^{3}\left(\frac{\partial u_h}{\partial x_j}\,\delta\frac{\partial u_h}{\partial x_i} + \frac{\partial u_h}{\partial x_i}\,\delta\frac{\partial u_h}{\partial x_j}\right).$$

Next, all terms with variations of the derivatives of u_m are lumped together. For $m = 1$ these are

$$\left\{2\frac{\partial A}{\partial\gamma_{11}}\left(1 + \frac{\partial u_1}{\partial x_1}\right) + \frac{\partial A}{\partial\gamma_{12}}\frac{\partial u_1}{\partial x_2} + \frac{\partial A}{\partial\gamma_{13}}\frac{\partial u_1}{\partial x_3}\right\}\delta\frac{\partial u_1}{\partial x_1} +$$

$$+\left\{\frac{\partial A}{\partial\gamma_{21}}\left(1 + \frac{\partial u_1}{\partial x_1}\right) + 2\frac{\partial A}{\partial\gamma_{22}}\frac{\partial u_1}{\partial x_2} + \frac{\partial A}{\partial\gamma_{23}}\frac{\partial u_1}{\partial x_3}\right\}\delta\frac{\partial u_1}{\partial x_2} +$$

$$+\left\{\frac{\partial A}{\partial\gamma_{31}}\left(1 + \frac{\partial u_1}{\partial x_1}\right) + \frac{\partial A}{\partial\gamma_{32}}\frac{\partial u_1}{\partial x_2} + 2\frac{\partial A}{\partial\gamma_{33}}\frac{\partial u_1}{\partial x_3}\right\}\delta\frac{\partial u_1}{\partial x_3}. \qquad (13.8)$$

For $m = 2$ and $m = 3$ similar forms are found.

For brevity is introduced

$$\frac{\partial A}{\partial\gamma_{ii}} = \frac{1}{2}k_{ii}, \quad \frac{\partial A}{\partial\gamma_{ij}} = \frac{\partial A}{\partial\gamma_{ji}} = k_{ij} = k_{ji} \quad (i \neq j). \qquad (13.9)$$

Expression (13.8) can now be written

$$\sum_{j=1}^{3}\left(k_{j1} + \sum_{h=1}^{3}k_{jh}\frac{\partial u_1}{\partial x_h}\right)\delta\frac{\partial u_1}{\partial x_j}.$$

It follows that the second integral of (13.6) can be written

$$\int_{t_0}^{t_1} dt \iiint \sum_{i,j} \frac{\partial A}{\partial \gamma_{ij}} \delta\gamma_{ij} dx_1 dx_2 dx_3 =$$

$$= \int_{t_0}^{t_1} dt \iiint \sum_{i=1}^{3} \left\{ \sum_{j=1}^{3} \left(k_{ji} + \sum_{h=1}^{3} k_{jh} \frac{\partial u_i}{\partial x_h} \right) \delta \frac{\partial u_i}{\partial x_j} \right\} dx_1 dx_2 dx_3 . \qquad (13.10)$$

If the normal to the surface is denoted by n, where the outward direction is assumed to be positive, then, after interchanging the sequence of variation and differentiation and after application of Gauss's theorem, (13.10) becomes

$$\int_{t_0}^{t_1} dt \iiint \sum_{i,j} \frac{\partial A}{\partial \gamma_{ij}} \delta\gamma_{ij} dx_1 dx_2 dx_3 =$$

$$= \int_{t_0}^{t_1} dt \iint \sum_{i=1}^{3} \left\{ \sum_{j=1}^{3} \left(k_{ji} + \sum_{h=1}^{3} k_{jh} \frac{\partial u_i}{\partial x_h} \right) \cos (x_j , n) \right\} \delta u_i df +$$

$$- \int_{t_0}^{t_1} dt \iiint \sum_{i=1}^{3} \left\{ \sum_{j=1}^{3} \frac{\partial}{\partial x_j} \left(k_{ji} + \sum_{h=1}^{3} k_{jh} \frac{\partial u_i}{\partial x_h} \right) \right\} \delta u_i dx_1 dx_2 dx_3 . \qquad (13.11)$$

With (13.7) and (13.11) equation (13.6) reduces to

$$\int_{t_0}^{t_1} dt \iiint \sum_{i=1}^{3} \left\{ \sum_{j=1}^{3} \frac{\partial}{\partial x_j} \left(k_{ji} + \sum_{h=1}^{3} k_{jh} \frac{\partial u_i}{\partial x_h} \right) + \rho X_i - \rho \frac{\partial^2 u_i}{\partial t^2} \right\} \delta u_i dx_1 dx_2 dx_3 +$$

$$- \int_{t_0}^{t_1} dt \iint_0 \sum_{i=1}^{3} \left\{ \sum_{j=1}^{3} \left(k_{ji} + \sum_{h=1}^{3} k_{jh} \frac{\partial u_i}{\partial x_h} \right) \cos (x_j , n) - p_i \right\} \delta u_i df = 0 . \qquad (13.12)$$

Since (13.12) should be satisfied for arbitrary variations δu_i the coefficients of δu_i in the integrals must be equal to zero.

For the points in the interior of the body it follows that

$$\sum_{j=1}^{3} \frac{\partial}{\partial x_j}\left(k_{ji} + \sum_{h=1}^{3} k_{jh} \frac{\partial u_i}{\partial x_h}\right) + \rho X_i - \rho \frac{\partial^2 u_i}{\partial t^2} = 0 \,, \; i = 1,2,3. \tag{13.13}$$

and for points on the part of 0 of the surface the boundary conditions

$$\sum_{j=1}^{3}\left(k_{ji} + \sum_{h=1}^{3} k_{jh} \frac{\partial u_i}{\partial x_h}\right)\cos(x_j, n) - p_i = 0 \,, \quad i = 1,2,3. \tag{13.14}$$

On the part $0'$ of the surface

$$u_i = \text{prescribed} \tag{13.15}$$

Equation (13.13) and (13.14) should of course agree with the equations of Kappus [10], which were derived by consideration of the equilibrium of tensile and inertial forces acting on an infinitesimal element of the body. Indeed the principal equations and boundary conditions of Kappus for his stress components k_{ij} are formally identical to equations (13.13) and (13.14). At the same time, in order to ensure the existence of an elastic potential, Kappus' stress components should satisfy conditions which are expressed by equations of the form (13.9). The elastic potential is then also the specific energy of deformation.

The equations governing the elastic equilibrium can be obtained from (13.13) if one equates to zero the derivatives with respect to time; they read

$$\sum_{j=1}^{3} \frac{\partial}{\partial x_j}\left(k_{ji} + \sum_{h=1}^{3} k_{jh} \frac{\partial u_i}{\partial x_h}\right) + \rho X_i = 0 \,; \; i = 1,2,3. \tag{13.16}$$

The boundary conditions remain identically valid.

Chapter 2
STABILITY OF EQUILIBRIUM

21. THE STABILITY CRITERION

For the analysis of the stability of a mechanical system, the method of small vibrations or the energy method are commonly used. The method first mentioned consists of the derivation of equations of motion for small displacements from the equilibrium state. The smallness of the displacements makes it possible to take into account only terms which are homogeneous and linear in the displacements or their derivatives. The homogeneous and linear equations derived in this manner have solutions whose dependence on time is characterized by their common factor e^{pt}. The equilibrium state under consideration is stable if and only if, for all solutions of this form, the real part of p is nonpositive (the possible complication of multiple roots of the characteristic equations are herewith disregarded). The stability analysis by Southwell [4] and Biezeno-Hencky [5] can be related to this method; they investigate under which circumstances the quantity p becomes zero.

The energy criterion states that an equilibrium configuration of a mechanical system is stable if and only if the work done by the external loads during transition to a neighboring kinematically possible configuration is not greater than the increase of the internal potential energy. The application of this criterion is considerably simplified if the assumption is made that the external forces also possess a potential energy. In that case, the work done by these forces is given by the difference between the potential energy of the forces in the state of equilibrium and that of the neighboring state. Then, the energy criterion demands that for stability the total energy, consisting of the sum of internal and external energies, should possess a minimum in the equilibrium state.

In the case of an elastic body for which the potential energy consists of a sum of one or more integrals, whose integrands are functions of the displacements and their derivatives. this minimum condition requires yet more precise definition. If the displacements of the equilibrium state are denoted by U_i and those of neighboring state by $U_i + u_i$, the potential energy $P(v_i)$ possesses a minimum for $v_i = U_i$ if and only if it is possible to find two positive constants g and h such that from the inequalities

$$|u_i| < g \; ; \quad \left| \frac{\partial u_i}{\partial x_j} \right| < h$$

which are valid throughout the body, it follows that

$$P(U_i + u_i) \geq P(U_i) \; . \tag{21.1}$$

The methods for the determination of the stability limit [4, 5, 7, 8] as developed from the theory of small vibrations and from the energy criterion are basically identical [10]. Nevertheless, when, in the following, preference is given to the energy criterion, it is because of the possibility offered by this criterion of an extension of the analysis to a closer inspection of the stability at the stability limit.

22. APPLICATION OF THE STABILITY CRITERION

In the application of the energy criterion the assumption will be made that the integrands of $P(U_i + u_i)$ may be expanded into a power series in the displacements and their derivatives according to Taylor's formula. If the sum of the integrals, (the integrands are complete homogeneous functions of the mth order in u_i and their derivatives) are denoted by $P_m[u]$[1], then the stability criterion is

$$P(U_i + u_i) - P(U_i) \equiv P[u] = P_1[u] + P_2[u] + P_3[u] + \ldots \geq 0 \; . \tag{22.1}$$

[1] In the following the subscript i of the coordinates x_i, the displacements U_i and u_i etc. are left out for as far as ambiguity can be excluded.

Besides, it is also assumed that the kinematic conditions to which the extra displacements are subjected, are linear homogeneous relations for the displacements u_i and their derivates. This assumption is satisfied if the kinematic conditions are linear in the total displacements $U + u$. Every linear combination of kinematically possible displacements is in itself again a kinematically possible system of displacements. Consequently, every possible configuration of $U + v$ can be understood as a sample from a bundle of possible configurations $U + \alpha u$, in which α represents a parameter independent of the coordinates[1]. Then condition (22.1) requires that it must be possible to find a positive number k for every kinematically possible system of displacements u, such that from the inequality $|\alpha| < k$ it follows that

$$P_1[\alpha u] + P_2[\alpha u] + P_3[\alpha u] + \ldots \equiv \alpha P_1[u] +$$

$$+ \alpha^2 P_2[u] + \alpha^3 P_3[u] + \ldots \geq 0 . \qquad (22.2)$$

This requirement leads to the following necessary conditions

$$P_1[u] = 0 , \qquad (22.3)$$

$$P_2[u] \geq 0 . \qquad (22.4)$$

Relation (22.3) is identical to the principle of virtual work applied to the equilibrium state. For, according to this principle, the first variation of the potential energy, i.e., the first term of the Taylor expansion

$$P(U_i + \delta U_i) - P(U_i) \equiv P[\delta U] = P_1[\delta U] + P_2[\delta U] + \ldots ,$$

is zero for all kinematically possible, infinitesimal displacements. It is equivalent to requirement (22.3) because of the homogenuity of the condition

$$\delta P \equiv P_1[\delta U] = 0$$

in the displacement variation δU.

1 The cases for which this assumption has not been satisfied require a closer inspection. This could, for instance, result from consideration of an arbitrary kinematically possible configuration $U + v$ as a sample of a system of possible configurations $U + u(\alpha)$. Here α is a parameter independent of the coordinates.

Condition (22.4) requires that the second variation of the potential energy does not become negative for any kinematically possible system of functions. As it appears from its derivation condition (22.4) can for the time being only be appreciated as a necessary condition for stability. The question how far it can at the same time be considered as a sufficient condition will be investigated in Sec. 23.

For the analysis of the second variation, Trefftz [7] writes the integrand of $P_2[u]$ as a difference between two homogeneous positive definite quadratic forms of its arguments. $P_2[u]$ is understood to be a homogeneous quadratic form in which all arguments are the displacements u and their derivatives appearing in the integrand of $P[u]$. In general, this separation shall be different at different points of the body. If the corresponding integrals are denoted by $T_2'[u]$ and $T_2''[u]$, then it follows that

$$P_2[u] = T_2'[u] - T_2''[u] = T_2''[u]\left(\frac{T_2'[u]}{T_2''[u]} - 1\right) .$$

The sign of the second variation is governed by the second factor so that the determination of this sign leads to the analysis of the minimum problem

$$\lambda = \text{Min}\,\frac{T_2'[u]}{T_2''[u]} .$$

Naturally, instead of this problem it is possible to consider the modified problem

$$\omega = \text{Min}\left\{\frac{T_2'[u]}{T_2''[u]} - 1\right\} ,$$

or when written in another form

$$\omega = \text{Min}\,\frac{P_2[u]}{T_2[u]} \tag{22.5}$$

Here, for simplicity in notation, $T_2[u]$ is written in the place of $T_2''[u]$. For this problem let ω_1 be the solution which is obtained for the function $u = u^{(1)}$. Then it follows that $P_2[u]$ is positive definite if ω_1 is positive; on the other hand, if ω_1 is negative $P_2[u]$ posseses negative values. According to Trefftz, in the first case equilibrium is stable, in the second case unstable. According to Trefftz the limiting case $\omega_1 = 0$ corresponds to the stability limit. In that case no decision about stability can yet be made because with $P_2[u^{(1)}] = 0$ nothing can yet be said about the sign of the lefthandside of (22.2). By use of a kinematically possible but otherwise arbitrary system of functions ζ and an arbitrary constant ϵ, the minimum condition for the functions $u^{(1)}$ can be expressed as

$$\frac{P_2\left[u^{(1)} + \epsilon\zeta\right]}{T_2\left[u^{(1)} + \epsilon\zeta\right]} \geq \frac{P_2\left[u^{(1)}\right]}{T_2\left[u^{(1)}\right]} = \omega_1$$

or

$$P_2\left[u^{(1)} + \epsilon\zeta\right] - \omega_1 T_2\left[u^{(1)} + \epsilon\zeta\right] \geq 0 . \tag{22.6}$$

In general, for an integral $S_m[u]$ whose integrand is a complete homogeneous function of order m in the arguments u and their derivatives, the following expansion for $u = v + w$ holds

$$S_m[v + w] = S_m[v] + S_{m-1,1}[v,w] + S_{m-2,2}[v,w] + \dots + \\ + S_{1,m-1}[v,w] + S_m[w] . \tag{22.7}$$

In this expression $S_{m-n,n}[v,w]$ is the integral of all terms which are obtained through development of the integrand of $S_m[v + w]$, and which is homogeneous of the nth order in the functions v and their derivatives and homogeneous of the $(m - n)^{th}$ order in the functions w and their derivatives. The integrals S_{pq} and S_{qp} are interchanged when v and w are interchanged. Besides, the following also holds

$$S_{m-n,n}[v,v] = S_{n,m-n}[v,v] = \binom{m}{m-n} S_m[v] = \binom{m}{n} S_m[v] \quad , \qquad (22.8)$$

in which $\binom{m}{m-n} = \binom{m}{n}$ represents as usual a binomial coefficient. By use of this notation and of the relation

$$P_2\left[u^{(1)}\right] = \omega_1 T_2\left[u^{(1)}\right]$$

(22.6) becomes

$$\epsilon\left\{P_{11}\left[u^{(1)},\zeta\right] - \omega_1 T_{11}\left[u^{(1)},\zeta\right]\right\} + \epsilon^2\left\{P_2[\zeta] - \omega_1 T_2[\zeta]\right\} = 0 .$$

This relation can be satisfied for arbitrary values of ϵ only if $u = u^{(1)}$ and $\omega = \omega_1$ satisfy the equation

$$P_{11}[u,\zeta] - \omega T_{11}[u,\zeta] = 0 . \qquad (22.9)$$

If in addition the second derivatives of the functions are assumed to be continuous, then it follows that (22.9) is equivalent to a system of differential equations and boundary conditions for the functions u. This system can be derived in the same manner as was described in Sec. 13. Because these equations and boundary conditions are homogeneous and linear in the functions u and their derivatives, they possess, in general, non-zero solutions for u (the so called eigenfunctions) only for special values of ω (the so called eigenvalues); these solutions contain an undetermined constant. The smallest eigenvalue ω_1 determines the stability.

23. FURTHER CONSIDERATION OF THE THEORY OF TREFFTZ

Two points in the theory of Trefftz as discussed in the foregoing section need further consideration.

In the first place, it has been assumed that the minimum problem (22.5) indeed possesses a solution, which is by no means an established fact. On the other hand, it can be

established that the ratio $P_2[u]/T_2[u]$ possesses a lower bound since, as it is the difference between $T_2'[u]/T_2''[u]$ and unity, it can never become smaller than -1. If this lower bound is denoted by d, then it follows that every kinematically possible function u should satisfy the inequality

$$\frac{P_2[u]}{T_2[u]} \geq d ,$$

while for every arbitrarily small positive number e, it should be possible to find yet another kinematically possible function v, for which the inequality

$$\frac{P_2[v]}{T_2[v]} < d + e$$

holds. However, the existence of a minimum ω_1 cannot yet be concluded from the existence of a lower bound, since it is not certain that the lower bound will correspond to a kinematically possible function. This difficulty in the energy criterion about the existence of the minimum ω_1 is bypassed through the replacement of ω_1 by the lower bound d. Equilibrium is stable or unstable depending on whether d is positive or negative; in the limiting case $d = 0$ the second variation $P_2[u]$ is at least semi-positive definite, but further conclusions about the stability cannot be drawn for the time being. The significance of this sharper formulation should not be overestimated. The practical application of the energy criterion would meet grave difficulties if the bound d is not also equal to the minimum ω_1. Therefore, the application of the stability analysis is dependent on Trefftz's method whereby the existence of the minimum ω_1 has been assumed; in cases for which such a minimum is nonexistent, the method is bound to fail.

The second point which demands a more extensive consideration concerns the use of the criterion $\omega_1 > 0$ as a sufficient condition for stability (that $\omega_1 = 0$ certainly is not a sufficient condition was mentioned already in Sect. 22). For concerning

condition (22.4) it was remarked in Sect. 22 that this condition, on the basis of its derivation, can only be acknowledged as a necessary condition for stability. The application of the criterion $\omega_1 > 0$ which is based on (22.4) then needs a further motivation. This motivation can be given without many difficulties as the partition of the integrand $P_2[u]$ in two positive definite homogeneous quadratic forms is carried out in such a way that the positive definite integrand of $T_2''[u] \equiv T_2[u]$ contains all the arguments appearing in the integrand of $P[u]$ (22.1) (in addition derivatives of the function u should be considered as separate arguments).

The Taylor expansion of the integrand F of $P[u]$ with respect to its twelve arguments u_i and $\partial u_i/\partial x_j$ which now for simplicity will be called y_λ ($\lambda = 1, 2, \ldots, 12$), can be written as

$$F = \sum_{\mu=1}^{12} \left(\frac{\partial F}{\partial y_\mu}\right)_0 y_\mu + \frac{1}{2} \sum_{(\mu,\nu)=1}^{12} \left(\frac{\partial^2 F}{\partial y_\mu \partial y_\nu}\right)_0 y_\mu y_\nu + R \,, \tag{23.1}$$

whereby

$$F_1[u] = \sum_{\mu=1}^{12} \left(\frac{\partial F}{\partial y_\mu}\right)_0 y_\mu \,, \quad F_2[u] = \frac{1}{2} \sum_{(\mu,\nu)=1}^{12} \left(\frac{\partial^2 F}{\partial y_\mu \partial y_\nu}\right)_0 y_\mu y_\nu \tag{23.2}$$

are the integrands of $P_1[u]$ and $P_2[u]$ respectively, and

$$R = \sum_{(\mu,\nu,\rho)=1}^{12} \frac{1}{6} \left(\frac{\partial^3 F}{\partial y_\mu \partial y_\nu \partial y_\rho}\right)_{\theta_\lambda y_\lambda} y_\mu y_\nu y_\rho =$$

$$= \sum_{(\mu,\nu)=1}^{12} \left\{ \frac{1}{6} \sum_{\rho=1}^{12} \left(\frac{\partial^3 F}{\partial y_\mu \partial y_\nu \partial y_\rho}\right)_{\theta_\lambda y_\lambda} y_\rho \right\} y_\mu y_\nu = \sum_{(\mu,\nu)=1}^{12} A_{\mu\nu} y_\mu y_\nu \,. \tag{23.3}$$

The indices 0, $\theta_\lambda y_\lambda$ attached to the derivatives of F with respect to its arguments indicate that the derivatives are meant for the values 0 and $\theta_\lambda y_\lambda$ $(0 \leq \theta_\lambda \leq 1;$ $\lambda = 1, 2, \ldots, 12)$ of these arguments. For an assessment of the magnitude of the remainder (23.3) the greatest absolute value A is considered. It can take the form

$$A = \sum_{(\mu,\nu)=1}^{12} A_{\mu\nu} y_\mu y_\nu \tag{23.4}$$

subject to the side condition

$$\sum_{\mu=1}^{12} \gamma_\mu y_\mu^2 = 1 , \tag{23.5}$$

in which $\gamma_\lambda (\lambda = 1, 2, \ldots, 12)$ are positive constants. As the absolute values of the quantities y_λ, under the restriction (23.5), cannot become greater than $\frac{1}{\sqrt{\gamma_\lambda}}$, A will satisfy the inequality

$$A \leq \sum_{(\mu,\nu)=1}^{12} | A_{\mu\nu} | \frac{1}{\sqrt{\gamma_\mu \gamma_\nu}} .$$

As A is at the same time the greatest absolute value which the quotient

$$\frac{\sum_{(\mu,\nu)=1}^{12} A_{\mu\nu} y_\mu y_\nu}{\sum_{\mu=1}^{12} \gamma_\mu y_\mu^2}$$

can acquire without restriction (23.5), it follows from here that

$$|\bar{R}| = \left| \sum_{(\mu,\nu)=1}^{12} A_{\mu\nu} y_\mu y_\nu \right| \leq \left\{ \sum_{(\mu,\nu)=1}^{12} \frac{|A_{\mu\nu}|}{\sqrt{\gamma_\mu \gamma_\nu}} \right\} \sum_{\mu=1}^{12} \gamma_\mu y_\mu^2 . \tag{23.6}$$

The positive definite integrand of $G[u]$ and $T_2[u]$ is given in the form

$$G[u] = \sum_{(\mu,\nu)=1}^{12} C_{\mu\nu} y_\mu y_\nu . \tag{23.7}$$

The positive minimum C of (23.7) under the side condition (23.5) is at the same time the minimum of the quotient[1]

$$\frac{\sum_{(\mu,\nu)=1}^{12} C_{\mu\nu} y_\mu y_\nu}{\sum_{\mu=1}^{12} \gamma_\mu y_\mu^2}$$

without this restriction, so that

$$G[u] = \sum_{(\mu,\nu)=1}^{12} C_{\mu\nu} y_\mu y_\nu \geq C \sum_{\mu=1}^{12} \gamma_\mu y_\mu^2 . \tag{23.8}$$

Combination of (23.6) and (23.8) leads to the inequality

$$|R| \leq \frac{1}{C} \left\{ \sum_{(\mu,\nu)=1}^{12} \frac{|A_{\mu\nu}|}{\sqrt{\gamma_\mu \gamma_\nu}} \right\} G[u] . \tag{23.9}$$

[1] The fact that C is positive is essentially based on the circumstance that the positive definite integrand of $T_2[u]$ possesses all the arguments which appear in the integrand of $P[u]$ (see Sect. 22).

The absolute value of the coefficient $A_{\mu\nu}$ can be made arbitrary small if the quantities y_λ are chosen sufficiently small (see 23.3). Consequently, it is always possible to choose the quantities g and h, introduced in Sect. 21, so small that from the inequalities for the arguments y_λ

$$|u_i| < g, \quad \left|\frac{\partial u_i}{\partial x_j}\right| < h$$

it follows that

$$\frac{1}{C} \sum_{(\mu,\nu)=1}^{12} \frac{|A_{\mu\nu}|}{\sqrt{\gamma_\mu \gamma_\nu}} \leq c$$

in which c is an arbitrarily small positive constant. It follows from (23.9) that

$$|R| \leq cG[u]. \tag{23.10}$$

This inequality for the remainder of the integrand of $P[u]$ leads to

$$P[u] \geq P_1[u] + P_2[u] - cT_2[u].$$

If in addition use is made of (22.3) and of the inequality

$$P_2[u] \geq \omega_1 T_2[u],$$

then it is found that

$$P[u] \geq (\omega_1 - c)\, T_2[u]. \tag{23.11}$$

Finally, it follows from (23.11) that the condition $\omega_1 > 0$ is indeed a sufficient condition for stability since c can be made arbitrarily small by the choice of sufficiently small values for g and h.

The proof given here is based on the assumption that the integrand of $T_2[u]$ is positive definite. This assumption is unnecessarily restrictive. For, an integrand of $T_2^*[u]$ which is not necessarily definite, but whose integral should of course be definite, a

positive solution ω_1^* of the minimum problem (22.5) is already sufficient for stability provided that (22.5) possesses also a solution for an integral $T_2[u]$ whose integrand is definite. That the latter solution also is positive follows easily from the assumption of the opposite. If it were zero or negative, $P_2[u]$ for the corresponding function and consequently also the solution ω_1^* of (22.5) belonging to $T_2^*[u]$ should be zero or negative respectively, which is in contradiction with the assumption $\omega_1^* > 0$. This greater freedom in the choice of $T_2[u]$ is useful for applications.

24. THE STABILITY LIMIT

At the stability limit, the solution of the minimum problem (22.5) is $\omega_1 = 0$. In this case, the integral $P_2[u]$ will become zero at least for the vector function $u^{(1)}$, so that (22.2) is not immediately satisfied by all functions u. Before entering upon the derivation of the criteria which govern stability in this case, it is important to know whether the integral $P_2[u]$ can also become zero for functions other than $u^{(1)}$.

For investigation of this question, it is remarked in the first place that for every kinematically possible vector function u can be written [29]

$$u = \underline{a}u^{(1)} + \bar{u} \text{ with } T_{11}\left[u^{(1)}, \bar{u}\right] = 0, \tag{24.1}$$

in which $\underline{a}$ represents a constant. For, it follows from the identity

$$T_{11}\left[u^{(1)}, \bar{u}\right] = T_{11}\left[u^{(1)}, u - \underline{a}u^{(1)}\right] = T_{11}\left[u^{(1)}, u\right] - \underline{a}T_{11}\left[u^{(1)}, u^{(1)}\right],$$

that the condition

$$T_{11}\left[u^{(1)}, \bar{u}\right] = 0 \tag{24.2}$$

is satisfied provided that the constant $\underline{a}$ is determined by

$$T_{11}\left[u^{(1)}, u\right] - \underline{a}T_{11}\left[u^{(1)}, u^{(1)}\right] = 0 \text{ or } \underline{a} = \frac{T_{11}\left[u^{(1)}, u\right]}{2T_2\left[u^{(1)}\right]}.$$

Next, the integral $P_2[u]$ is written as

$$P_2[u] = P_2\left[\underline{a}u^{(1)} + \bar{u}\right] = \underline{a}^2 P_2\left[u^{(1)}\right] + \underline{a}P_{11}\left[u^{(1)}, \bar{u}\right] + P_2\left[\bar{u}\right].$$

the first term of this development is identically zero; with use of (22.9) for $u = u^{(1)}$, $\omega - \omega_1$, $\zeta = \bar{u}$, and use of (24.2), the second term can be written as

$$\underline{a}P_{11}\left[u^{(1)}, \bar{u}\right] = \underline{a}\omega_1, \qquad T_{11}\left[u^{(1)}, \bar{u}\right] = 0,$$

so that

$$P_2[u] = P_2\left[\underline{a}u^{(1)} + \bar{u}\right] = P_2[\bar{u}] \tag{24.3}$$

remains.

Consequently, the integral $P_2[u]$ can only become zero if it is zero for a vector function $\bar{u}$ that satisfies (24.2). In order to investigate whether the integral $P_2[\bar{u}]$ can indeed become zero under the condition (24.2), the following problem will be considered

$$\omega = \text{Min}\,\frac{P_2[u]}{T_2[u]} \text{ under the side condition } T_{11}\left[u^{(1)}, u\right] = 0\ . \tag{24.4}$$

Let $u = u^{(2)}$ be the function for which this minimum ω_2 has been established.[1] Then, for every function η satisfying

$$T_{11}\left[u^{(1)}, \eta\right] = 0, \tag{24.5}$$

and for an arbitrary constant ϵ, it follows that

$$\frac{P_2\left[u^{(2)} + \epsilon\eta\right]}{T_2\left[u^{(2)} + \epsilon\eta\right]} \geqslant \frac{P_2\left[u^{(2)}\right]}{T_2\left[u^{(2)}\right]} = \omega_2 \text{ or}$$

$$P_2\left[u^{(2)} + \epsilon\eta\right] - \omega_2 T_2\left[u^{(2)} + \epsilon\eta\right] \geqslant 0,$$

From this it follows in a manner analogous to the derivation leading to (22.6),

$$P_{11}\left[u^{(2)}, \eta\right] - \omega_2 T_{11}\left[u^{(2)}, \eta\right] = 0. \tag{24.6}$$

[1] Just as for the analysis of $P_2[u]$ in Sect. 22, the existence of a solution will be assumed here and in all the following minimum problems.

This equation is derived under the restriction (24.5) for the functions η . Yet, it is also valid for functions ζ which are not restricted by (24.5). In order to show this, an arbitrary function ζ is written as

$$\zeta = tu^{(1)} + \eta \quad \text{with} \quad T_{11}\left[u^{(1)}, \eta\right] = 0 .$$

The possibility of this decomposition has already been explained. After replacement of the vector function η by a vector function $\zeta = tu^{(1)} + \eta$, the left hand side of (24.6) becomes

$$P_{11}\left[u^{(2)}, \zeta\right] - \omega_2 T_{11}\left[u^{(2)}, \zeta\right] = t\left\{P_{11}\left[u^{(2)}, u^{(1)}\right] - \omega_2 T_{11}\left[u^{(2)}, u^{(1)}\right]\right\} +$$

$$+ P_{11}\left[u^{(2)}, \eta\right] - \omega_2 T_{11}\left[u^{(2)}, u\right] .$$

Here

$$T_{11}\left[u^{(1)}, u^{(2)}\right] = T_{11}\left[u^{(2)}, u^{(1)}\right]_{\Gamma} = 0 ,$$

on account of the side condition (24.4). After application of (22.9) for $u = u^{(1)}$, $\omega = \omega_1$ and $\zeta = u^{(2)}$, it follows from this condition that

$$P_{11}\left[u^{(2)}, u^{(1)}\right] = 0 .$$

By use of these relations and of (24.6) it follows that $u = u^{(1)}$ and $\omega = \omega_2$ satisfy (22.9)

$$P_{11}[u, \zeta] - \omega T_{11}[u, \zeta] = 0 ,$$

so that the solution of the problem (24.4), as well as $u^{(1)}$, appear to be an eigenfunction of (22.9).

Since the set of admissible functions u is more restricted for the problem (24.4) than for the problem (22.5), $\omega_2 \geq \omega_1$ should always hold. If ω_2 becomes positive at the stability limit for which $\omega_1 = 0$, the investigation of $P_2[u]/T_2[u]$ can be abandoned because in that case $P_2[u]$ cannot become zero for functions other than $u^{(1)}$; neither is the knowledge of the functions $u^{(2)}$ necessary in that case. However, if also $\omega_2 = 0$, then the question arises if $P_2[u]$ can also become zero for functions other than $u^{(1)}$ and $u^{(2)}$. In the same manner as is described above it can be shown that this can only be the case if $P_2[u]$ can be zero under the side conditions

$$T_{11}\left[u^{(1)}, u\right] = 0 \ , \ T_{11}\left[u^{(2)}, u\right] = 0 \ .$$

The posed question will in that case be answered by the solution of the problem

$$\omega = \text{Min} \frac{P_2[u]}{T_2[u]} \quad \text{under the side conditions}$$

$$T_{11}\left[u^{(1)}, u\right] = 0 \ ; \ T_{11}\left[u^{(2)}, u\right] = 0 \ . \tag{24.7}$$

On the same manner as is described in the above, it is proved that the function $u^{(3)}$, for which the minimum ω_3 of (24.7) is obtained, is an eigensolution of equation (22.9) belonging to the eigenvalue ω_3. The analysis of the minima

$$\omega = \text{Min} \frac{P_2[u]}{T_2[u]} \quad \text{under the side condition}$$

$$T_{11}\left[u^{(j)}, u\right] = 0 \quad (j = 1, 2, \ldots . h - 1) \tag{24.8}$$

should be continued until a positive minimum ω_h has been found.

The eigenvectors $u^{(1)}$, $u^{(2)}$ .... all contain a constant still undetermined factor since they are the solutions of the homogeneous equation (22.9). The conditions (24.8) do not determine this factor. It is assumed that this factor is available, for instance by enforcement of a normalization condition of the form

$$T_2\left[u^{(h)}\right] = C \ , \tag{24.9}$$

in which C is a positive constant. It follows from (24.8) that

$$P_2\left[u^{(h)}\right] = \omega_h C \ . \tag{24.10}$$

Further, from relation

$$T_{11}\left[u^{(h)} , u^{(k)}\right] = 0 \quad \text{for} \quad h \neq k \tag{24.11}$$

and by application of (22.9) for $u = u^{(h)}$, $\omega = \omega_h$ and $\zeta = u^{(k)}$, it follows that

$$P_{11}\left[u^{(h)} , u^{(k)}\right] = 0 \quad \text{for} \quad h \neq k \ . \tag{24.12}$$

In some cases, the complete set of eigenfunctions belonging to Eq. (22.9) and to the minimum problem (24.8) respectively, can easily be determined. Although not necessary, the knowledge of all eigenfunctions can be of advantage for the execution of the calculations. For this purpose, the set should be complete and such that an arbitrary kinematically possible vector function f can be developed in terms of the eigenvectors

$$f = \sum_{h=1}^{\infty} c_h u^{(h)} \ , \tag{24.13}$$

whereby the operations carried out on f may be applied to each term of the series separately.

In general, the eigenvalues ω_h and the eigenvectors $u^{(h)}$ depend on the form which was chosen for the integrand of $T_2[u]$. However, if an eigenvalue zero has been found, then also for other forms of the integrand of $T_2[u]$ the eigenvalue zero will be found as well as corresponding eigenfunctions. (See also Sect. 23). The correctness

of this assertion follows immediately from the variational equation (22.9), which for an eigenvalue $\omega_h = 0$ transforms into the form

$$P_{11}[u, \zeta] = 0 \tag{24.14}$$

which is independent of $T_2[u]$. This equation is identical with the equation for neutral equilibrium as derived by Kappus [10]

$$\delta P_2[u] = 0 \ ;$$

consequently, equilibrium is neutral in the sense of Southwell and Biezeno-Hencky as soon as at least one eigenvalue ω_h is equal to zero. Conversely, the existence of a solution of (24.14) results into at least one eigenvalue ω_h equal to zero. It is generally true that if n eigenvalues ω_h are zero, equation (24.14) will possess n independent solutions. Conversely, it follows from the existence of n linearly independent solutions of (24.14) that n eigenvalues are zero. As a proof of this, it is noticed that the n solutions of (24.14) are also n solutions of (22.9) for the case that $\omega = 0$. By means of linear combination, n new linearly independent solutions of (22.9) can be constructed which solutions also belong to $\omega = 0$. The solutions last mentioned can always be chosen in such a way that they satisfy

$$T_{11}\left[u^{(i)}, u^{(h)}\right] = 0 \ , \quad i \neq h$$

so that they can be identified with the n eigenfunctions $u^{(i)}$, $i = 1, 2, \ldots, n$ which correspond to the n eigenvalues

$$\omega_1 = \ldots = \omega_n = 0 \ .$$

For details of this so called orthogonalization process see [48].

25. STABILITY AT THE STABILITY LIMIT

This section concerns the investigation of the stability at the stability limit. At first it is assumed that ω_2 is positive; how the following considerations must be changed in the case that ω_2 is zero will be shown in Sect. 27.

A set of necessary conditions for stability can immediately be derived from (22.2). Because of $P_2\left[u^{(1)}\right] = 0$, for sufficiently small absolute values of

$$\alpha^3 P_3\left[u^{(1)}\right] + \alpha^4 P_4\left[u^{(1)}\right] + \ldots \geqq 0 ,$$

should hold, which can only be satisfied with

$$P_3\left[u^{(1)}\right] = 0 \; ; \quad P_4\left[u^{(1)}\right] \geqq 0 , \tag{25.1}$$

and if in the last relation the equality sign holds, with

$$P_5\left[u^{(1)}\right] = 0 \; ; \quad P_6\left[u^{(1)}\right] \geqq 0 , \text{ and so on} .$$

It already appears from (25.1) that equilibrium at the stability limit shall "in general" be unstable.

For the derivation of necessary and sufficient conditions of stability, in agreement with (24.1), an arbitrary kinematically possible vector function is put equal to

$$u = \underset{\sim}{a}u^{(1)} + \bar{u} \quad \text{with} \quad T_{11}\left[u^{(1)}, \bar{u}\right] = 0 .$$

For stability is required that two positive constants g and h exist such that (22.1)

$$P[u] = P\left[\underline{a}u^{(1)} + \bar{u}\right] = P_1\left[\underline{a}u^{(1)} + \bar{u}\right] +$$

$$+ P_2\left[\underline{a}u^{(1)} + \bar{u}\right] + P_3\left[\underline{a}u^{(1)} + \bar{u}\right] + \ldots \geqq 0 \qquad (25.2)$$

follows from the inequalities

$$|u_i| < g \ , \quad \left|\frac{\partial u_i}{\partial x_j}\right| < h \ . \qquad (22.1')$$

Instead of this, it can be required that there should exist three positive constants A, $\bar{g}$ and $\bar{h}$ such that (25.2) follows from the inequalities

$$|\underline{a}| < A \ , \quad |\bar{u}_i| < \bar{g} \ , \quad \left|\frac{\partial \bar{u}_i}{\partial x_j}\right| < \bar{h} \ . \qquad (25.2')$$

That this modified condition is a necessary condition follows immediately from the fact that (22.1') results from (25.2').

That it is also a sufficient condition follows if it is shown that in reverse (25.2') follows from (22.1'). From the relation

$$\underline{a} = \frac{T_{11}[u^{(1)}, u]}{2T_2[u^{(1)}]} \ ,$$

it follows that $\underline{a}$ is bounded if u and its derivatives are bounded; the same holds true for $\bar{u}$ and its derivatives because

$$\bar{u} = u - \underline{a}u^{(1)} \ .$$

Evaluation of the integrals in (25.2) by use of the symbols introduced in (22.7) yields

$$
\begin{aligned}
P[u] = {} & \underline{a}P_1[u^{(1)}] + P_1[\bar{u}] + \underline{a}^2P_2[u^{(1)}] + \underline{a}P_{11}[u^{(1)}, \bar{u}] + \\
& + P_2[\bar{u}] + \underline{a}^3P_3[u^{(1)}] + \underline{a}^2P_{21}[u^{(1)}, \bar{u}] + \underline{a}P_{12}[u^{(1)}, \bar{u}] + \\
& + P_3[\bar{u}] + \underline{a}^4P_4[u^{(1)}] + \underline{a}^3P_{31}[u^{(1)}, \bar{u}] + \underline{a}^2P_{22}[u^{(1)}, \bar{u}] + \\
& + \underline{a}P_{13}[u^{(1)}, \bar{u}] + P_4[\bar{u}] + \dots ,
\end{aligned}
$$

or somewhat differently arranged

$$
\begin{aligned}
P[u] = {} & \underline{a}P_1[u^{(1)}] + \underline{a}^2P_2[u^{(1)}] + \underline{a}^3P_3[u^{(1)}] + \underline{a}^4P_4[u^{(1)}] + \dots + \\
& + P_1[\bar{u}] + \underline{a}P_{11}[u^{(1)}, \bar{u}] + \underline{a}^2P_{21}[u^{(1)}, \bar{u}] + \underline{a}^3P_{31}[u^{(1)}, \bar{u}] + \dots + \\
& + P_2[\bar{u}] + \underline{a}P_{12}[u^{(1)}, \bar{u}] + \underline{a}^2P_{22}[u^{(1)}, \bar{u}] + \dots + P_3[\bar{u}] + \\
& + \underline{a}P_{13}[u^{(1)}, \bar{u}] + \dots + P_4[\bar{u}] + \dots
\end{aligned}
\tag{25.3}
$$

In these expressions, the integrands of the terms following after $P_2[\bar{u}]$ are either of the second order in $\bar{u}$ and contain in that case one or more factors $\underline{a}$, or they are of higher order in $\bar{u}$ and its derivatives. It is, therefore, to be expected that these terms are of minor significance in comparison to $P_2[\bar{u}]$. To prove this supposition, again the Taylor expansion of the integrand F of $P[u]$ with respect to its arguments will be considered. When, for brevity, these arguments are denoted by

$$y_\lambda = \underline{a}y_\lambda^{(1)} + \bar{y}_\lambda (\lambda = 1, 2, \dots 12),$$

this expansion can be written

$$F[\underline{u}] = F\left[\underline{a}\underline{u}^{(1)} + \bar{\underline{u}}\right] = (F)_{\underline{a}y_\lambda(1)} + \sum_{\mu=1}^{12}\left(\frac{\partial F}{\partial y_\mu}\right)_{\underline{a}y_\lambda(1)} \bar{y}_\mu +$$

$$+ \sum_{(\mu,\nu)=1}^{12} \frac{1}{2}\left(\frac{\partial^2 F}{\partial y_\mu \partial y_\nu}\right)_{\underline{a}y_\lambda(1)} \bar{y}_\mu \bar{y}_\nu +$$

$$+ \sum_{(\mu,\nu,\rho)=1}^{12} \frac{1}{6}\left(\frac{\partial^3 F}{\partial y_\mu \partial y_\nu \partial y_\rho}\right)_{\underline{a}y_\lambda(1)+\bar{\theta}_\lambda \bar{y}_\lambda} \bar{y}_\mu \bar{y}_\nu \bar{y}_\rho \ , \quad (0 \leq \bar{\theta}_\lambda \leq 1) \ .$$

Just as in Sect. 23, the indices of the derivatives of F indicate with respect to which argument these derivatives are taken. The coefficients of the second order terms in $\bar{y}_\lambda$ can once more be expanded in a Taylor series with respect to $\underline{a}$

$$\left(\frac{\partial^2 F}{\partial y_\mu \partial y_\nu}\right)_{\underline{a}y_\lambda(1)} = \left(\frac{\partial^2 F}{\partial y_\mu \partial y_\nu}\right)_0 + \underline{a}\left\{\frac{d}{d\underline{a}}\left(\frac{\partial^2 F}{\partial y_\mu \partial y}\right)_{\underline{a}y_\lambda(1)}\right\}_{\theta\underline{a}} =$$

$$= \left(\frac{\partial^2 F}{\partial y_\mu \partial y_\nu}\right)_0 + \underline{a} \sum_{\rho=1}^{12}\left(\frac{\partial^3 F}{\partial y_\mu \partial y_\nu \partial y_\rho}\right)_{\theta \underline{a}y_\lambda(1)} y_\rho^{(1)} \ , \quad (0 \leq \theta \leq 1) \ .$$

so that the expansion of F can also be written in the form

$$F[\underline{a}u^{(1)} + \bar{u}] = (F)_{\underline{a}y_\lambda(1)} + \sum_{\mu=1}^{12}\left(\frac{\partial F}{\partial y_\mu}\right)_{\underline{a}y_\lambda(1)} \bar{y}_\mu +$$

$$+ \sum_{(\mu,\nu)=1}^{12} \frac{1}{2}\left(\frac{\partial^2 F}{\partial y_\mu \partial y_\nu}\right)_0 \bar{y}_\mu \bar{y}_\nu + \bar{R} \ , \qquad (25.4)$$

in which

$$\bar{R} = \sum_{(\mu,\nu)=1}^{12} \left\{ \frac{1}{2} \underline{a} \sum_{\rho=1}^{12} \left(\frac{\partial^3 F}{\partial y_\mu \partial y_\nu \partial y_\rho} \right)_{\theta \underline{a} y^{(1)}} y_\rho^{(1)} + \right.$$

$$\left. + \frac{1}{6} \sum_{\rho=1}^{12} \left(\frac{\partial^3 F}{\partial y_\mu \partial y_\nu \partial y_\rho} \right)_{\underline{a} y_\lambda^{(1)}} + \bar{\theta}_\lambda \bar{y}_\lambda \quad \bar{y}_\rho \right\} \bar{y}_\mu \bar{y}_\nu = \sum_{(\mu,\nu)=1}^{12} \bar{A}_{\mu\nu} \bar{y}_\mu \bar{y}_\nu \,. \quad (25.5)$$

By a mutual comparison of the order of the functions $\bar{u}$ and their derivatives, the contributions in (25.4)

$$(F)_{\underline{a} y_\lambda^{(1)}} \text{ and } \sum_{\mu=1}^{12} \left(\frac{\partial F}{\partial y_\mu} \right)_{\underline{a} y_\lambda^{(1)}} \bar{y}_\mu$$

can be identified as the integrands of

$$\underline{a} P_1 [u^{(1)}] + \underline{a}^2 P_2 [u^{(1)}] + \underline{a}^3 P_3 [u^{(1)}] + \underline{a}^4 P_4 [u^{(1)}] + \ldots \text{ and}$$

$$P_1 [\bar{u}] + \underline{a} P_{11} [u^{(1)}, \bar{u}] + \underline{a}^2 P_{21} [u^{(1)}, \bar{u}] + \underline{a}^3 P_{31} [u^{(1)}, \bar{u}] + \ldots$$

in (25.3) respectively. By comparison to (23.2), it appears that

$$\sum_{(\mu,\nu)=1}^{12} \frac{1}{2} \left(\frac{\partial^2 F}{\partial y_\mu \partial y_\nu} \right)_0 \bar{y}_\mu \bar{y}_\nu = F_2 [\bar{u}]$$

is the integrand of $P_2[\bar{u}]$ in (25.3). Consequently, the remainder $\bar{R}$ must be equal to the integrand of the remaining part of (25.3)

$$\underline{a} P_{12} [u^{(1)}, \bar{u}] + \underline{a}^2 P_{22} [u^{(1)}, \bar{u}] + \ldots + P_3 [\bar{u}] + \underline{a} P_{13} [u^{(1)}, \bar{u}] +$$

$$+ \ldots + P_4 [\bar{u}] + \ldots$$

The coefficients $\bar{A}_{\mu\nu}$ can be made arbitrarily small by the choice of sufficiently small values for A, $\bar{g}$ and $\bar{h}$ (the bounds of the absolute values of $\underline{a}$, $\bar{u}_i$ and $\frac{\partial \bar{u}_i}{\partial \bar{x}_j}$). Hence it can be shown in exactly the same way as in Sect. 23, that for an arbitrarily small positive constant β the remainder must satisfy

$$|\bar{R}| \leq \beta G[\bar{u}],$$

in which $G[\bar{u}]$ stands for the integrand of $T_2[\bar{u}]$. For the integrals in that case it follows that

$$\Big|\underline{a}P_{12}[u^{(1)}, \bar{u}] + \underline{a}^2 P_{22}[u^{(1)}, \bar{u}] + \ldots + P_3[\bar{u}] + \underline{a}P_{13}[u^{(1)}, \bar{u}] + \\ + \ldots + P_4[\bar{u}] + \ldots \Big| \leq \beta T_2[\bar{u}].$$

As

$$P_2[\bar{u}] \geq \omega_2 T_2[\bar{u}]$$

and with $\omega_2 > 0$ another arbitrarily small positive constant $\gamma = \beta/\omega_2$ can be defined such that

$$\Big|\underline{a}P_{12}[u^{(1)}, \bar{u}] + \underline{a}^2 P_{22}[u^{(1)}, \bar{u}] + \ldots + P_3[\bar{u}] + \underline{a}P_{13}[u^{(1)}, \bar{u}] + \\ + \ldots + P_4[\bar{u}] + \ldots \Big| \leq \gamma P_2[\bar{u}]. \qquad (25.6)$$

Inequality (25.6) gives the confirmation of and exact formulation of the conjecture stated earlier, that the terms following $P_2[\bar{u}]$ in (25.3) are only of minor importance. In (25.3) several simplifications can yet be introduced. Due to (22.3)

$$P_1[u^{(1)}] = P_1[\bar{u}] = 0$$

and as $\omega_1 = 0$ (see (22.5)) it follows that

$$P_2[u^{(1)}] = 0.$$

After use of the side condition for the functions $\bar{u}$ it follows from (22.9)

$$P_{ii}\,[u^{(1)}, \bar{u}] = \omega_i T_{ii}\,[u^{(1)}, \bar{u}] = 0 ,$$

while in (25.1), the requirement already was imposed that

$$P_3\,[u^{(1)}] = 0 .$$

With these simplifications and with use of (25.6) for $P[u]$, the following inequalities hold

$$P[u] \geq \underline{a}^4 P_4\,[u^{(1)}] + \ldots + \underline{a}^2 P_{21}\,[u^{(1)}, \bar{u}] + \underline{a}^3 P_{31}\,[u^{(1)}, \bar{u}] + \ldots + (1 - \gamma)\, P_2\,[\bar{u}] , \qquad (25.7)$$

$$P[u] \leq \underline{a}^4 P_4\,[u^{(1)}] + \ldots + \underline{a}^2 P_{21}\,[u^{(1)}, \bar{u}] + \underline{a}^3 P_{31}\,[u^{(1)}, \bar{u}] + \ldots + (1 + \gamma)\, P_2\,[\bar{u}] . \qquad (25.8)$$

For the derivation from (25.7) and (25.8) of the necessary and sufficient conditions for stability, the minimum will be determined of the expression

$$\underline{a}^2 P_{21}\,[u^{(1)}, \bar{u}] + \underline{a}^3 P_{31}\,[u^{(1)}, \bar{u}] + \ldots + \alpha P_2\,[\bar{u}] \qquad (25.9)$$

Here, $\underline{a}$ is a constant and due consideration must be given to the side condition

$$T_{11}\,[u^{(1)}, \bar{u}] = 0 , \qquad (25.10)$$

whereas α is a positive constant which replaces $1 - \gamma$ in (25.7) and $1 + \gamma$ in (25.8).

Let $\bar{u} = \bar{\varphi}$ be the vector function for which the minimum is obtained. Then, with an arbitrary kinematically possible vector function η which satisfies

$$T_{11}\,[u^{(1)}, \eta] = 0 , \qquad (25.11)$$

and an arbitrary constant ϵ the inequality

$$a^2 P_{21}[u^{(1)}, \bar{\varphi}+\epsilon\eta] + \underline{a}^3 P_{31}[u^{(1)}, \bar{\varphi}+\epsilon\eta] + \ldots + \alpha P_2[\bar{\varphi}+\epsilon\eta] \geq \underline{a}^2 P_{21}[u^{(1)}, \bar{\varphi}] + \underline{a}^3 P_{31}[u^{(1)}, \bar{\varphi}] + \ldots + \alpha P_2[\bar{\varphi}],$$

should be satisfied. After development of the left hand side

$$\epsilon \left| \underline{a}^2 P_{21}[u^{(1)}, \eta] + \underline{a}^3 P_{31}[u^{(1)}, \eta] + \ldots + \alpha P_{11}[\bar{\varphi}, \eta] \right| + \epsilon^2 \alpha P_2[\eta] \geq 0 .$$

This inequality can only be satisfied for arbitrary values of ϵ, if for every function η, $\bar{u} = \bar{\varphi}$ satisfies

$$\underline{a}^2 P_{21}[u^{(1)}, \eta] + \underline{a}^3 P_{31}[u^{(1)}, \eta] + \ldots + \alpha P_{11}[\bar{u}, \eta] = 0 . \qquad (25.12)$$

However, this condition is also sufficient as $P_2[\eta] \geq 0$.

Due to the restriction (25.11) for the functions η, (25.12) is not yet equivalent to a system of differential equations and boundary conditions of the functions $\bar{u}$. In order to obtain this equivalence, the left hand side of (25.12) is calculated by means of a replacement of the functions η by the kinematically possible functions ζ not subjected to the restriction (25.11). For these latter functions it can again be stated that

$$\zeta = tu^{(1)} + \eta \quad \text{with } T_{11}[u^{(1)}, \eta] = 0 \text{ and } t = \frac{T_{11}[u^{(1)}, \zeta]}{2T_2[u^{(1)}]}.$$

Substitution in the left hand side of (25.12) yields after some development

$$\underline{a}^2 P_{21}[u^{(1)}, \zeta] + \underline{a}^3 P_{31}[u^{(1)}, \zeta] + \ldots + \alpha P_{11}[\bar{u}, \zeta] =$$

$$= t \left| \underline{a}^2 P_{21}[u^{(1)}, u^{(1)}] + \underline{a}^3 P_{31}[u^{(1)}, u^{(1)}] + \ldots + \alpha P_{11}[\bar{u}, u^{(1)}] \right| +$$

$$+ \underline{a}^2 P_{21}[u^{(1)}, \eta] + \underline{a}^3 P_{31}[u^{(1)}, \eta] + \ldots + \alpha P_{11}[\bar{u}, \eta] . \qquad (25.13)$$

In agreement with (22.8) the following identities exist

$$P_{21}[u^{(1)}, u^{(1)}] = 3P_3[u^{(1)}], \quad P_{31}[u^{(1)}, u^{(1)}] = 4P_4[u^{(1)}] \text{ etc.}$$

Application of (22.9) for $u = u^{(1)}$, $\omega = \omega_1$ and $\zeta = \bar{u}$ yields with use of (25.10)

$$P_{11}[u^{(1)}, \bar{u}] = \omega_1 T_{11}[u^{(1)}, \bar{u}] = 0 .$$

Yet, if use is made also of (25.12), it follows from (25.13) that

$$\underline{a}^2 P_{21}[u^{(1)}, \zeta] + \underline{a}^3 P_{31}[u^{(1)}, \zeta] + \ldots + \alpha P_{11}[\bar{u}, \zeta] +$$
$$- t \left| 3\underline{a}^2 P_3[u^{(1)}] + 4\underline{a}^3 P_4[u^{(1)}] + \ldots \right| = 0 ,$$

or after elimination of the value t and use of (25.1)

$$\underline{a}^2 P_{21}[u^{(1)}, \zeta] + \underline{a}^3 P_{31}[u^{(1)}, \zeta] + \ldots +$$
$$- \frac{4\underline{a}^3 P_4[u^{(1)}] + \ldots}{2T_2[u^{(1)}]} T_{11}[u^{(1)}, \zeta] + \alpha P_{11}[\bar{u}, \zeta] = 0. \quad (25.14)$$

From equation (25.14) a system of differential equations and boundary conditions can be derived in the same manner as the equations of motion could be derived from Hamilton's principle in Sect. 13. These equations, together with condition (25.10), possess at most one solution. For, if φ' and φ'' were two different solutions, (25.10) and (25.14) would both be satisfied by φ' as well as by φ''. Subtraction then yields the relations

$$P_{11}[\varphi', \zeta] - P_{11}[\varphi'', \zeta] = P_{11}[\varphi' - \varphi'', \zeta] = 0 ,$$

$$T_{11}[u^{(1)}, \varphi'] - T_{11}[u^{(1)}, \varphi''] = T_{11}[u^{(1)}, \varphi' - \varphi''] = 0 ,$$

from which with (22.8) and $\zeta = \varphi' - \varphi''$ it should follow that

$$P_2[\varphi' - \varphi''] = 0 \text{ and } T_{11}[u^{(1)}, \varphi' - \varphi''] = 0 ,$$

which contradicts the assumption $\omega_2 > 0$ (see (24.4)). That the solution of equations (25.14) and (25.10) indeed determine a minimum was already stated above.

Equations (25.14) and (25.10) are linear in the unknown functions $\bar{u}$, so that its solution can be written in the form

$$\bar{\varphi} = \frac{1}{\alpha}(\underline{a}^2\varphi^{(2)} + \underline{a}^3\varphi^{(3)} + \ldots) , \tag{25.15}$$

in which $\varphi^{(2)}$, $\varphi^{(3)}$ etc. are the solutions of the equations

$$P_{21}[u^{(1)}, \zeta] + \ldots + P_{11}[\bar{u}, \zeta] = 0 ;$$
$$T_{11}[u^{(1)}, \bar{u}] = 0 . \tag{25.16}$$

$$P_{31}[u^{(1)}, \zeta] - \frac{4P_4[u^{(1)}]}{2T_2[u^{(1)}]} T_{11}[u^{(1)}, \zeta] + P_{11}[\bar{u}, \zeta] = 0 ;$$
$$T_{11}[u^{(1)}, \bar{u}] = 0 . \tag{25.17}$$

The functions $\varphi^{(2)}$, $\varphi^{(3)}$, etc. are independent of $\underline{a}$, so that there is always a possibility to choose the constant A so small that the inequality $|\underline{a}| < A$ leads to the inequalities $|\bar{\varphi}_i| < \bar{g}$ and $\left|\frac{\partial\bar{\varphi}_i}{\partial x_j}\right| < \bar{h}$; with this it has been proved that the functions $\bar{\varphi}$ also belong to the class of functions $\bar{u}$ which are admitted for the analysis of P[u].

The calculation of the minimum of (25.9) can still be simplified if use is made of (25.14) for $\zeta = \bar{\varphi}$

$$\underline{a}^2P_{21}[u^{(1)}, \bar{\varphi}] + \underline{a}^3P_{31}[u^{(1)}, \bar{\varphi}] + \ldots = -\alpha P_{11}[\bar{\varphi}, \bar{\varphi}] = -2\alpha P_2[\bar{\varphi}] ,$$

so that the desired minimum is

$$-\alpha P_2[\bar{\varphi}] = \frac{1}{2}\left\{ \underline{a}^2 P_{21}[u^{(1)}, \bar{\varphi}] + \underline{a}^3 P_{31}[u^{(1)}, \bar{\varphi}] + \ldots \right\}.$$

By use of (25.15) this expression can be written as

$$-\alpha P_2[\bar{\varphi}] = -\alpha P_2\left[\frac{1}{\alpha}(\underline{a}^2\varphi^{(2)} + \underline{a}^3\varphi^{(3)} + \ldots)\right] =$$

$$= -\frac{1}{\alpha}\left\{ \underline{a}^4 P_2[\varphi^{(2)}] + \underline{a}^5 P_{11}[\varphi^{(2)}, \varphi^{(3)}] + \underline{a}^6 (P_{11}[\varphi^{(2)}, \varphi^{(4)}] + \right.$$

$$\left. + P_2[\varphi^{(3)}]) + \ldots \right\}. \qquad (25.18)$$

Substitution of the minimum (25.18) in the inequalities (25.7) and (25.8) yields

$$P[u] \geq \underline{a}^4 \left\{ P_4[u^{(1)}] - \frac{1}{1-\gamma} P_2[\varphi^{(2)}] \right\} +$$

$$+ \underline{a}^5 \left\{ P_5[u^{(1)}] - \frac{1}{1-\gamma} P_{11}[\varphi^{(2)}, \varphi^{(3)}] \right\} + \ldots \qquad (25.19)$$

$$\text{Min } P[u] \text{ (with } \underline{a} = \text{const.)} \leq \underline{a}^4 \left\{ P_4[u^{(1)}] - \frac{1}{1+\gamma} P_2[\varphi^{(2)}] \right\} +$$

$$+ \underline{a}^5 \left\{ P_5[u^{(1)}] - \frac{1}{1+\gamma} P_{11}[\varphi^{(2)}, \varphi^{(3)}] \right\} + \ldots \qquad (25.20)$$

Here $1+\gamma$ and $1-\gamma$ has been reintroduced for the parameter α.

If, for brevity

$$P_4[u^{(1)}] - P_2[\varphi^{(2)}] = A_4, \qquad (25.21)$$

then it follows: at the stability limit equilibrium is

$$\left.\begin{array}{r} \text{stable, if } A_4 > 0 \\ \text{unstable, if } A_4 < 0 \end{array}\right\} \qquad (25.22)$$

If the first condition is satisfied, there is always a possibility to choose γ so small that at the same time with A_4

$$P_4[u^{(1)}] - \frac{1}{1-\gamma} P_2[\varphi^{(2)}]$$

is also positive. One the other hand, if A_4 is negative, γ can be chosen so small that

$$P_4[u^{(1)}] - \frac{1}{1+\gamma} P_2[\varphi^{(2)}]$$

is also negative. Only the limit case with A_4 equal to zero does this expression fail to give a decision about stability. In general, the solution $\bar{u} = \varphi^{(2)}$ of (25.16) is also dependent on the form which has been chosen for the integrand of $T_2[u]$. That A_4, the factor which determines stability is not influenced by this, follows from comparison of the solutions $\bar{u}$ and $\bar{u}'$ corresponding to the integrals of the different forms $T_2[u]$ and $T_2'[u]$. Subtraction of the equations (25.16) governing both solutions yields

$$P_{11}[\bar{u} - \bar{u}', \zeta] = 0 , \tag{25.23}$$

from which it can be concluded that

$$\bar{u} - \bar{u}' = cu^{(1)} ; \tag{25.24}$$

where c is an arbitrary constant. If (25.23) also possessed a solution $\bar{u} - \bar{u}'$ different from (25.24), then it would again be possible to state

$$\bar{u} - \bar{u}' = tu^{(1)} + \bar{\bar{u}} \text{ with } T_{11}[u^{(1)}, \bar{\bar{u}}] = 0 ,$$

from which it follows that (see 24.14)

$$P_{11}[\bar{\bar{u}}, \zeta] = 0, \; T_{11}[u^{(1)}, \bar{\bar{u}}] = 0 .$$

Then, for $\zeta = \bar{\bar{u}}$ it would hold that

$$P_{11}[\bar{\bar{u}}, \bar{\bar{u}}] = 2P_2[\bar{\bar{u}}] = 0, \; T_{11}[u^{(1)}, \bar{\bar{u}}] = 0 ,$$

which contradicts the assumption that $\omega_2 > 0$. With (25.24) it finally follows that

$$A_4 - A_4' = - P_2[\bar{u}] + P_2[\bar{u} - cu^{(1)}] =$$

$$= - P_2[\bar{u}] + P_2[\bar{u}] - cP_{11}[\bar{u}, u^{(1)}] + c^2 P_2[u^{(1)}] = 0 .$$

It is noticed also that for the calculation of $\varphi^{(2)}$ and A_4 no use is made of the assumption that the integrand of $T_2[u]$ is positive definite. Consequently the same result will be obtained for A_4 if this assumption has not been made provided that the integral of $T_2[u]$ is still positive definite. This greater freedom in the choice of $T_2[u]$ shall be of use for the application of the theory (see Sect. 23).

26. APPLICATION OF THE CRITERION (25.22)

For the application of the criterion (25.22) only the knowledge of the functions $\varphi^{(2)}$ is required, so that only the system of differential equations and boundary conditions resulting from (25.16) must be solved. The differential equations and boundary conditions again can be derived from (25.16) in a manner analogous to that described in Sect. 13.

When the complete system of eigenfunctions $u^{(h)}$ is known, this solution can most simply be carried out by expansion of $\varphi^{(2)}$ as well as ζ in series of these eigenfunctions. In this way, the derivation of the differential equations and boundary conditions will not be needed

$$\varphi^{(2)} = \sum_{h=1}^{\infty} c_h u^{(h)} , \quad \zeta = \sum_{h=1}^{\infty} d_h u^{(h)} . \tag{26.1}$$

The second relation (25.16) yields after use of (24.11)

$$T_{11}[u^{(1)}, \sum_{h=1}^{\infty} c_h u^{(h)}] = 2c_1 T_2[u^{(1)}] = 0 \text{ or } c_1 = 0 ,$$

while the first equation (25.16) becomes

$$\sum_{h=1}^{\infty} d_h P_{21}[u^{(1)}, u^{(h)}] + \sum_{h=1}^{\infty} \sum_{k=1}^{\infty} d_h c_k P_{11}[u^{(k)}, u^{(h)}] = 0 ,$$

or with use of (24.10) and (24.12)

$$\sum_{h=1}^{\infty} d_h P_{21}[u^{(1)}, u^{(h)}] + \sum_{h=1}^{\infty} 2d_h c_h \omega_h C = 0 .$$

The latter equation can only be satisfied for arbitrary values of d_h if, for $h \geq 2$

$$c_h = -\frac{1}{2\omega_h} C \; P_{21}[u^{(1)}, u^{(h)}] . \tag{26.2}$$

The condition for $h = 1$ is already satisfied because

$$P_{21}[u^{(1)}, u^{(1)}] = 3P_3[u^{(1)}] = 0 \text{ and } \omega_1 = 0 .$$

For A_4 it is found that (see (25.21))

$$A_4 = P_4[u^{(1)}] - P_2\left[\sum_{h=1}^{\infty} c_h u^{(h)}\right] =$$

$$= P_4[u^{(1)}] - \sum_{h=1}^{\infty} c_h^2 P_2[u^{(h)}] - \sum_{h \neq k} c_h c_k P_{11}[u^{(h)}, u^{(k)}] ; \tag{26.3}$$

the last sum should be calculated for all combinations of h and k such that $h \neq k$. With use of (24.10), (24.12) and (26.2) the result is

$$A_4 = P_4[u^{(1)}] - \frac{1}{4C} \sum_{h=2}^{\infty} \frac{1}{\omega_h} \left\{ P_{21}[u^{(1)}, u^{(h)}] \right\}^2 . \tag{26.4}$$

However, this consideration has more than a formal significance only if the possibility of the series expansion and the admissibility of the operations applied on these series has been established.

In many cases, the system of eigenfunctions is not completely known and an exact solution also in a different manner, will appear to be impossible. An approximate solution at least must be possible for such cases since (25.15) represents the solution of the minimum problem (25.9). If (25.9), after substitution of (25.15), is expanded and rearranged according to increasing powers of $\underline{a}$ (this expansion starts with the fourth power of $\underline{a}$), then the function $\varphi^{(2)}$ determined by (25.16) appears also to be the solution of the minimum problem

$$P_{21}[u^{(1)}, \bar{u}] + P_2[\bar{u}] = \text{minimum under the side condition}$$

$$T_{11}[u^{(1)}, \bar{u}] = 0 . \tag{26.5}$$

In that case it is obvious that an approximate solution of problem (26.5) can be found for instance, by means of Ritz's method [30]. It is inherent in this method that the approximation of the minimum of (26.5) thus found is greater than the exact minimum. For the exact solution, it follows from (25.16) for $\zeta = \varphi^{(2)}$ that

$$P_{21}[u^{(1)}, \varphi^{(2)}] + P_2[\varphi^{(2)}] = -P_2[\varphi^{(2)}] \tag{26.6}$$

Hence the approximate minimum of (26.5) is at the same time an approximation (too large) for $-P_2[\varphi^{(2)}]$. The expression

$$P_4[u^{(1)}] + P_{21}[u^{(1)}, \bar{u}] + P_2[\bar{u}], \tag{26.7}$$

in which $\bar{u}$ is the approximate solution of (26.5), then also yields a too great, approximate, value of A_4. Therefore, stability will always be overestimated by use of (26.7) instead of (25.21). If, in a certain case, the expression (26.7) would turn

out to be negative, i.e., according to the approximation equilibrium would be unstable, then equilibrium will certainly be unstable in reality. In reverse, a positive value of (26.7) does not always imply that equilibrium is stable.

27. SPECIAL CASES

In the foregoing, stability at the stability limit was analysed under the assumption that the solution ω_2 of the problem (24.4) is positive. Along with this, as necessary conditions for stability were found to be that (see (25.1), (25.22) and (26.6))

$$A_3 \equiv P_3[u^{(1)}] = 0 \; ; \; A_4 = P_4[u^{(1)}] - P_2[\varphi^{(2)}] =$$

$$= P_4[u^{(1)}] + P_{21}[u^{(1)}, \varphi^{(2)}] + P_2[\varphi^{(2)}] \geq 0 \quad , \quad (27.1)$$

which conditions are at the same time sufficient if in the second condition the upper sign holds. It has yet to be investigated which additions to these conditions will be needed if $A_4 = 0$ or $\omega_2 = 0$.

27.1 The Case $A_4 = 0$

For the analysis of this special case the assumption $\omega_2 > 0$ will be maintained. According to the considerations of Sect. 25

$$u = \underline{a}u^{(1)} + \bar{u} \text{ with } T_{11}[u^{(1)}, \bar{u}] = 0 \; .$$

Thus by use of (25.16), the functions $\bar{u}$ presently are written

$$\bar{u} = \underline{a}^2\varphi^{(2)} + \bar{\bar{u}} \text{ with } T_{11}[u^{(1)}, \bar{\bar{u}}] = 0 \; . \qquad (27.2)$$

Introduction of (27.2) in (25.3) yields after some reduction

$$
\begin{aligned}
P[u] = \underline{a}^5 \Big\{ & P_5[u^{(1)}] + P_{31}[u^{(1)}, \varphi^{(2)}] + P_{12}[u^{(1)}, \varphi^{(2)}] \Big\} + \\
& + \underline{a}^6 \Big\{ P_6[u^{(1)}] + P_{41}[u^{(1)}, \varphi^{(2)}] + P_{22}[u^{(1)}, \varphi^{(2)}] + P_3[\varphi^{(2)}] \Big\} + \\
& + \ldots + \underline{a}^3 \Big\{ P_{31}[u^{(1)}, \bar{\bar{u}}] + P_{111}[u^{(1)}, \varphi^{(2)}, \bar{\bar{u}}] \Big\} + \\
& + \underline{a}^4 \Big\{ P_{41}[u^{(1)}, \bar{\bar{u}}] + P_{211}[u^{(1)}, \varphi^2, \bar{\bar{u}}] + P_{21}[\varphi^{(2)}, \bar{\bar{u}}] \Big\} + \\
& + \ldots + P_2[\bar{\bar{u}}] + \underline{a} P_{12}[u^{(1)}, \bar{\bar{u}}] + \underline{a}^2 \Big\{ P_{22}[u^{(1)}, \bar{\bar{u}}] + P_{12}[\varphi^{(2)}, \bar{\bar{u}}] \Big\} + \\
& + \ldots + P_3[\bar{\bar{u}}] + \underline{a} P_{13}[u^{(1)}, \bar{\bar{u}}] + \ldots + P_4[\bar{\bar{u}}] + \ldots ,
\end{aligned}
\tag{27.3}
$$

in which use has been made of the identities

$$
P_1[u^{(1)}] = P_1[\varphi^{(2)}] = P_1[\bar{\bar{u}}] = 0 , \quad P_2[u^{(1)}] = 0 , \quad P_3[u^{(1)}] = 0 ,
$$

$$
A_4 = P_4[u^{(1)}] + P_{21}[u^{(1)}, \varphi^{(2)}] + P_2[\varphi^{(2)}] = 0 ,
$$

as well as of the equation (25.16) which also holds for $\zeta = \bar{\bar{u}}$. The integrals belonging to the development of $P_{mn}[u^{(1)}, \bar{u}]$ for $\bar{u} = \bar{v} + \bar{w}$ are written as $P_{m,n-q,q}[u^{(1)}, \bar{v}, \bar{w}]$ analogous to the manner described in (22.8). The integrands of these integrals are homogeneous functions of the order $n - q$ in $\bar{v}$ and its derivatives and of the order q in w and its derivatives. Again, expression (27.3) possesses a minimum for $u \equiv 0$ if and only if it is possible to find a set of positive quantities A , $\bar{\bar{g}}$ and $\bar{\bar{h}}$ such that from the inequalities

$$
|\underline{a}| < A , \quad |\bar{\bar{u}}_i| < |\bar{\bar{g}}| , \quad \left| \frac{\partial \bar{\bar{u}}_i}{\partial x_j} \right| < \bar{\bar{h}} \tag{27.4}
$$

it follows that

$$P[u] \geq 0 \ .$$

A set of necessary conditions may immediately be derived by the specilization $\bar{\bar{u}} = 0$. As all integrals depending on $\bar{\bar{u}}$ then become zero it follows that

$$A_5 = P_5[u^{(1)}] + P_{31}[u^{(1)}, \varphi^{(2)}] + P_{12}[u^{(1)}, \varphi^{(2)}] = 0 \ , \qquad (27.5)$$

$$P_6[u^{(1)}] + P_{41}[u^{(1)}, \varphi^{(2)}] + P_{22}[u^{(1)}, \varphi^{(2)}] + P_3[\varphi^{(2)}] \geq 0 \ . \qquad (27.6)$$

Since the positive definite integrand of $T_2[u]$ can again be assumed to be of the form (23.7), it can be shown in exactly the same manner as in Sect. 25, that it is possible to choose the quantities A, $\bar{\bar{g}}$ and $\bar{\bar{h}}$ so small that it follows from inequalities (27.4) that the terms after $P_2[\bar{\bar{u}}]$ satisfy

$$\Big| \underline{a} P_{12}[u^{(1)}, \bar{\bar{u}}] + \underline{a}^2 \Big\{ P_{22}[u^{(1)}, \bar{\bar{u}}] + P_{12}[\varphi^{(2)}, \bar{\bar{u}}] \Big\} + \ldots + P_3[\bar{\bar{u}}] +$$

$$+ \underline{a} P_{13}[u^{(1)}, \bar{\bar{u}}] + \ldots + P_4[\bar{\bar{u}}] + \ldots \Big| \leq \gamma P_2[\bar{\bar{u}}] \ , \qquad (27.7)$$

Here γ is an arbitrarily small positive constant. By use of (27.5) and (27.7) the following inequalities follow for $P[u]$

$$P[u] \geq \underline{a}^6 \Big| P_6[u^{(1)}] + P_{41}[u^{(1)}, \varphi^{(2)}] + P_{22}[u^{(1)}, \varphi^{(2)}] + P_3[\varphi^{(2)}] \Big| +$$

$$+ \ldots + \underline{a}^3 \Big| P_{31}[u^{(1)}, \bar{\bar{u}}] + P_{111}[u^{(1)}, \varphi^{(2)}, \bar{\bar{u}}] \Big| +$$

$$+ \underline{a}^4 \Big| P_{41}[u^{(1)}, \bar{\bar{u}}] + P_{211}[u^{(1)}, \varphi^{(2)}, \bar{\bar{u}}] + P_{21}[\varphi^{(2)}, \bar{\bar{u}}] \Big| +$$

$$+ \ldots + (1 - \gamma) P_2[\bar{\bar{u}}] \ , \qquad (27.8)$$

$$P[u] \leq \underline{a}^6 \left| P_6[u^{(1)}] + P_{41}[u^{(1)}, \varphi^{(2)}] + P_{22}[u^{(1)}, \varphi^{(2)}] + P_3[\varphi^{(2)}] \right| +$$

$$+ \ldots + \underline{a}^3 \left| P_{31}[u^{(1)}, \bar{\bar{u}}] + P_{111}[u^{(1)}, \varphi^{(2)}, \bar{\bar{u}}] \right| +$$

$$+ \underline{a}^4 \left| P_{41}[u^{(1)}, \bar{\bar{u}}] + P_{211}[u^{(1)}, \varphi^{(2)}, \bar{\bar{u}}] + P_{21}[\varphi^{(2)}, \bar{\bar{u}}] \right| +$$

$$+ \ldots + (1 + \gamma) P_2[\bar{\bar{u}}] \quad . \tag{27.9}$$

For the derivation from (27.8) and (27.9) of stability requirements sharper than the already established conditions (27.5) and (27.6), the minimum of the following expression will, as was done in Sect. 25, be determined

$$\underline{a}^3 \left| P_{31}[u^{(1)}, \bar{\bar{u}}] + P_{111}[u^{(1)}, \varphi^{(2)}, \bar{\bar{u}}] \right| +$$

$$+ \left| P_{41}[u^{(1)}, \bar{\bar{u}}] + P_{211}[u^{(1)}, \varphi^{(2)}, \bar{\bar{u}}] + P_{21}[\varphi^{(2)}, \bar{\bar{u}}] \right| +$$

$$+ \ldots + \alpha P_2[\bar{\bar{u}}] \quad (\alpha > 0) \ , \tag{27.10}$$

with due consideration of the side condition

$$T_{11}[u^{(1)}, \bar{\bar{u}}] = 0 \tag{27.11}$$

and with $\underline{a}$ considered a constant. As in the derivations in Sect. 25 it is shown that the function $\bar{\bar{u}} = \bar{\bar{\varphi}}$, for which the minimum of (27.10) has been obtained, can be written in the form

$$\bar{\bar{\varphi}} = \frac{1}{\alpha} (\underline{a}^3 \psi^{(3)} + \underline{a}^4 \psi^{(4)} + \ldots) \ , \tag{27.12}$$

in which $\psi^{(3)}$, $\psi^{(4)}$ etc. are the solutions of the equations

$$P_{31}[u^{(1)}, \zeta] + P_{111}[u^{(1)}, \varphi^{(2)}, \zeta] +$$

$$- \frac{4P_4[u^{(1)}] + 2P_{21}[u^{(1)}, \varphi^{(2)}]}{2T_2[u^{(1)}]} T_{11}[u^{(1)}, \zeta] + P_{11}[\bar{u}, \zeta] = 0 \; ;$$

$$T_{11}[u^{(1)}, \bar{\bar{u}}] = 0 \; ; \tag{27.13}$$

$$P_{41}[u^{(1)}, \zeta] + P_{211}[u^{(1)}, \varphi^{(2)}, \zeta] + P_{21}[\varphi^{(2)}, \zeta] +$$

$$- \frac{5P_5[u^{(1)}] + 3P_{31}[u^{(1)}, \varphi^{(2)}] + P_{12}[u^{(1)}, \varphi^{(2)}]}{2T_2[u^{(1)}]} T_{11}[u^{(1)}, \zeta] +$$

$$+ P_{11}[\bar{u}, \zeta] = 0 \; ; \quad T_{11}[u^{(1)}, \bar{\bar{u}}] = 0 \; , \tag{27.14}$$

etc.

By use of the identity (26.6)

$$4P_4[u^{(1)}] + 2P_{21}[u^{(1)}, \varphi^{(2)}] = 4\left\{P_4[u^{(1)}] - P_2[\varphi^{(2)}]\right\} = 4A_4 = 0 \; .$$

Hence the set of equations (27.13) can be simplified to

$$P_{31}[u^{(1)}, \zeta] + P_{111}[u^{(1)}, \varphi^{(2)}, \zeta] + P_{11}[\bar{u}, \zeta] = 0 \; ; \quad T_{11}[u^{(1)}, \bar{\bar{u}}] = 0 \; . \tag{27.15}$$

Also, the minimum of (27.10) is determined in the same manner as described in Sect. 25. It is found that

$$- \alpha P_2[\bar{\bar{\varphi}}] = - \frac{1}{\alpha} \left\{ \underline{a}^6 P_2[\psi^{(3)}] + \underline{a}^7 P_{11}[\psi^{(3)}, \psi^{(4)}] + \ldots \right\} ,$$

so that finally from (27.8) and (27.9) it follows that

$$P[u] \geqq \underline{a}^6 \left\{ P_6[u^{(1)}] + P_{41}[u^{(1)}, \varphi^{(2)}] + P_{22}[u^{(1)}, \varphi^{(2)}] + P_3[\varphi^{(2)}] + \right.$$

$$\left. - \frac{1}{1-\gamma} P_2[\psi^{(3)}] \right\} + \underline{a}^7 \left\{ \dots \right. , \tag{27.16}$$

$$\text{Min } P[u] \text{ (with } \underline{a} = \text{const.)} \leqq \underline{a}^6 \left\{ P_6[u^{(1)}] + P_{41}[u^{(1)}, \varphi^{(2)}] + \right.$$

$$\left. + P_{22}[u^{(1)}, \varphi^{(2)}] + P_3[\varphi^{(2)}] - \frac{1}{1+\gamma} P_2[\psi^{(3)}] \right\} + \underline{a}^7 \left\{ \dots \right. \tag{27.17}$$

If, for brevity

$$P_6[u^{(1)}] + P_{41}[u^{(1)}, \varphi^{(2)}] + P_{22}[u^{(1)}, \varphi^{(2)}] + P_3[\varphi^{(2)}] - P_2[\psi^{(3)}] = A_6 \quad , \tag{27.18}$$

then it follows, again analogous to the derivations in Sect. 25, that equilibrium is stable or unstable depending on whether A_6 is positive or negative. Only if $A_6 = 0$ does the form (27.18) fails to yield a final decision about stability. In that case the investigation must be continued; this can be done by the introduction of

$$\bar{\bar{u}} = \underline{a}^3 \psi^{(3)} + \bar{\bar{\bar{u}}} \text{ with } T_{11}[u^{(1)}, \bar{\bar{u}}] = 0 \ .$$

Then, the analysis proceeds further analogous to the foregoing.

27.2 The Case of $\omega_2 = 0$

For the analysis of this special case it will, for the moment, be assumed that ω_3 is positive. If one writes $u^{(2)} = v^{(1)}$ in behalf of a more symmetrical notation then for an arbitrary kinematically admissible function u, it is possible to set

$$u = \underline{a}u^{(1)} + bv^{(1)} + \bar{u} \text{ with } T_{11}[u^{(1)}, \bar{u}] = T_{11}[v^{(1)}, \bar{u}] = 0 \ , \qquad (27.19)$$

in a manner analogous to (24.1). The possibility of this separation again can be shown by calculation of the constants $\underline{a}$ and b. Substitution of (27.19) in (22.1) with $P_1[u] = 0$ yields

$$P[u] = P_2[\underline{a}u^{(1)} + bv^{(1)} + \bar{u}] + P_3[\underline{a}u^{(1)} + bv^{(1)} + \bar{u}] +$$

$$+ P_4[\underline{a}u^{(1)} + bv^{(1)} + \bar{u}] + \ldots . \qquad (27.20)$$

In general, for an integral $S_m[z]$ the following expansion holds for $z = u + v + w$

$$S_m[u + v + w] = \sum_{\alpha+\beta+\gamma=m} S_{\alpha,\beta,\gamma}[u, v, w] \ . \qquad (27.21)$$

where the integrand of $S_m[z]$ is an homogeneous and complete function of the order m in the argument functions z and their derivatives.

$S_{\alpha,\beta,\gamma}[u, v, w]$ is the integral of all terms which arise from the development of the integrand of $S_m[u + v + w]$ and they are homogeneous, of the order α, β and γ in the functions u, v, w and their derivatives respectively. For brevity the following notations are used

$$S_{o,\beta,\gamma}[u, v, w] = S_{\beta,\gamma}[v, w] \ ; \ S_{o,o,m}[u, v, w] = S_m[w] \ .$$

Furthermore the symmetry relations

$$S_{\alpha,\beta,\gamma}\,[u,\ v,\ w] = S_{\beta,\alpha,\gamma}\,[v,\ u,\ w] \text{ etc.}$$

hold together with the relations corresponding to (22.8)

$$S_{\alpha,\beta,\gamma}\,[u,\ u,\ w] = \binom{\alpha+\beta}{\beta} S_{\alpha+\beta,\gamma}\,[u,\ w]\ ,$$

$$S_{\alpha,\beta,\gamma}[u,\ u,\ u] = \binom{\alpha+\beta}{\beta}\binom{\alpha+\beta+\gamma}{\gamma} S_{\alpha+\beta+\gamma}[u] = \frac{m!}{\alpha!\,\beta!\,\gamma!} S_m[u]\ .$$

By use of (27.21), (27.20) can be written

$$\begin{aligned}
P[u] = {} & \underline{a}^3 P_3[u^{(1)}] + \underline{a}^2 b P_{21}[u^{(1)},\ v^{(1)}] + \underline{a}b^2 P_{12}[u^{(1)},\ v^{(1)}] + \\
& + b^3 P_3[v^{(1)}] + \underline{a}^4 P_4[u^{(1)}] + \underline{a}^3 b P_{31}[u^{(1)},\ v^{(1)}] + \underline{a}^2 b^2 P_{22}[u^{(1)},\ v^{(1)}] + \\
& + \underline{a}b^3 P_{13}[u^{(1)},\ v^{(1)}] + b^4 P_4[v^{(1)}] + \ldots + \underline{a}^2 P_{21}[u^{(1)},\ \bar{u}] + \\
& + \underline{a}b P_{111}[u^{(1)},\ v^{(1)},\ \bar{u}] + b^2 P_{21}[v^{(1)},\ \bar{u}] + \underline{a}^3 P_{31}[u^{(1)},\ \bar{u}] + \\
& + \underline{a}^2 b P_{211}[u^{(1)},\ v^{(1)},\ \bar{u}] + \underline{a}b^2 P_{121}[u^{(1)},\ v^{(1)},\ \bar{u}] + b^3 P_{31}[v^{(1)},\ \bar{u}] + \\
& + \ldots + P_2[\bar{u}] + \underline{a}P_{12}[u^{(1)},\ \bar{u}] + bP_{12}[v^{(1)},\ \bar{u}] + \underline{a}^2 P_{22}[u^{(1)},\ \bar{u}] + \\
& + \underline{a}b P_{112}[u^{(1)},\ v^{(1)},\ \bar{u}] + b^2 P_{22}[v^{(1)},\ \bar{u}] + \ldots + P_3[\bar{u}] + \\
& + \underline{a}P_{13}[u^{(1)},\ \bar{u}] + bP_{13}[v^{(1)},\ \bar{u}] + \ldots + P_4[\bar{u}] + \ldots
\end{aligned} \tag{27.22}$$

In this expression (24.10) and (24.12) have already been utilized for the eigenfunctions $u^{(1)}$ and $v^{(1)}$ as well as the relations below which from (22.9) and (27.19)

$$P_{11}[u^{(1)}, \bar{u}] = \omega_1 T_{11}[u^{(1)}, \bar{u}] = 0 , \quad P_{11}[v^{(1)}, \bar{u}] = \omega_2 T_{11}[v^{(1)}, u] = 0$$

Expression (27.22) again possesses a minimum for $u \equiv 0$ if and only if it is possible to find a set of positive quantities A, B, $\bar{g}$ and $\bar{h}$ such that from the inequalities

$$|\underline{a}| < A , \quad |b| < B , \quad |\bar{u}_i| < \bar{g} , \quad \left|\frac{\partial \bar{u}_i}{\partial x_j}\right| < \bar{h} \tag{27.23}$$

it follows that

$$P[u] \geq 0 .$$

A set of necessary conditions may be derived immediately by the specialization $\bar{u} \equiv 0$. As all integrals depending on $\bar{u}$ become zero, for all values of $\underline{a}$ and b the relation

$$\underline{a}^3 P_3[u^{(1)}] + \underline{a}^2 b F_{21}[u^{(1)}, v^{(1)}] + \underline{a} b^2 P_{12}[u^{(1)}, v^{(1)}] + b^3 P_3[v^{(1)}] = 0 ,$$

should hold. It follows that

$$P_3[u^{(1)}] = P_{21}[u^{(1)}, v^{(1)}] = P_{12}[u^{(1)}, v^{(1)}] = P_3[v^{(1)}] = 0 . \tag{27.24}$$

In addition the following inequality should be satisfied for all values of $\underline{a}$ and b

$$\underline{a}^4 P_4[u^{(1)}] + \underline{a}^3 b P_{31}[u^{(1)}, v^{(1)}] + \underline{a}^2 b^2 P_{22}[u^{(1)}, v^{(1)}] + \\ + \underline{a} b^3 P_{13}[u^{(1)}, v^{(1)}] + b^4 P_4[v^{(1)}] \geq 0 . \tag{27.25}$$

Since the integrand of $T_2[u]$ again can be assumed to be of the form (23.7), it may be shown in the same way as in Sect. 25, that it is possible to choose the quantities A, B, $\bar{g}$ and $\bar{h}$ so small that from inequalities (27.23), for the terms following $P_2[\bar{u}]$ in (27.22) it follows that

$$\left| \underline{a}P_{12}[u^{(1)}, \bar{u}] + bP_{12}[v^{(1)}, \bar{u}] + \underline{a}^2P_{22}[u^{(1)}, \bar{u}] + \dots + P_3[\bar{u}] + \right.$$

$$\left. + \underline{a}P_{13}[u^{(1)}, \bar{u}] + \dots + P_4[\bar{u}] + \dots \right| \leq \gamma P_2[\bar{u}] , \qquad (27.26)$$

in which γ is an arbitrarily small positive constant. By use of (27.24) and (27.26) for $P[u]$, the following inequalities are established

$$P[u] \geq \underline{a}^4P_4[u^{(1)}] + \underline{a}^3bP_{31}[u^{(1)}, v^{(1)}] + \underline{a}^2b^2P_{22}[u^{(1)}, v^{(1)}] +$$

$$+ \underline{a}b^3P_{13}[u^{(1)}, v^{(1)}] + b^4P_4[v^{(1)}] + \dots + \underline{a}^2P_{21}[u^{(1)}, \bar{u}] +$$

$$+ \underline{a}bP_{111}[u^{(1)}, v^{(1)}, \bar{u}] + b^2P_{21}[v^{(1)}, \bar{u}] + \underline{a}^3P_{31}[u^{(1)}, \bar{u}] +$$

$$+ \underline{a}^2bP_{211}[u^{(1)}, v^{(1)}, \bar{u}] + \underline{a}b^2P_{121}[u^{(1)}, v^{(1)}, \bar{u}] + b^3P_{31}[v^{(1)}, \bar{u}] +$$

$$+ \dots + (1 - \gamma)P_2[\bar{u}] , \qquad (27.27)$$

$$P[u] \leq \underline{a}^4P_4[u^{(1)}] + \underline{a}^3bP_{31}[u^{(1)}, v^{(1)}] + \underline{a}^2b^2P_{22}[u^{(1)}, v^{(1)}] +$$

$$+ \underline{a}b^3P_{13}[u^{(1)}, v^{(1)}] + b^4P_4[v^{(1)}] + \dots + \underline{a}^2P_{21}[u^{(1)}, \bar{u}] +$$

$$+ \underline{a}bP_{111}[u^{(1)}, v^{(1)}, \bar{u}] + b^2P_{21}[v^{(1)}, \bar{u}] + \underline{a}^3P_{31}[u^{(1)}, \bar{u}] +$$

$$+ \underline{a}^2bP_{211}[u^{(1)}, v^{(1)}, \bar{u}] + \underline{a}b^2P_{121}[u^{(1)}, v^{(1)}, \bar{u}] + b^3P_{31}[v^{(1)}, \bar{u}] +$$

$$+ \dots + (1 + \gamma)P_2[\bar{u}] . \qquad (27.28)$$

For the derivation of stability conditions sharper than conditions (27.24) and (27.25) in analogy with derivations in Sect. 25, the minimum of the expression

$$\underline{a}^2 P_{21}[u^{(1)}, \bar{u}] + \underline{a}bP_{111}[u^{(1)}, v^{(1)}, \bar{u}] + b^2 P_{21}[v^{(1)}, \bar{u}] + \underline{a}^3 P_{31}[u^{(1)}, \bar{u}] +$$

$$+ \underline{a}^2 bP_{211}[u^{(1)}, v^{(1)}, \bar{u}] + \underline{a}b^2 P_{121}[u^{(1)}, v^{(1)}, \bar{u}] +$$

$$+ b^3 P_{31}[v^{(1)}, \bar{u}] + \ldots + \alpha P_2[\bar{u}] \quad (\alpha > 0) \tag{27.29}$$

will be determined for constant values of $\underline{a}$ and b under the side-conditions

$$T_{11}[u^{(1)}, \bar{u}] = 0 , \quad T_{11}[v^{(1)}, \bar{u}] = 0 . \tag{27.30}$$

Likewise analogous to derivations in Sect. 25, it is shown that the solution of this problem can be represented by

$$\bar{\varphi} = \frac{1}{\alpha} \Big| \underline{a}^2 \varphi^{(20)} + \underline{a}b\varphi^{(11)} + b^2 \varphi^{(02)} + \underline{a}^3 \varphi^{(30)} + \underline{a}^2 b\varphi^{(21)} +$$

$$+ \underline{a}b^2 \varphi^{(12)} + b^3 \varphi^{(03)} + \ldots \Big| , \tag{27.31}$$

in which $u = \varphi^{(pq)}$ for arbitrary kinematically admissible functions ζ satisfies the equations

$$P_{pq1}[u^{(1)}, v^{(1)}, \zeta] - \frac{(p+1)P_{p+1,q}[u^{(1)}, v^{(1)}]}{2T_2[u^{(1)}]} T_{11}[u^{(1)}, \zeta] +$$

$$- \frac{(q+1)P_{p,q+1}[u^{(1)}, v^{(1)}]}{2T_2[v^{(1)}]} T_{11}[v^{(1)}, \zeta] + P_{11}[\bar{u}, \zeta] = 0 ,$$

$$T_{11}[u^{(1)}, \bar{u}] = 0 , \quad T_{11}[v^{(1)}, \bar{u}] = 0 . \tag{27.32}$$

For $p + q = 2$, and after use of (27.24) these equations are simplified to

$$\left.\begin{array}{lll} P_{21}[u^{(1)}, \zeta] + P_{11}[\bar{u}, \zeta] = 0 & , \quad T_{11}[u^{(1)}, \bar{u}] = 0 , & T_{11}[v^{(1)}, \bar{u}] = 0 . \\ P_{111}[u^{(1)}, v^{(1)}, \zeta] + P_{11}[\bar{u}, \zeta] = 0 , & T_{11}[u^{(1)}, \bar{u}] = 0 , & T_{11}[v^{(1)}, \bar{u}] = 0 . \\ P_{21}[v^{(1)}, \zeta] + P_{11}[\bar{u}, \zeta] = 0 & , \quad T_{11}[u^{(1)}, \bar{u}] = 0 , & T_{11}[v^{(1)}, \bar{u}] = 0 . \end{array}\right\} \quad (27.33)$$

The calculation of the minimum (27.29) is carried out in the same manner as is described in Sect. 25. Introduction of the result into (27.27) and (27.28) yields

$$\begin{aligned} P[u] \geq\ & \underline{a}^4 \left\{ P_4[u^{(1)}] - \frac{1}{1-\gamma} P_2[\varphi^{(20)}] \right\} + \\ & + \underline{a}^3 b \left\{ P_{31}[u^{(1)}, v^{(1)}] - \frac{1}{1-\gamma} P_{11}[\varphi^{(20)}, \varphi^{(11)}] \right\} + \\ & + \underline{a}^2 b^2 \left\{ P_{22}[u^{(1)}, v^{(1)}] - \frac{1}{1-\gamma} P_{11}[\varphi^{(20)}, \varphi^{(02)}] - \frac{1}{1-\gamma} P_2[\varphi^{(11)}] \right\} + \\ & + \underline{a} b^3 \left\{ P_{13}[u^{(1)}, v^{(1)}] - \frac{1}{1-\gamma} P_{11}[\varphi^{(11)}, \varphi^{(02)}] \right\} + \\ & + b^4 \left\{ P_4[v^{(1)}] - \frac{1}{1-\gamma} P_2[\varphi^{(02)}] \right\} + \ldots , \end{aligned} \quad (27.34)$$

Min P[u] (with $\underline{a}$ = const. and b = const.)

$$\approx \underline{a}^4 \left| P_4[u^{(1)}] - \frac{1}{1+\gamma} P_2[\varphi^{(20)}] \right| +$$

$$+ \underline{a}^3 b \left| P_{31}[u^{(1)}, v^{(1)}] - \frac{1}{1+\gamma} P_{11}[\varphi^{(20)}, \varphi^{(11)}] \right| +$$

$$+ \underline{a}^2 b^2 \left| P_{22}[u^{(1)}, v^{(1)}] - \frac{1}{1+\gamma} P_{11}[\varphi^{(20)}, \varphi^{(02)}] - \frac{1}{1+\gamma} P_2[\varphi^{(11)}] \right| +$$

$$+ \underline{a} b^3 \left| P_{13}[u^{(1)}, v^{(1)}] - \frac{1}{1+\gamma} P_{11}[\varphi^{(11)}, \varphi^{(02)}] \right| +$$

$$+ b^4 \left| P_4[v^{(1)}] - \frac{1}{1+\gamma} P_2[\varphi^{(02)}] \right| + \ldots . \tag{27.35}$$

Finally, after the following shorthand notation is introduced

$$\left.\begin{aligned}
C_{40} &= P_4[u^{(1)}] - P_2[\varphi^{(20)}] \quad , \\
C_{31} &= P_{31}[u^{(1)}, v^{(1)}] - P_{11}[\varphi^{(20)}, \varphi^{(11)}] \quad , \\
C_{22} &= P_{22}[u^{(1)}, v^{(1)}] - P_{11}[\varphi^{(20)}, \varphi^{(02)}] - P_2[\varphi^{(11)}] \quad , \\
C_{13} &= P_{13}[u^{(1)}, v^{(1)}] - P_{11}[\varphi^{(11)}, \varphi^{(02)}] \quad , \\
C_{04} &= P_4[v^{(1)}] - P_2[\varphi^{(02)}]
\end{aligned}\right\} \tag{27.36}$$

it follows that equilibrium will be stable if the quartic form

$$C_{40}\underline{a}^4 + C_{31}\underline{a}^3 b + C_{22}\underline{a}^2 b^2 + C_{13}\underline{a} b^3 + C_{04} b^4 \tag{27.37}$$

is positive definite; for in that case it will always be possible to choose γ so small that the quartic form in the right hand side of (27.34) also is positive definite. Conversely, if (27.37) can be negative, equilibrium will be unstable since in that case γ can be made sufficiently small to make the quartic form in the right hand side of (27.35) to be negative. Only when (27.37) is semipositive definite this form cannot give a decisive conclusion about stability. This very special case, which is of little practical significance, will not be further discussed.

The treatment of the cases $\omega_3 = 0$ etc. does not offer new difficulties. If the first $\omega > 0$ is given by ω_h then for the displacement field u it can be stated

$$u = \sum_{j=1}^{h-1} a_j u^{(j)} + \bar{u} \text{ with } T_{11}[u^{(j)}, \bar{u}] = 0 \quad (j = 1, 2 \ldots . h - 1) . \tag{27.38}$$

After this the analysis proceeds in complete analogy with the foregoing, but with considerably more labor. Again, necessary conditions for stability are that the form of the third order obtained by substitution of

$$u = \sum_{j=1}^{h-1} a_j u^{(j)} \tag{27.39}$$

in $P_3[u]$ is identically zero and that the form of the fourth order which is obtained by substitution of (27.39) in $P_4[u]$ shall not admit negative values.

28. CORRELATION WITH THE INVESTIGATIONS BY MAYER

The theory of stability at the stability-limit as developed in the foregoing can be connected with the investigations of Mayer[31] about the minima of a function F of n independent variables $x_\lambda (\lambda = 1, 2, \ldots, n)$ in the case that the second variation of

this function is semidefinite. Without loss of generality the origin of the independent coordinates x_λ can be chosen at the point where the existence of a minimum is analysed. From the Taylor expansion

$$F(x_\lambda) = F(0) + \sum_{\mu=1}^{n}\left(\frac{\partial F}{\partial x_\mu}\right)_0 x_\mu + \sum_{(\mu,\nu)=1}^{n} \frac{1}{2}\left(\frac{\partial^2 F}{\partial x_\mu \partial x_\nu}\right)_0 x_\mu x_\nu +$$

$$+ \sum_{(\mu,\nu,\rho)=1}^{n} \frac{1}{6}\left(\frac{\partial^3 F}{\partial x_\mu \partial x_\nu \partial x_\rho}\right)_0 x_\mu x_\nu x_\rho + \dots =$$

$$= F(0) + \sum_{\mu=1}^{n} A_\mu x_\mu + \sum_{(\mu,\nu)=1}^{n} A_{\mu\nu} x_\mu x_\nu + \sum_{(\mu,\nu,\rho)=1}^{n} A_{\mu\nu\rho} x_\mu x_\nu x_\rho + \dots =$$

$$= F(0) + F_1(x) + F_2(x) + F_3(x) + \dots \tag{28.1}$$

it can be concluded in the well known way that a minimum can only be present if the first variation satisfies

$$F_1(x) = 0 \ , \tag{28.2}$$

and if the second variation satisfies

$$F_2(x) \geq 0 \tag{28.3}$$

for all values of the variables x_λ. Besides, if the lower sign in (28.3) holds only when all x_λ are zero, i.e., if the second variation is positive definite, then conditions (28.2) and (28.3) are also sufficient for a minimum. In order to obtain an understanding of the conditions governing the existence of a minimum in the case of a semidefinite second variation, Mayer sets

$$x_\lambda = t\xi_\lambda^{(1)} + t^2\xi_\lambda^{(2)} + t^3\xi_\lambda^{(3)} + \dots . \tag{28.4}$$

where the coefficients $\xi_\lambda^{(j)}$ $(j = 1, 2, \dots,)$ are arbitrary. If, after introduction of (28.4) the function F is expanded in terms of increasing powers of t, it is a necessary and sufficient condition for a minimum of this function that the first term of this expansion is of even order and is positive (provided all values of the coefficient $\xi_\lambda^{(j)}$ are not being simultaneously zero). Mayer has left no doubts about the necessity of this condition. He has also in every respect demonstrated the likelihood of this condition being sufficient, although he did not succeed to prove this conjecture rigorously. The application of this method yields criteria for the ordinary minimum problem analogous to those of (25.1), (25.21), (27.24), and (27.37).

Without difficulty, Mayer's method can formally be applied to the variational problem (21.1) of stability. For this purpose an arbitrary kinematically possible vector function is written as

$$u = tv^{(1)} + t^2v^{(2)} + t^3v^{(3)} + \dots . \tag{28.5}$$

and subsequently the left hand side of (22.1) is expanded in increasing powers of t. For stability it is a necessary and sufficient condition that for all kinematically possible functions $v^{(j)}$ the expansion starts with a positive term of even order in t.

That this condition is actually sufficient is less evident than it is in the case of the ordinary problem of the minimum of a function of a finite number of variables. For, as in contrast, a positive definite second variation of a variational problem is not always a sufficient condition for the existence of a minimum [32]. For this reason no use was made in the foregoing of the seemingly obvious extension of Mayer's theory to variational problems. On the other hand, Mayer's results can be motivated in a rigourous way by considerations analogous to the theory developed here.

29. APPLICATION TO THE THEORY OF ELASTICITY

For application of the stability theory to the elastic equilibrium, the knowledge of the Taylor expansion of the total potential energy (22.1) is required. As far as the elastic potential energy is concerned, this can easily be given if the elastic potential according to Section 12 consists of a positive homogeneous quadratic function of the strain components. Expressed in the displacement v, this potential can be written

$$A(v) = A^2(v) + A^3(v) + A^4(v), \tag{29.1}$$

where expression $A^q(v)$ stands for a homogeneous polynomial of the order q in the derivatives of v. Expression $A^2(v)$ corresponds to the elastic potential of the linear theory of elasticity. It is a positive semidefinite function of the derivatives of the displacements that is zero only if the linear contributions of the displacement derivatives in the strain components $\partial v_i/\partial x_j + \partial v_j/\partial x_i$ all vanish simultaneously. The elastic potential in the equilibrium configuration for the displacements $v = U$ follows immediately from (29.1). In a configuration $v = U + u$

$$A(U+u) = A^2(U+u) + A^3(U+u) + A^4(U+u).$$

From this, by expansion with respect to the derivatives of U and u, it follows

$$\begin{aligned} A(U+u) = {} & A_0^2 + A_0^3 + A_0^4 + A_1^1 + A_1^2 + A_1^3 + \\ & + A_2^0 + A_2^1 + A_2^2 + A_3^0 + A_3^1 + A_4^0 . \end{aligned} \tag{29.2}$$

Here A_q^p is the sum of all terms that are homogeneous of the order p in the derivatives of U and homogeneous of the order q in the derivatives of u. Thus, this form is obtained through expansion of $A^{p+q}(U+u)$. The symbol A_o^p in (29.2) is apparently equivalent to the symbol A^p in (29.1). By interchange of U and u the terms A_q^p and A_p^q are also interchanged so that A_2^o represents a semi-positive definite function of the derivatives of u. This function will become zero only if all the relations $\frac{\partial u_i}{\partial x_j} + \frac{\partial u_j}{\partial x_i} = 0$ are simultaneously satisfied. If in addition

$$V_q^p = \iiint A_q^p \, dx_1 \, dx_2 \, dx_3 \, , \tag{29.3}$$

then the Taylor expansion for the elastic potential energy reads

$$V(U+u) - V(U) = V_1[u] + V_2[u] + V_3[u] + V_4[u] \tag{29.4}$$

with

$$\left.\begin{aligned} V_1[u] &= V_1^1 + V_1^2 + V_1^3 \, , \\ V_2[u] &= V_2^0 + V_2^1 + V_2^2 \, , \\ V_3[u] &= \qquad V_3^0 + V_3^1 \, , \\ V_4[u] &= \qquad\qquad V_4^0 \, . \end{aligned}\right\} \tag{29.5}$$

The stability analysis by use of the energy criterion can be carried out in a simple way only if there exists also a potential for the external loads, which in that case is represented by (the negative of) a work function W. If it is assumed that the increment of this function corresponding to the transition of an equilibrium-configuration U to a configuration $U + u$, can be expanded, then

$$W(U+u) - W(U) = W_1[u] + W_2[u] + W_3[u] + \dots \, , \tag{29.6}$$

is obtained, in which series $W_q[u]$ is the sum of the integrals whose integrands are homogeneous functions of the order q in the displacements u and their derivatives. In the frequently occurring case of loads given by magnitude and direction with respect to volume and surface elements of the undeformed state, the following holds

$$W_q[u] = \begin{cases} \sum_{i=1}^{3} \left\{ \iiint \rho X_i \, u_i \, dx_1 \, dx_2 \, dx_3 + \iint p_i \, u_i \, df \right\} & \text{for } q = 1, \\ 0 & \text{for } q > 1. \end{cases} \tag{29.7}$$

Finally, after use of (29.6), it follows that

$$\bar{P}_q[u] = \begin{cases} V_q[u] - W_q[u] & \text{for } 1 \leq q \leq 4 , \\ - W_q[u] & \text{for } q > 4 . \end{cases} \tag{29.8}$$

Chapter 3

EQUILIBRIUM STATES FOR LOADS IN THE NEIGHBORHOOD OF THE BUCKLING LOAD

31. THE BUCKLING LOAD

In the preceding chapter the stability of a supposedly known equilibrium state has been investigated. However, in engineering, stability problems are usually posed in a somewhat different form. It is a question here of the stability of an equilibrium configuration occurring under influence of a given load system. Hence, the state of equilibrium corresponding to this system of loads must first be determined before the stability theory can be applied. For this purpose, differential equations (13.13) with boundary conditions (13.14) or the variational equation (22.3) may be utilized.

In principle, aside from the difficulties connected with the solution of non-linear differential equations, the problem of such a nature appears to lead to a peculiar difficulty which is related to the determination of the loads. A necessary condition for a possible state of equilibrium is that the loads constitute a self equilibrating system. In the framework of the linear theory of elasticity, this requirement is satisfied if the loads which act on the undeformed, supposedly fixed body constitute an equilibrium system; the conditions for the loads which result from this can be written down explicitly. However, as soon as finite deformations are taken into account the loads must satisfy the requirement of equilibrium with respect to the deformed state of the body; as long as this state is unknown, the conditions for the load system cannot be formulated explicitly.

Fortunately, this fundamental difficulty has little significance in most important technical problems. A structure is usually supported in such a way that in any state of small (but finite) deformations in which the body is held fixed, an infinitesimal displacement of the body is excluded. Consequently, the equilibrium conditions for the body as a whole can always be satisfied. Besides, in the following it is assumed that the support reactions

do no work; the total potential energy of the system is then the sum of the elastic energy of the applied loads.

The following considerations will be restricted to cases in which the given loading contains a still undetermined proportionality factor λ; in that case it can be represented as a product of λ and a unit load system. For different values of the supposedly positive load parameters λ, existing equilibrium states are sought.[1] The question of the stability of these states is also posed. The general solution of this problem, i.e., the determination of all possible equilibrium configurations for a given value of λ, is almost always impossible. However, in many important cases in engineering it is possible to find one solution that continuously approaches the undeformed state as the value of λ approaches zero. This equilibrium state and corresponding displacement $U(\lambda)$, the so called fundamental state, is assumed to be known in the following. Moreover, for the range of λ under consideration this fundamental state is assumed to be uniquely determined. In general the following can be observed about the stability of the fundamental state. If the body is supposed to be fixed in the deformed state, any infinitesimal uniform displacement or rotation can be excluded. This means that the additional displacements from the fundamental state u_i cannot satisfy the six relations

[38] $\frac{\partial u_i}{\partial x_j} + \frac{\partial u_j}{\partial x_i} = 0$ throughout the interior of the body. In that case, as was shown in Section 29, $V_2^0[u]$ is positive definite. The remaining contributions in $P_2[u]$ approach zero together with λ and $U(\lambda)$ (see Section 29). Accordingly it is assumed that it is possible to find a positive value for λ_1 such that $P_2[u]$ is positive definite for $\lambda < \lambda_1$. The solution ω_1 of the minimum problem (22.5)

$$\omega = \mathrm{Min}\,\frac{P_2[u]}{T_2[u]}\,, \tag{31.1}$$

[1] If it is necessary to take negative loads into consideration as well, this can most simply be done by substitution of the unit load system by its opposite; λ is then also positive.

whose existence again is assumed, is then also positive, which means that the equilibrium is stable for $\lambda < \lambda_1$. This reasoning follows closely the uniqueness theorem of Kirchhoff [39]. In some cases, for instance the bar under pure tension, the solution of (31.1) is positive for all positive loads. In other cases ω_1 becomes negative after the load parameter exceeds a critical value λ_1. Equilibrium in the fundamental state becomes unstable after the load corresponding to λ_1 is exceeded, and thus the fundamental state has no practical significance for $\lambda > \lambda_1$. Of particular importance is the determination of the limit value λ_1, beyond which the fundamental state becomes unstable. This is determined as the smallest value of λ for which the solution ω_1 of (31.1) is zero.[1] Equilibrium in the fundamental state corresponding to λ is, therefore, at the stability limit. In that case the homogeneous variational equation (24.14) possesses a non zero solution. The load corresponding to λ_1 is called the buckling load; the corresponding fundamental state $U(\lambda_1)$ is called the critical state.

The existence of equilibrium states infinitesimally near the fundamental state for loads equal to the critical load gives rise to the expectation that there are also neighbouring equilibrium states for loads slightly different from the critical load, which can be derived by consideration of small but still finite displacements from the fundamental state. The stability of the critical state at the stability limit is of decisive significance for the character of the neighbouring states. These adjacent equilibrium states are the subject of the following considerations.

32. THE POTENTIAL ENERGY

It is assumed that in the neighbourhood of $\lambda = \lambda_1$ the displacement $U(\lambda)$ and its derivatives may, according to Taylor's formula, be expanded into a series with increasing powers of $\lambda - \lambda_1$. This implies that for parameter values of $\lambda > \lambda_1$ the existence is assumed of the fundamental state also in the neighbourhood of the buckling load. The consequence of this assumption with respect to the nature of the problems under consideration will be dealt with in Sect. 37.

[1] It is in principle not excluded that the fundamental state becomes stable again after the load parameter has considerably exceeded λ_1; in this case the solution of (31.1) should become zero also for a larger value of λ. This case can occur when a coil spring is subjected to axial compression (see [53]).

In the following, the integrals introduced in (22.1) will be denoted by $P_m^\lambda[u]$ for the general fundamental state $U(\lambda)$. They can now also be expanded in terms of $\lambda - \lambda_1$

$$P_m^\lambda[u] = P_m[u] + (\lambda - \lambda_1) P'_m[u] + (\lambda - \lambda_1)^2 P''_m[u] + \ldots \tag{32.1}$$

In the following, the symbol $P_m[u]$ exclusively refers to the critical state $U(\lambda_1)$. In agreement with (22.3), $P_1^\lambda[u]$ is equal to zero for all values of λ.

If, for the time being it is assumed that the solution ω_2 of the minimum problem (24.4) is positive for the critical state, then the general solution of (24.14) reads (see also sect. 25, in particular (25.23) and (25.24))

$$u = \underline{a}u^{(1)} . \tag{32.2}$$

The additional displacements of equilibrium states infinitesimally near to the fundamental state correspond to infinitesimal values of $\underline{a}$. The displacements from the fundamental state to neighboring states for loads slightly different from the critical load will presumably differ somewhat from the form (32.2), so that it is expedient to write them in the form (24.1)[1]

$$u = \underline{a}u_1 + \bar{u} \text{ with } T_{11}[u_1, \bar{u}] = 0 ; \tag{32.3}$$

consequently it is expected that the functions $\bar{u}$ will be small compared to $\underline{a}u_1$.

After use of (32.3), the energy increase, on transition from the fundamental state $U(\lambda)$ to another state $U(\lambda) + u$, is written

[1] Since there can be no confusion with the indices i used for the distinction of the displacement components, the indices of the eigenfunctions will in the following also be written to the right and below the symbol.

$$P^{\lambda}[u] = P_2^{\lambda}[u] + P_3^{\lambda}[u] + P_4^{\lambda}[u] + \ldots =$$

$$= P_2[u] + (\lambda - \lambda_1) P_2'[u] + (\lambda - \lambda_1)^2 P_2''[u] + \ldots +$$

$$+ P_3[u] + (\lambda - \lambda_1) P_3'[u] + \ldots + P_4'[u] + \ldots =$$

$$= \underline{a}^2 P_2[u_1] + \underline{a} P_{11}[u_1, \bar{u}] + P_2[\bar{u}] +$$

$$+ (\lambda - \lambda_1) \left| \underline{a}^2 P_2'[u_1] + \underline{a} P_{11}'[u_1, \bar{u}] + P_2'[\bar{u}] \right| +$$

$$+ (\lambda - \lambda_1)^2 \left| \underline{a}^2 P_2''[u_1] + \underline{a} P_{11}''[u_1, \bar{u}] + P_2''[\bar{u}] \right| +$$

$$+ \underline{a}^3 P_3[u_1] + \underline{a}^2 P_{21}[u_1, \bar{u}] + \underline{a} P_{12}[u_1, \bar{u}] + P_3[\bar{u}] +$$

$$+ (\lambda - \lambda_1) \left| \underline{a}^3 P_3'[u_1] + \ldots + P_3'[\bar{u}] \right| + \ldots +$$

$$+ \underline{a}^4 P_4[u_1] + \underline{a}^3 P_{31}[u_1, \bar{u}] + \ldots + P_4[\bar{u}] + \ldots$$

By use of the relations which follow from $\omega_1 = 0$

$$P_2[u_1] = 0 \text{ and } P_{11}[u_1, \bar{u}] = 0$$

it follows in a somewhat different arrangement that

$$
\begin{aligned}
P^{\lambda}[u] = {} & \underline{a}^2 (\lambda - \lambda_1) P_2'[u_1] + \underline{a}^2 (\lambda - \lambda_1)^2 P_2''[u_1] + \ldots + \\
& + \underline{a}^3 P_3[u_1] + \underline{a}^3 (\lambda - \lambda_1) P_3'[u_1] + \ldots + \underline{a}^4 P_4[u_1] + \ldots + \\
& + \underline{a} (\lambda - \lambda_1) P_{11}[u_1, \bar{u}] + \underline{a} (\lambda - \lambda_1)^2 P_{11}''[u_1, \bar{u}] + \ldots + \\
& + \underline{a}^2 P_{21}[u_1, \bar{u}] + \underline{a}^2 (\lambda - \lambda_1) P_{21}'[u_1, \bar{u}] + \ldots + \\
& + \underline{a}^3 P_{31}[u_1, \bar{u}] + \ldots + P_2[\bar{u}] + (\lambda - \lambda_1) P_2'[\bar{u}] + \\
& + (\lambda - \lambda_1)^2 P_2''[\bar{u}] + \underline{a} P_{12}[u_1, \bar{u}] + \\
& + \underline{a} (\lambda - \lambda_1) P_{12}'[u_1, \bar{u}] + \ldots + \underline{a}^2 P_{22}[u_1, \bar{u}] + \ldots + \\
& + P_3[\bar{u}] + (\lambda - \lambda_1) P_3'[u] + \ldots + \underline{a} P_{13}[u_1, \bar{u}] + \ldots + \\
& + P_4[\bar{u}] + \ldots
\end{aligned}
\tag{32.4}
$$

From this expression of the energy the equilibrium equations are derived in conventional manner by application of the principle of virtual displacements. This application can most readily be carried out in two steps. First, the stationary values of (32.4) are determined for arbitrary constant values of $\underline{a}$. By this condition the dependence of the functions $\bar{u}$ on the parameter $\underline{a}$ is determined. By substitution of (32.4) the energy will then be known as a function of $\underline{a}$, $P^{\lambda}(\underline{a})$. The values of $\underline{a}$ for which stationary values of this function are obtained and the corresponding functions $\bar{u}$ then yield the displacements for the equilibrium configuration.

The exact execution of this method encounters great difficulties due to the nonlinearity of the equations for $\bar{u}$. In order to obtain at least an approximation, the terms in (32.4) which follow $P_2[\bar{u}]$ are neglected; with this the equations for $\bar{u}$ are artifically linearized. The following is intended as a motivation of this approximation.

The integrands of the terms in (32.4) which follow $P_2[\bar{u}]$ are of the second order in $\bar{u}$ and contain one or more factors $\lambda - \lambda_1$ or $\underline{a}$, or they are of higher order in $\bar{u}$ and its derivatives. If the considerations are restricted to small displacements from a fundamental state which differs slightly from the critical state, so that $\lambda - \lambda_1$, $\underline{a}$ and $\bar{u}$ are small, then it is to be expected that these terms are of minor importance in comparison to $P_2[\bar{u}]$. As a proof of this supposition the integrands of the terms which follow $P_2[\bar{u}]$ are combined into one homogeneous quadratic form of $\bar{u}$ and its derivatives. The coefficients of this form are functions of $\lambda - \lambda_1$, $\underline{a}$, $\bar{u}$ and its derivatives, and they all approach zero as $\lambda - \lambda_1$, $\underline{a}$, $\bar{u}$ and its derivatives approach to zero. In analogy with the content of Section 25, it follows then that for sufficiently small absolute values of $\lambda - \lambda_1$, $\underline{a}$, $\bar{u}$ and its derivatives the absolute value of the terms which follow $P_2[\bar{u}]$ is smaller than an arbitrarily small fraction of $P_2[\bar{u}]$. Consequently, the smaller $|\lambda - \lambda_1|$, $|\underline{a}|$ and $|\bar{u}|$ are the better is the approximation of the potential energy obtained by omission of the terms following $P_2[\bar{u}]$. The approximation of the energy is

$$
\begin{aligned}
P^{\lambda}[u] = P^{\lambda}[\underline{a}u^{(1)} + \bar{u}] = {} & \underline{a}^2 (\lambda - \lambda_1) P_2'[u_1] + \underline{a}^2 (\lambda - \lambda_1)^2 P_2''[u_1] + \\
& + \ldots + \underline{a}^3 P_3[u_1] + \underline{a}^3 (\lambda - \lambda_1) P_3'[u_1] + \ldots + \underline{a}^4 P_4[u_1] + \\
& + \ldots + \underline{a} (\lambda - \lambda_1) P_{11}'[u_1, \bar{u}] + \underline{a} (\lambda - \lambda_1)^2 P_{11}''[u_1, \bar{u}] + \\
& + \ldots + \underline{a}^2 P_{21}[u_1, \bar{u}] + \underline{a}^2 (\lambda - \lambda_1) P_{21}'[u_1, \bar{u}] + \ldots + \\
& + \underline{a}^3 P_{31}[u_1, \bar{u}] + \ldots + P_2[\bar{u}]. \qquad (32.5)
\end{aligned}
$$

It is important for what follows to notice that the principal neglected terms are given by

$$
(\lambda - \lambda_1) P_2'[\bar{u}], \ \underline{a} P_{12}[u_1, \bar{u}], \ P_3[\bar{u}]. \qquad (32.6)
$$

33. CALCULATION OF THE FUNCTION $\bar{u}$.

The application of the equilibrium condition to the energy approximation (32.5) is also carried out in two steps. For the determination of the stationary values corresponding to a constant value of $\underline{a}$, the energy increment is calculated. This increment is due to the transition of the function $\bar{u}$ to a kinematically admissible function $\bar{u} + \eta$ which also satisfies (32.3)

$$T_{11}[u_1, \eta] = 0 \quad . \tag{33.1}$$

After expansion of the integrals depending on $\bar{u} + \eta$, it is found that

$$\begin{aligned} P^{\lambda}[\underline{a}u_1 + \bar{u} + \eta] - P^{\lambda}[\underline{a}u_1 + \bar{u}] &= \underline{a}(\lambda - \lambda_1) P'_{11}[u_1, \eta] + \\ &+ \underline{a}(\lambda - \lambda_1)^2 P''_{11}[u_1, \eta] + \ldots + \underline{a}^2 P_{21}[u_1, \eta] + \\ &+ \underline{a}^2(\lambda - \lambda_1) P'_{21}[u_1, \eta] + \ldots + \underline{a}^3 P_{31}[u_1, \eta] + \ldots + \\ &+ P_{11}[\bar{u}, \eta] + P_2[\eta] \, . \end{aligned} \tag{33.2}$$

The first variation, given by the terms of (33.2) which are linear in η, must always be zero for a stationary value of (32.5). As $P_2[\eta]$ is positive under condition (32.1) the sought stationary value is a minimum.

By analogy with Section 25, the condition obtained by equating the first variation to zero is made equivalent to a system of differential equations with boundary equations. For this purpose, an arbitrary kinematically possible function ζ, not subjected to restriction (33.1), is written as

$$\zeta = tu_1 + \eta \quad \text{with} \quad T_{11}[u_1, \eta] = 0 \quad \text{and} \quad t = \frac{T_{11}[u_1, \zeta]}{2T_2[u_1]} \quad .$$

With due consideration to the identities

$$P'_{11}[u_1, u_1] = 2P'_2[u_1], \; P_{21}[u_1, u_1] = 3P_3[u_1] \text{ etc.},$$

it is then possible to write

$$\begin{aligned}
&\underline{a}(\lambda - \lambda_1) P'_{11}[u_1, \zeta] + \underline{a}(\lambda - \lambda_1)^2 P''_{11}[u_1, \zeta] + \ldots + \\
&\quad + \underline{a}^2 P_{21}[u_1, \zeta] + \underline{a}^2(\lambda - \lambda_1) P'_{21}[u_1, \zeta] + \ldots + \underline{a}^3 P_{31}[u_1, \zeta] + \\
&\quad + \ldots + P_{11}[\bar{u}, \zeta] = t \Big| \underline{a}(\lambda - \lambda_1) 2P'_2[u_1] + \\
&\quad + \underline{a}(\lambda - \lambda_1)^2 2P''_2[u_1] + \ldots + \underline{a}^2 3P_3[u_1] + \\
&\quad + \underline{a}^2(\lambda - \lambda_1) 3P'_3[u_1] + \ldots + \underline{a}^3 4P_4[u_1] + \ldots + P_{11}[\bar{u}, u_1] \Big| + \\
&\quad + \underline{a}(\lambda - \lambda_1) P'_{11}[u_1, \eta] + \underline{a}(\lambda - \lambda_1)^2 P''_{11}[u_1, \eta] + \ldots + \\
&\quad + \underline{a}^2 P_{21}[u_1, \eta] + \underline{a}^2(\lambda - \lambda_1) P'_{21}[u_1, \eta] + \ldots + \\
&\quad + \underline{a}^3 P_{31}[u_1, \eta] + \ldots + P_{11}[\bar{u}, \eta] .
\end{aligned}$$

In this expression the terms which depend on η are identical to the terms linear in η of (33.2), and thus the sum of those is zero. With use of

$$P_{11}[u_1, \bar{u}] = 0$$

and after substitution of t. it follows that

$$\underline{a}(\lambda - \lambda_1)\left\{P'_{11}[u_1,\zeta] - \frac{2P'_2[u_1]}{2T_2[u_1]}T_{11}[u_1,\zeta]\right\} +$$

$$+ \underline{a}(\lambda - \lambda_1)^2\left\{P''_{11}[u_1,\zeta] - \frac{2P''_2[u_1]}{2T_2[u_1]}T_{11}[u_1,\zeta]\right\} + \ldots +$$

$$+ \underline{a}^2\left\{P_{21}[u_1,\zeta] - \frac{3P_3[u_1]}{2T_2[u_1]}T_{11}[u_1,\zeta]\right\} +$$

$$+ \underline{a}^2(\lambda - \lambda_1)\left\{P'_{21}[u_1,\zeta] - \frac{3P'_3[u_1]}{2T_2[u_1]}T_{11}[u_1,\zeta]\right\} + \ldots +$$

$$+ \underline{a}^3\left\{P_{31}[u_1,\zeta] - \frac{4P_4[u_1]}{2T_2[u_1]}T_{11}[u_1,\zeta]\right\} + \ldots +$$

$$+ P_{11}[\bar{u},\zeta] = 0. \tag{33.3}$$

Similarly, analogous to Sect. 25, it can be shown that this equation, together with the condition

$$T_{11}[u_1,\bar{u}] = 0 \tag{33.4}$$

possesses at most one solution. Due to the linearity of (33.3) and (33.4), this solution can be written

$$\bar{u} = \underline{a}(\lambda - \lambda_1)\varphi'_1 + \underline{a}(\lambda - \lambda_1)^2\varphi''_1 + \ldots + \underline{a}^2\varphi_2 +$$

$$+ \underline{a}^2(\lambda - \lambda_1)\varphi'_2 + \ldots + \underline{a}^3\varphi_3 + \ldots, \tag{33.5}$$

where φ_1', φ_1'', φ_2 etc. are the solutions of

$$\left.\begin{aligned} \bar{P}_{11}[\bar{u},\zeta] + \bar{P}_{11}'[u_1,\zeta] - \frac{2P_2'[u_1]}{2T_2[u_1]}\,\bar{T}_{11}[u_1,\zeta] &= 0\,; \\ T_{11}[u_1,\bar{u}] &= 0\,, \\ P_{11}[\bar{u},\zeta] + P_{11}''[u_1,\zeta] - \frac{2P_2''[u_1]}{2T_2[u_1]}\,T_{11}[u_1,\zeta] &= 0\,; \\ T_{11}[u_1,\bar{u}] &= 0\,, \end{aligned}\right\} \tag{33.6}$$

$$\left.\begin{aligned} P_{11}[\bar{u},\zeta] + P_{21}[u_1,\zeta] - \frac{3P_3[u_1]}{2T_2[u_1]}\,T_{11}[u_1,\zeta] &= 0\,; \\ T_{11}[u_1,\bar{u}] &= 0\,, \end{aligned}\right\} \tag{33.7}$$

$$\left.\begin{aligned} P_{11}[\bar{u},\zeta] + P_{31}[u_1,\zeta] - \frac{4P_4[u_1]}{2T_2[u_1]}\,T_{11}[u_1,\zeta] &= 0\,; \\ T_{11}[u_1,\bar{u}] &= 0\,. \end{aligned}\right\} \tag{33.8}$$

From (33.5) follows the confirmation of the expectation expressed in Sect. 32 that for small values of $\lambda - \lambda_1$ and $\underline{a}$ the functions $\bar{u}$ are small compared to $\underline{a}u_1$. From comparison of the first equation (33.7) with (25.16), it also follows that if $P_3[u_1]$ is zero, the functions φ_2 are identical to the functions $\varphi^{(2)}$ introduced in Sect. 25.

The minimum of (32.5) is calculated by application of (33.3) for $\zeta = \bar{u}$ (see also Sect. 25, in particular (25.18)). By use of (33.5) it is found that

$$\underline{a}^2(\lambda - \lambda_1)\, P_2'\,[u_1] + \underline{a}^2(\lambda - \lambda_1)^2\, P_2''\,[u_1] + \ldots + \underline{a}^3 P_3\,[u_1] +$$

$$+ \underline{a}^3(\lambda - \lambda_1)\, P_3'\,[u_1] + \ldots + \underline{a}^4 P_4\,[u_1] + \ldots - P_2\,[\bar{u}] =$$

$$= \underline{a}^2(\lambda - \lambda_1)\, P_2'\,[u_1] + \underline{a}^2(\lambda - \lambda_1)^2 \left\{P_2''\,[u_1] - P_2\left[\varphi_1'\right]\right\} +$$

$$+ \ldots + \underline{a}^3 P_3\,[u_1] + \underline{a}^3(\lambda - \lambda_1) \left\{P_3'\,[u_1] - P_{11}\left[\varphi_1', \varphi_2\right]\right\} +$$

$$+ \ldots + \underline{a}^4 \left\{P_4\,[u_1] - P_2\,[\varphi_2]\right\} + \ldots \tag{33.9}$$

Here in accordance with (32.6) and (33.5), the following terms have already been neglected

$$\underline{a}^2(\lambda - \lambda_1)^3\, P_2'\left[\varphi_1'\right],\ \underline{a}^3(\lambda - \lambda_1)^2\, P_{11}'\left[\varphi_1', \varphi_2\right],$$

$$\underline{a}^4(\lambda - \lambda_1)\, P_2'\,[\varphi_2],\ \underline{a}^5 P_{12}\,[u_1, \varphi_2] \quad .$$

Hence it would be meaningless to include any terms of the fifth or higher order in $\lambda - \lambda_1$ and $\underline{a}$. If, for brevity

$$\left.\begin{aligned} &P_2'\,[u_1] = A_2',\ P_2''\,[u_1] - P_2\left[\varphi_1'\right] = A_2'',\ P_3\,[u_1] = A_3, \\ &P_3'\,[u_1] - P_{11}\left[\varphi_1', \varphi_2\right] = A_3',\ P_4\,[u_1] - P_2\,[\varphi_2] = A_4 \end{aligned}\right\} \tag{33.10}$$

then, as a first approximation for the minimum of the energy for a constant value of $\underline{a}$, it finally follows

$$\bar{P}^{\lambda}(\underline{a}) = (\lambda - \lambda_1)\, A_2'\underline{a}^2 + (\lambda - \lambda_1)^2\, A_2''\underline{a}^2 + A_3\underline{a}^3 +$$

$$+ (\lambda - \lambda_1)\, A_3'\underline{a}^3 + A_4\underline{a}^4 . \tag{33.11}$$

It follows from (33.10) that only the terms quadratic in $\lambda - \lambda_1$ and $\underline{a}$ of (33.5), ($\underline{a}(\lambda - \lambda_1)\varphi_1'$, and $\underline{a}^2\varphi_2$), are significant so that the corresponding approximation of the function $\bar{u}$ is given by

$$\bar{u} = \underline{a}(\lambda - \lambda_1)\,\varphi_1' + \underline{a}^2\varphi_2 \,. \tag{33.12}$$

It is seen from (33.10) that the constant A_3 is identical to the quantity which in the first place is decisive for stability (see (25.1)). If it is zero, then it follows from the identity of the functions φ_2 and $\varphi^{(2)}$, that A_4 (33.10) is identical to the quantity introduced in (25.21), which in that case governs stability of the critical state.

34. IMPROVEMENT OF THE APPROXIMATION

As already has been remarked in Sect. 32, expression (32.5) represents an approximation of the energy which becomes more accurate with values of decreasing $\lambda - \lambda_1$, $\underline{a}$ and $\bar{u}$. Consequently, (33.11) yields an approximation of the stationary value of $\bar{P}^{\lambda}(\underline{a})$ for small values of $\lambda - \lambda_1$, $\underline{a}$ and $\bar{u}$, which is a better approximation the smaller $\lambda - \lambda_1$ and $\underline{a}$ are; the required smallness of the function $\bar{u}$ is in that case automatically ensured by (33.5) or (33.12). However, it is desirable to know in what manner the approximation, when necessary, can be improved. For this purpose, it is noted that (33.12) yields an approximation for the function $\bar{u}$ which determines the stationary value of (32.4). This approximation is again more accurate the smaller $\lambda - \lambda_1$ and $\underline{a}$ are taken. Now, if

$$\bar{u} = \underline{a}(\lambda - \lambda_1)\,\varphi_1' + \underline{a}^2\varphi_2 + \bar{\bar{u}} \text{ with } T_{11}\,[u_1, \bar{\bar{u}}] = 0 \,, \tag{34.1}$$

then as a consequence, $\bar{\bar{u}}$ is expected to be small in comparison to the first two terms.

Introduction of (34.1) in (32.4) yields after expansion and after arrangement of the terms according to increasing order in $\bar{\bar{u}}$ and its derivatives

$$
\begin{aligned}
P^{\lambda}[u] = {} & (\lambda - \lambda_1) A_2' \underline{a}^2 + (\lambda - \lambda_1)^2 A_2'' \underline{a}^2 + A_3 \underline{a}^3 + (\lambda - \lambda_1) A_3' \underline{a}^3 + \\
& + A_4 \underline{a}^4 + \underline{a}^2 (\lambda - \lambda_1)^3 \left\{ P_2''' [u_1] + P_{11}'' [u_1, \varphi_1'] + P_2' [\varphi_1'] \right\} + \\
& + \underline{a}^2 (\lambda - \lambda_1)^4 \left\{ P_2'''' [u_1] + P_{11}''' \left[u_1, \varphi_1'\right] + P_2'' \left[\varphi_1'\right] \right\} + \ldots + \\
& + \underline{a}^3 (\lambda - \lambda_1)^2 \left\{ P_3'' [u_1] + P_{21}' \left[u_1, \varphi_1'\right] + P_{12} \left[u_1, \varphi_1'\right] + \right. \\
& \left. + P_{11}'' [u_1, \varphi_2] + P_{11}' \left[\varphi_1', \varphi_2\right] \right\} + \underline{a}^3 (\lambda - \lambda_1)^3 \left\{ P_3''' [u_1] + \right. \\
& + P_{21}'' \left[u_1, \varphi_1'\right] + P_{12}' \left[u_1, \varphi_1'\right] + P_3 \left[\varphi_1'\right] + P_{11}''' [u_1, \varphi_2] + \\
& \left. + P_{11}'' \left[\varphi_1', \varphi_2\right] \right\} + \ldots + \underline{a}^4 (\lambda - \lambda_1) \left\{ P_4' [u_1] + P_{31} \left[u_1, \varphi_1'\right] + \right. \\
& + P_{21}' [u_1, \varphi_2] + P_{111} \left[u_1, \varphi_1', \varphi_2\right] + P_2' [\varphi_2] \Big\} + \\
& + \underline{a}^4 (\lambda - \lambda_1)^2 \left\{ P_4'' [u_1] + P_{31}' \left[u_1, \varphi_1'\right] + P_{22} \left[u_1, \varphi_1'\right] + \right. \\
& \left. + P_{21}'' [u_1, \varphi_2] + P_{111}' \left[u_1, \varphi_1', \varphi_2\right] + P_{21} \left[\varphi_1', \varphi_2\right] + P_2'' [\varphi_2] \right\} + \\
& + \ldots + \underline{a}^5 \left\{ P_5 [u_1] + P_{31} [u_1, \varphi_2] + P_{12} [u_1, \varphi_2] \right\} + \\
& + \underline{a}^5 (\lambda - \lambda_1) \left\{ P_5' [u_1] + P_{41} \left[u_1, \varphi_1'\right] + P_{31}' [u_1, \varphi_2] + \right. \\
& \left. + P_{211} \left[u_1, \varphi_1', \varphi_2\right] + P_{12}' [u_1, \varphi_2] + P_{12} \left[\varphi_1', \varphi_2\right] \right\} + \ldots + \\
& + \underline{a}^6 \left\{ P_6 [u_1] + P_{41} [u_1, \varphi_2] + P_{22} [u_1, \varphi_2] + P_3 [\varphi_2] \right\} + \ldots + \\
& + \underline{a} (\lambda - \lambda_1)^2 \left\{ P_{11}'' [u_1, \bar{\bar{u}}] + P_{11}' \left[\varphi_1', \bar{\bar{u}}\right] \right\} + \\
& + \underline{a} (\lambda - \lambda_1)^3 \left\{ P_{11}''' [u_1, \bar{\bar{u}}] + P_{11}'' \left[\varphi_1', \bar{\bar{u}}\right] \right\} + \ldots + \\
& + \underline{a}^2 (\lambda - \lambda_1) \left\{ P_{21}' [u_1, \bar{\bar{u}}] + P_{111} \left[u_1, \varphi_1', \bar{\bar{u}}\right] + P_{11}' [\varphi_2, \bar{\bar{u}}] \right\} +
\end{aligned}
$$

$$+ \underline{a}^2(\lambda - \lambda_1)^2 \left\{P''_{21}[u_1,\bar{\bar{u}}] + P'_{111}\left[u_1,\varphi'_1,\bar{\bar{u}}\right] + P_{21}\left[\varphi'_1,\bar{\bar{u}}\right] + \right.$$

$$\left. + P''_{11}[\varphi_2,\bar{\bar{u}}]\right\} + \ldots + \underline{a}^3 \left\{P_{31}[u_1,\bar{\bar{u}}] + P_{111}[u_1,\varphi_2,\bar{\bar{u}}]\right\} +$$

$$+ \underline{a}^3(\lambda - \lambda_1) \left\{P'_{31}[u_1,\bar{\bar{u}}] + P_{211}[u_1,\varphi'_1,\bar{\bar{u}}] + \right.$$

$$\left. + P'_{111}[u_1,\varphi_2,\bar{\bar{u}}] + P_{111}[\varphi'_1,\varphi_2,\bar{\bar{u}}]\right\} + \ldots +$$

$$+ \underline{a}^4 \left\{P_{41}[u_1,\bar{\bar{u}}] + P_{211}[u_1,\varphi_2,\bar{\bar{u}}] + P_{21}[\varphi_2,\bar{\bar{u}}]\right\} + \ldots +$$

$$+ P_2[\bar{\bar{u}}] + (\lambda - \lambda_1) P'_2[\bar{\bar{u}}] + \ldots +$$

$$+ \underline{a}P_{12}[u_1,\bar{\bar{u}}] + \underline{a}(\lambda - \lambda_1) \left\{P'_{12}[u_1,\bar{\bar{u}}] + P_{12}\left[\varphi'_1,\bar{\bar{u}}\right]\right\} + \ldots +$$

$$+ \underline{a}^2 \left\{P_{22}[u_1,\bar{\bar{u}}] + P_{12}[\varphi_2,\bar{\bar{u}}]\right\} + \ldots + P_3[\bar{\bar{u}}] + \ldots \qquad (34.2)$$

Here use has been made of the properties of the function φ'_1 and φ_2 through combination in expression (33.11) of all the terms which are independent of $\bar{\bar{u}}$ and which are of the third or fourth order in $\lambda - \lambda_1$ and $\underline{a}$. Further, due to the first of equations (33.6) and (33.7) which hold for φ'_1 and φ_2 respectively, the terms linear in $\bar{\bar{u}}$ and its derivatives with coefficients $\underline{a}(\lambda - \lambda_1)$ and $\underline{a}^2$ are omitted.

In the same manner as in Sect. 33, it can be shown that the terms which follow $P_2[\bar{\bar{u}}]$ for small values of $\lambda - \lambda_1$, $\underline{a}$ and $\bar{\bar{u}}$ and its derivatives are small in comparison to $P_2[\bar{\bar{u}}]$ and that they consequently can be neglected. Next, the stationary values of the remaining approximation of the energy are determined for constant values of $\underline{a}$. Since this analysis proceeds completely parallel to Sect. 33, it will suffice here to indicate the results. Again, the required stationary value appears to be a minimum, while the uniquely determined function $\bar{\bar{u}}$ for which this minimum is obtained can be written

$$\bar{\bar{u}} = \underline{a}(\lambda - \lambda_1)^2 \psi''_1 + \underline{a}^2(\lambda - \lambda_1)\psi'_2 + \underline{a}^3\psi_3 + \ldots \qquad (34.3)$$

Terms of the fourth and higher order in $\lambda - \lambda_1$ and $\underline{a}$ have no significance in this expression. They yield a contribution to the minimum whose lowest order terms are of the seventh order, while substitution of (34.3) in the neglected terms of (34.2) leads to terms of the same order in $(\lambda - \lambda_1)$ and $\underline{a}$. The functions ψ_1'', ψ_2', and ψ_3 are, respectively, the solutions of the equations

$$P_{11}[\bar{\bar{u}},t] + P_{11}''[u_1,t] + P_{11}'\left[\varphi_1',t\right] + \\ - \frac{2P_2''[u_1] + P_{11}'\left[\varphi_1',u_1\right]}{2T_2[u_1]} T_{11}[u_1,t] = 0 \; ; \; T_{11}[u_1,\bar{\bar{u}}] = 0 \; . \quad (34.4)$$

$$P_{11}[\bar{\bar{u}},t] + P_{21}'[u_1,t] + P_{111}\left[u_1,\varphi_1',t\right] + P_{11}'[\varphi_2,t] + \\ - \frac{3P_3'[u_1] + 2P_{21}\left[u_1,\varphi_1'\right] + P_{11}'[\varphi_2,u_1]}{2T_2[u_1]} T_{11}[u_1,t] = 0 \; ; \\ T_{11}[u_1,\bar{\bar{u}}] = 0 \; . \quad (34.5)$$

$$P_{11}[\bar{\bar{u}},t] + P_{31}[u_1,t] + P_{111}[u_1,\varphi_2,t] + \\ - \frac{4P_4[u_1] + 2P_{21}[u_1,\varphi_2]}{2T_2[u_1]} T_{11}[u_1,t] = 0; \; T_{11}[u_1,\bar{\bar{u}}] = 0 \; . \quad (34.6)$$

A comparison of (34.6) with (27.13) reveals that the identity of the function φ_2 and $\varphi^{(2)}$ for $A_3 = 0$ also results in the identity of the functions ψ_3 to the functions $\psi^{(3)}$ which were introduced in Sect. 27.

After introduction of the notations

$$
\left.
\begin{aligned}
& P_2'''[u_1] + P_{11}''\left[u_1,\varphi_1'\right] + P_2'\left[\varphi_1'\right] = A_2''' , \\
& P_2''''[u_1] + P_{11}'''\left[u_1,\varphi_1'\right] + P_2''\left[\varphi_1'\right] - P_2\left[\psi_1''\right] = A_2'''' , \\
& P_3''[u_1] + P_{21}'\left[u_1,\varphi_1'\right] + P_{12}\left[u_1,\varphi_1'\right] + P_{11}''[u_1,\varphi_2] + \\
& \qquad + P_{11}'\left[\varphi_1',\varphi_2\right] = A_3'' , \\
& P_3'''[u_1] + P_{21}''\left[u_1,\varphi_1'\right] + P_{12}'\left[u_1,\varphi_1'\right] + P_3\left[\varphi_1'\right] + \\
& \qquad + P_{11}'''[u_1,\varphi_2] + P_{11}''\left[\varphi_1',\varphi_2\right] - P_{11}\left[\psi_1'',\psi_2'\right] = A_3''' , \\
& P_4'[u_1] + P_{31}\left[u_1,\varphi_1'\right] + P_{21}'[u_1,\varphi_2] + P_{111}\left[u_1,\varphi_1',\varphi_2\right] + \\
& \qquad + P_2'[\varphi_2] = A_4' , \\
& P_4''[u_1] + P_{31}'\left[u_1,\varphi_1'\right] + P_{22}\left[u_1,\varphi_1'\right] + P_{21}''[u_1,\varphi_2] + \\
& \qquad + P_{111}'\left[u_1,\varphi_1',\varphi_2\right] + P_{21}\left[\varphi_1',\varphi_2\right] + P_2''[\varphi_2] + \\
& \qquad - P_{11}\left[\psi_1'',\psi_3\right] - P_2\left[\psi_2'\right] = A_4'' , \\
& P_5[u_1] + P_{31}[u_1,\varphi_2] + P_{12}[u_1,\varphi_2] = A_5 , \\
& P_5'[u_1] + P_{41}\left[u_1,\varphi_1'\right] + P_{31}'[u_1,\varphi_2] + P_{211}\left[u_1,\varphi_1',\varphi_2\right] + \\
& \qquad + P_{12}'[u_1,\varphi_2] + P_{12}\left[\varphi_1',\varphi_2\right] - P_{11}\left[\psi_2',\psi_3\right] = A_5' , \\
& P_6[u_1] + P_{41}[u_1,\varphi_2] + P_{22}[u_1,\varphi_2] + P_3[\varphi_2] - P_2[\psi_3] = A_6
\end{aligned}
\right\} \qquad (34.7)
$$

the minimum of the approximation of (34.2) becomes

$$\bar{P}^{\lambda}(\underline{a}) = (\lambda-\lambda_1) A_2' \underline{a}^2 + (\lambda-\lambda_1)^2 A_2'' \underline{a}^2 + (\lambda-\lambda_1)^3 A_2''' \underline{a}^2 +$$

$$+ (\lambda-\lambda_1)^4 A_2'''' \underline{a}^2 + A_3 \underline{a}^3 + (\lambda-\lambda_1) A_3' \underline{a}^3 +$$

$$+ (\lambda-\lambda_1)^2 A_3'' \underline{a}^3 + (\lambda-\lambda_1)^3 A_3''' \underline{a}^3 + A_4 \underline{a}^4 + (\lambda-\lambda_1) A_4' \underline{a}^4 +$$

$$+ (\lambda-\lambda_1)^2 A_4'' \underline{a}^4 + A_5 \underline{a}^5 + (\lambda-\lambda_1) A_5' \underline{a}^5 + A_6 \underline{a}^6 \quad . \qquad (34.8)$$

In this expression terms of an order higher than six are consistently left out.

It appears from (34.7) and (34.8) that by inclusion of terms of the fifth order, it is even possible to improve (33.11) without the knowledge of the functions ψ_1'', ψ_2' and ψ_3. Further, if A_3 is equal to zero, the coefficients A_5 and A_6 are identical to the quantities (27.5) and (27.18) introduced in Sect. 271, which successively govern stability in the critical state if A_3 as well as A_4 are zero.

It requires no proof that the described process of improvement can be continued by writing the functions $\bar{\bar{u}}$ as

$$\bar{\bar{u}} = \underline{a}(\lambda-\lambda_1)^2 \psi_1'' + \underline{a}^2 (\lambda-\lambda_1) \psi_2' + \underline{a}^3 \psi_3 + \bar{\bar{\bar{u}}} \text{ with } T_{11}[u_1, \bar{\bar{\bar{u}}}] = 0 \, .$$

This manner yields for small values of $\lambda - \lambda_1$ and $\underline{a}$ a power series for the stationary value of (32.4). Of course in general nothing can be said about the region of convergence of this series.

35. THE EQUILIBRIUM STATES

In this section the stationary values of $\bar{P}^{\lambda}(\underline{a})$ as functions of $\underline{a}$ will be determined in the case that $\bar{P}^{\lambda}(\underline{a})$ is given by the expressions (33.11) and (34.8) as a first and second approximation respectively. The corresponding values of $\underline{a}$ and the

functions $\bar{u}$ (33.12) and $\bar{\bar{u}}$ (34.3) yield in that case an approximation for the displacements in the equilibrium states. The analysis of the stability involves likewise no difficulties, since expressions (33.11) and (34.8) are both minimum. Now, if the stationary value of $\bar{P}^{\lambda}(\underline{a})$ as a function of $\underline{a}$, is again a minimum, then the approximation of the energy (32.4) or (34.2) also possesses a minimum with respect to varied functions $\bar{u}$ or $\bar{\bar{u}}$ and simultaneously varied values of $\underline{a}$. Equilibrium in the corresponding displacement configuration is then stable. In reverse, the approximation of the energy does not possess a minimum if the stationary value of $\bar{P}^{\lambda}(\underline{a})$ is not a minimum, and in that case equilibrium is unstable.

For the derivation of a first approximation expressions (33.11) and (34.8), representing respectively the first and second approximation as proposed in Sect. 34, may be considerably simplified. For this purpose it is noted that equilibrium in the fundamental state is stable for $\lambda < \lambda_1$, so that

$$P_2^{\lambda}[u] = P_2[u] + (\lambda - \lambda_1) P_2'[u] + \ldots \geq 0$$

should hold. Because $P_2[u_1] = 0$ it follows that

$$(\lambda - \lambda_1) P_2'[u_1] + \ldots \geq 0 .$$

This relation can be satisfied for $\lambda < \lambda_1$ only if the constant A_2' (33.10) is non positive. The limiting case in which A_2' is equal to zero does not occur in applications thus far considered, so that in the following it is assumed that A_2' is negative. For small absolute values of $\lambda - \lambda_1$ and $\underline{a}$ all terms containing at least one factor $\lambda - \lambda_1$ are small in absolute value compared to the absolute value of the first term $(\lambda - \lambda_1) \cdot A_2' \underline{a}^2$, and in a first approximation they may be neglected. Further, among the terms which contain no factor of $\lambda - \lambda_1$, the term of the lowest order in $\underline{a}$ is the dominant term. Let this term be $A_n \underline{a}^n$ (in which case the stability of the critical

state is governed by the quantity A_n) . Then (33.11)and (34.8) lead to the expression

$$\bar{P}^{\lambda}(\underline{a}) = (\lambda-\lambda_1) A_2' \underline{a}^2 + A_n \underline{a}^n . \quad n \geq 3 . \tag{35.1}$$

A simple procedure for the construction of (35.1) can now be given. By use of Chapter 2, stability of the critical state is analysed. The quantity A_n which governs stability appears in (35.1) as a coefficient of $\underline{a}^n$. Calculation of A_2' which coefficient is given by (33.10), does not offer any difficulties.

The states of equilibrium are characterized by stationary values of (35.1), i.e., by

$$\frac{d\bar{P}^{\lambda}(\underline{a})}{d\underline{a}} = 2(\lambda-\lambda_1) A_2' \underline{a} + nA_n \underline{a}^{n-1} = 0 . \tag{35.2}$$

Stability is governed by the second derivative of (35.1)

$$\frac{d^2\bar{P}^{\lambda}(\underline{a})}{d\underline{a}^2} = 2(\lambda-\lambda_1) A_2' + n(n-1) A_n \underline{a}^{n-2} . \tag{35.3}$$

Equation (35.2) is satisfied by the solution $\underline{a} = 0$ in which case the functions $\bar{u}$ and $\bar{\bar{u}}$ become also zero. This solution yields the already known fundamental state. The second derivative (35.3) is positive for $\lambda < \lambda_1$ and negative for $\lambda > \lambda_1$, so that equilibrium in the fundamental state is stable or unstable depending on whether λ is smaller or greater than λ_1, (in agreement with what already was known). The other solutions of (35.2) which determine the neighbouring states, should satisfy

$$\underline{a}^{n-2} = -\frac{2}{n}(\lambda-\lambda_1)\frac{A_2'}{A_n} . \tag{35.4}$$

By substitution in (35.3), it follows for the second derivative of $\overline{P}^{\lambda}(\underline{a})$ in these states that

$$\frac{d^2\overline{P}^{\lambda}}{d\underline{a}^2} = -2\,(n-2)\,(\lambda-\lambda_1)\,A_2' \,. \tag{35.5}$$

Consequently, a neighboring equilibrium state is always stable for $\lambda > \lambda_1$, and always unstable for $\lambda < \lambda_1$.

In a discussion of possible neighboring states of equilibrium, distinction must be made between even and odd values of n and, in the latter case, between negative and positive values of A_n as well. For odd values of n, A_n can always be taken positive since, according to (35.4) and (35.5) an equilibrium value $\underline{a}$ corresponding to positive A_n corresponds to the same type of stability behavior as does $-\underline{a}$ in a system with negative A_n. Consequently (35.4) possesses a real solution for both positive and negative values of $\lambda - \lambda_1$. This is determined by

$$\underline{a} = \left(-\frac{2}{n}\frac{A_2'}{A_n}\right)^{\frac{1}{n-2}} (\lambda-\lambda_1)^{\frac{1}{n-2}} \tag{35.6}$$

and it follows from (35.5) that the equilibrium is stable for $\lambda > \lambda_1$ and unstable for $\lambda < \lambda_1$.

For even values of n, (35.4) possesses real solutions only for negative or only for positive values of $\lambda - \lambda_1$, depending on whether A_n is negative or positive respectively. These solutions are determined by

$$\underline{a} = \pm\left(\frac{2}{n}\frac{A_2'}{A_n}\right)^{\frac{1}{n-2}} (\lambda_1-\lambda)^{\frac{1}{n-2}} \text{ and } \underline{a} = \pm\left(-\frac{2}{n}\frac{A_2'}{A_n}\right)^{\frac{1}{n-2}} (\lambda-\lambda_1)^{\frac{1}{n-2}} . \tag{35.7}$$

It follows from (35.5) that the solutions first mentioned correspond to unstable, the last mentioned to stable equilibrium.

According to the considerations of Chapter 2, equilibrium in the critical state is unstable if the governing quantity A_n corresponds to an odd value of n or if it is negative and corresponds to an even value of n. Equilibrium is stable if the governing constant A_n corresponds to a positive n and is even. The results obtained can be summarized as follows. If equilibrium in the critical state is unstable, and stability is governed by a quantity with odd subscript (A_3, A_5 etc.), neighboring states of equilibrium exist for loads greater than as well as for loads smaller than the bucklingload; the equilibrium states for loads greater than the bucklingload are stable and those for loads smaller than the bucklingload are unstable. If equilibrium in the critical state is unstable and stability is governed by a quantity with even subscript (A_4, A_6 etc.), neighboring states of equilibrium exist but only for loads smaller than the buckling load; these states are unstable. If equilibrium in the critical state is stable, in which case stability is always governed by a quantity with even subscript, neighboring states of equilibrium exist but only for loads greater than the buckling load; these states are stable.

The relation between the parameter $\underline{a}$, which represents a measure for the displacement from the fundamental state and the load parameter λ as given by equations (35.6) and (35.7), can be represented in a diagram. Fig. 1a gives the graph for a positive value of A_3 (the graph for the negative value can be obtained from this by taking its mirror image with respect to the λ-axis). Fig. 1b and Fig. 1c respectively give the diagrams belonging to the negative and positive value of A_4 in the case in which $A_3 = 0$. Finally, Fig. 1d gives the diagram for the case in which $A_3 = A_4 = 0$ and A_5 is positive. In these graphs the stable states of equilibrium are represented by heavy lines, the unstable equilibrium states by dotted lines. The boundary between the area in which equilibrium must be stable and the area in which it must be unstable is a curve obtained by equating to zero the expression (35.3). It is given by a dash-dot line.

At the critical load equilibrium states exist which deviate from the fundamental state in an infinitesimal sense and which are determined by (32.2) for infinitesimal values

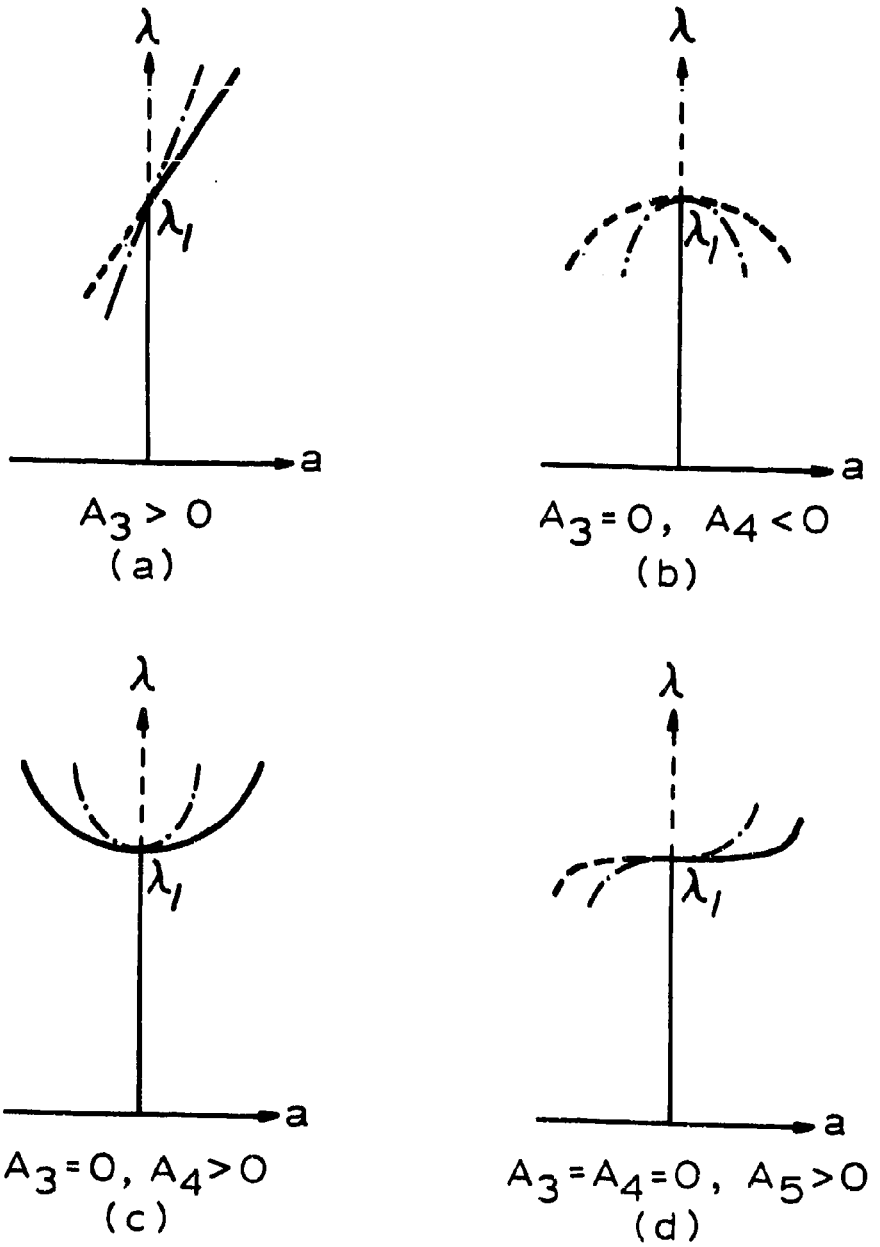

FIG. 1

of $\underline{a}$. If this solution is conceived as an approximation valid for small but finite values of $\underline{a}$, it follows that its image in the diagram is given by the straight line $\lambda = \lambda_1$. It follows from (35.4) that this approximation determines the tangent to the curve λ versus $\underline{a}$ of the neighboring states of equilibrium at the point $\lambda = \lambda_1$, $a = 0$ for $n > 3$. In these cases, already the first approximation leads to some insight into the character of the neighboring states of equilibrium. However, for $A_3 \neq 0$ the method fails to describe the real behavior even approximately (see also Fig. 1a). It is noted that for $A_3 = A_4 = 0$, the use of approximation (33.11) also leads to the straight line $\lambda = \lambda_1$ in the graph λ versus $\underline{a}$; for, in that case the derivative of expression (33.11) with respect to $\underline{a}$ contains the factor $\lambda - \lambda_1$. Consequently, for a better insight in the real behaviour, it is necessary to consider the improved approximation (34.8) or what amounts to the same, to continue the analysis of the critical state until a nonzero quantity A_n has been found.

The considerations in the foregoing are based on the simplified expression of $\bar{P}^{\lambda}(\underline{a})$ (35.1). In principle, an improvement of the approximation can easily be obtained by use of the unabbreviated expressions (33.11), (34.8) respectively. This is illustrated by the application of the equilibrium condition to (33.11) for the case $A_3 \neq 0$

$$\frac{d\bar{P}^{\lambda}(\underline{a})}{d\underline{a}} = 2(\lambda - \lambda_1) A_2' \underline{a} + 2(\lambda - \lambda_1)^2 A_2'' \underline{a} + 3A_3 \underline{a}^2 +$$

$$+ 3(\lambda - \lambda_1) A_3' \underline{a}^2 + 4A_4 \underline{a}^3 = 0$$

In addition to the trivial fundamental state, the following solution exists

$$\underline{a} = -\frac{3A_3 + 3(\lambda - \lambda_1)A_3'}{8A_4} +$$

$$\pm\sqrt{\frac{9\,[A_3 + (\lambda - \lambda_1)A_3']^2}{64A_4^2} - \frac{(\lambda - \lambda_1)A_2' + (\lambda - \lambda_1)^2 A_2'''}{2A_4}} =$$

$$= -\frac{3A_3}{8A_4}\left\{1 + (\lambda - \lambda_1)\frac{A_3'}{A_3} + \right.$$

$$\left. \pm\sqrt{\left[1 + (\lambda - \lambda_1)\frac{A_3'}{A_3}\right]^2 - \frac{32}{9}(\lambda - \lambda_1)\frac{A_2'A_4}{A_3^2} - \frac{32}{9}(\lambda - \lambda_1)^2\frac{A_2''A_4}{A_3^2}}\right\}.$$

The second root approaches $-\frac{3}{4}\frac{A_3}{A_4}$ as λ approaches λ_1 ; this is not a small quantity in the neighbourhood of the buckling load and it need, therefore, not be considered. Expansion of the first root in terms of $\lambda - \lambda_1$ gives

$$\underline{a} = -\frac{2}{3}\frac{A_2'}{A_3}(\lambda - \lambda_1) +$$

$$+\left(\frac{2}{3}\frac{A_2'A_3'}{A_3^2} - \frac{2}{3}\frac{A_2''}{A_3} - \frac{16}{27}\frac{A_2'^2A_4}{A_3^3}\right)(\lambda - \lambda_1)^2 + \ldots \qquad (35.8)$$

Terms of third and higher order can be omitted in this expansion because their contributions to the expression (33.11) are at least of fifth order; such contributions are already neglected in the improved approximation (34.8).

The stability of the equilibrium states determined by (35.8) are governed by the second derivative of (33.11). After substitution of the value of $\underline{a}$ as given by (35.8), this derivative becomes

$$\frac{d^2\bar{P}^\lambda}{d\underline{a}^2} = -2A_2'(\lambda - \lambda_1) - \left(2A_2'' - \frac{16}{9}\frac{A_2'^2 A_4}{A_3^2}\right)(\lambda - \lambda_1)^2 .$$

It appears from (35.8) that approximation (35.6) determines the tangent to the curve which for a neighbouring state of equilibrium represents the relationship between λ and $\underline{a}$. Further, it appears from (35.9) that for not too great values of $|\lambda - \lambda_1|$ the conclusions concerning stability as deduced from (35.5) remain valid. Therefore, the improvement leaves the character of the first approximation unaltered. In cases for which A_3 is equal to zero, corresponding conclusions hold. Consequently, the first approximation following from (35.1) will at least suffice for a qualitative analysis of elastic behaviour in the neighborhood of the buckling load. Such a restriction can also be justified on another basis. As mentioned in Sect. 34, the region of convergence is unknown for the series expansion obtained for $\bar{P}^\lambda(\underline{a})$ through the successive approximation. Therefore, in general, the region of validity of the approximate solution cannot be extended at will by use of a greater number of terms. Also, this improvement has significance only for a region of λ values in the neighbourhood of the buckling load. This region is different from case to case. As has been said above, in this neighbourhood the behaviour in the large is described by the first approximation.

36. SPECIAL CASES

The foregoing considerations were based on the assumption that ω_2, the solution of the minimum problem (24.4) for the critical state, is positive. Here the changes will be discussed which correspond to the case in which this condition is not satisfied; for the time being ω_3 is assumed to be positive.

The general solution of the variational equation (24.14) for neutral equilibrium is in that case

$$u = \underline{a}u_1 + bv_1 . \tag{36.1}$$

Here, for the sake of a more symmetrical notation $u^{(2)} = v_1$ is introduced. If (24.14) would possess a solution differing from (36.1), then it would always be possible to write it as

$$u = \underline{a}u_1 + bv_1 + \bar{u} \text{ with } T_{11}[u_1,\bar{u}] = T_{11}[v_1,\bar{u}] = 0 . \tag{36.2}$$

Substitution in (24.14) leads to the following conditions for $\bar{u}$

$$P_{11}[\bar{u},\zeta] = 0, \quad T_{11}[u_1,\bar{u}] = T_{11}[v_1,\bar{u}] = 0$$

which for $\zeta = \bar{u}$ contradict the assumption $\omega_3 > 0$. On the basis of considerations identical to those of Sect. 32, the displacements in the analysis of equilibrium states in the neighbourhood of the critical state are written in the form (36.2). Substitution in (32.1) gives, after use of the relations following from $\omega_1 = \omega_2 = 0$ and after expansion and arrangement according to increasing order in $\bar{u}$

$$\begin{aligned}
P^{\lambda}[u] = {} & \underline{a}^2 \left| (\lambda-\lambda_1) P_2'[u_1] + (\lambda-\lambda_1)^2 P_2''[u_1] + \dots \right| + \\
& + \underline{a}b \left| (\lambda-\lambda_1) P_{11}'[u_1,v_1] + (\lambda-\lambda_1)^2 P_{11}''[u_1,v_1] + \dots \right| + \\
& + b^2 \left| (\lambda-\lambda_1) P_2'[v_1] + (\lambda-\lambda_1)^2 P_2''[v_1] + \dots \right| + \\
& + \underline{a}^3 \left| P_3[u_1] + (\lambda-\lambda_1) P_3'[u_1] + \dots \right| + \underline{a}^2 b \left| P_{21}[u_1,v_1] + \dots \right| + \\
& + \underline{a}b^2 \left| P_{12}[u_1,v_1] + \dots \right| + b^3 \left| P_3[v_1] + \dots \right| + \\
& + \underline{a}^4 \left| P_4[u_1] + \dots \right| + \underline{a}^3 b \left| P_{31}[u_1,v_1] + \dots \right| +
\end{aligned}$$

$$
\begin{aligned}
&+ \underline{a}^2 b^2 \left| P_{22}\,[u_1, v_1] + \dots \right| + \underline{a} b^3 \left| P_{13}\,[u_1, v_1] + \dots \right| + \\
&+ b^4 \left| P_4\,[v_1] + \dots \right| + \dots + \\
&+ \underline{a} \left| (\lambda - \lambda_1)\, P'_{11}\,[u_1, \bar{u}] + (\lambda - \lambda_1)^2 P''_{11}\,[u_1, \bar{u}] + \dots \right| + \\
&+ b \left| (\lambda - \lambda_1)\, P'_{11}\,[v_1, \bar{u}] + (\lambda - \lambda_1)^2 P''_{11}\,[v_1, \bar{u}] + \dots \right| + \\
&+ \underline{a}^2 \left| P_{21}\,[u_1, \bar{u}] + (\lambda - \lambda_1)\, P'_{21}\,[u_1, \bar{u}] + \dots \right| + \\
&+ \underline{a} b \left| P_{111}\,[u_1, v_1, \bar{u}] + (\lambda - \lambda_1)\, P'_{111}\,[u_1, v_1, \bar{u}] + \dots \right| + \\
&+ b^2 \left| P_{21}\,[v_1, \bar{u}] + (\lambda - \lambda_1)\, P'_{21}\,[v_1, \bar{u}] + \dots \right| + \\
&+ \underline{a}^3 \left| P_{31}\,[u_1, \bar{u}] + \dots \right| + \underline{a}^2 b \left| P_{211}\,[u_1, v_1, \bar{u}] + \dots \right| + \\
&+ \underline{a} b^2 \left| P_{121}\,[u_1, v_1, \bar{u}] + \dots \right| + b^3 \left| P_{31}\,[v_1, \bar{u}] + \dots \right| + \\
&+ \dots + P_2\,[\bar{u}] + (\lambda - \lambda_1)\, P'_2\,[\bar{u}] + \dots + \\
&+ \underline{a} \left| P_{12}\,[u_1, \bar{u}] + \dots \right| + b \left| P_{12}\,[v_1, \bar{u}] + \dots \right| + \\
&+ \dots + P_3\,[\bar{u}] + \dots
\end{aligned}
\tag{36.3}
$$

For the application of the equilibrium conditions, the stationary value of (36.3) will first be determined for constant values of $\underline{a}$ and b in a manner analogous to that of Sect. 32. After that, the stationary values of the functions so obtained $\bar{P}^{\lambda}(\underline{a}, b)$ will be established with respect to $\underline{a}$ and b. In this process, omission of the terms following $P_2\,[\bar{u}]$ in (36.3) are justified in the same manner as in Sect. 32. The approximation of the energy thus obtained again appears to have one stationary value

for constant values of $\underline{a}$ and b and this value is at the same time a minimum. The functions $\bar{u}$ for which this minimum is obtained can be written in the form

$$\bar{u} = \underline{a}(\lambda - \lambda_1)\varphi'_{10} + b(\lambda - \lambda_1)\varphi'_{01} + \underline{a}^2\varphi_{20} + \underline{a}b\varphi_{11} + b^2\varphi_{02} + \dots \tag{36.4}$$

where φ'_{10}, φ'_{01}, φ_{20}, φ_{11} and φ_{02} are given respectively as the solutions of the equations

$$P_{11}[\bar{u},\zeta] + P'_{11}[u_1,\zeta] - \frac{2P'_2[u_1]}{2T_2[u_1]}T_{11}[u_1,\zeta] +$$

$$- \frac{P'_{11}[u_1,v_1]}{2T_2[v_1]}T_{11}[v_1,\zeta] = 0; \quad T_{11}[u_1,\bar{u}] = T_{11}[v_1,\bar{u}] = 0,$$

$$P_{11}[\bar{u},\zeta] + P'_{11}[v_1,\zeta] - \frac{P'_{11}[u_1,v_1]}{2T_2[u_1]}T_{11}[u_1,\zeta] +$$

$$- \frac{2P'_2[v_1]}{2T_2[v_1]}T_{11}[v_1,\zeta] = 0; \quad T_{11}[u_1,\bar{u}] = T_{11}[v_1,\bar{u}] = 0,$$

$$P_{11}[\bar{u},\zeta] + P_{21}[u_1,\zeta] - \frac{3P_3[u_1]}{2T_2[u_1]}T_{11}[u_1,\zeta] +$$

$$- \frac{P_{21}[u_1,v_1]}{2T_2[v_1]}T_{11}[v_1,\zeta] = 0; \quad T_{11}[u_1,\bar{u}] = T_{11}[v_1,\bar{u}] = 0,$$

$$P_{11}[\bar{u},\zeta] + P_{111}[u_1,v_1,\zeta] - \frac{2P_{21}[u_1,v_1]}{2T_2[u_1]} T_{11}[u_1,\zeta] +$$

$$- \frac{2P_{12}[u_1,v_1]}{2T_2[v_1]} T_{11}[v_1,\zeta] = 0 ; \quad T_{11}[u_1,\bar{u}] = T_{11}[v_1,\bar{u}] = 0 ,$$

$$P_{11}[\bar{u},\zeta] + P_{21}[v_1,\zeta] - \frac{P_{12}[u_1,v_1]}{2T_2[u_1]} T_{11}[u_1,\zeta] +$$

$$- \frac{3P_3[v_1]}{2T_2[v_1]} T_{11}[v_1,\zeta] = 0 ; \qquad T_{11}[u_1,\bar{u}] = T_{11}[v_1,\bar{u}] = 0 . \qquad (36.5)$$

Here the contribution to (36.4) which are of the third and higher order in $(\lambda - \lambda_1)$, $\underline{a}$ and b have already been omitted since together with the contributions in (33.5), they are of no significance in the present approximation. The derivation of equations (36.5) is completely analogous to that in Sect. 272 and in Sect. 33, so that its execution can be omitted here. By comparison of the last three equations of (36.5) with (27.33) it can be shown that the functions $\varphi^{(20)}$, $\varphi^{(11)}$ and $\varphi^{(02)}$ as defined in Sect. 272 agree with the functions introduced here, provided the condition (27.24) is satisfied. Also, the calculation of the approximate stationary value of $\bar{P}^{\lambda}(\underline{a}, b)$ is analogous to the preceding analysis. If for brevity is introduced

$$\left.\begin{aligned}
&P'_{12}[u_1,v_1] - P_{11}\left[\varphi'_{10},\varphi_{02}\right] - P_{11}\left[\varphi'_{01},\varphi_{11}\right] = C'_{12} , \\
&P'_3[v_1] - P_{11}\left[\varphi'_{01},\varphi_{02}\right] = C'_{03} , \\
&P_4[u_1] - P_2[\varphi_{20}] = C_{40} , \quad P_{31}[u_1,v_1] - P_{11}[\varphi_{20},\varphi_{11}] = C_{31} , \\
&P_{22}[u_1,v_1] - P_2[\varphi_{11}] - P_{11}[\varphi_{20},\varphi_{02}] = C_{22} , \\
&P_{13}[u_1,v_1] - P_{11}[\varphi_{11},\varphi_{02}] = C_{13} , \quad P_4[v_1] - P_2[\varphi_{02}] = C_{04}
\end{aligned}\right\} \qquad (36.6)$$

$$
\left.
\begin{aligned}
&P_2'[u_1] = C_{20}', \quad P_{11}'[u_1,v_1] = C_{11}', \quad P_2'[v_1] = C_{02}', \\
&P_2''[u_1] - P_2[\varphi_{10}'] = C_{20}'', \quad P_{11}''[u_1,v_1] - P_{11}[\varphi_{10}',\varphi_{01}'] = C_{11}'', \\
&P_2''[v_1] - P_2[\varphi_{01}'] = C_{02}'', \\
&P_3[u_1] = C_{30}, \quad P_{21}[u_1,v_1] = C_{21}, \quad P_{12}[u_1,v_1] = C_{12}, \quad P_3[v_1] = C_{03}, \\
&P_3'[u_1] - P_{11}[\varphi_{10}',\varphi_{20}] = C_{30}', \\
&P_{21}'[u_1,v_1] - P_{11}[\varphi_{10}',\varphi_{11}] - P_{11}[\varphi_{01}',\varphi_{20}] = C_{21}',
\end{aligned}
\right\} \quad (36.6)
$$

this approximation becomes

$$
\begin{aligned}
\bar{P}^{\lambda}(\underline{a}, b) = {} & (\lambda - \lambda_1)(C_{20}'\underline{a}^2 + C_{11}'\underline{a}b + C_{02}'b^2) + \\
& + (\lambda - \lambda_1)^2 (C_{20}''\underline{a}^2 + C_{11}''\underline{a}b + C_{02}''b^2) + \\
& + C_{30}\underline{a}^3 + C_{21}\underline{a}^2 b + C_{12}\underline{a}b^2 + C_{03}b^3 + \\
& + (\lambda - \lambda_1)(C_{30}'\underline{a}^3 + C_{21}'\underline{a}^2 b + C_{12}'\underline{a}b^2 + C_{03}'b^3) + \\
& + C_{40}\underline{a}^4 + C_{31}\underline{a}^3 b + C_{22}\underline{a}^2 b^2 + C_{13}\underline{a}b^3 + C_{04}b^4 .
\end{aligned}
\qquad (36.7)
$$

Terms of the fifth and higher order in $\lambda - \lambda_1$, $\underline{a}$ and b are here insignificant, even more so then in Sect. 33

From (36.6) it is seen that the terms of second order in $\underline{a}$ and b in (36.7), which contain one factor $\lambda - \lambda_1$, and the terms of third order which do not contain a factor $\lambda - \lambda_1$, depend exclusively on the eigenfunctions u_1 and v_1. Further, if the conditions (27.24)

$$C_{30} = C_{21} = C_{12} = C_{03} = 0$$

are satisfied,then it follows that the fourth order terms in $\underline{a}$ and b of (36.7) are identical to the form (27.37) which governs stability in the critical state.

The general case

$$\omega_2 = \omega_3 = \ldots = \omega_{h-1} = 0 \, , \; \omega_h > 0$$

can be analysed in a similar manner, by use of

$$u = \sum_{j=1}^{h-1} a_j u_j + \bar{u} \text{ with } T_{11}\,[u_j, \bar{u}] = 0 \, . \; j = 1, 2, \ldots h - 1 \, . \tag{36.8}$$

In this case, the approximation corresponding to (36.7) can be written

$$\bar{P}^{\lambda}(a_j) = (\lambda - \lambda_1)\,\bar{P}_2'(a_j) + (\lambda - \lambda_1)^2\,\bar{P}_2''(a_j) + \bar{P}_3(a_j) +$$

$$+ (\lambda - \lambda_1)\,\bar{P}_3'(a_j) + \bar{P}_4(a_j) \, . \tag{36.9}$$

In this expression, $\bar{P}_2'$ and $\bar{P}_3$ are completely determined by the h-1 eigenfunctions u_j

$$\bar{P}_2'(a_j) = P_2'\left[\sum_{\alpha=1}^{h-1} a_\alpha u_\alpha\right] = \frac{1}{2}\sum_{\alpha=1}^{h-1}\sum_{\beta=1}^{h-1} a_\alpha a_\beta P_{11}'\,[u_\alpha, u_\beta] \, , \tag{36.10}$$

$$\bar{P}_3(a_j) = P_3\left[\sum_{\alpha=1}^{h-1} a_\alpha u_\alpha\right] = \frac{1}{6}\sum_{\alpha=1}^{h-1}\sum_{\beta=1}^{h-1}\sum_{\gamma=1.}^{h-1} a_\alpha a_\beta a_\gamma P_{111}\,[u_\alpha, u_\beta, u_\gamma] \tag{36.11}$$

For calculation of the remaining terms in (36.9), the solution is required of a set of equations analogous to (36.5). If (36.11) is identically zero, which condition for the present case corresponds to condition (27.24) for the case with $\omega_3 > 0$, then $\overline{P}_4(a_j)$ will again be identical to the expression which governs the stability at the stability limit. The form (36.10) can never assume a positive value because, in analogy with Sect. 35, it would otherwise be possible to conclude that the fundamental state can be unstable also for $\lambda < \lambda_1$.

As a first approximation, in (36.9) the second and fourth terms are neglected in comparison to the first and third. Besides, if (36.11) is not identically zero, the last term will be neglected in comparison to the third. In both cases the result is

$$\overline{P}^{\lambda}(a_j) = (\lambda - \lambda_1)\,\overline{P}_2'(a_j) + \overline{P}_n(a_j)\,. \quad n = 3 \text{ or } n = 4 \tag{36.12}$$

The stationary values of (36.12) are determined by the equations

$$\frac{\partial \overline{P}^{\lambda}}{\partial a_i} = (\lambda - \lambda_1)\frac{\partial \overline{P}_2'}{\partial a_i} + \frac{\partial \overline{P}_n}{\partial a_i} = 0\,, \quad i = 1, 2, \ldots h-1\,, \tag{36.13}$$

while the stability of the corresponding equilibrium state is governed by the form

$$\sum_{i=1}^{h-1}\sum_{j=1}^{h-1}\frac{\partial^2 \overline{P}^{\lambda}}{\partial a_i \partial a_j}\Delta a_i\,\Delta a_j = (\lambda - \lambda_1)\sum_{i=1}^{h-1}\sum_{j=1}^{h-1}\frac{\partial^2 \overline{P}_2'}{\partial a_i \partial a_j}\Delta a_i \Delta a_j + \\ + \sum_{i=1}^{h-1}\sum_{j=1}^{h-1}\frac{\partial^2 \overline{P}_n}{\partial a_i \partial a_j}\Delta a_i \Delta a_j\,. \tag{36.14}$$

Although the solutions of (36.13) cannot be given as easily as those of (35.2), they do admit some general conclusions. In the first place, (36.13) possesses the solution $a_i = 0$ which yields the already known fundamental state. It follows from (36.14) that the stability of this state is governed by the form

$$(\lambda - \lambda_1) \sum_{i=1}^{h-1} \sum_{j=1}^{h-1} \frac{\partial^2 P_2'}{\partial a_i \partial a_j} \Delta a_i \Delta a_j = 2(\lambda - \lambda_1) \bar{P}_2' (\Delta a_j) . \tag{36.15}$$

Therefore, the fundamental state is stable for $\lambda < \lambda_1$, unstable for $\lambda > \lambda_1$, in agreement with what was already known.[1]

Furthermore, it appears from (36.13) that for $n = 3$, the existence of a solution a_i for the load parameter λ implies the existence of a solution $-a_i$ for the load parameter $2\lambda_1 - \lambda$. Thus, for $n = 3$ no neighbouring states of equilibrium exist at all or neighbouring states exist for loads greater as well as for loads smaller than the critical load.

Multiplication of the ith equation (36.13) by a_i and summation yields

$$(\lambda - \lambda_1) \sum_{i=1}^{h-1} a_i \frac{\partial \bar{P}_2'}{\partial a_i} + \sum_{i=1}^{h-1} a_i \frac{\partial \bar{P}_n}{\partial a_i} = 2(\lambda - \lambda_1) \bar{P}_2' (a_j) + $$

$$+ n\bar{P}_n (a_j) = 0 . \tag{36.16}$$

[1] Here the case that (36.10) is semi negative definite is disregarded; although it is in principle not excluded, the stability decision for $\lambda < \lambda_1$ is then not sufficiently substantiated by (36.15).

When $n = 4$ and $\overline{P}_4 (a_j)$ is positive definite, i.e., when equilibrium is stable in the critical state, (36.16) can only be satisfied for $\lambda > \lambda_1$; therefore, in this case, neighbouring states of equilibrium exist only for loads greater than the buckling load.

If the solution of (36.13) is substituted for Δa_i then, after use of (36.16), (36.14) becomes

$$(\lambda - \lambda_1) \sum_{i=1}^{h-1} \sum_{j=1}^{h-1} \frac{\partial^2 \overline{P}_2'}{\partial a_i \partial a_j} a_i a_j + \sum_{i=1}^{h-1} \sum_{j=1}^{h-1} \frac{\partial^2 \overline{P}_n}{\partial a_i \partial a_j} a_i a_j =$$

$$= 2 (\lambda - \lambda_1) \overline{P}_2' (a_j) + n (n - 1) \overline{P}_n (a_j) = - 2 (n - 2) (\lambda - \lambda_1) \overline{P}_2' (a_j) .$$

This expression is negative for $\lambda < \lambda_1$. Consequently, all possible neighbouring states of equilibrium for loads smaller than the buckling load are unstable.

37. NATURE OF THE PROBLEMS DISCUSSED.

It was pointed out in Sect. 32 that the assumption of a possible Taylor expansion for the displacement $U(\lambda)$ and its derivatives with respect to $\lambda - \lambda_1$ implies that the fundamental state exists for loads greater than the buckling load. This fundamental state approaches continuously the critical state as λ approaches λ_1 . In addition to the fundamental state in the neighbourhood of λ_1 other equilibrium states appear to exist which approach the critical state as λ approaches λ_1 (See Sect. 35). The state of buckling represents a so called bifurcation point of equilibrium; the significance of this term is illustrated for instance by the Fig. 1.

Now, the question arises whether under the assumption mentioned above all possibilities are exhausted which occur in practice. This question must be answered in the negative. There are structures with load systems for which no equilibrium states exist which can be obtained by gradual increase of λ in excess of a critical value λ^* and which when λ is monotonously decreased, pass continuously over into the original fundamental state corresponding to λ^* (see [40]). If equilibrium states are considered which vary continuously with λ in the neighbourhood of the critical value, λ^*

represents a maximum of the possible λ values. In a graph of a displacement component v at a point in the body as a function of λ, this is generally indicated by a horizontal tangent to the λ versus v curve. The equilibrium state corresponding to the critical value λ^* represents a so called snapping point. In particular, Biezeno has analysed several snap-through problems ([41]).

A snapping point has in common with a bifurcation point that equilibrium is neutral ([40]) and thus the snapping points can be determined by use of the conventional theory of neutral equilibrium. If the solution of the minimum problem (22.5) is positive for $\lambda < \lambda^*$ as λ is gradually increased from zero to λ^*, i.e., if equilibrium is stable for $\lambda < \lambda^*$, then it follows that the state of equilibrium determined by λ^* is at the stability limit; λ^* coincides with the parameter value λ_1 for the buckling load. Likewise, the considerations given in Sect. 2 retain their significance for the analysis of stability of the critical state. In summary the stability theory given in Sect. 2 is generally valid; the theory discussed in Sect. 3 dealing with states of equilibrium for loads in the neighbourhood of the buckling load is essentially restricted to buckling loads corresponding to bifurcation points.

38. EXTENSION OF THE THEORY.

It has been remarked more than once in the foregoing that the developed theory is valid only for loads in the neighbourhood of the buckling load. However, in engineering, one cannot always be satisfied with this restriction. Consequently, for some important plate problems, several writers already have developed methods which yield useful results considerably above the buckling load (see [46]). By introduction of some simplifying assumptions, which all are satisfied for these plate problems, the methods mentioned above can be combined in an extension of the theory developed in the foregoing.

The first assumption concerns the external loads; the direction and magnitude of these loads are assumed to be known with respect to a rigid frame of reference. The energy of the loads is then linearly dependent on the displacements (see Sect. 29).

Further, the displacements in the fundamental state are supposed to be so small that quantities of the second and higher order in these displacement, $U(\lambda)$, and its derivatives may be neglected in comparison to quantities which are linearly dependent on $U(\lambda)$ and its derivatives. A first consequence of this assumption is the linearization of the equations of equilibrium for the fundamental state so that the displacements of this state are proportional to the loads

$$U(\lambda) = \lambda U' . \tag{38.1}$$

In the increment of the elastic energy (29.4) corresponding to transition from the fundamental state (38.1) to a neighbouring state $U(\lambda) + u$, the terms whose integrands are of an order higher than the first in the derivatives of $U(\lambda)$ can be neglected. The total energy increment on transition from $U(\lambda)$ to $U(\lambda) + u$ then is

$$P^{\lambda}[u] = V_1[u] - W_1[u] + V_2^0[u] + V_2^1[u] + \\ + V_3^0[u] + V_3^1[u] + V_4^0[u] . \tag{38.2}$$

The sum of the terms linear in u must be equal to zero as the fundamental state is an equilibrium state. Furthermore

$$V_m^0[u] = P_m^0[u] , \quad m = 2, 3, 4$$

and after use of (38.1)

$$V_m^1[u] = \lambda P_m'[u] , \quad m = 2, 3.$$

Hence (38.2) becomes

$$P^{\lambda}[u] = P_2^0[u] + \lambda P_2'[u] + P_3^0[u] + \lambda P_3'[u] + P_4^0[u] . \tag{38.3}$$

In this expression, as in Sect. 31.

$$P_2^0 [u] = V_2^0 [u]$$

is positive definite.

The fundamental state (38.1) is uniquely determined so that the buckling load will be determined by the smallest value λ_1 of the load parameter λ for which the homogeneous variational equation (24.14) for neutral equilibrium

$$P_{11}^{\lambda} [u, \zeta] = P_{11}^0 [u, \zeta] + \lambda P_{11}' [u, \zeta] = 0 \tag{38.4}$$

possesses a non-zero solution.

This equation in general has non-zero solutions for a sequence of increasing λ values $\lambda_1, \lambda_2, \ldots$ [39], the so called eigensolutions. It is evident that the solution corresponding to λ_1 is identical to the eigenfunctions u_1 of the minimum problem (31.1) corresponding to the buckling load λ_1. However, the remaining eigensolutions of (38.4) can be correlated with the eigenfunctions $u_2, u_3, \ldots$ of the minimum problems (24.8) corresponding to the buckling load λ_1, if

$$T_2 [u] = P_2^0 [u] \quad . \tag{38.5}$$

This is always possible as $P_2^0 [u]$ is definite. The problems (24.8) in that case are formulated

$$\left.\begin{aligned} \omega_h &= \operatorname{Min} \frac{P_2^0 [u] + \lambda P_2' [u]}{P_2^0 [u]} \\ &\text{with the side conditions} \\ P_{11}^0 [u_j, u] &= 0 \, . \quad j = 1, 2 \ldots h - 1 \end{aligned}\right\} \tag{38.6}$$

The homogeneous variational equation (22.9) for the eigenfunctions u_j then becomes

$$(1 - \omega)\, P^0_{11}\, [u, \zeta] + \lambda_1 P'_{11}\, [u, \zeta] = 0 ,$$

which, by the substitution of

$$\omega = 1 - \frac{\lambda_1}{\lambda} \tag{38.7}$$

becomes identical to (38.4) and consequently has the same solutions. The sequences $\lambda_1, \lambda_2, \lambda_3, \ldots$ and $\omega_1, \omega_2, \omega_3, \ldots$ are both monotonically increasing; this is only possible if (38.7) is valid with identical subscripts on ω and λ

$$\omega_h = 1 - \frac{\lambda_1}{\lambda_h} . \tag{38.8}$$

Thus the eigensolution of (38.4) corresponding to λ_h must be identical to the eigenfunction u_h corresponding to ω_h.[1]

[1] This does not imply that the set of eigensolutions of (38.4) corresponding to positive values of λ are identical to the set of eigenfunctions (22.9). On the contrary, eigensolutions of (38.4) corresponding to possible negative values of λ are also represented in the eigenfunctions of (22.9). In the subsequent considerations, negative values of λ have as before been disregarded since these cases can easily be reduced to those which are being treated by replacement of the unit load system by one with opposite sign.

Use of (38.5) also gives the advantage that a vector function u satisfying the condition

$$P^0_{11}\,[u_j, u] = 0 \tag{38.9}$$

on account of (38.4), also satisfies the relation

$$P'_{11}\,[u_j, u] = 0 \tag{38.10}$$

and vice versa.

The integral $P'_2\,[u]$ can also assume negative values. If it is definite negative and of a more simple form than $P^0_2\,[u]$, it is even more advantageous to set

$$T_2\,[u] = -\,P'_2\,[u]\,. \tag{38.11}$$

In that case, the identity of the eigensolution which corresponds to λ_h and the eigenfunctions u_h of (22.9) can again be shown in analogy with the foregoing. Also, the equivalence of the relations (38.9) and (38.10) remains unchanged.

For the analysis of the equilibrium states at loads in the neighbourhood of the buckling load separation (32.3) has successfully been utilized. Again, if for the time being the solution ω_2 of the problem (38.6) is assumed to be positive, then to make also use the usefulness of (32.3) is obvious for the analysis of equilibrium states at loads further removed from the buckling load. Introduction of

$$u = \underline{a}u_1 + \bar{u} \text{ with } P^0_{11}\,[u_1, \bar{u}] = 0 \tag{38.12}$$

in (38.3) yields after expansion and rearrangement

$$P^{\lambda}[u] = \underline{a}^2 \left\{P_2^0[u_1] + \lambda P_2'[u_1]\right\} + \underline{a}^3 \left\{P_3^0[u_1] + \lambda P_3'[u_1]\right\} +$$

$$+ \underline{a}^4 P_4^0[u_1] + \underline{a}^2 \left\{P_{21}^0[u_1,\bar{u}] + \lambda P_{21}'[u_1,\bar{u}]\right\} + \underline{a}^3 P_{31}[u_1,\bar{u}] +$$

$$+ P_2^0[\bar{u}] + \lambda P_2'[\bar{u}] + \underline{a}\left\{P_{12}^0[u_1,\bar{u}] + \lambda P_{12}'[u_1,\bar{u}]\right\} +$$

$$+ \underline{a}^2 P_{22}^0[u_1,\bar{u}] + P_3^0[\bar{u}] + \lambda P_3'[\bar{u}] + \underline{a} P_{13}^0[u_1,\bar{u}] + P_4^0[\bar{u}] . \tag{38.13}$$

In this expression use has already been made of (38.10) which follows from (38.12).

With use of (38.12) it follows from (38.6) that

$$P_2^0[\bar{u}] + \lambda_1 P_2'[\bar{u}] \geq \omega_2 P_2^0[\bar{u}] ,$$

or with use of (38.8) that

$$P_2^0[\bar{u}] + \lambda P_2'[\bar{u}] \geq \left(1 - \frac{\lambda}{\lambda_2}\right) P_2^0[\bar{u}] . \tag{38.14}$$

Consequently, the left hand side of (38.14) is always positive for $\lambda < \lambda_2$.

Now, if it is assumed finally that the displacements u from the fundamental state are small, so that $\underline{a}$ and $\bar{u}$ are also small, then omission of terms which follow $\lambda P_2'[\bar{u}]$ can be justified in the same manner as in Sect. 32. The integrands of these terms are <u>either</u> of the second order and contain in that case one or more factors of $\underline{a}$, <u>or</u> are

in (38.3) yields after expansion and rearrangement

$$P^{\lambda}[u] = \underline{a}^2 \left| P_2^0[u_1] + \lambda P_2'[u_1] \right| + \underline{a}^3 \left| P_3^0[u_1] + \lambda P_3'[u_1] \right| +$$

$$+ \underline{a}^4 P_4^0[u_1] + \underline{a}^2 \left| P_{21}^0[u_1,\bar{u}] + \lambda P_{21}'[u_1,\bar{u}] \right| + \underline{a}^3 P_{31}[u_1,\bar{u}] +$$

$$+ P_2^0[\bar{u}] + \lambda P_2'[\bar{u}] + \underline{a} \left| P_{12}^0[u_1,\bar{u}] + \lambda P_{12}'[u_1,\bar{u}] \right| +$$

$$+ \underline{a}^2 P_{22}^0[u_1,\bar{u}] + P_3^0[\bar{u}] + \lambda P_3'[\bar{u}] + \underline{a} P_{13}^0[u_1,\bar{u}] + P_4^0[\bar{u}] . \tag{38.13}$$

In this expression use has already been made of (38.10) which follows from (38.12).

With use of (38.12) it follows from (38.6) that

$$P_2^0[\bar{u}] + \lambda_1 P_2'[\bar{u}] \geq \omega_2 P_2^0[\bar{u}] ,$$

or with use of (38.8) that

$$P_2^0[\bar{u}] + \lambda P_2'[\bar{u}] \geq \left(1 - \frac{\lambda}{\lambda_2}\right) P_2^0[\bar{u}] . \tag{38.14}$$

Consequently, the left hand side of (38.14) is always positive for $\lambda < \lambda_2$.

Now, if it is assumed finally that the displacements u from the fundamental state are small, so that $\underline{a}$ and $\bar{u}$ are also small, then omission of terms which follow $\lambda P_2'[\bar{u}]$ can be justified in the same manner as in Sect. 32. The integrands of these terms are <u>either</u> of the second order and contain in that case one or more factors of $\underline{a}$, <u>or</u> are

$$P_{11}^{0}[\bar{u},\zeta] + \lambda P_{11}^{'}[\bar{u},\zeta] + \underline{a}^{2}\Big\{P_{21}^{0}[u_1,\zeta] + \lambda P_{21}^{'}[u_1,\zeta] +$$

$$- \frac{3P_3^0[u_1] + 3\lambda P_3^{'}[u_1]}{2P_2^0[u_1]} P_{11}^{0}[u_1,\zeta]\Big\} +$$

$$+ \underline{a}^{3}\Big\{P_{31}^{0}[u_1,\zeta] - \frac{4P_4^0[u_1]}{2P_2^0[u_1]} P_{11}^{0}[u_1,\zeta]\Big\} = 0 . \qquad (38.18)$$

This equation should, together with the condition

$$P_{11}^{0}[u_1,\bar{u}] = 0 \qquad (38.19)$$

determine the functions $\bar{u}$. Indeed, the solution is uniquely determined for $\lambda \neq \lambda_h$, $h = 1, 2, 3 \ldots$. For, in view of (38.18), the difference between two solutions should satisfy the homogeneous equation (38.4) which only has a zero solution for $\lambda \neq \lambda_h$. The solution is uniquely determined also for $\lambda = \lambda_1$. For the difference between two solutions $\bar{u}'$ and $\bar{u}''$ condition (34.4) can be obtained from (38.18) by subtraction. It is true that this condition admits $\bar{u}' - \bar{u}'' = cu_1$, but this solution is incompatible with the condition (38.19) which holds for $\bar{u}'$ and $\bar{u}''$.

The circumstance that for $\lambda \neq \lambda_h$ the functions $\bar{u}$ are already uniquely determined by equation (38.18) gives the impression that these functions are subjected to too many requirements after addition of the condition (38.19). This is apparent indeed, because by application of (38.18) with $\zeta = u_1$ and of (38.4), it follows that

$$P_{11}^{0}[\bar{u},u_1] + \lambda P_{11}^{'}[\bar{u},u_1] = \left(1 - \frac{\lambda}{\lambda_1}\right) P_{11}^{0}[u,u_1] = 0$$

so that for $\lambda \neq \lambda_1$ condition (38.19) is implied by (38.18).

of higher order in $\bar{u}$ and its derivatives so that their absolute values are small in comparison to the terms in the left hand side of (38.14) the sum of which is always positive for $\lambda < \lambda_2$. The approximation of the energy in that case becomes

$$P^{\lambda}[u] = \underline{a}^2 \left| P_2^0 [u_1] + \lambda P_2^{'} [u_1] \right| + \underline{a}^3 \left| P_3^0 [u_1] + \lambda P_3^{'} [u_1] \right| +$$

$$+ \underline{a}^4 P_4^0 [u_1] + \underline{a}^2 \left| P_{21}^0 [u_1, \bar{u}] + \lambda P_{21}^{'} [u_1, \bar{u}] \right| + \underline{a}^3 P_{31}^0 [u_1, \bar{u}] +$$

$$+ P_2^0 [\bar{u}] + \lambda P_2^{'} [\bar{u}] \ . \tag{38.15}$$

Equilibrium configurations are again characterised by stationary values of the energy. Just as previously, the stationary values of (38.15) are first determined for arbitrary constant values of $\underline{a}$. For this purpose the increment of (38.15) is determined on transition to a function $\bar{u} + \eta$ such that

$$P_{11}^0 [u_1, \eta] = 0 \ . \tag{38.16}$$

$$P^{\lambda}[u + \eta] - P^{\lambda}[u] = \underline{a}^2 \left| P_{21}^0 [u_1, \eta] + \lambda P_2^{''} [u_1, \eta] \right| + \underline{a}^3 P_{31}^0 [u_1, \eta] +$$

$$+ P_{11}^0 [\bar{u}, \eta] + \lambda P_{11}^{'} [\bar{u}, \eta] + P_2^0 [\eta] + \lambda P_2^{'} [\eta] . \tag{38.17}$$

For a stationary value of (38.15) it is required that the sum of the terms of (38.17) which are linear in η should be zero. This stationary value is always a minimum for $\lambda < \lambda_2$ as

$$P_2^0 [\eta] + \lambda P_2^{'} [\eta] \geq 0 \ .$$

The derivation of a variational equation with kinematically possible functions ζ which are not subjected to restriction (38.16) is carried out in exactly the same manner as before. The result is

For $\lambda = \lambda_h$ $h = 2, 3, \ldots$ the homogeneous equation (38.4) corresponding to (38.18) has a solution which satisfies condition (38.19). In that case the nonhomogeneous equation (38.18) does generally not have a solution. By restriction of the analysis to $\lambda < \lambda_2$, which was done through the approximation applied to (38.13), this singularity would be insignificant, except that in general it manifests itself by a rapid increase of the solution $\bar{u}$ of (38.18) as λ approaches λ_2. In that case this solution does not satisfy the requirement of smallness. How this difficulty with the restriction $\lambda < \lambda_2$ previously introduced can be overcome, will be explainted later. For the time being, the considerations will be restricted to values of λ sufficiently far below λ_2.

Because of the linearity of (38.18) and (38.19), their solution can be written in the form

$$\bar{u} = \underline{a}^2 \varphi_2^{\lambda} + \underline{a}^3 \varphi_3^{\lambda} . \tag{38.20}$$

It is not possible here to express the dependency of (38.20) on λ in a simpler way because λ appears also as a coefficient of the unknown functions $\bar{u}$ in (38.18). When use is made of (38.18) for $\xi = \bar{u}$ it follows for the minimum of (38.15) that

$$\bar{P}^{\lambda}(\underline{a}) = \underline{a}^2 \left| P_2^0 [u_1] + \lambda P_2' [u_1] \right| + \underline{a}^3 \left| P_3^0 [u_1] + \lambda P_3' [u_1] \right| +$$
$$+ \underline{a}^4 P_4^0 [u_1] - P_2^0 \left[\underline{a}^2 \varphi_2^{\lambda} + \underline{a}^3 \varphi_3^{\lambda} \right] - \lambda P_2' \left[\underline{a}^2 \varphi_2^{\lambda} + \underline{a}^3 \varphi_3^{\lambda} \right].$$

In the above expression terms of the fifth and higher order in $\underline{a}$ can be omitted since also the terms neglected in (38.13) would yield terms of the fifth order after substitution of (38.20). By use of the identity following from (38.4)

$$P_2' [u_1] = -\frac{1}{\lambda_1} P_2^0 [u_1]$$

For $\lambda = \lambda_h$ $h = 2, 3, \ldots$ the homogeneous equation (38.4) corresponding to (38.18) has a solution which satisfies condition (38.19). In that case the nonhomogeneous equation (38.18) does generally not have a solution. By restriction of the analysis to $\lambda < \lambda_2$, which was done through the approximation applied to (38.13), this singularity would be insignificant, except that in general it manifests itself by a rapid increase of the solution $\bar{u}$ of (38.18) as λ approaches λ_2. In that case this solution does not satisfy the requirement of smallness. How this difficulty with the restriction $\lambda < \lambda_2$ previously introduced can be overcome, will be explainted later. For the time being, the considerations will be restricted to values of λ sufficiently far below λ_2.

Because of the linearity of (38.18) and (38.19), their solution can be written in the form

$$\bar{u} = \underline{a}^2 \varphi_2^{\lambda} + \underline{a}^3 \varphi_3^{\lambda} . \tag{38.20}$$

It is not possible here to express the dependency of (38.20) on λ in a simpler way because λ appears also as a coefficient of the unknown functions $\bar{u}$ in (38.18). When use is made of (38.18) for $\zeta = \bar{u}$ it follows for the minimum of (38.15) that

$$\bar{P}^{\lambda}(\underline{a}) = \underline{a}^2 \left| P_2^0 [u_1] + \lambda P_2' [u_1] \right| + \underline{a}^3 \left| P_3^0 [u_1] + \lambda P_3' [u_1] \right| +$$

$$+ \underline{a}^4 P_4^0 [u_1] - P_2^0 \left[\underline{a}^2 \varphi_2^{\lambda} + \underline{a}^3 \varphi_3^{\lambda} \right] - \lambda P_2' \left[\underline{a}^2 \varphi_2^{\lambda} + \underline{a}^3 \varphi_3^{\lambda} \right].$$

In the above expression terms of the fifth and higher order in $\underline{a}$ can be omitted since also the terms neglected in (38.13) would yield terms of the fifth order after substitution of (38.20). By use of the identity following from (38.4)

$$P_2' [u_1] = -\frac{1}{\lambda_1} P_2^0 [u_1]$$

and by introduction of the notation

$$\left.\begin{aligned} &P_2^0[u_1] = A_2^0, \quad P_3^0[u_1] = A_3^0, \quad P_3'[u_1] = A_3', \\ &P_4^0[u_1] - P_2^0\left[\varphi_2^{\lambda}\right] - \lambda P_2'\left[\varphi_2^{\lambda}\right] = A_4^{\lambda} \end{aligned}\right\} \tag{38.21}$$

it follows for the minimum of (38.15) that

$$\bar{P}^{\lambda}(\underline{a}) = \left(1 - \frac{\lambda}{\lambda_1}\right) A_2^0 \underline{a}^2 + (A_3^0 + \lambda A_3')\,\underline{a}^3 + A_4^{\lambda}\,\underline{a}^4 . \tag{38.22}$$

In view of (38.21) the terms of (38.22) up to and including the third order are already completely determined by u_1. Consequently, for cases in which a sufficiently accurate approximation has been obtained with the inclusion of these terms already, the solution of (38.18) and (38.19) is not needed.

Possible equilibrium configurations are determined by the values which yield stationary values of (38.12) and the corresponding functions $\bar{u}$. Since at constant values of $\underline{a}$ expression (38.22) is a minimum of (38.15), equilibrium is stable or unstable depending on whether the stationary value corresponding to (38.22) is or is not a minimum.

It was previously mentioned that in general, the function $\bar{u}$ does not remain small when λ approaches λ_2. The elimination of this difficulty will now be treated. For this purpose it is remarked that the homogenised equation (38.18) for the case $\lambda = \lambda_2$ possesses the solution cu_2. Thus, an obvious step seems to be the replacement of (38.12) by

$$u = a_1 u_1 + a_2 u_2 + \bar{u} \text{ with } P_{11}^0[u_1, \bar{u}] = P_{11}^0[u_2, \bar{u}] = 0 . \tag{38.23}$$

The case $\omega_2 = \omega_1 = 0$, which so far has been disregarded, will at the same time be treated. In this case $\lambda_2 = \lambda_1$, so that (38.23) rather than (38.12) should be used for

values of λ in the neighbourhood of λ_1 (see also Sect. 36). Substitution in (38.3) yields after expansion and rearrangement

$$
\begin{aligned}
P^{\lambda}[u] = {} & a_1^2 \left| P_2^0[u_1] + \lambda P_2'[u_1] \right| + a_2^2 \left| P_2^0[u_2] + \lambda P_2'[u_2] \right| + \\
& + a_1^3 \left| P_3^0[u_1] + \lambda P_3'[u_1] \right| + \\
& + a_1^2 a_2 \left| P_{21}^0[u_1, u_2] + \lambda P_{21}'[u_1, u_2] \right| + \\
& + a_1 a_2^2 \left| P_{12}^0[u_1, u_2] + \lambda P_{12}'[u_1, u_2] \right| + \\
& + a_2^3 \left| P_3^0[u_2] + \lambda P_3'[u_2] \right| + \\
& + a_1^4 P_4^0[u_1] + a_1^3 a_2 P_{31}^0[u_1, u_2] + a_1^2 a_2^2 P_{22}^0[u_1, u_2] + \\
& + a_1 a_2^3 P_{13}^0[u_1, u_2] + a_2^4 P_4^0[u_2] + \\
& + a_1^2 \left| P_{21}^0[u_1, \bar{u}] + \lambda P_{21}'[u_1, \bar{u}] \right| + \\
& + a_1 a_2 \left| P_{111}^0[u_1, u_2, \bar{u}] + \lambda P_{111}'[u_1, u_2, \bar{u}] \right| + \\
& + a_2^2 \left| P_{21}^0[u_2, \bar{u}] + \lambda P_{21}'[u_2, \bar{u}] \right| + a_1^3 P_{31}^0[u_1, \bar{u}] + \\
& + a_1^2 a_2 P_{211}^0[u_1, u_2, \bar{u}] + a_1 a_2^2 P_{121}^0[u_1, u_2, \bar{u}] \\
& + a_2^3 P_{31}^0[u_2, \bar{u}] + P_2^0[\bar{u}] + \lambda P_2'[\bar{u}] + \ldots
\end{aligned}
\tag{38.24}
$$

Here use has been already made of the properties of the functions u_1, u_2 and $\bar{u}$

$$
\begin{aligned}
P_{11}^0[u_1, u_2] = P_{11}'[u_1, u_2] = P_{11}^0[u_1, \bar{u}] = P_{11}'[u_1, \bar{u}] = \\
= P_{11}^0[u_2, \bar{u}] = P_{11}'[u_2, \bar{u}] = 0 \, .
\end{aligned}
$$

By analogy to the foregoing in the case that $\lambda < \lambda_3$, it is also possible to justify the omission of the terms in (38.24) which follow $\lambda\ P_2'[\bar{u}]$. Also the determination of the stationary value, which appears again to be unique for $\lambda < \lambda_3$, opens no new angles. The functions $\bar{u}$ corresponding to the minimum are again sufficiently small only when λ stays sufficiently below λ_3. Again, for the minimum itself the functions $\bar{u}$ do not contribute terms of lower order than the fourth in a_1 and a_2. Hence, in cases for which terms of the fourth order may be neglected, it is sufficient to know the eigenfunctions u_1 and u_2.

It need not be said that the difficulty which arises as λ approaches λ_3 can be overcome in the same manner by separation of the component of the third eigenfunction in the displacement u from the fundamental state. Thus in principle, this method can be extended to arbitrarily large values of λ provided that the assumption concerning the smallness of the displacements u remains satisfied. As λ is increased very far in excess of λ_1, a large number of eigenvalues λ_h will be passed. In that case, the analysis becomes very complicated and will usually appear to be impractical unless the approximation of the energy is sufficiently accurate even if the series expansion is broken off after the third order terms.

Once the approximate expansion of the energy $\bar{P}^{\lambda}(a_j)$ is available, the determination of its stationary values does not contribute any new points of view beyond those presented in Sect. 35 and 36. The stability analysis also proceeds entirely in agreement with the conventional scheme.

Finally, it is noted that the first assumption introduced in this section regarding the nature of the load system is unnecessarily sharply formulated. It is sufficient to assume instead that the displacements $U(\lambda)$ remain so small that their influence on the direction and magnitude of the load which is acting upon a body element may be neglected. The increase of the load energy on transition from the fundamental state $U(\lambda)$ to a neighboring state $U(\lambda) + u$ is then independent of $U(\lambda)$

$$-W[u] = -W_1[u] - W_2[u] - \ldots =$$

$$= -\lambda W_1'[u] - \lambda W_2'[u] - \ldots \qquad (38.25)$$

Accordingly, the terms $-\lambda W_m'[u]$, $m \geq 2$ should be added to expression (38.3). The analysis proceeds then in the same manner as already has been described.

Chapter 4
THE INFLUENCE OF SMALL DEVIATIONS

The geometric form of a structure, the elastic properties of its material, and the forces acting on it are never exactly known. Such a structure is made accessible to analysis by design of a model which represents the structure as well as possible and to this model the theory of elasticity is applied.

When the difference between the real structure and the idealized model are small and when the displacements are so small that the classical theory of elasticity may be applied, then the behaviour of the model yields a good approximation of the elastic behaviour of the real structure; this approximation improves as the differences between real structure and model become smaller.

On the other hand, in the case that the displacements are not small enough that the linear theory of elasticity can be applied, the model does not always yield a satisfactory approximation of the elastic behaviour of the structure. It is true that the approximation improves when differences between structure and model decrease, but the small differences which appear in reality may have a significant influence. This is clearly illustrated by the example of the axially compressed bar. The model used here is the true prismatic and homogeneous bar loaded by central axial compression. When the load is not too far away from the buckling load of the model, a small deviation of the axis at the real bar from the straight line or a small eccentricity of the loading will cause considerable bending of the real bar, while the axis of the model bar will remain straight under the given load.

The stability theory belongs essentially to the field of the non-linear theory of elasticity and, therefore, it is necessary to take into consideration the influence of small deviations between structure and model. The smallness of the deviations makes it possible to omit all terms except those which are linear in these.

41. THE DEFORMATIONS

In the undeformed state a point P^o of the structure is given by its coordinates x_i^o with respect to a rigid orthogonal frame of reference.[1] When this point is subjected to a displacement with components u_i in the direction of the axes, the deformation in the immediate neighbourhood of P^o is described by the six components of deformations (See (11.1)).

$$\gamma_{ij}{}^o = \gamma_{ji}{}^o = \frac{\partial u_i}{\partial x_i^o} + \frac{\partial u_i}{\partial x_i^o} + \sum_{h=1}^{3} \frac{\partial u_i}{\partial x_h^o} \frac{\partial u_i}{\partial x_h^o} \quad . \tag{41.1}$$

Points of the structure are mapped uniquely and reversibly into points of the corresponding model if the coordinates of a point P^o of the real structure are written.

$$x_i^o = x_i + u_i^o . \tag{41.2}$$

Here, x_i are the coordinates of the corresponding point P of the model. The geometrical differences between structure and model are small when the functions u_i^o are small. In that case the requirement of reversibility of the mapping is always satisfied because the functional determinant obeys

$$\frac{\partial\left(x_1^o, x_2^o, x_3^o\right)}{\partial(x_1, x_2, x_3)} = \left| \delta_{hj} + \frac{\partial u_h^o}{\partial x_j} \right| > 0 \quad \left(\delta_{hj} = \begin{matrix} 1 \text{ for } h = j \\ 0 \text{ for } h \neq j \end{matrix}\right) \tag{41.3}$$

and is therefore always nonzero.

The description of the deformed state of the structure is given with x_i^o as independent variables. It is also possible however, to introduce, by use of transformation (41.2),

---

[1] The superscript 0, used here and in the following section to indicate the real structure, should not be confused with the superscript used in Sect. 38.

x_i the coordinates used for the analysis of the model as independent variables. It is obvious then that the comparison of elastic behaviour of structure and model will be considerably simplified. In view of (41.3), $\frac{\partial u_i}{\partial x_j^o}$ can be solved from relations

$$\frac{\partial u_i}{\partial x_j} = \sum_{h=1}^{3} \frac{\partial u_i}{\partial x_h^o} \frac{\partial x_h^o}{\partial x_i} = \sum_{h=1}^{3} \left(\delta_{hj} + \frac{\partial u_h^o}{\partial x_j} \right) \frac{\partial u_i}{\partial x_h^o} \quad \begin{pmatrix} i = 1, 2, 3 \\ j = 1, 2, 3 \end{pmatrix} .$$

For $j = 1$ it follows that

$$\frac{\partial u_i}{\partial x_1^o} = \begin{vmatrix} \frac{\partial u_i}{\partial x_1} & \frac{\partial u_2^o}{\partial x_1} & \frac{\partial u_3^o}{\partial x_1} \\ \frac{\partial u_i}{\partial x_2} & 1 + \frac{\partial u_2^o}{\partial x_2} & \frac{\partial u_3^o}{\partial x_2} \\ \frac{\partial u_i}{\partial x_3} & \frac{\partial u_2^o}{\partial x_3} & 1 + \frac{\partial u_3^o}{\partial x_3} \end{vmatrix} : \begin{vmatrix} 1 + \frac{\partial u_1^o}{\partial x_1} & \frac{\partial u_2^o}{\partial x_1} & \frac{\partial u_3^o}{\partial x_1} \\ \frac{\partial u_1^o}{\partial x_2} & 1 + \frac{\partial u_2^o}{\partial x_2} & \frac{\partial u_3^o}{\partial x_2} \\ \frac{\partial u_1^o}{\partial x_3} & \frac{\partial u_2^o}{\partial x_3} & 1 + \frac{\partial u_3^o}{\partial x_3} \end{vmatrix} ,$$

or with terms of second and higher order disregarded in the derivatives of u_h^o

$$\frac{\partial u_i}{\partial x_1^o} = \frac{\partial u_i}{\partial x_1} - \sum_{h=1}^{3} \frac{\partial u_h^o}{\partial x_1} \frac{\partial u_i}{\partial x_h} .$$

For $j = 2$ and $j = 3$ an analogous result follows, so that in general

$$\frac{\partial u_i}{\partial x_j^o} = \frac{\partial u_i}{\partial x_j} - \sum_{h=1}^{3} \frac{\partial u_h^o}{\partial x_j} \frac{\partial u_i}{\partial x_h} . \tag{41.4}$$

Substitution of (41.4) in (41.1) yields, again after omission of terms of second and higher order in the derivatives of u_h^o

$$\gamma_{ij}{}^o = \frac{\partial u_i}{\partial x_j} + \frac{\partial u_j}{\partial x_i} + \sum_{h=1}^{3} \frac{\partial u_i}{\partial x_h} \frac{\partial u_j}{\partial x_h} - \sum_{h=1}^{3} \left(\frac{\partial u_h^o}{\partial x_j} \frac{\partial u_i}{\partial x_h} + \frac{\partial u_h^o}{\partial x_i} \frac{\partial u_j}{\partial x_h} \right) +$$

$$- \sum_{h=1}^{3} \sum_{k=1}^{3} \frac{\partial u_h^o}{\partial x_k} \left(\frac{\partial u_i}{\partial x_h} \frac{\partial u_j}{\partial x_k} + \frac{\partial u_i}{\partial x_k} \frac{\partial u_j}{\partial x_h} \right) = \gamma_{ij} + \Delta\gamma_{ij} \qquad (41.5)$$

where the γ_{ij} are the strain components (11.1) at a point P in the model which corresponds to a point P^o in the structure, provided that the displacements of the points in the structure and in model are equal; the $\Delta\gamma_{ij}$ are the differences in the strain components caused by the differences in geometry between structure and model.

42. THE POTENTIAL ENERGY

The elastic potential of the model is a homogeneous quadratic function of the strain quantities (11.1)

$$A(\gamma_{ij}) = \Sigma\, c_{ij}\, \gamma_{ij}{}^2 \qquad (42.1)$$

where summation should be carried out over the six combinations of i and j. It is assumed that the elastic potential of the real structure is also given by a homogeneous quadratic function of the strain components which, now however, are determined by (41.5)

$$A^o\left(\gamma_{ij}{}^o\right) = \Sigma\, c_{ij}{}^o\, \gamma_{ij}{}^{o^2} \; . \qquad (42.2)$$

The coefficients $c^o_{ij} = c_{ij} + \Delta c_{ij}$ differ slightly from the coefficients of (42.1). Expansion of (42.2) yields, if only linear quantities of the differences between structure and model are taken into account,

$$A^o\left(\gamma_{ij}{}^o\right) = \Sigma c_{ij}\,\gamma_{ij}{}^2 + 2\Sigma c_{ij}\,\gamma_{ij}\,\Delta\gamma_{ij} + \Sigma\Delta c_{ij}\,\gamma_{ij}{}^2 = A\left(\gamma_{ij}\right) + \Delta A\ . \quad (42.3)$$

The total elastic energy of the structure is given by the integral

$$\iiint A^o\left(\gamma_{ij}{}^o\right)\ dx^o_1\,dx^o_2\,dx^o_3\ ,$$

where integration is carried out over the volume of the structure. By use of (41.2) this integral is transformed into an integral which extends over the volume of the model.

$$\iiint A^o\left(\gamma_{ij}{}^o\right) dx^o_1\,dx^o_2\,dx_3{}^o = \iiint A^o\left(\gamma_{ij}{}^o\right)\frac{\partial\left(x^o_1\,,\,x^o_2\,,\,x^o_3\right)}{\partial\left(x_1\,,\,x_2\,,\,x_3\right)}\,dx_1\,dx_2\,dx_3\ .$$

Finally, by expansion and by omission of second and higher order terms in the differences between structure and model, for the elastic energy it follows

$$\iiint A^o\left(\gamma_{ij}{}^o\right)\ dx^o_1\,dx^o_2\,dx^o_3 =$$

$$= \iiint A\left(\gamma_{ij}\right) dx_1\,dx_2\,dx_3 + \iiint \Delta A\,dx_1\,dx_2\,dx_3 +$$

$$+ \iiint A\left(\gamma_{ij}\right)\left(\frac{\partial u^o_1}{\partial x_1} + \frac{\partial u^o_2}{\partial x_2} + \frac{\partial u^o_3}{\partial x_3}\right) dx_1\,dx_2\,dx_3\ . \quad (42.4)$$

It is assumed that the load $\rho X_i dx_1 dx_2 dx_3$ which is acting on a volume element at an interior point x_i of the model corresponds to a load $\{\rho X_i + \Delta(\rho X_i)\} dx_1 dx_2 dx_3$ acting at an interior point $x_i^o + \Delta x_i^o$ of the structure. Let $x_i + \Delta x_i$ be the point in the model corresponding to $x_i^o + \Delta x_i^o$. The quantities Δx_i can be understood to be eccentricities of the loads which are acting on the structure, in reference to the geometry of the model. Likewise, it is assumed that the load $p_i df$ acting on a surface element in the point x_i of the model corresponds to loads $(p_i + \Delta p_i) df$ acting on the surface of the structure. If the magnitude and direction of the loads are given with respect to the rigid coordinate system, the potential energy of the loads for the structure is (see (29.7))

$$
\begin{aligned}
&- \iiint \sum_{i=1}^{3} \rho X_i u_i \, dx_1 \, dx_2 \, dx_3 - \iint \sum_{i=1}^{3} p_i u_i df + \\
&- \iiint \sum_{i=1}^{3} \Delta(\rho X_i) \, u_i dx_1 dx_2 dx_3 - \iint \sum_{i=1}^{3} \Delta p_i \, u_i df + \\
&- \iiint \sum_{i=1}^{3} \rho X_i \sum_{j=1}^{3} \frac{\partial u_i}{\partial x_j} \Delta x_j \, dx_1 \, dx_2 \, dx_3 - \iint \sum_{i=1}^{3} p_i \sum_{j=1}^{3} \frac{\partial u_i}{\partial x_j} \Delta x_j \, df \, . \qquad (42.5)
\end{aligned}
$$

The total energy is given by the sum of expression (42.4) and (42.5). All possible deviations of the structure with respect to the model are here taken into account. In the following, however, the differences of elasticity constants and magnitude of the loads will be disregarded so that only the influence of the geometrical deviation and of the eccentricity of the loads will be taken into consideration. The total energy in that case is

$$\iiint \sum c_{ij}\,\gamma_{ij}^{2}\,dx_1\,dx_2\,dx_3 - \iiint \sum_{i=1}^{3} \rho X_i\,u_i\,dx_1\,dx_2\,dx_3 - \iint \sum_{i=1}^{3} p_i\,u_i\,df +$$

$$+ \iiint \left\{ 2\sum c_{ij}\,\gamma_{ij}\,\Delta\gamma_{ij} + \sum c_{ij}\,\gamma_{ij}^{2} \sum_{h=1}^{3} \frac{\partial u_h^{\,0}}{\partial x_h} \right\} dx_1\,dx_2\,dx_3 +$$

$$- \iiint \sum_{i=1}^{3} \rho X_i \sum_{j=1}^{3} \frac{\partial u_i}{\partial x_j}\,\Delta x_j\,dx_1\,dx_2\,dx_3 - \iint \sum_{i=1}^{3} p_i \sum_{j=1}^{3} \frac{\partial u_i}{\partial x_j}\,\Delta x_j\,df\,. \qquad (42.6)$$

The first three terms represent the energy of the model, the fourth term the energy increase as a result of the geometrical deviations, and the last terms the energy increase caused by the eccentricities of the loads. It is noted also that the integrand of the fourth term as well as that of the first term is a polynomial in the derivatives of u_i with terms of the second, third and fourth order. The integrands of the last term, as well as those of the second and third term, depend linearly on the displacements u_i. For the following it is advantageous to write the geometric deviations and the eccentricities in the form

$$u_i^0 = \epsilon v_i^0 \quad , \quad \Delta x_i = \epsilon \Delta y_i\,. \qquad (42.7)$$

The last three integrals then have a factor ϵ in common. The quantities v_i^0 and Δy_i characterise the nature of the differences between structure and model. The factor ϵ determines the magnitude of these differences and is accordingly named the deviation parameter.

43. SIMPLIFICATION OF THE ENERGY

As in Chapter 3 the loading is assumed to be given as a product of a unit load system and a load parameter λ. If the model possesses an equilibrium configuration for a certain value of λ, then, for small differences between structure and model, it can be expected that the structure possesses an equilibrium-configuration for the same value of λ with displacements which differ slightly from the equilibrium displacements

of the model. In the limiting case that the deviation parameter ϵ converges to zero, the equilibrium states of the structure should of course approach those of the model.

Thus, the structure shall in general possess an equilibrium state whose displacements differ slightly from the displacements $U(\lambda)$ of the fundamental state of the model. However, also, the neighboring states of equilibrium of the model, which exist for loads in the neighborhood of the buckling load, will correspond to equilibrium states of the real structure whose displacements will differ slightly from the displacements of the model, and consequently, will differ slightly from the displacements $U(\lambda)$ of the fundamental state of the model. It is, therefore, appropriate for the analysis of all these equilibrium states to write for the total displacements of the structure (at present indicated by v[1])

$$v = U(\lambda) + u. \tag{43.1}$$

After introduction of (43.1) in (42.6), the integrands are expanded. Through a series expansion in agreement with (22.1) the sum of the first three integrals, which together represent the energy of the model corresponding to the displacements (43.1), are found to be

$$P(U(\lambda) + u) = P(U(\lambda)) + P_1^\lambda[u] + P_2^\lambda[u] + P_3^\lambda[u] + P_4^\lambda[u], \tag{43.2}$$

Here the dependency on the load parameter is expressed by use of the index λ. In (42.6) there are no integrals with integrands of an order higher than four in the displacements and their derivatives. Therefore

$$P_m^\lambda[u] = 0 \text{ for } m > 4 \quad ; \quad P_4^\lambda[u] = P_4[u]$$

[1] In the following, the subscripts i etc., which indicate the components of the displacements, are again discarded.

should hold (see also Sect. 29). Besides, the fundamental state of the model is an equilibrium state and thus (22.3) should be satisfied

$$P_1^\lambda [u] = 0 .$$

The remaining integrals of (42.6) are treated in an analogous manner. The result is of the form

$$\epsilon Q (U(\lambda) + u) = \epsilon Q (U(\lambda)) + \\ + \epsilon \left\{ Q_1^\lambda [u] + Q_2^\lambda [u] + Q_3^\lambda [u] + Q_4^\lambda [u] \right\} \tag{43.3}$$

which, unlike (43.2), in general should contain the linear term in u, $Q_1^\lambda[u]$. This term results partially from the fourth integral and partially from the last two integrals of (42.6). The integrand of the first part is a linear polynomial of the derivatives of the displacement u, whose coefficients all contain at least one of the derivatives of $U(\lambda)$ as a factor; the integrand of the second part contains the factor λ.

For small displacements u the term of the lowest order in (43.3) will be most significant so that for a first approximation to the influence of the differences between structure and model it is sufficient to take only this term into account. The energy of the structure then is

$$P^\lambda [u] + \epsilon Q^\lambda [u] = P_2^\lambda [u] + P_3^\lambda [u] + P_4 [u] + \epsilon Q_1^\lambda [u] , \tag{43.4}$$

where an unimportant contribution independent of u, and representing the energy corresponding to the displacements $U(\lambda)$, has been disregarded.

It is of course of particular importance to determine how the structure behaves at loads in the neighborhood of the buckling load of the model. For this purpose, just as in Sect. 32, the integrals occurring in (43.4) will be expanded in terms of $\lambda - \lambda_1$

$$P^{\lambda}[u] + \epsilon Q^{\lambda}[u] = P_2[u] + (\lambda - \lambda_1) P_2'[u] + (\lambda - \lambda_1)^2 P_2''[u] +$$

$$+ \ldots + P_3[u] + (\lambda - \lambda_1) P_3'[u] + \ldots + P_4[u] +$$

$$+ \epsilon \left\{ Q_1[u] + (\lambda - \lambda_1) Q_1'[u] + \ldots \right\} . \tag{43.5}$$

As in Chapter 3, the assumption of the existence of this expansion implies that only stability problems can be treated, for which the critical state of the model constitutes a bifurcation point of equilibrium.

For the analysis of equilibrium configurations in the neighbourhood of the buckling load in the case that the solution ω_2 for the critical state of problem (24.4) is positive, it was stated that[1]

$$u = \underline{a}u_1 + \bar{u} \text{ with } T_{11}[u_1, \bar{u}] = 0 .$$

It is to be expected that also for the analysis of the structure this decomposition will be useful. Introduction in (43.5) after expansion and rearrangement (see also (32.4)) gives

[1]As confusion about the indices of the coordinate directions can be excluded, the indices for the eigenfunctions are again placed right below the symbol.

$$
\begin{aligned}
P^{\lambda}[u] + \epsilon Q^{\lambda}[u] = {} & \underline{a}\epsilon \left\{ Q_1[u_1] + (\lambda - \lambda_1) Q_1'[u_1] + \dots \right\} + \\
& + \underline{a}^2 \left\{ (\lambda - \lambda_1) P_2'[u_1] + (\lambda - \lambda_1)^2 P_2''[u_1] + \dots \right\} + \\
& + \underline{a}^3 \left\{ P_3[u_1] + (\lambda - \lambda_1) P_3'[u_1] + \dots \right\} + \underline{a}^4 P_4[u_1] + \\
& + \epsilon \left\{ Q_1[\bar{u}] + (\lambda - \lambda_1) Q_1'[\bar{u}] + \dots \right\} + \\
& + \underline{a} \left\{ (\lambda - \lambda_1) P_{11}'[u_1, \bar{u}] + (\lambda - \lambda_1)^2 P_{11}''[u_1, \bar{u}] + \dots \right\} + \\
& + \underline{a}^2 \left\{ P_{21}[u_1, \bar{u}] + (\lambda - \lambda_1) P_{21}'[u_1, \bar{u}] + \dots \right\} + \\
& + \underline{a}^3 P_{31}[u_1, \bar{u}] + P_2[\bar{u}] + (\lambda - \lambda_1) P_2'[\bar{u}] + \dots + \\
& + \underline{a} P_{12}[u_1, \bar{u}] + \dots + P_3[\bar{u}] + \dots + P_4[\bar{u}]
\end{aligned}
\tag{43.6}
$$

In agreement with Sect. 32 the omission of the terms which follow $P_2[\bar{u}]$ is justified. It follows that

$$
\begin{aligned}
P^{\lambda}[u] + \epsilon Q^{\lambda}[u] = {} & \underline{a}\epsilon \left\{ Q_1[u_1] + (\lambda - \lambda_1) Q_1'[u_1] + \dots \right\} + \\
& + \underline{a}^2 \left\{ (\lambda - \lambda_1) P_2'[u_1] + (\lambda - \lambda_1)^2 P_2''[u_1] + \dots \right\} + \\
& + \underline{a}^3 \left\{ P_3[u_1] + (\lambda - \lambda_1) P_3'[u_1] + \dots \right\} + \underline{a}^4 P_4[u_1] + \\
& + \epsilon \left\{ Q_1[\bar{u}] + (\lambda - \lambda_1) Q_1'[\bar{u}] + \dots \right\} + \\
& + \underline{a} \left\{ (\lambda - \lambda_1) P_{11}'[u_1, \bar{u}] + (\lambda - \lambda_1)^2 P_{11}''[u_1, \bar{u}] + \dots \right\} + \\
& + \underline{a}^2 \left\{ P_{21}[u_1, \bar{u}] + (\lambda - \lambda_1) P_{21}'[u_1, \bar{u}] + \dots \right\} + \\
& + \underline{a}^3 P_{31}[u_1, \bar{u}] + P_2[\bar{u}] \quad .
\end{aligned}
\tag{43.7}
$$

Furthermore, it is noted also that the simplifying assumption with regard to the nature of the load system, as was introduced in Sect. 42, is not essential. For more general load systems the increment in the energy on transition from the displacement configuration $U(\lambda)$ to $U(\lambda) + u$ can always be expanded in terms of $\lambda - \lambda_1$. For that case the terms to be added to (43.2 and 3) are of the same form as those already considered, so that the previous considerations do not undergo essential modifications.

44. CALCULATIONS OF THE FUNCTIONS $\bar{u}$

The equilibrium configurations of the structure are determined from the stationary values of the energy (43.7). This procedure is again applied in two steps. First, the stationary values of (43.7) are determined for an arbitrary constant value of $\underline{a}$. Next, the stationary values of the function $F^{\lambda}(\underline{a})$ thus obtained are determined.

The first step is carried out through calculation of the increment of (43.7) as the function $\bar{u}$ is replaced by the functions $\bar{u} + \eta$ under the restriction

$$T_{11}[u_1, \eta] = 0 . \tag{44.1}$$

The result is

$$\begin{aligned} P^{\lambda}[u+\eta] + \epsilon Q^{\lambda}[u+\eta] - P^{\lambda}[u] - \epsilon Q^{\lambda}[u] &= \\ = \epsilon \Big| Q_1[\eta] + (\lambda - \lambda_1) Q_1' + \dots \Big| + \\ + \underline{a} \Big| (\lambda - \lambda_1) P_{11}'[u_1, \eta] + (\lambda - \lambda_1)^2 P_{11}''[u_1, \eta] + \dots \Big| + \\ + \underline{a}^2 \Big| P_{21}[u_1, \eta] + (\lambda - \lambda_1) P_{21}'[u_1, \eta] + \dots \Big| + \\ + \underline{a}^3 P_{31}[u_1, \eta] + P_{11}[\bar{u}, \eta] + P_2[\eta] . \end{aligned} \tag{44.2}$$

The condition for a stationary value of (43.7) requires that the terms in (44.2) which are linear in η should be zero. The stationary value so determined must be a minimum because $P_2[\eta]$ is always positive due to condition (44.1). In analogy to developments in Sect. 33, the condition obtained by equating to zero all terms of (44.2) linear in η is made equivalent to a set of differential equations and boundary conditions. This is done through introduction of an arbitrary kinematically possible function ζ which is not restricted by (44.1). The execution of this derivation does not offer any new difficulties and the result may immediately be written down

$$
\begin{aligned}
&\epsilon \left| Q_1[\zeta] - \frac{Q_1[u_1]}{2T_2[u_1]} T_{11}[u_1, \zeta] \right| + \\
&+ \epsilon(\lambda - \lambda_1) \left| Q_1'[\zeta] - \frac{Q_1'[u_1]}{2T_2[u_1]} T_{11}[u_1, \zeta] \right| + \dots + \\
&+ \underline{a}(\lambda - \lambda_1) \left| P_{11}'[u_1, \zeta] - \frac{2P_2'[u_1]}{2T_2[u_1]} T_{11}[u_1, \zeta] \right| + \\
&+ \underline{a}(\lambda - \lambda_1)^2 \left| P_{11}''[u_1, \zeta] - \frac{2P_2''[u_1]}{2T_2[u_1]} T_{11}[u_1, \zeta] \right| + \dots + \\
&+ \underline{a}^2 \left| P_{21}[u_1, \zeta] - \frac{3P_3[u_1]}{2T_2[u_1]} T_{11}[u_1, \zeta] \right| + \\
&+ \underline{a}^2(\lambda - \lambda_1) \left| P_{21}'[u_1, \zeta] - \frac{3P_3'[u_1]}{2T_2[u_1]} T_{11}[u_1, \zeta] \right| + \dots + \\
&+ \underline{a}^3 \left| P_{31}[u_1, \zeta] - \frac{4P_4[u_1]}{2T_2[u_1]} T_{11}[u_1, \zeta] \right| + P_{11}[\bar{u}, \zeta] = 0 . \qquad (44.3)
\end{aligned}
$$

The functions $\bar{u}$ are uniquely determined by (44.3) together with the requirement

$$T_{11}[u_1, \bar{u}] = 0 . \qquad (44.4)$$

On account of the linearity of (44.3) and (44.4) this solution can be written in the form

$$\bar{u} = \epsilon \varphi_0 + \epsilon (\lambda - \lambda_1)\varphi_0' + \dots + \underline{a}(\lambda - \lambda_1)\varphi_1' + \underline{a}(\lambda - \lambda_1)^2 \varphi_1'' +$$

$$+ \dots + \underline{a}^2 \varphi_2 + \underline{a}^2 (\lambda - \lambda_1)\varphi_2' + \dots + \underline{a}^3 \varphi_3, \qquad (44.5)$$

in which φ_1', φ_1'' etc. φ_2, φ_2' etc. and φ_3 are the solutions of (33.6), (33.7) and (33.8) respectively. The solutions φ_0, φ_0', etc., are the solutions of the equations

$$P_{11}[\bar{u}, \zeta] + Q_1[\zeta] - \frac{Q_1[u_1]}{2T_2[u_1]} T_{11}[u_1, \zeta] = 0 \; ; \; T_{11}[u_1, \bar{u}] = 0$$

$$P_{11}'[\bar{u}, \zeta] + Q_1'[\zeta] - \frac{Q_1'[u_1]}{2T_2[u_1]} T_{11}[u_1, \zeta] = 0 \; ; \; T_{11}[u_1, \bar{u}] = 0 \text{ etc.}$$

(44.6)

By application of (44.3) for $\zeta = \bar{u}$, the minimum of (43.7) is found to be

$$\underline{a}\,\epsilon\{Q_1[u_1] + (\lambda - \lambda_1) Q_1'[u_1] + \dots\} +$$

$$+ \underline{a}^2\{(\lambda - \lambda_1) P_2'[u_1] + (\lambda - \lambda_1)^2 P_2''[u_1] + \dots\} +$$

$$+ \underline{a}^3\{P_3[u_1] + (\lambda - \lambda_1) P_3'[u_1] + \dots\} + \underline{a}^4 P_4[u_1] - P_2[\bar{u}].$$

By introduction of (44.5) and by use of the constants (33.10), this expression becomes

$$F^\lambda(\underline{a}) = (\lambda - \lambda_1) A_2' \underline{a}^2 + (\lambda - \lambda_1)^2 A_2'' \underline{a}^2 + \dots + A_3 \underline{a}^3 +$$

$$+ (\lambda - \lambda_1) A_3' \underline{a}^3 + \dots + A_4 \underline{a}^4 + \dots + \epsilon \underline{a}\, Q_1[u_1] +$$

$$+ \epsilon \underline{a}(\lambda - \lambda_1)\{Q_1'[u_1] - P_{11}[\varphi_0, \varphi_1']\} + \dots - \epsilon \underline{a}^2 P_{11}[\varphi_0, \varphi_2] - \dots +$$

$$- \epsilon^2 P_2[\varphi_0] - \epsilon^2 (\lambda - \lambda_1) P_{11}[\varphi_0, \varphi_0'] - \dots \qquad (44.7)$$

Here, as in (33.11), the terms of higher order than the fourth in $\lambda - \lambda_1$ and $\underline{a}$ are disregarded. The terms independent of $\underline{a}$ have no influence on the derivatives of $F^{\lambda}(\underline{a})$ and can, therefore, be disregarded. The most important influence of the difference between behavior of structure and model is represented in (44.7) by the first term with factor ϵ. Unless $Q_1[u_1]$ is zero for all possible kinds of geometrical deviations and eccentricities, which case will not be considered in the following, it is sufficient as a first approximation of this influence to take into account only the first term.

In analogy to Sect. 34 approximation (44.7) may be improved. This improvement is again necessary when A_3 as well as A_4 are zero. No improved approximation of the influence of the differences between structure and model will be derived here. The energy of the structure is then given by (34.8) augmented by the correction term

$$\epsilon \underline{a} Q_1[u_1] = \epsilon B_1 \underline{a}. \tag{44.8}$$

In (44.7) and in the second approximation ((34.8) augmented by (44.8)), the first term is of dominant importance in comparison to all terms containing a factor $\lambda - \lambda_1$. Further, the dominant term among those which do not contain a factor $\lambda - \lambda_1$ or ϵ, is given by the one which is of the lowest order in $\underline{a}$. Let this term be $A_n \underline{a}^n$, then $F^{\lambda}(\underline{a})$ can be simplified to

$$F^{\lambda}(\underline{a}) = \epsilon B_1 \underline{a} + (\lambda - \lambda_1) A_2' \underline{a}^2 + A_n \underline{a}^n. \tag{44.9}$$

(See also Sect. 35.)

45. THE EQUILIBRIUM CONFIGURATIONS

The equilibrium configurations are characterized by stationary values of the energy, thus, on account of approximation (44.9) by

$$f^{\lambda}(\underline{a}) \equiv \frac{dF^{\lambda}(\underline{a})}{d\underline{a}} = \epsilon B_1 + 2(\lambda - \lambda_1) A_2' \underline{a} + nA_n \underline{a}^{n-1} = 0. \tag{45.1}$$

Because $F^{\lambda}(\underline{a})$ is the minimum of (43.7) for a constant value of $\underline{a}$, the stability requirement determined by (45.1) will be satisfied if and only if the corresponding stationary value of $\bar{F}^{\lambda}(\underline{a})$ is also a minimum. The decisive quantity about stability is, therefore, the second derivative of (44.9)

$$\frac{d^2 F^{\lambda}(\underline{a})}{d\underline{a}^2} = \frac{df^{\lambda}(\underline{a})}{d\underline{a}} = 2(\lambda - \lambda_1) A_2' + n(n-1) A_n \underline{a}^{n-2}. \tag{45.2}$$

It appears from (45.2) that in a λ versus $\underline{a}$ diagram for the structure, the stable combinations of λ and $\underline{a}$ are separated from the unstable combinations by the same line of partition holding for the model (see Sect. 35). Consequently, an equilibrium configuration of the structure which for $\epsilon \to 0$ approaches an equilibrium configuration of the model is stable or unstable depending on the stability of the model configuration. Equilibrium of the structure is at the stability limit if the image point in the λ versus $\underline{a}$ diagram appears on the partition line. The third derivative of (44.9) is nonzero, except in the case that $\underline{a} = 0$. Consequently, equilibrium at the stability limit is unstable, except perhaps in the case $\underline{a} = 0$, $\lambda = \lambda_1$, and the above mentioned partition line must belong to the unstable region.

According to Sect. 35, A_2' is always negative. B_1 may always be taken positive as differences of opposite sign between structure and model are already represented by negative values of ϵ. However, distinction must be made between odd and even values of n, and in the latter case also between positive and negative values of A_n. For odd values of n an equilibrium value of $\underline{a}$ corresponding to ϵ and A_n is equivalent to an equilibrium value of $-\underline{a}$ corresponding to $-\epsilon$ and $-A_n$. In view of (45.2) the stability is also the same for the equivalent states so that it is sufficient in this case to restrict the considerations to positive values of A_n. For even values of n, it is sufficient to take into account only positive values of ϵ, since an equilibrium value of $\underline{a}$ corresponding to ϵ and an equilibrium value of $-\underline{a}$ corresponding to $-\epsilon$ exhibit the same type of stability. The treatment of (45.1) and (45.2) may consequently be restricted to the following four cases

a. n odd , $A_n > 0, \epsilon > 0$;

b. n odd , $A_n > 0, \epsilon < 0$;

c. n even , $A_n < 0, \epsilon > 0$;

d. n even , $A_n > 0, \epsilon > 0$.

For the cases a. to c. the equilibrium of the model is unstable in the critical state; while in case d. it is stable.

451 Case a.

From (45.1) it follows that $f^{\lambda}(\underline{a})$ is positive for values of $\underline{a}$ corresponding to the fundamental and the neighboring states of the model

$$\underline{a} = 0 \text{ and } \underline{a} = -\left\{\frac{2(\lambda - \lambda_1) A_2'}{nA_n}\right\}^{\frac{1}{n-2}} \tag{45.3}$$

From (45.2) it follows that

$$\frac{df^{\lambda}(\underline{a})}{d\underline{a}} \begin{matrix} > 0 \text{ for } \underline{a} > \\ = 0 \text{ for } \underline{a} = -\left\{\frac{2(\lambda - \lambda_1) A_2'}{n(n-1) A_n}\right\}^{\frac{1}{n-2}} \\ < 0 \text{ for } \underline{a} < \end{matrix} \tag{45.4}$$

Consequently equation (45.1) can have at most two roots and those lie between values of $\underline{a}$ determined by (45.3). For the values of $\underline{a}$ determined by (45.4), $f^{\lambda}(\underline{a})$ reaches its minimum. The roots of (45.1) are real if the minimum of $f^{\lambda}(\underline{a})$, corresponding to a value of $\underline{a}$ determined by (45.4), is negative or equal to zero.

$$\text{Min } f^{\lambda}(\underline{a}) = \epsilon B_1 - 2(\lambda - \lambda_1) A_2' \left\{ \frac{2(\lambda - \lambda_1) A_2'}{n(n-1) A_n} \right\}^{\frac{1}{n-2}} +$$

$$+ \; nA_n \left\{ \frac{2(\lambda - \lambda_1) A_2'}{n(n-1) A_n} \right\}^{\frac{n-1}{n-2}} =$$

$$= \epsilon B_1 - \left| 2(\lambda - \lambda_1) A_2' \right|^{\frac{n-1}{n-2}} n^{-\frac{1}{n-2}} (n-1)^{-\frac{n-1}{n-2}} (n-2) A_n^{-\frac{1}{n-2}} \leq 0 .$$

This condition is satisfied if and only if

$$\left| 2(\lambda - \lambda_1) A_2' \right|^{n-1} \frac{(n-2)^{n-2}}{n(n-1)^{n-1} A_n} \geq (\epsilon B_1)^{n-2} \quad \text{or}$$

$$\left| \lambda - \lambda_1 \right| \geq \frac{1}{2} n^{\frac{1}{n-1}} (n-1)(n-2)^{-\frac{n-2}{n-1}} \frac{A^{\frac{1}{n-1}}}{-A_2'} (\epsilon B_1)^{\frac{n-2}{n-1}} \tag{45.5}$$

The inequalities (45.5) determine two values λ^* and λ^{**} such that equation (45.1) has two real solutions for $\lambda < \lambda^* < \lambda_1$ and $\lambda > \lambda^{**} > \lambda_1$. For $\lambda = \lambda^*$ and $\lambda = \lambda^{**}$ it has a real double root and for $\lambda^* < \lambda < \lambda^{**}$ it has no real roots. In the λ versus $\underline{a}$ graph the equilibrium states which exist for $\lambda \leq \lambda^*$ and $\lambda \geq \lambda^{**}$ form two separate branches which for $\lambda = \lambda^*$ and $\lambda = \lambda^{**}$ have a maximum and a minimum respectively. These branches both consist of one part that approaches the fundamental state of the model and a part that approaches the neighboring states of the model when $\epsilon \to 0$ (see also Fig. 3a, page 93).

From (45.2) and from use of (45.4), it follows that equilibrium is stable in the state corresponding to the greatest value of $\underline{a}$ and unstable in the other state. Equilibrium is at the stability limit for $\lambda = \lambda^*$ and $\lambda = \lambda^{**}$.

Of particular interest is the equilibrium configuration which, for loads below the buckling load, approaches the fundamental state of the model when $\epsilon \to 0$. This state, the so-called natural state, will be obtained from the undeformed state by gradual increase of the load parameter λ. As for $\lambda < \lambda^*$ both equilibrium values of $\underline{a}$ are negative. It follows that the greatest of these equilibrium values corresponds to the natural state which is stable for $\lambda < \lambda^*$. For $\lambda = \lambda^*$ the stability limit is reached and λ^* determines the buckling load of the structure. This buckling load is lower than that of the model. It follows from (45.5) that

$$\frac{d\lambda^*}{d\epsilon} = -\frac{1}{2}\left|\frac{n(n-2)A_n}{B_1}\right|^{\frac{1}{n-1}} \frac{B_1}{-A_2'}\,\epsilon^{-\frac{1}{n-1}}, \tag{45.6}$$

so that in a graph of the buckling load of the structure as a function of the deviation parameter ϵ, the tangent in the point $\epsilon = 0$, $\lambda^* = \lambda_1$ coincides with the λ^* axis (Fig. 2).

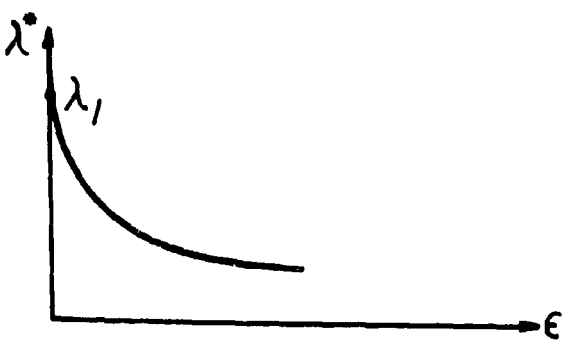

FIG. 2

Consequently, for a small but finite value of ϵ, i.e., for small differences between structure and model, the buckling load of the structure may lie considerably below that of the model. This decrease is mainly governed by the exponent of ϵ in (45.6); it is more pronounced the smaller n is.

452. Case b. (n odd, $A_n > 0$, $\epsilon < 0$)

From (45.1) it follows that $f^{\lambda}(\underline{a})$ is negative for values of $\underline{a}$ corresponding to the fundamental state and the neighboring state of the model (45.3). In this case (45.4) also holds. There are consequently always two equilibrium values of $\underline{a}$ which are separated by the equilibrium values of the model (45.3). The state corresponding to the largest value of $\underline{a}$ is always stable, the other unstable. Also in this case, the λ versus $\underline{a}$ diagram consists of two separate branches, of which one is now completely stable, the other completely unstable. Both branches consist again of one part that approaches the fundamental state and one part that approaches the neighboring state of the model when $\epsilon \to 0$ (see also Fig. 3b, page 145).

The natural equilibrium state, which for $\lambda < \lambda_1$ approaches the fundamental state of of the model as ϵ approaches zero, corresponds to the largest value of $\underline{a}$ and lies consequently on the stable branch. Therefore, as the load parameter λ is gradually increased the buckling load of the model will be passed without occurrence of buckling.

453. Case c. (n even, $A_n < 0$, $\epsilon < 0$)

For $\lambda > \lambda_1$, (45.2) is always negative. As $f^{\lambda}(\underline{a})$ is positive for $\underline{a} = 0$, equation (45.1) has one real root; the corresponding equilibrium state is unstable.

For $\lambda < \lambda_1$ it follows from (45.1) that $f^{\lambda}(\underline{a})$ is positive for

$$\underline{a} = 0 \text{ and for } \underline{a}^{n-2} = -\frac{2(\lambda - \lambda_1) A_2'}{nA_n} \tag{45.7}$$

which correspond to the fundamental and neighboring states of the model. It follows from (45.2) that

$$\frac{df^{\lambda}(\underline{a})}{d\underline{a}} \gtreqless 0 \text{ for } \underline{a}^{n-2} \lesseqgtr -\frac{2(\lambda - \lambda_1) A_2'}{n(n-1) A_n} \tag{45.8}$$

Consequently, equation (45.1) always has one positive root for which the corresponding state of equilibrium is unstable. This root is greater than the positive value of $\underline{a}$ for the neighboring equilibrium state of the model as determined by (45.7).

Moreover, equation (45.1) can also have two negative roots which lie between

$$\underline{a} = -\left\{-\frac{2(\lambda-\lambda_1)A_2'}{nA_n}\right\}^{\frac{1}{n-2}} \quad \text{and} \quad \underline{a} = 0 . \tag{45.9}$$

A necessary and sufficient condition for the existence of these roots is that the minimum of $f^{\lambda}(\underline{a})$, which lies between the values given in (45.9) and which is obtained for values of $\underline{a}$ determined by (45.8) is negative or zero

$$\text{Min } f^{\lambda}(\underline{a}) = \epsilon B_1 - 2(\lambda-\lambda_1)A_2'\left\{\frac{2(\lambda-\lambda_1)A_2'}{-n(n-1)A_n}\right\}^{\frac{1}{n-2}} +$$

$$-nA_n\left\{\frac{2(\lambda-\lambda_1)A_2'}{-n(n-1)A_n}\right\}^{\frac{n-1}{n-2}} =$$

$$= \epsilon B_1 - \left|2(\lambda-\lambda_1)A_2'\right|^{\frac{n-1}{n-2}} n^{-\frac{1}{n-2}}(n-1)^{-\frac{n-1}{n-2}}(n-2)(-A_n)^{-\frac{1}{n-2}} \leq 0 .$$

This condition is satisfied if and only if

$$\left|2(\lambda - \lambda_1) A_2'\right|^{n-1} \frac{(n-2)^{n-2}}{n(n-1)^{n-1}} \frac{}{(-A_n)} \geq (\epsilon B_1)^{n-2}$$

or

$$\lambda - \lambda_1 \leq -\frac{1}{2} n^{\frac{1}{n-1}} (n-1)(n-2)^{-\frac{n-2}{n-1}} \frac{(-A_n)^{\frac{1}{n-1}}}{-A_2'} (\epsilon B_1)^{\frac{n-2}{n-1}} \tag{45.10}$$

The inequalities (45.10) determine a value λ^* such that equation (45.1) has one positive root for $\lambda > \lambda^*$, one positive and two negative roots for $\lambda < \lambda^*$. For $\lambda = \lambda^*$ the two negative roots coincide. In the λ versus $\underline{a}$ graph the positive and negative equilibrium values of $\underline{a}$ form two separate branches. The branch for negative $\underline{a}$ values has a maximum of λ for $\lambda = \lambda^*$. Both branches consist again of one part which approaches the fundamental state and one part which approaches the neighboring state of the model as $\epsilon \to 0$. (See also Fig. 3c, page 145).

From (45.2) it follows, after use of (45.8), that the smallest negative root determines an unstable state of equilibrium, and the largest negative root a stable state of equilibrium. For $\lambda = \lambda^*$ equilibrium is at the stability limit. The natural equilibrium state is in this case determined by the largest negative value of $\underline{a}$. This configuration is stable $\lambda < \lambda^*$; for $\lambda = \lambda^*$ the stability limit is reached and thus the buckling load of the structure is determined by λ^*. This buckling load is again lower than that of the model. In analogy to (45.6) it follows from (45.10) that

$$\frac{d\lambda^*}{d\epsilon} = -\frac{1}{2}\left\{\frac{-n(n-2)A_n}{B_1}\right\}^{\frac{1}{n-1}} \frac{B_1}{-A_2'} \epsilon^{-\frac{1}{n-1}} \tag{45.11}$$

For (45.11) the same conclusions can be drawn as was done in the discussion of (45.6); in particular fig. 2 holds also in this case.

454. Case d.(n even, $A_n > 0$, $\epsilon > 0$)

For $\lambda < \lambda_1$, (45.2) is always positive. Since $f^{\lambda}(\underline{a})$ is always positive for $\underline{a} = 0$, equation (45.1) possesses one real negative root; the corresponding state of equilibrium is always stable.

It follows from (45.1) that for $\lambda > \lambda_1$, $f^{\lambda}(\underline{a})$ is always positive. It follows from (45.2) that, for values of $\underline{a}$ (45.7) which correspond to the fundamental and neighboring equilibrium state of the model,

$$\frac{df^{\lambda}(\underline{a})}{d\underline{a}} \gtrless 0 \text{ for } \underline{a}^{n-2} \gtrless -\frac{2(\lambda-\lambda_1)A_2'}{n(n-1)A_n} \tag{45.12}$$

Consequently, equation (45.1) always has a negative root which corresponds to a stable equilibrium configuration.

Besides, equation (45.1) can also have two positive roots falling between

$$\underline{a} = 0 \quad \text{and} \quad \underline{a} = \left\{ -\frac{2(\lambda-\lambda_1)A_2'}{nA_n} \right\}^{\frac{1}{n-2}} \tag{45.13}$$

The minimum of $f^{\lambda}(\underline{a})$ which lies between the values of $\underline{a}$ indicated in (45.13) corresponds to positive values of $\underline{a}$ as determined by (45.12).

It is necessary and sufficient for the existence of the two positive roots that this minimum of $f^{\lambda}(\underline{a})$ is negative or equal to zero. In analogy with the foregoing case this requirement leads to the condition

$$\lambda - \lambda_1 \geq \frac{1}{2} n^{\frac{1}{n-1}} (n-1)(n-2)^{-\frac{n-2}{n-1}} \frac{A_n^{\frac{1}{n-1}}}{-A_2'} (\epsilon B_1)^{\frac{n-2}{n-1}} . \qquad (45.14)$$

Inequality (45.14) determines a value λ^{**} such that equation (45.1) has only one negative root for $\lambda < \lambda^{**}$, one negative and two positive roots for $\lambda > \lambda^{**}$. For $\lambda = \lambda^{**}$ the positive roots coincide. In the λ versus $\underline{a}$ graph the positive and negative equilibrium values of $\underline{a}$ form two separate branches. The positive branch has a minimum for $\lambda = \lambda^{**}$. Also in this case both branches consist of one part which approaches the fundamental state and one part which approaches the neighboring state of the model when $\epsilon \to 0$ (see also Fig. 3d, page 145).

It follows from (45.2) that the largest positive root determines a stable state of equilibrium, the smallest positive root determines an unstable state of equilibrium; for $\lambda = \lambda^{**}$ equilibrium is at the stability limit.

The natural equilibrium configuration in this case is determined by the negative root of (45.1) and lies therefore on the stable branch. Consequently, by gradual increase of the load parameter λ the buckling load of the model will be passed without the occurrence of buckling.

455. Conclusions

The results obtained in the foregoing may briefly be summarized as follows.

For the model the λ versus $\underline{a}$ graph has two branches which intersect at $\lambda = \lambda_1$, the fundamental state and the neighboring states. Small deviations of the structure from the model cause these branches to decompose in two completely separated branches. Both branches consist of one part which yields the fundamental state of the model and one part which yields a neighboring state of the model when the deviations approach zero. One of these branches represents the so-called natural equilibrium state of the structure which, on gradual increase of the load, is obtained from the undeformed state. The following considerations are restricted to this most important natural branch.

If equilibrium is unstable at the critical point, and the stability is governed by a quantity with odd subscript (A_3, A_5, etc.), then, for positive values of the deviation parameter ϵ, the buckling load of the structure is considerably smaller than the buckling load of the model. This decrease of the buckling load is larger for smaller values of n. On the other hand, for negative values of ϵ, a gradual increase of the load on the real structure does not result in buckling when the critical load of the model is passed.

When equilibrium of the model is unstable in the critical state and the stability is governed by a quantity with even subscript (A_4, A_6, etc.), for positive as well as negative values of ϵ, buckling load of the structure is considerably below the buckling load of the model. This decrease is again more significant for smaller values of n.

When equilibrium of the model is stable in the critical state, increase of the load on the real structure does not result in buckling as the buckling load of the model is passed.

Not only the magnitude of the buckling load is considerably influenced by deviation of the structure from the model, but also the character of the buckling phenomenon in structure and model is completely different. While the buckling load of the model corresponds to a bifurcation point of equilibrium, the buckling load of the structure as a maximum corresponds to a snapping point. As the model can be considered a special case of the real structure (the case that $\epsilon = 0$), it seems that the buckling problem corresponding to a bifurcation point should be considered as a special case of the more general problem of a snap buckling.[1]

A possible decrease in the buckling load caused by the presence of small deviations in the case of an unstable critical state of the model is of great importance in engineering. The greatest allowable load is determined by the buckling load of the structure for the most unfavorable deviations between structure and model. The calculation of this

[1] This conjecture can generally be maintained if and only if in the case d (Sect. 454), the minimum λ^{**} of λ corresponding to the second but not natural branch of the λ versus $\underline{a}$ diagram is also called a snapping point.

admissable allowable load is, therefore, only possible on the basis of an analysis which includes the existing differences between structure and model. Of course, the buckling load of the structure can also be determined experimentally. However, because of the strong dependency of the buckling load on the magnitude of the deviations (see Fig. 2), the results of these tests will show a rather great scatter, so that a fairly large number of tests will be needed for a reliable determination of the buckling load which corresponds to the most unfavourable case.[1]

456. Examples

Some typical examples of λ versus $\underline{a}$ graphs are represented in Figs. 3a to 3d, for the cases

$$A_3 > 0\,,\ \epsilon > 0\,;\ A_3 > 0\,,\ \epsilon < 0\,;\ A_3 = 0\,,\ A_4 < 0\,,\ \epsilon > 0\,;$$

$$A_3 = 0\,,\ A_4 > 0\,,\ \epsilon > 0\,.$$

respectively. In these figures, the curves indicating the model behavior are also shown. The stable branches are, just as in Fig. 1, indicated by heavy lines; the unstable branches by dotted lines. The boundary between the stable and unstable combinations of λ and $\underline{a}$ are indicated by a dash-dotted line.

Of the curves, only the part in the neighborhood of $\lambda = \lambda_1$ is drawn. This is motivated by the fact that the results of this section are valid only in a more or less restricted neighborhood of the buckling load of the model.

46. SPECIAL CASES

The preceding considerations are based on the assumption that for the critical state of the model the solution ω_2 of the minimum problem (24.4) is positive. The influence

---

[1] Along with this it is yet once more stressed that all considerations are based on the assumption that the elasticity limit is not exceeded anywhere in the material.

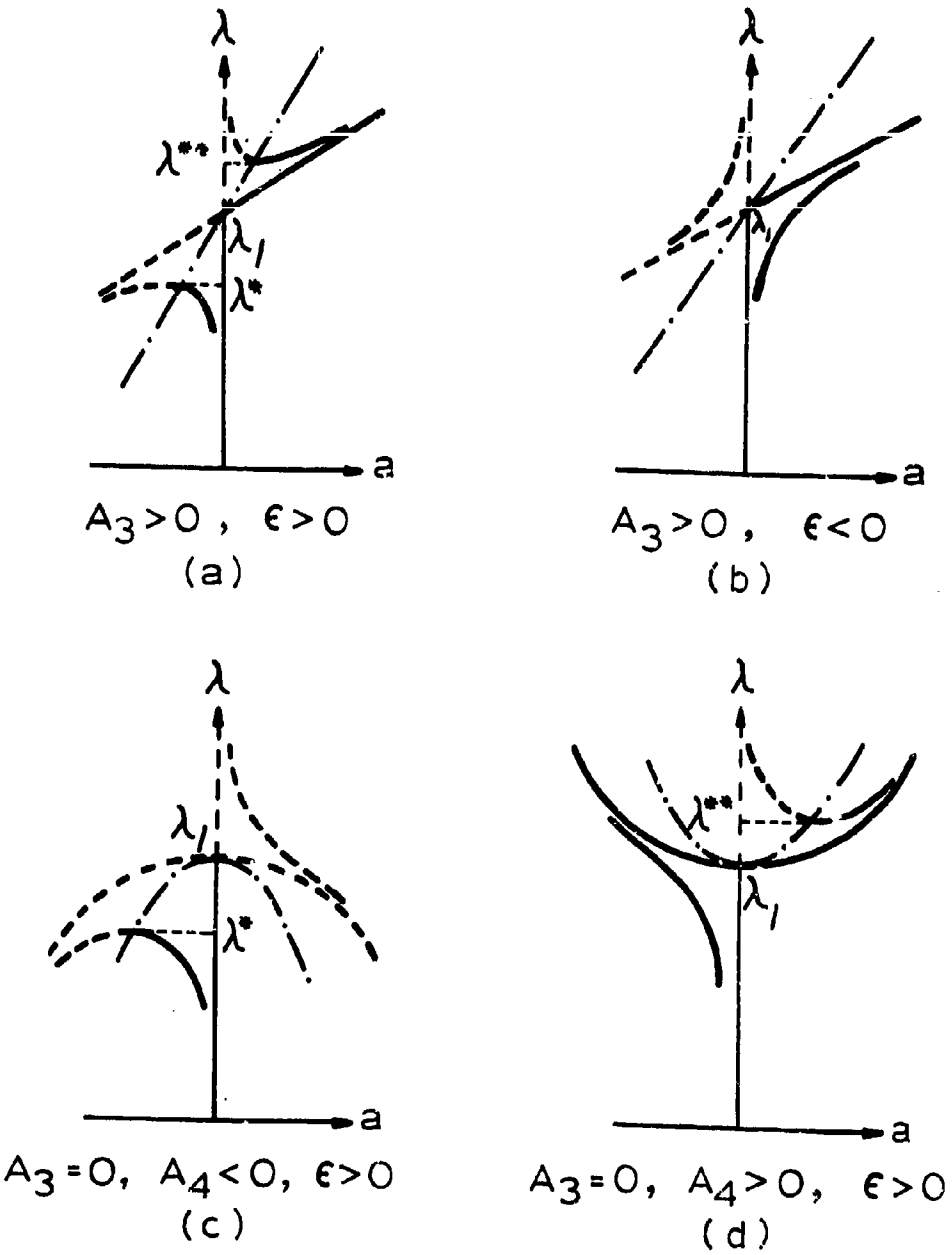
λ
λ**
λ1
λ*
a
A3>0 , ε>0
(a)
λ
λ1
a
A3>0 , ε<0
(b)
λ
λ1
λ*
a
A3=0, A4<0, ε>0
(c)
λ
λ**
λ1
a
A3=0, A4>0, ε>0
(d)

FIG. 3

of the deviations between structure and model on the minimum of the energy for a constant value of $\underline{a}$ is then expressed by the addition of the term $\epsilon B_1 \underline{a}$ to the form (35.2).

The case

$$\omega_2 = \omega_3 = \dots = \omega_{h-1} = 0 , \ \omega_h > 0$$

can correspondingly be treated when the displacement u is written as (see (36.8))

$$u = \sum_{j=1}^{h-1} a_j u_j + \bar{u} \quad \text{with} \quad T_{11} [u_j, \bar{u}] = 0 , \ j = 1, 2 \dots h - 1. \tag{36.8}$$

After introduction of this expression in (43.5), the minimum of the energy is again determined for constant values of a_j. This treatment, which is a synthesis of the considerations of Sect. 36 and Sect. 44, does not offer new difficulties, so that the expression for this minimum is immediately written

$$F^{\lambda} (a_j) = \epsilon \bar{Q}_1 (a_j) + (\lambda - \lambda_1) \bar{P}_2' (a_j) + \bar{P}_n (a_j) ; \ n = 3 \text{ or } n = 4 . \tag{46.1}$$

The difference between structure and model is here expressed by the term

$$\epsilon \bar{Q}_1 (a_j) = \epsilon \sum_{j=1}^{h-1} a_j Q_1 [u_j] .$$

The equilibrium states are characterized by stationary values of (46.1), i.e., by the

$$\frac{\partial F^{\lambda}}{\partial a_i} = \epsilon \frac{\partial \bar{Q}_1}{\partial a_i} + (\lambda - \lambda_1) \frac{\partial \bar{P}_2'}{\partial a_i} + \frac{\partial \bar{P}_n}{\partial a_i} = 0 . \tag{46.2}$$

The stability of the equilibrium configuration determined by (46.2) is governed by the form

$$\sum_{i=1}^{h-1} \sum_{j=1}^{h-1} \frac{\partial^2 F^\lambda}{\partial a_i \partial a_j} \Delta a_i \Delta a_j = (\lambda - \lambda_1) \sum_{i=1}^{h-1} \sum_{j=1}^{h-1} \frac{\partial^2 \bar{P}_2'}{\partial a_i \partial a_j} \Delta a_i \Delta a_j +$$

$$+ \sum_{i=1}^{h-1} \sum_{j=1}^{h-1} \frac{\partial^2 \bar{P}_n}{\partial a_i \partial a_j} \Delta a_i \Delta a_j \qquad (46.3)$$

In this case, the general analysis of the states of equilibrium leads to great difficulties and will be omitted here. One special case will be discussed in Chapter 7.

47. EXTENSION OF THE THEORY

The theory developed in the foregoing, as well as the general theory of Chapter 3, is restricted to a small neighborhood of the buckling load which differs from case to case. This is, for instance, expressed by equation (45.1) which for $\lambda = 0$ does not have the solution $\underline{a} = 0$ corresponding to the fundamental state. Consequently, it is here of importance also to extend the theory to loads further removed from the buckling load. As well as in Sect. 38, the possibility for this exists if the displacements $U(\lambda)$ of the fundamental state of the model are so small that quantities of the second and higher order in $U(\lambda)$ and its derivatives may be neglected in comparison to quantities which are linear in $U(\lambda)$ and its derivatives. Likewise, the displacements u from the fundamental state $U(\lambda)$ should remain small, and it is assumed that magnitude and direction of the loads are given with respect to a fixed coordinate system. By use of (38.3), (43.4) can now be written

$$P^\lambda[u] + \epsilon Q^\lambda[u] = P_2^0[u] + \lambda P_2'[u] + P_3^0[u] + \lambda P_3'[u] + P_4^0[u] + \epsilon Q_1^\lambda[u] . \qquad (47.1)$$

In Sect. 43 it was remarked that $Q_1^\lambda[u]$ consists of one part containing λ and one part whose integrand is a linear polynomial of the derivatives of u with coefficients which contain as a factor one or more derivatives of $U(\lambda)$. In this latter part, only the coefficients which are linear in the derivatives of $U(\lambda)$ must now be taken into account. After this, by use of (38.1), it follows that

$$Q_1^\lambda[u] = \lambda Q_1'[u] . \tag{47.2}$$

Under the assumption that the solution ω_2 of the first problem (38.6) is positive, again is introduced

$$u = \underline{a}u_1 + \bar{u} \text{ with } P_{11}^o[u_1, \bar{u}] = 0 . \tag{47.3}$$

Introduction of (47.1) gives, after expansion and rearrangement,

$$\begin{aligned} P^\lambda[u] + \epsilon Q^\lambda[u] = {} & \epsilon\lambda \underline{a} Q_1'[u_1] + \underline{a}^2 \left\{ P_2^o[u_1] + \lambda P_2'[u_1] \right\} + \\ & + \underline{a}^3 \left\{ P_3^o[u_1] + \lambda P_3'[u_1] \right\} + \underline{a}^4 P_4^o[u_1] + \epsilon\lambda Q_1'[\bar{u}] + \\ & + \underline{a}^2 \left\{ P_{21}^o[u_1, \bar{u}] + \lambda P_{21}'[u_1, \bar{u}] \right\} + \underline{a}^3 P_{31}^o[u_1, \bar{u}] + \\ & + P_2^o[\bar{u}] + \lambda P_2'[\bar{u}] . \end{aligned} \tag{47.4}$$

The omission of the terms which follow $\lambda P_2'[\bar{u}]$ (see (38.12)) may be motivated here for $\lambda < \lambda_2$ in the same way as in Sect. 38.

States of equilibrium are characterized by stationary values of the energy. For a constant value of $\underline{a}$, (47.4) appears to have a minimum for $\lambda < \lambda_2$. This minimum is obtained for the functions

$$\bar{u} = \underline{a}^2 \varphi_2^\lambda + \underline{a}^3 \varphi_3^\lambda + \epsilon\lambda \varphi_0^\lambda , \tag{47.5}$$

where the first two terms form together the solution (38.20) of (38.18) and (38.19). The last term is determined as the solution of

$$P_{11}^{o}\,[\bar{u}, \zeta] + \lambda P_{11}'\,[\bar{u}, \zeta] + \epsilon\lambda \left| Q_1'\,[\zeta] - \frac{Q_1'[u_1]}{2P_2^{o}\,[u_1]} P_{11}^{o}\,[u_1, \zeta] \right| = 0;$$

$$P_{11}^{o}\,[u_1, \bar{u}] = 0\,. \qquad (47.6)$$

The derivation of these results, which is in complete agreement with Sect. 38, are omitted here. The calculation of the minimum proceeds in the same manner as in the foregoing. Through introduction of the notation

$$Q_1'\,[u_1] = B_1' \qquad (47.7)$$

and by use of (38.21), it follows that

$$F^{\lambda}(\underline{a}) = \epsilon\lambda B_1'\,\underline{a} + \left(1 - \frac{\lambda}{\lambda_1}\right) A_2^{o}\,\underline{a}^2 + (A_3^{o} + \lambda A_3')\,\underline{a}^3 + A_4^{\lambda}\,\underline{a}^4\,. \qquad (47.8)$$

In this expression, just as in (38.22), terms of the fifth and higher order in $\underline{a}$ are neglected. Furthermore, among the terms which contain a factor ϵ only the term of the lowest order in $\underline{a}$, the linear term, is taken into account.

The difficulties which successively arise when λ approaches λ_2, λ_3, etc., are dealt with in the same manner as in Sect. 38, so that it is not necessary to look into this matter more closely. Also, the determination of the stationary values of (47.8) and the stability analysis of the corresponding equilibrium states meet no difficulties, so that it is sufficient here to refer to Chapters 6 and 7 in which some applications will be discussed.

Chapter 5
SHELL STRUCTURES UNDER FINITE DISPLACEMENTS

51. SIMPLIFYING ASSUMPTIONS

The technical shell theory for infinitesimal displacement is usually based on the following three approximations concerning the state of deformation and stress [35]:

1. points which initially lie on the same normal to the undeformed middle surface, remain after deformation on the corresponding normal to the deformed middle surface;
2. change in distance between two such points may be neglected;[1]
3. normal stresses on planes parallel to the middle surface may be neglected.

Although the assumptions of this theory are mutually contradictory for an isotropic material, the results which are obtained for thin shells are in satisfactory agreement with experience. Also, the more rigorous investigation of Love [36], in which the results obtained from the assumptions mentioned above are considered to be a first approximation, confirms that at least for thin shells these contradictions are of no practical significance.

In view of this experience gained in the analysis of infinitesimal deformations, it seems justified to base the shell theory for finite deformations on the same assumptions. This theory could be obtained by means of a slight extension of Love's analysis. Nevertheless, when, in the following, preference is given to a different derivation, it has mainly been done to avoid the assymmetry which was introduced by Love in the definition of the changes of curvature of the middle surface and which detracts from the lucidity of his results.

---

[1] It is true that Flügge [35] does not mention this second assumption; however, he makes use of it in calculating the deformations.

52. DIFFERENTIAL GEOMETRY OF SURFACE

A surface is described by the coordinates x_i with respect to a rigidly fixed rectangular coordinate system. The coordinates are functions of two parameters α and β

$$x_i = x_i(\alpha, \beta). \tag{52.1}$$

For a line element on the surface [37]

$$d\ell^2 = Ed\alpha^2 + 2Fd\alpha d\beta + Gd\beta^2, \tag{52.2}$$

where E, F and G are the so-called quantities of the first order.[1] [2]

$$E = A^2 = \sum\left(\frac{\partial x_i}{\partial \alpha}\right)^2, \quad F = \sum \frac{\partial x_i}{\partial \alpha}\frac{\partial x_i}{\partial \beta}, \quad G = B^2 = \sum\left(\frac{\partial x_i}{\partial \beta}\right)^2 \tag{52.3}$$

The direction cosines of the normal of the surface with respect to the rigid coordinate system are given by

$$n_i = \frac{\frac{\partial x_j}{\partial \alpha}\frac{\partial x_h}{\partial \beta} - \frac{\partial x_h}{\partial \alpha}\frac{\partial x_j}{\partial \beta}}{\sqrt{EG - F^2}} \tag{52.4}$$

in which i, j and h are the cyclic sequence of the coordinate axes. The positive direction of the normal is determined by (52.4). The coordinate system formed by the tangents to the parameter curves β = const. and α = const. in the direction of increasing values α and β together with the positive normal is, in this sequence, orientated in the same sense as the x_i system.

---

[1] For these quantities the usual notation has been retained since confusion with the elasticity constants E and G is excluded.

[2] Unless it is explicitly stated differently, summation should always be carried out over i = 1 to 3.

The curvature of the surface is completely described by (52.3) and by the so-called quantities of the second order

$$L = \sum n_i \frac{\partial^2 x_i}{\partial \alpha^2} = -\sum \frac{\partial n_i}{\partial \alpha} \frac{\partial x_i}{\partial \alpha},$$

$$M = \sum n_i \frac{\partial^2 x_i}{\partial \alpha \partial \beta} = -\sum \frac{\partial n_i}{\partial \alpha} \frac{\partial x_i}{\partial \beta} = -\sum \frac{\partial n_i}{\partial \beta} \frac{\partial x_i}{\partial \alpha},$$

$$N = \sum n_i \frac{\partial^2 x_i}{\partial \beta^2} = -\sum \frac{\partial n_i}{\partial \beta} \frac{\partial x_i}{\partial \beta} \tag{52.5}$$

The radii of curvature through the tangents to the parameter curves β = const. and α = const. are determined by

$$\frac{1}{R_1} = \frac{L}{E}, \quad \frac{1}{R_2} = \frac{N}{G}, \tag{52.6}$$

where R_1 and R_2 become positive or negative depending on whether the center of curvature lies on the positive or negative part of the normal.

The formulas are considerably simplified if the parameter curves coincide with the lines of curvature so that $F = M = 0$. It is assumed that this is the case for the undeformed middle surface.

The following calculation of the strain components is most clearly demonstrated after a set of unit vectors is introduced in the directions of the tangents to the lines of curvature β = const. and α = const. and the positive normal to the surface. For the components of the two vectors first mentioned, it holds that

$$a_i = \frac{1}{A} \frac{\partial x_i}{\partial \alpha}, \quad b_i = \frac{1}{B} \frac{\partial x_i}{\partial \beta}, \tag{52.7}$$

while the components of the normal vector are given by the direction cosines n_i. The orthogonality of these vectors is expressed by the relations

$$\sum a_i b_i = 0 \quad , \sum b_i n_i = 0 \quad , \sum n_i a_i = 0 . \tag{52.8}$$

The fact that the length of these vectors is equal to unity is expressed by the relation

$$\sum a_i^2 = 1 \quad , \sum b_i^2 = 1 \quad , \sum n_i^2 = 1 . \tag{52.9}$$

Each vector (consequently also the derivatives of the unit vectors) may be expressed as a linear relation in the three unit vectors so that for the components

$$\frac{\partial p_i}{\partial \alpha} \left(\text{or } \frac{\partial p_i}{\partial \beta} \, , \; p_i = a_i , b_i , n_i \right)$$

such a derivation can be represented by

$$\frac{\partial p_i}{\partial \alpha} = \lambda' a_i + \mu' b_i + \nu' n_i , \quad \frac{\partial p_i}{\partial \beta} = \lambda'' a_i + \mu'' b_i + \nu'' n_i .$$

For the constants λ', λ'', μ', μ'' and ν', ν'' with use of (52.8) and (52.9), it is found that

$$\left. \begin{aligned} \lambda' &= \sum a_i \frac{\partial p_i}{\partial \alpha} , \quad \mu' = \sum b_i \frac{\partial p_i}{\partial \alpha} , \quad \nu' = \sum n_i \frac{\partial p_i}{\partial \alpha} , \\ \lambda'' &= \sum a_i \frac{\partial p_i}{\partial \beta} , \quad \mu'' = \sum b_i \frac{\partial p_i}{\partial \beta} , \quad \nu'' = \sum n_i \frac{\partial p_i}{\partial \beta} . \end{aligned} \right\} \tag{52.10}$$

Thus, for a further reduction it is necessary to know the scalar products (52.10) in the cases that $p_i = a_i$, b_i, n_i. In this way it follows from (52.9) that

$$\sum a_i \frac{\partial a_i}{\partial \alpha} = 0 \quad , \sum a_i \frac{\partial a_i}{\partial \beta} = 0 \text{ etc.}$$

Furthermore,

$$\sum b_i \frac{\partial a_i}{\partial \alpha} = -\sum a_i \frac{\partial b_i}{\partial \alpha} - \frac{1}{A}\sum \frac{\partial x_i}{\partial \alpha} \frac{\partial}{\partial \alpha}\left(\frac{1}{B}\frac{\partial x_i}{\partial \beta}\right) =$$

$$= \frac{1}{AB^2}\frac{\partial B}{\partial \alpha}\sum \frac{\partial x_i}{\partial \alpha}\frac{\partial x_i}{\partial \beta} - \frac{1}{AB}\sum \frac{\partial x_i}{\partial \alpha}\frac{\partial^2 x_i}{\partial \alpha \partial \beta},$$

from which after use of $F = 0$ it follows that

$$\sum b_i \frac{\partial a_i}{\partial \alpha} = -\sum a_i \frac{\partial b_i}{\partial \alpha} = -\frac{1}{2AB}\frac{\partial}{\partial \beta}\sum\left(\frac{\partial x_i}{\partial \alpha}\right)^2 = -\frac{1}{B}\frac{\partial A}{\partial \beta}.$$

In the same manner,

$$\sum a_i \frac{\partial b_i}{\partial \beta} = -\sum b_i \frac{\partial a_i}{\partial \beta} = -\frac{1}{A}\frac{\partial B}{\partial \alpha}.$$

In addition

$$\sum n_i \frac{\partial a_i}{\partial \alpha} = -\sum a_i \frac{\partial n_i}{\partial \alpha} = -\frac{1}{A}\sum \frac{\partial x_i}{\partial \alpha}\frac{\partial n_i}{\partial \alpha} = \frac{L}{A} = \frac{A}{R_1},$$

$$\sum n_i \frac{\partial b_i}{\partial \beta} = -\sum b_i \frac{\partial n_i}{\partial \beta} = -\frac{1}{B}\sum \frac{\partial x_i}{\partial \beta}\frac{\partial n_i}{\partial \beta} = \frac{N}{B} = \frac{B}{R_2}.$$

Finally, as $M = 0$

$$\sum n_i \frac{\partial a_i}{\partial \beta} = -\sum a_i \frac{\partial n_i}{\partial \beta} = -\frac{1}{A}\sum \frac{\partial x_i}{\partial \alpha}\frac{\partial n_i}{\partial \beta} = 0,$$

$$\sum n_i \frac{\partial b_i}{\partial \alpha} = -\sum b_i \frac{\partial n_i}{\partial \alpha} = -\frac{1}{B}\sum \frac{\partial x_i}{\partial \beta}\frac{\partial n_i}{\partial \alpha} = 0.$$

For the derivatives of the unit vectors, then, it follows

$$\left.\begin{aligned}
\frac{\partial a_i}{\partial \alpha} &= -\frac{1}{B}\frac{\partial A}{\partial \beta} b_i + \frac{A}{R_1} n_i \; ; & \frac{\partial a_i}{\partial \beta} &= \frac{1}{A}\frac{\partial B}{\partial \alpha} b_i \\
\frac{\partial b_i}{\partial \alpha} &= \frac{1}{B}\frac{\partial A}{\partial \beta} a_i \; ; & \frac{\partial b_i}{\partial \beta} &= -\frac{1}{A}\frac{\partial B}{\partial \alpha} a_i + \frac{B}{R_2} n_i \, , \\
\frac{\partial n_i}{\partial \alpha} &= -\frac{A}{R_1} a_i \; ; & \frac{\partial n_i}{\partial \beta} &= -\frac{B}{R_2} b_i
\end{aligned}\right\} \quad (52.11)$$

Naturally, it is also possible to derive these relations from the well known general formulas of Gauss and Weingarten [37] by means of the specialization $F = M = 0$.

53. THE DEFORMATIONS

In the undeformed state, an arbitrary point P of the shell is defined by its projection Q on the middle surface with coordinates x_i and the distance z from the middle surface. The coordinates y_i of P are then given by

$$y_i = x_i + z n_i \; ;$$

where x_i and n_i are functions of the parameters α and β. The square of the length of a line element $d\ell$ determined by the endpoints $P(\alpha, \beta, z)$ and $\bar{P}(\alpha + d\alpha, \beta + d\beta, z + dz)$ is given by

$$
\begin{aligned}
d\ell^2 &= \sum\left(\frac{\partial y_i}{\partial\alpha}d\alpha + \frac{\partial y_i}{\partial\beta}d\beta + \frac{\partial y_i}{\partial z}dz\right)^2 = \\
&= \left\{\sum\left(\frac{\partial x_i}{\partial\alpha}\right)^2 + 2z\sum\frac{\partial x_i}{\partial\alpha}\frac{\partial n_i}{\partial\alpha} + z^2\sum\left(\frac{\partial n_i}{\partial\alpha}\right)^2\right\}d\alpha^2 + \\
&\quad + \left\{\sum\left(\frac{\partial x_i}{\partial\beta}\right)^2 + 2z\sum\frac{\partial x_i}{\partial\beta}\frac{\partial n_i}{\partial\beta} + z^2\sum\left(\frac{\partial n_i}{\partial\beta}\right)^2\right\}d\beta^2 + \\
&\quad + \sum n_i^2\,dz^2 + \left\{\sum\frac{\partial x_i}{\partial\alpha}\frac{\partial x_i}{\partial\beta} + z\left(\sum\frac{\partial x_i}{\partial\alpha}\frac{\partial n_i}{\partial\beta} + \sum\frac{\partial x_i}{\partial\beta}\frac{\partial n_i}{\partial\alpha}\right) + \right. \\
&\quad \left. + z^2\sum\frac{\partial n_i}{\partial\alpha}\frac{\partial n_i}{\partial\beta}\right\}2d\alpha d\beta + \left\{\sum\frac{\partial x_i}{\partial\alpha}n_i + z\sum\frac{\partial n_i}{\partial\alpha}n_i\right\}2d\alpha dz + \\
&\quad + \left\{\sum\frac{\partial x_i}{\partial\beta}n_i + z\sum\frac{\partial n_i}{\partial\beta}n_i\right\}2d\beta dz\,. \qquad (53.1)
\end{aligned}
$$

By use of the results of Sect. 52, (53.1) is simplified to

$$
d\ell^2 = A^2\left(1 - \frac{z}{R_1}\right)^2 d\alpha^2 + B^2\left(1 - \frac{z}{R_2}\right)^2 d\beta^2 + dz^2\,. \qquad (53.2)
$$

During deformation, the material point Q of the middle surface undergoes displacements u_i in directions of the axis, so that the coordinates of this point in the deformed state are

$$
x_i' = x_i + u_i\,.
$$

If the direction cosines of the normal to the deformed middle surface are denoted by n_i', then, by use of the first two assumptions, the coordinates of the material point P in the deformed state are

$$
y_i' = x_i' + zn_i'\,.
$$

In the deformed state, the line element determined by the material points $P(\alpha,\beta,z)$ and $\bar{P}(\alpha + d\alpha,\ \beta + d\beta,\ z + dz)$ (whose length in the undeformed state is given by (53.1), (53.2) respectively) is then determined by

$$
\begin{aligned}
d\ell'^2 = & \left\{ \sum\left(\frac{\partial x_i'}{\partial\alpha}\right)^2 + 2z\sum\frac{\partial x_i'}{\partial\alpha}\frac{\partial n_i'}{\partial\alpha} + z^2 \sum\left(\frac{\partial n_i'}{\partial\alpha}\right)^2 \right\} d\alpha^2 + \\
& + \left\{ \sum\left(\frac{\partial x_i'}{\partial\beta}\right)^2 + 2z\sum\frac{\partial x_i'}{\partial\beta}\frac{\partial n_i'}{\partial\beta} + z^2 \sum\left(\frac{\partial n_i'}{\partial\beta}\right)^2 \right\} d\beta^2 + \\
& + dz^2 + \left\{ \sum\frac{\partial x_i'}{\partial\alpha}\frac{\partial x_i'}{\partial\beta} + z\left(\sum\frac{\partial x_i'}{\partial\alpha}\frac{\partial n_i'}{\partial\beta} + \sum\frac{\partial x_i'}{\partial\beta}\frac{\partial n_i'}{\partial\alpha}\right) + \right. \\
& \left. + z^2\sum\frac{\partial n_i'}{\partial\alpha}\frac{\partial n_i'}{\partial\beta} \right\} 2d\alpha\, d\beta \ . \qquad (53.3)
\end{aligned}
$$

In this expression use has already been made of the relations

$$
\sum n_i'^2 = 1 \ , \sum n_i' \frac{\partial n_i'}{\partial\alpha} = \sum n_i' \frac{\partial n_i'}{\partial\beta} = \sum n_i' \frac{\partial x_i'}{\partial\alpha} = \sum n_i' \frac{\partial x_i'}{\partial\beta} = 0 \ .
$$

which are valid also in the deformed state.

The direction cosines ℓ_α , ℓ_β , ℓ_z of the line element in the undeformed state are defined with respect to the parameter curves β = const. and α = const. and the normal. They are given by

$$
\ell_\alpha^2 = \frac{A^2\left(1 - \frac{z}{R_1}\right)^2 d\alpha^2}{d\ell^2} \ , \quad \ell_\beta^2 = \frac{B^2\left(1 - \frac{z}{R_2}\right)^2 d\beta^2}{d\ell^2} \ , \quad \ell_z^2 = \frac{dz^2}{d\ell^2} \ ,
$$

and it follows from (53.3) that

$$\left(\frac{d\ell'}{d\ell}\right)^2 = \frac{\sum\left(\frac{\partial x_i'}{\partial\alpha}\right)^2 + 2z\sum\frac{\partial x_i'}{\partial\alpha}\frac{\partial n_i'}{\partial\alpha} + z^2\sum\left(\frac{\partial n_i'}{\partial\alpha}\right)^2}{A^2\left(1-\frac{z}{R_1}\right)^2}\ell_\alpha^2 +$$

$$+\frac{\sum\left(\frac{\partial x_i'}{\partial\beta}\right)^2 + 2z\sum\frac{\partial x_i'}{\partial\beta}\frac{\partial n_i'}{\partial\beta} + z^2\sum\left(\frac{\partial n_i'}{\partial\beta}\right)^2}{B^2\left(1-\frac{z}{R_2}\right)^2}\ell_\beta^2 +$$

$$+\ell_z^2 + \frac{\sum\frac{\partial x_i'}{\partial\alpha}\frac{\partial x_i'}{\partial\beta} + z\left(\sum\frac{\partial x_i'}{\partial\alpha}\frac{\partial n_i'}{\partial\beta} + \sum\frac{\partial x_i'}{\partial\beta}\frac{\partial n_i'}{\partial\alpha}\right) + z^2\sum\frac{\partial n_i'}{\partial\alpha}\frac{\partial n_i'}{\partial\beta}}{AB\left(1-\frac{z}{R_1}\right)\left(1-\frac{z}{R_2}\right)}2\ell_\alpha\ell_\beta .$$

By comparison with (11.2) it follows that the strain components are given by

$$1+\gamma_{\alpha\alpha} = \frac{\sum\left(\frac{\partial x_i'}{\partial\alpha}\right)^2 + 2z\sum\frac{\partial x_i'}{\partial\alpha}\frac{\partial n_i'}{\partial\alpha} + z^2\sum\left(\frac{\partial n_i'}{\partial\alpha}\right)^2}{A^2\left(1-\frac{z}{R_1}\right)^2}$$

$$1+\gamma_{\beta\beta} = \frac{\sum\left(\frac{\partial x_i'}{\partial\beta}\right)^2 + 2z\sum\frac{\partial x_i'}{\partial\beta}\frac{\partial n_i'}{\partial\beta} + z^2\sum\left(\frac{\partial n_i'}{\partial\beta}\right)^2}{B^2\left(1-\frac{z}{R_2}\right)^2}$$

$$\gamma_{\alpha\beta} = \frac{\sum\frac{\partial x_i'}{\partial\alpha}\frac{\partial x_i'}{\partial\beta} + z\left(\sum\frac{\partial x_i'}{\partial\alpha}\frac{\partial n_i'}{\partial\beta} + \sum\frac{\partial x_i'}{\partial\beta}\frac{\partial n_i'}{\partial\alpha}\right) + z^2\sum\frac{\partial n_i'}{\partial\alpha}\frac{\partial n_i'}{\partial\beta}}{AB\left(1-\frac{z}{R_1}\right)\left(1-\frac{z}{R_2}\right)}$$

$$\gamma_{zz} = \gamma_{\alpha z} = \gamma_{\beta z} = 0 . \qquad (53.4)$$

For thin shells, z is always very small and it is natural to expand expressions (53.4) in a series with increasing powers of z. When terms of the third and higher order are omitted, the following expansion is obtained

$$\gamma_{\alpha\alpha} = \gamma_{\alpha\alpha o} - 2z\rho_{\alpha\alpha} + \frac{2z}{R_1}\gamma_{\alpha\alpha o} + z^2\theta_{\alpha\alpha} ,$$

$$\gamma_{\beta\beta} = \gamma_{\beta\beta o} - 2z\rho_{\beta\beta} + \frac{2z}{R_2}\gamma_{\beta\beta o} + z^2\theta_{\beta\beta} ,$$

$$\gamma_{\alpha\beta} = \gamma_{\alpha\beta o} - 2z\rho_{\alpha\beta} + \left(\frac{z}{R_1} + \frac{z}{R_2}\right)\gamma_{\alpha\beta o} + z^2\theta_{\alpha\beta} \tag{53.5}$$

in which the quantities

$$\gamma_{\alpha\alpha o} = \frac{1}{A^2}\sum\left(\frac{\partial x_i'}{\partial\alpha}\right)^2 - 1 ,$$

$$\gamma_{\beta\beta o} = \frac{1}{B^2}\sum\left(\frac{\partial x_i'}{\partial\beta}\right)^2 - 1 ,$$

$$\gamma_{\alpha\beta o} = \frac{1}{AB}\sum\frac{\partial x_i'}{\partial\alpha}\frac{\partial x_i'}{\partial\beta} \tag{53.6}$$

represent the strain components of the middle surface.

The quantities

$$\rho_{\alpha\alpha} = -\frac{1}{A^2}\sum\frac{\partial x_i'}{\partial\alpha}\frac{\partial n_i'}{\partial\alpha} - \frac{1}{R_1} ,$$

$$\rho_{\beta\beta} = -\frac{1}{B^2}\sum\frac{\partial x_i'}{\partial\beta}\frac{\partial n_i'}{\partial\beta} - \frac{1}{R_2} ,$$

$$2\rho_{\alpha\beta} = -\frac{1}{AB}\left(\sum\frac{\partial x_i'}{\partial\alpha}\frac{\partial n_i'}{\partial\beta} + \sum\frac{\partial x_i'}{\partial\beta}\frac{\partial n_i'}{\partial\alpha}\right) \tag{53.7}$$

are closely connected to the changes of curvature of the middle surface. Therefore, in what follows, they will be termed changes of curvature. In addition, for brevity the following notations are introduced

$$\theta_{\alpha\alpha} = \frac{1}{A^2}\left\{\sum\left(\frac{\partial n_i'}{\partial\alpha}\right)^2 + \frac{4}{R_1}\sum\frac{\partial x_i'}{\partial\alpha}\frac{\partial n_i'}{\partial\alpha} + \frac{3}{R_1^2}\sum\left(\frac{\partial x_i'}{\partial\alpha}\right)^2\right\}$$

$$\theta_{\beta\beta} = \frac{1}{B^2}\left\{\sum\left(\frac{\partial n_i'}{\partial\beta}\right)^2 + \frac{4}{R_2}\sum\frac{\partial x_i'}{\partial\beta}\frac{\partial n_i'}{\partial\beta} + \frac{3}{R_2^2}\sum\left(\frac{\partial x_i'}{\partial\beta}\right)^2\right\}$$

$$\theta_{\alpha\beta} = \frac{1}{AB}\left\{\sum\frac{\partial n_i'}{\partial\alpha}\frac{\partial n_i'}{\partial\beta} + \left(\frac{1}{R_1} + \frac{1}{R_2}\right)\left(\sum\frac{\partial x_i'}{\partial\alpha}\frac{\partial n_i'}{\partial\beta} + \sum\frac{\partial x_i'}{\partial\beta}\frac{\partial n_i'}{\partial\alpha}\right) + \right.$$

$$\left. + \left(\frac{1}{R_1^2} + \frac{1}{R_2^2} + \frac{1}{R_1R_2}\right)\sum\frac{\partial x_i'}{\partial\alpha}\frac{\partial x_i'}{\partial\beta}\right\}.$$

54. THE ELASTIC POTENTIAL

The determination of the deformations above was based on the first two assumptions introduced in Sect. 51. The third assumption will now be used for the formulation of the relation between stresses and deformation or, equivalently, for the construction of the elastic potential. A prismatic volume element is considered, which is determined by the parameter values α, $\alpha + d\alpha$, β, $\beta + d\beta$ and the ordinates z and and $z + dz$ and with two surfaces in the deformed state parallel to the middle surface. For equilibrium of this element, the requirement must be satisfied that during a virtual change of the deformation, the increase of the deformation energy should be equal to the work done by the tractions acting on the element. This requirement should also be satisfied for virtual deformations that consist exclusively of changes of length of the line elements perpendicular to the middle surface. During such deformation, which is completely described by a variation of the deformation component γ_{zz}, the tractions do no work. Therefore,

$$\frac{\partial A}{\partial \gamma_{zz}} = 0 \tag{54.1}$$

must hold, where A is the elastic potential.[1] Application of this condition to (12.3) yields

$$\gamma_{zz} = -\frac{1}{m-1}\left(\gamma_{\alpha\alpha} + \gamma_{\beta\beta}\right) . \tag{54.2}$$

The third assumption is, therefore, in general incompatible with the first two assumptions (see (53.4)). This contradiction will be further discussed in Sect. 55.

---

[1] The symbol A representing the elastic potential has here a different meaning from that in the preceding and in the following sections.

By use of the first two assumptions it was found in Sect. 53 that $\gamma_{\alpha z}$ and $\gamma_{\beta z}$ are zero. In view of this result and of the relation (54.2) which is required by the third assumption, the elastic potential (12.5) becomes

$$A = \frac{Gm}{4(m-1)} \left\{ (\gamma_{\alpha\alpha} + \gamma_{\beta\beta})^2 - 2\frac{m-1}{m}(\gamma_{\alpha\alpha}\gamma_{\beta\beta} - \gamma_{\alpha\beta}^2) \right\} \quad (54.3)$$

55. CONSEQUENCES OF THE ASSUMPTIONS INTRODUCED

From expressions (53.5) for the strain components, it is immediately clear that for thin shells the third term is always very small in comparison to the first ones. It is also to be expected that the fourth term which contains z^2 as a factor is small as compared to the second one. Therefore, these terms are often omitted. However, Flügge [35] remarks that they cannot be deleted without interference with the logical structure of the theory. This appears justified for the calculation of strain components by use of the first two assumptions. However, for the formulation of the law of elasticity, use is also made of the third assumption which is in general in contradiction with the first two assumptions. This contradiction reduces the importance of Flügge's argument.

To form a better founded opinion on this matter, one must study the significance of the second and third assumptions which lead to the contradiction. The third assumption states that axial stresses on planes parallel to the middle surface are small as compared to axial stresses on planes perpendicular to the middle surface; it has therefore a clear mechanical significance.

On the other hand, the second assumption is based on the consideration that the relative displacements in the direction of the normal to the middle surface are of the order of magnitude of the product of the strain measure in that direction and the shell thickness. Hence, in a mechanical sense there is no objection to the admission of displacements of this order of magnitude; they are omitted only for simplification and because no important influence can be expected from them. Nevertheless, in order to get some insight in the order of magnitude of this influence, corrections are calculated which should be imposed on the deformation components (53.4) if the second assumption were

not considered. Expressions (53.4) are herewith accepted as a first approximation. The order of magnitude of these corrections can then be compared with the order of magnitude of the third and fourth term of (53.5). If it should appear that these orders of magnitude are the same, it would be consistent to neglect the third and fourth term of (53.5).

If ζ is used to denote the change in distance to the middle surface, then the difference in value between the coordinates of the endpoints of a line-element in the deformed state is, as $y'_i = x'_i + (z + \zeta)n'_i$

$$dy'_i = \left(\frac{\partial x'_i}{\partial \alpha} + z\frac{\partial n'_i}{\partial \alpha} + \zeta\frac{\partial n'_i}{\partial \alpha} + \frac{\partial \zeta}{\partial \alpha} n'_i\right) d\alpha +$$

$$+\left(\frac{\partial x'_i}{\partial \beta} + z\frac{\partial n'_i}{\partial \beta} + \zeta\frac{\partial n'_i}{\partial \beta} + \frac{\partial \zeta}{\partial \beta} n'_i\right) d\beta + \left(n'_i + \frac{\partial \zeta}{\partial z} n'_i\right) dz \ .$$

Thus by use of the direction cosines ℓ_α, ℓ_β, ℓ_z and of the identities

$$\sum n'^2_i = 1 \ , \ \sum n'_i \frac{\partial n'_i}{\partial \alpha} = \sum n'_i \frac{\partial n'_i}{\partial \beta} = \sum n'_i \frac{\partial x'_i}{\partial \alpha} = \sum n'_i \frac{\partial x'_i}{\partial \beta} = 0$$

the square of the ratio between the line-elements in deformed and undeformed state can be written in the form

$$
\left(\frac{d\ell'}{d\ell}\right)^2 = \frac{\left[\sum\left(\frac{\partial x_i'}{\partial\alpha}\right)^2 + 2z\sum\frac{\partial x_i'}{\partial\alpha}\frac{\partial n_i'}{\partial\alpha} + z^2\sum\left(\frac{\partial n_i'}{\partial\alpha}\right)^2 + 2\zeta\sum\frac{\partial x_i'}{\partial\alpha}\frac{\partial n_i'}{\partial\alpha} + 2\zeta z\sum\left(\frac{\partial n_i'}{\partial\alpha}\right)^2 + \zeta^2\sum\left(\frac{\partial n_i'}{\partial\alpha}\right)^2 + \left(\frac{\partial\zeta}{\partial\alpha}\right)^2\right]}{A^2\left(1-\frac{z}{R_1}\right)^2}\ell_\alpha^2 +
$$

$$
+\frac{\left[\sum\left(\frac{\partial x_i'}{\partial\beta}\right)^2 + 2z\sum\frac{\partial x_i'}{\partial\beta}\frac{\partial n_i'}{\partial\beta} + z^2\sum\left(\frac{\partial n_i'}{\partial\beta}\right)^2 + 2\zeta\sum\frac{\partial x_i'}{\partial\beta}\frac{\partial n_i'}{\partial\beta} + 2\zeta z\sum\left(\frac{\partial n_i'}{\partial\beta}\right)^2 + \zeta^2\sum\left(\frac{\partial n_i'}{\partial\beta}\right)^2 + \left(\frac{\partial\zeta}{\partial\beta}\right)^2\right]}{B^2\left(1-\frac{z}{R_2}\right)^2}\ell_\beta^2 +
$$

$$
+\frac{\left[\sum\frac{\partial x_i'}{\partial\alpha}\frac{\partial x_i'}{\partial\beta} + z\left(\sum\frac{\partial x_i'}{\partial\alpha}\frac{\partial n_i'}{\partial\beta} + \sum\frac{\partial x_i'}{\partial\beta}\frac{\partial n_i'}{\partial\alpha}\right) + z^2\sum\frac{\partial n_i'}{\partial\alpha}\frac{\partial n_i'}{\partial\beta} + \zeta\left(\sum\frac{\partial x_i'}{\partial\alpha}\frac{\partial n_i'}{\partial\beta} + \sum\frac{\partial x_i'}{\partial\beta}\frac{\partial n_i'}{\partial\alpha}\right) + 2\zeta z\sum\frac{\partial n_i'}{\partial\alpha}\frac{\partial n_i'}{\partial\beta} + \zeta^2\sum\frac{\partial n_i'}{\partial\alpha}\frac{\partial n_i'}{\partial\beta} + \frac{\partial\zeta}{\partial\alpha}\frac{\partial\zeta}{\partial\beta}\right]}{AB\left(1-\frac{z}{R_1}\right)\left(1-\frac{z}{R_2}\right)}2\ell_\alpha\ell_\beta\,.
$$

$$
+\left\{1 + 2\frac{\partial\zeta}{\partial z} + \left(\frac{\partial\zeta}{\partial z}\right)^2\right\} + \frac{\frac{\partial\zeta}{\partial\alpha} + \frac{\partial\zeta}{\partial\alpha}\frac{\partial\zeta}{\partial z}}{A\left(1-\frac{z}{R_1}\right)}2\ell_\alpha\ell_z + \frac{\frac{\partial\zeta}{\partial\beta} + \frac{\partial\zeta}{\partial\beta}\frac{\partial\zeta}{\partial z}}{B\left(1-\frac{z}{R_2}\right)}2\ell_\beta\ell_z\,. \tag{55.1}
$$

The corrections to expression (53.4) are determined by the terms in (55.1) that contain ζ. The relative displacements ζ are always very small so that terms of second and higher order in ζ may be neglected. Furthermore, the considerations are for the time being restricted to small displacements of the middle surface. The coefficients of ζ may then be approximated by their corresponding values for the undeformed middle surface. By use of (52.11) the corrections of the strain components are obtained as

$$\Delta\gamma_{\alpha\alpha} = \frac{1}{\left(1 - \frac{z}{R_1}\right)^2}\left(-\frac{2\zeta}{R_1} + \frac{2\zeta}{R_1}\frac{z}{R_1}\right), \quad \Delta\gamma_{\beta\beta} = \frac{1}{\left(1 - \frac{z}{R_2}\right)^2}\left(-\frac{2\zeta}{R_2} + \frac{2\zeta}{R_2}\frac{z}{R_2}\right), \quad \Delta\gamma_{\alpha\beta} = 0$$

$$\Delta\gamma_{zz} = 2\frac{\partial\zeta}{\partial z}, \quad \Delta\gamma_{\alpha z} = \frac{1}{1 - \frac{z}{R_1}}\frac{1}{A}\frac{\partial\zeta}{\partial\alpha}, \quad \Delta\gamma_{\beta z} = \frac{1}{1 - \frac{z}{R_2}}\frac{1}{B}\frac{\partial\zeta}{\partial\beta};$$

and, if in these expressions z/R_1 and z/R_2 are neglected with respect to unity it follows that

$$\left.\begin{aligned} \Delta\gamma_{\alpha\alpha} &= -\frac{2\zeta}{R_1}, \quad \Delta\gamma_{\beta\beta} = -\frac{2\zeta}{R_2}, \quad \Delta\gamma_{\alpha\beta} = 0, \\ \Delta\gamma_{zz} &= -\frac{2\partial\zeta}{\partial z}, \quad \Delta\gamma_{\alpha z} = \frac{1}{A}\frac{\partial\zeta}{\partial\alpha}, \quad \Delta\gamma_{\beta z} = \frac{1}{B}\frac{\partial\zeta}{\partial\beta} \end{aligned}\right\} \tag{55.2}$$

Condition (54.2) in the form

$$\Delta\gamma_{zz} = \frac{-1}{m-1}(\gamma_{\alpha\alpha} + \gamma_{\beta\beta}),$$

which, in connection with the first approximation, may be considered a corrective formula for γ_{zz}, together with (55.2) yields

$$\frac{\partial\zeta}{\partial z} = -\frac{1}{2(m-1)}(\gamma_{\alpha\alpha} + \gamma_{\beta\beta}),$$

or with $\zeta = 0$ for $z = 0$, and with use of (53.5) as a first approximation for $\gamma_{\alpha\alpha}$ and $\gamma_{\beta\beta}$

$$\zeta = -\frac{1}{2(m-1)}(\gamma_{\alpha\alpha o} + \gamma_{\beta\beta o})z + \frac{1}{2(m-1)}(\rho_{\alpha\alpha} + \rho_{\beta\beta})z^2 + \dots \quad (55.3)$$

The corrections $\Delta\gamma_{\alpha\alpha}$ and $\Delta\gamma_{\beta\beta}$ then are

$$\left.\begin{aligned} \Delta\gamma_{\alpha\alpha} &= \frac{1}{m-1}\frac{z}{R_1}(\gamma_{\alpha\alpha o} + \gamma_{\beta\beta o}) - \frac{1}{m-1}\frac{z}{R_1}z(\rho_{\alpha\alpha} + \rho_{\beta\beta}) + \dots, \\ \Delta\gamma_{\beta\beta} &= \frac{1}{m-1}\frac{z}{R_2}(\gamma_{\alpha\alpha o} + \gamma_{\beta\beta o}) - \frac{1}{m-1}\frac{z}{R_2}z(\rho_{\alpha\alpha} + \rho_{\beta\beta}) + \dots \end{aligned}\right\} \quad (55.4)$$

Further, by use of the assumptions of small displacements, the order of magnitude of the quantities $\theta_{\alpha\alpha}$ etc., are determined. From the general formulas of Weingarten [37]

$$\frac{\partial n_i}{\partial \alpha} = \frac{(FM - GL)\frac{\partial x_i}{\partial \alpha} + (FL - EM)\frac{\partial x_i}{\partial \beta}}{EG - F^2},$$

$$\frac{\partial n_i}{\partial \beta} = \frac{(FN - GM)\frac{\partial x_i}{\partial \alpha} + (FM - EN)\frac{\partial x_i}{\partial \beta}}{EG - F^2}$$

after introduction of primed symbols to denote the deformed state

$$\sum\left(\frac{\partial n_i'}{\partial \alpha}\right)^2 = \frac{L'^2G' + M'E' - 2L'M'F'}{E'G' - F^2}$$

$$\sum\left(\frac{\partial n_i'}{\partial \beta}\right)^2 = \frac{N'^2E' + M'^2G' - 2N'M'F'}{E'G' - F'^2}$$

$$\sum\frac{\partial n_i'}{\partial \alpha}\frac{\partial n_i'}{\partial \beta} = \frac{L'M'G' + N'M'E' - (L'N' + M'^2)F'}{E'G' - F'^2} . \qquad (55.5)$$

The smallness of the displacements justifies the omission of the quadratic terms in the changes of the fundamental quantities $E' - E$, etc., $L' - L$, etc. With $F = M = 0$, it follows that

$$\sum\left(\frac{\partial n_i'}{\partial \alpha}\right)^2 = \frac{L'^2}{E'}, \quad \sum\left(\frac{\partial n_i'}{\partial \beta}\right)^2 = \frac{N'^2}{G'}$$

$$\sum\frac{\partial n_i'}{\partial \alpha}\frac{\partial n_i'}{\partial \beta} = \frac{L}{E}M' + \frac{N}{G}M' - \frac{LN}{EG}F'$$

Further, in view of (53.6) and (53.7) it follows that

$$E' = A^2(1 + \gamma_{\alpha\alpha o}), \quad G' = B^2(1 + \gamma_{\beta\beta o}), \quad F' = AB\gamma_{\alpha\beta o}$$

$$L' = A^2\left(\frac{1}{R_1} + \rho_{\alpha\alpha}\right), \quad N' = B^2\left(\frac{1}{R_2} + \rho_{\beta\beta}\right), \quad M' = AB\rho_{\alpha\beta} \qquad (55.6)$$

so that (55.5) leads to the approximations

$$\sum \left(\frac{\partial n_i'}{\partial \alpha}\right)^2 = A^2 \left\{ \frac{1}{R_1^2} + \frac{2}{R_1} \rho_{\alpha\alpha} - \frac{1}{R_1^2} \gamma_{\alpha\alpha o} \right\}$$

$$\sum \left(\frac{\partial n_i'}{\partial \beta}\right)^2 = B^2 \left\{ \frac{1}{R_2^2} + \frac{2}{R_2} \rho_{\beta\beta} - \frac{1}{R_2^2} \gamma_{\beta\beta o} \right\}$$

$$\sum \frac{\partial n_i' \partial n_i'}{\partial \alpha \partial \beta} = AB \left\{ \left(\frac{1}{R_1} + \frac{1}{R_2}\right) \rho_{\alpha\beta} - \frac{1}{R_1 R_2} \gamma_{\alpha\beta o} \right\} \tag{55.7}$$

The calculation of the remaining contributions from $\theta_{\alpha\alpha}$ etc., is carried out as follows:

$$\frac{4}{R_1} \sum \frac{\partial x_i' \partial n_i'}{\partial \alpha \partial \alpha} = -4 \frac{L'}{R_1} = -\frac{4A^2}{R_1} \left(\frac{1}{R_1} + \rho_{\alpha\alpha}\right) ,$$

$$\frac{4}{R_2} \sum \frac{\partial x_i' \partial n_i'}{\partial \beta \partial \beta} = -4 \frac{N'}{R_2} = -\frac{4B^2}{R_2} \left(\frac{1}{R_2} + \rho_{\beta\beta}\right)$$

$$\left(\frac{1}{R_1} + \frac{1}{R_2}\right) \left(\sum \frac{\partial x_i' \partial n_i'}{\partial \alpha \partial \beta} + \sum \frac{\partial x_i' \partial n_i'}{\partial \beta \partial \alpha}\right) = -2 \left(\frac{1}{R_1} + \frac{1}{R_2}\right) M' = -2AB \left(\frac{1}{R_1} + \frac{1}{R_2}\right) \rho_{\alpha\beta} ,$$

$$\frac{3}{R_1^2} \sum \left(\frac{\partial x_i'}{\partial \alpha}\right)^2 = \frac{3}{R_1^2} E' = \frac{3A^3}{R_1^2} \left(1 + \gamma_{\alpha\alpha o}\right) ,$$

$$\frac{3}{R_2^2} \sum \left(\frac{\partial x_i'}{\partial \beta}\right)^2 = \frac{3}{R_2^2} G' = \frac{3B^2}{R_2^2} \left(1 + \gamma_{\beta\beta o}\right) ,$$

$$\left(\frac{1}{R_1^2} + \frac{1}{R_2^2} + \frac{1}{R_1 R_2}\right) \sum \frac{\partial x_i' \partial x_i'}{\partial \alpha \partial \beta} = \left(\frac{1}{R_1^2} + \frac{1}{R_2^2} + \frac{1}{R_1 R_2}\right) F' =$$

$$= AB \left(\frac{1}{R_1^2} + \frac{1}{R_2^2} + \frac{1}{R_1 R_2}\right) \gamma_{\alpha\beta o} ,$$

so that the result is given by

$$\theta_{\alpha\alpha} = -\frac{2}{R_1}(\rho_{\alpha\alpha} - \frac{1}{R_1}\gamma_{\alpha\alpha o}) ,$$

$$\theta_{\beta\beta} = -\frac{2}{R_2}(\rho_{\beta\beta} - \frac{1}{R_2}\gamma_{\beta\beta o}) ,$$

$$\theta_{\alpha\beta} = -\left(\frac{1}{R_1} + \frac{1}{R_2}\right)\rho_{\alpha\beta} + \left(\frac{1}{R_1^2} + \frac{1}{R_2^2}\right)\gamma_{\alpha\beta o} \tag{55.8}$$

The technical theory of shells is founded on the admissibility of omission of contributions to the strain components that are of the form (55.4). On comparing (53.5), (55.4) and (55.8) it thus appears to be pointless to take into account the third and fourth term of (53.5); perhaps one exception should be made if $\gamma_{\alpha\alpha o} + \gamma_{\beta\beta o}$ is small in comparison to $\gamma_{\alpha\alpha o}$, $\gamma_{\beta\beta o}$, $\gamma_{\alpha\beta o}$ and $\rho_{\alpha\alpha} + \rho_{\beta\beta}$ is small in comparison to $\rho_{\alpha\alpha}$, $\rho_{\beta\beta}$, $\rho_{\alpha\beta}$. Therefore, in general the omission of the third and fourth term in (53.5) should be accepted as a consequence of the schematization introduced, and hence

$$\gamma_{\alpha\alpha} = \gamma_{\alpha\alpha o} - 2z\rho_{\alpha\alpha} ,$$

$$\gamma_{\beta\beta} = \gamma_{\beta\beta o} - 2z\rho_{\beta\beta} ,$$

$$\gamma_{\alpha\beta} = \gamma_{\alpha\beta o} - 2z\rho_{\alpha\beta} \tag{55.9}$$

The considerations that lead to the simplified expressions (55.9) hold strictly speaking only for infinitesimal displacements of the middle surface. However, as long as there is no reason to assume that for finite displacements the order of magnitude of the third and fourth term of (53.5) is different from that of the neglected influence of the displacement ζ, these expressions may also be applied for finite displacements.

By use of (55.9) the elastic energy per unit surface of the undeformed middle-surface can be obtained through integration of (54.3). The area of a surface element

$z = \text{const.}$ is given by the absolute value of the vector product of the vectors with components $\partial y_i/\partial\alpha \, d\alpha$ and $\partial y_i/\partial\beta \, d\beta$, for which due to Lagrange's identity

$$df = \sqrt{\left(\frac{\partial y_1}{\partial\alpha}\frac{\partial y_2}{\partial\beta} - \frac{\partial y_1}{\partial\beta}\frac{\partial y_2}{\partial\alpha}\right)^2 + \left(\frac{\partial y_2}{\partial\alpha}\frac{\partial y_3}{\partial\beta} - \frac{\partial y_2}{\partial\beta}\frac{\partial y_3}{\partial\alpha}\right)^2 + \left(\frac{\partial y_3}{\partial\alpha}\frac{\partial y_1}{\partial\beta} - \frac{\partial y_3}{\partial\beta}\frac{\partial y_1}{\partial\alpha}\right)^2} \, d\alpha d\beta =$$

$$= \sqrt{\sum\left(\frac{\partial y_i}{\partial\alpha}\right)^2 \sum\left(\frac{\partial y_i}{\partial\beta}\right)^2 - \left(\sum\frac{\partial y_i}{\partial\alpha}\frac{\partial y_i}{\partial\beta}\right)^2} \, d\alpha d\beta \; .$$

Here

$$\sum\left(\frac{\partial y_i}{\partial\alpha}\right)^2 = \sum\left(\frac{\partial x_i}{\partial\alpha}\right)^2 + 2z\sum\frac{\partial x_i}{\partial\alpha}\frac{\partial n_i}{\partial\alpha} + z^2\sum\left(\frac{\partial n_i}{\partial\alpha}\right)^2 = A^2\left(1 - \frac{z}{R_1}\right)^2 ,$$

$$\sum\left(\frac{\partial y_i}{\partial\beta}\right)^2 = \sum\left(\frac{\partial x_i}{\partial\beta}\right)^2 + 2z\sum\frac{\partial x_i}{\partial\beta}\frac{\partial n_i}{\partial\beta} + z^2\sum\left(\frac{\partial n_i}{\partial\beta}\right)^2 = B^2\left(1 - \frac{z}{R_2}\right)^2 ,$$

$$\sum\frac{\partial y_i}{\partial\alpha}\frac{\partial y_i}{\partial\beta} = \sum\frac{\partial x_i}{\partial\alpha}\frac{\partial x_i}{\partial\beta} + z\left(\sum\frac{\partial x_i}{\partial\alpha}\frac{\partial n_i}{\partial\beta} + \sum\frac{\partial x_i}{\partial\beta}\frac{\partial n_i}{\partial\alpha}\right) + z^2\sum\frac{\partial n_i}{\partial\alpha}\frac{\partial n_i}{\partial\beta} = 0 ,$$

so that for the area of the surface element it holds that

$$df = AB\left(1 - \frac{z}{R_1}\right)\left(1 - \frac{z}{R_2}\right) d\alpha d\beta \qquad (55.10)$$

Because quantities of the form $z/R_1 \, \gamma_{\alpha\alpha 0}$, $z/R_1 \, z\rho_{\alpha\alpha}$, etc., are already neglected in expressions (55.9), the factors $1 - z/R_1$ and $1 - z/R_2$ may be replaced by unity

in (55.10). The elastic energy in a shell element of thickness h, bounded by the normal planes α = const., β = const., $\alpha + d\alpha$ = const., $\beta + d\beta$ = const., then is

$$AB\,d\alpha\,d\beta\,\frac{Gm}{4(m-1)}\int_{-\frac{h}{2}}^{\frac{h}{2}} dz\left[\left[\gamma_{\alpha\alpha o}+\gamma_{\beta\beta o}-2z(\rho_{\alpha\alpha}+\rho_{\beta\beta})\right]^2+\right.$$

$$\left.-2\frac{m-1}{m}\left[(\gamma_{\alpha\alpha o}-2z\rho_{\alpha\alpha})(\gamma_{\beta\beta o}-2z\rho_{\beta\beta})-(\gamma_{\alpha\beta o}-2z\rho_{\alpha\beta})^2\right]\right],$$

from which, after execution of the integration and division by $AB\,d\alpha\,d\beta$, for the elastic energy per unit area of the undeformed middle surface is obtained

$$\overline{A}=\frac{1}{4}Gh\frac{m}{m-1}\left[(\gamma_{\alpha\alpha o}+\gamma_{\beta\beta o})^2-2\frac{m-1}{m}(\gamma_{\alpha\alpha o}\gamma_{\beta\beta o}-\gamma_{\alpha\beta o}{}^2)\right]+$$

$$+\frac{1}{12}Gh^3\frac{m}{m-1}\left[(\rho_{\alpha\alpha}+\rho_{\beta\beta})^2-2\frac{m-1}{m}(\rho_{\alpha\alpha}\rho_{\beta\beta}-\rho_{\alpha\beta}{}^2)\right]. \qquad (55.11)$$

It appears from this result that the elastic energy is the sum of two terms of which the first exclusively depends on the deformations in the middle surface and the second exclusively depends on the changes of curvature of the middle surface, or more briefly, that the elastic energy is the sum of the membrane and bending energies.

56. THE STRAIN – DISPLACEMENT FUNCTIONS

The components of strain (53.6) and the changes of curvature (53.7) can easily be expressed in terms of the displacements $u_i = x_i' - x_i$.

For clarity of the results, it appears worthwhile to express the vector component u_i representing the displacement at a point of the middle surface in terms of the three unit vectors a_i, b_i, n_i.

$$u_i = ua_i + vb_i + wn_i ; \tag{56.1}$$

It will then be possible in the formulas for the strains to express the properties of the middle surface exclusively in terms of the quantities A, B, R_1, R_2.

By use of formula's (52.7) and (52.11) it follows from (56.1) that

$$\frac{\partial x_i'}{\partial \alpha} = A\left(1 + \frac{1}{A}\frac{\partial u}{\partial \alpha} + \frac{v}{AB}\frac{\partial A}{\partial \beta} - \frac{w}{R_1}\right)a_i +$$

$$+ A\left(\frac{1}{A}\frac{\partial v}{\partial \alpha} - \frac{u}{AB}\frac{\partial A}{\partial \beta}\right)b_i + A\left(\frac{1}{A}\frac{\partial w}{\partial \alpha} + \frac{u}{R_1}\right)n_i ,$$

$$\frac{\partial x_i'}{\partial \beta} = B\left(\frac{1}{B}\frac{\partial u}{\partial \beta} - \frac{v}{AB}\frac{\partial B}{\partial \alpha}\right)a_i +$$

$$+ B\left(1 + \frac{1}{B}\frac{\partial v}{\partial \beta} + \frac{u}{AB}\frac{\partial B}{\partial \alpha} - \frac{w}{R_2}\right)b_i + B\left(\frac{1}{B}\frac{\partial w}{\partial \beta} + \frac{v}{R_2}\right)n_i , \tag{56.2}$$

so that the strain components are

$$\gamma_{\alpha\alpha o} = 2\left(\frac{1}{A}\frac{\partial u}{\partial \alpha} + \frac{v}{AB}\frac{\partial A}{\partial \beta} - \frac{w}{R_1}\right) + \frac{1}{A^2}\left[\left(\frac{\partial u}{\partial \alpha}\right)^2 + \left(\frac{\partial v}{\partial \alpha}\right)^2 + \left(\frac{\partial w}{\partial \alpha}\right)^2\right] +$$

$$+ \frac{u^2}{A^2B^2}\left(\frac{\partial A}{\partial \beta}\right)^2 + \frac{u^2}{R_1^2} + \frac{v^2}{A^2B^2}\left(\frac{\partial A}{\partial \beta}\right)^2 + \frac{w^2}{R_1^2} + 2\frac{v}{AB}\frac{\partial A}{\partial \beta}\frac{1}{A}\frac{\partial u}{\partial \alpha} +$$

$$- 2\frac{u}{AB}\frac{\partial A}{\partial \beta}\frac{1}{A}\frac{\partial v}{\partial \alpha} - 2\frac{w}{R_1}\frac{1}{A}\frac{\partial u}{\partial \alpha} + 2\frac{u}{R_1}\frac{1}{A}\frac{\partial w}{\partial \alpha} - 2\frac{w}{R_1}\frac{v}{AB}\frac{\partial A}{\partial \beta},$$

$$\gamma_{\beta\beta o} = 2\left(\frac{1}{B}\frac{\partial v}{\partial \beta} + \frac{u}{AB}\frac{\partial B}{\partial \alpha} - \frac{w}{R_2}\right) + \frac{1}{B^2}\left[\left(\frac{\partial u}{\partial \beta}\right)^2 + \left(\frac{\partial v}{\partial \beta}\right)^2 + \left(\frac{\partial w}{\partial \beta}\right)^2\right] +$$

$$+ \frac{u^2}{A^2B^2}\left(\frac{\partial B}{\partial \alpha}\right)^2 + \frac{v^2}{A^2B^2}\left(\frac{\partial B}{\partial \alpha}\right)^2 + \frac{v^2}{R_2^2} + \frac{w^2}{R_2^2} + 2\frac{u}{AB}\frac{\partial B}{\partial \alpha}\frac{1}{B}\frac{\partial v}{\partial \beta} +$$

$$- 2\frac{v}{AB}\frac{\partial B}{\partial \alpha}\frac{1}{B}\frac{\partial u}{\partial \beta} - 2\frac{w}{R_2}\frac{1}{B}\frac{\partial v}{\partial \beta} + 2\frac{v}{R_2}\frac{1}{B}\frac{\partial w}{\partial \beta} - 2\frac{u}{AB}\frac{\partial B}{\partial \alpha}\frac{w}{R_2},$$

$$\gamma_{\alpha\beta o} = \frac{1}{B}\frac{\partial u}{\partial \beta} + \frac{1}{A}\frac{\partial v}{\partial \alpha} - \frac{u}{AB}\frac{\partial A}{\partial \beta} - \frac{v}{AB}\frac{\partial B}{\partial \alpha} +$$

$$+ \frac{1}{AB}\left(\frac{\partial u}{\partial \alpha}\frac{\partial u}{\partial \beta} + \frac{\partial v}{\partial \alpha}\frac{\partial v}{\partial \beta} + \frac{\partial w}{\partial \alpha}\frac{\partial w}{\partial \beta}\right) - \frac{u^2 + v^2}{A^2B^2}\frac{\partial A}{\partial \beta}\frac{\partial B}{\partial \alpha} + \frac{u}{R_1}\frac{v}{R_2} +$$

$$+ \frac{u}{AB}\frac{\partial A}{\partial \beta}\frac{w}{R_2} + \frac{v}{AB}\frac{\partial B}{\partial \alpha}\frac{w}{R_1} + \frac{u}{AB}\frac{\partial B}{\partial \alpha}\frac{1}{A}\frac{\partial v}{\partial \alpha} +$$

$$+ \frac{v}{AB}\frac{\partial A}{\partial \beta}\frac{1}{B}\frac{\partial u}{\partial \beta} - \frac{v}{AB}\frac{\partial B}{\partial \alpha}\frac{1}{A}\frac{\partial u}{\partial \alpha} - \frac{u}{AB}\frac{\partial A}{\partial \beta}\frac{1}{B}\frac{\partial v}{\partial \beta} +$$

$$+ \frac{u}{R_1}\frac{1}{B}\frac{\partial w}{\partial \beta} + \frac{v}{R_2}\frac{1}{A}\frac{\partial w}{\partial \alpha} - \frac{w}{R_1}\frac{1}{B}\frac{\partial u}{\partial \beta} - \frac{w}{R_2}\frac{1}{A}\frac{\partial v}{\partial \alpha} \qquad (56.3)$$

In these expressions the terms which are linear in u, v, and w agree with Love's results for $2\epsilon_1$, $2\epsilon_2$, and ω [36, 326].

For the calculation of the changes of curvatures of the middle surface, formula(52.4) and(52.5) are used (see also [37]).

$$L = \sum n_i \frac{\partial^2 x_i}{\partial \alpha^2} = \frac{1}{\sqrt{EG - F^2}} \text{Det.} \left(\frac{\partial^2 x_i}{\partial \alpha^2}, \frac{\partial x_i}{\partial \alpha}, \frac{\partial x_i}{\partial \beta} \right),$$

$$N = \sum n_i \frac{\partial^2 x_i}{\partial \beta^2} = \frac{1}{\sqrt{EG - F^2}} \text{Det} \left(\frac{\partial^2 x_i}{\partial \beta^2}, \frac{\partial x_i}{\partial \alpha}, \frac{\partial x_i}{\partial \beta} \right),$$

$$M = \sum n_i \frac{\partial^2 x_i}{\partial \alpha \partial \beta} = \frac{1}{\sqrt{EG - F^2}} \text{Det.} \left(\frac{\partial^2 x_i}{\partial \alpha \partial \beta}, \frac{\partial x_i}{\partial \alpha}, \frac{\partial x_i}{\partial \beta} \right),$$

from which, after use of (55.6), it follows

$$\rho_{\alpha\alpha} = \frac{1}{A^2} \frac{1}{\sqrt{E'G' - F'^2}} \text{Det.} \left(\frac{\partial^2 x_i'}{\partial \alpha^2}, \frac{\partial x_i'}{\partial \alpha}, \frac{\partial x_i'}{\partial \beta} \right) - \frac{1}{R_1},$$

$$\rho_{\beta\beta} = \frac{1}{B^2} \frac{1}{\sqrt{E'G' - F'^2}} \text{Det.} \left(\frac{\partial^2 x_i'}{\partial \beta^2}, \frac{\partial x_i'}{\partial \alpha}, \frac{\partial x_i'}{\partial \beta} \right) - \frac{1}{R_2},$$

$$\rho_{\alpha\beta} = \frac{1}{AB} \frac{1}{\sqrt{E'G' - F'^2}} \text{Det.} \left(\frac{\partial^2 x_i'}{\partial \alpha \partial \beta}, \frac{\partial x_i'}{\partial \alpha}, \frac{\partial x_i'}{\partial \beta} \right)$$

By use of the relation following from (55.6)

$$\sqrt{E'G' - F'^2} = AB \sqrt{(1 + \gamma_{\alpha\alpha o})(1 + \gamma_{\beta\beta o}) - \gamma_{\alpha\beta o}^2}$$

these expressions become

$$\rho_{\alpha\alpha} = \frac{1}{A^3 B} \frac{1}{\sqrt{(1+\gamma_{\alpha\alpha o})(1+\gamma_{\beta\beta o}) - \gamma_{\alpha\beta o}^2}} \text{Det.} \left(\frac{\partial^2 x_i'}{\partial \alpha^2}, \frac{\partial x_i'}{\partial \alpha}, \frac{\partial x_i'}{\partial \beta} \right) - \frac{1}{R_1},$$

$$\rho_{\beta\beta} = \frac{1}{AB^3} \frac{1}{\sqrt{(1+\gamma_{\alpha\alpha o})(1+\gamma_{\beta\beta o}) - \gamma_{\alpha\beta o}^2}} \text{Det.} \left(\frac{\partial^2 x_i'}{\partial \beta^2}, \frac{\partial x_i'}{\partial \alpha}, \frac{\partial x_i'}{\partial \beta} \right) - \frac{1}{R_2},$$

$$\rho_{\alpha\beta} = \frac{1}{A^2 B^2} \frac{1}{\sqrt{(1+\gamma_{\alpha\alpha o})(1+\gamma_{\beta\beta o}) - \gamma_{\alpha\beta o}^2}} \text{Det.} \left(\frac{\partial^2 x_i'}{\partial \alpha \partial \beta}, \frac{\partial x_i'}{\partial \alpha}, \frac{\partial x_i'}{\partial \beta} \right)$$

After omission of $\gamma_{\alpha\alpha o}$, $\gamma_{\beta\beta o}$ and $\gamma_{\alpha\beta o}^2$ in comparison to unity, it finally follows that

$$\rho_{\alpha\alpha} = \frac{1}{A^3 B} \text{Det.} \left(\frac{\partial^2 x_i'}{\partial \alpha^2}, \frac{\partial x_i'}{\partial \alpha}, \frac{\partial x_i'}{\partial \beta} \right) - \frac{1}{R_1},$$

$$\rho_{\beta\beta} = \frac{1}{AB^3} \text{Det.} \left(\frac{\partial^2 x_i'}{\partial \beta^2}, \frac{\partial x_i'}{\partial \alpha}, \frac{\partial x_i'}{\partial \beta} \right) - \frac{1}{R_2},$$

$$\rho_{\alpha\beta} = \frac{1}{A^2 B^2} \text{Det.} \left(\frac{\partial^2 x_i'}{\partial \alpha \partial \beta}, \frac{\partial x_i'}{\partial \alpha}, \frac{\partial x_i'}{\partial \beta} \right) \tag{56.4}$$

By means of (56.4) the changes of curvature are rationally expressed in the displacements $u_i = x_i' - x_i$. This is achieved through differentiation of (56.2). The determinants in (56.4) take the simplest possible form if, after the differentiations have been carried out, the fixed x_i-system is chosen to coincide with the $\underline{a}$, b, n system, so that

$$a_1 = 1 \; ; \quad a_2 = 0 \; ; \quad a_3 = 0 \; ;$$

$$b_1 = 0 \; , \quad b_2 = 1 \; , \quad b_3 = 0 \; ;$$

$$n_1 = 0 \; , \quad n_2 = 0 \; , \quad n_3 = 1 \; . \tag{56.5}$$

The first row of the determinants (56.4) is then given by the formulas

$$\frac{\partial^2 x_1'}{\partial \alpha^2} = \frac{\partial A}{\partial \alpha} + \frac{\partial^2 u}{\partial \alpha^2} + \frac{2}{B} \frac{\partial A}{\partial \beta} \frac{\partial v}{\partial \alpha} - 2 \frac{A}{R_1} \frac{\partial w}{\partial \alpha} - u \left\{ \frac{A^2}{R_1^2} + \frac{1}{B^2} \left(\frac{\partial A}{\partial \beta} \right)^2 \right\} +$$

$$+ v \frac{\partial}{\partial \alpha} \left(\frac{1}{B} \frac{\partial A}{\partial \beta} \right) - w \frac{\partial}{\partial \alpha} \left(\frac{A}{R_1} \right) ,$$

$$\frac{\partial^2 x_2'}{\partial \alpha^2} = - \frac{A}{B} \frac{\partial A}{\partial \beta} + \frac{\partial^2 v}{\partial \alpha^2} - \frac{2}{B} \frac{\partial A}{\partial \beta} \frac{\partial u}{\partial \alpha} - u \frac{\partial}{\partial \alpha} \left(\frac{1}{B} \frac{\partial A}{\partial \beta} \right) - \frac{v}{B^2} \left(\frac{\partial A}{\partial \beta} \right)^2 +$$

$$+ \frac{w}{B} \frac{A}{R_1} \frac{dA}{\partial \beta} ,$$

$$\frac{\partial^2 x_3'}{\partial \alpha^2} = \frac{A^2}{R_1} + \frac{\partial^2 w}{\partial \alpha^2} + 2 \frac{A}{R_1} \frac{\partial u}{\partial \alpha} + u \frac{\partial}{\partial \alpha} \left(\frac{A}{R_1} \right) + \frac{v}{B} \frac{A}{R_1} \frac{\partial A}{\partial \beta} - w \frac{A^2}{R_1^2} , \tag{56.6}$$

$$
\left.
\begin{aligned}
\frac{\partial^2 x_1'}{\partial\beta^2} &= -\frac{B}{A}\frac{\partial B}{\partial\alpha} + \frac{\partial^2 u}{\partial\beta^2} - \frac{2}{A}\frac{\partial B}{\partial\alpha}\frac{\partial v}{\partial\beta} - \frac{u}{A^2}\left(\frac{\partial B}{\partial\alpha}\right)^2 - v\frac{\partial}{\partial\beta}\left(\frac{1}{A}\frac{\partial B}{\partial\alpha}\right) + \\
&\quad + \frac{w}{A}\frac{B}{R_2}\frac{\partial B}{\partial\alpha}, \\
\frac{\partial^2 x_2'}{\partial\beta^2} &= \frac{\partial B}{\partial\beta} + \frac{\partial^2 v}{\partial\beta^2} + \frac{2}{A}\frac{\partial B}{\partial\alpha}\frac{\partial u}{\partial\beta} - 2\frac{B}{R_2}\frac{\partial w}{\partial\beta} + u\frac{\partial}{\partial\beta}\left(\frac{1}{A}\frac{\partial B}{\partial\alpha}\right) + \\
&\quad - v\left\{\frac{B^2}{R_2^2} + \frac{1}{A^2}\left(\frac{\partial B}{\partial\alpha}\right)^2\right\} - w\frac{\partial}{\partial\beta}\left(\frac{B}{R_2}\right), \\
\frac{\partial^2 x_3'}{\partial\beta^2} &= \frac{B^2}{R_2} + \frac{\partial^2 w}{\partial\beta^2} + 2\frac{B}{R_2}\frac{\partial v}{\partial\beta} + \frac{u}{A}\frac{B}{R_2}\frac{\partial B}{\partial\alpha} + v\frac{\partial}{\partial\beta}\left(\frac{B}{R_2}\right) - w\frac{B^2}{R_2^2},
\end{aligned}
\right\} \quad (56.7)
$$

$$
\left.
\begin{aligned}
\frac{\partial^2 x_1'}{\partial\alpha\partial\beta} &= \frac{\partial A}{\partial\beta} + \frac{\partial^2 u}{\partial\alpha\partial\beta} - \frac{1}{A}\frac{\partial B}{\partial\alpha}\frac{\partial v}{\partial\alpha} + \frac{1}{B}\frac{\partial A}{\partial\beta}\frac{\partial v}{\partial\beta} - \frac{A}{R_1}\frac{\partial w}{\partial\beta} + \\
&\quad + \frac{u}{AB}\frac{\partial A}{\partial\beta}\frac{\partial B}{\partial\alpha} + v\frac{\partial}{\partial\beta}\left(\frac{1}{B}\frac{\partial A}{\partial\beta}\right) - w\frac{\partial}{\partial\beta}\left(\frac{A}{R_1}\right), \\
\frac{\partial^2 x_2'}{\partial\alpha\partial\beta} &= \frac{\partial B}{\partial\alpha} + \frac{\partial^2 v}{\partial\alpha\partial\beta} + \frac{1}{A}\frac{\partial B}{\partial\alpha}\frac{\partial u}{\partial\alpha} - \frac{1}{B}\frac{\partial A}{\partial\beta}\frac{\partial u}{\partial\beta} - \frac{B}{R_2}\frac{\partial w}{\partial\alpha} + \\
&\quad + u\frac{\partial}{\partial\alpha}\left(\frac{1}{A}\frac{\partial B}{\partial\alpha}\right) + \frac{v}{AB}\frac{\partial A}{\partial\beta}\frac{\partial B}{\partial\alpha} - w\frac{\partial}{\partial\alpha}\left(\frac{B}{R_2}\right), \\
\frac{\partial^2 x_3'}{\partial\alpha\partial\beta} &= \frac{\partial^2 w}{\partial\alpha\partial\beta} + \frac{A}{R_1}\frac{\partial u}{\partial\beta} + \frac{B}{R_2}\frac{\partial v}{\partial\alpha}.
\end{aligned}
\right\} \quad (56.8)
$$

Here use has already been made of the identities

$$\frac{\partial}{\partial\alpha}\left(\frac{1}{A}\frac{\partial B}{\partial\alpha}\right) + \frac{\partial}{\partial\beta}\left(\frac{1}{B}\frac{\partial A}{\partial\beta}\right) + \frac{AB}{R_1R_2} = 0 \quad ,$$

$$\frac{\partial}{\partial\beta}\left(\frac{A}{R_1}\right) = \frac{1}{R_2}\frac{\partial A}{\partial\beta} \ , \ \frac{\partial}{\partial\alpha}\left(\frac{B}{R_2}\right) = \frac{1}{R_1}\frac{\partial B}{\partial\alpha} \quad , \tag{56.9}$$

which resulted from (52.11) and of the identities

$$\frac{\partial^2 a_i}{\partial\alpha\partial\beta} = \frac{\partial^2 a_i}{\partial\alpha\partial\beta}, \quad \frac{\partial^2 n_i}{\partial\alpha\partial\beta} = \frac{\partial^2 n_i}{\partial\beta\partial\alpha} \ .$$

The second and third rows are the same for all three determinants (56.4) and are determined by the formulas (56.2) respectively, if (56.5) is substituted. Thus, they are

$$A\left(1 + \frac{1}{A}\frac{\partial u}{\partial\alpha} + \frac{v}{AB}\frac{\partial A}{\partial\beta} - \frac{w}{R_1}\right) \ , \quad A\left(\frac{1}{A}\frac{\partial v}{\partial\alpha} - \frac{u}{AB}\frac{\partial A}{\partial\beta}\right) \ ,$$

$$A\left(\frac{1}{A}\frac{\partial w}{\partial\alpha} + \frac{u}{R_1}\right) \text{ and}$$

$$B\left(\frac{1}{B}\frac{\partial u}{\partial\beta} - \frac{v}{AB}\frac{\partial B}{\partial\alpha}\right) \ , \quad B\left(1 + \frac{1}{B}\frac{\partial v}{\partial\beta} + \frac{u}{AB}\frac{\partial B}{\partial\alpha} - \frac{w}{R_2}\right) ,$$

$$B\left(\frac{1}{B}\frac{\partial w}{\partial\beta} + \frac{v}{R_2}\right) \tag{56.10}$$

The changes of curvature for infinitesimal displacements follow from (56.4) and (56.6) to (56.10) after omission of second and third order terms in the displacements u, v, and w

$$\rho_{\alpha\alpha} = \frac{1}{A^2}\frac{\partial^2 w}{\partial\alpha^2} + \frac{3}{AR_1}\frac{\partial u}{\partial\alpha} + \frac{1}{BR_1}\frac{\partial v}{\partial\beta} - \frac{1}{A^3}\frac{\partial A}{\partial\alpha}\frac{\partial w}{\partial\alpha} +$$

$$+ \frac{1}{AB^2}\frac{\partial A}{\partial\beta}\frac{\partial w}{\partial\beta} + u\left\{\frac{1}{A}\frac{\partial}{\partial\alpha}\left(\frac{1}{R_1}\right) + \frac{1}{ABR_1}\frac{\partial B}{\partial\alpha}\right\} +$$

$$+ \frac{v}{AB}\frac{\partial A}{\partial\beta}\left(\frac{2}{R_1} + \frac{1}{R_2}\right) - \frac{w}{R_1}\left(\frac{2}{R_1} + \frac{1}{R_2}\right),$$

$$\rho_{\beta\beta} = \frac{1}{B^2}\frac{\partial^2 w}{\partial\beta^2} + \frac{1}{AR_2}\frac{\partial u}{\partial\alpha} + \frac{3}{BR_2}\frac{\partial v}{\partial\beta} +$$

$$+ \frac{1}{A^2B}\frac{\partial B}{\partial\alpha}\frac{\partial w}{\partial\alpha} - \frac{1}{B^3}\frac{\partial B}{\partial\beta}\frac{\partial w}{\partial\beta} + \frac{u}{AB}\frac{\partial B}{\partial\alpha}\left(\frac{1}{R_1} + \frac{2}{R_2}\right) +$$

$$+ v\left\{\frac{1}{B}\frac{\partial}{\partial\beta}\left(\frac{1}{R_2}\right) + \frac{1}{ABR_2}\frac{\partial A}{\partial\beta}\right\} - \frac{w}{R_2}\left(\frac{1}{R_1} + \frac{2}{R_2}\right),$$

$$\rho_{\alpha\beta} = \frac{1}{AB}\frac{\partial^2 w}{\partial\alpha\partial\beta} + \frac{1}{BR_1}\frac{\partial u}{\partial\beta} + \frac{1}{AR_2}\frac{\partial v}{\partial\alpha} - \frac{1}{A^2B}\frac{\partial A}{\partial\beta}\frac{\partial w}{\partial\alpha} +$$

$$- \frac{1}{AB^2}\frac{\partial B}{\partial\alpha}\frac{\partial w}{\partial\beta} - \frac{u}{ABR_1}\frac{\partial A}{\partial\beta} - \frac{v}{ABR_2}\frac{\partial B}{\partial\alpha}. \qquad (56.11)$$

These expressions differ from Love's [36 art. 329] as follows

$$\rho_{\alpha\alpha} - \kappa_1 = \frac{1}{R_1}\left\{ 2\left(\frac{1}{A}\frac{\partial u}{\partial \alpha} + \frac{v}{AB}\frac{\partial A}{\partial \beta} - \frac{w}{R_1}\right) + \frac{1}{B}\frac{\partial v}{\partial \beta} + \frac{u}{AB}\frac{\partial B}{\partial \alpha} - \frac{w}{R_2}\right\},$$

$$\rho_{\beta\beta} - \kappa_2 = \frac{1}{R_2}\left\{ \frac{1}{A}\frac{\partial u}{\partial \alpha} + \frac{v}{AB}\frac{\partial A}{\partial \beta} - \frac{w}{R_1} + 2\left(\frac{1}{B}\frac{\partial v}{\partial \beta} + \frac{u}{AB}\frac{\partial B}{\partial \alpha} - \frac{w}{R_2}\right)\right\},$$

$$\rho_{\alpha\beta} - \tau = \frac{1}{R_1}\left\{ \frac{1}{B}\frac{\partial u}{\partial \beta} + \frac{1}{A}\frac{\partial v}{\partial \alpha} - \frac{u}{AB}\frac{\partial A}{\partial \beta} - \frac{v}{AB}\frac{\partial B}{\partial \alpha}\right\},$$

and as the displacements are assumed to be infinitesimal they can be written

$$\rho_{\alpha\alpha} - \kappa_1 = \frac{\gamma_{\alpha\alpha o}}{R_1} + \frac{\gamma_{\beta\beta o}}{2R_1},$$

$$\rho_{\beta\beta} - \kappa_2 = \frac{\gamma_{\alpha\alpha o}}{2R_2} + \frac{\gamma_{\beta\beta o}}{R_2},$$

$$\rho_{\alpha\beta} - \tau = \frac{\gamma_{\alpha\beta o}}{R_1}.$$

These differences are of no significance as the terms $\frac{z}{R_1}\gamma_{\alpha\alpha o}$, etc., were omitted already in the expressions for the strains.

57. THE INFLUENCE OF SMALL DEVIATIONS

For applications of the theory developed in Chapter 4 to shell constructions, it is necessary to know the change of the elastic energy which results from small geometrical deviations. It is assumed that the coordinates x_i of points of the middle surface of the structural model are given as functions of the two parameters α and β such that the lines β = const. and α = const. determine the lines of curvature of this surface. The previous theory can then immediately be applied to this model.

An arbitrary surface can in general be obtained from a given surface if each point of the latter surface is subjected to a displacement in the direction of its normal. It is assumed that the middle surface of the structure is derived in this manner from the middle surface of the model by displacements $w_o(\alpha, \beta)$ in the direction of the model's normal

$$x_i^o = x_i + w_o n_i ;$$

the middle surface of the structure is then also given by its coordinates x_i^o as functions of α and β. If it is assumed also that the shell thickness of structure and model are equal, points on equal distances z from the middle surfaces of structure and model, whose projections on the respective middle surfaces are given by the same values of α and β, can be regarded as corresponding points.

The square of a line element in the undeformed state of the model is given by (53.2). If the structure is regarded as a "deformed" state of the model, the square of a line element of the structure can be written as

$$d\ell^{o^2} = \left(1 + \gamma_{\alpha\alpha}{}^o\right) A^2 \left(1 - \frac{z}{R_1}\right)^2 d\alpha^2 + \left(1 + \gamma_{\beta\beta}{}^o\right) B^2 \left(1 - \frac{z}{R_2}\right)^2 d\beta^2 +$$

$$+ 2\gamma_{\alpha\beta}{}^o \, AB \left(1 - \frac{z}{R_1}\right)\left(1 - \frac{z}{R_2}\right) d\alpha d\beta + dz^2 ; \qquad (57.1)$$

where $\gamma_{\alpha\alpha}{}^o$ etc., are the "strain components" (53.3), (53.4) in the point (α, β, z) of the model for the displacements o , o , w_o in the direction of the unit vectors corresponding to the middle surface of the model. After use of (55.9), the "strain-components" are written

$$\gamma_{\alpha\alpha}{}^o = \gamma_{\alpha\alpha o}{}^o - 2z\rho_{\alpha\alpha}{}^o , \text{ etc.} \qquad (57.2)$$

Here $\overset{o}{\gamma}_{\alpha\alpha o}$, $\overset{o}{\rho}_{\alpha\alpha}$ are obtained from expressions for $\gamma_{\alpha\alpha o}$, $\rho_{\alpha\alpha}$, etc., derived in Sect. 56 by setting u , v equal to zero and $w = w_o$.

The square of a line element of the structure in the deformed state, which state is characterized by the coordinates x_i' of the middle surface, is written as

$$d\ell'^2 = (1 + \gamma_{\alpha\alpha}') A^2 \left(1 - \frac{z}{R_1}\right)^2 d\alpha^2 + \left(1 + \gamma_{\beta\beta}'\right) B^2 \left(1 - \frac{z}{R_2}\right)^2 d\beta^2 +$$

$$+ 2\gamma_{\alpha\beta}' AB \left(1 - \frac{z}{R_1}\right)\left(1 - \frac{z}{R_2}\right) d\alpha d\beta + dz^2 , \qquad (57.3)$$

in which $\gamma'_{\alpha\alpha}$ etc., are the "strain-components" at a point (α, β, z) of the model for the "displacements"

$$u_i' = x_i' - x_i = u_i + u_i^o .$$

The quantities u_i are here the real displacements that occur during deformation of the structure. The "strain components" may again be written as

$$\gamma'_{\alpha\alpha} = \gamma_{\alpha\alpha o} - 2z\rho'_{\alpha\alpha}, \text{ etc.} \qquad (57.4)$$

If the displacements u_i are also expressed in terms of the unit vectors which correspond to the middle surface of the model

$$u_i = ua_i + vb_i + wn_i , \qquad (57.5)$$

then $\gamma'_{\alpha\alpha o}$, $\rho'_{\alpha\alpha}$, etc., are obtained from the expressions $\gamma_{\alpha\alpha o}$, $\rho_{\alpha\alpha}$, etc., of Sect. 56 by replacement of u , v , w by u , v , $w + w_o$.

The actual deformed state of the structure is completely described by the ratio between (57.3) and (57.1). To calculate from these ratios together with (11.2), the actual components of strain along the three initially mutual orthogonal directions in the structure (57.1) is reduced to

$$d\ell^{o^2} = (1 + \lambda_{\alpha\alpha}{}^{o}) \left[1 - \frac{\gamma_{\alpha\beta}{}^{o2}}{(1 + \gamma_{\alpha\alpha}{}^{o})(1 + \gamma_{\beta\beta}{}^{o})} \right] A^2 \left(1 - \frac{z}{R_1}\right)^2 d\alpha^2 +$$

$$+ (1 + \gamma_{\beta\beta}{}^{o}) \left[B \left(1 - \frac{z}{R_2}\right) d\beta + \frac{\gamma_{\alpha\beta}{}^{o}}{1 + \gamma_{\beta\beta}{}^{o}} A \left(1 - \frac{z}{R_1}\right) d\alpha \right]^2 + dz^2 .$$

From this formula it appears that the three directions

$$B \left(1 - \frac{z}{R_2}\right) d\beta + \frac{\gamma_{\alpha\beta}{}^{o}}{1 + \gamma_{\beta\beta}{}^{o}} A \left(1 - \frac{z}{R_1}\right) d\alpha = 0 , \quad dz = 0 ;$$

$$dz = 0 , \quad d\alpha = 0 ;$$

$$d\alpha = 0 , \quad B \left(1 - \frac{z}{R_2}\right) d\beta + \frac{\gamma_{\alpha\beta}{}^{o}}{1 + \gamma_{\beta\beta}{}^{o}} A \left(1 - \frac{z}{R_1}\right) d\alpha = 0 , \qquad (57.6)$$

are mutually perpendicular. The smallness of the differences between structure and model justifies the omission of quantities of second and higher order in $\gamma^{o}_{\alpha\alpha}$, etc. The direction cosines of the line element $d\ell^{o}$ with respect to the directions determined by (57.6) are

$$\ell_\alpha^{o^2} = (1 + \gamma_{\alpha\alpha}{}^o) \frac{A^2 \left(1 - \frac{z}{R_1}\right)^2 d\alpha^2}{d\ell^{o^2}} ,$$

$$\ell_\beta^{o^2} = (1 + \gamma_{\beta\beta}{}^o) \frac{\left[B \left(1 - \frac{z}{R_2}\right) d\beta + \gamma_{\alpha\beta}{}^o A \left(1 - \frac{z}{R_1}\right) d\alpha\right]^2}{d\ell^{o^2}}$$

$$\ell_z{}^{o^2} = \frac{dz^2}{d\ell^{o^2}} \tag{57.7}$$

By use of (57.7) $d\alpha$, $d\beta$, and dz are eliminated from (57.3). The result is, after omission of quantities of second and higher order in $\gamma^o_{\alpha\alpha}$, etc.,

$$\frac{d\ell'^2}{d\ell^{o^2}} = \left[\frac{1 + \gamma_{\alpha\alpha}{}'}{1 + \gamma_{\alpha\alpha}{}^o} - 2\gamma_{\alpha\beta}{}^o \gamma_{\alpha\beta}{}'\right] \ell_\alpha{}^{o2} + \frac{1 + \gamma_{\beta\beta}{}'}{1 + \gamma_{\beta\beta}{}^o} \ell_\beta{}^{o2} +$$

$$+ 2\left[\frac{\gamma_{\alpha\beta}{}'}{\sqrt{(1 + \gamma_{\alpha\alpha}{}^o)(1 + \gamma_{\beta\beta}{}^o)}} - \gamma_{\alpha\beta}{}^o\right] \ell_\alpha^o \ell_\beta^o + \ell_z^2 .$$

For small deformations of the structure which slightly deviates from the model, the quantities $\gamma'_{\alpha\alpha}$, etc., are likewise small. Consequently, if quantities which are quadratic in $\gamma'_{\alpha\alpha}$, etc., and in $\gamma^o_{\alpha\alpha}$, etc., are also neglected, the deformation components of the structure with respect to the directions determined by (57.6) are

$$\gamma_{\alpha\alpha} = \gamma_{\alpha\alpha}{}' - \gamma_{\alpha\alpha}{}^o , \gamma_{\beta\beta} = \gamma_{\beta\beta}{}' - \gamma_{\beta\beta}{}^o , \gamma_{\alpha\beta} = \gamma_{\alpha\beta}{}' - \gamma_{\alpha\beta}{}^o$$

$$\gamma_{\alpha z} = \gamma_{\beta z} = \gamma_{zz} = 0 . \tag{57.8}$$

By use of (57 2) and (57. 4)

$$\gamma_{\alpha\alpha} = \gamma_{\alpha\alpha o}' + \gamma_{\alpha\alpha o}^{o} + 2z\rho_{\alpha\alpha}' + 2z\rho_{\alpha\alpha}^{o} + \gamma_{\alpha\alpha o}^{*} + 2z\rho_{\alpha\alpha}^{*} \text{ etc} \quad . \qquad (57.3)$$

The quantities $\gamma_{\alpha\alpha o}'$, $\rho_{\alpha\alpha}'$, etc., follow from the expressions for $\gamma_{\alpha\alpha o}$, $\rho_{\alpha\alpha}$, etc., given in Sect. 56 by replacement of w by $w_o + w$. In this procedure, terms of second and higher order in w_o and its derivatives will again be omitted. The quantities $\gamma_{\alpha\alpha o}^{o}$, $\rho_{\alpha\alpha}^{o}$, etc., are obtained from $\gamma_{\alpha\alpha o}$, $\rho_{\alpha\alpha}$, etc., by replacement of u, v, w by o, o, w_o respectively, whereby terms of the second order in w_o and its derivatives are likewise disregarded. The following rule can be given for the determination of $\gamma_{\alpha\alpha o}^{*}$, $\rho_{\alpha\alpha}^{*}$, etc.: replace w by $w_o + w$ in the expression for $\gamma_{\alpha\alpha o}$, $\rho_{\alpha\alpha}$, etc., of Sect. 56 and take into account only those terms in w_o and its derivatives which are linear in w_o and which contain at least one of the displacements u, v, w or one of their derivatives.

If $\gamma_{\alpha\alpha}^{o}$, etc., are disregarded in comparison to unity, the area of a surface element z = const. is determined by (55.10). This omission is justified, as contributions of the form $\gamma_{\alpha\alpha}^{o}$, $\gamma_{\alpha\alpha}$, etc., have already been omitted in the calculation of the strain components. The elastic energy per unit area of the structure or model is then without modification given by (55.11), but with the modified strain components.

Chapter 6

APPLICATION TO BAR AND PLATE PROBLEMS

61. THE INCOMPRESSIBLE BAR (PROBLEM OF THE ELASTICA).

611. The Potential Energy.

The ends of a prismatic bar of length ℓ are supported in such a way that displacements perpendicular to its axis may be excluded. It is clear that the straight undeformed state of the supposedly incompressible bar is always an equilibrium state if the bar is loaded by compressive forces N acting on the centers of the endpoints; this equilibrium state is called the fundamental state.

It is assumed that points on the bar axis can only undergo displacements which lie in a plane spanned by the beam axis and one of the principal axis of inertia of the cross-section. Let x be the distance from a point P on the undeformed beam axis with respect to one of the supports and let u and w be the displacements of this point in the direction of the axis and in the direction normal to it respectively. The origin of the rigid x_i system is fixed at the support $x = 0$; the x_1 axis coincides with the bar axis, the x_3 axis lies in the plane of bending of the bar. The coordinates of the point P in the deformed state are

$$x_1' = x + u\,, \quad x_2' = 0\,, \quad x_3' = w\,,$$

so that the length of an element of the bar axis in the deformed state, which initially had a length dx , is given by

$$d\ell'^2 = \left\{\left(\frac{dx_1'}{dx}\right)^2 + \left(\frac{dx_2'}{dx}\right)^2 + \left(\frac{dx_3'}{dx}\right)^2\right\} dx^2 = \left\{\left(1 + \frac{du}{dx}\right)^2 + \left(\frac{dw}{dx}\right)^2\right\} dx^2 .$$

The incompressibility of the bar axis is therefore expressed by the condition

$$\left(1 + \frac{du}{dx}\right)^2 + \left(\frac{dw}{dx}\right)^2 = 1 . \tag{61.1}$$

The curvature of the bar axis is determined by the formula

$$\rho = \pm \frac{\frac{dx_1'}{dx}\frac{d^2x_3'}{dx^2} - \frac{dx_3'}{dx}\frac{d^2x_1'}{dx^2}}{\left\{\left(\frac{dx_1'}{dx}\right)^2 + \left(\frac{dx_3'}{dx}\right)^2\right\}^{\frac{3}{2}}} ,$$

from which it follows by use of (61.1)

$$\rho = \pm \left\{\left(1 + \frac{du}{dx}\right)\frac{d^2w}{dx^2} - \frac{dw}{dx}\frac{d^2u}{dx^2}\right\} . \tag{61.2}$$

In agreement with the classical bending theory, the elastic energy of a bar element is assumed to be proportional to the square of the curvature. The total elastic energy then is

$$V = \frac{1}{2}\ \alpha \int_0^{\ell} \rho^2\, dx ,$$

in which α represents the bending stiffness of the bar. The potential energy of the axial loads N is, with compression, considered positive

$$- W = Nu \Big|_{x=0}^{x=\ell} = N \int_0^{\ell} \frac{du}{dx}\, dx .$$

After substitution of (61.2) the total potential energy $V - W$ is expressed in terms of the displacements. These are, however, related by the inhomogeneous condition (61.1), so that the general theory cannot immediately be applied (see Sect. 22). This difficulty disappears as the displacement component u is eliminated by use of (61.1)

$$\frac{du}{dx} = \sqrt{1 - \left(\frac{dw}{dx}\right)^2} - 1 .$$

Substitution in (61.2) gives

$$\rho = \pm \frac{\frac{d^2w}{dx^2}}{\sqrt{1 - \left(\frac{dw}{dx}\right)^2}}$$

so that apart from a trivial constant, the total energy is given by

$$V - W = \frac{1}{2}\alpha \int_0^{\ell} \frac{\left(\frac{d^2w}{dx^2}\right)^2}{1 - \left(\frac{dw}{dx}\right)^2} dx + N \int_0^{\ell} \sqrt{1 - \left(\frac{dw}{dx}\right)^2} dx . \qquad (61.3)$$

When the quantities appearing here are made dimensionless by

$$x = \xi \ell, \quad w = \psi \ell, \quad N = \lambda \frac{\pi^2 \alpha}{\ell^2}, \quad V - W = \frac{1}{2}\frac{\alpha}{\ell} P^{\lambda} ,$$

and if for brevity, differentiation with respect to is denoted by a dot, then (61.3) becomes

$$P^{\lambda}[\psi] = \int_0^1 \frac{\ddot{\psi}^2}{1 - \dot{\psi}^2} d\xi + 2\pi^2 \lambda \int_0^1 \sqrt{1 - \dot{\psi}^2} d\xi . \qquad (61.4)$$

Expansion of the integrands and omission of terms of higher than fourth order in the derivatives of ψ and of a trivial constant yields

$$\left.\begin{aligned} P^{\lambda}[\psi] &= P_2^{\lambda}[\psi] + P_4^{\lambda}[\psi] \\ P_2^{\lambda}[\psi] &= \int_0^1 (\psi^{\cdot\cdot 2} - \pi^2 \lambda \dot{\psi}^2)\, d\xi, \\ P_4^{\lambda}[\psi] &= \int_0^1 (\psi^{\cdot 2}\psi^{\cdot\cdot 2} - \tfrac{1}{4}\pi^2 \lambda \psi^{\cdot 4})\, d\xi \end{aligned}\right\} \qquad (61.5)$$

It appears also from (61.5) that the first variation of the energy is identically zero for the straight configuration of the bar, in agreement with the above statement that this state is always an equilibrium state.

612. The Buckling Load.

It follows from Sect. 31 that the buckling load is determined by the smallest value of λ for which the variational equation (24.14) is satisfied for an arbitrary kinematically admissible function ζ that consequently vanishes at $\xi = 0$ and at $\xi = 1$

$$P_{11}^{\lambda}[\psi, \zeta] = 2\int_0^1 (\psi^{\cdot\cdot}\zeta^{\cdot\cdot} - \pi^2 \lambda \psi^{\cdot} \zeta^{\cdot})\, d\xi = 0 .$$

Integration by parts yields

$$2\psi^{\cdot\cdot}\zeta^{\cdot}\Big|_0^1 - 2(\psi^{\cdot\cdot\cdot} + \pi^2\lambda\psi^{\cdot})\zeta\Big|_0^1 + 2\int_0^1 (\psi^{\cdot\cdot\cdot\cdot} + \pi^2\lambda\psi^{\cdot\cdot})\zeta\, d\xi = 0 .$$

As the function ζ is arbitrary for $0 < \xi < 1$, ψ should satisfy the differential equation

$$\psi^{\cdot\cdot\cdot\cdot} + \pi^2 \lambda \psi^{\cdot\cdot} = 0 . \tag{61.6}$$

The requirement that $\zeta^{\cdot}$ is arbitrary at $\xi = 0$ and at $\xi = 1$ further yields

$$\psi^{\cdot\cdot} = 0 \text{ for } \xi = 0 \text{ and } \xi = 1 , \tag{61.7}$$

while the kinematic conditions at the supports lead to the requirement

$$\psi = 0 \text{ for } \xi = 0 \text{ and } \xi = 1 . \tag{61.8}$$

The general solution of (61.6) is

$$\psi = A + B\xi + C \cos \pi\sqrt{\lambda}\,\xi + D \sin \pi\sqrt{\lambda}\,\xi .$$

The boundary conditions (61.7) and (61.8) admit a nonzero value for D only. This value exists if and only if

$$\pi\sqrt{\lambda} = k\pi . \quad (k = 1, 2, \ldots) ,$$

and remains in that case undetermined. The smallest value of the load parameter for which (61.6) (61.7) and (61.8) possess a nonzero solution is therefore $\lambda_1 = 1$ with the corresponding eigenfunction

$$\psi_1 = \sin \pi \xi ; \tag{61.9}$$

this function is normalized by introduction of the condition $\psi_1 = 1$ for $\xi = \frac{1}{2}$. The corresponding buckling load is the well known Euler load.

In the series (61.5) no term of the third order occurs so that $P_3[\psi_1]$ as well as $P_{21}[\psi_1, \zeta]$ are zero. Consequently, the quantity which governs stability in the critical state would be (see Sect. 25)

$$A_4 = P_4[\psi_1] = \int_0^1 \left(\psi_1^{\cdot 2} \psi_1^{\cdot\cdot 2} - \frac{1}{4}\pi^2 \lambda_1 \psi_1^{\cdot 4} \right) d\xi =$$

$$= \pi^6 \int_0^1 \left(\sin^2 \pi\xi \cos^2 \pi\xi - \frac{1}{4} \cos^4 \pi\xi \right) d\xi = \frac{\pi^6}{32}. \qquad (61.10)$$

As it is a positive quantity equilibrium at the buckling load is stable.

613. Equilibrium States for Loads in the Neighborhood of the Buckling Load.

It follows from (61.5) that

$$P_2'[\psi] = -\pi^2 \int_0^1 \psi^{\cdot 2} d\xi,$$

so that the constant A_2' is

$$A_2' = P_2'[\psi_1] = -\pi^4 \int_0^1 \cos^2 \pi\xi d\xi = -\frac{\pi^4}{2}. \qquad (61.11)$$

It follows then from (35.7) that the amplitude of the eigenfunction (61.9) for loads in the neighborhood of the buckling load is given by

$$\underline{a} = \pm\sqrt{-\frac{2}{4}\frac{-\frac{1}{2}\pi^4}{\frac{1}{32}\pi^6}\sqrt{\lambda - \lambda_1}} = \pm\frac{2\sqrt{2}}{\pi}\sqrt{\frac{\lambda}{\lambda_1} - 1} \ . \tag{61.12}$$

This result agrees with the approximate solution of von Mises [42] which was obtained in a different way.

It appears from (61.10) that the displacements from the fundamental state grow very rapidly as the load is increased. For a load which exceeds the buckling load only by 5% the largest deflection at the middle of the bar amounts to about 20% of the length of the bar. Consequently, there is little sense in applying the theory of Sect. 38 for loads further removed from the buckling load. Indeed, the present theory does not yield improved results for greater loads, but the opposite will be the case. This should not be surprising in the present case as for such loads and the corresponding large displacements the assumption of Sect. 38 concerning the smallness of displacements is not in the least satisfied.

614. The Influence of a Small Eccentricity of the Load.

Up till now it was assumed that the resultant of the compressive forces in the end-points act in the neutral axis of the cross-section. The influence of a small eccentricity $\epsilon\ell$ of the loading can be taken into account by application of two moments $N\epsilon\ell$ of opposite sign on the ends of the bar in addition to the compressive loads N. These moments are understood to be positive if in the absence of the compressive loads, the curved bar axis turns its concave side towards the positive x_3 direction. Let θ be the rotation of a cross section of the bar, positive in the direction from the x_3-axis towards the x_1-axis. The energy of the moments then is

$$N\epsilon\ell\left\{(\theta)_{\xi=1} - (\theta)_{\xi=0}\right\} \ .$$

This energy should be added to the sum (61.3) of the elastic energy and the energy of the compressive loads. On account of the incompressibility of the bar axis, the angle θ is determined by

$$\theta = -\arcsin\frac{dw}{dx} = -\arcsin\psi' ,$$

or after expansion

$$\theta = -\psi' - \frac{1}{6}\psi'^3 - \ldots$$

After devision by $\frac{1}{2}\frac{\alpha}{\ell}$ the total energy can be written as

$$P^\lambda[\psi] + \epsilon Q^\lambda[\psi] = \epsilon Q_1^\lambda[\psi] + P_2^\lambda[\psi] + P_4^\lambda[\psi] + \ldots , \tag{61.13}$$

in which $P_2^\lambda[\psi]$ and $P_4^\lambda[\psi]$ are determined by (61.5) and

$$Q_1^\lambda[\psi] = -2\pi^2\lambda\psi' \Big|_{\xi=0}^{\xi=1} . \tag{61.14}$$

In agreement with Chapter 4 only the linear influence of the eccentricity in the displacements is taken into account.

For loads in the neighborhood of the buckling load for the centrally compressed bar, the equilibrium states are determined by the stationary values of (44.9). The coefficients A_4 and A_2' are given by (61.10) and (61.11) respectively. B_1 is determined by

$$B_1 = Q_1\left[\psi_1\right] = -2\pi^2\lambda_1\psi_1' \Big|_{\xi=0}^{\xi=1} = 4\pi^3 . \tag{61.15}$$

For the problem under consideration it is also of interest to know the equilibrium states for loads which are considerably smaller than the buckling load of the centrally compressed bar. For this purpose use is made of expression (47.8). In order to obtain connection with equilibrium states of the centrally loaded bar as treated in Sect. 613., in expression (47.8) the coefficient A_4^λ is replaced by A_4. This yields no significant modification in the immediate neighborhood of the buckling load of the centrally compressed bar. For greater or for smaller loads it rapidly becomes either so large that it violates the assumption regarding the smallness of the displacements on which (47.8) is based or it becomes so small that the fourth order term in (47.8) is of minor importance. Therefore, whenever (47.8) can be applied to the present case, there is no objection to the replacement of A_4^λ by A_4. The remaining constants are determined by

$$B_1' = Q_1'[\psi_1] = -2\pi^2\psi_1' \Big|_{\xi=0}^{\xi=1} = 4\pi^3 , \quad A_2^0 = -\frac{1}{\lambda_1}A_2' = \frac{1}{2}\pi^4 ,$$

so that (47.8) becomes

$$F^\lambda(\underline{a}) = 4\pi^3\epsilon\lambda\underline{a} + \frac{1}{2}\pi^4(1-\lambda)\underline{a}^2 + \frac{1}{32}\pi^6\underline{a}^4 . \tag{61.16}$$

The equilibrium states are determined by

$$\frac{dF^\lambda(\underline{a})}{d\underline{a}} = 4\pi^3\epsilon\lambda + \pi^4(1-\lambda)\underline{a} + \frac{1}{8}\pi^6\underline{a}^3 = 0 . \tag{61.17}$$

The stability of equilibrium is governed by the sign of the second derivative of (61.16)

$$\frac{d^2F^\lambda(\underline{a})}{d\underline{a}^2} = \pi^4(1-\lambda) + \frac{3}{8}\pi^6\underline{a}^2 . \tag{61.18}$$

In view of the fact that the variations $\delta\theta$, for $0 < \xi < 1$ are arbitrary, the differential equation

$$\theta'' + \pi^2 \lambda \sin \theta = 0 \tag{61.20}$$

must be satisfied, while for $\xi = 0$ and $\xi = 1$ the boundary conditions must hold

$$\theta' + \pi^2 \epsilon \lambda = 0 \tag{61.21}$$

By restriction of the considerations to deviations which are symmetric with respect to the midpoint of the bar, the boundary condition for $\xi = 1$ may be replaced by the condition

$$\theta = 0 \tag{61.22}$$

holding for $\xi = \frac{1}{2}$.

As is well known the integration of (61.20) can be performed by use of elliptic integrals (see appendix). The result, the dimensionless deflection β at the midpoint of the bar (the value ψ for $\xi = \frac{1}{2}$) as a function of the load parameter λ is represented in Fig. 4 for the centrally loaded bar (curve I) as well as for a bar with the eccentricity parameter $\epsilon = 0.01$ (curve Ia). Furthermore, in this figure the approximate solutions (61.12) and (61.17) are drawn for $\epsilon = 0$ and for $\epsilon = 0.01$; the values of β corresponding to these solutions are directly given by $\underline{a}$. The boundary between the stable and unstable regions of the approximate solutions is also indicated. This boundary is obtained when (61.18) is set equal to zero.[1,2]

---

[1]In order to avoid crowding of the figure, a relatively large eccentricity has been assumed.

[2]The analysis of the stability of the exact solution (61.20) is very complicated and it will not be persued.

615. Comparison with the Exact Solution

It is possible to give the exact solution for the problem treated above. The energy of the eccentricity moments amounts to

$$N\epsilon\ell\theta \Bigg|_{\xi=0}^{\xi=1} = \frac{1}{2}\frac{\alpha}{\ell} 2\pi^2 \epsilon\lambda\theta \Bigg|_{\xi=0}^{\xi=1}$$

By use of (61.4) after devision by $\frac{1}{2}\frac{\alpha}{\ell}$, the total energy can be written

$$P^{\lambda}[\psi] + \epsilon Q^{\lambda}[\psi] = 2\pi^2\epsilon\lambda\theta \Bigg|_{\xi=0}^{\xi=1} + \int_0^1 \left| \frac{\psi^{\cdot\cdot 2}}{1-\psi^{\cdot 2}} + 2\pi^2\sqrt{1-\psi^{\cdot 2}} \right| d\xi .$$

By substitution of $\psi^{\cdot} = -\sin\theta$ this expression becomes

$$P^{\lambda}[\theta] + \epsilon Q^{\lambda}[\theta] = 2\pi^2\epsilon\lambda\theta \Bigg|_{\xi=0}^{\xi=1} + \int_0^1 (\theta^{\cdot 2} + 2\pi^2\lambda\cos\theta)\, d\xi . \tag{61.19}$$

Equilibrium states are determined by stationary values of the energy, therefore, also by stationary values of (61.19). The first variation of this expression is

$$\delta\left| P^{\lambda}[\theta] + \epsilon Q^{\lambda}[\theta] \right| = 2\pi^2\epsilon\lambda\delta\theta \Bigg|_{\xi=0}^{\xi=1} + \int_0^1 (2\theta^{\cdot}\delta\theta^{\cdot} - 2\pi^2\lambda\sin\theta\,\delta\theta)\, d\xi =$$

$$= 2(\pi^2\epsilon\lambda + \theta^{\cdot})\delta\theta \Bigg|_{\xi=0}^{\xi=1} - 2\int_0^1 (\theta^{\cdot\cdot} + \pi^2\lambda\sin\theta)\,\delta\theta\, d\xi ..$$

Moreover, in Fig. 4 the solution of the well known beam column theory is represented (curve IIIa, b for $\epsilon = 0.01$). This solution is obtained by omission of all terms of an order higher than two in (61.13). In order that the energy so approximated

$$- 2\pi^2 \epsilon \lambda \psi' \Big|_{\xi = 0}^{\xi = 1} + \int_0^1 (\psi''^2 - \pi^2 \lambda \psi'^2)\, d\xi$$

would have a stationary value, ψ must satisfy the differential equation (61.6) with boundary conditions

$$\xi = 0 \text{ and } \xi = 1 : \ \psi = 0 \text{ and } \psi'' = \pi^2 \epsilon \lambda . \tag{61.23}$$

By use of (61.23) the four integration constants of the general solution of (61.6) are determined. For the dimensionless deflection at the middle of the beam, it is found

$$\beta = \epsilon \left(1 - \sec \tfrac{1}{2} \pi \sqrt{\lambda}\right) . \tag{61.24}$$

This result is well known (see for instance [43], eq. 27). As $\epsilon \to 0$ this solution becomes $\beta = 0$ for $\lambda \neq \lambda_1$, while for $\lambda = \lambda_1$ the deflection is undetermined (curve III). The latter solution can also be obtained if the solution $\underline{a}\psi_1$ for neutral equilibrium of the equation (61.6) with boundary conditions (61.7) and (61.8) which holds for $\lambda = \lambda_1$ and infinitesimal values of $\underline{a}$, is regarded as an approximate solution for finite deflections (see also Sect. 35).

It appears from Fig. 4 that the approximate solutions II and IIa are close to the exact solution if the deflection at the midpoint of the bar does not exceed 20% of the length of the bar. The approximation by the beam column theory is satisfactory if this largest deflection remains smaller than 10% of the bar length. In the case of eccentric loads, the approximate theory developed here may be applied to the natural equilibrium state for loads below the buckling load for the centrically loaded bar, and the beam column theory holds for loads up to 90% of this buckling load. The extension

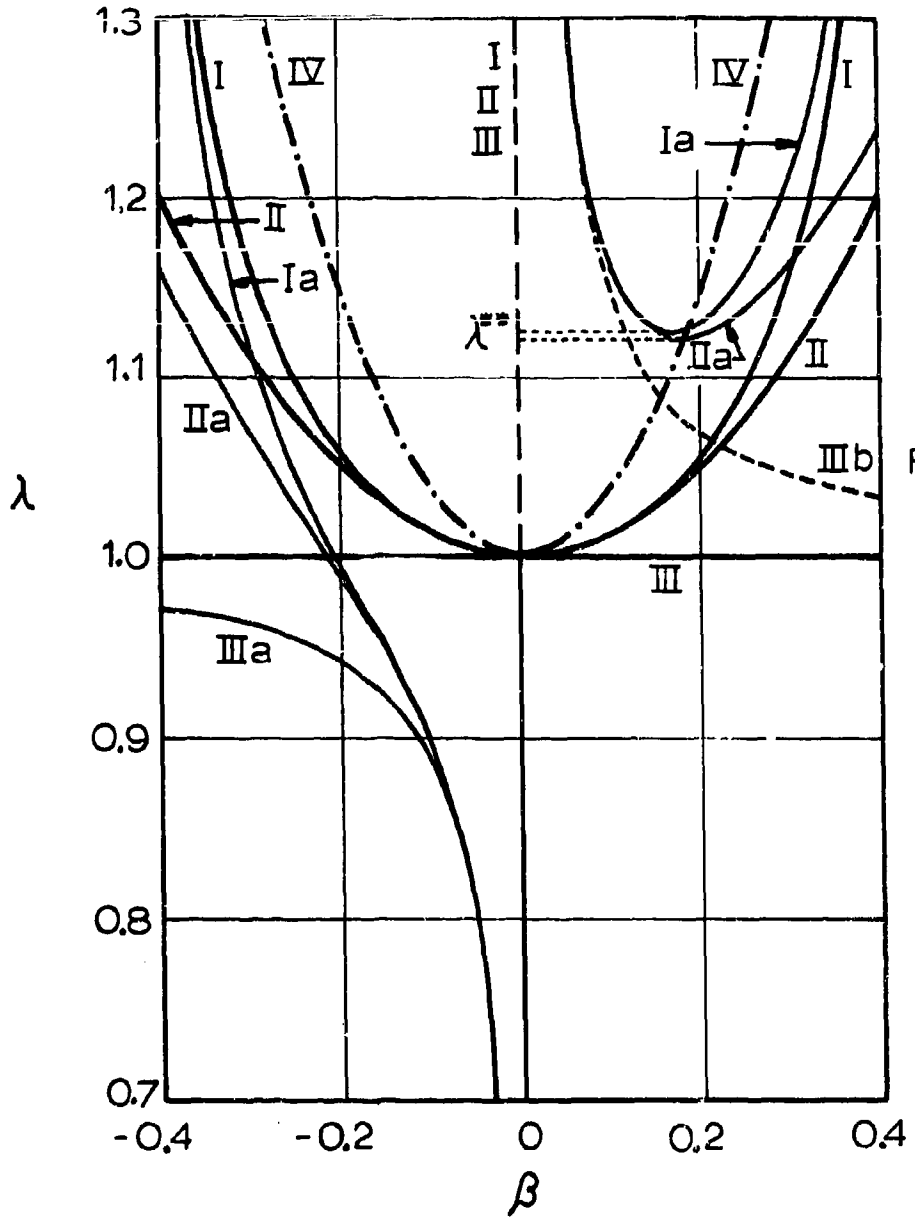

FIG. 4

I. Exact solution without eccentricity.
Ia. Exact solution with eccentricity.
II. Approximate solution without eccentricity.
IIa. Approximate solution with eccentricity.
III. Approximate solution corresponding to the assumption that neutral equilibrium is applicable for finite displacements.
IIIa, b. Beam-column theory (with eccentricity)
IV. Boarder between regions of stable and unstable equilibrium for the approximate Solutions II and IIa.

of the region of validity of the beam column theory is small in this example; this is due to the small value of A_4 resulting in a very rapid increase of the deflections as the buckling load of the centrically loaded beam is surpassed.

62. COX'S PROBLEM [23].

The ends of a prismatic, supposedly incompressible bar of length ℓ, are simply supported such that displacements perpendicular to the bar axis are excluded. Again, consideration will be given to bending which takes place in a plane through the bar axis and a principal axis of inertia of the cross-section; the same notation will be used as in Sect. 611.

At the middle midpoint C of the bar AB (Fig. 5a) two identical compressible bars are attached through hinges. The end points of these supporting bars which lie in a plane perpendicular to AB, are simply supported at the rigid points D and E. The plane of symmetry of this support coincides with the plane of bending of AB. It is further assumed that the point C cannot undergo displacements in the direction of the AB bar axis. The distance between the points D and E is denoted 2b, the distance from C to the midpoint of the line DE is denoted by d (Fig. 5b)

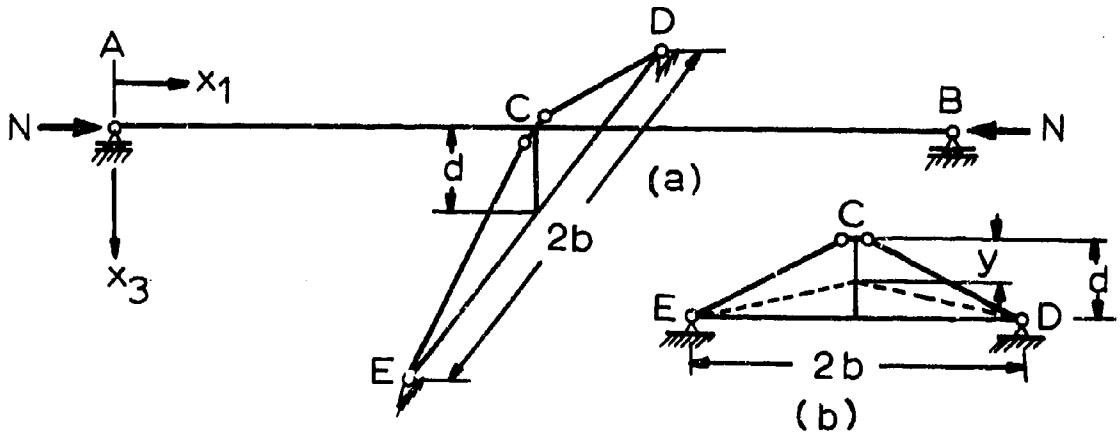

FIG. 5

it is clear that the straight undeformed state of the bar, which corresponds to undeformed supports, is always a possible state of equilibrium when the loading consists of two opposing compressive forces N. This state of equilibrium is the fundamental state.

621. The Potential Energy

Let y be the displacement of the point C in the direction x_3. It follows then that the length of the supports amounts to $\sqrt{b^2 + d^2}$ in the undeformed state, and to $\sqrt{b^2 + (d-y)^2}$ in the undeformed state (see fig. 5b). If, for the moment, a rigid coordinate system x_1, x_2, x_3 is conceived as fixed with the x_1- axis along one of the supporting bars, then the deformation component γ_{11} of this bar is (see Sect. 11)

$$\gamma_{11} = \frac{b^2 + (d - y)^2}{b^2 + d^2} - 1 = -\frac{2dy}{b^2 + d^2} + \frac{y^2}{b^2 + d^2}.$$

The elastic potential for the support is then given by expression

$$\frac{1}{8}E\gamma_{11}^{\ 2} \text{ with } E = 2G\,\frac{m+1}{m}. \tag{62.1}$$

This result can easily be derived from (12.5) as the deformation components γ_{ij} $(i \neq j)$ are zero while the absence of normal stresses in planes parallel to the support axis, by analogy to Sect. 54, leads to the conditions

$$\frac{\partial A}{\partial \gamma_{22}} = \frac{A}{\partial \gamma_{33}} = 0 \text{ or } \gamma_{22} = \gamma_{33} = -\frac{1}{m}\gamma_{11}.$$

Substitution in (12.5) then gives (62.1).

The total elastic energy in the supports is

$$2 \cdot \frac{1}{8}E\gamma_{11}^{\ 2}F\sqrt{b^2 + d^2} = \frac{EF}{\left(\sqrt{b^2 + d^2}\right)^3}\left(d^2y^2 - dy^3 + \frac{1}{4}y^4\right),$$

where F is the area of the supporting bars. With

$$\frac{EF\ell^3}{\alpha\left\{\sqrt{b^2+d^2}\right\}^3}\frac{d^2}{8\pi^2} = M \text{ and } y = \ell B \tag{62.2}$$

in which α is the bending stiffness of the bar AB and M a constant introduced by Cox [23], the energy of the support is written as

$$8\pi^2 M\frac{\alpha}{\ell}\left(\beta^2 - \frac{\ell}{d}\beta^3 + \frac{1}{4}\frac{\ell^2}{d^2}\beta^4\right) . \tag{62.3}$$

For the sum of the elastic energy of the beam and energy of the loads, it can by use of (61.4) be written

$$V - W = \frac{1}{2}\frac{\alpha}{\ell}\int_0^1\left\{\frac{\psi^{\cdot\cdot 2}}{1-\psi^{\cdot 2}} + 2\pi^2\lambda\sqrt{1-\psi^{\cdot 2}}\right\}d\xi =$$

$$= \frac{1}{2}\frac{\alpha}{\ell}\left\{\int_0^1 (\psi^{\cdot\cdot 2} - \pi^2\lambda\psi^{\cdot 2})\,d\xi + \int_0^1\left(\psi^{\cdot 2}\psi^{\cdot\cdot 2} - \frac{1}{4}\pi^2\lambda\psi^{\cdot 4}\right)d\xi\right. .$$

Here a trivial constant has been disregarded and the series has been terminated after the terms of the fourth order. By restriction of the considerations to symmetric deflections with respect to the midpoint C of AB, the total energy is

$$\text{Energy} = \frac{\alpha}{\ell}\left\{P_2^\lambda[\psi] + P_3^\lambda[\psi] + P_4^\lambda[\psi]\right\}$$

with

$$P_2^\lambda[\psi] = \int_0^{\frac{1}{2}} (\psi''^2 - \pi^2\lambda\psi'^2)\, d\xi + 8\pi^2 M\beta^2 ,$$

$$P_3^\lambda[\psi] = -8\pi^2 M \frac{\ell}{d}\beta^3 ,$$

$$P_4^\lambda[\psi] = \int_0^{\frac{1}{2}} \left(\psi'^2\psi''^2 - \frac{1}{4}\pi^2\lambda\psi'^4\right) d\xi + 2\pi^2 M \frac{\ell^2}{d^2}\beta^4 . \qquad (62.4)$$

It should be noted also that in view of (62.2), β is the value of ψ for $\xi = \frac{1}{2}$. It appears from (62.4) that the first variation of the energy is identically zero for the state in which the bar remains straight, in agreement with the fact that this state is always a possible state of equilibrium.

622. The Buckling Load

According to Sect. 31, the buckling load is determined by the smallest value of λ for which, with an arbitrary kinematically possible function ζ, the variational equation (24.14) is satisfied

$$P_{11}^\lambda[\psi,\zeta] = 2\int_0^{\frac{1}{2}} (\psi''\zeta'' - \pi^2\lambda\psi'\zeta')\, d\xi + 16\pi^2 M(\psi\zeta)_{\xi=\frac{1}{2}} = 0 . \qquad (62.5)$$

After restriction to deflections which are symmetric with respect to C, the kinematic conditions for the function ζ are given by

$$\zeta = 0 \text{ for } \xi = 0 \text{ and } \zeta' = 0 \text{ for } \xi = \frac{1}{2}.$$

Through integration by parts it follows from (62.5) that

$$2\psi'' \zeta' \Big|_{\xi=0}^{\xi=\frac{1}{2}} - 2(\psi''' + \pi^2\lambda\psi')\zeta \Big|_{\xi=0}^{\xi=\frac{1}{2}} + 16\pi^2 M(\psi\zeta)_{\xi=\frac{1}{2}} +$$

$$+ 2\int_0^{\frac{1}{2}} (\psi'''' + \pi^2\lambda\psi'')\zeta d\xi = 0 .$$

Since the function ζ is arbitrary for $0 < \xi < \frac{1}{2}$, ψ should satisfy the differential equation

$$\psi'''' + \pi^2\lambda\psi'' = 0 ; \tag{62.6}$$

due to the fact that ζ' is arbitrary for $\xi = 0$ and ζ for $\xi = \frac{1}{2}$ it follows

$$\psi'' = 0 \text{ for } \xi = 0 \text{ and } -\psi''' - \pi^2\lambda\psi' + 8\pi^2 M\psi = 0 \text{ for } \xi = \frac{1}{2} . \tag{62.7}$$

Moreover ψ should satisfy the kinematic conditions

$$\psi = 0 \text{ for } \xi = 0 \text{ and } \psi' = 0 \text{ for } \xi = \frac{1}{2}. \tag{62.8}$$

The general solution of (62.6) is given by

$$\psi = A + B\xi + C\cos\pi\sqrt{\lambda}\,\xi + D\sin\pi\sqrt{\lambda}\,\xi . \tag{62.9}$$

The boundary conditions for $\xi = 0$ yield

$$A = C = 0$$

The remaining constants with $\pi\sqrt{\lambda} = \mu$ are determined by the boundary conditions at $\xi = \frac{1}{2}$

$$B + \mu D\cos\tfrac{1}{2}\mu = 0 ,$$

$$\mu^3 D\cos\tfrac{1}{2}\mu + 8\pi^2 M\left(\tfrac{1}{2}B + D\sin\tfrac{1}{2}\mu\right) = 0 . \tag{62.10}$$

These equations possess a non-zero solution if and only if the determinant of the coefficients is zero. This condition becomes after some manipulation

$$M = -\frac{\mu^3\cos\frac{1}{2}\mu}{8\pi^2\left(\sin\frac{1}{2}\mu - \frac{1}{2}\mu\cos\frac{1}{2}\mu\right)} = -\frac{\lambda\mu}{8\left(\mathrm{tg}\frac{1}{2}\mu - \frac{1}{2}\mu\right)} . \tag{62.11}$$

The buckling load is determined by the smallest value $\mu_1 = \pi\sqrt{\lambda_1}$ which satisfies (62.11). If M increases beyond bounds from zero, μ_1 grows from π to the value 8.986 ... determined by the equation

$$\mathrm{tg}\tfrac{1}{2}\mu - \tfrac{1}{2}\mu = 0 . \tag{62.12}$$

The value λ_1 for the buckling load lies consequently in the region

$$1 \leq \lambda_1 < \frac{8.986^2}{\pi^2} = 8.18 .$$

The eigenfunction belonging to λ_1 is given by

$$\psi_1 = \sin \mu_1 \xi - \mu_1 \xi \cos \tfrac{1}{2}\mu_1 ; \tag{62.13}$$

it is normalized in such a way that its value for $\xi = \frac{1}{2}$ is

$$\beta_1 = \left(\psi_1\right)_{\xi = \frac{1}{2}} = \sin \tfrac{1}{2}\mu_1 - \tfrac{1}{2}\mu_1 \cos \tfrac{1}{2}\mu_1 . \tag{62.14}$$

Stability at the buckling load is in the first place governed by the quantity

$$A_3 = P_3 [\psi_1] = - 8\pi^2 M \frac{\ell}{d} \beta_1^3 = - 8\pi^2 M \frac{\ell}{d} \left(\sin \tfrac{1}{2}\mu_1 - \tfrac{1}{2}\mu_1 \cos \tfrac{1}{2}\mu_1\right)^3 =$$

$$= \frac{\ell}{d} \mu_1^3 \cos \tfrac{1}{2}\mu_1 \left(\sin \tfrac{1}{2}\mu_1 - \tfrac{1}{2}\mu_1 \cos \tfrac{1}{2}\mu_1\right)^2 . \tag{62.15}$$

This quantity is zero only if one of the factors of (62.15) is zero, i.e. when $\mu_1 = \pi$ or when μ_1 is equal to the value determined by (62.12); the corresponding values of M are zero and infinite respectively. Consequently, for values of M between these bounds, equilibrium at the buckling load is always unstable.

623. Equilibrium States for Loads in the Neighborhood of the Buckling Load

It follows from (62.4) that

$$P_2' [\psi] = - \pi^2 \int_0^{\frac{1}{2}} \psi'^2 \, d\xi ,$$

so that the constant A_2' is found to be

$$A_2' = P_2'[\psi_1] = -\pi^2\mu_1^2 \int_0^{\frac{1}{2}} \left(\cos\mu_1\xi - \cos\tfrac{1}{2}\mu_1\right)^2 d\xi =$$

$$= -\pi^2\mu_1^2\left(\frac{1}{2} + \frac{1}{4}\cos\mu_1 - \frac{3}{4}\frac{\sin\mu_1}{\mu_1}\right). \qquad (62.16)$$

It follows then from (35.6) that, at loads in the neighborhood of the buckling load, the amplitude of the eigenfunction (62.13) is given by

$$\underline{a} = \frac{2}{3}\frac{\pi^2\mu_1^2\left(\frac{1}{2} + \frac{1}{4}\cos\mu_1 - \frac{3}{4}\frac{\sin\mu_1}{\mu_1}\right)}{\frac{\ell}{d}\mu_1^3\cos\frac{1}{2}\mu_1\left(\sin\frac{1}{2}\mu_1 - \frac{1}{2}\mu_1\cos\frac{1}{2}\mu_1\right)^2}(\lambda-\lambda_1). \qquad (62.17)$$

The deflection at the midpoint of the bar is

$$w_{\xi=\frac{1}{2}} = \underline{a}\ell\beta_1 = \underline{a}\ell\left(\sin\tfrac{1}{2}\mu_1 - \tfrac{1}{2}\mu_1\cos\tfrac{1}{2}\mu_1\right).$$

When this deflection is made dimensionless by

$$w_{\xi=\frac{1}{2}} = rd\ ,$$

then it follows from (62.17) that

$$r = \frac{2}{3}\frac{\pi^2\left(\frac{1}{2} + \frac{1}{4}\cos\mu_1 - \frac{3}{4}\frac{\sin\mu_1}{\mu_1}\right)}{\mu_1\cos\frac{1}{2}\mu_1\left(\sin\frac{1}{2}\mu_1 - \frac{1}{2}\mu_1\cos\frac{1}{2}\mu_1\right)}(\lambda-\lambda_1). \qquad (62.18)$$

For loads further removed from the buckling load, the theory of Sect. 38 may be applied. If the displacements from the fundamental state are still so small that the term of the fourth order in (38.22) may be neglected, it follows, after the derivatives of (38.22) are set equal to zero,

$$\underline{a} = -\frac{2}{3}\,\frac{\left(1 - \frac{\lambda}{\lambda_1}\right)A_2^0}{A_3^0 + \lambda A_3'}\,. \tag{62.19}$$

Here (see also (62.4))

$$A_2^0 = P_2^0\,[\psi_1] = -\lambda_1 P_2'\,[\psi_1] = -\lambda_1 A_2'\,;\; A_3' = P_3'\,[\psi_1] = 0$$

and thus (62.19) agrees completely with (35.6). Therefore, the theory of Sect. 38 does not cause important modification of (62.18), even if the load is considerably different from the buckling load.

624. The Influence of Small Deviations

At present it will be assumed that in the undeformed state the bar axis AB slightly deviates from the straight line, while the undeformed state of the supports remains unchanged. The deviation will be such that in the undeformed state the coordinates of a point of the bar axis are given by

$$x_1^0 = x\,,\quad x_3^0 = w_0\,. \tag{62.20}$$

The deviation of the undeformed state from the model with coordinates $x_1 = x$, $x_3 = 0$ which was considered above is small if the quantity w_0 is small. In agreement with Chapter 4, this smallness justifies omission of quantities of second and

higher order in w_o and its derivatives. The length of a line-element of the undeformed bar axis then is

$$d\ell^o = \sqrt{1 + \left(\frac{dw_o}{dx}\right)^2}\, dx = dx . \tag{62.21}$$

It is assumed that at $x = 0$ and at $x = \ell$ the function w_o becomes zero.

If the point (62.20) undergoes displacements u and w in the directions of the axes, then the length of a line element of the deformed bar axis is

$$d\ell' = \sqrt{\left(1 + \frac{du}{dx}\right)^2 + \left(\frac{dw_o}{dx} + \frac{dw}{dx}\right)^2}\, dx .$$

The incompressibility of the bar axis is consequently expressed by the condition

$$\left(1 + \frac{du}{dx}\right)^2 + \left(\frac{dw_o}{dx} + \frac{dw}{dx}\right)^2 = 1 . \tag{62.22}$$

The curvature of the bar axis in the undeformed state is

$$\rho^o = \pm \frac{\dfrac{dx_1^o}{dx}\dfrac{d^2x_3^o}{dx^2} - \dfrac{dx_3^o}{dx}\dfrac{d^2x_1^o}{dx^2}}{\left\{\left(\dfrac{dx_1^o}{dx}\right)^2 + \left(\dfrac{dx_3^o}{dx}\right)^2\right\}^{\frac{3}{2}}} = \pm \frac{d^2w_o}{dx^2} ,$$

and in the deformed state it is

$$\rho' = \pm \frac{\left(1 + \frac{du}{dx}\right)\left(\frac{d^2w_o}{dx^2} + \frac{d^2w}{dx^2}\right) - \left(\frac{dw_o}{dx} + \frac{dw}{dx}\right)\frac{d^2u}{dx^2}}{\left\{\left(1 + \frac{du}{dx}\right)^2 + \left(\frac{dw_o}{dx} + \frac{dw}{dx}\right)^2\right\}^{3/2}} .$$

By use of (62.22) the function u can be eliminated. The result is (see also sec. 611)

$$\rho' = \pm \frac{\frac{d^2w_o}{dx^2} + \frac{d^2w}{dx^2}}{\sqrt{1 - \left(\frac{dw_o}{dx} + \frac{dw}{dx}\right)^2}} .$$

After expansion and omission of terms of the fifth and higher order in the derivatives of w_o and w as well as of terms of the second and higher order in w_o, it follows

$$\rho' = \pm \left\{\frac{d^2w_o}{dx^2} + \frac{d^2w}{dx^2} + \frac{1}{2}\frac{d^2w_o}{dx^2}\left(\frac{dw}{dx}\right)^2 + \frac{dw_o}{dx}\frac{dw}{dx}\frac{d^2w}{dx^2} + \frac{1}{2}\left(\frac{dw}{dx}\right)^2\frac{d^2w}{dx^2}\right\} .$$

The energy in a beam element is taken to be proportional to the square of the change of curvature $\rho' - \rho^o$. If terms of the sixth and higher order in the derivatives of w_o and w, as well as terms of the second and higher order in w_o are neglected, the total energy in the bar is

$$\frac{1}{2}\alpha\int_0^{\ell^o}\left(\rho' - \rho^o\right)^2 d\ell^o = \frac{1}{2}\alpha\int_0^{\ell}\left\{\left(\frac{d^2w}{dx^2}\right)^2 + \frac{d^2w_o}{dx^2}\left(\frac{dw}{dx}\right)^2\frac{d^2w}{dx^2} + \right.$$

$$\left. + 2\frac{dw_o}{dx}\frac{dw}{dx}\left(\frac{d^2w}{dx^2}\right)^2 + \left(\frac{dw}{dx}\right)^2\left(\frac{d^2w}{dx^2}\right)^2\right\} dx . \qquad (62.23)$$

The energy of the loads is

$$Nu \Big|_{x=o}^{x=\ell} = N \int_o^{\ell} \frac{du}{dx}\, dx \ ,$$

for which, after use of (62.22) and expansion with omission of terms of the sixth and higher order in the derivatives of w_o and w and terms of the second and higher order in the derivative of w_o, it follows

$$N \int_o^{\ell} \left\{ \sqrt{1 - \left(\frac{dw_o}{dx} + \frac{dw}{dx}\right)^2} - 1 \right\} dx =$$

$$= -\frac{1}{2} N \int_o^{\ell} \left\{ 2 \frac{dw_o}{dx} \frac{dw}{dx} + \left(\frac{dw}{dx}\right)^2 + \frac{dw_o}{dx}\left(\frac{dw}{dx}\right)^3 + \frac{1}{4}\left(\frac{dw}{dx}\right)^4 \right\} dx \ . \quad (62.24)$$

For the energy of the supports, (62.3) remains valid without change. These quantities are again made dimensionless by

$$x = \xi \ell \ , \quad w_o = \epsilon \psi_o \ell \ , \quad w = \psi \ell \ , \quad N = \lambda \frac{\pi^2 \alpha}{\ell^2} \ .$$

Here ψ_o is a function which describes the form of the deviation of the bar axis from the straight line; ϵ is the deviation parameter which determines the magnitude of the deviations. At $\xi = 0$ and $\xi = 1, \psi_o$ is equal to zero. Differentiations with respect to ξ are again denoted by a dot. When the considerations are restricted to symmetric deflections with respect to the midpoint of the beam then the total energy as a sum of (62.23), (62.24) and (62.3) is

$$\text{Energy} = \frac{\alpha}{\ell} \left\{ P_2^{\lambda} [\psi] + P_3^{\lambda} [\psi] + P_4^{\lambda} [\psi] + \epsilon Q_1^{\lambda} [\psi] + \epsilon Q_3^{\lambda} [\psi] \right\}; \quad (62.25)$$

In this expression the first three terms are given by (62.4), the remaining terms by

$$\left.\begin{aligned} Q_1\lambda\ [\psi] &= -\ 2\pi^2\ \lambda \int_0^{1/2} \psi_0^{\cdot}\ \psi^{\cdot} d\,\xi\ , \\ Q_3\lambda\ [\psi] &= \int_0^{1/2} (\psi_0^{\cdot\cdot}\ \psi^{\cdot 2}\psi^{\cdot\cdot} + 2\psi_0^{\cdot}\ \psi^{\cdot}\ \psi^{\cdot\cdot 2} - \pi^2\lambda\psi_0^{\cdot}\ \psi^{\cdot 3})\, d\,\xi \end{aligned}\right\} \qquad (62.26)$$

For small values of ψ , the conditions given in Sect. 47 for the extended theory are satisfied. If terms of the fourth order in the displacements are omitted, the coefficients of (47.8) follow immediately (see (38.21), (62.4) and (62.26))

$$\left.\begin{aligned} A_2^0 &= P_2^0\ [\psi_1] = -\lambda_1 P_2'[\psi_1] = \\ &= \lambda_1\pi^2\mu_1^2\left(\frac{1}{2} + \frac{1}{4}\cos\mu_1 - \frac{3}{4}\frac{\sin\mu_1}{\mu_1}\right)\ , \\ A_3^0 &= P_3^0\ [\psi_1] = P_3\,[\psi_1] = \\ &= \frac{\ell}{d}\,\mu_1^3\cos\tfrac{1}{2}\mu_1\,(\sin\tfrac{1}{2}\mu_1 - \tfrac{1}{2}\mu_1\cos\tfrac{1}{2}\mu_1)^2\ , \\ A_3' &= 0\ , \\ B_1' &= Q_1'[\psi_1] = -\ 2\pi^2\mu_1 \int_0^{1/2} \psi_0^{\cdot}\,(\cos\mu_1\,\xi - \cos\tfrac{1}{2}\mu_1)\, d\,\xi\ , \end{aligned}\right\} \qquad (62.27)$$

In agreement with the work by Cox it is assumed here that the undeformed beam consists of two straight parts which are connected to each other in an angle at the midpoint C. The deviation function ψ_o is chosen in such a way the midpoint C lies on a distance d under the line AB

$$\psi_o = 2\frac{d}{\ell}\xi \text{ for } 0 \leq \xi \leq \frac{1}{2} . \tag{62.28}$$

The constant B_1' then is

$$B_1' = -4\pi^2\frac{d}{\ell}(\sin\frac{1}{2}\mu_1 - \frac{1}{2}\mu_1\cos\frac{1}{2}\mu_1) . \tag{62.29}$$

The deflection at the midpoint is

$$\underline{a}\beta\ell = \underline{a}\ell(\sin\frac{1}{2}\mu_1 - \frac{1}{2}\mu_1\cos\frac{1}{2}\mu_1) .$$

After substitution of

$$\underline{a}\beta\ell = rd$$

instead of $\underline{a}$, a new variable r is introduced which determines the deflection at the midpoint of the beam as a multiple of the distance d. Expression (47.8) can then be written

$$F^{\lambda}(\underline{a}) = \frac{d^2}{\ell^2}\left\{\frac{\mu_1^{\,3}\cos\frac{1}{2}\mu_1}{\sin\frac{1}{2}\mu_1 - \frac{1}{2}\mu_1\cos\frac{1}{2}\mu_1}\, r^3 + \right.$$

$$\left. + (\lambda_1 - \lambda)\pi^2\mu_1^{\,2}\,\frac{\frac{1}{2} + \frac{1}{4}\cos\mu_1 - \frac{3}{4}\frac{\sin\mu_1}{\mu_1}}{(\sin\frac{1}{2}\mu_1 - \frac{1}{2}\mu_1\cos\frac{1}{2}\mu_1)^2}\, r^2 - 4\pi^2\epsilon\lambda r\right\} =$$

$$= \frac{d^2}{\ell^2}\left[R_3 r^3 + (\lambda - \lambda_1)R_2' r^2 + \epsilon\lambda R_1' r\right] . \qquad (62.30)$$

As it appears from (62.30) the introduction of the new variable r offers the advantage that the influence of the ratio d/ℓ has been eliminated. The equilibrium states are characterized by stationary values of (62.30), i.e., by

$$3R_3 r^2 + 2(\lambda - \lambda_1)R_2' r + \epsilon\lambda R_1' = 0 . \qquad (62.31)$$

The solutions of (62.31) are

$$r = -\frac{1}{3}(\lambda - \lambda_1)\frac{R_2'}{R_3} \pm \sqrt{\frac{1}{9}(\lambda - \lambda_1)^2\frac{R_2'^2}{R_3^2} - \epsilon\lambda\frac{R_1'}{3R_3}} . \qquad (62.32)$$

These solutions are real if

$$\frac{1}{9}(\lambda - \lambda_1)^2\frac{R_2'^2}{R_3^2} \geq \epsilon\lambda\frac{R_1'}{3R_3} . \qquad (62.33)$$

As the values of μ_1 lie between π and 8.986 all coefficients R of (62.31) are negative. Consequently for negative values of ϵ, (62.33) is always satisfied. The roots determined by (62.32) represent in a λ versus r graph two separate branches (see also fig. 6, page 219). Only the branch which is obtained by continuous deformation from the unloaded, undeformed state is of practical importance. This branch, the natural branch, corresponds to use of the lower sign in front of the square root in (62.32). For positive values of ϵ two limits $\lambda^* < \lambda_1$ and $\lambda^{**} > \lambda_1$ are determined such that the solutions (62.32) are real for $\lambda < \lambda^*$ and for $\lambda > \lambda^{**}$. Here only the branch for which $\lambda < \lambda^*$ is of practical importance.

Stability of the equilibrium is governed by the sign of the second derivative of (62.30)

$$6R_3 r + 2(\lambda - \lambda_1)R_2' \quad . \tag{62.34}$$

In view of (62.32) this derivative is always positive for the solution of (62.32) which corresponds to the negative square root with the exception of the limit values λ^* and λ^{**} determined by (62.33) for positive values of ϵ. Consequently, the natural branch is always stable for negative values of ϵ. For positive values of ϵ, as the natural branch passes through λ^*, the stability limit will be reached. In view of (62.35), this buckling load is determined by

$$\lambda^* = \lambda_1 + \frac{3}{2}\epsilon\frac{R_1'R_3}{R_2'^2} - \sqrt{3\epsilon\frac{R_1'R_3}{R_2'^2} + \frac{9}{4}\epsilon^2\frac{R_2'^2 R_3^2}{R_2'^4}} \quad . \tag{62.35}$$

625. Comparison with the solution by Cox

In the derivative above, all terms were disregarded in the energy (62.25) which correspond to the bar and are of a higher order than two in the derivatives of ψ;

this omission is justified in Sect. 615 for the case in which the maximum deflection does not exceed 10 percent of the length of the bar. In that case the energy is given by[1]

$$\text{Energy} = \frac{\alpha}{\ell}\left\{\int_0^{1/2} (\psi''^2 - \pi^2\lambda\psi'^2 - 2\pi^2\epsilon\lambda\psi_0'\psi')\,d\xi + \right.$$

$$\left. + 8\pi^2 M\left(\beta^2 - \frac{\ell}{d}\beta^3 + \frac{1}{4}\frac{\ell^2}{d^2}\beta^4\right)\right\} \tag{62.36}$$

Equilibrium states are determined by the stationary values of (62.36), thus by

$$2\int_0^{1/2} (\psi''\zeta'' - \pi^2\lambda\,\psi'\zeta' - \pi^2\epsilon\lambda\psi_0'\,\zeta')\,d\xi +$$

$$+ 8\pi^2 M\left(2\psi\zeta - 3\frac{\ell}{d}\,{}^2\zeta + \frac{\ell^2}{d^2}\psi^3\zeta\right)_{\xi=\frac{1}{2}} = 0 \tag{62.37}$$

for all functions ζ which satisfy the kinematic conditions

$$\zeta = 0 \text{ for } \xi = 0 \text{ and } \zeta' = 0 \text{ for } \xi = \frac{1}{2}\,.$$

[1] The energy formulation used here deviates somewhat from that of Cox in which the compressibility of the bar has been taken into account. Furthermore, Cox puts the elastic potential proportional to the square of the specific strain and not, as it has been done here, proportional to the square of the strain component. These differences are, however, of minor importance.

Through integration by parts it follows from (62.37) that ψ should satisfy the differential equation

$$\psi^{\cdot\cdot\cdot\cdot} + \pi^2 \lambda \psi^{\cdot\cdot} + \pi^2 \epsilon \lambda \psi_0^{\cdot\cdot} = 0 \tag{62.38}$$

with the boundary conditions

$$\psi^{\cdot\cdot} = 0 \text{ for } \xi = 0 ,$$

$$- \psi^{\cdot\cdot\cdot} - \pi^2 \lambda \psi^{\cdot} - \pi^2 \epsilon \lambda \psi_0^{\cdot} +$$

$$+ 8\pi^2 M \left(\psi - \frac{3}{2} \frac{\ell}{d} \psi^2 + \frac{1}{2} \frac{\ell^2}{d^2} \psi^3 \right) = 0 \text{ for } \xi = \frac{1}{2} . \tag{62.39}$$

The kinematic conditions for ψ read

$$\psi = 0 \text{ for } \xi = 0 \text{ and } \psi^{\cdot} = 0 \text{ for } \xi = \frac{1}{2} . \tag{62.40}$$

For the deviation function (62.28), equation (62.38) becomes identical to (62.6). This equation with boundary conditions (62.39) and (62.40) can be solved rigorously. Two integration constants of the general solution (62.9) follow immediately from the conditions at $\xi = 0$

$$A = C = 0 .$$

The deflection at the midpoint of the beam is determined by

$$\beta = \frac{1}{2} B + D \sin \frac{1}{2} \mu \text{ with } \mu = \pi \sqrt{\lambda} .$$

Under the condition $\psi' = 0$ at $\xi = \frac{1}{2}$

$$B + D\mu\cos\frac{1}{2}\mu = 0$$

the constants B and D may be expressed in terms of β

$$B = -\frac{\mu\,\beta\cos\frac{1}{2}\mu}{\sin\frac{1}{2}\mu - \frac{1}{2}\mu\cos\frac{1}{2}\mu}, \quad D = \frac{\beta}{\sin\frac{1}{2}\mu - \frac{1}{2}\mu\cos\frac{1}{2}\mu}.$$

Finally β is determined by the second condition (62.39)

$$\frac{\mu^3}{\sin\frac{1}{2}\mu - \frac{1}{2}\mu\cos\frac{1}{2}\mu}\beta\cos\frac{1}{2}\mu - 2\mu^2\epsilon\frac{d}{\ell} +$$

$$+ 8\pi^2 M\left(\beta - \frac{3}{2}\frac{\ell}{d}\beta^2 + \frac{1}{2}\frac{\ell^2}{d^2}\beta^3\right) = 0 . \tag{62.41}$$

An equation for the deflection at the midpoint of the beam as a multiple of the distance d follows from (62.41) by substitution of $\beta\,\ell/d = r$

$$r^3 - 3r^2 + \left(2 + \frac{\lambda}{2M}\frac{\mu}{2\,\mathrm{tg}\frac{1}{2}\mu - \mu}\right) r - \frac{\lambda}{2M}\epsilon = 0 . \tag{62.42}$$

This result agrees completely with that by Cox who neglected

$$\frac{r}{R^2 + 1}$$

in comparison to unity in his equation (18) [23, in particular p. 264].[1]

[1] For the derivation of (62.42) Cox developed the functions ψ_0 and ψ in Fourier-series. This detour is shown to be unnecessary by the solution method given here.

The stability of the equilibrium states determined by (62.42) are governed by the second variation of the energy (62.36)

$$\frac{\alpha}{\ell}\left\{\int_0^{1/2}(\zeta''^2-\pi^2\lambda\zeta'^2)\,d\xi+8\pi^2M\left(\zeta^2-3\frac{\ell}{d}\beta\zeta^2+\frac{3}{2}\frac{\ell^2}{d^2}\beta^2\zeta^2\right)_{\xi=\frac{1}{2}}\right\}=$$

$$=\frac{\alpha}{\ell}\left\{\int_0^{1/2}(\zeta''^2-\pi^2\lambda\zeta'^2)\,d\xi+\left[8\pi^2M\left(1-3r+\frac{3}{2}r^2\right)\zeta^2\right]_{\xi=\frac{1}{2}}\right\}. \tag{62.43}$$

This is of the same form as the second variation (62.4) for the initially straight beam. The condition for neutral equilibrium can therefore immediately be derived from (62.11)

$$8\pi^2M\left(1-3r+\frac{3}{2}r^2\right)\frac{\mu^3}{\operatorname{tg}\frac{1}{2}\mu-\frac{1}{2}\mu}=0 \text{ or}$$

$$3r^2-6r+2+\frac{\lambda}{2M}\frac{\mu}{2\operatorname{tg}\frac{1}{2}\mu-\mu}=0\,. \tag{62.44}$$

In a λ versus r diagram, the neutral states of equilibrium for different values of ϵ are all represented by the curve determined by (62.44). This curve, according to (62.11), goes through the point $\lambda=\lambda_1$, $r=0$. For the points $\lambda<\lambda_1$, $r=0$ and for $\lambda>\lambda_1$, $r=0$ representing possible equilibrium states at $\epsilon=0$, equilibrium is stable and unstable respectively. The transition from a stable to an unstable state of equilibrium always takes place at a state of neutral equilibrium. Therefore, the equilibrium states are stable and unstable respectively depending on whether they are represented by a point on the same or the opposite side of the curve given by (62.44) as $\lambda<\lambda_1$, $r=0$ and $\lambda>\lambda_1$, $r=0$. In passing along the natural branch from the point

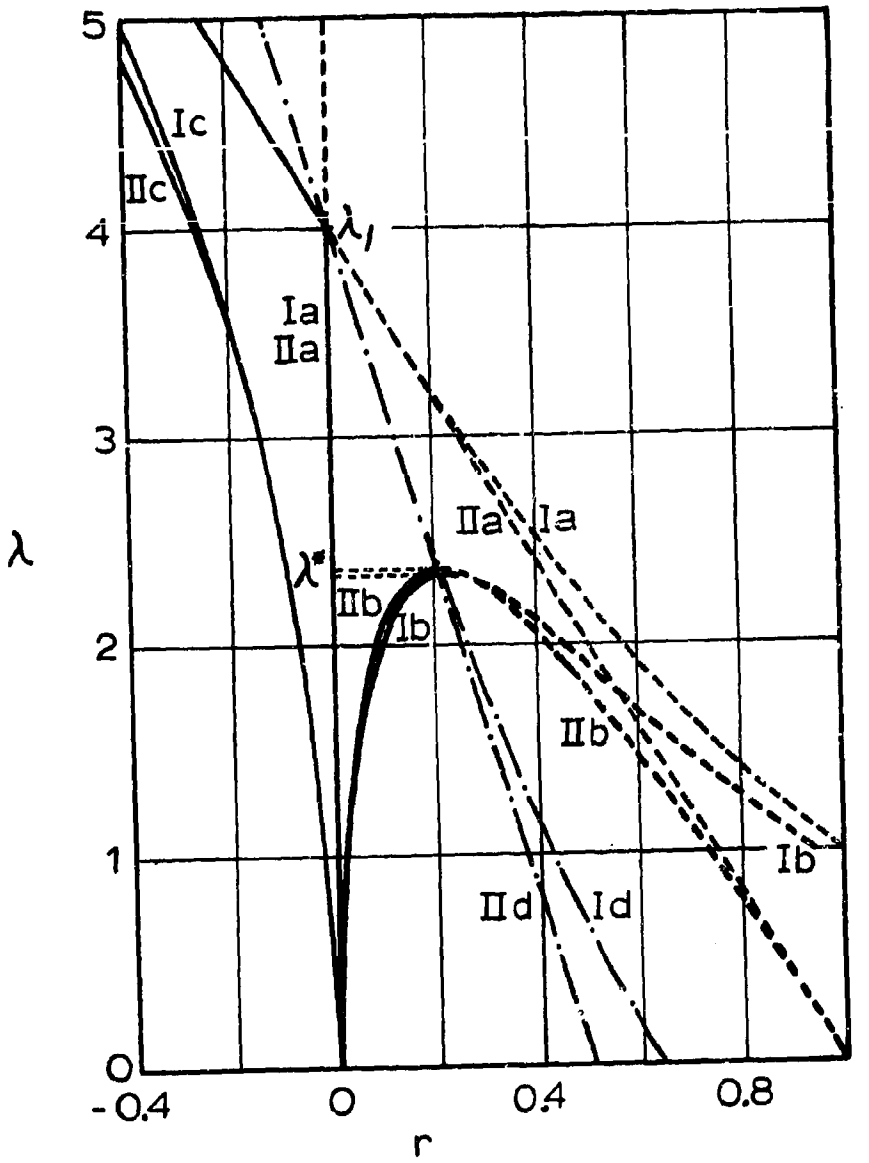

FIG. 6

Ia. Solution of Cox $\epsilon = 0$
Ib. Solution of Cox $\epsilon = 0,1.$
Ic. Solution of Cox $\epsilon = -0,1.$
Id. Partition between stable and unstable region according to Cox
IIa. Approximation $\epsilon = 0.$
IIb. Approximation $\epsilon = 0,1.$
IIc. Approximation $\epsilon = 0,1.$
IId. Partition between stable and unstable region according to the approximation.

which represents the undeformed, unloaded state $\lambda = r = 0$, the buckling load is reached at the first intersection with the curve (62.44). The corresponding value λ^* of the load parameter is obtained by elimination of r from (62.42) and (62.44). As (62.44) is also the condition for the occurrence of a double root of (62.42), the tangent to the curve λ versus r is at the point λ^*, r^* parallel to the r-axis.

In Fig. 6 some λ versus r curves are drawn for the case $M = 1$; in view of (62.11), the value of the load parameter corresponding to the buckling load of the initially straight beam is $\lambda_1 = 4$.

Curve Ia is valid for the initially straight bar, the curves Ib and Ic are valid for the values 0.1 and -0.1 of the deviation parameter ϵ respectively. Of the last mentioned curves, only those branches are represented which are obtained continuously from the undeformed state. The line of partition between the stable and unstable regions is given by curve Id. The stable parts of the λ versus r curves are given by heavy lines, the unstable parts by dotted lines.

Further, in Fig. 6 some λ versus r curves are drawn for the approximate solution for $M = 1$. Curve IIa holds for the initially straight beam (see (62.18)), the curves IIb and IIc hold for the values 0.1 and -0.1 of the deviation parameter ϵ respectively (see (62.32)). The line of partition between the stable and unstable region is given by curve IId; this curve is obtained when (62.34) is set equal to zero. It appears from the figure that the approximation is good if r does not exceed the value 0.4, i.e. if the deflection at the midpoint of the bar is not larger than 40% of the distance d.

In Fig. 7 the buckling load λ^* of the bar is given as a function of ϵ for the case of positive values of ϵ. Curve I corresponds to Cox's solution obtained by elimination of r in (62.42) and (62.44), curve II corresponds to the approximate solution (62.35). Also in this case the agreement is very satisfactory.

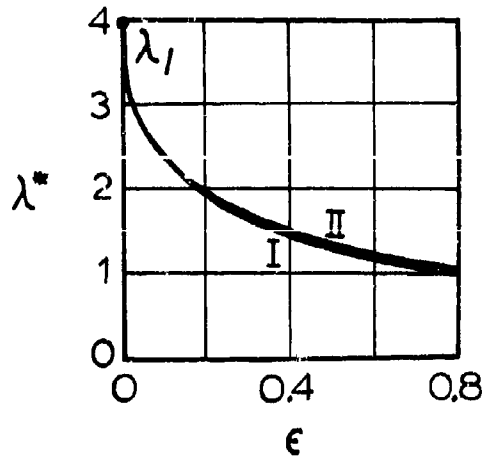

FIG. 7

Finally, it may be noted that the analysis of Cox's problem is also based on the assumption of a completely elastic material. As a consequence, the considerations have significance only as long as the occurring deformations are very small. In view of the results of Sect. 621, the strain components in the supporting bars are of an order of magnitude of $d^2/(b^2 + d^2)$ if the deflection at the midpoint of the beam is of the same order of magnitude as the distance d . Consequently, in the foregoing it has tacitly been assumed that the angle ECD of the supports differs little from 180° (see Fig. 5b).

63. THE PROBLEM OF THE EFFECTIVE WIDTH

The simplest case of the problem of the effective width may be formulated as follows. The edges of a flat rectangular plate are simply supported such that edge displacements can only occur in the plane of the plate. If the plate is loaded in compression on two opposite sides, buckling of the plate will take place as a certain critical load (the buckling load) is exceeded. Below the buckling load, a linear relation exists between the compressive load and the end shortening; after the buckling load is exceeded, the end shortening increases more rapidly than the compressive load. This is expressed by use of the concept of effective width defined as follows: the ratio of the effective width to the total width of the plate is equal to the ratio of the compressive load sustained by the plate to the load on a similar but not buckled plate which has the

same end shortening. The extensive theoretical literature about this subject (see [46]) yields good results for loads not too far in excess of the buckling load; on the other hand the theory is still unsatisfactory for loads far in excess of the buckling load.

For loads not too far in excess of the buckling load the best theory is given by Marguerre-Trefftz [19]. After a short survey of their considerations (Sect. 632), the general theory of Chapter 3 will be applied in Sect. 633 here. The results thus obtained agree very well with the results obtained by Marguerre-Trefftz.

631. The Elastic Energy

The elastic energy in an initially flat plate can be calculated by application of the general theory of Chapter 5. In this particular case, it is simpler, to make use of the results already obtained by Marguerre and Trefftz [19].

A point in the middle surface of the undeformed plate is described by its coordinates x and y with respect to a fixed system of orthogonal coordinate axes whose origin is at the midpoint of the plate. For a plate of length ℓ and width b the longitudinal edges are given by $y = \pm\frac{1}{2}b$ and the transverse edges by $x = \pm\frac{1}{2}\ell$. As the plate is deformed a point in the middle surface undergoes a displacement with components u and v in the directions of the x and y axis respectively and a component w normal to the surface of the plate. If differentiation with respect to x and y is denoted by indices x and y placed at right below the arguments, then the total elastic energy is [19, eq. 36].

$$V = \frac{1}{4}Gh\frac{m}{m-1}\int_{-\frac{1}{2}\ell}^{\frac{1}{2}\ell}\int_{-\frac{1}{2}b}^{\frac{1}{2}b}\Big\{\left(2u_x + 2v_y + w_x^2 + w_y^2\right)^2 + \\ - 2\frac{m-1}{m}\left[\left(2u_x + w_x^2\right)\left(2v_y + w_y^2\right) - \left(u_y + v_x + w_x w_y\right)^2\right] + \\ + \frac{1}{3}h^2\left[(w_{xx} + w_{yy})^2 - 2\frac{m-1}{m}(w_{xx}w_{yy} - w_{xy}^2)\right]\Big\}\,dxdy\,. \qquad (63.1)$$

632. The Theory of Marguerre-Trefftz

An infinitely long plate which undergoes an average compression ϵ_1 is considered. The displacement component u is

$$u = -\epsilon_1 x + \hat{u} , \tag{63.2}$$

where the second term is a periodic function of x. For the displacement component v is written

$$v = \epsilon_2 y + \hat{v} . \tag{63.3}$$

The transverse displacements of the longitudinal edges (which remain straight) are $\pm\frac{1}{2}\epsilon_2 b$. Also $\hat{v}$ is a periodic function of x. Along the longitudinal edges

$$\hat{v}\left(x , \pm\frac{1}{2}b\right) = 0 . \tag{63.4}$$

For the edge values of the displacement component $\hat{u}$ it is also required that

$$\hat{u}\left(x , \pm\frac{1}{2}b\right) = 0 . \tag{63.5}$$

This implies that the longitudinal edges are connected to stringers of such a stiffness that they do not noticeably deform under the shear stresses induced in the plate. This assumption appears to be of minor importance; almost the same result may be obtained if it is assumed that the longitudinal edges are not subjected to loads in the x-direction, i.e., that no shear stresses act on the longitudinal edges.

Marguerre and Trefftz consider ϵ_1 as an independent parameter or to put it differently, they consider a plate with a prescribed end shortening. The compressive load which is (at infinity) acting on the plate than does not contribute to the potential energy. Further, they consider the two limiting cases that the longitudinal edges

are completely free to move in the y-direction and that the edges are completely restrained from motion in the y direction. In neither of these cases do the loads on the longitudinal edges contribute to the total potential energy; in the first case because the total load on the edge is zero, in the second case because displacement of the longitudinal edges is zero. The total potential energy is then determined by (63.1). By use of (63.2) and (63.3) this expression becomes

$$V = \frac{1}{4} Gh \frac{m}{m-1} \iint \left[-2\epsilon_1 + 2\epsilon_2 + 2(\hat{u}_x + \hat{v}_y) + w_x^2 + w_y^2 \right]^2 dxdy +$$

$$- \frac{1}{2} Gh \iint \left[\left(-2\epsilon_1 + 2\hat{u}_x + w_x^2 \right) \left(2\epsilon_2 + 2\hat{v}_y + w_y^2 \right) + \right.$$

$$\left. - (\hat{u}_y + \hat{v}_x + w_x w_y)^2 \right] dxdy +$$

$$+ \frac{1}{12} Gh^3 \frac{m}{m-1} \iint \left[\left(w_{xx} + w_{yy} \right)^2 - 2 \frac{m-1}{m} \left(w_{xx} w_{yy} - w_{xy}^2 \right) \right] dxdy . \tag{63.6}$$

States of equilibrium are characterized by stationary values of the energy (63.6).

It is known that, as the stability limit is reached the displacement components $\hat{u}$ and $\hat{v}$ are zero while the component w is given by [47]

$$w = \underline{a} \cos \frac{\pi x}{b} \cos \frac{\pi y}{b} \tag{63.7}$$

if the longitudinal edges are free, and by

$$w = \underline{a} \cos \mu \frac{\pi x}{b} \cos \frac{\pi y}{b} \quad \text{with } \mu = \sqrt{\frac{m-2}{m}} \tag{63.8}$$

if the longitudinal edges are restrained from displacement in y-direction [19, eq. 92[1]]. An approximation is now introduced by the assumption that the displacement component perpendicular to the surface of the plate, also after the buckling load has been exceeded, is given by (63.7) or (63.8). The still unknown components $\hat{u}$ and $\hat{v}$ are determined if the first variation of (63.6) is set equal to zero for every possible variation of $\hat{u}$ and $\hat{v}$. This leads to the differential equations (see [19], sec. V)

$$\left.\begin{aligned} &\hat{u}_{xx} + \hat{u}_{yy} + \frac{m+1}{m-1}\frac{\partial}{\partial x}(\hat{u}_x + \hat{v}_y) + \frac{m}{m-1}\frac{\partial}{\partial x}\left(w_x^2 + w_y^2\right) + \\ &\qquad + w_x w_{yy} - w_y w_{xy} = 0 \,, \\ &\hat{v}_{xx} + \hat{v}_{yy} + \frac{m+1}{m-1}\frac{\partial}{\partial y}(\hat{u}_x + \hat{v}_y) + \frac{m}{m-1}\frac{\partial}{\partial y}\left(w_x^2 + w_y^2\right) + \\ &\qquad + w_y w_{xx} - w_x w_{xy} = 0 \,. \end{aligned}\right\} \tag{63.9}$$

After restriction of the considerations to free longitudinal edges with the buckling mode (63.7), a particular solution of (63.9) can immediately be written down [19, eq. 50]

$$\left.\begin{aligned} \hat{u}_p &= \frac{\pi a^2}{16b}\sin\frac{2\pi x}{b}\left(\cos\frac{2\pi y}{b} + \frac{m-1}{m}\right), \\ \hat{v}_p &= \frac{\pi a^2}{16b}\sin\frac{2\pi y}{b}\left(\cos\frac{2\pi x}{b} + \frac{m-1}{m}\right). \end{aligned}\right\} \tag{63.10}$$

The requirement of periodicity is satisfied by this solution. However, the boundary conditions are not yet satisfied. For this purpose a solution of the homogeneous equations (63.9) must also be added. It appears, however, that this addition is not numerically significant [19, sec. V and VI] so that it will not be further considered. This is even more justified in view of the fact that in reality the boundary conditions

---

[1] Equation 92 contains a typographical error, it should read $\frac{b^2}{\ell^2} = \frac{m-2}{m}$.

(63.5) are only approximately valid and that (63.10) represents the exact solution if, instead of (63.5), absence of shear stresses along the longitudinal edges is required.

Introduction of (63.7) and (63.10) in (63.6) determines the energy as a function of the three parameters ϵ_1, ϵ_2, $\underline{a}$. Execution of the integration over the length b of a half period yields [19, eq. 69[1])]

$$V = Ghb^2 \left\{ \frac{m}{m-1} (\epsilon_1 - \epsilon_2)^2 + 2\epsilon_1\epsilon_2 - \frac{m+1}{m-1} (\epsilon_1 - \epsilon_2) \frac{\pi^2 \underline{a}^2}{4b^2} + \right.$$

$$\left. + \frac{m}{m-1} \frac{\pi^4 h^2 \underline{a}^2}{12b^4} + \frac{(3m-1)(m+1)}{m(m-1)} \frac{\pi^4 \underline{a}^4}{64b^4} \right\}. \qquad (63.11)$$

In the case of free lateral edges the conditions

$$\frac{\partial V}{\partial \epsilon_2} = 0 , \quad \frac{\partial V}{\partial \underline{a}} = 0$$

should be satisfied for a stationary value of (63.11). These conditions are

$$- \frac{2m}{m-1} (\epsilon_1 - \epsilon_2) + 2\epsilon_1 + \frac{m+1}{m-1} \frac{\pi^2 \underline{a}^2}{4b^2} = 0 ,$$

$$- 2 \frac{m+1}{m-1} (\epsilon_1 - \epsilon_2) \frac{\pi^2 \underline{a}}{4b^2} + 2 \frac{m}{m-1} \frac{\pi^4 h^2 \underline{a}}{12b^4} +$$

$$+ 4 \frac{(3m-1)(m+1)}{m(m-1)} \frac{\pi^4 \underline{a}^3}{64b^4} = 0 . \qquad (63.12)$$

---

[1]The last term of eq. 69 contains a typographical error; it should read $\frac{m}{m-1} \frac{\pi^4 h^2 f^2}{12b^4}$.

The second equation is satisfied by $a = 0$ with which from the first equation it follows that $\epsilon_2 = \frac{1}{m}\epsilon_1$. For this solution (63.11) becomes

$$V = Ghb^2 \frac{m+1}{m} \epsilon_1^2 . \tag{63.13}$$

This solution yields the unbuckled state of the plate. With the known value $\epsilon_1 = \epsilon^*$ for the buckling load (see [47])

$$\epsilon^* = \frac{\pi^2}{3} \frac{m^2}{m^2 - 1} \frac{h^2}{b^2}$$

the remaining solutions of (63.12) are written

$$\left.\begin{aligned} \epsilon_2 &= \frac{1}{m}\epsilon_1 - \frac{m+1}{m}\frac{\pi^2 a^2}{8b^2} , \\ \frac{\pi^2 a^2}{4b^2} &= \epsilon_1 - \epsilon^* . \end{aligned}\right\} \tag{63.14}$$

This solution is apparently only real for $\epsilon_1 > \epsilon^*$. In that case the energy (63.11) is found to be

$$V = Ghb^2 \frac{m+1}{m}\left(\frac{1}{2}\epsilon_1^2 + \epsilon_1\epsilon^* - \frac{1}{2}\epsilon^{*2}\right) . \tag{63.15}$$

Knowledge of the stress distribution in the plate is not needed for the calculation of the effective width. For a variation $\delta\epsilon_1$ of the average compression, the work of the load N acting on a strip of the plate of the length of a half period and the width equal to b is equal to $Nb\,\delta\epsilon_1$. This work should be equal to the increase of the elastic energy so that

$$N = \frac{1}{b}\frac{dV}{d\epsilon_1}$$

should hold. For the unbuckled plate follows from (63.13) that

$$N = Ghb\, 2\, \frac{m+1}{m}\, \epsilon_1 ;$$

for the buckled plate from (63.15) that

$$N = Ghb\, \frac{m+1}{m}\, (\epsilon_1 + \epsilon^*) .$$

The ratio of the effective width to the total width is given by the quotient of these expressions

$$\frac{b_m}{b} = \frac{1}{2}\left(1 + \frac{\epsilon^*}{\epsilon_1}\right), \tag{63.16}$$

in agreement with the result of Marguerre-Trefftz [19, eq. 86] .

633. Application of the General Theory of Chapter 3

It is assumed that in-plane loads on the edges of the plate which remain straight can only act in a direction perpendicular to the edge. Moreover, it is assumed that the total load on the longitudinal edges of the plate $y = \pm \frac{1}{2} b$ is zero. Let N be the resultant of the compressive load acting on a transverse edge, then the energy of the loads is

$$Nu \Big|_{x=-\frac{1}{2}\ell}^{x=\frac{1}{2}\ell} \tag{63.17}$$

This is in agreement with the case treated in Sect. 632.

The displacements in the fundamental state are assumed to be

$$U = -ex\,, \quad V = fy\,, \quad W = 0\,, \tag{63.18}$$

while the displacements of a neighboring state are written as

$$U + u = -ex + u\,, \quad V + v = fy + v\,, \quad W + w = w\,. \tag{63.19}$$

After introduction of (63.19) in the total energy [the sum of (63.1) and (63.17)] and after series expansion, it is found for the linear terms in u, v and w (the first variation of the fundamental state) that

$$\frac{1}{4} Gh \frac{m}{m-1} \iint \left| -8\,(e-f)\,(u_x + v_y) - 8\,\frac{m-1}{m}\,fu_x + 8\,\frac{m-1}{m}\,ev_y \right| dx\,dy \; +$$

$$+ \; Nu \Bigg|_{x=-\frac{1}{2}\ell}^{x=\frac{1}{2}\ell} = 2Gh\,\frac{m}{m-1}\,\ell\left(f - \frac{1}{m}e\right) v \Bigg|_{y=-\frac{1}{2}b}^{y=\frac{1}{2}b} \; +$$

$$- \left| 2Gh\,\frac{m}{m-1}\left(e - \frac{1}{m}f\right) - N \right| u \Bigg|_{x=-\frac{1}{2}\ell}^{x=\frac{1}{2}\ell} .$$

It appears thus that the state (63.18) is indeed an equilibrium state if

$$f = \frac{1}{m}e \quad \text{and} \quad 2G\,\frac{m+1}{m}\,bhe = N\,.$$

To the load parameter

$$\lambda = \frac{N}{Ebh} = \frac{m}{2\,(m+1)}\,\frac{N}{Gbh} = e \tag{63.20}$$

therefore belongs the fundamental state

$$U = -\lambda x\,, \quad V = \frac{1}{m}\lambda y\,, \quad W = 0\,. \tag{63.21}$$

The expansion of the increase in the energy during transition from the fundamental state to a neighboring state, obtained by substitution of (63.19) into (63.1), is now written in the form

$$P^{\lambda}[u] = P_2^0[u] + \lambda P_2'[u] + P_3^0[u] + P_4^0[u]$$

with

$$P_2^0[u] = Gh\frac{m}{m-1}\iint\left\{(u_x + v_y)^2 - 2\frac{m-1}{m}\left[u_x v_y - \frac{1}{4}(u_y + v_x)^2\right] + \right.$$
$$\left. + \frac{1}{12}h^2\left[(w_{xx} + w_{yy})^2 - 2\frac{m-1}{m}\left(w_{xx}w_{yy} - w_{xy}^2\right)\right]\right\}dxdy\,,$$

$$P_2'[u] = Gh\frac{m}{m-1}\iint -\frac{m^2-1}{m^2}w_x^2\,dxdy\,,$$

$$P_3^0[u] = Gh\frac{m}{m-1}\iint\left\{(u_x + v_y)\left(w_x^2 + w_y^2\right) + \right.$$
$$\left. - \frac{m-1}{m}\left[u_x w_y^2 + v_y w_x^2 - (u_y + v_x)\,w_x w_y\right]\right\}dxdy\,,$$

$$P_4^0[u] = Gh\frac{m}{m-1}\iint\frac{1}{4}\left(w_x^2 + w_y^2\right)^2 dxdy\,. \tag{63.22}$$

The buckling load is reached when the second variation

$$P_2^{\lambda}[u] = P_2^0[u] + \lambda P_2'[u]$$

is semi-definite. Because the displacements in the plane of the plate and those perpendicular to the plane of the plate yield mutually independent contributions, these contributions should separately be equal to zero. The integrand of the contribution first mentioned is also semi-definite so that for the first system of eigenfunctions at the buckling load the following should hold

$$u_{1x} = v_{1y} = u_{1y} + v_{1x} = 0 ,$$

from which by use of the boundary conditions

$$u = \text{const. for } x = \pm\frac{1}{2}\ell \ , \ v = \text{const. for } y = \pm\frac{1}{2}b \tag{63.23}$$

it follows that

$$u_1 = v_1 = 0 .$$

The variational equation (38.4) for neutral equilibrium then is

$$Gh\frac{m}{m-1}\iint\left\{\frac{1}{12}h^2\left[2(w_{xx}+w_{yy})(\zeta_{xx}+\zeta_{yy}) + \right.\right.$$
$$\left.\left. - 2\frac{m-1}{m}(w_{xx}\zeta_{yy}+w_{yy}\zeta_{xx}-2w_{xy}\zeta_{xy})\right] - 2\frac{m^2-1}{m^2}\lambda w_x\zeta_x\right\}dxdy = 0 .$$

After division by the factor in front of the integral sign and integration by parts it follows that

$$\int_{-\frac{1}{2}b}^{\frac{1}{2}b} \left\{ \frac{1}{6} h^2 \left[\left(w_{xx} + \frac{1}{m} w_{yy} \right) \zeta_x + \frac{m-1}{m} w_{xy} \zeta_y + \right.\right.$$

$$\left.\left. - (w_{xxx} + w_{xyy}) \zeta \right] - 2 \frac{m^2 - 1}{m^2} \lambda w_x \zeta \right\} dy \Bigg|_{x=-\frac{1}{2}\ell}^{x=+\frac{1}{2}\ell} +$$

$$+ \int_{-\frac{1}{2}\ell}^{\frac{1}{2}\ell} \frac{1}{6} h^2 \left[\left(w_{yy} + \frac{1}{m} w_{xx} \right) \zeta_y + \frac{m-1}{m} w_{xy} \zeta_x + \right.$$

$$\left. - (w_{xxy} + w_{yyy}) \zeta \right] dx \Bigg|_{y=-\frac{1}{2}b}^{y=\frac{1}{2}b} + \iint \left\{ \frac{1}{6} h^2 (w_{xxxx} + 2w_{xxyy} + w_{yyyy}) + \right.$$

$$\left. + 2 \frac{m^2 - 1}{m^2} \lambda w_{xx} \right\} \zeta dxdy = 0 . \tag{63.25}$$

The kinematic conditions for the displacements w are

$$w = 0 \text{ for } x = \pm \frac{1}{2}\ell \text{ and } y = \pm \frac{1}{2} b \tag{63.26}$$

so that in addition

$$\zeta = 0 \text{ for } x = \pm \frac{1}{2}\ell \text{ and } y = \pm \frac{1}{2} b .$$

From this it also follows that

$$t_x = 0 \text{ for } y = \pm\frac{1}{2}b \text{ and } t_y = 0 \text{ for } x = \pm\frac{1}{2}\ell .$$

Furthermore, the function t is arbitrary so that for $|x| < \frac{1}{2}\ell$ and $|y| < \frac{1}{2}b$ the differential equation

$$\frac{1}{6}h^2 (w_{xxxx} + 2w_{xxyy} + w_{yyyy}) + 2\frac{m^2 - 1}{m^2}\lambda w_{xx} = 0 \qquad (63.27)$$

with boundary conditions

$$w_{xx} + \frac{1}{m}w_{yy} = 0 \text{ for } x = \pm\frac{1}{2}\ell , \quad w_{yy} + \frac{1}{m}w_{xx} = 0 \text{ for } y = \pm\frac{1}{2}b .$$

should be satisfied. By use of (63.26) it follows that

$$w_{yy} = 0 \text{ for } x = \pm\frac{1}{2}\ell , \quad w_{xx} = 0 \text{ for } y = \pm\frac{1}{2}b$$

and thus the boundary conditions become

$$w_{xx} = 0 \text{ for } x = \pm\frac{1}{2}\ell , \quad w_{yy} = 0 \text{ for } y = \pm\frac{1}{2}b . \qquad (63.28)$$

The solution of (63.27) with the boundary conditions (63.26) and (63.28) may be written in the form [47]

$$w = A \begin{matrix}\cos\\ \sin\end{matrix} i\frac{\pi x}{\ell} \begin{matrix}\cos\\ \sin\end{matrix} j\frac{\pi y}{b} ,$$

where the cosine or sine functions are used depending on whether i and j are odd or even respectively. However, this solution exists only if λ attains a value determined by

$$\lambda = \frac{1}{12}\frac{m^2}{m^2-1}\frac{\pi^2 h^2}{b^2}\left(i^2\frac{b^2}{\ell^2} + 2j^2 + \frac{j^4}{i^2}\frac{\ell^2}{b^2}\right). \tag{63.29}$$

The smallest value of λ corresponds to

$$j = 1 \text{ and } i = \frac{\ell}{b}.$$

For long plates, the latter condition can always be satisfied with good approximation. It is assumed to be satisfied for an odd value of i so that the buckling load and the corresponding eigenfunction are given by

$$\lambda_1 = \frac{m^2}{m^2-1}\frac{\pi^2 h^2}{3b^2}, \quad w_1 = \cos\frac{\pi x}{b}\cos\frac{\pi y}{b}, \tag{63.30}$$

which is in agreement with Sect. 632.

For the analysis of the neighboring states which belong to the fundamental state, the following is introduced in agreement with the general theory,

$$u = \underline{a}u_1 + \bar{u} = \bar{u}, \quad v = \underline{a}v_1 + \bar{v} = \bar{v}, \quad w = \underline{a}w_1 + \bar{w}. \tag{63.31}$$

As (63.22) is of the form (38.3), the extended theory of Sect. 38 may be applied provided that the displacements u, v, w are small. Some of the coefficients in expression (38.22) can readily be determined (see also (38.21))

$$\left.\begin{aligned} A_2^0 &= -\lambda_1 A_2' = -\lambda_1 P_2'[u_1] = \\ &= \lambda_1 Gh\frac{m}{m-1}\frac{m^2-1}{m^2}\iint w_{1x}^2\,dxdy = Gh\frac{m}{m-1}\frac{\pi^4 h^2 \ell}{12b^3}, \\ A_3^0 + \lambda A_3' &= P_3^0[u_1] + \lambda P_3'[u_1] = 0. \end{aligned}\right\} \tag{63.32}$$

For the calculation of $\overset{\lambda}{A}_4 \underline{a}^4$ the functions $\underline{a}^2 \overset{\lambda}{\varphi}_2$ must be known. These are determined by the variational equation resulting from (38.18), which holds for arbitrary kinematically possible functions ξ, η, ζ

$$
\begin{aligned}
& Gh \frac{m}{m-1} \iint \Big\{ 2 (\bar{u}_x + \bar{v}_y)(\xi_x + \eta_y) + \\
& \quad - 2 \frac{m-1}{m} \Big[\bar{u}_x \eta_y + \bar{v}_y \xi_x - \frac{1}{2} (\bar{u}_y + \bar{v}_x)(\xi_y + \eta_x) \Big] + \\
& \quad + \frac{1}{12} h^2 \Big[2 (\bar{w}_{xx} + \bar{w}_{yy})(\zeta_{xx} + \zeta_{yy}) + \\
& \quad - 2 \frac{m-1}{m} (\bar{w}_{xx} \zeta_{yy} + \bar{w}_{yy} \zeta_{xx} - 2 \bar{w}_{xy} \zeta_{xy}) \Big] \Big\} dxdy + \\
& \quad + Gh \frac{m}{m-1} \iint - 2\lambda \frac{m^2 - 1}{m^2} \bar{w}_x \zeta_x \, dxdy + \\
& \quad + Gh \frac{m}{m-1} \underline{a}^2 \iint \Big\{ (w_{1x}^2 + w_{1y}^2)(\xi_x + \eta_y) + \\
& \quad - \frac{m-1}{m} \Big[w_{1y}^2 \xi_x + w_{1x}^2 \eta_y - w_{1x} w_{1y} (\xi_y + \eta_x) \Big] dxdy = 0 , \qquad (63.33)
\end{aligned}
$$

together with the condition (38.19) which here takes the form

$$
\begin{aligned}
& Gh \frac{m}{m-1} \iint \frac{1}{12} h^2 \Big[2 (w_{1xx} + w_{1yy})(\bar{w}_{xx} + \bar{w}_{yy}) + \\
& \quad - 2 \frac{m-1}{m} (w_{1xx} \bar{w}_{yy} + w_{1yy} \bar{w}_{xx} - 2 w_{1xy} \bar{w}_{xy}) \Big] dxdy = 0 . \qquad (63.34)
\end{aligned}
$$

In the formulation of this condition use has already been made of (63.24). By analogy to the foregoing (63.33) is reduced through integration by parts

$$\int_{-\frac{1}{2}b}^{\frac{1}{2}b} \left\{ \left[2\left(\bar{u}_x + \frac{1}{m}\bar{v}_y\right) + \underline{a}^2\left(w_{1x}^2 + \frac{1}{m}w_{1y}^2\right)\right]\xi + \right.$$

$$\left. + \frac{m-1}{m}\left(\bar{u}_y + \bar{v}_x + \underline{a}^2 w_{1x}w_{1y}\right)\eta \right\} dy \Bigg|_{x=-\frac{1}{2}\ell}^{x=\frac{1}{2}\ell} +$$

$$+ \int_{-\frac{1}{2}b}^{\frac{1}{2}b} \left\{ \frac{1}{6}h^2\left(\bar{w}_{xx} + \frac{1}{m}\bar{w}_{yy}\right)\zeta_x + \frac{1}{6}h^2\frac{m-1}{m}\bar{w}_{xy}\zeta_y + \right.$$

$$\left. - \left[\frac{1}{6}h^2\left(\bar{w}_{xxx} + \bar{w}_{xyy}\right) + 2\frac{m^2-1}{m^2}\lambda\bar{w}_x\right]\zeta \right\} dy \Bigg|_{x=-\frac{1}{2}\ell}^{x=\frac{1}{2}\ell} +$$

$$+ \int_{-\frac{1}{2}\ell}^{\frac{1}{2}\ell} \left\{ \left[2\left(\bar{v}_y + \frac{1}{m}\bar{u}_x\right) + \underline{a}^2\left(w_{1y}^2 + \frac{1}{m}w_{1x}^2\right)\right]\eta + \right.$$

$$\left. + \frac{m-1}{m}\left(\bar{u}_y + \bar{v}_x + \underline{a}^2 w_{1x}w_{1y}\right)\xi \right\} dx \Bigg|_{y=-\frac{1}{2}b}^{y=\frac{1}{2}b} +$$

$$+ \int_{-\frac{1}{2}}^{\frac{1}{2}\ell} \left\{ \frac{1}{6}h^2\left(\bar{w}_{yy} + \frac{1}{m}\bar{w}_{xx}\right)\zeta_y + \frac{1}{6}h^2\frac{m-1}{m}\bar{w}_{xy}\zeta_x + \right.$$

$$- \frac{1}{6} h^2 \left(\overline{w}_{xxy} + \overline{w}_{yyy} \right) \zeta \Bigg\} dx \Bigg|_{y=-\frac{1}{2}b}^{y=\frac{1}{2}b} +$$

$$- \iint \frac{m-1}{m} \Bigg\{ \overline{u}_{xx} + \overline{u}_{yy} + \frac{m+1}{m-1} \frac{\partial}{\partial x} (\overline{u}_x + \overline{v}_y) +$$

$$+ \frac{m}{m-1} \underline{a}^2 \frac{\partial}{\partial x} \left(w_{1x}^2 + w_{1y}^2 \right) + \underline{a}^2 w_{1x} w_{1yy} - \underline{a}^2 w_{1y} w_{1xy} \Bigg\} \xi \, dxdy +$$

$$- \iint \frac{m-1}{m} \Bigg\{ \overline{v}_{xx} + \overline{v}_{yy} + \frac{m+1}{m-1} \frac{\partial}{\partial y} (\overline{u}_x + \overline{v}_y) +$$

$$+ \frac{m}{m-1} \underline{a}^2 \frac{\partial}{\partial y} \left(w_{1x}^2 + w_{1y}^2 \right) + \underline{a}^2 w_{1y} w_{1xx} - \underline{a}^2 w_{1x} w_{1xy} \Bigg\} \eta \, dxdy +$$

$$+ \iint \Bigg\{ \frac{1}{6} h^2 (\overline{w}_{xxxx} + 2\overline{w}_{xxyy} + \overline{w}_{yyyy}) + 2 \frac{m^2-1}{m^2} \lambda \overline{w}_{xx} \Bigg\} \zeta \, dxdy = 0 . \tag{63.35}$$

The kinematic conditions for the functions $\overline{u}$ and ξ, $\overline{v}$ and η follow from (63.23)

$$\left.\begin{aligned} \overline{u} &= \text{const. and } \xi = \text{const. for } x = \pm \tfrac{1}{2}\ell , \\ \overline{v} &= \text{const. and } \eta = \text{const. for } y = \pm \tfrac{1}{2} b . \end{aligned}\right\} \tag{63.36}$$

As the functions ξ and η are arbitrary, $\overline{u}$ and $\overline{v}$ should satisfy the differential equations

$$\bar{u}_{xx} + \bar{u}_{yy} + \frac{m+1}{m-1}\frac{\partial}{\partial x}(\bar{u}_x + \bar{v}_y) +$$

$$+ \frac{m}{m-1} a^2 \frac{\partial}{\partial x}\left(w_{1x}{}^2 + w_{1y}{}^2\right) + \underline{a}^2 w_{1x} w_{1yy} - \underline{a}^2 w_{1y} w_{1xy} = 0 ,$$

$$\bar{v}_{xx} + \bar{v}_{yy} + \frac{m+1}{m-1}\frac{\partial}{\partial y}(\bar{u}_x + \bar{v}_y) +$$

$$+ \frac{m}{m-1} \underline{a}^2 \frac{\partial}{\partial y}\left(w_{1x}{}^2 + w_{1y}{}^2\right) + \underline{a}^2 w_{1y} w_{1xx} - \underline{a}^2 w_{1x} w_{1xy} = 0 \qquad (63.37)$$

with the boundary conditions

$$\left.\begin{aligned}
x = \pm\frac{1}{2}\ell:\ \bar{u} = \text{const.},\ & \int_{-\frac{1}{2}b}^{\frac{1}{2}b} \left[2\left(\bar{u}_x + \frac{1}{m}\bar{v}_y\right) + \right. \\
& \left. + \underline{a}^2\left(w_{1x}{}^2 + \frac{1}{m} w_{1y}{}^2\right)\right] dy = 0 ,\ \bar{u}_y + \bar{v}_x + \underline{a}^2 w_{1x} w_{1y} = 0 ; \\
y = \pm\frac{1}{2}b:\ \bar{v} = \text{const.},\ & \int_{-\frac{1}{2}\ell}^{\frac{1}{2}\ell} \left[2\left(\bar{v}_y + \frac{1}{m}\bar{u}_x\right) + \right. \\
& \left. + \underline{a}^2\left(w_{1y}{}^2 + \frac{1}{m} w_{1x}{}^2\right)\right] dx = 0 ,\ \bar{u}_y + \bar{v}_x + \underline{a}^2 w_{1x} w_{1y} = 0 .
\end{aligned}\right\} \qquad (63.38)$$

The last conditions in (63.37) and in (63.38) transform, by use of (63.30) and (63.36), into

$$x = \pm\frac{1}{2}\ell : \bar{v}_x = 0 \text{ and } y = \pm\frac{1}{2}b : \bar{u}_y = 0 . \qquad (63.38)'$$

For the function $\bar{w}$ is obtained the same differential equation as that which followed from (63.25) for w

$$\frac{1}{6} h^2 (\bar{w}_{xxxx} + 2\bar{w}_{xxyy} + \bar{w}_{yyyy}) + 2\frac{m^2 - 1}{m^2}\lambda\bar{w}_{xx} = 0 \tag{63.39}$$

with the boundary conditions

$$x = \pm\frac{1}{2}\ell : \bar{w} = \bar{w}_{xx} = 0 \text{ and } y = \pm\frac{1}{2}b : \bar{w} = \bar{w}_{yy} = 0 . \tag{63.40}$$

Equations (63.37) are identical to (63.9) so that they also have the same particular solution (63.10). In order to satisfy the boundary conditions (63.38) this solution is combined with a solution

$$\bar{u} = cx , \quad \bar{v} = dy$$

of the homogeneous equations (63.37). It follows then from the integral condition (63.38) that with

$$c = d = -\frac{\pi^2 a^2}{8b^2}$$

all boundary conditions (63.38) are satisfied. The resulting solution of (63.37) is

$$\left.\begin{aligned} \bar{u} &= \frac{\pi a^2}{16b}\sin\frac{2\pi x}{b}\left(\cos\frac{2\pi y}{b} + \frac{m-1}{m}\right) - \frac{\pi^2 a^2}{8b^2}x , \\ \bar{v} &= \frac{\pi a^2}{16b}\sin\frac{2\pi y}{b}\left(\cos\frac{2\pi x}{b} + \frac{m-1}{m}\right) - \frac{\pi^2 a^2}{8b^2}y . \end{aligned}\right\} \tag{63.41}$$

Equation (63.39) with boundary conditions (63.40) is identical to (63.27) with boundary conditions (63.26) and (63.28). Therefore, it similarly always has the solution

$$\overline{w} \equiv 0 \tag{63.42}$$

and in addition a non-zero solution for the particular values of λ determined by (63.29). The solution corresponding to the smallest value λ_1 is incompatible with condition (63.34). Therefore, as long as λ remains below the second smallest value λ_2, there are no nonzero solutions of (63.39).

Substitution of (63.24), (63.30), (63.41) and (63.42) yields after integration for the term $A_4^\lambda \underline{a}^4$ of (38.22)

$$A_4^\lambda \underline{a}^4 = \underline{a}^4 \left\{ P_4^0[u_1] - P_2^0[\varphi_2^\lambda] - P_2'[\varphi_2^\lambda] \right\} = \underline{a}^4 P_4^0[u_1] +$$

$$- P_2^0[\overline{u}] - \lambda P_2'[\overline{u}] = Gh \frac{m}{m-1} \frac{m^2-1}{m^2} \frac{\pi^4 \ell a^4}{64 b^3} . \tag{63.43}$$

The coefficient of this term is always positive, thus also for $\lambda = \lambda_1$, so that equilibrium is stable at the buckling load.

The equilibrium condition is

$$4A_4^\lambda \underline{a}^3 + 2A_4^0 \left(1 - \frac{\lambda}{\lambda_1}\right) \underline{a} = 0$$

with the solutions

$$\underline{a} = 0 \text{ and } \underline{a}^2 = \frac{\left(\frac{\lambda}{\lambda_1} - 1\right) A_2^0}{2A_4^\lambda} \text{ for } \lambda \geq \lambda_1 .$$

By use of (63.32) and (63.43) the second solution becomes

$$\underline{a}^2 = \frac{8b^2}{\pi^2}(\lambda - \lambda_1) \text{ for } \lambda \geqq \lambda_1 . \tag{63.44}$$

The average shortening of the plate is

$$\epsilon = \frac{1}{\ell}\left\{ e\ell - (\underline{a}u_1 + \bar{u}) \Big|_{x=-\frac{1}{2}\ell}^{x=\frac{1}{2}\ell} \right\}$$

which, after use of (63.24) and (63.41), can be written

$$\epsilon = e + \frac{\pi^2 \underline{a}^2}{8b^2} .$$

Substitution of the values of e (63.20) and of $\underline{a}^2$ (63.44) gives this shortening as a function of the load parameter

$$\epsilon = 2\lambda - \lambda_1 . \quad (\lambda \geqq \lambda_1) \tag{63.45}$$

If the quantities related to this case are denoted by a dash, it follows by analogy for the unbuckled plate

$$\bar{\epsilon} = \bar{e} = \bar{\lambda} ,$$

The ratio of the effective width to the total width of the plate (which is equal to the ratio of load sustained by the buckled plate to the load on a similar unbuckled plate under the same average shortening) is then given by

$$\frac{b_m}{b} = \frac{1}{2}\left[1 + \frac{\lambda_1}{\epsilon}\right] . \tag{63.46}$$

This result is the same as that of Marguerre-Trefftz on account of the identity of λ_1 with ϵ^*.

That the same result has been obtained is due to the circumstance that the function $\overline{w}$ which determines the change of the buckling mode with respect to w_1, appears to be zero, i.e., that the general theory confirms the assumption which was introduced by Marguerre-Trefftz concerning the form of the buckling mode. This is due to the facts that the differential equation in $\overline{w}$ and its boundary conditions have no known terms and also that there are no terms containing $\overline{w}$ in $P_{21}^{0}[u_1,\overline{u}]$ and $P_{21}^{1}[u_1,\overline{u}]$.

Strictly speaking the application of the theory of Sect. 38 as given here, holds only for values of λ smaller than λ_2. Since λ_2 for long plates is only a little greater than λ_1 – for an infinitely long plate, the particular λ values actually represent the continuum $\lambda \geq \lambda_1$ – the practical significance of the result would appear to be little. In spite of this, the result (63.46) for the effective width appears to represent a good approximation also for λ values exceeding λ_2. There is no doubt that this is caused by the circumstance that the buckling modes which correspond to λ_2, λ_3 etc. differ only a little from the buckling mode (63.30).

Chapter 7

THE THIN WALLED CYLINDER UNDER AXIAL COMPRESSION

71. THE DEFORMATIONS AND THE POTENTIAL ENERGY

The two sets of lines of curvature for the cylinder are formed by the generators and the parallel circles which are introduced as the parameter lines β = const. and α = const., respectively. The positive directions of the parameter lines are chosen in such a way that the positive direction of a normal to the cylinder is pointed outwards. A point of the middle surface of the undeformed cylinder may be described by its coordinates with respect to a rigid system of coordinates of which the x_1- axis coincides with the cylinder axis

$$x_1 = R\alpha, \quad x_2 = R \sin \beta, \quad x_3 = R \cos \beta.$$

The quantities A and B defined by (52.3) are

$$A = \sqrt{\Sigma\left(\frac{\partial x_i}{\partial \alpha}\right)^2} = R, \quad B = \sqrt{\Sigma\left(\frac{\partial x_i}{\partial \beta}\right)^2} = R, \tag{71.1}$$

while the principal radii of curvature are

$$R_1 = \infty, \quad R_2 = -R; \tag{71.2}$$

the minus sign in the last relation expresses that the corresponding center of curvature lies on the negative part of the normal.

If for simplicity differentiation with respect to α and with respect to β are denoted by a prime and a dot respectively, then the deformation components of the middle surface take the form [see (56.3)]

$$\left.\begin{aligned}
\gamma_{\alpha\alpha o} &= \frac{1}{R}\,2u' + \frac{1}{R^2}\,(u'^2 + v'^2 + w'^2),\\
\gamma_{\beta\beta o} &= \frac{1}{R}\,2(v^{\cdot} + w) + \frac{1}{R^2}\left[u^{\cdot 2} + (v^{\cdot} + w)^2 + (w^{\cdot} - v)^2\right],\\
\gamma_{\alpha\beta o} &= \frac{1}{R}(u^{\cdot} + v') + \frac{1}{R^2}\left[u'u^{\cdot} + v'(v^{\cdot} + w) + w'(w^{\cdot} - v)\right].
\end{aligned}\right\} \quad (71.3)$$

The changes of curvature follow from the formulas (56.4) to (56.10). If terms of the third order in the displacement components and their derivatives are disregarded in the development of the determinants, it follows

$$\rho_{\alpha\alpha} = \frac{1}{R^2}\,w'' + \frac{1}{R^3}\left[-w'u'' - (w^{\cdot} - v)\,v'' + (u' + v^{\cdot} + w)\,w''\right],$$

$$\begin{aligned}
\rho_{\beta\beta} = {} & \frac{1}{R^2}(-u' - 3v^{\cdot} - 2w + w^{\cdot\cdot}) + \\
& + \frac{1}{R^3}\Big[-w'u^{\cdot\cdot} - (w^{\cdot} - v)(v^{\cdot\cdot} + 2w^{\cdot} - v) + \\
& + (u' + v^{\cdot} + w)(w^{\cdot\cdot} - 2v^{\cdot} - w) - u'(v^{\cdot} + w) + u^{\cdot}v'\Big],
\end{aligned}$$

$$\begin{aligned}
\rho_{\alpha\beta} = {} & \frac{1}{R^2}(w'^{\cdot} - v') + \frac{1}{R^3}\Big[-w'u'^{\cdot} - (w^{\cdot} - v)(v'^{\cdot} + w') + \\
& + (u' + v^{\cdot} + w)(w'^{\cdot} - v')\Big].
\end{aligned}$$

By calculation of these expressions terms, of the form $\frac{1}{R_2}\gamma_{\beta\beta o}$, etc., are disregarded. Consequently, there is no objection to the simplification of these expressions whenever possible by the addition of a part of the disregarded terms. Accordingly, if $\frac{1}{2R}\gamma_{\alpha\alpha o}$ and $\frac{1}{R}\gamma_{\beta\beta o}$ are added to $\rho_{\beta\beta}$, the changes of curvature of the middle surface are

$$\left.\begin{aligned}
\rho_{\alpha\alpha} &= \frac{1}{R^2}w'' + \frac{1}{R^3}\left[-w'u'' - (w^{\cdot} - v)v'' + (u' + v^{\cdot} + w)w''\right],\\
\rho_{\beta\beta} &= \frac{1}{R^2}(w^{\cdot} - v)^{\cdot} + \frac{1}{R^3}\left[\frac{1}{2}u'^2 + \frac{1}{2}v'^2 + \frac{1}{2}w'^2 + \right.\\
&\qquad + u^{\cdot\,2} - 2u'(v^{\cdot} + w) + u^{\cdot}v' - w'u^{\cdot\cdot} +\\
&\qquad \left. + (w^{\cdot} - v)(v^{\cdot} + w)^{\cdot} + (u' + v^{\cdot} + w)(w^{\cdot} - v)^{\cdot}\right],\\
\rho_{\alpha\beta} &= \frac{1}{R^2}(w^{\cdot} - v)' + \frac{1}{R^3}\left[-w'u'' - (w^{\cdot} - v)(v^{\cdot} + w)' + \right.\\
&\qquad \left. + (u' + v^{\cdot} + w)(w^{\cdot} - v)'\right].
\end{aligned}\right\} \quad (71.4)$$

The contributions to the changes of curvature which are linear in the displacements and its derivatives will suffice for the determination of the buckling load (see [49, 50]). Use of this simplification will be made also for the analysis of equilibrium for the buckling load as well as for the neighboring states and the analysis of the influence of small initial deviations. Hence,

$$\rho_{\alpha\alpha} = \frac{1}{R^2}w'', \quad \rho_{\beta\beta} = \frac{1}{R^2}(w^{\cdot} - v)^{\cdot}, \quad \rho_{\alpha\beta} = \frac{1}{R^2}(w^{\cdot} - v)'. \qquad (71.5)$$

The justification of this simplification will later be given by use of expressions (71.4) (see Sect. 782).

The elastic energy in the cylinder is calculated through integration of (55.11) after substitution of (71.3) and (71.5). If ℓ denotes the length of the cylinder, the energy is:

$$
\begin{aligned}
V = {} & \frac{1}{4} Gh \frac{1}{1-\nu} \int_0^{\frac{\ell}{R}} d\alpha \int_0^{2\pi} d\beta \Big\{ 4u'^2 + 4 (v^{\cdot} + w)^2 + 8\nu u' (v^{\cdot} + w) + \\
& + 2 (1-\nu) (u^{\cdot} + v')^2 + k \Big[w''^2 + (w^{\cdot} - v)^{\cdot 2} + \\
& + 2\nu w'' (w^{\cdot} - v)^{\cdot} + 2 (1-\nu) (w^{\cdot} - v)'^2 \Big] \Big\} + \\
& + \frac{1}{4} Gh \frac{1}{1-\nu} \frac{1}{R} \int_0^{\frac{\ell}{R}} d\alpha \int_0^{2\pi} d\beta \Big\{ 4u' (u'^2 + v'^2 + w'^2) + \\
& + 4 (v^{\cdot} + w) \Big[u^{\cdot 2} + (v^{\cdot} + w)^2 + (w^{\cdot} - v)^2 \Big] + \\
& + 4\nu u' \Big[u^{\cdot 2} + (v^{\cdot} + w)^2 + (w^{\cdot} - v)^2 \Big] + 4\nu (v^{\cdot} + w) (u'^2 + v'^2 + w'^2) + \\
& + 4 (1-\nu) (u^{\cdot} + v') \Big[u' u^{\cdot} + v' (v^{\cdot} + w) + w' (w^{\cdot} - v) \Big] \Big\} + \\
& + \frac{1}{4} Gh \frac{1}{1-\nu} \frac{1}{R^2} \int_0^{\frac{\ell}{R}} d\alpha \int_0^{2\pi} d\beta \Big\{ (u'^2 + v'^2 + w'^2)^2 + \\
& + \Big[u^{\cdot 2} + (v^{\cdot} + w)^2 + (w^{\cdot} - v)^2 \Big]^2 + \\
& + 2\nu (u'^2 + v'^2 + w'^2) \Big[u^{\cdot 2} + (v^{\cdot} + w)^2 + (w^{\cdot} - v)^2 \Big] + \\
& + 2 (1-\nu) \Big[u' u^{\cdot} + v' (v^{\cdot} + w) + w' (w^{\cdot} - v) \Big]^2 \Big\} .
\end{aligned}
\tag{71.6}
$$

Here for, brevity

$$\frac{1}{m} = \nu, \quad \frac{h^2}{3R^2} = k. \tag{71.7}$$

Let N be the axial load per unit length of the circumference which is acting on the cylinder edges, then with the load parameter defined as

$$\lambda = \frac{N}{Eh} = \frac{N}{2G\,(1+\nu)\,h}, \tag{71.8}$$

the energy of the loads is

$$W = \lambda 2Gh\,(1+\nu)\,R \int_0^{2\pi} u\,d\beta \Big|_{\alpha=0}^{\alpha=\frac{\ell}{R}} = \lambda 2Gh\,(1+\nu)\,R \iint u'\,d\alpha\,d\beta. \tag{71.9}$$

72. THE FUNDAMENTAL STATE

The fundamental state is assumed to be of the form

$$U = -eR\alpha, \quad V = 0, \quad W = fR. \tag{72.1}$$

The increase in the energy on transition from the fundamental state to the state

$$U + u = -eR\alpha + u, \; V + v = v, \; W + w = fR + w \tag{72.2}$$

is obtained by substitution of (72.1, 2) in (71.6) and (71.9). After division by $\frac{1}{4}\,Gh\,\frac{1}{1-\nu}$ and after expansion, this increment is

$$P^{\lambda}[u] = P_1^{\lambda}[u] + P_2^{\lambda}[u] + P_3^{\lambda}[u] + P_4^{\lambda}[u]\,. \tag{72.3}$$

For the moment only the first term, which represents the first variation of the energy in the fundamental state, will be defined

$$P_1^{\lambda}[u] = R\iint\Big[(-8e + 8\nu f + 12e^2 + 4\nu f^2 - 8\nu ef - 4e^3 - 4\nu ef^2)\, u' +$$

$$+ (8f - 8\nu e + 12f^2 + 4\nu e^2 - 8\nu ef + 4f^3 + 4\nu e^2 f)\,(v' + w)\Big]\, d\alpha d\beta +$$

$$+ 8\,(1 - \nu^2)\,\lambda R\iint u'\, d\alpha d\beta.$$

The equilibrium conditions for the fundamental state are obtained by setting the first variation equal to zero, and consequently e and f should satisfy

$$\begin{gathered} -8e + 8\nu f + 12e^2 + 4\nu f^2 - 8\nu ef - 4e^3 - 4\nu ef^2 + 8\,(1 - \nu^2)\,\lambda = 0, \\ 8f - 8\nu e + 12f^2 + 4\nu e^2 - 8\nu ef + 4f^3 + 4\nu e^2 f = 0. \end{gathered} \tag{72.4}$$

In the elastic range, e and f are very small and the equation may be linearized; its solution is

$$e = \lambda, \quad f = \nu\lambda. \tag{72.5}$$

Also, in the integrals $P_m^{\lambda}[u]$, terms of the second and higher order in e and f are disregarded. After use of (72.5), they take the form

$$P_m^{\lambda}[u] = P_m^{0}[u] + P_m'[u].$$

Here

$$P_2^{o}[u] = \iint \Big\{ 4u'^2 + 4\,(v^{\cdot} + w)^2 + 8\nu u'\,(v^{\cdot} + w) +$$

$$+ 2\,(1 - \nu)\,(u^{\cdot} + v')^2 + k \Big[w''^2 + (w^{\cdot} - v)^{\cdot\,2} + 2\nu w''\,(w^{\cdot} - v)^{\cdot} +$$

$$+ 2\,(1 - \nu)\,(w^{\cdot} - v)'^2 \Big] \Big\}\, d\alpha d\beta, \qquad (72.6)$$

$$P_2'[u] = \iint \Big[(-12 + 4\nu^2)\,u'^2 + 8\nu\,(v^{\cdot} + w)^2 +$$

$$- 8\nu\,(1 - \nu)\,u'\,(v^{\cdot} + w) - 4\,(1 - \nu)\,u^{\cdot\,2} - 4\,(1 - \nu)\,v'^2 +$$

$$- 4\,(1 - \nu)^2\,u^{\cdot} v' - 4\,(1 - \nu^2)\,w'^2 \Big]\, d\alpha d\beta, \qquad (72.7)$$

$$P_3^{o}[u] = \frac{1}{R} \iint \Big\{ 4u'\,(u'^2 + v'^2 + w'^2) +$$

$$+ 4\,(v^{\cdot} + w) \Big[u^{\cdot\,2} + (v^{\cdot} + w)^2 + (w^{\cdot} - v)^2 \Big] +$$

$$+ 4\nu u' \Big[u^{\cdot\,2} + (v^{\cdot} + w)^2 + (w^{\cdot} - v)^2 \Big] +$$

$$+ 4\nu (v^{\cdot} + w)\,(u'^2 + v'^2 + w'^2) +$$

$$+ 4\,(1 - \nu)\,(u^{\cdot} + v') \Big[u'u^{\cdot} + v'\,(v^{\cdot} + w) + w'\,(w^{\cdot} - v) \Big] \Big\}\, d\alpha d\beta, \qquad (72.8)$$

$$P_3'[u] = \frac{1}{R}\iint\Big\{ - 4u' (u'^2 + v'^2 + w'^2) +$$

$$+ 4\nu (v^{\cdot} + w) \left[u^{\cdot 2} + (v^{\cdot} + w)^2 + (w^{\cdot} - v)^2\right] +$$

$$- 4\nu u' \left[u^{\cdot 2} + (v^{\cdot} + w)^2 + (w^{\cdot} - v)^2\right] +$$

$$+ 4\nu^2 (v^{\cdot} + w) (u'^2 + v'^2 + w'^2) +$$

$$- 4 (1 - \nu) (u^{\cdot} - \nu v') \left[u' u^{\cdot} + v' (v^{\cdot} + w) + w' (w^{\cdot} - v)\right]\Big\} d\alpha d\beta, \quad (72.9)$$

$$P_4^{o}[u] = \frac{1}{R^2}\iint\Big\{ (u'^2 + v'^2 + w'^2)^2 + \left[u^{\cdot 2} + (v^{\cdot} + w)^2 + (w^{\cdot} - v)^2\right]^2 +$$

$$+ 2\nu (u'^2 + v'^2 + w'^2) \left[u^{\cdot 2} + (v^{\cdot} + w)^2 + (w^{\cdot} - v)^2\right] +$$

$$+ 2 (1 - \nu) \left[u' u^{\cdot} + v' (v^{\cdot} + w) + w' (w^{\cdot} - v)\right]^2 \Big\} d\alpha d\beta, \quad (72.10)$$

$$P_4'[u] = 0 . \quad (72.11)$$

The second term of the second variation

$$P_2^{\lambda}[u] = P_2^{o}[u] + \lambda P_2'[u]$$

contains the small factor λ. Therefore, those contributions in the integrand of $P_2'[u]$ which have a counterpart of the same arguments u', $v^{\cdot}$, w, $u^{\cdot}$, v' in the integrand

of $P_2^0[u]$ appear to be negligible. However, such a simplification may lead to a completely incorrect result. This is due to the circumstance that the integrand of $P_2^0[u]$ is not definite in the arguments u', v^*, w, u^*, v' so that the contributions depending on these arguments in $P_2'[u]$ may become large in comparison with contributions depending on the same arguments in the integrand of $P_2^0[u]$; in that case, the omission of the first mentioned contributions in $\lambda P_2'[u]$ can no longer be justified. This objectio is not valid if in the integrand of $P_2'[u]$ terms are neglected which exclusively depend on u', $v^* + w$ and $u^* + v'$, because the integrand of $P_2^0[u]$ is definite in these arguments. The integral $P_2'[u]$ now becomes as simple as possible if the contribution depending on u', $v^* + w$ and $u^* + v'$

$$(12 - 4\nu^2)\, u'^2 - 8\nu\,(v^* + w)^2 + 8\nu\,(1 - \nu)\, u'\,(v^* + w) + \\ + 2\,(1 - \nu)^2\,(u^* + v')^2 \qquad (72.12)$$

is added to its integrand. The result is then given by

$$P_2'[u] = \iint -(1 - \nu^2)\,(2u^{*2} + 2v'^2 + 4w'^2)\, d\alpha d\beta . \qquad (72.13)$$

73. THE BUCKLING LOAD

The buckling load is determined by the smallest value of λ for which the homogeneous variational equation for neutral equilibrium (38.4) has a nonzero solution. With arbitrary, kinematically possible functions ξ, η, ζ this equation takes the form

$$\iint \Big\{ 8u'\xi' + 8(v^{\cdot} + w)(\eta^{\cdot} + \zeta) + 8\nu u'(\eta^{\cdot} + \zeta) +$$

$$+ 8\nu(v^{\cdot} + w)\xi' + 4(1-\nu)(u^{\cdot} + v')(\xi^{\cdot} + \eta') +$$

$$+ k\Big[2w''\zeta'' + 2(w^{\cdot} - v)^{\cdot}(\zeta^{\cdot} - \eta)^{\cdot} + 2\nu w''(\zeta^{\cdot} - \eta)^{\cdot} +$$

$$+ 2\nu(w^{\cdot} - v)^{\cdot}\zeta'' + 4(1-\nu)(w^{\cdot} - v)'(\zeta^{\cdot} - \eta)'\Big] +$$

$$- (1-\nu^2)\lambda(4u^{\cdot}\xi^{\cdot} + 4v'\eta' + 8w'\zeta')\Big\}\, d\alpha d\beta = 0. \qquad (73.1)$$

As ξ, η, ζ (just as u, v, w) are periodic functions of β with period 2π, (73.1) after integration by parts becomes

$$\int_0^{2\pi}\Big\{\Big[8u' + 8\nu(v^{\cdot} + w)\Big]\xi + \Big[4(1-\nu)(u^{\cdot} + v') +$$

$$- 4k(1-\nu)(w^{\cdot} - v)' - 4(1-\nu^2)\lambda v'\Big]\eta +$$

$$+ k\Big[2w'' + 2\nu(w^{\cdot} - v)^{\cdot}\Big]\zeta' - \Big[2kw''' + 2k\nu(w^{\cdot} - v)'^{\cdot} +$$

$$+ 4k(1-\nu)(w^{\cdot} - v)'^{\cdot} + 8(1-\nu^2)\lambda w'\Big]\zeta\Big\}\, d\beta \Bigg|_{\alpha=0}^{\alpha=\frac{\ell}{R}} +$$

$$+ \iint\Big\{\Big[-8u'' - 4(1-\nu)u^{\cdot\cdot} - 4(1+\nu)v'^{\cdot} - 8\nu w' + 4(1-\nu^2)\lambda u^{\cdot\cdot}\Big]\xi +$$

$$+ \Big[-4(1+\nu)u'^{\cdot} - 4(1-\nu)v'' - 8v^{\cdot\cdot} - 8w^{\cdot} + k\{-4(1-\nu)v'' +$$

$$- 2v^{\cdot\cdot} + (4-2\nu)w'''^{\cdot} + 2w^{\cdot\cdot\cdot}\} + 4(1-\nu^2)\lambda v''\Big]\eta +$$

$$+ \Big[8\nu u' + 8v^{\cdot} + 8w + k\{-(4-2\nu)v'''^{\cdot} - 2v^{\cdot\cdot\cdot} + 2w'''' +$$

$$+ 4w'''^{\cdot\cdot} + 2w^{\cdot\cdot\cdot\cdot}\} + 8(1-\nu^2)\lambda w''\Big]\zeta\Big\}\, d\alpha d\beta = 0. \qquad (73.2)$$

It is assumed that the cylinder edges are supported in such a way that the displacement components v and w in the plane of these edges are zero; as Flügge remarked [50] these boundary conditions, or at least the one concerning the displacement w, may take effect only after the load for the fundamental state has been applied as otherwise they would be inconsistent with the assumed form of the fundamental state (72.1). In agreement with these kinematical conditions also η and ζ should be zero at the edges of the cylinder. Besides from these restrictions, the function ξ, η, ζ are completely arbitrary so that u, v, w must satisfy the differential equations

$$\left.\begin{aligned}
&8u'' + 4(1-\nu)u^{\cdot\cdot} + 4(1+\nu)v'^{\cdot} + \\
&\qquad\qquad + 8\nu w' - 4(1-\nu^2)\lambda u^{\cdot\cdot} = 0, \\
&4(1+\nu)u'^{\cdot} + 4(1-\nu)v'' + 8v^{\cdot\cdot} + 8w^{\cdot} + k\Big[4(1-\nu)v'' + \\
&\qquad + 2v^{\cdot\cdot} - (4-2\nu)w'''^{\cdot} - 2w^{\cdot\cdot\cdot}\Big] - 4(1-\nu^2)\lambda v'' = 0, \\
&8\nu u' + 8v^{\cdot} + 8w + k\Big[-(4-2\nu)v'''^{\cdot} - 2v^{\cdot\cdot\cdot} + \\
&\qquad + 2w'''' + 4w'''^{\cdot} + 2w^{\cdot\cdot\cdot\cdot}\Big] + 8(1-\nu^2)\lambda w'' = 0
\end{aligned}\right\} \tag{73.3}$$

with the boundary conditions for $\alpha = 0$ and $\alpha = \frac{\ell}{R}$

$$v = w = u' + \nu(v^{\cdot} + w) = w'' + \nu(w^{\cdot} - v)^{\cdot} = 0 .$$

These boundary conditions are reduced to

$$u' = v = w = w'' = 0. \tag{73.4}$$

An arbitrary function of α and β with a continuous mixed second derivative can be expanded into a double Fourier series. In view of the boundary conditions (73.4), these series can be written in the form

$$\left.\begin{aligned} u &= \Sigma\,(A_{pn} \cos p\alpha \cos n\beta + A_{pn} \cos p\alpha \sin n\beta), \\ v &= \Sigma\,(P_{pn} \sin p\alpha \sin n\beta + \overline{B}_{pn} \sin p\alpha \cos n\beta), \\ w &= \Sigma\,(C_{pn} \sin p\alpha \cos n\beta + \overline{C}_{pn} \sin p\alpha \sin n\beta); \end{aligned}\right\} \tag{73.5}$$

where

$$p = i\pi \frac{R}{\ell}$$

while summation should be carried out over all integer values of i and n, including $i = 0$ and $n = 0$. Under the assumption that differentiation of u, v, and w may be applied to the series term by term, the first equation (73.3) becomes

$$\begin{aligned} &\sum \Big\{ \Big[-8p^2 - 4(1-\nu)n^2 + 4(1-\nu^2)\lambda n^2 \Big] A_{pn} + \\ &\quad + 4(1+\nu)\, pnB_{pn} + 8\nu p C_{pn} \Big\} \cos p\alpha \cos n\beta + \\ &+ \sum \Big\{ \Big[-8p^2 - 4(1-\nu)n^2 + 4(1-\nu^2)\lambda n^2 \Big] \overline{A}_{pn} + \\ &\quad - 4(1+\nu)\, pn\overline{B}_{pn} + 8\nu p \overline{C}_{pn} \Big\} \cos p\alpha \sin n\beta = 0. \end{aligned}$$

The validity of this equation for all values of α and β implies that coefficients of $\cos p\alpha \cos n\beta$ and $\cos p\alpha \sin n\beta$ must all be zero. The remaining equations (73.3) are treated similarly. The coefficients A, B, C, whose indices will henceforth be left out, should thus satisfy the three homogeneous linear equations

$$
\left.
\begin{aligned}
&\left[2p^2 + (1-\nu)\,n^2 - (1-\nu^2)\lambda n^2\right]A - (1+\nu)\,pnB + \\
&\qquad\qquad - 2\nu pC = 0, \\
&-2\,(1+\nu)\,pnA + \Big[2\,(1-\nu)\,p^2 + 4n^2 + \\
&\quad + k\left\{2\,(1-\nu)\,p^2 + n^2\right\} - 2\,(1-\nu^2)\lambda p^2\Big]B + \\
&\qquad\qquad + \left[4n + k\left\{(2-\nu)\,p^2 n + n^3\right\}\right]C = 0, \\
&-4\nu pA + \left[4n + k\left\{(2-\nu)\,p^2 n + n^3\right\}\right]B + \\
&\qquad\qquad + \left[4 + k\,(p^2+n^2)^2 - 4\,(1-\nu^2)\lambda p^2\right]C = 0.
\end{aligned}
\right\} \tag{73.6}
$$

The equations for $\overline{A}$, $\overline{B}$ and $\overline{C}$ are obtained from this by replacement of n by $-n$.

These equations have a nonzero solution if and only if the determinant formed by their coefficients is equal to zero. Thus, the states of neutral equilibrium are characterized by the values of λ satisfying the equation

$$
\begin{vmatrix}
2p^2 + (1-\nu)\,n^2 - (1-\nu^2)\lambda n^2 & -(1+\nu)\,pn & -2\nu p \\
-2\,(1+\nu)\,pn & 2\,(1-\nu)\,p^2 + 4n^2 + k\,[2\,(1-\nu)\,p^2 + n^2] - 2\,(1-\nu^2)\lambda p^2 & 4n + kn\,[(2-\nu)\,p^2 + n^2] \\
-4\nu p & 4n + kn\,[(2-\nu)\,p^2 + n^2] & 4 + k\,(p^2+n^2)^2 - 4\,(1-\nu^2)\lambda p^2
\end{vmatrix} = 0. \tag{73.7}
$$

Expansion of the determinant yields, if terms of the second or higher order in the small quantities λ and k are disregarded,

$$\lambda = \frac{(1-\nu^2)\,p^4 + \frac{1}{4}k\left\{[2(1-\nu)p^2+n^2][2(1+\nu)p^2+n^2] + \right.}{\left. -2n^2\,[(2-\nu)\,p^2+n^2]\,[(2+\nu)\,p^2+n^2] + (p^2+n^2)^4\right\}}{(1-\nu^2)\,[(1+\nu)\,p^4 + p^2n^2 + p^2\,(p^2+n^2)^2]} \tag{73.8}$$

After the omission of λ, k, kp^2 and kn^2 in comparison to unity (see also Sect. 781) the ratio of the coefficients A, B and C are calculated from the first two equations

$$\frac{A}{C} = \frac{p\,(\nu p^2 - n^2)}{(p^2+n^2)^2}\,, \quad \frac{B}{C} = -\,\frac{n\,[(2+\nu)\,p^2+n^2]}{(p^2+n^2)^2} \tag{73.9}$$

The buckling load is determined by λ_1 the minimum of (73.8) for integer values of i and n and with $p = i\pi R/\ell$. The corresponding eigenfunctions are given by (73.5) and the ratios of the constants A, B and C determined by (73.9). The constants $\bar{A}$, $\bar{B}$, and $\bar{C}$ are taken to be zero.

74. SIMPLIFICATIONS

It appears from experiments that p is large for cylinders with very thin walls [49]; in that case equation (73.8) may be simplified to

$$\lambda \approx \frac{n^2}{(p^2+n^2)^2} + \frac{k}{4\,(1-\nu^2)}\,\frac{(p^2+n^2)^2}{p^2} \tag{74.1}$$

This equation is only dependent on the ratio

$$\frac{(p^2+n^2)^2}{p^2}$$

and thus the minimum is obtained for

$$- \frac{p^4}{(p^2 + n^2)^4} + \frac{k}{4(1 - \nu^2)} = 0,$$

or

$$p^2 + n^2 = p\sqrt[4]{\frac{4(1 - \nu^2)}{k}} \quad . \tag{74.2}$$

The corresponding minimum of λ is [49]

$$\lambda = \sqrt{\frac{k}{1 - \nu^2}} \tag{74.3}$$

Here no attention has been given to the conditions that n should be an integer and that p should be multiple of $\pi \frac{R}{\ell}$. However, the latter condition is of little importance unless the cylinder is very short, as the values of p corresponding to i and to $i + 1$ differ very little for large values of i. This conclusion is supported by experiments [25], from which it appears that the buckling load is independent of the length of the cylinder and of the boundary conditions as long as the cylinder is not too short ($\ell/R > 0.75$). Accordingly, in the following influences of edge restraint will be neglected and p will be regarded as a continuous variable. For each integer value of n, (74.2) then yields two values of p

$$p_{n1,2} = \frac{1}{2}\sqrt[4]{\frac{4(1 - \nu^2)}{k}} \pm \sqrt{\frac{1}{2}\sqrt{\frac{1 - \nu^2}{k}} - n^2}; \tag{74.4}$$

these values are real and unequal if

$$n^2 < \frac{1}{2}\sqrt{\frac{1 - \nu^2}{k}} \quad . \tag{74.5}$$

If in

$$\frac{1}{2}\sqrt{\frac{1-\nu^2}{k}} = m^2 \tag{74.6}$$

m is an integer, then the values of p corresponding to n = m coincide

$$p_m = \frac{1}{2}\sqrt[4]{\frac{4(1-\nu^2)}{k}} = m. \tag{74.7}$$

In view of (73.5), the combination n = p = 0 determines a rigid body displacement of the cylinder in the direction of its axis and it can therefore be disregarded. Thus for n = 0, only the solution

$$p_o = \sqrt[4]{\frac{4(1-\nu^2)}{k}} \tag{74.8}$$

need be considered. If (74.6) is satisfied, then in view of (74.7)

$$m = \frac{1}{2}p_o . \tag{74.9}$$

The displacements (73.5) were established with due consideration to the boundary conditions (73.4). However, these boundary conditions are again ignored if p is regarded as a continuous variable. Strictly speaking this implies a restriction of the considerations to infinitely long cylinders. The condition of periodicity for the particular solutions replaces in that case the boundary conditions. The latter condition as well as the differential equations are also satisfied after interchange of $\sin p\alpha$ and $\cos p\alpha$ in (73.5). Therefore, the general solution of the equations of neutral equilibrium for the displacement component w is

$$
\begin{aligned}
w = {} & a_o \sin p_o\alpha + b_o \cos p_o\alpha + \sum_{n=1}^{\cdots} \Big(a_{n1} \sin p_{n1}\alpha \cos n\beta + \\
& + b_{n1} \sin p_{n1}\alpha \sin n\beta + c_{n1} \cos p_{n1}\alpha \cos n\beta + d_{n1} \cos p_{n1}\alpha \sin n\beta + \\
& + a_{n2} \sin p_{n2}\alpha \cos n\beta + b_{n2} \sin p_{n2}\alpha \sin n\beta + \\
& + c_{n2} \cos p_{n2}\alpha \cos n\beta + d_{n2} \cos p_{n2}\alpha \sin n\beta \Big) + \\
& + a_m \sin m\alpha \cos m\beta + b_m \sin m\alpha \sin m\beta + \\
& + c_m \cos m\alpha \cos m\beta + d_m \cos m\alpha \sin m\beta, \qquad (74.10)
\end{aligned}
$$

with the understanding that the last four terms are only present if (74.6) has been satisfied and that summation should be carried out over all integer values of n which satisfy (74.5).

The displacement components u and v are completely determined by (74.10) and by the equations (73.3). In view of (73.5), terms of the form $\sin p\alpha \cos n\beta$ in (74.10) correspond to terms of the form $\cos p\alpha \cos n\beta$ and $\sin p\alpha \sin n\beta$ for u and v, respectively. The coefficients for these terms are determined by (73.9). The terms in u and v which apply after replacement of $\sin p\alpha$ and/or $\cos n\beta$ by $\cos p\alpha$ and $\sin n\beta$ in (74.10), are obtained through replacement of $\sin p\alpha$ and/or $\cos n\beta$ $\cos p\alpha$ and $\sin n\beta$ respectively. The ratio of the coefficients is again given by (73.9) in which now p is replaced by $-p$ and/or n is replaced by $-n$. The general solution for u and v then is

$$u = \frac{\nu}{p_o}\left(a_o \cos p_o\alpha - b_o \sin p_o\alpha\right) +$$

$$+ \sum_{n=1}^{\infty}\left\{\frac{p_{n1}\left(\nu p_{n1}^{\ 2} - n^2\right)}{\left(p_{n1}^{\ 2} + n^2\right)^2}\left(a_{n1} \cos p_{n1}\alpha \cos n\beta + \right.\right.$$

$$\left. + b_{n1} \cos p_{n1}\alpha \sin n\beta - c_{n1} \sin p_{n1}\alpha \cos n\beta - d_{n1} \sin p_{n1}\alpha \sin n\beta\right) +$$

$$+ \frac{p_{n2}\left(\nu p_{n2}^{\ 2} - n^2\right)}{\left(p_{n2}^{\ 2} + n^2\right)^2}\left(a_{n2} \cos p_{n2}\alpha \cos n\beta + b_{n2} \cos p_{n2}\alpha \sin n\beta + \right.$$

$$\left.\left. - c_{n2} \sin p_{n2}\alpha \cos n\beta - d_{n2} \sin p_{n2}\alpha \sin n\beta\right)\right\} +$$

$$- \frac{1 - \nu}{4m}\left(a_m \cos m\alpha \cos m\beta + b_m \cos m\alpha \sin m\beta + \right.$$

$$\left. - c_m \sin m\alpha \cos m\beta - d_m \sin m\alpha \sin m\beta\right), \tag{74.11}$$

$$v = \sum_{n=1}^{\infty}\left\{\frac{n\left[(2 + \nu)\, p_{n1}^{\ 2} + n^2\right]}{\left(p_{n1}^{\ 2} + n^2\right)^2}\left(- a_{n1} \sin p_{n1}\alpha \sin n\beta + \right.\right.$$

$$\left. + b_{n1} \sin p_{n1}\alpha \cos n\beta - c_{n1} \cos p_{n1}\alpha \sin n\beta + d_{n1} \cos p_{n1}\alpha \cos n\beta\right) +$$

$$+ \frac{n\left[(2 + \nu)\, p_{n2}^{\ 2} + n^2\right]}{\left(p_{n2}^{\ 2} + n^2\right)^2}\left(- a_{n2} \sin p_{n2}\alpha \sin n\beta + b_{n2} \sin p_{n2}\alpha \cos n\beta + \right.$$

$$\left.\left. - c_{n2} \cos p_{n2}\alpha \sin n\beta + d_{n2} \cos p_{n2}\alpha \cos n\beta\right)\right\} +$$

$$+ \frac{3 + \nu}{4m}\left(- a_m \sin m\alpha \sin m\beta + b_m \sin m\alpha \cos m\beta + \right.$$

$$\left. - c_m \cos m\alpha \sin m\beta + d_m \cos m\alpha \cos m\beta\right). \tag{74.12}$$

The same remark as was made about (74.10) holds here with respect to the last four terms of (74.11) and (74.12).

In view of the above, the general solution of the equations for neutral equilibrium at the buckling load is a linear combination (with coefficients a_o, b_o, a_{n1}, etc.) of a number (suppose q) of linearly independent particular solutions u_h, v_h, w_h. If

$$T_{11}\,[u_h,\ v_h,\ w_h;\ u_i,\ v_i,\ w_i] = 0 \quad \text{for } h \neq i \tag{74.13}$$

is satisfied, these solutions are also the solutions of the first q minimum problems (24.8); according to Sect. 24 these first q minima should all be zero. Now with[1]

$$T_2\,[u] = \frac{R}{\ell}\,P_2{}^{o}\,[u] \quad \text{or} \quad T_2\,[u] = -\frac{R}{\ell}\,P_2{}'\,[u]$$

it appears that condition (74.13) is satisfied for an infinitely long cylinder. This follows easily from the relations

$$\left.\begin{aligned}
&\int_0^{2\pi} \begin{matrix}\cos\\ \sin\end{matrix}\, h\beta \begin{matrix}\cos\\ \sin\end{matrix}\, i\beta\, d\beta = 0 \quad \text{for} \quad h \neq i, \quad \int_0^{2\pi} \cos h\beta \sin h\beta\, d\beta = 0,\\
&\lim_{\ell\to\infty} \frac{R}{\ell} \int_0^{\frac{\ell}{R}} \begin{matrix}\cos\\ \sin\end{matrix}\, p_h\alpha \begin{matrix}\cos\\ \sin\end{matrix}\, p_i\alpha\, d\alpha = 0 \quad \text{for} \quad h \neq i,\\
&\lim_{\ell\to\infty} \frac{R}{\ell} \int_0^{\frac{\ell}{R}} \cos p\alpha \sin p\alpha\, d\alpha = 0.
\end{aligned}\right\} \tag{74.14}$$

[1]The factor R/ℓ is included because $T_2[u]$ would otherwise become infinitely large for the infinitely long cylinder.

The general solution (74.10, 11, 12) is then immediately given in the form which is known from the general theory.

75. STABILITY OF THE CRITICAL STATE

According to the general theory of Sect. 272, stability of equilibrium at the buckling load is in the first place governed by the question whether or not the third order form, which results from substitution of (74.10, 11 and 12) in

$$P_3 \widetilde{[u]} = p_3^{\,o} [u] + \lambda_1 P_3' [u] , \tag{75.1}$$

is identically zero. The integrand of (75.1) consists of a sum of products of the form

$$\begin{matrix}\cos\\ \sin\end{matrix} p_h\alpha \begin{matrix}\cos\\ \sin\end{matrix} p_i\alpha \begin{matrix}\cos\\ \sin\end{matrix} p_j\alpha \begin{matrix}\cos\\ \sin\end{matrix} h\beta \begin{matrix}\cos\\ \sin\end{matrix} i\beta \begin{matrix}\cos\\ \sin\end{matrix} j\beta \tag{75.2}$$

where p_h, p_i, p_j each have one of the values determined by (74.4) corresponding to values of $n = h, i, j$ respectively. Each of these products may be reduced to a sum of products of the form

$$\begin{matrix}\cos\\ \sin\end{matrix} (p_h \pm p_i \pm p_j)\alpha \begin{matrix}\cos\\ \sin\end{matrix} (h \pm i \pm j)\beta \ . \tag{75.3}$$

The products (75.3) must be integrated over the cylinder wall. Since

$$\int_0^{2\pi} \begin{matrix}\cos\\ \sin\end{matrix} n\beta\, d\beta = 0 \quad \text{for} \quad n \neq 0,$$

such a product can only yield a nonzero contribution if

$$h \pm i \pm j = 0. \tag{75.4}$$

The integration with respect to α does in general not yield such a simple result. However, if in all contributions of (75.1) the common factor $\frac{2\pi\ell}{R}$ is divided out and the limit process $\ell \to \infty$ is carried out, then as

$$\lim_{\ell \to \infty} \frac{R}{\ell} \int_0^{\frac{\ell}{R}} \begin{matrix}\cos\\ \sin\end{matrix}\, p\alpha\, d\alpha = 0 \quad \text{for} \quad p \neq 0,$$

it follows that a product (75.2) can only yield a nonzero contribution if

$$p_h \pm p_i \pm p_j = 0. \tag{75.5}$$

For the buckling modes considered here ($p \gg 1$), application of this result obtained for infinitely long cylinders to cylinders of a not too small but finite length ($\ell/R > 0.75$) is justified because no influence of the length of such cylinders has been detected experimentally. Besides, the simplification already introduced, whereby p was regarded as a continuous variable, is also exactly valid only for infinite cylinders.

The number of possible combinations of values of h, i, j and p_h, p_i, p_j which satisfy (74.2) or (74.4) is drastically reduced by the conditions (75.4) and (75.5). First of all it is noticed that

$$h + i + j = 0 \quad \text{or} \quad p_h + p_i + p_j = 0$$

is not a possible combination if only positive values of h, i, j and p_h, p_i, p_j are included (negative values give no extension of the solutions (74.10, 11, 12) and therefore need not be considered). Further, the considerations may be restricted to the two cases

$$h + i - j = 0, \quad p_h + p_i - p_j = 0 \quad \text{and} \tag{75.6}$$

$$h + i - j = 0, \quad p_h - p_i + p_j = 0\,, \tag{75.7}$$

as all other possible combinations may be obtained from these by permutation of h, i, and j.

Also, it appears the possibility (75.6) may be eliminated, as substitution of j and p_j (75.6) in relation (74.2) which holds for $n = j$, yields

$$(p_h + p_i)^2 + (h + i)^2 = (p_h + p_i)\sqrt[4]{\frac{4(1 - \nu^2)}{k}}$$

from which, with use of (74.2) for $n = h$ and $n = i$, it follows that

$$p_h p_i + hi = 0.$$

Thus, only the possibility (75.7) remains. Elimination of i and p_i from the relation (74.2), holding for $n = i$, yields

$$p_h p_j - hj = 0.$$

The relation (74.2) for $n = j$ then may be written in the form

$$j^2\left(1 + \frac{h^2}{p_h^2}\right) = \frac{jh}{p_h}\sqrt[4]{\frac{4(1 - \nu^2)}{k}}$$

from which, with use of (74.2) for $n = h$, it follows that $j = h$. The combinations of n and p, which together determine a product (75.2) that may yield a nonzero solution, are thus given by

$$\left.\begin{matrix} n = 0 \\ p = p_o \end{matrix}\right\}, \quad \left.\begin{matrix} n = h \\ p = p_{h1} \end{matrix}\right\}, \quad \left.\begin{matrix} n = h \\ p = p_{h2} \end{matrix}\right\}. \tag{75.8}$$

This result can simply be illustrated by a p versus n graph. Here the combinations of p and n for the buckling modes (74.4) are represented by the intersections of the circle (74.2) with the generators $n = 1, 2, \ldots$ (Fig. 9). The two points of intersections belonging to the same value of n and the point $n = 0$, $p = p_o$ determine together a term of the integrand of P_3 [u] which after integration can yield a nonzero quantity. Except for $n = 0$, $p = p_o$, the assumption $p >> 1$, allows only relatively large values of n as only in that case this assumption has been fulfilled.

Still more simplifications can be introduced in the calculation of (75.1). From (74.10, 11, 12) it follows that u and v are small in comparison to w while their first derivatives may be of the same order of magnitude. Further w' is large in comparison to w, while w° may be of the same order of magnitude as w'. The most important terms of the integrand of P_3^o [u] (72.8), in comparison to which the remaining terms may be disregarded, are then given by

$$\begin{aligned} 4u' w'^2 &+ 4 (v^\circ + w) w^{\circ 2} + 4\nu u' w^{\circ 2} + 4 \nu(v^\circ + w) w'^2 + \\ &+ 4 (1 - \nu) (u^\circ + v') w' w^\circ = 4 [u' + \nu (v^\circ + w)] w'^2 + \\ &+ 4 (\nu u' + v^\circ + w) w^{\circ 2} + 4 (1 - \nu) (u^\circ + v') w' w^\circ . \end{aligned} \tag{75.9}$$

The most important terms of (72.9) are of the same form so that, as $\lambda_1 << 1$, the contribution $\lambda_1 P_3'$ [u] may be neglected in comparison to P_3^o [u] .

Although the corresponding amount of writing is quite extensive, the execution of the calculation of the third order terms now yields no more difficulties, and thus the final result only is reported

$$\begin{aligned} P_3 [\Sigma a_j u_j] = \frac{2\pi \ell}{R^2} (1 - \nu^2) \Big\{ & 3\Sigma n^2 \Big[b_o (- a_{n1} a_{n2} - b_{n1} b_{n2} + c_{n1} c_{n2} + \\ & + d_{n1} d_{n2}) + a_o (a_{n1} c_{n2} + a_{n2} c_{n1} + b_{n1} d_{n2} + b_{n2} d_{n1}) \Big] + \\ & + \frac{3}{2} m^2 \Big[b_o (- a_m^2 - b_m^2 + c_m^2 + d_m^2) + 2a_o (a_m c_m + b_m d_m) \Big] \Big\} . \end{aligned} \tag{75.10}$$

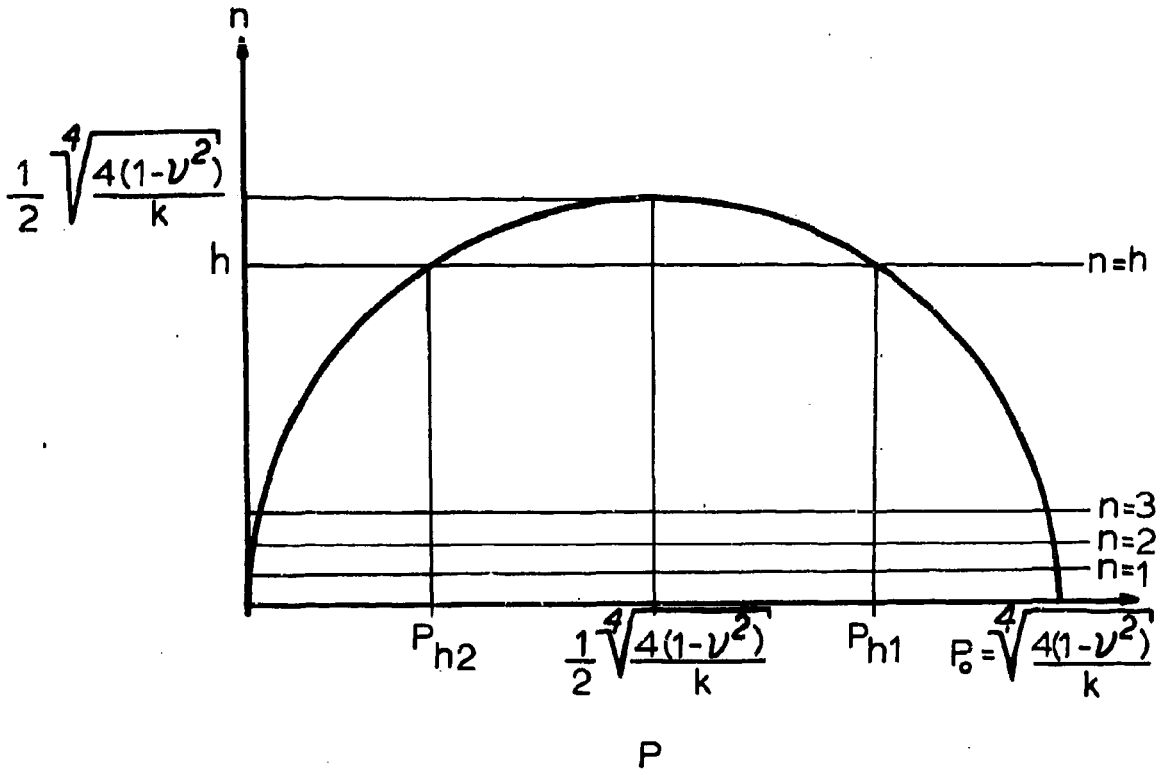
n
$\frac{1}{2}\sqrt[4]{\frac{4(1-\nu^2)}{k}}$
h
n=h
n=3
n=2
n=1
P_{h2}
$\frac{1}{2}\sqrt[4]{\frac{4(1-\nu^2)}{k}}$
P_{h1}
$P_o=\sqrt[4]{\frac{4(1-\nu^2)}{k}}$
P

FIG. 8

Here summation should be extended to all sufficiently large integer values of n which satisfy (74.5). It appears from (75.10) that terms of the third order do exist so that equilibrium at the critical state is unstable.

76. EQUILIBRIUM STATES AT LOADS IN THE NEIGHBORHOOD OF THE BUCKLING LOAD STATE

Since, in view of (72.6 to 11), the energy increment (72.3) is of the form (38.3) the theory of Sect. 38 may be applied. If the considerations are restricted to displacements from the fundamental state of such a small magnitude that already terms of the fourth order may be neglected, then the stationary value of the energy $\overline{P}^{\lambda}(a_j)$ for constant values of a_j takes the form corresponding to (38.22)

$$\overline{P}^{\lambda}(a_j) = (\lambda - \lambda_1)\,\overline{P}_2'(a_j) + \overline{P}_3^{o}(a_j) + \lambda\overline{P}_3'(a_j) \tag{76.1}$$

where

$$\overline{P}_2'(a_j) = P_2'[\Sigma a_j u_j]$$

$$\overline{P}_3^{o}(a_j) = P_3^{o}[\Sigma a_j u_j]$$

$$\overline{P}_3'(a_j) = P_3'[\Sigma a_j u_j] \tag{76.2}$$

As already has been remarked in the previous section, $P_3'[u]$ is of the same form as $P_3^{o}[u]$ so that in (76.1) the last term may be disregarded as $\lambda \ll 1$. Furthermore, the second term agrees with (75.10) so that only the first term needs be calculated. In the integrand of (72.13) u'^2 and v'^2 are again negligible in comparison to w'^2 so that

$$\overline{P}_2'(a_j) = -4(1-\nu^2)\iint(\Sigma a_j w_j')^2\,d\alpha d\beta;$$

after use of (74.14) this becomes

$$\overline{P}_2'(a_j) = -4(1-\nu^2)\,\Sigma a_j^{\,2}\iint w_j'^{\,2}\,d\alpha\,d\beta =$$

$$= -\frac{2\pi\ell}{R}(1-\nu^2)\Big\{\,2p_o^{\,2}\left(a_o^{\,2}+b_o^{\,2}\right)+$$

$$+\sum_{n=1}^{\cdots} p_{n1}^{\,2}\left(a_{n1}^{\,2}+b_{n1}^{\,2}+c_{n1}^{\,2}+d_{n1}^{\,2}\right)+$$

$$+\sum_{n=1}^{\cdots} p_{n2}^{\,2}\left(a_{n2}^{\,2}+b_{n2}^{\,2}+c_{n2}^{\,2}+d_{n2}^{\,2}\right)+$$

$$+\,m^2\left(a_m^{\,2}+b_m^{\,2}+c_m^{\,2}+d_m^{\,2}\right)\Big\}\,. \qquad (76.3)$$

Hence (76.1) becomes

$$\overline{P}^{\lambda}(a_j) = \frac{2\pi\ell}{R^2}(1-\nu^2)\Big\{-R(\lambda-\lambda_1)\Big[2p_o^{\,2}\left(a_o^{\,2}+b_o^{\,2}\right)+$$

$$+\sum_{n=1}^{\cdots} p_{n1}^{\,2}\left(a_{n1}^{\,2}+b_{n1}^{\,2}+c_{n1}^{\,2}+d_{n1}^{\,2}\right)+$$

$$+\sum_{n=1}^{\cdots} p_{n2}^{\,2}\left(a_{n2}^{\,2}+b_{n2}^{\,2}+c_{n2}^{\,2}+d_{n2}^{\,2}\right)+m^2\left(a_m^{\,2}+b_m^{\,2}+c_m^{\,2}+d_m^{\,2}\right)\Big]+$$

$$+\,3\sum_{n=1}^{\cdots} n^2\Big[b_o\left(-a_{n1}a_{n2}-b_{n1}b_{n2}+c_{n1}c_{n2}+d_{n1}d_{n2}\right)+$$

$$+\,a_o\left(a_{n1}c_{n2}+a_{n2}c_{n1}+b_{n1}d_{n2}+b_{n2}d_{n1}\right)\Big]+$$

$$+\,\frac{3}{2}m^2\Big[b_o\left(-a_m^{\,2}-b_m^{\,2}+c_m^{\,2}+d_m^{\,2}\right)+2a_o\left(a_mc_m+b_md_m\right)\Big]\Big\}\,. \qquad (76.4)$$

The equilibrium states are characterized by stationary values of (76.4) as functions of the parameters a_o, b_o, a_{n1} etc. Differentiation with respect to a_o and b_o leads to the conditions

$$\left.\begin{aligned} &-4R(\lambda-\lambda_1)\,p_o^{\,2}a_o+3\sum_{n=1}^{\infty} n^2(a_{n1}c_{n2}+a_{n2}c_{n1}+b_{n1}d_{n2}+b_{n2}d_{n1})+\\ &\qquad\qquad +3m^2\,(a_m c_m+b_m d_m)=0,\\ &-4R(\lambda-\lambda_1)\,p_o^{\,2}b_o+3\sum_{n=1}^{\infty} n^2(-a_{n1}a_{n2}-b_{n1}b_{n2}+c_{n1}c_{n2}+d_{n1}d_{n2})+\\ &\qquad\qquad +\frac{3}{2}m^2\,(-a_m^{\,2}-b_m^{\,2}+c_m^{\,2}+d_m^{\,2})=0. \end{aligned}\right\} \quad (76.5)$$

It appears from these conditions that a_o and b_o cannot have a nonzero value unless at least one pair of the remaining coefficients differs from zero.

Differentiation with respect to a_{n1}, a_{n2}, c_{n1}, c_{n2} leads to the conditions

$$\left.\begin{aligned} -2R\,(\lambda-\lambda_1)\,p_{n1}^{\,2}\,a_{n1}+3n^2\,(-b_0a_{n2}+a_0c_{n2})&=0,\\ -2R\,(\lambda-\lambda_1)\,p_{n2}^{\,2}\,a_{n2}+3n^2\,(-b_0a_{n1}+a_0c_{n1})&=0,\\ -2R\,(\lambda-\lambda_1)\,p_{n1}^{\,2}\,c_{n1}+3n^2\,(\ b_0c_{n2}+a_0a_{n2})&=0,\\ -2R\,(\lambda-\lambda_1)\,p_{n2}^{\,2}\,c_{n2}+3n^2\,(\ b_0c_{n1}+a_0a_{n1})&=0. \end{aligned}\right\} \quad (76.6)$$

The conditions obtained from differentiation with respect to b_{n1}, b_{n2}, d_{n1}, d_{n2} have the same form and follow from (76.6) through replacement of $a_{n1,2}$ and $c_{n1,2}$ by $b_{n1,2}$ and $d_{n1,2}$ respectively. Differentiation of (76.4) with respect to a_m and c_m leads to the conditions

$$\left.\begin{aligned} -2R(\lambda-\lambda_1)\,m^2 a_m + 3m^2(-b_o a_m + a_o c_m) &= 0, \\ -2R(\lambda-\lambda_1)\,m^2 c_m + 3m^2(\ b_o c_m + a_o a_m) &= 0. \end{aligned}\right\} \tag{76.7}$$

The condition obtained by differentiation with respect to b_m and d_m follows from (76.7) through replacement of a_m and c_m by b_m and d_m respectively.

The conditions (76.6) may be regarded as a system of homogeneous linear equations for a_{n1}, a_{n2}, c_{n1}, c_{n2}. These equations have a nonzero solution if and only if the determinant formed by its coefficients

$$\begin{vmatrix} -2R(\lambda-\lambda_1)\,p_{n1}^2 & -3n^2 b_o & 0 & 3n^2 a_o \\ -3n^2 b_o & -2R(\lambda-\lambda_1)\,p_{n2}^2 & 3n^2 a_o & 0 \\ 0 & 3n^2 a_o & -2R(\lambda-\lambda_1)\,p_{n1}^2 & 3n^2 b_o \\ 3n^2 a_o & 0 & 3n^2 b_o & -2R(\lambda-\lambda_1)\,p_{n2}^2 \end{vmatrix} \tag{76.8}$$

is equal to zero. Expansion of the determinant leads after use of

$$p_{n1}\,p_{n2} = n^2 \tag{76.9}$$

to the condition

$$n^8\left[4R^2(\lambda-\lambda_1)^2 - 9(a_o^2 + b_o^2)\right]^2 = 0,$$

from which it follows that

$$a_o^2 + b_o^2 = \tfrac{4}{9}R^2(\lambda-\lambda_1)^2. \tag{76.10}$$

Likewise, the conditions (76.7) as a system of linear homogeneous equations has a nonzero solution if and only if the determinant

$$\begin{vmatrix} -2R(\lambda-\lambda_1)m^2 - 3m^2 b_o & 3m^2 a_o \\ 3m^2 a_o & -2R(\lambda-\lambda_1)m^2 + 3m^2 b_o \end{vmatrix}$$

is equal to zero. Expansion of this determinant leads again to the condition (76.10).

A surprising feature of condition (76.10) is its independency of n, so that the result of its satisfaction is that all equations (76.6 and 7), as well as the equations obtained from these by replacement of

$$a_{n1},\ a_{n2},\ c_{n1},\ c_{n2},\ a_m,\ c_m, \quad \text{by} \quad b_{n1},\ b_{n2},\ d_{n1},\ d_{n2},\ b_m,\ d_m,$$

have simultaneously a nonzero solution. On the other hand, if (76.10) is not satisfied, then (76.6 and 7) have only the trivial zero solution. In that case a_o and b_o are also equal to zero in view of (76.5). This solution which represents the fundamental state can be left out of further consideration.

For the values of a_o and b_o determined by (76.10), the determinant (76.8) is of the rank 2, i.e., all the determinants of the third order formed from its rows and columns are zero, while at least one of the determinants of rank two is unequal to zero. The general solution of (76.6) is, therefore,

$$\left.\begin{aligned} a_{n2} &= \frac{3n^2}{2R(\lambda-\lambda_1)\,p_{n2}^{\,2}}\,(-b_0 a_{n1} + a_0 c_{n1}), \\ c_{n2} &= \frac{3n^2}{2R(\lambda-\lambda_1)\,p_{n2}^{\,2}}\,(a_0 a_{n1} + b_0 c_{n1}), \end{aligned}\right\} \qquad (76.11)$$

in which a_{n1} and c_{n1} are arbitrary constants. The corresponding solutions for b_{n2} and d_{n2} are obtained through replacement here of a_{n1} and c_{n1} by b_{n1} and d_{n1} respectively. The solution of (76.7) is

$$c_m = \frac{3}{2R(\lambda - \lambda_1) - 3b_o} a_o a_m \tag{76.12}$$

unless a_o is equal to zero; in the latter case the solution is given by

$$b_o = \frac{2}{3} R(\lambda - \lambda_1) \quad \text{or} \quad b_o = -\frac{2}{3} R(\lambda - \lambda_1) \ . \tag{76.13}$$

depending on whether b_o determined by (76.10) has the value

$$a_m = 0, \ c_m \text{ arbitrary, resp. } a_m \text{ arbitrary, } c_m = 0. \tag{76.14}$$

The corresponding solutions for b_m and d_m are obtained from this through replacement of a_m and c_m by b_m and d_m respectively.

By substitution of (76.11 and 12), (76.5) becomes

$$-4R(\lambda - \lambda_1) p_o^2 a_o + 9 \sum_{n=1}^{\cdots} \frac{n^4 a_o}{2R(\lambda - \lambda_1) p_{n2}^2} \left(a_{n1}^2 + b_{n1}^2 + c_{n1}^2 + d_{n1}^2\right) +$$

$$+ 9 \frac{m^2 a_o}{2R(\lambda - \lambda_1) - 3b_o} \left(a_m^2 + b_m^2\right) = 0,$$

$$-4R(\lambda - \lambda_1) p_o^2 b_o + 9 \sum_{n=1}^{\cdots} \frac{n^4 b_o}{2R(\lambda - \lambda_1) p_{n2}^2} \left(a_{n1}^2 + b_{n1}^2 + c_{n1}^2 + d_{n1}^2\right) +$$

$$+ \frac{3}{2} m^2 \left\{ \frac{9a_o^2}{[2R(\lambda - \lambda_1) - 3b_o]^2} - 1 \right\} \left(a_m^2 + b_m^2\right) = 0.$$

By use of (76.9) the first condition becomes

$$a_o \left\{ -4R(\lambda - \lambda_1) p_o^2 + \frac{9}{2R(\lambda - \lambda_1)} \sum_{n=1}^{\cdots} p_{n1}^2 (a_{n1}^2 + b_{n1}^2 + c_{n1}^2 + d_{n1}^2) + \right.$$

$$\left. + \frac{9}{2R(\lambda - \lambda_1) - 3b_o} m^2 (a_m^2 + b_m^2) \right\} = 0. \quad (76.15)$$

By use of (76.10), the second condition can be reduced to

$$b_o \left\{ -4R(\lambda - \lambda_1) p_o^2 + \frac{9}{2R(\lambda - \lambda_1)} \sum_{n=1}^{\cdots} p_{n1}^2 (a_{n1}^2 + b_{n1}^2 + c_{n1}^2 + d_{n1}^2) + \right.$$

$$\left. + \frac{9}{2R(\lambda - \lambda_1) - 3b_o} m^2 (a_m^2 + b_m^2) \right\} = 0. \quad (76.16)$$

Except if $a_o = b_o = 0$, which case may be disregarded, these conditions are only satisfied by

$$-4R(\lambda - \lambda_1) p_o^2 + \frac{9}{2R(\lambda - \lambda_1)} \sum_{n=1}^{\cdots} p_{n1}^2 (a_{n1}^2 + b_{n1}^2 + c_{n1}^2 + d_{n1}^2) +$$

$$+ \frac{9}{2R(\lambda - \lambda_1) - 3b_o} m^2 (a_m^2 + b_m^2) = 0. \quad (76.17)$$

The case $a_o = 0$ must still be considered separately. The first condition (76.5) is then immediately satisfied by substitution of (76.11 and 14). Depending on whether the first or the second relation (76.13) is satisfied, the second condition (76.5) by substitution of (76.11 and 14) becomes

$$-8R^2 (\lambda - \lambda_1)^2 p_o^2 + 9 \sum_{n=1}^{\cdots} p_{n1}^2 (a_{n1}^2 + b_{n1}^2 + c_{n1}^2 + d_{n1}^2) +$$

$$+ \frac{9}{2} m^2 (c_m^2 + d_m^2) = 0, \quad \text{or} \quad (76.18)$$

$$- 8R^2 (\lambda - \lambda_1)^2 p_o^2 + 9 \sum_{n=1}^{\cdots} p_{n1}^2 (a_{n1}^2 + b_{n1}^2 + c_{n1}^2 + d_{n1}^2) +$$

$$+ \frac{9}{2} m^2 (a_m^2 + b_m^2) = 0 \qquad (76.19)$$

respectively.

The results obtained may be summarized as follows. The displacements (74.10 to 12), for neighboring states of equilibrium deviating from the fundamental state, should satisfy (76.10 and 17) and (76.11 and 12). In the case that $a_o = 0$ one of the conditions (76.18 or 19) takes the place of (76.17), while (76.12) is replaced by the corresponding relation (76.14). It appears from these results that the displacements in the neighboring equilibrium states are far from uniquely determined. This is partially caused by the fact that the contributions to the displacements with coefficients a, b, c, d with the same indices, all determine the same buckling mode, although with a relative "phase-shift". On the other hand, the indeterminancy between the coefficients with different indices cannot be attributed to this fact. It is to be expected that this latter indeterminancy would, at least partially, disappear if in the energy also terms of the fourth order in the displacements were taken into account. This possibility of improvement of the theory would introduce a considerable complication of the analysis and will not be further explored.

The stability of the neighboring states of equilibrium is governed by the second variation of (76.4)

$$\Delta^2 \bar{P}^\lambda(a_j) = \frac{2\pi \ell}{R^2} (1 - \nu^2) \Big\{ - R(\lambda - \lambda_1) \Big[2p_o^2 (\Delta a_o^2 + \Delta b_o^2) +$$

$$+ \sum_{n=1}^{\cdots} p_{n1}^2 (\Delta a_{n1}^2 + \Delta b_{n1}^2 + \Delta c_{n1}^2 + \Delta d_{n1}^2) +$$

$$+ \sum_{n=1}^{\cdots} p_{n2}^2 (\Delta a_{n2}^2 + \Delta b_{n2}^2 + \Delta c_{n2}^2 + \Delta d_{n2}^2) +$$

$$
\begin{aligned}
&+ m^2 (\Delta a_m{}^2 + \Delta b_m{}^2 + \Delta c_m{}^2 + \Delta d_m{}^2) \Big] + \\
&+ 3 \sum_{n=1}^{\cdots} n^2 \Big[b_o(- \Delta a_{n1} \Delta a_{n2} - \Delta b_{n1} \Delta b_{n2} + \Delta c_{n1} \Delta c_{n2} + \Delta d_{n1} \Delta d_{n2}) + \\
&+ a_o (\Delta a_{n1} \Delta c_{n2} + \Delta a_{n2} \Delta c_{n1} + \Delta b_{n1} \Delta d_{n2} + \Delta b_{n2} \Delta d_{n1}) + \\
&- a_{n1} \Delta b_o \Delta a_{n2} - a_{n2} \Delta b_o \Delta a_{n1} - b_{n1} \Delta b_o \Delta b_{n2} - b_{n2} \Delta b_o \Delta b_{n1} + \\
&+ c_{n1} \Delta b_o \Delta c_{n2} + c_{n2} \Delta b_o \Delta c_{n1} + d_{n1} \Delta b_o \Delta d_{n2} + d_{n2} \Delta b_o \Delta d_{n1} + \\
&+ a_{n1} \Delta a_o \Delta c_{n2} + c_{n2} \Delta a_o \Delta a_{n1} + a_{n2} \Delta a_o \Delta c_{n1} + c_{n1} \Delta a_o \Delta a_{n2} + \\
&+ b_{n1} \Delta a_o \Delta d_{n2} + d_{n2} \Delta a_o \Delta b_{n1} + b_{n2} \Delta a_o \Delta d_{n1} + d_{n1} \Delta a_o \Delta b_{n2} \Big] + \\
&+ \frac{3}{2} m^2 \Big[b_o (- \Delta a_m{}^2 - \Delta b_m{}^2 + \Delta c_m{}^2 + \Delta d_m{}^2) + \\
&+ 2a_o (\Delta a_m \Delta c_m + \Delta b_m \Delta d_m) + \\
&- 2a_m \Delta b_o \Delta a_m - 2b_m \Delta b_o \Delta b_m + 2c_m \Delta b_o \Delta c_m + \\
&+ 2d_m \Delta b_o \Delta d_m + 2a_m \Delta a_o \Delta c_m + 2c_m \Delta a_o \Delta a_m + \\
&+ 2b_m \Delta a_o \Delta d_m + 2d_m \Delta a_o \Delta b_m \Big] \Big\} . \qquad (76.20)
\end{aligned}
$$

The general conclusion of Sect. 36 that neighboring equilibrium states at loads smaller than the buckling load are unstable can immediately be used. Further, the coefficient of, for instance, $\Delta a_o{}^2$ is negative for loads greater than the buckling load. Consequently (76.20) is negative only if Δa_o is different from zero. Therefore, the neighboring states of equilibrium, as well as the fundamental state, are unstable at loads in excess of the buckling load. Since an unstable state of equilibrium cannot be realized experimentally, the above analysis offers an explanation why, at least for small deformations, the thin walled cylinder cannot carry loads greater than the buckling load.

The neighboring equilibrium states for a cylindrical shell were investigated by von Kármán and Tsien [51]. These writers assumed for the total normal displacement component

$$w = a_o + a_1 \cos p\alpha \cos n\beta + a_2 (\cos 2p\alpha + \cos 2n\beta) . \qquad (76.21)$$

The displacement components in the axial and tangential directions are then determined by application of the equilibrium conditions in the plane of the shell. The three parameters in (76.21) are finally found from the condition that the potential energy should be a minimum.

The displacements assumed by von Kármán and Tsien cannot represent the general solution in the critical state. Consequently, their results will presumably be less accurate for loads reasonably close to the buckling load. This supposition is confirmed by the shape of their curves giving the amplitude a_1 of the critical mode as a function of the load. At the point which represents the critical state $\lambda = \lambda_1$, $a_1 = 0$, the tangent to the curve is parallel to the a_1-axis. According to the general theory (76.10), however, the amplitude of the critical mode in the neighborhood of the buckling load increases linearly with the changes in the load. On the other hand, the theory developed here yields improbable results for loads further removed from the buckling load. It leads for instance for the unloaded state, $\lambda = 0$, to equilibrium states with nonzero values of the coefficients $\underline{a}$, b, c, d. There is no doubt that this is caused by the omission in the calculation of the energy of terms of the fourth order in the displacements (see also Sect. 783).

77. THE INFLUENCE OF SMALL DEVIATIONS

It is assumed that the undeformed state of the middle surface of the structure can be derived from a cylinder by displacements w_o in the direction normal to the cylinder surface. The coordinates of a point on this middle surface are then given by

$$x_1^o = R\alpha, \quad x_2^o = (R + w_o) \sin\beta , \quad x_3^o = (R + w_o) \cos\beta \; ..$$

It follows from Sect. 57, that the strain components of the middle surface are determined by (see also (56.3))

$$\left.\begin{aligned}
\gamma_{\alpha\alpha o}{}^{*} &= \frac{1}{R}\,2u' + \frac{1}{R^2}\,(u'^2 + v'^2 + w'^2) + \frac{1}{R^2}\,2w_o{}'\,w', \\
\gamma_{\beta\beta o}{}^{*} &= \frac{1}{R}\,2(v^{\cdot} + w) + \frac{1}{R^2}\left[u^{\cdot 2} + (v^{\cdot} + w)^2 + (w^{\cdot} - v)^2\right] + \\
&\qquad + \frac{1}{R^2}\left[2w_o\,(v^{\cdot} + w) + 2w_o{}^{\cdot}\,(w^{\cdot} - v)\right], \\
\gamma_{\alpha\beta o}{}^{*} &= \frac{1}{R}\,(u^{\cdot} + v') + \frac{1}{R^2}\left[u'\,u^{\cdot} + v'\,(v^{\cdot} + w) + w'\,(w^{\cdot} - v)\right] + \\
&\qquad + \frac{1}{R^2}\left[w_o v' + w_o{}'\,(w^{\cdot} - v) + w_o{}^{\cdot}\,w'\right].
\end{aligned}\right\} \quad (77.1)$$

The expressions (71.5) for the changes of curvature remain unchanged.

Just as the extended theory of Sect. 38 could be applied to the perfect cylinder, use can here be made of Sect. 47. In the energy increment (47.1) on transition from the displacement configuration $U(\lambda)$, which determines the fundamental state of the model, to a displacement configuration $U(\lambda) + u$, the influence of small deviations between structure and model is expressed by the term (47.2) only. This term, originating from the elastic energy, is obtained from terms which are quadratic in the total displacements $U(\lambda) + u$. If for the time being these total displacements are called u, v, w, it follows from Sect. 57 that these quadratic terms are obtained by substitution of (77.1) in (55.11). Thus, they are

$$\frac{1}{4} Gh \frac{1}{1-\nu} \frac{1}{R} \iint \Big[8w_o' u' w' + 8w_o (v^{\cdot} + w)^2 +$$

$$+ 8w_o (v^{\cdot} + w)(w^{\cdot} - v) + 8\nu w_o' w' (v^{\cdot} + w) +$$

$$+ 8\nu w_o u' (v^{\cdot} + w) + 8\nu w_o^{\cdot} u' (w^{\cdot} - v) +$$

$$+ 4(1-\nu) w_o (u^{\cdot} + v') v' + 4(1-\nu) w_o' (u^{\cdot} + v')(w^{\cdot} - v) +$$

$$+ 4(1-\nu) w_o^{\cdot} (u^{\cdot} + v') w' \Big] d\alpha d\beta. \qquad (77.2)$$

In the following $U(\lambda) + u$ represents the total displacements, of which the components are

$$-\lambda R\alpha + u, \quad v, \quad \lambda\nu R + w.$$

The desired expression (47.2) is then obtained by expansion of (77.2) including only terms which are linear in u, v, and w. After division by $\frac{1}{4} Gh \frac{1}{1-\nu}$

$$\epsilon\lambda Q_1'[u] = \iint \Big[-8\lambda w_o' w' + 16\nu\lambda w_o (v^{\cdot} + w) +$$

$$+ 8v\lambda w_o^{\cdot} (w^{\cdot} - v) + 8\nu^2 \lambda w_o' w' - 8\nu\lambda w_o (v^{\cdot} + w) +$$

$$+ 8\nu^2 \lambda w_o u' - 8\nu\lambda w_o^{\cdot} (w^{\cdot} - v) \Big] d\alpha d\beta =$$

$$= \lambda \iint \Big[-8(1-\nu^2) w_o' w' + 8\nu w_o (\nu u' + v^{\cdot} + w) \Big] d\alpha d\beta.$$

If it is assumed also that w_o is zero along the edges of the cylinder, then, through integration by parts, this expression may be reduced to

$$\epsilon\lambda Q_1' [u] = 8\lambda \iint w_o \left[(1 - \nu^2) w'' + \nu (\nu u' + v' + w)\right] d\alpha d\beta. \qquad (77.3)$$

The considerations are restricted to displacements from the configuration $U(\lambda)$ of such small magnitude that terms of the fourth order in u, v, w and their derivatives may be disregarded. The stationary value of the energy $F^\lambda(a_j)$ for constant values of a_j then takes the form

$$F^\lambda (a_j) = \epsilon\lambda \overline{Q}_1' (a_j) + \overline{P}^\lambda (a_j), \qquad (77.4)$$

which is derived from (76.1) and (77.3) and which corresponds to (47.8). In this expression $\overline{P}^\lambda(a_j)$ is determined by (76.4) and

$$\epsilon\lambda\overline{Q}_1' (a_j) = \epsilon\lambda Q_1' [\Sigma a_j u_j], \qquad (77.5)$$

where the components of $\Sigma a_j u_j$ are determined by (74.10 to 12). Since p^2 is always supposed to be large in comparison to unity, the first term between brackets dominates in (77.3) and all the other terms may be omitted. For (77.5) then follows

$$\begin{aligned}\epsilon\lambda\overline{Q}_1' (a_j) = - \frac{2\pi\ell}{R^2} (1 - \nu^2) 8R \epsilon\lambda \Big\{ & p_o^2 (A_o a_o + B_o b_o) + \\ & + \sum_{n=1}^{\cdots} p_{n1}^2 (A_{n1}a_{n1} + B_{n1}b_{n1} + C_{n1}c_{n1} + D_{n1}d_{n1}) + \\ & + \sum_{n=1}^{\cdots} p_{n2}^2 (A_{n2}a_{n2} + B_{n2}b_{n2} + C_{n2}c_{n2} + D_{n2}d_{n2}) + \\ & + m^2 (A_m a_m + B_m b_m + C_m c_m + D_m d_m) \Big\} . \end{aligned} \qquad (77.6)$$

where for brevity

$$\frac{R}{2\pi\ell} \iint w_o \sin p_o \alpha d\alpha d\beta = \epsilon A_o,$$

$$\frac{R}{2\pi\ell} \iint w_o \sin p_{n1} \alpha \cos n\beta d\alpha d\beta = \epsilon A_{n1} \text{ etc.} \tag{77.7}$$

The equilibrium states are characterized by stationary values of (77.4). Differentiation with respect to a_o and b_o leads to the conditions

$$- 8R\lambda \epsilon p_o^2 A_o - 4R(\lambda - \lambda_1) p_o^2 a_o +$$

$$+ 3 \sum_{n=1}^{\infty} n^2 (a_{n1} c_{n2} + a_{n2} c_{n1} + b_{n1} d_{n2} + b_{n2} d_{n1}) +$$

$$+ 3m^2 (a_m c_m + b_m d_m) = 0,$$

$$- 8R\lambda \epsilon p_o^2 B_o - 4R(\lambda - \lambda_1) p_o^2 b_o +$$

$$+ 3 \sum_{n=1}^{\infty} n^2 (- a_{n1} a_{n2} - b_{n1} b_{n2} + c_{n1} c_{n2} + d_{n1} d_{n2}) +$$

$$+ \frac{3}{2} m^2 (- a_m^2 - b_m^2 + c_m^2 + d_m^2) = 0. \tag{77.8}$$

Differentiation with respect to a_{n1}, a_{n2}, c_{n1}, c_{n2} leads to the conditions

$$- 8R\lambda \epsilon p_{n1}^2 A_{n1} - 2R(\lambda - \lambda_1) p_{n1}^2 a_{n1} + 3n^2 (- b_o a_{n2} + a_o c_{n2}) = 0,$$

$$- 8R\lambda \epsilon p_{n2}^2 A_{n2} - 2R(\lambda - \lambda_1) p_{n2}^2 a_{n2} + 3n^2 (- b_o a_{n1} + a_o c_{n1}) = 0,$$

$$- 8R\lambda\epsilon p_{n1}^{2} C_{n1} - 2R(\lambda - \lambda_1) p_{n1}^{2} c_{n1} + 3n^2 (b_o c_{n2} + a_o a_{n2}) = 0,$$

$$- 8R\lambda\epsilon p_{n2}^{2} C_{n2} - 2R(\lambda - \lambda_1) p_{n2}^{2} c_{n2} + 3n^2 (b_o c_{n1} + a_o a_{n1}) = 0. \quad (77.9)$$

The conditions obtained from differentiation with respect to b_{n1}, b_{n2}, d_{n1}, d_{n2} follow from (77.9) after replacement of $A_{n1,2}$, $C_{n1,2}$, $a_{n1,2}$, $c_{n1,2}$ by $B_{n1,2}$, $D_{n1,2}$, $b_{n1,2}$, $d_{n1,2}$, respectively. Differentiation with respect to a_m and c_m leads to the conditions

$$\left.\begin{aligned} - 8R\lambda\epsilon m^2 A_m - 2R(\lambda - \lambda_1) m^2 a_m + 3m^2 (- b_o a_m + a_o c_m) &= 0, \\ - 8R\lambda\epsilon m^2 C_m - 2R(\lambda - \lambda_1) m^2 c_m + 3m^2 (b_o c_m + a_o a_m) &= 0. \end{aligned}\right\} \quad (77.10)$$

The conditions obtained by differentiation with respect to b_m and d_m follow from (77.10) after replacement of A_m, C_m, a_m, c_m by B_m, D_m, b_m, d_m respectively.

The solution of the equilibrium equations can in principle be carried out as follows. Again, (77.9 and 10) may be conceived to be systems of linear equations for $a_{n1,2}$, $c_{n1,2}$, a_m, c_m which then are inhomogeneous. The solution of these equations is always uniquely determined as long as the determinant (76.8) differs from zero, and, as it will appear later, this is always the case below the buckling load. Substitution of this solution, which is still dependent on the parameters a_o and b_o, in (77.8) yields two non-linear equations for a_o and b_o.

However, the solution method described above is difficult to apply and the considerations will be restricted to a simpler, special case. For this, the following choice is made

$$A_{n1,2} = B_{n1,2} = C_{n1,2} = D_{n1,2} = A_m = B_m = C_m = D_m = 0.$$

This case occurs for instance for an infinitely long cylinder if

$$w_o = \epsilon h \sin (p_o \alpha - \alpha_o) . \tag{77.11}$$

The remaining constants (77.7) then are

$$A_o = \frac{1}{2} h \cos \alpha_o , \quad B_o = -\frac{1}{2} h \sin \alpha_o . \tag{77.12}$$

Equations (77.9 and 10) now have only the trivial solution unless the determinant (76.8) is equal to zero. For this zero solution, it follows from (77.8)

$$a_o = \frac{2\lambda \, \epsilon A_o}{\lambda_1 - \lambda} = \frac{\lambda}{\lambda_1 - \lambda} \, \epsilon h \cos \alpha_o ,$$

$$b_o = \frac{2\lambda \, \epsilon B_o}{\lambda_1 - \lambda} = -\frac{\lambda}{\lambda_1 - \lambda} \, \epsilon h \sin \alpha_o . \tag{77.13}$$

It appears from (77.13) that for $\lambda \to 0$, a_o and b_o also approach zero. The solution obtained, therefore, corresponds to the undeformed state of the structure when $\lambda \to 0$, i.e, it determines the natural equilibrium state.

The stability of the equilibrium for $\lambda < \lambda_2$ is governed by the second variation of (77.4) which is identical to the second variation (76.20) of the expression (76.4). Substitution of the zero solution of (77.9 and 10) gives

$$\frac{\Delta^2 F^\lambda (a_i)}{\frac{2\pi \ell}{R^2} (1 - \nu^2)} = \left\{ 2R (\lambda_1 - \lambda) \, p_o^2 \, (\Delta a_o^2 + \Delta b_o^2) \right\} +$$

$$+ \sum_{n=1}^{\infty} \left\{ R (\lambda_1 - \lambda) \left[p_{n1}^2 \, (\Delta a_{n1}^2 + \Delta c_{n1}^2) + p_{n2}^2 \, (\Delta a_{n2}^2 + \Delta c_{n2}^2) \right] \right\} +$$

$$+ 3n^2 b_o (- \Delta a_{n1} \Delta a_{n2} + \Delta c_{n1} \Delta c_{n2}) +$$

$$+ 3n^2 a_o (\Delta a_{n1} \Delta c_{n2} + \Delta a_{n2} \Delta c_{n1}) \Big| +$$

$$+ \sum_{n=1}^{\cdots} \Big| R (\lambda_1 - \lambda) \Big[p_{n1}^2 (\Delta b_{n1}^2 + \Delta d_{n1}^2) + p_{n2}^2 (\Delta b_{n2}^2 + \Delta d_{n2}^2) \Big] +$$

$$+ 3n^2 b_o (- \Delta b_{n1} \Delta b_{n2} + \Delta d_{n1} \Delta d_{n2}) +$$

$$+ 3n^2 a_o (\Delta b_{n1} \Delta d_{n2} + \Delta b_{n2} \Delta d_{n1}) \Big| +$$

$$+ \Big| R (\lambda_1 - \lambda) m^2 (\Delta a_m^2 + \Delta c_m^2) +$$

$$+ \frac{3}{2} m^2 b_o (- \Delta a_m^2 + \Delta c_m^2) + 3m^2 a_o \Delta a_m \Delta c_m \Big| +$$

$$+ \Big| R (\lambda_1 - \lambda) m^2 (\Delta b_m^2 + \Delta d_m^2) +$$

$$+ \frac{3}{2} m^2 b_o (- \Delta b_m^2 + \Delta d_m^2) + 3m^2 a_o \Delta b_m \Delta d_m \Big| . \qquad (77.14)$$

The forms of the second order in $\Delta a_o, \Delta b_o$, etc., placed between curly brackets are not mutually coupled and, thus, they can be considered separately.

The first form is positive definite for $\lambda < \lambda_1$, semidefinite for $\lambda = \lambda_1$ and negative definite for $\lambda > \lambda_1$.

The second form is, for sufficiently small values of λ, positive definite because a_o and b_o approach simultaneously zero along with λ. On the other hand it can certainly admit negative values for $\lambda > \lambda_1$. This form is semi-positive definite if its minimum (with the value zero) is also reached for a set of values $\Delta a_{n1,2}, \Delta c_{n1,2}$ differing from zero. For this purpose, the equations

$$2R (\lambda_1 - \lambda) p_{n1}^2 \Delta a_{n1} + 3n^2 (- b_o \Delta a_{n2} + a_o \Delta c_{n2}) = 0 \text{ etc.} \qquad (77.15)$$

which express the minimum conditions, should possess a non-trivial solution. These equations are, however, identical to (76.8) so that they possess a non-zero solution if and only if (76.10) has been satisfied

$$a_o^{\ 2} + b_o^{\ 2} = \frac{4}{9} R^2 (\lambda_1 - \lambda)^2. \tag{77.16}$$

The second form thus can be made semipositive definite by increase of the load parameter λ to a value smaller than λ_1 for which (77.16) is satisfied. Elimination of a_o and b_o by use of (77.13) gives for this limit value the equation

$$\frac{\lambda^2}{(\lambda_1 - \lambda)^2} \epsilon^2 h^2 = \frac{4}{9} R^2 (\lambda_1 - \lambda)^2 ,$$

which has a solution between 0 and λ_1

$$\lambda = \lambda_1 + \frac{3}{4} \frac{\epsilon h}{R} - \sqrt{\frac{3}{2} \lambda_1 \frac{\epsilon h}{R} + \frac{9}{16} \frac{\epsilon^2 h^2}{R^2}} \tag{77.17}$$

for positive values of ϵ, and

$$\lambda = \lambda_1 - \frac{3}{4} \frac{\epsilon h}{R} - \sqrt{-\frac{3}{2} \lambda_1 \frac{\epsilon h}{R} + \frac{9}{16} \frac{\epsilon^2 h^2}{R^2}}$$

for negative values of ϵ. This latter solution is the same as that for the positive value $|\epsilon|$ so that the considerations may be further restricted to positive values of ϵ.

Furthermore, the determinant (76.8) is different from zero for values of λ smaller than the limit value (77.17) so that the assumption used in the solution of (77.9 and 10) has been fulfilled.

The third form of (77.14) is completely equivalent to the second so that it is also positive definite for values of λ smaller than the limit value (77.17).

The fourth and fifth forms of (77.14) are also positive definite for small values of λ and they can also assume negative values for $\lambda > \lambda_1$. They are semipositive definite if the minimum (with the value zero) determined by the equations

$$2R(\lambda_1 - \lambda)\Delta a_m + 3(-b_o\Delta a_m + a_o\Delta c_m) = 0 ,$$

$$2R(\lambda_1 - \lambda)\Delta c_m + 3(b_o\Delta c_m + a_o\Delta a_m) = 0 ,$$

also corresponds to a set of non zero values of Δa_m, Δc_m. This requirement leads again to condition (77.16) which again leads to the value of λ determined by (77.17).

It follows from the foregoing that the second variation (77.14) is positive definite for values of λ between zero and the value determined by (77.17), while it is semi-definite for the value last mentioned. Hence, this value determines the buckling load of the structure. With

$$\lambda_1 = \sqrt{\frac{k}{1 - \nu^2}} = \frac{h}{R}\frac{1}{\sqrt{3(1 - \nu^2)}},$$

it can be written in the form

$$\lambda^* = \lambda_1 \left[1 + \frac{3}{4}\sqrt{3(1 - \nu^2)}\,\epsilon + \right.$$

$$\left. - \sqrt{\frac{3}{4}\sqrt{3(1 - \nu^2)}\,\epsilon\left[2 + \frac{3}{4}\sqrt{3(1 - \nu^2)}\,\epsilon\right]}\right] \qquad (77.18)$$

and with $\nu = 0.3$ it is given by

$$\lambda^* = \lambda_1 \left[1 + 1.24\,\epsilon - \sqrt{1.24\epsilon(2 + 1.24\epsilon)} \right] \quad . \tag{77.19}$$

The great sensitivity of the buckling load for small deviations from the perfect cylindrical shell is clear from this last formula (see Fig. 9).

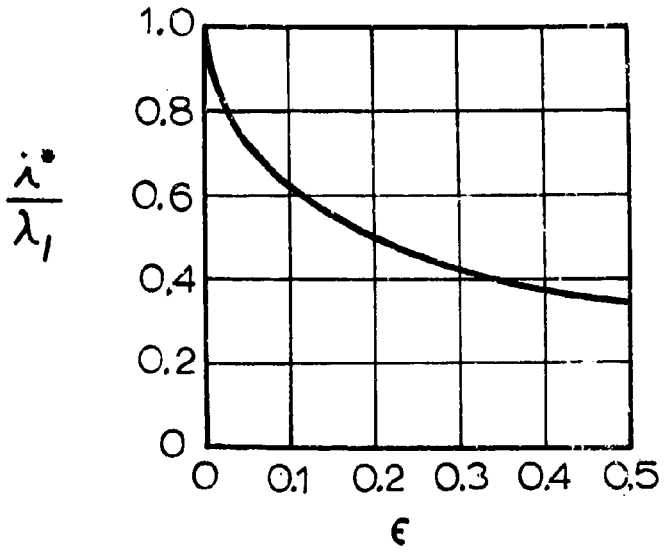

FIG. 9

For instance, the buckling load amounts to 61 percent of the buckling load for the perfect cylindrical shell for $\epsilon = 0.1$, in which case the amplitude of the deviations (77.11) is 10 percent of the wall thickness. For $\epsilon = 0.5$ the buckling load is only 34 percent of its original value. The experimentally determined value of about 25 percent of the buckling load for the perfect cylinder with a radius to wall thickness ratio of $R/h = 1000$ corresponds to $\epsilon = 0.9$. This result forms a striking contrast to the theory of Donnell [22] which can explain the experimentally determined values only if the amplitude of the deviations is about ten times larger. Although it is, of course, desirable to extend the investigation to deviations of other forms than (77.11), it may be concluded now that the theory presented here gives an explanation for the large differences between theoretically and experimentally determined buckling loads. Also,

the wide scatter in the experimental results is satisfactorily explained by the great sensitivity of the buckling load to small changes in the magnitude of the deviations.

In the previous analysis it was consistently assumed that the elastic limit of the material would not be surpassed at any point of the structure. This assumption may be examined after the calculation of the greatest absolute value of the strain component $\gamma_{\alpha\alpha}$. When u'^2 and v'^2 are disregarded and the substitution of

$$- \lambda R\alpha + \frac{\nu}{p_o}(a_o \cos p_o\alpha - b_o \sin p_o\alpha) \text{ and } \nu\lambda R + a_o \sin p_o\alpha + b_o \cos p_o\alpha \qquad (77.20)$$

for the total displacements in axial and radial direction is made, then the deformation component of the middle surface (77.1), by use of (77.11) and (77.13) becomes

$$\gamma_{\alpha\alpha o}^{*} = - 2\lambda - 2\nu\frac{\lambda}{\lambda_1 - \lambda} \epsilon \frac{h}{R} \sin(p_o\alpha - \alpha_o) +$$

$$+ p_o{}^2 \left(\frac{\lambda}{\lambda_1 - \lambda}\right)^2 \epsilon^2 \frac{h^2}{R^2} \cos^2(p_o\alpha - \alpha_o) +$$

$$+ 2p_o{}^2 \frac{\lambda}{\lambda_1 - \lambda} \epsilon^2 \frac{h^2}{R^2} \cos^2(p_o\alpha - \alpha_o) , \qquad (77.21)$$

while the change of curvature is

$$\rho_{\alpha\alpha}^{*} = - p_o{}^2 \frac{\lambda}{\lambda_1 - \lambda} \epsilon \frac{h}{R^2} \sin(p_o\alpha - \alpha_o) . \qquad (77.22)$$

The greatest (negative) total component of deformation is reached for $\sin(p_o \alpha - \alpha_o) = 1$ and for $z = -1/2\,h$; it is (see(57.9))

$$\gamma_{\alpha\alpha} = -2\lambda - 2\nu \frac{\lambda}{\lambda_1 - \lambda} \epsilon \frac{h}{R} - p_o^2 \frac{\lambda}{\lambda_1 - \lambda} \epsilon \frac{h^2}{R^2} . \qquad (77.23)$$

The greatest absolute value is reached at the buckling load $\lambda = \lambda^*$; after substitution of (74.8)

$$\gamma_{\alpha\alpha} = -2\lambda^* - 2 \frac{\lambda^*}{\lambda_1 - \lambda^*} \left(\nu\epsilon \frac{h}{R} + \sqrt{3(1 - \nu^2)}\, \epsilon \frac{h}{R} \right) .$$

For $R/h = 1000$, $\nu = 0.3$ and the values found in experiments

$$\lambda^* = \frac{1}{4}\lambda_1 = 0.15 \frac{h}{R} , \qquad \epsilon = 0.9$$

it then follows that

$$\gamma_{\alpha\alpha} = -\ 0.0015 .$$

The specific strain is consequently smaller than 0.001 so that it is not to be expected that excess of the elasticity limit will occur if the cylinder is made of steel or dural alumin.

78. CLOSER CONSIDERATION OF SOME SIMPLIFICATIONS

In this section some of the simplifications which were introduced will be more closely examined. Justification of omissions, which have been discussed elsewhere in the literature will not be attempted here.

781. Formulas (73.9)

In the derivation of these formulas, kp^2 and kn^2 are disregarded in comparison to unity. For the buckling modes considered in Sect. 74 and thereafter, this omission is indeed motivated since kp^2 and kn^2, in view of (74.8), cannot be greater than $2\sqrt{k(1-\nu^2)}$; thus, the omission is equivalent to the omission of λ in comparison to unity (see 74.3).

782. Formulas (71.5)

It is sufficient to justify these simplified formulas for the calculation of (75.10). For this purpose it is remarked that, when use is made of the more accurate formulas (71.4), the integrand of the third order term in (71.6) should be supplemented with a term containing the factor k. With use of the displacements (74.10 to 12), the order of magnitude of the most important part of this term appears to be kww''. Then, again by use of (74.10), a contribution in (75.10) of the form

$$\frac{2\pi\ell}{R^2} kp_o^4 \, a_o a_{n1} a_{n2} \quad \text{etc.}$$

is found, or after use of (74.8)

$$\frac{2\pi\ell}{R^2} 4(1-\nu^2) \, a_o a_{n1} a_{n2} \quad \text{etc.} \tag{78.1}$$

Because p_{n1}^2 and p_{n2}^2 can only become large in comparison to unity if n is large, terms of the form (78.1) may be neglected in (75.10).

783. The Omission of Boundary Influences

This omission is best justified by the experiments which show no dependency of the buckling phenomenum on the length of the cylinder or on the boundary conditions. But it may also be made plausible theoretically.

The influence of the boundary conditions were first disregarded in Sect. 74, where p was conceived as a continuous variable; moreover, p^2 was supposed to be so great that unity could be neglected in comparison to p^2. Under those assumptions, at the buckling load, infinitesimally close neighboring states of equilibrium were found for

each value of n satisfying (74.5) by use of the two corresponding values of $p_{n1,2}$ (74.4).

In reality, the smallest value for the solution λ_1 of (73.7) generally corresponds to a completely determined set of values n^* and $p^* = i\pi R/\ell$. Naturally, this value p^* will not deviate considerably from the values p^*_{n1} or p^*_{n2} determined by (74.4) which correspond to $n = n^*$. Further, (73.7) has a solution that differs only slightly from λ_1 for other values of n and for values of p which differ slightly from the values given by (74.4). In reality, the general solution (74.10), which was obtained through the simplifications, is for $\lambda = \lambda_1$ dissolved in a set of single valued solutions for values of λ (λ_i) with small differences between them. The result of this is that the third order terms determined in Sect. 75, each composed of three buckling modes, are absent. Equilibrium at the critical state then does not necessarily have to be unstable. However, this will only influence the neighboring states of equilibrium if $|\lambda_1 - \lambda|$ is much smaller than $|\lambda_i - \lambda|$ with $i = 2, 3$, etc., and this is only the case in a very small neighborhood of the buckling load.

The same holds for the analysis of the influence of small deviations; only when the load, for very small deviations can approach the buckling load very closely, a different elastic behavior may be expected. It is, therefore, not surprising that, for such deviations as occur in reality, nothing of this kind has been observed.

784. Omission of the fourth order terms

The admissibility of the omission of terms of the fourth order may be examined through calculation of (74.10) and comparison with the remaining contributions in the energy. This calculation is first executed for a particular neighboring equilibrium state

$$\left.\begin{aligned} &a_o = a_{n1,2} = b_{n1,2} = c_{n1,2} = d_{n1,2} = a_m = b_m = d_m = 0 \,, \\ &b_o = \frac{2}{3} R(\lambda - \lambda_1) \,, \qquad c_m = \frac{8}{3} R(\lambda - \lambda_1) \,. \end{aligned}\right\} \quad (78.2)$$

These coefficients do satisfy (76.10, 14 and 18). The most important terms of the integrand of (72.10) are

$$w'^4 + 2w'^2 w^{\cdot 2} + w^{\cdot 4} = (w'^2 + w^{\cdot 2})^2 .$$

Substitution of (74.10) and use of (78.2) gives for this integrand

$$m^4 \left[(2b_o \sin 2m\alpha + c_m \sin m\alpha \cos m\beta)^2 + c_m^2 \cos^2 m\alpha \sin^2 m\beta\right]^2 =$$

$$= m^4 \left[2b_o^2 + \frac{1}{2}c_m^2 - 2b_o^2 \cos 4m\alpha + \right.$$

$$\left. + 2b_o c_m (\cos m\alpha - \cos 3m\alpha) \cos m\beta - \frac{1}{2}c_m^2 \cos 2m \cos 2m\beta\right]^2 .$$

Execution of the integration gives

$$\overline{P}_4^o (a_j) = P_4^o \left[\sum a_j u_j\right] = \frac{2\pi\ell}{R^2} \frac{1}{R} m^4 (6b_o^4 + 4b_o^2 c_m^2 + \frac{5}{16} c_m^4) .$$

Through substitution of (78.2) it finally follows from here that

$$\overline{P}_4^o (a_j) = \frac{2\pi\ell}{R^2} \frac{800}{27} m^4 R^3 (\lambda_1 - \lambda)^4 . \tag{78.3}$$

For the third order terms after use of (78.2)

$$\overline{P}_3 (a_j) = \frac{2\pi\ell}{R^2} (1 - \nu^2) \frac{64}{9} m^2 R^3 (\lambda - \lambda_1)^3 , \tag{78.4}$$

so that the fourth order term may indeed be neglected if

$$\left| \frac{25}{6} m^2 (\lambda_1 - \lambda) \right| \ll 1 - \nu^2$$

In view of (74.3, 8 and 9) this requirement is

$$\left| 1 - \frac{\lambda}{\lambda_1} \right| \ll \frac{12}{25} (1 - \nu^2) \ . \tag{78.5}$$

It appears from this condition that the omission of the fourth order terms restricts the validity of the analysis of Sect. 76 to loads in the immediate neighborhood of the buckling load.

The circumstances in the analysis of Sect. 77, at least for the form of the deviations which was considered (77.11), are much more favorable. By use of (77.13) the radial displacement component

$$w = a_o \sin p_o \alpha + b_o \cos p_o \alpha$$

can be written in the form

$$w = \sqrt{a_o^2 + b_o^2} \sin(p_o \alpha - \alpha_o)$$

so that the most important contribution of (72.10) is

$$\overline{P}_4^{\,o}(a_j) = \frac{1}{R^2} \iint p_o^4 (a_o^2 + b_o^2)^2 \cos^4(p_o \alpha - \alpha_o) d\alpha d\beta =$$

$$= \frac{2\pi \ell}{R^2} \frac{3}{8} \frac{p_o^4}{R} (a_o^2 + b_o^2)^2 \ . \tag{78.6}$$

In this case the third order terms are absent; the second order terms are

$$\overline{P}_2^{\,j}(a_j) = \frac{2\pi\ell}{R^2}(1 - \nu^2)2Rp_o^2\lambda_1 - \lambda)(a_o^2 + b_o^2) \ . \tag{78.7}$$

Therefore, the terms of the fourth order may be neglected if

$$\left| \frac{3}{16} p_o^2 \frac{a_o^2 + b_o^2}{R^2(\lambda_1 - \lambda)} \right| \ll 1 - \nu^2 \ .$$

After substitution of (77.13) and use of

$$p_o^2 = 2\sqrt{\frac{1 - \nu^2}{k}} = \frac{2}{\lambda_1} \ , \quad \frac{h}{R} = \lambda_1 \sqrt{3(1 - \nu^2)}$$

this requirement becomes

$$\left| \frac{9}{8} \epsilon^2 \frac{\lambda_1 \lambda^2}{(\lambda_1 - \lambda)^3} \right| \ll 1 \ . \tag{78.8}$$

The maximum of the left hand side of (78.8) occurs for the buckling load $(\lambda = \lambda^*)$. By use of (77.16) instead of (77.13), the condition is

$$1 - \frac{\lambda^*}{\lambda_1} \ll 6(1 - \nu^2) \ . \tag{78.9}$$

This condition is reasonably well satisfied and there is no justification, at least for the deviations considered in Sect. 77, to improve the theory.

APPENDIX

As far as the writer knows, in the literature (e.g. [45]) the solution of equation (61.20)

$$\theta'' + \pi^2 \lambda \sin \theta = 0 \tag{1}$$

with boundary conditions (61.21) and (61.22)

$$\xi = 0 : \theta' = -\pi^2 \epsilon \lambda ; \qquad \xi = \frac{1}{2} : \theta = 0 \tag{2}$$

has only been determined for the case in which θ_o (the value of θ for $\xi = 0$) has the same sign as ϵ. However, for Section 615 it is also necessary to know possible solutions for the case with opposite sign of θ_o and ϵ. It is assumed now, just as previously, that ϵ is positive.

Equation (1) may be written

$$\frac{d}{d\theta}\left(\frac{1}{2}\theta'^2\right) + \pi^2 \lambda \sin \theta = 0$$

from which, by use of (2), it follows through integration

$$\theta'^2 = \pi^4 \epsilon^2 \lambda^2 + 2\pi^2 \lambda \left(\cos \theta - \cos \theta_o\right). \tag{3}$$

In view of (2), θ' is negative for $\xi = 0$. As θ' must be a continuous function of ξ, it follows then from (3) that

$$\theta' = -\pi\sqrt{\lambda}\sqrt{\pi^2 \lambda \epsilon^2 + 2\left(\cos \theta - \cos \theta_o\right)} \tag{4}$$

as long as the expression under the square root sign remains positive.

First the case will be considered in which θ_o is positive; (4) then definitely holds for values of θ between 0 and θ_o. If further considerations are restricted to curved beams for which θ is equal to zero only if $\xi = \frac{1}{2}$, then integration of (4) yields

$$\int_{\theta_o}^{0} \frac{d\theta}{\sqrt{\pi^2 \lambda \epsilon^2 + 2\left(\cos\theta - \cos\theta_o\right)}} = -\frac{1}{2}\pi\sqrt{\lambda};$$

which can be written

$$\int_{0}^{\theta_o} \frac{d\theta}{\sqrt{\frac{1}{4}\pi^2 \lambda \epsilon^2 + \sin^2\frac{1}{2}\theta_o - \sin^2\frac{1}{2}\theta}} = \pi\sqrt{\lambda} \quad . \tag{5}$$

It is assumed that $\theta_o < \pi$ still is so small that

$$\frac{1}{4}\pi^2 \lambda \epsilon^2 + \sin^2\frac{1}{2}\theta_o = k^2 < 1 \, . \tag{6}$$

As $\left|\frac{1}{2}\theta\right| < \frac{1}{2}\theta_o < \frac{1}{2}\pi$ it is then always possible to set

$$\sin\Theta = \frac{1}{k}\sin\frac{1}{2}\theta \quad (0 \leq \Theta \leq \tfrac{1}{2}\pi) \, . \tag{7}$$

Herewith (5) becomes

$$\int_{0}^{\varphi} \frac{2k\dfrac{\cos\Theta}{\cos\frac{1}{2}\theta}\, d\Theta}{\sqrt{k^2 - k^2\sin^2\Theta}} = 2\int_{0}^{\varphi} \frac{d\Theta}{\sqrt{1 - k^2\sin^2\Theta}} = \pi\sqrt{\lambda} \tag{8}$$

with

$$\sin\varphi = \frac{1}{k}\sin\frac{1}{2}\theta_o \quad (0 \leq \varphi \leq \tfrac{1}{2}\pi) \, . \tag{9}$$

The integral appearing in (8) is the elliptical integral of the first kind $F(k,\varphi)$.

The dimensionless deflection β at the middle of the beam is determined by

$$\beta = \int_0^{\frac{1}{2}} - \sin\theta \, d\xi = \int_{\theta_0}^{0} \frac{\sin\theta \; d\theta}{\pi\sqrt{\lambda}\,\sqrt{\pi^2\lambda\epsilon^2 + 2\left(\cos\theta - \cos\theta_0\right)}} =$$

$$= -\frac{1}{\pi\sqrt{\lambda}}\sqrt{\pi^2\lambda\epsilon^2 + 2\left(\cos\theta - \cos\theta_0\right)}\;\Bigg|_{\theta=\theta_0}^{\theta=0} = \epsilon - \frac{2k}{\pi\sqrt{\lambda}} \cdot \qquad (10)$$

It follows from (6), (9) and (10) that

$$\cos\varphi = \sqrt{1 - \frac{1}{k^2}\sin^2\frac{1}{2}\theta_0} = \frac{\pi\sqrt{\lambda}}{2k}\,\epsilon = \frac{\epsilon}{\epsilon - \beta},$$

while from (8) and (10) it follows that

$$k = (\epsilon - \beta)\; F\;(k, \varphi)\;.$$

The relation between β and λ is then given by the parameter representation

$$\cos\varphi = \frac{\epsilon}{\epsilon - \beta}, \quad k = (\epsilon - \beta)\; F\;(k, \varphi)\;, \quad \sqrt{\lambda} = \frac{2}{\pi}\; F\;(k, \varphi)\;. \qquad (11)$$

It remains to be seen to what extent assumption (6) has been satisfied. According to (11) the undeformed, unloaded state $\beta = 0$, $\lambda = 0$ represents an equilibrium state with $k = 0$ and $\varphi = 0$. Assumption (6) will therefore be satisfied for all loads below the limit value for which k becomes 1 for the first time. For $k = 1$, $F(k,\varphi)$ can be expressed in terms of elementary functions

$$F\;(1, \varphi) = \int_0^{\varphi} \frac{d\theta}{\sqrt{1 - \sin^2\theta}} = \ln \operatorname{tg}\left(\frac{1}{4}\pi + \frac{1}{2}\varphi\right).$$

The value of φ corresponding to this limiting case is, according to the first two relations, determined by

$$\cos\varphi = \epsilon \ln \operatorname{tg}\left(\frac{1}{4}\pi + \frac{1}{2}\varphi\right). \tag{12}$$

For small values of ϵ, (12) has a solution which slightly differs from $\frac{1}{2}\pi$; λ is in that case large, on account of the last relation (11). For instance, in the example treated in Section 615 these quantities were given by $\epsilon = 0.01$, $\varphi = 0.975\,\frac{\pi}{2}$ and $\lambda = 6.25$. The limiting case remains consequently outside of the range of λ considered in fig. 4.

Next the case is analysed in which θ_o is negative. It follows from (2) that for small values of ξ, $\theta^{\bullet}$ is negative. In order that the condition $\theta = 0$ be satisfied at the middle of the beam, $\theta^{\bullet}$ must change sign for a value ξ_1 (between 0 and $\frac{1}{2}$). This will be the case if the expression under the root sign in (4) becomes zero as in view of (1), $\theta^{\bullet\bullet}$ is positive at that point. The integration of (3) must therefore be carried out separately for $\xi < \xi_1$ and $\xi > \xi_1$.

Let θ_1 be the value of θ for $\xi = \xi_1$, then it follows in analogy with (5) that

$$\int_{\theta_1}^{\theta_o} \frac{d\,\theta}{\sqrt{\frac{1}{4}\pi^2\lambda\epsilon^2 + \sin^2\frac{1}{2}\theta_o - \sin^2\frac{1}{2}\theta}} = 2\pi\sqrt{\lambda}\,\xi_1, \tag{13}$$

in which θ_1 is determined by

$$\sin^2\frac{1}{2}\theta_1 = \frac{1}{4}\pi^2\lambda\epsilon^2 + \sin^2\frac{1}{2}\theta_o = k^2. \tag{14}$$

The existence of a solution with a negative initial value θ_o does imply, in view of (14), that $k \leq 1$. Substitution of

$$\sin\Theta = \frac{1}{k}\sin\frac{1}{2}\theta \quad (0 \geq \Theta \geq -\frac{1}{2}\pi)$$

with

$$\sin \Theta_1 = \frac{1}{k} \sin \frac{1}{2} \theta_1 = -1, \text{ consequently } \Theta_1 = -\frac{1}{2}\pi$$

transforms (13) into

$$\int_{-\frac{\pi}{2}}^{-\varphi} \frac{d\Theta}{\sqrt{1 - k^2 \sin^2\Theta}} = \int_{\varphi}^{\frac{\pi}{2}} \frac{d\Theta}{\sqrt{1 - k^2 \sin^2\Theta}} = \pi\sqrt{\lambda}\,\xi_1 , \tag{15}$$

in which φ is determined by

$$\sin \varphi = -\frac{1}{k} \sin \frac{1}{2} \theta_o \quad (0 \leq \varphi < \tfrac{1}{2}\pi) . \tag{16}$$

In the interval $\xi_1 < \xi < \frac{1}{2}$ it holds that

$$\theta' = \pi\sqrt{\lambda}\sqrt{\pi^2\lambda\epsilon^2 + 2\left(\cos\theta - \cos\theta_o\right)},$$

from which, by integration, it follows that

$$\int_{\theta_1}^{o} \frac{d\Theta}{\sqrt{\frac{1}{4}\pi^2\lambda\epsilon^2 + \sin^2\frac{1}{2}\theta_o - \sin^2\frac{1}{2}\theta}} = 2\pi\sqrt{\lambda}\left(\frac{1}{2} - \xi_1\right).$$

By use of the same substitution this can be written

$$\int_{-\frac{\pi}{2}}^{o} \frac{d\Theta}{\sqrt{1 - k^2 \sin^2\Theta}} = \int_{o}^{\frac{\pi}{2}} \frac{d\Theta}{\sqrt{1 - k^2 \sin^2\Theta}} = \pi\sqrt{\lambda}\left(\frac{1}{2} - \xi_1\right). \tag{17}$$

Addition of (15) and (17) eliminates ξ_1; the result is

$$2F\left(k, \tfrac{1}{2}\pi\right) - F(k, \varphi) = \frac{1}{2}\pi\sqrt{\lambda}\ , \tag{18}$$

in which $F\left(k, \frac{1}{2}\pi\right)$ is the complete elliptical integral of the first kind.

The dimensionless deflection at the middle of the beam is determined by

$$\beta = \int_0^{\frac{1}{2}} -\sin\theta\ d\xi = \int_{\theta_0}^{\theta_1} \frac{\sin\theta\, d\theta}{\pi\sqrt{\lambda}\sqrt{\pi^2\lambda\epsilon^2 + 2\left(\cos\theta - \cos\theta_0\right)}} +$$

$$- \int_{\theta_1}^{0} \frac{\sin\theta\, d\theta}{\pi\sqrt{\lambda}\sqrt{\pi^2\lambda\epsilon^2 + 2\left(\cos\theta - \cos\theta_0\right)}} =$$

$$= -\frac{1}{\pi\sqrt{\lambda}}\sqrt{\pi^2\lambda\epsilon^2 + 2\left(\cos\theta - \cos\theta_0\right)}\ \Bigg|_{\theta=\theta_0}^{\theta=\theta_1} +$$

$$+ \frac{1}{\pi\sqrt{\lambda}}\sqrt{\pi^2\lambda\epsilon^2 + 2\left(\cos\theta - \cos\theta_0\right)}\ \Bigg|_{\theta=\theta_1}^{\theta=0} \tag{19}$$

Now, on account of (14),

$$\pi^2\lambda\epsilon^2 + 2\left(\cos\theta_1 - \cos\theta_0\right) = 4k^2 - 4\sin^2\tfrac{1}{2}\theta_1 = 0\ ,$$

so that it follows from (19)

$$\beta = \epsilon + \frac{1}{\pi\sqrt{\lambda}}\sqrt{\pi^2\lambda\epsilon^2 + 4\sin^2\tfrac{1}{2}\theta_0} = \epsilon + \frac{2k}{\pi\sqrt{\lambda}}\ . \tag{20}$$

It follows from (14), (16) and (20) that

$$\cos\varphi = \sqrt{1 - \frac{1}{k^2}\sin^2\frac{1}{2}\hat{\sigma}_o} - \frac{\pi\sqrt{\lambda}}{2k}, \quad \epsilon = \frac{\epsilon}{\beta - \epsilon},$$

while from (18) and (20) follows

$$k = (\beta - \epsilon)\left\{2F\left(k, \tfrac{1}{2}\pi\right) - F(k, \varphi)\right\}.$$

The relation between β and λ is then given by the parametric-presentation

$$\cos\varphi = \frac{\epsilon}{\beta - \epsilon}, \quad k = (\beta - \epsilon)\left\{2F\left(k, \tfrac{1}{2}\pi\right) - F(k, \varphi)\right\},$$

$$\sqrt{\lambda} = \frac{2}{\pi}\left\{2F\left(k, \tfrac{1}{2}\pi\right) - F(k, \varphi)\right\}. \tag{21}$$

From the latter relation it follows that

$$\sqrt{\lambda} \geq \frac{2}{\pi} F\left(k, \tfrac{1}{2}\pi\right) \geq \frac{2}{\pi}\int_0^{\frac{\pi}{2}} d\Theta = 1$$

so that (21) certainly does not have a solution for $\lambda < 1$. As was to be expected, for the case of a centrally loaded bar $(\epsilon = 0)$, the relations (11) and (21) yield identical results

$$\varphi = \frac{\pi}{2}, \quad k = \mp\beta F\left(k, \tfrac{1}{2}\pi\right), \quad \sqrt{\lambda} = \frac{2}{\pi} F\left(k, \tfrac{1}{2}\pi\right). \tag{22}$$

The numerical treatment of (11) and (21) does not offer any difficulties. After φ is assigned a value, β can be calculated from the first of these relations; next the second relation, which forms a transcendental equation for k, is solved; the third relation yields the corresponding value of λ.

The result for $\epsilon = 0.01$ is represented in fig. 4 (Curve Ia). The branch of negative β values results from (11), the branch of positive values of β belongs to (21).

The numerical treatment of (22) is even simpler; after k is assigned a value, a corresponding set of values of β and λ are immediately found. The result is the curve I of Fig. 4.

BIBLIOGRAPHY

1. L. Euler. Methodus inveniendi lineas curvas maximi minimive proprietate gaudentes, Additamentum I, De curvis elasticis, Lausanne et Génève (1744); vertaald door H. Linsenbarth opgenomen in, Ostwald's Klassiker der exakten Wissenschaften", deel 175, Leipzig (1910).

2. W. Thomson. Dynamical problems regarding elastic spheroidal shells and spheroids of incompressible liquid. Appendix, Equations of equilibrium of an elastic solid deduced from the principle of energy, Phil. Trans. Roy. Soc. Lond., vol. 153 (1863), p. 610. Edited in W. Thomson, Mathematical and physical papers, vol. III, London (1910), p. 386 and in W. Thomson and P. G. Tait, Treatise on natural philosophy, vol. I, part 2, appendix C, Cambridge (1883).

3. G. H. Bryan. On the stability of elastic systems. Proc. Cambr. Phil. Soc., vol. VI (1888), p. 199.

4. R. V. Southwell. On the general theory of elastic stability. Phil. Trans. Roy. Soc. Lond., ser. A, vol. 213 (1913), p. 187.

5. C. B. Biezeno and H. Hencky. On the general theory of elastic stability Proc. Acad. Sci. Amst., vol. 31 (1928), p. 569; 32 (1929), p. 444. See also C. B. Biezeno und R. Grammel, Technische Dynamik, Berlin (1939), Kap. I, § 5.

6. H. Reissner. Energiekriterium der Knicksicherheit. Zeitschr. f. angew. Math. u. Mech., Bd. 5 (1925), p. 475.

7. E. Trefftz. Über die Ableitung der Stabilitätskriterien des elastischen Gleichgewichts aus der Elastizitätstheorie endlicher Deformationen. Proc. 3. Int. Congr. Appl. Mech., vol. III, Stockholm (1930), p. 44.

8. E. Trefftz. Zur Theorie der Stabilität des elastischen Gleichgewichts. Zeitschr. f. angew. Math. u. Mech., Bd. 13 (1933), p. 160.

9. K. Marguerre. Über die Behandlung von Stabilitätsproblemen mit Hilfe der energetischen Methode. Zeitschr. f. angew. Math. u. Mech., Bd. 18 (1938),

p. 57. Über die Anwendung der energetischen Methode auf Stabilitätsprobleme. Jahrbuch 1938 der Deutschen Versuchsanstalt für Luftfahrt, p. 252.

10. R. Kappus. Zur Elastizitätstheorie endlicher Verschiebungen. Zeitschr. f angew. Math. u. Mech., Bd. 19 (1939), p. 271 en 344.

11. M. Biot. Theory of elasticity with large displacements and rotations. Proc. 5. Int. Congr. Appl. Mech., Cambridge U.S.A. (1938), p. 117.

12. M. Biot. Théorie de l'élasticité du second ordre avec applications a la théorie du flambage. Ann. Soc. Scient. Bruxelles, t. LIX, série I (1939), p. 104.

13. M. Biot. Non-lineair theory of elasticity and the linearized case for a body under initial stress. Phil. Mag., ser. 7. vol. XXVII (1939), p. 468.

14. M. Biot. Elastizitätstheorie zweiter Ordnung mit Anwendungen. Zeitschr. f. angew. Math. u. Mech. Bd. 20 (1940), p. 89.

15. G. Green. On the propagation of light in crystallized media. Trans. Cambr. Phil. Soc. vol. VII (1842), p. 121;see also G. Green, Mathematical and physical papers, London (1871), p. 248, 295.

16. G. Kirchhoff. Über die Gleichungen des Gleichgewichts eines elastischen Körpers bei nicht unendlich kleinen Verschiebungen seiner Theile. Sitz. ber. der K. Akad. der Wiss. Wien, math.-phys. Kl., Bd. 9 (1852), p. 762.

17. G. Hamel. Elementare Mechanik, Leipzig-Berlin (1911), § 60.

18. F. D. Murnaghan. Finite deformations of an elastic solid. Am. Journ. Math., vol. 59 (1937), p. 235.

19. E. Trefftz and K. Marguerre. Über die Tragfähigkeit eines längsbelasteten Plattenstreifens nach Überschreiten der Beullast. Zeitschr. f. angew. Math u. Mech., Bd. 17 (1937), p. 85.

20. K. Marguerre. Die mittragende Breite der gedrückten Platte. Luftfahrtforschung, Bd. 14 (1937), p. 121.

21. W. Flügge. Die Stabilität der Kreiszylinderschale. Ing. Arch., Bd. 3 (1932), p. 463.

22. L. H. Donnell. A new theory for the buckling of thin cylinders under axial compression and bending. Trans. Am. Soc. Mech. Eng., vol. 56 (1934), p. 795.

23. H. L. Cox. Stress analysis of thin metal construction. J. Roy. Aer. Soc., vol. XLIV (1940), p. 231.

24. T. Von Kármám and Hsue-Shen Tsien. The buckling of spherical shells by external pressure. J. Aeron. Sci., vol. 7 (1939), p. 43.

25. T. Von Kármán, L. G. Dunn, Hsue-Shen Tsien. The influence of curvature on the buckling characteristics of structures. J. Aeron. Sci., vol. 7 (1940), p. 276.

26. A. E. H. Love. Treatise on the mathematical theory of elasticity, 4th ed., Cambridge (1927), arts. 23–27.

27. C. B. Biezeno und R. Grammel. Technische Dynamik, Berlin (1939), Kap. I, § 2.

28. R. Courant und D. Hilbert. Methoden der mathematischen Physik, Bd. I. 2 Aufl., Berlin (1931), Kap. IV, § 1, Nr. 4.

29. Idem, Kap. VI, § 1, Nr. 1.

30. Idem, Kap. IV, § 2, Nr. 2.

31. A. Mayer. Zur Theorie der Maxima und Minima der Functionen von n Variabeln. Verh. Kön. Ges. Wiss. Leipzig, math.-phys. Cl., Bd. 44 (1892), p. 54.

32. J. Hadamard. Leçons sur le calcul des variations, t. I, Paris (1911), nos. 39–41.

33. F. Schuh. Beknopte hoogere algebra, Groningen (1926), p. 71, vraagstuk 57.

34. C. B. Biezeno und R. Grammel. Technische Dynamik, Berlin (1939), Kap. I, § 3, Nr. 14.

35. W. Flügge. Statik und Dynamik der Schalen, Berlin (1934), Kap. VI.

36. A. E. H. Love. Mathematical theory of elasticity, 4th ed., Cambridge (1927), ch. XXIV.

37. O. T. Bürklen und F. Ringleb. Mathematische Formelsammlung, 3 Aufl., Berlin (1936), § 106.

38. A. E. H. Love. Mathematical theory of elasticity, 4th ed., Cambridge (1927), art. 18.

39. C. B. Biezeno und R. Grammel. Technische Dynamik, Berlin (1939), Kap. I, § 5, Nr. 19.

40. C. B. Biezeno und R. Grammel. Technische Dynamik, Berlin (1939), Kap. VII, Nr. 1.

41. C. B. Biezeno. Über eine Stabilitätsfrage beim gelenkig gelagerten, schwachgekrümmten Stabe. Proc. Acad. Sci. Amsterdam, vol. 32 (1929), p. 990.
Das Durchschlagen eines schwachgekrümmten Stabes. Zeitschr. für angew. Math. u. Mech., Bd. 18 (1938), p. 21.
Über die Bestimmung der Durchschlagkraft einer schwachgekrümmten kreisförmigen Platte. Zeitschr. f. angew. Math. u. Mech., Bd. 15 (1935), p. 10
See also C. B. Biezeno und R. Grammel. Technische Dynamik, Berlin (1939), Kap. VII, § 1, Nr. 11 u. 12, § 3, Nr. 28.

42. R. von Mises. Ausbiegung eines auf Knicken beanspruchten Stabes, Zeitschr. f. angew. Math. u. Mech., Bd. 4 (1924), p. 435. See also P. Frank und R. von Mises, Die Differential- und Integralgleichungen der Mechanik und Physik, Bd. I, 2, Aufl., Braunschweig (1930), p. 467 en C. B. Biezeno und R. Grammel, Technische Dynamik, Berlin (1939), Kap. VII, § 1, Nr. 4.

43. S. Timoshenko. Theory of elastic stability, New York (1936), art. 4.

44. M. Born. Untersuchungen über die Stabilität der elastischen Linie in Ebene und Raum, Göttingen (1906).

45. A. Schleusner. Strenge Theorie der Knickung und Biegung, 1. Teil, Leipzig (1937).

46. F. J. Plantema en W. K. G. Floor. De meedragende breedte van vlakke en weinig gekromde platen, Rapport S 248 van het Nationaal Luchtvaartlaboratorium, Amsterdam (1941).

47. S. Timoshenko. Theory of elastic stability, New York (1936), art. 63.

48. R. Courant und D. Hilbert. Methoden der mathematischen Physik, Bd. I, 2. Auflag Berlin (1931), Kap. II, § 1, Nr. 2.

49. S. Timoshenko. Theory of elastic stability, New York (1936), arts. 79 and 84.

50. W. Flügge. Statik und Dynamik der Schalen, Berlin (1934), Kap. IX.

51. T. von Kármán and Hsue-Shen Tsien. The buckling of thin cylindrical shells under axial compression. J. Aeron. Sci., vol. 8 (1941), p. 303.

52. C. B. Biezeno und R. Grammel. Technische Dynamik, Berlin (1939), Kap. VII, § 1, Nr. 10.

53. J. A. Haringx. On the buckling and the lateral rigidity of helical compression springs. Proc. Ned. Ak. Wet., vol. 45 (1942), p. 533.

UNCLASSIFIED

Security Classification

DOCUMENT CONTROL DATA - R & D

(Security classification of title, body of abstract and indexing annotation must be entered when the overall report is classified)

1. ORIGINATING ACTIVITY (Corporate author) Stanford University Dept. of Aeronautics & Astronautics	2a. REPORT SECURITY CLASSIFICATION UNCLASSIFIED 2b. GROUP N/A

3. REPORT TITLE

A Translation of the Stability of Elastic Equillibrium

4. DESCRIPTIVE NOTES (Type of report and inclusive dates)

Final Report

5. AUTHOR(S) (First name, middle initial, last name)

Warner Tjardus Koiter, author; Edward Riks, translator

6. REPORT DATE Nov 1969 February 1970	7a. TOTAL NO. OF PAGES 320	7b. NO. OF REFS 53
8a. CONTRACT OR GRANT NO. None b. PROJECT NO. 1467 c. d.	9a. ORIGINATOR'S REPORT NUMBER(S) N/A 9b. OTHER REPORT NO(S) (Any other numbers that may be assigned this report) AFFDL-TR-70-25	

10. DISTRIBUTION STATEMENT

Distribution of this document is unlimited

11. SUPPLEMENTARY NOTES	12. SPONSORING MILITARY ACTIVITY AFFDL (FDTR) WPAFB, Ohio 45433

13. ABSTRACT

A general theory of elastic stability is presented. In contrast to previous works in the field, the present analysis is augmented by an investigation of the behavior of the buckled structure in the immediate neighborhood of the bifurcation point. This investigation explains why some structures, e.g., a flat plate supported along its edges and subjected to thrust in its plane, are capable of carrying loads considerably above the buckling load, while other structures, e.g., an axially loaded cylindrical shell, collapse at loads far below the theoretical critical load.

DD FORM 1 NOV 65 1473

UNCLASSIFIED

Security Classification

Security Classification

14 KEY WORDS	LINK A ROLE	LINK A WT	LINK B ROLE	LINK B WT	LINK C ROLE	LINK C WT
Stability (Mechanics)						
Shells (Mechanics)						
Structural analysis						

Security Classification