ESD TDR 64-521
ESTI FILE COPY

R-64-521

(FINAL REPORT)

COLOR IMAGE - ENHANCEMENT PROGRAM

TECHNICAL DOCUMENTARY REPORT NO. ESD-TDR-64-521

JULY 1964

ESTI PROCESSED

☐ DDC TAB ☐ PROJ OFFICER
☐ ACCESSION MASTER FILE
☐ _____

DATE _____
ESTI CONTROL NR. AL 43834
CY NR. 1 OF 1 CYS

ESD RECORD COPY
RETURN TO
SCIENTIFIC & TECHNICAL INFORMATION DIVISION
(ESTI), BUILDING 1211

COPY NR. _____ OF _____ COPIES

DECISION SCIENCES LABORATORY
ELECTRONIC SYSTEMS DIVISION
AIR FORCE SYSTEMS COMMAND
UNITED STATES AIR FORCE
L. G. Hanscom Field, Bedford, Massachusetts

(Prepared under Contract No. AF 19 (628)-416 by the
Westwood Division, Houston Fearless Corporation, Los Angeles, Calif.)

AD608277

When US Government drawings, specifications or other data are used for any purpose other than a definitely related government procurement operation, the government thereby incurs no responsibility nor any obligation whatsoever; and the fact that the government may have formulated, furnished, or in any way supplied the said drawings, specifications, or other data is not to be regarded by implication or otherwise as in any manner licensing the holder or any other person or conveying any rights or permission to manufacture, use, or sell any patented invention that may in any way be related thereto.

DDC AVAILABILITY NOTICES

Qualified requesters may obtain copies from Defense Documentation Center (DDC). Orders will be expedited if placed through the librarian or other person designated to request documents from DDC.

Copies available at Office of Technical Services, Department of Commerce.

FOREWORD

This report was prepared by the Westwood Division of the Houston Fearless Corporation, Los Angeles, California, on Air Force Contract AF 19(628)-416, under Task 624402 of Project 6244, "Color Image-Enhancement Program." The work was performed for the Electronic Systems Division of the Air Force Systems Command.

The technical work on this project was conducted by Paul DeCoster under the direction of Norman Taylor.

This is the final technical documentary report and it concludes the work on Contract AF 19(628)-416. The contractor's report number is R-130-64.

COLOR IMAGE-ENHANCEMENT PROGRAM

ABSTRACT

The color image-enhancement program consisted of research and development to determine the feasibility of applying color in enhancing the image of a photograph for information extraction. The program included the design and fabrication of equipment to test and evaluate electronic and optical concepts. However, this equipment should not be considered as operational equipment.

Considerable discussion is devoted to the theory of image enhancement and why certain equipment was chosen to test and develop the program.

The program will have a follow-up color evaluation program which will test and produce enhanceable photographs in the form of slides for color projection. Testing with human observers will also be programmed and a final analysis will be made.

REVIEW AND APPROVAL

This technical documentary report has been reviewed and is approved.

Joseph T. Begley

JOSEPH T. BEGLEY
Chief, Applications Division
Decision Sciences Laboratory

Roy Morgan

ROY MORGAN
Colonel, USAF
Director, Decision Sciences Laboratory

Donald W. Connolly

DONALD W. CONNOLLY
Chief, Display Division
Decision Sciences Laboratory

KEY WORD LIST

1. PHOTOGRAPHIC IMAGES
2. COLORS
3. PHOTO INTERPRETATION
4. PERCEPTION
5. DATA
6. TESTS

CONTENTS

Section		Page
1	INTRODUCTION	1-1
2	THEORY OF COLOR IMAGE-ENHANCEMENT	2-1
	2.1 DESIGN APPROACH	2-1
	2.2 COLOR VERSUS BLACK-AND-WHITE PERCEPTION	2-2
	2.2.1 Color Transformation Parameters	2-5
3	COLOR ENHANCEMENT EQUIPMENT	3-1
	3.1 GENERAL	3-1
	3.2 FUNCTIONAL DESCRIPTION	3-1
	3.2.1 Input Circuitry	3-1
	3.2.2 Color-Transformation Circuitry	3-6
	3.2.3 Scanning Raster	3-6
	3.2.4 Noise Reduction and Signal Linearization	3-12
	3.2.5 Dynamic Focusing	3-13
	3.2.6 Photometric Analysis	3-16
	3.2.7 Additive Color Projection	3-21
	3.3 CIRCUIT ANALYSIS	3-22
	3.3.1 Scanning Waveform Generation	3-22
	3.3.2 Typical Flip-Flop	3-22
	3.3.3 40.97-Kilocycle Oscillator	3-24
	3.3.4 Clock-Pulse Generator	3-24
	3.3.5 Countdown Circuit	3-24
	3.3.6 Sweep-Integrator Circuit	3-33
	3.3.7 Sweep Drive Circuit	3-37
	3.3.8 Recorder Timer Circuit	3-37
	3.3.9 Color-Transformation Circuitry	3-46
	3.3.10 Adding Circuits	3-56
	3.3.11 Recorder CRT Drive and Control Circuit	3-59
	3.3.12 Photomultiplier Circuit	3-59
	3.3.13 PMT-Circuit Operation	3-67
	3.3.14 Video Preamplifier	3-68
	3.3.15 Reader-CRT Feedback Circuit	3-71
	3.3.16 Recorder-CRT Feedback Circuit	3-71
	3.3.17 Dynamic Focusing	3-74
4	EXAMPLE OF COLOR IMAGE-ENHANCEMENT	4-1

ILLUSTRATIONS

Figure		Page
1-1	Color Image-Enhancement Equipment	1-3
2-1	Visual Perception Limits for Black and White Images	2-3
2-2	Qualitative Representation of the Color Triangle	2-4
2-3	The Color Triangle	2-7
2-4	Window-Circuit Amplitude Characteristics	2-9
2-5	Color-Transformation Circuit Amplitude Characteristics	2-10
2-6	Color-Transformation Electronics, Block Diagram	2-11
3-1	Color Image-Enhancement Equipment, Block Diagram	3-3
3-2	Example of Video Signal from Unidirectional Scan	3-8
3-3	Example of Combined Video Signal from Unidirectional Scan	3-9
3-4	Rectangular Lissajous Patterns and Generating Waveforms	3-10
3-5	Light Output Comparison	3-14
3-6	Dynamic Focus Characteristics	3-15
3-7	Schematic Diagram - Typical Flip-Flop Circuit	3-23
3-8	Schematic Diagram - 40.97-Kilocycle Oscillator	3-25
3-9	Schematic Diagram - Clock-Pulse Generator	3-26
3-10	Block Diagram - Clock-Pulse Generator	3-27
3-11	Block Diagram - Countdown Circuit	3-29
3-12	Schematic Diagram - Cutback Circuit	3-32
3-13	Schematic Diagram - Sweep Integrator	3-35
3-14	Schematic Diagram - Sweep Drive Circuit	3-39
3-15	Schematic Diagram - Recorder Timer (Sheet 1 of 2)	3-41
3-15	Schematic Diagram - Recorder Timer (Sheet 2 of 2)	3-43
3-16	Schematic Diagram - Function Generator	3-47
3-17	Function Generator Output Slicer Response Curves	3-50
3-18	Schematic Diagram - Function Generator Output Circuit	3-53
3-19	Differential Amplifier Output Response Curves	3-55
3-20	Schematic Diagram - Cathode Followers and Adding Circuits	3-57
3-21	Schematic Diagram - Recorder CRT Drive and Control Circuits	3-60
3-22	Schematic Diagram - Photomultiplier Tube Circuit	3-61
3-23	Schematic Diagram - 4-Megacycle Oscillator and Output	3-65
3-24	Schematic Diagram - Window Circuit and Variable Gain Amplifier	3-69
3-25	Schematic Diagram - Reader CRT Feedback Amplifier	3-72

ILLUSTRATIONS (Continued)

Figure		Page
3-26	Schematic Diagram - Recorder CRT Feedback Amplifier	3-73
3-27	Schematic Diagram - Dynamic Focus Integrator and Waveshaper	3-75
3-28	Schematic Diagram - Dynamic Focus Adding Network and Output	3-79
4-1	Example of Color Image-Enhancement	4-3

SECTION 1
INTRODUCTION

Photographic image enhancement consists of extracting information content that is otherwise undiscernible. The information content may be obscured to the observer by lack of contrast, fog, shadow, overlying detail, or a combination of these problems. Image-enhancement processes must first detect the obscured image information content and then, by suitable transformation, display an enhanced image which reveals the previously obscured information.

Producing a new and improved image of the original photograph is not limited to a faithful reproduction of the original scene. For example, a deliberate distortion in brightness (in the intensity or brightness sense, rather than the geometric sense) of the original scene may be introduced in the output display to enhance the image.

Houston Fearless has investigated and applied various electronic processes such as area scan-filtering, frequency filtering, contrast enhancement, automatic contrast control, and line drawing representations. These techniques are solely concerned with gray-scale differences. Another very promising and sophisticated method of enhancing the image uses color for displaying the processed image. The original photograph is in black and white, and the color is introduced to the image synthetically; the color need not be natural to the original scene. This process uses the natural color perceptivity of the observer by introducing color as a means of enhancing the information hidden in the original photograph.

Manuscript released by the author 15 July 1964
for publication as an ESD Technical Documentary Report.

Figure 1-1 shows color enhancement equipment which was fabricated for generating color display slides. The equipment, as read from left to right, consists of a feedback PMT, an output film-holder and associated optical system, a recorder PMT, high-voltage power supplies, color-transformation circuitry, waveform circuitry, low-voltage power supplies, a scanner, an input film-holder and associated optical system, a feedback PMT, and a video PMT.

The equipment was built for use in testing and evaluating the color enhancement concepts only and is not to be construed as operational equipment.

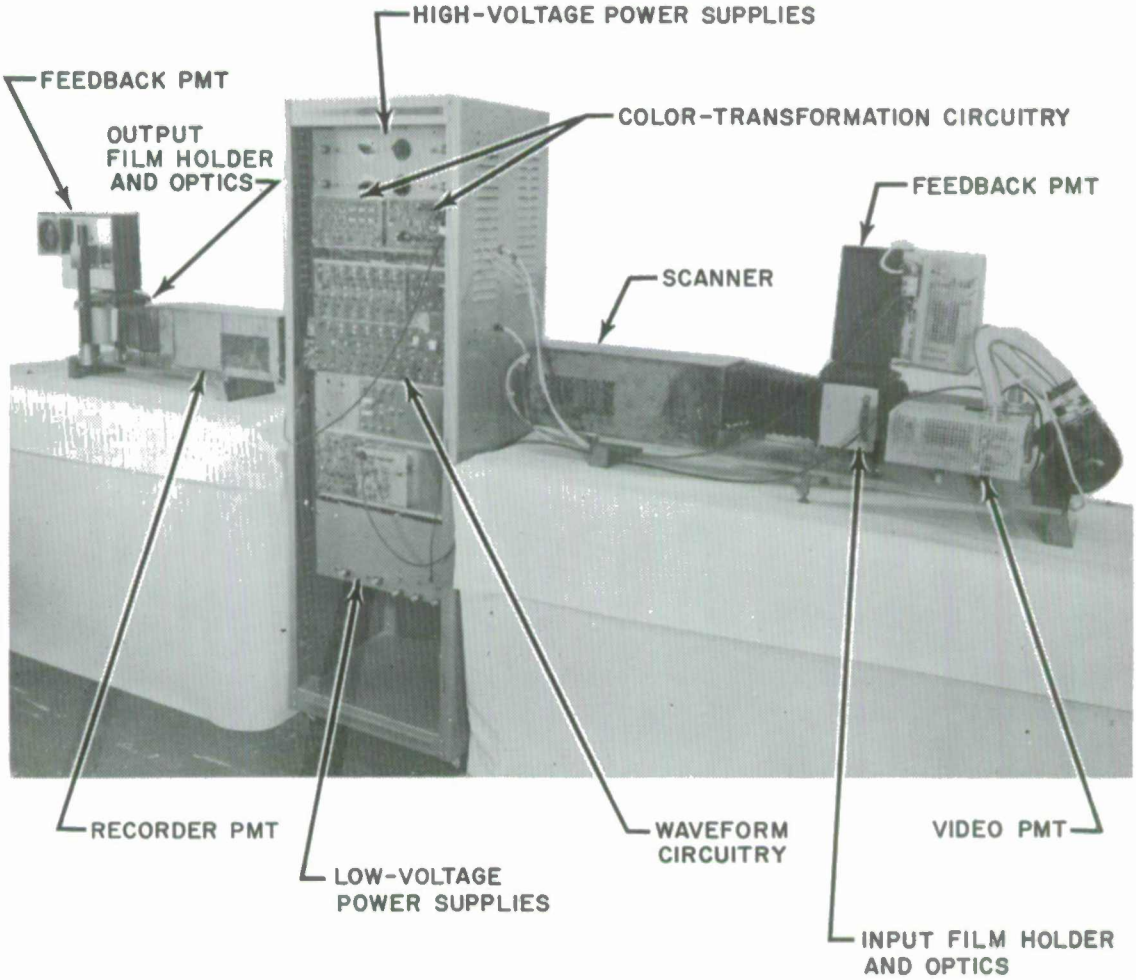

Figure 1-1. Color Image-Enhancement Equipment

41533

SECTION 2
THEORY OF COLOR IMAGE ENHANCEMENT

2.1 DESIGN APPROACH

Houston Fearless bases the theory of color image enhancement through added color on an original description by Deane B. Judd* of the National Bureau of Standards. Mr. Judd states that any light in the visible spectrum (380 to 780 millimicrons) may be reproduced by a combination of three primary colored lights which, when properly blended and simultaneously projected upon a screen, are received by the eye as the given light. No two of these three primary lights cover the entire visible spectrum, and one extra light is superfluous.

The three primary lights may be considered to be vertices of an equilateral triangle. The sides of the triangle represent various colors that are mixtures of two primaries only. The interior represents colors that are mixtures of all three primaries. The entire triangle (interior, sides, and vertices) represents all the colors of the visible spectrum. Colors exterior to the triangle are not visible to the human eye.

Mr. Judd further indicates a considerable choice of the three wavelengths to be chosen as primary ones. He selects red (780 millimicrons), green (520 millimicrons), and blue (380 millimicrons). Each point in the triangle represents a color that may be reproduced by a combination of the three selected primary lights; red, green and blue.

---

*Judd, Deane B., "Colorimetry." NBS Circular 478, U.S. Department of Commerce, National Bureau of Standards, March 1950.

Relative light illumination is inversely proportional to the distance from the points to the vertex. Equal combinations of the three lights produce white, which is represented by the center of the triangle. If blue is lacking, the effect is yellowish, representing points close to the red/green side. Similarly, points near the red/blue side tend to be purplish, and points near the blue/green side incline toward the aqua colors.

2.2 COLOR VERSUS BLACK-AND-WHITE PERCEPTION

Figure 2-1 is a graph of the gray-scale capability of an average observer. It shows the least-perceptible density difference as a function of the object detail measured in lines per millimeter. The curve assumes that the illumination is optimum; that is, the illumination increases as the mean density increases. For this condition, the detectable density difference is independent of the mean density, and is only a function of the viewed image.

Large objects may be detected at lower contrast ratios than small ones. The limit for very coarse detail is a density difference of approximately 0.0026, which corresponds to a brightness contrast ratio of 0.006. On this basis, there are approximately 1150 shades of gray between the density levels of 0 and 3 that are barely detectable as differences under the best size and viewing conditions.

Each ellipse on the chromaticity scale (Figure 2-2) corresponds to about 30,000 different colors; therefore, about 800,000 detectably different colors exist if each color is displayed at constant luminance. If luminance variation is also considered, the number of different colors would be extremely large. Therefore, color has far greater information-conveying potentials than gray-scale differences alone.

The image-enhancement process depends partly on the ability of an instrument to detect density variations below the human perceptivity

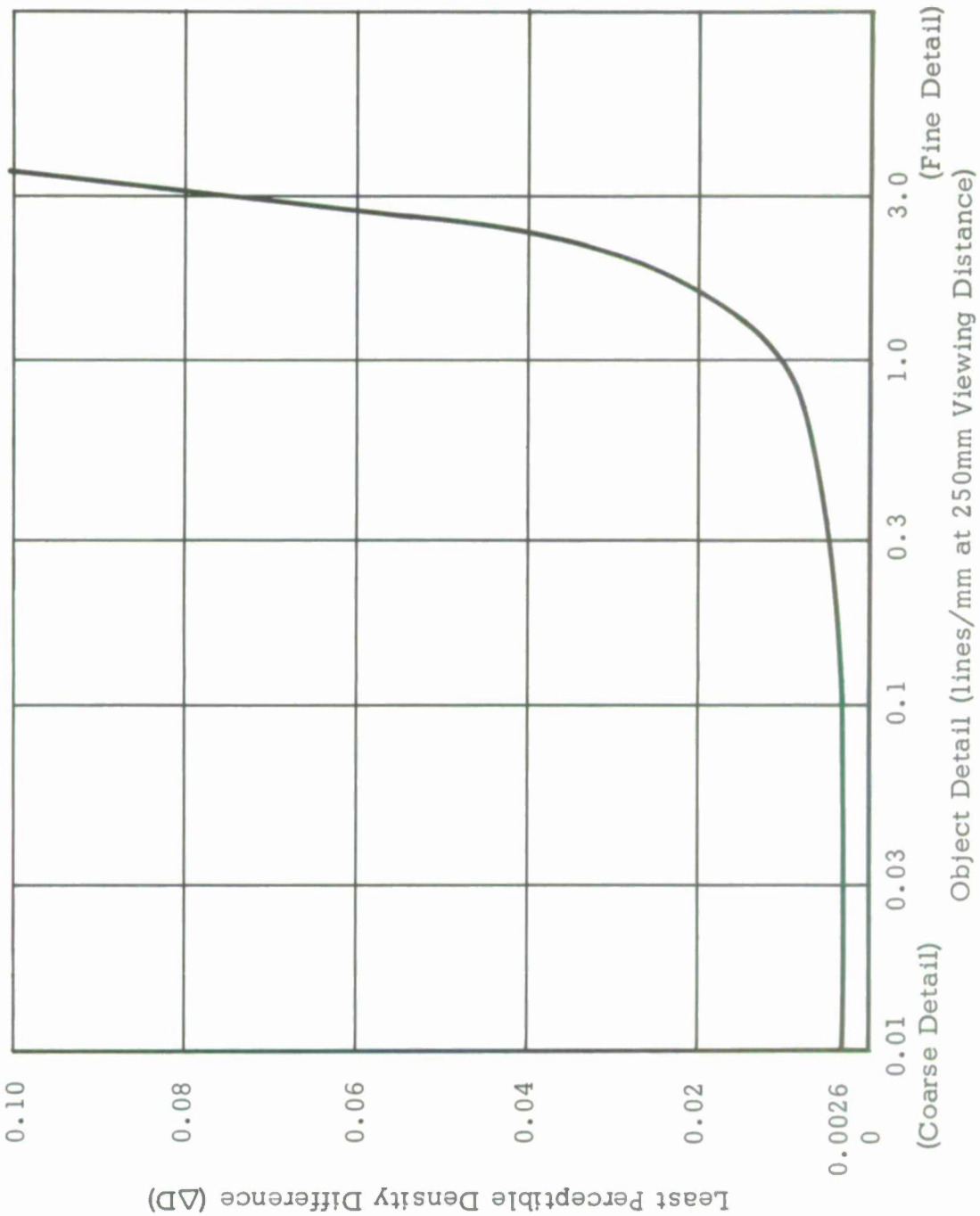

Figure 2-1. Visual Perception Limits for Black and White Images

41020

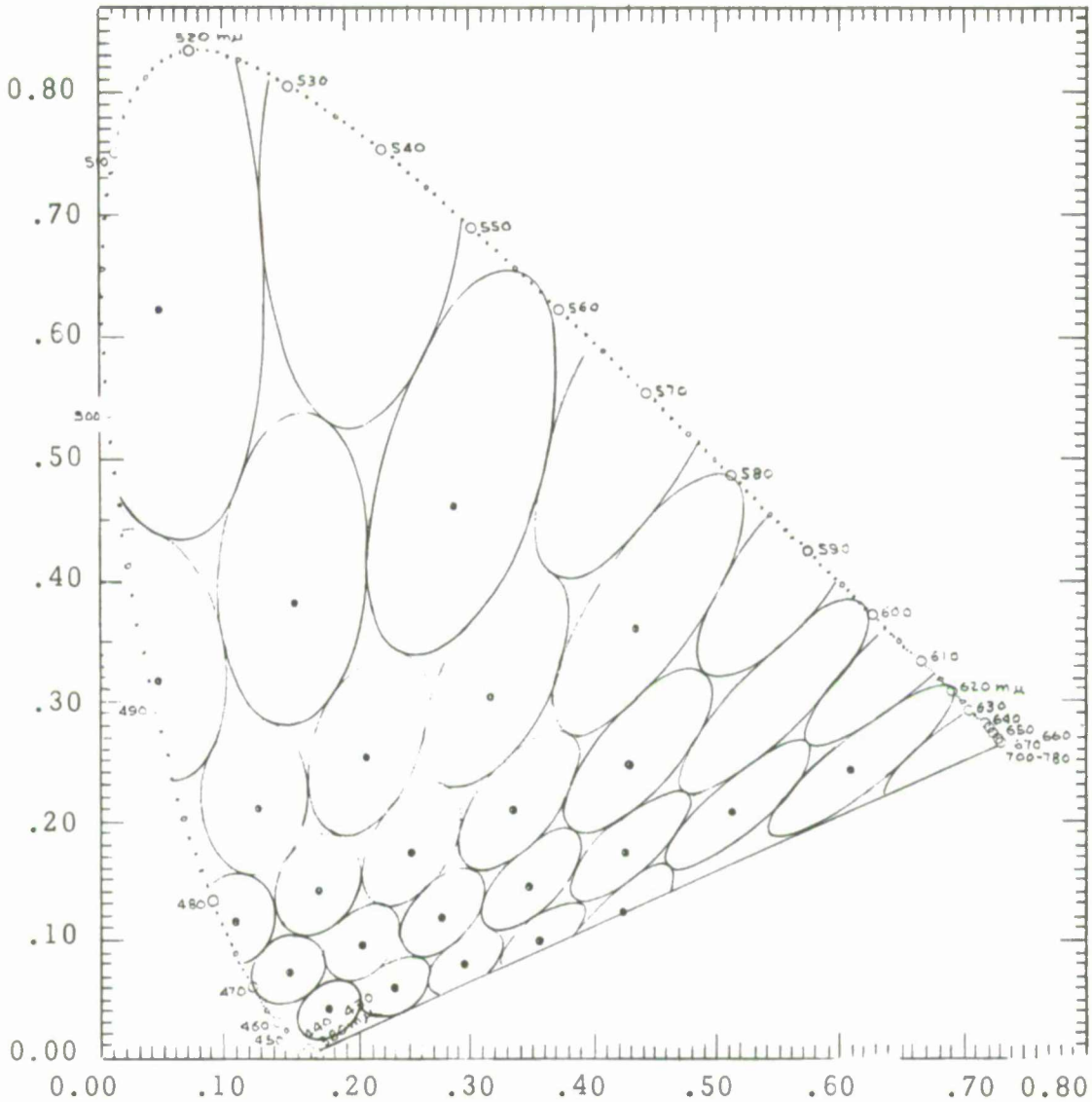

Approximate Perceptibility of Chromaticity Differences on the (x, y) - Chromaticity Diagram

Figure 2-2. Qualitative Representation of the Color Triangle

41023

threshold and to display these variations as perceptible, meaningful images. A photomultiplier tube with sufficient illumination can detect density variations considerably below the lower limit of the human eye. Expansion of gray-scale density variations is limited to the dynamic range of the human eye; only a very small part of the density range (for example, between 0 and 3) may be displayed in steps that correspond to the sensitivity limits of electronic devices. This "slicing" permits the viewing of a selectable range of input densities on the output display but, because the output display is limited, considerable information is lost.

Because color displays have so many more distinguishable states than black-and-white displays, considerably more information can be presented to the observer.

2.2.1 Color Transformation Parameters

The density (D), or darkness, of the emulsion of a black-and-white negative can be measured in density units on a scale graduated from zero for a blank spot, to about 2.5 for a black spot. Since the human eye can derive more information from projected colored images than images in black-and-white, a system of adding color to the black-and-white image (even colors unrelated to the original scene) can improve the usefulness of the negative considerably.

Houston Fearless has implemented this concept by using the following mathematical models. Three distance single-valued functions are involved which are continuous, at least through the second derivative. The functions are labeled r(D), g(D), and b(D), whose domain is D (approximately $0 \leq D \leq 2.5$), and whose range is the same range as D, or $0 \leq r, g; b \leq 2.5$. The parameters r, g, and b are applied to the negative by a photoelectronic process. This means that for each point P(x,y)

on the negative there is a value $D(x,y)$. This value is the density yielding $r[D(x,y)]$, $g[D(x,y)]$, and $b[D(x,y)]$, which are the values of the three functions at $P(x,y)$.

When the three values (r, g, and b) have been obtained for all points P on the negative, three new pictures (not necessarily either positive or negative) exist.

The three new pictures are placed before three different colored lights: r before red, b before blue, and g before green. The greater the value of r, b, or g on any picture, the less the quantity of light that shines through. All three lights are focused on the same screen and are of such color and luminance that they present a white image for each point P for which $r = g = b = K$.

Each point of the negative is represented on the screen by a summation of the red, green, and blue lights, which are dependent on the original density of the point and the three functions. The visual impression will be one of varying shades of color, depending upon the texture of the original negative.

The three functions are derived by translating a one-dimensional black-and-white density scale in the range $0 \leq D \leq 2.5$ into the two-dimensional triangular color area shown in Figure 2-3. It is possible to make a one-to-one transformation from a one-dimensional domain into a two-dimensional range by means of a space-filling curve. However, it is sufficient to use a zigzag path inside the color triangle at every point where there is a one-to-one correspondence with a point on the black-and-white scale. Figure 2-3 is a qualitative representation of the zigzag path.

The three functions r, b, and g are, respectively, about proportional to the distances from the red, blue, and green vertices. Thus, as

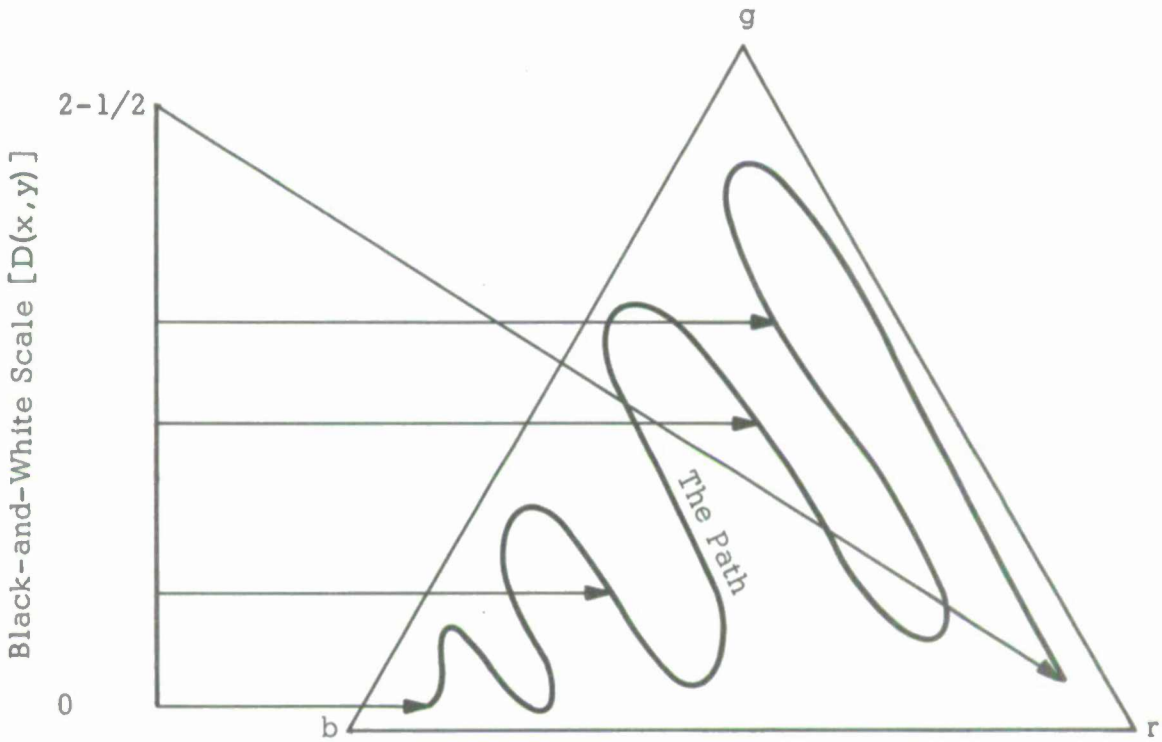

The one-dimensional black-and-white scale and the one-to-one function transforming it into a path in the two dimensional triangle. The arrows represent the transformation from black-and-white to color.

Figure 2-3. The Color Triangle

41021

D(x, y) proceeds from zero to 2.5, there is a constant rate of recession for b from the blue vertex; hence, b(D) is a linearly increasing function of D. The other two functions zigzag and are out of phase with each other. The path of Figure 2-3 alternately moves toward green and somewhat away from red, then departs from green and decreases the distance to red. Hence, r(D) and g(D) present out-of-phase zigzags. An increase in r, b, or g means a darker spot on the black-and-white to be placed before the red, blue, or green light and, therefore, a lesser amount of light shines through. The point in the triangle corresponding to such a point in the negative is more distant from the r, b, or g vertex.

Figures 2-4 and 2-5 show the three functions r, g, and b graphically and qualitatively by the oscilloscope traces. In these traces, the abscissa is time and the ordinate is voltage. Figure 2-6 shows an electro-optical block diagram of the color transformation.

The film is scanned at the photomultiplier tube (PMT) input. Density signal D then passes through the PMT and enters a "window" circuit. When the window is "open," a transfer function responds to a wide range of voltage; when it is "closed," it responds only to a narrow range. These effects are shown in the amplitude characteristics of Figure 2-4. In both cases, the upward slanting straight line represents a signal coming through the window, increasing in amplitude at a constant rate, and emerging at the circuit output. The gain-adjustable amplifier performs a linear function on the portion of the signal emerging from the window.

In Figure 2-4 (A), the window is not very wide; therefore, until the voltage emerging from it reaches a certain threshold level, the amplifier does not respond. Once the threshold level is exceeded, the amplifier emits a linear function that increases with increasing voltage until the upper limit is attained. From that point, the amplifier does not increase its response.

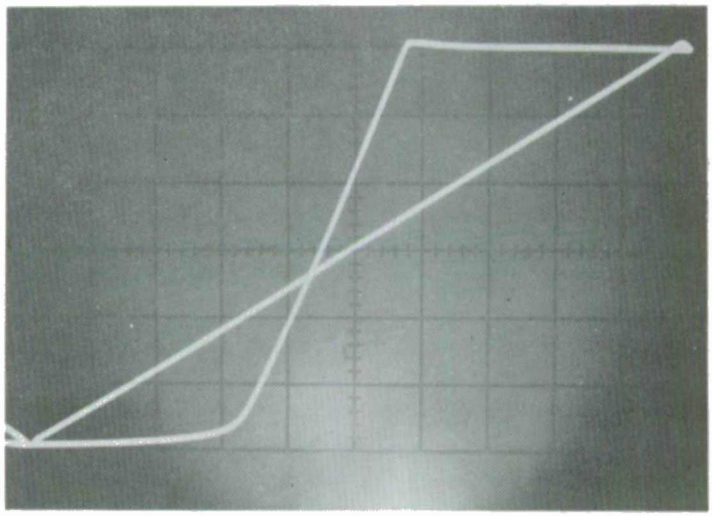

A. RAMP WAVEFORM: PMT OUTPUT
STEP WAVEFORM: AMPLIFIER OUTPUT

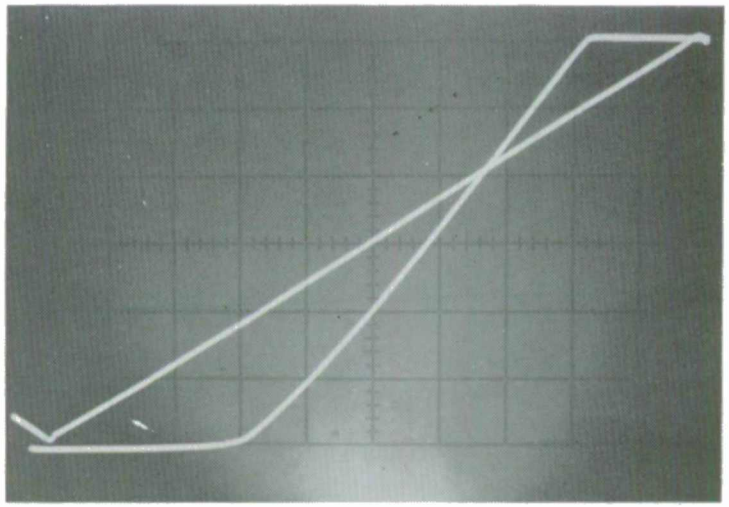

B. SAME AS A, BUT WITH WIDER WINDOW

Figure 2-4. Window-Circuit Amplitude Characteristics

40755

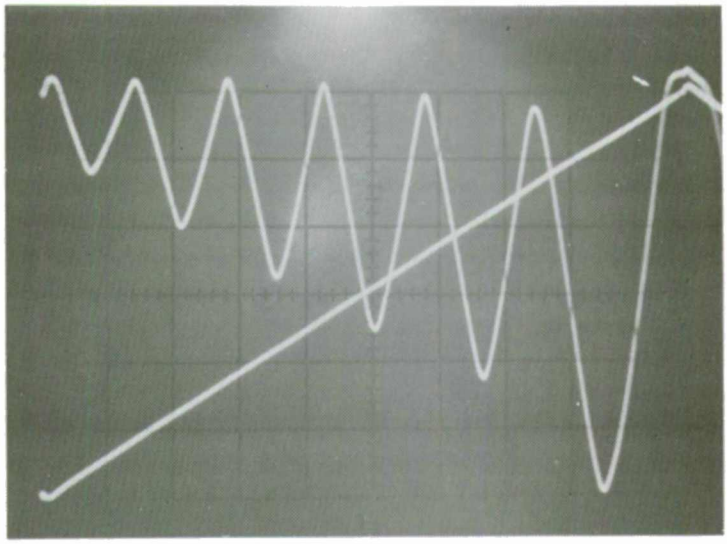

A. RAMP WAVEFORM: WINDOW CIRCUIT OUTPUT
SINUSOIDAL WAVEFORM: RED RECORD E_r
FROM COLOR TRANSFORM ELECTRONICS

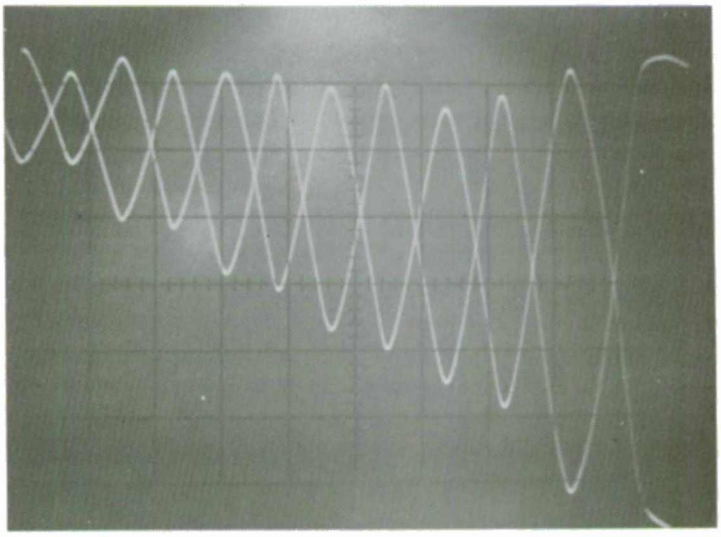

B. E_r AND E_g COLOR TRANSFORM ELECTRONICS
OUTPUTS AS A FUNCTION OF LINEAR INPUT

Figure 2-5. Color-Transformation Circuit Amplitude Characteristics

40758

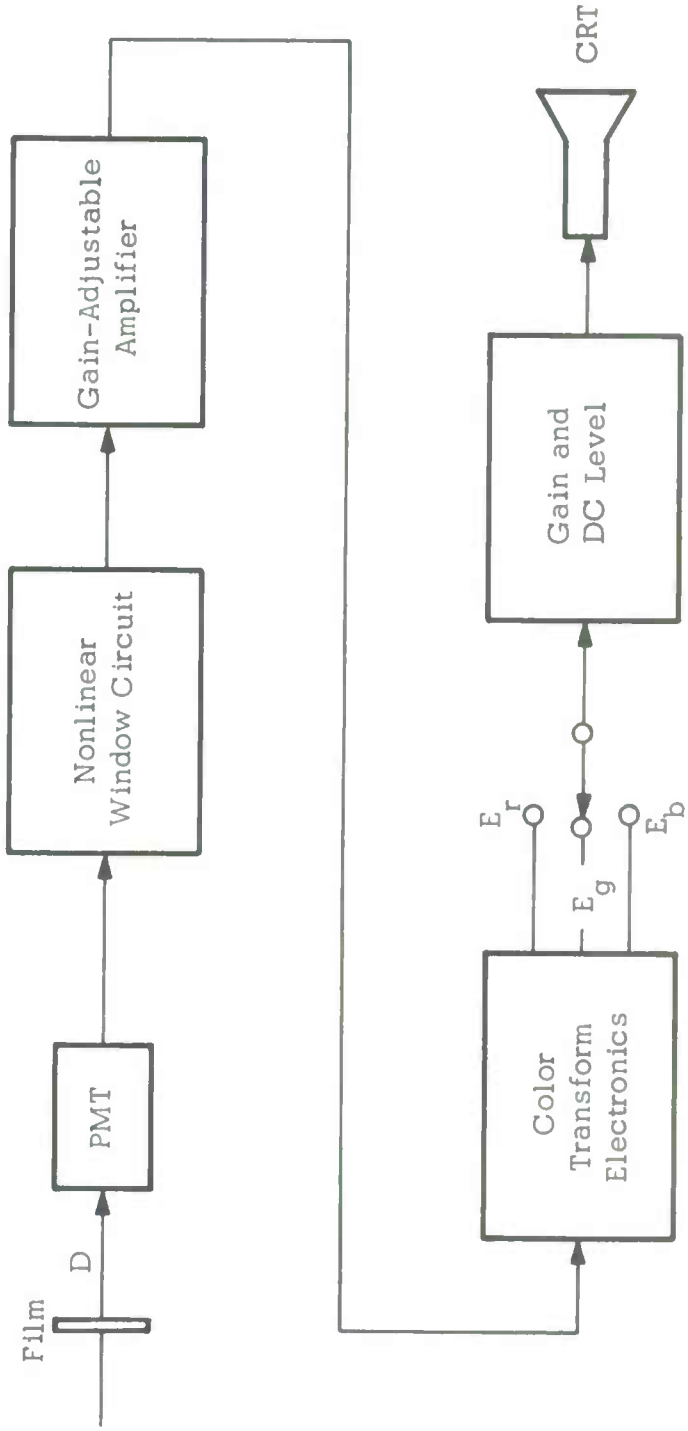

Figure 2-6. Color Transformation Electronics, Block Diagram

40751

Figure 2-4 (B) illustrates the same event, but with the window opened much wider. The linear response at the amplifier output is used as the function b.

In Figure 2-5 (A) the slanting line again represents a signal that is constantly increasing with time. The response to this signal passes through the window and through the amplifier and emerges from the color transformation electronics. The zigzag form corresponds to the function r and indicates that the path in the color triangle is alternately approaching and receding from the r vertex.

Finally, Figure 2-5 (B) shows the generation of functions r and g. Their out-of-phase zigzagging indicates the zigzag of the path in the color triangle; when it moves toward green it is moving away from red, and vice versa. Because only two traces are available on an oscilloscope, the constantly increasing signal was omitted.

SECTION 3
COLOR ENHANCEMENT EQUIPMENT

3.1 GENERAL

The color enhancement equipment was designed to produce quality photographic-image specimens for conducting an evaluation program* using the techniques outlined in Section 2.

The equipment need not produce rapid generations of transformed imagery. By keeping the generation speed low, only conventional electronic circuits were required for operation. The equipment used high-quality components and many unique features; however, the equipment was not designed to satisfy operational requirements. Features such as real-time displays, operational conveniences, and variable-format input were not included in the equipment design.

The primary design function of the equipment is to display each element of a photographic image in a particular color as a function of the photographic density of that element.

3.2 FUNCTIONAL DESCRIPTION

Figure 3-1 is a block diagram of the color image-enhancement equipment. The diagram uses solid lines to designate optical paths and dashed lines to designate electronic signal flow.

3.2.1 Input Circuitry

A flying-spot scanner comprised of a CRT with a fixed raster receives a precision input signal from the waveform circuitry. The output of the scanner feeds through imaging optics for a 2:1 demagnification to an input film for scanning.

---

*The evaluation program will be witnessed by personnel who will be observing static displays on a projection screen.

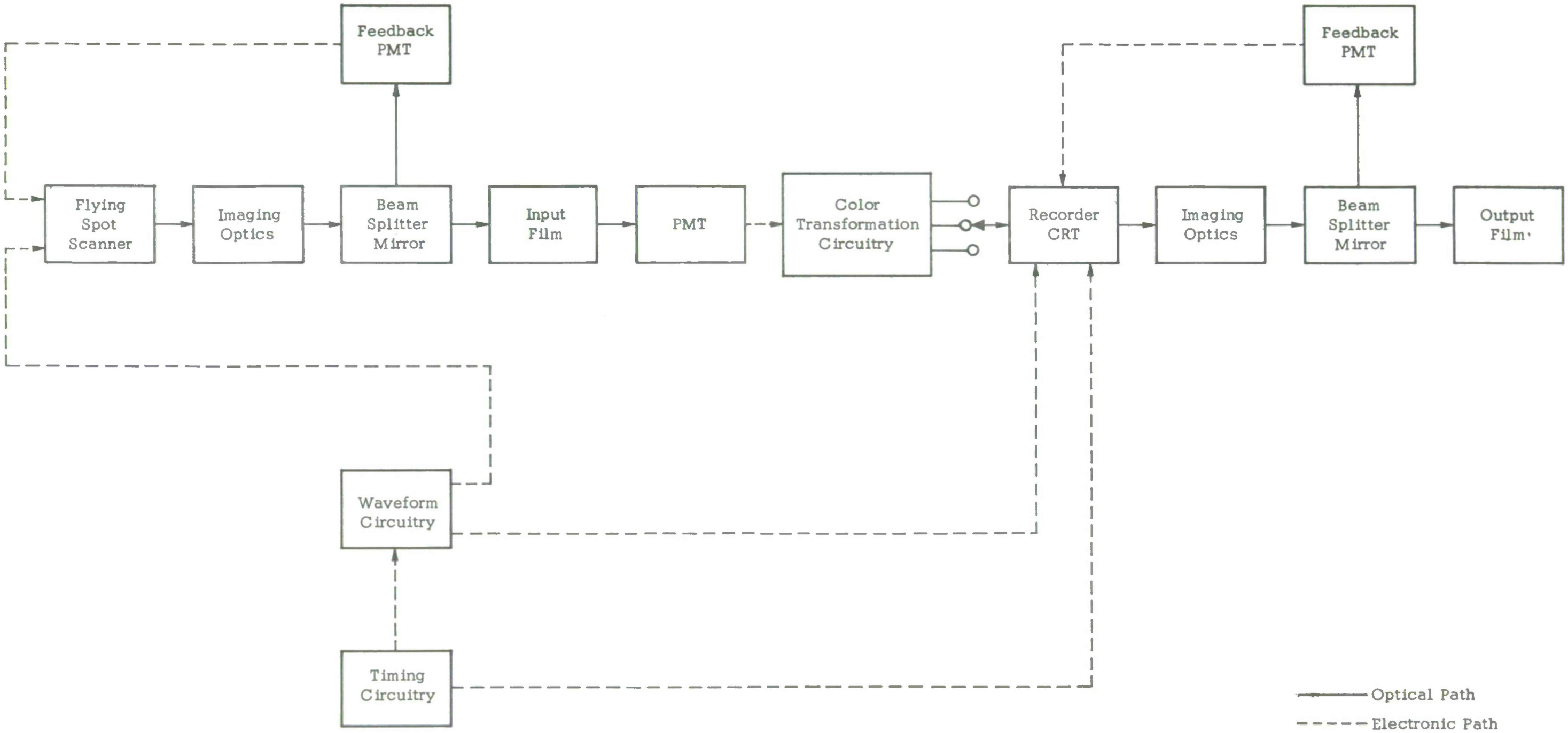

Figure 3-1. Color Image-Enhancement Equipment, Block Diagram

Since the scanner spot is very small, the film-input signal must be free from noise interferences. Even a minute variation in the phosphor surface of the CRT will show up as noise interference in the light beam as the spot is scanned across the face of the CRT. To reduce this noise, an inverse feedback circuit is used. The feedback circuit consists of a beam-splitter mirror which uses about 5 percent of the light output to illuminate a PMT, and the other 95 percent to scan the input film. The PMT output is a negative signal feeding back* to the control grid of the scanner CRT.

The input film is scanned three times. Each scan cycle uses different electronic transformations. Each transformation is recorded on separate films. The image content of all three films will ultimately be combined in an additive color projector. The projector provides an output display which produces a color locus as a function of the input film density.

The input film receives an aerial image of the scanning raster from an optical system. The scanned-image area is 1.4 by 1.4 inches with 4000 scanning lines across the diagonal. The scanning spot at the film plane is nominally 0.0006-inch in diameter, which gives a resolving capability for the scanner of 33 lines per millimeter. The light transmitted through the film is a time-variant signal which is amplitude-modulated by the film-image density. The signal illuminates the photocathode on a second PMT whose output is a signal proportional to the photographic density of the input film. This signal feeds to the color-transformation circuitry.

---

*The technique of sensing instantaneous scanning light values and feeding back an inverse signal proportional to the light values insures that the light output remains nearly constant. In addition, the feedback circuit compensates for the vignetting effect of the optical system.

3.2.2 Color-Transformation Circuitry

The color-transformation circuitry has three outputs. Figures 2-4 and 2-5 show typical transformation output signals. When the three photographic signals are added together using white light for illumination, the ac component cancels out, leaving only a dc component. This means that the brightness spatial signal is removed, leaving only a uniform screen brightness.

The three electrical signals are converted back into a spatial signal by intensity-modulating a second CRT. This CRT is also scanned by the precision input signal from the waveform circuitry.

The CRT output feeds through imaging optics to a beam-splitter mirror and then to an output film. The output image measures 1.4 by 1.4 inches on 2-1/4 by 3-1/4 cut film.

To reduce noise, a second inverse feedback circuit is used. The feedback circuit consists of a beam-splitter mirror which uses 50 percent of the light output to illuminate the cathode of a PMT, and the other 50 percent to expose the output film. The PMT output is a negative signal feeding back to the control grid of the recorder CRT for output signal shaping and noise reduction.

3.2.3 Scanning Raster

The raster used in most flying-spot scanners is unidirectional. That is, the spot of light moves at a constant velocity in one direction across the film, then is blanked out while the spot retraces to a point adjacent to the preceding scan line. The sequence is repeated until the entire image format is scanned, one line at a time. This type of scanning has a disadvantage in that it is difficult to filter the electrical signal to give emphasis to a particular spatial frequency band. Figure 3-2 shows

an example of unidirectional scanning. Figure 3-2(a) shows a few lines of the scanning raster and 3-2(b) shows the scanning lines passing over an image element and the resultant video signal. If the high frequencies of this signal are emphasized, the signal shown on the third line results. If this signal is put on a display tube or a recording tube, a nonsymmetrical spatial display results, even though the original signal was symmetrical. One edge of the image detail will be bordered with a bright line while the other edge will be bordered with a dark line.

The scanning raster selected for this equipment is an orthogonal variable-phase (Lissajous) raster. This is shown in Figure 3-3(a). The scan starts in one corner and proceeds to the opposite corner. For each succeeding cycle of the scan, the scanning lines move toward the remaining two corners and proceed until the scanning signal returns to the starting condition. If the adjacent scanning lines are just made to touch each other, every element of the raster area is traversed by four different scanning lines in four different directions. Figure 3-4(b) shows the result of adding high-frequency boost to signals with this type of scanning raster. The individual signal from an image element has the same nonsymmetrical characteristic but since the image is traversed in opposite directions, the combined signal has its symmetry restored. Therefore, it is possible to boost the high frequencies without the degrading results which result when using unidirectional scanning rasters. As a result, the image-edge contrast is increased in the output display or in the output recording. The high spatial-frequency contrast increase can be carried to the limit where only the high frequencies are recorded, which will result in a line drawing in the spatial output display.

A rectangular Lissajous scanning raster is generated by using triangular (isosceles) waveforms for both the x-axis and the y-axis deflection circuits. The two deflection-signal frequencies are made slightly

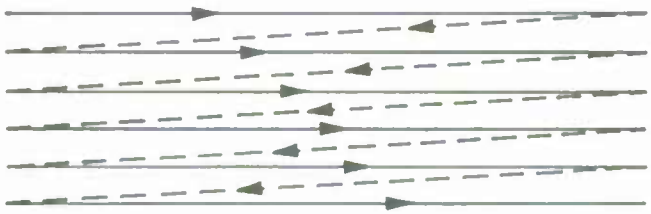

a) Unidirectional Scan Raster

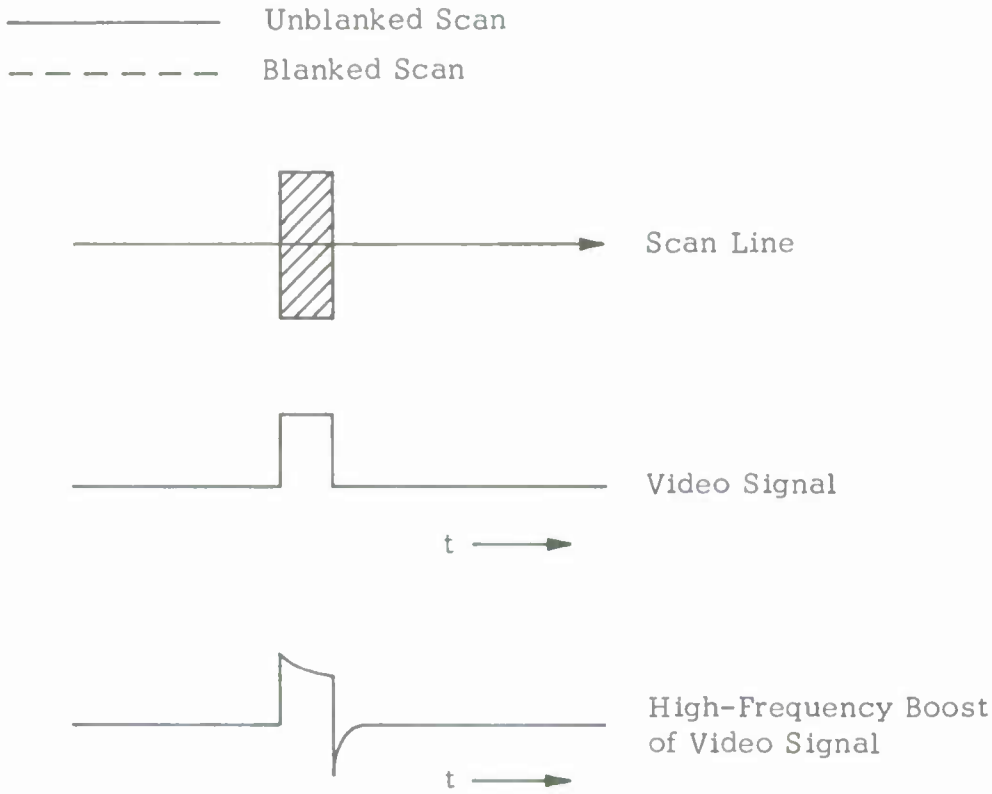

b) Transfer Response of Unidirectional Scan

Figure 3-2. Example of Video Signal from Unidirectional Scan

41024

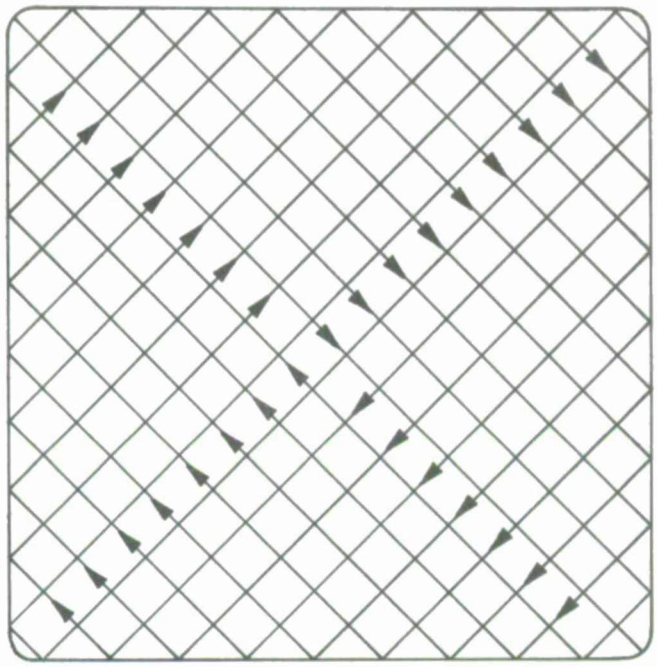

a) Orthogonal Variable-Phase (Lissajous) Scan

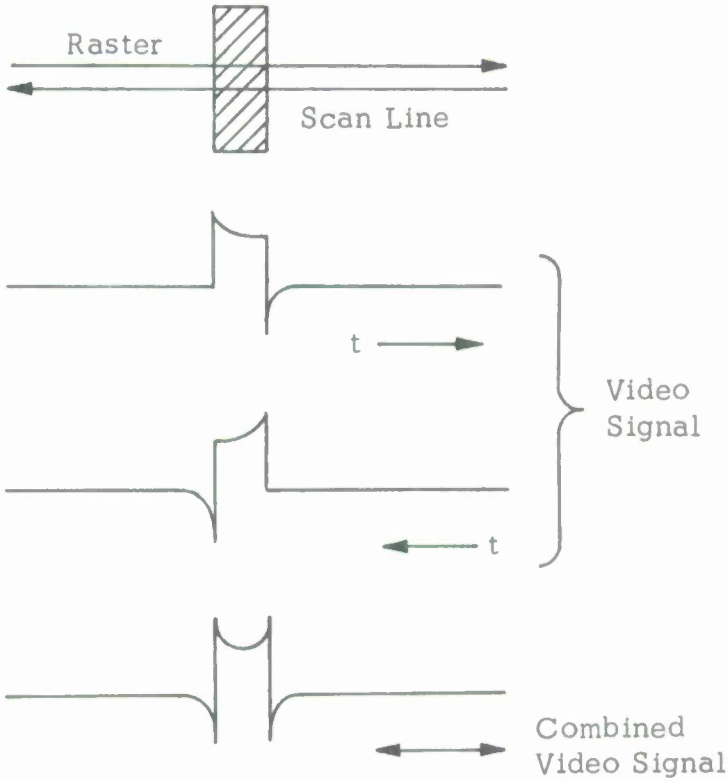

b)

Figure 3-3. Example of Combined Video Signal from Unidirectional Scan

41025

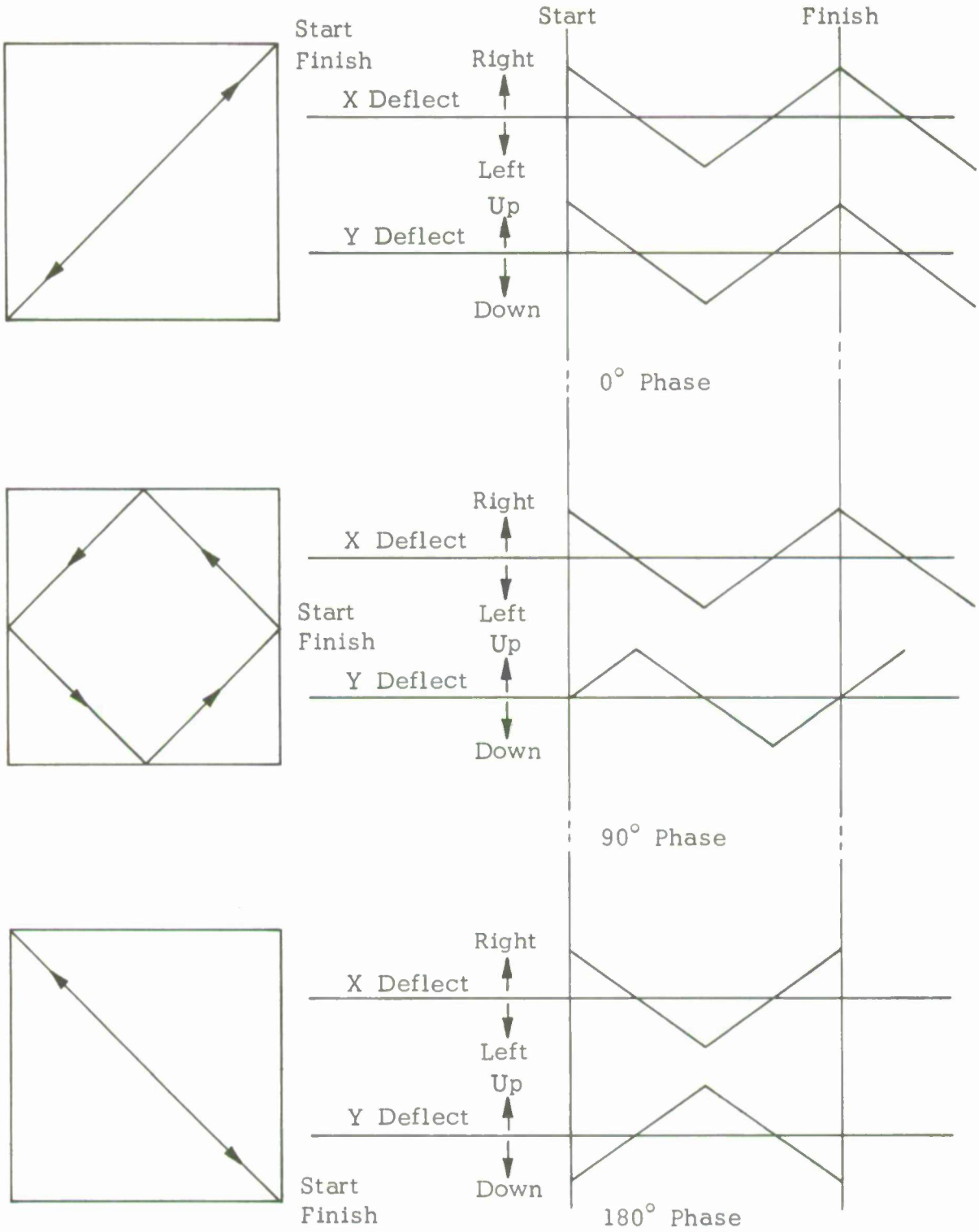

Figure 3-4. Rectangular Lissajous Patterns and Generating Waveforms

41026

different to permit many cycles of the individual deflections before the Lissajous pattern is repeated. The frequency relationship was set to produce 4000 cycles of x-axis deflection, and 4001 cycles of y-axis deflection before the Lissajous pattern repeats. Figure 3-4 shows the deflection signals and the resultant Lissajous pattern for three different phase relationships. In the initial condition, the two signals have a zero-degree phase difference which causes the trace to follow a diagonal line across the format and retrace itself to the starting point. The second pattern results when the two signals are 90 degrees out of phase, and the pattern is rotated 90 degrees to form a square raster. The third pattern results in a trace diagonally across the format in the opposite direction to the zero-degree phase condition. This pattern is generated by having the two deflection signals 180 degrees out of phase. Thus, an infinite number of different patterns can be generated by using an infinite number of phase relationships. If the phase relationship of the two deflection signals is 270 degrees, another square pattern will be generated; however, the pattern direction will be reversed.

These examples indicate that it is possible to generate a sucession of patterns with two deflection signals which are of the same frequency but with step changes in a signal phase between successive patterns. It is difficult to generate these patterns with step phase changes without transient disturbances at the start of each pattern. The same raster characterization can be achieved by making the period of the two signals differ by a small amount. This difference will produce a constant change in the relative phase of the two signals.

It was previously pointed out that the deflection signals were selected to produce 4000 different Lissajous patterns before they were repeated. This means that the phase of the two signals was changed by $\frac{(360)}{(4000)}$ or 0.09-degree between successive patterns.

A Westinghouse WZ-4647P-16 CRT was used in both the reader and recorder. This CRT had a nominal spot size of 0.0012-inch, which provides a slight spot overlap between successive scanning lines because 4000 scanning lines are used across 4 inches of the tube face. The scanning raster is demagnified to a 2-inch diagonal at the input film-plane, which gives a resolution capability of 833 photographic lines per inch, or 33 lines per millimeter.

3.2.4 Noise Reduction and Signal Linearization

High-resolution CRTs have inherently high noise levels. The noise is due to settled phosphors (which are used in the Westinghouse WZ-4647P-16 tube) with a granular structure in which each individual grain has its own transfer characteristic. In addition to this variation in grain characteristic, there are blanks in the phosphor. A high-resolution CRT has a small electronic beam irradiating the phosphor. For the tubes used in this equipment, the electron beam size is approximately 0.001-inch in diameter. This beam will only irradiate a few grains at each instant of time; therefore, the instantaneous output level will vary more than with a larger beam where the instantaneous output is an average of a greater number of phosphor grains. Most high-resolution CRTs with settled phosphors have an rms noise output which is at least 20 percent of the average light output. This noise is a function of the phosphor distribution only, and is not random in the spatial plane of the scanning raster; the noise is only random in a time function. The spatial noise is added to image detail to set the lower limit of image contrast which can be read in image-modulated light. The color enhancement equipment uses a system of light feedback to reduce the limiting effects imposed by this source of noise. In the reader (flying-spot scanner), a light-feedback system was used for noise reduction only; however, the light-feedback

system serves a dual function in the recorder circuit. One function is to reduce phosphor noise and a second function is to shape the response characteristics of the CRT. The CRT input-output characteristic is not a linear function; rather it is an exponential characteristic. Figure 3-5 shows the CRT input-output chracteristics. Figure 3-6(a) shows a PMT operated at constant gain and illuminated by the light signal from the CRT. The PMT has an electrical output proportional to the light-signal input. The voltage is amplified and fed back to the input 180 degrees out of phase to the light signal.

The standard negative feedback system equation also applies to light feedback: Gain (video-to-light output) = $\frac{A}{1-BA}$. In the equation, A is the input-output transfer characteristic of the CRT. B is the gain in the feedback loop of the PMT and the amplifier. If the negative-feedback signal is made large, the overall gain is reduced and the transfer response approaches a linear characteristic, with noise or nonlinear characteristics within the loop being reduced. The two light-feedback systems in the equipment are very similar; the only difference is that the recorder has a video input and the reader has a fixed-reference voltage input. Since the imaging optics are placed between the CRT and the PMT, vignetting characteristics of these optics are also minimized.

3.2.5 Dynamic Focusing

The face of the CRT has a flat surface which causes electron-beam focusing problems. The nominal spot size applies only to an undeflected spot in the center region of the CRT screen. As the deflection angle of the beam is increased, with the focusing potential held constant, the point of correct focus is behind the screen. The focal point is directly related to the beam deflection angle. A fixed-focus potential focuses the beam for one particular distance from the beam-shaping aperture.

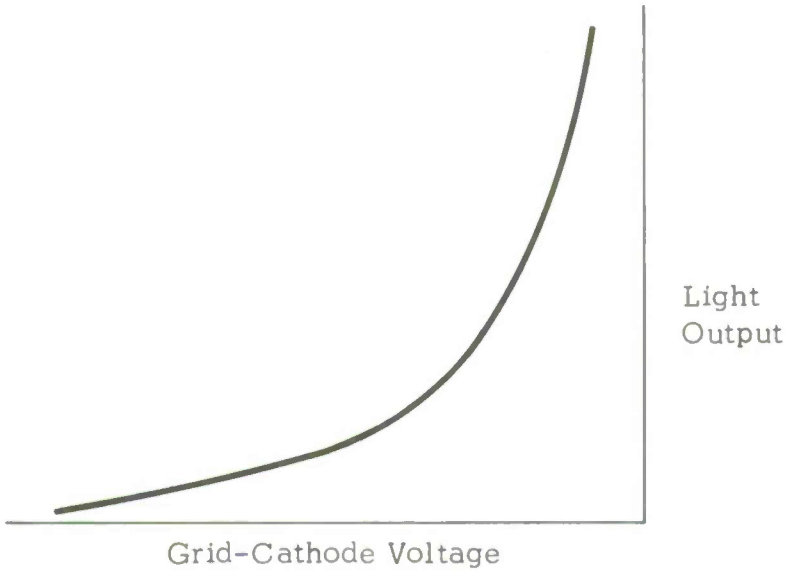

a) Cathode-Ray Tube Input-Output Characteristic

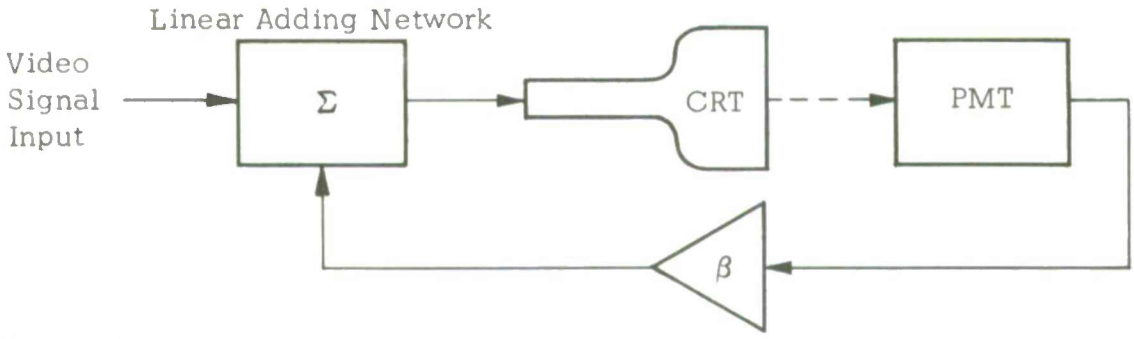

b) Feedback System

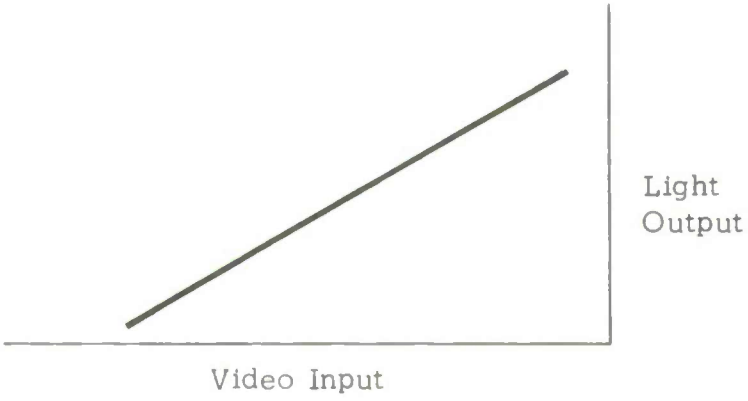

c) Combined Characteristic

Figure 3-5. Light Output Comparison

41028

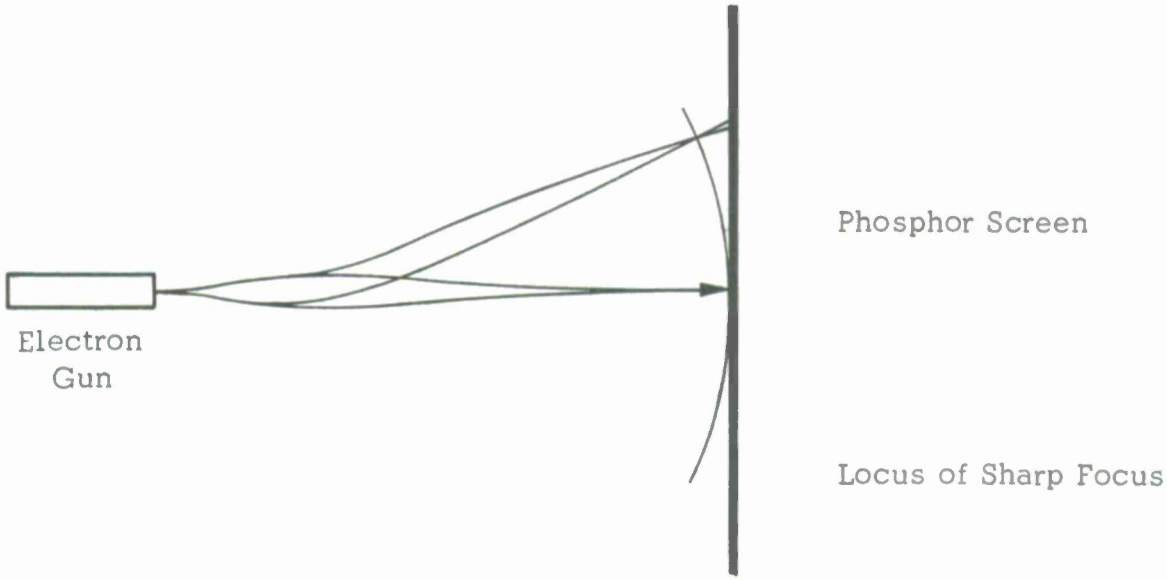

a) Focus Geometry in Cathode-Ray Tubes

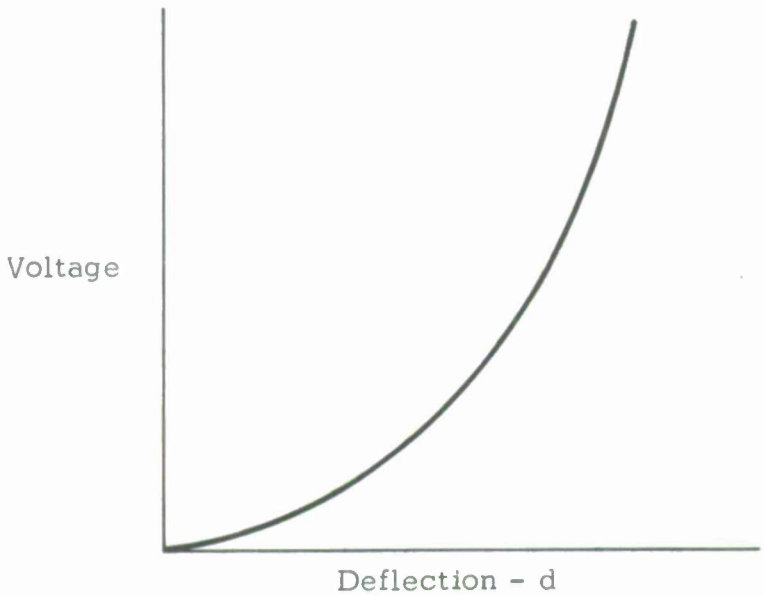

b) Dynamic Focus Voltage for Correction to Flat Screen

Figure 3-6. Dynamic Focus Characteristics

41027

If a deflected beam is focused at the screen, the distance to the screen increases; therefore, the beam is no longer in focus at the CRT screen. Figure 3-6(a) shows the locus of optimum focus for a CRT which does not use dynamic focusing. The correction required to obtain optimum focusing for the entire screen is proportional to the square of the spot distance from the center of the screen. Therefore,

$$V = k(d)^2$$

Since d is a function of both the x-deflection and the y-deflection,

$$d = \sqrt{x^2 + y^2}$$

therefore, V (dynamic focus potential) is:

$$V = k\,(x^2 + y^2).$$

To obtain a maximum resolving capability over the entire format, a dynamic focusing potential was used in conjunction with a dc focusing voltage. Figure 3-6(b) shows the effect of voltage correction to a flat screen.

3.2.6 Photometric Analysis

A flying-spot scanner is limited in maximum readable film density by the radiant power of the CRT and the sensitivity of the photosensor. The lower limit of sensitivity, or contrast, to which a scanner can operate is determined by the threshold sensitivity of the photosensor: in this case, a PMT. The threshold is determined by the electrical noise in the video circuits and the phosphor noise in the CRT. Techniques employed in the color-enhancement equipment to reduce this second source of noise have been described; therefore, the following analysis considers only the electrical noise source from the photoreceptor and the radiant power from a CRT.

Radiant Power from a CRT. Radiant power or radiant emittance information from a CRT is very difficult to obtain from CRT supplies. For this reason, several tests were conducted to determine this parameter, using various CRTs with Types P-11 and P-16 phosphors. The output readings were taken from a photographic exposure and converted into irradiance values. The measured and calculated values of irradiance determined the parameters of the optical system and were used to calculate the radiance of the CRT. Many assumptions were made in arriving at the radiance value; however, conservative estimates were used in all cases. An average value of all the tests showed that it is possible to operate a CRT with Type P-16 phosphor safely at a level of about 20 watts/cm^2 steradian. This experimental value of radiance compares very favorably to the value obtained by using the theoretical efficiency for a Type P-16 phosphor.

To convert the radiance value into radiant intensity, the following equation is used: $J = NA$, where

J = Radiant intensity

N = Radiance

A = Area of Scanning Spot

$$J = \left(\frac{20 \text{ watts}}{\text{cm}^2 \text{ steradian}}\right)\left(\frac{\pi}{4}\right)\left(1.2 \times 10^{-3}\right)^2 \left(2.54\right)^2 \text{cm}^2$$

Therefore,

$$J = 180 \times 10^{-6} \frac{\text{watts}}{\text{steradian}} .$$

The radiant intensity value is used to determine the quantity of scanning light available at the film plane. This is necessary to determine

the threshold limits imposed by system noise. These limits are discussed in following paragraphs. The equation for calculating radiant power is:

$$P_o = kJ \times \sin^2 \left[\tan^{-1} \frac{C}{2y} \right]$$

where,

P_o = Power in scanning spot

J = Radiant intensity of CRT

C = Diameter of objective lens

y = Distance from CRT to objective lens

k = Efficiency of objective lens

To make this equation more general and directly applicable to an optical system, the C and y terms of the equation are put in terms of magnification and the aperture number of the objective lens. Therefore,

$$P_o = kJ \times \sin^2 \left[\tan^{-1} \frac{FM}{2(M+1)} \right]$$

where,

F = Aperture number

M = Magnification

An F/3.5 lens at a magnification of 0.5X was used for the scanner in this equipment. Assuming an efficiency of 50 percent for the optical elements, the scanning spot power is

$$P_o = 0.5 \times 180 \times 10^{-6} \frac{\text{watts}}{\text{steradian}} \times \sin^2 (4.2^o)$$

Therefore,

$$P_o = 0.9 \times 10^{-6} \text{ watts.}$$

The noise in the photo detector and the associated video circuits also sets a threshold on the readability of photo signals with a flying-spot scanner. The main source of this electrical noise is the shot noise in the photocathode of the PMT. Since the gain of a PMT is extremely high, the signal-to-noise ratio of this system is determined by this source. The noise contributed by the video amplifiers and other video circuits is insignificant.

The equation for shot noise is

$$i_n = \sqrt{I_o \, 2eTB}$$

I_o = DC value of cathode current

e = Electron charge

T = Absolute temperature in degrees Kelvin

B = Signal bandwidth

I_o is proportioned to the irradiance of the photocathode and, since this light is a function of the radiant intensity by the CRT and the photographic density of the film, the noise is principally shot noise due to irradiation. The signal increases linearly with irradiation in accordance with the following equation:

$$I_o = kP_o$$

The value k for the Type 6655-A PMT used in this equipment is 0.044

microampere/microwatt. Therefore, with zero-density film in the optical path, the value

$$I_o = 0.044 \times 0.9 \text{ microampere}$$

$$= 0.040 \text{ microampere.}$$

The calculated value of shot noise can be obtained by using the value of cathode current given in the previous equation

$$i_n = \sqrt{0.04 \times 10^{-6} \times 3.2 \times 10^{-19} \times 5 \times 10^{3}}$$

$$= 8 \times 10^{-12} \text{ amperes.}$$

If a signal-to-noise ratio of 2 is considered acceptable, signals as small as 16×10^{-12} can be used at the photocathode. As the density of the input film increases, the dc component of the signal decreases as a linear function of the irradiance and the noise decreases as a one-half power function of the irradiance. For a fixed photographic signal (ΔD) amplitude, the signal-to-noise ratio decreases at a rate proportional to the square root of the cathode current or,

$$\text{S/N ratio} = k\sqrt{I_o} .$$

For example, if the input film has an average density of 2, I_o will be $\frac{1}{100}$ of the previous value and the noise current will be $\frac{1}{10}$ of the previous value. For a fixed signal ($\Delta D=k$) on this average brightness, the noise component is $\frac{1}{10}$ and the ac component of the signal is $\frac{1}{100}$; therefore, the signal-to-noise ratio decreases by a factor of 10.

3.2.7 Additive Color Projection

The output display for the color image-enhancement equipment consists of an additive color projection on a front-surface screen. This screen was viewed at ten feet, enabling simultaneous viewing by several photo-interpreters.

The projection distance was sixteen feet, with an image magnification of 27X. The screen resolving ability of the human eye at a distance of ten feet is 0.4 line per millimeter. Therefore, a photographic line-pair of 2.5 millimeters can be resolved. To obtain good color registration, the three images must be positioned to within one-fourth of this dimension. Thus, images on the screen must be positioned to within 0.625 millimeter, or 0.001 inch at the film gate.

A registration frame was designed to permit horizontal, vertical, and rotational adjustments of two images while holding the third image stationary.

After the three images were registered, they were transferred to a glass plate by applying glue to the film chip edges and placing the glass in contact with the film. After the glue dried, the glass was removed from the registration frame along with the film chips. A second glass was placed in contact with the film chips, sandwiching the film between two pieces of glass*.

Three projectors were used to project the color images. The projectors were modified Bell and Howell 500-watt, 2-inch by 2-inch units. The projectors were mounted on a common base. Modifications included mounting of a set of color filters and the special registration frame. The

*This technique will be used to generate all material for the evaluation program.

projection lenses, which were not matched sets and differed in focal lengths, each needed an additional correction lens. The correction lens was a 1/4-diopter lens whose spacing could be adjusted in relation to the main lens. This provided a fine control over the focal length of each of the three projector lenses.

A set of Balgar Type 392 additive color projection filters were used. The blue filter had a passband from 400 to 475 millimicrons. The green filter had a passband from 500 to 575 millimicrons, and the red filter had a passband from 600 to over 725 millimicrons. The passband transmission efficiency of all three filters was 80 percent.

Since the projector has three optical axes, it can only be used for one projection distance for a preregistered triad of images.

3.3 CIRCUIT ANALYSIS

3.3.1 Scanning Waveform Generation

The scanning waveform is generated by sweep circuitry which requires good frequency stability. This stability is assured by use of a stable oscillator driving digital frequency dividers.

3.3.2 Typical Flip-Flop

Figure 3-7 shows a typical flip-flop used in the countdown circuitry and in the recorder-timer circuitry. Transistors Q15 and Q16 are part of the flip-flop circuit. Transistor Q17 is an emitter-follower buffer stage for the AND-gate, CR12 and CR13. The buffer stage reduces loading effects on the driving signals and clock pulses.

The output of emitter-follower Q17 feeds through steering diodes CR10 and CR11 to drive the bases of switching transistors Q15 and Q16.

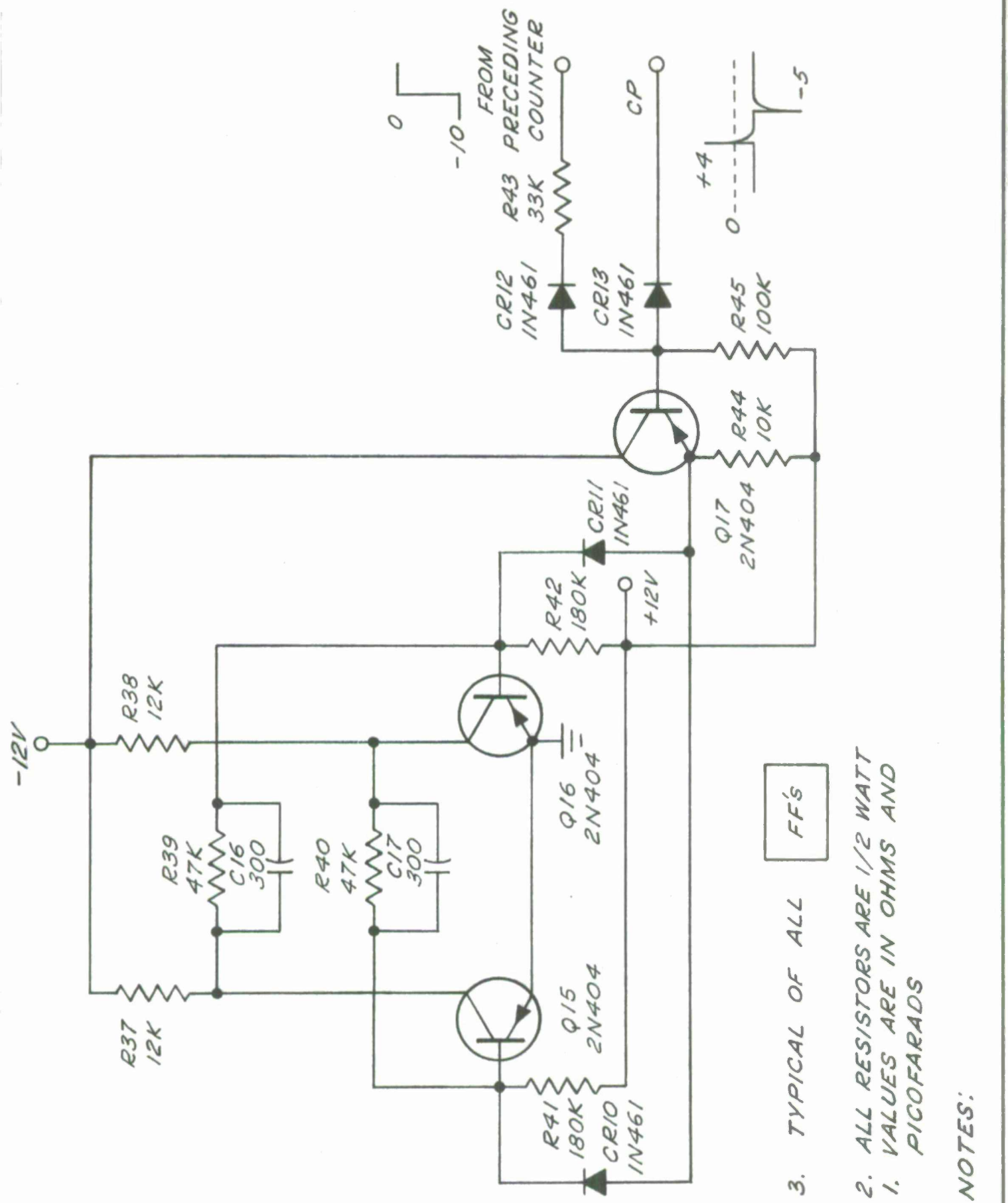

Figure 3-7. Schematic Diagram - Typical Flip-Flop Circuit

41558

3.3.3 40.97-Kilocycle Oscillator

The 40.97-kilocycle oscillator is a conventional phase-shift rc oscillator used to drive a clock-pulse generator. Figure 3-8 shows the oscillator circuit.

3.3.4 Clock-Pulse Generator

Figures 3-9 and 3-10 show the clock-pulse generator circuit. The input to the clock-pulse generator is a 40.97-kilocycle signal feeding to Schmitt trigger Q1 and Q2. The trigger changes the 40.97-kilocycle signal to square waves with a frequency of 40.97 kilocycles. Both positive and negative transitions of the square waves are used to produce clock pulses. The positive transition is inverted by Q3, fed to differentiating network C4 and R12, and fed through dual emitter-followers Q4 and Q5 to produce pulses designated as CP. The negative transition is fed to differentiating network C5, R15, and R16 to emitter-follower Q6 to produce pulses designated as CP. The pulses are a few microseconds wide. The emitter-followers provide low impedance outputs.

A SYMMETRY control, R1, equalizes the positive and negative halves of cycles from the Schmitt trigger.

3.3.5 Countdown Circuit

The clock-pulse generator output signals are used to drive a countdown circuit composed of two frequency-divider chains. Figure 3-11 shows a block diagram of the countdown circuit. The circuit comprises 13 standard scale-of-2 flip-flops cascaded to provide a countdown of 8192. The frequency-divider used for the horizontal sweep circuits is shown in solid lines. The frequency-divider used for the vertical sweep circuits is identical to the one used for the horizontal sweep circuit except that a cutback circuit is used from FF11 to the input. This cutback circuit is shown in dashed lines.

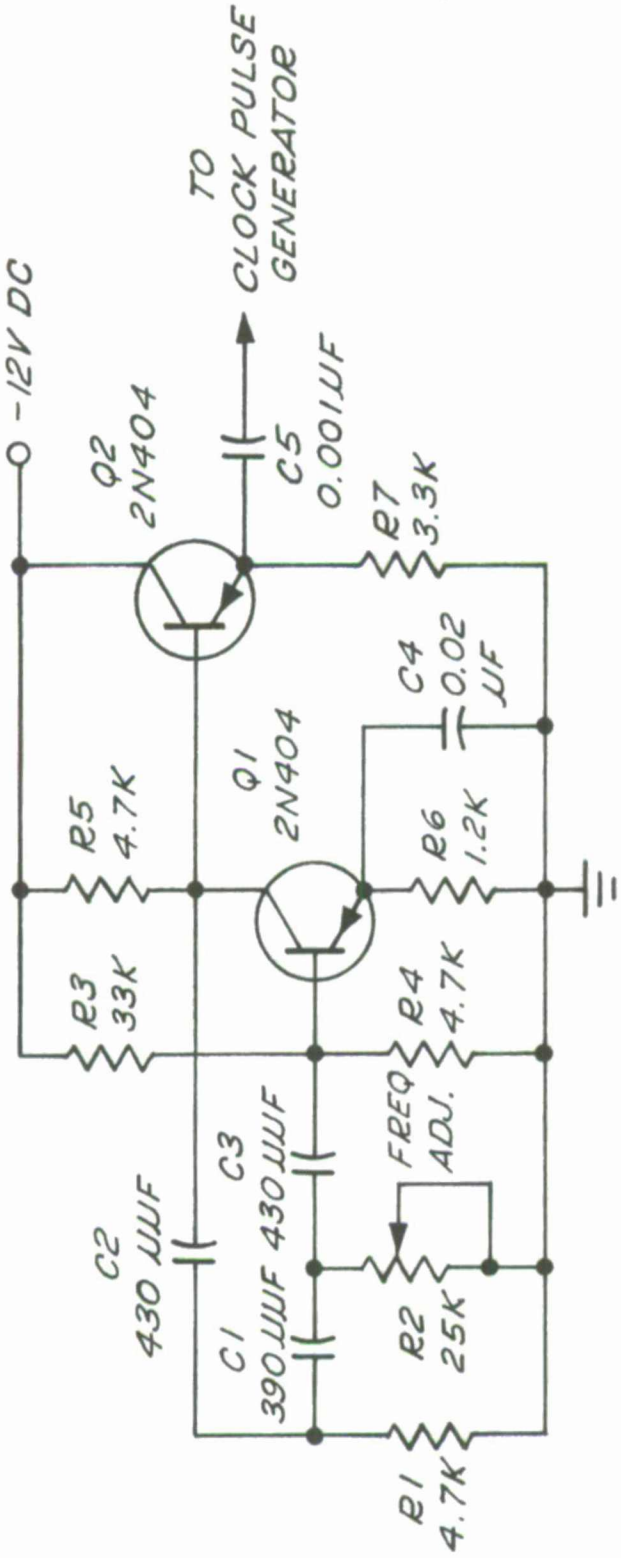

Figure 3-8. Schematic Diagram - 40.97-Kilocycle Oscillator

41557

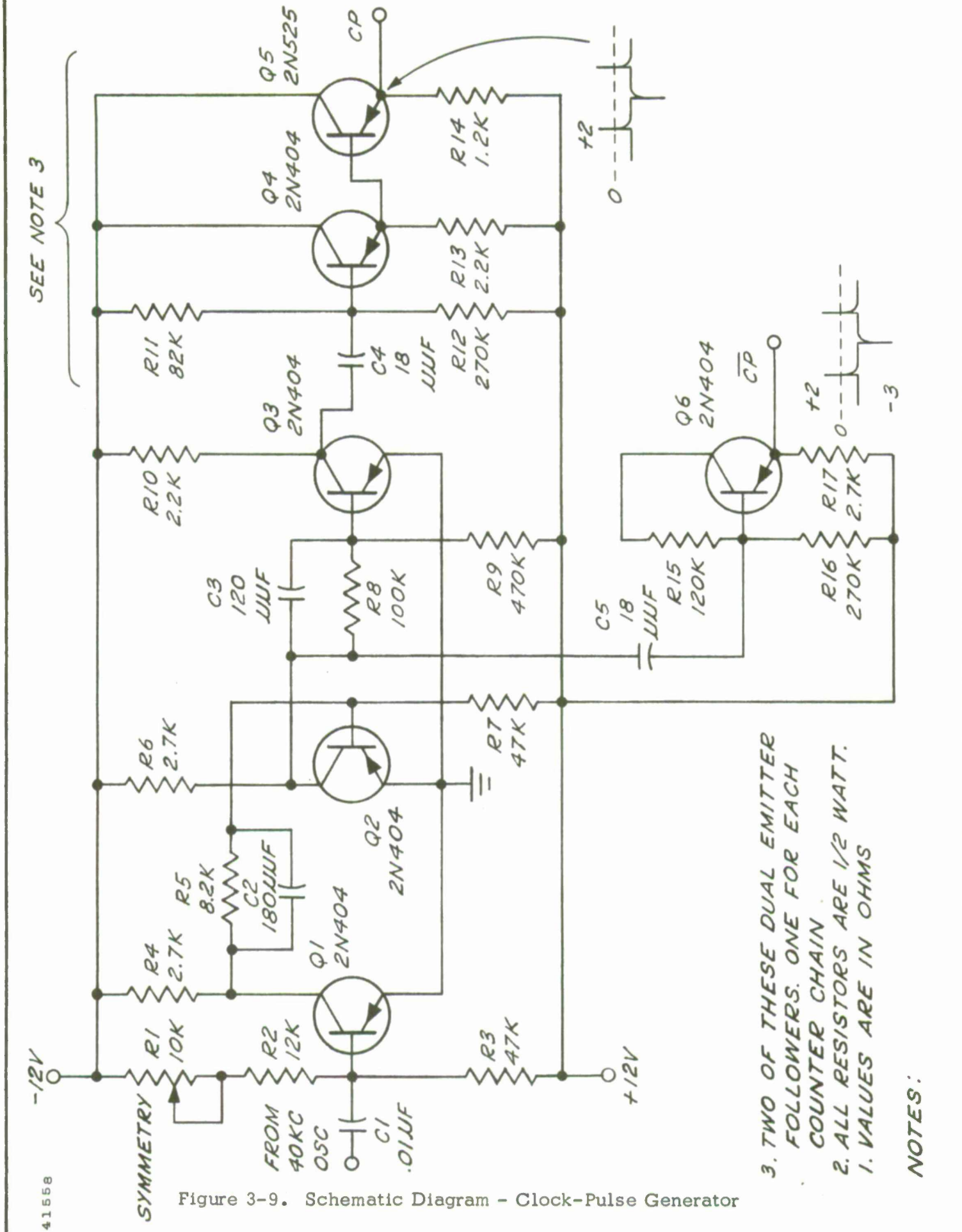

Figure 3-9. Schematic Diagram - Clock-Pulse Generator

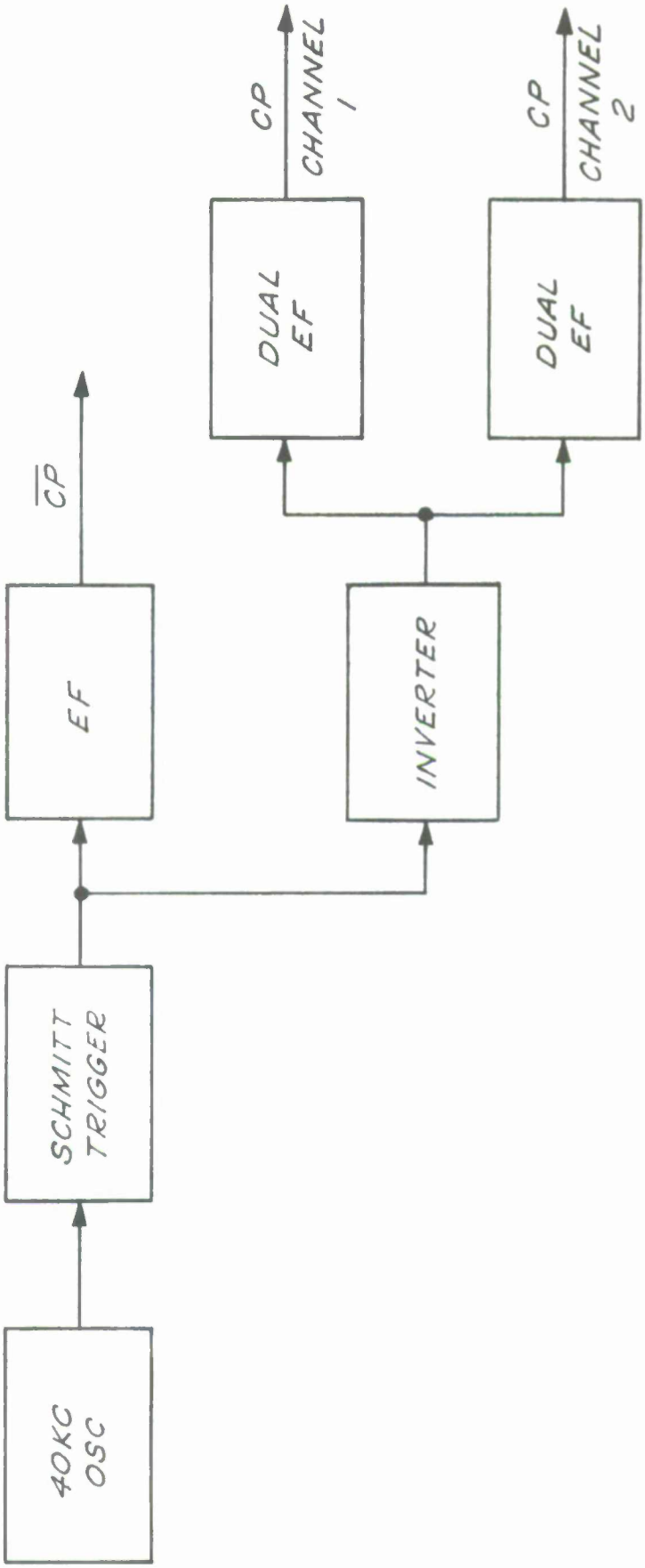

Figure 3-10. Block Diagram - Clock-Pulse Generator

41559

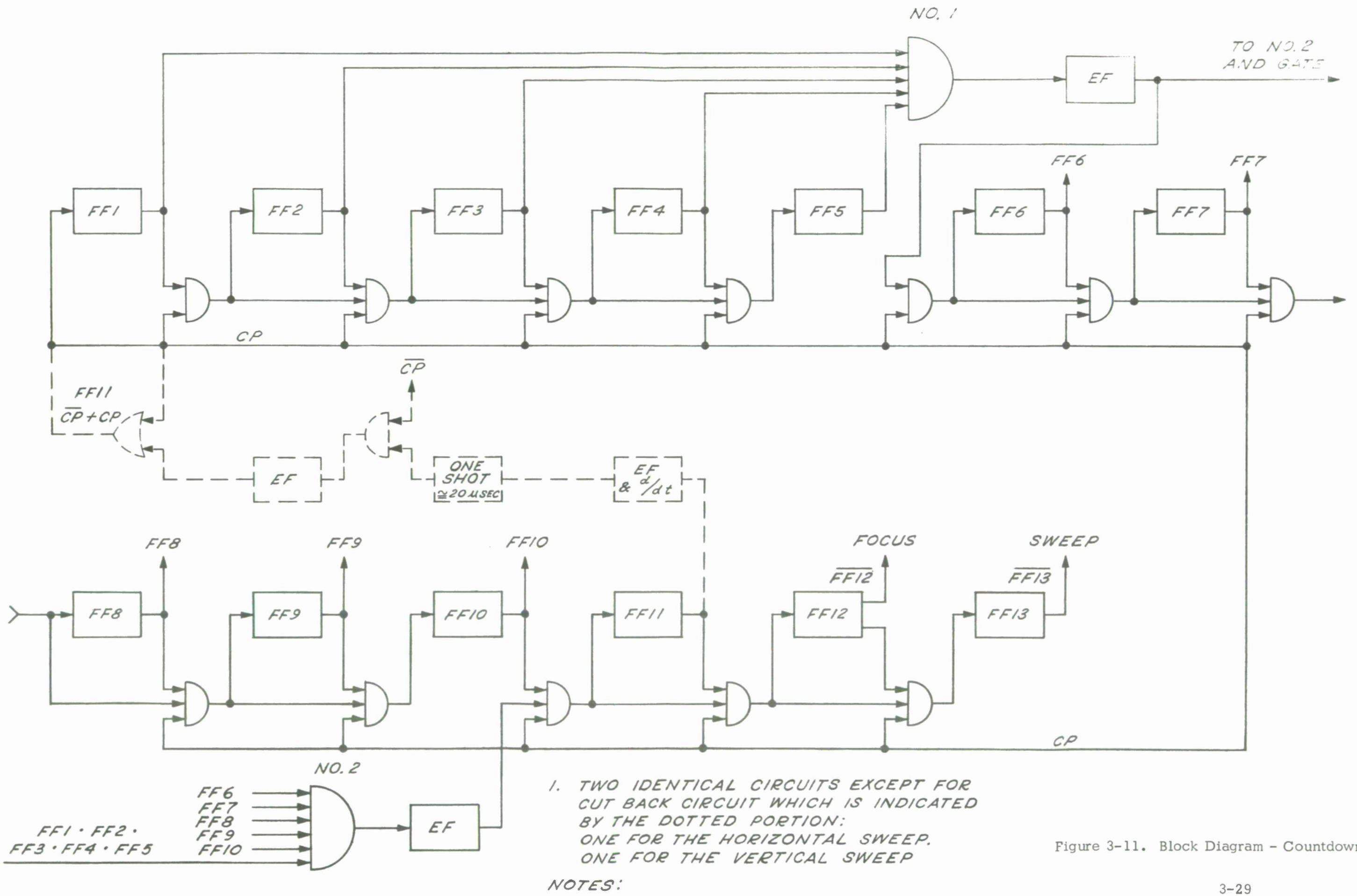

1. TWO IDENTICAL CIRCUITS EXCEPT FOR CUT BACK CIRCUIT WHICH IS INDICATED BY THE DOTTED PORTION: ONE FOR THE HORIZONTAL SWEEP. ONE FOR THE VERTICAL SWEEP

NOTES:

Figure 3-11. Block Diagram - Countdown Circuit

41353

The output frequency of the first flip-flop, FF1, is one-half the frequency of the clock-pulse generator output signal. The output frequency of the second flip-flop, FF2, is one-fourth the frequency of the clock-pulse generator output signal; this progression continues down to the eleventh flip-flop, FF11, whose output frequency is 1/2048th of the clock-pulse generator output signal.

Flip-flop FF12 has an output frequency which divides the clock-pulse generator output signal by 4096, and flip-flop FF13 divides by 8192. Since the clock-pulse generator output frequency is 40.97 kilocycles and the countdown is 8192, the horizontal sweep frequency is 40,970 divided by 8192, or 5.00122 cycles per second.

Cutback Circuit. A cutback circuit shown in dashed lines on Figure 3-11 and schematically on Figure 3-12 feeds the output from flip-flop FF11 back to the input of flip-flop FF1. The FF11 output is fed to emitter-follower Q9 and differentiator circuit C10, R27, and CR1 to produce waveforms needed to start the 20-microsecond one-shot multivibrator Q10 and Q11. The multivibrator output is fed to AND-gate CR4 and CR5. The gate also receives the $\overline{CP}$ pulses from the clock-pulse generator to open the gate. The AND-gate output feeds to emitter-follower Q12 and to OR-gate CR6, CR7, and R31. The OR-gate feeds either a CP or a $\overline{CP}$ pulse to flip-flop FF1.

The cutback circuit introduces one additional pulse into the countdown circuit for each output of flip-flop FF11. Therefore, the countdown circuit counts down normally (by a scale of 2) up to flip-flop FF11, and instead of receiving a division of the input frequency 2048 (the output frequency of FF11), the frequency division is changed to 2048.5. The output of flip-flop FF12 is changed from a division of 4096 to 4097. The output of FF13 is a division of 8194 instead of 8196.

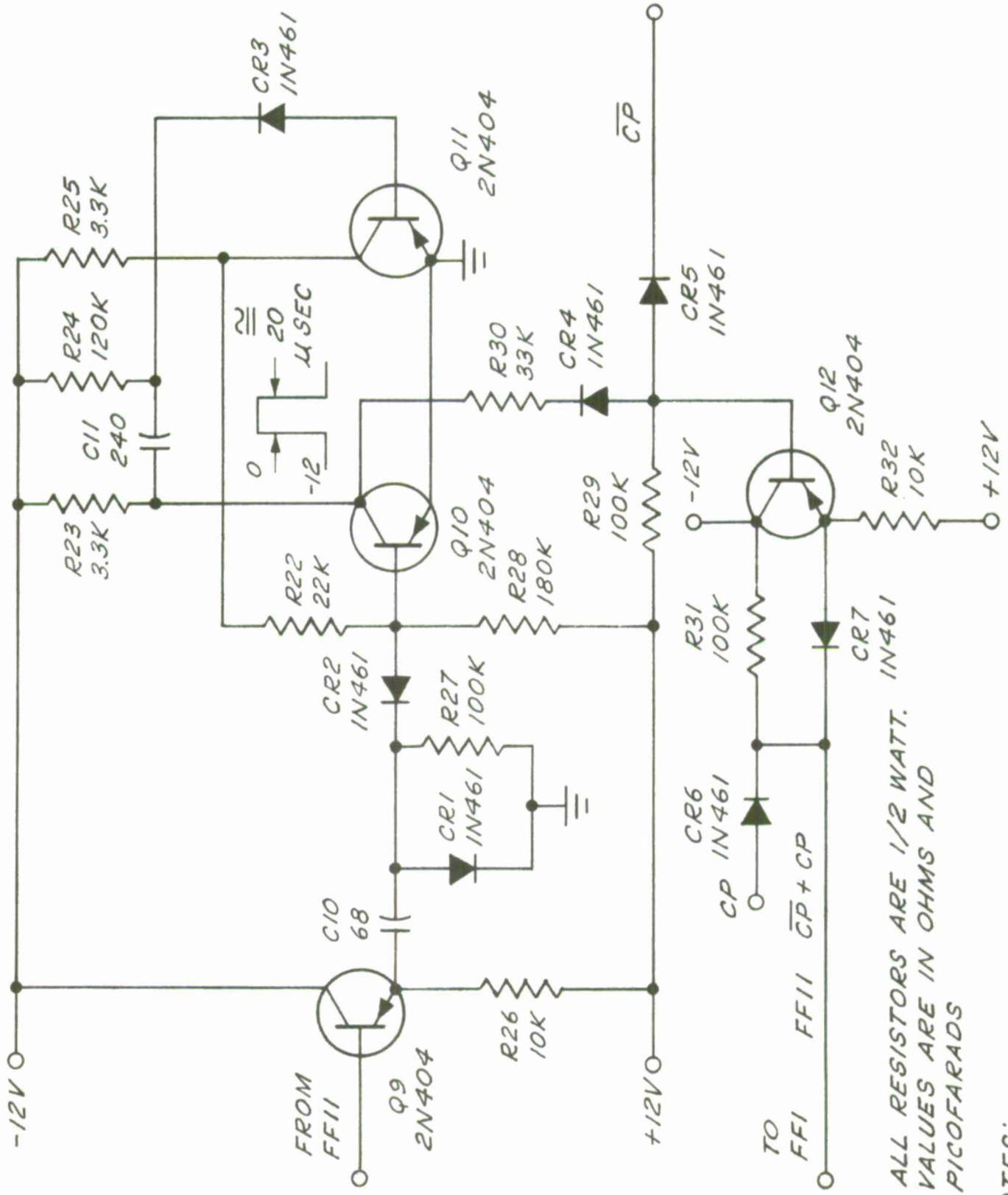

NOTES:

1. VALUES ARE IN OHMS AND PICOFARADS
2. ALL RESISTORS ARE 1/2 WATT.

Figure 3-12. Schematic Diagram - Cutback Circuit

41580

The resultant signal is used to drive the vertical sweep circuits whose frequency is 40,970 divided by 8194, or 5 cycles per second.

The horizontal and the vertical sweep circuits will return to the same phase condition after 4099 cycles of sweep. Therefore, the frame rate for each picture is 4099 sweep cycles.

3.3.6 Sweep-Integrator Circuit

The output of flip-flop FF13 is a symmetrical square wave used to drive a sweep-integrator circuit. Figure 3-13 shows the sweep-integrator circuit. The square wave output of countdown circuit flip-flop FF13 is fed to emitter-follower Q38 which drives amplifier Q39. The output signal of Q39 is clamped by diodes CR40 and CR41. Diode CR40 clamps the waveform to a ground-potential maximum value, and CR41, a Zener diode, limits the waveform swing from ground to a maximum of -42 volts. The clamping prevents amplitude variations which may be caused by component or power supply drift.

The clamped waveforms are fed to an active integrator circuit composed of Q40, Q41, Q42, and C45. Resistor R125 and capacitor C45 provide feedback from the collector of Q42 to the base of Q40.

An active integrator circuit requires a low output impedance with a high input impedance. Transistors Q40 and Q41 are 2N338 direct-coupled emitter-follower units which were selected for their low leakage and high input impedance characteristics.

The output waveform is an isosceles triangle which is the integral of the square wave input. These triangular signals are used to drive the sweep circuits for the cathode-ray tubes. One integrator is used for the horizontal deflection circuits and one integrator is used for the vertical deflection circuits.

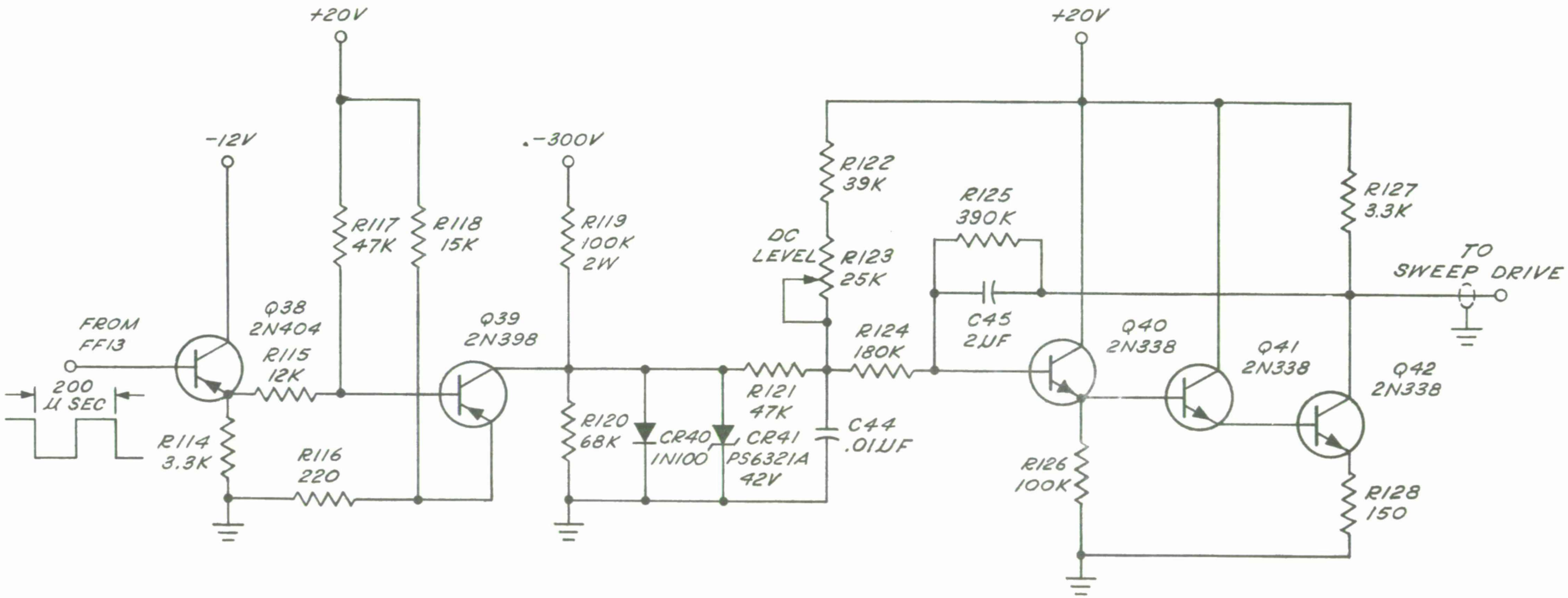

3. ALL RESISTORS ARE 1/2 WATT UNLESS OTHERWISE NOTED
2. VALUES ARE IN OHMS
1. TWO IDENTICAL CIRCUITS:
   ONE FOR VERTICAL DEFLECTION.
   ONE FOR HORIZONTAL DEFLECTION

NOTES:

41354

Figure 3-13. Schematic Diagram - Sweep Integrator

3.3.7 Sweep-Drive Circuit

Figure 3-14 shows the sweep-drive circuit components. Potentiometer R90 controls the current gain of emitter-follower Q29. The output of Q29 feeds across 6-volt Zener diode CR36 to shift the dc level of the input to phase-splitter Q30. Equal outputs of Q30 are fed to push-pull Class A amplifier Q31 and Q32. The push-pull amplifier outputs are rc-coupled to amplifiers Q33 and Q34. These amplifiers afford a high-impedance load to phase-splitter Q30 and produce drive currents for the horizontal and vertical deflection yokes in the flying-spot scanner CRT and the recorder CRT. One amplifier drives the vertical deflection coils in both the reader and recorder CRT. A second amplifier is used to drive the horizontal deflection coils in both units.

Rheostat-connected potentiometers R98 and R100 are used to adjust the dc operating levels of the push-pull amplifier. Potentiometer R110 affords horizontal centering of the CRT image.

3.3.8 Recorder-Timer Circuit

Figure 3-15 shows the recorder-timer circuit. The timer circuit is used to control the unblanking interval of the recording CRT. The unblank interval is generated by timing from flip-flops FF11 in both the horizontal and the vertical countdown circuits. The negative-to-positive waveform transitions of the two flip-flop outputs will be in coincidence every 205 milliseconds. A counter chain counts 4 periods of 205 milliseconds; the first pulse starts the recording cycle and the fifth pulse stops the cycle.

The pulses are only admitted when an AND-gate is open and flip-flop FF17 is true. The AND-gate pulses drive a three-stage counter composed of flip-flops FF14, FF15, and FF16.

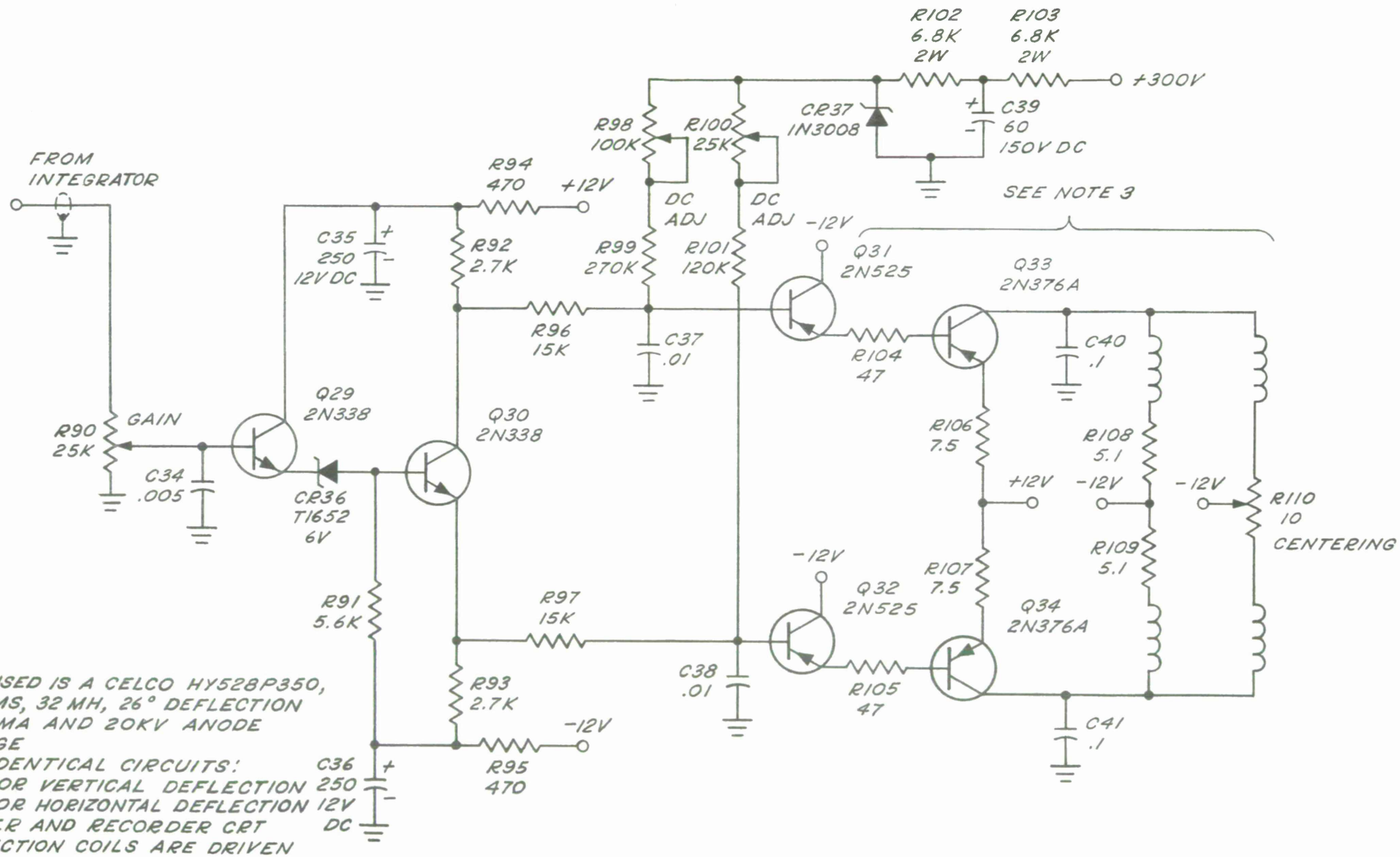

NOTES:

1. VALUES ARE IN OHMS AND MICROFARADS
2. ALL RESISTORS ARE 1/2 WATT UNLESS OTHERWISE NOTED.
3. READER AND RECORDER CRT DEFLECTION COILS ARE DRIVEN FROM SAME AMPLIFIERS
4. TWO IDENTICAL CIRCUITS: ONE FOR VERTICAL DEFLECTION ONE FOR HORIZONTAL DEFLECTION
5. YOKE USED IS A CELCO HY528P350, 90 OHMS, 32 MH, 26° DEFLECTION @ 150 MA AND 20KV ANODE VOLTAGE

41355

Figure 3-14. Schematic Diagram - Sweep Drive Circuit

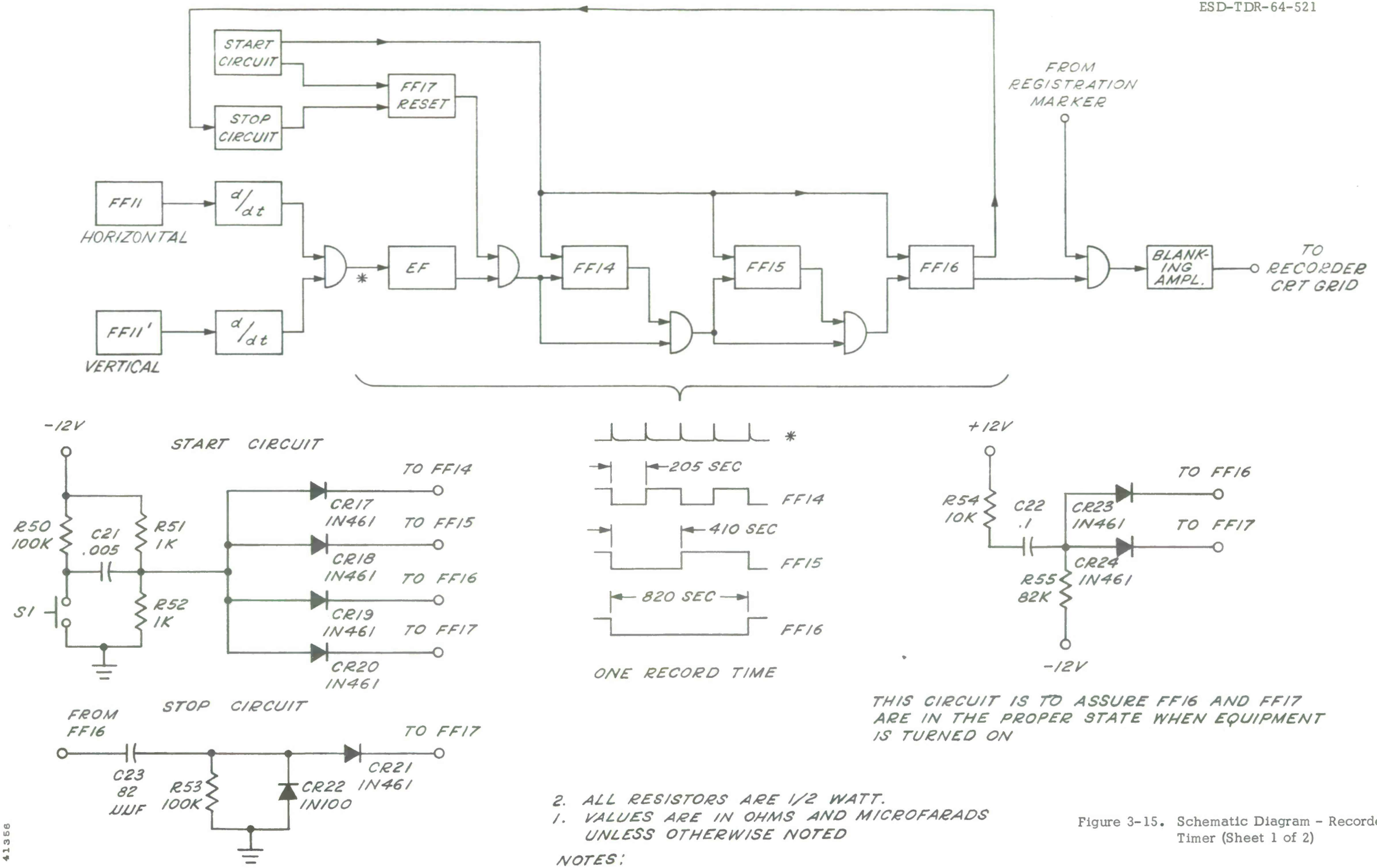

Figure 3-15. Schematic Diagram - Recorder Timer (Sheet 1 of 2)

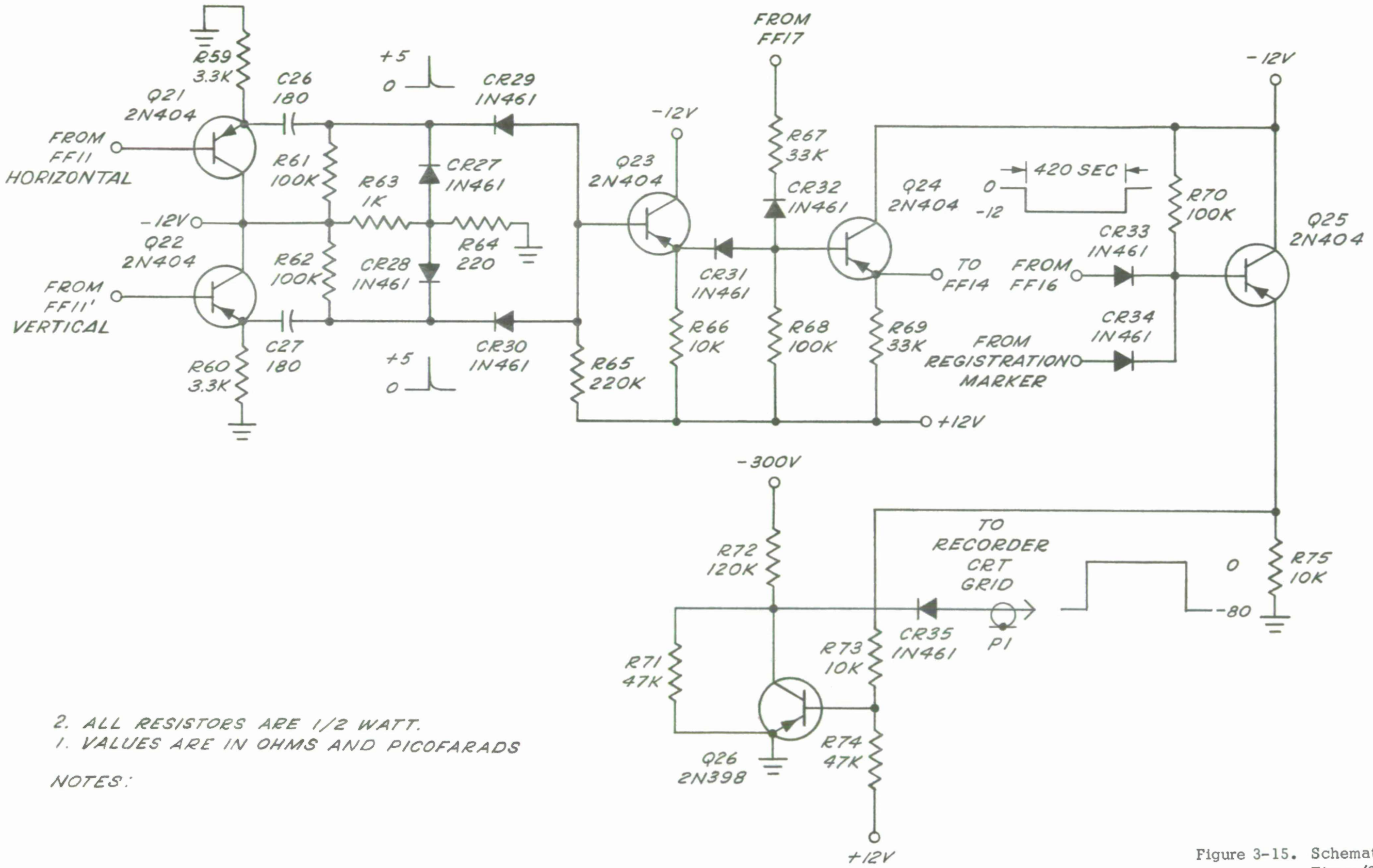

2. ALL RESISTORS ARE 1/2 WATT.
1. VALUES ARE IN OHMS AND PICOFARADS

NOTES:

41357

Figure 3-15. Schematic Diagram - Recorder Timer (Sheet 2 of 2)

The first four pulses set the recording time and the fifth pulse out of flip-flop FF16 resets flip-flop FF17 through a stop circuit. When flip-flop FF17 is reset, an AND-gate is closed, flip-flop FF14 is off, and the recording cycle ceases.

A recording-start circuit is actuated by depressing a momentary pushbutton, S1, which supplies biasing voltages to steering diodes CR17 through CR20. The diodes, when forward-biased, feed voltages to flip-flops FF14 through FF17, which reset to a high condition. The first clock pulse received by flip-flop FF11 opens an AND-gate and sets flip-flops FF14 through FF17 to a low condition, starting the recording cycle. The cycle continues until the fifth pulse (count), which returns flip-flop FF16 to a high condition. The low-to-high transition of flip-flop FF16 through the stop circuit resets flip-flop FF17 and closes the AND-gate to additional pulses.

The stop circuit consists of differentiator C23 and R53, clamping diode CR22, and isolation diode CR21 placed between flip-flops FF16 and FF17. The output of flip-flop FF16 feeds one input to an AND-gate. The gate also receives a registration-marker pulse derived from a registration mark placed on the input film. The AND-gate output drives a blanking amplifier which feeds pulses to the grid of the recording CRT. The grid pulses blank the CRT to an off condition, providing a clear emulsion at the point where the registration marks were made.

The blanking amplifier comprises transistor Q26, which receives the input direct-coupled from gate buffer Q25. The blanking amplifier Q26 is normally at a potential of -70 or -80 volts while at cutoff. Q26 is at cutoff while the recorder CRT is blanked out. During recording, Q26 is on and the collector output is at ground potential. This decouples the blanking signal from the CRT by the action of diode CR35.

3.3.9 Color-Transformation Circuitry

The need for color-transformation circuitry was described in Section 2 of this report. To generate a color locus, three different transformation circuits are needed for recording: a blue record signal, a red record signal, and a green record signal. The blue signal is a linear transformation of the input density range. The green and red signals are reciprocating signals with increasing amplitudes (Figures 2-5 and 2-6).

Function Generator. Figure 3-16 shows three stages of a six-stage function-generator circuit. The input signal is proportional to the density of the input film. The desired density range is fixed to provide a signal with an amplitude variable from 0 to 12 volts by adjusting R195. The input video signal is fed across potentiometer R195 to two branches. One branch feeds to transistor Q70, and the second branch feeds to transistor Q71 which has a dc reference-level adjustment, R198.

The upper half of the function-generator circuit is analyzed as follows. Transistor Q70 is an emitter-follower which drives three other emitter-followers Q72, Q76, and Q80 in parallel. Each emitter-follower is isolated by a 22 k-ohm resistor. Each emitter-follower drives another emitter-follower. For example, Q72 is direct-coupled to Q74. Both collectors are supplied by +1 volt. The base of Q72 is returned to ground through a 22 k-ohm resistor while the base of Q74 is returned to ground through a 2.2 k-ohm resistor. As the signal changes from 0 to +1 volt, the emitter-follower output point 1A follows the input signal linearly. As the signal exceeds +1 volt, Q74 saturates and prevents point 1A from exceeding +1 volt.

The second stage consists of Q76 and Q78. This stage is identical to Q72 and Q74 except that the emitter circuit is returned to +2 volts, and the collectors are supplied with +3 volts. Until the signal reaches a

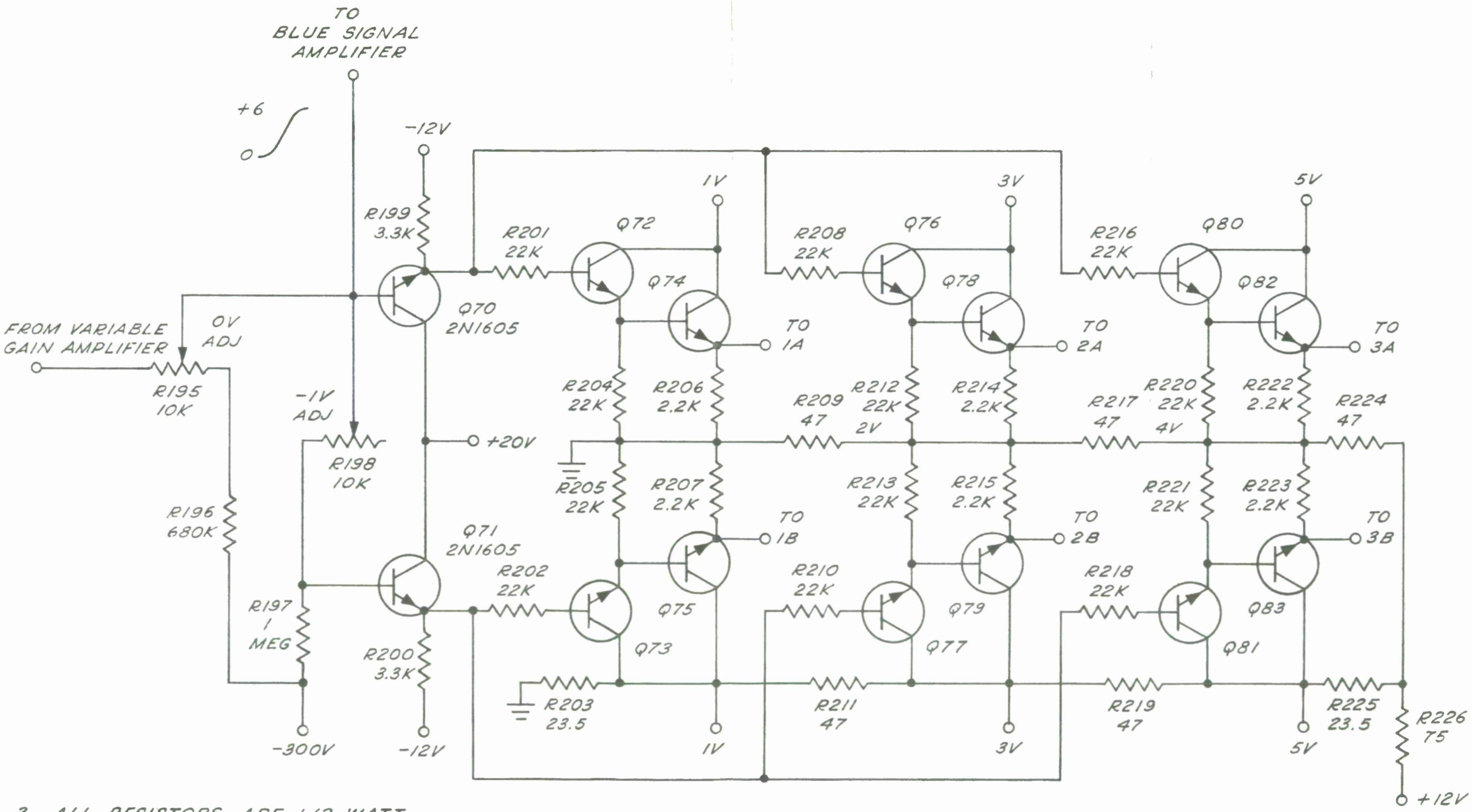

NOTES:

1. VALUES ARE IN OHMS UNLESS OTHERWISE NOTED
2. ALL TRANSISTORS ARE 2N1304 UNLESS OTHERWISE NOTED
3. ALL RESISTORS ARE 1/2 WATT

41358

Figure 3-16. Schematic Diagram - Function Generator

+2-volt level, Q76 and Q78 are at cutoff and cannot conduct. The emitter-follower output point 2A will remain at +2 volts. As the signal increases above +2 volts, the output point will follow the input signal until saturation occurs. At saturation, the output will not exceed +3 volts to provide an output which is linear with the input signal between +2 and +3 volts.

The third stage is identical to Q76 and Q78 except that the emitter circuit is returned to +4 volts and the collectors are supplied with +5 volts. Therefore, the emitter-follower output point 3A will follow the input signal linearly between +4 and +5 volts only. This procedure is continued for the fourth, fifth, and sixth stage of the circuitry; the next stage will have an output that follows the input signal between +6 and +7 volts, and so forth.

The lower half of the schematic diagram shows the input signal fed across potentiometer R198. This potentiometer shifts the dc level of the input signal to -1 volt below the input signal. Large resistive components minimize any changes in amplitude.

Emitter-follower Q71 drives three other emitter-follower stages which are identical to the stages in the upper half of the schematic diagram. The stages are returned to resistive dividers at the 0-volt level, 2-volt level, 4-volt level, and so forth. The collector-supply voltages are +1 volt, +3 volt, +5 volt, and so forth.

If the output signals are referred back to the input signals, the output point 1B is identical to 1A except that the conduction voltage range referred to the input is from +1 volt to +2 volts. The output from 2B is from +3 volts to +4 volts. The output from 3B is from +5 volts to +6 volts, and so forth for the six stages.

Figure 3-17 shows the response curves of the six dual stages. As 1A goes from 0 to +1 volts, 1B goes from +1 to +2 volts, 2A goes from +2 to +3 volts, 2B goes from +3 to +4 volts, and so forth until 6A goes from +10 to +11 volts, and 6B goes from +11 to +12 volts. These voltages

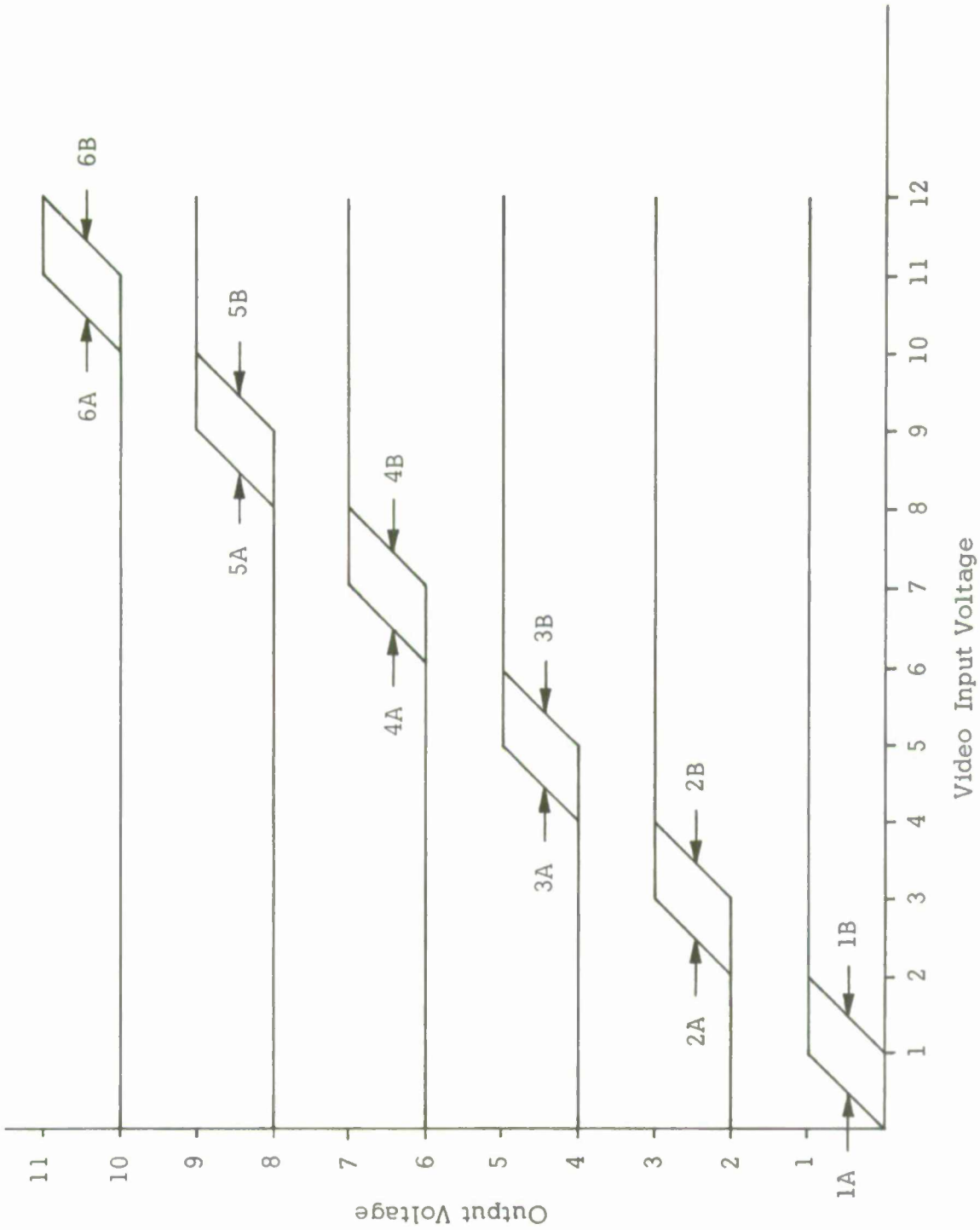

Figure 3-17. Function Generator Output-Slicer Response Curves

41029

are all referenced to the input video signals.

In effect, the input video signal is divided into 12 steps (each step is the linear response over a 1-volt range of the input signal). Thus, the original input film gray-scale is "sliced" into 12 different voltage levels to produce 12 outputs, each one a linear response of the input over one unit of the gray-scale range.

Function-Generator Output Circuit. Figure 3-18 shows the function-generator output circuit. The circuit shows the outputs of only three function-generator signals (1A through 3B). Six "step" functions are used with the color-enhancement equipment. All the "A" output signals are added in a resistive network. All the "B" output signals are added in another resistive network.

The output signals are added so that output 1A has the least weight, and output 6A has the most weight in the adder network. The adder-network resistors are valued accordingly. For example, resistor R230 is a 47 k-ohm unit, and resistor R233 is a 12 k-ohm unit.

Figure 3-19 shows the two adder-network buses plotted against the input voltage. Adder buses A and B are identical except that bus B is delayed 1 volt with respect to bus A. When an algebraic operation of bus A minus bus B is performed, a resultant waveform appears as shown in the top half of the figure. This algebraic addition can be accomplished by the use of a differential amplifier (Figure 3-18).

The adder-network outputs are fed to emitter-followers Q87 and Q88. The outputs of Q87 and Q88 drive the bases of differential amplifier Q89 and Q90. The emitter circuit of this amplifier is balanced by potentiometer R242.

The output of the transistorized differential amplifier is further amplified by vacuum-tube differential amplifier V5A and V5B. Potentiometer R251 affords input balancing. The two amplifier outputs are designated as RED′ and GREEN′ respectively.

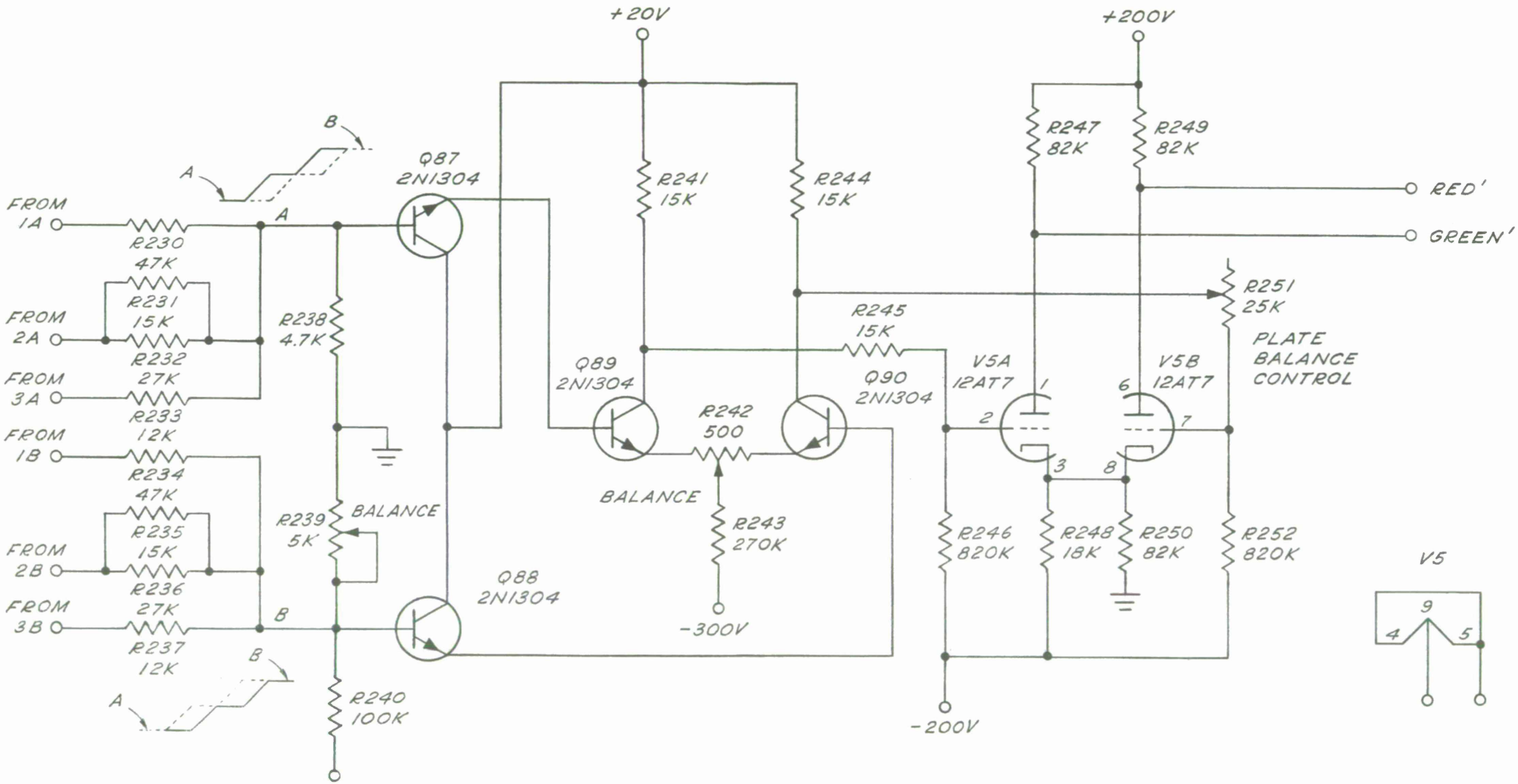

2. ALL RESISTORS ARE 1/2 WATT
1. VALUES ARE IN OHMS

NOTES:

Figure 3-18. Schematic Diagram - Function Generator Output Circuit

41359

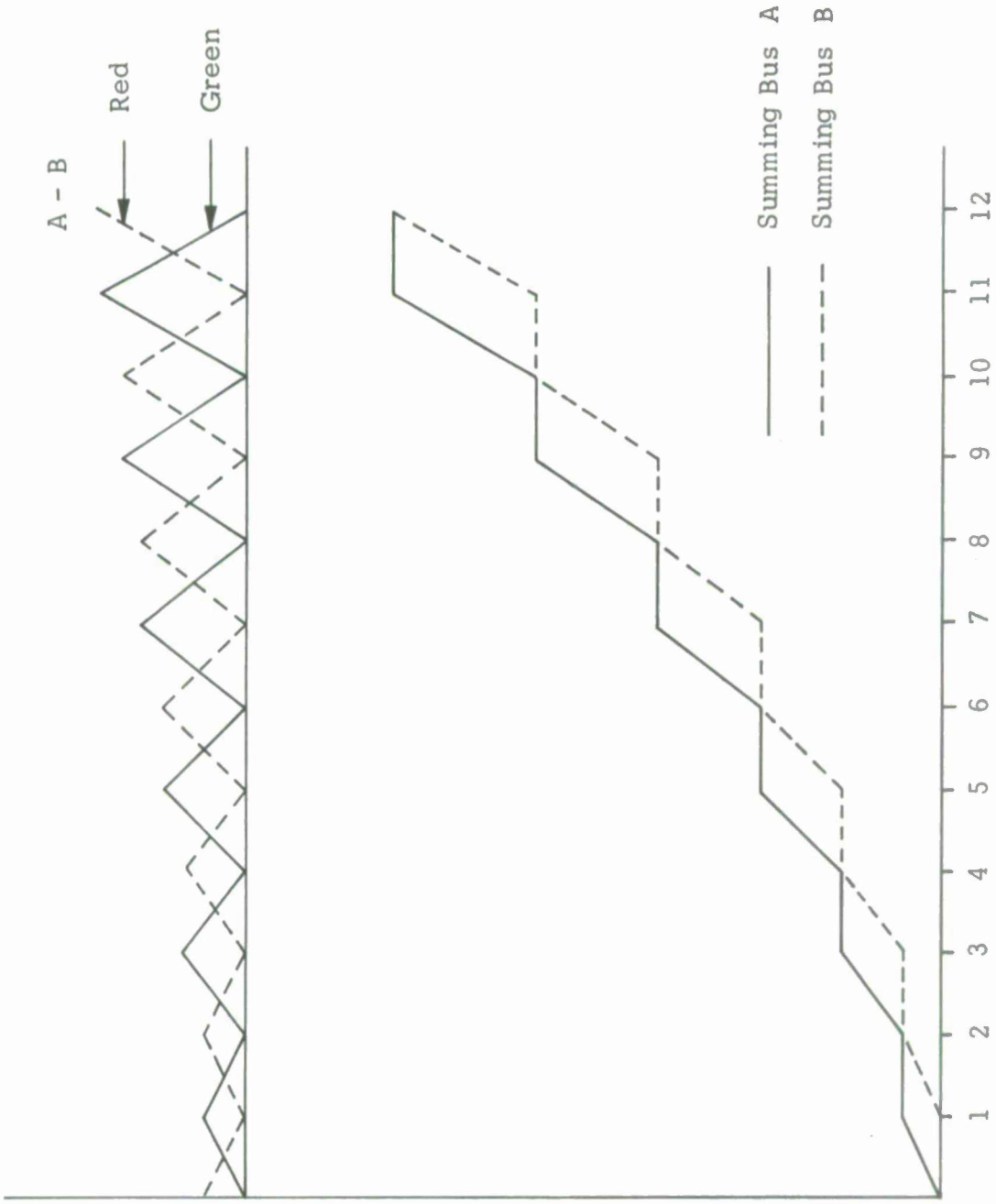

Figure 3-19. Differential Amplifier Output Response Curves

41030

The overall transfer function from the video input signal to the vacuum-tube differential amplifier output signals is shown in the upper half of Figure 3-19. The solid line is the GREEN' signal and the dashed line is the RED' signal. These two signals and the "blue" signal (which is the video-amplifier output signal) are fed to the adding circuits.

3.3.10 Adding Circuits

Figure 3-20 shows the adding circuits. The adding circuits are used to compensate for the imperfections in the differential amplifier response. The circuits add a slope to the waveforms of the RED' and GREEN' signals. In addition, the circuits place all three signals to the required dc level to drive a CRT.

The GREEN' signal is fed to the grid of cathode-follower V10A. The cathode-follower output of V10A feeds to one segment of rotary switch S12. This is the GREEN position. The blue signal is fed to one-half of differential amplifier V12A. The output of V12A feeds to cathode-follower V11B which feeds the blue signal to another segment of switch S12. This is the BLUE position. The RED' signal is fed to cathode-follower V10B and fed to a third segment of switch S12. This is the RED position. The wiper arm of S12 feeds Zener diode CR64 which shifts the dc level of the three signals to the correct bias level needed by the recording CRT. The bias signal is also controlled by CONTRAST control R265, which controls the amplitude but has little affect on the dc level of the signal. The signal also feeds across BRIGHTNESS control R266, which changes the dc operating level of the CRT. The signal, designated as E_{B-G-R}, feeds to the grid of cathode-follower V13B.

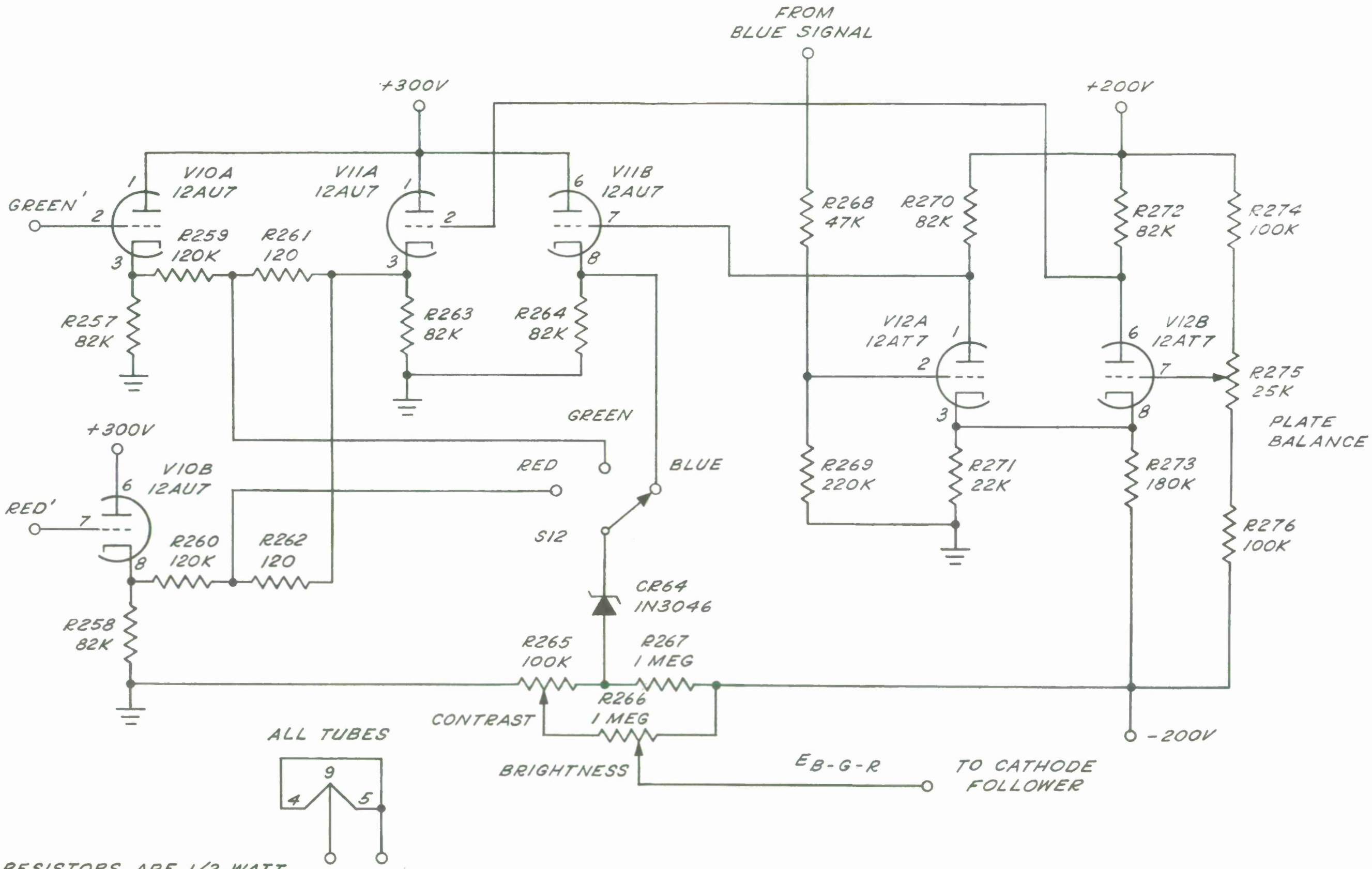

NOTES:
1. VALUES ARE IN OHMS UNLESS OTHERWISE NOTED
2. ALL RESISTORS ARE 1/2 WATT

41380

Figure 3-20. Schematic Diagram - Cathode Followers and Adding Circuits

3.3.11 Recorder CRT Drive and Control Circuit

Figure 3-21 shows the recorder CRT drive and control circuit. The input signal E_{B-G-R} feeds to cathode-follower V13B, which feeds the signal to an AND-gate. The plate circuit of V13B is limited to +40 volts by the action of Zener diode CR68.

The AND-gate is composed of diodes CR69, CR70, and CR73. One of the inputs to the AND-gate feeds from the recorder-feedback amplifier which limits the minimum grid-to-cathode voltage of V14. This minimum voltage is set by two series-connected Zener diodes CR71 and CR72, which limit the voltage to +34 volts. Since the grid-to-cathode voltage can never be less than 34 volts, the CRT is protected against overdrive and resulting phosphor burns on the screen.

CRT screen-intensity control R283 is used for adjusting the CRT without an input signal, for checking purposes.

Another CRT input is fed to coaxial connector J1, which is normally at ground potential during recording. At the end of a scanning cycle, this input point (fed from the recorder-timer circuit) drops down to -60 to -70 volts, which drives V14 into cutoff.

During frame recordings, a video signal is fed to coaxial connector J2 through diode CR69 to the grid of V14. This signal controls the display intensity unless the grid-to-cathode voltage becomes less than 34 volts; then, the Zener diodes conduct to protect the CRT.

During blanking (no recording taking place), the recorder-timer signals at J1 control the level of the CRT grid signal and cut off V14.

3.3.12 Photomultiplier Circuit

Figure 3-22 shows the photomultiplier circuit. Three PMT units are required for this equipment. Two units are used as light-sensors for the feedback to the CRT input. The third unit is used as a transducer to

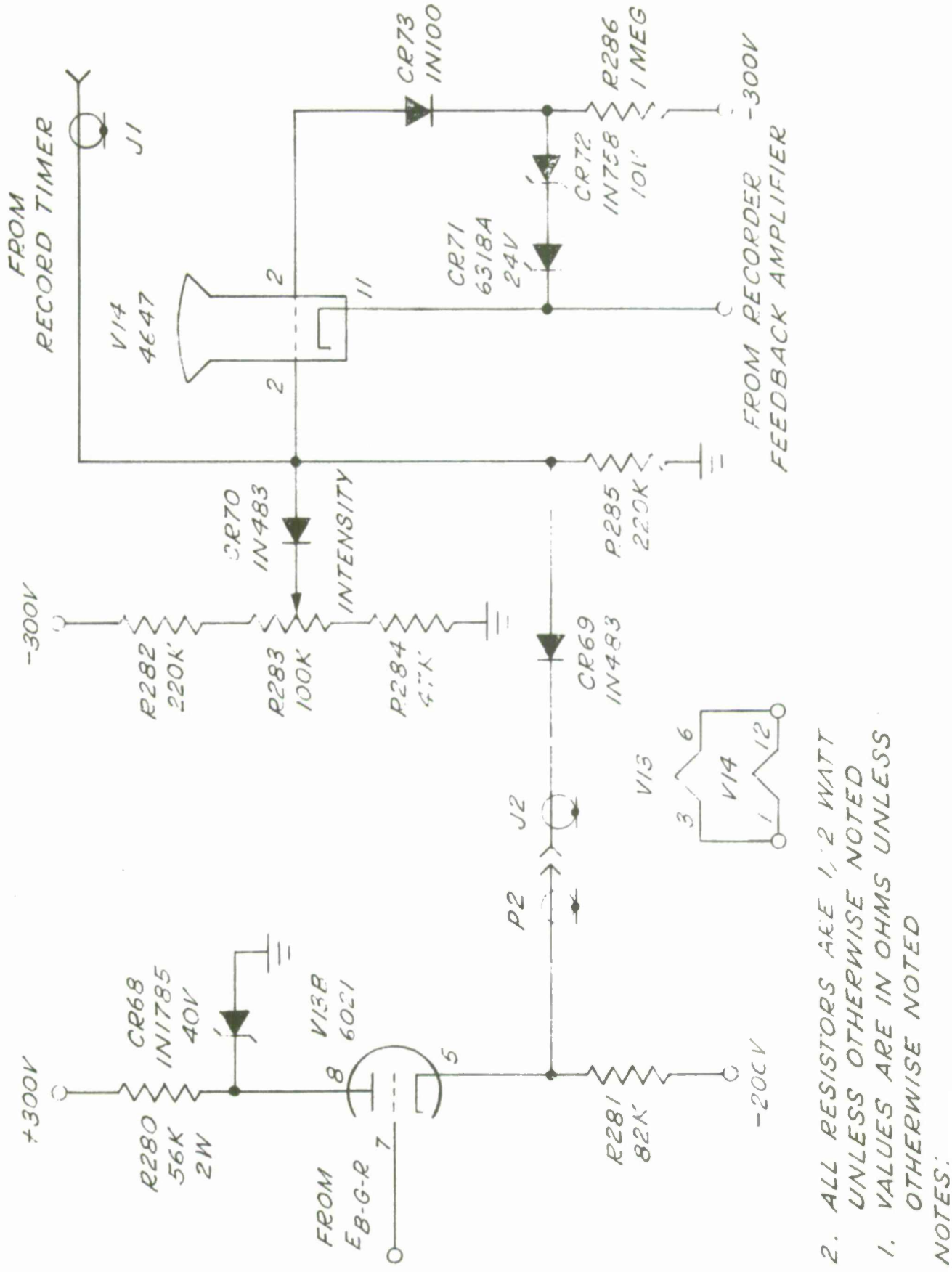

Figure 3-21. Schematic Diagram - Recorder CRT Drive and Control Circuits

41561

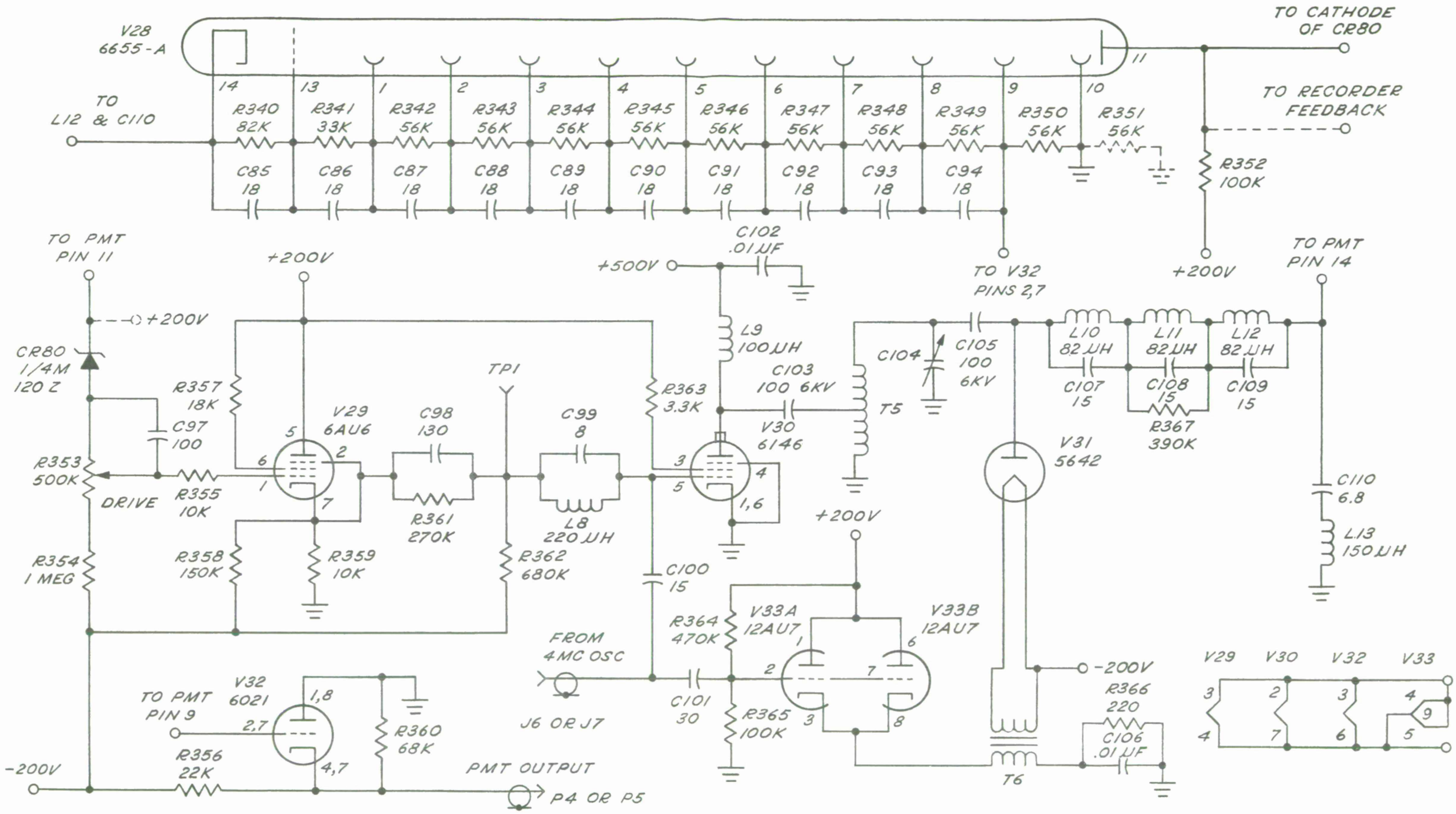

NOTES:

1. VALUES ARE IN OHMS AND PICOFARADS UNLESS OTHERWISE NOTED
2. ALL RESISTORS ARE 1/2 WATT
3. DOTTED PORTIONS ARE USED ON RECORDER PMT POWER SUPPLY ONLY

41361

Figure 3-22. Schematic Diagram - Photomultiplier Tube Circuit

convert the light video signal into an electrical video signal. The two PMT units used in the feedback circuit require a linear response and the video signal requires that the output is a logarithm of the light input. This response is required so that the video signal is a linear function of the photographic density on the film. In addition, the logarithmic response provides a wide dynamic range for the video signal with an optimum signal-to-noise ratio described in Subsection 3.2.6.

One PMT unit was designed so that either type response could be achieved by making internal wiring changes.

The PMT power supply is shown on the lower half of Figure 3-22. The PMT and voltage-divider network is shown in the upper half of this figure. When the wiring is connected as shown by the solid lines, the output video signal will be a logarithm of the irradiance of the photocathode. If the wiring is connected as shown by the dashed lines, the output will be a linear function of the irradiance of the photocathode.

When wired for a logarithmic response, the circuit functions as follows: A PMT voltage-gain characteristic is an exponential function. Therefore, the gain on the PMT is exponentially proportional to the supply voltage. This fact enables the creation of a logarithmic response by modulating the supply voltage for different amounts of brightness radiating the photocathode.

If the PMT anode voltage is held constant while varying the supply voltage, the variation in supply voltage is proportional to the logarithm of the input irradiance. A feedback loop can be created to automate this concept. The feedback loop from the anode is used to modulate the PMT supply. The feedback voltage tends to keep the anode signal constant, making the supply voltage modulation a logarithmic response of the irradiance on the photocathode.

The PMT power supply is driven by a 4-megacycle rf oscillator. Figure 3-23 shows the oscillator circuit. The oscillator is a conventional antiresonant crystal oscillator. The crystal, Y1, is cut for a 4-megacycle frequency. Oscillator tube V22 feeds an output signal to two power amplifiers V23 and V24. Each power amplifier drives one PMT circuit. The power amplifiers are tuned with coils L3 and L4, respectively. These coils are resonated by the capacitance in 4 feet of coaxial cabling which feeds the 4-megacycle signal with a peak-to-peak voltage of 120 volts to the grid of rf amplifier V30 in the PMT circuit.

A shunt decoupling network for V30 is composed of coil L9 and capacitor C102. The output of V30 is ac-coupled to autotransformer T5 in parallel with padder C104. This variable capacitor is used to tune T5 to resonate at a center frequency of 4 megacycles. The signal is shunt-detected by diode V31. The diode is cathode-biased to a fixed potential of -200 volts. A rectified signal from the tank circuit (T5 and C104) is added to this fixed potential. When unmodulated, the resultant signal is at a potential of -1200 volts dc.

A series-connected LC network in the output circuit of V31 (L10, L11, L12, C107, C108, C109), and a shunt-connected network (C110 and L13), filters out the 4-megacycle carrier. The remainder of the signal is a dc voltage modulated by a video signal. This signal is fed to the PMT V28 cathode. The unmodulated value of this signal is -1200 volts. This voltage is divided by 11 resistors which are placed between 10 dynodes. As a result, the dynode-to-dynode potential is -105 volts. The divider network is capacitor-compensated to maximize the upper cutoff frequency.

The anode signal acts as an error signal which is fed back across Zener diode CR80 to modulate the rf power amplifier. The feedback signal is fed across DRIVE potentiometer R353 to the grid of cathode-follower V29,

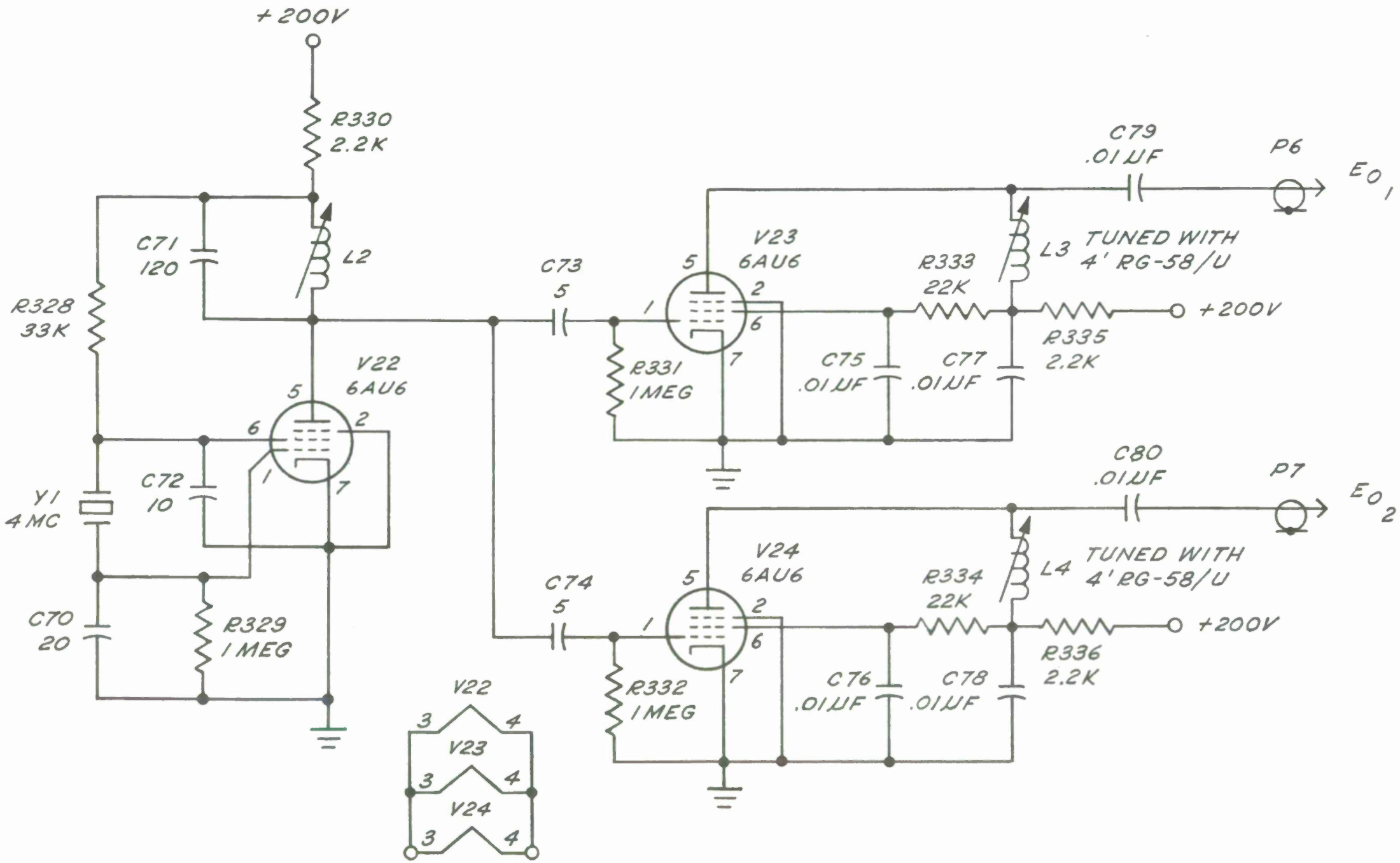

2. ALL RESISTORS ARE 1/2 WATT
1. VALUES ARE IN OHMS AND PICOFARADS UNLESS OTHERWISE NOTED

NOTES:

41362

Figure 3-23. Schematic Diagram - 4-Megacycle Oscillator and Output

which provides a low-impedance driving source for rf amplifier V30. The DRIVE potentiometer adjusts the power supply output level with no illumination on the PMT cathode.

The cathode-follower output feeds through a peaking network composed of C98 and R361 and a series tank circuit composed of C99 and L8. The tank circuit provides a low series impedance to the video signal and a high impedance to the 4 megacycle grid-drive signal.

The 4 megacycle driving signal is also ac-coupled to parallel cathode-follower V33A and V33B. The output of V33 drives filament transformer T6 which heats the filament of V31. Resistor R366 and bypass capacitor C106 furnish a bias voltage for the cathode-follower.

3.3.13 PMT-Circuit Operation

When the PMT circuit is connected for a logarithmic response, the circuit will function as follows: assuming that light is illuminating the photocathode, the resultant cathode current will be amplified by the dynode multipliers and fed back to reduce the bias of V30 which reduces the gain of this tube. V30 normally operates in a Class B mode. When the bias of V30 is reduced, the dc output is reduced and the PMT receives a lower potential. Thus, each dynode receives a lower potential and the overall gain of the PMT is reduced. The PMT anode senses this voltage change so that a small error signal (at the PMT input) produces an exponential gain change at the anode.

The PMT output point is between dynodes 9 and 10. The output signal feeds to cathode-follower V32 which supplies a 75-ohm output impedance at coaxial connector P4 or P5.

When the PMT circuit is connected to operate as a linear unit, the feedback loop is broken and the high voltage is held constant. Zener diode CR80 is returned to a fixed potential of +200 volts. However, the

power supply output can still be adjusted by the DRIVE potentiometer, R353. The PMT output is now taken directly from the anode, and not from dynode 9. An additional resistor, R351, is added to provide a higher voltage between dynode 10 and the anode. All other operational characteristics remain the same.

3.3.14 Video Preamplifier

Figure 3-24 shows the window or "slicing" circuit and the variable gain amplifier circuit. The PMT circuit output feeds through coaxial connector J4 to a filter network. This network, composed of L1 and C160, filters out any residual 4-megacycle carrier signal which may be present in the input signal. The signal feeds to the base of emitter-follower Q59. A resistive network composed of R170, R171, and WINDOW LEVEL control R172 is returned to +300 volts. This network shifts the negative PMT input signal for "slicing." Control R172 enables shifting any level of input signal above ground potential.

The shifted input signal feeds to a clipping network composed of diodes CR56 and CR57. Diode CR56 is reverse-biased to clip signals below ground potential. Diode CR57 is biased with potentiometer R173 which enables signal adjustments between 0 and +12 volts. The adjustment provides a maximum window width (12 volts with a video signal) and a minimum window width (forward drop of the two diodes, about 0.6-volt for each diode, or 1.2 volts peak-to-peak).

The emitter-follower (Q59) output signal feeds to a step-divider network composed of S13, R175, R176, and R177. The divider network switch provides a coarse gain control for variable-gain amplifiers Q60 and Q61. The outputs of Q60 and Q61 feed complemented differential amplifier stage Q62 and Q63. The output is a push-pull signal which follows two paths. One path is direct-coupled to power amplifier Q64

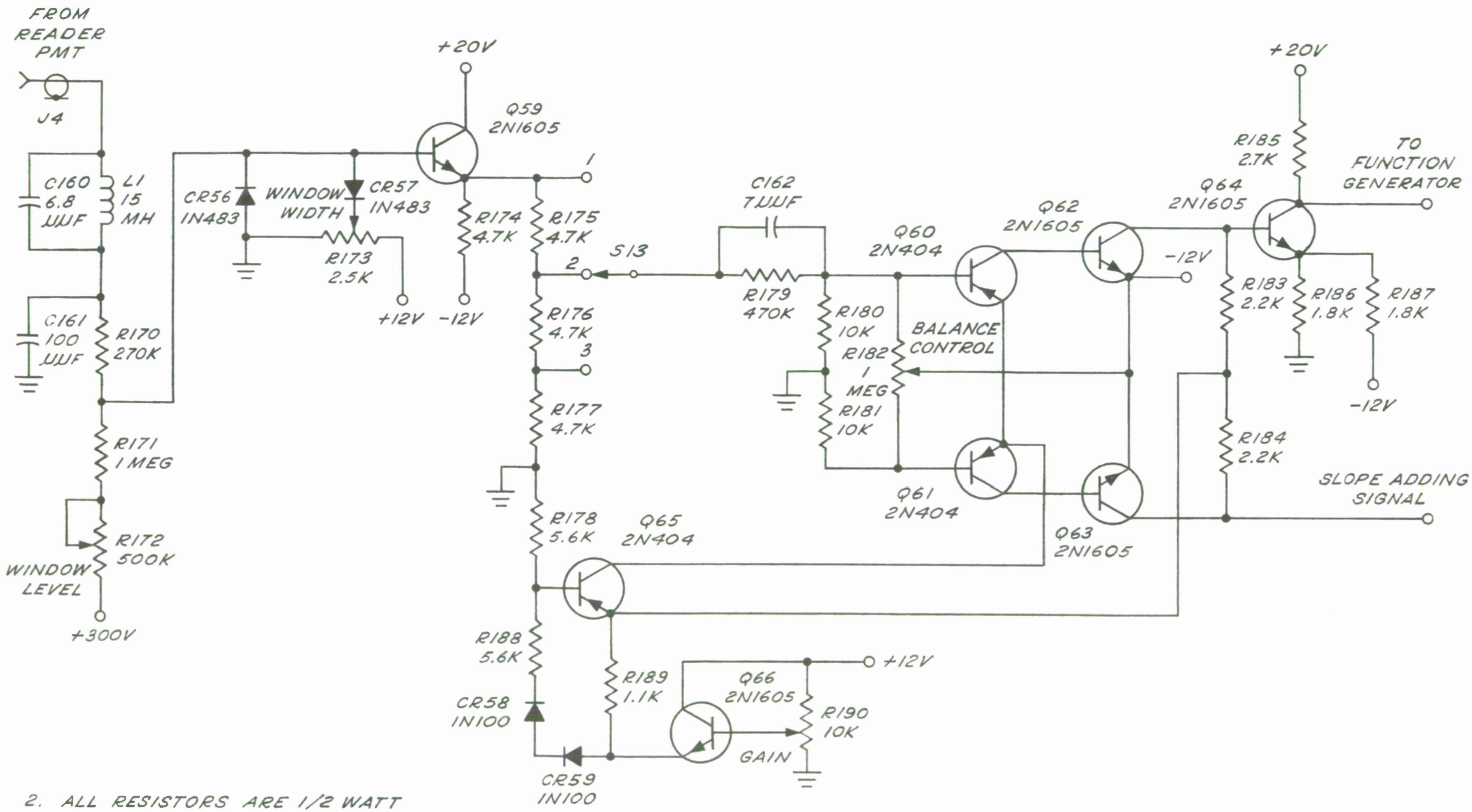

NOTES:

1. VALUES ARE IN OHMS UNLESS OTHERWISE NOTED
2. ALL RESISTORS ARE 1/2 WATT

41363

Figure 3-24. Schematic Diagram - Window Circuit and Variable Gain Amplifier

which amplifies and feeds the signal to the function generator. A second path is a slope-adding signal.

The differential amplifier stage is zero-balanced by potentiometer R182. Transistor Q65 keeps the emitter circuit of Q60 and Q61 constant by feeding back a bias voltage. Emitter-follower Q66 is an isolation unit controlled by GAIN potentiometer R190. The dc stability of the circuit prevents the differential amplifier tendency to drift. Transistor Q65 is biased by Q66, diodes CR58 and CR59, and resistors R178, R188, and R189. The diodes overcome the forward drop of Q65. The output voltage of Q66 is controlled by the settings of the GAIN control, R190. This amplifier has a maximum gain of 1000 and a control range of 30 db.

When the GAIN control is used in conjunction with the step dividers, a total gain control range of about 40 db is achieved.

3.3.15 Reader-CRT Feedback Circuit

Figure 3-25 shows the reader-CRT feedback amplifier circuit. The input feeds from the PMT circuit through coaxial plug P5 to potentiometer R303. The output of the potentiometer drives a differential amplifier composed of V17A and V17B. The differential-amplifier output signal feeds to cathode-follower V18. The cathode-follower output of V18 feeds to the cathode of CRT V19.

The plate circuits of V17A and V17B are balanced by potentiometer R308. The differential amplifier provides about 10 db of gain in the feedback loop.

3.3.16 Recorder-CRT Feedback Circuit

Figure 3-26 shows the recorder-CRT feedback amplifier circuit. The input feeds from the PMT circuit through coaxial plug P5 to emitter-follower Q95. This stage receives the output of 35-volt bias supply composed of Zener diode CR76, C66, C67, R290, and R291.

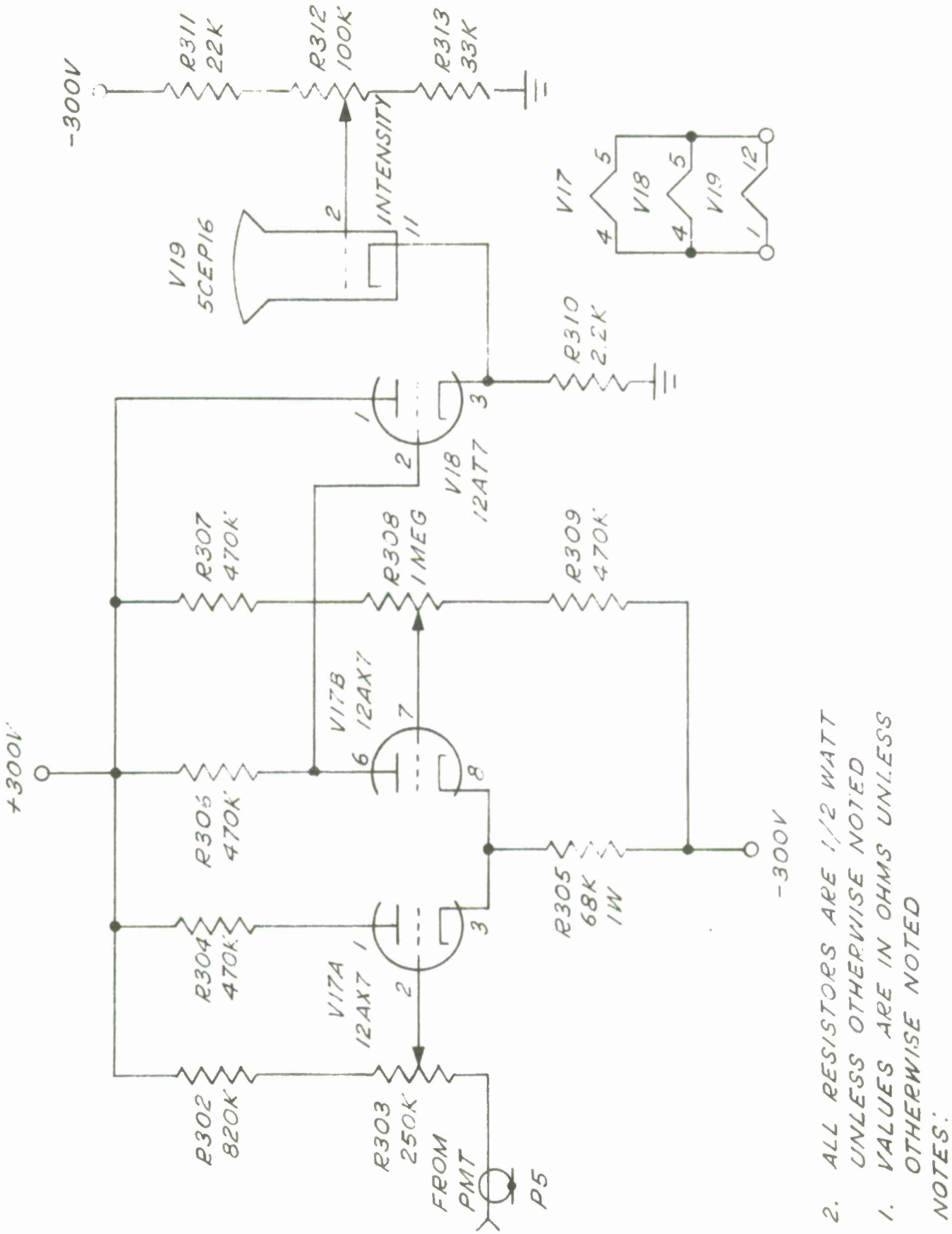

Figure 3-25. Schematic Diagram - Reader CRT Feedback Amplifier

41562

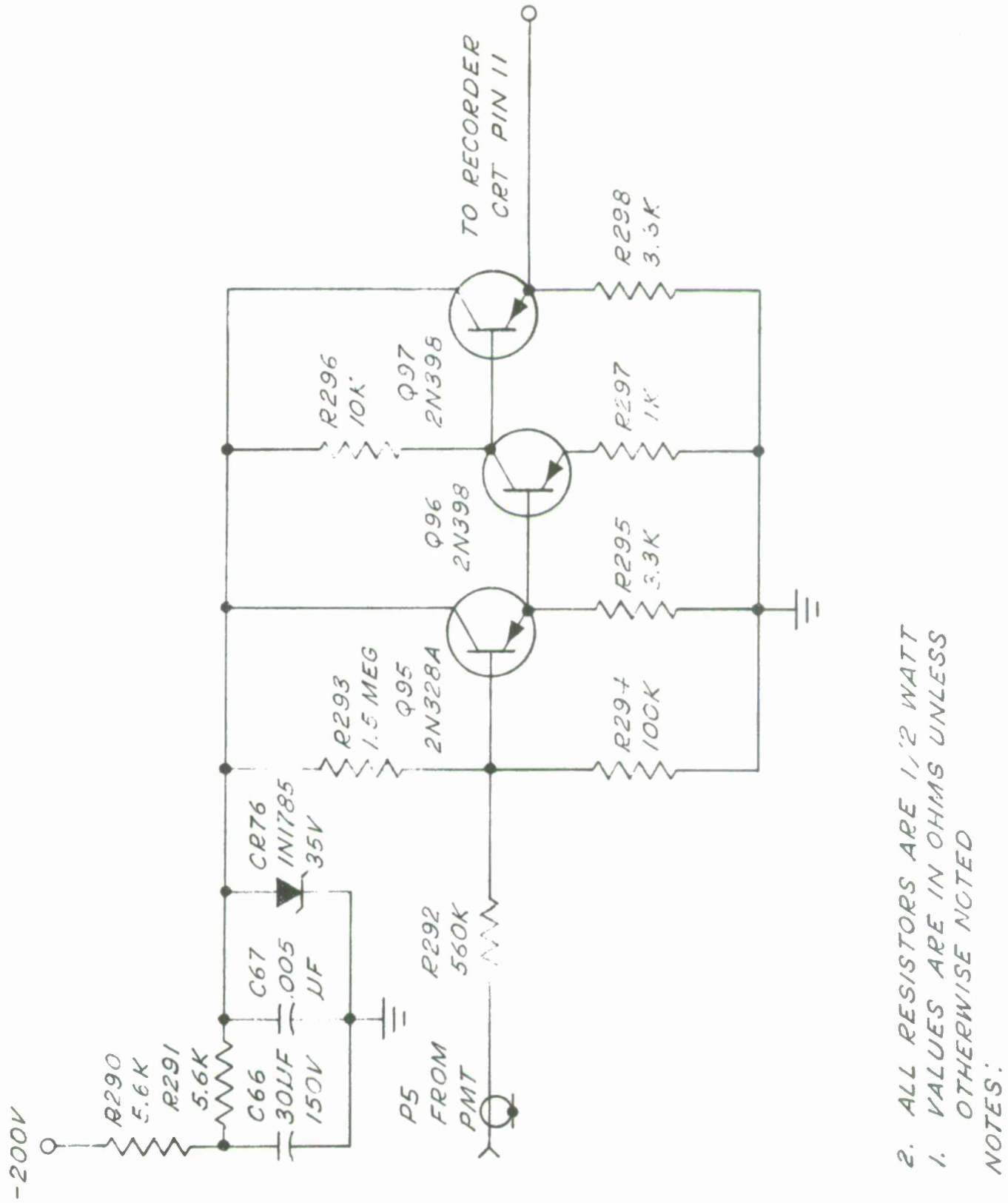

Figure 3-26. Schematic Diagram - Recorder CRT Feedback Amplifier

41563

The output of Q95 is direct-coupled to amplifier Q96 which is direct-coupled to emitter-follower Q97. The output feeds to the cathode of CRT V14 (refer to Figure 3-21).

3.3.17 Dynamic Focusing

The dynamic focusing* signal is driven by signals from the x- and y-deflection circuits. Both circuits furnish parabolic waveshape outputs which are added algebraically to produce a voltage used for focusing the CRT's. The deflection can be either positive or negative from the center of the CRT; therefore, the focus driving frequency must be twice the sweep rate.

The signal is supplied by the output of flip-flop FF12 in both the vertical and horizontal function-generator circuits. Figure 3-27 shows the dynamic-focus integrator and waveshape circuit. The FF12 output signal feeds to emitter-follower Q45 which feeds the signal to resistive networks. These networks contain DC LEVEL potentiometer R135 and GAIN potentiometer R136 for adjusting the dc level and the amplitudes of the square-wave pulses. The square wave signal is fed to an active integrator composed of Q46, Q47, and Q48 and capacitor C49. The integrator output is a triangular (isosceles) waveshape ranging from +4 to +9 volts. The triangular waveshape is modified into a parabolic waveshape by a network consisting of diodes and resistors. The diodes are CR44, CR45, CR46, and CR47; each one is biased at different potentials. A divider chain composed of R140,

*The requirement for dynamic focusing was covered in Subsection 3.2.5. The discussion pointed out the need for maintaining an optimum spot size over the entire CRT format. The deflection voltage is proportional to the square of the deflection from the center of the CRT. Since there are two components, x- and y-deflection, two focusing networks are required, each dependent upon one of the components only.

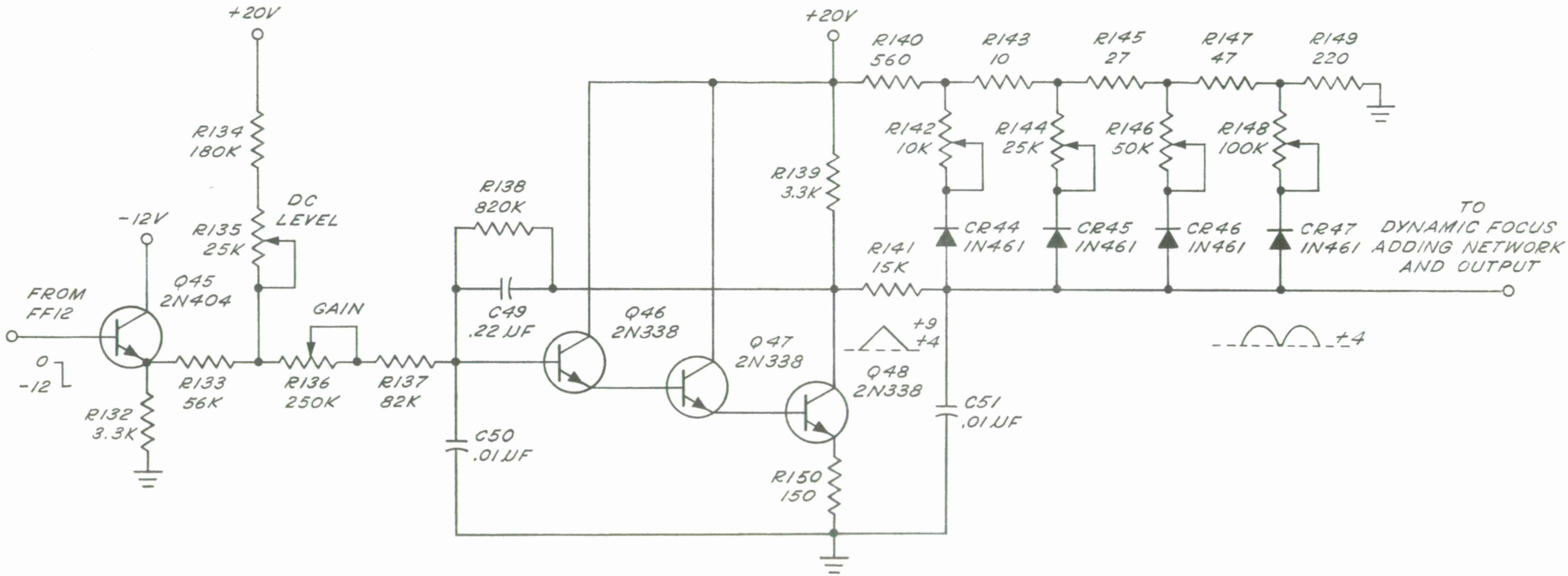

3. ALL RESISTORS ARE 1/2 WATT
2. VALUES ARE IN OHMS
1. TWO IDENTICAL CIRCUITS:
ONE FOR VERTICAL FOCUS.
ONE FOR HORIZONTAL FOCUS

NOTES:

41384

Figure 3-27. Schematic Diagram - Dynamic Focus Integrator and Waveshaper

R143, R145, R147, and R149 furnishes the bias voltages. Diode CR47 receives the smallest bias voltage, and CR44 receives the largest bias voltage. As the triangular waveshape potential increases from +4 to +9 volts, the diodes, which are initially reverse-biased, become forward-biased one by one. In series with each diode is an adjustable resistor which limits the forward-biased load for each diode. As the triangular signal increases, the signal load increases, and if the diodes were perfect, the triangular waveform would be divided into five straight line segments from +4 to +9 volts and from +9 back down to +4 volts. However, due to the nonlinear turn-on characteristic of a diode, the output signal is a smooth curve with all segments smoothed out to near-parabolic waveshapes as a function of beam deflection.

The curve smoothness is adjusted by visually viewing the output signal on an oscilloscope and adjusting the load potentiometers for a parabolic waveshape.

Figure 3-28 shows the dynamic-focus adding network and output circuit. The adding network adds the two parabolic waveshapes algebracially. The horizontal focus signal feeds to emitter-follower Q51 and the vertical focus signal feeds to emitter-follower Q52.

The output of Q51 is ac-coupled to emitter-follower Q53. Diode CR51 clamps the bias voltage for Q53. The output of Q52 is ac-coupled to emitter-follower Q54. Diode CR52 clamps the bias voltage for Q54.

The two outputs of Q53 and Q54 are resistively added in a network composed of R160, R161, R162, and R163. Potentiometer R163 varies the amplitude of the signal. The added signal drives amplifier V1 which is a sharp-cutoff pentode. The pentode output feeds directly to the CRT focus power supply.

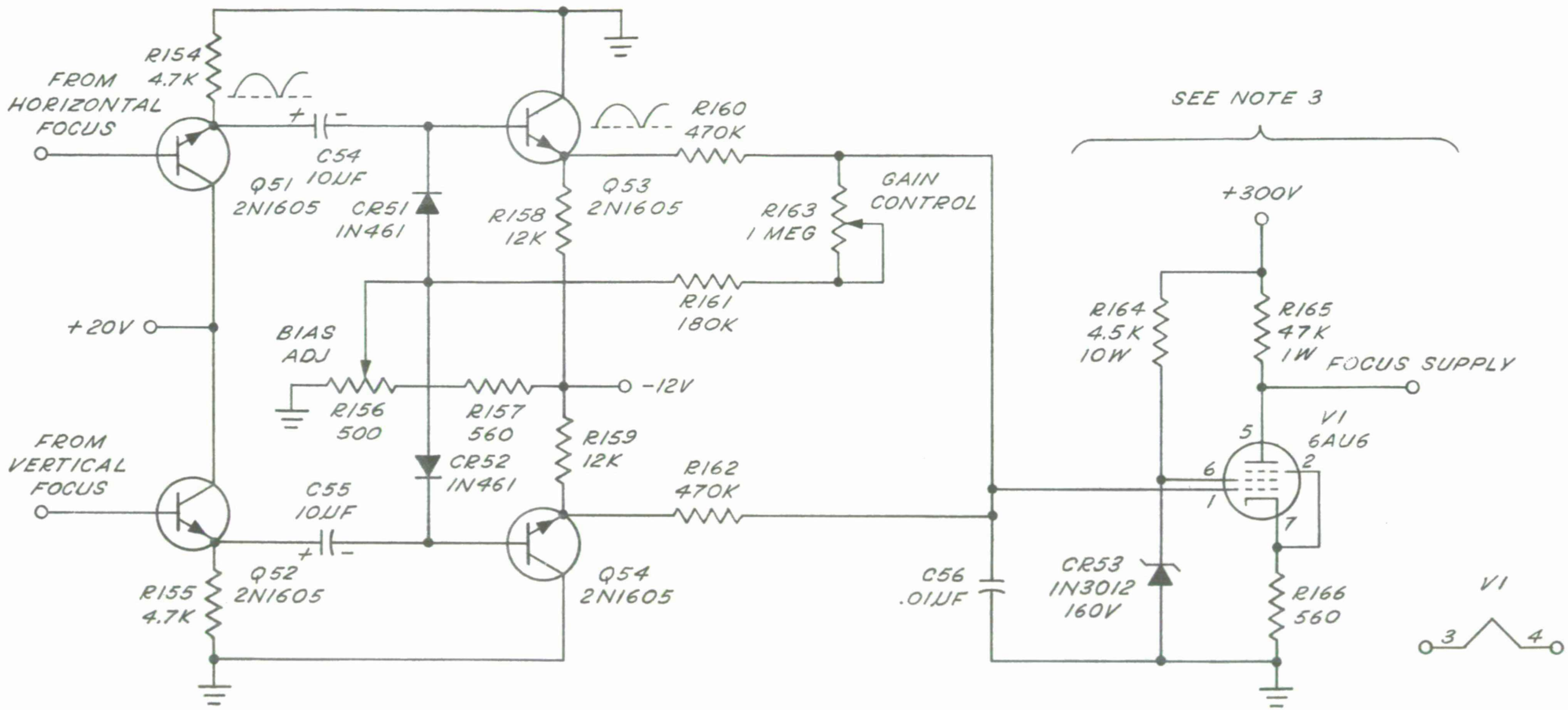

3. TWO OF THESE STAGES:
   ONE FOR READER CRT
   ONE FOR RECORDER CRT
2. ALL RESISTORS ARE 1/2 WATT UNLESS OTHERWISE NOTED
1. VALUES ARE IN OHMS UNLESS OTHERWISE NOTED

NOTES:

41385

Figure 3-28. Schematic Diagram - Dynamic Focus Adding Network and Output

SECTION 4
EXAMPLE OF COLOR IMAGE-ENHANCEMENT

This section contains an example of the color image-enhancement process. Figure 4-1 shows a comparison between a scene that is enhanced with color and a black-and-white shot of the same scene. It is obvious that the color-enhanced scene is considerably more useful in bringing out pertinent details of the original image.

(a) Color-Enhanced Scene

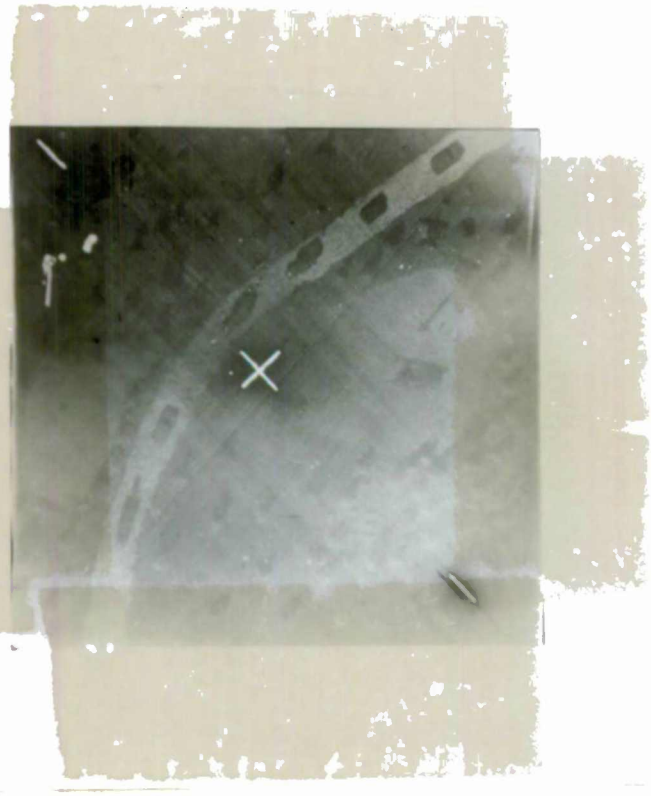

(b) Original Black-and-White Scene

Figure 4-1. Example of Image Enhancement

6

Security Classification

DOCUMENT CONTROL DATA - R&D

(Security classification of title, body of abstract and indexing annotation must be entered when the overall report is classified)

1. ORIGINATING ACTIVITY *(Corporate author)*

Westwodd Division, Houston Fearless Corp., Los Angeles, Calif.

2a. REPORT SECURITY CLASSIFICATION

UNCLASSIFIED

2b GROUP

N/A

3. REPORT TITLE

(Final Report) Color Image-Enhancement Program

4. DESCRIPTIVE NOTES *(Type of report and inclusive dates)*

Final Report

5. AUTHOR(S) *(Last name, first name, initial)*

6. REPORT DATE	7a. TOTAL NO. OF PAGES	7b. NO. OF REFS
Jul 64	97	0

8a. CONTRACT OR GRANT NO.

b. PROJECT NO. AF19(628)416

c. P 6244- T 624402

d.

9a. ORIGINATOR'S REPORT NUMBER(S)

ESD-TDR-64-521

9b. OTHER REPORT NO(S) *(Any other numbers that may be assigned this report)*

10. AVAILABILITY/LIMITATION NOTICES

Qualified Requesters May Obtain from DDC.
Aval From OTS.

11. SUPPLEMENTARY NOTES

12. SPONSORING MILITARY ACTIVITY

Decision Sciences Labs., ESD, L.G. Hanscom Field, Bedford, Mass.

13. ABSTRACT

The color image-enchancement program consisted of research and development to determine the feasibility of applying color in enhancing the image of a photograph for information extraction. The program included the design and fabrication of equipment to test and evaluate electronic and optical concepts. However, this equipment should not be considered as operational equipment. Considerable discussion is devoted to thetheory of image enhancement and why certain equipment was chosen to test and develop the program. The program will have a follow-up color evaluation program which will test and produce enhanceable photographs in the form of slides for color projection. Testing with human observers will also be programmed and a final analysis will be made.

DD FORM 1 JAN 64 1473

Security Classification

14. KEY WORDS	LINK A ROLE	LINK A WT	LINK B ROLE	LINK B WT	LINK C ROLE	LINK C WT
Photographic Images Colors Photo Interpretation Perception Data Tests						

INSTRUCTIONS

1. ORIGINATING ACTIVITY: Enter the name and address of the contractor, subcontrsctor, grsntee, Department of Defense activity or other orgsnization *(corporate author)* issuing the report.

2a. REPORT SECURITY CLASSIFICATION: Enter the overall aecurity classaification of the report. Indicate whether "Restricted Dsta" is included. Msrking is to be in accordsnce with appropriate aecurity regulations.

2b. GROUP: Automatic downgrsding is specified in DoD Directive 5200.10 and Armed Forces Industrial Manual. Enter the group number. Also, when applicable, show that optional markings have been used for Group 3 and Group 4 as authorized.

3. REPORT TITLE: Enter the complete report title in all capital lettera. Titles in all casea should be unclassified. If s meaningful title cannot be selected without classification, show title classification in all capitals in parentheala immediately following the title.

4. DESCRIPTIVE NOTES: If appropriate, enter the type of report, e.g., interim, progreaa, summary, annual, or final. Give the inclusive dates when a specific reporting period la covered.

5. AUTHOR(S): Enter the name(s) of author(s) aa shown on or in the report. Enter last name, first name, middle initial. If military, show rank and branch of service. The name of the principal author is sn absolute minimum requirement.

6. REPORT DATE: Enter the date of the report aa day, month, year; or month, year. If more than one date appears on the report, use date of publication.

7a. TOTAL NUMBER OF PAGES: The total page count should follow normal pagination procedures, i.e., enter the number of pages containing information.

7b. NUMBER OF REFERENCES: Enter the total number of referencea cited in the report.

8a. CONTRACT OR GRANT NUMBER: If appropriate, enter the applicable number of the contract or grant under which the report was written.

8b, 8c, & 8d. PROJECT NUMBER: Enter the appropriate military department identification, such as project number, subproject number, system numbera, task number, etc.

9a. ORIGINATOR'S REPORT NUMBER(S): Enter the official report number by which the document will be identified and controlled by the originating activity. This number must be unique to this report.

9b. OTHER REPORT NUMBER(S): If the report has been assigned any other report numbera *(either by the originator or by the sponsor)*, also enter this number(a).

10. AVAILABILITY/LIMITATION NOTICES: Enter any limitations on further dissemination of the report, other than those imposed by security classification, using standard statements such as:

(1) "Qualified requestera may obtain copiea of this report from DDC."

(2) "Foreign announcement snd dissemination of this report by DDC is not authorized."

(3) "U. S. Government agencies may obtain copies of this report directly from DDC. Other qualified DDC users shall request through _____."

(4) "U. S. military agencies msy obtain copies of this report directly from DDC. Other qualified users shall request through _____."

(5) "All distribution of this report is controlled. Qualified DDC users shall request through _____."

If the report has been furnished to the Office of Technical Servicea, Department of Commerce, for sale to the public, indicate this fact and enter the price, if known.

11. SUPPLEMENTARY NOTES: Use for additional explanatory notes.

12. SPONSORING MILITARY ACTIVITY: Enter the name of the departmental project office or laboratory sponsoring *(paying for)* the research and development. Include address.

13. ABSTRACT: Enter an abstract giving a brief and factual summary of the document indicative of the report, even though it may also appear elsewhere in the body of the technical report. If additional space is required, a continuation sheet shall be attached.

It is highly desirable that the abstract of classified reports be unclassified. Each paragraph of the abstract shall end with an indication of the military security classification of the information in the paragraph, represented as *(TS)*, *(S)*, *(C)*, or *(U)*.

There is no limitation on the length of the abstract. However, the suggested length is from 150 to 225 words.

14. KEY WORDS: Key words sre technically meaningful terms or short phrases that characterize a report snd may be used as index entries for cataloging the report. Key words must be selected so thst no security classificstion is required. Identifiers, such as equipment model designation, trade name, military project code name, geographic locstion, may be used as key words but will be followed by an indication of technical context. The assignment of links, rules, and weights is optional.