AD NUMBER

ADB231640

NEW LIMITATION CHANGE

TO

Approved for public release, distribution unlimited

FROM

Distribution authorized to U.S. Gov't. agencies only; Proprietary Information; Jun 97. Other requests shall be referred to US Army Medical Research and Materiel Command, 504 Scott St., Fort Dterick, MD 21702-5012.

AUTHORITY

USAMRMC ltr, 1 Jun 2001.

AD___________

CONTRACT NUMBER DAMD17-93-C-3098

TITLE: Use of Combination Thermal Therapy and Radiation in Breast-Conserving Treatment of Extensive Intraductal Breast Cancer

PRINCIPAL INVESTIGATOR: Goran K. Svensson, Ph.D.

CONTRACTING ORGANIZATION: Beth Israel Deaconess Medical Center
Boston, Massachusetts 02215

REPORT DATE: July 1997

TYPE OF REPORT: Annual

PREPARED FOR: Commander
U.S. Army Medical Research and Materiel Command
Fort Detrick, Maryland 21702-5012

DISTRIBUTION STATEMENT: Distribution authorized to U.S. Government agencies only (proprietary information, Jun 97). Other requests for this document shall be referred to U.S. Army Medical Research and Materiel Command, 504 Scott Street, Fort Detrick, Maryland 21702-5012.

REPORT DOCUMENTATION PAGE

Form Approved
OMB No. 0704-0188

1. AGENCY USE ONLY *(Leave blank)*	2. REPORT DATE July 1997	3. REPORT TYPE AND DATES COVERED Annual (1 Jun 96 - 31 May 97)

4. TITLE AND SUBTITLE

Use of Combination Thermal Therapy and Radiation in Breast-Conserving Treatment of Extensive Intraductal Breast Cancer

5. FUNDING NUMBERS

DAMD17-93-C-3098

6. AUTHOR(S)

Svensson, Goran, Ph.D.

7. PERFORMING ORGANIZATION NAME(S) AND ADDRESS(ES)

Beth Israel Deaconess Medical Center
Boston, Massachusetts 02215

8. PERFORMING ORGANIZATION REPORT NUMBER

9. SPONSORING / MONITORING AGENCY NAME(S) AND ADDRESS(ES)

U.S. Army Medical Research Command
Fort Detrick, Maryland 21702-5012

10. SPONSORING / MONITORING AGENCY REPORT NUMBER

11. SUPPLEMENTARY NOTES

12a. DISTRIBUTION / AVAILABILITY STATEMENT
Distribution authorized to U.S. Government agencies only (proprietary information Jul 97). Other requests for this document shall be referred to Commander, U.S. Army Medical Research and Materiel Command, ATTN: MCMR-RMI-S, Fort Detrick, Frederick, MD 21702-5012.

12b. DISTRIBUTION CODE

13. ABSTRACT

This research supports the development of a technique for breast cancer treatment using ultrasound hyperthermia (heat treatments produced by sound waves) in addition to standard treatment using radiation therapy. The rationale is that treatment of early stage breast cancer (Ductal Carcinoma in Situ, DCIS, and Extensive Intraductal Carcinoma, EIC) is based on the hypoxic (low oxygen) environment in parts of the tumor region that causes tumor cells to be less sensitive to the killing effects of radiation and more sensitive to the killing effects of hyperthermia. Hyperthermia has the potential of increasing local tumor control and may eliminate the need for disfiguring mastectomy. A breast treatment applicator and the associated instrumentation has been completed. The applicator consists of 384 ultrasound transducers in a cylindrical geometry, specifically designed for hyperthermia of the intact breast. The results of the acceptance testing are presented in this progress report. The breast treatment system allows hyperthermia of a quadrant of the breast, half the breast or the whole breast. A device evaluation with ten patients will test how to operate the therapy machine with minimal toxicity and discomfort to the patients. An Investigational Device Exemption has been approved by the Food and Drug Administration.

14. SUBJECT TERMS
Breast Cancer

15. NUMBER OF PAGES
403

16. PRICE CODE

17. SECURITY CLASSIFICATION OF REPORT Unclassified	18. SECURITY CLASSIFICATION OF THIS PAGE Unclassified	19. SECURITY CLASSIFICATION OF ABSTRACT Unclassified	20. LIMITATION OF ABSTRACT Limited

FOREWORD

Opinions, interpretations, conclusions and recommendations are those of the author and are not necessarily endorsed by the U.S. Army.

✓ Where copyrighted material is quoted, permission has been obtained to use such material.

✓ Where material from documents designated for limited distribution is quoted, permission has been obtained to use the material.

✓ Citations of commercial organizations and trade names in this report do not constitute an official Department of Army endorsement or approval of the products or services of these organizations.

____ In conducting research using animals, the investigator(s) adhered to the "Guide for the Care and Use of Laboratory Animals," prepared by the Committee on Care and Use of Laboratory Animals of the Institute of Laboratory Resources, National Research Council (NIH Publication No. 86-23, Revised 1985).

✓ For the protection of human subjects, the investigator(s) adhered to policies of applicable Federal Law 45 CFR 46.

____ In conducting research utilizing recombinant DNA technology, the investigator(s) adhered to current guidelines promulgated by the National Institutes of Health.

____ In the conduct of research utilizing recombinant DNA, the investigator(s) adhered to the NIH Guidelines for Research Involving Recombinant DNA Molecules.

____ In the conduct of research involving hazardous organisms, the investigator(s) adhered to the CDC-NIH Guide for Biosafety in Microbiological and Biomedical Laboratories.

Goran Svensson 6/30/97
PI - Signature Date

III. Table of Contents:

Page number.

IV. Introduction.

1. Clinical problem, background and hypothesis:

Thermal Therapy or Hyperthermia (sustained tissue temperature at 40.5°C - 44°C) adjuvant to radiation has been shown in the laboratory to increase cell killing (1 - 17). Clinical investigations show that the combination of hyperthermia with radiation therapy or with cytotoxic agents improve the complete response rate of many cancers (18 - 20). A large European randomized study with over 300 patients with recurrent or primary inoperable breast cancer showed an overall complete response rate of 60 % when using radiation plus hyperthermia as compared to 40 % for radiation alone (21). The investigators in that study emphasize that current general purpose hyperthermia treatment devices may be inadequate for the treatment of relatively deep tumors in intact breast. Novel and optimized technology that allows reaching hyperthermic temperatures to the whole breast or to any tumor bearing volume in the breast is thus essential to reach adequate thermal dose and meet the goals of this proposal. We wish to accomplish hyperthermia treatment of the breast by using a multi-frequency high resolution site-specific ultrasound applicator.

Contract DAMD 17-93-C-3098 supports the development of a technique for adjuvant treatment of breast cancer using hyperthermia generated by a site-specific ultrasound device. Ultrasound is capable of penetrating soft tissues to produce deep heating. The research also supports a clinical study of the safety and efficacy of using hyperthermia in combination with radiation for treatment of breast cancer patients with an extensive intraductal component of their infiltrating tumor or patients with pure intraductal carcinoma. Breast cancer patients with these histologies have a higher risk of local recurrence after treatment with radiation alone than patients without these histologies (22 - 32).

Intraductal carcinoma is characterized by cancer cells spreading within the lactiferous ducts. It is suggested that intraductal carcinoma is associated with tumor necrosis within the ducts and that the necrotic tumor cells are related to the absence of blood supply with resulting hypoxia (26). It is well known that thermal therapy, in contrast to radiation, is more effective in killing hypoxic cells as compared to well oxygenated cells (33, 34, 35).

The clinical rationale and hypothesis for this work is that patients with infiltrating breast cancer containing an extensive intraductal component or patients with pure intraductal carcinoma will have a reduced risk for local recurrence from a combined and non-disfiguring treatment approach using hyperthermia and irradiation. This will extend the indications for breast conserving therapy and eliminate the need for mastectomy for many patients. There may be a population of patients with early stage breast cancer, where the hyperthermia treatment can replace radiation treatments and eliminate radiation associated toxicities to normal tissues in the treated breast, in the opposite breast, and toxicities to heart and lungs.

The research also postulates that the hyperthermia is most effectively and controllably delivered to the breast tissue using a breast site specific ultrasound applicator.

During year 01 and 02 (April 1, 1993 to March 31 1995), the breast treatment applicator and the associated complex instrumentation system was designed, fabricated and in part tested. This has been described in detail in previous Annual Progress Reports. The third contract year began on April 1, 1995. Due to unforeseen technical, scientific, and regulatory problems, this research has taken significantly more time than originally anticipated. As a result, I have requested and received a No-Cost extension of this program on two occasions, first from April 1, 1996 to December 31 1996 and the second time from January 1, 1997 to May 31, 1998. In spite of a delay in progress, the quality of the treatment system is excellent and the hypothesis and goals of this program remain the same.

The technical rationale and criteria for the design of the ultrasound therapy system and applicator are derived from the tissue characteristics and features of the breast:

a. The breast is an external, convex shaped organ. When submerged into a temperature controlled water bath, the temperature boundaries are well defined and the skin temperature can be well controlled.

b. Ultrasound heating is suitable for the breast, because there is no intervening gas or bone in the breast tissue. With the patient in prone position and the breast submerged into a water bath, the breast tissue can be surrounded with an array of ultrasound transducers and achieve tangential incidence of the ultrasound beam relative to the chest wall. Tangential incidence is desired to avoid interaction between the ribcage and the ultrasound pressure wave.

c. There are no major blood vessels that carry away heat from the breast tissue, which can reduce the ability to deliver therapeutic heat.

d. The hyperthermia target volume can be the whole breast, a quadrant of the breast, or even a smaller specific tumor mass. Energy deposition, which may heat sensitive regions, such as a lumpectomy scar must be avoided or minimized. It is therefore essential that the energy deposition be controlled and focused on specific sites within the breast tissue. Ultrasound permits this level of control.

e. Although our initial pilot study will aim for a target temperature of $T_{90} > 40.5°C$ (T_{90} means the temperature reached by 90% of the sensors) and $T_{max} < 45°C$, the device must be able to heat the breast tissue within an even more narrow temperature range (42°C - 44°C) over a reasonable range of tissue perfusion (i.e. 30 to 200 ml, kg^{-1}, min^{-1}).

2. Specific Research Objectives.

The first research objective is to build a cylindrical, multi-transducer, dual frequency, intensity controlled ultrasound therapy system and applicator for treatment of breast cancer. The device must be capable of delivering controllable energy for the purpose of heating the whole breast or a small volume of breast tissue as defined by the clinical situation and the criteria in section V.2.A. The intensity control of the applicator must permit heating within a narrow temperature range, i.e. $42°C < T_{tissue} < 44°C$. Many scientific and technical problems associated with the individual subsystems have now been solved and the sophisticated system has been assembled in the laboratories at the Dornier Medical Systems, Inc., Champaign, Illinois.

A second objective is to develop an effective pre-treatment planning and real-time treatment control system. One aspect of this effort is to perform the thermal therapy using dense thermometry. It is essential for the assessment of outcome that temperatures are measured during thermal therapy in a large number of points throughout the breast tissue volume. The objective is to accomplish this through new technologies using minimally invasive or non-invasive thermometry. The minimally invasive temperature measurements will be achieved by using small multi-sensor thermistor probes (dense thermometry), developed at the Massachusetts Institute for Technology (MIT) under the direction of Dr. F. Bowman, who is a consultant to our contract (36). To augment the dense thermometry mapping, we have implemented a technique for real time imaging of the breast surface. This is important for monitoring of the location of the breast tissue within the treatment cavity and thus for control of power deposition in the breast.

A third objective is to develop ultrasound thermal therapy protocols. These protocols and the investigational device exemption from the food and drug administration are completed and described in the body of the report.

V. BODY OF ANNUAL REPORT

1. Program Organization.

This contract was originally sponsored by the New England Deaconess Hospital (NEDH); a Harvard Medical School (HMS) affiliated hospital in Boston, Massachusetts. In 1996, the NEDH and another HMS affiliated hospital, The Beth Israel Hospital merged into one institution with the name Beth Israel Deaconess Medical Center (BIDMC). BIDMC is now the sponsor of this contract. The program director, Goran K. Svensson, Ph.D. is an Associate Professor at HMS and he is responsible for the progress of the scientific, technical and clinical developments. Dr. Svensson is also the Director of Physics at the Joint Center for Radiation Therapy (JCRT). The JCRT provide radiation therapy and thermal therapy (hyperthermia) services the BIDMC, the Dana Farber Cancer Institute (DFCI), Brigham and Women's Hospital (BWH) and Children's Hospital (CH). These hospitals are all affiliated with Harvard Medical School.

In addition the JCRT provides service to several community hospitals in Boston and the South Eastern part of Massachusetts. An important aspect of this program is that this treatment technology will be available to women in the outreach community where academic medicine is not normally available.

All clinical work will be done at the BIDMC and at DFCI. Clinical research protocols used by the JCRT member hospital network require IRB approval from the participating hospitals. The DFCI has a large Breast Evaluation Center (BEC), which is an important referral base for breast cancer patients. We have therefore chosen to seek IRB approval for hyperthermia, using this device, from DFCI and from the sponsoring hospital BIDMC.

Theoretical simulations and treatment planning require large computational resources. This work will take place at the BIDMC or DFCI using a distributed computer network with a centrally located 60 Gigabyte server.

The electronic design and the fabrication of the ultrasound treatment system and breast applicator is subcontracted to Dornier Medical Systems Inc. (DMSI) with headquarters in Atlanta, Georgia. The actual work has been performed at the DMSI R&D Laboratory in Champaign, Illinois under the direction of Everette C. Burdette, Ph.D. Dr. Burdette directs advanced technology research for DMSI. The breast treatment system has been completed, and is currently awaiting shipment to its clinical site in Boston.

2. Summary of Progress to May 31st 1997.

A. Introduction.

Appendix I is the institutional application to the Food and Drug Administration (FDA) for an Investigational Device Exemption (IDE), and associated correspondence with FDA. This document (Appendix I) contains all work performed under this contract related to technical progress, and the clinical protocols approved by the hospital Internal Review Boards (IRB). Appendix I does not include the extensive acceptance testing of the system, which is separately described on page 13 in the progress report. To avoid excessive redundancy between this progress report and Appendix I, frequent reference will be made to this document.

The clinical rationale and hypothesis for this work is that patients with infiltrating breast cancer containing an extensive intraductal component or patients with pure intraductal carcinoma will have a reduced risk for local recurrence from a combined and non-disfiguring treatment approach using hyperthermia and irradiation. This will extend the indications for breast conserving therapy and eliminate the need for mastectomy for many patients. The hyperthermia treatment is most effectively and controllably delivered to the breast tissue using a site specific ultrasound Breast Therapy System (BTS).

Toxicities associated with hyperthermia are well documented (12, 13, 37). One major concern addressed in the design of the system is that women that have undergone lumpectomy or surgical biopsy are left with a scar cavity within the breast. Scar tissue, in general, has much lower perfusion than surrounding normal tissue. Clinical experience has revealed that the poorly perfused scar tissue can easily over-heat during hyperthermia that can cause a burn or a blister as an undesired toxicity. The BTS must have very accurate temporal and spatial power control to reduce the temperature in and around the scar tissue. To achieve this level of control and spatial resolution, 384, 1.5x1.5 cm^2 square transducers are incorporated in the cylindrical site-specific applicator. The control of these ultrasound therapy transducers is augmented by minimally invasive thermometry and non-invasive monitoring. The power level to each transducer is independently controlled.

The technical rationale and criteria for the design of the ultrasound therapy system and applicator are derived from the tissue characteristics and features of the breast. These criteria were described in the Introduction on page 6.

B. Completion of the hyperthermia Breast Treatment System (BTS).

To reach the clinical goal, defined on page NN, we have designed, built, and tested a Breast Therapy System (BTS), which now is ready for clinical use. Although the system is described in detail in Appendix I a brief summary is given here. Figure 1 shows the completed BTS.

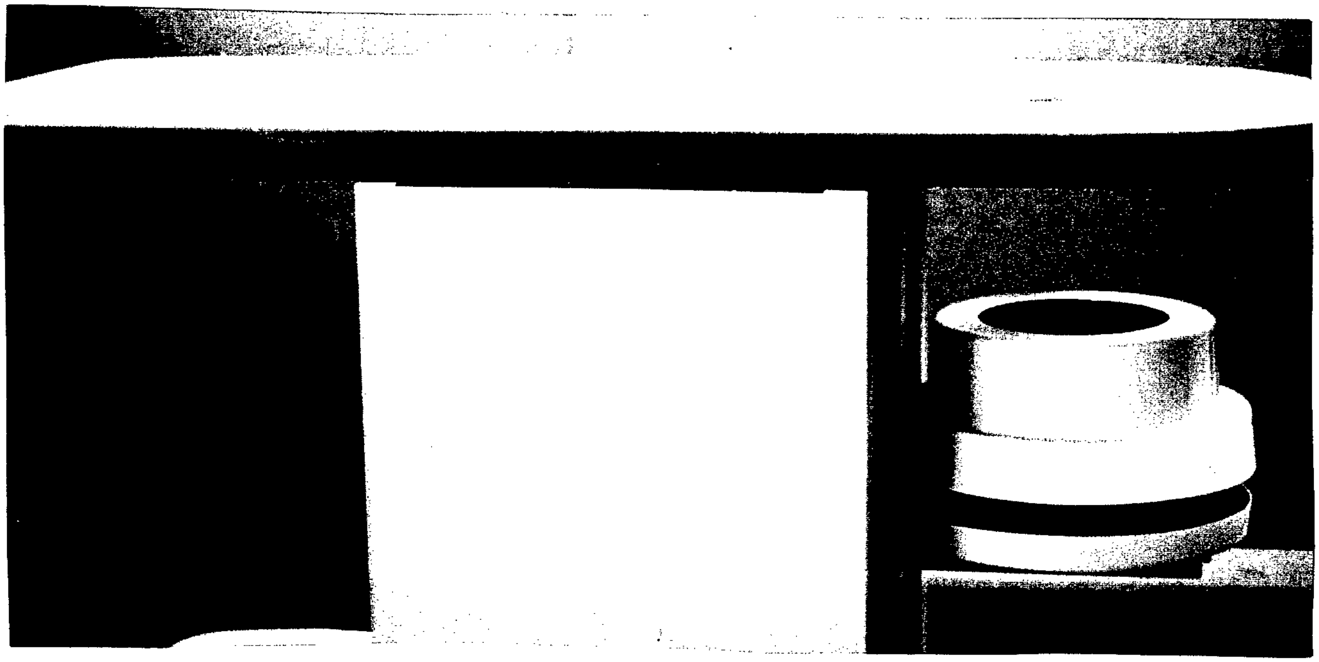

Figure 1. Completed BTS. All electronics and control computers are mounted in the center column of the machine.

The BTS consists of several subsystems. The major subsystems and their relationships are shown schematically in Figure 2.

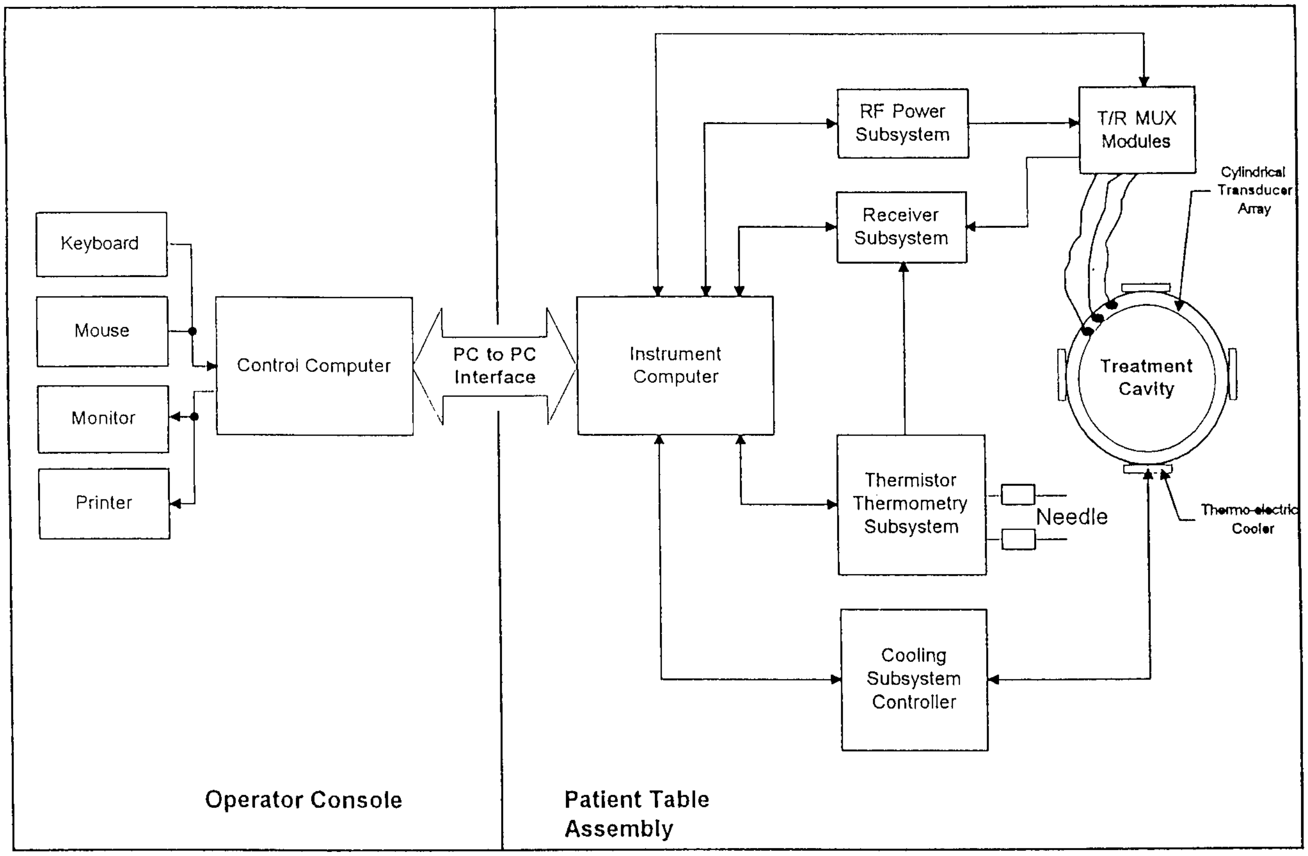

Figure 2. Schematic drawing of the BTS subsystems.
The individual systems are briefly described below using the terminology from Figure 2.

1. The ultrasound breast applicator consists of the cylindrical transducer array and the treatment cavity (Appendix 1, pages 143 - 148). The cylindrical transducer array surrounds the breast, which is submerged into the treatment cavity. The applicator is schematically illustrated in Figure 3 and a photograph of the completed applicator on the table frame is shown in Figure 4. The array consists of eight individual rings, which are stacked with water-tight seals between each ring. Each ring accommodates 48 transducers. Each transducer has a square emitting face with dimensions of 1.5 cmx1.5 cm. Computer simulations (38 - 40) show that three different frequencies are needed to achieve sufficient control of the heating pattern. Table 1 shows the number of rings, transducers per ring and the frequencies of the transducers in each ring. Table 2 shows the expected ring activation for the treatment of a large breast and a small breast. Each transducer was fabricated with the crystal mounted in a machined transducer housing, sealed watertight and faced with a matching layer. Each transducer was individually tested to determine operating acoustic efficiency, center frequency and bandwidth. More details are available in the Systems Description Manual (Appendix I page 139).

Cylindrical Transducer Array

Number of XDucers	Ring Number
48	1
48	2
48	3
48	4
48	5
48	6
48	7
48	8

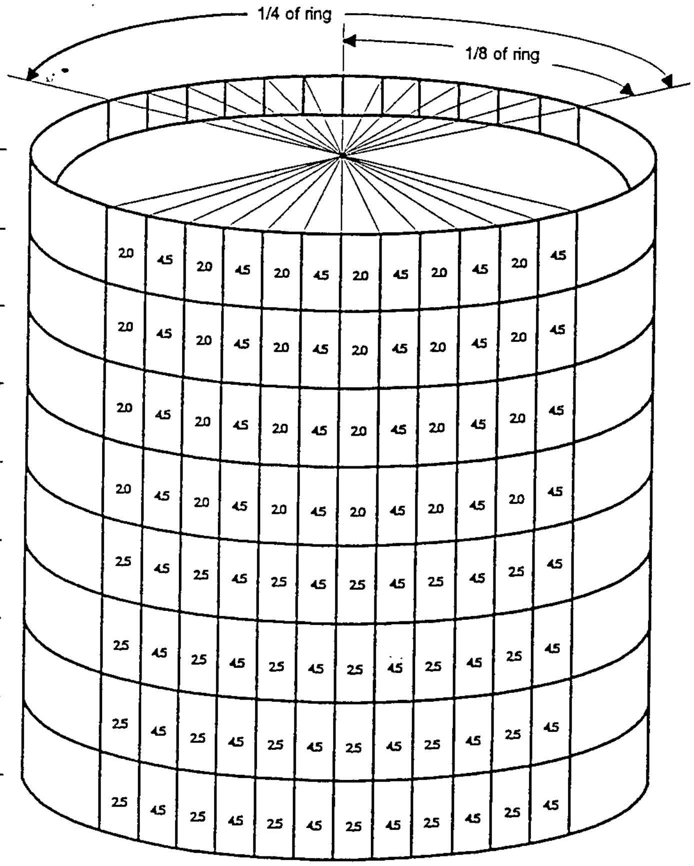

Figure 3. Applicator shown schematically.

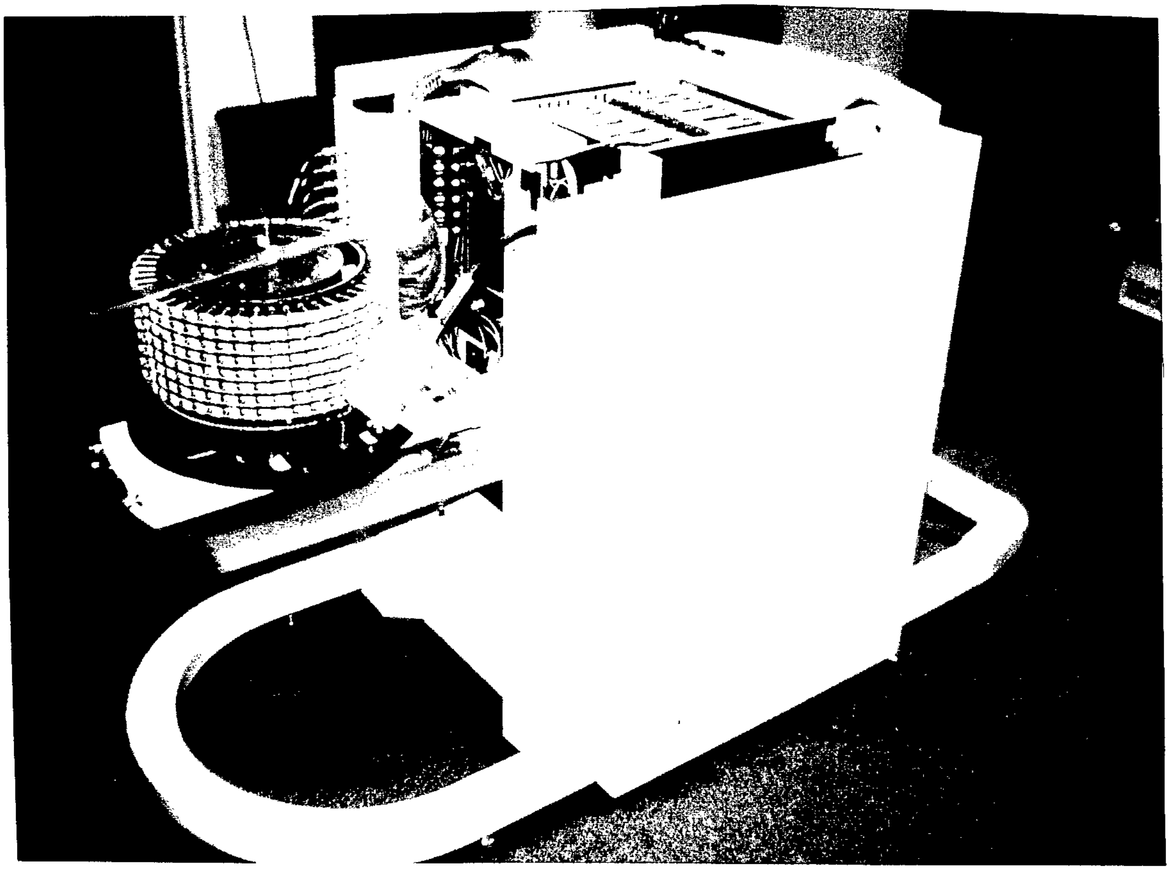

Figure 4. Completed applicator transducer array mounted on table frame. The Agar-Graphite breast phantom is submerged into the treatment cavity. Also see figure 5.

Total Cylinder I.D. = 25 cm
Transducers: 15 mm x 15 mm
Rings of Transducers: 10 (numbered from top down)
Each 1/8 ring vertical section driven by RF
Amplifiers whose outputs are multiplexed to step around ring

Ring No.	FQ 1 (MHz)/No. XDCRS	FQ 2 (MHz)/No. XDCRS	TOTAL XDCRS
1	4.5/24	2.0/24	48
2	4.5/24	2.0/24	48
3	4.5/24	2.0/24	48
4	4.5/24	2.0/24	48
5	4.5/24	2.5/24	48
6	4.5/24	2.5/24	48
7	4.5/24	2.5/24	48
8	4.5/24	2.5/24	48
		TOTAL	384

Table I. Description of transducers and frequencies in each ring.

Total Cylinder I.D. = 25 cm
Transducers: 15 mm x 15 mm
Rings of Transducers: 8 (numbered from top down)
Each 1/8 ring vertical section driven by RF
amplifiers whose outputs are multiplexed to "step around" ring

Ring No.	No. Transducers	Breast Size (cm)		No Transducers in 1/8 of ring
		Large	Small	
1	48	15	8	6
2	48	14	7	6
3	48	12	6	6
4	48	10	5	6
5	48	8	4	6
6	48	7	3	6
7	48	6	0	6
8	48	4	0	6

Table 2. Illustration of how many rings and transducer elements in each ring that will be activated when treating a large breast and a small breast respectively.

2. Systems control is performed by a control computer and an instrument computer (Appendix 1 pages 172 - 175). When power is turned on to the system, the treatment software initializes automatically so that no interaction is required by the user to start the software. All available options are displayed on the start-up screen, including access to treatment planning software, file handling utilities, diagnostic mode selection, treatment record printing and treatment initiation.

   Prior to the beginning of a treatment, the user will be required to complete a treatment plan. The treatment planning software is in graphical form to simplify data entry such as target volume outline, the number and locations of temperature sensors, temperature and thermal dose for each sensor, scar tissue location and patient information. Since the external contour of the breast is monitored in real time prior to and during treatment, the breast contour(s) with sensor location, scar tissue location and thermal dose information is displayed on an operators screen. Guided by this information, the operator may manually select and control the power on any transducer or group of transducers (e.g. reduce power deposition directly over the scar).

   Temperatures and thermal dose are determined in two ways. The thermistor thermometry subsystem supports the use of multisensor (14 sensors) temperature probes that are placed in the breast tissue following guidelines from the Radiation Therapy Oncology Group (RTOG) (41 - 43). The thermometry subsystem provides real time temperature information and real time thermal dose data (i.e. $CEMT_{10}$, which stands for the Cumulative Equivalent Minutes for 10% of the sensors reaching 43°C).

3. The RF power subsystem, the receiver subsystem, and the cooling subsystem

controller are important electronic modules of the system. A description of these systems is available in the Systems Description Manual (Appendix 1 Page 159 and 171).

4. The patient table assembly (Appendix 1, pages 148 - 154) is shown in Figures 1. The patient table is designed similar to a stereotactic breast biopsy table, allowing the breast to be suspended through an opening in the table top. Its specifications are described in Appendix 1, Table 3 on page 152. The table top consists of sheet steel with a tubular steel outer frame fabricated to provide for insertion of a 1.5" foam padding.

   The central column or "pedestal" beneath the table houses all of the system electronics, and the appearance of the total system is clean, appealing, and without any clutter of cables and instruments.

5. Experimental studies have been performed throughout the whole development phase of the BTS. The studies have demonstrated that the BTS can deliver a power deposition capable of achieving uniform temperatures within 2^{O}C. This is achieved by using individual amplifier power control and three ultrasound transducer frequencies; 2.0 MHz, 2.5 MHz and 4.5 MHz. The range of power control is expected to be greater than the clinical requirements. Consequently, it will be possible to adequately treat a wide variety of clinical situations and over a large range of breast tissue parameters, such as various perfusion and temperature boundary conditions. These studies also demonstrated the system's ability to control power deposition in each octant, quadrant, half and whole volume of the breast. The experiments also demonstrated deep and shallow heating control and individual transducer control. Our experiments did not show any unpredictable hot or cold areas (38) (Also attached in Appendix 1, Figure 11 on page 123). This demonstrates that there are no constructive or destructive interferences between the ultrasound transducers that would create hot or cold areas. We have therefore concluded that the electronic design and the multiplexer switching arrangements have been successfully implemented.

C. Acceptance testing of BTS.

Experimental methods:

The hardware and software modules of the BTS were assembled and ready for acceptance testing in February/March 1996. The research team from the JCRT-BIDMC traveled to Champaign, Illinois, where the BTS has been designed and manufactured. The team spent a total of eight days carefully analyzing the system with respect to its ability to safely deliver hyperthermia to breast phantoms. A large number of measurements were performed and later analyzed. However, the system was not accepted by the research team during the February/March visit. There were significant problems with the control algorithm which prevented adequate control of the power deposition, and caused software crashes of the system. The software problems were fixed during the summer of 1996 and the team returned for testing in August of 1996, at which time the system was accepted.

In order to increase the density of temperature sensors available for dense thermometry and mapping of thermal dose distributions, a 32-channel thermometry system was brought from BIDMC supplementing the 84 channel thermometry system built into the BTS.

The BTS was tested using non-perfused phantoms designed to mimic the physical shape and ultrasound properties of the intact female breast. The phantoms were constructed from a latex membrane, shaped like an average breast, filled with an Agar-graphite-alcohol mixture formulated to yield a velocity of sound of 1540 m/sec and an absorption coefficient of 0.75 dB/cm both at 1 MHz. The phantom mixture, which is prepared hot, solidifies after being filled into the latex membrane and being allowed to cool down.

The phantom experiments were primarily designed to test the basic design philosophy of the BTS. The hyperthermia applicator was constructed with half the transducers operating at a low frequency of 2.0 to 2.5 MHz and the other half at a high frequency of 4.5 MHz. The low frequency transducers were designed to deposit energy at the core of the breast, and the high frequency transducers to deposit power at the treatment volume boundaries thereby compensating for thermal conduction to the non-heated surroundings of the breast. During patient treatments, all transducers will be activated initially in order to raise the temperature in all of the target area. When the core of the target area reaches therapeutic levels, the power to the low frequency transducers will be decreased thus lowering the power delivered to the core of the target area. During the remainder of the treatment the power delivered to the high frequency transducers will be controlled to compensate for thermal conduction from the surface of the breast to the coupling water and maintaining therapeutic temperatures in the surface of the breast.

The tests were also designed to test ability of the BTS to treat any part of the breast including any quadrant of the breast, any half of the breast, or the whole breast.

Correlation between power deposition fields and temperature fields are dependent upon the exact perfusion (or blood flow) patterns in the breast. Due to the non-perfused nature of the phantom, the main emphasis of these experiments was placed on measuring power deposition field in the phantoms. In hyperthermia, power deposition is commonly measured as Specific Absorption Rate (SAR) with the unit J/kg,sec. If temperature measurements are performed immediately after a power field has been imposed on the phantom, and before any significant temperature gradient has build up, then $SAR = c/\rho * dT/dt$., where c is the specific heat capacity and ρ is the specific density of the phantom material. Both these factors are physical constants of the phantom material, which leaves SAR proportional to the rate of temperature rise dT/dt measured in units of ^{o}C per unit time.

During experiments the phantoms were heavily instrumented with temperature probes containing up to 14 temperature sensors each. Up to 5 probes, each with 14 temperature sensors, were carefully implanted in the phantoms for each experiment and their exact position in the phantom determined. Figure 5 shows a photograph of the phantom and the temperature probes, and figure 4 shows the phantom submersed into the cylindrical treatment cavity.

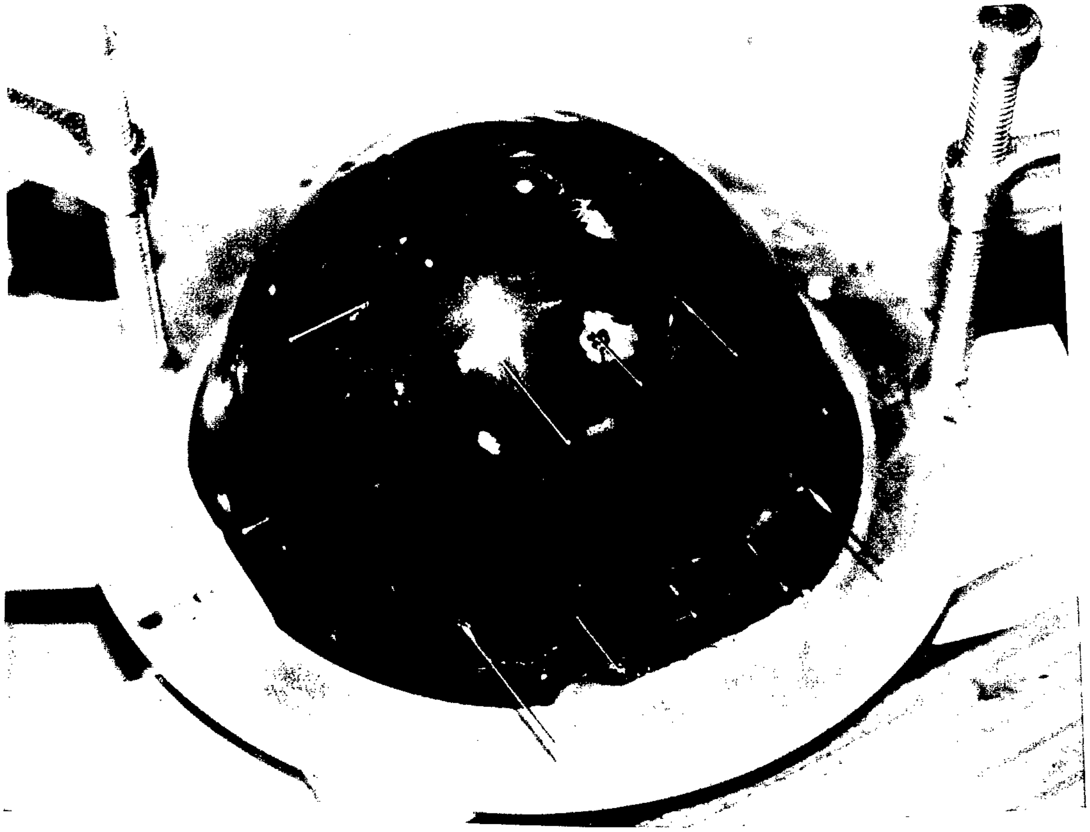

Figure 5. Agar-Graphite phantom with array of 14 sensor probes.

Figure 6 illustrates, a schematic view of the phantom placed in the treatment cavity of the degassed water filled applicator.

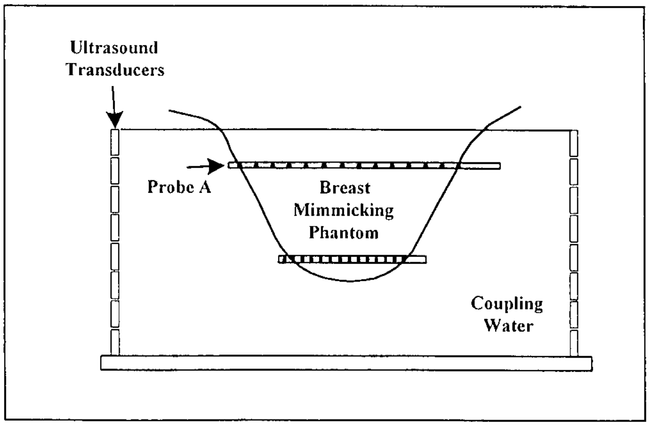

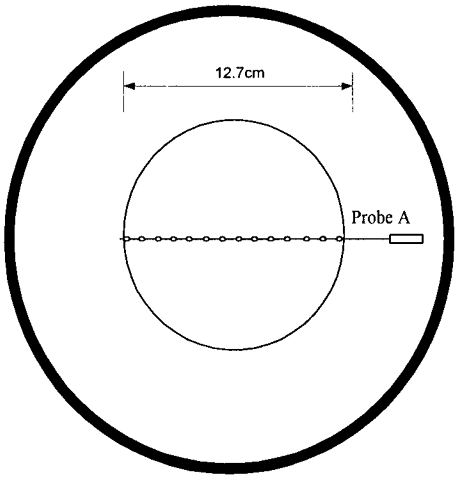

Figure 6. The top figure shows a sagittal cut and the figure below is a coronal cut through the applicator-phantom setup. The top schematic drawing shows the breast mimicking phantom submerged in the ultrasound transducer cylinder. The cylinder is filled with degassed coupling water. Below, the heavy circle indicates the transducer array, where all transducers are engaged, and the thin circle indicates the breast phantom outline. This probe configuration is one of several used for whole breast exposure experiment. The probe marked A was implanted in a position of the phantom, where the diameter is 12.7 cm.

As an example of our results, we will analyze four different sets of data shown in figures 7 - 14. Many different treatment geometries were measured, and the results below represent about 10 % of the total number of data sets.

Results and discussion:

Figure 7 shows a family of relative power deposition (SAR) profiles as measured by probe A. The rate of temperature rise was determined by monitoring the temperature at each sensor point during application of a power field. This experiment was subdivided into 3 power applications. In the first application (shown as filled diamonds), all the high frequency transducers were engaged to assess the ability to deposit power in the surface of the phantom in order to compensate for thermal conduction to the coupling water. It is clear from the "diamond" curve that most power is deposited at the surface of the breast phantom leaving less power deposition in the center (about 6 cm deep). In the second application (shown as filled squares), all the low frequency transducers were engaged to assess the ability to deposit power to the core of the phantom. This is also evident from the curve showing a power deposition peak in the center of the phantom at about 6 cm. In the third measurements (shown as filled triangles), all transducers were engaged at a ration of two parts power to the high frequency transducers and one part power to the low frequency transducers with the purpose of testing the ability to deposit power (SAR) both at the surface and at depth in the phantom. If this ratio of power deposition is retained for about 10 minutes, the thermal conduction will generate a relatively uniform temperature distribution reaching a quasi steady state condition. Figure 8 shows the temperature rise in the breast phantom resulting from the non-uniform power deposition (SAR) shown in Figure 7.

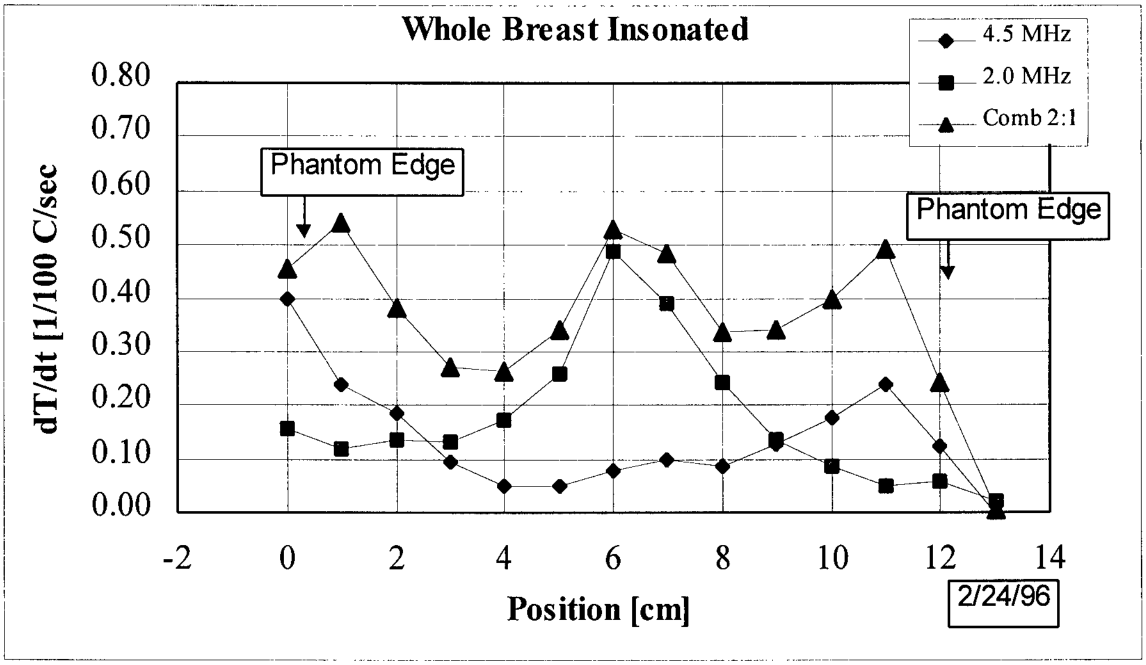

Figure 7. This figure shows a family of relative power deposition profiles measured by probe A in figure 6. This profile is measured through the center of the breast phantom at a position where the diameter of the phantom is 12.7 cm. The diamonds indicates the power being mostly deposited at the surface (edge) of the phantom due to the 4.5 MHz high frequency, the squares indicate that the 2.0 MHz low frequency mostly deposits power at the core of the phantom, and the triangles shows the ability to combine the low and high frequencies in order to achieve a more uniform power deposition profile.

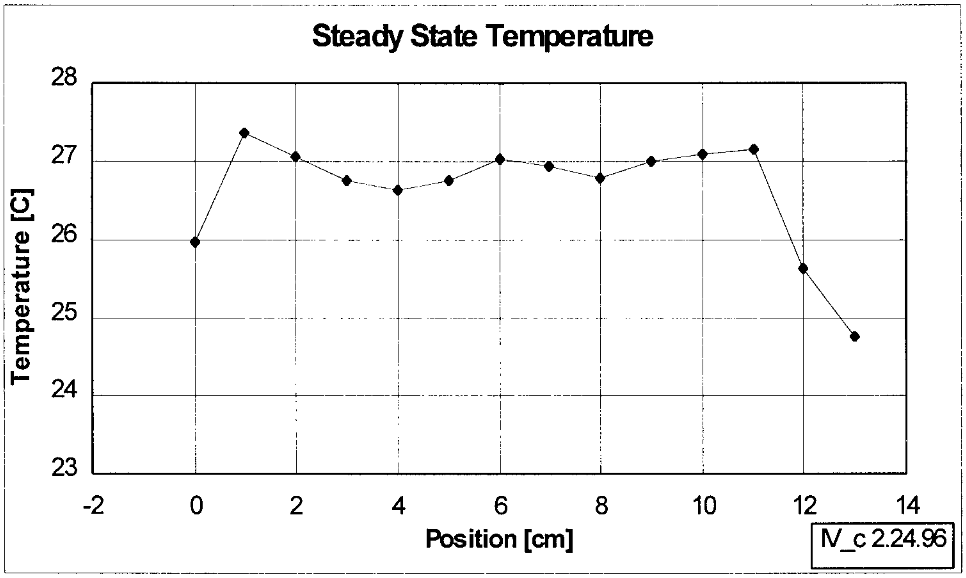

Figure 8. This figure show the steady state temperature profile achieved during the experiment in shown in figure 7. Initially power (SAR) was delivered to both the low and high frequency transducers. After the temperature had increased by 4^{o}C at the center of the phantom, the low frequency transducers were decreased and controlled for maximum uniformity of the temperature profile.

Figure 8 demonstrates that the system is capable of delivering uniform temperature distribution to within +/- 0.5 °C in this plane throughout the breast phantom.

Figures 9 and 10 shows the results of from insonating half the breast phantom. Figure 9 shows two cuts through the phantom setup as in figure 6. On the right, this figure indicates that temperature sensors in probe B are distributed differently than the sensors in probe A (figure 6) in that it has the temperature sensors concentrated in the left part of the phantom where the power deposition is expected. The heavy semi-circle indicated the part of the transducer array that is engaged for this experiment.

Figure 10 shows the resulting family of relative power deposition curves. Again, the high frequency transducers preferentially deposits power at the edge of the phantom (left part of diamond symbols), the low frequency transducers mostly at the center of the phantom (right part of square symbols). A combination of frequencies can be employed to deposit even amount of power at the surface and to the core of the phantom (circular symbols).

Figure 11 shows the phantom setup for insonating a quadrant of the breast. Temperature sensor B is utilized and the heavy quarter circle indicates which transducers that are engaged. Figure 12 shows the resulting power deposition profiles. The selective heating to the surface and the core of the phantom is now much less pronounced due to the fewer transducers and therefore lower geometrical gain of the setup. It is however still possible to selectively heat the surface or the core of the phantom.

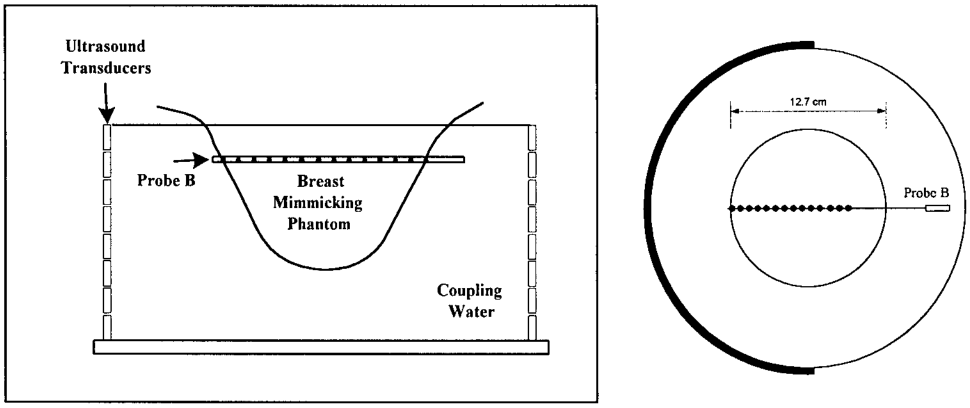

Figure 9 shows cuts through the applicator-phantom setup as in figure 6. The temperature probe shown on the right drawing is placed through the center of the phantom, with the sensors distributed through the left part of the phantom. The heavy semicircle on the right schematic drawing indicated that the left half of the transducer array is engaged.

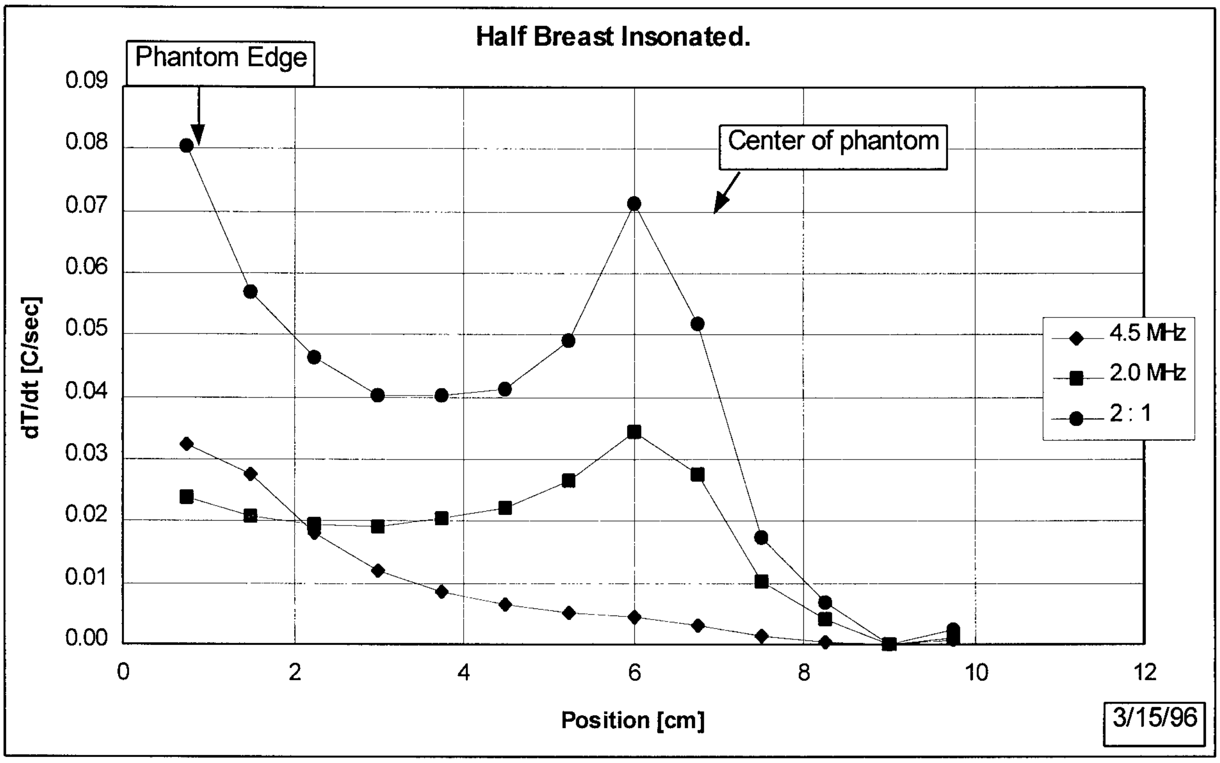

Figure 10. This figure shows a family of relative power deposition profiles measured by probe B in figure 9. This profile is measured through the center of the breast phantom at a position where the diameter of the phantom is 12.7 cm. The diamonds indicates the power being mostly deposited at the surface (edge) of the phantom due to the 4.5 MHz high frequency, the squares indicate that the 2.0 MHz low frequency mostly deposits power at the core of the phantom, and the circles shows the ability to combine the low and high frequencies in order to achieve a more uniform power deposition profile.

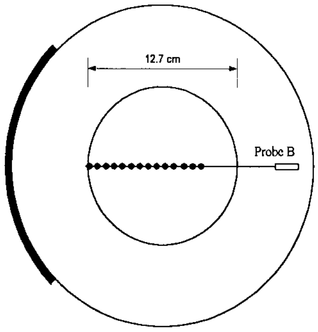

Figure 11. This figure shows a coronal cut of the experimental setup where one quadrant of the ultrasound transducers is engaged. Temperature probe B is placed as in figure 9, and the quadrant of transducers engaged is highlighted on the left of the schematic.

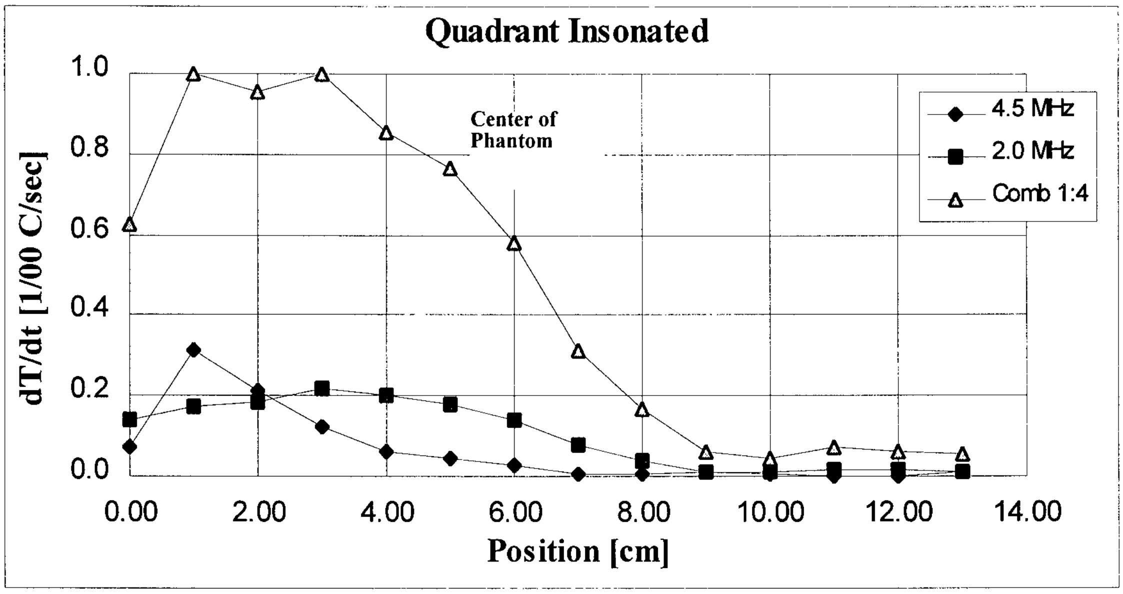

Figure 12 shows the relative power deposition profiles through the center of the irradiated quadrant of the breast. The diamonds indicate the power deposition profile when the high frequency transducers are engaged. The squares shows the same properties for the low frequency transducers, and the triangles shows the power deposition pattern when the transducers are engaged with a power a ration of 1:4 high to low frequency.

An experiment was performed to assess the deposition of power along the central axis of the breast phantom. Figure 13 shows the position of temperature probe C for this experiment. Figure 14 shows the resulting relative power deposition profile. The sensors at the apex (or tip) of the breast phantom is to the left, and the base of the phantom is to the right. As expected, the power deposition on the central axis close to the apex is highest due to a smaller diameter of the phantom at this position. This can easily be compensated by increasing the power to the rings closer to the base of the phantom.

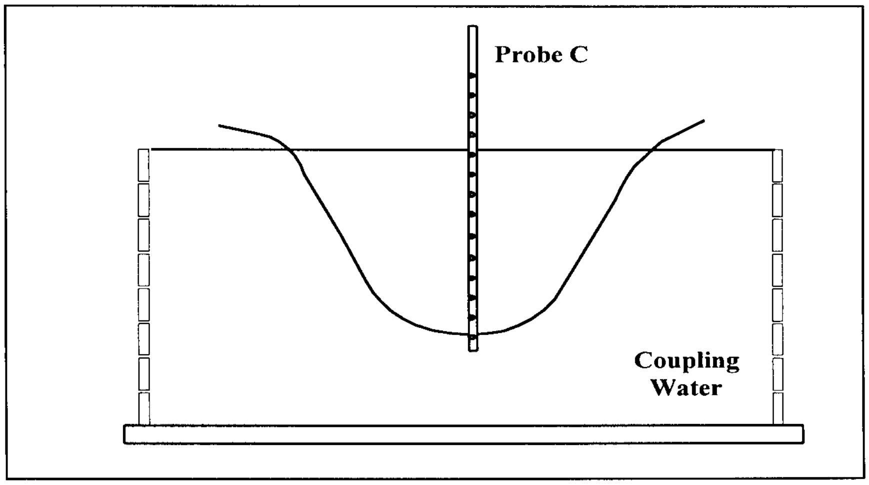

Figure 13. This figure shows the position of temperature probe C placed to demonstrate the uniformity of relative power deposition (SAR) along the central axis of the breast phantom. In this experiment the phantom was insonated with uniform power applied to the upper 5 rings.

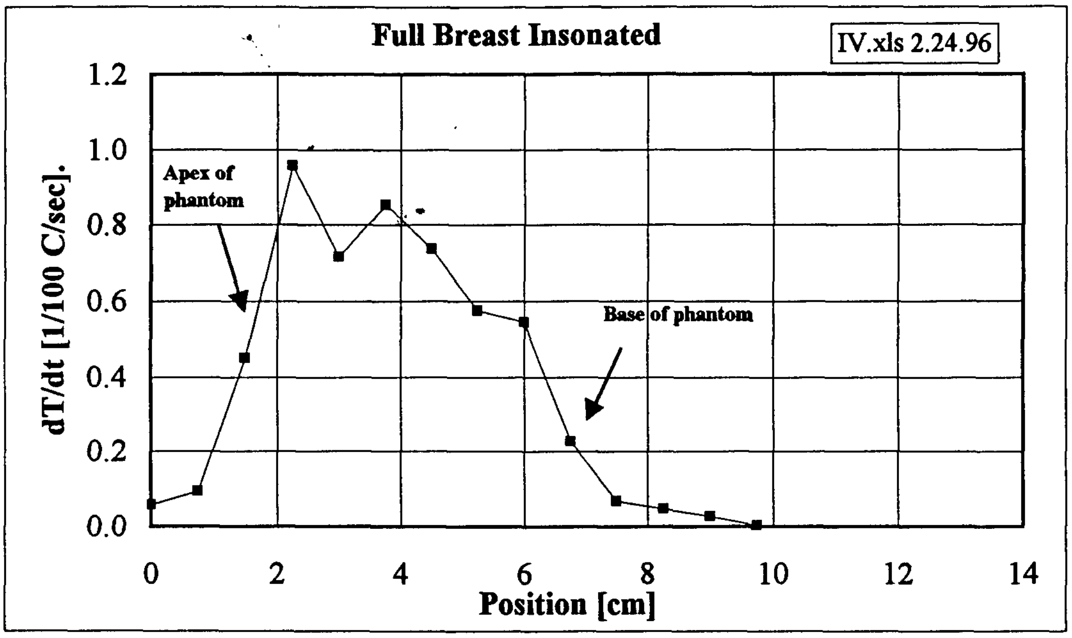

Figure 14. The relative power deposition profile resulting from supplying uniform power to all transducers in the upper 5 rings. The power delivered to each of the rings can be adjusted in order to achieve improved uniformity in the power deposition profile.

The temperature distributions have been measured in many coronal and sagittal planes in the breast phantom with the conclusion that the system has enough power output and control capability to achieve a uniform three dimensional temperature distribution throughout the breast phantom.

D. Investigational Device Exemption (IDE) from the Food and Drug Administration (FDA), and Clinical Protocols.

The clinical study of the capability, limitations, and safety the BTS is planned (device evaluation). Clinical research protocols for cancer treatments using new devices are subject to increasingly rigorous scrutiny by the hospital IRB and the U.S. FDA branch that issues the IDE. Recent federal regulations require the hospital to have an IDE for any new device used in therapy before the IRB approval. In addition the US Army Human Use Review and Regulatory Affairs Division require an institutional IDE before approving the protocol and before granting permission to proceed with the clinical trial. The process of receiving an IDE and approval of protocols by the hospitals and the Army, has been very lengthy. As a result, we have received a No-Cost extension of this program to May 31, 1998.

The progress is as follows:

⇒ The IDE application was completed during the fall of 1996. The first submission included a pre-IDE visit to the FDA in Rockville, Maryland. Dr. Bornstein from the

JCRT, Dr. Burdette from DMSI, Mr. Hansen from JCRT, and Dr. Svensson (PI) from JCRT gave a presentation of this program to FDA officials on October 4th, 1996. We received important feedback to the IDE application. In particular, the wording of our consent form was significantly changed. The feed back from this meeting was incorporated into a new version of the IDE application, and was submitted on December 16, 1996 (Appendix 1, pages 17 - 377. The response from FDA (Appendix 1 pages 14 - 15) required additional clarification of the IDE application (Appendix 1, pages 2 - 13), which was submitted on March 7,1997. The approval from FDA to begin the clinical study and treat 10 patients was received on March 27, 1997.

⇒ The clinical protocol previously submitted and approved by the hospital IRB had to be resubmitted because of the changes in the consent form required by FDA. The protocols are now approved by both the BIDMC and the DFCI. See Appendix 1, pages 52 - 103.

⇒ The approved clinical protocol was submitted to the US Army Human Use Review and Regulatory Affairs Division for approval. We received a lengthy response requiring several additional changes. Unfortunately, some of the requested changes were in direct conflict with the internal policies at the DFCI and could not be immediately implemented. The proposed changes are now being reviewed by the General Counsel of the hospital. The clinical trial cannot begin until the changes requested by the Army are either implemented or withdrawn. This process has significantly delayed the patient studies for which we have requested a No-Cost extension to May 31st 1998.

VI. Conclusion and importance:

This report demonstrates that the technical component of the Contract DAMD17-93-C3098 has been completed. A site-specific hyperthermia breast treatment system (BTS) has been built and accepted for clinical use. The system is capable of delivering hyperthermia as an adjuvant modality to the whole breast volume, and to a portion of the breast which can be as small as a quadrant of the breast.

During the design, building and testing of the system, we experienced difficult technical, scientific, and regulatory challenges requiring complex solutions before the system could be completed and accepted. This has resulted in delays in the program and we have been approved for a No-Cost extension to May 31st, 1998, to be able to begin the clinical studies. The process to acquire an Institutional IDE was very lengthy, but finally we were approved in March 1997. One remaining problem is that the US Army Human Use Review and Regulatory Affairs Division has requested changes in our IDE and hospital approved treatment protocols that are inconsistent with our hospital protocol policies, and a legal review of the Army requirements are currently underway. As soon as these issues are resolved, we will start patient accrual for a device evaluation and Phase I study.

The importance of this work is our attempt to address two of the goals suggested by the 1993 Institute of Medicine Report, that was used by the USAMRMC to formulate its Broad Agency Announcements (BAA).

One of the goals is to identify new biologically based therapies to move away from todays relatively toxic treatments, and to offer more precise intervention that can eradicate the cancer, perhaps at its earliest stage, to improve local control, conserve the breast and reduce toxicity. The rationale for choosing adjuvant hyperthermia treatment of early stage breast cancer (DCIS and EIC) is based on the hypoxic environment in the target region that causes tumor cells to be less sensitive to the killing effects of radiation and more sensitive to the killing effects of hyperthermia. Therefore, hyperthermia has the potential of increasing local control without adding toxicity and may eliminate in many cases the need for disfiguring mastectomy. There may in fact be a population of patients with early stage breast cancer, where the hyperthermia can replace radiation treatments and eliminate radiation associated toxicities to normal tissues in the treated breast, in the opposite breast, and toxicities to heart and lungs.

The second goal relates to the mission of the Joint Center for Radiation Therapy (JCRT) to reach out beyond its academic headquarters at Harvard Medical School and provide cancer management in community hospitals that were previously under serviced. One objective of the USAMRMC breast research program is to support efforts to disseminate novel treatment approaches to women who are older, less affluent and more diverse than those women who normally enroll in academically based trials. We intend to make the hyperthermia treatment facility a regional resource that will include at least five community hospitals in a more ethnically diverse environment outside of Boston. Hyperthermia is particularly suitable for a regional approach, since only two treatment visits are needed for each patient.

VII. References:

1. Overgaard J: Rationale and problems in the design of clinical trials. In Overgaard J (ed): Hyperthermic Oncology 1984. pp 325-337. London, Taylor and Francis, 1984.
2. Kapp DS: Areas of need for continued Phase II testing in human patients. In Paliwal BR, Hetzel FW, Dewhirst MW (eds): Biological, Physical and Clinical Aspects of Hyperthermia. Medical Physics Monograph, no 16. p424. New York, American Institute of Physics, 1988.
3. Bornstein BA, Coleman CN. Innovative approaches to local therapy. In Harris JR, Hellman S, Henderson IC, Kinne DW (eds): Breast Diseases. 2nd ed. Philadelphia, JB Lippincott, 1990:673-677.
4. Overgaard J. The current and potential role of hyperthermia in radiotherapy. Int J Radiat Oncol Biol Phys 1989:16:535.
5. Scott R, Gillespie B, Perez CA, et al. Hyperthermia in combination with definitive radiation therapy: results of a phase I/II RTOG study. Int J Radiat Oncol Biol Phys 1988:15;711.
6. Lindholm CE, Kjellen E, Nilsson P, Hertzman S. Microwave-induced hyperthermia and radiotherapy in human superficial tumours: clinical results with a comparative study of combined treatment versus radiotherapy alone. Int J Hyperthermia 1987:3;393.
7. van der Zee J, Treurniet-Donker AD, The SK, et al. Low dose reirradiation in combination with hyperthermia: a palliative treatment for patients with breast cancer recurring in previously irradiated areas. Int J Radiat Oncol Biol Phys 1988:15;1407.

8. Perez CA, Kuske RR, Emami B, Fineberg B. Irradiation alone or combined with hyperthermia in the treatment of recurrent carcinoma of the breast in the chest wall: a nonrandomized comparison. Int J Hyperthermia 1986:2;179.

9. Dragovic J, Seydel HG, Sandhu T, Kolosvary A, Blough J. Local superficial hyperthermia in combination with low-dose radiation therapy for palliation of locally recurrent breast carcinoma. J Clin Oncol 1989:7;30.

10. Jampolis S, Blumenschein G, Gomez-Yeyille JE, et al. Combination hyperthermia and radiation treatment for locally recurrent breast cancer: an analysis of response and prognostic factors. [Abstract] Proc Am Assoc Can Res 1989:30;253.

11. Gonzalez Gonzalez D, van Dijk JDP, Blank LECM. Chestwall recurrences of breast cancer: results of combined treatment with radiation and hyperthermia. Radiother and Oncol 1988:12;95.

12. Kapp DS, Barnett TA, Cox RS, Lee ER, Lohrbach A, Fessenden P. Hyperthermia and radiation therapy of local-regional recurrent breast cancer: prognostic factors for response and local control of diffuse or nodular tumors. Int J Radiat Oncol Biol Phys 20:1147-1164, 1991.

13. Kapp DS, Cox RS, Barnett TA, Ben-Yosef R. Thermoradiotherapy for residual microscopic cancer: elective or post-excisional hyperthermia and radiation therapy in the management of local-regional recurrent breast cancer. Int J Radiat Oncol Biol Phys 24:261-277, 1992.

14. Sapareto SA, Hopwood LE, Dewey WC. Combined effects of x-irradiation and hyperthermia on CHO cells for various temperatures and orders of application. Radiat Res 43:221-233, 1978.

15. Cavaliere R, Ciocatto EC, Giovanella RC, et al. Selective heat sensitivity of cancer dells. Cancer 20:1351, 1967.

16. Belli JA, Bonte FJ: Influence of temperature on the radiation response of mammalian cells in tissue cultures. Radiat Res 18:272-276, 1963.

17. Hall EJ. Radiobiology for the Radiologist, 3rd Ed, p293-329. JB Lippincott: Philadelphia, 1988.

18. Herman TS, Teicher BA, Jochelson MS, et al. Rational for the use of local hyperthermia with radiation therapy and selected anticancer drugs in locally advanced human malignancies. Int J Hyperthermia 4:143-158, 1988.

19. Dahl, O: Interaction of hyperthermia and chemotherapy. Recent Results in Cancer Research, 107:157-169, 1988.

20. Kapp KS, and Kapp DS.: Hyperthermia's emerging role in cancer therapy. Contemporary Oncology. Pages 19-30, June 1993.

21. Vernon CC, Hand JW, Field SB, Machin D, Whaley JB, van der Zee J, van Putten WLJ, van Rhoon GC, van Dijk JDP, and Gonzalez DG, Liu FF, Goodman PG, Sherar M.: Radiotherapy with or without Hyperthermia in the Treatment of Superficial Localized Breast cancer: Results from Five Randomized Controlled Trials. Int J Radiat Oncol Biol Phys, Vol. 35 No 4: 731 - 744, 1996.

22. Harris JR, Recht A, Connolly J, Cady B, Come S, Henderson C, Koufman C, Love S, Schnitt S, Osteen R. Conservative surgery and radiotherapy for early breast cancer. Cancer 66:1427-1438, 1990.

23. Holland R, Connolly JL, Gelman R, Mravunac M, Hendriks JHCL, Verbeek ALM, Schnitt SJ, Silver B, Boyages J, Harris JR. The presence of an extensive intraductal component following a limited excision correlates with prominent residual disease in the remainder of the breast. J Clin Oncol 8:113-118, 1990.

24. Harris JR, Connolly JL, Schnitt SJ, et al. The use of pathologic features in selecting the extent of surgical resection necessary for breast cancer patients treated by primary radiation therapy. Ann Surg 201:164-169, 1985.

25. Bartelink H, Borger JH, van Dongen JA, Peterse JL. The impact of tumor size and histology on local control after breast-conserving therapy. Radiother Oncol 11:297-303, 1988.

26. Lindley R, Bulman A, Parsons P, Phillips R, Henry K, Ellis H. Histologic features predictive of an increased risk of early local recurrence after treatment of breast cancer by local tumor excision and radical radiotherapy. Surgery 105:13-20, 1989.

27. Boyages J, Recht A, Connolly J, Schnitt SJ, Gelman R, Kooy H, et al. Early breast cancer: predictors of breast recurrence for patients treated with conservative surgery and radiation therapy. Radiother Oncol 19:29-41, 1990.

28. Schnitt SJ, Abner A, Gelman R, Connolly JL, Recht A, Duda RB, Eberlein TJ, Mayzel K, Silver B, Harris JR. The relationship between microscopic margins of resection and the risk of local recurrence in patients with breast cancer treated with breast-conserving surgery and radiation therapy. Cancer 74:1746-1751, 1994.

29. Bornstein BA, Recht A, Connolly JL, Schnitt SJ, Cady B, Koufman C, Love S, Osteen RT, Harris JR. Results of treating ductal carcinoma in situ of the breast with conservative surgery and radiation therapy. Cancer 67:7-13, 1991.

30. Schnitt SJ, Silen W, Sadowsky NL, Connolly JL, Harris HR. Current concepts: ductal carcinoma in situ (intraductal carcinoma) of the breast. N Engl J Med 318:898-903, 1988.

31. van Dongen JA, Fentiman IS, Harris JR, et al. In situ breast cancer: the EORTC consensus meeting. Lancet 2:25-27, 1989.

32. Solin LJ, Recht A, Fourquet A, Kurtz J, Kuske R, McNeese M, McCormick, B, Cross MA, Schultz DJ, Bornstein BA, Spitalier JM, Vilcoq JR, Fowble BL, Harris JR, Goodman RL. Ten year results of breast-conserving surgery and definitive irradiation for intraductal carcinoma (ductal carcinoma in situ) of the breast. Cancer 68:2337-2344, 1991.

33. Hall EJ. Radiobiology for the Radiologist, 3rd Ed, p 139. JB Lippincott: Philadelphia, 1988.

34. Gerweck LE. Modification of cell lethality at elevated temperatures: The pH effect. Radiat Res 70:224-235, 1977.

35. Freeman ML, Dewey WC, Hopwood LE. Effect of pH on hyperthermic cell survival: Brief communication. JNCI 58:1837-1839, 1977.

36. Bowman HF, Newman WH, Curley MG, Summit SC, Kumar S, Martin GT, Hansen J, Svensson GK: Tumor Hyperthermia: Dense Thermometry, Dosimetry, and Effects of Perfusion. Advances in Biological Heat and Mass Transfer. JJ McGrath, ed.; ASME HTD 189:23-32, 1991.

37. Bornstein BA, Zouranjian PS, Hansen JL, Fraser SM, Gelwan LA, Teicher BA, Svensson GK: Local hyperthermia, radiation therapy, chemotherapy in patients with local-regional recurrence of breast cancer. Int J Radiat Oncol Biol Phys 25:79-85, 1993.

38. Dewhirst MW, Phillips TL, Samulski TV, Stauffer P, Shrivastava P, Paliwal B, Pajak T, Gillim M, Sapozink M, Myerson R, Waterman FM, Sapareto SA, Corry P, Cetas TC, Leeper DB, Fessenden P, Kapp D, Oleson JR, Emami B. RTOG quality assurance guidelines for clinical trials using hyperthermia. Int J Radiat Oncol Biol Phys 18:1249-1259, 1990.

39. Waterman FW, Dewhirst MW, Samulski TV, Herman T, Emami B, Cetas TC, Corry P, Fessenden P, Gillin M, Kapp D, Leeper DB, Myerson R, Oleson TJ, Paliwal B, Pajak T, Phillips TL, Sapareto SA, Sapozink M, Shrivastava P, Stauffer P. RTOG quality assurance guidelines for clinical hyperthermia administered by ultrasound. Int J Radiat Oncol Biol Phys 20:1099-1107, 1991.

40. Sapozink MD, Corry PM, Kapp DS, Myerson RJ, Dewhirst MW, Emami B, Herman T, Prionas S, Ryan T, Samulski T, Sapareto S, Shrivastava T, Stauffer P, Waterman F. RTOG quality assurance guidelines for clinical trials using hyperthermia for deep-seated malignancy. Int J Radiat Oncol Biol Phys 20:1109-1115, 1991.

41. Lu, X-Q., Burdette, E.C., Bornstein, B.A., Hansen, J.L., Svensson, G.K.. Design of an Ultrasonic Therapy System for Breast Cancer Treatment. Int J Hyperthermia 12, No3:375 - 399,1996.

43. Svensson GK, Lu, X-Q, Hansen JL, Bornstein BA, Burdette EC. Simulation of a multi-transducer, dual frequency ultrasound applicator for hyperthermia treatment of breast cancer. Proceedings of the IEEE International Symposium on Electromagnetic Compatibility, Sendi, Japan. P. 433-436, 1994.

43. Hansen JL, Burdette JL, Bornstein BA, Svensson GK. Control Capabilities of a Multi Transducer Ultrasound Breast Hyperthermia System. Proceedings of the 16th Annual Meeting of the National Hyperthermia Society. May 1997, Providence, Rhode Island.

APPENDIX I.

IDE Application and
associated documentation

Contains Proprietary Information

TABLE OF CONTENTS FOR THE IDE APPLICATION AND ASSOCIATED DOCUMENTS.

DEPARTMENT OF HEALTH & HUMAN SERVICES

Public Health Service

Food and Drug Administration
9200 Corporate Boulevard
Rockville MD 20850

MAR 27 1997

Goran K. Svensson, Ph.D.
Director of Physics
Dana-Farber Cancer Institute
44 Binney Street
Boston, Massachusetts 02115

Re: G970001/S01
Breast Ultrasound Therapy System (BTS)
Dated: March 7, 1997
Received: March 10, 1997

Dear Dr. Svensson:

The Food and Drug Administration (FDA) has reviewed the supplement to your investigational device exemptions (IDE) application. You have corrected the deficiencies cited in our January 17, 1997 conditional approval letter. Therefore, your application is approved and you may continue your investigation at the institution enrolled in your investigation where you have obtained institutional review board (IRB) approval and submitted certification of IRB approval to FDA. Your investigation is limited to 1 institutions and 15 subjects.

If you have any questions, please contact John C. Monahan at 301) 594-1212.

Sincerely yours,

David A. Segerson

for Lillian Yin, Ph.D.
Director, Division of Reproductive,
Abdominal, Ear, Nose and Throat,
and Radiological Devices
Office of Device Evaluation
Center for Devices and
Radiological Health

MAR 31 1997

Joint Center for Radiation Therapy
Harvard Medical School

Joint Center for Radiation Therapy
Department of Radiation Oncology
Harvard Medical School
330 Brookline Avenue
Boston, Massachusetts 02215

Telephone 617-667-9570
Facsimile 617-667-9599
gsvensson@jcrt.harvard.edu

GÖRAN K. SVENSSON, PH.D.
Associate Professor, Director of Physics

Beth Israel Hospital
Brigham & Women's Hospital
Children's Hospital
Dana-Farber Cancer Institute
Deaconess Hospital

March 7, 1997

IDE Document Mail Center (HFZ-401)
Center for Devices and Radiological Health
Food and Drug Administration
9200 Corporate Boulevard
Rockville MD 20850

RE: Amendment to IDE G970001
Breast Ultrasound Therapy System

Dear Madame/Sir:

This amendment to IDE #G970001 is in response to your letter of January 1997. All changes requested to the informed consent form have been executed. Please find appended 3 copies of the updated patient consent form with the requested changes highlighted and letters confirming IRB approval.

Sincerely yours,

Goran K. Svensson

Enclosures: Updated Informed Consent Form
IRB Confirmation from Dana-Farber Cancer Institute

DANA-FARBER
CANCER INSTITUTE

MEMORANDUM

TO: Jorgen Hansen, M.D., Physicians and Administrators

FROM: Richard D'Augusta, R.Ph., M.P.A. - IRB Chairman

DATE: March 7, 1997

SUBJECT:

Revisions - Major Changes -- (Revision date 2/10/97)

95-006 Radiation and Thermal Therapy for Extensive Intraductal Carcinoma

Please be advised that "major changes" with the current issue date of 02/10/97 have been made to the above mentioned protocol. These revisions were reviewed by the Human Protection Committee (HPC) on 03/06/97 and now have IRB approval.

Please note that the existing protocol will be updated with the appropriate replacement pages.

If there are any questions, please contact me at 2-3029.

Attachments

CC: Carol A. Moyer, Ph.D. - PAO
Bruce Bornstein, MD

CHHPAPP

DANA-FARBER CANCER INSTITUTE

The JimmyFund

BRIGHAM AND WOMEN'S HOSPITAL

RESEARCH CONSENT FORM

TITLE: Radiation and Thermal Therapy for Extensive Intraductal Carcinoma

PRINCIPAL INVESTIGATOR:
Bruce A. Bornstein, MD

CO-PRINCIPAL INVESTIGATOR:
Jay R. Harris, MD

CO-INVESTIGATOR(S):
Jorgen L. Hansen, MSc
Abram Recht, MD
Kitt Shaffer, MD, PhD
Charles L. Shapiro, MD
Barbara L. Smith, MD, PhD
Goran K. Svensson, PhD

(imprint patient ID plate in space above)

FOR PAO USE ONLY

APPROVED FOR USE BY THE INSTITUTIONAL REVIEW BOARD FOR THE DFCI/BWH

ISSUE DATE: 2/10/97

APPROVAL DATE: 3/6/97

FORM DISTRIBUTION DATE:

PROTOCOL NUMBER: 95-006

SIGNED BY:
Executive officer, HPC

RADIATION AND THERMAL THERAPY FOR EXTENSIVE INTRADUCTAL CARCINOMA OF THE BREAST

INTRODUCTION

Your physician has determined that you either have, invasive breast cancer that contains an extensive amount of intraductal carcinoma (non-invasive cancer), or that your have pure intraductal carcinoma without any associated invasion. Local recurrence of breast cancer following breast conserving treatment with lumpectomy and radiation therapy is seen in 10-15% of cases. However, breast cancers such as yours, with an extensive intraductal component may have a higher risk of local recurrence in the breast than cancers without an extensive intraductal component when treated with breast conservative therapy. For patients with an extensive intraductal component, the option of mastectomy may have a lower risk of breast recurrence, but many patients prefer breast conservation.

Intraductal carcinoma may be more resistant to radiation therapy and this may account for the poor results seen with irradiation in these patients. Thermal therapy or hyperthermia refers to the use of temperatures 42°C (107.6°F) or higher to treat malignant tumors. Laboratory and clinical reports have demonstrated that heat kills tumors, if tumors are heated to 43°C (109°F) for 30-60 minutes. Many studies suggest that the addition of heat may also improve upon the usual results of radiation therapy for many tumors, including recurrent invasive breast cancer, bladder cancer, and tumors of the head and neck region. Investigators have found an improvement in tumor response rates and a lengthened duration of response. This is the first study to attempt to treat non-invasive breast tumors.

You are being asked to participate in a research project to study the use of thermal therapy (heat treatments produced by sound waves) for the treatment of breast cancer with extensive intraductal carcinoma. We have developed the thermal therapy technologies required to make use of the positive interaction between heat and radiation. The specific clinical study we propose is a study to optimize and establish our ability to safely deliver heat to the breast using a new breast thermal therapy device. The purpose is to determine if we can control heat delivery.

OBJECTIVE

The purpose of this research study is to determine the safety and effectiveness of generating, and delivering, heat to the breast in combination with radiation therapy. We want to evaluate what side effects are associated with this treatment. Fifteen patients will be treated in this research study.

TREATMENT DESCRIPTION

Your radiation oncologist will schedule a radiation therapy treatment planning and an initial thermal therapy planning session. Both of these are conducted at the Dana Farber Cancer Institute even though the radiation therapy is carried out at another hospital. Photographs of the treatment site will be taken during the planning and at each of the thermal therapy sessions.

Thermal Therapy: At the Radiation Therapy Planning Department at the Dana Farber Cancer Institute you will receive two thermal therapy treatments. Each treatment will require at least two hours of preparation time prior to treatment. The heat treatment requires you to lay on your stomach on a soft flat table for approximately two hours. Therefore, on the day of thermal therapy you must plan for a total of approximately 5 hours from the time you arrive for therapy to the time you are ready to leave. The device used to generate heat produces ultrasonic sound waves to heat the breast. This device was developed under contract with the U.S. Army Medical Research & Development Command. This is a new heat treatment device. Your breast will fall through a cut-out (hole) in the table and rest in a tank of water for the heat treatment. The ultrasound energy waves enter the quadrant or half of the breast containing the original lump (tumor) region. The goal will be to reach 40 to 43 °C (104 to 109 °F) in the breast for 45 minutes. During heat treatments you will experience warmth and occasionally discomfort or pain. The level of discomfort or pain is currently unknown and may be mild, moderate, or severe. If you experience any intolerable discomfort or pain we will modify or stop the treatment to attempt to relieve your symptoms. You will have an intravenous line inserted prior to treatment that may be used to give pain medications if needed. A technologist will be with you during treatment.

During the heat treatment, temperatures will be measured. Prior to each heat treatment at least two metal thermometer needle probes will be inserted into the breast. The thermometer probes help control the temperature in the breast and avoid burns. A Radiation Oncologist and Diagnostic Radiologist will place the small needle probes into the breast through numbed skin under sterile conditions using local anesthesia. The temperature measuring probes will be removed after each thermal therapy treatment. The total time for each treatment session will be at least three hours.

Radiation Therapy: In addition to the heat treatments, you will receive radiation therapy to your breast. Your radiation oncologist will decide what radiation dose you receive. On the basis of experience, we believe that the effectiveness of the radiation may be improved with heat. On days when both radiation and thermal therapy are given, radiation will follow thermal therapy by 30-60 minutes. Radiation will be given daily, five days a week, for 6 to 6 1/2 weeks.

After the treatment course is completed you will be asked to return at regular intervals for follow-up visits to evaluate the results of treatment and the potential long-term side effects. In order to assess your response to treatment certain diagnostic tests will be done prior to beginning treatment and at intervals following treatment. This may include blood tests, mammography, breast ultrasound, breast magnetic resonance imaging (MRI), and other tests determined to be necessary by your physician. They will be explained to you at the time of your initial evaluation and at follow-up visits.

POTENTIAL BENEFITS

The potential benefits associated with the treatment include a possible reduced risk of tumor recurrence. Heat appears to increase the effectiveness of radiation therapy. However, no guarantee or assurance can be made regarding the results, if any, that may be obtained since research results cannot be foreseen. Your participation will contribute to the development of medical knowledge about the treatment of breast cancer and the use of this thermal therapy device.

If new information develops during the course of your treatment that may be related to the efficacy or risks of your treatment, you will be informed and options will be discussed.

POTENTIAL SIDE EFFECTS

Although hyperthermia has the potential to produce beneficial results, it may be of no benefit and may have injurious effects.

Thermometer probe placement: Despite local anesthesia to diminish pain during thermometer probe insertion, you may experience pain at the time of probe placement. When local anesthesia is given, you will experience a momentary stinging sensation. As with any invasive procedure, there is a risk of bleeding, infection, or perforation of normal structures in or near the region of treatment. There is the small risk of a permanent scar at the point where the thermometry probe enters the skin of the breast, but this risk should be small. There is a minor risk that tumor cells could track along the thermometry probe path in the breast, but this would be rare, and be included in the field receiving radiation therapy treatment.

Radiation Therapy: Your radiation oncologist will describe the possible side effects to you, and you will be asked to sign a separate consent form for the delivery of the radiation therapy. However, common immediate side effects include fatigue and skin redness and irritation in the treated breast. Thermal therapy may also make the normal tissues more sensitive to the toxic effects of radiation. Thus, all of the tissues that receive radiation therapy and heat are potentially more prone to radiation injury. Since this treatment is investigational, it is possible that unforeseen side effects could occur.

Thermal Therapy (heat treatment): Is associated with possible pain, burns, blisters, nausea, itching, or fever during the treatment session. If any of these is observed, it may be possible to change the heating pattern to eliminate them. You may also become uncomfortable from lying on your stomach, in the treatment position. We will attempt to make you comfortable.

During treatment, your heart may beat faster and you will probably feel warm and begin to sweat. Your heart's electrical pulses and your blood pressure will be monitored during therapy. You may choose to stop receiving the study treatment at any time if any of the related side effects is intolerable. In addition if you experience dizziness, shortness of breath, or chest pain, you must notify your physician immediately, so that the treatment can be modified or stopped. We expect most acute (short-term) side effects associated with the use of thermal therapy and radiation therapy to be controllable and reversible. We do, however, emphasize that we cannot rule out any unsuspected short-term or long-term side effect. During this study, provisions and precautions will be taken to insure your safety throughout the course of treatment.

Should any of the above side effects appear, your physician(s) will take steps to reduce or eliminate these effects by whatever means are necessary, but there can be no assurance that such effects can be reduced or eliminated.

In the long-term, after the thermal therapy session it is possible to develop pain, burns, or blisters that might persist. In addition, infection or ulceration may occur. If persistent pain should develop, this may represent muscle or nerve injury. You will be evaluated by your physician and further heat treatment sessions will be stopped until such problems have resolved.

In addition, in the future, tissue changes, such as fibrosis (scar tissue), necrosis (dead tissue), and ulceration, in the treated breast could happen at any time following treatment, be permanent and require additional surgery. Some of these long-term effects such as fibrosis could make follow-up examinations of your breast by you or your physician more difficult. In addition, thermal therapy may make follow-up mammograms of the breast more difficult to interpret.

This is a new deep-heating device and with all investigational treatments, it is possible that unforeseen complications could occur.

ALTERNATIVE TREATMENTS

The alternative treatment is mastectomy with or without reconstruction of the breast. Reconstruction can be done at the time of the mastectomy or at a later time. Another alternative treatment would be conventional radiation therapy alone. Your physician has explained these procedures and both their advantages and their disadvantages to you.

CONTRAINDICATIONS

Thermal therapy is not to be given to patients whose sensitivity to heat sensation has been significantly decreased in the area to be treated by any means (previous treatment, anesthesia, diabetic nerve damage, etc.), patients with cardiac pacemakers, and patients having a known decrease in circulation in the area to be heated. General or regional anesthetic must not be given with thermal therapy and will not be used in your treatments. Pain-medication, sedatives, or tranquilizers may be used in your treatments as long as they do not significantly decrease your awareness of pain sensation in the treatment area.

FOR WOMEN OF CHILDBEARING POTENTIAL

Radiation therapy may have an adverse effect on an unborn child and should not be performed during pregnancy. You are advised NOT to become pregnant before or during this study. If you become pregnant, you would automatically be excluded from radiation therapy and this protocol study.

PARTICIPATION

Your participation is voluntary and you may refuse to participate and/or withdraw your consent and discontinue participation in the project at any time without penalty, loss of benefits to which you are otherwise entitled, or penalty of prejudice in your future treatment.

Also, your physician can terminate your participation without your consent at any time in the event of physical injury or other condition that makes further treatment an unnecessary risk in the medical opinion of your physician.

CHARGES

You will not be charged for the hyperthermia treatment. However, you will be charged for the ultrasound examination of the breast that will occur at the time of thermometer probe placement. You will be charged in the usual fashion for radiation therapy, doctors visits, and any other portion of your care that is considered standard care. You are also responsible for payment of all charges for medical procedures to treat conditions resulting from adverse outcomes related to the study treatment.

CONTACT PERSONS

For more information concerning the research and research-related risks or injuries, you can contact Dr. Bruce Bornstein, the investigator in charge, at (617) 632-3591.

LAST PAGE OF RESEARCH CONSENT FORM

APPROVED BY THE INSTITUTIONAL REVIEW BOARD FOR DFCI/BWH

PROTOCOL NUMBER: ____________________

PATIENT'S NAME: ____________________

DATE PROTOCOL TREATMENT BEGINS: ______/______/______

PATIENT IDENTIFICATION

PATIENTS REFERENCE COPY

INFORMED CONSENT FOR RESEARCH

You may receive care or have studies performed at either the Brigham & Women's Hospital ("BWH") or the Dana-Farber Cancer Institute, Inc. ("DFCI"), collectively, the Hospitals. Your medical record may be made available to health care professionals at the Hospitals and may be reviewed by Hospital staff members. Except as provided below, information in your medical record will be kept confidential. The results of the study, coded so that only those affiliated with the Hospitals will know which patient the data represents, will be reported to the study sponsor (and/or its agent), to regulatory agencies such as the FDA, and in scientific presentations and publications. It is also possible that your medical and research record, including sensitive information and/or identifying information, may be inspected and/or copied by the study sponsor (and/or its agent), the FDA, other federal or state government agencies, or hospital accrediting agencies, in the course of carrying out their duties. If your record is inspected or copied by the study sponsor (and/or its agent), or by any of these agencies, the Hospitals will use reasonable efforts to protect your privacy and the confidentiality of your medical information.

If you are injured as a result of this study, you will be provided with the necessary care. This care does not imply negligence on the part of the Hospitals. Where applicable, the Hospitals reserve the right to bill third-party payors for services rendered. The Hospitals will not provide you with any additional compensation as a result of such injuries.

If you have questions about your treatment, the research, your rights, injuries which occur, if you believe you have not been adequately informed of the risks, benefits, or alternative treatment options, or if you feel any pressure to enroll in this research study or continue to participate against your wishes, please speak to a representative of the Human Protection Committee at the DFCI (617-632-3029).

I have been fully informed of the purpose of the research, the expected duration of my participation, the procedures to be followed, and which procedures are investigational and which are standard. I have been given a description of the expected discomforts, risks, and benefits, the alternative procedures available, and the risks and benefits of those alternative procedures. I voluntarily agree to participate in this research study and understand that I am free to withdraw my consent and end my participation at any time, without prejudice of any kind. I understand that if I have questions at any time, they will be answered. I have been given a copy of the Informed Consent document describing the protocol.

____ ______________

SIGNATURE OF PATIENT/RESEARCH SUBJECT OR PERSON LEGALLY AUTHORIZED TO CONSENT FOR PATIENT/RESEARCH SUBJECT — DATE

____

PRINTED NAME AND RELATIONSHIP TO PATIENT/RESEARCH SUBJECT

____ ______________

SIGNATURE OF WITNESS — PRINTED NAME — DATE

I have fully explained to the patient/research subject (or the person named above authorized to consent for the patient/research subject) the purpose of this research study, the expected duration of his or her participation, the procedures to be followed, and which procedures are investigational and which are standard. I have given the patient/research subject a description of the expected discomforts, risks, and benefits, the alternative procedures available, and the risks and benefits of those alternative procedures. I have asked whether any questions have arisen regarding the procedures and have answered those questions to the best of my ability.

____ ______________

PHYSICIAN'S SIGNATURE AND PRINTED NAME — DATE

(If Non-Treatment: Researcher's or Approved Designee's Signature and Printed Name)

DEPARTMENT OF HEALTH & HUMAN SERVICES

Public Health Service

Food and Drug Administration
9200 Corporate Boulevard
Rockville MD 20850

JAN 29 1997

JAN 17 1997

Goran K. Svensson, Ph.D.
Dana-Farber Cancer Institute
44 Binney Street
Boston, Massachusetts 02115

Re: G970001
Breast Ultrasound Therapy System
Indications for Use: For hyperthermia of the breast in conjunction with radiation therapy.
Dated: November 27, 1996
Received: December 20, 1997
HCFA Reimbursement Category: B3

Dear Dr. Svensson:

The Food and Drug Administration (FDA) has reviewed your investigational device exemptions (IDE) application. Your application is conditionally approved, and you may begin your investigation at the Joint Center for Radiation Therapy, Boston Massachusetts, using a revised informed consent document which corrects deficiency numbers 1, 2, and 3 after you have obtained institutional review board (IRB) approval and submitted certification of IRB approval to FDA. Your investigation is limited to 1 institution and 15 subjects.

This approval is being granted on the condition that, within 45 days from the date of this letter, you submit information correcting the following deficiencies:

1. Please revise page 1 of the informed consent document to remove the statement comparing breast conservation to mastectomy with respect to survival. Since the treatment being used in this study has not been established as an alternative for this particular subset of patients the above statement could give the subjects an unrealistic impression of the risks involved in not undergoing standard surgical treatment.

2. Please revise the following statement on page 3-4 that states "during heat treatments you will experience warmth and occasionally mild discomfort." This statement should be revised to more accurately reflect the fact that the extent to which patients will experience discomfort or pain is currently unknown and may be mild, moderate or severe.

3. Your statement on page 7 that most side effects associated with thermal therapy and radiation are expected to be "controllable and reversible" is inconsistent with the potential long-term tissue damage described on the next page. Please revise this statement to indicate that a real potential for severe and permanent damage does exist and that additional surgery could be necessary to treat such injuries.

This information should be identified as an IDE supplement referencing the IDE number above, and must be submitted in triplicate to:

IDE Document Mail Center (HFZ-401)
Center for Devices and Radiological Health
Food and Drug Administration
9200 Corporate Boulevard
Rockville, MD 20850

If you do not provide this information within 45 days from the date of this letter, we may take steps to propose withdrawal of approval of your IDE application.

We would like to point out that FDA approval of your IDE application does not imply that this investigation will develop sufficient safety and effectiveness data to assure FDA approval of a premarket approval (PMA) application for this device. You may obtain the guideline for the preparation of a PMA application, entitled "Premarket Approval (PMA) Manual," from the Division of Small Manufacturers Assistance at its toll-free number (800) 638-2041 or (301) 443-6597.

We have enclosed the guidance document entitled "Sponsor's Responsibilities for a Significant Risk Device Investigation" to help you understand the functions and duties of a sponsor. Also enclosed is the guidance document "Investigators' Responsibilities for a Significant Risk Device Investigation" which you should provide to participating investigators.

If you have any questions, please contact John C. Monahan at (301) 594-1212.

Sincerely yours,

David A. Segerson

for Lillian Yin, Ph.D.
Director, Division of Reproductive,
Abdominal, Ear, Nose and Throat,
and Radiological Devices
Office of Device Evaluation
Center for Devices and
Radiological Health

Enclosures

(1) Sponsor's Responsibilities for a Significant Risk Device Investigation
(2) Guideline for the Monitoring of Clinical Investigations

Joint Center for Radiation Therapy
Harvard Medical School

Joint Center for Radiation Therapy
Department of Radiation Oncology
Harvard Medical School
330 Brookline Avenue
Boston, Massachusetts 02215

Telephone 617-667-9570
Facsimile 617-667-9599
gsvensson@jcrt.~~dfci~~.harvard.edu

GÖRAN K. SVENSSON, PH.D.
Associate Professor, Director of Physics

Beth Israel Hospital
Brigham and Women's Hospital
Children's Hospital
Dana-Farber Cancer Institute
Deaconess Hospital

Document Mail Center
U.S. Food and Drug Administration
Center for Devices and Radiological Health
9200 Corporate BLVD
Rockville, MD 20850

November 27, 1996

Dear Sir/Madame:

Please find enclosed three copies of an institutional IDE application for the use of an ultrasound device for hyperthermia of breast cancer. On October 4, 1996, the research team from Dana Farber Cancer Institute traveled to FDA for a Pre-IDE visit to review the application. The enclosed IDE application includes all the very useful advice received during the Pre-IDE visit.

Thank you for your attention to this matter.

Yours Sincerely

Göran

Goran K Svensson, Ph.D.
PI for this project.

Application for an Investigational Device Exemption for a Significant Risk Device

Food and Drug Administration
Center for Devices and Radiological Health
Document Mail Center (HFZ-470)
9200 Corporate Blvd.
Rockville, MD 20850

Project: Use of Combination Thermal Therapy and Radiation in Breast Conserving Treatment of Breast Cancer

Device: Breast Ultrasound Therapy System

Dana-Farber Cancer Institute
44 Binney Street
Boston, MA 02115

Sponsor: ______________________ Date: December 16, 1996

B.W. Janicki, Ph.D.
Director of Research

TABLE OF CONTENTS

XI. APPENDICIES

I. Introduction

Dana-Farber Cancer Institute (DFCI) is requesting an institutional Investigational Device Exemption (IDE) for the ultrasound Breast Therapy System (BTS), a computerized cylindrical multi-element ultrasonic hyperthermia system. This system is a custom-built device fabricated to DFCI specifications by Dornier Medical Systems, Inc..

I.a. Background

Heat has the ability to kill cancer cells as does ionizing radiation and chemotherapeutic drugs. Studies of the safety and the efficacy of using hyperthermia in combination with radiation for treatment of breast cancer patients with an extensive intraductal component of their infiltrating tumor or patients with pure intraductal carcinoma will be conducted. This IDE application focuses on a Device Evaluation to determine if the custom built BTS can heat to the desired thermal dose without causing local pain and heat related toxicities [14]. We will also evaluate the user interaction with the BTS, the thermometry system and the ability to control the local energy deposition.

Intraductal carcinoma is characterized by cancer cells spreading within the lactiferous ducts. It is suggested that intraductal carcinoma is associated with tumor necrosis within the ducts and that the necrotic tumor cells are related to the absence of blood supply with resulting hypoxia. It has been demonstrated [4] that thermal therapy, in contrast to radiation, is more effective in killing hypoxic cells as compared to well oxygenated cells. Breast cancer patients with these histologies have a higher risk of local recurrence [10].

The clinical rationale and hypothesis for treating intraductal carcinoma is that patients with infiltrating breast cancer containing an extensive intraductal component or patients with pure intraductal carcinoma will have a reduced risk for local recurrence from a combined and non-disfiguring treatment approach using thermal therapy and irradiation. This will extend the indications for breast conserving therapy and may eliminate the need for mastectomy for many patients.

In the future we may also treat non-inflammatory stage III patients and patient with ipsilateral local recurrence after radiation therapy. A European phase III study with over 300 patients randomizing to radiation alone or radiation and hyperthermia shows an overall complete response rate of 60% for the combined treatments as compared to 40% for radiation therapy alone [29].

Ultrasound hyperthermia is a common method of heat delivery. High power ultrasound devices have the ability to deliver heat down to 7 cm depth for planar non-focused transducers and to 10-15 cm depth for focused devices [3]. A device using ultrasound generated by arrays of planar non-focused transducers received a PMA from the FDA in 1989 (Sonotherm 1000; Labthermics Technologies). This device has been successful in tumor therapy of many types of solid tumor cancers. Several ultrasound systems for deep-seated tumor therapy have been designed and reported in the literature [7,9,11,12,13,16,17,18,20,21,27,28]. However, it is often difficult to find suitable treatment insonation portals with available general purpose heating devices. This is due to limitations in the use of ultrasound including the presence of intervening critical organs and other tissue heterogeneities, such as muscle-bone interfaces, which can create painful overheating or sheer stresses. In addition, air cavities do not conduct the ultrasonic wave energy and thus present another obstacle to heat delivery in some anatomical locations.

The experience using these general purpose devices is therefore mixed, especially with respect to the patients' sense of discomfort and pain during therapy. For example, a six-transducer fixed beam ultrasound system, developed by the group at Stanford University, has been reported [9]. This device has transducers mounted on a spherical shell with a 26 cm radius of curvature. The device is capable of heating a therapeutic volume approximately 8 cm wide and 6 cm deep located at 10 cm depth. Almost 50% of the patients treated reported some degree of pain. The level of pain was related to anatomical site, power level, frequency, and geometric arrangement of the transducers.

In another report, a commercial diagnostic ultrasound scanner was modified for hyperthermia therapy [11,12]. The system uses four large focused ultrasound transducers operating at 1 MHz and scanned under computer control. Test results from this device show that it can heat perfused tissue down to depth of at least 10 cm, and that uniform temperature can be produced in volumes up to 5 cm in diameter.

The team that presents this IDE application has worked on hyperthermia devices since approximately 1987. Dr. Burdette developed the Sonotherm-1000 when he was the president of Labthermics Inc. Dr. Burdette in collaboration with the research team at Dana-Farber Cancer Institute developed the Focused Segmented Ultrasound Machine (FSUM) for delivering hyperthermia to deep tumors at maximum depth of 15 cm. The system consists of 56, 1 MHz transducers mounted on a spherical shell focused at 24 cm radius. This development was sponsored by NCI and the device received an Investigational Device Exemption in February of 1994. The FSUM is a general purpose device which has been used for the treatment of various abdominal and axillary tumors.

Treatment of breast cancer (intact breast) using hyperthermia cannot be adequately done with FSUM or any other general purpose device. The main problem is effective coupling of the FSUM applicator to the breast and the anteriorly directed ultrasound beam which will cause undesirable interaction in the bony ribcage. Also, the spherical geometry used in this applicator is not suitable for heating the whole breast.

We therefore postulated that hyperthermia is most effectively and controllably delivered to the breast tissue using a breast site specific ultrasound applicator where the ultrasound transducers are arranged in a cylindrical geometry, thus completely covering the breast tissue when the patient is placed in a prone position.

We proposed the site specific BTS to, and received funding from, the U.S. Army Medical Research and Material Command (USAMRMC).

The technical rationale and criteria for the design of the ultrasound applicator are derived from the specific tissue characteristics and features of the female breast:

a. The breast is an external, convex shaped organ. When submerged into a temperature controlled water bath, the temperature boundaries are well defined and the skin temperature can be well controlled.

b. Ultrasound heating is suitable for the breast, because there is no intervening air cavities or bone in the breast tissue. With the patient in the prone position and the breast submerged into a water bath, the breast tissue can be surrounded with an array of ultrasound transducers and achieve tangential incidence of the ultrasound beam relative to the chest wall. Tangential incidence (relative to the chest wall) is desired to avoid interaction between the ribcage and the ultrasound pressure wave.

c. There are no major blood vessels that carry away heat from the breast tissue, which could reduce the ability to deliver uniform therapeutic heat.

d. The hyperthermia target volume can be the whole breast, a quadrant of the breast, or even a smaller specific tumor mass. Energy deposition, which may heat sensitive regions such as a lumpectomy scar, must be minimized or avoided. It is therefore essential that the energy deposition be controlled and focused on specific sites within the breast tissue. Ultrasound permitting this level of control is achieved by the cylindrical applicator design of the BTS.

The work so far has been focused on the specifications, design, fabrication, and phantom testing of the BTS. With this IDE application we propose proceeding to a device evaluation on human subjects.

Dr. Göran K. Svensson, Director of Physics at the Harvard Joint Center for Radiation Therapy (JCRT) is available to answer questions in reference to this IDE application. Dr. Svensson can be reached by telephone at (617) 667-9570, by fax at (617) 667-9599, or by mail at JCRT, Harvard Medical School, 330 Brookline Avenue., Boston, MA 02215.

II. Name and address of sponsor.

Bernard W. Janicki, Ph.D.
Director of Research
Dana-Farber Cancer Institute
44 Binney Street
Boston, MA 02115
(617) 632-3488

III. Report of Prior Investigation

The BTS incorporates a cylindrically mounted transducer array applicator which provides accurate computer-assisted control of the energy deposition and a therapeutic temperature distribution for hyperthermia therapy. Preliminary results illustrate an advantage for this system over other clinical systems currently available. The experimental data to support this conclusion are reported herein. The work to date has included the design, modeling, fabrication, and laboratory testing of the BTS for hyperthermia therapy.

III.a. Bibliography

Published articles and abstracts pertaining to the Breast Ultrasound Therapy System:

A. Burdette EC, Hansen JL, Neubauer PL, Foard WW, Grossman LJ, Bornstein BA, Svensson GK. "Real-Time Computer Controlled Ultrasound Therapy and Monitoring System for Breast Cancer Treatment". Proceedings of the VII International Congress on Hyperthermic Oncology, Rome, Italy, April 1996.

B. Hansen JL, Burdette EC, Neubauer P, Lu X-Q, Bornstein BA, Svensson GK. "Experimental Verification of a Cylindrical Multi-Transducer Ultrasound Breast Hyperthermia Treatment System". Proceedings of the VII International Congress on Hyperthermic Oncology, Rome, Italy, April 1996.

C. Lu X-Q., Burdette E.C., Bornstein B.A., Hansen J.L., Svensson G.K. "Design of an ultrasonic therapy system for breast cancer treatment". Int. J. Hyperthermia, Vol 12:3, 375-399, 1996.

D. Lu X-Q, Svensson GK, Hansen JL, Bornstein BA, Harris JR, Burdette EC, Slayton M, Barth P. "Design of an ultrasonic hyperthermia unit for breast cancer treatment". 14th Annual Meeting of the North American Hyperthermia Society, Nashville, Tennessee, 1994.

E. Svensson GK, Lu, X-Q, Hansen JL, Bornstein BA, Burdette EC. "Simulation of a multi-transducer, dual frequency ultrasound applicator for hyperthermia treatment of breast cancer". Proceedings of the IEEE Int'l Symposium on Electromagnetic Compatibility, Sendai, Japan May 1994. In Press.

III.b. Published and unpublished adverse information

None.

III.c. Other unpublished information

None.

III.d. Non clinical laboratory data

The performance of the system was evaluated in the laboratory by thoroughly testing the electronics components, by extensive computer modeling of the therapy applicator, in vitro by insonating into absorbing AGAR-graphite breast phantoms, and through dynamic thermal modeling of the breast over a wide range of perfusion values.

III.d.1. Laboratory Experimental Studies

Each electronic system component was individually tested to verify adherence to design specifications, sub-system assemblies were tested, and finally, complete system performance tests were conducted.

III.d.1.i. RF Generator and Amplifier Tests

A block diagram of the RF Generator-Amplifier is shown in Figure 1. The design consists of an onboard VCO connected through an on/off channel gate to a driver stage which is in turn connected to the output driver (amplifier) stage. The design operates in Class D-E using a bipolar driver and dual switched FETs in the output stage. The output power is variable from 0 watts to approximately 10 watts and is controlled by a linear voltage regulator circuit. The linear voltage regulator and on/off gate are controlled via an onboard micro-controller which is controlled by the system computer. Each RF Generator-Amplifier in the breast therapy system is individually controlled.

The RF Generator-Amplifier design has been developed with numerous design variations and board configurations being tested. The final configuration incorporates 4 channels per circuit card. A total of 24 cards provide 96 channels which are multiplexed 1:4 to drive the individual array transducers (384 total). The RF system is described in detail in Section IV.d.2.v.

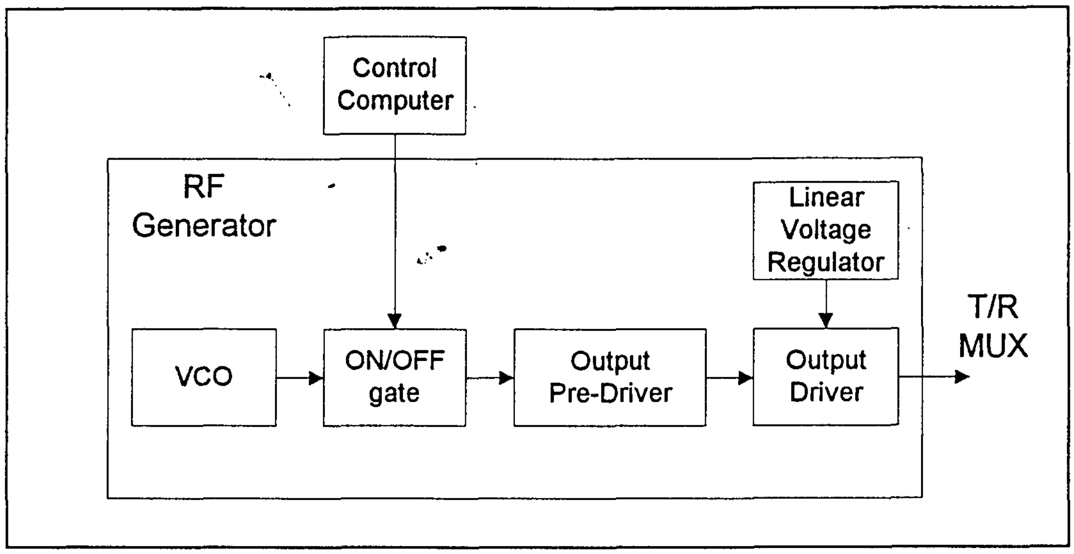

Figure 1. RF Generator-Amplifier block diagram.

Operating specifications and test results for the RF Generator-Amplifier are consistent with design criteria. These are summarized as follows:

Specifications:

- Square wave generator consisting of a computer controlled Voltage Controlled Oscillators (Frequency range 1 to 5 MHz)
- On/Off gating
- 10 Watt continuous power output computer controlled with a DC/DC linear voltage regulator.
- Short circuit current limiting

Test results:

- Frequency range of 0.8 to 6.2 MHz with little signal degradation
- 10 to 15 Watt output over full frequency range
- 12 Watt continuous at 2.0 MHz
- 10 Watt continuous at 4.5 MHz

Gating and current limiting function operating as designed.

III.d.1.ii. Multiplexer-Transmit-Receive Switch Tests

The multiplexer switches the RF Generator-Amplifier outputs among different transducers and also selects transducers in the "receive" mode through the multiplexer's transmit-receive select function. Each multiplexer-transmit-receive switch connects to four transducers. Test results for the transmit-receive switch function are shown in Figure 2. Note there is minimal power output attenuation through the switch.

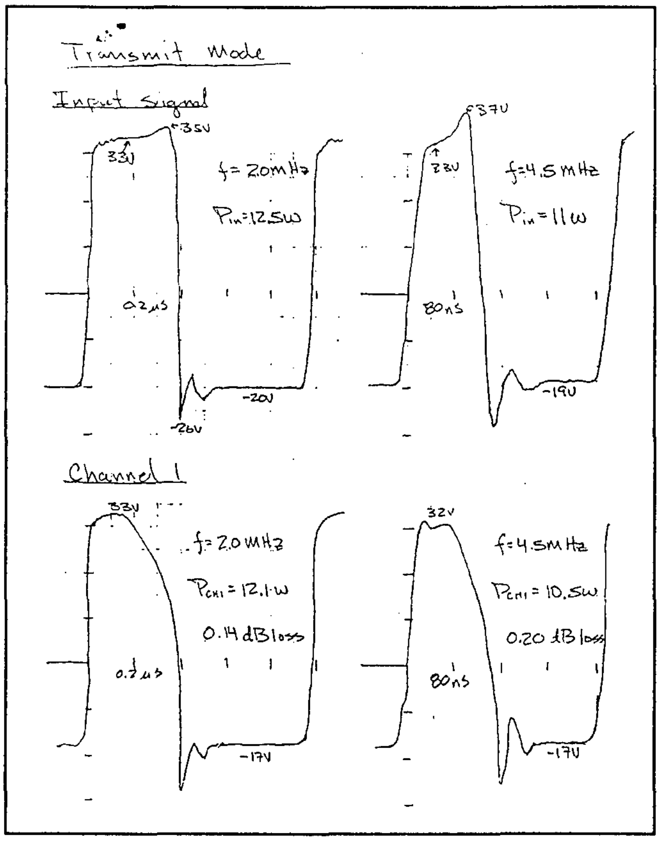

Figure 2. Multiplex-Transmit-Receive switch function test results. Top oscilloscope trace shows the input signal to the T/R switch, and the bottom trace the output signal in transmit position.

III.d.1.iii. 16-Channel Transmit-Multiplex-Receive Board

Boards were constructed and tested which integrate control of 16 transducers into a single circuit card, which is designated the Transmit-Multiplex-Receive (TMR) board. On these cards are 4 RF Generator-Amplifier channels, 4 separate 4-channel multiplexer/transmit-receive switches, and a receiver section. These are illustrated in the block diagram of Figure 3.

The receivers are used for monitoring tissue attenuation and for measuring reflected signals for determination of the breast contours. The TMR board is used to acquire acoustic information regarding the breast tissue during therapy. This information will be used as a real-time monitor of the treatment.

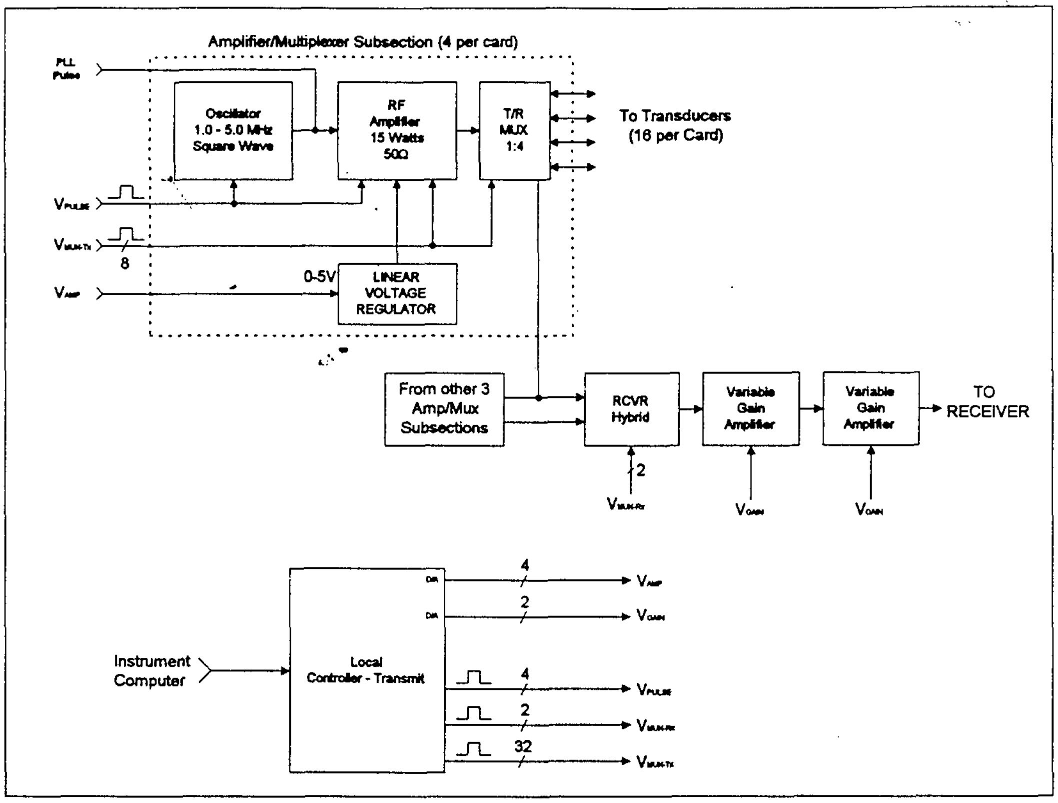

Figure 3. Multiplexer-Transmit-Receive board block diagram

III.d.2. Theoretical Simulation of the Breast Ultrasound Applicator

The cylindrical ultrasound applicator has been extensively characterized by using a validated computer model to optimize the physical size of the transducers and the excitation frequencies (references C, D, E, and Appendix C). The specific design of the applicator (number and frequency of transducers) is a direct result of this extensive modeling effort.

III.d.2.i. Methodology

The thermal treatment of the breast will be done with the patient in prone position. The breast is submerged through a hole in the treatment table into a water filled cylindrical applicator housing as shown in Figure 4. A cylindrical array of individually controlled ultrasound transducers surround the breast (Figure 5). The ultrasound wave enters the breast tissue tangential to the chest wall to eliminate or minimize the interaction with the ribs. To accommodate a large sized breast, the diameter of the cylindrical array is 25 cm. This is enough of a margin to accommodate asymmetry in the breast contour and alignment of the breast in the cylinder. The cylindrical applicator consists of a stack of 8 rings, each being approximately 1.7 cm high. Each ring contains 48 transducers, alternating between low frequency and high frequency transducers. Each ring deposits power in a plane parallel to the chest wall and the heating effect of each ring is relatively independent of adjacent rings. This property facilitates local control of the heating pattern.

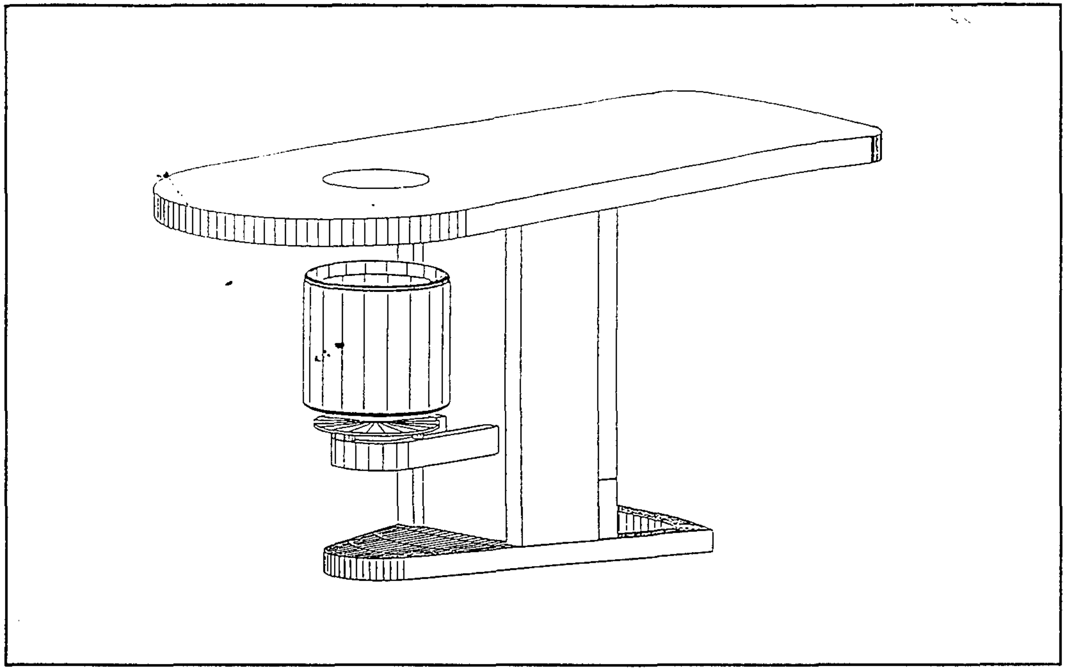

Figure 4. Schematic drawing of the treatment couch with the applicator positioned under the opening in the table top.

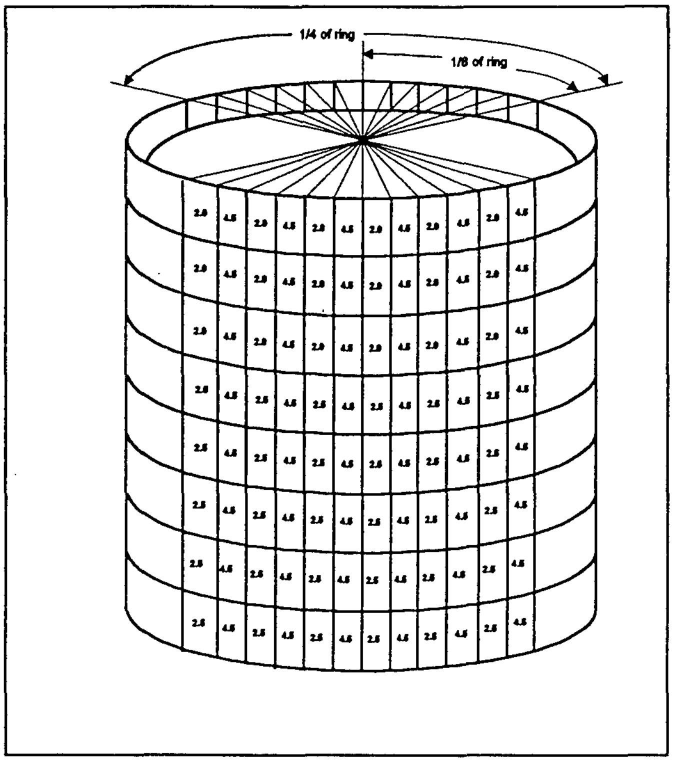

Figure 5. Schematic diagram of the cylindrical applicator. The applicator is constructed from 8 rings, each containing 48 transducers alternating between high and low frequency.

The clinical specifications and capabilities of the breast applicator are listed in Section IV.d.1. The technical specifications and operating parameters for the cylindrical array were determined by computer simulations using several common treatment conditions. A Hewlett-Packard 9000/735 workstation made these complex and lengthy calculations practical. A detailed description of the three-dimensional acoustic and thermal computer model and the results of this simulation are found in reference C and in Appendix C..

III.d.2.ii. Conclusions

There is a significant normal variation in the numerical values of ultrasound interaction parameters and heat transfer parameters in tissue. There are also uncertainties in these values. A range of operating characteristics of the breast applicator accounting for these variations and uncertainties has been determined by computer simulations. We concluded that to achieve the therapeutic goals, we need to build a multiple frequency transducer array. A low ultrasound frequency, in the range of 1.5 - 2.5 MHz, is needed to compensate for the heat removed by the blood flow and permits an initial quick temperature elevation at depth in the breast tissue. Due to variations in the breast tissue attenuation, a broad frequency band for the low frequency transducers is desired. High frequency ultrasound, in the range of 4 - 4.7 MHz, is needed to maintain a steep temperature gradient near the surface of the target volume. The high and low frequency transducers are mounted alternately in each ring. Each ring offers power and frequency control sufficient to heat the whole breast or a quadrant of the breast to a minimum of 42°C without exceeding 44°C.

III.d.3. Breast Phantom Studies

The BTS was tested, under a variety of different transducer emission conditions, to evaluate design performance of the treatment applicator. The ultrasound field was measured by heating ultrasound absorbing graphite-AGAR breast phantoms using built-in thermocouple sensors (Reference B).

These tests permitted critical examination of the hardware and software design, including temporal multiplexing of the therapy transducers. A schematic drawing depicting the setup for these tests is shown in Figure 6. Equipment utilized in the testing includes the treatment applicator, RF generating and multiplexing circuitry, T/R switching circuitry, and Instrument Computer system.

The system's Instrument Computer controlled the excitation of consecutive ultrasound transducers to "sweep around" the ring at least once per two second interval. The same interval applies when multiple rings are excited (i.e. time is not extended). Heating of phantoms has been studied with extensive invasive thermometry used to characterize performance. Conditions as close as possible to modeled parameters from the simulation studies were created and comparisons made between the simulation study results and measured results in phantoms.

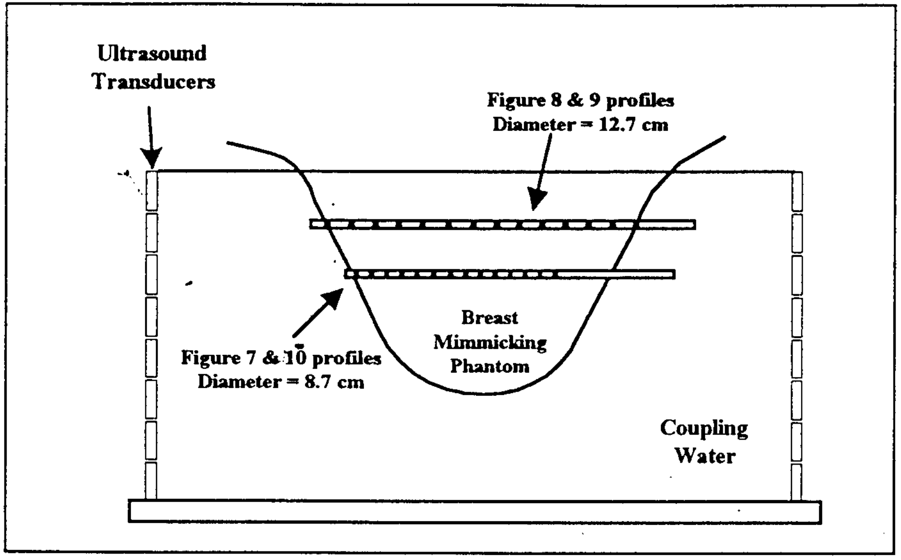

Figure 6. Schematic drawing of the phantom setup. The breast phantom is placed in the ultrasound transducer cavity, and degassed coupling water is added to displace all air between the ultrasound transducers and the phantom.

III.d.3.i Phantom Construction

Several breast tissue mimicking phantoms were manufactured from breast shaped latex membranes salvaged from ultrasound guided biopsy phantoms. The membranes were mounted in a sturdy frame, and a mixture of heated distilled water, agar, powdered graphite, and n-Propanol was poured into the membrane [19]. When returned to room temperature the phantoms solidifies. The composition of the phantom materials was chosen to yield an ultrasound attenuation of 0.75 dB/cm/MHz, a specific density of 1.076 g/cm^2, specific heat capacity of 0.776 calories/g/ ^{0}C, and thermal conductivity of 0.015 calories/cm/MHz [6,15].

The phantoms were instrumented in several patterns to test different aspects of the applicators heating capabilities. 18 gauge temperature probes, each containing 14 thermistor temperature sensors, were placed in different planes parallel to the base of the phantom (where the chest wall would be located in a patient). Following instrumentation, the phantom was placed in the center of the treatment cylinder.

Experimental studies were conducted to determine if temperature uniformity could be expected to within a 2°C variation throughout a 12.7 cm diameter breast tissue-equivalent phantom. In each experiment, temperatures were recorded from 6 probes each containing 14 sensors. The positioning of the sensors is indicated in Figure 6.

III.d.3.ii Results

Predicting the temperature field in a blood perfused breast from the measurements in a non-perfused phantom is very complex. For this reason we decided primarily to investigate the power deposition or Specific Absorption Rate (SAR) patterns in the phantom. SAR is deduced from the temperature rise dT/dt (measured immediately after the power is engaged and before significant thermal gradients can develop in the phantom) multiplied by the specific density and the heat capacity of the phantom material. Computer models indicates that to produce a uniform temperature distribution, initially a uniform SAR distribution is required. However, after therapeutic temperatures have been reached, the power delivered to the core of the breast has to be decreased to prevent overheating. Therefore, the measurements were performed in 3 steps: 1) the low frequency transducers were engaged to quantify the power deposition at the core; 2) the high frequency transducers were engaged to quantify the power deposition at the surface; 3) both low and high frequency transducers were engaged and adjusted to create a variable power deposition profile over the extent of the breast phantom. All measurements were repeated for one quadrant, one half, and the whole breast.

Figure 7 shows the SAR profile through the center of the breast at a level where the phantom diameter is 8.7 cm (also see figure 6). The schematic indicates the placement of the temperature probe, and the graph shows the individual SAR profile for high frequency, low frequency, and a 2 : 1 combination of high and low frequency. The low frequency profile demonstrated, that we are able to preferentially deposit posit power at the core of the breast, the high frequency profile demonstrates the ability to preferentially deposit power at the surface of the phantom, and the combination profile shows the ability to combine the two frequencies to achieve a balance between depositing power at the core and the surface.

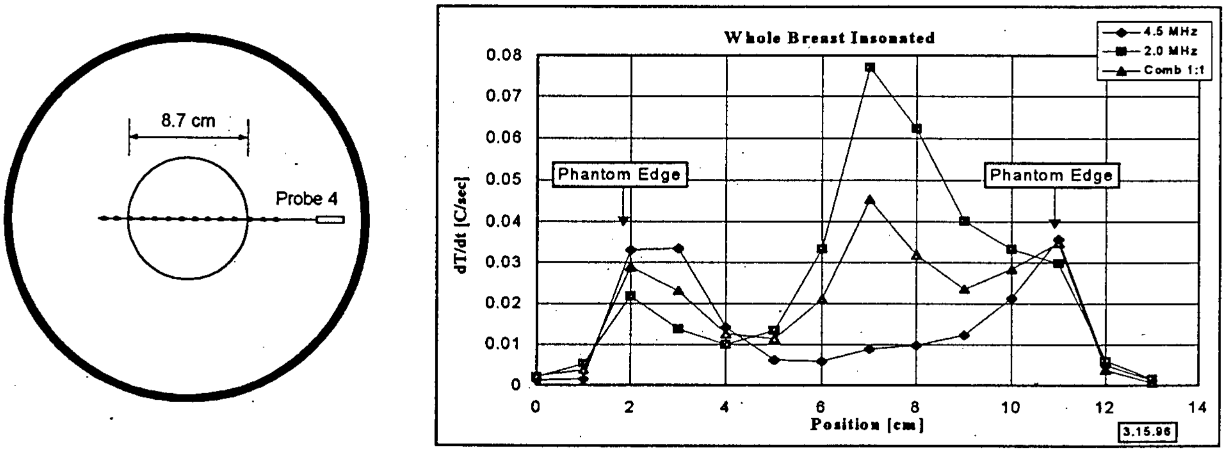

Figure 7. SAR profiles through the breast phantom close to the center of the breast. The schematic drawing to the left indicates the experimental setup. The heavy circle indicated the position of the transducer array with all transducers engaged, the thin circle in the center indicates the outline of the breast phantom, and the temperature probe is indicated by a line with circles indicating temperature measurement points.
The graph on the right shows a family of curves representing the profile of the temperature rise (and by inference power deposition) as a function of ultrasound frequency combinations. The diamond symbols shows the power deposition profile when the 2.0 MHz low frequency transducers are engaged, the triangular symbols the profile when the 4.5 MHz high frequency transducers are engaged, and the squares the profile with a high to low frequency ratio of 2:1.

Figure 8 demonstrates the systems ability to achieve the same features at a position in the breast closer to the chest wall, where the phantom has a diameter of 12.7 cm. Again we are able to selectively deposit power at the surface of the breast, at the core, or to balance out the power deposition between these locations. Figure 9 shows the steady state temperature profile (in the non-perfused phantom) achieved by combining the SAR profiles in figure 8. Please note that the temperature goal in phantom experiments is different from 42-44^{0}C. Here we try to achieve a uniform temperature distribution approximately 6^{0}C above the base line temperature of the phantom.

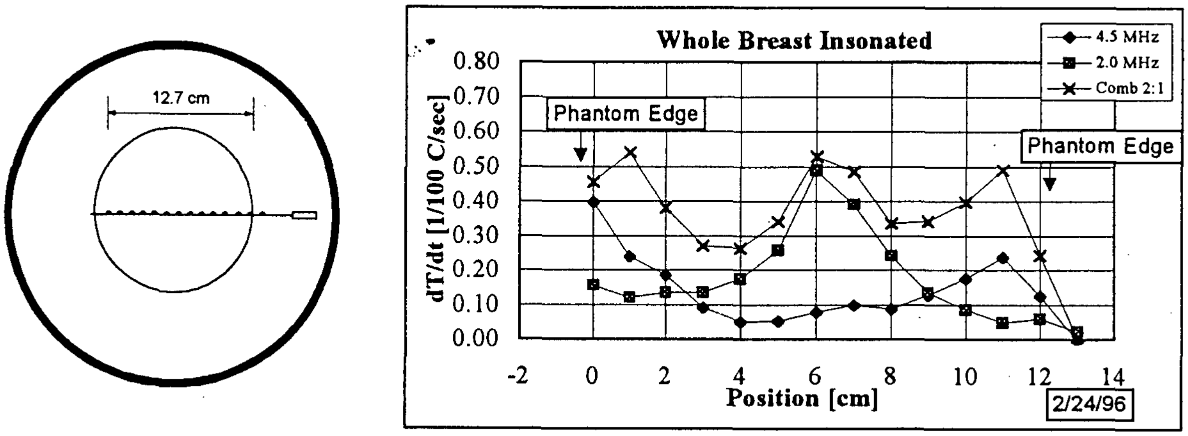

Figure 8. The ability to heat a large diameter breast is demonstrated. On the schematic drawing on the left, the temperature probe is shown placed through the center of the phantom at a level where the phantom has a diameter of 12.7 cm. The heavy circle indicates that the full transducer array is engaged.
In the graph on the right are shown a family of SAR curves. The diamond symbols represents the profile when the 4.5 MHz high frequency transducers are engaged, the squares the profile when the 2.0 MHz low frequency transducers are engaged, and the crosses are measurements of a high frequency to low frequency power ration of 2 : 1.

The ability to heat half of a breast is demonstrated in figure 10. Again the SAR profiles achieved with the different frequency combinations are separated, and the graph indicates the ability to selectively heat the surface of the breast, the center of the breast, or any combination of the two.

One comparison of phantom measurements to computer models is shown if figure 11. The measurement was taken at a location where the phantom diameter is 9.7 cm, and the computer simulation was set up to dissemble the geometrical parameters and physical properties of the phantom experiment. The computer simulation is indicated in a solid line, and the phantom measurements are indicated by diamond symbols. In this figure all modeled and measured data has been calculated to absolute SAR values. The most prominent reason for the discrepancy between the modeled and the measured data is due to the limitation in the spatial resolution of the measured data. Any measurement records the temperature rise in a volume of finite size, whereas the computer model can calculate the temperature variation in much smaller volumes.

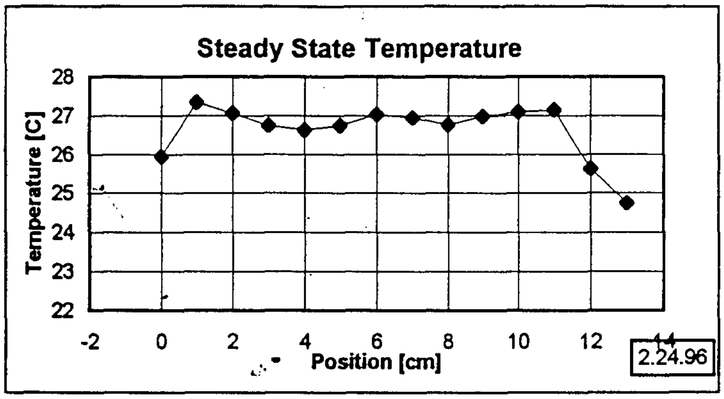

Figure 9. Temperature profile (in a non-perfused breast phantom) after a steady state has been reached with the power deposition pattern indicated in figure 8.

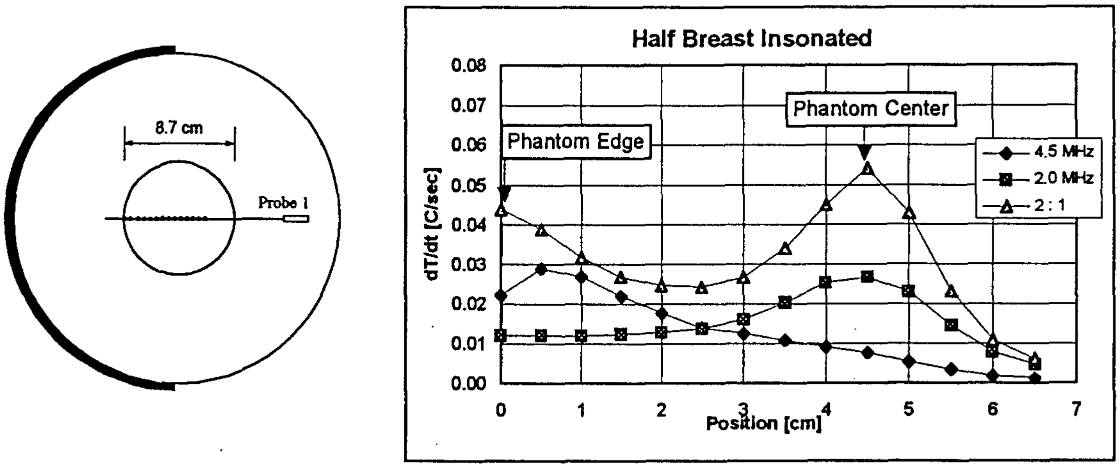

Figure 10. A schematic drawing of the phantom setup is shown on the left. The heavy semi circle indicates that half the transducer array is engaged for insonation into the thin circle representation of the breast phantom. Probe 1 is placed through the center of the phantom at the level of ring 3. The graph on the right shows the corresponding temperature rise profiles. The diamonds shows the profile when the 4.5 MHz high frequency transducers are engaged, the squares when the 2.0 MHz low frequency transducers are engaged, and the circles when the transducers are engaged with a ration of 2 parts high to 1 part low frequency.

III.d.3.iii Conclusion

From these studies, it has been demonstrated, that the BTS can deposit the required ultrasound power profiles throughout the central region of a female breast, and that the BTS can deliver power to the surface of the breast to compensate for thermal conduction to the ultrasound coupling medium without overheating the core of the breast. We feel confident that the BTS will be able to raise the breast target volume temperature to 42-44 ^{o}C with relative uniformity, and maintain this temperature.

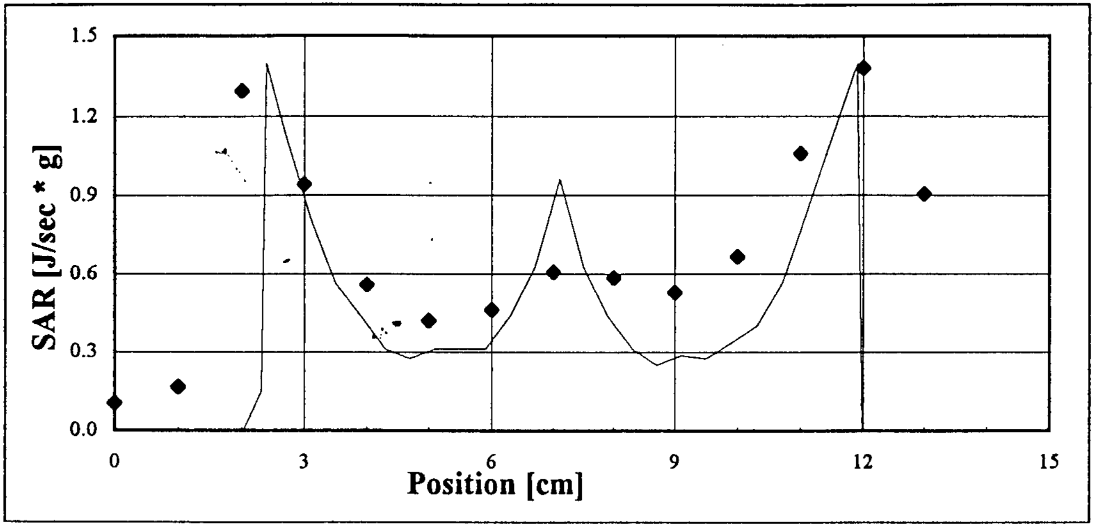

Figure 11 show a graph comparing computer model with phantom experiments. The power deposition profiles are calculated and measured through the center of the phantom where all transducers are engaged at a ratio of 8 parts high frequency to 1 part low frequency. All data are absolute and true specific absorption rate power deposition values.

III.d.4. Animal Tests.

None. In consultation with Robert Hopkins, III, D.V.M. we have concluded that there is no meaningful animal breast model available to test the cylindrical applicator. However, under an approved DFCI animal protocol, and under the supervision of Dr. Hopkins, we have used 8 pigs over the last three to four years in terminal animal tests of the FSUM device. The FSUM is a spherically focused device with planar transducers as compared to the BTS, which is a cylindrically focused device with planar transducers. In these tests, we have validated the accuracy of the thermometry system and the computer models being used for the planning of the breast system. We believe that the experiences from the numerous FSUM animal studies can safely be extrapolated to the breast treatment system.

IV. Investigational plan.

IV.a. Purpose

The ultrasound Breast Therapy System is intended for use in thermal therapy of breast cancer. It is engineered and designed to provide precise application of ultrasound energy to induce local hyperthermia in tumor sites within breasts up to 15 cm diameter and 13 cm or less "length". Once the machine is proven to *provide sufficient and safe control capabilities in the Phase I Device Evaluation and toxicity study*, we expect to move to a Phase I/II study of the potential efficacy of this device

The objectives of this investigation are:

1. Establish criteria for clinical operation and therapeutic application of the BTS.
2. Demonstrate the safety of the BTS for thermal therapy when used in accordance with operating instructions, and clinical protocol guidelines.
3. Determine site-specific normal tissue toxicities of hyperthermia induced with the BTS used in conjunction with radiation therapy.
4. Demonstrate efficacy of breast thermal therapy as an adjuvant therapy in combination with radiation therapy in a phase II clinical study protocol (second stage of study after completion of initial device evaluation).

IV.b. Protocol

The clinical protocol is a Phase I (toxicity/feasibility) study combining ultrasound hyperthermia and radiation therapy. The complete clinical protocol as approved by the Institutional Review Board of the DFCI is provided in Appendix A.

The investigator will keep the following information on each patient:

1. Past medical history.
2. The result of diagnostic tests.
3. Documents evidencing informed consent.
4. Records detailing other concurrent therapies or corrective therapy for device-related adverse effects for each patient.
5. Therapy observations on each patient noting general condition, condition prior to each therapy session, during session, and after the sessions.
6. Therapy record including the date, time and length of each therapy session along with any observed complaints or adverse effects of therapy.
7. Documents specifying the nature of and reason for any and all deviations from the protocol.
8. Report of any adverse effects.

IV.c. Risk analysis

1. Description and analysis of the nature and incidence of increased risk to subjects:

   Foreseeable risks are:

   a) excessive localized heating of normal tissue located adjacent to the treatment volume,

   b) potential for blisters or burns of the skin surface.

   As with all ultrasound hyperthermia devices, the BTS could produce localized pain or discomfort. The pain usually is relieved as soon as the applicator power is reduced or turned off.

2. Means by which these risks will be minimized and corrective therapy for anticipated adverse effects:

   Careful pre-planning of the treatment to optimize the insonation pattern, as well as operator training will minimize the risks to therapy. Control of the insonation pattern during treatment will minimize risks by:

a) intensity distribution control,
b) interactive monitoring of temperatures at multiple sites in tumor and normal tissue, and
c) independent control of power in each of the transducers comprising the applicator array.

3. Justification and benefits of the investigation:

Studies involving hyperthermia in conjunction with conventional therapies for cancer have consistently reported a significant increase in one tumor response rate over the rate for a single therapy administered alone [1,5,22]. In some cases, complete regression of the tumor and remission of the disease has been reported, in others, formerly inoperable tumors have regressed and were rendered operable as a result of the combined therapies. In addition several authors reported an improved duration of response with the combination of hyperthermia and radiation therapy. It is possible that the radiation therapy dose may be reduced when given in combination with hyperthermia, which is especially useful in patients that have previously been treated with radiation therapy to that location.

The national collaborative RTOG Study 84-01 and various institutional studies [3,8,13,23, 24,25,26,28] have demonstrated the feasibility and safety of regional deep hyperthermia using a variety of heating devices. Acceptable acute normal tissue side effects have been reported and continue to be reported in the preliminary analysis of RTOG Study 89-08 evaluating radiation and deep hyperthermia. These studies have also demonstrated that it is very difficult to achieve temperature elevation objectives. The first clinical protocol designed to prospectively evaluate the toxicity of radiation therapy and deep hyperthermia induced by the FSUM. It was fashioned after the current RTOG Study 89-08 and incorporates many of its features to allow ready comparison of this device to those already in Phase II use [26]. The BTS is a new apparatus which is breast site-specific, that can be controlled and is able to preferentially heat sub-regions of the breast, while hopefully avoiding the heating of surrounding normal tissue. Once the system is proven safe in this Phase I toxicity and feasibility evaluation, we plan to move to a Phase I/II study of the potential feasibility and efficacy of this promising new technology.

IV.d. Description of the device.

IV.d.1. Specifications

Design specifications for the breast therapy applicator include the ability to treat a wide range of breast sizes while providing control of power deposition in a manner which permits therapy of the entire breast or of a pre-defined sub-region, such as a quadrant of the breast. The applicator must be able to accommodate sizes of the breast ranging from a few cm diameter up to a maximum of about 15 cm at the base and still provide control of treatment within a narrow temperature range (42°C - 44°C) over a reasonably wide range of tissue perfusion, i.e. 30 to 200 ml, kg $^{-1}$, min $^{-1}$. The breast system includes the ability to monitor temperature and other vital tissue characteristics by using minimally invasive techniques, later to be extended to non-invasive monitoring techniques.

Based on these requirements, design specifications were developed for the breast therapy applicator. Included in the criteria is the patient positioning specification, which is essential in defining the applicator geometry.

Design Specifications:

- Prone patient position with breast extended downward.
- Cylindrical applicator geometry surrounding breast target.
- Ability to accommodate breast diameters of 15 cm or less, measured at the chest wall.
- Ability to accommodate treatment of breast length between 3 cm and 13 cm.
- Spatial resolution control of therapy field to within 1.5 cm vertically and to within one quadrant of the breast.
- Optimize temperature distribution and minimize any potential toxicity to the breast by:
    a. providing temperature control of the breast surface using the surrounding temperature controlled water bath.
    b. provide means for monitoring of the operation of the applicator using opposing pairs of transducers to measure the energy transmitted through the breast.
    c. provide means for accommodating probes for invasive measurements of temperature during therapy
    d. provide means for using reflected ultrasound energy to define the contour of the breast and determine its position within the applicator.

IV.d.2. Device Description

IV.d.2.i. General System Description and Intended Use

The BTS is intended for use in thermal therapy of breast cancer. Thermal therapy is attained by means of a breast site-specific ultrasound applicator coupled with minimally-invasive and non-invasive thermometry.

The device consists of the hardware components illustrated in Figure 12. A breast site-specific cylindrical array applicator of ultrasound transducers is used for thermal therapy induction and for multiple monitoring functions. The "heart" of the hardware consists of the cylindrical array of transducers which both deposit power into the breast tissue for therapy and monitor the dynamic course of the treatment. The ultrasound array is described in more detail in IV.d.2.ii. The ultrasound transducers are geometrically arranged and operated to provide several monitoring functions. The monitoring functions are comprised of:

1. Diagnostic pulse-echo monitoring to determine breast contour and location within the treatment cylinder
2. Through-transmission monitoring of power during therapy for determination of absorbed power distribution (SAR) in the breast tissue being monitored
3. Measurement of "time-of-flight" throughout regions of the target breast tissue referenced to a limited number of invasive temperature measurements for non-invasive mapping of temperatures throughout the treatment volume.

The system consists of an Instrument Computer which provides all direct control and data interaction with the RF Power Subsystem, Receiver Subsystem, Transmit/Receive/Multiplexing Modules, Thermistor Thermometry Subsystem, and Cooling Subsystem. The system electronics, Instrument Computer, and Cylindrical Transducer Array/Treatment Cavity are integrated into a Patient Table Assembly/Subsystem, which provides a comfortable treatment support for the patient, accurate positioning of the breast within the treatment cavity, and a convenient means for consolidating system components and functions.

The Patient Table subsystem is discussed further in subsection IV.d.2.iii. The RF Power Subsystem generates the drive power for the transducers during therapy and is used for pulse-echo imaging of the breast contour. The T/R MUX Modules select which transducers are active for receiving or transmitting at any given moment during therapy. The Thermometry Subsystem is used to provide relatively high density (14 sensors in each of 5 needles) invasive thermistor thermometry information within the breast regions of interest. The Cooling Subsystem consists of thermoelectric coolers connected to the cylinder cavity and a temperature controller interfaced to the Instrument Computer. The Control Computer, including all operator interfaces, display and treatment recording functions, is located separately in the Operator Console.

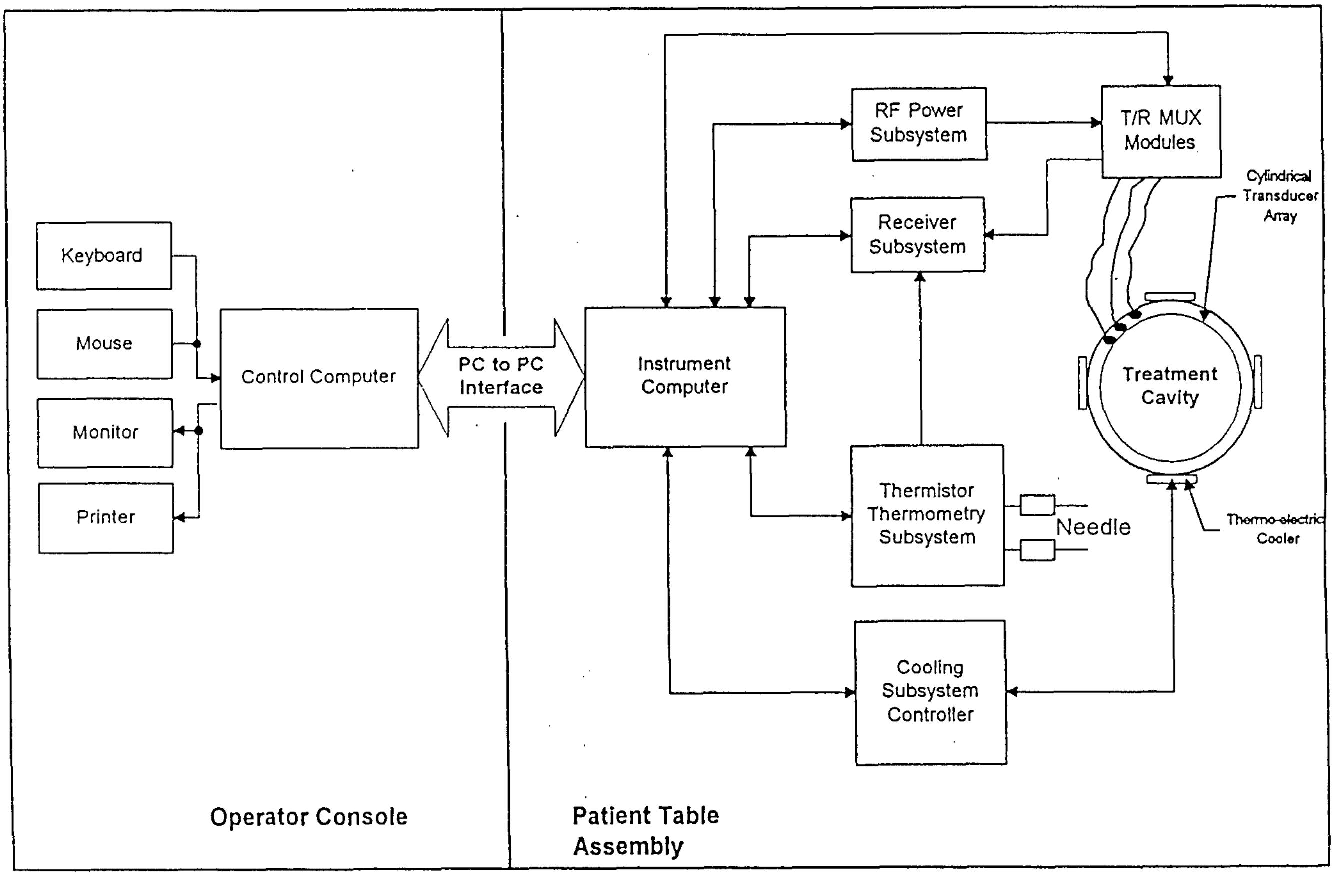

Figure 12. System hardware block diagram

IV.d.2.ii. Transducer Array Applicator Subsystem

The Transducer Array Subsystem is illustrated schematically in Figure 5 and photographically in figure 13. The array consists of 8 individual rings which are "stacked" with water-tight seals between rings. Each ring accommodates 48 transducers. The exact configuration and operating characteristics of the cylindrical transducer array has been extensively studied using theoretical computer simulations described in section III.d.2. Each transducer is square having dimensions of 1.5cm x 1.5cm on a side. Spacing between transducers along vertical dimension of the cylinder is 2.4mm. Therefore, 8 rings accommodates breast "lengths" of 13 cm or less.

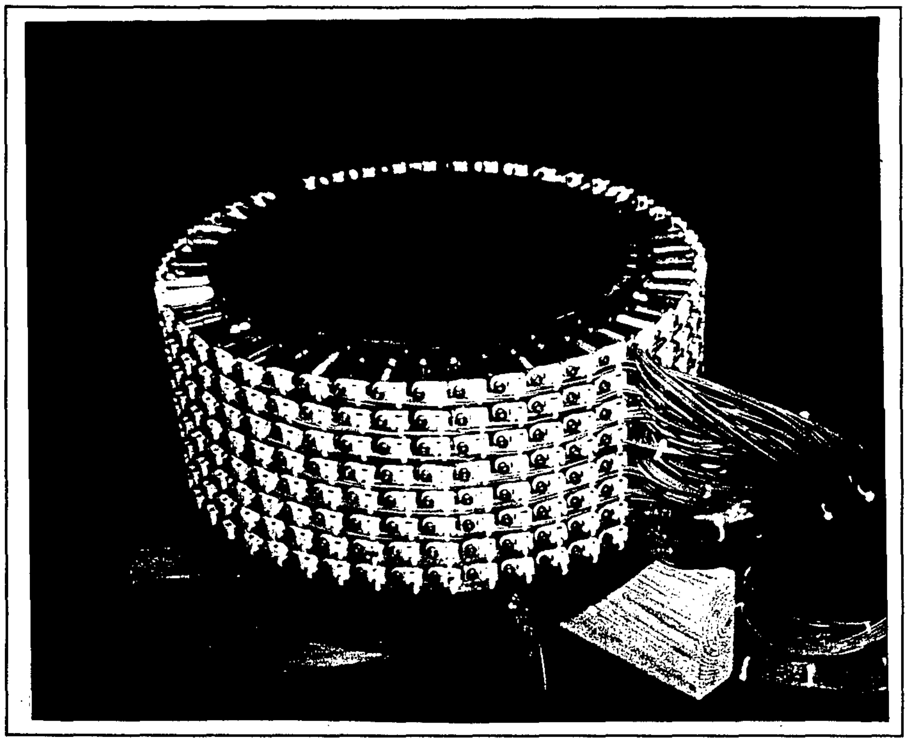

Figure 13. A photograph of the un-shrouded ultrasound transducer array. 384 transducer surfaces are mounted on the inside of a 25 cm diameter cylinder. Visible are the external electrical connections and the coaxial cables supplying RF power to the transducers.

IV.d.2.iii. Patient Table Subsystem

The patient table subsystem in shown in the two perspective illustrations in Figures 14 and a photograph is shown in Figure 15. The patient table is designed to maximize utilization of symmetry of the breast by positioning the patient in a prone position with the breast suspended through an opening in the table top. The table top consists of sheet steel with a tubular steel outer frame fabricated to provide for a 1.5" foam padding insert. The foam is sealed and the entire table top covered with a Naugahyde covering which is stretched tight and snapped into place, and is easily removed for cleaning. The foam insert (and Naugahyde) taper near the hole through which the breast is suspended in order to ensure that the entire breast can be extended beneath the table top for treatment if indicated.

Specifications for the patient table subsystem are indicated in Table 1.

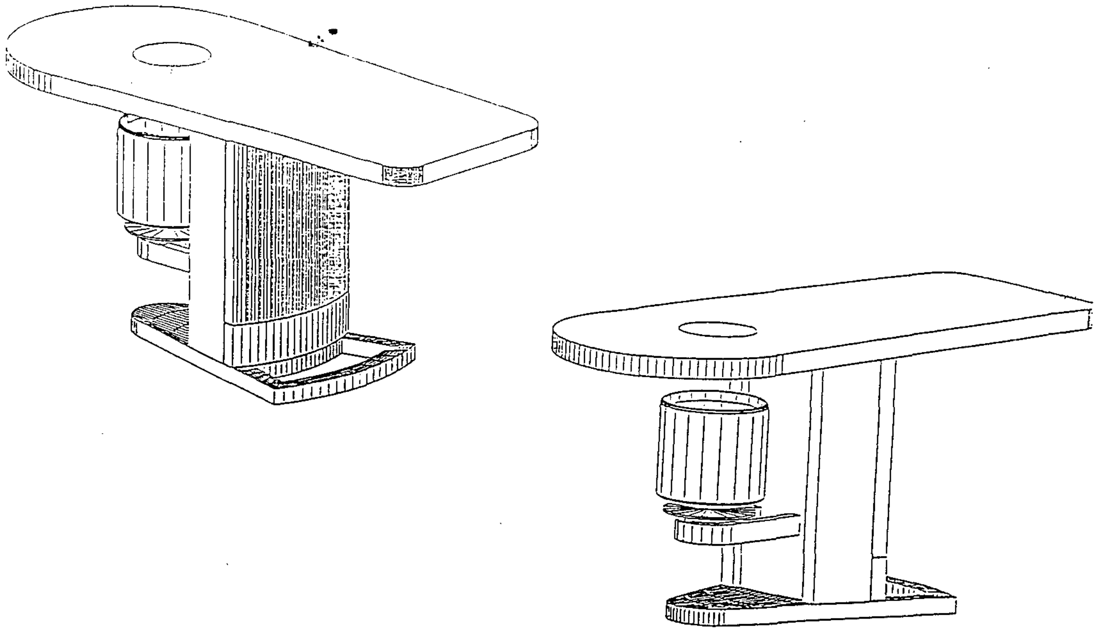

Figure 14. Perspective drawings of the patient table subsystem.

Table 1. Treatment table specifications:

Table top overall length	78"	
Table top height	37"	
Load capacity	300 lbs.	
Table top hole size	10" diameter (25.4 cm)	
X-Y Applicator positioning:	± 2.5"	Vernier drive
	± 6.0"	Vernier drive
	180°	Vernier drive
Structure material	Stainless steel	
Paint	Non-toxic texture	
Table top cover	1 ¼" foam with Naugahyde cover	

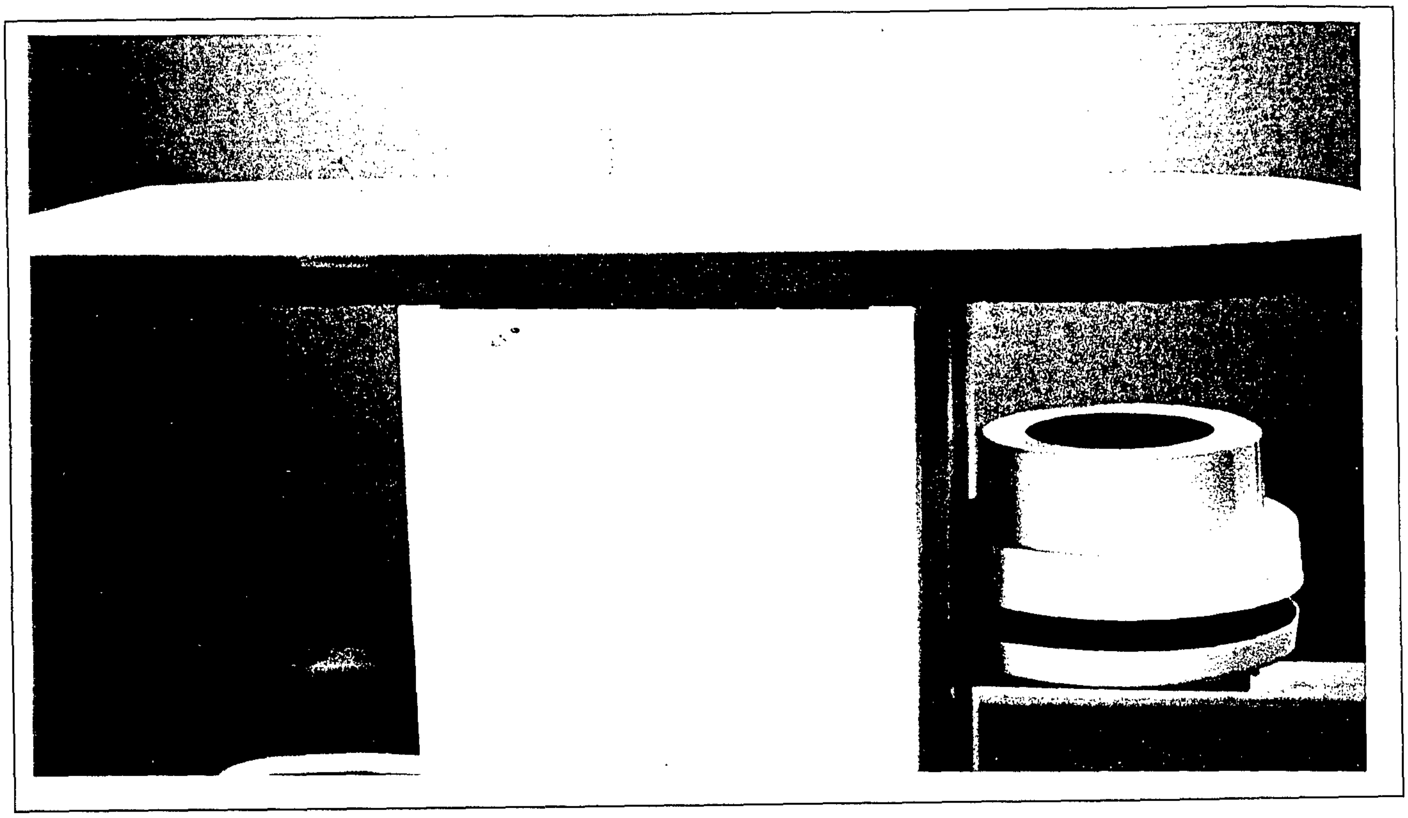

Figure 15 shows a photograph of the table top system mounted on the instrument stand. The shrouded transducer array is visible below an opening in the right side of the table top.

IV.d.2.iv. System Control and Computer Subsystems

Upon power up of the system, the treatment software will execute automatically so that no interaction is required by the user to start the software. All available options are displayed to the user in a graphical format. Options that are available at the startup screen include access to the treatment planning software, file handling utilities, diagnostic mode selections, treatment record printing, and treatment initiation. The user makes requests of the system via the computer keyboard, computer mouse, or a mechanical pause switch during all phases of the treatment. A hardware pause switch is provided that guarantees no output power can be delivered in case of an emergency.

Prior to initiation of a treatment, the user will be required to complete a treatment plan. The treatment planning software is in graphical form to simplify data entry, such as target volume locations, the number and location of temperature sensors, target temperatures for each sensor, scar tissue locations, and patient information.

The BTS will perform the treatment in a computer-assisted manual mode. The user selects different target tissue regions on the computer screen and sets a new target temperature value for each region. The computer system will then recommend which ultrasound transducers output power needs to be adjusted to accommodate the users request. The operator makes the actual transducer and power selections.

Treatment progress and status information will be available to the user via a graphical user interface that provides treatment information such as temperature distribution, power absorption distribution, thermal dose distribution, target contour information, and treatment time information. The user will not be required to determine power levels for the individual transducers since temperature distribution information is continually available on a graphics screen. The user will have the capability to specify the target temperatures for locations where implanted sensors are placed as well as other locations in the target volume. Once a treatment has been completed, the user will be returned to the startup screen so that printing of the treatment information may be performed, and duplication of the treatment files may be accomplished.

The computational functions of the system are divided between two computers, the Treatment Control Computer and the Instrument Computer. The control computer's primary responsibility is to control the overall treatment functions and provide an intuitive user interface via a graphics monitor, keyboard, and mouse. The Instrument Computer is primarily responsible for communicating with other hardware devices such as the Cylindrical Array Applicator, the Video Sub-system, Cooling Sub-system, Thermometry Sub-system, and the Pause Switch. The system software diagram is shown in Figure 16.

The Treatment Control Computer is a standard architecture machine with no custom hardware interfacing requirements that connects to the Instrument Computer via an ethernet communications link and is also connected to a printer to allow hard copy of the treatment information. For treatment results analysis, demonstrations, and software development purposes the Treatment Control Computer can be operated without the Instrument Computer connected.

The Instrument Computer implements the user control and measurement interfaces to other hardware portions of the treatment instrument, is located in the patient table sub-system near the control and measurement points, and communicates with the Control Computer via a bi-directional communications link. For software design consistency and to avoid unnecessary costs, the Instrument Computer was implemented as PC-AT compatible computer (Intel 80486 CPU based) filled with interface cards.

IV.d.2.v. RF Power Subsystem (TMR Boards)

This subsystem resides on the 24 Transmit-Multiplex-Receive (TMR) boards and consists of 96 independent RF amplifiers driven by 96 separate oscillator sources. Each oscillator consists of a computer-controlled voltage controlled oscillator (VCO) operating over the frequency range 1 - 5 MHz. Each of the independent RF amplifiers incorporates its own voltage control/regulator circuit which provides independent computer control of amplitude (output power level) for each amplifier channel as described in section III.d.1 and figure 1. Each RF amplifier output is connected to a T/R MUX input circuit. A block diagram of the TMR board is shown in Figure 3. Also located on each TMR board is the receiver circuit used for pulse-echo and attenuation measurements.

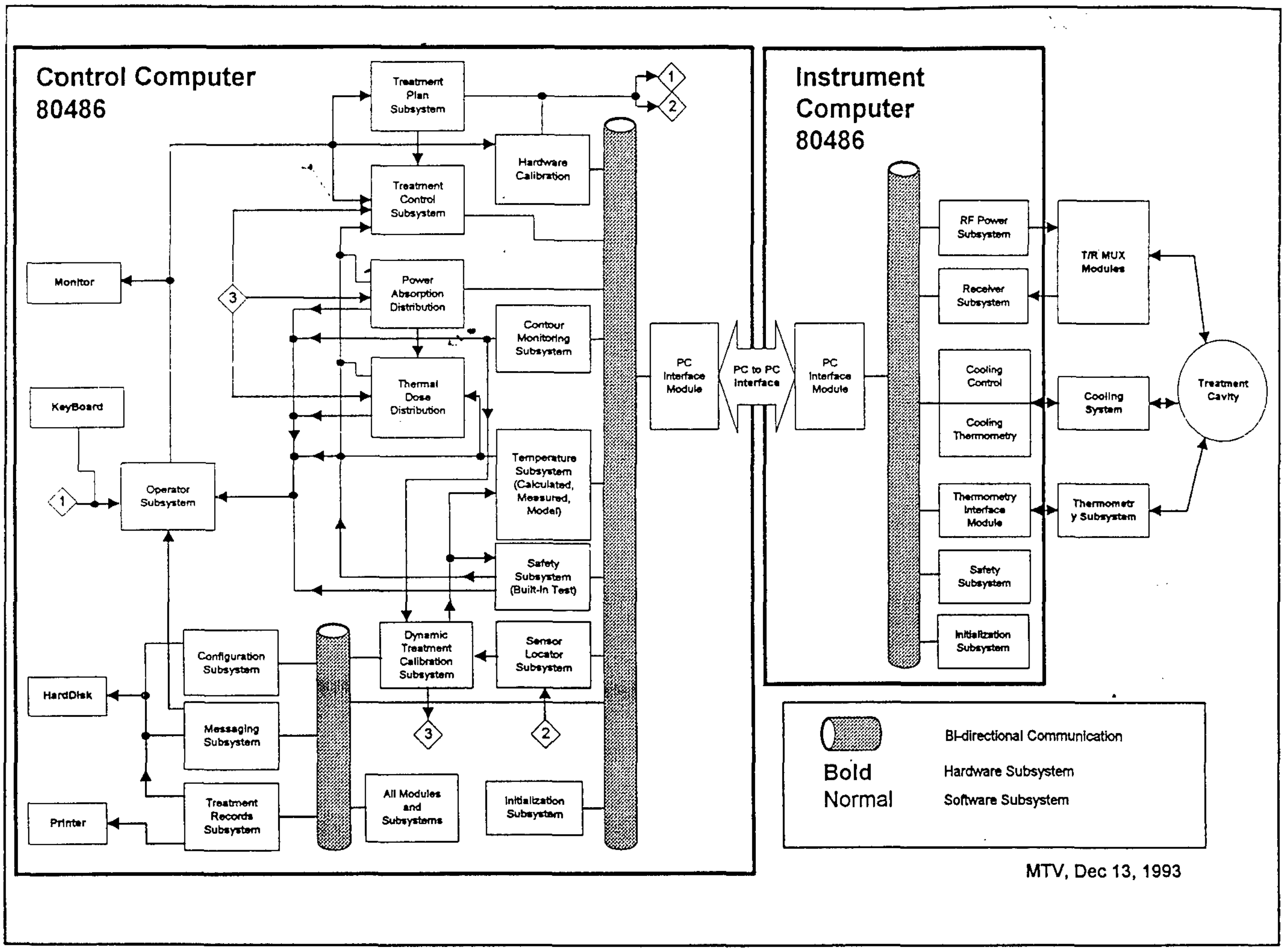

Figure 16. System Software block diagram

IV.d.2.vi. Thermometry Subsystem

The thermometry utilized for invasive measurements in the breast is a multi-channel thermistor-based Profilometer system [2] (stand-alone module incorporated into therapy system) which provides a large number of sensor points within a single needle probe. The probes used to measure temperature are thermistors mounted on needles, molded into catheters, or other designs as desired. Stainless steel needles are planned for use with this system. These are 19 ga. needles, each contain 14 thermistor sensors. The length of the probes and the spacing of the temperature sensors can be tailored to the individual patient. This range of probe configurations permits selection of a probe appropriate for the particular site being monitored. The multi-channel temperature instrument monitors and records up to 6 multi-channel temperature probes. Each probe can measure temperature at up to 14 sites (thermistors), resulting in a total of 6*14 = 84 measurement sites.

The present instrumentation has a resolution down to 0.1 degree Celsius, and the temperatures from all channels are sampled once every 2 seconds. The thermometry sub-system consists of a medically isolated driver card for each channel, a controller card, and an interface card, which are illustrated in Figure 17. Each channel card contains excitation and signal conditioning circuitry for the sensors. The controller card coordinates the different channel cards. The interface card handles communication to and from the Instrument Computer. Analog-digital conversion is handled by a commercially available board in the Instrument Computer.

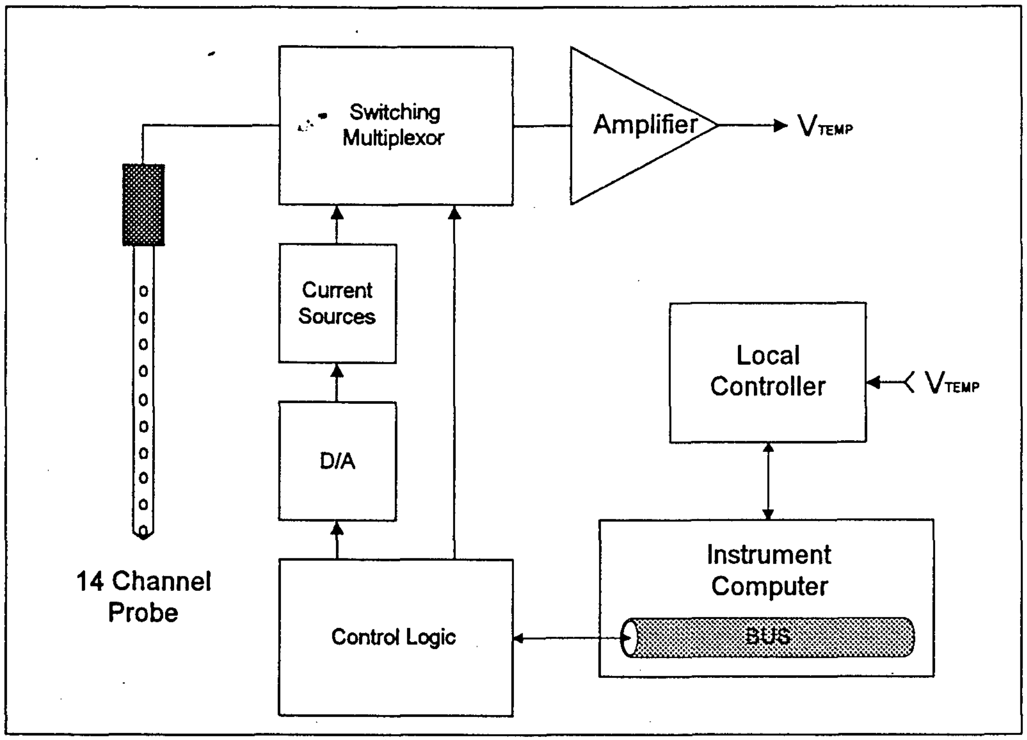

Figure 17. Thermometry subsystem

IV.d.2.vii. Non-Invasive Monitoring Subsystem

As previously discussed, we have chosen to perform real-time measurements of ultrasound attenuation, velocity and back-scatter in the breast tissue. This offers real-time assessment of the breast position within the cylinder and of the three-dimensional power deposition, which can be correlated with temperature.

(1) Contour Monitoring

Pulse-echo reflection data is collected using the cylindrical transducer array. The reflection data is collected by the Instrument Computer's Receiver subsystem and sent to the Contour Monitoring subsystem. The Contour Monitoring subsystem converts this information into image data that outlines the contour of the breast and prepares it for display. It also maps 3D image data into a 2D image space for the generation of 2D displays. This sub-system provides information to the Dynamic Treatment Calibration Subsystem to locate the breast within the treatment cylinder for detection of breast movement within extreme boundaries set in the

Configuration file, and for updating the treatment cells in which the contour (surface of the breast) resides. Figure 18 is a simplified depiction of the pulse-echo monitoring method.

Contour Monitoring is performed by selecting a single ultrasound transducer to transmit an ultrasound pulse into the treatment cavity and then receiving the same pulse while measuring the time it takes for the pulse to return. This measurement is called a "Pulse-Echo" measurement since it measures the time it takes for a pulse to return to the transducer. The sooner a pulse returns the closer the object is to the face of the transducer. The spatial resolution of this technique is about 2 mm. By pulsing all of the transducers sequentially one at a time a 3 dimensional contour map of the target tissue located in the applicator can be generated.

(2) Power Absorption/Attenuation Monitoring

The Power Absorption Distribution Subsystem calculates the power deposition within the tissue based on current temperature and power information and absorption models. Figure 19 is a simplified depiction of the "Through Transmission" power measurement.

During treatment, the power absorption throughout the target volume for each transducer pair is measured by the Instrument Computer, and sent to this subsystem. The Power Absorption Distribution subsystem converts this information into an array representing the computed absorption or SAR in (W/cm^3) for each treatment cell (minimum unit treatment volume). This computed absorption array is then sent to the Thermal Dose Distribution subsystem for its next simulation model cycle.

The "Through Transmission" power is determined by selecting a single transducer to produce an ultrasound pulse while at the same time having the transducers that are located on the other side of the cylinder (through the tissue) receive the pulse and measure the change in magnitude of the pulse (pulse amplitude degradation) once it has been received. A correlation between the transmitted magnitude and the received magnitude can then be used to determine the amount of power that was absorbed in the tissue. This feature will not be utilized for direct control of treatment, but rather for obtaining information which may be useful as an aid to monitoring treatment.

IV.d.2.viii. Software System

The System Software Block Diagram (refer to Figure 16) shows the system control implementation approach. System control is divided between two computers, the Treatment Control Computer and the Instrument Computer. The Treatment Control Computer provides an operator control interface, measurement interpretation, feedback control, and data recording. The Instrument Computer provides direct hardware interfacing for collecting temperature measurements, collecting measured data from receivers, setting control output levels, and controlling the timing for multiplexing the transducer array.

(1) Operator Interface

The Treatment Control Computer performs several interrelated functions. The operator input and display subsystem provides control over the treatment and feedback to the user as the treatment progresses. User control over the treatment is a high interaction level; actual control over the timing, power levels, and frequencies applied to the large numbers of individual transducer elements is complex and must be controlled rapidly. Therefore, an operator is not capable of controlling the individual transducer parameters directly.

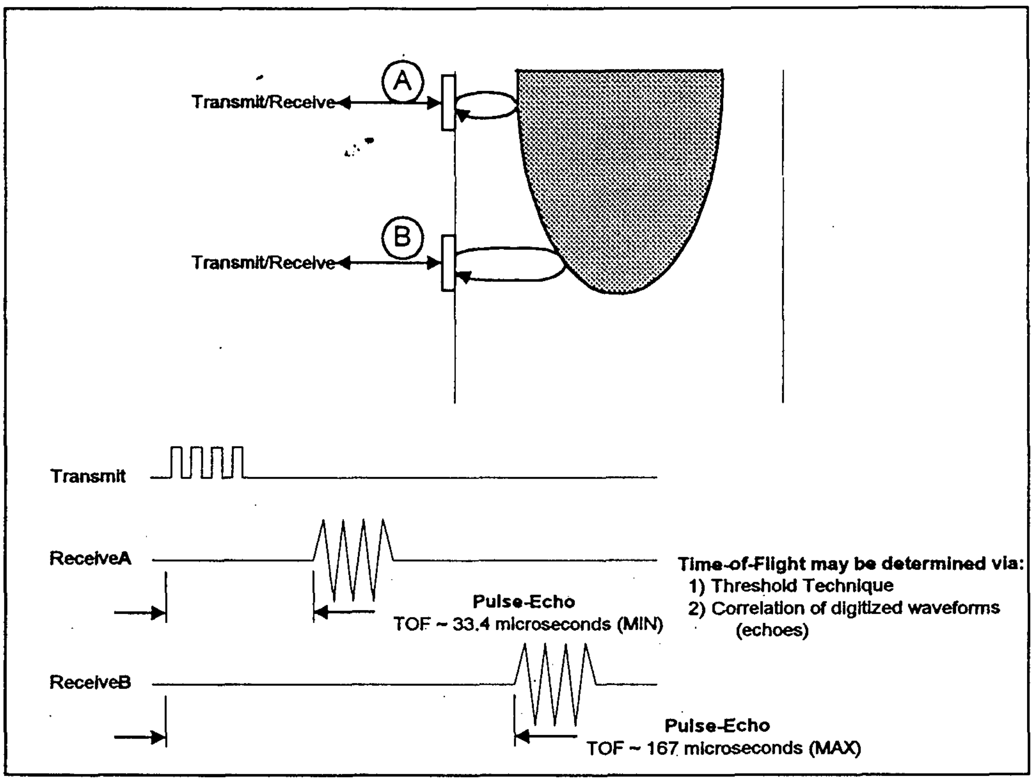

Figure 18. Schematic illustration of contour monitoring.

The operator interface is one of the most important parts of the treatment system since it represents "the system" to the users. Therefore, the engineering design approach must be secondary to the user-oriented approach in this instance. Not only must the data interfaces be considered, but also the tools (keyboard, mouse, etc.) and the display organization and options. The operator interface will define the treatment control and reference data and display a variety of types of treatment progress and general display information.

The displays to be provided during treatment includes:

1. A breast contour
2. Display of the temperature probe locations
3. 2D cross section breast images, each with selected overlays of calculated isotherms, thermal dose, or temperature.
4. Hot spot alerting
5. An optional display of 2D cross sections by location
6. Continuous time and temperature monitoring displayed as a graph for each temperature probe

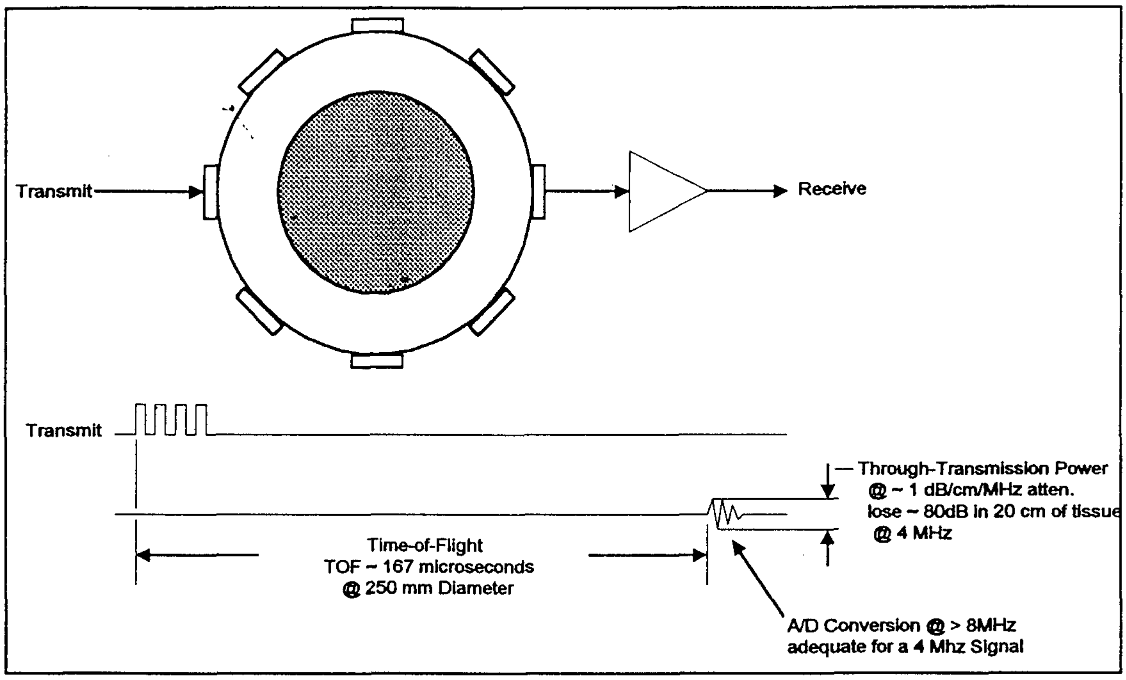

Figure 19. Schematic illustration of power monitoring.

(2) Treatment Planning

The Treatment Planning Subsystem is responsible for obtaining information from the user necessary for proper treatment operation. Information required by this subsystem includes the number of treatment sensor probes, number of sensors per probe, spacing of the sensors on the probe, target temperature and temperature limits for individual sensors and/or sub-region locations in the treatment volume, patient name and/or number identifier, and therapy region (or regions) determination. The treatment plan subsystem maintains this information and provides it to other subsystems.

The Treatment Plan Subsystem will also provide a method for the user to select regions as small as an octant and select a temperature set-point for the entire octant at once. It further provides seeding of overall power to each ring. It also provides for selection of sub-regions within an octant which can be controlled independently. These sub-regions can be utilized to provide decreased power levels to areas such as scar tissue.

(3) Treatment Control

The Treatment Control Subsystem sets transducer output power based on information received from the operator assisted by the, Thermal Dose Distribution Subsystem, Treatment Plan Subsystem, Dynamic Treatment Calibration Subsystem, and Temperature Subsystem. Once output power and frequency setting have been determined, the Treatment Control Subsystem sends those data to the RF Power Subsystem on the TMR board so that actual power changes can be made for the applicator transducers.

The Treatment Control Subsystem operates on treatment sub-regions (volumes) defined by the user. The actual volume of each treatment sub-region is determined by the treatment plan.

The Treatment Control Subsystem operates in a computer assisted manual mode, with the user making manual adjustments of the temperature set-points for each treatment cell volume during the treatment. The default control method will be to heat the breast to 43°C in all treatment volume cells.

IV.e. Monitoring procedure

A monitor from the DFCI will be appointed and a monitoring procedure will be established.

IV.f. Labeling

Labeling information including the preliminary operating manual are found in Appendix D and E.

IV.g. Informed consent

1. Procedures and time scheduling for obtaining informed consent:

   After a subject has been identified as a potential study participant, the subject will be informed by the investigating physician of the nature of the study and given an information package containing a complete explanation of the objectives and procedures of the study. The physician will discuss the study with the subject and clarify any questions that may exist. The subject will then be asked to sign the informed consent form, indicating his or her intentions.

2. Outline of documentation and information is provided in Appendix B.
3. The informed consent form itself contains the following items and will be given to the patient:
   a. An explanation of hyperthermia and how it has been used in cancer therapy in layman's terms.
   b. A detailed list of anticipated adverse effects, measures taken to minimize these effects and possible corrective therapy applied.
   c. A summary of the results of similar studies, detailing the reported response rates and adverse effects.
4. Informed consent statements

Informed consent statements are included in Appendix B.

IV.h. IRB information

The IRB at DFCI operates in full compliance with all HHS and FDA regulations covering the use of human subjects in research. We have a Multiple Project Assurance (#M 1034) approved by NIH's OPRR and an IRB (#01) which reviews all protocols used at DFCI.

IV.i. Additional records and reports

None.

V. Manufacturing methods, facilities, and control

1. The device was manufactured by Dornier Medical Systems, Inc., which is inspected by the FDA for compliance with Good Manufacturing Practice (GMP) regulation (43 FR 7/21/78, pp. 31508-31532 or CFR part 820). The device is a one-of-a-kind custom device built under contract to DFCI, is not intended for commercial production, and was not fabricated under strict GMP guidelines. Contact Dr. E.C. Burdette at Dornier Medical Systems, Inc., 206 N. Randolph, Suite 301, Champaign, Illinois 61820, (217) 355-6070 concerning fabrication of the BTS.
2. Non-destructive performance testing, including procedures, calibration, and final tests to be employed to determine that the device has not deteriorated between manufacture and the time of use are described below.

   The device itself is designed to perform "self checks" prior to and during operation. Diagnostics are run to insure proper computer operation. During therapy, the system monitors the tumor and normal tissue temperature distribution. Forward and reverse power on all applicator transducer elements are monitored during therapy. If the forward power level exceeds the level called for by the therapy control program, the system will shut down. Also, if the reverse power exceeds a preset percentage of the forward power for a given applicator element, that channel will automatically shut down. Output power monitoring is done both in hardware and software. A prominently displayed array of light emitting diodes indicates at all times if any power is applied to any of the transducer elements at any time. Any discrepancies will cause a separate circuit to produce a shutdown of the hardware.
3. The procedure for inspecting incoming device components and the methods, controls and other fabrication procedures used for the manufacturing, processing, packaging, and storage are in accordance with Dornier Medical Systems, Inc. procedures.

VI. Agreement to be signed by investigators.

Not applicable. The institute will assess the clinical and technical expertise of each individual investigator involved. Signed 1572 forms and CV's in appendix F.

VII. Name and address of IRB chairman

Arthur Skarin MD. (Scientific Chairman)
Richard D'Augusta R.Ph., M.P.A. (Administrative Chairman)
Dana-Farber Cancer Institute
44 Binney Street
Boston, MA 02115

VIII. Amount charged for the device.

The BTS is a custom device built to specifications determined by the DFCI. Its development was funded by USARMDC Contract DAMD 17-93-C3098.

IX. Other information.

None.

X. General References.

1. Bornstein B.A., Zouranjian P.S., Hansen J.L., Fraser S.M., Gelwan L.A., Teicher B.A., Svensson G.K. Local hyperthermia, radiation therapy, and chemotherapy in patients with local-regional recurrence of breast carcinoma. Int. J Rad. Oncol. Biol. Phys. 1992, 25: 79-85
2. Bowman, H.F., Curley M.G., Newman W.H., Summit S.C., Kumar S.C., Martin G.T., Hansen J.L., and Svensson G.K. Tumor hyperthermia: dense thermometry, dosimetry, and effects of perfusion. In: Advances in Biological Heat and Mass Transfer, HTD-volume 189/BED, 18:23-31, ASME, 1991.
3. Corry P.M., Jabboury K., Kong J.S., Armour E.P., McGraw F.J., Leduc T., Evaluation of equipment for hyperthermia treatment of cancer. Int. J. Hyperthermia, 4, 53-74, 1988.
4. Dewey W.C., Hopwood L.E., Sapareto S.A., Gerweck L.E., Cellular responce to combinations of hyperthermia and radiation. Radiology, 123, 463-474, 1977.
5. Dewhirst M.W., Sim D.A., Grochowski K.J., Thermal influence on radiation induced complications vs. tumor response in a Phase III randomized trial. In Overgaard J. (ed): Hyperthermia Oncology 1984, 313-316. London, Taylor and Francis, 1984.
6. Duck F.A.: Physical Properties of Tissue - A Comprehensive Reference Book. Academic Press, Inc., 1990.
7. Ebbini E.S., Cain C.A., A spherical-section Ultrasound Phased-Array Applicator for Deep Localized Hyperthermia. IEEE Trans. Biomedical Engineering. BME-38(7), 634-643, July 1991.
8. Emami B., Myerson R.J., Scott C., Gibbs F., Lee C., Perez C., Phase I/II study, combination of radiotherapy and hyperthermia in patients with deep-seated malignant tumors: Report of a pilot study by the Radiation Therapy Oncology Group. Int. J. Radiat. Oncol. Biol. Phys. 20:73-79, 1991.

Radiat. Oncol. Biol. Phys. 20:73-79, 1991.

9. Fessenden P., Lee E.R., Anderson T.L., Strohbehn J.W., Meyer J.L., Samulski T.V., Marmor J.B., Experience with multitransducer ultrasound system for localized hyperthermia of deep tissues. IEEE Trans. Biomedical Engineering, BME-31(1), 126-135, 1984.

10. Holland R., Connolly J.L., Gelman R., Mravunac M., Henriks J.H.C.L., Verbeek A.L.M., Schnitt S.J., Silver B., Boyages J., Harris J.R. The presence of an extensive intraductal component following a limited excision correlates with prominent residual disease in the remainder of the breast. J. Clin. Oncology 8:113-118, 1990.

11. Hynynen K., Johnson C., Moros E., Roemer R.B., DeYoung D., Evaluation of physical parameters of ultrasound hyperthermia. IEEE Eighth annual conference of the Engineering in Medicine and Biology Society pp. 1444-1447, 1986.

12. Hynynen K., Roemer R., Anhalt D., Johnson C., Xu Z.X., Swindell W., Cetas T., A scanned, focused, multiple transducer ultrasonic system for localized hyperthermia treatments. Int. J. Hyperthermia, 3, 21-35, 1987.

13. Kapp D.S., Fessenden P., Samulski T.V., Bagshaw M.A., Cox R.S., Lee E.R., Lohrbach A.W., Meyer J.L., Prionas S.D., Stanford University institutional report. Phase I evaluation of equipment for hyperthermia treatment of cancer. Int. J. Hyperthermia 4:75-115, 1988.

14. Kapp, D.S., Cox, R.S., Fessenden, P., Meyer, J.L., Prionas, S.D., Lee E.R., Bagshaw, W.A.: Parameters predictive for complications of treatment with combined hyperthermia and radiation therapy. Int. J. Rad. Oncol. Biol. Phys. 22 (5) 999-1008. 1992.

15. Kaye G.W.C., Laby T.H., Tables of Physical and Chemical Constants. 1973 (London. Longman)

16. Lele P.P., Advanced ultrasound techniques for local tumor hyperthermia. Radiological Clinics in North America, 27(3), 559-575, 1989.

17. Lele P.P., Rationale, technique and clinical results with scanned focused ultrasound (SIMFU) system. IEEE Eighth annual conference of the Engineering in Medicine and Biology Society, pp. 1435-1440, 1986.

18. Lele P.P., The MIT, scanned intensity modulated focused ultrasound (SIMFU) system. Proceedings from the 5th International Symposium on Hyperthermic Oncology, Kyoto Japan, Aug. 29 - Sept. 3, 1988.

19. Madsen E.L., Zagzebski J.A., Banjavie R.A., Jutila R.E., Tissue mimicking materials for ultrasound phantoms. Med. Phys. 5(5), Sep/Oct. 1978.

20. Nussbaum G.H., Seppi E., Shapiro E., Sathiaseelan V., Straube W., Emami B., Performance characteristics of "HELIOS", A thirty-beam ultrasound device for deep-tumor hyperthermia. IEEE Eighth annual conference of the Engineering in Medicine and Biology Society, pp. 1441-1443, 1986.

21. Nussbaum G.H., Straube W.L., Drag M.D., Melson G.L., Emami B., Sathiaseelan V., Seppi E., Shapiro E., Potential for localized adjustable deep heating in soft-tissue

environments with a 30 beam ultrasonic hyperthermia system. Int. J. Hyperthermia, 7(2), 279-300, 1991.

22. Overgaard J., Rationale and problems in the design of clinical trials. In Overgaard J. (ed): Hyperthermia Oncology 1984, 325-337. London, Taylor and Francis, 1984.
23. Pilepich M.V., Myerson R.J., Emami B.N., Perez C.A., Straube W., von Gerichten D., Regional hyperthermia-assessment to tolerance to treatment. Int. J. Radiat. Oncol. Biol. Phys. 14:247-352, 1988.
24. Sapozink M.D., Gibbs F.A. Jr, Egger M.J., Steward J.R., Regional hyperthermia for clinically advanced deep-seated pelvic malignancy. Am. J. Clin. Oncology (CCT) 2:162-169, 1986.
25. Sapozink M.D., Gibbs F.A. Jr, Egger M.J., Steward J.R., Abdominal regional hyperthermia with annular phased array. J. Clin. Oncology. 4:775-783, 1986.
26. Sapozink M., Emami B., Radiation Therapy Oncology Group Study 89-08: A Phase I/II study to evaluate radiation therapy and hyperthermia for deep-seated tumors.
27. Seppi E., Shapiro E., Zitelli L., Henderson S., Wehlau A., Wu G., Dittmer C., A large aperture ultrasonic array for hyperthermia treatment of deep-seated tumors. IEEE 1985 ultrasonic symposium, pp. 942-948, 1985.
28. Shimm D., Hynynen K., Anhalt D., Roemer R.B., Cassady J.R., Scanned focussed ultrasound hyperthermia: Initial clinical results. Int. J. Radiat. Oncol. Biol. Phys. 15:1203, 1988.
29. Vernon C.C., Collaborative phase III superficial hyperthermia trial (MRC/ESHO/PMH). Program and Abstracts of Fourteenth Annual Meeting of the North American Hyperthermia Society, p. 87, 1994.

Appendix A

Clinical Protocol

PROTOCOL NUMBER: 95-006

APPROVED BY

DIVISION CHIEF/DFCI: 1/25/95
DATE SIGNATURE

BIOSTATISTICAL REVIEW: 3·21·95 Janet W. Anderson
DATE SIGNATURE

SCIENTIFIC REVIEW: 2/6/95 BWK
DATE SIGNATURE

HUMAN PROTECTION COMMITTEE: 4/6/95
DATE SIGNATURE

ORIGINAL DATE: 3/2/95 (Issue date of protocol reviewed by HPC.)

APPROVAL DATE: 4/24/95 (Date protocol met HPC conditions.)

ACTIVATION DATE: ______ (Open to patient entry.)

REVISION DATE	SECTIONS	HPC REVIEW DATE
6/22/95	Schema, table of Contents, Section 2.1, 3.12, 3.13, 3.10.2, 5.73, 5.73.4, 5.73.5, 9.0 and Appendix G.	8/3/95

DANA-FARBER
CANCER INSTITUTE

44 Binney Street, Boston, MA 02115

PROTOCOL ADMINISTRATION OFFICE
Tel. 617-632-3029
Fax 617-632-2686

THE JIMMY FUND

CURRENT ISSUE: 6/22/95

GROUP #: None
SPONSOR: U.S. Army R&D
IND/IDE #:

PROTOCOL NUMBER*: 95-006

PROTOCOL NICKNAME: RT and HT for Breast Cancer

PROTOCOL NAME: Radiation and Thermal Therapy for Extensive Intraductal Carcinoma

PHASE OF STUDY: I

DRUGS:

DFCI STUDY CHAIRPERSON(S):

Bruce A. Bornstein, MD
Jay R. Harris, MD

OTHER INVESTIGATORS:

Jorgen L. Hansen, MSc
Abram Recht, MD
Kitt Shaffer, MD, PhD
Charles L. Shapiro, MD
Barbara L. Smith, MD, PhD
Goran K. Svensson, PhD

INSTITUTIONAL PARTICIPANTS:	
DFCI INPATIENT	
DFCI ADULT CLINIC	X
DFCI PEDIATRIC CLINIC	
CHILDREN'S HOSPITAL	
BRIGHAM & WOMEN'S	
BETH ISRAEL	
DEACONESS HOSPITAL	X
HARVARD COMM. HEALTH	
OTHER INSTITUTIONS:	
Joint Center for Radiation Therapy	
APPROVED FOR CCOP USE?	
RANDOMIZED?	

TARGET POPULATIONS:	
ADULT PATIENTS	X
PEDIATRIC PATIENTS	
VOLUNTEERS:	
Pediatric	
Adult	
MODALITIES:	
RADIATION THERAPY	X
CHEMOTHERAPY	
SURGERY	
BMT	
QOL, SURVEYS, etc.	
GENE THERAPY	
OTHER : Hyperthermia	X

* **This protocol is the property of the Dana-Farber Cancer Institute; it may contain information that is confidential and proprietary to the Institute or the study sponsor. Its distribution is limited to the Institute in accordance with DFCI policy.** *Approval by the Protocol Administration Office is required for any other distribution.*

6/22/95 [redacted]

SCHEMA

PHASE I

DEVICE EVALUATION STUDY

Radiation and Thermal Therapy for Extensive Intraductal Carcinoma

(in patients undergoing definitive radiation therapy for breast cancer)

Patients with:

Infiltrating ductal carcinoma of the breast with an extensive intraductal component (EIC ⊕)

- re-excision with residual tumor
- positive or close ($\leq$ 1 mm) margins

or

Ductal carcinoma in situ (DCIS) of the breast

- re-excision with residual tumor
- positive or close ($\leq$ 1 mm) margins

REGISTER

Radiation Therapy

6100 cGy / 6 weeks

\+

Hyperthermia

T =40-43 ^{o}C X 45 min. x 2 Tx

(no target volume temperature $\geq$ 43 ^{o}C)

TABLE OF CONTENTS

1.0 INTRODUCTION

The use of radiation therapy in combination with breast-conserving surgery has been established as a standard option for patients with early-stage breast cancer (1). The goal of this approach is to eradicate the cancer locally and to preserve the cosmetic appearance of the breast. This is achieved by resecting the tumor in the breast and using moderate doses of irradiation to destroy any remaining cancer cells in the breast. Randomized studies have demonstrated equivalent survival for patients treated with mastectomy and with breast conserving surgery and irradiation (2, 3).

1.1 Invasive Breast Cancer

Local recurrence of the cancer following breast-conserving treatment is seen in about 10 -15% of cases and, most commonly, these recurrences are treated by mastectomy (4). Studies from our institution, and elsewhere, have demonstrated that the likelihood of local recurrence is related to the presence and extent of the intraductal component of the cancer (5-9). Those cancers with an extensive intraductal component (EIC) have a much higher risk of local recurrence compared with those without an EIC. Boyages and colleagues at the Joint Center for Radiation Therapy (JCRT) found a recurrence rate of 26% (43/166) for patients with EIC-positive tumors compared to 7% (29/418) for EIC-negative tumors ($p=0.0001$) (9). Schnitt reviewed 181 patients treated at the JCRT with conservative surgery and radiation therapy and whose final microscopic margins of resection were evaluable (10). No recurrences were observed in 18 patients with EIC-positive cancers with negative, close, or focally positive margins. However, among 12 EIC-positive patients with more than focally positive margins (cancer present at the margins in more than three low-power fields) 50% had a true recurrence or marginal miss. On the basis of these findings, the use of breast conserving treatment in patients with cancer containing an EIC and more than focally positive margins is not recommended. Most commonly, these patients are treated by mastectomy.

1.2 Non-Invasive Breast Cancer

Ductal carcinoma in situ, (intraductal carcinoma, DCIS) is a heterogeneous group of lesions whose common histologic feature is the proliferation of presumably malignant epithelial cells confined to the mammary ducts and lobules <u>without demonstrable evidence of invasion</u> through the basement membrane into the surrounding stroma. The treatment options for woman with DCIS include mastectomy, conservative surgery (CS) and radiation therapy (RT), or conservative surgery alone. Mastectomy for DCIS is associated with excellent disease-free and overall survival but, as with invasive cancers many women desire breast conservation. However, little information is available on the long-term results of breast-conserving treatment with either conservative surgery alone or conservative surgery combined with radiotherapy.

The NSABP B-17 trial is the only randomized study comparing CS with CS & RT that has reported results (59). With relatively short follow-up (mean, 43 months), the 5-year actuarial risk of local failure was 20.9% in 391 patients treated with CS alone, compared to 10.4% in 399 patients treated with CS & RT.

Figure 1 shows the results of treatment. The length of follow-up and the number of patients treated is limited, however these results suggest that there is a high risk of local recurrence over time. Overall, 50% of the recurrences were invasive. The results also suggest that RT reduces the rate of local recurrence. Possible prognostic factors (e.g., histology) have not been analyzed in this series yet. Similar findings have been found in single institution retrospective studies of either conservative surgery alone or conservative surgery and radiation therapy (11-14).

Figure 1.

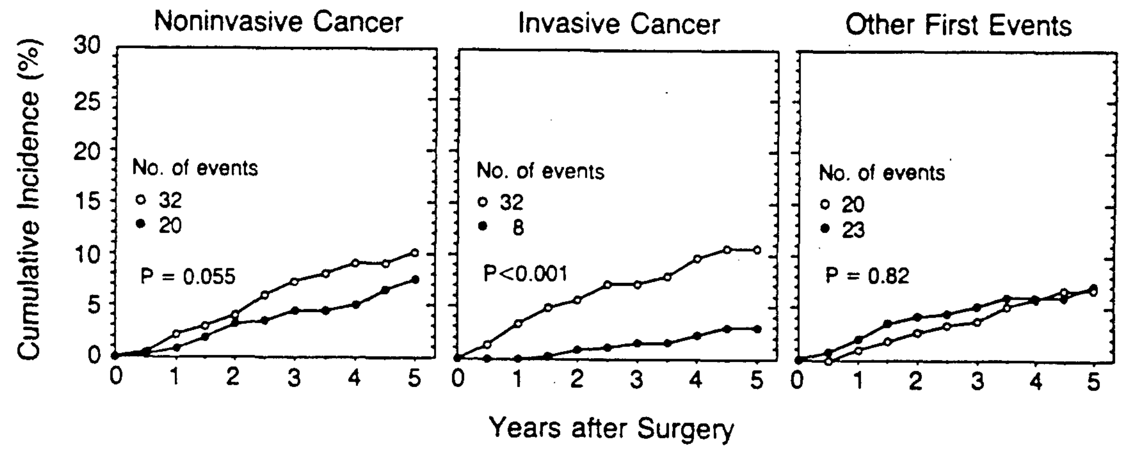

Cumulative Incidence of Noninvasive and Invasive Ipsilateral Breast Cancers and of All Other First Events in Women Treated by Lumpectomy (O) or Lumpectomy and Radiation Therapy (●).

P values are for the comparisons of average annual incidence rates between treatment groups.

from Fisher et al. (59)

1.3 Why are breast cancers containing intraductal carcinoma less effectively managed by radiation therapy?

Breast conserving treatment is an important option for many women with breast cancer. Invasive breast cancers with an EIC or pure non-invasive intraductal breast cancers have a much higher risk of local recurrence as compared to breast cancers without these histologies. Prior experience has shown that breast cancers with an intraductal component are less effectively managed by radiation therapy (4-14).

The reason for the association between pure DCIS or an EIC-postive invasive breast cancer and recurrence are not well established. There is some evidence to suggest that these cancers may be more extensive in the breast than other cancers and that the doses of irradiation consistent with maintaining the cosmetic appearance is often insufficient to destroy the numerous remaining cancer cells in these patients (5). It has also been noted that intraductal carcinoma is characterized by proliferation of cancer cells within breast ducts typically showing central necrosis. Lindley, et al., examined the histologic features predictive for an increased risk of early local recurrence in 272 patients after treatment with conservative surgery and radiation therapy with pathologic data available (8). In 213 EIC-negative patients 21 (10%) had local recurrence compared to 13 of 59 patients (22%) with EIC-positive cancers. Furthermore, when the EIC-positive group was examined for the presence of extensive necrosis (comedonecrosis), they found that the recurrence rate was 50% (9/18) in this subgroup compared to 10% (4/41) for the group without extensive necrosis. This necrosis is related to the absence of blood supply within the ducts and has been shown to correspond to hypoxemic regions based on the calculation of oxygen diffusion (15). This is in agreement with evidence that even in microscopic tumors there can be hypoxic areas ($pO_2 < 12$ mmHg) (16). Since hypoxia is known to increase radioresistance by as much as a factor of 3, it is possible that this may account, in part, for the poor results seen with irradiation in these patients (17, 18). Okunieff et al., recently reported that tumor oxygenation alone was sufficient to account for the slope of the observed dose response curve for human breast carcinoma (60). Moreover, the oxygen tension distribution is a critical modifier of radiation treatment response.

It is also known that heat is effective at killing cells in an hypoxic environment (18-21). In fact, the synergistic effect of heat and radiation on hypoxic tumor cells both *in vivo* and *in vitro* has been well demonstrated (19, 22, 23). Most studies find a greater interaction between these modalities when x-rays and heat are delivered as close together as possible, but potentiation is seen even for treatments given greater than an hour apart (23-25). Thus, patients with extensive amounts intraductal carcinoma may significantly benefit from a combined approach using thermal therapy and irradiation.

It is reasonable to anticipate that combined use of thermal therapy and radiation therapy may be more effective than radiation therapy alone (19, 22). Thus, it is of great clinical significance that this combined treatment approach extends breast conserving therapy to high risk breast cancer patients, offering the prospect of avoiding mastectomy for many patients.

1.4 Hyperthermia

Hyperthermia is a potent radiosensitizing agent. It is the use of temperatures above 37 °C (98.6 °F) to treat tumors. Temperatures are typically prescribed in the range of 40 °C to 43 °C (104-109 °F) when hyperthermia is combined with radiation or drugs. The investigation of hyperthermia in the laboratory is extensive. Hyperthermia has been shown in vitro to kill tumor cells (26) and markedly sensitize cells to the cytotoxicity of radiation (27) and chemotherapy (28). Cells are particularly sensitive to hyperthermia when they are at low pH or when they have insufficient nutrition. These are environmental conditions that reduce cell killing by radiation (19-21).

This provides the rationale for the potential therapeutic gain when hyperthermia is used alone or with radiation therapy (29). In the clinic, the results using hyperthermia alone have been disappointing. This has been the basis of a shift away from the use of hyperthermia as a sole modality of cancer therapy to hyperthermia being used in conjunction with radiation therapy or chemotherapy (30-33). The majority of early clinical studies of hyperthermia were not concerned with the feasibility of a particular technical approach, but rather efficacy and toxicity. Therefore, the capability of many devices to deliver heat uniformly to a specific target volume is unknown. In addition, most clinical studies of hyperthermia were done before the development of hyperthermia quality assurance guidelines (34-36). Not only were many of the techniques of heating inadequate, but also the sparse and artifact prone thermometry to measure temperature was inadequate. Few devices were designed and manufactured to optimize therapy to a specific tumor site, but rather were designed as machines that could treat everything. These devices were claimed to treat most tumor sites, but unfortunately they treated no tumor site well. In the field of radiation oncology, linear accelerators can treat most sites remarkably well, however, there are some sites that demand modification of the accelerator to afford therapy tailored to that site; e.g., the brain leading to the development of stereotactic radiotherapy and radiosurgery. The same is even more true of hyperthermia given the limited depths of heat penetration and the effect of biologic parameters, such as blood flow, on heating ability. Despite the technical limitations of hyperthermia some conclusions can be drawn.

1.41 Hyperthermia for Breast Cancer

A major clinical use of hyperthermia in patients with breast cancer is the treatment of chest wall recurrence following mastectomy. The long-term local control rate of recurrent chest wall lesions using radiation therapy alone is less than 50%. The combination of hyperthermia with radiation therapy, for infiltrating carcinomas, has resulted in complete response rates of 57-93% (37-46), which are superior to those seen in many series using radiotherapy alone (47-53). For example, in a study by the Radiation Therapy Oncology Group (RTOG) of twice-weekly hyperthermia and radiotherapy (given in conventional fractionation to 60-66 Gy), complete regression was seen in 85% of patients (n=54) with locally recurrent breast cancer (39). Among the small number of patients followed for 2 years, complete response was maintained in nearly all evaluable patients. Lindholm and associates (40) reported on 11 patients with multiple superficial recurrent breast cancers. The complete response rate for 17 lesions treated with radiation therapy and hyperthermia was 65% compared to only 35% for 17 matched lesions given radiation alone (p=0.0253). Other investigators have reported similar results (41-46).

In summary, for gross tumor nodules (infiltrating carcinomas) response rates of 70% to over 90% have been reported in patients treated with low-dose radiotherapy and hyperthermia, with many or most patients achieving maintained complete response and acceptable complication rates (37, 38, 40-46, 54-56).

More recently Kapp and colleagues (57) reported on the use of thermoradiotherapy for residual microscopic infiltrating breast cancer after local regional recurrence. They treated 262 fields in 89 patients and had a 68% three-year actuarial local-control rate. The number of acute and long term complications was small. For example, blisters developed after only 22 of 445 treatments (5%) and were usually self-limited. This is the first clinical report to suggest that hyperthermia may be given in the adjuvant setting of recurrent breast cancer.

1.5 Clinical Study

Our specific goal is to develop the thermal therapy technologies required to optimize the synergistic efficacy between heat and radiation for patients with infiltrating breast cancer containing an extensive intraductal component or for patients with extensive pure intraductal carcinoma. The data suggests that intraductal carcinoma is frequently necrotic or associated with necrosis and that this may be secondary to hypoxia (8, 15, 16, 60). The hypoxic environment of intraductal carcinoma may explain the relative radioresistance of tumors with extensive amounts of intraductal tumor (17, 18). Since heat is effective at killing cells in an hypoxic environment it is reasonable to anticipate that combined use of hyperthermia and radiation therapy may be more effective than radiation therapy alone (18-24).

Thermal therapy of the breast will be accomplished by a site specific multi-transducer ultrasound array applicator, developed under contract with the U.S. Army, USAMRDC Contract # DAMD 17-93-C-3098. A description of the applicator is given in the next section. The specific clinical study we propose is a Phase I - Device Evaluation Study to establish our ability to safely deliver heat to the breast using this new device (58). The purpose is to determine if we can control heat delivery and deliver heat uniformly.

Once we have established our ability to uniformly heat the breast can we then begin a Phase I/II clinical study to establish a safe and effective treatment protocol for combining thermal therapy and irradiation. We will test the hypothesis that patients with breast cancer containing an extensive intraductal component or with extensive pure intraductal carcinoma will have a reduced risk for local recurrence from a combined and non-disfiguring treatment approach using irradiation and thermal therapy. It will be of great clinical significance if this combined treatment approach extends breast conserving therapy to high risk breast cancer patients, offering the prospect of avoiding mastectomy for many patients.

1.6 Hardware: Treatment System

The device consists of the hardware components illustrated in Figure 2. A breast site-specific cylindrical array applicator of ultrasound transducers is used for thermal therapy induction and for multiple monitoring functions. The "heart" of the hardware consists of the cylindrical array of transducers that deposits power into the breast tissue for therapy and monitors the dynamic course of the treatment.

The ultrasound transducers are geometrically arranged and operated to provide several monitoring functions. One important monitoring function is to determine the breast contour and the location of the breast within the treatment cylinder.

The system consists of an Instrument Computer (Figure 2) which provides all direct control and data interaction with the RF power subsystem, receiver subsystem, transmit/receive/multiplexing modules, thermistor thermometry subsystem, and cooling subsystem. The system electronics, instrument computer, and cylindrical transducer array/treatment cavity are integrated into a patient table assembly/subsystem, which provides a comfortable treatment support for the patient, accurate positioning of the breast within the treatment cavity, and convenient means for consolidating system components and functions.

Figure 3 is a schematic of the patient support system. The RF power subsystem generates the drive power for the transducers during therapy and is used for pulse-echo imaging of the breast contour and for ultrasound velocity measurements during a brief period every 4 seconds when the therapy is gated "off." The transmit/receive/multiplexing modules select which transducers are active for receiving or transmitting at any given moment during therapy.

The thermometry subsystem is used to provide high density (14 sensors per needle) invasive thermistor thermometry information within the breast regions of interest. This is a stand-alone module, which will be integrated into the overall system in the future.

The cooling subsystem consists of thermoelectric coolers attached to the cylindrical array shell and a temperature controller interfaced to the instrument computer. The control computer, including all operator interfaces, display and treatment recording functions, is located separately in the operator console.

1.7 Food and Drug Administration Investigational Device Exemption

Pending Institutional Review Board approval, this protocol will be included as a part of the FDA Investigational Device Exemption application for this new device. This study can not begin until after FDA approval is granted.

1.8 Future Studies

If the treatment device achieves tolerable hyperthermia in the breast target volume we plan to do a Phase I/II Study examining the long-term toxicity and efficacy of treatment. The findings of the current study may make necessary a change in the number of hyperthermia treatments or the duration of treatment required to achieve the clinicly recommended therapeutic goal of T_{90} at 10 minutes equivalent to 43 °C.

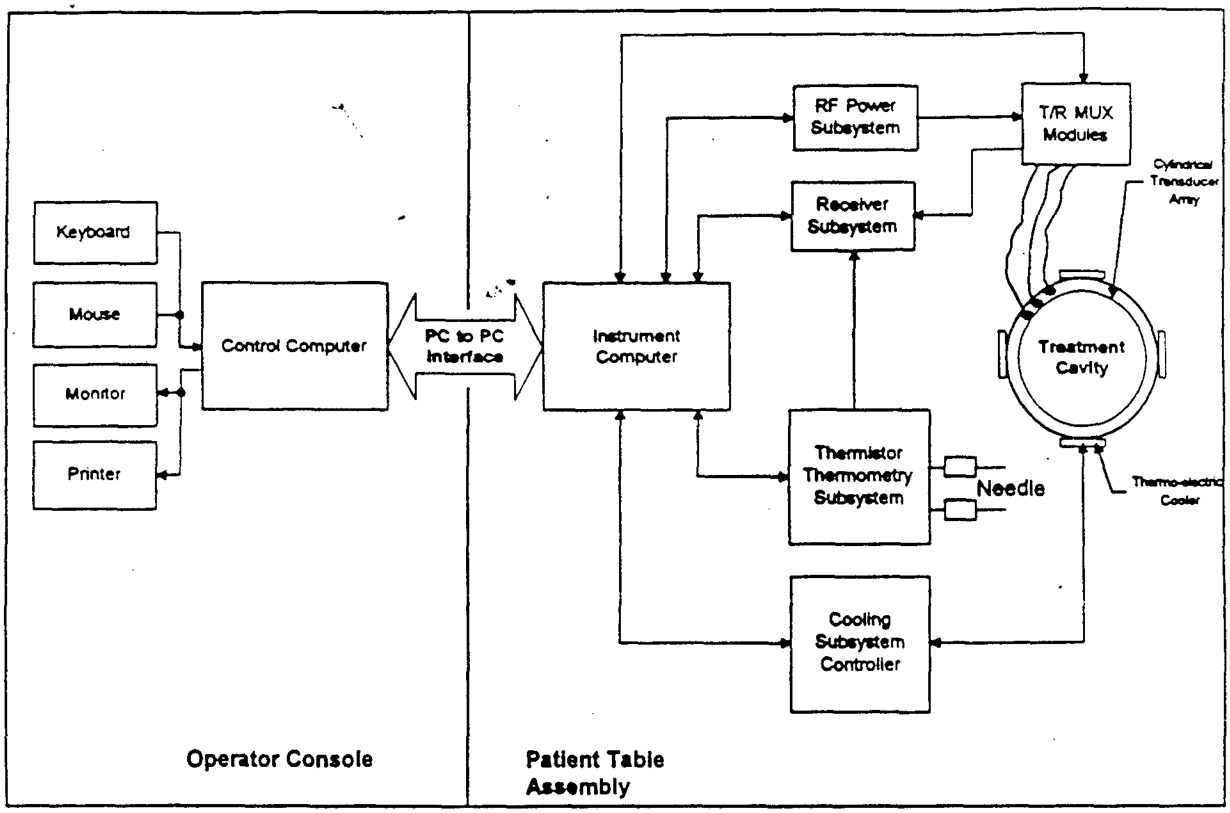

Figure 2. System hardware block diagram.

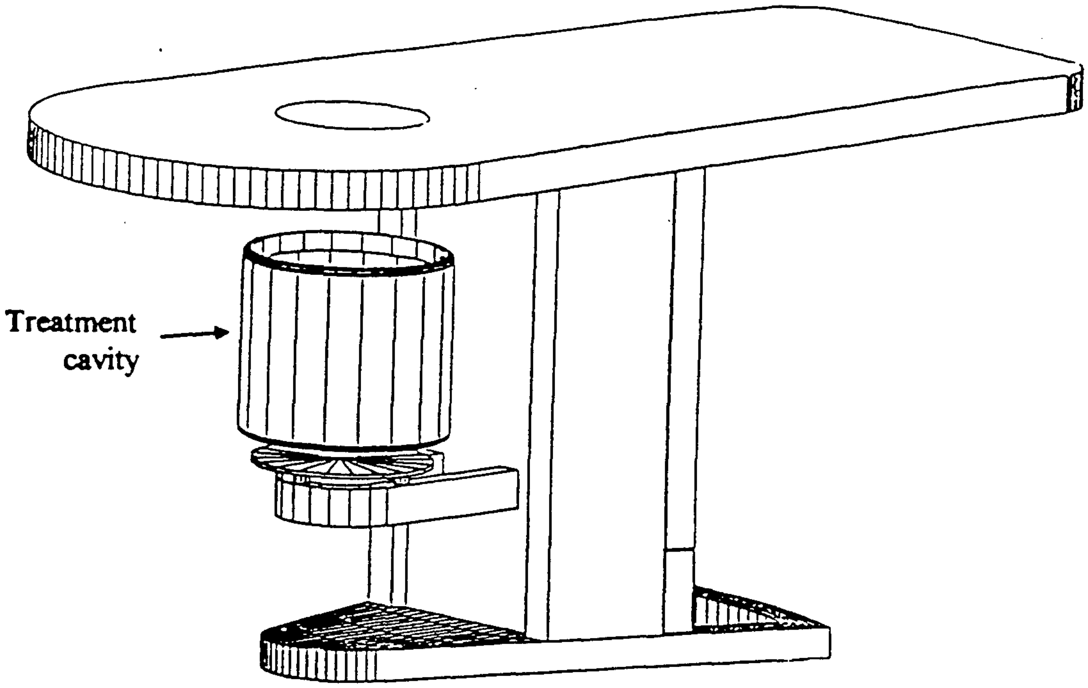

Figure 3. Schematic drawing of treatment table and cavity

2.0 OBJECTIVES

2.1 Evaluate the capability of the breast treatment device to deliver homogeneous heat therapy in a specified quadrant or half the breast.

2.2 Evaluate the acute and long-term toxicity and cosmetic outcome of thermal therapy combined with radiation therapy to treat early breast cancer.

3.0 PATIENT SELECTION

This protocol is open to all patients fulfilling the eligibility criteria below. However, the intent of this study is not to be used as a way to offer breast conservation to those women who would otherwise be treated with mastectomy. This protocol is only to be considered after the patient and her physicians have decided to go on with breast conservation as a treatment choice.

3.1 Histologic confirmation of breast cancer with all 3 criteria below:

3.11 Patients must have either:

A). Infiltrating ductal carcinoma with an extensive intraductal component (EIC+)

<u>or</u>

B). Ductal carcinoma in situ (DCIS) without invasion.

3.12 A re-excision of the biopsy cavity must show residual non-invasive tumor. (Note: residual invasive tumor in addition to residual non-invasive tumor is permitted.)

3.13 Margins of the re-excision must be positive or close (≤ 1 mm).

3.2 Breast imaging:

3.21 Preoperative film-screen mammography.

3.22 Postoperative mammograms may be valuable in assessing the extent of residual disease (if in question) for patients presenting with microcalcifications.

3.23 Postoperative MRI of the breast as a baseline, prior to treatment is suggested, but not mandatory.

3.3 Staging studies:

3.31 Chest x-ray.

[redacted]

3.32 Bone scan, only for patients with infiltrating ductal carcinoma.

3.4 EKG.

3.5 CBC with differential and platelet count. PTT and PT. (Bleeding time in patients with platelet counts <100,000.)

3.6 Age ≥18 years.

3.7 Karnofsky Performance Status ≥70 (capable of self care) [Appendix A].

3.8 Expected survival of at least 3 months.

3.9 Informed consent obtained.

3.10 Criteria for ineligibility:

3.10.1 Abnormal bleeding propensity that would make thermal probe placement excessively hazardous.

3.10.2 Previous treatment:

3.10.2.1 Previous radiotherapy to ipsilateral breast.

3.10.2.2 Chemotherapy in the previous 2 weeks.

3.10.2.3 Previous chemotherapy with a regime containing an anthracycline agent, such as doxorubicin.

3.10.3 Patients with severe insulin-dependent diabetes mellitus, and evidence of neuropathy or vasculopathy.

3.10.4 Patients with unstable cardiac status including:

3.10.4.1 Unstable angina pectoris on medication.

3.10.4.2 Patients with documented myocardial infarction within six months of protocol entry.

3.10.4.3 Congestive heart failure requiring medication.

3.10.4.4 Patients on anti-arrhythmic drugs.

3.10.4.5 Severe hypertension (diastolic BP > 100 on medication).

3.10.5 Severe cerebrovascular disease (multiple CVA or CVA within 6 months).

3.10.6 Pregnancy.

3.10.7 Inability to give informed consent.

4.0 PATIENT ENTRY

4.1 Confirm eligibility (Pathology checklist).

4.2 Contact Study Chair to enter a patient on study.

4.3 The Study Chair will contact the Quality Control Center(QCC), J810, (617) 632-3761, FAX (617) 632-2295 before the patient begins treatment with the following information:

-Your name and telephone number
-Protocol name and number
-Date treatment begins
-Patient name
-Date of birth
-Patient ID number
-Primary physician
-Primary treatment institution

5.0 TREATMENT PROGRAMS

This is a pilot study. Specifically it is a device evaluation study of a new ultrasound thermal therapy machine for the treatment of the breast. This is one of the few devices designed and built to specifically treat a single site with hyperthermia and possibly the only device made to treat the breast. The treatment programs objective is to integrate thermal therapy into a course of "standard" breast irradiation.

5.1 Timing and sequencing of treatment.

5.11 Radiation therapy will begin within 8 weeks of the patients' last breast surgery. If systemic chemotherapy is given prior to definitive radiation therapy then radiation therapy can begin more than 8 weeks after the patients' last breast surgery.

5.12 Thermal therapy will be given twice during the course of whole breast irradiation. Hyperthermia will be delivered one time per week during any two of the five weeks of external beam whole breast irradiation. Thermal therapy can not be given on the first or second day of radiation therapy, but can commence anytime after the second radiation treatment. The two treatments must be separated by a minimum of 72 hours.

5.13 On the day of thermal therapy radiation will follow hyperthermia by 30-60 minutes.

5.2 Radiation therapy:

5.21 Megavoltage linear accelerators with dose rates of between 200-400 cGy/min will be used.

5.22 The dose to the breast: 4500 cGy in 25 fractions (180 cGy/day), 5x/week.

5.23 Boost dose: 1600 cGy in 8 fractions, 5x/week; if electron beam therapy is used it is prescribed to the 80% isodose line.

5.24 Regional nodes (when treated): Supraclavicular +/- axillary nodes, dose: 4500 cGy in 25 fractions (180 cGy/day), 5x/week. An additional axillary boost if indicated is permitted. Internal mammary nodes when treated are included in the tangential fields.

5.3 Thermal therapy:

5.31 Equipment: Hyperthermia will be delivered by the ultrasonic breast treatment system developed under contract from the U.S. Army Medical Research and Development Command. Treatment is delivered with the patient in the prone position and her treated breast submersed into water. The treatment cylinder contains of degassed water has a disposable liner that is discarded or sterilized after each treatment session.

5.32 The target volume is the quadrant of the breast that contains the biopsy cavity. If the biopsy cavity occupies two quadrants e.g., biopsy cavities located at 3, 6, 9, or 12 o'clock then the target volume is both quadrants (half the breast).

5.33 The treatment volume prescription temperature is 40 °C to 43 °C for 45 minutes.

5.34 Hyperthermia treatment duration is defined as <u>starting</u> 10 minutes after onset of power application or attainment of 40 °C in any part of the target volume, if the latter occurs in fewer than 10 minutes. After the starting time, treatment will <u>continue</u> for 45 minutes.

[redacted]

5.35 Ultrasound applicator transducer power will be increased until any <u>one</u> of the following occurs:

5.35.1 The recording of a target volume temperature > 43 °C for more than 1 continuous minute.

5.35.2 The maximum tolerated power level is reached.

5.36 Conditions dictating reduction of applied power and/or cessation of treatment:

5.36.1 Patient request.

5.36.2 Intractable pain or chest pain.

5.36.3 Monitored normal tissue temperature > 43 °C.

5.36.4 Pulse > 160.

5.36.5 Blood Pressure:

5.36.5.1 Systolic > 180 mmHg, diastolic > 100 mmHg.

5.36.5.2 Systolic < 90 mmHg, diastolic < 50 mmHg.

5.36.6 Altered mental status.

5.36.7 Systemic Temperature ≥ 40 °C.

5.4 Thermometry:

Target volume temperatures will be monitored continuously by interstitial and external temperature probes. Probes are placed interstitially using local anesthesia.

5.41 We will attempt to place two invasive thermometry probes, each containing 1 to 14 sensors, orthogonally with the target volume. Thermometry sensors will also be placed superficially on the surface of the breast.

5.42 Thermometry probe location:

5.42.1 The location of the regions for thermometry and the paths of insertion of the probes will be selected during therapy planning. RTOG guidelines (34-36) and methodology for estimating probe paths and location will be used compatible with patient safety.

5.42.2 Suggested specific locations to sample temperature include:

5.42.2.1 The biopsy cavity region, especially at the edges and center of the cavity. This is measured with the invasive probe.

5.42.2.2 At surgical scars, especially the biopsy cavity scar. This is typically measured with the non-invasive superficial skin sensors.

5.42.2.3 Measurements at the surface of the nipple.

5.42.2.4 Predicted "hot spots" within the breast, determined by treatment planning.

5.43 Thermometry probe insertion:

5.43.1 Diagnostic ultrasound will be attempted for probe placement in all patients (unless probes can be placed safely by clinical or by radiographic means and also be compatible with the requirements of treatment planning).

5.43.2 The thermometric probes will be inserted along the pre-selected tracks and inserted to the desired depth under diagnostic ultrasound guidance with patients in the prone treatment position.

5.43.3 After insertion, the location of the probes relative to the breast and target volume will be visualized with the ultrasound treatment unit.

5.43.4 A photograph will be taken to document the thermometry probe position prior to each treatment session.

5.44 A minimum of 28 invasive temperature points per treatment will be attempted.

5.45 Temperature sensors:

5.45.1 All temperatures will be measured by NIST traceable sensors.

5.45.2 Thermocouples or thermistors in 18-22 gauge needle probes with 1-14 sensors per needle will be used for static points [see Appendix B].

[redacted]

5.45.3 At the completion of the hyperthermia treatment session, the temperature sensing probes will be removed.

5.5 Other invasive sensors:

5.51 In selected cases, thermocouple/thermistor probes will be replaced by the Enhanced Thermal Diffusion Probe that, in addition to temperature, measures thermal conductivity, thermal diffusivity, and tissue blood flow [see Appendix B].

5.52 In selected cases, oxygen tension will be measured in the target volume, scar/biopsy cavity region both pre- and post-treatment.

5.6 Additional monitoring:

5.61 The P.I. or a physician designated by the P.I. will be in attendance during every treatment.

5.62 The treatment nurse will monitor vital signs continuously.

5.63 During treatment, the patient's pulse rate and EKG will be continually monitored. An automatic blood pressure device will obtain blood pressure every 5 minutes.

5.64 General anesthesia cannot be used, but light sedation (e.g. Ativan, Percocet, etc.) can be employed as well as previously prescribed analgesics. All patients, however, must be able to discern mild to moderate treatment-associated pain in order to avoid potentially severe thermal injury.

5.7 Adverse reactions and their management

5.71 Anticipated toxicities:

5.71.1 RADIATION THERAPY; related morbidity is discussed with the patient using a separate radiation therapy consent form. However, common immediate side effects include fatigue and skin redness and irritation in the treated breast. In patients that receive chemotherapy prior to treatment on this protocol, they may experience myelosupression.

5.71.2 THERMAL THERAPY; related morbidity includes acute pain in the treatment region secondary to treatment. Also associated with treatment are possible, burns, blisters, itching, or fever during the treatment session. If any of these are observed, it may be possible to change the heating pattern to eliminate the effect. Patients may feel warm or sweat. After the hyperthermia session it is possible to develop pain, burns, or blisters that might persist. Patients may become uncomfortable from lying in the prone treatment position

- Late tissue changes, such as fibrosis, necrosis, ulceration, and vascular changes, in the treated breast could be seen. Some of these effect such as fibrosis could make follow-up examinations of the breast more difficult.

5.71.3 THERMOMETRY, related morbidity include pain during probe insertion, despite local anesthesia. As with any invasive procedure, there is a risk of bleeding or infection.

5.72 Toxicity management:

We expect most side effects associated with the use of thermal therapy and radiation therapy to be controllable. Thermal therapy related pain, warmth, and other acute effects are commonly eliminated by adjustment of the heating pattern or energy. Some burns and skin ulcers can be observed after <u>superficial</u> hyperthermia (heat) treatments to persist for more than 6 months in about 15% of patients who receive burns. These are usually treated with complete resolution of symptoms in the majority of cases by routine skin care management.

Unfortunately, possible late tissue changes are not reversible and if they develop may make follow-up examinations of the treated breast more difficult.

5.73 Criteria for Removal from Treatment:

5.73.1 Patient decision to withdraw from study.

5.73.2 Patient noncompliance with the requirements of the protocol.

5.73.3 A patient may be removed from this study if it is believed that the constraints of this protocol are detrimental to the patient's health or the ability to deliver planned radiation therapy to the breast.

5.73.4 Patients who are unable to tolerate therapy because of the side effects of hyperthermia delivery (pain, tachycardia, anxiety, etc.) will have treatment terminated. Intolerable side effects are defined as:

[redacted]

5.73.4.1 Any NCI Common Grade 3 or Grade 4 toxicity except for Blood Pressure changes and Second Degree Burns.

5.73.5 Patients who refuse a second session of breast hyperthermia.

5.73.6 Cessation of radiation therapy for any cause will result in the termination of hyperthermia treatments.

6.0 FEDERAL REPORTING REQUIREMENTS FOR ADVERSE REACTIONS

6.1 Unanticipated adverse device effects

6.11 The Protocol Chairman shall submit to the sponsor (U. S. Army Medical Research & Development Command) and to the reviewing IRB's a report of any unanticipated adverse device effect occurring during an investigation as soon as possible, but in no event later than 10 working days after the investigator first learns of the effect.

6.12 The sponsor who conducts an evaluation of an unanticipated adverse device effect shall report the results of such evaluation to FDA and to all reviewing IRB's and participating investigators within 10 working days after the sponsor first receives notice of the effect. Thereafter the sponsor shall submit such additional reports concerning the effect as FDA requests.

warm or sweat. After the hyperthermia session it is possible to develop pain, burns, or blisters that might persist. Patients may become uncomfortable from lying in the prone treatment position

Late tissue changes, such as fibrosis, necrosis, ulceration, and vascular changes, in the treated breast could be seen. Some of these effect such as fibrosis could make follow-up examinations of the breast more difficult.

5.71.3 THERMOMETRY, related morbidity include pain during probe insertion, despite local anesthesia. As with any invasive procedure, there is a risk of bleeding or infection.

5.72 Toxicity management:

We expect most side effects associated with the use of thermal therapy and radiation therapy to be controllable. Thermal therapy related pain, warmth, and other acute effects are commonly eliminated by adjustment of the heating pattern or energy. Some burns and skin ulcers can be observed after <u>superficial</u> hyperthermia (heat) treatments to persist for more than 6 months in about 15% of patients who receive burns. These are usually treated with complete resolution of symptoms in the majority of cases by routine skin care management.

Unfortunately, possible late tissue changes are not reversible and if they develop may make follow-up examinations of the treated breast more difficult.

5.73 Criteria for Removal from Treatment:

5.73.1 Patient decision to withdraw from study.

5.73.2 Patient noncompliance with the requirements of the protocol.

5.73.3 A patient may be removed from this study if it is believed that the constraints of this protocol are detrimental to the patient's health or the ability to deliver planned radiation therapy to the breast.

5.73.4 Patients who are unable to tolerate therapy because of the side effects of hyperthermia delivery (pain, tachycardia, anxiety, etc.) will have treatment terminated. Intolerable side effects are defined as:

[redacted]

5.73.4.1 Any NCI Common Grade 3 or Grade 4 toxicity except for Blood Pressure changes and Second Degree Burns.

5.73.5 Patients who refuse a second session of breast hyperthermia.

5.73.6 Cessation of radiation therapy for any cause will result in the termination of hyperthermia treatments.

6.0 FEDERAL REPORTING REQUIREMENTS FOR ADVERSE REACTIONS

6.1 Unanticipated adverse device effects

6.11 The Protocol Chairman shall submit to the sponsor (U. S. Army Medical Research & Development Command) and to the reviewing IRB's a report of any unanticipated adverse device effect occurring during an investigation as soon as possible, but in no event later than 10 working days after the investigator first learns of the effect.

6.12 The sponsor who conducts an evaluation of an unanticipated adverse device effect shall report the results of such evaluation to FDA and to all reviewing IRB's and participating investigators within 10 working days after the sponsor first receives notice of the effect. Thereafter the sponsor shall submit such additional reports concerning the effect as FDA requests.

7.0 REQUIRED DATA

7.1 Data to be collected:

Data Set	At Study Entry	Day of Thermal Therapy	At Follow-up*
Age	X		X
Histologic confirmation	X		
Mammograms	X		X†
Chest X-ray	X		
Bone Scan	X		
MRI of Breast	X**		X**
EKG	X		
CBC	X		
Platelets	X		
LFT's	X		
PT and PTT	X		
Quadrant of breast initially containing the tumor	X		
Capability of device to heat breast target volume		X	
Side effects of therapy		X	X
Tumor control (Measurements within the breast)	X	X	X
Survival			X

† An ipsilateral mammogram of the treated breast will be done approximately 6 months after the patients pre-treatment mammogram. Then bilateral mammograms will be done 6 months later and repeated yearly after that.

* The first follow-up appointment will be one month after treatment. The patient will then return for follow-up every 3 months for 2 years and then every 6 months after that.

** MRI of the breast will be encouraged, but is not mandatory, prior to treatment, at the end of radiation therapy, at the first month follow-up, and then every 6 months.

7.2 Data Collection:

Form	Submission Time
On Study	Within 1 month of patient entry
Thermal Therapy Evaluation	Within 2 weeks of treatment
Summary and Evaluation	Within 1 month of completion of therapy
Status Update	At each follow-up visit (see above)

8.0 MODALITY REVIEW

8.1 Evaluation During Treatment Course:

While treatment is in progress, the following will be done at weekly intervals:

[redacted]

8.11 Patients will be examined at least once weekly and a treatment note will be done weekly with particular attention to acute reactions.

8.12 Patient discomfort [see Appendix C].

8.13 Acute systemic stress effects will be detailed and quantified as either non-treatment limiting or treatment limiting by the clinician.

8.14 An end of treatment evaluation and summary must be completed no later than 1 month after treatment.

8.2 Evaluation Post Treatment Course:

8.21 The time intervals to the development of late complications, first relapse, site(s) of relapse, disease-free survival and overall survival will be recorded.

8.22 The first follow-up appointment will be one month after treatment. The patient will then return for follow-up every 3 months for 2 years and then every 6 months after that.

8.23 History and physical examination will be performed at each follow-up. The investigator shall routinely observe and document the impact of the treatment on the patient's condition and provide an assessment in the following areas:

8.23.1 Late tissue changes, such as fibrosis, necrosis, ulceration, and vascular changes, in the treated breast.

8.23.2 Toxicity parameters will be recorded and evaluated according to the RTOG Late Morbidity Scoring Criteria [Appendix D] and the NCI Common Toxicity Criteria [Appendix E].

8.23.3 Breast cosmesis will be determined by physical examination. An attempt shall be made to quantify normal tissue changes/damage and tumor necrosis within the treated volume [Appendix F].

8.3 Thermal Dose Assessment:

In order to evaluate the capabilities and limitations of the breast treatment device to deliver homogeneous heat therapy in a breast we will assess a number of treatment parameters after each treatment. Several thermal parameters will be calculated and recorded [Appendix G]. These parameters include:

T_{min} = minimum temperature in the tumor area
T_{max} = maximum temperature in the tumor area
T_{ave} = average temperature in the tumor area
T_{90} = the temperature index for which 90% of all measured temperature points are above
$\% < 40.0$ = percentage of measured temperature points below 40.0 ^{o}C
$\% > 43.0$ = percentage of measured temperature points above 43.0 ^{o}C
$\% > 43.5$ = percentage of measured temperature points above 43.5 ^{o}C
$\% > 44.0$ = percentage of measured temperature points above 44.0 ^{o}C

9.0 STATISTICAL CONSIDERATIONS

The primary objective of this pilot study is to evaluate the ability of the treatment device to deliver homogeneous heat therapy to the breast in patients with extensive intraductal breast cancer. A total of 15 patients, of whom 14 are expected to be fully evaluable, will be entered on study. Accrual is expected to require 18 months. The endpoint for the device evaluation is the proportion of patients for whom the treatment goal was achieved (as defined in Section 8.3 and Appendix G) without intolerable side effects (described in Section 5.73). Short- and long-term toxicities and cosmetic outcome will also be evaluated in each patient.

With 14 evaluable patients, the probability of failing to observe an adverse side effect that occurs in the population at a rate of 20% is 0.044. For rare toxicities occurring in the population at a rate of 10%, this probability is 0.23. Assuming 14 evaluable patients, the 95% confidence intervals for the proportion of patients who experience intolerable side effects are as follows:

No. with Side Effect	Proportion with Side Effect	95% Confidence Interval
0	0.00	0.00-0.23
1	0.071	0.0021-0.34
2	0.14	0.018-0.43
3	0.21	0.047-0.51
4	0.29	0.084-0.58
5	0.36	0.13-0.65
6	0.43	0.18-0.71
7	0.50	0.23-0.77

To ensure that only a limited number of patients experience potentially intolerable side effects, if "intolerable medical toxicity" (defined in Section 5.73.4.1), is observed in two patients **or** if five patients refuse a second session of breast hyperthermia, patient accrual will be suspended pending review of results and possible amendment of treatment procedures.

[redacted]

10.0 REFERENCES

1. National Institutes of Health (NIH) consensus development conference statement: Treatment of early stage breast cancer. JAMA 265(3):391-394, 1991.

2. Fisher B, Redmond C, Poisson R, et al. Eight-year results of a randomized clinical trial comparing total mastectomy and lumpectomy with or without irradiation in the treatment of breast cancer. N Engl J Med 320:822-828, 1989.

3. Veronesi U. Rationale and indications for limited surgery in breast cancer: Current data. World J Surg 11:493-498, 1987.

4. Harris JR, Recht A, Connolly J, Cady B, Come S, Henderson C, Koufman C, Love S, Schnitt S, Osteen R. Conservative surgery and radiotherapy for early breast cancer. Cancer 66:1427-1438, 1990.

5. Holland R, Connolly JL, Gelman R, Mravunac M, Hendriks JHCL, Verbeek ALM, Schnitt SJ, Silver B, Boyages J, Harris JR. The presence of an extensive intraductal component following a limited excision correlates with prominent residual disease in the remainder of the breast. J Clin Oncol 8:113-118, 1990.

6. Harris JR, Connolly JL, Schnitt SJ, et al. The use of pathologic features in selecting the extent of surgical resection necessary for breast cancer patients treated by primary radiation therapy. Ann Surg 201:164-169, 1985.

7. Bartelink H, Borger JH, van Dongen JA, Peterse JL. The impact of tumor size and histology on local control after breast-conserving therapy. Radiother Oncol 11:297-303, 1988.

8. Lindley R, Bulman A, Parsons P, Phillips R, Henry K, Ellis H. Histologic features predictive of an increased risk of early local recurrence after treatment of breast cancer by local tumor excision and radical radiotherapy. Surgery 105:13-20, 1989.

9. Boyages J, Recht A, Connolly J, Schnitt SJ, Gelman R, Kooy H, et al. Early breast cancer: predictors of breast recurrence for patients treated with conservative surgery and radiation therapy. Radiother Oncol 19:29-41, 1990.

10. Schnitt SJ, Abner A, Gelman R, Connolly JL, Recht A, Duda RB, Eberlein TJ, Mayzel K, Silver B, Harris JR. The relationship between microscopic margins of resection and the risk of local recurrence in patients with breast cancer treated with breast-conserving surgery and radiation therapy. Cancer 74:1746-1751, 1994.

11. Bornstein BA, Recht A, Connolly JL, Schnitt SJ, Cady B, Koufman C, Love S, Osteen RT, Harris JR. Results of treating ductal carcinoma in situ of the breast with conservative surgery and radiation therapy. Cancer 67:7-13, 1991.

12. Schnitt SJ, Silen W, Sadowsky NL, Connolly JL, Harris HR. Current concepts: ductal carcinoma in situ (intraductal carcinoma) of the breast. N Engl J Med 318:898-903, 1988.

13. van Dongen JA, Fentiman IS, Harris JR, et al. In situ breast cancer: the EORTC consensus meeting. Lancet 2:25-27, 1989.

14. Solin LJ, Recht A, Fourquet A, Kurtz J, Kuske R, McNeese M, McCormick, B, Cross MA, Schultz DJ, Bornstein BA, Spitalier JM, Vilcoq JR, Fowble BL, Harris JR, Goodman RL. Ten year results of breast-conserving surgery and definitive irradiation for intraductal carcinoma (ductal carcinoma in situ) of the breast. Cancer 68:2337-2344, 1991.

15. Mayr NA, Staples JJ, Robinson RA, Vanmetre JE, Hussey DH. Morphometric studies in intraductal breast carcinoma using computerized image analysis. Cancer 67:2805-2812, 1991.

16. Dewhirst MW, Ong ET, Klitzman B, Secomb TW, Vinuya RZ, Dodge R, Brizel D, Gross JF. Perivascular oxygen tensions in a transplantable mammary tumor growing in a dorsal flap window chamber. Rad Res 130:171-182, 1992.

17. Palcic B, Skarsgard LD. Reduced oxygen enhancement ratio at low doses of ionizing radiation. Radiat Res 100:328-339, 1984.

18. Hall EJ. Radiobiology for the Radiologist, 3rd Ed, p 139. JB Lippincott: Philadelphia, 1988.

19. Hahn GM. Hyperthermia and Cancer, p 7. New York, Plenum Press, 1982.

20. Gerweck LE. Modification of cell lethality at elevated temperatures: The pH effect. Radiat Res 70:224-235, 1977.

21. Freeman ML, Dewey WC, Hopwood LE. Effect of pH on hyperthermic cell survival: Brief communication. JNCI 58:1837-1839, 1977.

22. Dewey WC, Hopwood LE, Sapareto SA, Gerweck LE. Cellular response to combinations of hyperthermia and radiation. Radiology 123:463-474, 1977.

23. Hahn GM. Hyperthermia and Cancer, p154-163. New York, Plenum Press, 1982.

24. Hall EJ. Radiobiology for the Radiologist, 3rd Ed, p311-317. JB Lippincott: Philadelphia, 1988.

25. Sapareto SA, Hopwood LE, Dewey WC. Combined effects of x-irradiation and hyperthermia on CHO cells for various temperatures and orders of application. Radiat Res 43:221-233, 1978.

26. Cavaliere R, Ciocatto EC, Giovanella RC, et al. Selective heat sensitivity of cancer dells. Cancer 20:1351, 1967.

27. Belli JA, Bonte FJ: Influence of temperature on the radiation response of mammalian cells in tissue cultures. Radiat Res 18:272-276, 1963.

28. Hahn GM: Potential for therapy of drugs and hyperthermia. Cancer Res 39:2264-2268, 1979.

29. Hall EJ.. Radiobiology for the Radiologist, 3rd Ed, p293-329. JB Lippincott: Philadelphia, 1988.

30. Overgaard J: Rationale and problems in the design of clinical trials. In Overgaard J (ed): Hyperthermic Oncology 1984. pp 325-337. London, Taylor and Francis, 1984.

31. Kapp DS: Areas of need for continued Phase II testing in human patients. In Paliwal BR, Hetzel FW, Dewhirst MW (eds): Biological, Physical and Clinical Aspects of Hyperthermia. Medical Physics Monograph, no 16. p424. New York, American Institute of Physics, 1988.

32. Herman TS, Teicher BA, Jochelson MS, et al. Rational for the use of local hyperthermia with radiation therapy and selected anticancer drugs in locally advanced human malignancies. Int J Hyperthermia 4:143-158, 1988.

33. Dahl, O: Interaction of hyperthermia and chemotherapy. Recent Results in Cancer Research, 107:157-169, 1988.

34. Dewhirst MW, Phillips TL, Samulski TV, Stauffer P, Shrivastava P, Paliwal B, Pajak T, Gillim M, Sapozink M, Myerson R, Waterman FM, Sapareto SA, Corry P, Cetas TC, Leeper DB, Fessenden P, Kapp D, Oleson JR, Emami B. RTOG quality assurance guidelines for clinical trials using hyperthermia. Int J Radiat Oncol Biol Phys 18:1249-1259, 1990.

35. Waterman FW, Dewhirst MW, Samulski TV, Herman T, Emami B, Cetas TC, Corry P, Fessenden P, Gillin M, Kapp D, Leeper DB, Myerson R, Oleson TJ, Paliwal B, Pajak T, Phillips TL, Sapareto SA, Sapozink M, Shrivastava P, Stauffer P. RTOG quality assurance guidelines for clinical hyperthermia administered by ultrasound. Int J Radiat Oncol Biol Phys 20:1099-1107, 1991.

36. Sapozink MD, Corry PM, Kapp DS, Myerson RJ, Dewhirst MW, Emami B, Herman T, Prionas S, Ryan T, Samulski T, Sapareto S, Shrivastava T, Stauffer P, Waterman F. RTOG quality assurance guidelines for clinical trials using hyperthermia for deep-seated malignancy. Int J Radiat Oncol Biol Phys 20:1109-1115, 1991.

37. Bornstein BA, Coleman CN. Innovative approaches to local therapy. In Harris JR, Hellman S, Henderson IC, Kinne DW (eds): Breast Diseases. 2nd ed. Philadelphia, JB Lippincott, 1990:673-677.

38. Overgaard J. The current and potential role of hyperthermia in radiotherapy. Int J Radiat Oncol Biol Phys 1989:16:535.

39. Scott R, Gillespie B, Perez CA, et al. Hyperthermia in combination with definitive radiation therapy: results of a phase I/II RTOG study. Int J Radiat Oncol Biol Phys 1988:15;711.

40. Lindholm CE, Kjellen E, Nilsson P, Hertzman S. Microwave-induced hyperthermia and radiotherapy in human superficial tumours: clinical results with a comparative study of combined treatment versus radiotherapy alone. Int J Hyperthermia 1987:3;393.

41. van der Zee J, Treurniet-Donker AD, The SK, et al. Low dose reirradiation in combination with hyperthermia: a palliative treatment for patients with breast cancer recurring in previously irradiated areas. Int J Radiat Oncol Biol Phys 1988:15;1407.

42. Perez CA, Kuske RR, Emami B, Fineberg B. Irradiation alone or combined with hyperthermia in the treatment of recurrent carcinoma of the breast in the chest wall: a nonrandomized comparison. Int J Hyperthermia 1986:2;179.

43. Dragovic J, Seydel HG, Sandhu T, Kolosvary A, Blough J. Local superficial hyperthermia in combination with low-dose radiation therapy for palliation of locally recurrent breast carcinoma. J Clin Oncol 1989:7;30.

44. Jampolis S, Blumenschein G, Gomez-Yeyille JE, et al. Combination hyperthermia and radiation treatment for locally recurrent breast cancer: an analysis of response and prognostic factors. [Abstract] Proc Am Assoc Can Res 1989:30;253.

45. Gonzalez Gonzalez D, van Dijk JDP, Blank LECM. Chestwall recurrences of breast cancer: results of combined treatment with radiation and hyperthermia. Radiother and Oncol 1988:12;95.

46. Kapp DS, Barnett TA, Cox RS, Lee ER, Lohrbach A, Fessenden P. Hyperthermia and radiation therapy of local-regional recurrent breast cancer: prognostic factors for response and local control of diffuse or nodular tumors. Int J Radiat Oncol Biol Phys 20:1147-1164, 1991.

47. Aberizk WJ, Silver B, Henderson IC, Cady B, Harris JR. The use of radiotherapy for treatment of isolated locoregional recurrence of breast carcinoma after mastectomy. Cancer 58:1214-1218, 1986.

48. Chen KKY, Montague ED, Oswald MJ. Results of irradiation in the treatment of locoregional breast cancer recurrence. Cancer 56:1269-1273, 1985.

49. Chu FCH, Lin FJ, Kim JH, Huh SH, Garmatis CJ. Locally recurrent carcinoma of the breast: Results of radiation therapy. Cancer 37:2677-2681, 1976.

50. Deutsch M, Parsons J, Mittal BB. Radiation therapy for local-regional recurrent breast cancer. Int J Radiat Oncol Biol Phys 12:2061-2065, 1986.

51. Mango L, Bignardi M, Micheletti E, et al. Analysis of prognostic factors in patients with isolated chest wall recurrence of breast cancer. Cancer 60:240-244, 1987.

52. Beck TM, Hart NE, Woodard DA, Smith CE. Local or regionally recurrent carcinoma of the breast: results of therapy in 121 patients. J Clin Oncol 1:400-405, 1983.

53. Danoff BF, Coia LR, Canter RI, et al. Locally recurrent breast carcinoma: The effect of adjuvant chemotherapy on prognosis. Radiology 147:849-852, 1983.

54. Valdagni R, Liu FF, Kapp DS. Important prognostic factors influencing outcome of combined radiation and hyperthermia. Int J Radiat Oncol Biol Phys 1988:15:959.

55. Luk KH, Purser PR, Castro JR, Meyler TS, Phillips TL. Clinical experiences with local microwave hyperthermia. Int J Radiat Oncol Biol Phys 1981:7;615.

56. Kapp DS, Fessenden P, Samulski TV, Bagshaw MA, Cox RS, Lee ER, Lohrbach AW, Meyer JL, Prionas SD. Stanford University Institutional Report. Phase I evaluation of equipment for hyperthermia treatment of cancer. Int J Hyperthermia 4:75-115, 1988.

57. Kapp DS, Cox RS, Barnett TA, Ben-Yosef R. Thermoradiotherapy for residual microscopic cancer: elective or post-excisional hyperthermia and radiation therapy in the management of local-regional recurrent breast cancer. Int J Radiat Oncol Biol Phys 24:261-277, 1992.

58. Dewhirst MW, Griffin TW, Smith AR, Parker RG, Hanks GE, Brady LW. Intersociety council on radiation oncology essay on the introduction of new medical treatments into practice. JNCI 85:951-957, 1993.

59. Fisher B, Costantino J, Redmond C, et al. Lumpectomy compared with lumpectomy and radiation therapy for the treatment of intraductal breast cancer. N Engl J Med 328:1581-1586, 1993.

60. Okunieff P, Hoeckel M, Dunphy EP, Schlenger K, Knoop C, Vaupel P. Oxygen tension distributions are sufficient to explain the local response of human breast tumors treated with radiation alone. Int J Radiat Oncol Biol Phys 26:631-636, 1993.

[redacted]

APPENDIX A

KARNOFSKY PERFORMANCE SCALE

100	Normal; no complaints; no evidence of disease
90	Able to carry on normal activity; minor signs or symptoms of disease
80	Normal activity with effort; some sign or symptoms of disease
70	Cares for self; unable to carry on normal activity or do active work
60	Requires occasional assistance, but is able to care for most personal needs
50	Requires considerable assistance and frequent medical care
40	Disabled; requires special care and assistance
30	Severely disabled; hospitalization is indicated, although death not imminent
20	Very sick; hospitalization necessary; active support treatment is necessary
10	Moribund; fatal processes progressing rapidly
0	Dead

APPENDIX B

Description of Non-Commercial Temperature Probes

1. The Enhanced Thermal Diffusion Probe (ETDP):

The Enhanced Thermal Diffusion Probe (ETDP) system can accurately measure tissue temperature, thermal conductivity, thermal diffusivity and derive tissue blood flow. The ETDP measurement instrumentation permits the routine measurement of microcirculatory and physiologic tissue parameters via a single invasive probe. The probe is physically no different than the large diameter temperature measurement probe we use routinely in the hyperthermia clinic. It simply uses thermistors instead of thermocouples as the measurement elements. As is the case with all our temperature probes, the power supply is an isolated, medically certified unit that surpasses UL-544 regulations for isolation voltage and leakage current for medical and dental devices. In addition, the communication link between the host computer and the ETDP is optically isolated. Thus, there is no electrical connection between the ETDP and any of the other equipment in the hyperthermia center. (Please see the attached diagram at the end of this Appendix.) This probe is already approved for use in DFCI protocol 91-063.

2. The Oxygen Tension Probe:

The group providing us with the ETDP probe have added the additional ability to measure oxygen tension via a polarographic cathode that resides in a probe. This modified probe is available for use when treating patients with hyperthermia and is approved by the DFCI IRB for use in DFCI protocol 91-063. Of note, a similar probe is approved for a group of investigators at Brigham and Women's Hospital (BWH) by the BWH IRB for the measurement of oxygen tension.

General Electrical: The oxygen tension measurement is via a polarographic cathode residing in our 16 gauge or 18 gauge probe in conjunction with a conventional gel coated ECG electrode attached to roughened skin. There are no direct electrical connections between the instrument and host computer. In addition electrical isolation of the instrument from the wall ground is provided via use of an UL544 Medical Grade Power Supply. Further isolation of the oxygen tension measurement circuitry is provided via battery power of that portion of the circuit, and isolation of the resulting signal using an isolated amplifier. Finally, as done with our current probe and by the group using the similar probe at BWH we will have the isolation and safety features confirmed by the Biomedical Engineering Services at BWH.

Polarographic Oxygen Measurements: A -0.6 volt potential is applied to the polarographic cathode with respect to the anode, and the resulting induced current (0-10 nanoAmps) is measured and internally converted to oxygen tension by a predetermined calibration. The driving voltage used is on the order of magnitude of galvanic stimulation routinely utilized in neurophysiologic testing and poses no added stress or discomfort to the patient. The American Association of Medical Instruments has set a current limit of 10 microAmps for use in implanted devices, and the techniques described here typically establish currents no greater than 10 nanoAmps (less than 0.1% of the safety limit). Passive safety circuitry limits current in the unlikely event of a complete probe and system failure to less than 6 microAmps.

3. Multi-Channel Temperature Probes:

The group providing us with the probe have now been able to manufacture a new multi-channel temperature instrument that is capable of driving one, two, or three multi-channel temperature probes. Each probe can measure temperature at up to 14 sites.

Accurate temperature measurement in both tumor and normal tissue is paramount to delivery of both safe and hopefully effective hyperthermia treatments. Each new multi-channel sensor probe provides only temperature data, however up to 14 sites could be monitored simultaneously per "invasive" placement. This is a major step up from our current commercially available multi-channel probes that can only measure data at a maximum of three sites. Increasing the number of temperature points monitored during treatment may allow us to deliver higher tumor temperatures and provide improved patient comfort.

The probes are either plastic or stainless steel needles, sized from 15 to 20 gauge and from 10 to 30 cm long, containing 10 to 14 thermistor temperature sensors. Each thermistor is individually tested for voltage isolation at an FDA-approved, GMP-certified fabrication facility. The probe instrumentation allows a temperature resolution down to 10-20 millidegrees Centigrade and temperature can be sampled (across all sites) at up to 10 times per second.

A range of probe configurations are provided and permits selection of a probe appropriate for the particular site being monitored. Since there is little change in the size of the probes from those presently in use, it should not add any additional patient discomfort.

General Electrical: There are no direct electrical connections between the patient and ground via the instrumentation. Within the measurement instrumentation, each probe is connected to an individual, electrically isolated probe driver card. The driver cards are powered by a UL-544 Medical Grade Power Supply and signals to and from the driver cards are passed through optical isolators and isolation amplifiers. This isolation ensures that there is no electrical connection between patient and ground. However, as a further safety precaution, hardware protection circuitry is provided to shut off power (within 65 microseconds) to a probe if an "out-of-range" signal is detected due to probe breakage or other mishap. Although the isolation circuitry described earlier ensures that there is no current path from the instrument to ground through the patient under such circumstances, this latter measure provides added assurance of patient safety.

We have shown that the instrument and probes have surpassed the 10 microAmp patient safety limit for leakage current, set by the American Association of Medical Instruments for implanted devices via experiments with a BioTek 170 Digital Safety Analyzer. Of course, as done with our other hyperthermia equipment and probes we will have the isolation and safety features confirmed by the Biomedical Engineering Services at BWH, before any patient use.

We would like to use the multi-channel instrument and all the accompanying temperature probes in appropriate patients. The additional information provided by these probes will add to our knowledge of the physiological changes in tumor and normal tissue during hyperthermia. The use of this thermometry system should not pose any additional risk or discomfort to our patients. Furthermore, the multi-channel temperature probe is of great value in the treatment of large deep tumors where many temperature points must continuously be monitored in order to provide both safe and effective treatment.

Schematic diagram of the isolated power supply of the ETDP system.

As in the case of all our temperature probes, the power supply is an isolated, medically certified unit that surpasses UL-544 regulations for isolation voltage and leakage current for medical and dental devices. In addition, the communication link between the host computer and the ETDP is optically isolated. Thus, there is no electrical connection between the ETDP and any of the other equipment in the hyperthermia center.

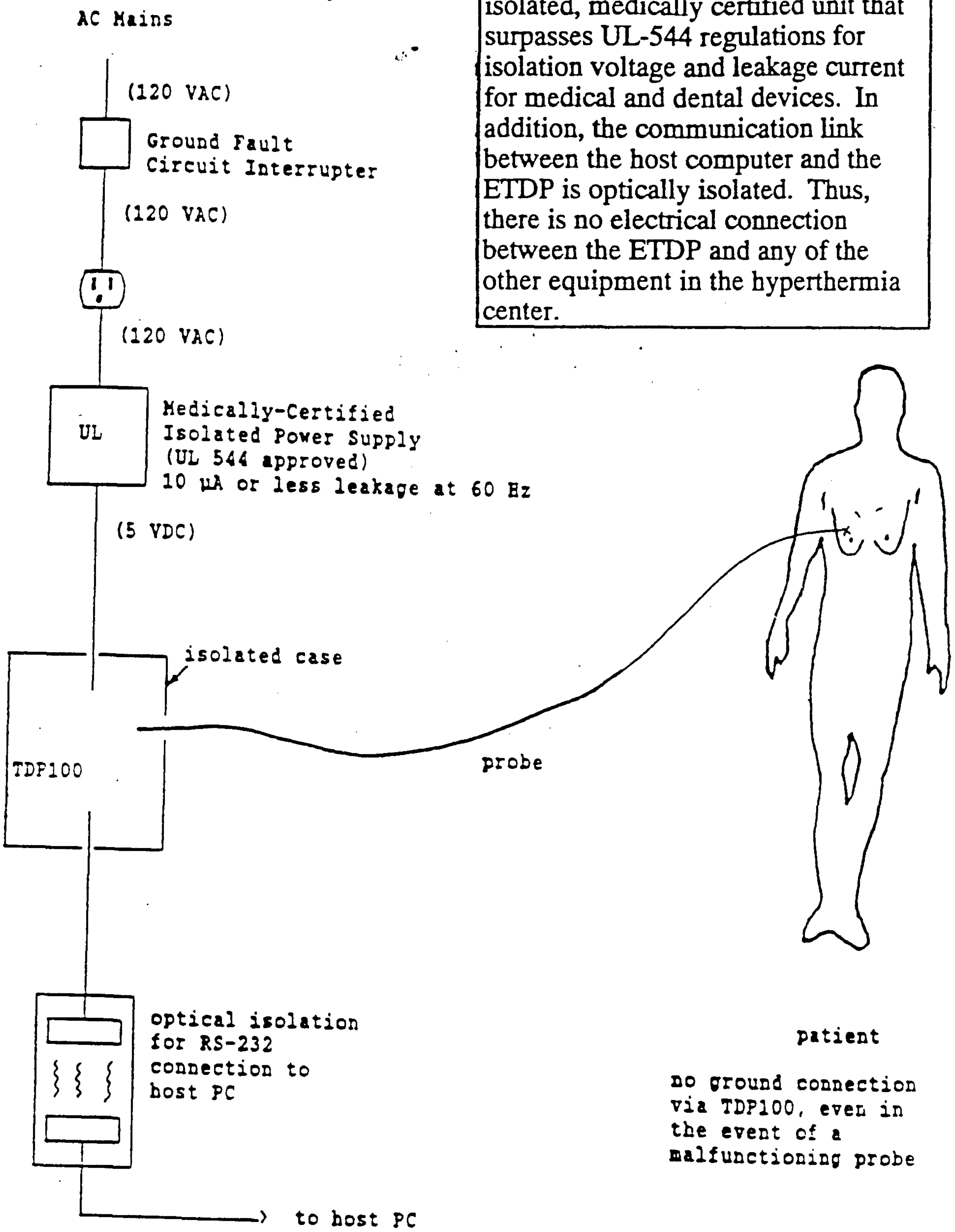

APPENDIX C

GRADING OF PATIENT DISCOMFORT

During Hyperthermia Session*

Grade 1:	Patient volunteers complaint of discomfort, which is tolerable, or can be relieved by counseling, medication, or positional changes, without reduction in applied power necessary to elevate tumor temperature.
Grade 2:	Reduction in applied power is necessary, however, all scheduled sessions are completed, and minimum temperature elevation evaluability criteria are fulfilled.
Grade 3:	One or more scheduled sessions are not completed or are canceled because of intolerable discomfort, however minimum temperature elevation evaluability criteria are fulfilled.
Grade 4:	Intolerable discomfort prevents fulfillment of minimum temperature elevation evaluability criteria.

---

* Taken from RTOG Protocol 89-08. A phase I/II study to evaluate radiation therapy and hyperthermia for deep-seated tumors.

APPENDIX D

RTOG Late Morbidity Scoring Criteria

ORGAN/TISSUE	0	GRADE 1	GRADE 2	GRADE 3	GRADE 4	GRADE 5
SKIN	None	Slight atrophy Pigmentation change Some hair loss	Patchy atrophy Moderate telangiectasia Total hair loss	Marked atrophy Gross telangiectasia	Ulceration	
SUBCUTANEOUS TISSUE	None	Slight induration (fibrosis) and loss of subcutaneous fat	Moderate fibrosis but asymptomatic/Slight field contracture/ < 10% linear reduction	Severe induration and loss of subcutaneous tissue Field contracture >10% linear measurement	Necrosis	
MUCOUS MEMBRANE	None	Slight atrophy and dryness	Moderate atrophy and telangiectasia/ Little mucous	Marked atrophy with complete dryness/Severe telangiectasia	Ulceration	
SALIVARY GLANDS	None	Slight dryness of mouth/Good response on stimulation	Moderate dryness of mouth/Poor response on stimulation	Complete dryness of mouth/No response on stimulation	Fibrosis	DEATH DIRECTLY RELATED TO RADIATION LATE EFFECT
SPINAL CORD	None	Mild L'Hermitte's syndrome	Severe L'Hermitte's syndrome	Objective neurological findings at or below cord level treated	Mono, para quadraplegia	
BRAIN	None	Mild headache/ Slight lethargy	Moderate headache/ Great lethargy	Severe headache/Severe CNS dysfunction (partial loss of power or dyskinesia)	Seizures or paralysis/coma	
EYE	None	Asymptomatic cataract Minor corneal ulceration or keratitis	Symptomatic cataract Moderate corneal ulderation/Minor retinopathy or glaucoma	Severe keratitis Severe retinopathy or detachment/Severe glaucoma	Panopthalmitis Blindness	
LARYNX	None	Hoarseness/Slight arytenoid edema	Moderate arytenoid edema/Chondritis	Severe edema/Severe chondritis	Necrosis	
LUNG	None	Asymptomatic or mild symptoms (dry cough) Slight radiographic appearances	Moderate symptomatic fibrosis or pneumonitis (severe cough) Low grade fever/Patchy radiographic appearances	Severe symptomatic fibrosis or pneumonitis/Dense radiographic changes	Severe respiratory insufficiency/Continuous O^2/Assisted ventilation	
HEART	None	Asymptomatic or mild symptoms/Transient T wave inversion and ST changes/Sinus tachycardia >110 (at rest)	Moderate angina on effort/Mild pericarditis/ Normal heart size/Persistent abnormality T wave and ST changes/ Low ORS	Severe angina/Pericardial effusion/Constrictive pericarditis/Moderate heart failure/Cardiac enlargement/EKG abnormalities	Tamponade/Severe heart failure Severe constrictive pericarditis	
ESOPHAGUS	None	Mild fibrosis/Slight difficulty in swallowing solids/No pain on swallowing	Unable to take solid food normally/Swallowing semi-solid food/Dilatation may be indicated	Severe fibrosis/Able to swallow only liquids/May have pain on swallowing Dilatation required	Necrosis/Perforation/Fistula	
SMALL/LARGE INTESTINE	None	Mild diarrhea/Mild cramping/Bowel movement 5 times daily Slight rectal discharge or bleeding	Moderate diarrhea and colic/Bowel movement >5 times daily/Excessive rectal mucus or intermittent bleeding	Obstruction or bleeding requiring surgery	Necrosis/Perforation/Fistula	
LIVER	None	Mild lassitude/Nausea dyspepsia/Slightly abnormal liver function	Moderate symptoms/Some abnormal liver function tests/Serum albumin normal	Disabling hepatitic insufficiency/Liver function tests grossly abnormal/Low albumin/Edema or ascites	Necrosis/Hepatic coma or encephalopathy	
KIDNEY	None	Transient albuminuria No hypertension/Mild impairment renal function/Urea 25-35 mg% Creatinine 1.5-2.0 mg% Creat. clearance >75%	Persistent moderate albuminuria (2+)/Mild hypertension/No related anemia/Moderate impairment renal function/Urea >36-60 mg% Creatinine clearance (50-74%)	Severe albuminuria/Severe hypertension/Persistent anemia (< 10G%) Severe renal failure/Urea >60 mg% Creatining >4.0 mg% Creatinine clearance < 50%	Malignant hypertension/Uremic coma Urea > 100%	
BLADDER	None	Slight epithelial atrophy/Minor telangiectasia (microscopic hematuria)	Moderate frequency/Generalized telangiectasia Intermittent macroscopic hematuria	Severe frequency & dysuria Severe generalized telangiectasia (often with petechiae) Frequent hematuria. Reduction in bladder capacity (< 150 cc)	Necrosis/Contractec bladder (capacity < 100 cc) Severe hemorrhagic cystitis	
BONE	None	Asymptomatic/No growth retardation Reduced bone density	Moderate pain or tenderness/Growth retardation Irregular bone sclerosis	Severe pain or tenderness Complete arrest bone growth Dense bone sclerosis	Necrosis/Spontaneous fracture	
JOINT	None	Mild joint stiffness Slight limitation of movement	Moderate stiffness/Intermittent or moderate joint pain/Moderate limitation of movement	Severe joint stiffness/ Pain with severe limitation of movement	Necrosis/Complete fixation	

APPENDIX E

COMMON TOXICITY CRITERIA

	GRADE				
TOXICITY	0	1	2	3	4
Blood/Bone Marrow					
WBC	≥4.0	3.0 - 3.9	2.0 - 2.9	1.0 - 1.9	<1.0
PLT	WNL	75.0 - normal	50.0 - 74.9	25.0 - 49.9	<25.0
Hgb	WNL	10.0 - normal	8.0 - 10.0	6.5 - 7.9	<6.5
Granulocytes/ Bands	≥2.0	1.5 - 1.9	1.0 - 1.4	0.5 - 0.9	<0.5
Lymphocytes	≥2.0	1.5 - 1.9	1.0 - 1.4	0.5 - 0.9	<0.5
Hemorrhage (clinical)	none	mild, no transfusion	gross, 1-2 units transfusion per episode	gross, 3-4 units transfusion per episode	massive, > 4 units transfusion per episode
Infection	none	mild	moderate	severe	life-threatening
Gastrointestinal					
Nausea	none	able to eat reasonable intake	intake significantly decreased but can eat	no significant intake	—
Vomiting	none	1 episode in 24 hours	2-5 episodes in 24 hours	6-10 episodes in 24 hours	>10 episodes in 24 hrs, or requiring parenteral support
Diarrhea	none	increase of 2-3 stools/day over pre-Rx	increase of 4-6 stools/day, or nocturnal stools, or moderate cramping	increase of 7-9 stools/day, or incontinence, or severe cramping	increase of ≥10 stools/day or grossly bloody diarrhea, or need for parenteral support
Stomatitis	none	painless ulcers, erythema, or mild soreness	painful erythema, edema, or ulcers, but can eat	painful erythema, edema, or ulcers, and cannot eat	requires parenteral or enteral support
Liver					
Bilirubin	WNL	—	<1.5 x N	1.5 - 3.0 x N	>3.0 x N
Transaminase (SGOT, SGPT)	WNL	≤2.5 x N	2.6 - 5.0 x N	5.1 - 20.0 x N	>20.0 x N
Alk Phos or 5'nucleotidase	WNL	≤2.5 x N	2.6 - 5.0 x N	5.1 - 20.0 x N	>20.0 x N
Liver—clinical	no change from baseline	—	—	precoma	hepatic coma
Kidney, Bladder					
Creatinine	WNL	<1.5 x N	1.5 - 3.0 x N	3.1 - 6.0 x N	>6.0 x N
Proteinuria	no change	1+ or <0.3 g% or <3 g/l	2 - 3+ or 0.3 - 1.0 g% or 3 - 10 g/l	4+ or >1.0 g% or >10 g/l	nephrotic syndrome
Hematuria	neg	micro only	gross, no clots	gross + clots	requires transfusion
Alopecia	no loss	mild hair loss	pronounced or total hair loss	—	—
Pulmonary	none or no change	asymptomatic, with abnormality in PFT's	dyspnea on significant exertion	dyspnea at normal level of activity	dyspnea at rest

COMMON TOXICITY CRITERIA

	GRADE				
TOXICITY	0	1	2	3	4
Heart					
Cardiac dysrhythmias	none	asymptomatic, transient, requiring no therapy	recurrent or persistent, no therapy required	requires treatment	requires monitoring; or hypotension, or ventricular tachycardia, or fibrillation
Cardiac function	none	asymptomatic, decline of resting ejection fraction by less than 20% of baseline value	asymptomatic, decline of resting ejection fraction by more than 20% of baseline value	mild CHF, responsive to therapy	severe or refractory CHF
Cardiac-ischemia	none	non-specific T-wave flattening	asymptomatic, ST and T-wave changes suggesting ischemia	angina without evidence for infarction	acute myocardial infarction
Cardiac-pericardial	none	asymptomatic effusion, no intervention required	pericarditis (rub, chest pain, ECG changes)	symptomatic effusion; drainage required	tamponade; drainage urgently required
Blood Pressure					
Hypertension	none or no change	asymptomatic, transient increase by > 20 mm Hg (D) or to >150/100 if previously WNL. No treatment required	recurrent or persistent increase by >20 mm Hg (D) or to >150/100 if previously WNL. No treatment required	requires therapy	hypertensive crisis
Hypotension	none or no change	changes requiring no therapy (including transient orthostatic hypotension)	requires fluid replacement or other therapy but not hospitalization	requires therapy and hospitalization; resolves within 48 hrs of stopping the agent	requires therapy and hospitalization for >48 hrs after stopping the agent
Neurologic					
Neuro-sensory	none or no change	mild paresthesias, loss of deep tendon reflexes	mild or moderate objective sensory loss; moderate paresthesias	severe objective sensory loss or paresthesias that interfere with function	—
Neuro-motor	none or no change	subjective weakness; no objective findings	mild objective weakness without significant impairment of function	objective weakness with impairment of function	paralysis
Neuro-cortical	none	mild somnolence or agitation	moderate somnolence or agitation	severe somnolence, agitation, confusion, disorientation, or hallucinations	coma, seizures, toxic psychosis
Neuro-cerebellar	none	slight incoordination, dysdiadokinesis	intention tremor, dysmetria, slurred speech, nystagmus	locomotor ataxia	cerebellar necrosis
Neuro-mood	no change	mild anxiety or depression	moderate anxiety or depression	severe anxiety or depression	suicidal ideation
Neuro-headache	none	mild	moderate or severe but transient	unrelenting and severe	—
Neuro-constipation	none or no change	mild	moderate	severe	ileus >96 hrs
Neuro-hearing	none or no change	asymptomatic, hearing loss on audiometry only	tinnitus	hearing loss interfering with function but correctable with hearing aid	deafness not correctable

COMMON TOXICITY CRITERIA

GRADE

TOXICITY	0	1	2	3	4
Neuro-vision	none or no change	—	—	symptomatic subtotal loss of vision	blindness
Skin	none or no change	scattered macular or papular eruption or erythema that is asymptomatic	scattered macular or papular eruption or erythema with pruritus or other associated symptoms	generalized symptomatic macular, papular, or vesicular eruption	exfoliative dermatitis or ulcerating dermatitis
Allergy	none	transient rash, drug fever <38c, 100.4F	urticaria, drug fever =38c, 100.4F mild bronchospasm	serum sickness, bronchospasm, req parenteral meds	anaphylaxis
Fever in absence of infection	none	37.1 - 38.0c 98.7 - 100.4F	38.1 - 40.0c 100.5 - 104.0F	>40.0c >104.0F for < 24 hrs	>40.0c (104.0F) for > 24 hrs or fever accompanied by hypotension
Local	none	pain	pain and swelling, with inflammation or phlebitis	ulceration	plastic surgery indicated
Weight gain/loss	<5.0%	5.0 - 9.9%	10.0 - 19.9%	≥20.0%	—
[illegible]olic					
Hyperglycemia	<116	116 - 160	161 - 250	251 - 500	>500 or ketoacidosis
Hypoglycemia	>64	55 - 64	40 - 54	30 - 39	<30
Amylase	WNL	<1.5 x N	1.5 - 2.0 x N	2.1 - 5.0 x N	>5.1 x N
Hypercalcemia	<10.6	10.6 - 11.5	11.6 - 12.5	12.6 - 13.5	≥13.5
Hypocalcemia	>8.4	8.4 - 7.8	7.7 - 7.0	6.9 - 6.1	≤6.0
Hypomagnesemia	>1.4	1.4 - 1.2	1.1 - 0.9	0.8 - 0.6	≤0.5
Coagulation					
Fibrinogen	WNL	0.99 - 0.75 x N	0.74 - 0.50 x N	0.49 - 0.25 x N	≤0.24 x N
Prothrombin time	WNL	1.01 - 1.25 x N	1.26 - 1.50 x N	1.51 - 2.00 x N	>2.00 x N
Partial thrombo-plastin time	WNL	1.01 - 1.66 x N	1.67 - 2.33 x N	2.34 - 3.00 x N	>3.00 x N

APPENDIX F

[redacted]

Follow-up Visit Form

FOLLOW-UP VISIT

JOINT CENTER FOR RADIATION THERAPY

DEFINITIVE BREAST CANCER TREATMENT

NAME ______________________ DATE ________ HOSP. NO. ______________ THERAPY NO. __________

Systemic Treatment Since Prior Follow-Up Visit (type) ______________________

If Recurrence Noted, Indicate Site:

a.) breast, compatible with primary	d.) supraclavicular area
b.) breast, separate from primary	e.) opposite breast
c.) axilla	f.) other (state) ______________

NARRATIVE:

NORMAL TISSUE STATUS:	None - 0	Slight - 1	Moderate - 2	Severe - 3
Breast or chest wall tenderness				
Breast retraction				
Breast fibrosis				
Breast edema				
Matchline effect				
Matchline effect at hockey stick				
Telangiectasia (indicate site)				
Hyperpigmentasia				
Arm edema				
Shoulder restriction				
Supraclavicular fibrosis				
Other				

Overall Cosmetic Result:

Physician – Excellent ______ Good ______ Fair ______ Poor ______

Patient – Excellent ______ Good ______ Fair ______ Poor ______

STUDIES ORDERED:

NEXT VISIT:

COPIES SENT:

______________________________ M.D.

RADIOTHERAPIST

8502-7/81

6/22/95

[redacted]

APPENDIX G

HT-Breast-1

Equipment Evaluation Form
for
Breast Applicator

Last Name: ______________________
First Name: ______________________
Therapy #: ____________
Tr. Date: ____________
Tr. Number: ____________

Mark target area, surgical scar, and probe placement:

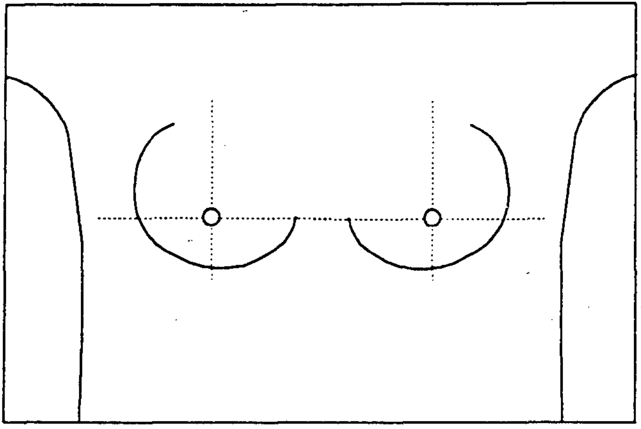

Temperature sensors: Tumor: ______ Normal: ______ Skin: ______

Applicator power:		LF			HF	
	# xducers	Max Pwr	Ave Pwr	# xducers	Max Pwr	Ave Pwr
Ring 1:						
Ring 2:						
Ring 3:						
Ring 4:						
Ring 5:						
Ring 6:						
Ring 7:						
Ring 8:						

Treatment Descriptors:

T_{min}		$Eq43_{min}$	
T_{ave}		T_{90}	
T_{max}		$\% < 40.0^{o}C$	
T_{peak}		$\% > 43.0^{o}C$	
		$\% > 43.5^{o}C$	
		$\% > 44.0^{o}C$	

Was treatment goal achieved? Yes ☐ No ☐

uccessfull treatment defines as '$\% < 40.0^{o}C$' $\leq 15\%$ and '$\% > 43.5^{o}C$' $\leq 10\%$ and '$\% > 44.0^{o}C$' $\leq 1\%$)

JLH 1/95

Appendix B

Informed Consent

DANA-FARBER CANCER INSTITUTE

INFORMED CONSENT
FOR RESEARCH

Issue Date: ____________
PROTOCOL NUMBER & TITLE: 95-006
RT + HT for Breast Cancer

SUBJECT/PATIENT NAME: ______________________________ DFCI I.D. NUMBER: ____________

RADIATION AND THERMAL THERAPY FOR EXTENSIVE INTRADUCTAL CARCINOMA OF THE BREAST

INTRODUCTION

Your physician has determined that you either have, invasive breast cancer that contains an extensive amount of intraductal carcinoma (non-invasive cancer), or that your have pure intraductal carcinoma without any associated invasion. Local recurrence of breast cancer following breast conserving treatment with lumpectomy and radiation therapy is seen in 10-15% of cases. However, breast cancers such as yours, with an extensive intraductal component may have a higher risk of local recurrence in the breast than cancers without an extensive intraductal component when treated with breast conservative therapy. For patients with an extensive intraductal component, the option of mastectomy may have a lower risk of breast recurrence, but many patients prefer breast conservation. The overall survival of patients treated with breast conservation is virtually identical to those treated with mastectomy.

Intraductal carcinoma may be more resistant to radiation therapy and this may account for the poor results seen with irradiation in these patients. Thermal therapy or hyperthermia refers to the use of temperatures 42°C (107.6°F) or higher to treat malignant tumors. Laboratory and clinical reports have demonstrated that heat kills

DANA-FARBER CANCER INSTITUTE

INFORMED CONSENT FOR RESEARCH

Issue Date: ______

PROTOCOL NUMBER & TITLE: 95-006

RT + HT for Breast Cancer

SUBJECT/PATIENT NAME: ______ DFCI I.D. NUMBER: ______

tumors, if tumors are heated to 43°C (109°F) for 30-60 minutes. Many studies suggest that the addition of heat may also improve upon the usual results of radiation therapy for many tumors, including recurrent invasive breast cancer, bladder cancer, and tumors of the head and neck region. Investigators have found an improvement in tumor response rates and a lengthened duration of response. This is the first study to attempt to treat non-invasive breast tumors.

You are being asked to participate in a research project to study the use of thermal therapy (heat treatments produced by sound waves) for the treatment of breast cancer with extensive intraductal carcinoma. We have developed the thermal therapy technologies required to make use of the positive interaction between heat and radiation. The specific clinical study we propose is a study to optimize and establish our ability to safely deliver heat to the breast using a new breast thermal therapy device. The purpose is to determine if we can control heat delivery.

OBJECTIVE

The purpose of this research study is to determine the safety and effectiveness of generating, and delivering, heat to the breast in combination with radiation therapy. We want to evaluate what side effects are associated with this treatment. Fifteen patients will be treated in this research study.

DANA-FARBER CANCER INSTITUTE

INFORMED CONSENT FOR RESEARCH

Issue Date: ____________
PROTOCOL NUMBER & TITLE: 95-006
RT + HT for Breast Cancer
SUBJECT/PATIENT NAME: ____________ DFCI I.D. NUMBER: ____________

TREATMENT DESCRIPTION

Your radiation oncologist will schedule a radiation therapy treatment planning and an initial thermal therapy planning session. Both of these are conducted at the Dana Farber Cancer Institute even though the radiation therapy is carried out at another hospital. Photographs of the treatment site will be taken during the planning and at each of the thermal therapy sessions.

Thermal Therapy: At the Radiation Therapy Planning Department at the Dana Farber Cancer Institute you will receive two thermal therapy treatments. Each treatment will require at least two hours of preparation time prior to treatment. The heat treatment requires you to lay on your stomach on a soft flat table for approximately two hours. Therefore, on the day of thermal therapy you must plan for a total of approximately 5 hours from the time you arrive for therapy to the time you are ready to leave. The device used to generate heat produces ultrasonic sound waves to heat the breast. This device was developed under contract with the U.S. Army Medical Research & Development Command. This is a new heat treatment device. Your breast will fall through a cut-out (hole) in the table and rest in a tank of water for the heat treatment. The ultrasound energy waves enter the quadrant or half of the breast containing the original lump (tumor) region. The goal will be to reach 40 to 43 °C (104 to 109 °F) in the breast for 45 minutes. During heat treatments you will experience warmth and

96

DANA-FARBER CANCER INSTITUTE

INFORMED CONSENT FOR RESEARCH

Issue Date: ____________

PROTOCOL NUMBER & TITLE: 95-006

RT + HT for Breast Cancer

SUBJECT/PATIENT NAME: ______________________ DFCI I.D. NUMBER: ____________

occasionally mild discomfort. You will have an intravenous line inserted prior to treatment that may be used to give pain medications if needed. A technologist will be with you during treatment.

During the heat treatment, temperatures will be measured. Prior to each heat treatment at least two metal thermometer needle probes will be inserted into the breast. The thermometer probes help control the temperature in the breast and avoid burns. A Radiation Oncologist and Diagnostic Radiologist will place the small needle probes into the breast through numbed skin under sterile conditions using local anesthesia. The temperature measuring probes will be removed after each thermal therapy treatment. The total time for each treatment session will be at least three hours.

Radiation Therapy: In addition to the heat treatments, you will receive radiation therapy to your breast. Your radiation oncologist will decide what radiation dose you receive. On the basis of experience, we believe that the effectiveness of the radiation may be improved with heat. On days when both radiation and thermal therapy are given, radiation will follow thermal therapy by 30-60 minutes. Radiation will be given daily, five days a week, for 6 to 6 1/2 weeks.

After the treatment course is completed you will be asked to return at regular intervals for follow-up visits to evaluate the results of treatment and the potential long-term side effects. In order to assess your response to treatment certain diagnostic tests will be

DANA-FARBER CANCER INSTITUTE

INFORMED CONSENT FOR RESEARCH

Issue Date: __________

PROTOCOL NUMBER & TITLE: 95-006

RT + HT for Breast Cancer

SUBJECT/PATIENT NAME: __________ DFCI I.D. NUMBER: __________

done prior to beginning treatment and at intervals following treatment. This may include blood tests, mammography, breast ultrasound, breast magnetic resonance imaging (MRI), and other tests determined to be necessary by your physician. They will be explained to you at the time of your initial evaluation and at follow-up visits.

POTENTIAL BENEFITS

The potential benefits associated with the treatment include a possible reduced risk of tumor recurrence. Heat appears to increase the effectiveness of radiation therapy. However, no guarantee or assurance can be made regarding the results, if any, that may be obtained since research results cannot be foreseen. Your participation will contribute to the development of medical knowledge about the treatment of breast cancer and the use of this thermal therapy device.

If new information develops during the course of your treatment that may be related to the efficacy or risks of your treatment, you will be informed and options will be discussed.

POTENTIAL SIDE EFFECTS

Although hyperthermia has the potential to produce beneficial results, it may be of no benefit and may have injurious effects.

DANA-FARBER CANCER INSTITUTE

INFORMED CONSENT FOR RESEARCH

Issue Date: __________
PROTOCOL NUMBER & TITLE: 95-006
RT + HT for Breast Cancer
SUBJECT/PATIENT NAME: __________ DFCI I.D. NUMBER: __________

<u>Thermometer probe placement</u>: Despite local anesthesia to diminish pain during thermometer probe insertion, you may experience pain at the time of probe placement. When local anesthesia is given, you will experience a momentary stinging sensation. As with any invasive procedure, there is a risk of bleeding, infection, or perforation of normal structures in or near the region of treatment. There is the small risk of a permanent scar at the point where the thermometry probe enters the skin of the breast, but this risk should be small. There is a minor risk that tumor cells could track along the thermometry probe path in the breast, but this would be rare, and be included in the field receiving radiation therapy treatment.

<u>Radiation Therapy</u>: Your radiation oncologist will describe the possible side effects to you, and you will be asked to sign a separate consent form for the delivery of the radiation therapy. However, common immediate side effects include fatigue and skin redness and irritation in the treated breast. Thermal therapy may also make the normal tissues more sensitive to the toxic effects of radiation. Thus, all of the tissues that receive radiation therapy and heat are potentially more prone to radiation injury. Since this treatment is investigational, it is possible that unforeseen side effects could occur.

<u>Thermal Therapy (heat treatment)</u>: Is associated with possible pain, burns, blisters, nausea, itching, or fever during the treatment session. If any of these is observed, it may be possible to change the heating pattern to eliminate them. You may also become

DANA-FARBER CANCER INSTITUTE

INFORMED CONSENT FOR RESEARCH

Issue Date: ____________

PROTOCOL NUMBER & TITLE: 95-006

RT + HT for Breast Cancer

SUBJECT/PATIENT NAME: ______________________ DFCI I.D. NUMBER: ____________

uncomfortable from lying on your stomach, in the treatment position. We will attempt to make you comfortable.

During treatment, your heart may beat faster and you will probably feel warm and begin to sweat. Your heart's electrical pulses and your blood pressure will be monitored during therapy. You may choose to stop receiving the study treatment at any time if any of the related side effects is intolerable. In addition if you experience dizziness, shortness of breath, or chest pain, you must notify your physician immediately, so that the treatment can be modified or stopped. We expect most side effects associated with the use of thermal therapy and radiation therapy to be controllable and reversible. We do, however, emphasize that we cannot rule out any unsuspected side effect. During this study, provisions and precautions will be taken to insure your safety throughout the course of treatment.

Should any of the above side effects appear, your physician(s) will take steps to reduce or eliminate these effects by whatever means are necessary, but there can be no assurance that such effects can be reduced or eliminated.

After the thermal therapy session it is possible to develop pain, burns, or blisters that might persist. In addition, infection or ulceration may occur. If persistent pain should develop, this may represent muscle or nerve injury. You will be evaluated by your

DANA-FARBER CANCER INSTITUTE

INFORMED CONSENT FOR RESEARCH

Issue Date: __________
PROTOCOL NUMBER & TITLE: 95-006
RT + HT for Breast Cancer

SUBJECT/PATIENT NAME: __________ DFCI I.D. NUMBER: __________

physician and further heat treatment sessions will be stopped until such problems have resolved.

Tissue changes, such as fibrosis (scar tissue), necrosis (dead tissue), and ulceration, in the treated breast could happen at any time following treatment and be permanent. Some of these effects such as fibrosis could make follow-up examinations of your breast by you or your physician more difficult. In addition, thermal therapy may make follow-up mammograms of the breast more difficult to interpret.

This is a new deep-heating device and with all investigational treatments, it is possible that unforeseen complications could occur.

ALTERNATIVE TREATMENTS

The alternative treatment is mastectomy with or without reconstruction of the breast. Reconstruction can be done at the time of the mastectomy or at a later time. Another alternative treatment would be conventional radiation therapy alone. Your physician has explained these procedures and both their advantages and their disadvantages to you.

DANA-FARBER CANCER INSTITUTE

INFORMED CONSENT FOR RESEARCH

Issue Date: __________
PROTOCOL NUMBER & TITLE: 95-006
RT + HT for Breast Cancer

SUBJECT/PATIENT NAME: __________ DFCI I.D. NUMBER: __________

CONTRAINDICATIONS

Thermal therapy is not to be given to patients whose sensitivity to heat sensation has been significantly decreased in the area to be treated by any means (previous treatment, anesthesia, diabetic nerve damage, etc.), patients with cardiac pacemakers, and patients having a known decrease in circulation in the area to be heated. General or regional anesthetic must not be given with thermal therapy and will not be used in your treatments. Pain-medication, sedatives, or tranquilizers may be used in your treatments as long as they do not significantly decrease your awareness of pain sensation in the treatment area.

FOR WOMEN OF CHILDBEARING POTENTIAL

Radiation therapy may have an adverse effect on an unborn child and should not be performed during pregnancy. You are advised NOT to become pregnant before or during this study. If you become pregnant, you would automatically be excluded from radiation therapy and this protocol study.

PARTICIPATION

Your participation is voluntary and you may refuse to participate and/or withdraw your consent and discontinue participation in the project at any time without penalty,

DANA-FARBER CANCER INSTITUTE

INFORMED CONSENT FOR RESEARCH

Issue Date: ____________

PROTOCOL NUMBER & TITLE: 95-006

RT + HT for Breast Cancer

SUBJECT/PATIENT NAME: ______________________ DFCI I.D. NUMBER: ____________

loss of benefits to which you are otherwise entitled, or penalty of prejudice in your future treatment.

Also, your physician can terminate your participation without your consent at any time in the event of physical injury or other condition that makes further treatment an unnecessary risk in the medical opinion of your physician.

CHARGES

You will not be charged for the hyperthermia treatment. However, you will be charged for the ultrasound examination of the breast that will occur at the time of thermometer probe placement. You will be charged in the usual fashion for radiation therapy, doctors visits, and any other portion of your care that is considered standard care. You are also responsible for payment of all charges for medical procedures to treat conditions resulting from adverse outcomes related to the study treatment.

CONTACT PERSONS

For more information concerning the research and research-related risks or injuries, you can contact Dr. Bruce Bornstein, the investigator in charge, at (617) 632-3591.

Appendix C

Publications

INT. J. HYPERTHERMIA, 1996, VOL. 12, NO. 3, 375–399

Design of an ultrasonic therapy system for breast cancer treatment

X-Q. LU†, E. C. BURDETTE‡, B. A. BORNSTEIN†, J. L. HANSEN†
and G. K. SVENSSON†

†Joint Center for Radiation Therapy, Department of Radiation Oncology,
Harvard Medical School, Boston MA 02115, USA
‡Dornier Medical Systems Inc., Champaign, IL 61820, USA

(*Received 25 April 1995; revised 20 September 1995; accepted 17 October 1995*)

This paper describes the design of a novel ultrasonic therapy system dedicated to the breast cancer treatment and the theoretical investigation of the heating characteristics of the system. The applicator is a cylinder comprised of a stack of rings. Each ring has up to 48 transducers mounted on the inside of the ring and directed towards the centre. The transducers operate in one of two frequency bands (1·8–2·8 MHz and 4·3–4·8 MHz), arranged alternately in each ring. During treatment the patient is positioned in prone position, with the breast immersed in water and surrounded by this array. This design was modelled and optimized by 3-D simulations for a variety of treatment conditions. The simulated results demonstrate that the system has an excellent capability to achieve and maintain a temperature distribution (41·5–44°C) in a quadrant to a whole breast. Initial experiments using a single ring of transducers has been performed to verify the power deposition calculation.

Key words: Hyperthermia, breast treatment, ultrasound field, bio-heat transfer

1 Introduction

Clinical data show that combination of hyperthermia with radiation therapy or cytotoxic agents improve complete response rates for the treatment of many cancers (Kapp and Kapp 1993). A majority of these clinical studies pertain to hyperthermia treatment of superficial and small tumours (i.e. <4 cm in diameter). Considerable problems still remain when using external hyperthermia applicators for treatment of deep and large tumours. Ultrasound is capable of penetrating soft tissues to produce deep heating (Lele 1983, Fessenden *et al.* 1984, Hynynen *et al.* 1987, Hansen *et al.* 1994). To fully utilize its potential, however, tumour site specific applicators, that optimize heat delivery to the tumour, are needed. Only then can we expect improved efficacy and reduced complications of hyperthermia treatment.

Recent studies have shown that the use of conservative surgery and radiation in patients with an infiltrating breast cancer containing an extensive intraductal component (EIC) is associated with an increased risk of local failure (Boyages *et al.* 1990). Intraductal carcinoma is characterized by a proliferation of cancer cells within breast ducts typically showing central necrosis, which may correspond to hypoxic regions as indicated by a morphometric study (Mayr *et al.* 1991). It is known that hypoxia increases radioresistance by as much as a factor of 3 (Palcic and Skarsgard 1984) and that heat is effective at killing cells in a hypoxic environment (Dewey *et al.* 1977). These patients, therefore, may benefit from a combined approach using hyperthermia and radiation therapy. Other potential patients who may benefit from the hyperthermia treatment include those with local recurrence after

[redacted]

mastectomy, non-inflammatory stage III patients, and those with ipsilateral local recurrence after radiation therapy. A European phase III study randomized over 300 patients with recurrent or primary breast cancer to radiation alone or to radiation and superficial hyperthermia. The preliminary results (Vernon 1994) show an overall complete response rate of 60% for the combined treatments as compared to 40% for radiation alone.

Geometrically, the breast is a site particularly well suited for hyperthermia. This is due to its convex shape, the absence of large vessels and the relatively low perfusion. However, current applicators, using ultrasound or microwave, are still not able to deliver an optimized heating pattern for treatment of the intact breast. For these reasons, a dedicated applicator has been designed. The goals are as follows:

(I) The system should be able to produce hyperthermic temperatures in a treatment volume ranging from a quadrant to the whole breast, and to maintain a uniform temperature distribution to within ~2°C. The treatment objective for our application is to reach a minimum temperature of 41·5°C but not exceed 44°C in a treatment volume. It is critical to keep the temperature within this narrow range in order to minimize potential toxicity and yet maximize effectiveness of the treatment (Kapp *et al.* 1992, Oleson *et al.* 1993).

(II) The breast treatment system should have the operational flexibility to accommodate the uncertainties in tissue characteristics, such as ultrasound attenuation and perfusion rate, and the variability in the patient geometry.

(III) It should be easy to use the system in the clinic.

These requirements present a considerable technological challenge. To meet these goals the design has to rely on general physics considerations. We consider ultrasound to be most suitable for treatment of the breast tissue compared to other modalities. Reasons for the choice are that the penetration and the power deposition of ultrasound can be controlled by selecting appropriate frequencies, and air cavities and bone interfaces with soft tissue are minimal in the breast. The arrangement of the transducers has to be determined by the power deposition pattern that satisfies the thermal condition for uniform temperature elevation.

The purpose of the work described here is twofold. The first is to determine the basic configuration of the applicator based on a general physics and clinical consideration. The second purpose is to develop a theoretical model for ultrasound power deposition calculation and the three dimensional solution to the bioheat transfer equation. This model, approximating the system, offers insights to the physical process. Based on the model and the available data of the tissue characteristics, the ultrasound frequency bands are optimized. An initial experiment using a single transducer ring was performed to verify the ultrasound power deposition. This experiment also serves as a test for the electronics design.

2. Methods

2.1. *Basic design*

It is desirable to achieve a uniform hyperthermic temperature region covering the tumour volume with sharp temperature gradients at the edge towards the normal tissue. Several investigators (Ocheltree and Frizzell 1987, Roemer 1991) have theoretically studied the power deposition pattern required to achieve such temperature distribution.

It was found that in the absence of large blood vessels, the ideal temperature distribution can be achieved by depositing power properly in the boundary and the interior of the treatment region. The power deposited in the boundary compensates for the conduction losses to the surrounding volume, and the power deposited interiorly in the treatment region overcomes the effect of blood perfusion.

An important lesson can be drawn from these studies for the design of the breast applicator. When the whole breast needs to be treated, the boundary consists of the breast surface and the chest wall. In order to elevate the temperature uniformly in the breast, independent adjustment of the power deposition in the interior of the breast and the two boundaries is necessary. We found that this capability cannot be obtained by the current ultrasound devices, in which only one frequency is applied in a treatment. It was determined that transducers with two different frequencies surrounding the breast should be used simultaneously. The low frequency is more penetrating and deposits power deeper into the breast tissue, thus compensating for the energy removed by blood flow in the interior of the breast. The high frequency, with a higher attenuation rate, deposits most of the power near the breast surface and compensates for heat loss to the outside of the breast. The chest wall boundary, on the other hand, can be addressed by using both high and low frequencies. An optimized power deposition, therefore, can be obtained by appropriate combinations of these two frequencies.

In some clinical situations, only a quadrant of the breast needs to be treated. The pie shaped treatment region is bounded by a quadrant of the breast surface, a quadrant of the chest wall base, and two planes inside the breast, for which the same principle can be used. The breast surface quadrant is insonated using high frequency ultrasound, and the boundaries deep into the tissue are insonated using low frequency ultrasound.

To implement this approach, a cylindrical applicator was designed which consists of a stack of eight rings with an inner diameter of 25 cm (Figure 1). There are 48 transducers (PZT-8) in each of the upper four rings, and this number decreases to 24 in the rest rings toward the apex of the breast. The size of the transducers is 1·5 × 1·5 cm. The gap between two adjacent rings is 0·24 cm. This small size permits a better spatial control of power deposition. Low frequency and high frequency transducers are arranged alternately in each ring. Inherent to the design of this device, the transducers with overlapping fields are driven non-coherently to avoid phase effect.

The patient lies in a prone position with her breast submerged, through a hole in treatment table, into the water filled applicator. The water bath, in which the temperature is controllable from 30 to 40°C, serves the purpose of skin sparing and provides an excellent coupling for ultrasound propagation.

Due to the considerable uncertainties in various tissue parameters (in particular the attenuation and perfusion rate), the use of relatively broad frequency-band transuders is a necessity. This is especially true for the low frequency transducers. The electronics is designed to be able to control the frequency, power and duty cycle in wide ranges for each transducer individually. This feature gives the system a great deal of flexibility to adapt to various treatment scenarios.

2.2. *Simulation*

Due to the complexity of the acoustic wave propagation and the bio-heat transfer process, it is desirable to have a comprehensive numerical model to verify the

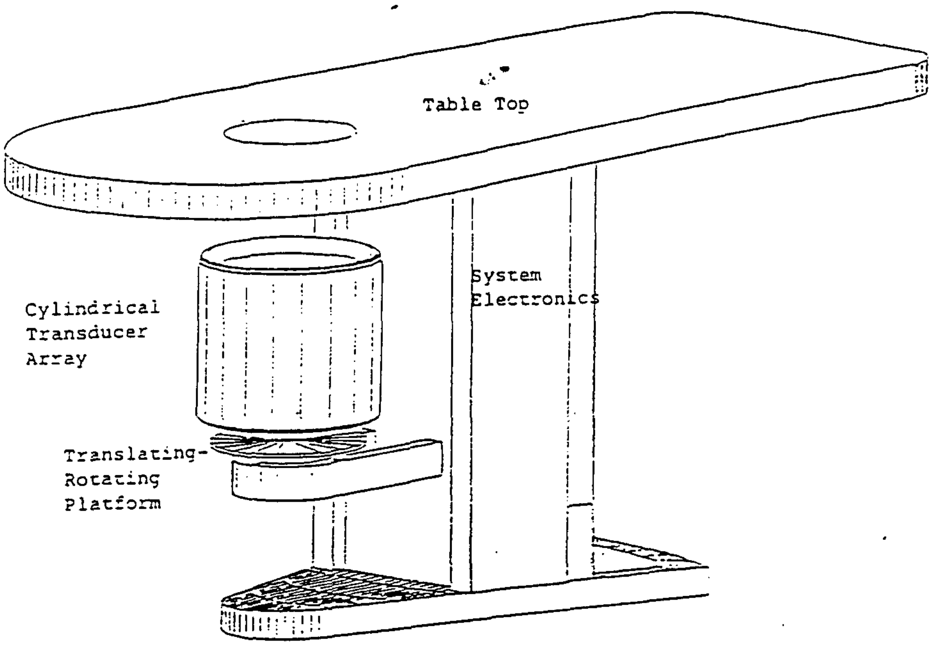

Figure 1. The dual frequency, cylindrical transducer array mounted on a hyperthermia treatment table. Circulating water in the array is maintained at a constant, adjustable temperature (30–40°C).

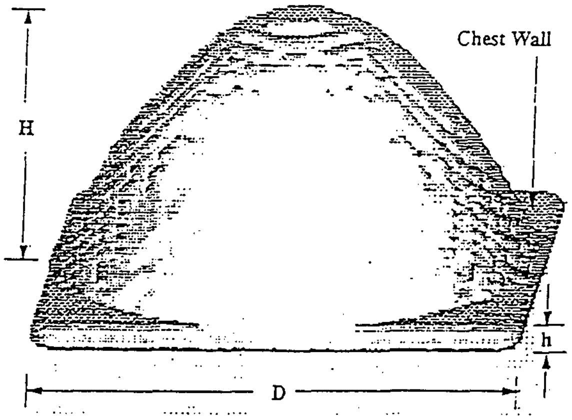

Figure 2. The geometric model for the breast used in the simulation. The surface is assumed to be a paraboloid. H is the height, D is the diameter at the base, h is the depth beneath the chest wall (where the temperature is assumed constant at 37°C).

general concept and to guide the detailed design. The modeling efforts consist of three parts: the geometric model of the breast, the acoustic-field model, and the bio-heat transfer model. The geometric model is shown in Figure 2, where a paraboloidal surface with a height H and a diameter D on the base are assumed. Clinically relevant breast sizes, when submerged in water, were estimated from direct measurements as well as CT scans on patients positioned prone with the breast hanging freely in air. The parameter h shown in Figure 2 is a depth into the chest wall, where the temperature is assumed to be maintained at 37°C. The

Table 1. Parameters used in the model. Parameters D, H, h are indicated in Figure 2. The most-likely tissue parameters are based on the published values. A large breast size is used as the most-likely value.

Parameter	Most-likely value	Range studied
Attenuation in breast	0·086 ($f^{1.5} np\, cm^{-1}$) (Foster *et al.* 1979)	0·052–0·12
Attenuation in water	0·0002 ($f^2 np\, cm^{-1}$) (Kaye 1973)	
Conductivity in breast	0·5 ($W m^{-1} K^{-1}$) (Bowman 1981)	0·3–0·8
Heat Capacity for unit volume	3000 ($J Kg^{-1} K^{-1}$)	3000–3500
Perfusion rate constant in breast	0·52 (at 37°) 1·7 (at 44°) ($kg\, m^{-3}\, s^{-1}$)	0·52–1·7 1·7–3·4
T_{water}	37°C	30–40°C
D	15·3 (cm)	10·2, 15·3
H	7·8 (cm)	5·2, 7·8
h	7·5 mm	0–12

most-likely values of these and other parameters, as well as the range being studied, are listed in Table 1.

An efficient and accurate numerical method for acoustic field calculation in a homogeneous medium generated by a rectangular plane source has been reported (Ocheltree and Frizzell 1989). In this method, the plane source is divided into small rectangular elements, surrounded by a rigid baffle. The method sums the contributions to the pressure at a point from all elements. This method can be extended to a two-layer medium, such as water-tissue or tissue-tissue, if the density (ρ) and the speed of sound (c) in the two layers are close so that the reflection and refraction at the interface of the two materials can be ignored (Lu *et al.* 1995). In the case of water and breast tissue, the density and speed are $1000\,\mathrm{Kg\,m^{-3}}$ and $1519\,\mathrm{m\,sec^{-1}}$ at 35°C (Kaye and Laby 1973) for the former, $1020 \pm 40\,\mathrm{Kg\,m^{-3}}$ (Duck 1990) and $1553 \pm 35\,\mathrm{m\,sec^{-1}}$ (Scherzinger *et al.* 1989) for the latter. Therefore, the effect at the interface can be neglected. For a uniformly excited rectangular plane source, the sound pressure amplitude P_0 at a point inside the breast then can be calculated by:

$$P_0 = \frac{j\rho c \Delta A}{\lambda} \cdot \sum_{n=1}^{N} \left[\frac{u}{R} \cdot e^{-(\alpha_w r_w + \alpha_b r_b + jkr_w + jkr_b)} \cdot \right.$$
$$\left. \times\, sinc\left(\frac{k x'_n \Delta h}{2(r_w + r_b)} \right) \cdot sinc\left(\frac{k y'_n \Delta w}{2(r_w + r_b)} \right) \right] \tag{1}$$

where ρ is the density, c is the phase velocity of the sound waves, u is the velocity amplitude of the plane source, λ is the wavelength, k is the wave number, $\Delta A = \Delta h \cdot \Delta w$ is the element size, x'_n and y'_n are the coordinates of the field point with respect to the centre of the element n, α_w and α_b are the attenuation coefficient in water and breast, r_w and r_b are the propagation distances within water and breast.

The size of Δw and Δh must be small enough to satisfy the conditions for the applicable far-field approximations. The distance between the transducer and the breast is approximately 5 cm in the applicator, which leads to a condition that the element size should be 1 mm or less (Lu *et al.* 1995). In this calculation a size of 1 mm is used.

The power deposition (PD), i.e. the power absorbed per unit volume in the breast, can be calculated from the acoustical pressure amplitude P_0 at a point:

$$PD = \frac{\alpha_b P_0^2}{\rho c}, \tag{2}$$

where the attenuation coefficient α_b is used, assuming that the majority of the attenuated power is absorbed locally.

The PD value is calculated at the centre of each voxel in the breast. A voxel size of $2 \times 2 \times 2\,\text{mm}^3$ is used for the smaller breast size, and $3 \times 3 \times 3\,\text{mm}^3$ for the larger breast size (Table 1). To reduce the number of calculations, only the voxels within 2 cm of the plane passing through the centres of the transducers in the ring are calculated. Beyond this region the PD value is negligible. Since these calculations are very CPU intensive, they are performed only once for each configuration. Power deposition patterns from each transducer are normalized to 1 W applied acoustic power and stored in a data base. In the thermal calculation, these data can be retrieved and the actual absorption pattern from each transducer can be determined once the total deposited power by the transducer is assigned. The total PD at a field point is the arithmetic sum of the contributions by all the transducers. This simple arithmetic relation is possible due to the fact that there is no phase coherence or interference between the transducers as discussed in the previous section.

The standard bio-heat transfer equation (Pennes 1948) is used for the thermal model. Usefulness and limitations of this model have been discussed by several authors (Chen 1980, Eberhart *et al.* 1980, Bowman 1982, Roemer 1988). A main concern of this model is the methodology for handling the effect of the blood flow. In contrast to the thermal conduction process, the effect of blood flow is neither well understood nor mathematically rigorously characterized. Given the complexity and variability of the blood flow patterns, it is understandable that a simple linear perfusion term in the model is a gross simplification of reality. On the other hand, this equation is still the practically operational formula, and has been successfully applied in many cases (Cravalho *et al.* 1980, Dickinson 1984, Roemer *et al.* 1984, Strohbehn and Roemer 1984). Particularly, in the absence of large vessels and when perfusion is not the dominating factor, this formula predicts well the temperature elevation produced by acoustic or electromagnetic fields. For convenience, this bio-heat transfer equation is written as follows (NCRP 1992):

$$\frac{\partial T}{\partial t} = (K/c_v)\nabla^2 T - (T - T_0)/\tau + q_v/c_v, \tag{3}$$

and

$$\tau = \rho_b c_v (\omega_{\mathrm{SI}} c_{vb})^{-1} \tag{4}$$

where T is the temperature, t is the time, K is the thermal conductivity, T_0 is body temperature (37°C), c_v and c_{vb} are the heat capacity per unit volume of tissue and blood, respectively, τ is the perfusion time constant, ω_{SI} is the perfusion rate constant, and q_v is the heat production rate per unit volume. In the case of ultrasound heating q_v is the value of PD calculated Formula (2). The heat production due to metabolism is relatively small, and therefore ignored.

The finite difference method is used in the 3-D numerical treatment of the partial differential equation (Ames 1977, Press *et al.* 1985). This method provides a great deal of flexibility in dealing with different geometries, boundary and initial conditions. Once these conditions are clearly defined and the PD in each voxel is given, the temperature evolution for a whole treatment session, i.e. the temperature distribution in each voxel as a function of time, can be calculated. The voxels in this calculation are the same as those defined for the PD calculation. The choice of their size is a compromise between an acceptable accuracy and a reasonable CPU time required. A time step of 3 s is used, which satisfies the requirement of the stability criterion (Ames 1977). In this approach the PD values, boundary conditions and tissue parameters, all can be assigned as functions of time and position. Therefore, a realistic hyperthermia treatment can be simulated.

The breast tissue parameters listed in Table 1 are based on published data wherever available. To date very little perfusion data for breast are available. A recent report based on seven hyperthermia treatments by use of a modified thermal clearance technique (Waterman and Kramer 1994) indicates that blood flow can be in a range from $<0{\cdot}3\,\mathrm{kg\,m^{-3}\,s^{-1}}$ in the first treatment to $1{\cdot}3\,\mathrm{kg\,m^{-3}\,s^{-1}}$ in the later treatment. These data are consistent with the fact that there are no large blood vessels in breast, and that the breast tissue has a high content of adipose tissue, which would tend to reduce the perfusion rate. The perfusion in breast is, therefore, likely similar to or less than that of resting skeletal muscle. The perfusion rate constant for anterior thigh and forearm have been measured as $0{\cdot}48\,\mathrm{kg\,m^{-3}\,s^{-1}}$ and $0{\cdot}59\,\mathrm{kg\,m^{-3}\,s^{-1}}$, respectively (Sekins and Emery 1982). Thus, the perfusion rate constant for breast is assumed to be about $0{\cdot}52\,\mathrm{kg\,m^{-3}\,s^{-1}}$, but could be as high as $1{\cdot}7\,\mathrm{kg\,m^{-3}\,s^{-1}}$. It was further assumed that when the temperature is elevated to 44°C, the perfusion rate may linearly increase by a factor of two. Even at this higher value, the perfusion rate is still relatively low compared to other organs. Consequently, the standard bio-heat transfer equation can be used and reliable results can be expected.

The initial temperature inside the breast is assumed to be 37°C uniformly. Near the surface, the actual initial temperature may be lower than this value. However, this initial uncertainty causes no concern, since it has little effect on the temperature distribution after several minutes of heating. Water temperature is adjustable between 30 and 40°C. It is assumed that the voxels in the superficial breast adjacent to water are kept at this temperature. When the water is well circulated, this is a practical and very reasonable approximation. For the boundary condition below the chest wall, which is outside the ultrasound field, it is assumed that the temperature is maintained at 37°C at a depth h.

The simulation is performed with the parameter values listed in Table 1. In all simulated cases the acoustic power from each transducer is adjusted manually by the operator according to the temperature feedback until the resulting temperature elevation is satisfied. The two frequencies were optimized by the simulation. The low frequency was determined to be 2 MHz in the first two rings and 2·5 MHz elsewhere. The high frequency was determined to be ~4·5 MHz. The results obtained using these frequencies are presented in § 3.

2.3. *Experiment*

Experiments have been conducted using a single ring of transducers. The main purpose of the experiment was to verify the power deposition calculations. Another purpose is to verify that the transducers are driven non-coherently with the designed electronics.

This transducer ring has 48 transducers operated alternately at low (2·0 MHz) and high (4·5 MHz) frequency. The electronic system used to drive the test ring has six amplifiers, each having its own oscillator (Figure 3A). The output of one amplifier is connected to eight transducers through a multiplexer. Consequently, the transducer ring is divided into eight groups, each consisting of six transducers.

In this experiment, each transducer group is powered for a duration of 55 m sec in a sequential manner. Consequently, one complete cycle is $8 \times 55\,\mathrm{m\,sec} = 440\,\mathrm{m\,sec}$, which is less than the time constant relevant to thermal processes (such as τ). The insonation can therefore be treated as if the transducers are turned on continuously with a temporally averaged power.

The ultrasonic tissue-mimicking phantom consists of water-based pharmaceutical gels containing uniform distributions of graphite powder and alcohol (Madsen *et al.* 1978). The phantom, which has a diameter of 13 cm at the base and a height of 8 cm, is immersed in water and surrounded by the transducer ring. The base is covered by a 2 mm rubber sheet. The plane in the middle of the ring is 1·35 cm below the base. Multisensor thermocouples, inserted into 20 gauge needles, were used for temperature measurement. These probes (Dickinson 1985, Hynynen and Edwards 1989) have a fast response time (0·1 s) and minimal acoustic artifact. Three probes were inserted in the plane as shown in Figure 3 (B). The water temperature and room temperature were 24°C during the experiment.

As the first step of the experiment, the PDs, normalized to the total output power of all the amplifiers operating at the same frequency, are determined at each sensor point. It is calculated from the initial rate of the temperature change from a stable state, which can be derived from Formula (3) by ignoring the conductivity and perfusion term and written as:

$$q_0 = q_v/N = c_v \frac{\Delta T}{\Delta t}/N, \tag{5}$$

where q_0 is denoted as the normalized PD at each sensor point, N is the total output power by the amplifiers (2·5 W for 2 MHz transducers and 10 W for 4·5 MHz transducers in this experiment). ΔT is the temperature elevation at the sensor point in a small time interval Δt, which is between 1–11 s after the power is turned on. The measured temperature within the first second is ignored, so that the artifacts can be eliminated. Normalized PDs are determined separately for the low and high frequencies.

In the second step, the output powers to the high and low frequency transducers were adjusted manually until a uniform and pseudo-steady temperature distribution was reached in the plane (~6°C above the baseline) and maintained. The total output power by the amplifiers to achieve the temperature distribution was found to be 1·9 W for the 2·0 MHz transducers and 15 W for the 4·5 MHz transducers.

These same experimental conditions were simulated by the methods discussed previously. The experimental results are compared to the simulations in § 3 and discussed in § 4.

3. Results

3.1. *Simulation results*

The most-likely values of ultrasound and tissue characteristics used in the simulation are listed in Table 1. They are closest to those found in the literature for

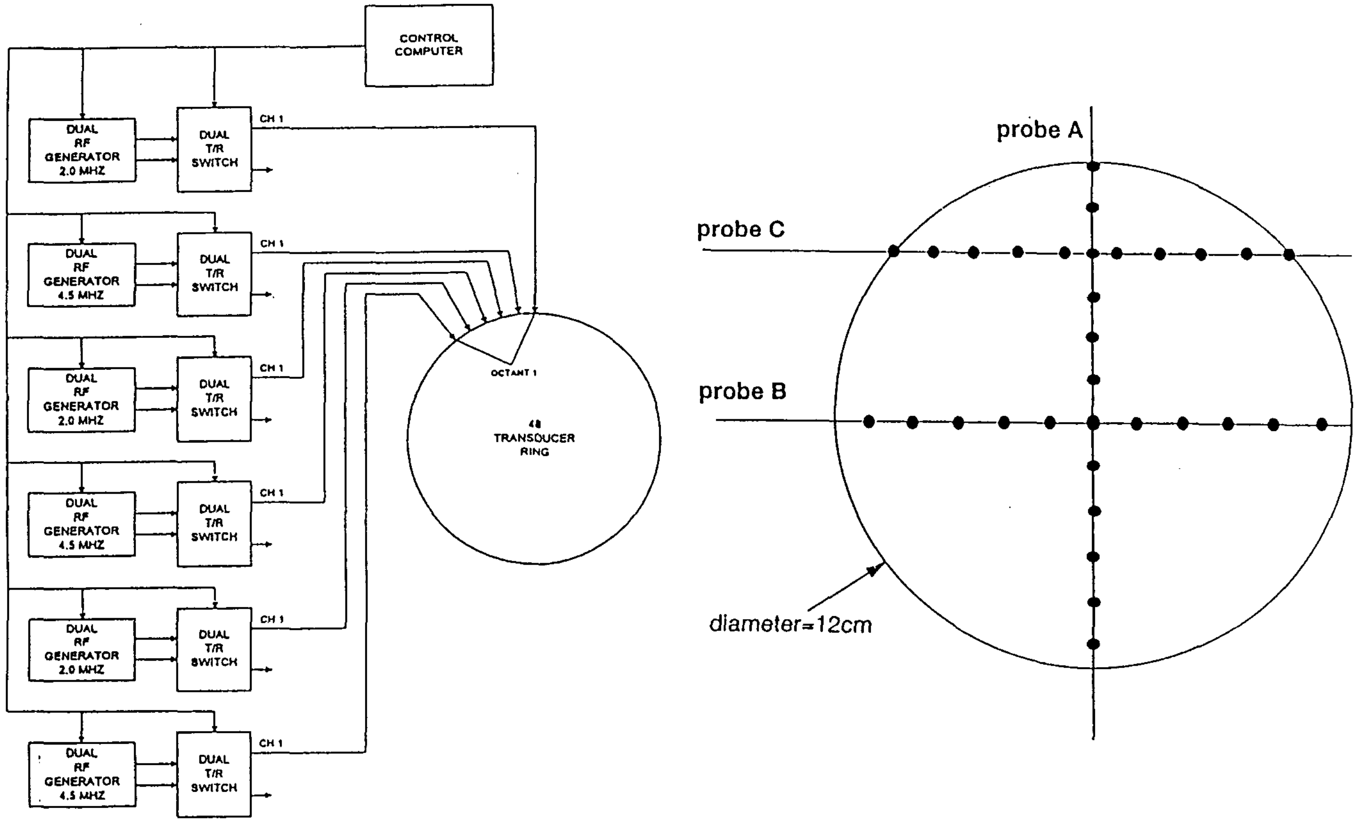

Figure 3. (A) The schematic diagram of the electronics used in the single ring experiment. Six RF generators, each consists of a voltage controlled oscillator (VCO) and an amplifiers, are connected to one of the octant of the 48 transducers for a duration of 55 m sec. The eight octants are powered alternately by the six generators. As a result, the ultrasound beams from different transducers are always out of phase. It also shows that the system can operate in transmit or receive mode. All these operations are under the control of a PC; (B) cross section coincident with the centres of transducers in the single ring experiment. The lines represent the positions of the probes. The dots represent the positions of the sensors.

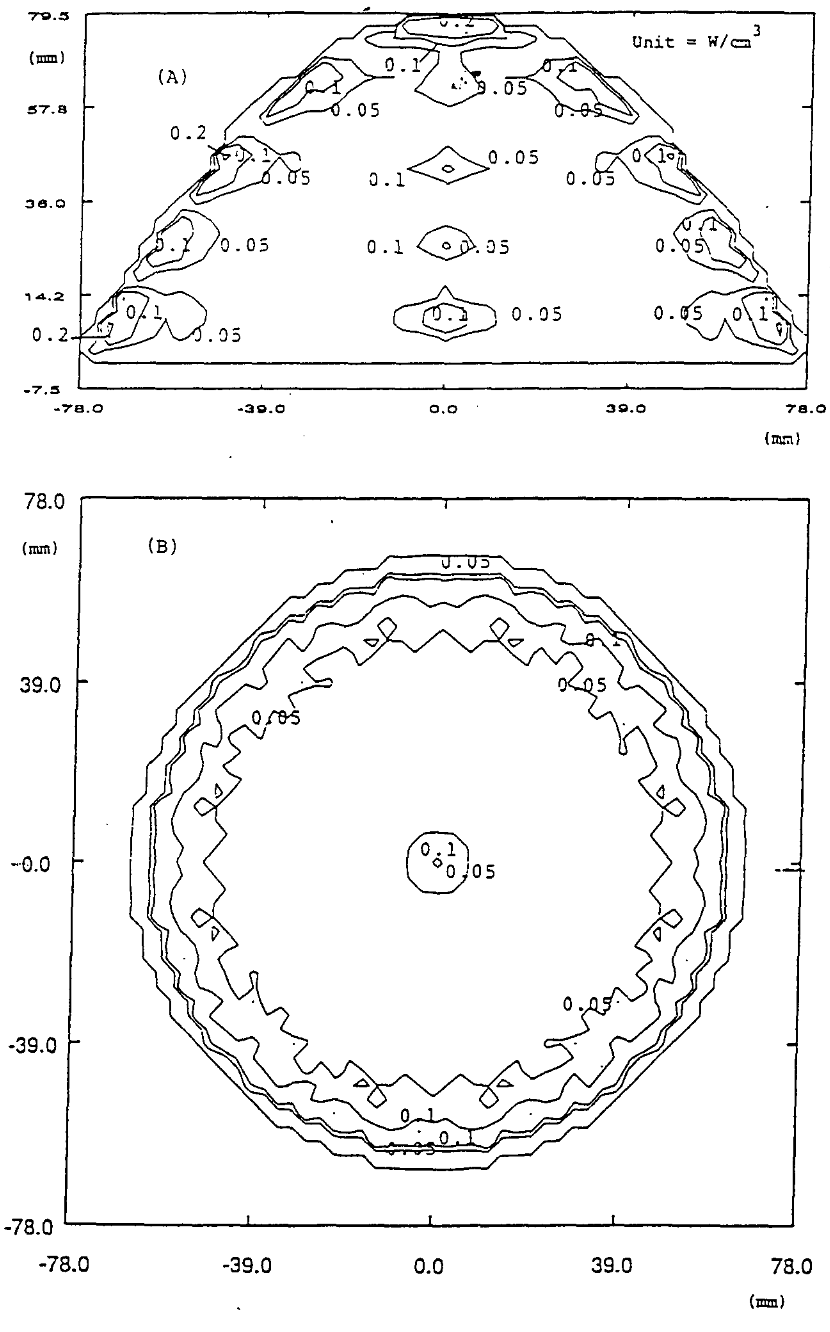

Figure 4. PD distribution applied in the simulation. The most-likely parameter values in Table 1 are used: (A) sagital section passing through the centre of the breast; (B) coronal section 25·5 mm from the chest wall, corresponding to the second transducer ring; (C) sagital section passing through the centre of the breast due to the low frequency transducers; (D) sagital section passing through the centre of the breast due to the high frequency transducers.

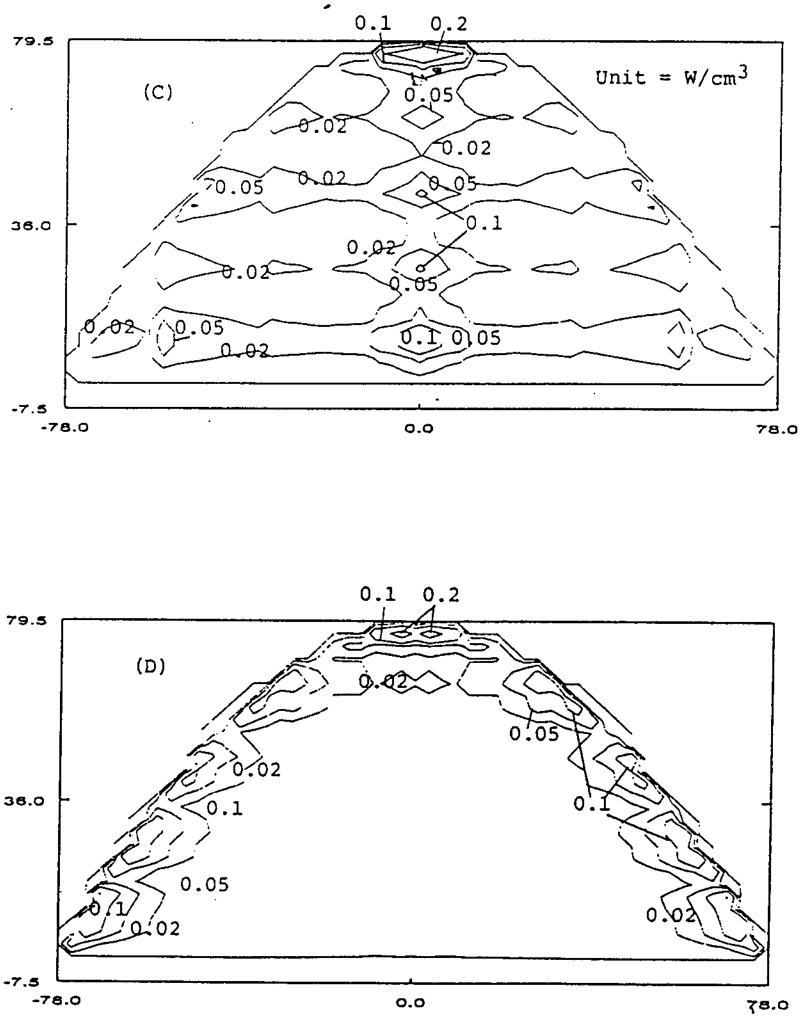

Figure 4. Continued.

the appropriate frequency and tissue type. Simulations were performed over a range of ultrasound and tissue parameters, representing extreme tissue types, breast sizes, attenuation and perfusion conditions. We therefore can examine the ability of the treatment system to control the temperature distribution over a large range of conditions.

To simulate a typical treatment, the power level may be changed during the session. This is an important feature of the approach in this study. For simplicity in the presentation, however, we only show simulations in which the powers are constant. Figure 4 shows the steady PD distribution for the most-likely case. The total deposited power is about 42 W. Figure 4A is the sagital view passing through the centre of the breast. In this plot, five rings with higher PD can be seen, corresponding to the five transducer rings. Figure 4B is the coronal view at 25·5 mm from the chest wall coincident with the centre of the second transducer ring. For understanding the operating principles of the device, Figure 4C and D illustrate the power deposition patterns due to each frequency component. The contributions from each transducer is

[redacted]

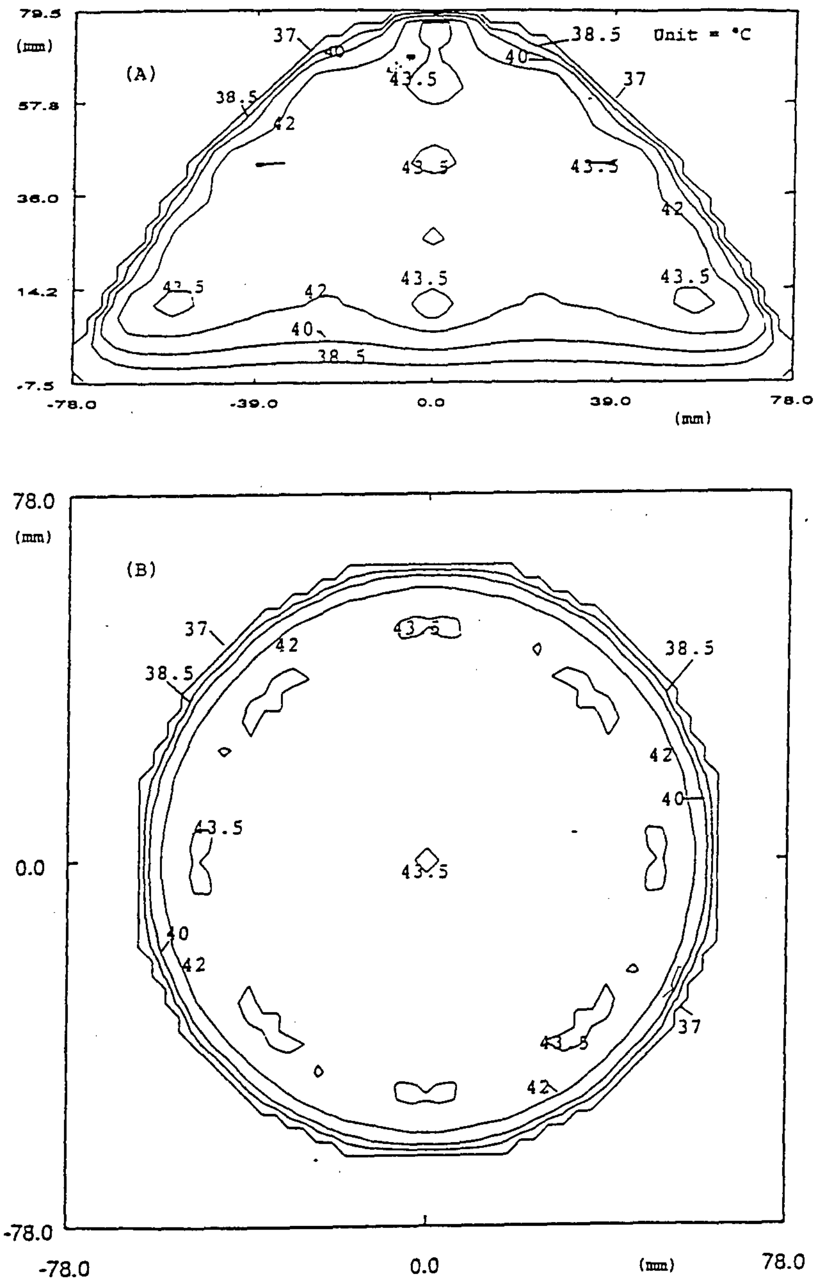

Figure 5. Simulated temperature distribution 40 min after the steady PD shown in Figure 4 is applied. Maximum temperature is 44·0°C: (A) sagital section passing through the centre of the breast; (B) coronal section at 25·5 mm from the chest wall, corresponding to the second transducer ring.

also listed in Table 2. The corresponding temperature distributions after 40 min are shown in Figure 5A and B.

Figure 6 plots the temperature evolutions in the line passing through the centre of the sagital sections and in the horizontal diameter in the coronal plane. The

Table 2. The power deposition by each transducer required to maintain the steady state temperature distribution. Three cases are shown. 'M.L. Value' means the most-likely parameter values listed in Table 1. The power distribution for this case is also shown in Figure 5. '$T_{\text{water}} = 30°\text{C}$' indicates the circulating water temperature is changed to 30°C. 'High Perfusion' indicates the perfusion time constant is changed from 600 s at 37°C to 300 s at 44°C. All other parameters remain as the most-likely values.

Ring	Frequency (MHz)	Number of transducers	Power deposition (W)/transducer		
			M.L. values	$T_{\text{water}} = 30°$	High perfusion
1	2	24	0·42	0·41	0·62
	4·5	24	0·28	0·38	0·32
2	2	24	0·15	0·15	0·31
	4·5	24	0·26	0·45	0·3
3	2·5	24	0·16	0·15	0·31
	4·5	24	0·20	0·3	0·22
4	2·5	24	0·04	0·04	0·07
	4·5	24	0·18	0·33	0·26
5	2·5	12	0·04	0·04	0·04
	4·5	12	0·04	0·10	0·04
Total			41·5	54·8	58·8

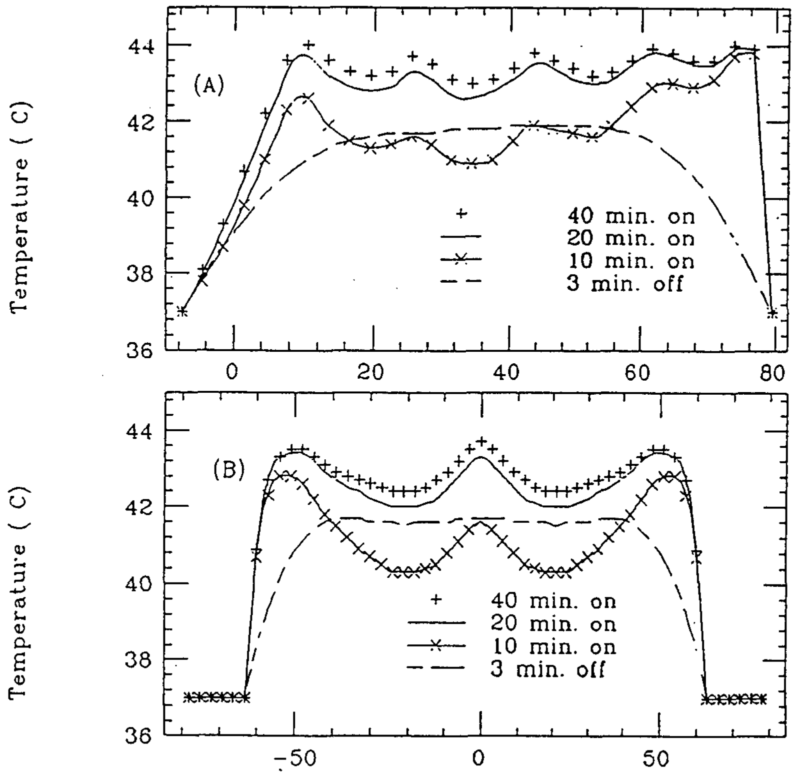

Figure 6. Simulated temperature distribution 10, 20, 40 min after the corresponding PD shown in Figure 6 is applied and the distribution 3 min after the power is off: (A) the distribution in a perpendicular line passing through the centre of the sagital section; (B) the distribution in a perpendicular line passing through the centre of the coronal section.

temperature distributions 10, 20 and 40 min after the power is on, and the distribution 3 min after the power is off are plotted. Note that after 20 min, the temperature distribution is approaching steady state and becomes quite uniform. Also note that the distribution after power off becomes smooth.

The simulation parameters were changed to examine the effects of boundary conditions and perfusion rate on the computed temperature distribution. For a better understanding of the effects of these changes, only one parameter is varied at a time, and all other parameters remain as the most-likely values. In Table 2, the power contributions by each transducer for two more simulations are shown. In one case, the surrounding water temperature is kept at 30°C. In another case, the perfusion rate is increased. It is assumed that the perfusion rate is $1{\cdot}7\,\mathrm{kg\,m^{-3}\,s^{-1}}$ at 37°C, and

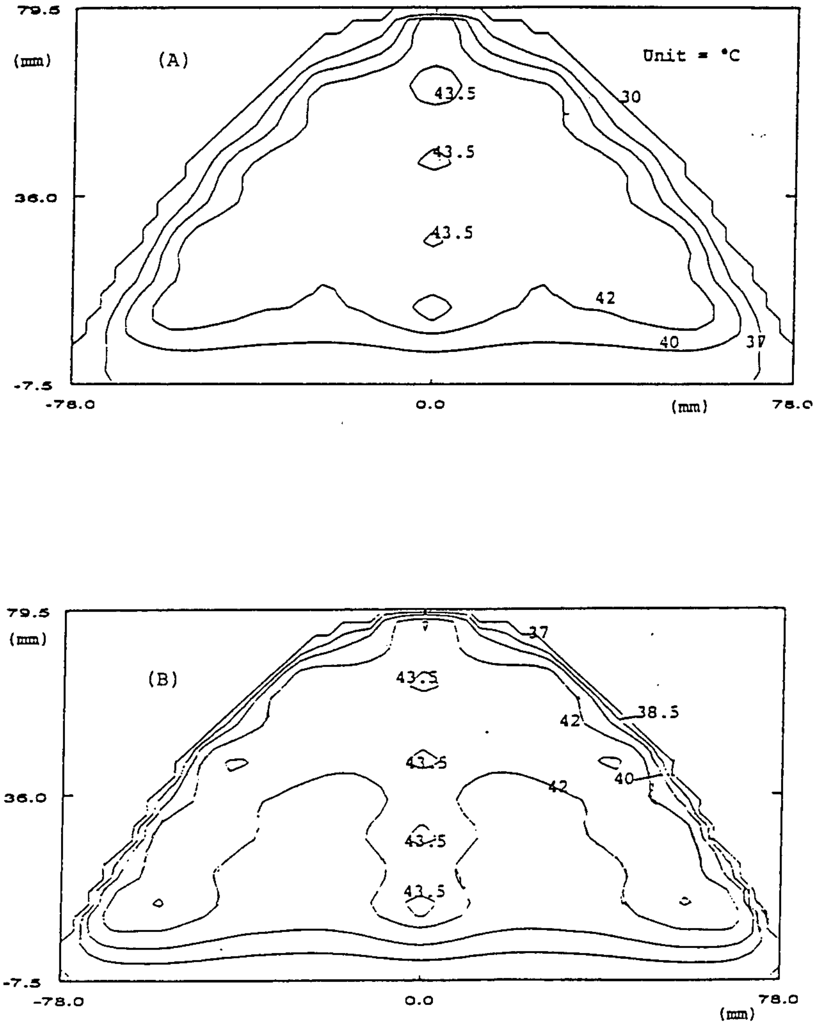

Figure 7. Sagital section passing through the centre of the breast for simulated temperature distribution 40 min after steady PD described in Table 2 is applied (A) water temperature is changed to 30°C. Other parameters remain as the most-likely values in Table 1; (B) a high perfusion rate is used (600 s at 37°C and 300 s at 44°C). Other parameters remain as the most-likely values in Table 1.

linearly changes to $3{\cdot}4\,\mathrm{kg\,m^{-3}\,s^{-1}}$ at 44°C. In either case, the power deposition can be adjusted such that the temperature distribution remains satisfactory as shown in Figure 7. It can be noted that a higher perfusion rate produces a less homogeneous temperature distribution.

One particular clinical concern, that has been raised for recurrent breast cancer treatment, is for scar tissue resulting from lumpectomy or other surgical interventions. Scar tissue has poor blood supply and very low perfusion rate and, therefore, tends to be overheated. Such overheating can create undesirable treatment toxicity and one goal of this design is to have adequate temperature control to avoid such toxicities. To study this problem, different sizes of biopsy cavities determined by CT scans were examined. These cases included a biopsy cavity of the size of $12 \times 60 \times 80\,\mathrm{mm}^3$ which was added to the theoretical model. It was assumed that the biopsy volume had no perfusion and that the attenuation rage and other parameters remain the same. Obviously, hot spots will occur in this region unless the heating pattern is changed accordingly. This hot region is shown in Figure 8A where the lumpectomy volume exists by the same power level as in Figure 4 is applied, and the maximum temperature reaches 45·3°C. To prevent this overheating of the scar and lumpectomy volume, the breast treatment applicator must have enough control capacity to reduce the power deposition locally in the biopsy scar cavity. This is shown in Figure 8B where a satisfactory temperature distribution is achieved when corrected PD is applied, and the maximum temperature is 44·0°C.

To treat a quadrant of the breast, the boundaries inside the breast need to be sufficiently heated, in addition to the quadrant of the surface and the base. Figure 9 demonstrates the PD pattern from the breast applicator needed to satisfy that requirement. The corresponding steady state temperature distribution is shown in Figure 10.

3.2. *Experimental results*

The measured pseudo-steady state temperature distribution is plotted in Figure 11. To determine the corresponding power deposition in each sensor point, the normalized PD (q_0), deduced by Equation (4), is multiplied by the total steady power output (i.e. 1·9 W for 2·0 MHz and 15 W for 4·5 MHz). This was performed separately for high and low frequencies, and their results were added together. This gives the measured constant power deposition which is shown in Figure 12.

The power deposition was simulated by the acoustic model. The total absorbed powers for the low and high frequencies in the simulation were adjusted such that the calculated PD values in the sensor points match reasonably well with the measurement as shown in Figure 12. Based upon this calculated PD, the pseudo-steady state temperature distribution in the whole phantom is calculated. The result 20 min after the steady power was 'turned on' in the simulation is shown. The computed temperature distribution in the sensor positions is superimposed into the experimental data in Figure 11.

The total absorbed power used in the simulation is 0·84 and 7·9 W for the low and high frequency transducers, respectively. These values are lower than the measured total output powers of the amplifiers (1·9 and 15 W for low and high frequency respectively). This difference is expected due to the losses in the cables and transducers.

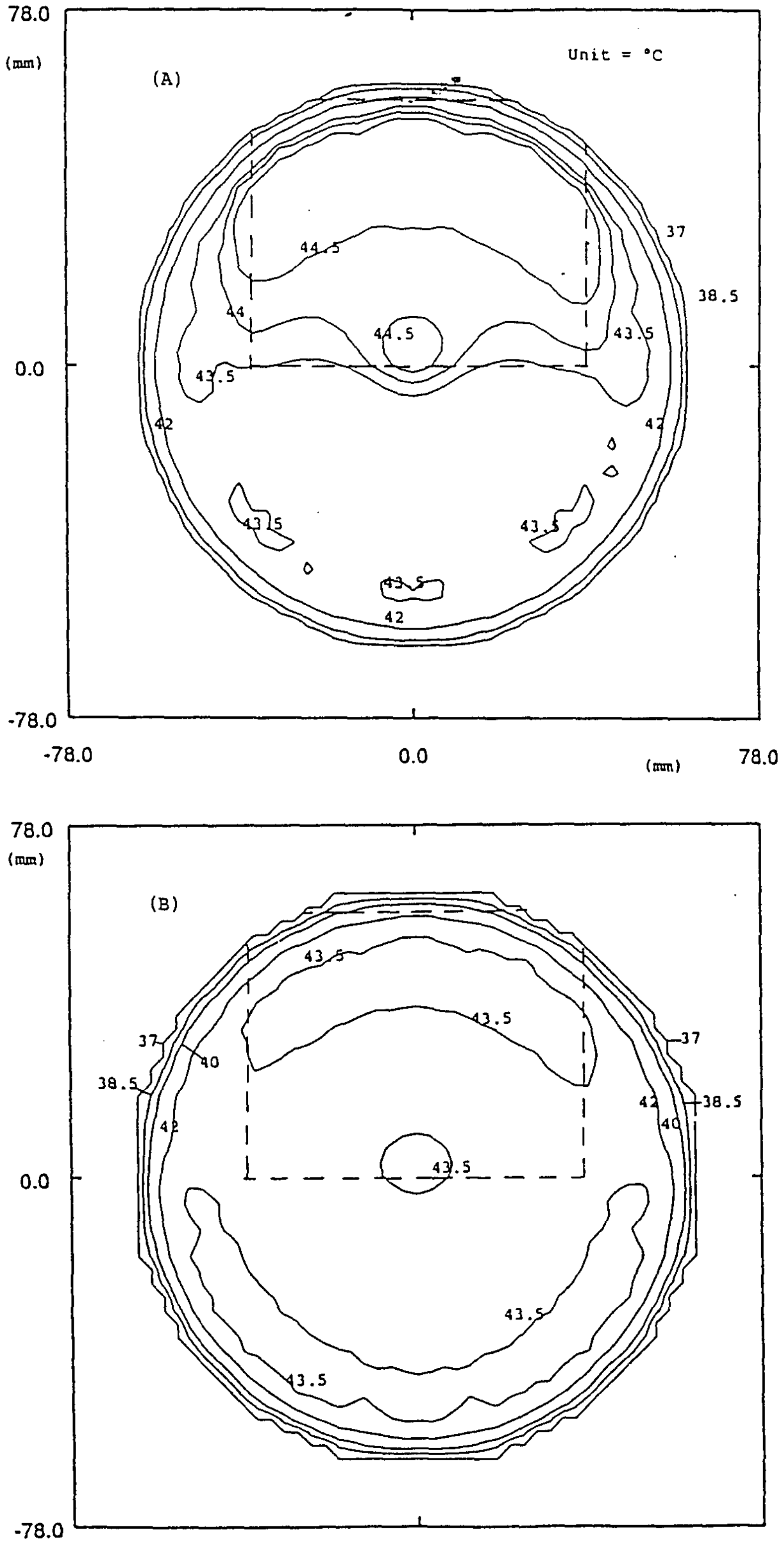
78.0
(mm)
(A)
Unit = °C
37
38.5
44.5
44
44.5
43.5
43.5
0.0
42
42
43.5
43.5
43.5
42
-78.0
-78.0
0.0
(mm)
78.0
78.0
(mm)
(B)
43.5
43.5
37
37
40
38.5
38.5
42
42
40
43.5
0.0
43.5
43.5
-78.0

[redacted]

4. Discussion

In this paper we have reported the general design and the simulation models for the ultrasound applicator for intact breast treatment. The simulations demonstrated that a combination of low and high frequencies is capable of delivering appropriate power deposition to the boundaries and interior of the breast as shown in Figures 4–10. This capability is enhanced by the small transducer size and the separate power control for each transducer. As a result, the heat losses due to conduction and perfusion can be properly compensated, and a uniform temperature distribution can be achieved and maintained.

The different roles of the high and low frequency transducers for maintaining uniform temperature can be clearly seen by comparing the data in Table 2, where the power deposition per transducer with low and high frequencies are listed for three cases. When the circulating water temperature is changed from 37 to 30°C, the power of the high frequency source has to be increased by more than 30% to compensate the increased heat losses to the water. Meanwhile, the low frequency power remains the same, because the perfusion rate did not change. On the other hand, when the perfusion rate is high but the water temperature remains at 37°C, the power at the low frequency has to be increased significantly to overcome the higher perfusion, while only a slight power change is needed at high frequency.

It has been demonstrated that a target area from a quadrant to a whole breast can be treated satisfactorily. The application of the treatment system, however, is not limited to these examples. By combining Figures 5 and 7A, it is clear that a smaller target volume in the centre can be heated by using low water temperature and/or reduced high frequency power. Meanwhile, the technique for heating a quadrant may be used for a smaller arc. By combining the centre area and one or more arcs, treatment of non-symmetric tumours is also possible. Furthermore, in this paper results only for a large size breast are shown. Better results were found for a smaller breast, because a more uniform power deposition can be obtained for a smaller size breast, where the conduction effect becomes more pronounced.

Since individual transducer rings are stacked together, the power deposited to a given plane is delivered predominantly from the ring that defines the plane. As a result, in the first order of approximation the temperature in a plane can be adjusted by the corresponding ring of transducers. The lack of significant interaction between adjacent rings simplifies the power control.

The simulation is a useful tool for the design of a hyperthermia system of this complexity. However, the results are based on certain assumptions and may be of limited predictive value for individual patients due to uncertainties in the breast tissue characteristics. To better understand the magnitude of these uncertainties the tissue and ultrasound parameters have been varied over a large range of values covering both assumed extremes and published data (Table 1). The purpose of studying the effect of parameter uncertainties on the system performance is to demonstrate that the power frequency control of the breast applicator has enough range to accommodate different clinical situations and individual breast tissue variations.

Figure 8. Sagital section of simulated temperature distribution 40 min after power is 'on'. It is assumed that there is no perfusion in a volume indicated by the dash lines ($12 \times 60 \times 80\,\mathrm{mm}^3$). (A) The steady PD, shown in Figure 4, is applied. The maximum temperature is 45·3°C; (B) after corrected PD is applied, the maximum temperature is 44·0°C.

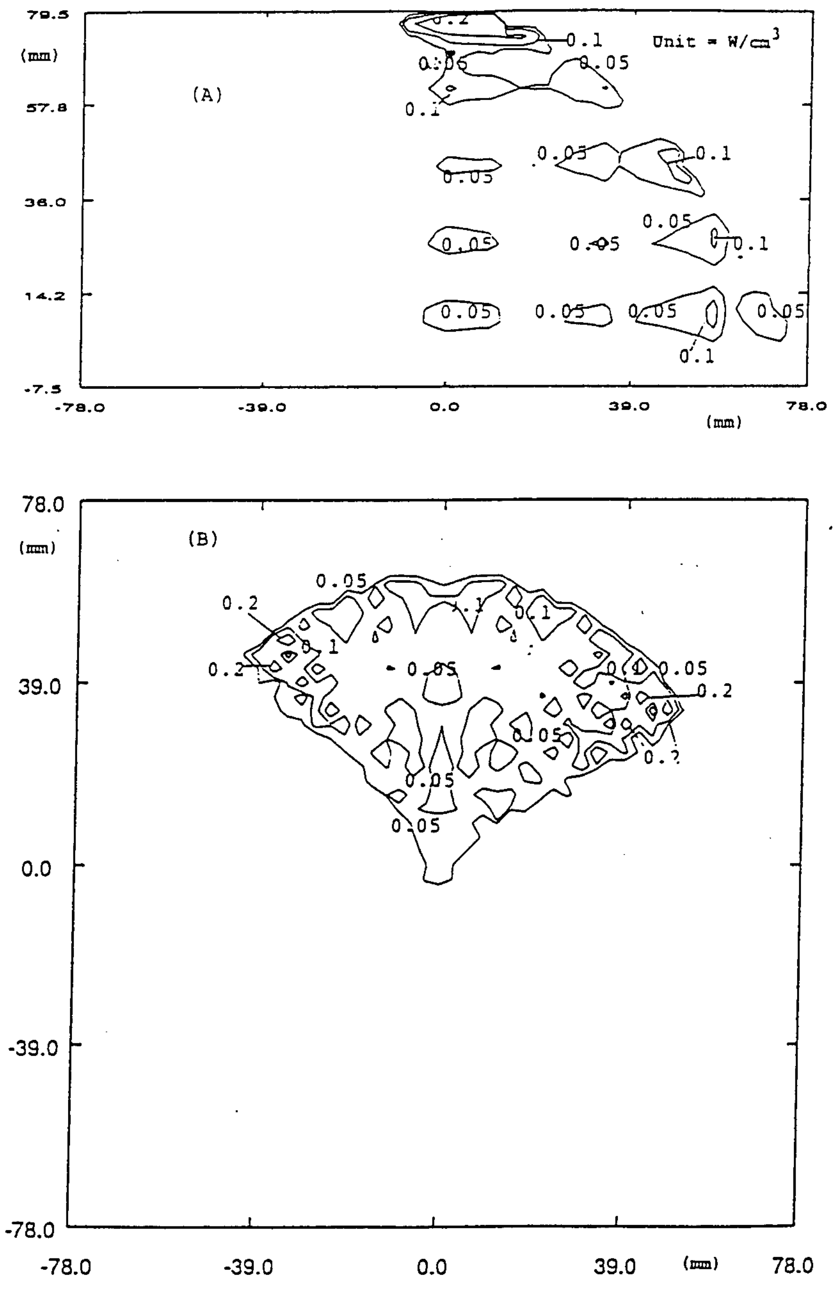

Figure 9. Steady PD distribution to treat a quadrant of the breast. The most-likely parameter values in the Table 1 are used: (A) sagital section passing through the centre of the breast; (B) coronal section at 25·5 mm from the chest wall, corresponding to the second transducer ring.

The transducer frequencies are determined by the simulation in order to achieve the heating pattern discussed in § 2.1. for the assumed tissue attenuation rate. Measurements of the acoustic attenuation coefficient for breast tissue show variations of ±40% (Foster and Hunt 1979, Edmonds *et al.* 1991), which can only be

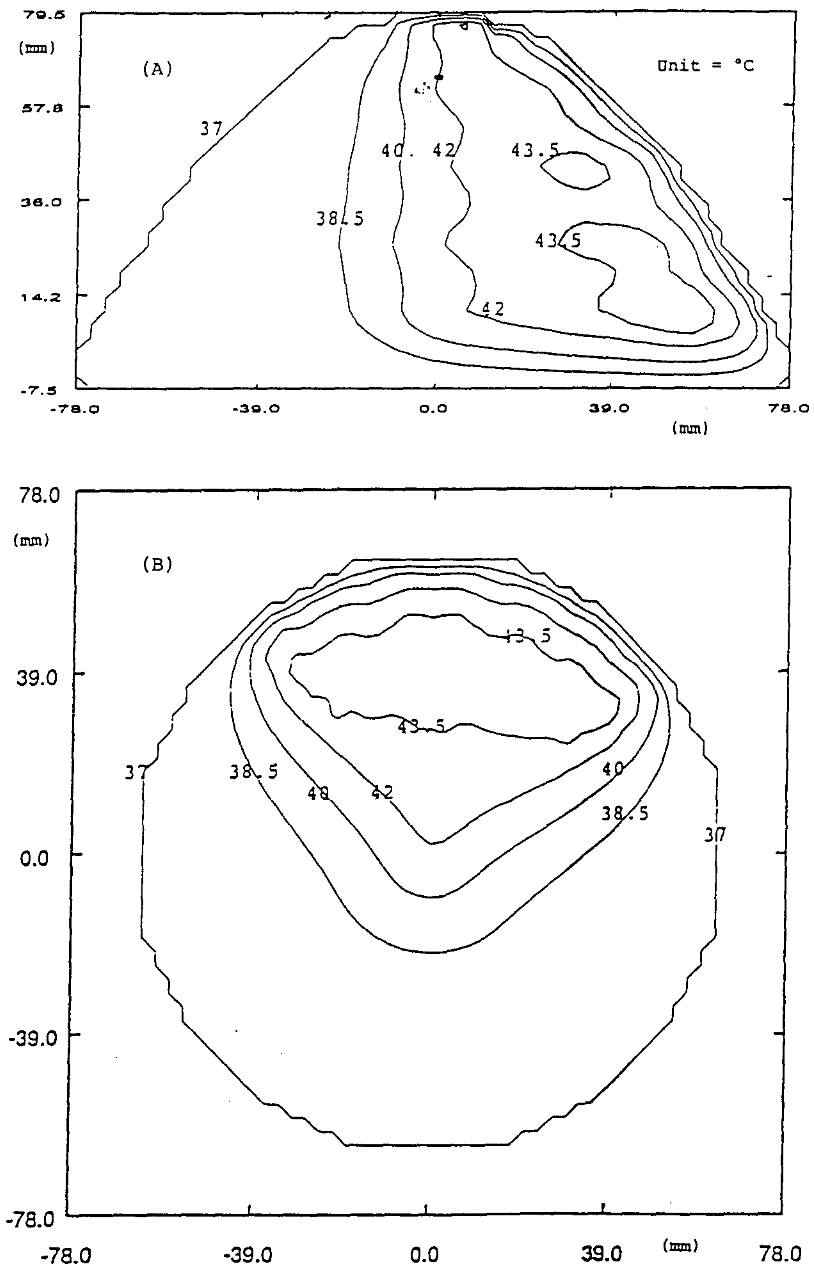

Figure 10. Temperature distribution 40 min after the steady PD, shown in Figure 9, is applied: (A) sagital section passing through the centre of the breast; (B) coronal section at 25·5 mm from the chest wall, corresponding to the second transducer ring.

compensated by changing the frequency. For a higher attenuation, a lower frequency should be used, and vise versa. Therefore, a broadband transducer is needed, especially for the low frequency. The bandwidth of the transducers is about 30% at −3 dB of maximum. The voltage controlled oscillators (VCO) in the system can operate between 1 MHz and 5 MHz, and the desired frequency band can be selected

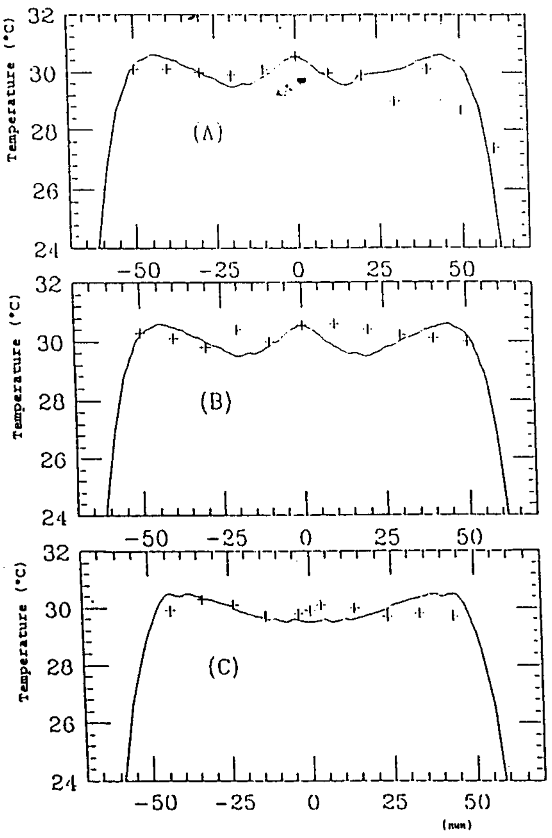

Figure 11. Measured temperature distribution (shown as +) by the probes in the single ring experiment, compared with the simulation results shown by solid lines. (A), (B), (C) correspond to the probe A, B, C respectively. The water and room temperature was maintained at 24°C during the experiment.

by computer control. With these features, the system will be able to compensate for the uncertainties.

The effect of blood perfusion is a difficult parameter to simulate. Only limited data are available and it varies significantly with tissue heterogeneity and changing temperature. Recently reported blood flow data, measured at the same point in a human breast adenocarcinoma during hyperthermia over four weeks of hyperthermia, indicate that the flow rate may change significantly even in the same measurement point (Waterman and Kramer 1994). The uncertainties in the breast tissue perfusion, therefore, remains a main concern. Due to these uncertainties, we simulated the breast applicator over a wide range of temperature dependent perfusion rates. In the case of high perfusion rate (Figure 7(B)), it is noticed that the 42°C line is well up into the region being 'treated'. This is due to the fact that the transducers are focused at the centre. A relatively hot spot is found in the centre and a cooler area is between the centre and surface. To correct the problem, the applicator may be translated a few centimeters away from the centre of the breast, and a circular movement made around it. The inhomogeneity of the perfusion in the breast is another clinical concern. The biopsy example shown in Figure 8 demonstrated that the small transducer size and the individual power control made a compensation

[redacted]

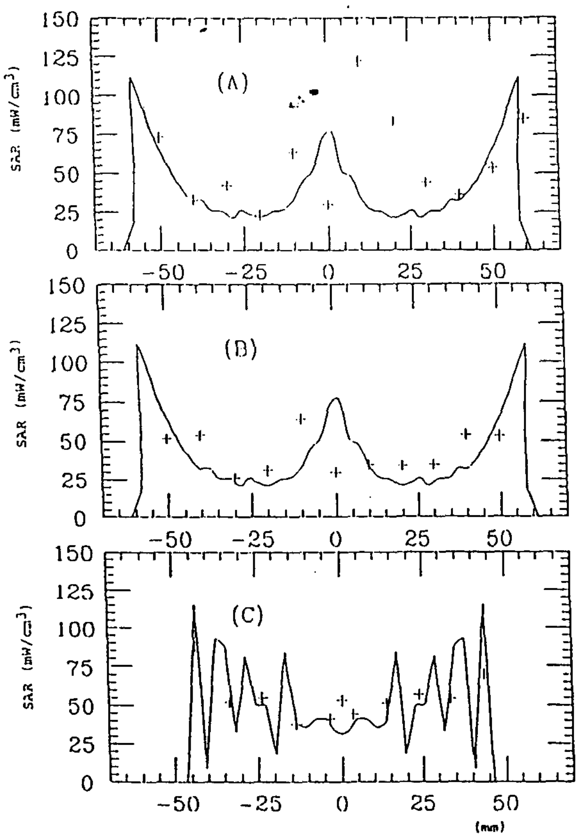

Figure 12. Measured PD (shown as +) by the probes in the single ring experiment. The simulated results are shown by solid lines. The total power deposited in the simulation was adjusted to match the measured data. (A), (B), (C) correspond to the probes A, B, C respectively.

possible, given that the nature of the inhomogeneity is known.

The simulation used in this work is dynamic. The tissue parameters can be changed over time and the power deposited by each transducer can be adjusted based upon the feedback of the temperature distribution. When the time to reach steady state temperature is considerable (i.e. 10 min or more) or when other factors such as perfusion are known to vary as a function of temperature and time, the dynamic simulation allows one to study realistic temperature variations. Important parameters highly associated with the outcome of the treatment, such as the *EQ MIN* T_x 43 (Oleson *et al.* 1993), can be estimated.

The single ring experiment was mainly used to verify the power deposition calculation method. Several factors contributed to the uncertainties in the experiment. First, the sensor positions are not known exactly due to bending of the needle probes. The uncertainty is estimated to be $\leqslant$ 1 cm at the tip of the probes. The second source of uncertainty is from non-uniformity in the transducer efficiency. The average efficiencies (RF to ultrasound field) for the transducers are determined to be 70 ± 3% for low frequency and 58 ± 10% for high frequency transducers. Furthermore, inhomogeneities can occur in the phantom material due to evaporation of water and alcohol. In the simulations, however, it was assumed that all transducers

[redacted]

were identical and the phantom was homogeneous. Given these uncertainties, the agreement between the experimental data and the simulations (Figure 12) is fair. A reasonable uniform temperature distribution (within approximately 2°C) was indeed reached in the experiment and it matches the simulation results well (Figure 11). The function of the low frequency in the experiment is only to compensate the heat lost to the neighbouring tissue volume. As a result, the power needed at low frequency was small (0·84 W), compared with that at high frequency (7·9 W). Therefore, this is a useful check for the two-frequency concept discussed in § 2.1.

One important assumption in the design and simulation is that there is no phase interference between different beams. This is achieved by an electronics design that prevents any two beams from being in-phase, while keeping the number of oscillators and amplifiers moderate. The single ring experiment with associated electronics proved that the electronics design is appropriate in this respect. No unexpected hot spots were observed. For the multi-ring applicator the circuits for any two neighbouring rings are independent, which guarantees the validity of the assumption.

The choice of grid size in the simulation has been carefully studied. We used 2 mm for a small size model and 3 mm for a large size model. The total number of voxels used is $53 \times 53 \times 30$ in both cases. The PD calculation is more CPU intensive than the thermal computation. When the breast is assumed to be symmetric, the CPU time needed for PD calculation is greatly reduced. It takes about 20 min for five transducer rings on a dedicated work station HP 9000/735. For thermal calculation, it takes about 5 min to simulate a complete treatment session (~50 min). Using a smaller grid size has proven not to be beneficial, because reducing the grid size by a factor of two requires CPU time increase by a factor of 2^4 in the thermal calculation and 2^3 in the PD calculation, while the difference in the resulting temperature distribution is insignificant.

The use of the minimally temperature invasive sensors, currently being developed (Szajda *et al.* 1994), will be more tolerable to patients due to its small size (22 gauge). Still, the number of probes will be limited to, perhaps, three in a patient. Therefore, the arrangement of these probes needs to be optimized. To facilitate treatment planning and control, knowledge of the breast profile is essential. This may be obtained on-line by employing pulse-echo signals using the same transducers. Two operating modes (transmit and receive) have been built into the system electronics for this purpose. It may also be possible to use the methods and algorithms being developed for on-line control in the treatment (Hartov *et al.* 1993, VanBaren and Ebbini 1995). All of these require further study.

5. Conclusions

A therapeutic ultrasound system dedicated to breast cancer treatment has been developed. It consists of an array of dual frequency, multilayer transducer rings and associated electronics, coupled with thermometry and closed-loop control. Its performance has been modelled and optimized using a comprehensive 3-D simulation, which offers insights in the physical process and the design criteria. The simulations demonstrate the system's capability to deliver a power deposition to achieve uniform hyperthermia (41·5–44°C) under various perfusion and boundary conditions. The two frequency bands and the small size transducers provide a flexibility for treating target volumes with different sizes and shapes. With these features the designed system is able to meet clinical needs in breast cancer treatment.

6. Acknowledgement

This work is supported by the US Army Medical Research and Development Command, under contract #DAMD 17-93-C-3098. The views, opinions and/or findings contained in this paper are those of the authors and should not be construed as an official Department of the Army position, policy or decision unless so designated by other documentation. The authors would like to thank H. F. Bowman, W. H. Newman of MIT, R. X. Huang of Woods Hole Oceanographic Institution, and P. Neubauer, P. Barthe, M. H. Slayton of Dornier-AI for many helpful discussions, and Jamie Pellegati for his technical support.

References

AMES, W. F., 1977, *Numerical Methods for Partial Differential Equations*. (New York: New York Academic Press).

BOWMAN, H. F., 1981, Heat transfer and thermal dosimetry. *Journal of Microwave Power*, **16**(2), 121–133.

BOWMAN, H. F., 1982, Themodynamics of tissue heating: modeling and measurements for temperature distributions. In *Physics Aspect of Hyperthermia*, edited by G. H. Nussbaum (New York: American Institute of Physics) pp. 511–548.

BOYAGES, J., RECHT, A., CONNOLLY, J., SCHNITT, S. J., GELMAN, R., KOOY, H., LOVE, S., OSTEEN, R. T., CADY, B., SILVER, B., and HARRIS, J. R., 1990, Early breast cancer: predictors of breast recurrence for patients treated with conservative surgery and radiation therapy. *Radiationtherapy and Oncology*, **19**, 29–41.

CHEN, M. M., 1980, Microvascular Contributions in Tissue Heat Transfer. *Annals of New York Academy of Sciences*, **335**, 137–150.

CRAVALHO, E. G., FOX, L. R., and KAN, J. C., 1980, The application of the bioheat equation to the design of thermal protocols for local hyperthermia. *Annals of the New York Academy of Sciences*, **335**, 86–97.

DEWEY, W. C., HOPWOOD, L. E., SAPARETO, S. A., GERWECK, L. E., 1977, Cellular response to combinations of hyperthermia and radiation. *Radiology*, **123**, 463–474.

DICKINSON, R. J., 1984, An Ultrasonic system for local hyperthermia using scanned focused transducers. *IEEE Transactions Biomedical Engineering*, **31**, 120–125.

DICKINSON, R. J., 1985, Thermal conduction errors of manganin-constanian thermocouple arrays. *Phys. Med. Biol.*, **30**, 445–453.

DUCK, F. A., 1990, *Physical Properties of Tissue—A Comprehensive Reference Book* (Academic Press Inc), 138 pp.

EBBINI, E. S., and CAIN, C. A., 1991, A spherical-section ultrasound phased array applicator for deep localized hyperthermia. *IEEE Transactions on Biomedical Engineering*, **38**, 634–644.

EBERHART, R. C., SHITZER, A., and HERNANDEZ, E. J., 1980, Thermal dilution methods 2; Estimation of tissue blood flow and metabolism. *Annals NY Academy of Sciences*, **335**, 107–132.

EDMONDS, P. D., MORTENSEN, C. L., HILL, J. R., HOLLAND, S. K., JENSEN, J. F., SCHATTNER, P., VALDERS, A. D., LEE, R. H., and MARZONI, F. A., 1991, Ultrasound tissue characterization of breast biopsy specimens. *Ultrasonic Imaging*, **13**, 162–185.

FESSENDEN, P., LEE, E. R., ANDESON, T. L., STROHBEHN, J. W., MEYER, J. L., SAMULSKI, T. V., and MARMOR, J. B., 1984, Experience with a multitransducer ultrasound system for localized hyperthermia of deep tissues. *IEEE Transactions of Biomedical Engineering*, **31**(1), 126–134.

FOSTER, F. S., and HUNT, J. W., 1979, Transmission of ultrasound beams through human tissue—focusing and attenuation studies. *Ultrasound in Medicine and Biology*, **5**, 257–268.

HARTOV, A., COLACCHIO, T. A., STROHBEHN, J. W., 1993, Performance of an adaptive MIMO controller for a multiple-element ultrasound hyperthermia system. *International Journal of Hyperthermia*, 9(4), 563–579.

Hansen, J. L., and Bornstein, B. A., Svensson, G. K., Newman, W. H., Martin, G. T., Sidney, D. A., and Frederick, B., 1994, A quantitative, integrated, clinical focused ultrasound system for deep hyperthermia. Presented at the 1994 *ASME International Mechanical Engineering Congress and Exhibition*.

Hynynen, K., Roemer, R., Anhalt, D., Johnson, C., Xu, Z. X., Swindell, W., and Cetas, T., 1987, A scanned, focused, multiple transducer ultrasonic system for localized hyperthermia treatments. *International Journal of Hyperthermia*, 3(1), 21–35.

Hynynen, K., and Edwards, D. K., 1989, Temperature Measurement During Ultrasound Hyperthermia. *Medical Physics*, **16**(4), 618–626.

Kapp, D. S., Cos, R. S., Fessenden, P., Meyer, J. L., Prionas, S. D., Lee, E. R., and Bargshaw, M. A., 1992, Parameters predictive for complications of treatment with combined hyperthermia and radiation therapy. *International Journal of Radiation Oncology, Biology and Physics*, **22**(5), 999–1008.

Kapp, K. S., and Kapp, D. S., 1993, Hyperthermia's emerging role in cancer therapy, *Contemporary Oncology*, pp. 21–30.

Kaye, G. W. C. and Laby, T. H., 1973, *Tables of Physical and Chemical Constants*, (London: Longman).

Lele, P. P., 1983, Physical aspects and clinical studies with ultrasound hyperthermia. In *Hyperthermia in Cancer Therapy*, edited by F. C. Storm (Boston: Hall Medical Publishers), pp. 333–367.

Lu, X-Q., Burdette, E. C., and Svensson, G. K., 1995, Ultrasound Field Calculation In a Two-Layer Medium (Submitted to *International Journal of Hyperthermia*).

Madsen, E. L., Zagzebski, J. A., Banjavie, R. A., and Jutila, R. E., 1978, Tissue mimicking materials for ultrasound phantoms. *Med. Phys.*, **5**(5), 391–394.

Mayr, N. A., Staples, J. J., Robinson, R. A., Vanmetre, J. E., and Hussey, D. H., 1991, Morphometric studies in intraductal breast carcinoma using computerized image analysis. *Cancer*, **67**, 2805–2812.

NCRP Report No. 113, 1992, *Exposure Criteria for Medical Diagnostic Ultrasound: I. Criteria Based on the Thermal Mechanisms*, pp. 53–54.

Ocheltree, K. B., and Frizzell, K. A., 1987, Determination of Power deposition patterns for localized hypthermia, a steady-state analysis. *International Journal of Hyperthermia*, 3(3), 269–279.

Ocheltree, K. B., and Frizzell, L. A., 1989, Sound field calculation for rectangular sources, *IEEE Transactions on Ultrasonic, Ferroelectrics, and Frequency Control*, **36**(2), 242–247.

Oleson, J. R., Samulski, T. V., Leopold, K. A., Clegg, S. T., Dewhirst, M. W., Dodge, R. K., and George, S. L., 1993, Sensitivity of hyperthermia trial outcomes to temperature and time: implications for thermal goals of treatment. *International Journal of Radiation Oncology, Biology and Physics*, **25**(2), 289–97.

Palcic, B., and Skarsgard, L. D., 1984, Reduced oxygen enhancement ratio at low doses of ionizing radiation, *Radiation Research*, **100**, 328–339.

Pennes, H. H., 1948, Analysis of tissue and arterial blood temperatures in the resting human forearm. *Journal of Applied Physiology*, **1**, 93–122.

Press, W. H., Flannery, B. P., Teukolsky, S. A., and Vetterling, W. T., 1985, *Numerical Recipes, The Art of Scientific Computing* (Cambridge: Cambridge University Press).

Roemer, R. B., 1991, Optimal power deposition in hyperthermia. I. The treatment goal: the ideal temperature distribution: the role of large blood vessel. *International Journal of Hyperthermia*, 7(2), 317–341.

Roemer, R. B., Swindell, W., Clegg, S. T., and Kress, R. L., 1984, Simulation of focused scanned ultrasonic heating of deep-seated tumours: the effect of blood perfusion. *IEEE Transactions Sonics and Ultrasonics*, **31**, 457–466.

Roemer, R. B., 1988, Heat transfer in hyperthermia treatment: Basic principles and applications. *American Association of Physicists in Medicine, Medical Physics Monograph No. 16*, pp. 210–242.

Schesinger, A. L., Belgam, R. A., Carson, P. L., *et al.* 1989, Assessment of ultrasonic computed tomography in symptomatic breast patients by discriminant analysis. *Ultrasound in Medicine and Biology*, **15**, 21–28.

Sekins and Emery, 1982, Thermal science for physical medicine. In *Therapeutic Heat and Cold*, edited by J. F. Lehmann (Baltimore: Williams and Wilkins).

Strohbehn, J. W., and Roemer, R. B., 1984, A survey of computer simulations of hyperthermia treatments. *IEEE Transactions Biomedical Engineering*, **31**, 136–149.

Szajda, K. S., Sodini, C. G., and Bowman, H. F., 1994, The active needle for *in-vivo* temperature measurement. *Program and Abstracts of Fourteenth Annual Meeting of the North Americam Hyperthermia Society*, 111 pp.

VanBaren, P., and Ebbini, E. S., 1995, Multi-Point temperature control during hyperthermia treatments: theory and simulation. *IEEE Transactions on Biomedical Engineering*, (in press).

Vernon, C. C., 1994, Collaborative phase III superficial hyperthermia trial (MRC/ESHO/PMH). *Program and Abstracts of Fourteenth Annual Meeting of the North American Hyperthermia Society*, 87 pp.

Waterman, E. M., and Kramer, D. B., 1994, Changes in human tumor blood flow during four weeks of hyperthermia. *Program and Abstracts of Fourteenth Annual Meeting of the North American Hyperthermia Society*, 125 pp.

EXPERIMENTAL VERIFICATION OF A CYLINDRICAL MULTI-TRANSDUCER ULTRASOUND BREAST HYPERTHERMIA TREATMENT SYSTEM.

J.L. Hansen, EC Burdette*, P. Neubauer*, X-Q. Lu, B.A. Bornstein, G.K. Svensson.

Joint Center for Radiation Therapy, Department of Radiation Oncology, Harvard Medical School,
Boston, MA, USA, and *Dornier Medical Systems Inc. Champaign, IL, USA

1. Introduction

The use of limited surgery and radiation therapy for early stage breast cancer achieves breast conservation with excellent results and relatively low rates of local tumor recurrence. However, a subgroup of patients with Ductal Carcinoma in Situ (DCIS) has shown increased rates of local recurrence when treated with breast conservation. DCIS generally has a large number of hypoxic cells which has proven to respond well to hyperthermia. In addition, the female breast is very well suited to treatment with ultrasound hyperthermia due to the lack of air cavities or bony structures within the breast. For these reasons we decided to develop an ultrasound hyperthermia Breast Therapy System (BTS) dedicated to treatment of the female breast.

2. Material & Methods

A schematic drawing of the BTS is shown in figure 1. The patient is placed prone on a padded treatment couch, with the breast to be treated, extended through an opening in the tabletop. A cylindrical transducer array applicator is mounted on a three-dimensional translation table underneath the table opening. The applicator is filled with degassed water, brought up under, and centered around the breast. A six probe, 84 sensors thermistor based thermometry system is used to monitor the temperature distribution during therapy. The system is computer controlled and displays temperatures and thermal dose, as a function of time, in three dimensions. The breast contour is monitored and displayed in real time throughout the treatment to ensure accurate geometric alignment of the applicator.

To achieve accurate and flexible control of the power deposition in the breast tissue, the applicator consists of 384 ultrasound transducers, each 15 x 15 mm, mounted on the inner surface of a 25 cm diameter cylinder. Alternate transducers are optimized at a low frequency of 2.5 MHz and a high frequency of 4.0 - 4.5 MHz. The low frequency transducers are depositing energy at depth in the breast, and the high frequency transducers deposit energy superficially and thereby compensate for thermal conduction to the ultrasound coupling medium. The system is designed to heat individual quadrants or the whole breast to a uniform temperature between 40 and 42 $^{\circ}$C. The BTS is further discussed by E.C. Burdette et. al. in "Real-Time Computer Controlled Ultrasound Therapy and Monitoring System for Breast Cancer Treatment".

The system has been developed and is being extensively tested on non-perfused tissue mimicking breast phantoms. Several phantoms have been manufactured using the plastic 'skin' of ultrasound guided biopsy breast phantoms manufactured by RMI (Middleton, WI) as a mold. The mold was filled with a liquid solution of 83% distilled degassed water, 3% agar, 8% n-Propanol, and 6% graphite powder (all by weight). The mold was set to solidify and 3 temperature probes, each containing 14 temperature sensors, were inserted in the phantom. The phantom was positioned in the transducer array, and the cylinder was filled with degassed coupling water (see figure 2).

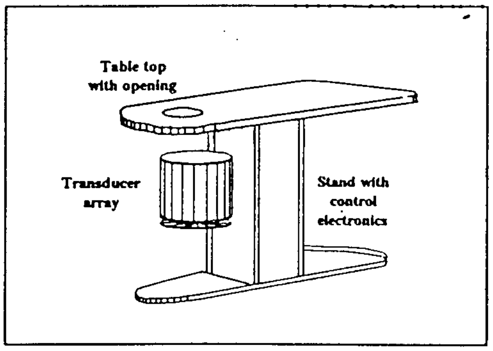

Figure 1. Schematic drawing of the Breast Therapy System. The transducer array is mounted on a 3 dimensional adjustable table allowing fine positioning of the array after the patient is placed in treatment position.

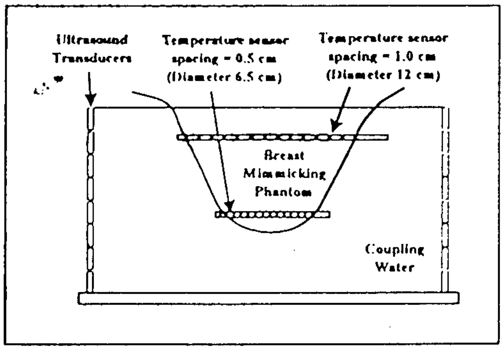

Figure 2. Schematic drawing of the BTS applicator showing the transducer array in 8 rings, the breast phantom placed in the array, and the location of the temperature probes in the phantom.

The phantom was insonated for short duration's of 20-30 seconds, each time heating individual sectors or the whole breast phantom. The initial temperature rise (compensated for thermal artifacts) was evaluated, and the ultrasound power deposition patterns along the temperature probes were deduced from the expression SAR = $\Delta T/\Delta t$ / c, where SAR = specific absorption rate, $\Delta T/\Delta t$ = the temperature rise per unit time, and the specific heat of the phantom material c = 3.26 J/g ^{o}C. As a first approximation thermal conduction was ignored due to low thermal gradients during the initiation of the experiments.

3. Results

Predicting the temperature field in a blood perfused breast from the measurements in a non-perfused phantom is very complex. For this reason we decided to investigate the power deposition patterns in the phantom. Computer models indicates that, to produce a uniform temperature distribution, initially a uniform SAR distribution is required. However, after therapeutic temperatures have been reached, the power delivered to the core of the breast has to be decreased to prevent overheating. Therefore, the measurements were performed in 3 steps: 1) the low frequency transducers were engaged to quantify the power deposition at the core; 2) the high frequency transducers were engaged to quantify the power deposition at the surface; 3) both low and high frequency transducers were engaged and adjusted to create a variable power deposition profile over the extend of the breast phantom. All measurements were repeated for all sectors and the whole breast.

Figure 3 shows the SAR profiles at the base of the breast, where the breast diameter is 12 cm and figure 4 the profiles close to the apex of the breast, where the diameter is 6.5 cm. Computer modeling of the BTS by Lu et. al. indicated, that after reaching temperature equilibrium, a power ratio of 8 high frequency units to 1 low frequency unit is required to produce a uniform temperature field. Figure 5 shows the measured SAR profiles at the base of the breast as well as the computer model for this power ratio. The agreement between theoretical calculations and experimental results is excellent.

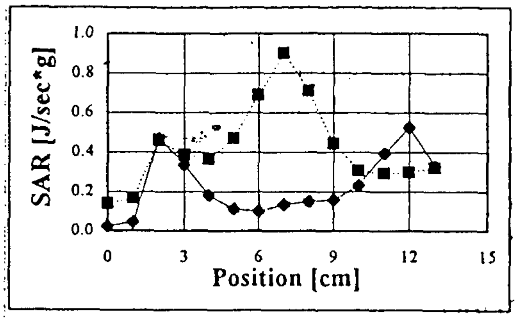

Figure 3. SAR profile through the center and close to the base of the breast where the diameter is 12 cm. The solid line indicates the SAR profile for the high frequency transducers at 8% of full power, and the broken line the SAR profile for the low frequency transducers at 8% of full power.

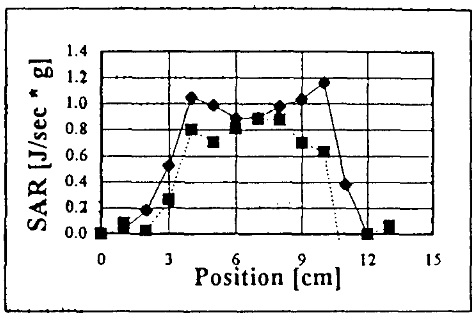

Figure 4. SAR profile through the center and close to the apex of the breast where the diameter is 6.5 cm. The solid line indicates the SAR profile for the high frequency transducers, and the broken line the SAR profile for the low frequency transducers.

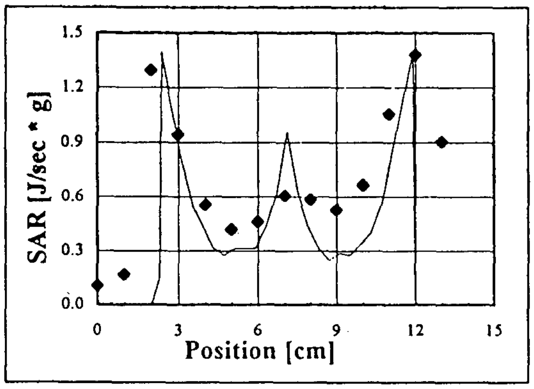

Figure 5. SAR profiles through the breast phantom close to the base. The solid line shows the results of a theoretical calculation using a computer model of the BTS. In this calculation the power of the high frequency transducers were 8 times the power of the low frequency transducers. The symbols show the phantom measurements as shown in figure 3 using the same power ratios as the computer model.

4. Conclusion

We have demonstrated, that the BTS can deposit uniform ultrasound power throughout the core of a female breast, and that the BTS can deliver power to the surface of the breast to compensate for thermal conduction to the ultrasound coupling medium without overheating the core of the breast. We feel confident, that the BTS will be able to raise the breast target volume temperature to 40-42 °C with relative uniformity, and maintain this temperature.

Supported in part by US Army Research and Material Command contract # DAMD-93-C-3098.

1. X-Q. Lu, E.C. Burdette, B.A. Bornstein, J.L. Hansen, G.K. Svensson. Design of an Ultrasonic Hyperthermia System for Breast Cancer Treatment, Int. J. of Hyperthermia, 1996, in press.

REAL-TIME COMPUTER CONTROLLED ULTRASOUND THERAPY AND MONITORING SYSTEM FOR BREAST CANCER TREATMENT

E.C. Burdette, J.L. Hansen*, X-Q Lu*, P.L. Neubauer, W.W. Foard, L.J. Grossman, B.A. Bornstein*, G.K. Svensson*

Dornier Medical Systems, Inc. Champaign, IL, USA and Joint Center for Radiation Therapy, Department of Radiation Oncology, Harvard Medical School, Boston, MA, USA*

Introduction

Conservative breast therapy for early stage infiltrating breast cancer consists of lumpectomy and radiation therapy. However, patients with extensive intraductal component (EIC) of tumor or patients with Ductal Carcinoma In Situ (DCIS) have shown increased rates of local recurrence when treated with conservative therapy. EIC+ patients currently face mastectomy as the recommended treatment course. DCIS and EIC+ have a large fraction of hypoxic cells which have been shown to be vulnerable to heat and therefore, patients with intraductal disease may benefit from thermal therapy to the whole breast or to a quadrant of the breast.

System Description

An ultrasound Breast Therapy System (BTS) has been designed for the treatment of the intact breast. The system incorporates both therapeutic and imaging capabilities utilizing a cylindrical array applicator which surrounds the breast with the patient in a prone position. The cylindrical transducer array consists of eight "rings" of transducers surrounding the breast. The transducers are operated in a time-multiplexed mode to provide both therapy and monitoring functions in real time. Each ring has 48 transducers operating in alternating low (2-2.5 Mhz) and in high (4.5-5 Mhz) frequency bands.

The patient will lay on the top of the system with the breast descending through a hole in the table. Needle probes are inserted under local anesthesia. These probes contain thermistors for temperature measurements and ultrasonic receiver chips to help locate the probes. Thermistors are also taped to the breast surface. The cylindrical array applicator, filled with water, is then brought up under the breast and positioned with the aid of a motor to raise and lower the cylinder, x and y vernier controls and a rotational vernier control. A small video camera mounted at the bottom of the cylinder is used to monitor the position.

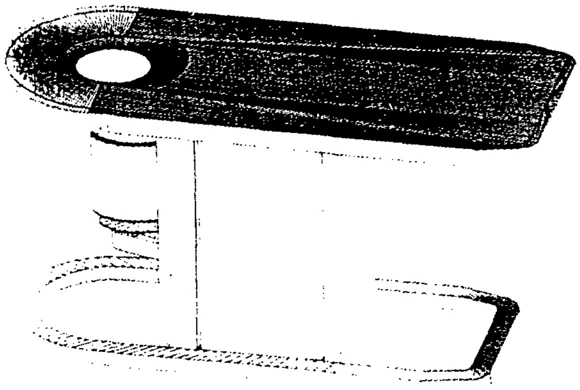

The system controls the water bath temperature as patient information and a treatment plan are entered. After this step, the system begins to acquire data from the temperature probes and from ultrasonic measurements in order to form a temperature map of the breast. Once an initial map is produced, therapy can begin. The operator initiates therapy and the system begins to apply therapy heating power while continuing to maintain a temperature map, thermal dose map, and ultrasonic power levels map. All necessary information is logged while therapy is in progress. At the end of the therapy period, the system continues to monitor conditions while the breast returns to normal temperature levels.

3. Data Acquisition

The major task of the system is to provide ultrasonic power to the entire breast or to a portion of the breast in order to produce a desired temperature profile. The temperature range and affected areas must, therefore, be controlled very closely. In order to accomplish this, it is necessary to have good information about the target. Breast location, probe positions, and temperature and thermal dosimetry are monitored throughout treatment.

A contour of the breast is determined by echo-location where each transducer is used to transmit and then receive its own transmission. The time-of-flight gives us the breast outline and detects any motion of the breast.

The system checks the temperature probes' location by using ultrasonic time-of-flight from a ring transducer through the receiving transducers in each probe. Multiple measurements are made for each sensor so that its position may be triangulated. Since the probes are embedded in the breast, the calculation of the distance becomes complex due to the different ultrasonic velocities through the water and breast.

The temperature within the breast is known due to direct measurement by as many as 5 probes each having 14 sensors. The temperature at other points in the breast must be calculated by interpolation with a thermal model. Thermistor temperature acquisition techniques are used to monitor the temperature of the water bath and of the interior and exterior of the breast.

The system is also equipped to provide imaging of the breast as well through tomographic reconstruction of measured ultrasound attenuation. This will allow the operator to position the patient based on internal as well as external alignment points giving more precise control of the treatment.

Control Algorithms

The control of the water bath temperature is accomplished by a proportional-integral-derivative (PID) control loop algorithm. The breast therapy control algorithm, however, is significantly more complicated. There are 384 effectors (the ultrasonic transducers) plus the water bath. There are also two frequency bands of transducers. High frequency transducers have a greater effect on temperatures close to the surface of the breast and the low frequency transducers effect temperatures nearer the center. The algorithm controls the temperature of an active therapy section of the breast (1, 2, 3, 4 or 8 octants) and any specified "exclusion region" corresponding potentially to scar tissue. PID techniques in conjunction with a "thermal wall" heuristic is the first order control. The exclusion region conforms to the shape of a small grouping of transducers.

Safety and Fault-Detection

It is very important not to expose tissue to too high a temperature or to too large a thermal dose. Three techniques are used in combination to ensure these safety requirements. First, watchdog timers are used to indicate to the other compute elements that no fault has occurred. These timers are used inside of the multitasking compute elements to indicate that each task is functioning properly. Secondly, the mechanism of a "system mode" is introduced as a safety interlock. The "system mode" provides a check on the system's operation by only allowing operations to occur within the proper system modes. In this manner, rogue commands for action by an out of control task will not be acted upon an will cause the system to treat this rogue command as a fault. Lastly, a coding style that double checks its own operation and the operation of other software modules is used.

Computer System

The computing system consists of a Pentium PC and an 80486 PC both running the iRMX real-time operating system and 26 specialized boards containing 80166 microcontrollers running their application with simple loop schedulers. The Pentium PC runs Microsoft DOS as a task under iRMX which is used to run Microsoft Windows and the specialized system interaction application. This application gives operators a window into the system and allows data entry and control over system operations. The iRMX networking facilities are used to provide a virtual circuit connection between the machines and to delineate application level packets. A proprietary high-speed serial bus is used to allow communications between the 80486 PC and the 80166 microcontrollers. A master-slave protocol is used in accordance with the synchronous nature of the application -- waiting for commands to the microcontrollers to be fulfilled before it can move on.

System Hardware

The system is modular in design, with 24 circuit cards each supporting 16 individual transducers. A microcontroller on each card controls the functions, including transmit-receive switches, transmitter-amplifiers and receiver. The system uses a built-in frequency measuring capability to fine tune what control voltage needs to be used for each transducer. Each card communicates with the host instrument computer system via high-speed links. The instrument computer oversees the function of all cards plus three specialized cards in the system: one with receivers for transponder crystals located within temperature probes and two for precision phase quadrature measurements. These signals are routed to the other boards through a buffer board designed for flat group delay. The Pulse card uses its counter-timer capabilities to produce the duty-cycle modulated signal that controls a thermoelectric heater/cooler for the water bath temperature control. Finally, the card can be used to generate an arbitrary phase signal for calibration purposes. The above components, including the instrument computer, power supplies, and water circulation and heating/cooling system are located within a patient treatment table pedestal which supports the patient table.

Acknowledgment

This work is supported by the U.S. Army Medical Research and Materiale Command, under contract #DAMD17--93-C-3098. Views, opinions and/or findings contained in this paper are those of the authors and should not be construed as an official Dept. of the Army position, policy or decision unless so designated by other documentation.

[redacted]

The ultrasound Breast Therapy System is labeled with the following information:

Currently the stand of the BTS is labeled with a ‘Caution’ label limiting the use of the device to laboratory animal and testing experiments only.

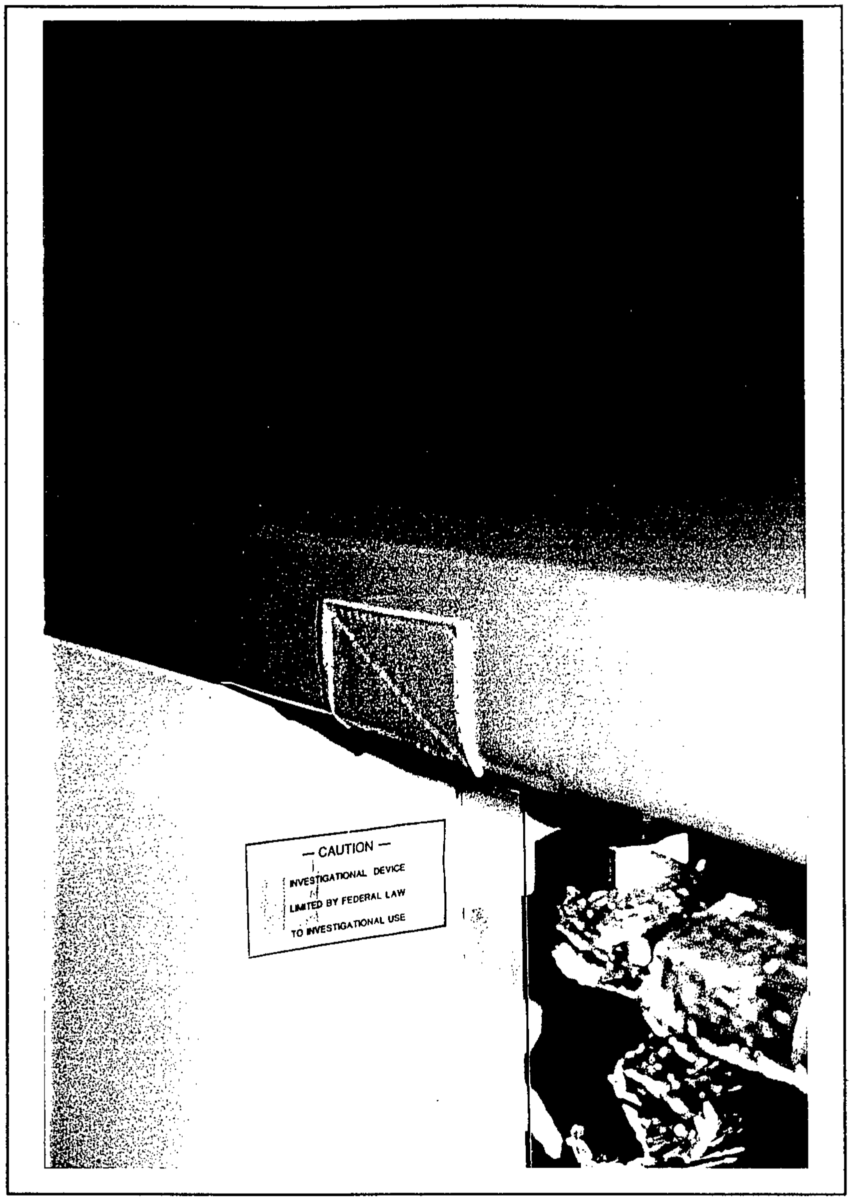

When an IDE for the BTS device has been awarded, the 'Caution' label will be replaced with a label limiting the use of the device to 'Investigational' use only.

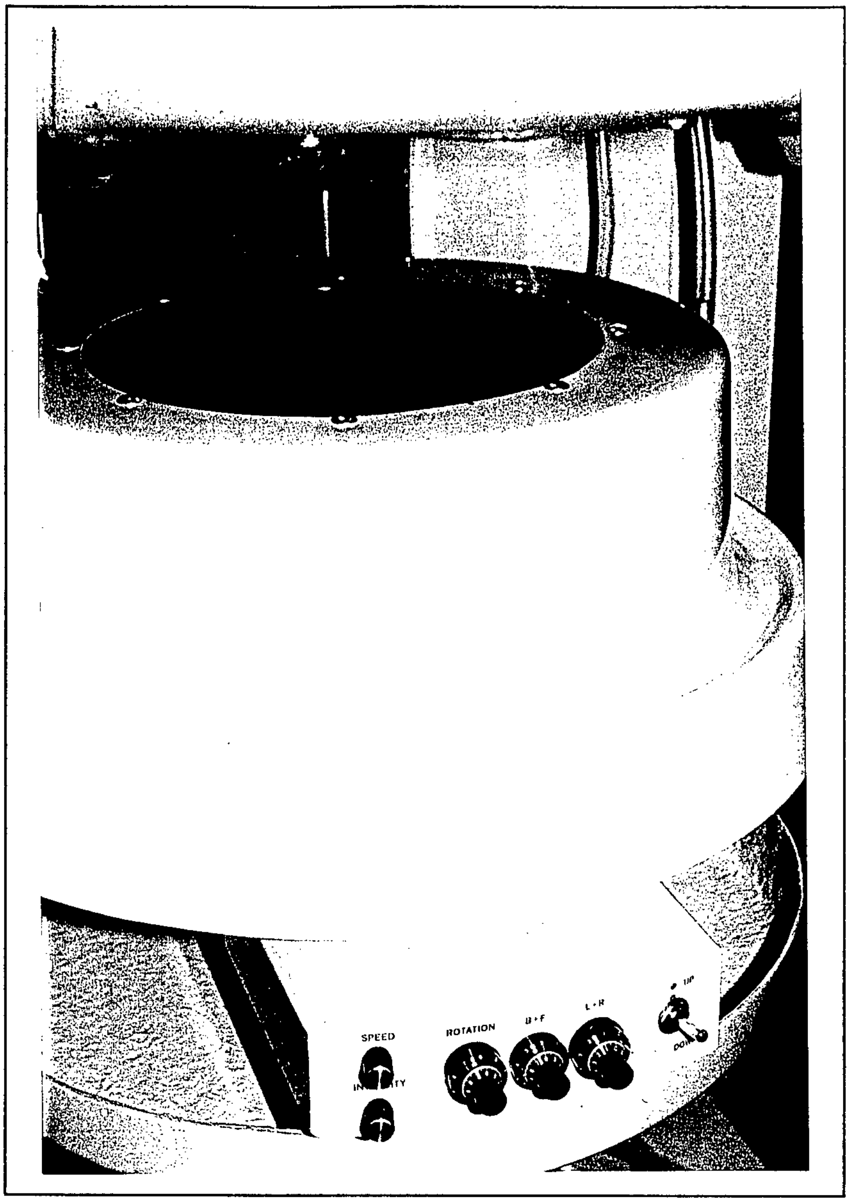

The applicator can be positioned exactly around the breast to be treated by a number of controls. These controls are labeled “Speed”, “Rotation”, “B+F”, “L+R”, and “Up/Down”. In addition, a camera is placed in the applicator to visually verify the position of the breast. A brightens control for illumination of the breast is labeled “Intensity”.

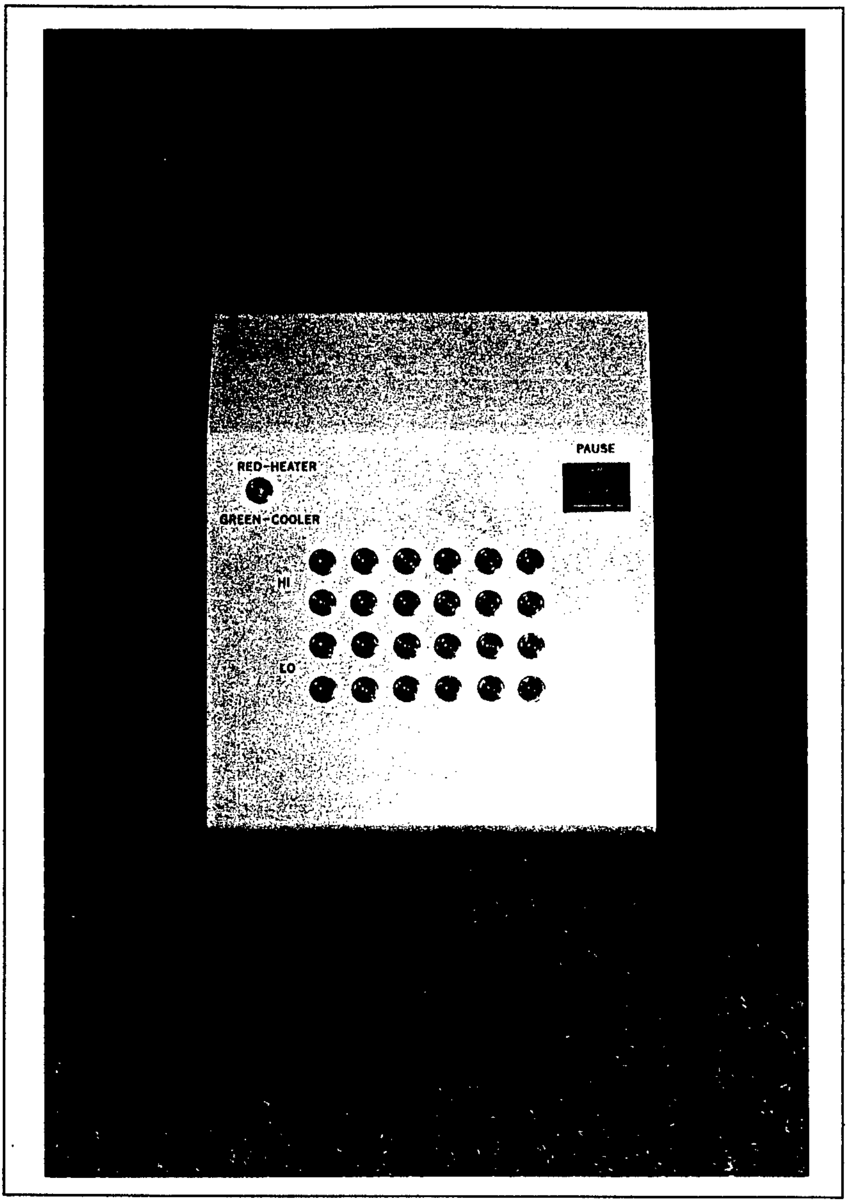

An indicator box with a number of light emitting diodes. These diodes light up whenever any of the 24 power boards are emitting power. The diodes are marked "Hi" for high frequency boards and "Lo" for low frequency boards.

The same box contains an indicator for the temperature control of the degassed coupling water labeled "Red-Heater" and "Green-Cooler", and a switch labeled "Pause". The pause switch, when depressed, will remove all power from all power boards bypassing of all computers and software.

Appendix E

Operators Manual

ULTRASOUND
BREAST THERAPY
SYSTEM
(BTS)

MANUAL

Version 1.0
15 November 1996

TABLE OF CONTENTS

I. INTENDED APPLICATION OF THE BREAST THERAPY SYSTEM

Breast cancer patients with extensive intraductal component (EIC) of tumor currently face mastectomy as the best treatment course available. EIC is characterized by proliferation of cancer cells within the ducts. Mastectomy of the entire breast is currently indicated due to the high recurrence rate in this type of cancer compared to cancer without an EIC. These cancer cells have been shown to be vulnerable to heat and therefore patients with intraductal disease may benefit from thermal therapy. Another case of interest is treatment of locally advanced breast disease using heat therapy either for non-resectable lesions or to reduce lesion volume prior to surgery.

An ultrasound system has been designed for the treatment of the intact breast. It is dedicated to optimizing the synergistic effect between thermal therapy and radiation in the treatment of early stage breast disease in patients with intraductal disease. The system incorporates both therapeutic and imaging capabilities utilizing a cylindrical array applicator which surrounds the breast with the patient in a prone position. The cylindrical transducer array consists of eight rings of transducers surrounding the breast. The transducers are operated in a time-multiplexed mode to provide both therapy and monitoring functions in real time.

The rings each have 48 transducers in two different frequency bands with each odd numbered transducer operating in the low frequency band and each even numbered transducer operating in the high frequency band.

In operation, a patient will lay on the top of the system with the diseased breast descending through a hole in the platform. Probes, in the form of long needles, are inserted under local anesthesia. These probes contain thermistors for temperature measurements. Thermistors are also taped to the breast surface. The cylindrical array applicator, filled with water, is then brought up under the breast and positioned with the aid of a motor to raise and lower the cylinder, x and y vernier controls and a rotational vernier control. A small video camera mounted at the bottom of the cylinder is used to monitor the position of the breast relative to the center of the treatment cylinder.

II. BREAST THERAPY SYSTEM DESCRIPTION

The ultrasound Breast Therapy System (BTS) consists of the hardware components illustrated in Figure 1. A breast site-specific cylindrical array applicator of ultrasound transducers is used for thermal therapy induction and for multiple monitoring functions. The "heart" of the hardware consists of the cylindrical array of transducers which both deposit power into the breast tissue for therapy and monitor the dynamic course of the treatment. The ultrasound array is described in more detail below. The ultrasound transducers are geometrically arranged and operated to provide both therapy and monitoring functions. The monitoring functions are comprised of: diagnostic pulse-echo monitoring to determine breast contour and location within the treatment cylinder and through-transmission monitoring of power during therapy for determination of absorbed power distribution (SAR) in the breast tissue being monitored. The hardware capability for future addition of the measurement of "time-of-flight" throughout regions of the target breast tissue referenced to a limited number of invasive temperature measurements for non-invasive mapping of temperatures throughout the treatment volume is also included in the BTS.

The system consists of an Instrument Computer which provides all direct control and data interaction with the Transmit-Multiplex-Receive (TMR) Subsystem, including receiver circuits, transmit/receive/multiplexing modules, Thermistor Thermometry Subsystem, and Cooling Subsystem. The system electronics, Instrument Computer, and Cylindrical Transducer Array/Treatment Cavity are integrated into a Patient Table Assembly/Subsystem, which provides a comfortable treatment support for the patient, accurate positioning of the breast within the treatment cavity, and a convenient means for consolidating system components and functions.

A. Ultrasound Breast Applicator

The Transducer Array Subsystem is illustrated graphically in Figure 2. A photo of the cylindrical array is shown in Figure 3. The array consists of eight (8) individual rings which are stacked with water-tight seals between rings. Each ring has 48 transducers. Based on analyses performed, it is not necessary to fill all available ring locations with transducers, in order to achieve adequate therapy, but populating all positions is important to noninrasive monitoring. Each transducer is square having dimensions of 15mm x 15mm. Spacing between transducers along the vertical dimension of the cylinder is 2.4mm. and a bottom clearance of 1cm is added. Therefore, 8 rings accommodates breast lengths of 14cm or less, suspended in water in the prone position. Table 1 states the number of rings, transducers per ring, and the frequencies of the transducers in each ring. Table 2 indicates expected ring activation for examples of large and small breasts.

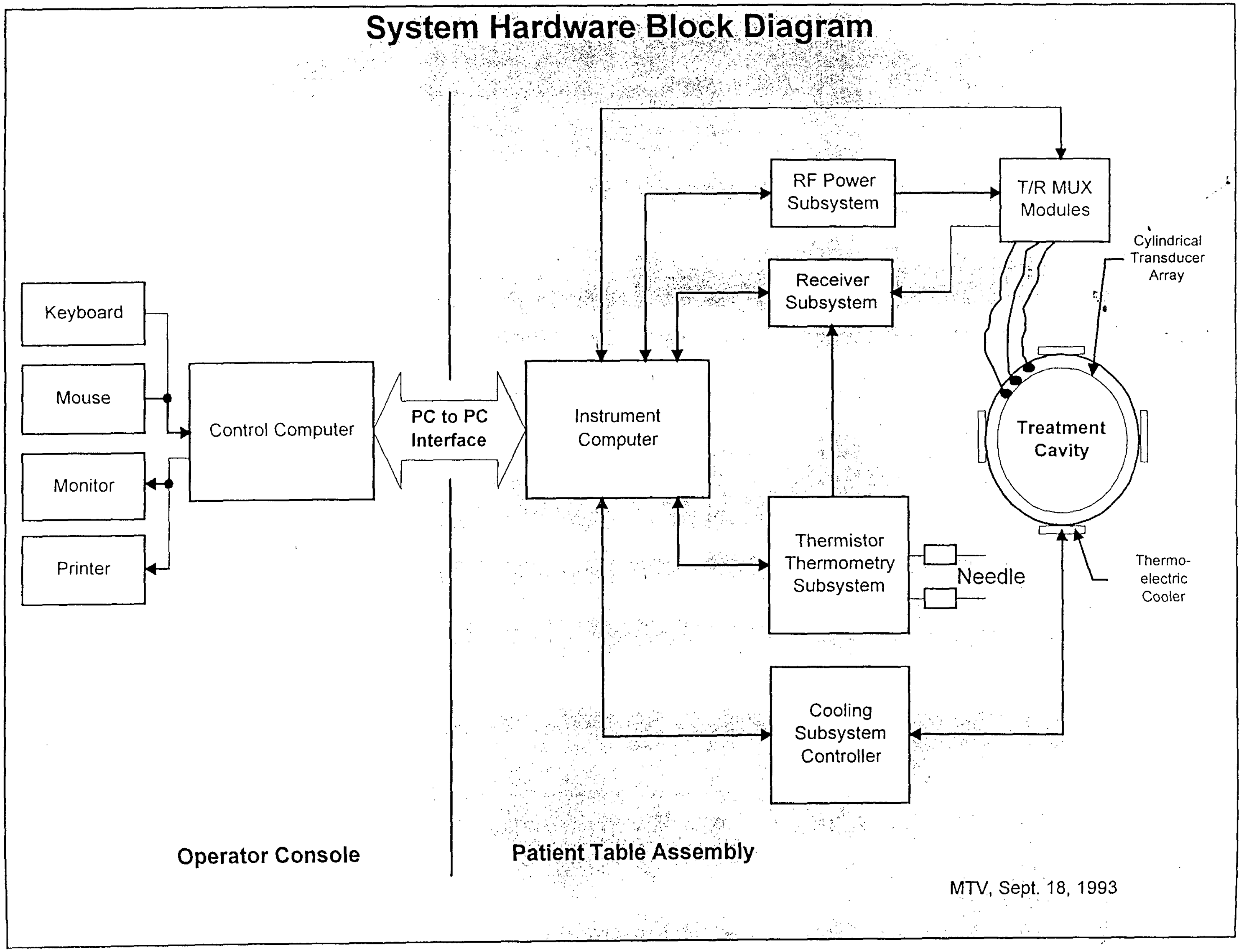

System Hardware Block Diagram

MTV, Sept. 18, 1993

Figure 1

Cylindrical Transducer Array

Number of XDucers	Ring Number
48	1
48	2
48	3
48	4
48	5
48	6
48	7
48	8

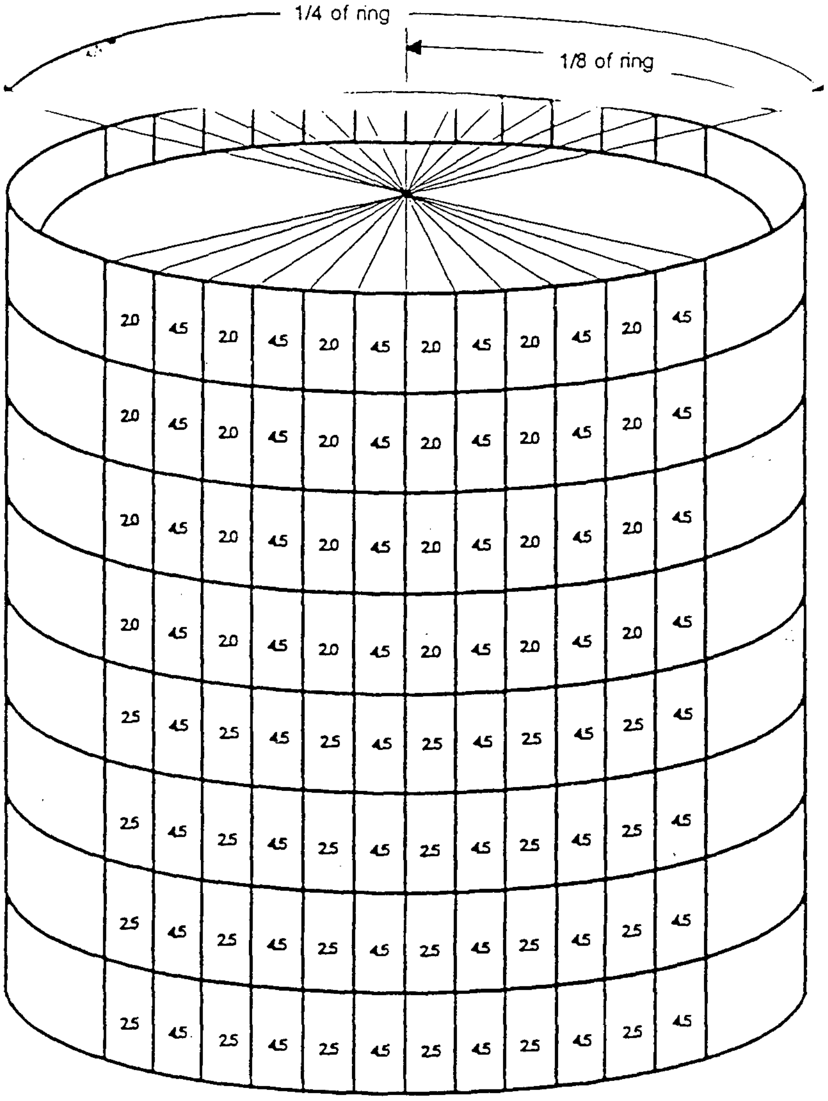

Figure 2. Transducer array configuration arranged in rings of cylinder.

Figure 3

Photo - Cylindrical Array

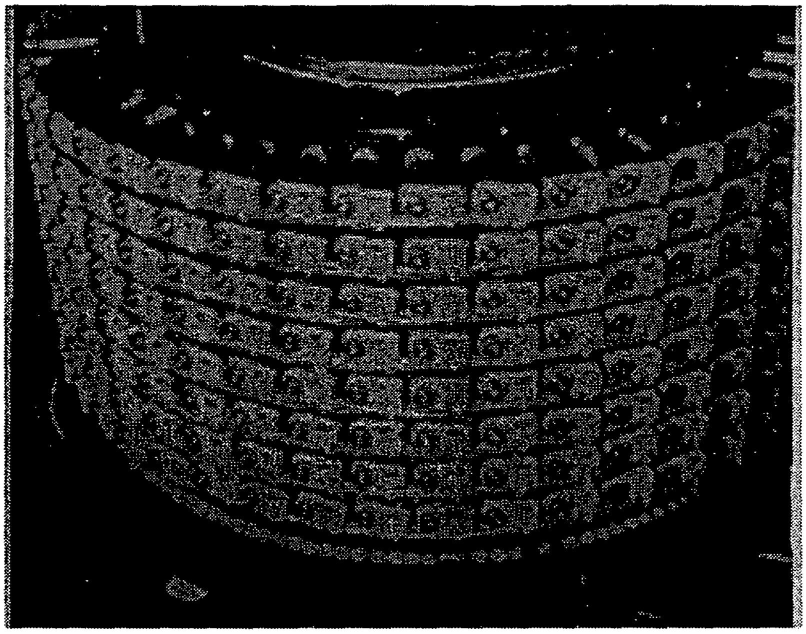

Table 1. Numbers and distribution of transducers per ring.

CYLINDRICAL ARRAY APPLICATOR DESIGN

Total Cylinder I.D. = 25 cm
Transducer Dimensions: 15 mm x 15 mm
Rings of Transducers: 8 (numbered from top down)
Each 1/8 ring vertical section driven by RF Amplifiers
whose outputs are multiplexed to step around ring

Ring No.	FQ 1 (MHz)/No. XDCRS	FQ 2 (MHz)/No. XDCRS	TOTAL XDCRS
1	4.5/24	2.0/24	48
2	4.5/24	2.0/24	48
3	4.5/24	2.0/24	48
4	4.5/24	2.0/24	48
5	4.5/24	2.5/24	48
6	4.5/24	2.5/24	48
7	4.5/24	2.5/24	48
8	4.5/24	2.5/24	48
		TOTAL	384

Table 2 . The table illustrates how many rings and transducer elements in a ring that will be activated when treating a large breast and a small breast respectively.

CYLINDRICAL ARRAY APPLICATOR DESIGN

Total Cylinder I.D. = 25 cm
Transducer Dimensions: 15 mm x 15 mm
Rings of Transducers: 8 (numbered from top down)
Each 1/8 ring vertical section driven by RF
amplifiers whose outputs are multiplexed to "step around" ring

Ring No.	No. Transducers	Breast Size (cm)	
		Large	Small
1	48	15	7
2	48	14	6
3	48	12	5
4	48	10	4
5	48	8	3
6	48	7	0
7	48	6	0
8	48	4	0

The transducers used in the cylindrical array subsystem were fabricated with the crystal (2.0, 2.5, or 4.5 MHz) mounted in a machined transducer housing, sealed with a watertight seal and faced with a matching layer. Each transducer has been individually performance-tested to determine its operating acoustic efficiency, center frequency and bandwidth. Tables containing the efficiency and frequency bandwidth data for each transducer in the cylindrical array are presented in Appendix C of this manual.

Each transducer in each ring of the cylinder is "mapped" into both the cylindrical array and to theTMR board. A diagram of the T/R MUX applicator transducer interconnections map is provided in Appendix D .

A close up view of the cylindrical array of transducers is shown in Figure 4.

B. Patient Table Subsystem

The patient table subsystem is shown in the two perspective photos in Figures 5 and 6 (indicating front side and rear views, respectively). A close up of the shroud covering the cylindrical array is shown in Figure 7. The patient table is designed to maximize utilization of symmetry of the breast by positioning the patient in a prone position with the breast suspended through an opening in the table top. Its specifications are described in Table 3. The table top consists of sheet steel with a tubular steel outer frame fabricated to provide for insertion of a 1.5" foam padding insert. The foam is sealed and the entire table top covered with a naugahyde covering which is stretched tight and snapped into place, and is easily removed for cleaning. The foam insert (and naugahyde) taper near the hole through which the breast is suspended in order to ensure that the entire breast can be extended beneath the table top for treatment if indicated.

The central column, or "pedestal", beneath the table houses all of the system electronics, power supplies, and cylindrical array of transducers. The Instrument Computer is also located within the pedestal behind a side cover panel. Drawings of the internal layout are shown in Figures 8 and 9. Note the positions of the key electronic system components. The 25 TMR subsystems and microcontrollers are located in the two card cage racks above the fan trays. The transducer coaxial cable connections are routed from the rear of the card cages to panel connectors on a subpanel behind the dress panel at the front of the system (just behind the cylindrical array).

Figure 4

Photo - Cylindrical array
Close up

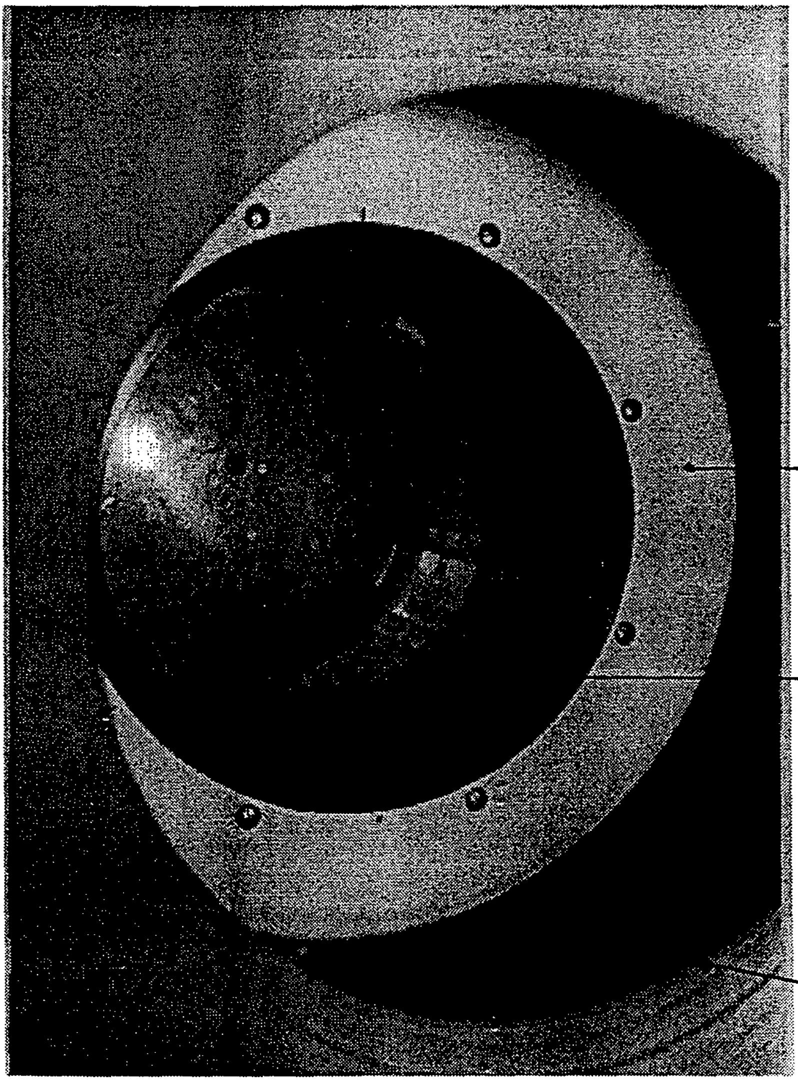

Figure 5
Front View of BTS Patient Table

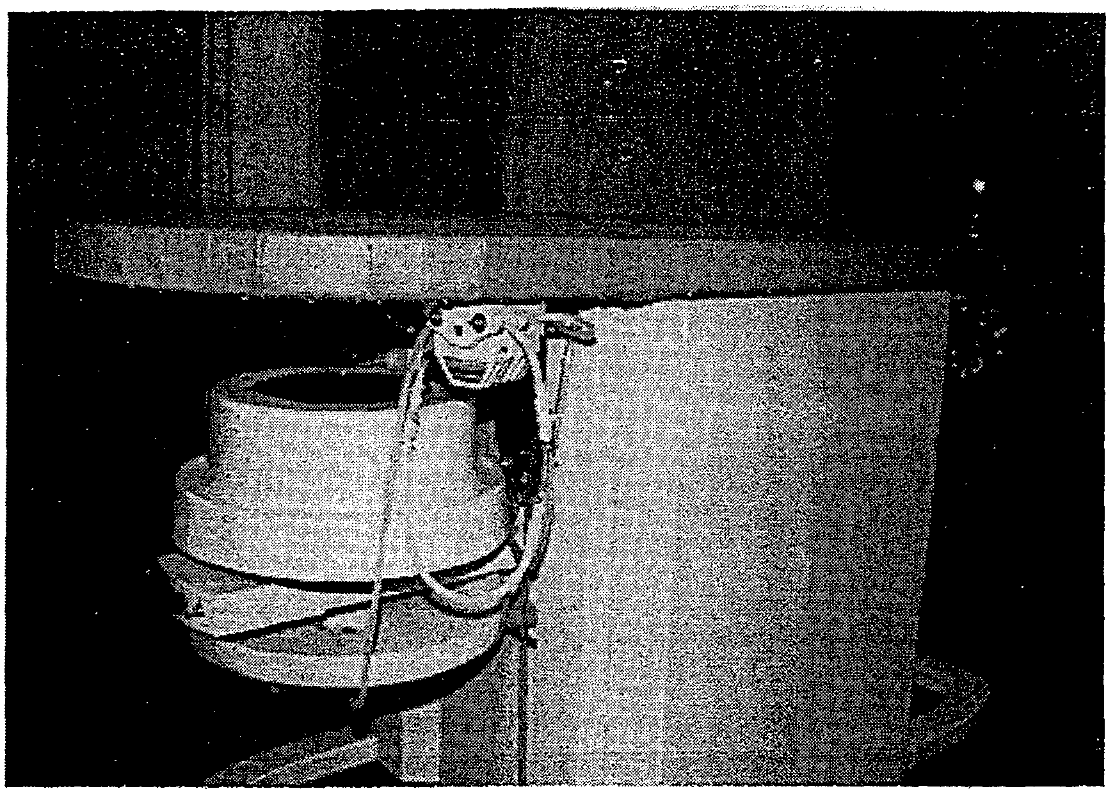

Figure 6
Back View of BTS Patient Table

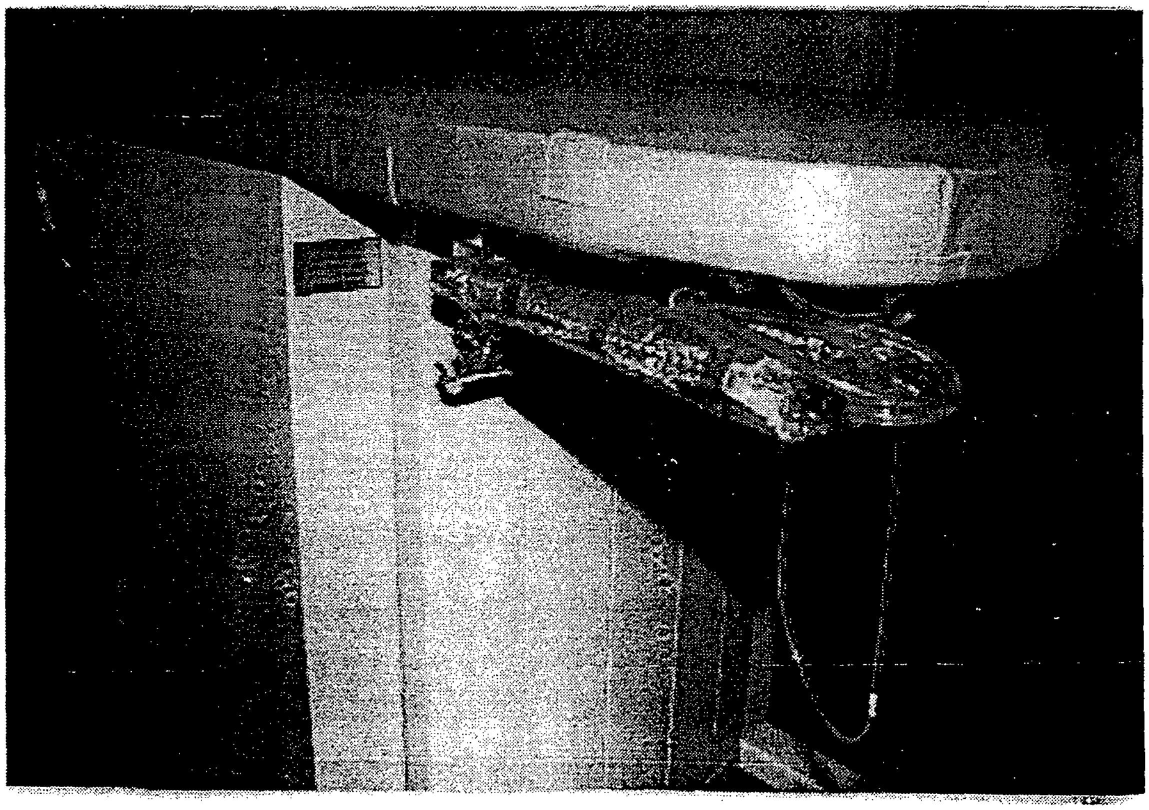

Figure 7

Photo - Shroud covering cylindrical array

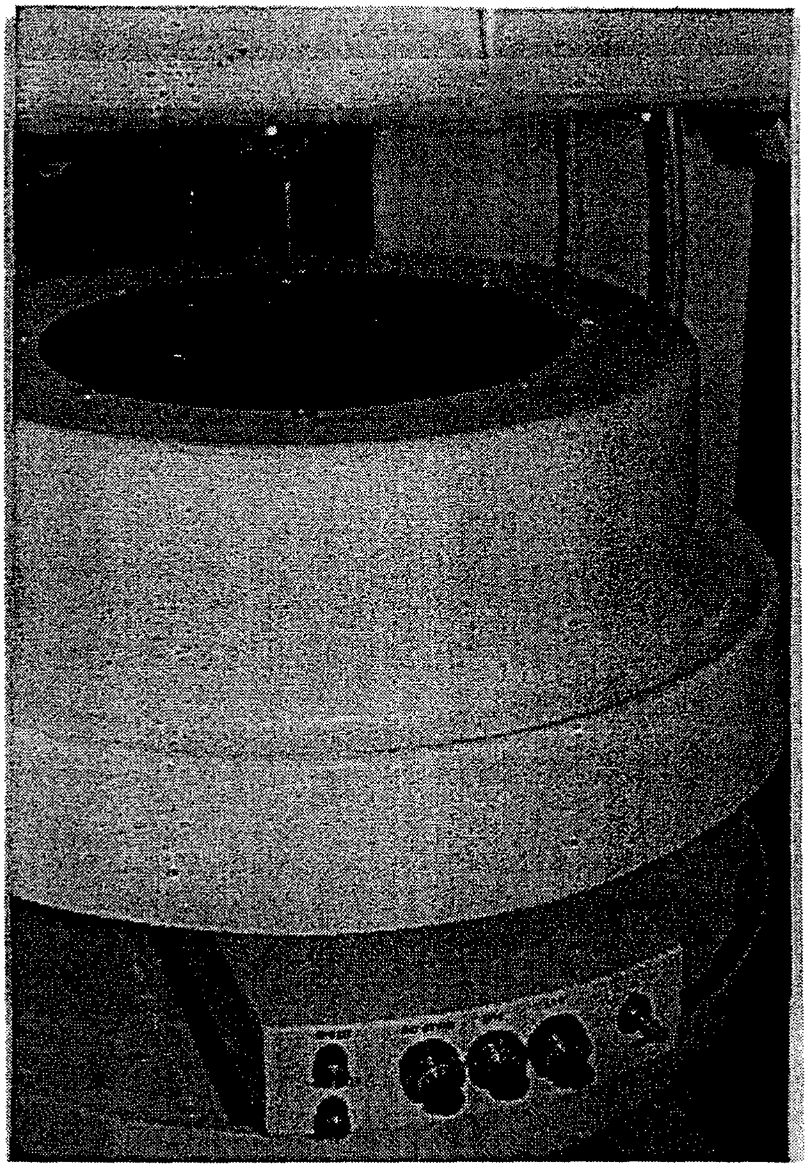

TABLE 3

PATIENT TABLE SYSTEM SPECIFICATIONS		
Table Top Overall Length:	78"	
Table Top Height (to floor):	37"	
X-Y Table: Positioning	± 2.5"	X-Y Vernier Drive
	± 6"	Vertical Motion Motor Drive
	180°	Rotation Capability - Motor Drive
Structural Materials:	Stainless steel	
Paint:	Non-toxic textured (Color chip supplied by Dornier)	
Construction Restrictions:	No sharp edges	
Aesthetics:	Per design drawings	
Load Capacity:	300 lbs.	
Table Top Hole Size:	10" diameter	
Table Top Cover:	Naugahyde cover (with snaps or velcro) over 1 1/4" foam pad	
Other Requirements:	Make sure areas that could get patient fluids on them can be easily cleaned. There should be no areas where spilled fluids could be trapped.	

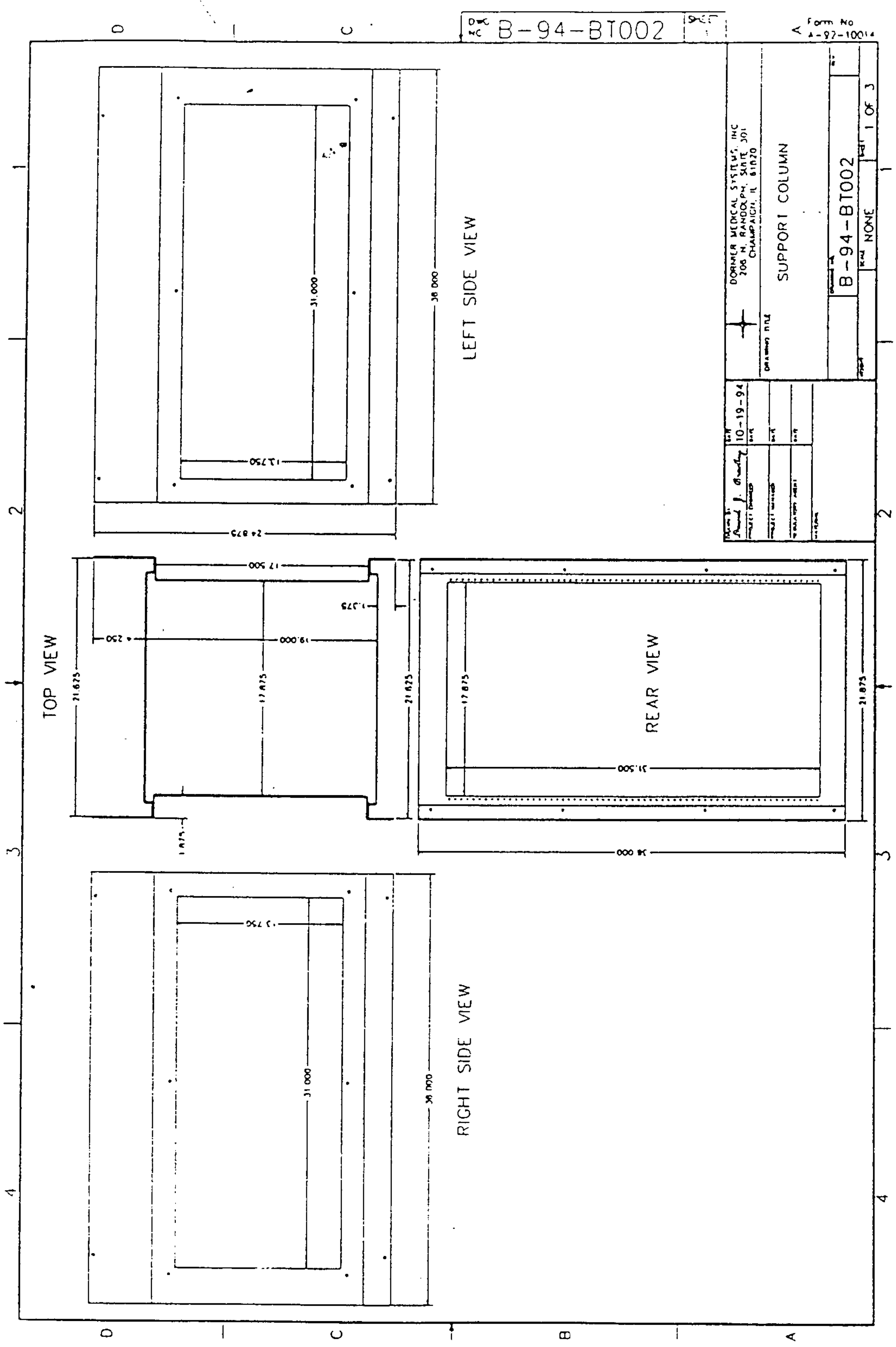

Figure 8
Support Pedestal Views

View of support column.

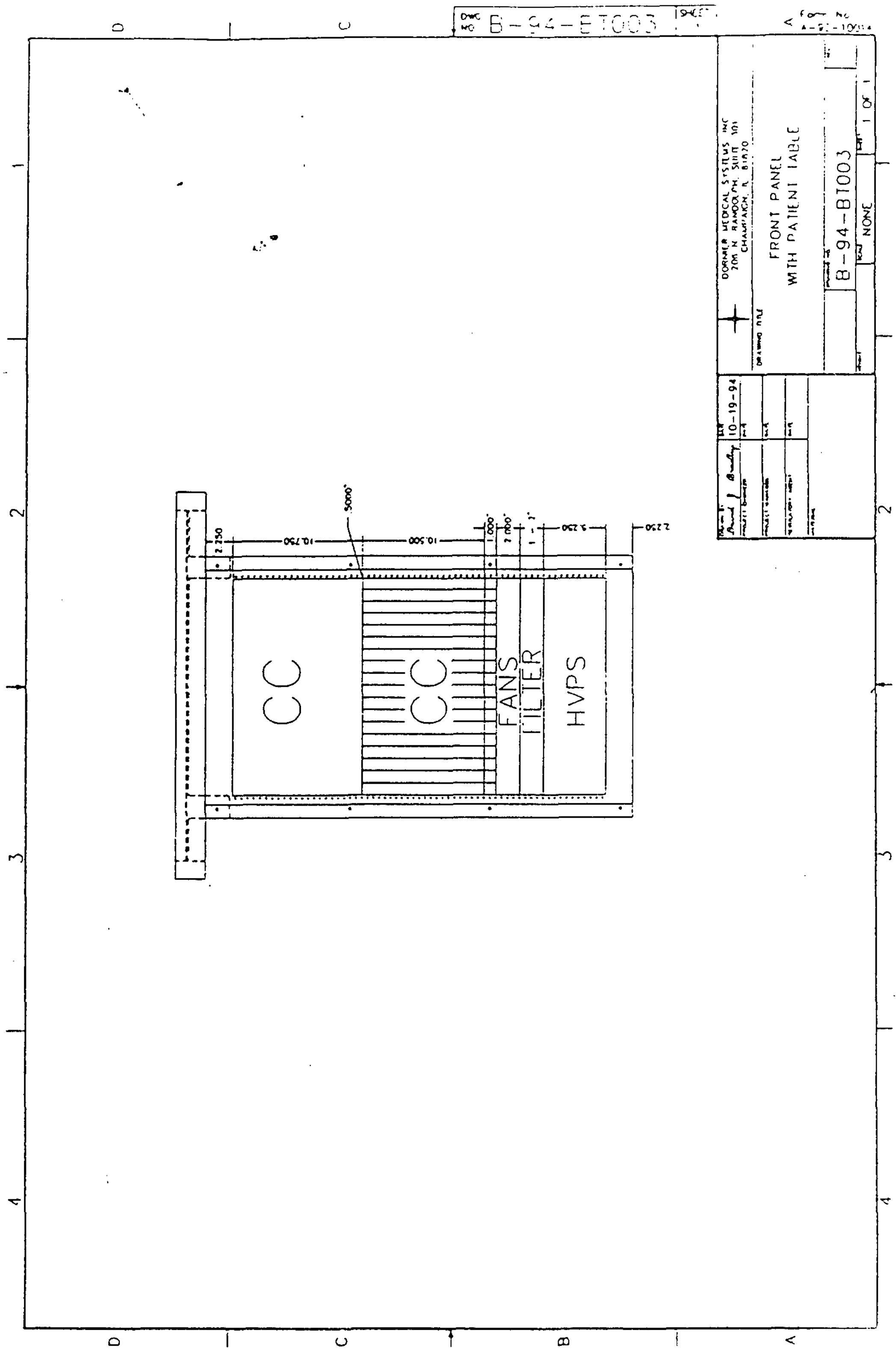

Figure 9
Internal layout

Drawing of internal layout of the key electronic system components inside the table central column

C. System Control Design

When power is turned on to the system, the treatment software initializes automatically so that no interaction is required by the user to start the software. All available options are displayed to the user in a graphical format. Options that will be available at the startup screen include access to the treatment planning software, file handling utilities, diagnostic mode selections, treatment record printing, and treatment initiation. The user makes requests of the system via the computer keyboard, computer mouse, or a mechanical pause switch during all phases of the treatment. A hardware Pause switch is provided that guarantees no power output will occur in case of emergency.

Prior to beginning a treatment, the user is required to complete a treatment plan. The treatment planning software is in graphical form to simplify data entry, such as target volume locations, the number and location of temperature sensors, target temperatures for each sensor, scar tissue locations, and patient information. Custom treatment plans can be configured for each patient prior to the actual treatment. These can be stored in the system and recalled at the time of treatment.

The BTS can perform the treatment in both computer assisted and manual modes. At any time during treatment, the system operator will be capable of interrupting the computer and/or provide advice to the computer concerning the treatment. The operator selects different target tissue regions on the computer screen and set a target temperature value for each region. The computer system will then determine which ultrasound transducer's output power needs to be adjusted to accommodate the operator's request. Alternatively, the operator can directly control the power levels to different groups of transducers (1 to 4 groups) comprising any selected number or to an entire region of the applicator.

Treatment progress and status information is available via a graphical user interface that provides treatment information such as temperature distribution, power absorption distribution, thermal dose distribution, target contour information, and treatment time information. The operator is not required to determine power levels for the individual transducers since temperature distribution information is continually available on a graphics screen. The operator has the capability to make suggestions about the target temperatures for locations where implanted sensors are placed as well as other locations in the target volume. Further, the operator may manually select and adjust the power on any active transducers (e.g. reduce power deposition directly over a scar). Selection of active transducers, control of receive and transmit mode and gated on-off periods are under control of the Instrument Computer.

Once a treatment has been completed, the operator returns to the startup screen so that printing of the treatment information may be performed, and duplication of the treatment files may be accomplished.

D. TMR Subsystem

The TMR (Transmit-Multiplex-Receive) subsystem is the "heart" of the system's electronics. It resides on a custom 10in. x 16in. four layer circuit board, with sockets for two daughter boards - a microcontroller board(MCB) and a digital signal processor (DSP). The TMR subsystem includes the RF power generators and VCO's, transmit-receive (T/R) circuits, receiver circuits, transducer multiplexer circuits, an on-board microcontroller daughter card and provision for addition of a DSP. The breast therapy system contains 25 TMR subsystem boards, 24 being for system therapy and noninvasive interrogation operation and one for temperature probe location. Each TMR subsystem contains four independent RF generators with separate VCO's, receiver circuits, T/R switches, and multiplexers for driving 16 transducers. All functions on the TMR are controlled via the MCB daughter board microcontroller (a custom- designed six-layer surface-mount board). The microcontroller interfaces to the system's Instrument Computer. A block diagram and controller signals map of the TMR subsystem is shown in Figures 10 and 11, respectively. This comprehensive design, including T/R switches and receivers plus DSP provisions, provides the capability for the addition of non-invasive measurements including tomographic reconstruction of interrogated ring "slices".

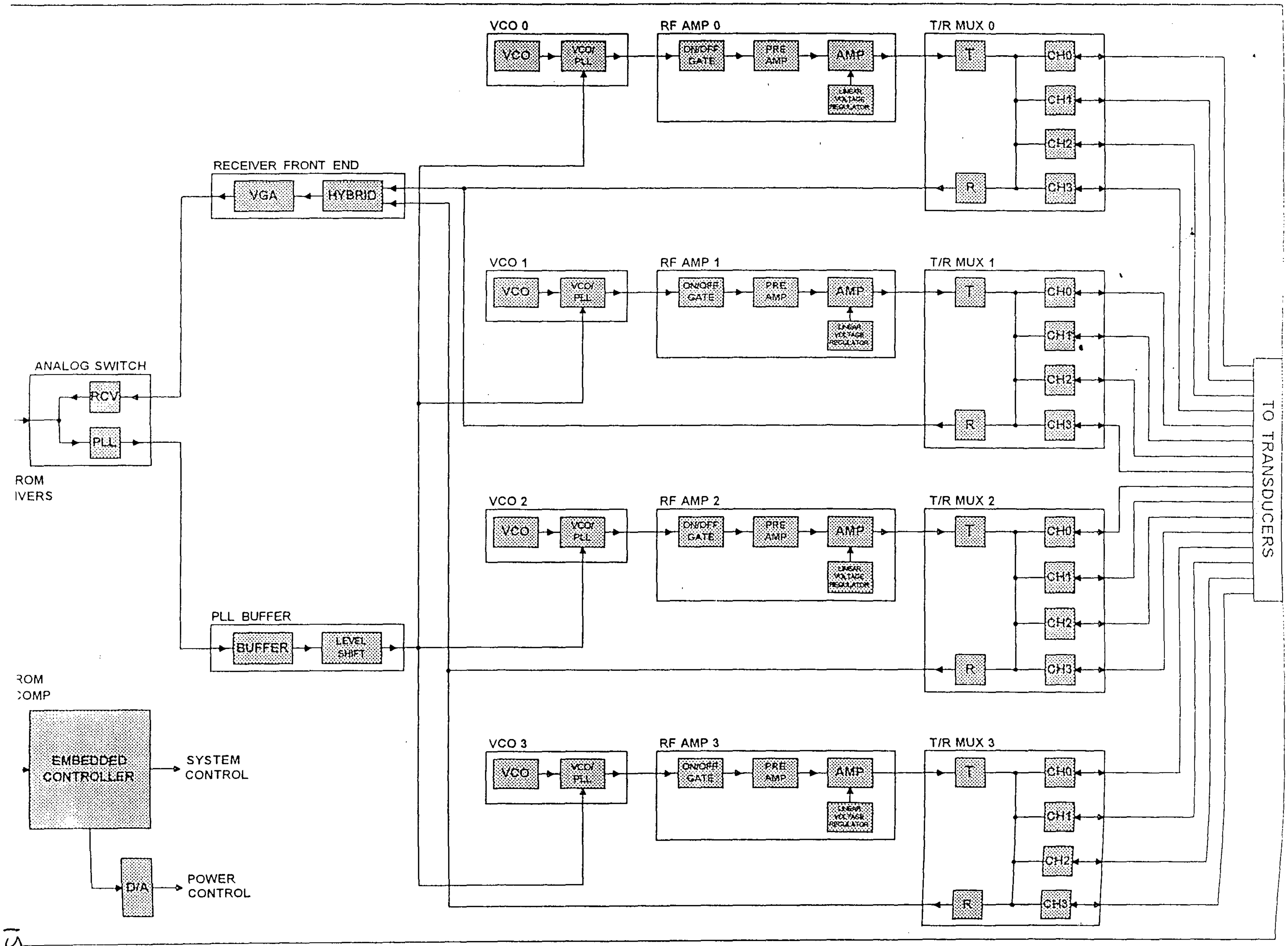

Figure 10 TMR Subsystem Block Diagram

Figure 11

TMR CARD EMBEDDED CONTROLLER SIGNALS

9-26-94
pja

EXISTING CONFIGURATION

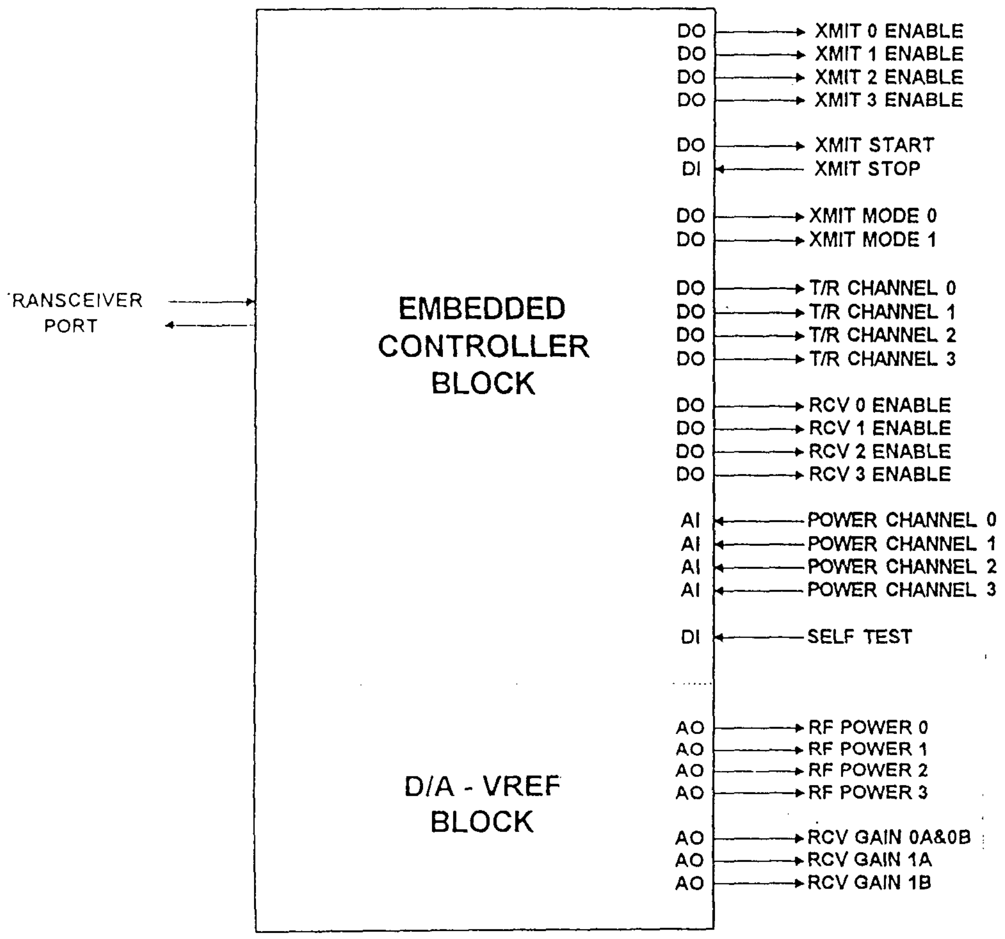

DESIGN REQUIREMENTS

VCO	XMIT EN0	DO
	XMIT EN1	DO
	XMIT EN2	DO
	XMIT EN3	DO
RF GEN	RF PWR0	AO
	RF PWR1	AO
	RF PWR2	AO
	RF PWR3	AO
	PWR CH0	AI
	PWR CH1	AI
	PWR CH2	AI
	PWR CH3	AI
T/R MUX	XMIT EN0	DO
	XMIT EN1	DO
	XMIT EN2	DO
	XMIT EN3	DO
	RCV EN0	DO
	RCV EN1	DO
	RCV EN2	DO
	RCV EN3	DO
	T/R CH0	DO
	T/R CH1	DO
	T/R CH2	DO
	T/R CH3	DO
	T/R CH4	DO
RCVR FE	RCV GAIN 0A&0B	AO
	RCV GAIN 1A	AO
	RCV GAIN 1B	AO
	HYB EN0	DO
	HYB EN1	DO
PLL	PLL EN	DO

Each section of the TMR subsystem is described in detail as follows.

D.1. RF Section

The RF Power Section consists of 96 independent RF amplifiers driven by 96 separate oscillator sources. Each oscillator consists of a computer-controlled VCO operating over the frequency range of 1 - 5 MHz and is used to drive one RF amplifier. Each oscillator is preset to operate at one of the three operating frequencies (2.0, 2.5, 4.5MHz). The individual VCOs frequency may controlled by the microcontrollers under direction of the Instrument Computer. Each of the 96 independent RF amplifiers incorporates its own voltage control/regulator circuit which provides independent computer control of amplitude (output power level) for each amplifier channel. A block diagram of the RF Amplifier Subsystem is shown in Figure 12. Each RF amplifier output is connected to a T/R MUX input circuit.

D.2. Receiver Section

The Receiver Section consists of 25 independent receiver with 24 dedicated to noninvasive monitoring and one for temperature probe location. Inputs can be received from any of the 384 transducers in the array, dependent upon multiplexer selection. Each of 24 receiver circuits receives inputs from up to 16 transducers and multiplexes those transducer signals to two receiver hybrids per card. There are 24 identical circuits comprising the Receiver Section plus two cards with sampling, phase comparator, and PLL circuits. Specifications for the receiver hybrids are listed in Table 4. Each hybrid consists of an analog multiplexer and a 15dB low noise amplifier as illustrated in Figure 13. The hybrid output is processed through two high gain VGA stages as shown in Figure 12. Receiver outputs are digitized and sent to the Instrument Computer for processing. The complete Receiver Section block diagram is illustrated in Figures 14 and 15.

D.3. T/R Mux Section

The Transmit-Receive Multiplexer blocks connect each of the transducers in the array to the RF amplifiers and the receivers. The fundamental block has 6 ports, 4 of these are for individual transducers, 1 is for transmit RF, and 1 is for receive. The design consists of 6 single pole RF diode switches all connected to one common pole. Certain switch combinations are not desired such as transmitting at high power levels into the receiver so control logic prevents this and other undesired combinations. Performance of the design was evaluated at 4.5 MHz and is slightly better at 2.5 and 2.0 MHz. Transmit loss was around 0.1 dB, receiver loss was 1.0 dB, transmit receive isolation was 58 dB, and cross channel isolation was 35 dB. Each TMR card has 4 of the basic T/R Mux blocks, the system has 24 fully used TMR cards so 96 of the T/R

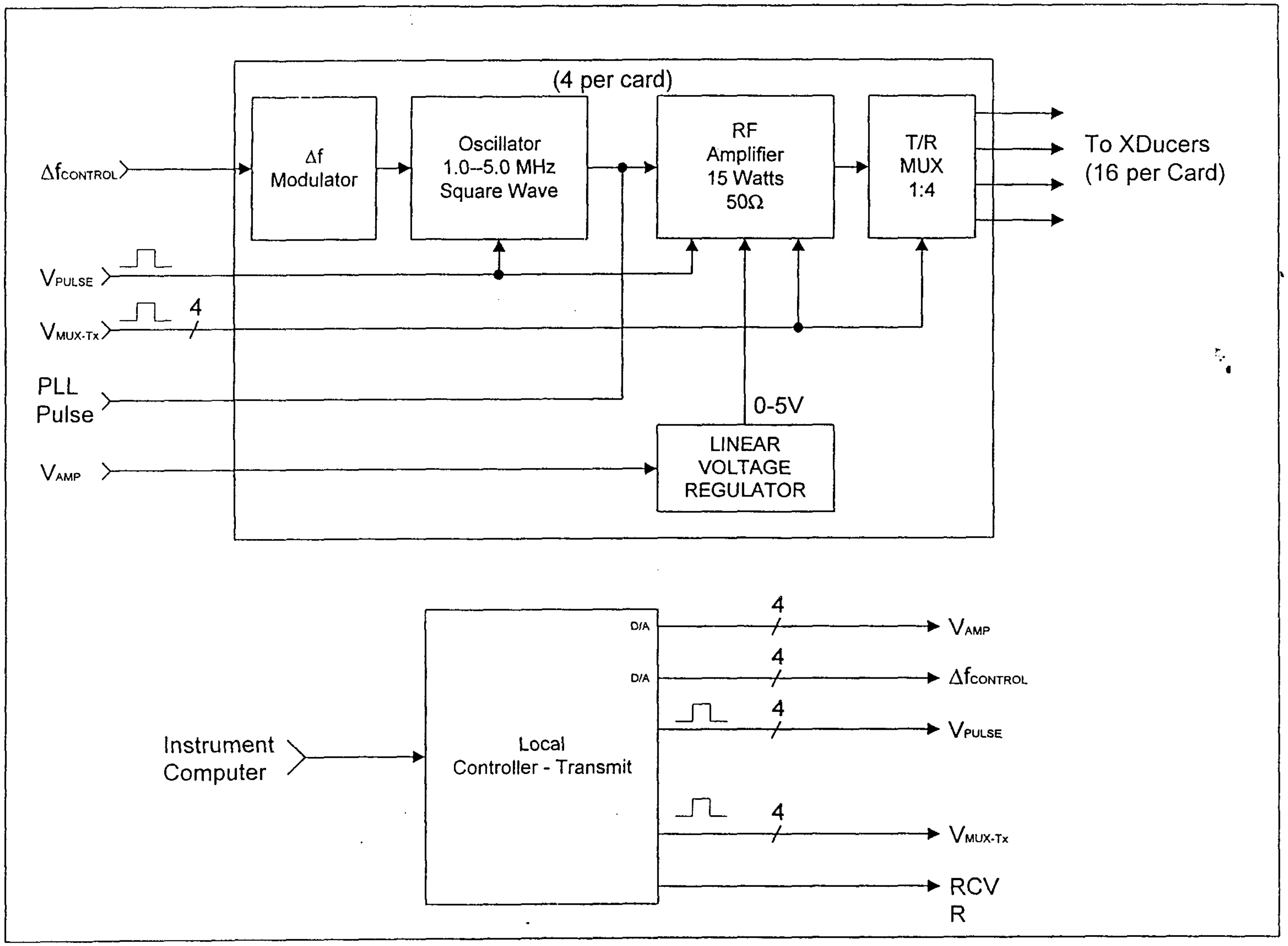

Figure 12 RF Amplifier Subsystem

Figure 13. Receiver Hybrid

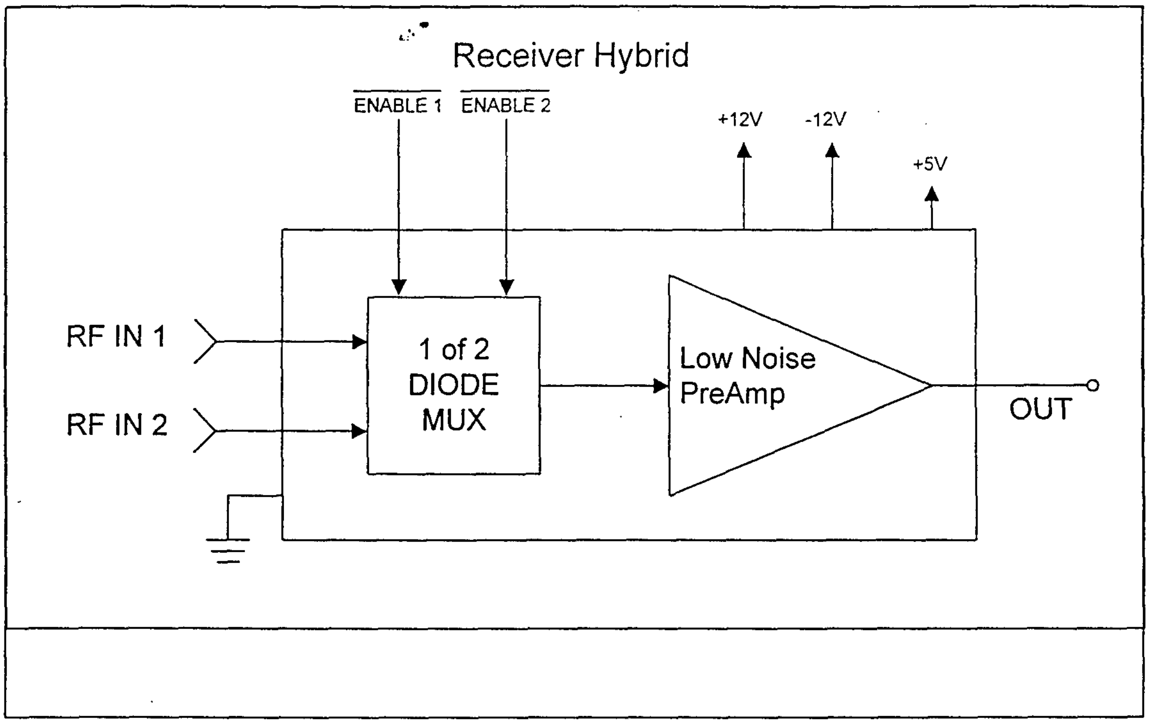

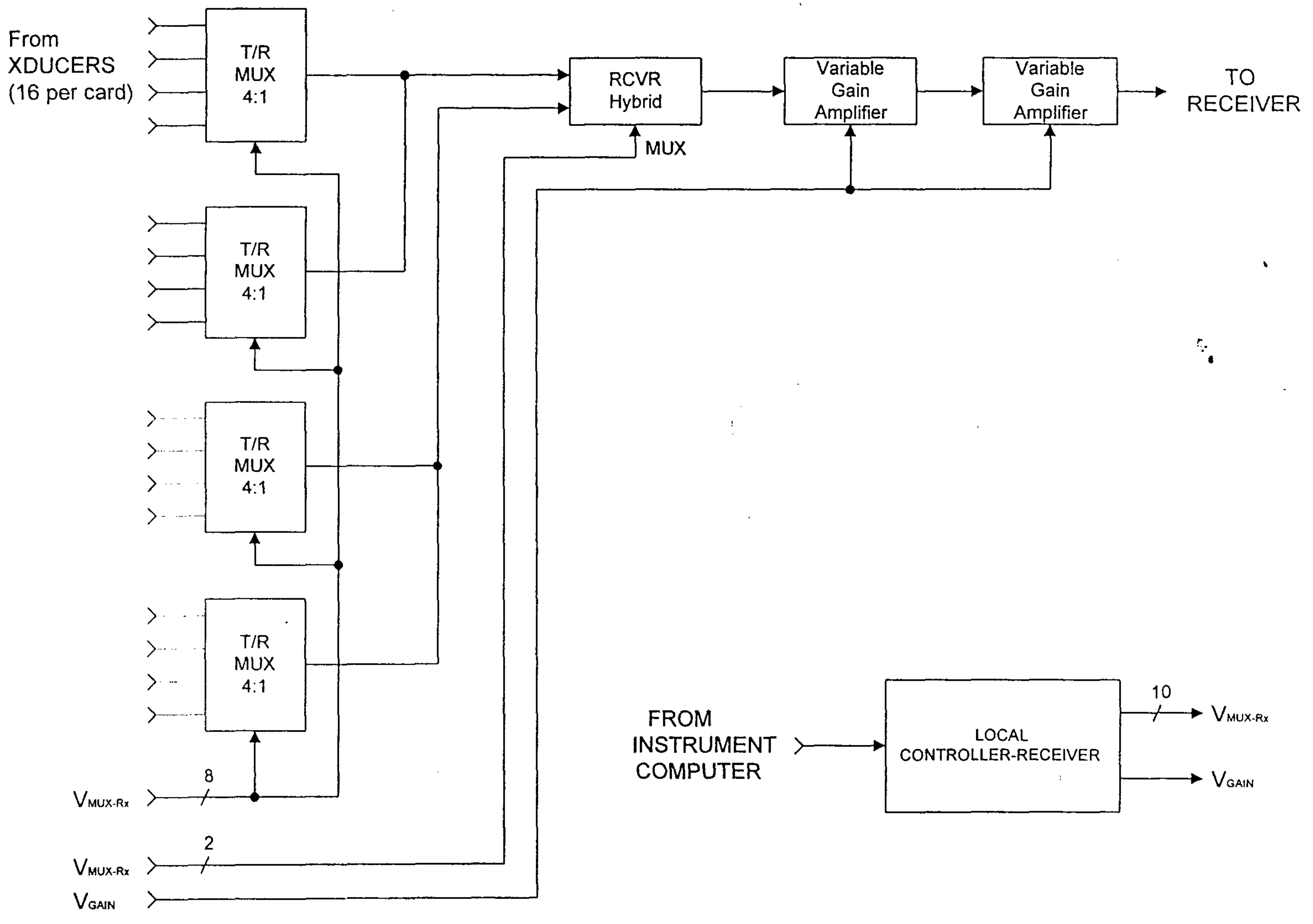

Figure 14. RF Receiver Subsection (1 of 20)

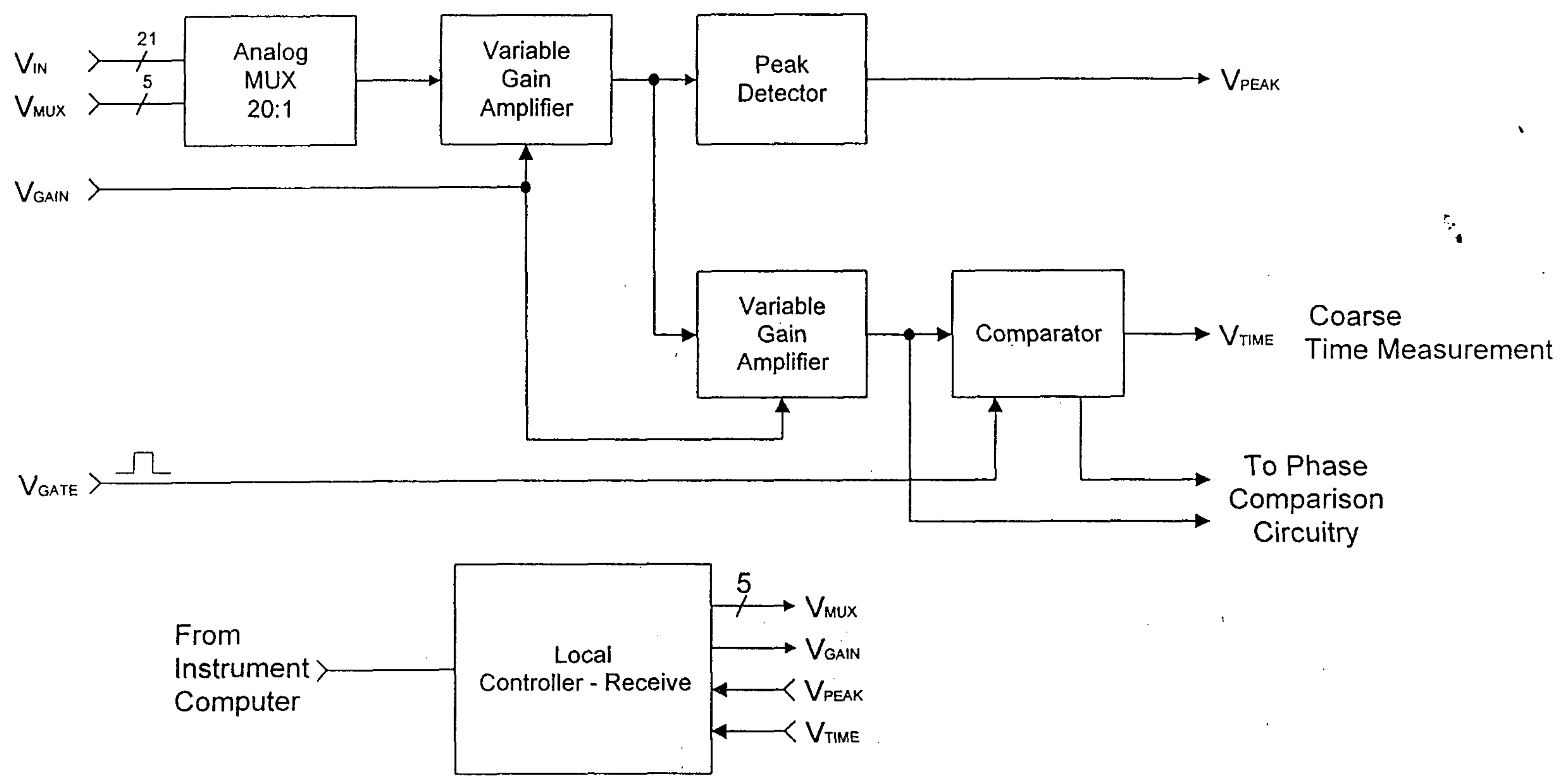

Figure 15. RF Receiver Amplitude and Coarse TOF Measurement

Mux circuits allow for 96 RF amps to drive 384 transducers. 96 receiver ports are further multiplexed down to 24 separate receivers, one per board.

D.4. Microcontroller Section

A separate surface-mount microcontroller daughter card is mounted onto (and plugged into) the TMR subsystem board. The schematic of the microcontroller daughter card is shown in Figure 16. The processor contains on-board memory and 64 Bytes of SRAM. Each mocrocontroller board also contains 16 digital control lines and 8 each A/D and D/A lines. The requirements of this therapy system were unique enough that it would have been very difficult to implement an “off the shelf” controller board. Also, physical space constraints in this system are severe. As a result, we designed and layed out our own circuit card a 6-layer surface mount 3”x 5” package. The microcontroller card layout is shown in Figure 17. Much of the receiver peak-detect and A/D functionality reside in the microcontroller, whose programmable functions can be optimized.

D.5. VCO/PLL Input Section

The TMR subsystem board contains a section which permits injection of a phase-locked oscillator source into the RF generator/amplifier circuits on a selected channel basis. The PLL input is buffered through phase-matched buffer arrays to maintain equal phases to all amplifier inputs. This permits use of the same generator/amplifiers for both therapy and pulsed signal interrogation. During the therapy mode, the VCO on each generator section drives the RF amplifier. The VCO frequency is computer-controlled by the microcontroller under direction of the Instrument Computer. Since each RF generator/amplifier section of the TMR subsystem has its own VCO, the outputs of each amplifier are incoherent. This permits avoidance of any undesired phase addition or cancellation in the emitted ultrasound energy used for thermal therapy. During the interrogation mode of system operation, the pulse signal must be phase-locked to a single source in order to permit accurate measurement of pulse-echo and through-transmission times. This in turn permits accurate representation of the breast contour on the operator’s treatment screen. This section of the TMR subsystem functions to switch the generators/amplifiers between these two modes and to provide buffered, phase-matched signals to the drivers. It is shown on the upper right corner of the TMR layout in Figure 18.

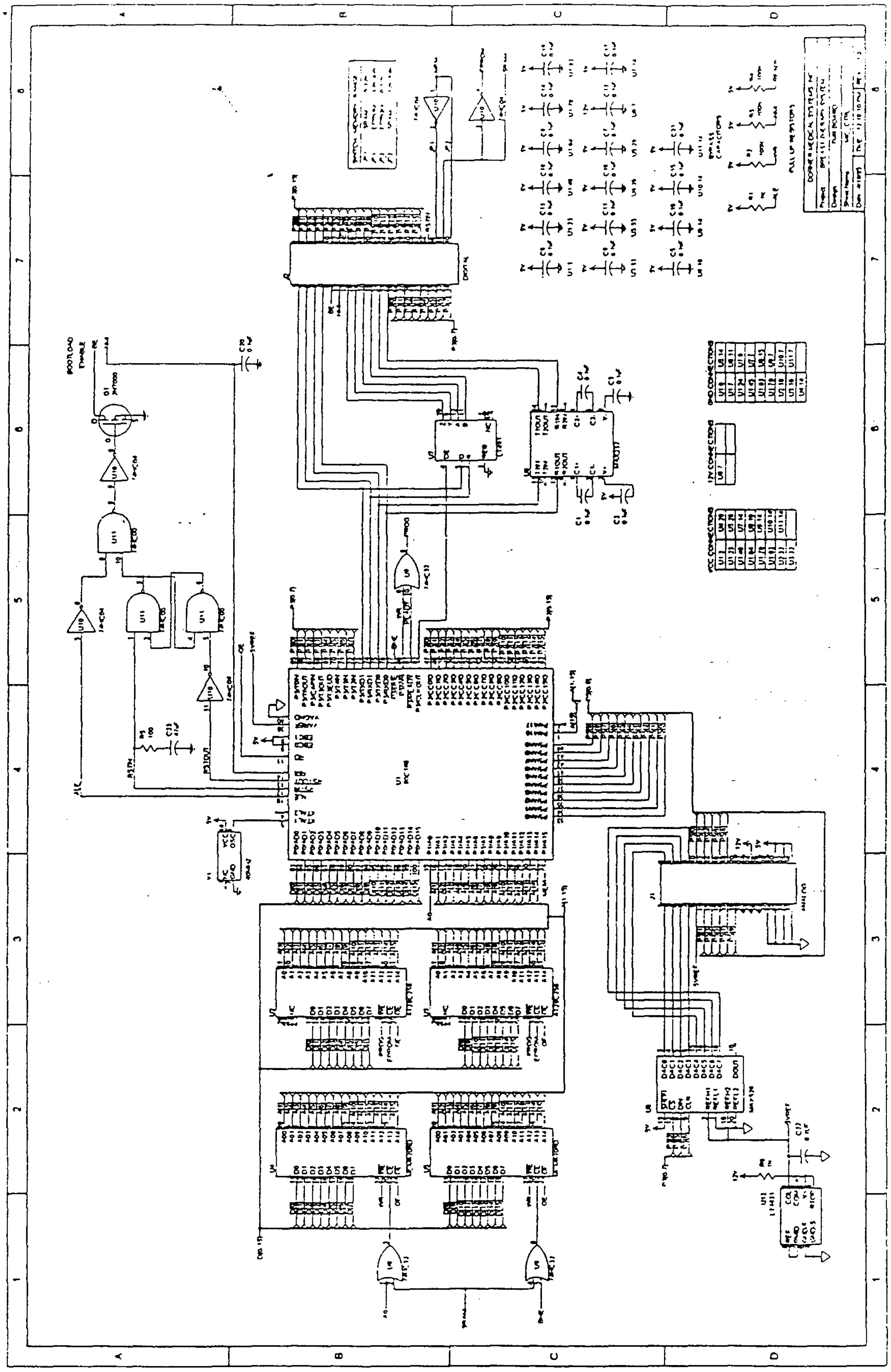

Figure 16
Microcontroller Board
Schematic Diagram

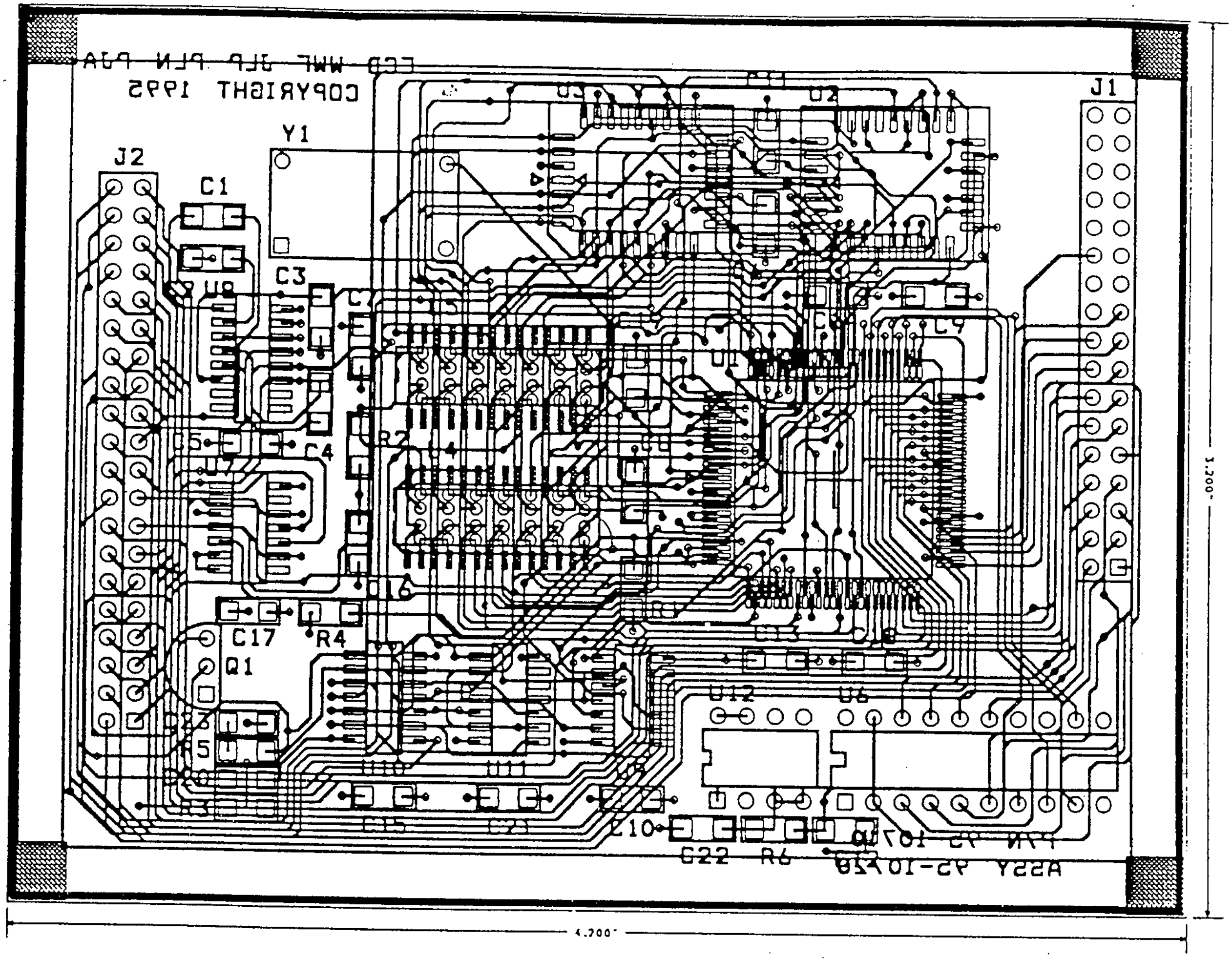

HOLE LEGEND				
SYM	DIAM	TOL	QTY	NOTE
×	0.020	+/- 0.005	282	(N)
+	0.022	+/- 0.005	56	(N)
◇	0.034	+/- 0.005	35	(N)
⊠	0.040	+/- 0.005	74	(N)
TOTAL			447	

Figure 17
MicroController Board
Layout Diagram

D.6. DSP Add-On Provision

This section of the TMR subsystem represents one of the important "looking ahead" features which has been incorporated into the BTS. The TMR circuit board contains sockets for plug-in addition of a digital signal processor (DSP) to be developed at a future date (Figure 18). DSPs are widely used today in many applications and in this case, will provide the only reliable method to obtain "clean" received signals for the through-transmission data to be used for both noninvasive temperature monitoring and real-time breast image reconstruction within the treatment system. This work is beyond the scope of the present contract. It is a very important provision, however, and is the only method whereby these capabilities may be readily retrofitted to the overall system without complete rework of the TMR subsystem at considerable cost and time consumption.

E. Non-Invasive Monitoring Subsystem

The noninvasive monitoring subsystem resides on the TMR subsystem circuit cards and on three separate circuit cards contained within the system enclosure.

The receiver section of the TMR subsystem, in conjunction with the T/R Mux circuits and VCO/PLL control circuits comprise the heart of the noninvasive monitoring subsystem. This portion of the system changes the functional state of the transducers from therapy to target interrogation and receives both reflected and transmitted signals from and through the breast, respectively. Functional descriptions of each of these TMR subsystem sections are given previously in Section D. of this manual.

One of the three additional circuit cards contains the phase-locked oscillators for each of the three transducer interrogation-mode operating frequencies (2.0, 2.5, 4.5 Mhz), filters for eliminating noise from the high-resolution time measurement signals, and the time-of-flight (TOF) measurement circuitry. A microcontroller also resides on this card for the purpose of communicating with the Instrument Computer which directs the TOF measurements. The other two cards contain large phase-matched buffer arrays for distributing the phase-locked oscillator outputs to each of the 96 RF generator/amplifier channels.

Figure 18
TMR Board

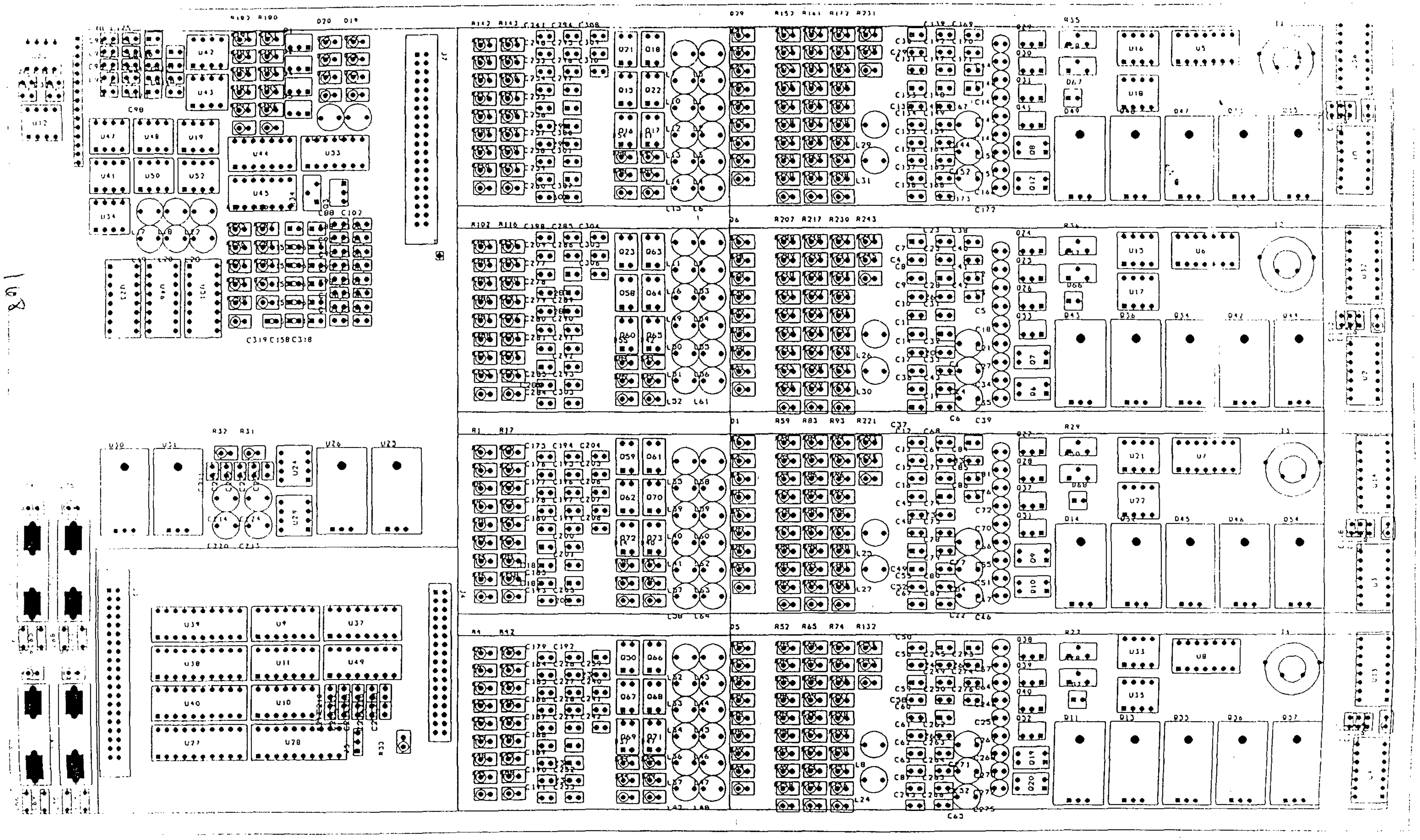

F. Thermometry Subsystem

Minimally invasive thermometry is performed by a multichannel thermistor thermometry system (Profilometer) developed by Drs. Bowman and Newman at the Massachusetts Institute of Technology (Bowman, et al., 1991; Hansen, et al., 1994).

The multi-channel temperature measurement instrument accomodates up to 6 multi-channel temperature probes. Each probe can measure temperature at up to 14 sites providing a total of 84 channels of information. The present instrumentation has resolution down to 10-17 millidegrees C, and temperature can be sampled at variable rates dependent on the data acquisition system being used and the amount of data averaging and signal processing. Each of the 84 channels can be sampled at 20 Hz which provides 10,080 samples of temperature data per second. Multi-site temperature data are collected and stored by the Instrument Computer. Data signal conditioning is performed by the Instrument Computer and the data then passed to the Control Computer for interaction with the control algorithm and display for the operator.

The instrument consists of two card types; the isolation cards and a digital control card. The isolation card is a medically isolated driver card external to the Instrument Computer which provides isolation for each channel and also provides multiplexing of the analog and digital signals. The digital control card provides function selection including card selection, channel selection, gain selection for a Programmable Gain Amplifier, and resetting of an Over Current Protection Latch. The controller card also handles communication to and from the Instrument Computer. Analog-digital conversion is presently handled by a commercially available system in the Instrument Computer, and all instrument control, data display, and data storage is handled by the computer.

Within the measurement instrumentation, each probe is connected to an individual, electrically isolated probe driver card. The driver cards are powered by a UL-544 approved power supply certified for medical use, and signals to and from the driver cards are passed through optical isolators and isolation amplifiers. This isolation ensures that there is no electrical connection between the patient and ground via the instrumentation.

The instrument also contains common circuitry - the controller and interface cards - for coordinating the activities of the several driver cards and for communicating with the Instrument Computer. This common circuitry is powered from a separate power supply, so that the probe driver cards are electrically isolated from the common circuitry, from the AC line, from the host computer, and from the other probes.

The probes used to measure temperature can be mounted on needles, molded into catheters, or other designs as desired. Stainless steel needle probes are planned for use with this system. These are 19 ga. needles, from 6" to 12" long, and contain 14 thermistor sensors. This range of probe configurations permits selection of a probe appropriate for the particular size breast being monitored.

The sensors used to measure temperature are thermistors. There is no electrical connection from the probe to the patient in normal operation. However, as a further safety precaution, hardware protection circuitry is provided to shut off power to a probe if an out-of-range signal is detected due to probe breakage or other mishap. Should such a condition occur, probe excitation will be shut off within 65ms. Although the isolation circuitry ensures that there is no current path from the instrument to ground through the patient under such conditions, this additional measure of redundancy provides added assurance of patient safety.

A unique feature of this system is that various temperature displays are available in real-time on the Control Computer screen during treatment. The display modes are as follows:

- Temperature-Time Display Mode: This mode presents a graph of all sensors on a common time axis. For the breast system, use of 3 probes simultaneously is anticipated for most treatment cases, which is easily seen on the display.
- Spatial Temperature Distribution Mode: This mode is displayed on the operator treatment control screen directly on the breast contour/slice map and shows spatially where each of the sensors is located within the breast profile and the temperature of each sensor.
- Thermal Dose Spatial Distribution Mode: This mode is displayed on the operator treatment control screen directly on the breast contour/slice maps and shows spatially the thermal dose distribution within the breast. Thermal dose is displayed as the instantaneous value of accumulated thermal dose, expressed as equivalent minutes at 43 deg. C.

A block diagram of the thermometry subsystem used in the breast therapy system is shown in Figure 19.

The profilometer system and displays are fully developed and approved by the IRB at the Dana Farber Cancer Institute. A profilometer system (operating as a stand-alone device) is currently in clinical use for other thermal therapy systems at the JCRT.

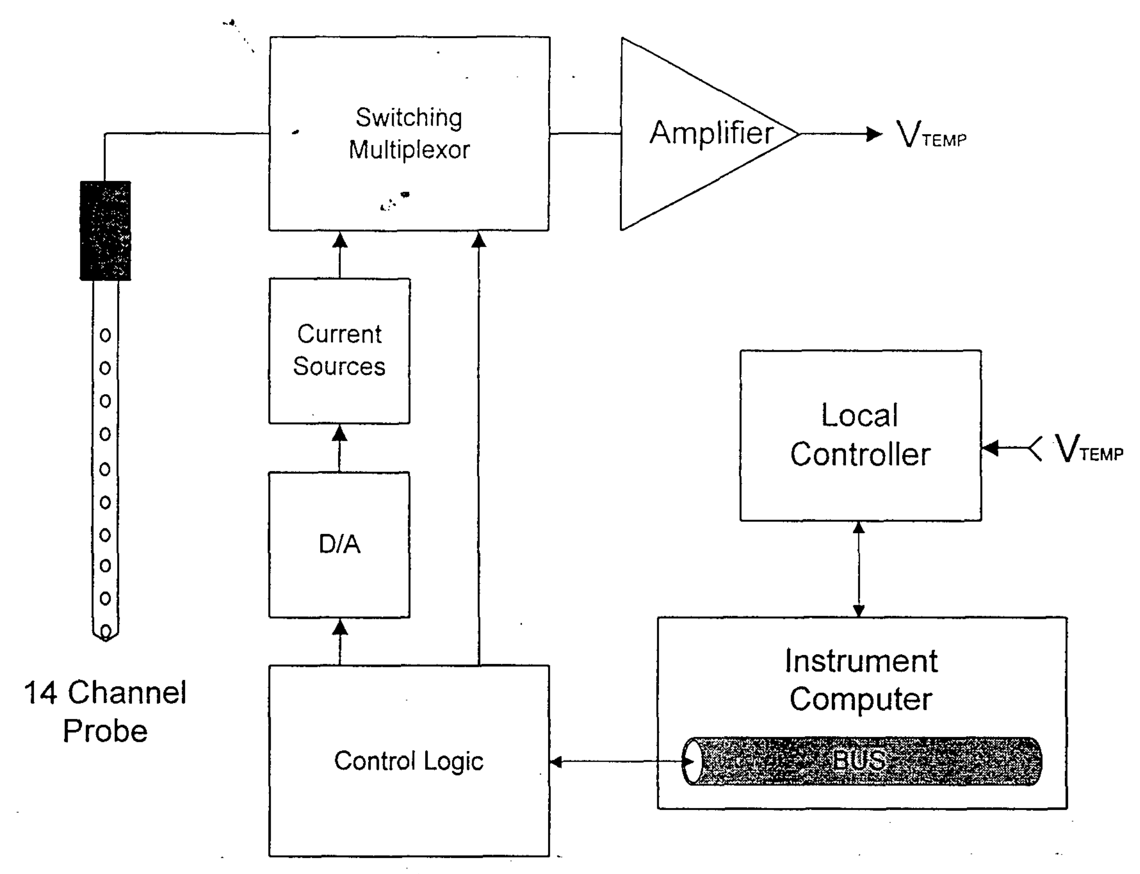

Figure 19. Thermometry Subsystem

G. Cooling/Heating and Water Circulating Subsystem

This subsystem consists of a 110 watt thermoelectric cooler/heater, water circulating system, and a temperature controller interfaced to the Instrument Computer.

The thermoelectric cooler/heater is attached to a thermal plate which includes a machined serpentine groove and cover plate for placing the tubing which carries the circulating water. Using this approach makes it possible to maintain sterility of the water which comes in contact with the patient and avoid circulating the water directly through the cooler body itself. The cooler maintains the water at a preset temperature which is under operator control via the Control and Instrument Computers. The interface communicates bi-directionally with the Instrument Computer. The temperature controller controls the setpoint temperature based upon information feedback from the thermometry monitor module and the setpoint temperature selected by the operator. A PID control algorithm is incorporated in the software. The setpoint temperature range is 25°C to 42°C.

H. Computer Subsystems

The computational functions of the system will be divided between two computers, the Control Computer and the Instrument Computer. The control computer's primary responsibility is to control the overall treatment functions and provide an intuitive user interface via a graphics monitor, keyboard, and mouse. The Instrument Computer is primarily responsible for communicating with other hardware devices such as the Cylindrical Array Applicator, the Video system, Cooling System, Thermometry system, and the Pause switch.

H.1. Control Computer

A photo of the Control Computer workstation is shown in Figure 20.

The Control Computer is a standard architecture machine with no custom hardware interfacing requirements that connects to the Instrument Computer via a communications link and is also connected to a printer to allow hardcopy of the treatment information. For treatment results analysis, demo, and software development purposes the Control Computer is able to be operated without the Instrument Computer connected.

The bi-directional communications link has been implemented via a parallel port using off-the-shelf hardware. The communications software design employed is independent of the communications link technology, except for the low-level driver implementation.

Control Computer Specifications:

Processor:
- Pentium, 66 MHz
- PC/AT, MS-DOS, Windows, iRMX Compatibility
- 32 MB RAM
- 520 MB hard disk
- 3.5" 1.44 MB floppy drive
- Printer Port
- Bi-directional Communications link to Instrument Computer (Ether Express Network)

Graphics and operator entry subsystem:
- 1280 x 1024 x 256 resolution
- 21" monitor size
- PCI bus with graphics accelerator
- Standard 101-key keyboard

Microsoft Windows supported mouse

Figure 20

View of Control Computer Operator Workstation

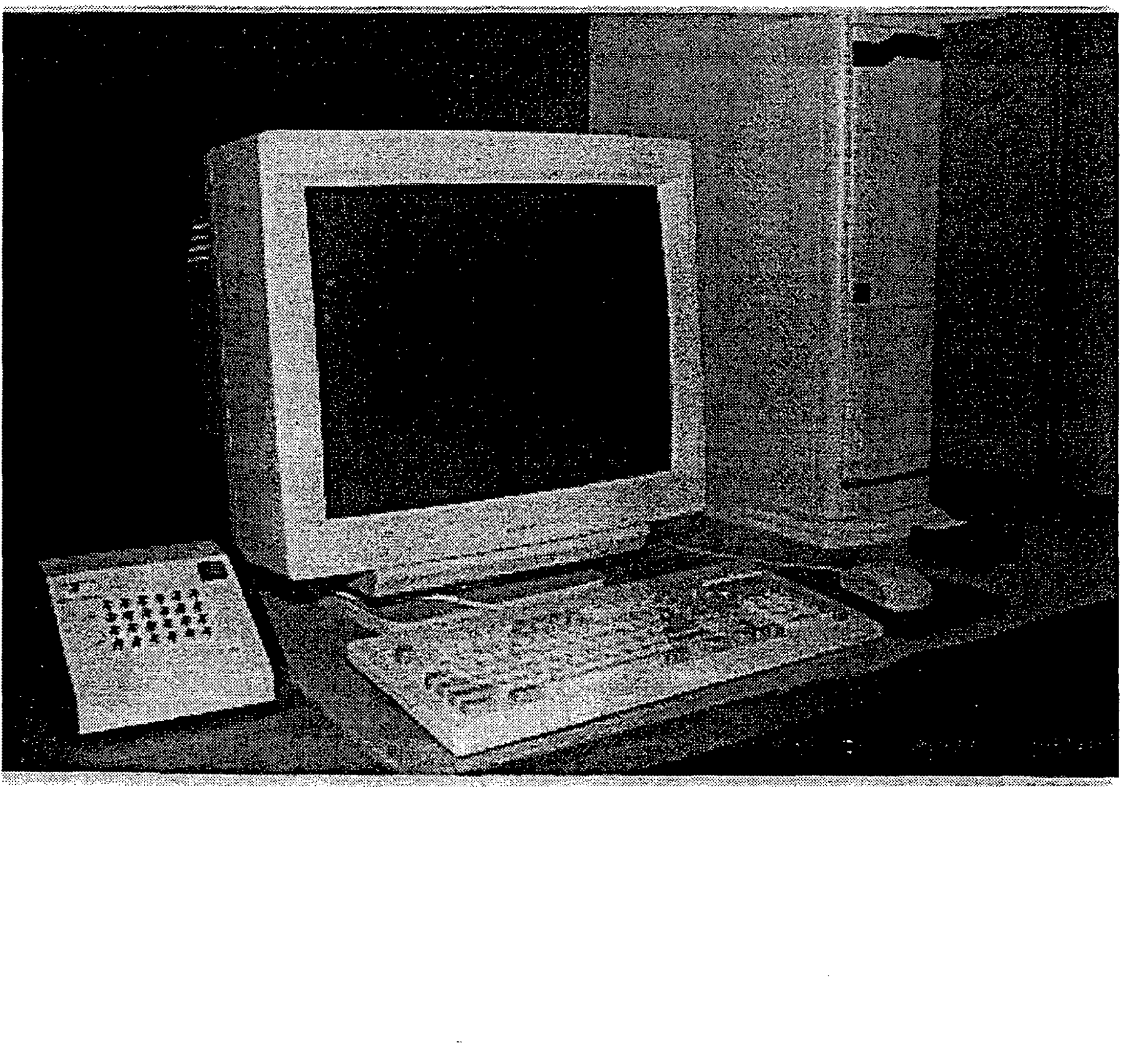

Inputs to Control Computer:

Keyboard
Mouse
Ether Express Network from Instrument Computer.

Outputs from Control Computer:

Display Screen
Parallel Port to Printer
Ether Express Network to Instrument Computer.

H.2. Instrument Computer

The Instrument Computer implements the custom control and measurement interfaces to other hardware portions of the treatment instrument, is located within the system enclosure beneath the patient table and near the control and measurement points, and communicates with the Control Computer via a bi-directional communications link. For software design consistency and to avoid unnecessary costs, the Instrument Computer is implemented as a PC-AT compatible computer filled with interface cards.

The bi-directional communications link was implemented via a parallel port using off-the-shelf hardware. The communications software design is based on iRMX and is independent of the communications link technology, except for the low-level driver implementation.

Instrument Computer Specifications:

- Processor:
  - 80486 DX2/66, upgradable to Pentium
  - PC/AT, MS-DOS, iRMX Compatibility
  - 16 MB RAM
  - 250 MB hard disk [deleted from final system]
  - 3.5" 1.44 MB floppy drive [deleted from final system]
  - Ether Express Network link to Treatment Control Computer

- Custom designed transducer array interface hardware

- TTI Temperature Profilometer System:
  - Low profile card cage
  - 14 Channels per board
  - 6 boards
  - Isolation card
  - Digital control card

- Coolant system interface hardware

Video system interface hardware

Inputs to Instrument Computer

Safety Controls --- Emergency Shutdown, Pause control.
T/R Switch Status
Demultiplexer Status
Receiver data
Invasive Thermometry Sensors
Coolant Temperature
Ether Express Network from Control Computer

Outputs from Instrument Computer

Safety Shutdown
Image Pulser
RF Power On/Off, Gated CW burst
RF Frequency Sweep On/Off
T/R Switch Control
Demultiplexer Switch Control
Cooling System Control
Ether Express Network to Control Computer

I. Video Subsystem

The breast ultrasound therapy system also incorporates a charge-coupled-device (CCD) solid-state video system for visual imaging of the breast within the treatment cylinder. This video subsystem was not anticipated in the original system design; however, several physicians within our group and our outside scientific reviewers suggested that real-time video imaging of the breast would provide useful information concerning the breast's position within the treatment cylinder and would confirm the breast contour outline provided by the noninvasive interrogation pulse-echo ultrasound. The video image from the CCD device is coupled through a video digitizer to the Instrument Computer and transferred to the Control Computer. The resultant image is displayed within a "window" on the operator treatment control screen.

J. Safety Subsystem

This subsystem automatically tests for any system ground faults and monitors leakage currents. It also directly monitors RF output power from the generator/amplifier subsystems independently of any computer-based monitoring of output power. It provides for system shutdown in the event of RF power malfunction, such that a "power on" failure mode is not possible. Also, a system level emergency shutdown switch is provided.

III. SYSTEM SOFTWARE

A. System Software Overview

The System Software Block Diagram shows the system control implementation approach. System control is divided between two computers, the Control Computer and the Instrument Computer. The Control Computer provides an operator control interface, measurement interpretation, feedback control, and data recording. The Instrument Computer provides direct hardware interfacing for collecting temperature measurements, collecting measured data from receivers, setting control output levels, and controlling the timing for multiplexing the transducer array.

B. Operating System

The Control Computer and the Instrument Computer are each configured with a 32-bit real-time multitasking operating system (Intel's iRMX for Windows). The software for each computer is written as a collection of well-isolated tasks, with intertask communications implemented via a consistent mailbox communication approach, with each task having its own separate GDT entries for its code, data, and stack segments (except that multiple iterations of a task, if any, use a shared code segment), and with minimal use of shared memory between tasks. All tasks are written as iRMX native tasks, except in the Control Computer where the operator interface is written as a Microsoft Windows application. Any task using mutual exclusion mechanisms rigidly adheres to an access order regimen to prevent deadlock situations from occurring.

C. Interprocess Communication

A standard intertask communications message structure is used for most intertask communication messages. This structure contains message type, response mailbox, destination, and standard auxiliary information fields. For passing large messages, an auxiliary information field will be used to pass a pointer to a memory segment containing the passed information. To avoid conflicts, in most circumstances this segment will not be accessed again by the sending task until it is returned by the receiving task. Preallocated communications buffer queues are used where possible rather than dynamic memory allocation and deallocation to exercise explicit control over message queuing performance and to avoid memory fragmentation.

D. Initialization

The Initialization task has the responsibility to start up all the other primary application tasks in the system. Each iRMX task is separately bound, and loaded by the initialization task with the iRMX application loader. This approach encourages good design practices such as maintaining task isolation, automatically provides independent data segments for each task, and minimizes compile, build, and bind cycle time.

Each task has a synchronous initialization phase, and may also have asynchronous initialization. During synchronous initialization, each task establishes communications mailboxes and message queues, perform any other synchronous initialization required, send the token for its main command mailbox to the initialization task, and wait for an initialization message from the initialization task. After synchronous initialization is complete, the task may also do other initializations asynchronously.

E. Control Computer

The Control Computer performs several interrelated functions. The operator input and display subsystem provides user control over the treatment and feedback to the user as the treatment progresses. User control over the treatment is at a high interaction level; actual control over the timing, power levels, and frequencies applied to scores of individual transducer elements is too complex and must be controlled too fast for an operator to control individual transducer parameters directly.

E.1. Operator Subsystem

The operator interface is one of the most important parts of the treatment system since it represents "the system" to the users. Therefore, the engineering design approach must be secondary to the user-oriented approach in this instance. Not only must the data interfaces be considered, but also the tools (keyboard, mouse, etc.) and the display organization and options. These are each discussed in the paragraphs below.

The operator interface will be used to define the treatment control and reference data and to display a variety of types of treatment progress and general display information.

Treatment Definition and Control Data

Treatment definition and control data will be suggested to the operator through the presentation of a configuration file, or files, and by requests to the operator to:

1) accept the configuration file in its entirety
2) specify new data for particular fields of the file
3) specify data not included in a configuration file.

Treatment Associated Data

Treatment associated data is measured by the system from sources external to the therapy system and therefore must be provided to it. Such data includes:

1) the number of temperature probes
2) the locations of the probes
3) the number and spacing of sensors on each probe
4) the spatial locations of the temperature sensors
5) the size and location of scar tissue
6) the patient's name and any identification being used

Definition of these data and the procedures for providing it to the operator interface are defined on their respective screens.

E.2. Display Subsystem

The displays to be provided during treatment include:

1) a breast contour (every 3 to 5 seconds),
2) periodic imaging of the temperature probe(s),
3) 2D cross section breast images, each with overlays of temperature data,
4) Hot spot alerting,
5) An optional display of 2D cross sections by location,
6) continuous time and temperature monitoring displayed as a graph for each cross section.

Where temperature is to be indicated by color shading scale shown below will be used. The actual temperature values that map to these colors and the colors used will be defined and configurable via the Configuration Subsystem.

White - over temperature (above 44.5 °C)
Red - upper temperature threshold (44.0 °C)
Orange - 43.0 °C
Yellow - 42.0 °C
Green - 41.0 °C
Blue - below lower temperature threshold (40.5 °C)
Gray - shading

All display software are designed with the resolution-independent features available in Windows, so that the treatment software will be able to run satisfactorily on machines with lower resolution for remote treatment replay purposes, with the acknowledgment that display detail will be lost.

E.3. Configuration Subsystem

System configuration information will be read from a file into a configuration information structure, then passed to each task as part of the synchronous initialization message. The configuration information will be defined as a constant structure and may be compiled into a binary file prior to system startup.

The system configuration information structure definition will be contained in a common file, "SYSCONFG.HC", and included by all referencing files.

The configuration subsystem reads all configurable parameters from the storage media (hard disk) and returns the appropriate data to the module that requests the information. The types of configurable parameters that this subsystem is responsible for obtaining are power calibration table or tables and system behavioral preferences.

E.4. Messaging Subsystem

The messaging subsystem handles all messages that are to be displayed to the user. This subsystem uses the Display Subsystem to display pre and post treatment messages, error messages during the treatment, and informational messages that are provided for the user. This subsystem accepts messages from any of the other subsystems and displays them in the appropriate fashion. For example, if an error occurs during a treatment, this subsystem will display an error message in a pop-up window and inform the Treatment Control Subsystem to pause the treatment. If the message is an informational message, the message will be displayed in a message bar located on the display screen. All messages received are also transmitted to the Treatment Records Subsystem.

E.5. Treatment Records Subsystem

The function of this subsystem is the collection, organization, control, and distribution of data between subsystems, tasks, and modules, and to store all relevant treatment data for post-treatment recall and analysis. In addition, the Treatment Records Subsystem provides treatment information to the user in paper form. A printout of key treatment parameters including temperature vs. time for all of the sensors will be provided upon request.

Information that the Treatment Records Subsystem is responsible for storing and retrieving includes the system configuration, all temperature measurement results, patient information, cooling system information, treatment cell information, automated control decisions, and user keypresses and mouse events during each treatment session. This task will also allow the data to be retrieved in an off-line simulation mode, for post-mortem analysis of the treatment session, operator training, system demonstration, and software development support. Other utilities and function will also be provided to assist in hardware testing, system calibration, and printing treatment data.

E.6. Treatment Plan Subsystem

The Treatment Plan Subsystem is responsible for obtaining information from the user that is necessary for proper treatment operation. Information that this subsystem will require includes the number of treatment sensor probes, number of sensors per probe, spacing of the sensors on the probe, target temperature and temperature limits for individual sensors and/or subregion locations in the treatment volume, patient name and/or number identifier, and possibly suggestions about the method of heating. The treatment plan subsystem maintains this information and provides it to the other subsystems.

The Treatment Plan Subsystem will also provide a method for the user to select regions as small as an octant and select a temperature setpoint for the entire octant at once.

E.7. Treatment Control Subsystem

The Treatment Control Subsystem makes transducer output power and frequency decisions based on information received from the Power Absorption Distribution Subsystem, Thermal Dose Distribution Subsystem, Treatment Plan Subsystem, Dynamic Treatment Calibration Subsystem, and the Temperature Subsystem. Once output power and frequency settings have been determined the Treatment Control Subsystem sends those data to the RF Power Subsystem via the PC Interface Module so that actual power changes can be made for the Transducer Array.

The Treatment Control Subsystem operates on predefined Treatment Cell Volumes. The actual volume of each treatment cell may be determined by the configuration file. The Treatment Cell center points, volume corners, and transducers that affect a treatment cell are stored in a Treatment Cell Information File (TCIF.DAT). If the volume defined in the configuration file for a treatment cell does not match the volume used to calculate the current treatment cell information file, the Treatment Control Subsystem will generate a new treatment cell information file.

The Treatment Control Subsystem will operate in automatic mode, yet it will be capable of allowing the user to make manual adjustments of the temperature setpoints for each treatment cell volume during the treatment. The default control method will be to heat the entire breast to 43 °C in all treatment volume cells.

To achieve the desired temperatures for the target volume the Control Subsystem may begin the treatment by selecting the Low Frequency Setting (2.0 - 2.5 MHz) until the center treatment cells have reached their target temperatures and then switching to the High Frequency Setting (4.5 MHz) to maintain these temperatures.

Treatment Cell Volume

A Treatment Cell Volume is a volume located inside the Cylindrical Transducer array. All treatment cell volumes are the same volume (or as close to the same as possible while still cumulatively encompassing the entire volume inside the Cylindrical Transducer array). The actual value for this volume is stored in the configuration file (default = 1 cm^2). A data file containing the treatment cell center point location, volume corner points locations, and the transducers that affect each cell is accessed prior to the treatment as the Control Subsystem sets up the Treatment Cell list. The Treatment Records Subsystem will check the Treatment Cell information file to ensure that the configuration file volume selection matches the volume used to generate the treatment cell information file. If it does not match, then the Treatment Records Subsystem will call on the Control Subsystem to generate a new file prior to starting the treatment.

This subsystem calculates the center point location for each volume, the corner points for each volume, and then determines which ultrasound transducers affect this volume. Although the volume for each cell will be equal, the actual shape of each volume will not be exactly the same. Figure 20 shows a simplified view of how the center points of each volume cell is determined for a single ring of transducers(48 in this case).

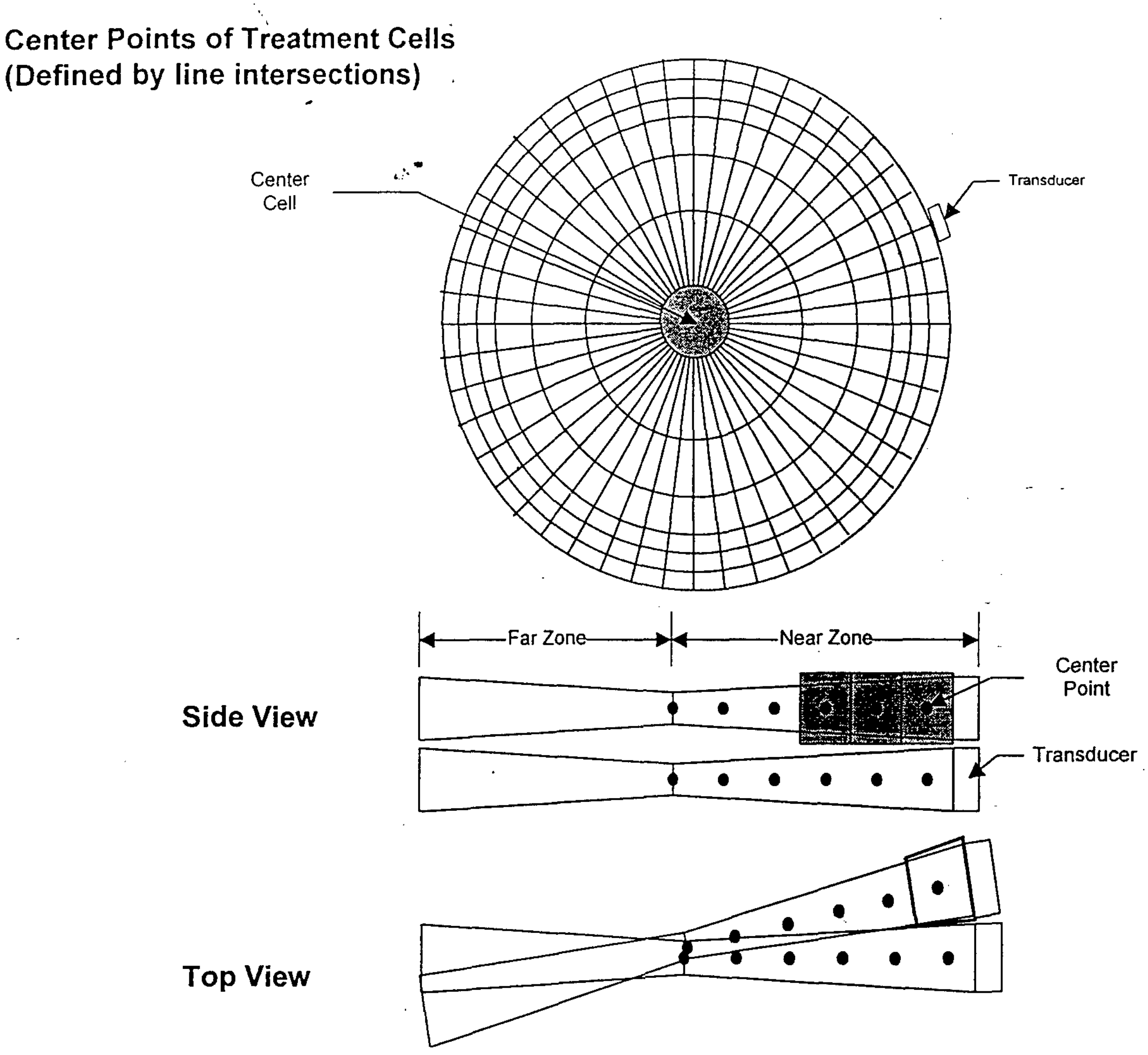

Figure 12. Treatment Cell Centerpoints

Treatment Cell Volume Centers

Each treatment cell volume's centerpoint is located on a line from the center of the face of a transducer to the centerpoint of the cylindrical array. The central treatment cell volume is actually a cylinder with a radius selected such that the volume will match the volume contained in the configuration file. The remainder of the treatment cells for a given transducer ring are in the shape of a rhombus (see Figure 22). Once the central treatment cell radius has been determined, the radius (distance from array center) for the center point of the rest of the treatment cell volumes is calculated and the centers determined. If a volume is selected such that all cells cannot be the same size, the treatment cells located closest to the transducer face will be of different volume so that the entire cylinder volume is represented by an individual treatment cell volume (These cells could be ignored since they will never contain target tissue).

Treatment Cell Volume Corner Points

Once the center points for each treatment cell are computed, the eight corner points for the Treatment Cell Volume are calculated. Each treatment cell volume is defined by 6 planes (except for the center cells). For a given treatment cell, the top and bottom plane are horizontal planes that are centered between the ring of transducers above and below the ring that the current transducer resides (see Figures 21 and 22). The left and right planes are vertical planes that extend from between the left and right neighbors of the transducer to the center point of the Cylindrical array applicator. The front and back planes are normal to a vector originating from the center point of the cylindrical array to the center point of the transducer. The distance of the front plane is half way between the current volume center and the center of the volume closer to the origin, and the back plane is halfway to the volume center further from the origin. Once all six planes have been determined, 8 volume corner points are calculated by finding the intersection of 3 planes.

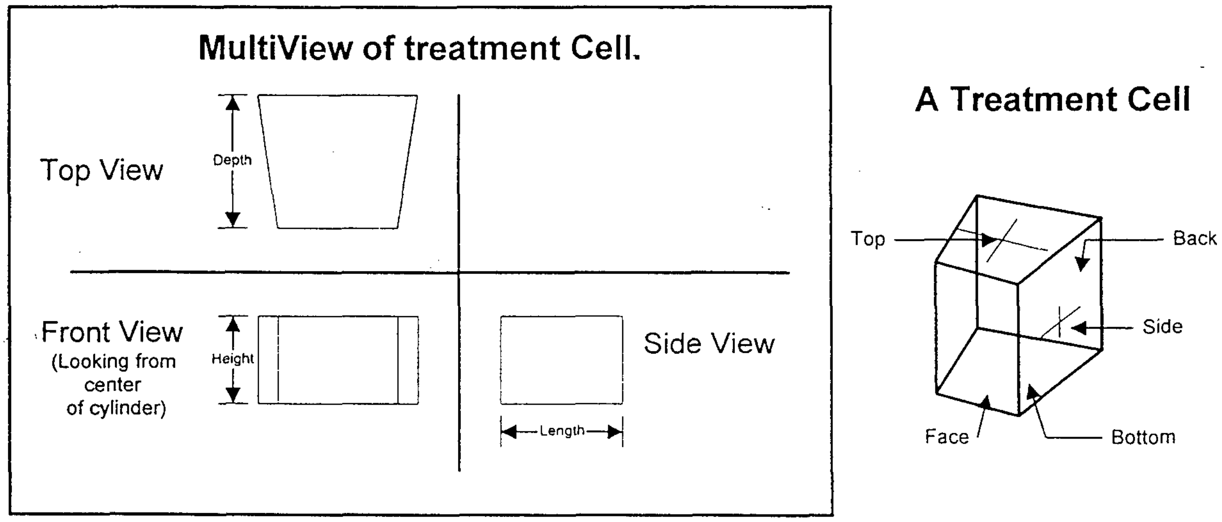

Figure 22. Treatment Cell Volume

Transducers Affecting a Particular Volume Cell

A center and 8 corner points define each volume cell. After all cell points have been calculated each of the points defining a cell are checked to see if they fall within either the Near Zone or Far Zone regions of each Transducer in the array; if so they are said to be touching a cell. The control subsystem creates a list for each volume cell of all transducers that "touch" a volume. In addition to whether or not a transducer "touches" the volume, information about whether the ultrasound field that touches the volume is in the Near Zone or the Far Zone region is also maintained. A "strength capability value" is also given for each transducer. For example, if a given transducer touches both a corner and the center points it will be given a higher strength capability value than a transducer that only touches a corner point. The strength value will be used by the Control Subsystem during the treatment to determine what the output power configuration should be to perform the desired treatment.

Treatment Cell Structure Definition

The structure definition below describes the types of information that will be maintained for each treatment cell volume.

point	Center	Location of center of cell
point	Corners[8]	Location of 8 corners
float	Volume	Volume of this cell
float	AbsorbedPower	Current absorbed power
float	ThermalDose	Current thermal dose
float	Temperature	Current cell temperature
float	SetPoint	Temperature setpoint
float	TempLimit	Temperature limit
short	Type	Scar, NormalTissue, ContourTissue, NoTissue
sensor	*sensors	List of sensors in treatment cell
xducers	*xducers	List of transducers touching cell

E.8. Contour Monitoring Subsystem

Pulse-echo reflection data is collected using the cylindrical transducer array. The reflection data is collected by the Instrument Computer's Receiver Subsystem and sent to the Contour Monitoring subsystem. The Contour Monitoring Subsystem will convert this information into 3D image data that outlines the contour of the breast and prepare it for display. It will also map 3D image data into a 2D image space for the generation of 2D displays. This subsystem will also provide information to the Dynamic Treatment Calibration Subsystem to locate the breast within the treatment cylinder for detection of breast movement within extremes (boundaries) set in the Configuration file, and for updating the treatment cells in which the contour (surface of the breast) resides. Figure 23 is a simplified depiction of the pulse-echo monitoring method.

Contour Monitoring is performed by selecting a single ultrasound transducer to transmit an ultrasound pulse into the treatment cavity and then receiving the same pulse while measuring the time it takes for the pulse to return. This measurement is called a "Pulse-Echo" measurement since it measures the time it takes for a pulse to return to the transducer. The sooner a pulse returns the closer the object is to the face of the transducer. By pulsing all of the transducers one at a time a 3 dimensional contour map of the target tissue located in the applicator can be generated.

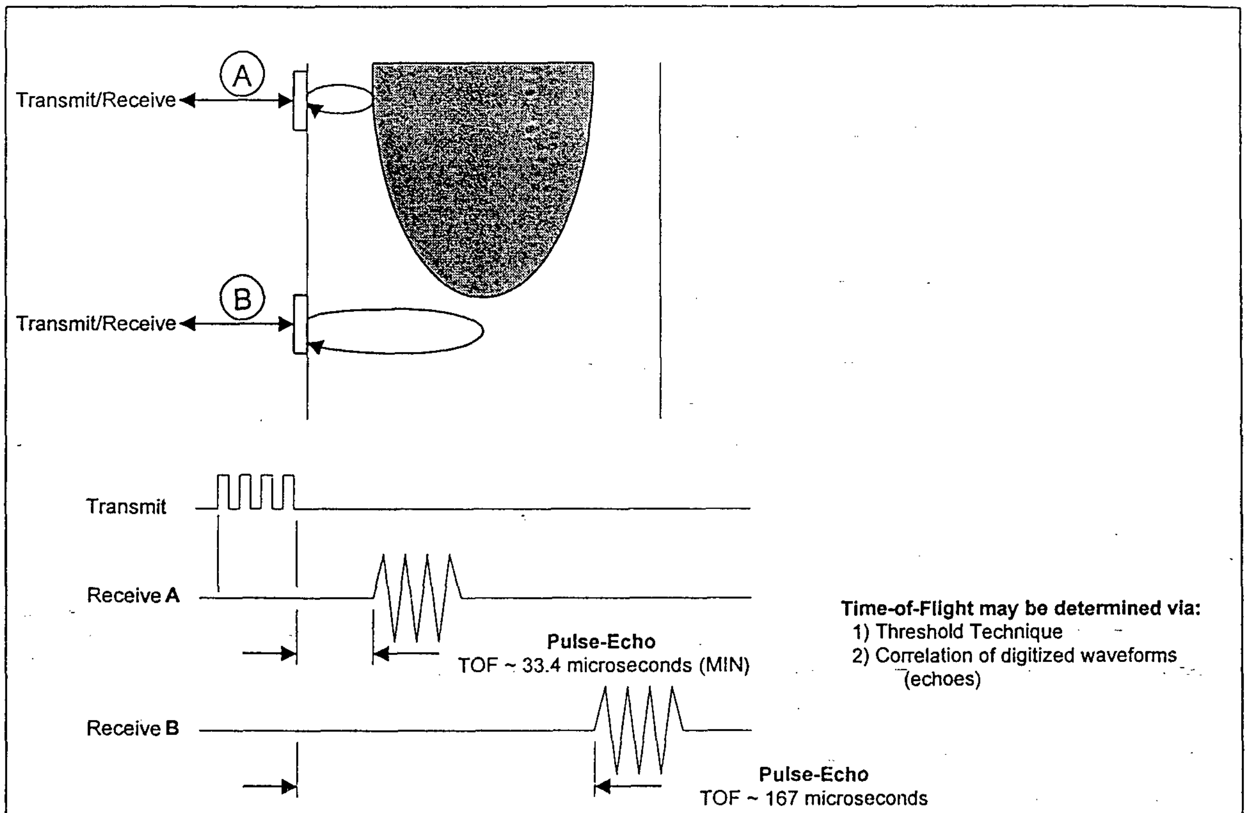

Figure 23. Contour Monitoring

E.9. Dynamic Treatment Calibration Subsystem

The Dynamic treatment calibration subsystem's primary responsibility is the detection of movement of the sensors, or the contour information. Once movement has been detected, this subsystem sends updated spatial target coordinate information to the subsystems that will be required to update their respective information tables.

Subsystems requiring the updated spatial information concerning target position include the Power Absorption Distribution Subsystem, the Temperature Subsystem, the Thermal Dose Distribution Subsystem, the Treatment Control Subsystem and the Safety Subsystem.

Whenever the breast moves within the treatment cylinder, new contour information is generated by the Contour Monitoring Subsystem based on pulse-echo measurements which are made every 4 seconds. This new breast contour information is passed to the Dynamic Treatment Calibration Subsystem to update the breast/target 3-dimensional spatial position within the treatment cylinder volume, relative to the transducers. This information is utilized by each of the subsystems requiring the updated spatial information. The Safety Subsystem compares the new breast/target spatial location against the maximum movement threshold specified in the Configuration file in order to determine whether or not to pause treatment.

Whenever sensors move the Sensor Locator Subsystem updates its sensor location table and warns the Dynamic Treatment Calibration Subsystem. This subsystem then sends the new sensor location information to the Temperature Subsystem and/or the Safety Subsystem. If a sensor that is to be used for the treatment is not located in tissue, the Safety Subsystem must be warned so that the treatment may be paused and the sensor deselected for control purposes.

E.10. Power Absorption Distribution Subsystem

The Power Absorption Distribution Subsystem calculates the power deposition within the tissue based on current temperature and power information and absorption models. Figure 24 is a simplified depiction of the "Through-Transmission" power measurement.

During treatment, the actual absorption throughout the target volume for each transducer pair is measured by the Instrument Computer, and sent to this subsystem. The Power Absorption Distribution Subsystem converts this information into an array representing the computed absorption or SAR (in W/cm^3) for each treatment cell (minimum unit treatment volume). This computed absorption array is then sent to the Thermal Dose Distribution subsystem for its next simulation model cycle.

The "Through-Transmission" power is calculated by selecting a single transducer to produce an ultrasound pulse while at the same time having the transducers that are located on the other side of the cylinder (through the tissue) receive the pulse and measure the change in magnitude of the pulse (Pulse Amplitude Degradation) once it has been received. A correlation between the transmitted magnitude and the received magnitude can then be used to determine the amount of power that was absorbed in the tissue.

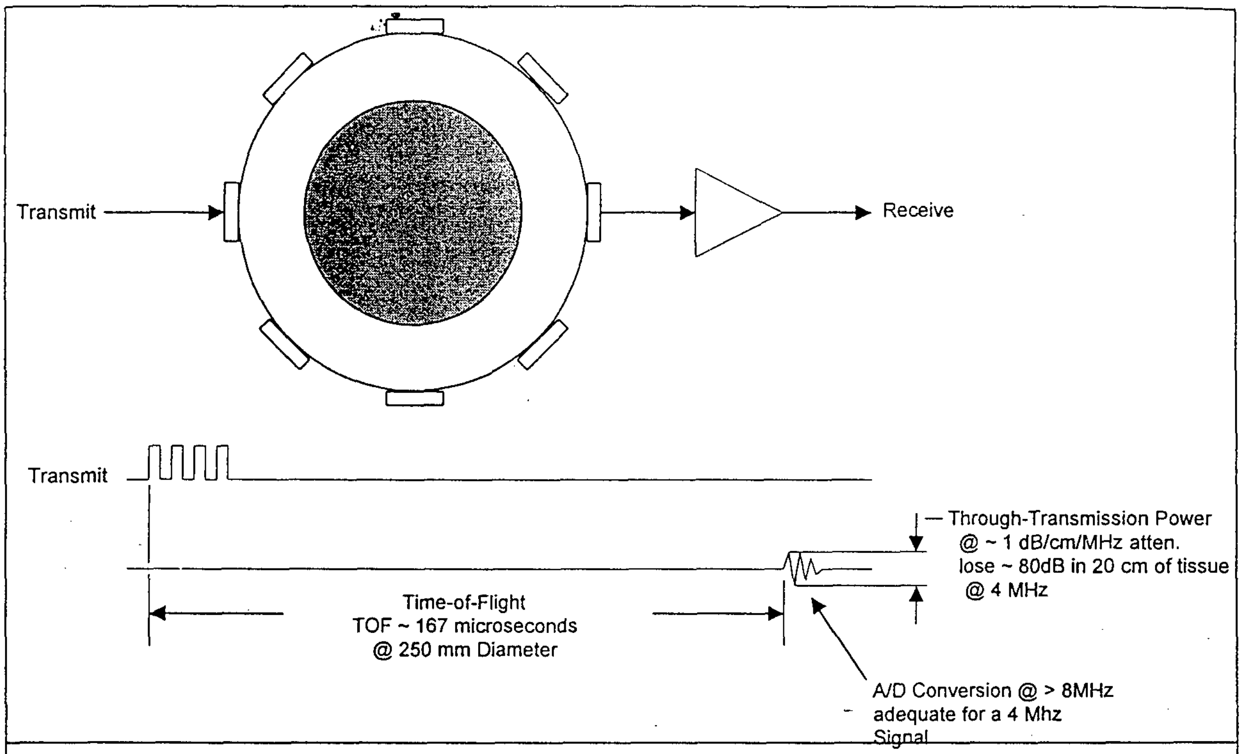

Figure 24. Power Monitoring

E.11. Temperature Subsystem (Not included in present system software)

The Temperature Subsystem collects temperature values for all temperature sensors and "Time-of-Flight" temperature measurements from the Instrument Computer. These temperatures are then provided to the rest of the system upon request. In addition, this subsystem calculates the temperature distribution for all spatial volume cells based on the sensor, Time-of-Flight/Pulse Amplitude Degradation measurements. Invasive temperature sensor measurements and Time-of-Flight/Pulse Amplitude Degradation measurements occupying the same volume cells are set equal to the invasive sensor measured temperature and all derived temperatures in neighboring volume cells are calibrated according to the nearest invasive sensor measurement. Time-of-Flight/Pulse Amplitude Degradation measurements are depicted in Figure 25.

Actual temperature at a few points within the target volume will be directly measured with an invasive thermometry system, using two needles each carrying fourteen temperature sensors. These measurements will be collected by the

Instrument Computer, and sent to the Temperature Subsystem. The Temperature Subsystem will convert the measured temperature information into an array representing measured temperature per treatment cell, also using the needle position information provided to it by the Sensor Locator Subsystem. The measured and calculated temperature per treatment cell will be sent to the Thermal Dose Distribution and Treatment Control Subsystems.

Temperature monitoring using the ultrasound transducers is accomplished by selecting a single transducer to transmit a pulse while at the same time either one or a small set of transducers on the opposite side of the Cylindrical Array measure both the Time-of-Flight and Pulse Amplitude Degradation of the pulse that was transmitted. A correlation between the Time-of-Flight and Pulse Amplitude Degradation can then be made to the actual temperature of the treatment cells.

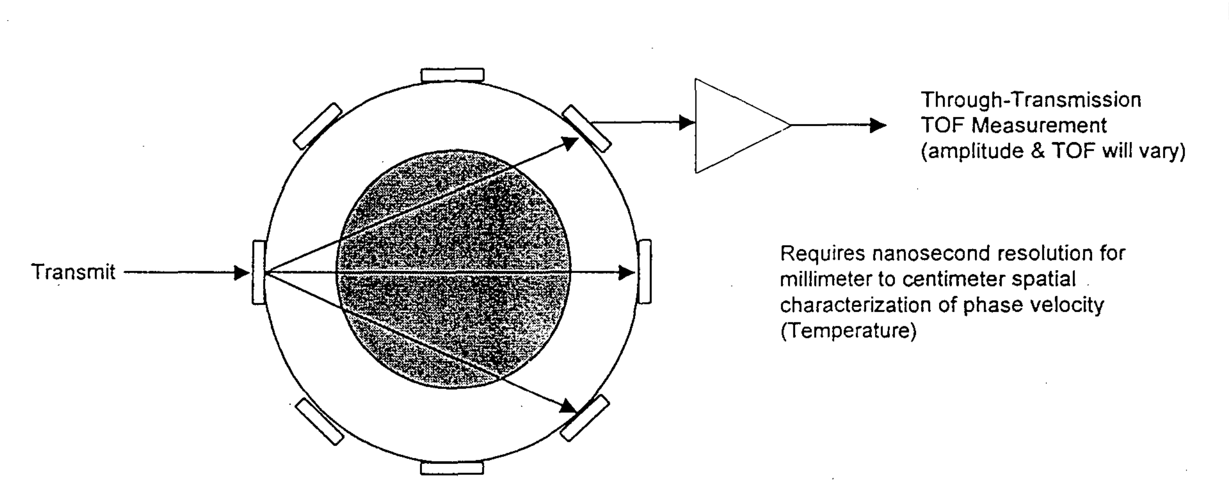

Figure 25. Temperature Monitoring

E.12. Thermal Dose Distribution Subsystem (not included in present system software)

The Thermal Dose Distribution Subsystem is responsible for calculating the thermal dose distribution in the tissue. This calculation is done based on the temperature for each cell over time. This information is generated by the Temperature Subsystem and consists of current measured temperature, calculated temperatures, and derived temperatures from Time of Flight/Pulse Amplitude Degradation measurements, all with 3-dimensional spatial correlation within the cylinder volume.

The Thermal Dose Distribution task will calculate cumulative thermal dose for each spatial treatment cell and update that information continually during treatment. For each treatment interval, the Thermal Dose Distribution subsystem will compute the temperature dose distribution within the breast from the measurements provided by the

Power Absorption subsystem and then compare the simulation modeling results with the direct invasive temperature measurements and temperature volume-cell measurements derived from Time-of-Flight/Pulse-Amplitude-Degradation measurements in order to correct the model. The Thermal Dose Distribution subsystem will distribute modeling parameters and results to the Treatment Control Subsystem and the Display Subsystem.

E.13. Hardware Calibration Subsystem

The Hardware Calibration Subsystem provides a method for calibrating the ultrasound output for each channel. The input control voltage for each channel is determined for a given ultrasound field intensity. This subsystem is executed prior to shipment of the system and may be executed again on a regular basis or when a ultrasound transducer is replaced or a portion of the circuit that feeds the transducer is changed. During the calibration procedure, a calibration table is generated. Once calibration is completed, the table is written to a file to be used for the next treatment.

E.14. Safety Subsystem

The Safety Subsystem checks safety relevant system hardware prior to and during the therapy session. It ensures that all safety relevant hazards are accounted for and recognized by the software.

Prior to beginning the therapy session the Safety Subsystem will test the Pause Button, Water level error latch, A/D and D/A converters, Heartbeat Error Latch, and the Power Inhibit Latch. During the therapy, this subsystem will monitor the Pause button, Water Level Signal, Water Level Latch, periodically test the A/D and D/A converters, Power Inhibit latch, and confirm that the Instrument computer is generating a Heartbeat signal appropriately. The Instrument Computer will generate a heartbeat at the same time as the Control Computer so that each computer will be watching the other.

This subsystem will also monitor and compare the breast/target positioning error threshold in the configuration file with the actual breast/target location determined by the Contour Monitoring Subsystem. The "zero reference" position will be the central axis of the treatment cylinder.

If an error condition is detected, this subsystem will be responsible for inhibiting the power supply, and/or inhibiting the Ultrasound output power.

E.15. Sensor Locator Subsystem

The Transducer array will be used to determine the positions of the thermometry needles. The Sensor Locator Subsystem is responsible for determining the sensor location of all sensors.

The location of each sensor is determined as follows. Each thermometry needle is a 19-gauge needle with 14 sensors. Spacing of the sensor is retrieved from the Treatment Plan Subsystem. Each needle contains two ultrasound transducer transponders which are utilized to locate the position of the implanted needle exactly within the breast and within the treatment cylinder. The known sensor spacing information is then used to determine the spatial location of each sensor within the total treatment cylinder volume and within the breast. Within these volumes, each sensor is "assigned" by the Temperature Subsystem to a spatial volume cell.

The location of each sensor is also supplied to the Dynamic Treatment Calibration Subsystem so that movement in the sensor locations can also be recognized by the rest of the system.

E.16. PC Interface Subsystem

The PC Interface module initiates and maintains communications with the Instrument computer. This subsystem is capable of operating in three modes. The three modes of operation are Treatment mode, Test mode, and replay mode and are discussed below.

Treatment Mode

In the Treatment Mode, this subsystem communicates with the Instrument Computer to send and receive information about the hardware. The information received by this subsystem includes current measured forward and reflected power for each ultrasound transducer, Through-Transmission", and "Pulse-Echo" measurements for each ultrasound transducer, Current Cooling System Temperature and setpoint, actual temperature measurements as measured by the thermisters, a Heartbeat signal, Video System information, and periodic safety testing information.

Simulation Mode

When operating in the Simulation Mode, this subsystem requests information from the Treatment Records Subsystem such that all requests from the other subsystems will be handled as if a Instrument Computer was present. This mode is provided primarily for testing and debug sessions when the Instrument Computer is not present.

F. Instrument Computer Functions

The Treatment Instrument Computer will receive measurement requests and control output requests via the communication link, act upon the requests as needed, and send replies to the Control Computer containing the measurement results or acknowledging the control operation. Measurement and control parameters needed are detailed below.

F.1. RF Power Subsystem Software

The RF Power Subsystem consists of 96 independent transmitters each driving a 4-way T/R Multiplexer which switches the RF output to the appropriate transducer.

The Instrument Computer will control the switching on/off of each of the VCO sources, the RF output power of each of the amplifier channels, the on-off status of each amplifier channel, the T/R MUX status of each channel relative to the 4 transducers which it may possibly drive, and the selection of which receivers are active at any given instant.

F.2. Receiver Subsystem Software

The Receiver Subsystem consists of 24 independent receiver modules which are interconnected to the T/R MUX devices as shown in Figure 14. The status of each is detected by the Instrument Computer and provided to the Contour Monitoring Subsystem and the Temperature Subsystem.

F.3. Cooling/Heating Control Software Subsystem

This subsystem is responsible for maintaining the proper coolant fluid temperature prior to and during the therapy session. This subsystem sets the cooling system temperature setpoint according to the Configuration file and continuously checks the measured cooling temperature to ensure that the cooling system has not malfunctioned. In the event that the measured temperature value is not within the tolerance (also set in the configuration file) set this subsystem will report the error to the Safety Subsystem. This subsystem is also responsible for turning on/off the cooling system as requested by the Control Subsystem.

F.4. Thermometry Interface Software Subsystem

The Thermometry Interface Subsystem communicates with the thermistor thermometry subsystem in the appropriate manner to receive all temperature information. The temperature information is requested from the Thermometry Subsystem every 4 seconds and is then sent to the Temperature Subsystem in the Control Computer.

F.5. Safety Software Subsystem

The Safety Subsystem checks safety relevant system hardware prior to and during the therapy session. It ensures that all safety relevant hazards are accounted for and recognized by the software.

Prior to beginning the therapy session the Safety Subsystem will test the Pause Button, Water level error latch, A/D and D/A converters, Heartbeat Error Latch, and the Power Inhibit Latch. During the therapy, this subsystem will monitor the Pause button, Water Level Signal, Water Level Latch, periodical test the A/D and D/A converters, Power Inhibit latch, and confirm that the Instrument computer is generating a Heartbeat signal appropriately. The Instrument Computer will generate a heartbeat at the same time as the Control Computer so that each computer is watching the other.

This subsystem will also monitor and compare the breast/target positions within the treatment cylinder volume to the position error threshold specification in the Configuration file and pause the treatment if out of range. If an error condition is detected, this subsystem is responsible for inhibiting the power supply, and/or inhibiting the Ultrasound output power.

Appendix A

Schematics

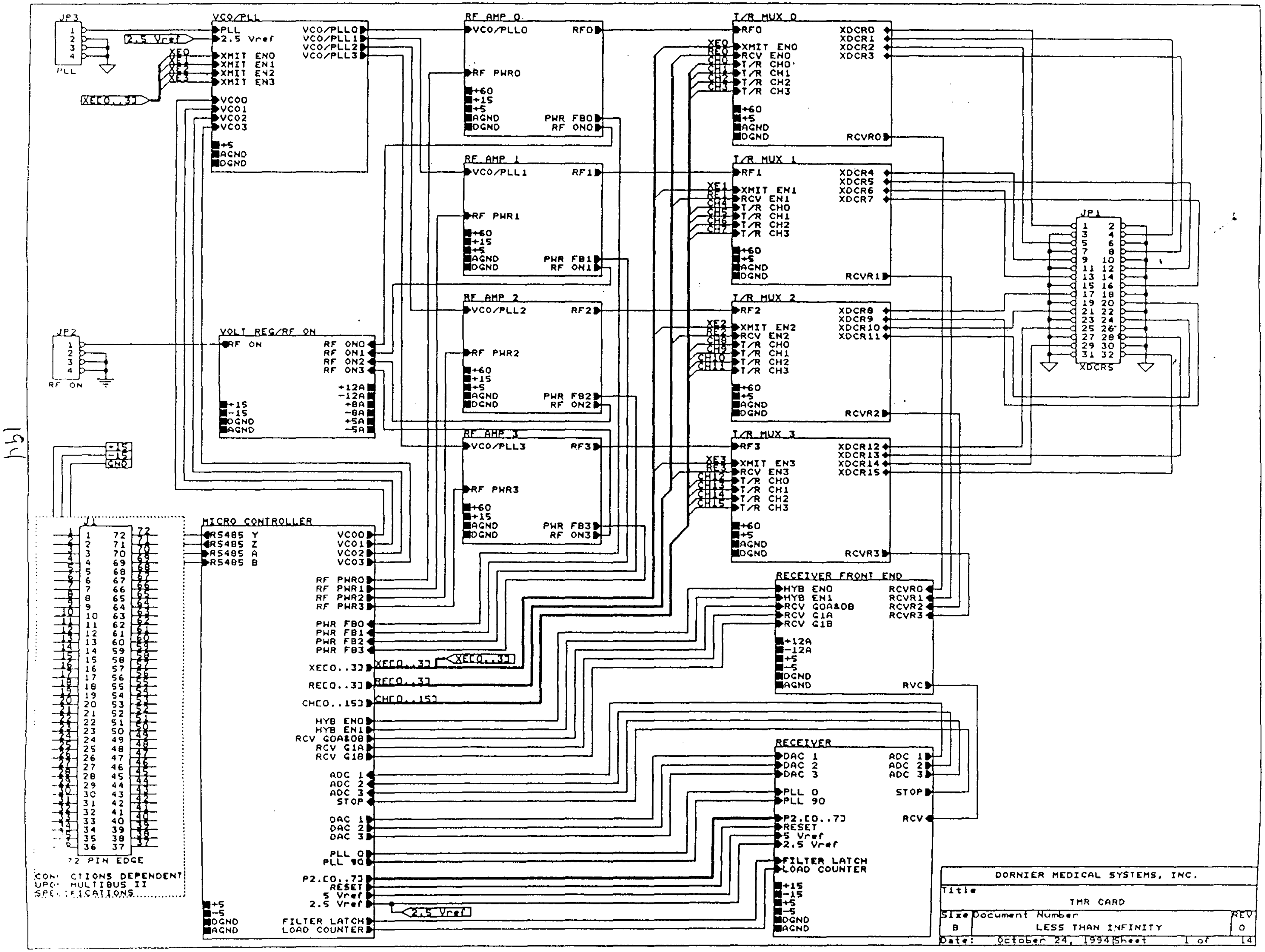

DORNIER MEDICAL SYSTEMS, INC.

Title	TMR CARD	
Size B	Document Number LESS THAN INFINITY	REV 0
Date: October 24, 1994	Sheet 1 of 14	

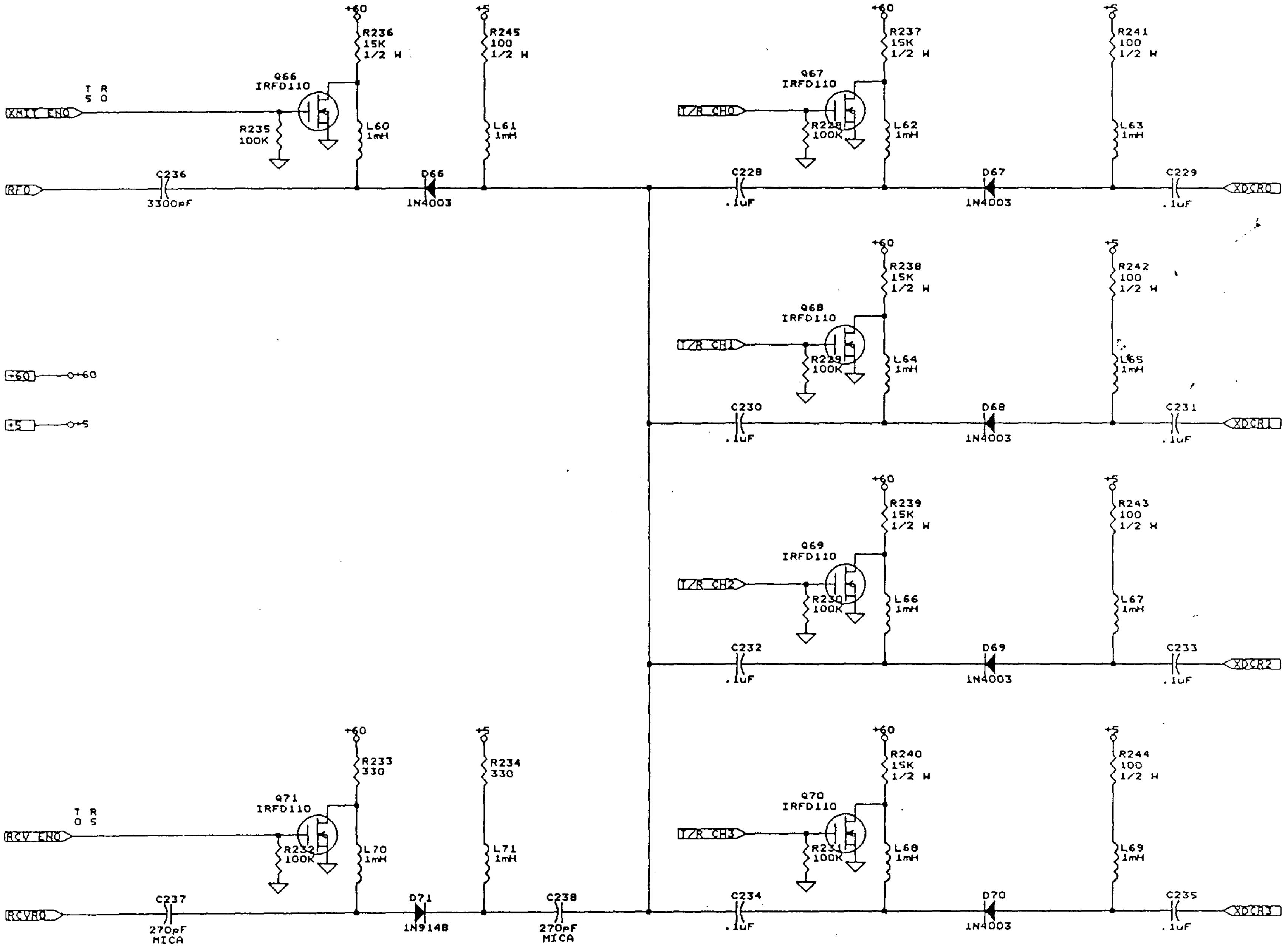

DORNIER MEDICAL SYSTEMS, INC.		
Title	T/R MULTIPLEXER 0	
Size B	Document Number LESS THAN INFINITY	REV 0
Date: October 31, 1994	Sheet 2 of 14	

]

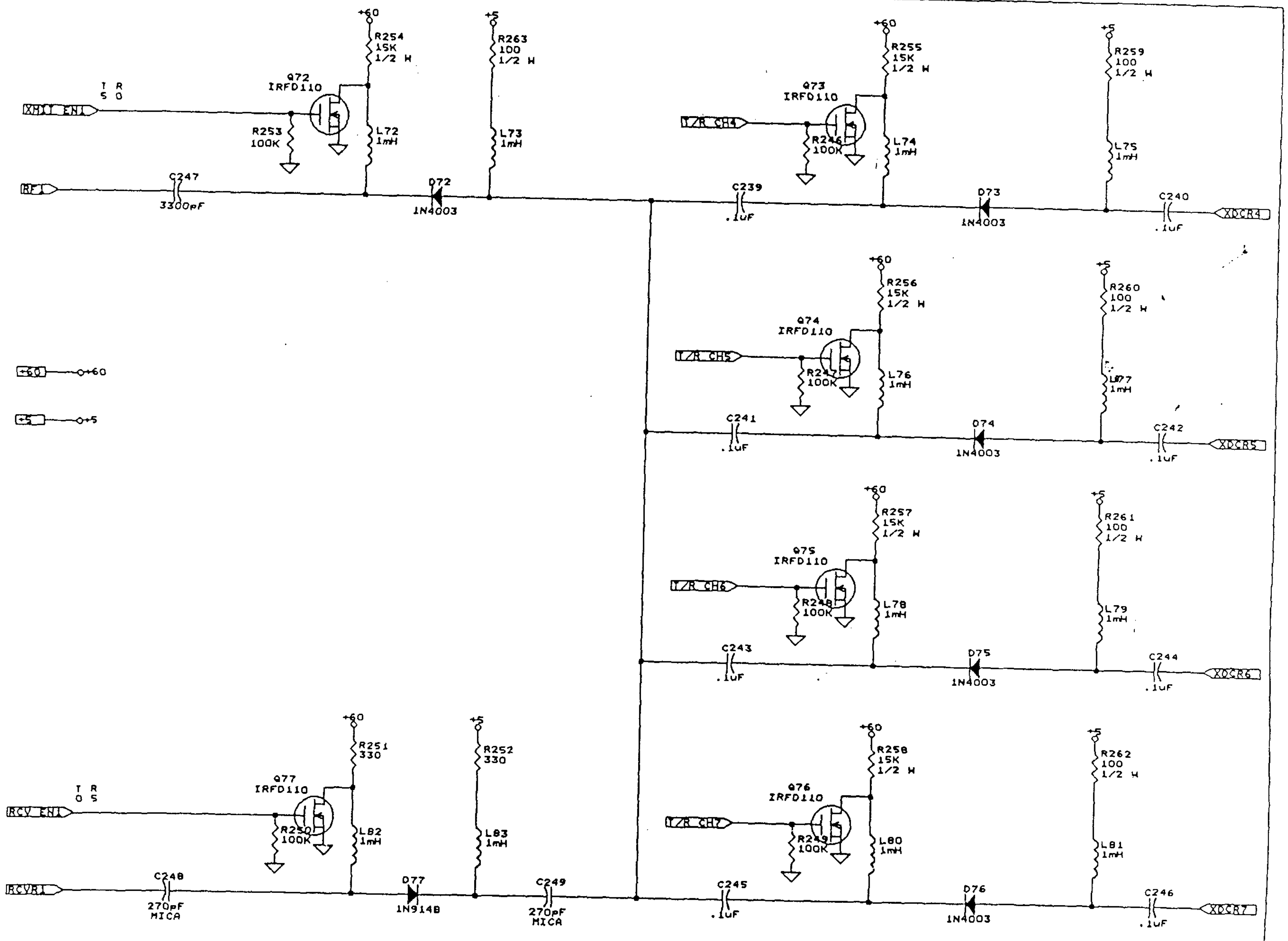

DORNIER MEDICAL SYSTEMS, INC.		
Title T/R MULTIPLEXER 1		
Size B	Document Number LESS THAN INFINITY	REV 0
Date: October 31, 1994	Sheet 3 of 14	

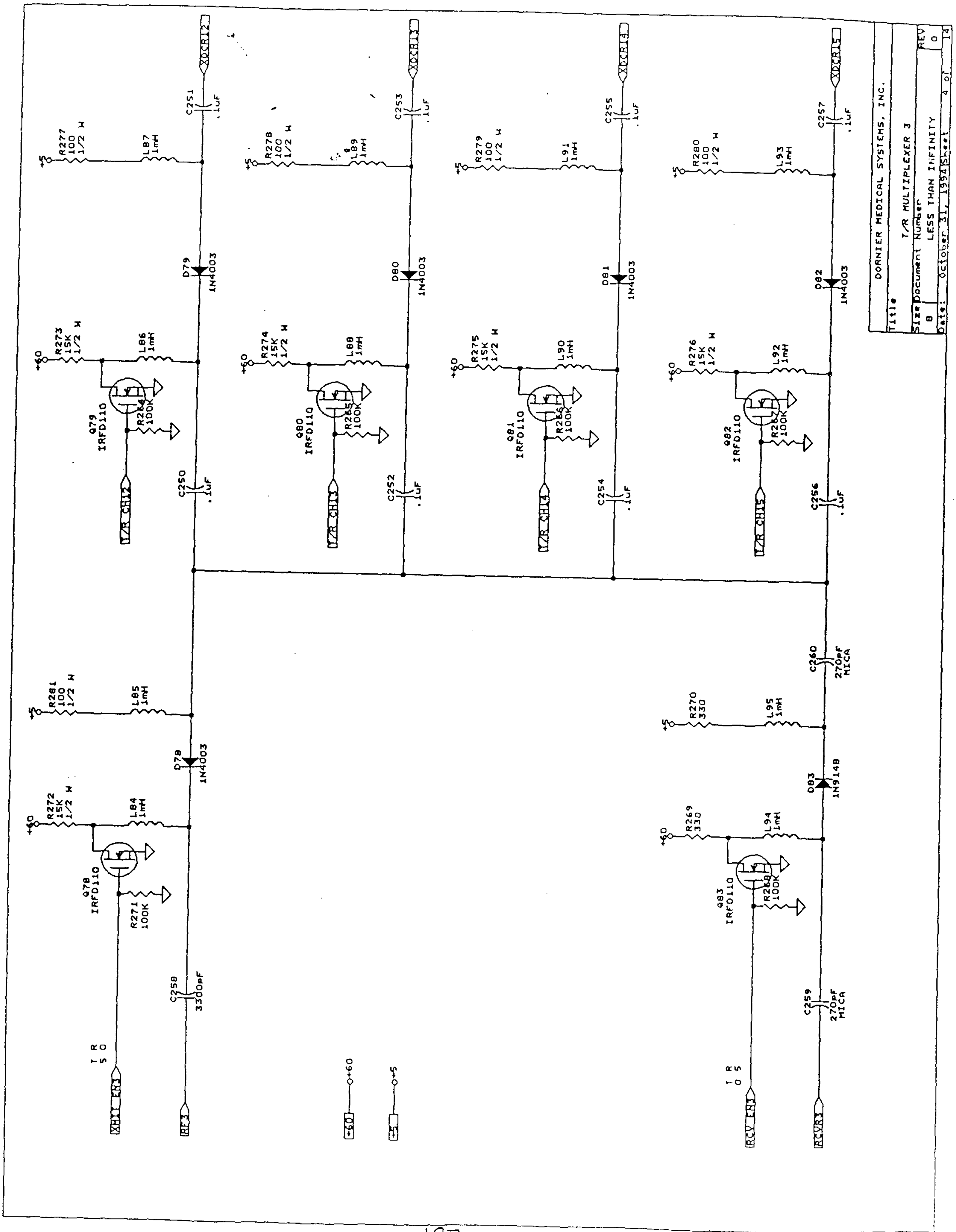
DORNIER MEDICAL SYSTEMS, INC.
Title
T/R MULTIPLEXER 3
Size B
Document Number
LESS THAN INFINITY
REV 0
Date: October 31, 1994
Sheet 4 of 14
XDCR12
XDCR13
XDCR14
XDCR15
C251 .1uF
C253 .1uF
C255 .1uF
C257 .1uF
R277 100 1/2 W
R278 100 1/2 W
R279 100 1/2 W
R280 100 1/2 W
L87 1mH
L89 1mH
L91 1mH
L93 1mH
D79 1N4003
D80 1N4003
D81 1N4003
D82 1N4003
R273 15K 1/2 W
R274 15K 1/2 W
R275 15K 1/2 W
R276 15K 1/2 W
L86 1mH
L88 1mH
L90 1mH
L92 1mH
Q79 IRFD110
Q80 IRFD110
Q81 IRFD110
Q82 IRFD110
R264 100K
R265 100K
R266 100K
R267 100K
T/R CH12
T/R CH13
T/R CH14
T/R CH15
C250 .1uF
C252 .1uF
C254 .1uF
C256 .1uF
C260 270pF MICA
R281 100 1/2 W
L85 1mH
D78 1N4003
R272 15K 1/2 W
L84 1mH
Q78 IRFD110
R271 100K
C258 3300pF
R270 330
L95 1mH
D83 1N914B
R269 330
L94 1mH
Q83 IRFD110
R268 100K
C259 270pF MICA
+5
+60
I R 5 0
I R 0 5
XMIT EN3
RF3
+60
+5
RCV EN3
RCVR3

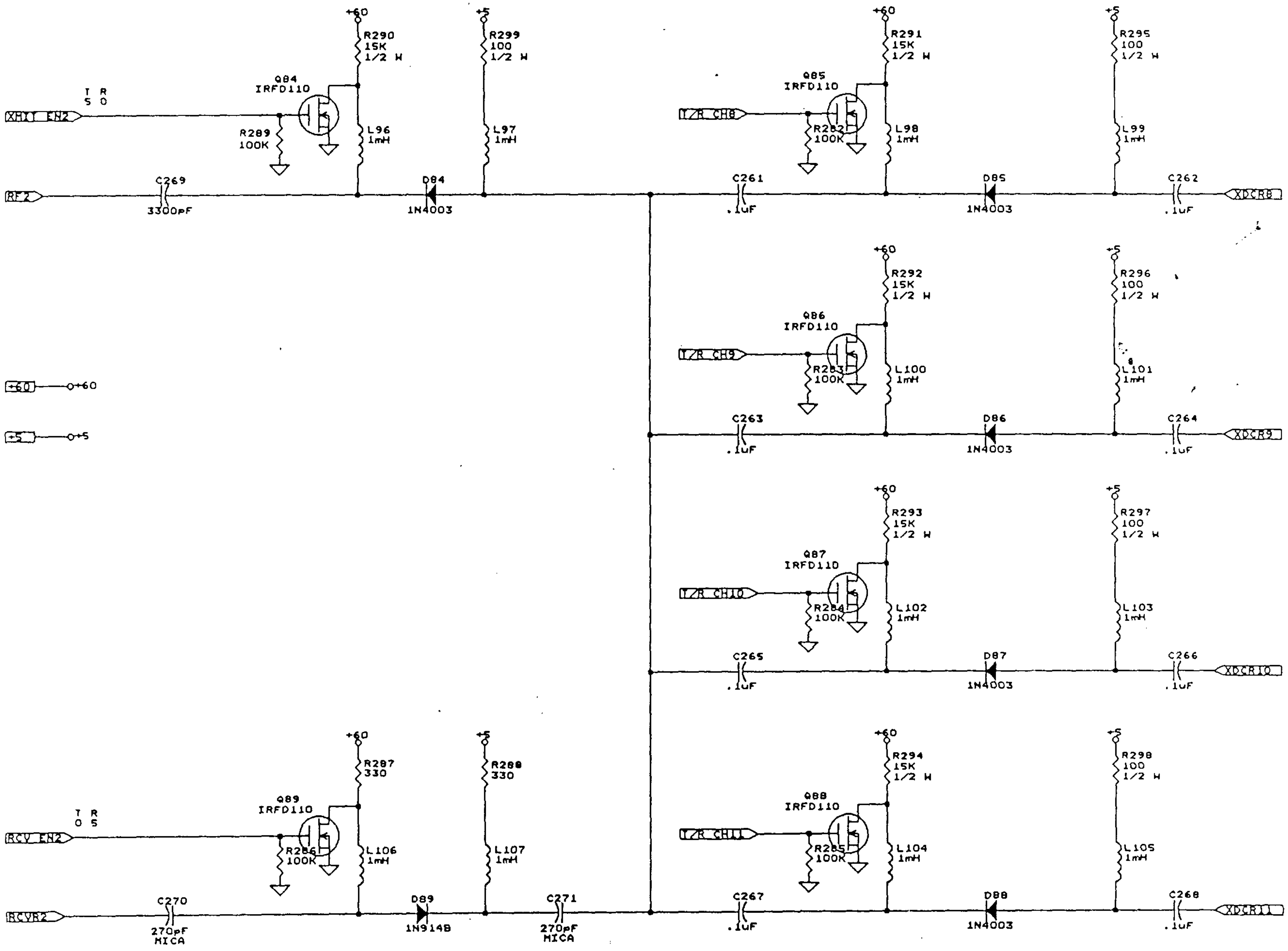

DORNIER MEDICAL SYSTEMS, INC.

Title	T/R MULTIPLEXER 2	
Size B	Document Number LESS THAN INFINITY	REV 0
Date: October 31, 1994	Sheet 5 of 14	

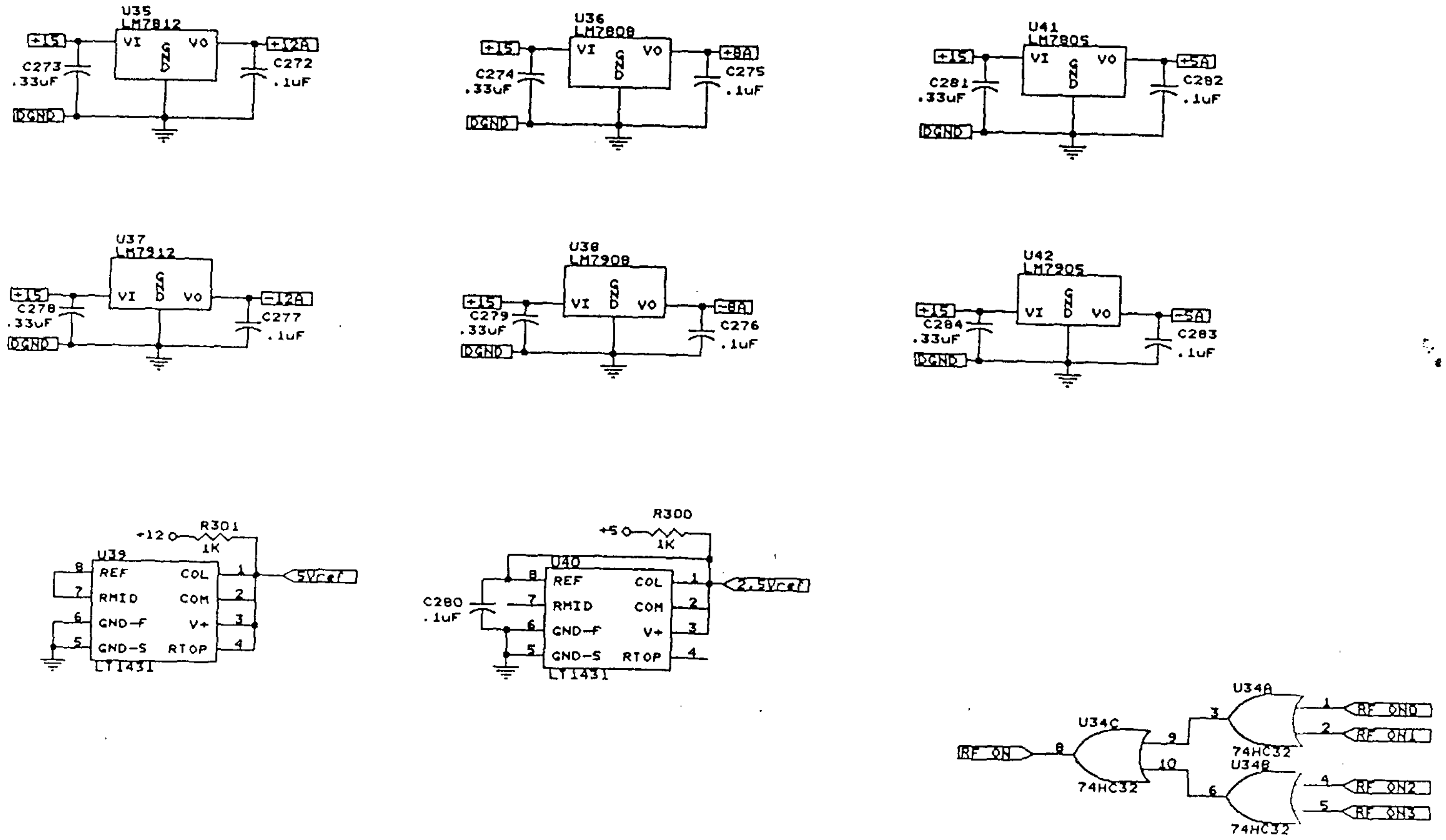

DORNIER MEDICAL SYSTEMS, INC.

Title VOLTAGE REGULATORS/ RF ON MONITOR		
Size B	Document Number LESS THAN INFINITY	REV 0
Date: October 24, 1994	Sheet 6 of 14	

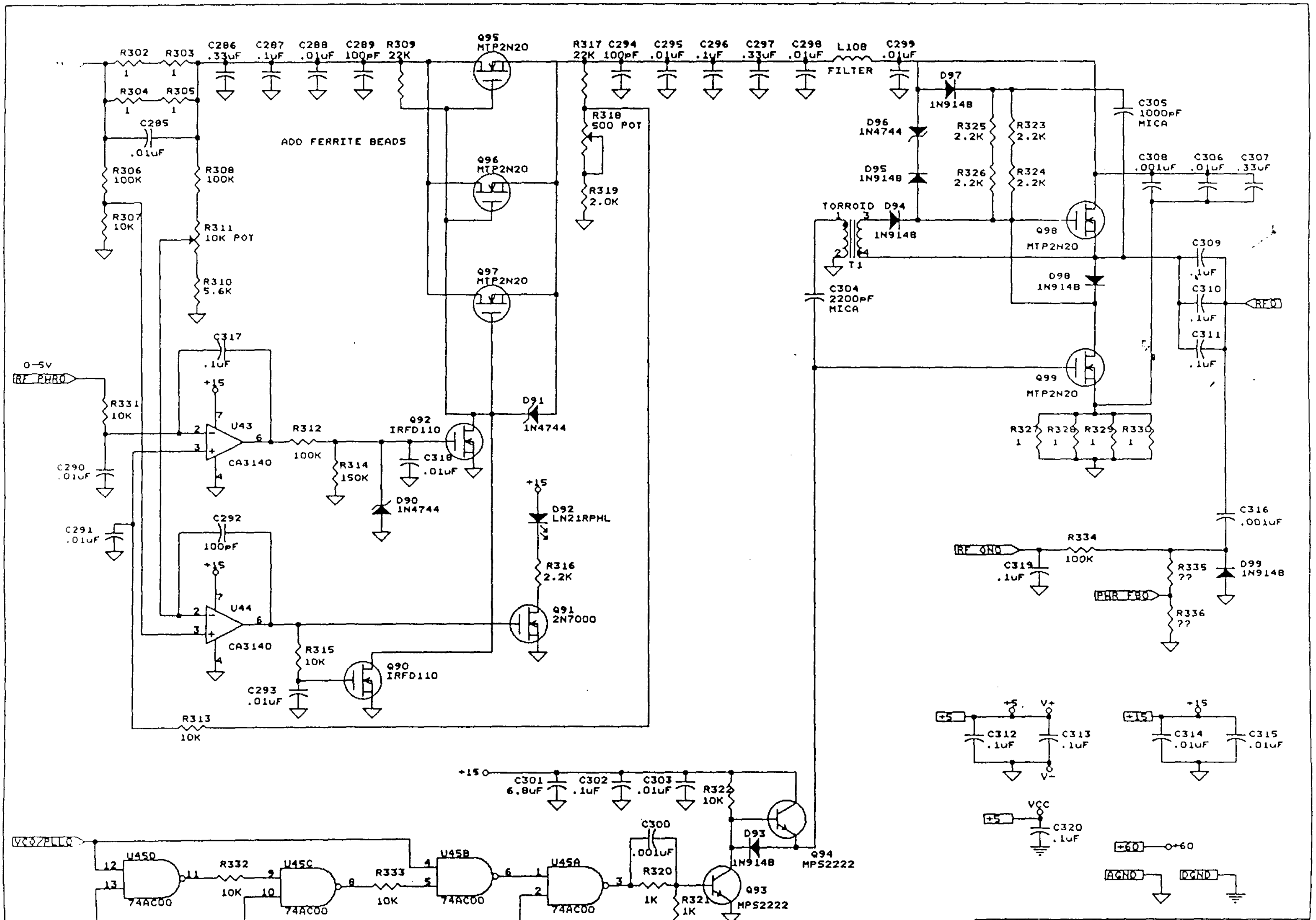

DORNIER MEDICAL SYSTEMS, INC.		
Title	RF AMPLIFIER 0	
Size B	Document Number LESS THAN INIFINITY	REV 0
Date: October 31, 1994	Sheet 7 of	14

200

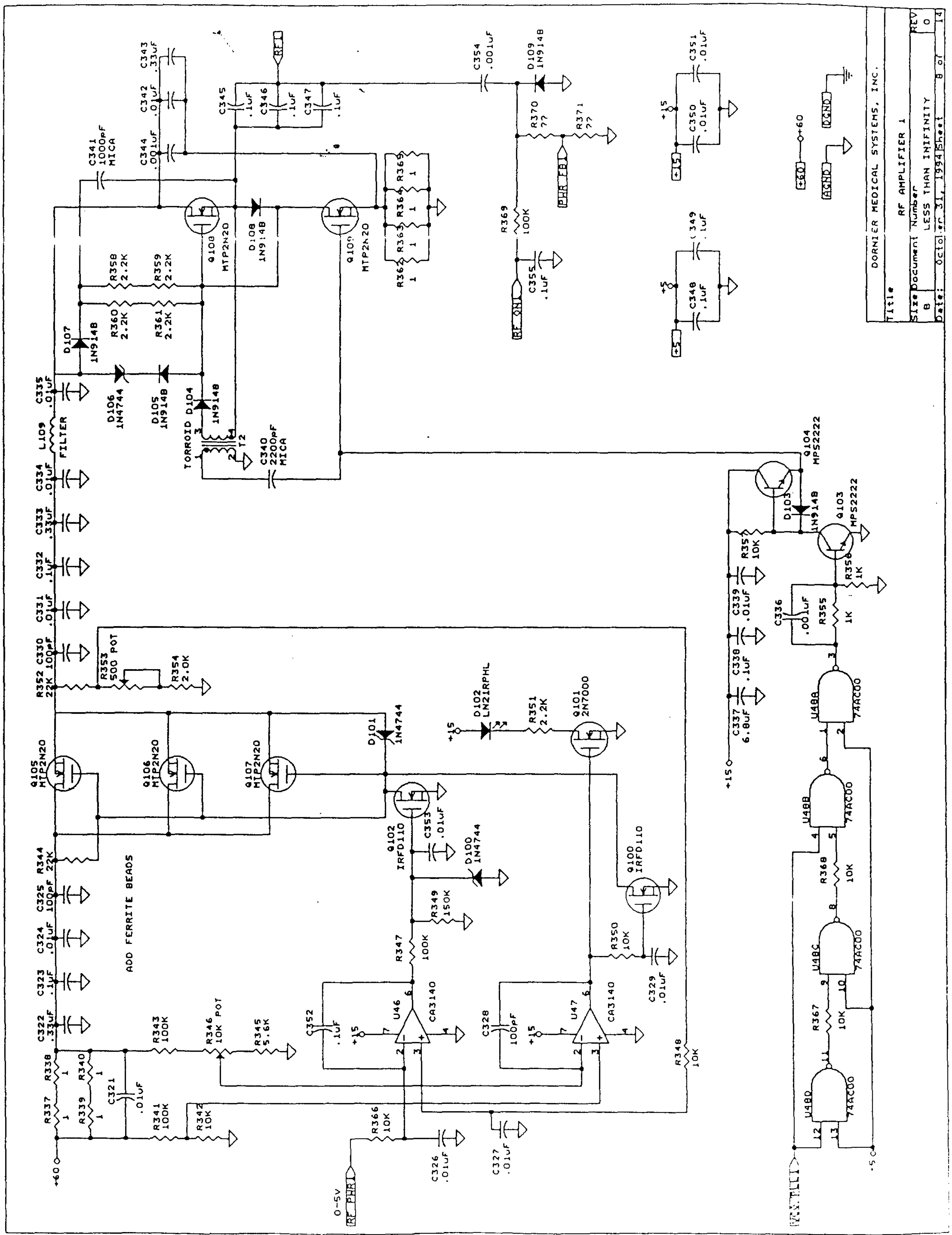
DORNIER MEDICAL SYSTEMS, INC.
Title RF AMPLIFIER 1
Size B
Document Number LESS THAN INFINITY
REV 0
Date: October 31, 1994 Sheet 8 of 14
+60
0-5V RF PWR1
RF ON1
PWR FB1
RF1
RF TTL1
+15
+5
-5
+60
DGND
AGND
ADD FERRITE BEADS
TORROID T2
L109 FILTER
Q105 MTP2N20
Q106 MTP2N20
Q107 MTP2N20
Q108 MTP2N20
Q109 MTP2N20
Q100 IRFD110
Q102 IRFD110
Q101 2N7000
Q103 MPS2222
Q104 MPS2222
U46 CA3140
U47 CA3140
U48A 74AC00
U48B 74AC00
U48C 74AC00
U48D 74AC00
D100 1N4744
D101 1N4744
D102 LN21RPHL
D103 1N914B
D104 1N914B
D105 1N914B
D106 1N4744
D107 1N914B
D108 1N914B
D109 1N914B
R337 1
R338 1
R339 1
R340 1
R341 100K
R342 10K
R343 100K
R344 22K
R345 5.6K
R346 10K POT
R347 100K
R348 10K
R349 150K
R350 10K
R351 2.2K
R352 22K
R353 500 POT
R354 2.0K
R355 1K
R356 1K
R357 10K
R358 2.2K
R359 2.2K
R360 2.2K
R361 2.2K
R362 1
R363 1
R364 1
R365 1
R366 10K
R367 10K
R368 10K
R369 100K
R370 ??
R371 ??
C321 .01uF
C322 .33uF
C323 .1uF
C324 .01uF
C325 100pF
C326 .01uF
C327 .01uF
C328 100pF
C329 .01uF
C330 100pF
C331 .01uF
C332 .1uF
C333 .33uF
C334 .01uF
C335 .01uF
C336 .001uF
C337 6.8uF
C338 .1uF
C339 .01uF
C340 2200pF MICA
C341 1000pF MICA
C342 .01uF
C343 .33uF
C344 .001uF
C345 .1uF
C346 .1uF
C347 .1uF
C348 .1uF
C349 .1uF
C350 .01uF
C351 .01uF
C352 .1uF
C353 .01uF
C354 .001uF
C355 .1uF

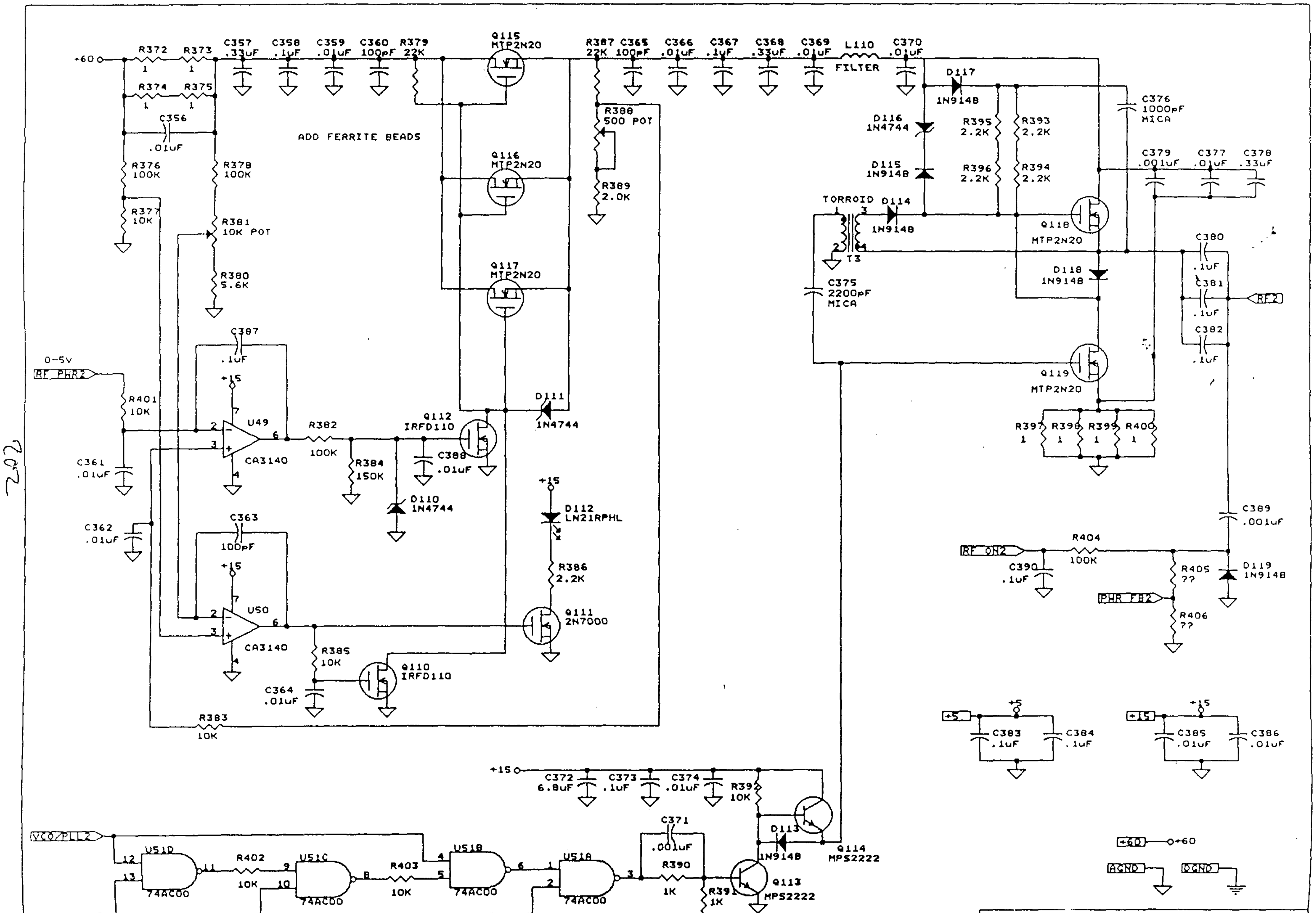

DORNIER MEDICAL SYSTEMS, INC.

Title	RF AMPLIFIER 2		
Size	Document Number		REV
B	LESS THAN INFINITY		0
Date:	October 31, 1994	Sheet 9 of	14

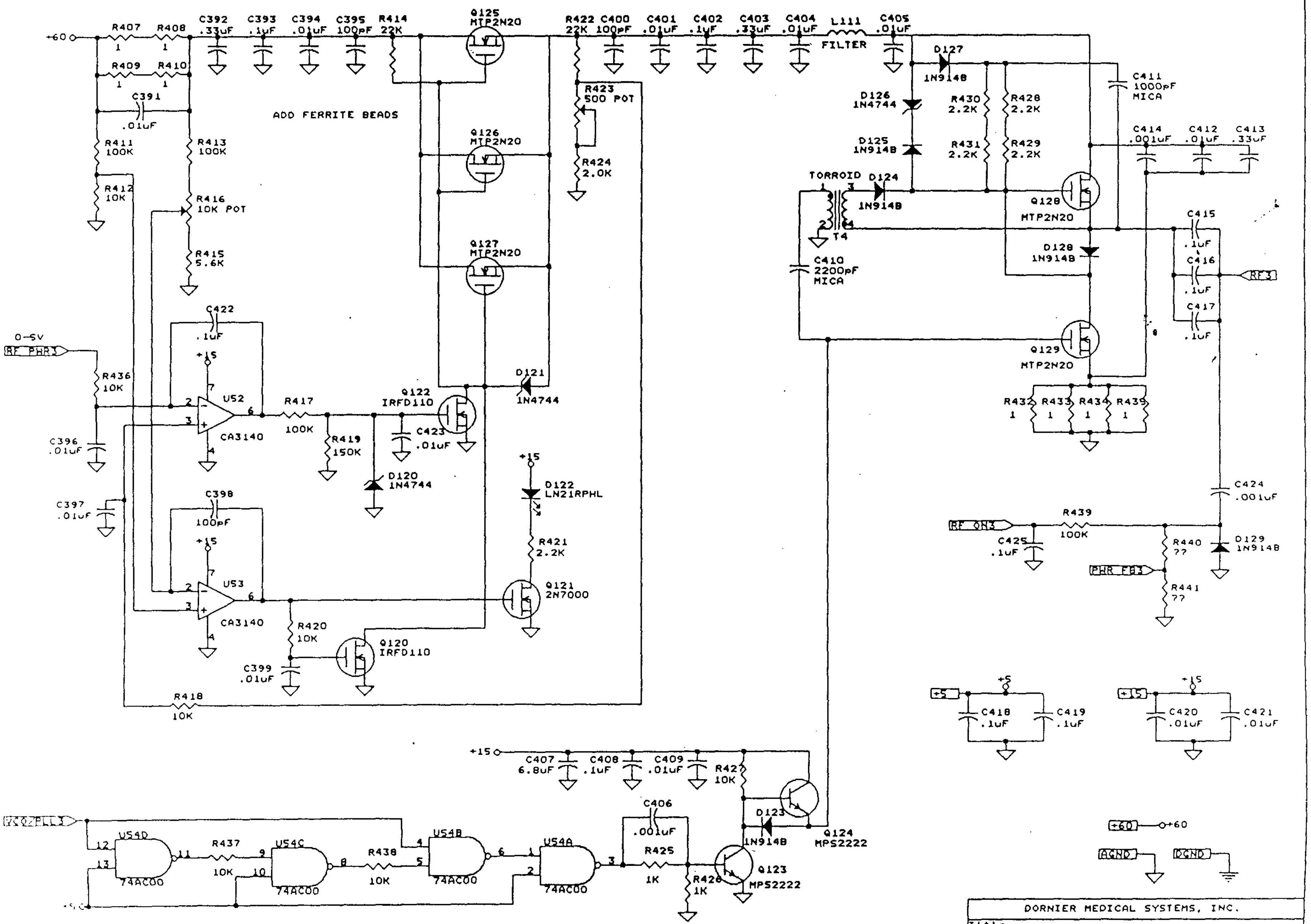

DORNIER MEDICAL SYSTEMS, INC.

Title	RF AMPLIFIER 3	
Size B	Document Number LESS THAN INIFINITY	REV 0
Date:	October 31, 1994 Sheet 10 of 14	

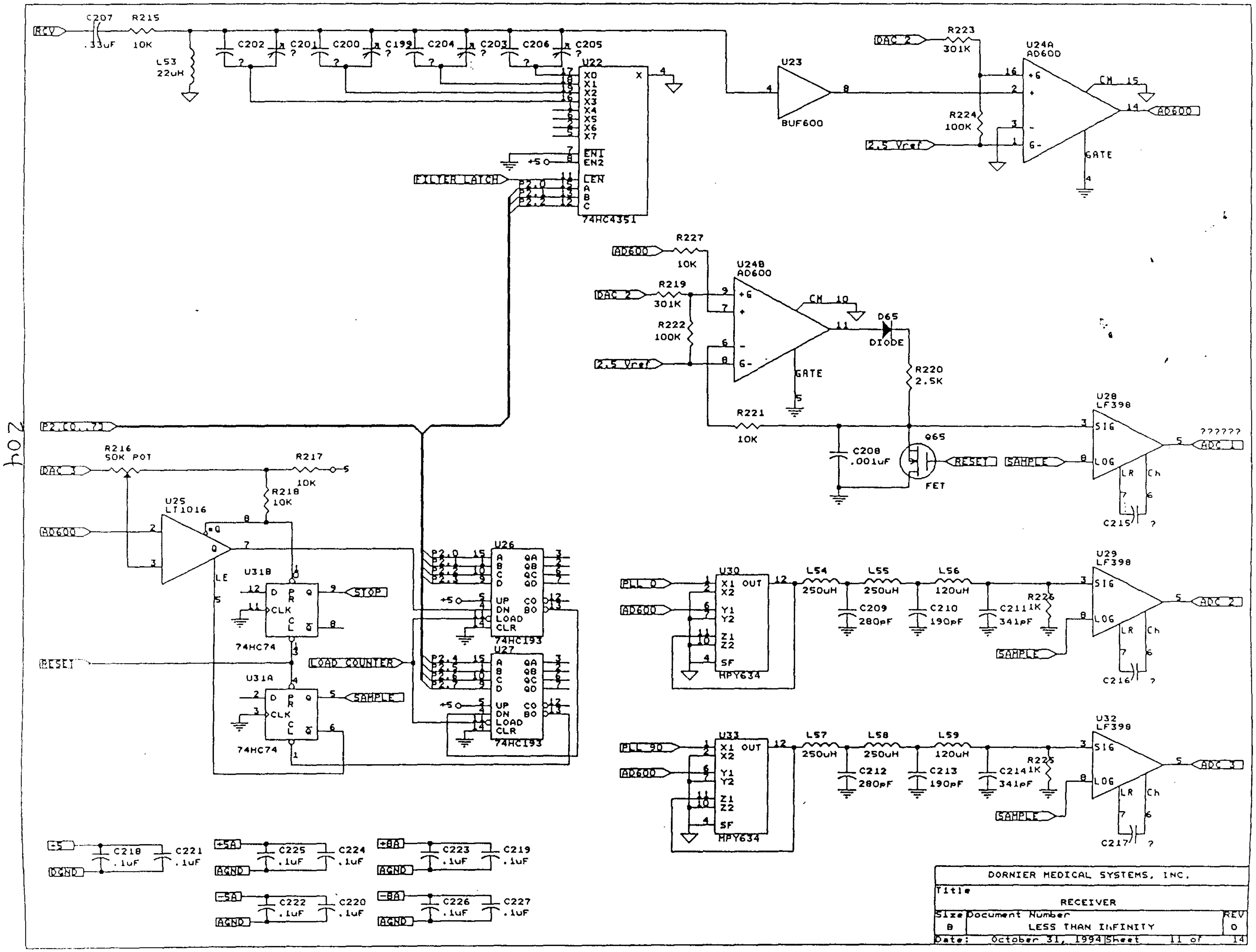

DORNIER MEDICAL SYSTEMS, INC.

Title RECEIVER

Size B Document Number LESS THAN INFINITY REV 0

Date: October 31, 1994 Sheet 11 of 14

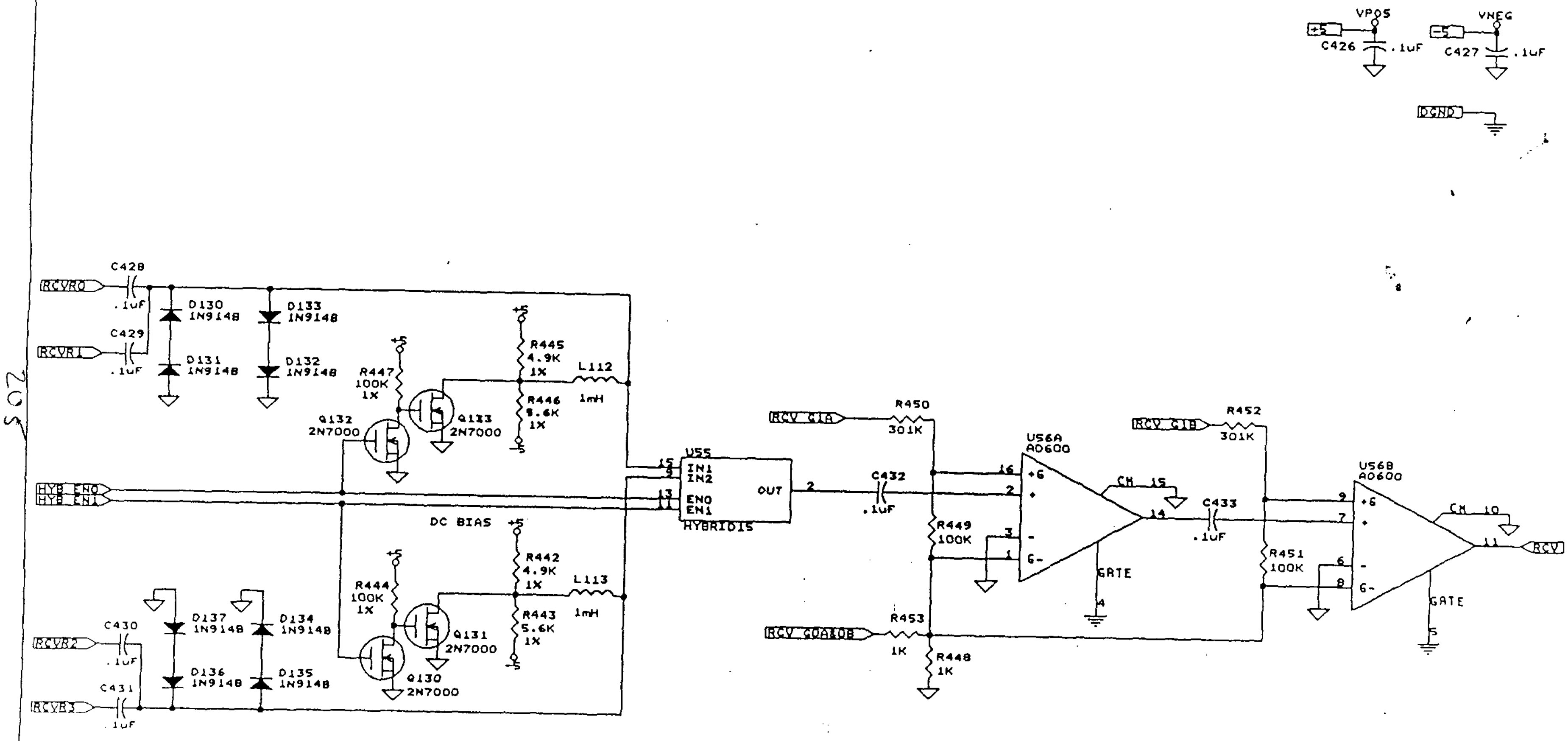

DORNIER MEDICAL SYSTEMS, INC.		
Title RECEIVER FRONT END		
Size B	Document Number LESS THAN INFINITY	REV 0
Date: October 31, 1994	Sheet 12 of 14	

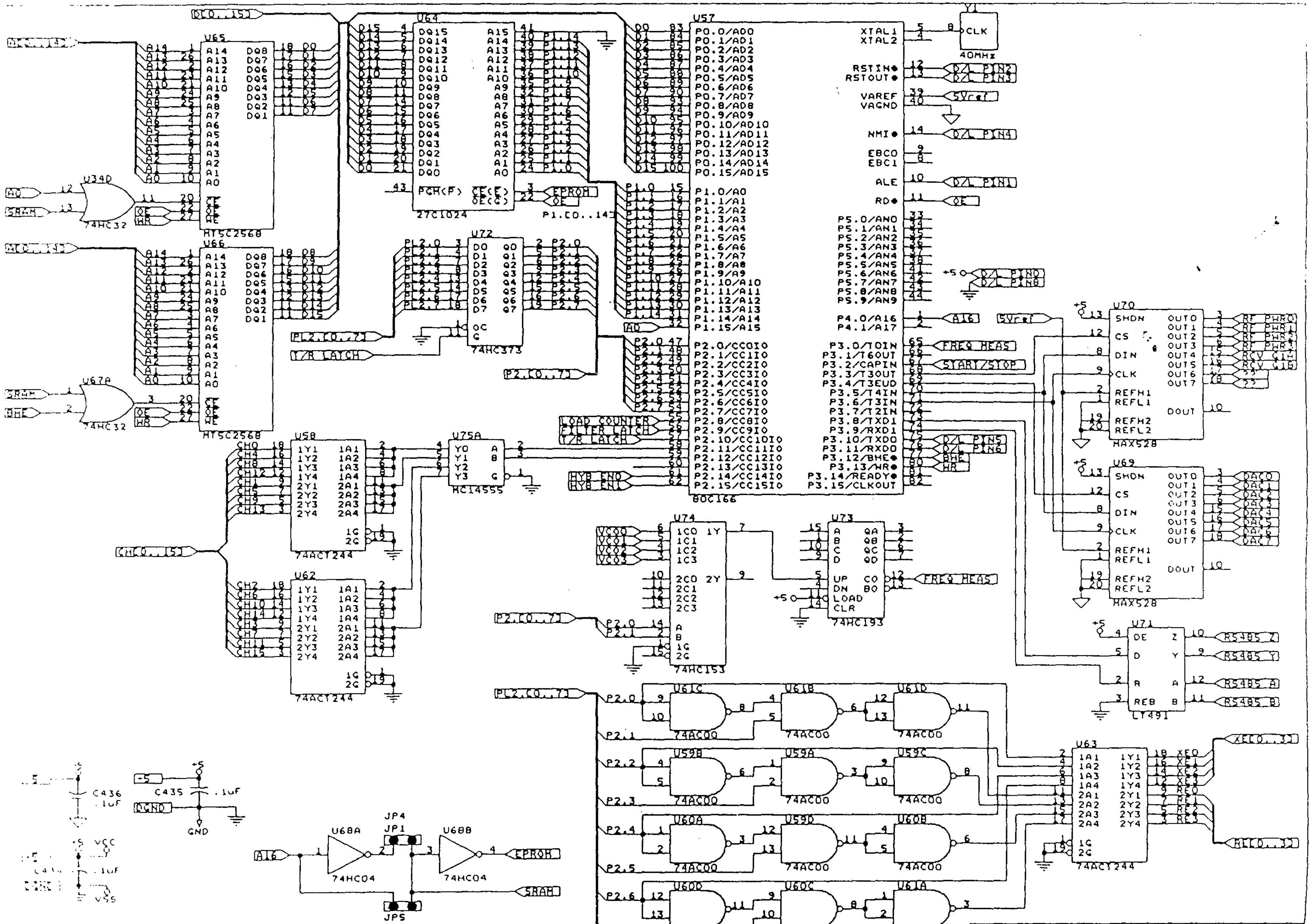

SWITCH	MEMORY	RANGE
JP2	EPROM	0-32K
JP2	SRAM	32K-64K
JP1	EPROM	32K-64K
JP1	SRAM	0K-32K

DORNIER MEDICAL SYSTEMS, INC.

Title
MICRO CONTROLLER

Size B
Document Number
LESS THAN INFINITY
REV 0
Date: October 31, 1994 Sheet 13 of 14

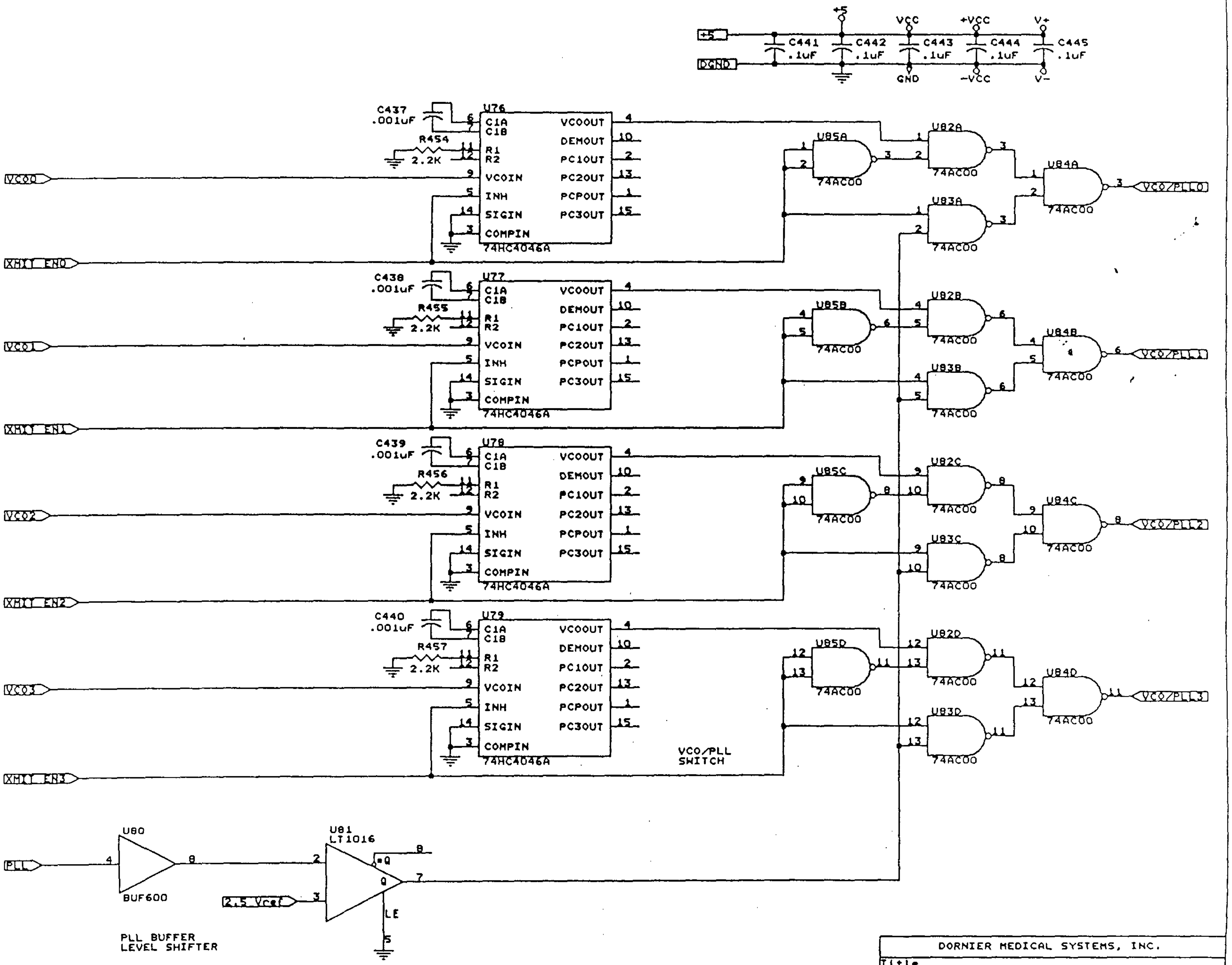

DORNIER MEDICAL SYSTEMS, INC.

Title	VOLTAGE CONTROLLED OSCILLATORS		
Size	Document Number		REV
B	LESS THAN INFINITY		0
Date:	October 31, 1994	Sheet	14 of 14

TMR CARD
PCB LAYOUT SPACE ESTIMATE

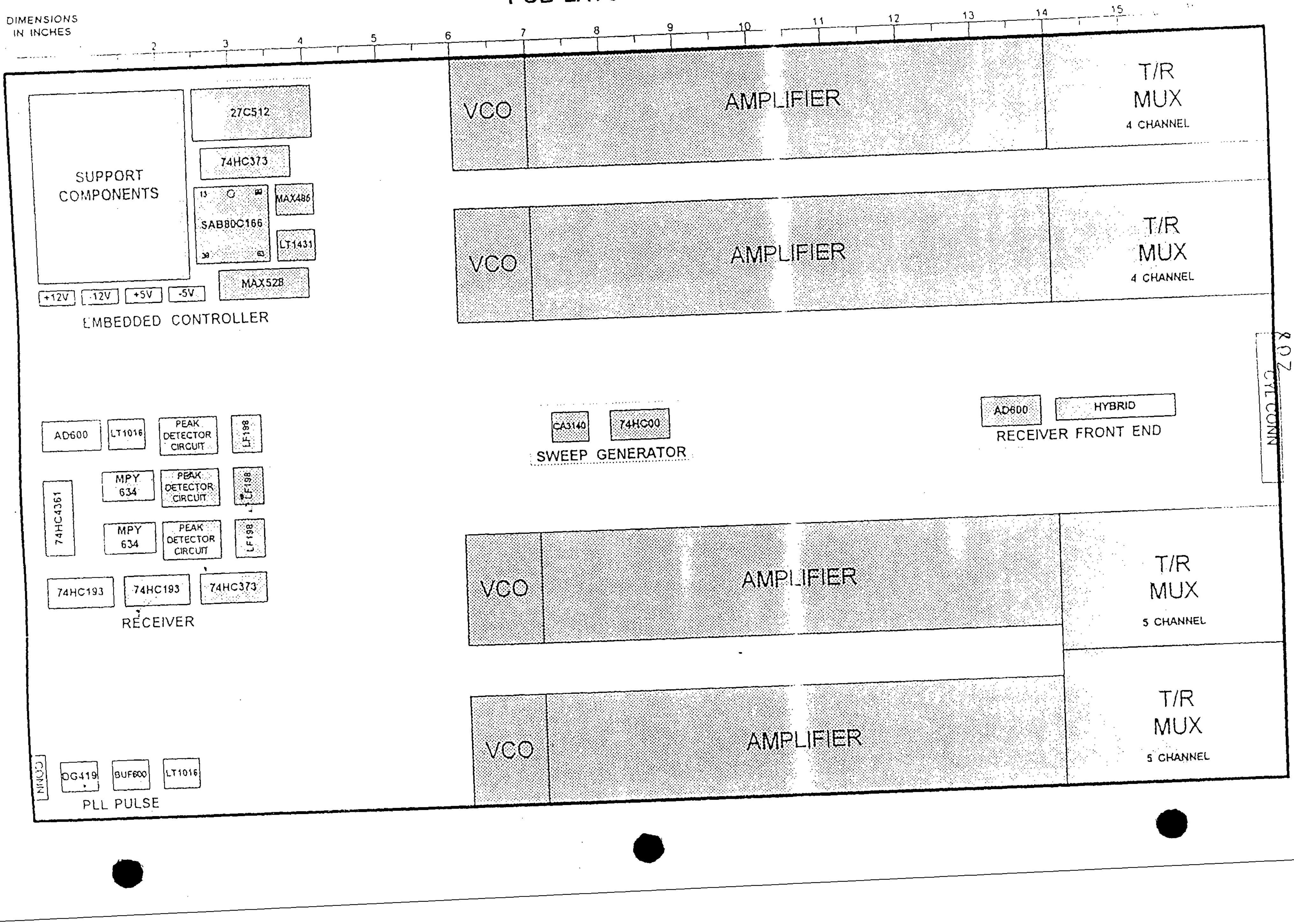

Appendix B

Measured Angular Beam Profile Data for 2.0 Mhz and 4.5 Mhz Transducers

.5 MHz Beam Pattern for Square Transducer, Case 1

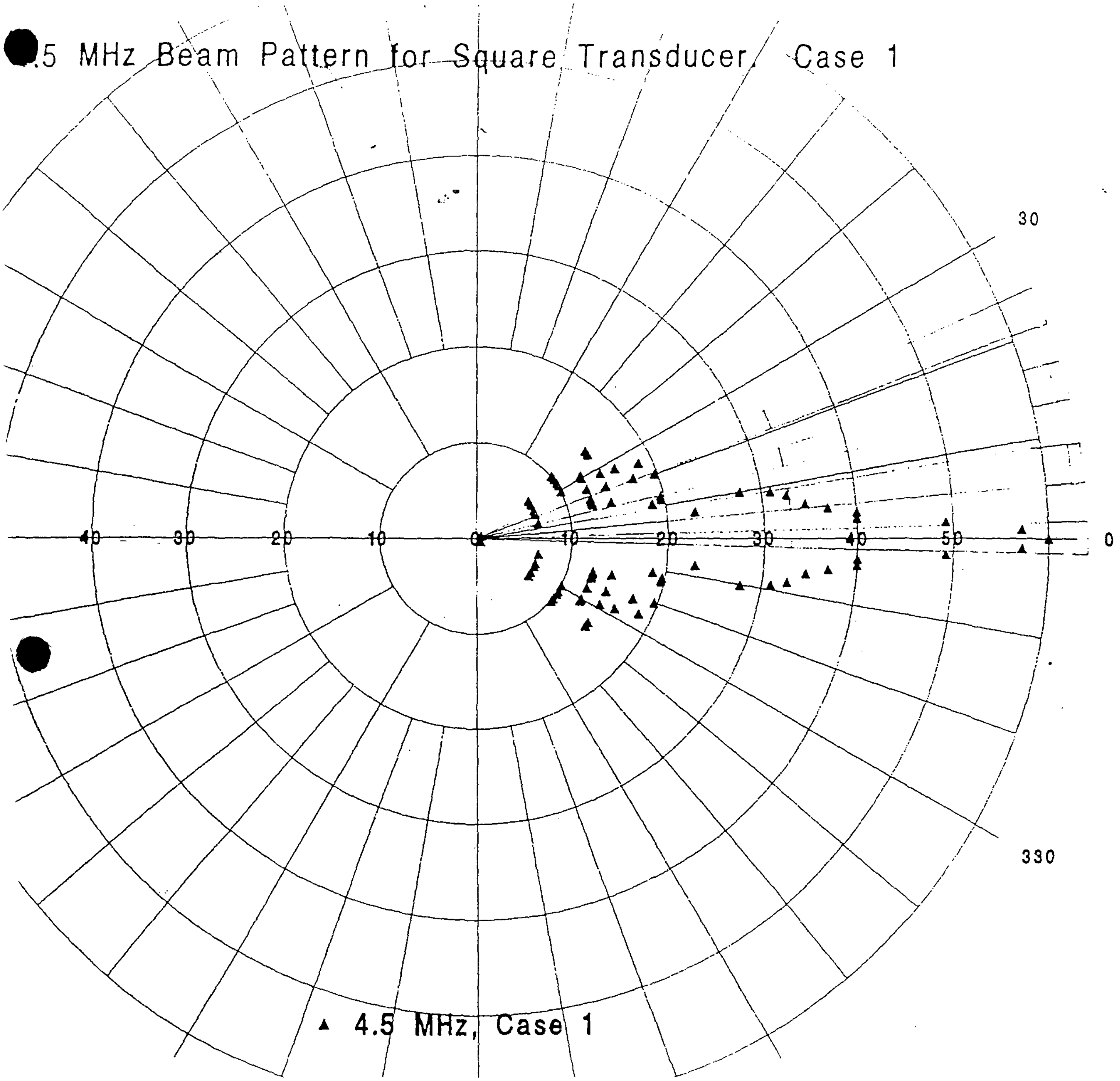

2.0 MHz Beam Pattern for Square Transducer. Case 1

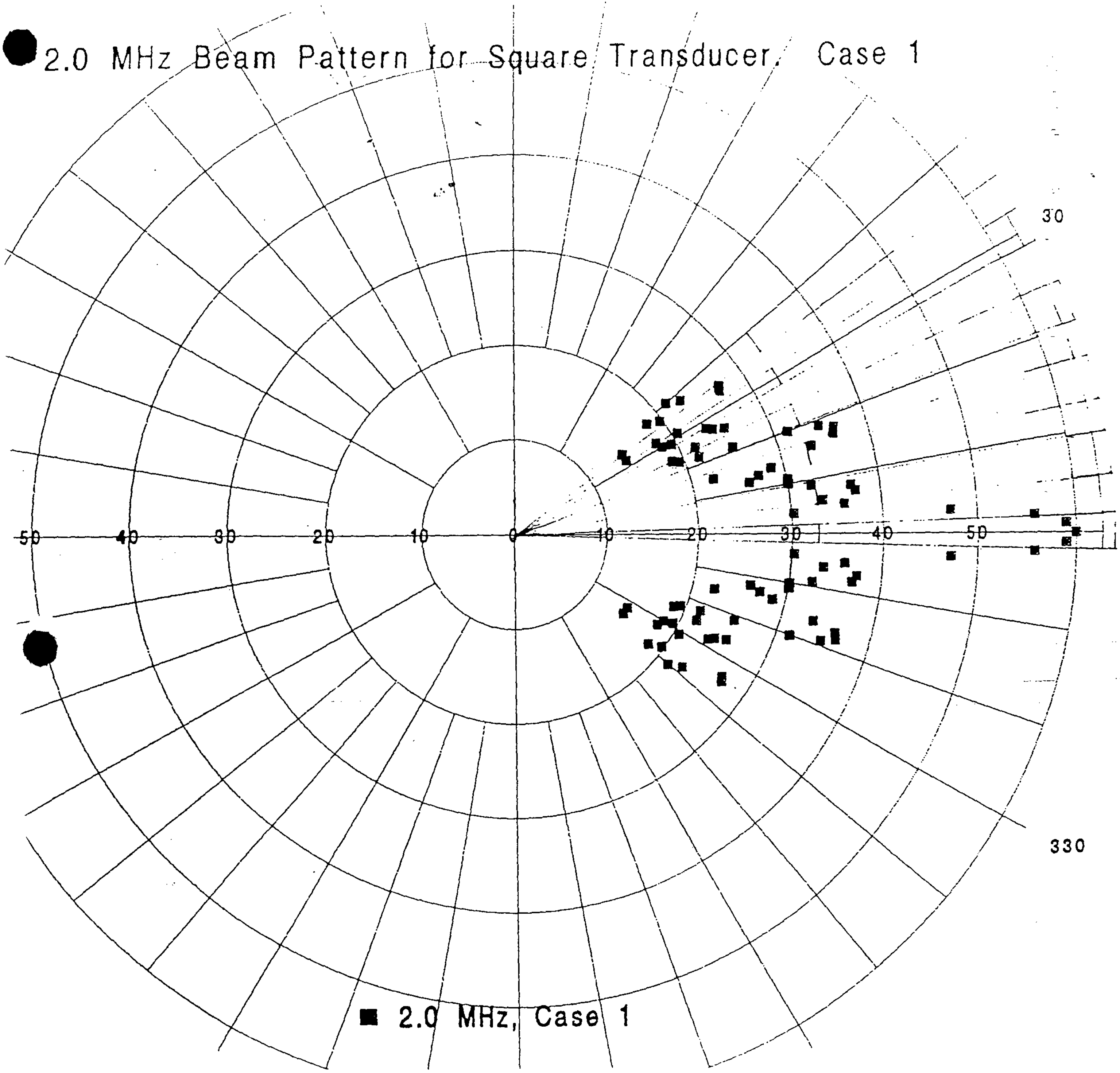

Appendix C

Efficiency Data for each Transducer in the Cylindrical Array

Transducer#	Col	#	Rng	#	Freq in MHz	Measured Acoustic Watts at D/A V=2.37	Calculated Acoustic Watts at D/A V=5.00	Calculated D/A Voltage at 0.5 Watts	Calculated D/A Voltage at 4.5 Watts
4-230A	C	2	R	1	4.80	2.64	11.75	1.03	3.09
4-214	C	2	R	2	4.82	2.84	12.64	0.99	2.98
4-217	C	2	R	3	4.81	2.88	12.82	0.99	2.96
4-237B	C	2	R	4	4.78	1.98	8.81	1.19	3.57
4-188	C	4	R	1	4.49	1.90	8.46	1.22	3.65
4-154	C	4	R	2	4.49	1.52	6.77	1.36	4.08
4-144	C	4	R	3	4.49	1.42	6.32	1.41	4.22
4-163	C	4	R	4	4.50	1.18	5.25	1.54	4.63
4-265	C	6	R	1	4.71	1.58	7.03	1.33	4.00
4-272	C	6	R	2	4.71	1.58	7.03	1.33	4.00
4-277	C	6	R	3	4.68	1.54	6.85	1.35	4.05
4-273	C	6	R	4	4.68	1.48	6.59	1.38	4.13
4-232B	C	8	R	1	4.73	2.02	8.99	1.18	3.54
4-230B	C	8	R	2	4.71	1.92	8.55	1.21	3.63
4-234A	C	8	R	3	4.70	1.94	8.63	1.20	3.61
4-216	C	8	R	4	4.69	1.98	8.81	1.19	3.57
4-210	C	10	R	1	4.67	2.16	9.61	1.14	3.42
4-221	C	10	R	2	4.67	1.76	7.83	1.26	3.79
4-249	C	10	R	3	4.66	2.00	8.90	1.19	3.56
4-242	C	10	R	4	4.67	1.56	6.94	1.34	4.03
4-281	C	12	R	1	4.67	1.80	8.01	1.25	3.75
4-271	C	12	R	2	4.68	1.50	6.68	1.37	4.10
4-262	C	12	R	3	4.67	1.62	7.21	1.32	3.95
4-267	C	12	R	4	4.66	1.58	7.03	1.33	4.00
4-218	C	14	R	1	4.62	2.06	9.17	1.17	3.50
4-240A	C	14	R	2	4.65	1.58	7.03	1.33	4.00
4-241A	C	14	R	3	4.63	1.58	7.03	1.33	4.00
4-229	C	14	R	4	4.61	1.60	7.12	1.32	3.97
4-225	C	16	R	1	4.61	1.62	7.21	1.32	3.95
4-238A	C	16	R	2	4.61	1.54	6.85	1.35	4.05
4-235A	C	16	R	3	4.61	1.54	6.85	1.35	4.05
4-241B	C	16	R	4	4.62	1.40	6.23	1.42	4.25
4-278	C	18	R	1	4.65	1.60	7.12	1.32	3.97
4-280	C	18	R	2	4.61	1.58	7.03	1.33	4.00
4-279	C	18	R	3	4.62	1.38	6.14	1.43	4.28
4-239B	C	18	R	4	4.61	1.60	7.12	1.32	3.97
4-130	C	20	R	1	4.60	1.68	7.48	1.29	3.88
4-234B	C	20	R	2	4.60	1.56	6.94	1.34	4.03
4-246	C	20	R	3	4.60	1.48	6.59	1.38	4.13
4-236A	C	20	R	4	4.60	1.52	6.77	1.36	4.08
4-211	C	22	R	1	4.58	1.64	7.30	1.31	3.93
4-212	C	22	R	2	4.58	1.56	6.94	1.34	4.03
4-137	C	22	R	3	4.59	1.50	6.68	1.37	4.10
4-231B	C	22	R	4	4.59	1.52	6.77	1.36	4.08
4-233B	C	24	R	1	4.58	1.66	7.39	1.30	3.90
4-223	C	24	R	2	4.58	1.54	6.85	1.35	4.05
4-245	C	24	R	3	4.58	1.52	6.77	1.36	4.08
4-233A	C	24	R	4	4.58	1.46	6.50	1.39	4.16

4-232A	C	26	R	1	4.57	1.62	7.21	1.32	3.95
4-140	C	26	R	2	4.57	1.54	6.85	1.35	4.05
4-243	C	26	R	3	4.57	1.54	6.85	1.35	4.05
4-239A	C	26	R	4	4.58	1.42	6.32	1.41	4.22
4-219	C	28	R	1	4.55	1.54	6.85	1.35	4.05
4-224	C	28	R	2	4.55	1.48	6.59	1.38	4.13
4-187	C	28	R	3	4.57	1.54	6.85	1.35	4.05
4-248	C	28	R	4	4.57	1.50	6.68	1.37	4.10
4-264	C	30	R	1	4.57	1.58	7.03	1.33	4.00
4-189	C	30	R	2	4.55	1.66	7.39	1.30	3.90
4-128	C	30	R	3	4.57	1.18	5.25	1.54	4.63
4-101A	C	30	R	4	4.55	1.40	6.23	1.42	4.25
4-208	C	32	R	1	4.53	1.58	7.03	1.33	4.00
4-102A	C	32	R	2	4.55	1.42	6.32	1.41	4.22
4-133	C	32	R	3	4.55	1.42	6.32	1.41	4.22
4-157	C	32	R	4	4.52	1.48	6.59	1.38	4.13
4-237A	C	34	R	1	4.55	1.54	6.85	1.35	4.05
4-153	C	34	R	2	4.55	1.52	6.77	1.36	4.08
4-213	C	34	R	3	4.55	1.46	6.50	1.39	4.16
4-134	C	34	R	4	4.54	1.42	6.32	1.41	4.22
4-186	C	36	R	1	4.54	1.58	7.03	1.33	4.00
4-174	C	36	R	2	4.53	1.44	6.41	1.40	4.19
4-138	C	36	R	3	4.55	1.40	6.23	1.42	4.25
4-177	C	36	R	4	4.55	1.36	6.05	1.44	4.31
4-197	C	38	R	1	4.53	1.54	6.85	1.35	4.05
4-103A	C	38	R	2	4.53	1.42	6.32	1.41	4.22
4-169	C	38	R	3	4.53	1.28	5.70	1.48	4.44
4-159	C	38	R	4	4.52	1.46	6.50	1.39	4.16
4-171	C	40	R	1	4.52	1.66	7.39	1.30	3.90
4-204	C	40	R	2	4.52	1.52	6.77	1.36	4.08
4-205	C	40	R	3	4.52	1.58	7.03	1.33	4.00
4-114A	C	40	R	4	4.52	1.30	5.79	1.47	4.41
4-145	C	42	R	1	4.55	1.44	6.41	1.40	4.19
4-146	C	42	R	2	4.53	1.44	6.41	1.40	4.19
4-129	C	42	R	3	4.52	1.44	6.41	1.40	4.19
4-135	C	42	R	4	4.52	1.34	5.96	1.45	4.34
4-166	C	44	R	1	4.51	1.52	6.77	1.36	4.08
4-165	C	44	R	2	4.52	1.50	6.68	1.37	4.10
4-193	C	44	R	3	4.51	1.44	6.41	1.40	4.19
4-207	C	44	R	4	4.51	1.30	5.79	1.47	4.41
4-143	C	46	R	1	4.50	1.58	7.03	1.33	4.00
4-173	C	46	R	2	4.50	1.52	6.77	1.36	4.08
4-180	C	46	R	3	4.50	1.46	6.50	1.39	4.16
4-160	C	46	R	4	4.49	1.42	6.32	1.41	4.22
4-274	C	48	R	1	4.77	2.26	10.06	1.11	3.34
4-275	C	48	R	2	4.73	2.24	9.97	1.12	3.36
4-263	C	48	R	3	4.74	1.88	8.37	1.22	3.67
4-266	C	48	R	4	4.77	1.88	8.37	1.22	3.67
4-181	C	2	R	5	4.48	1.52	6.77	1.36	4.08
4-183	C	2	R	6	4.48	1.52	6.77	1.36	4.08
	C	2	R	7					
	C	2	R	8					

4-231A	C	4	R	5	4.49	1.24	5.52	1.50	4.51
4-199	C	4	R	6	4.49	1.36	6.05	1.44	4.31
	C	4	R	7					
	C	4	R	8					
4-184	C	6	R	5	4.50	1.38	6.14	1.43	4.28
4-132	C	6	R	6	4.49	1.08	4.81	1.61	4.84
	C	6	R	7					
	C	6	R	8					
4-215	C	8	R	5	4.47	1.38	6.14	1.43	4.28
4-203	C	8	R	6	4.48	1.46	6.50	1.39	4.16
	C	8	R	7					
	C	8	R	8					
4-227	C	10	R	5	4.47	1.40	6.23	1.42	4.25
4-235B	C	10	R	6	4.47	1.28	5.70	1.48	4.44
	C	10	R	7					
	C	10	R	8					
4-116A	C	12	R	5	4.45	1.50	6.68	1.37	4.10
4-141	C	12	R	6	4.46	1.32	5.88	1.46	4.38
	C	12	R	7					
	C	12	R	8					
4-201	C	14	R	5	4.45	1.50	6.68	1.37	4.10
4-162	C	14	R	6	4.49	1.16	5.16	1.56	4.67
	C	14	R	7					
	C	14	R	8					
4-228	C	16	R	5	4.45	1.28	5.70	1.48	4.44
4-182	C	16	R	6	4.44	1.24	5.52	1.50	4.51
	C	16	R	7					
	C	16	R	8					
4-155	C	18	R	5	4.43	1.36	6.05	1.44	4.31
4-131	C	18	R	6	4.43	1.24	5.52	1.50	4.51
	C	18	R	7					
	C	18	R	8					
4-238B	C	20	R	5	4.44	1.40	6.23	1.42	4.25
4-198	C	20	R	6	4.41	1.32	5.88	1.46	4.38
	C	20	R	7					
	C	20	R	8					
4-142	C	22	R	5	4.42	1.36	6.05	1.44	4.31
4-206	C	22	R	6	4.42	1.30	5.79	1.47	4.41
	C	22	R	7					
	C	22	R	8					
4-172	C	24	R	5	4.43	1.32	5.88	1.46	4.38
4-152	C	24	R	6	4.42	1.28	5.70	1.48	4.44
	C	24	R	7					
	C	24	R	8					
4-222	C	26	R	5	4.48	1.34	5.96	1.45	4.34
4-175	C	26	R	6	4.49	1.22	5.43	1.52	4.55
	C	26	R	7					
	C	26	R	8					
4-149	C	28	R	5	4.48	1.48	6.59	1.38	4.13
4-164	C	28	R	6	4.49	1.28	5.70	1.48	4.44
	C	28	R	7					
	C	28	R	8					

4-176	C	30	R	5	4.48	1.34	5.96	1.45	4.34
4-136	C	30	R	6	4.47	1.20	5.34	1.53	4.59
	C	30	R	7					
	C	30	R	8					
4-158	C	32	R	5	4.47	1.18	5.25	1.54	4.63
4-194	C	32	R	6	4.45	1.22	5.43	1.52	4.55
	C	32	R	7					
	C	32	R	8					
4-200	C	34	R	5	4.46	1.30	5.79	1.47	4.41
4-151	C	34	R	6	4.46	1.16	5.16	1.56	4.67
	C	34	R	7					
	C	34	R	8					
4-269	C	36	R	5	4.47	1.26	5.61	1.49	4.48
4-185	C	36	R	6	4.45	1.26	5.61	1.49	4.48
	C	36	R	7					
	C	36	R	8					
4-202	C	38	R	5	4.45	1.22	5.43	1.52	4.55
4-209	C	38	R	6	4.44	1.24	5.52	1.50	4.51
	C	38	R	7					
	C	38	R	8					
4-195	C	40	R	5	4.43	1.24	5.52	1.50	4.51
4-148	C	40	R	6	4.43	1.16	5.16	1.56	4.67
	C	40	R	7					
	C	40	R	8					
4-276	C	42	R	5	4.45	1.30	5.79	1.47	4.41
4-191	C	42	R	6	4.44	1.22	5.43	1.52	4.55
	C	42	R	7					
	C	42	R	8					
4-156	C	44	R	5	4.42	1.26	5.61	1.49	4.48
4-220	C	44	R	6	4.43	1.22	5.43	1.52	4.55
	C	44	R	7					
	C	44	R	8					
4-178	C	46	R	5	4.40	1.28	5.70	1.48	4.44
4-167	C	46	R	6	4.41	1.20	5.34	1.53	4.59
	C	46	R	7					
	C	46	R	8					
4-179	C	48	R	5	4.38	1.30	5.79	1.47	4.41
4-192	C	48	R	6	4.33	1.30	5.79	1.47	4.41
	C	48	R	7					
	C	48	R	8					
Total No. Tested 144					Freq in MHz	Measured Acoustic Watts at D/A V=2.37	Calculated Acoustic Watts at D/A V=5.00	Calculated D/A Voltage at 0.5 Watts	Calculated D/A Voltage at 4.75 Watts
				AVE	4.55	1.51	6.72	1.38	4.14
				MIN	4.33	1.08	4.81	0.99	2.96
				MAX	4.82	2.88	12.82	1.61	4.84

Transducer#	Most Efficient Frequency, in MHz	Ultrasound Power, Watts	DC Watts	DC to Ultrasound Efficiency, %	Transducer Efficiency, %
4-011	4.45	1.36	4.65	29.23	49.40
4-101A	4.55	1.40	4.60	30.42	51.41
4-102A	4.55	1.42	4.69	30.28	51.17
4-103A	4.53	1.42	4.69	30.29	51.19
4-114A	4.52	1.30	4.56	28.54	48.23
4-116A	4.45	1.50	4.74	31.62	53.44
4-128	4.57	1.18	4.18	28.22	47.69
4-129	4.52	1.44	4.74	30.36	51.31
4-130	4.60	1.68	5.01	33.51	56.63
4-131	4.43	1.24	4.09	30.32	51.24
4-132	4.53	1.16	4.26	27.22	46.00
4-133	4.55	1.42	4.75	29.92	50.56
4-134	4.54	1.42	4.65	30.54	51.61
4-135	4.52	1.34	4.63	28.97	48.96
4-136	4.47	1.20	4.14	28.96	48.94
4-137	4.59	1.50	4.67	32.11	54.27
4-138	4.55	1.40	4.65	30.12	50.90
4-140	4.57	1.54	4.80	32.06	54.18
4-141	4.46	1.32	4.26	30.99	52.37
4-142	4.42	1.36	4.26	31.91	53.93
4-143	4.50	1.58	4.80	32.89	55.58
4-144	4.49	1.42	4.65	30.53	51.60
4-145	4.55	1.44	4.75	30.31	51.22
4-146	4.53	1.44	4.77	30.21	51.05
4-147	4.49	1.26	4.22	29.84	50.43
4-148	4.43	1.16	4.08	28.41	48.01
4-149	4.48	1.48	4.64	31.89	53.89
4-151	4.46	1.16	4.00	29.03	49.06
4-152	4.42	1.28	4.17	30.66	51.82
4-153	4.55	1.52	4.91	30.93	52.27
4-154	4.49	1.52	5.05	30.10	50.87
4-155	4.43	1.36	4.40	30.89	52.20
4-156	4.42	1.26	4.28	29.45	49.77
4-157	4.52	1.48	5.06	29.26	49.45
4-158	4.47	1.18	4.06	29.03	49.06
4-159	4.52	1.46	4.85	30.09	50.85
4-160	4.49	1.42	4.71	30.18	51.00
4-162	4.49	1.16	4.01	28.96	48.94
4-163	4.50	1.18	4.22	27.96	47.25
4-164	4.49	1.28	4.69	27.32	46.17
4-165	4.52	1.50	4.96	30.24	51.11
4-166	4.51	1.52	4.84	31.41	53.08
4-167	4.41	1.20	3.98	30.14	50.94

4-169	4.49	1.20	4.20	28.58	48.30
4-171	4.52	1.66	4.89	33.98	57.43
4-172	4.43	1.32	4.31	30.60	51.71
4-173	4.50	1.52	5.32	28.56	48.27
4-174	4.53	1.44	4.62	31.15	52.64
4-175	4.49	1.22	4.43	27.56	46.58
4-176	4.48	1.34	4.44	30.21	51.05
4-177	4.55	1.36	4.70	28.96	48.94
4-178	4.40	1.28	4.17	30.71	51.90
4-179	4.38	1.30	4.31	30.18	51.00
4-180	4.50	1.46	4.86	30.06	50.80
4-181	4.48	1.52	4.86	31.28	52.86
4-182	4.44	1.24	4.17	29.75	50.28
4-183	4.48	1.52	4.69	32.38	54.72
4-184	4.50	1.38	4.47	30.84	52.12
4-185	4.45	1.26	4.18	30.15	50.95
4-186	4.54	1.58	5.02	31.47	53.18
4-187	4.57	1.54	4.99	30.84	52.12
4-188	4.49	1.90	5.23	36.34	61.41
4-189	4.55	1.66	5.06	32.80	55.43
4-191	4.44	1.22	4.15	29.37	49.64
4-192	4.33	1.30	4.74	27.42	46.34
4-193	4.51	1.44	4.78	30.14	50.94
4-194	4.45	1.22	4.14	29.45	49.77
4-195	4.43	1.24	4.01	30.94	52.29
4-197	4.53	1.54	5.26	29.29	49.50
4-198	4.41	1.32	4.35	30.35	51.29
4-199	4.49	1.36	4.98	27.30	46.14
4-200	4.46	1.30	4.37	29.78	50.33
4-201	4.45	1.50	4.87	30.82	52.09
4-202	4.45	1.22	4.13	29.55	49.94
4-203	4.48	1.46	4.74	30.77	52.00
4-204	4.52	1.52	4.84	31.41	53.08
4-205	4.52	1.58	4.83	32.74	55.33
4-206	4.42	1.30	4.30	30.23	51.09
4-207	4.51	1.30	4.42	29.42	49.72
4-208	4.53	1.58	4.92	32.13	54.30
4-209	4.44	1.24	4.62	26.83	45.34
4-210	4.67	2.16	5.66	38.19	64.54
4-211	4.58	1.64	4.86	33.76	57.05
4-212	4.58	1.56	4.92	31.69	53.56
4-213	4.55	1.46	4.81	30.38	51.34
4-214	4.82	2.84	6.65	42.71	72.18
4-215	4.47	1.38	4.39	31.43	53.12
4-216	4.69	1.98	6.51	30.43	51.43

4-217	4.81	2.88	6.78	42.48	71.79
4-218	4.62	2.06	4.73	43.56	73.62
4-219	4.55	1.54	4.78	32.20	54.42
4-220	4.43	1.22	4.35	28.06	47.42
4-221	4.67	1.76	4.95	35.53	60.05
4-222	4.48	1.34	4.20	31.89	53.89
4-223	4.58	1.54	4.75	32.43	54.81
4-224	4.55	1.48	4.66	31.78	53.71
4-225	4.61	1.62	4.99	32.44	54.82
4-227	4.47	1.40	4.63	30.23	51.09
4-228	4.45	1.28	4.28	29.89	50.51
4-229	4.61	1.60	4.89	32.69	55.25
4-230A	4.80	2.64	6.01	43.95	74.28
4-230B	4.71	1.92	5.81	33.06	55.87
4-231A	4.49	1.24	4.30	28.84	48.74
4-231B	4.59	1.52	4.93	30.86	52.15
4-232A	4.57	1.62	5.01	32.35	54.67
4-232B	4.73	2.02	5.89	34.28	57.93
4-233A	4.58	1.46	4.82	30.31	51.22
4-233B	4.58	1.66	4.99	33.25	56.19
4-234A	4.70	1.94	5.90	32.90	55.60
4-234B	4.60	1.56	4.91	31.79	53.73
4-235A	4.61	1.54	4.79	32.15	54.33
4-235B	4.47	1.28	4.30	29.75	50.28
4-236A	4.60	1.52	4.98	30.50	51.55
4-237A	4.55	1.54	4.97	30.98	52.36
4-237B	4.78	1.98	5.81	34.10	57.63
4-238A	4.61	1.54	4.86	31.67	53.52
4-238B	4.44	1.40	4.61	30.37	51.33
4-239A	4.58	1.42	5.00	28.38	47.96
4-239B	4.61	1.60	5.17	30.97	52.34
4-240A	4.65	1.58	5.00	31.62	53.44
4-241A	4.63	1.58	4.83	32.74	55.33
4-241B	4.62	1.40	4.89	28.63	48.38
4-242	4.67	1.56	4.98	31.31	52.91
4-243	4.57	1.54	4.85	31.73	53.62
4-245	4.58	1.52	4.68	32.49	54.91
4-246	4.60	1.48	4.73	31.32	52.93
4-248	4.57	1.50	4.92	30.46	51.48
4-249	4.66	2.00	5.62	35.57	60.11
4-262	4.67	1.62	5.43	29.81	50.38
4-263	4.74	1.88	5.47	34.38	58.10
4-264	4.57	1.58	4.99	31.68	53.54
4-265	4.71	1.58	4.99	31.64	53.47
4-266	4.77	1.88	5.77	32.59	55.08

4-267	4.66	1.58	5.10	30.96	52.32
4-269	4.47	1.26	4.43	28.42	48.03
4-271	4.68	1.50	4.89	30.65	51.80
4-272	4.71	1.58	5.05	31.28	52.86
4-273	4.68	1.48	4.70	31.50	53.24
4-274	4.77	2.26	5.57	40.59	68.60
4-275	4.73	2.24	5.82	38.50	65.07
4-276	4.45	1.30	4.80	27.10	45.80
4-277	4.68	1.54	4.68	32.94	55.67
4-278	4.65	1.60	4.94	32.42	54.79
4-279	4.62	1.38	4.46	30.94	52.29
4-280	4.61	1.58	4.94	31.98	54.05
4-281	4.67	1.80	5.41	33.30	56.28
Transducer#	Frequency,in MH Most Efficient	Power, Watts Ultrasound	DC Watts	Efficiency,% DC to Ultrasound	Transducer Efficiency,%
Average	4.5469	1.51	4.79	31.29	52.88
SD	0.10	0.29	0.51	2.90	4.90
# Of Samples	146.00				
Max Value	4.82	2.88	6.78	43.95	74.28
Min Value	4.33	1.16	3.98	26.83	45.34

Bad Xducr Serial #	Most Efficient Frequency, in MHz	Ultrasound Power, Watts	 DC Watts	DC to Ultrasound Efficiency, %	Transducer Efficiency, %
4-003	missing wire		#DIV/0!		0.00
4-010	no polarity 4.45	1.22	4.31	28.31	47.84
4-012	missing wire		#DIV/0!		0.00
4-150	4.34	1.24	5.11	24.27	41.02
4-161	4.53	1.42	5.35	26.55	44.87
4-168	4.60	3.08	5.43	56.71	95.84
4-170	4.56	34.70	4.92	705.89	1192.95
4-190	no polarity 4.52	1.54	4.92	31.30	52.90
4-196	4.35	1.20	4.80	24.99	42.23
4-226	4.41	1.26	4.84	26.02	43.97
4-236B	4.50	1.28	4.82	26.53	44.84
4-240B	4.34	1.36	5.26	25.84	43.67
4-244	4.48	1.32	5.02	26.32	44.48
4-247	4.36	1.28	4.93	25.96	43.87
4-268	4.57	1.28	5.05	25.33	42.81
4-270	4.50	1.14	4.77	23.92	40.42

12 pairs of transducers with identical serial numbers.

*2 - defective (wedge) surface: note #4-170 & #4-168 transducer.

4 - with one serial number written on top of a different serial number: Ex:

2.5 MHz Transducers 4/11/95

Transducer #	Col	#	Rng	#	Freq in MHz	Measured Acoustic Watts at D/A V = 2.37	Calculated Acoustic Watts at D/A V = 5.00	Calculated D/A Voltage at 0.5 Watts	Calculated D/A Voltage at 8 Watts
2.5-176	C	1	R	5	2.51	2.38	10.59	1.09	4.35
2.5-140	C	1	R	6	2.56	2.02	8.99	1.18	4.72
2.5-115	C	1	R	7	2.53	2.22	9.88	1.12	4.50
2.5-109	C	1	R	8	2.47	2.62	11.66	1.04	4.14
2.5-120	C	3	R	5	2.55	2.06	9.17	1.17	4.67
2.5-168	C	3	R	6	2.52	2.12	9.44	1.15	4.60
2.5-133	C	3	R	7	2.56	2.14	9.52	1.15	4.58
2.5-177	C	3	R	8	2.50	2.18	9.70	1.14	4.54
2.5-157	C	5	R	5	2.56	2.12	9.44	1.15	4.60
2.5-107	C	5	R	6	2.54	2.14	9.52	1.15	4.58
2.5-161	C	5	R	7	2.51	2.08	9.26	1.16	4.65
2.5-164	C	5	R	8	2.44	2.52	11.22	1.06	4.22
2.5-155	C	7	R	5	2.55	2.04	9.08	1.17	4.69
2.5-153	C	7	R	6	2.53	2.08	9.26	1.16	4.65
2.5-121	C	7	R	7	2.50	2.22	9.88	1.12	4.50
2.5-169	C	7	R	8	2.50	2.10	9.35	1.16	4.63
2.5-106	C	9	R	5	2.53	2.12	9.44	1.15	4.60
2.5-167	C	9	R	6	2.52	2.26	10.06	1.11	4.46
2.5-149	C	9	R	7	2.52	2.06	9.17	1.17	4.67
2.5-147	C	9	R	8	2.51	2.08	9.26	1.16	4.65
2.5-143	C	11	R	5	2.57	1.96	8.72	1.20	4.79
2.5-139	C	11	R	6	2.54	2.06	9.17	1.17	4.67
2.5-125	C	11	R	7	2.54	2.06	9.17	1.17	4.67
2.5-162	C	11	R	8	2.49	2.26	10.06	1.11	4.46
2.5-142	C	13	R	5	2.58	2.02	8.99	1.18	4.72
2.5-111	C	13	R	6	2.54	2.14	9.52	1.15	4.58
2.5-148	C	13	R	7	2.51	2.08	9.26	1.16	4.65
2.5-178	C	13	R	8	2.48	2.18	9.70	1.14	4.54
2.5-112	C	15	R	5	2.55	2.00	8.90	1.19	4.74
2.5-175	C	15	R	6	2.46	2.16	9.61	1.14	4.56
2.5-104	C	15	R	7	2.57	1.94	8.63	1.20	4.81
2.5-136	C	15	R	8	2.51	2.18	9.70	1.14	4.54
2.5-117	C	17	R	5	2.57	1.90	8.46	1.22	4.86
2.5-150	C	17	R	6	2.56	2.06	9.17	1.17	4.67
2.5-123	C	17	R	7	2.54	2.06	9.17	1.17	4.67
2.5-101	C	17	R	8	2.50	2.02	8.99	1.18	4.72
2.5-152	C	19	R	5	2.57	1.90	8.46	1.22	4.86
2.5-132	C	19	R	6	2.53	2.06	9.17	1.17	4.67
2.5-124	C	19	R	7	2.52	2.08	9.26	1.16	4.65
2.5-141	C	19	R	8	2.47	2.16	9.61	1.14	4.56
2.5-131	C	21	R	5	2.53	2.08	9.26	1.16	4.65
2.5-171	C	21	R	6	2.52	2.28	10.15	1.11	4.44
2.5-151	C	21	R	7	2.51	2.24	9.97	1.12	4.48
2.5-166	C	21	R	8	2.42	2.78	12.37	1.01	4.02
2.5-116	C	23	R	5	2.57	1.82	8.10	1.24	4.97
2.5-135	C	23	R	6	2.55	2.08	9.26	1.16	4.65
2.5-108	C	23	R	7	2.54	1.96	8.72	1.20	4.79
2.5-102	C	23	R	8	2.52	2.02	8.99	1.18	4.72
2.5-160	C	25	R	5	2.57	1.84	8.19	1.24	4.94
2.5-113	C	25	R	6	2.57	1.98	8.81	1.19	4.76
	C	25	R	7					
	C	25	R	8					

2.5-154	C	27	R	5	2.56	2.06	9.17	1.17	4.67
2.5-138	C	27	R	6	2.55	2.06	9.17	1.17	4.67
	C	27	R	7					
	C	27	R	8					
2.5-144	C	29	R	5	2.53	1.94	8.63	1.20	4.81
2.5-129	C	29	R	6	2.53	1.98	8.81	1.19	4.76
	C	29	R	7					
	C	29	R	8					
2.5-110	C	31	R	5	2.54	2.14	9.52	1.15	4.58
2.5-134	C	31	R	6	2.54	2.02	8.99	1.18	4.72
	C	31	R	7					
	C	31	R	8					
2.5-103	C	33	R	5	2.51	2.00	8.90	1.19	4.74
2.5-146	C	33	R	6	2.51	2.26	10.06	1.11	4.46
	C	33	R	7					
	C	33	R	8					
2.5-122	C	35	R	5	2.48	2.26	10.06	1.11	4.46
2.5-158	C	35	R	6	2.48	2.50	11.13	1.06	4.24
	C	35	R	7					
	C	35	R	8					
2.5-174	C	37	R	5	2.51	2.02	8.99	1.18	4.72
2.5-163	C	37	R	6	2.50	2.30	10.24	1.11	4.42
	C	37	R	7					
	C	37	R	8					
2.5-145	C	39	R	5	2.51	2.06	9.17	1.17	4.67
2.5-173	C	39	R	6	2.50	1.98	8.81	1.19	4.76
	C	39	R	7					
	C	39	R	8					
2.5-118	C	41	R	5	2.50	2.22	9.88	1.12	4.50
2.5-159	C	41	R	6	2.49	2.38	10.59	1.09	4.35
	C	41	R	7					
	C	41	R	8					
2.5-170	C	43	R	5	2.47	2.60	11.57	1.04	4.16
2.5-172	C	43	R	6	2.48	2.42	10.77	1.08	4.31
	C	43	R	7					
	C	43	R	8					
2.5-105	C	45	R	5	2.48	2.42	10.77	1.08	4.31
2.5-156	C	45	R	6	2.48	2.42	10.77	1.08	4.31
	C	45	R	7					
	C	45	R	8					
2.5-130	C	47	R	5	2.48	2.18	9.70	1.14	4.54
2.5-119	C	47	R	6	2.48	2.34	10.41	1.10	4.38
	C	47	R	7					
	C	47	R	8					
Total No. Tested	72				Freq in MHz	Measured Acoustic Watts at D/A V=2.37	Calculated Acoustic Watts at D/A V=5.00	Calculated D/A Voltage at 0.5 Watts	Calculated D/A Voltage at 8 Watts
	AVE				2.52	2.15	9.55	1.15	4.59
	MIN				2.42	1.82	8.10	1.01	4.02
	MAX				2.58	2.78	12.37	1.24	4.97

Transducer #	Min. Refl. Pwr. Frequency, in MHz	Ultrasound Power, Watts	DC Watts	DC to Ultrasound Efficiency, %	Transducer Efficiency, %
2.5-101	2.50	2.02	4.38	46.11	70.65
2.5-102	2.52	2.02	4.41	45.76	70.11
2.5-103	2.51	2.00	4.42	45.24	69.32
2.5-104	2.57	1.94	4.19	46.27	70.89
2.5-105	2.48	2.42	5.73	42.23	64.70
2.5-106	2.53	2.12	4.47	47.45	72.70
2.5-107	2.54	2.14	4.47	47.88	73.36
2.5-108	2.54	1.96	4.29	45.67	69.97
2.5-109	2.47	2.62	5.40	48.52	74.34
2.5-110	2.54	2.14	4.72	45.32	69.44
2.5-111	2.54	2.14	4.57	46.81	71.72
2.5-112	2.55	2.00	4.29	46.67	71.51
2.5-113	2.57	1.98	4.44	44.63	68.38
2.5-115	2.53	2.22	4.56	48.66	74.56
2.5-116	2.57	1.82	4.00	45.46	69.65
2.5-117	2.57	1.90	4.12	46.17	70.74
2.5-118	2.50	2.22	4.97	44.71	68.50
2.5-119	2.48	2.34	5.67	41.27	63.23
2.5-120	2.55	2.06	4.27	48.26	73.94
2.5-121	2.50	2.22	4.66	47.62	72.96
2.5-122	2.48	2.26	5.07	44.57	68.29
2.5-123	2.54	2.06	4.45	46.25	70.86
2.5-124	2.52	2.08	4.52	46.06	70.57
2.5-125	2.54	2.06	4.39	46.91	71.87
2.5-129	2.53	1.98	4.46	44.44	68.09
2.5-130	2.48	2.18	5.16	42.26	64.75
2.5-131	2.53	2.08	4.52	45.98	70.45
2.5-132	2.53	2.06	4.48	46.03	70.53
2.5-133	2.56	2.14	4.45	48.12	73.73
2.5-134	2.54	2.02	4.63	43.65	66.88
2.5-135	2.55	2.08	4.56	45.65	69.94
2.5-136	2.51	2.18	4.70	46.37	71.05
2.5-138	2.55	2.06	4.57	45.08	69.07
2.5-139	2.54	2.06	4.39	46.97	71.97
2.5-140	2.56	2.02	4.18	48.32	74.03
2.5-141	2.47	2.16	4.69	46.06	70.57
2.5-142	2.58	2.02	4.33	46.70	71.55
2.5-143	2.57	1.96	4.18	46.87	71.81
2.5-144	2.53	1.94	4.31	45.06	69.04
2.5-145	2.51	2.06	4.56	45.18	69.22
2.5-146	2.51	2.26	5.43	41.62	63.77
2.5-147	2.51	2.08	4.39	47.41	72.64
2.5-148	2.51	2.08	4.44	46.80	71.71
2.5-149	2.52	2.06	4.36	47.27	72.43
2.5-150	2.56	2.06	4.46	46.16	70.72
2.5-151	2.51	2.24	4.87	46.00	70.48

2.5-152	2.57	1.90	4.13	46.06	70.57
2.5-153	2.53	2.08	4.35	47.78	73.21
2.5-154	2.56	2.06	4.55	45.25	69.33
2.5-155	2.55	2.04	4.28	47.64	72.99
2.5-156	2.48	2.42	5.93	40.83	62.56
2.5-157	2.56	2.12	4.42	47.91	73.41
2.5-158	2.48	2.50	5.98	41.79	64.03
2.5-159	2.49	2.38	5.77	41.26	63.22
2.5-160	2.57	1.84	4.06	45.28	69.38
2.5-161	2.51	2.08	4.35	47.87	73.34
2.5-162	2.49	2.26	4.80	47.10	72.17
2.5-163	2.50	2.30	5.16	44.61	68.35
2.5-164	2.44	2.52	5.26	47.95	73.47
2.5-166	2.42	2.78	6.07	45.83	70.22
2.5-167	2.52	2.26	4.76	47.45	72.70
2.5-168	2.52	2.12	4.40	48.14	73.76
2.5-169	2.50	2.10	4.40	47.72	73.12
2.5-170	2.47	2.60	5.99	43.39	66.48
2.5-171	2.52	2.28	4.97	45.87	70.28
2.5-172	2.48	2.42	5.83	41.50	63.58
2.5-173	2.50	1.98	4.42	44.76	68.58
2.5-174	2.51	2.02	4.44	45.45	69.64
2.5-175	2.46	2.16	4.64	46.54	71.31
2.5-176	2.51	2.38	4.70	50.67	77.63
2.5-177	2.50	2.18	4.55	47.95	73.47
2.5-178	2.48	2.18	4.66	46.82	71.74
Transducer #	Frequency, in MHz Most Efficient	Power, Watts Ultrasound	DC Watts	Efficiency, % DC to Ultrasound	Efficiency, % Transducer
Average	2.5197	2.15	4.6865	45.92	70.35
SD	0.03	0.18	0.51	2.00	3.07
# of samples	73.00				
Max Value	2.58	2.78	6.07	50.67	77.63
Min Value	2.42	1.82	4.00	40.83	62.56

Bad Xducr Serial #	Most Efficient Frequency, in MHz	Ultrasound Power, Watts	DC Watts	DC to Ultrasound Efficiency, %	Transducer Efficiency, %
2.5-114	2.52	1.78	4.49	39.67	60.78
2.5-126	2.48	2.24	5.62	39.86	61.07
2.5-127	2.49	2.20	5.79	37.97	58.18
2.5-128	2.48	2.40	6.08	39.46	60.46
2.5-137	2.47	2.58	6.44	40.09	61.42
2.5-165	no polarity 2.5	2.22	4.60	48.25	73.93

	Trans #	Most Efficient Frequency, in MHz	Ultrasound Watts	DC Watts	DC to Ultrasound Efficiency, %	Transducer Efficiency, %
1	*2-001*	2.09	2.46	4.83	50.98	84.97
2	*2-002*	2.10	2.58	5.08	50.74	84.57
3	*2-008*	2.08	2.40	4.67	51.41	85.68
4	*2-015*	2.08	2.50	4.91	50.89	84.82
5	*2-116*	2.12	2.62	5.44	48.20	80.33
6	*2-120*	2.10	2.68	5.28	50.73	84.55
7	*2-121*	2.13	2.18	4.38	49.72	82.87
8	*2-122*	2.09	2.34	4.63	50.53	84.22
9	*2-123*	2.08	2.86	5.64	50.69	84.48
10	*2-124*	2.09	2.62	5.32	49.23	82.05
11	*2-125*	2.07	2.70	5.91	45.71	76.18
12	*2-126*	2.15	2.56	5.53	46.27	77.12
13	*2-127*	2.09	2.68	5.22	51.33	85.55
14	*2-128*	2.08	2.82	5.51	51.14	85.23
15	*2-129*	2.09	2.58	5.19	49.74	82.90
16	*2-130*	2.12	2.44	4.78	51.03	85.05
17	*2-131*	2.16	2.34	4.85	48.21	80.35
18	*2-133*	2.11	2.54	4.93	51.49	85.82
19	*2-134*	2.09	2.66	5.18	51.34	85.57
20	*2-135*	2.07	2.98	6.05	49.28	82.13
21	*2-136*	2.10	2.52	5.18	48.61	81.02
22	*2-137*	2.08	2.72	5.34	50.93	84.88
23	*2-138*	2.10	2.46	4.73	52.04	86.73
24	*2-139*	2.09	2.50	5.30	47.14	78.57
25	*2-140*	2.09	2.34	4.84	48.32	80.53
26	*2-141*	2.09	2.68	5.33	50.30	83.83
27	*2-142*	2.12	3.00	5.63	53.27	88.78
28	*2-143*	2.10	2.54	5.01	50.68	84.47
29	*2-144*	2.08	2.86	5.67	50.45	84.08
30	*2-145*	2.08	2.74	5.50	49.80	83.00
31	*2-147*	2.11	2.36	4.89	48.25	80.42
32	*2-151*	2.09	3.14	6.60	47.57	79.28
33	*2-157*	2.09	2.48	5.34	46.41	77.35
34	*2-159*	2.07	2.76	6.13	44.99	74.98
35	*2-162*	2.09	2.40	5.00	48.03	80.05
36	*2-164*	2.11	2.54	4.98	51.04	85.07
37	*2-166*	2.08	3.10	6.20	49.97	83.28
38	*2-167*	2.11	3.02	6.14	49.17	81.95
39	*2-168*	2.15	2.48	4.81	51.53	85.88
40	*2-169*	2.09	2.82	5.56	50.75	84.58
41	*2-170*	2.10	2.72	5.22	52.11	86.85
42	*2-171*	2.12	2.32	4.63	50.14	83.57
43	*2-172*	2.07	3.66	7.93	46.17	76.95
44	*2-173*	2.07	3.26	7.08	46.02	76.70
45	*2-174*	2.10	2.84	5.71	49.78	82.97
46	*2-175*	2.11	2.52	4.98	50.62	84.37
47	*2-176*	2.10	2.80	5.59	50.11	83.52

48	*2-177*	2.09	2.76	5.44	50.76	84.60
49	*2-178*	2.09	3.24	6.90	46.97	78.28
50	*2-179*	2.11	2.64	5.28	49.96	83.27
51	*2-180*	2.10	2.40	4.76	50.40	84.00
52	*2-181*	2.09	2.86	5.71	50.13	83.55
53	*2-183*	2.08	2.92	5.72	51.02	85.03
54	*2-184*	2.10	2.66	5.19	51.29	85.48
55	*2-185*	2.09	2.88	5.89	48.87	81.45
56	*2-186*	2.17	2.20	4.44	49.54	82.57
57	*2-187*	2.09	2.98	6.21	47.97	79.95
58	*2-188*	2.09	2.42	5.02	48.25	80.42
59	*2-189*	2.12	2.56	5.21	49.17	81.95
60	*2-190*	2.10	2.54	5.33	47.68	79.47
61	*2-191*	2.10	2.60	5.25	49.50	82.50
62	*2-192*	2.10	2.50	5.02	49.83	83.05
63	*2-193*	2.08	2.72	5.80	46.88	78.13
64	*2-194*	2.08	3.62	7.77	46.57	77.62
65	*2-195*	2.09	2.42	4.94	48.97	81.62
66	*2-196*	2.09	3.00	5.81	51.60	86.00
67	*2-197*	2.10	2.48	4.94	50.21	83.68
68	*2-198*	2.11	2.54	5.42	46.88	78.13
69	*2-200*	2.09	2.74	5.42	50.58	84.30
70	*2-201*	2.17	2.34	4.68	49.95	83.25
71	*2-203*	2.08	3.12	6.48	48.16	80.27
72	*2-204*	2.09	2.88	6.13	46.97	78.28
73	*2-205*	2.18	2.22	4.61	48.16	80.27
74	*2-206*	2.15	3.22	6.33	50.87	84.78
75	*2-207*	2.10	2.98	5.82	51.21	85.35
76	*2-208*	2.08	2.90	5.81	49.92	83.20
77	*2-209*	2.15	2.06	4.23	48.67	81.12
78	*2-210*	2.17	2.28	4.61	49.46	82.43
79	*2-211*	2.20	2.48	4.94	50.21	83.68
80	*2-212*	2.13	2.40	4.64	51.70	86.17
81	*2-213*	2.12	2.52	5.12	49.18	81.97
82	*2-214*	2.16	2.78	5.26	52.85	88.08
83	*2-215*	2.17	2.14	4.32	49.53	82.55
84	*2-216*	2.11	2.30	4.53	50.77	84.62
85	*2-217*	2.11	2.48	4.89	50.76	84.60
86	*2-218*	2.10	2.26	4.87	46.45	77.42
87	*2-300*	2.12	2.24	4.51	49.67	82.78
88	*2-301*	2.08	2.60	5.30	49.10	81.83
89	*2-302*	2.10	2.48	4.89	50.70	84.50

Trans #	Frequency, MHz	DC Watts	US Watts	DC to US Eff. %	Trans Eff. %
Average	2.1046	2.65	5.35	49.55	82.59
SD	0.03	0.30	0.69	1.74	2.90
Max	2.20	3.66	7.93	53.27	88.78
Min	2.07	2.06	4.23	44.99	74.98

	Bad Xducr Serial #	Most Efficient Frequency, in MHz	Ultrasound Power, Watts	DC Watts	DC to Ultrasound Efficiency, %	Transducer Efficiency, %
1	*2-003*	no polarity 2.14	2.30	4.76	48.35	80.58
2	*2-132*	2.09	1.28	3.78	33.87	56.45
3	*2-146*	2.10	1.72	4.46	38.55	64.25
4	*2-148*	2.10	0.90	2.94	30.63	51.05
5	*2-149*	2.07	0.70	2.85	24.58	40.97
6	*2-150*	2.08	0.32	2.33	13.74	22.90
7	*2-152*	2.07	0.14	2.27	6.16	10.26
8	*2-153*	2.02	2.68	8.65	30.98	51.63
9	*2-154*	2.05	0.18	2.16	8.32	13.87
10	*2-155*	2.12	0.32	2.42	13.21	22.02
11	*2-156*	2.07	0.38	2.38	15.99	26.65
12	*2-158*	2.08	0.32	2.78	11.50	19.17
13	*2-160*	2.10	0.74	2.80	26.43	44.05
14	*2-161*	2.06	0.06	2.03	2.95	4.92
15	*2-163*	2.11	0.08	1.99	4.02	6.70
16	*2-165*	2.08	0.34	2.28	14.93	24.88
17	*2-199*	2.08	2.92	6.63	44.02	73.37
18	*2-202*	no polarity 2.09	2.48	5.03	49.33	82.22

2 MHz Transducers 4/11/95

Trans #	*Col*	*#*	*Rng*	*#*	Freq in MHz	Measured Acoustic Watts at D/A V = 2.37	Calculated Acoustic Watts at D/A V = 5.00	Calculated D/A Voltage at 0.5 Watts	Calculated D/A Voltage at 9 Watts
2-186	C	1	R	1	2.16	2.78	12.37	1.01	4.26
2-206	C	1	R	2	2.15	3.22	14.33	0.93	3.96
2-168	C	1	R	3	2.15	2.48	11.04	1.06	4.51
2-211	C	1	R	4	2.20	2.48	11.04	1.06	4.51
2-147	C	3	R	1	2.10	2.72	12.11	1.02	4.31
2-212	C	3	R	2	2.13	2.40	10.68	1.08	4.59
2-130	C	3	R	3	2.12	2.44	10.86	1.07	4.55
2-116	C	3	R	4	2.11	2.54	11.31	1.05	4.46
2-133	C	5	R	1	2.11	2.54	11.31	1.05	4.46
2-164	C	5	R	2	2.11	2.52	11.22	1.06	4.48
2-217	C	5	R	3	2.11	2.48	11.04	1.06	4.51
2-216	C	5	R	4	2.11	2.30	10.24	1.11	4.69
2-207	C	7	R	1	2.10	2.98	13.26	0.97	4.12
2-120	C	7	R	2	2.10	2.68	11.93	1.02	4.34
2-184	C	7	R	3	2.10	2.66	11.84	1.03	4.36
2-002	C	7	R	4	2.10	2.58	11.48	1.04	4.43
2-198	C	9	R	1	2.10	2.46	10.95	1.07	4.53
S-5C009	C	9	R	2	2.17	2.36	10.50	1.09	4.63
2-302	C	9	R	3	2.10	2.48	11.04	1.06	4.51
2-180	C	9	R	4	2.10	2.40	10.68	1.08	4.59
2-169	C	11	R	1	2.09	2.82	12.55	1.00	4.23
2-177	C	11	R	2	2.09	2.76	12.28	1.01	4.28
2-200	C	11	R	3	2.09	2.74	12.20	1.01	4.30
2-127	C	11	R	4	2.09	2.68	11.93	1.02	4.34
2-141	C	13	R	1	2.09	2.68	11.93	1.02	4.34
2-134	C	13	R	2	2.09	2.66	11.84	1.03	4.36
2-001	C	13	R	3	2.09	2.46	10.95	1.07	4.53
2-122	C	13	R	4	2.09	2.34	10.41	1.10	4.65
2-183	C	15	R	1	2.08	2.92	13.00	0.98	4.16
2-123	C	15	R	2	2.08	2.86	12.73	0.99	4.20
2-144	C	15	R	3	2.08	2.86	12.73	0.99	4.20
2-128	C	15	R	4	2.08	2.82	12.55	1.00	4.23
2-190	C	17	R	1	2.09	3.00	13.35	0.97	4.10
2-137	C	17	R	2	2.08	2.72	12.11	1.02	4.31
2-015	C	17	R	3	2.08	2.50	11.13	1.06	4.50
S-5C008	C	17	R	4	2.14	2.70	12.02	1.02	4.33
2-205	C	19	R	1	2.18	2.34	10.41	1.10	4.65
2-201	C	19	R	2	2.17	2.28	10.15	1.11	4.71
2-215	C	19	R	3	2.17	2.20	9.79	1.13	4.79
2-214	C	19	R	4	2.17	2.14	9.52	1.15	4.86
2-121	C	21	R	1	2.13	2.18	9.70	1.14	4.82
2-189	C	21	R	2	2.12	2.56	11.39	1.05	4.44
2-213	C	21	R	3	2.12	2.52	11.22	1.06	4.48
2-171	C	21	R	4	2.12	2.32	10.33	1.10	4.67
2-167	C	23	R	1	2.11	3.02	13.44	0.96	4.09
2-179	C	23	R	2	2.11	2.64	11.75	1.03	4.38
2-174	C	23	R	3	2.10	2.84	12.64	0.99	4.22
2-176	C	23	R	4	2.10	2.80	12.46	1.00	4.25
2-191	C	25	R	1	2.10	2.60	11.57	1.04	4.41
2-192	C	25	R	2	2.10	2.50	11.13	1.06	4.50
2-197	C	25	R	3	2.10	2.48	11.04	1.06	4.51

230

2-181	C	27	R	1	2.09	2.86	12.73	0.99	4.20
2-124	C	27	R	2	2.09	2.62	11.66	1.04	4.39
2-129	C	27	R	3	2.09	2.58	11.48	1.04	4.43
S-5C010	C	27	R	4	2.16	2.66	11.84	1.03	4.36
2-195	C	29	R	1	2.09	2.42	10.77	1.08	4.57
2-166	C	29	R	2	2.08	3.10	13.80	0.95	4.04
2-208	C	29	R	3	2.08	2.90	12.91	0.98	4.18
2-145	C	29	R	4	2.08	2.74	12.20	1.01	4.30
2-301	C	31	R	1	2.08	2.60	11.57	1.04	4.41
2-194	C	31	R	2	2.07	2.98	13.26	0.97	4.12
2-210	C	31	R	3	2.17	2.22	9.88	1.12	4.77
2-131	C	31	R	4	2.16	2.34	10.41	1.10	4.65
2-175	C	33	R	1	2.12	2.62	11.66	1.04	4.39
2-170	C	33	R	2	2.11	2.36	10.50	1.09	4.63
2-136	C	33	R	3	2.10	2.54	11.31	1.05	4.46
2-138	C	33	R	4	2.11	2.54	11.31	1.05	4.46
2-218	C	35	R	1	2.10	2.52	11.22	1.06	4.48
2-151	C	35	R	2	2.09	3.14	13.98	0.95	4.01
2-196	C	35	R	3	2.10	2.26	10.06	1.11	4.73
2-182	C	35	R	4	2.10	3.18	14.15	0.94	3.99
2-188	C	37	R	1	2.09	2.42	10.77	1.08	4.57
2-178	C	37	R	2	2.09	3.24	14.42	0.93	3.95
2-125	C	37	R	3	2.07	2.70	12.02	1.02	4.33
S-5C002	C	37	R	4	2.17	2.62	11.66	1.04	4.39
2-162	C	39	R	1	2.09	2.40	10.68	1.08	4.59
2-204	C	39	R	2	2.09	2.88	12.82	0.99	4.19
2-139	C	39	R	3	2.09	2.50	11.13	1.06	4.50
S-5C003	C	39	R	4	2.18	2.60	11.57	1.04	4.41
2-187	C	41	R	1	2.09	2.98	13.26	0.97	4.12
2-157	C	41	R	2	2.09	2.48	11.04	1.06	4.51
2-193	C	41	R	3	2.08	3.62	16.11	0.88	3.74
S-5C004	C	41	R	4	2.16	2.60	11.57	1.04	4.41
2-140	C	43	R	1	2.09	2.34	10.41	1.10	4.65
2-135	C	43	R	2	2.08	2.72	12.11	1.02	4.31
2-172	C	43	R	3	2.07	3.66	16.29	0.88	3.72
2-117	C	43	R	4	2.14	2.54	11.31	1.05	4.46
2-203	C	45	R	1	2.08	3.12	13.89	0.95	4.03
2-173	C	45	R	2	2.07	3.26	14.51	0.93	3.94
2-159	C	45	R	3	2.07	2.76	12.28	1.01	4.28
S-5C006	C	45	R	4	2.17	2.52	11.22	1.06	4.48
2-209	C	47	R	1	2.15	2.06	9.17	1.17	4.95
2-142	C	47	R	2	2.14	2.30	10.24	1.11	4.69
2-126	C	47	R	3	2.15	2.56	11.39	1.05	4.44
2-300	C	47	R	4	2.12	2.24	9.97	1.12	4.75
Total No. Tested				96	Freq in MHz	Measured Acoustic Watts at D/A V = 2.37	Calculated Acoustic Watts at D/A V = 5.00	Calculated D/A Voltage at 0.5 Watts	Calculated D/A Voltage at 9 Watts
				AVE	2.11	2.64	11.76	1.04	4.39
				MIN	2.07	2.06	9.17	0.88	3.72
				MAX	2.20	3.66	16.29	1.17	4.95

Trans #	Col	#	Rng	#	Most Efficient Frequency, in MHz	Ultrasound Watts	DC to Ultrasound Efficiency, %	Transducer Efficiency, %
2-186	C	1	R	1	2.16	2.78	52.85	87.50
2-206	C	1	R	2	2.15	3.22	50.87	85.00
2-168	C	1	R	3	2.15	2.48	51.53	85.00
2-211	C	1	R	4	2.20	2.48	50.21	82.50
2-147	C	3	R	1	2.10	2.72	52.11	87.50
2-212	C	3	R	2	2.13	2.40	51.70	85.00
2-130	C	3	R	3	2.12	2.44	51.03	85.00
2-116	C	3	R	4	2.11	2.54	51.49	85.00
2-133	C	5	R	1	2.11	2.54	51.04	85.00
2-164	C	5	R	2	2.11	2.52	50.62	85.00
2-217	C	5	R	3	2.11	2.48	50.76	85.00
2-216	C	5	R	4	2.11	2.30	50.77	85.00
2-207	C	7	R	1	2.10	2.98	51.21	85.00
2-120	C	7	R	2	2.10	2.68	50.73	85.00
2-184	C	7	R	3	2.10	2.66	51.29	85.00
2-002	C	7	R	4	2.10	2.58	50.74	85.00
2-198	C	9	R	1	2.10	2.46	52.04	87.50
S-5C009	C	9	R	2	2.17	2.36	49.85	75.00
2-302	C	9	R	3	2.10	2.48	50.70	85.00
2-180	C	9	R	4	2.10	2.40	50.40	85.00
2-169	C	11	R	1	2.09	2.82	50.75	85.00
2-177	C	11	R	2	2.09	2.76	50.76	85.00
2-200	C	11	R	3	2.09	2.74	50.58	85.00
2-127	C	11	R	4	2.09	2.68	51.33	85.00
2-141	C	13	R	1	2.09	2.68	50.30	85.00
2-134	C	13	R	2	2.09	2.66	51.34	85.00
2-001	C	13	R	3	2.09	2.46	50.98	85.00
2-122	C	13	R	4	2.09	2.34	50.53	85.00
2-183	C	15	R	1	2.08	2.92	51.02	85.00
2-123	C	15	R	2	2.08	2.86	50.69	85.00
2-144	C	15	R	3	2.08	2.86	50.45	85.00
2-128	C	15	R	4	2.08	2.82	51.14	85.00
2-190	C	17	R	1	2.09	3.00	51.60	85.00
2-137	C	17	R	2	2.08	2.72	50.93	85.00
2-015	C	17	R	3	2.08	2.50	50.89	85.00
S-5C008	C	17	R	4	2.14	2.70	51.36	77.50
2-205	C	19	R	1	2.18	2.34	49.95	82.50
2-201	C	19	R	2	2.17	2.28	49.46	82.50
2-215	C	19	R	3	2.17	2.20	49.54	82.50
2-214	C	19	R	4	2.17	2.14	49.53	82.50
2-121	C	21	R	1	2.13	2.18	49.72	82.50
2-189	C	21	R	2	2.12	2.56	49.17	82.50
2-213	C	21	R	3	2.12	2.52	49.18	82.50
2-171	C	21	R	4	2.12	2.32	50.14	82.50
2-167	C	23	R	1	2.11	3.02	49.17	82.50
2-179	C	23	R	2	2.11	2.64	49.96	82.50
2-174	C	23	R	3	2.10	2.84	49.78	82.50
2-176	C	23	R	4	2.10	2.80	50.11	82.50
2-191	C	25	R	1	2.10	2.60	49.50	82.50
2-192	C	25	R	2	2.10	2.50	49.83	82.50
2-197	C	25	R	3	2.10	2.48	50.21	82.50
2-185	C	25	R	4	2.09	2.88	48.87	82.50

2-181	C	27	R	1	2.09	2.86	50.13	82.50
2-124	C	27	R	2	2.09	2.62	49.23	82.50
2-129	C	27	R	3	2.09	2.58	49.74	82.50
S-5C010	C	27	R	4	2.16	2.66	51.35	77.50
2-195	C	29	R	1	2.09	2.42	48.97	82.50
2-166	C	29	R	2	2.08	3.10	49.97	82.50
2-208	C	29	R	3	2.08	2.90	49.92	82.50
2-145	C	29	R	4	2.08	2.74	49.80	82.50
2-301	C	31	R	1	2.08	2.60	49.10	82.50
2-194	C	31	R	2	2.07	2.98	49.28	82.50
2-210	C	31	R	3	2.17	2.22	48.16	80.00
2-131	C	31	R	4	2.16	2.34	48.21	80.00
2-175	C	33	R	1	2.12	2.62	48.20	80.00
2-170	C	33	R	2	2.11	2.36	48.25	80.00
2-136	C	33	R	3	2.10	2.54	47.68	80.00
2-138	C	33	R	4	2.11	2.54	46.88	77.50
2-218	C	35	R	1	2.10	2.52	48.61	80.00
2-151	C	35	R	2	2.09	3.14	47.57	80.00
2-196	C	35	R	3	2.10	2.26	46.45	77.50
2-182	C	35	R	4	2.10	3.18	47.94	80.00
2-188	C	37	R	1	2.09	2.42	48.25	80.00
2-178	C	37	R	2	2.09	3.24	46.97	77.50
2-125	C	37	R	3	2.07	2.70	45.71	75.00
S-5C002	C	37	R	4	2.17	2.62	50.27	77.50
2-162	C	39	R	1	2.09	2.40	48.03	80.00
2-204	C	39	R	2	2.09	2.88	46.97	77.50
2-139	C	39	R	3	2.09	2.50	47.14	77.50
S-5C003	C	39	R	4	2.18	2.60	50.99	77.50
2-187	C	41	R	1	2.09	2.98	47.97	80.00
2-157	C	41	R	2	2.09	2.48	46.41	77.50
2-193	C	41	R	3	2.08	3.62	46.57	77.50
S-5C004	C	41	R	4	2.16	2.60	50.84	77.50
2-140	C	43	R	1	2.09	2.34	48.32	80.00
2-135	C	43	R	2	2.08	2.72	46.88	77.50
2-172	C	43	R	3	2.07	3.66	46.17	77.50
2-117	C	43	R	4	2.14	2.54	46.26	77.50
2-203	C	45	R	1	2.08	3.12	48.16	80.00
2-173	C	45	R	2	2.07	3.26	46.02	77.50
2-159	C	45	R	3	2.07	2.76	44.99	75.00
S-5C006	C	45	R	4	2.17	2.52	49.97	75.00
2-209	C	47	R	1	2.15	2.06	48.67	80.00
2-142	C	47	R	2	2.14	2.30	48.35	80.00
2-126	C	47	R	3	2.15	2.56	46.27	77.50
2-300	C	47	R	4	2.12	2.24	49.67	82.50

Transducer Number		2-139				% Efficiency	
Freq. MHz	DC mA	DC Volts	US Watts	DC Watts	RF Watts	DC to US	RF to US
2.04	220.10	25.87	2.58	5.69	3.43	45.31%	75.22%
2.05	214.30	25.89	2.52	5.55	3.34	45.47%	75.49%
2.06	211.60	25.89	2.50	5.48	3.30	45.63%	75.75%
2.07	214.20	25.89	2.56	5.55	3.34	46.16%	76.63%
2.08	212.40	25.89	2.56	5.50	3.31	46.55%	77.28%
2.09	204.70	25.91	2.50	5.30	3.20	47.14%	78.25%
2.10	197.30	25.94	2.40	5.12	3.08	46.89%	77.84%
2.11	193.00	25.95	2.36	5.01	3.02	47.12%	78.22%
2.12	189.30	25.96	2.30	4.91	2.96	46.80%	77.69%
2.13	183.80	25.97	2.22	4.77	2.88	46.51%	77.20%
2.14	178.20	25.99	2.12	4.63	2.79	45.77%	75.99%
2.15	178.30	25.99	2.10	4.63	2.79	45.32%	75.23%
2.16	183.30	25.97	2.14	4.76	2.87	44.96%	74.63%
2.17	186.90	25.97	2.18	4.85	2.92	44.91%	74.56%
2.18	186.90	25.96	2.18	4.85	2.92	44.93%	74.58%

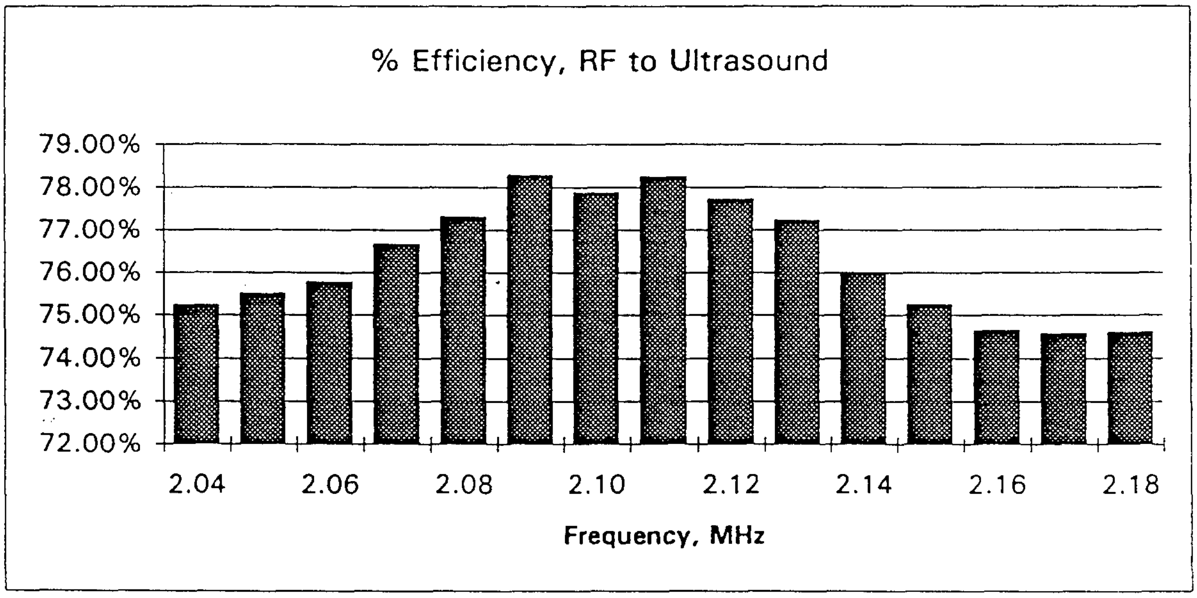
% Efficiency, RF to Ultrasound

Efficiency from DC to RF is 60% as measured with Bird meter at 2 to 3 watts ultrasound.
DC to RF efficiency increases to around 75% at 10 watts ultrasound power
DC to RF efficiency increases to around 90% at 20 watts ultrasound power

Appendix D

T/R MUX Applicator Transducer Interconnections Map

OCTANT 1

10 Apr, 1995

COL 0	COL 1	COL 2	COL 3	COL 4	COL 5
2.0M C1 CH1	4.5M C2 CH1	2.0M C3 CH1	4.5M C4 CH1	2.0M C5 CH1	4.5M C6 CH1
2.0M C1 CH5	4.5M C2 CH5	2.0M C3 CH5	4.5M C4 CH5	2.0M C5 CH5	4.5M C6 CH5
2.0M C1 CH9	4.5M C2 CH9	2.0M C3 CH9	4.5M C4 CH9	2.0M C5 CH9	4.5M C6 CH9
2.0M C1 CH13	4.5M C2 CH13	2.0M C3 CH13	4.5M C4 CH13	2.0M C5 CH13	4.5M C6 CH13
2.5M C13 CH1	4.5M C14 CH1	2.5M C15 CH1	4.5M C16 CH1	2.5M C17 CH1	4.5M C18 CH1
2.5M C13 CH5	4.5M C14 CH5	2.5M C15 CH5	4.5M C16 CH5	2.5M C17 CH5	4.5M C18 CH5
2.5M C13 CH9	4.5M C14 CH9	2.5M C15 CH9	4.5M C16 CH9	2.5M C17 CH9	4.5M C18 CH9
2.5M C13 CH13	4.5M C14 CH13	2.5M C15 CH13	4.5M C16 CH13	2.5M C17 CH13	4.5M C18 CH13

OCTANT 2

10 Apr, 1995

COL 6	COL 7	COL 8	COL 9	COL 10	COL 11
2.0M C7 CH1	4.5M C8 CH1	2.0M C9 CH1	4.5M C10 CH1	2.0M C11 CH1	4.5M C12 CH1
2.0M C7 CH5	4.5M C8 CH5	2.0M C9 CH5	4.5M C10 CH5	2.0M C11 CH5	4.5M C12 CH5
2.0M C7 CH9	4.5M C8 CH9	2.0M C9 CH9	4.5M C10 CH9	2.0M C11 CH9	4.5M C12 CH9
2.0M C7 CH13	4.5M C8 CH13	2.0M C9 CH13	4.5M C10 CH13	2.0M C11 CH13	4.5M C12 CH13
2.5M C19 CH1	4.5M C20 CH1	2.5M C21 CH1	4.5M C22 CH1	2.5M C23 CH1	4.5M C24 CH1
2.5M C19 CH5	4.5M C20 CH5	2.5M C21 CH5	4.5M C22 CH5	2.5M C23 CH5	4.5M C24 CH5
2.5M C19 CH9	4.5M C20 CH9	2.5M C21 CH9	4.5M C22 CH9	2.5M C23 CH9	4.5M C24 CH9
2.5M C19 CH13	4.5M C20 CH13	2.5M C21 CH13	4.5M C22 CH13	2.5M C23 CH13	4.5M C24 CH13

OCTANT 3

10 Apr, 1995

COL 12	COL 13	COL 14	COL 15	COL 16	COL 17
2.0M C13 CH2	4.5M C14 CH2	2.0M C15 CH2	4.5M C16 CH2	2.0M C17 CH2	4.5M C18 CH2
2.0M C13 CH6	4.5M C14 CH6	2.0M C15 CH6	4.5M C16 CH6	2.0M C17 CH6	4.5M C18 CH6
2.0M C13 CH10	4.5M C14 CH10	2.0M C15 CH10	4.5M C16 CH10	2.0M C17 CH10	4.5M C18 CH10
2.0M C13 CH14	4.5M C14 CH14	2.0M C15 CH14	4.5M C16 CH14	2.0M C17 CH14	4.5M C18 CH14
2.5M C1 CH2	4.5M C2 CH2	2.5M C3 CH2	4.5M C4 CH2	2.5M C5 CH2	4.5M C6 CH2
2.5M C1 CH6	4.5M C2 CH6	2.5M C3 CH6	4.5M C4 CH6	2.5M C5 CH6	4.5M C6 CH6
2.5M C1 CH10	4.5M C2 CH10	2.5M C3 CH10	4.5M C4 CH10	2.5M C5 CH10	4.5M C6 CH10
2.5M C1 CH14	4.5M C2 CH14	2.5M C3 CH14	4.5M C4 CH14	2.5M C5 CH14	4.5M C6 CH14

OCTANT 4

10 Apr, 1995

COL 18	COL 19	COL 20	COL 21	COL 22	COL 23
2.0M C19 CH2	4.5M C20 CH2	2.0M C21 CH2	4.5M C22 CH2	2.0M C23 CH2	4.5M C24 CH2
2.0M C19 CH6	4.5M C20 CH6	2.0M C21 CH6	4.5M C22 CH6	2.0M C23 CH6	4.5M C24 CH6
2.0M C19 CH10	4.5M C20 CH10	2.0M C21 CH10	4.5M C22 CH10	2.0M C23 CH10	4.5M C24 CH10
2.0M C19 CH14	4.5M C20 CH14	2.0M C21 CH14	4.5M C22 CH14	2.0M C23 CH14	4.5M C24 CH14
2.5M C7 CH2	4.5M C8 CH2	2.5M C9 CH2	4.5M C10 CH2	2.5M C11 CH2	4.5M C12 CH2
2.5M C7 CH6	4.5M C8 CH6	2.5M C9 CH6	4.5M C10 CH6	2.5M C11 CH6	4.5M C12 CH6
2.5M C7 CH10	4.5M C8 CH10	2.5M C9 CH10	4.5M C10 CH10	2.5M C11 CH10	4.5M C12 CH10
2.5M C7 CH14	4.5M C8 CH14	2.5M C9 CH14	4.5M C10 CH14	2.5M C11 CH14	4.5M C12 CH14

OCTANT 5

10 Apr, 1995

COL 24	COL 25	COL 26	COL 27	COL 28	COL 29
2.0M C13 CH3	4.5M C14 CH3	2.0M C15 CH3	4.5M C16 CH3	2.0M C17 CH3	4.5M C18 CH3
2.0M C13 CH7	4.5M C14 CH7	2.0M C15 CH7	4.5M C16 CH7	2.0M C17 CH7	4.5M C18 CH7
2.0M C13 CH11	4.5M C14 CH11	2.0M C15 CH11	4.5M C16 CH11	2.0M C17 CH11	4.5M C18 CH11
2.0M C13 CH15	4.5M C14 CH15	2.0M C15 CH15	4.5M C16 CH15	2.0M C17 CH15	4.5M C18 CH15
2.5M C1 CH3	4.5M C2 CH3	2.5M C3 CH3	4.5M C4 CH3	2.5M C5 CH3	4.5M C6 CH3
2.5M C1 CH7	4.5M C2 CH7	2.5M C3 CH7	4.5M C4 CH7	2.5M C5 CH7	4.5M C6 CH7
2.5M C1 CH11	4.5M C2 CH11	2.5M C3 CH11	4.5M C4 CH11	2.5M C5 CH11	4.5M C6 CH11
2.5M C1 CH15	4.5M C2 CH15	2.5M C3 CH15	4.5M C4 CH15	2.5M C5 CH15	4.5M C6 CH15

OCTANT 6

10 Apr, 1995

COL 30	COL 31	COL 32	COL 33	COL 34	COL 35
2.0M C19 CH3	4.5M C20 CH3	2.0M C21 CH3	4.5M C22 CH3	2.0M C23 CH3	4.5M C24 CH3
2.0M C19 CH7	4.5M C20 CH7	2.0M C21 CH7	4.5M C22 CH7	2.0M C23 CH7	4.5M C24 CH7
2.0M C19 CH11	4.5M C20 CH11	2.0M C21 CH11	4.5M C22 CH11	2.0M C23 CH11	4.5M C24 CH11
2.0M C19 CH15	4.5M C20 CH15	2.0M C21 CH15	4.5M C22 CH15	2.0M C23 CH15	4.5M C24 CH15
2.5M C7 CH3	4.5M C8 CH3	2.5M C9 CH3	4.5M C10 CH3	2.5M C11 CH3	4.5M C12 CH3
2.5M C7 CH7	4.5M C8 CH7	2.5M C9 CH7	4.5M C10 CH7	2.5M C11 CH7	4.5M C12 CH7
2.5M C7 CH11	4.5M C8 CH11	2.5M C9 CH11	4.5M C10 CH11	2.5M C11 CH11	4.5M C12 CH11
2.5M C7 CH15	4.5M C8 CH15	2.5M C9 CH15	4.5M C10 CH15	2.5M C11 CH15	4.5M C12 CH15

OCTANT 7

10 Apr, 1995

COL 36	COL 37	COL 38	COL 39	COL 40	COL 41
2.0M C1 CH4	4.5M C2 CH4	2.0M C3 CH4	4.5M C4 CH4	2.0M C5 CH4	4.5M C6 CH4
2.0M C1 CH8	4.5M C2 CH8	2.0M C3 CH8	4.5M C4 CH8	2.0M C5 CH8	4.5M C6 CH8
2.0M C1 CH12	4.5M C2 CH12	2.0M C3 CH12	4.5M C4 CH12	2.0M C5 CH12	4.5M C6 CH12
2.0M C1 CH16	4.5M C2 CH16	2.0M C3 CH16	4.5M C4 CH16	2.0M C5 CH16	4.5M C6 CH16
2.5M C13 CH4	4.5M C14 CH4	2.5M C15 CH4	4.5M C16 CH4	2.5M C17 CH4	4.5M C18 CH4
2.5M C13 CH8	4.5M C14 CH8	2.5M C15 CH8	4.5M C16 CH8	2.5M C17 CH8	4.5M C18 CH8
2.5M C13 CH12	4.5M C14 CH12	2.5M C15 CH12	4.5M C16 CH12	2.5M C17 CH12	4.5M C18 CH12
2.5M C13 CH16	4.5M C14 CH16	2.5M C15 CH16	4.5M C16 CH16	2.5M C17 CH16	4.5M C18 CH16

OCTANT 8

10 Apr, 1995

COL 42	COL 43	COL 44	COL 45	COL 46	COL 47
2.0M C7 CH4	4.5M C8 CH4	2.0M C9 CH4	4.5M C10 CH4	2.0M C11 CH4	4.5M C12 CH4
2.0M C7 CH8	4.5M C8 CH8	2.0M C9 CH8	4.5M C10 CH8	2.0M C11 CH8	4.5M C12 CH8
2.0M C7 CH12	4.5M C8 CH12	2.0M C9 CH12	4.5M C10 CH12	2.0M C11 CH12	4.5M C12 CH12
2.0M C7 CH16	4.5M C8 CH16	2.0M C9 CH16	4.5M C10 CH16	2.0M C11 CH16	4.5M C12 CH16
2.5M C19 CH4	4.5M C20 CH4	2.5M C21 CH4	4.5M C22 CH4	2.5M C23 CH4	4.5M C24 CH4
2.5M C19 CH8	4.5M C20 CH8	2.5M C21 CH8	4.5M C22 CH8	2.5M C23 CH8	4.5M C24 CH8
2.5M C19 CH12	4.5M C20 CH12	2.5M C21 CH12	4.5M C22 CH12	2.5M C23 CH12	4.5M C24 CH12
2.5M C19 CH16	4.5M C20 CH16	2.5M C21 CH16	4.5M C22 CH16	2.5M C23 CH16	4.5M C24 CH16

Appendix F

FDA Forms 1572 and CV's

DEPARTMENT OF HEALTH AND HUMAN SERVICES
PUBLIC HEALTH SERVICE
FOOD AND DRUG ADMINISTRATION
STATEMENT OF INVESTIGATOR
(TITLE 21, CODE OF FEDERAL REGULATIONS (CFR) Part 312)
(See instructions on reverse side.)

Form Approved: OMB No 0910-0014.
Expiration Date: November 30, 1995.
See OMB Statement on Reverse.

NOTE: No investigator may participate in an investigation until he/she provides the sponsor with a completed, signed Statement of Investigator, Form FDA 1572 (21 CFR 312.53(c))

1. NAME AND ADDRESS OF INVESTIGATOR.

Bruce A. Bornstein, M.D.
Joint Center for Radiation therapy
Dana-Farber Cancer Institute Division
330 Brookline Avenue
Boston MA 02215

2. EDUCATION, TRAINING, AND EXPERIENCE THAT QUALIFIES THE INVESTIGATOR AS AN EXPERT IN THE CLINICAL INVESTIGATION OF THE DRUG FOR THE USE UNDER INVESTIGATION. ONE OF THE FOLLOWING IS ATTACHED:

☒ CURRICULUM VITAE ☐ OTHER STATEMENT OF QUALIFICATIONS

3. NAME AND ADDRESS OF ANY MEDICAL SCHOOL, HOSPITAL, OR OTHER RESEARCH FACILITY WHERE THE CLINICAL INVESTIGATION(S) WILL BE CONDUCTED.

Dana-Farber Cancer Institute
44 Binney St
Boston MA 02115

4. NAME AND ADDRESS OF ANY CLINICAL LABORATORY FACILITIES TO BE USED IN THE STUDY.

Clinical Laboratory
Dana-Farber Cancer Institute
44 Binney Street, D521
Boston MA 02115

5. NAME AND ADDRESS OF THE INSTITUTIONAL REVIEW BOARD (IRB) THAT IS RESPONSIBLE FOR REVIEW AND APPROVAL OF THE STUDY(IES).

Institutional Review Board
Dana-Farber Cancer Institute
44 Binney St
Boston MA 02115

6. NAMES OF THE SUBINVESTIGATORS (*e.g., research fellows, residents, associates*) WHO WILL BE ASSISTING THE INVESTIGATOR IN THE CONDUCT OF THE INVESTIGATION(S).

7. NAME AND CODE NUMBER, IF ANY, OF THE PROTOCOL(S) IN THE IND FOR THE STUDY(IES) TO BE CONDUCTED BY THE INVESTIGATOR.

Protocol name: Radiation and Thermal therapy for Extensive Intraductal carcinoma.
Protocol number: 95-006

☒ FOR PHASE 1 INVESTIGATIONS, A GENERAL OUTLINE OF THE PLANNED INVESTIGATION INCLUDING THE ESTIMATED DURATION OF THE STUDY AND THE MAXIMUM NUMBER OF SUBJECTS THAT WILL BE INVOLVED.

☐ FOR PHASE 2 OR 3 INVESTIGATIONS, AN OUTLINE OF THE STUDY PROTOCOL INCLUDING AN APPROXIMATION OF THE NUMBER OF SUBJECTS TO BE TREATED WITH THE DRUG AND THE NUMBER TO BE EMPLOYED AS CONTROLS, IF ANY; THE CLINICAL USES TO BE INVESTIGATED; CHARACTERISTICS OF SUBJECTS BY AGE, SEX, AND CONDITION; THE KIND OF CLINICAL OBSERVATIONS AND LABORATORY TESTS TO BE CONDUCTED; THE ESTIMATED DURATION OF THE STUDY; AND COPIES OR A DESCRIPTION OF CASE REPORT FORMS TO BE USED.

9. COMMITMENTS:

I agree to conduct the study(ies) in accordance with the relevant, current protocol(s) and will only make changes in a protocol after notifying the sponsor, except when necessary to protect the safety, rights, or welfare of subjects.

I agree to personally conduct or supervise the described investigation(s).

I agree to inform any patients, or any persons used as controls, that the drugs are being used for investigational purposes and I will ensure that the requirements relating to obtaining informed consent in 21 CFR Part 50 and institutional review board (IRB) review and approval in 21 CFR Part 56 are met.

I agree to report to the sponsor adverse experiences that occur in the course of the investigation(s) in accordance with 21 CFR 312.64.

I have read and understand the information in the investigator's brochure, including the potential risks and side effects of the drug.

I agree to ensure that all associates, colleagues, and employees assisting in the conduct of the study(ies) are informed about their obligations in meeting the above commitments.

I agree to maintain adequate and accurate records in accordance with 21 CFR 312.62 and to make those records available for inspection in accordance with 21 CFR 312.68.

I will ensure that an IRB that complies with the requirements of 21 CFR Part 56 will be responsible for the initial and continuing review and approval of the clinical investigation. I also agree to promptly report to the IRB all changes in the research activity and all unanticipated problems involving risks to human subjects or others. Additionally, I will not make any changes in the research without IRB approval, except where necessary to eliminate apparent immediate hazards to human subjects.

I agree to comply with all other requirements regarding the obligations of clinical investigators and all other pertinent requirements in 21 CFR Part 312.

INSTRUCTIONS FOR COMPLETING FORM FDA 1572
STATEMENT OF INVESTIGATOR:

1. Complete all sections. Attach a separate page if additional space is needed.
2. Attach curriculum vitae or other statement of qualifications as described in Section 2.
3. Attach protocol outline as described in Section 8.
4. Sign and date below.
5. FORWARD THE COMPLETED FORM AND ATTACHMENTS TO THE SPONSOR. The sponsor will incorporate this information along with other technical data into an Investigational New Drug Application (IND). INVESTIGATORS SHOULD NOT SEND THIS FORM DIRECTLY TO THE FOOD AND DRUG ADMINISTRATION.

10. SIGNATURE OF INVESTIGATOR Bruce A. Bernstein	11. DATE 11-14-96

Public reporting burden for this collection of information is estimated to average 84 hours per response, including the time for reviewing instructions, searching existing data sources, gathering and maintaining the data needed, and completing reviewing the collection of information. Send comments regarding this burden estimate or any other aspect of this collection of information, including suggestions for reducing this burden to:

Reports Clearance Officer, PHS
Hubert H. Humphrey Building, Room 721-B
200 Independence Avenue, S.W.
Washington, DC 20201
Attn: PRA

and to:

Office of Management and Budget
Paperwork Reduction Project (0910-0014)
Washington, DC 20503

Please DO NOT RETURN this application to either of these addresses.

Curriculum Vitae

Name: Bruce Alan Bornstein

Address: 11 Edgewater Drive
Dover, MA 02030

Date of Birth: February 8, 1957

Place of Birth: Boston, MA

Education:

1979 S.B.	Massachusetts Institute of Technology, Cambridge, MA (Biomedical/Mechanical Engineering)
1983 M.D.	Tufts University School of Medicine, Boston, MA

Postdoctoral Training:

Internship and Residency:

1983-84	Intern in Medicine, Mount Auburn Hospital, Harvard Medical School, Cambridge, MA
1984-88	Resident in Radiation Therapy, Joint Center for Radiation Therapy, Harvard Medical School, Boston, MA

Research Fellowships:

1977-79	Research Assistant, Laboratory for Medical Technology, Massachusetts Institute of Technology, Cambridge, MA
1986-87	Research Fellow in Radiation Therapy, Joint Center for Radiation Therapy, Harvard Medical School, Boston, MA
1987-88	Research Fellow, Department of Cancer Biology, Harvard School of Public Health, Boston, MA

Licensure and Certification:

1984	Diplomate of the National Board of Medical Examiners
1984	Massachusetts License Registration
1988	American Board of Radiology (Therapeutic Radiology), Certificate

Academic Appointments:

1984-88	Clinical Fellow in Radiation Therapy, Joint Center for Radiation Therapy, Department of Radiation Therapy, Harvard Medical School
1988-95	Instructor, Joint Center for Radiation Therapy, Department of Radiation Therapy, Harvard Medical School

1993-	Deputy Division Chief, Dana-Farber Cancer Institute Division, Joint Center for Radiation Therapy, Harvard Medical School
1993-	Director of Clinical Hyperthermia, Joint Center for Radiation Therapy and Dana-Farber Cancer Institute, Harvard Medical School
1995-	Assistant Professor, Joint Center for Radiation Therapy, Department of Radiation Therapy, Harvard Medical School

Other Professional Positions:

1979-80	Mechanical Engineer, Lion Precision Corporation, Newton, MA

Awards and Honors:

1978	Tau Beta Pi - National Engineers Honor Society
1978	Pi Tau Sigma - Mechanical Engineers Honor Society
1978	Awarded by MIT Mechanical Engineering Department for Best Tensile Test Specimen produced by a Student

Major Committee Assignments:

1988-93	Scientific Review Board and Committee for Protection of Human Subjects (IRB), voting member, New England Deaconess Hospital, Boston, MA
1996-	Executive Committee; Clinical Operations Committee; Education Committee; Information Systems Sub-committee; Women's Cancer Program, Dana-Farber Partners Cancer Care, Boston, MA

Memberships, Offices and Professional Societies:

1980-	American Medical Association (AMA)
1980-	Massachusetts Medical Society
1985-	American Society for Therapeutic Radiology and Oncology (ASTRO)
1985-	American College of Radiology (ACR)
1988-	Radiation Research Society
1988-	North American Hyperthermia Society (NAHS)
1988-	New England Society of Radiation Oncology (NESRO)
1989-	President, MIT Class of 1979
1990-	American Society of Clinical Oncology (ASCO)
1994-	American College of Radiation Oncology (ACRO)
1995-	Elected Office, Councilor in Medicine of the NAHS

Major Research Interests:

1. Breast Cancer: The clinical study of breast cancer. Improving the technical delivery of radiation therapy.
2. Hyperthermia: The clinical development, application, and evaluation of tumor site-specific equipment for use in hyperthermia therapy. The study of the cellular biochemistry of hyperthermia.
3. Radiation Treatment Planning: Integrating diagnostic studies for the optimization of radiation therapy treatment planning.

Research Funding Information:

Past:

1987-88	National Research Service Award-Radiation Training Grant Fellowship, NCI CA 09078-12, P.I. John B. Little, M.D.
1992-1995	NCI 2 P01 CA 31303-07A1, P.I. C. Norman Coleman. Title: Optimization of Hyperthermia: Biological and Physical Studies.

Current:

1993-	Department of Defense-U.S. Army Grant for Breast Cancer Research, Log #9216003, P.I. Goran K. Svensson, Ph.D. Grant Period 1993-1996. Title: Use of Combination Thermal Therapy and Radiation in Breast-Conserving Treatment of Extensive Intraductal Breast Cancer.
1996-	NCI 5 P01 CA 31303-10, P.I. C. Norman Coleman. Grant Period 1996-1999. Title: Optimization of Hyperthermia: Clinic, Biology, Physics.
1996-	NCI 2 R01 CA 48939-06, P.I. Kullervo Hynynen. Grant Period 1996-2001. Title: Intracavitary Ultrasound Hyperthermia.

Teaching Experience:

Harvard Medical School

1985-87	Lecturer, Radiation Therapy Resident Seminar Series, Joint Center for Radiation Therapy, Harvard Medical School, Boston, MA.
1993	Faculty Speaker and Panel Member, Modern Surgical Oncology for the General Surgeon, Department of Continuing Education, Harvard Medical School, Cambridge, MA. "Breast cancer: Radiation techniques." (5/22/93)

Faculty Speaker and Panel Member, Critical Issues in Breast Cancer Management, Department of Continuing Education, Harvard Medical School, Boston, MA. "Ductal Carcinoma In Situ: How should it be treated." (12/10/93)

1994- Faculty Speaker, Hyperthermia: Biology, Technology, and Cancer Therapy (subject HST532J), Health Sciences and Technology Program, Harvard Medical School & Massachusetts Institute of Technology, Cambridge, MA. (2/8/94 and 2/23/95)

Invited Presentations

1985- Lecturer, Radiation Therapy Technology Program, Allied Health Sciences Department, Massachusetts College of Pharmacy. (1985-present)

1988 Visiting Lecturer, Academic Conference, Breast Evaluation Center, Dana-Farber Cancer Institute, Boston, MA. "The role of radiation therapy and hyperthermia in the management of chest wall recurrence." (12/7/88)

1989 Visiting Lecturer, Breast Cancer Tumor Conference, Beth Israel Hospital, Boston, MA. "Role of radiation therapy and hyperthermia in breast cancer." (1/89)

1991 Invited Speaker, Rehabilitation Services Conference, New England Deaconess Hospital, Boston, MA. "The management of lytic lesions in the lower extremities." (3/21/91)

Invited Lecturer, Fifteenth Annual Meeting of the American Society of Radiologic Technologists, Washington D.C. "Hyperthermia may help to improve local tumor control." (11/6/91)

1992 Invited Speaker, International Congress on Hyperthermic Oncology (ICHO), Tucson, AZ. "Hyperthermia, radiation therapy and chemotherapy in patients with local-regional recurrence of breast carcinoma." (4/29/92)

Visiting Lecturer, Academic Conference, Breast Evaluation Center, Dana-Farber Cancer Institute, Boston, MA. "Hyperthermia and the potential roles in the treatment of breast cancer." (8/19/92)

Surgical Grand Rounds, Cambridge Hospital, Cambridge, MA. "Hyperthermia: An additional modality of cancer treatment." (10/29/92)

Invited Speaker, American Association of Physicists in Medicine (New England Chapter), Worcester, MA. "Hyperthermia: An additional modality of cancer treatment." (12/9/92)

1993	Invited Speaker/Participant, Working Group on the Pulmonary Complications Associated with Breast Cancer Therapy, National Heart, Lung, and Blood Institute, Rockville, MD. "Pulmonary complications related to radiotherapy for breast cancer." (9/20/93)
	Oncology Grand Rounds, Tufts-New England Medical Center, Boston, MA. "Current Trends in the Clinical Application of Hyperthermia." (12/17/93)
1994	Invited Speaker and Panel Member, Oncologic Issues of the 90's: "Daily Dilemmas in Cancer Care," Twenty-sixth Annual Southeastern Wisconsin Cancer Conference, American Cancer Society, Milwaukee, WI. "Breast Cancer: Ductal Carcinoma In Situ." (4/9/94)
	Invited Speaker, Second Annual Oncology Conference of the Spohn Health System and Texas Medical Association, Corpus Christi, TX. "DCIS of the Breast: Natural history, early detection, and radiotherapeutic management." (4/23/94)
	Invited Speaker, Eleventh Annual New England Radiation Therapist Student Day, Joint Center for Radiation Therapy, Boston, MA. "Hyperthermia." (6/1/94)
1995	Invited Speaker, Medical Grand Rounds, Lowell General Hospital, Lowell, MA. "New developments in hyperthermia and its current role in cancer management." (12/6/95)
1996	Invited Speaker and Panel Member, The 19th Annual Teaching Day: "Oncology," St. Luke's Hospital-The Cornwall Hospital and The Medical Society County of Orange, New Windsor, NY. "Breast Cancer Symposium: Role of Radiation Therapy." (5/1/96)
	Invited Speaker, Urologic Oncology Conference, Dana-Farber Cancer Institute, Boston, MA. "Prostate cancer: The possible role of hyperthermia." (5/23/96)
	Invited Speaker, Breast Cancer Conference, Women's Cancer Program, Dana-Farber Cancer Institute, Boston, MA. "Long-term cardiac effects of left-sided breast irradiation." (11/6/96)

Leadership Roles:

1993-1996	Coordinator of Monthly Lecture Series, Breast Cancer: Critical issues of local treatment, Breast Evaluation Center, Dana-Farber Cancer Institute, Boston, MA. Role: select speakers and chair meeting. (7/93-8/96)

1996-	Coordinator of Monthly Lecture Series, Breast Cancer: Critical issues of local treatment using radiation therapy, Breast Cancer Conference, Women's Cancer Program, Dana-Farber Partners Cancer Care, Dana-Farber Cancer Institute, Boston, MA. Role: select speakers and chair meeting. (9/96-present)

BIBLIOGRAPHY

1. Calderwood SK, **Bornstein B**, Farnum EK, Stevenson MA: Heat shock stimulates the release of arachidonic acid and the synthesis of prostaglandins and leukotriene B4 in mammalian cells. J Cell Physiol 141:325-333, 1989.

2. **Bornstein B**, Cheng CW, Rhodes L, Rashid H, Stomper P, Siddon R, Harris J: Can simulation measurements be used to predict the irradiated lung volume in the tangential fields in patients treated for breast cancer? Int J Radiat Oncol Biol Phys 18:181-187, 1990.

3. **Bornstein BA**, Recht A, Connolly JL, Schnitt SJ, Cady B, Koufman C, Love S, Osteen RT, Harris JR: Results of treating ductal carcinoma in situ of the breast with conservative surgery and radiation therapy. Cancer 67:7-13, 1991.

4. Solin LJ, Recht A, Fourquet A, Kurtz J, Kuske R, McNeese M, McCormick B, Cross MA, Schultz DJ, **Bornstein BA**, Spitalier JM, Vilcoq JR, Fowble BL, Harris JR, Goodman RL: Ten-year results of breast-conserving surgery and definitive irradiation for intraductal carcinoma (ductal carcinoma in situ) of the breast. Cancer 68:2337-2344, 1991.

5. **Bornstein BA**, Zouranjian PS, Hansen JL, Fraser SM, Gelwan LA, Teicher BA, Svensson GK: Local hyperthermia, radiation therapy, chemotherapy in patients with local-regional recurrence of breast cancer. Int J Radiat Oncol Biol Phys 25:79-85, 1993.

6. Uematsu M, **Bornstein BA**, Recht A, Abner A, Come SE, Shulman LN, Silver B, Harris JR: Long-term results of post-operative radiation therapy following mastectomy with or without chemotherapy in stage I-III breast cancer. Int J Radiat Oncol Biol Phys 25:765-770, 1993.

7. Hiramatsu H, **Bornstein BA**, Recht A, Schnitt SJ, Baum JK, Connolly JL, Duda RB, Guidi AJ, Kaelin CM, Silver B, Harris JR: Local recurrence after conservative surgery and radiation therapy for ductal carcinoma in situ: possible role of family history. Cancer J Sci Am 1:55-61, 1995.

8. **Bornstein BA**, Herman TS, Buswell L, Hansen J, Zouranjian PS, Fraser SM, Teicher BA, Svensson GK, Coleman CN: Pilot study of local hyperthermia, radiation therapy, etanidazole, and cisplatin for advanced superficial tumors. Int J Hyperthermia 11:489-499, 1995.

9. Gage I, Recht A, Gelman R, Nixon AJ, Silver B, **Bornstein BA**, Harris JR: Long-term outcome following breast-conserving surgery and radiation therapy. Int J Radiat Oncol Biol Phys 33:245-251, 1995.

10. Solin LJ, Kurtz J, Fourquet A, Amalric R, Recht A, **Bornstein BA**, Kuske R, Taylor M, Barrett W, Fowble B, Haffty B, Schultz DJ, Yeh I-T, McCormick B, McNeese M: Fifteen-year results of breast-conserving surgery and definitive irradiation for the treatment of ductal carcinoma in situ of the breast. J Clin Oncol 14:754-763, 1996.

11. Solin LJ, McCormick B, Recht A, Haffty B, Taylor M, Kuske R, **Bornstein BA**, McNeese M, Schultz DJ, Fowble B, Barrett W, Yeh I-T, Kurtz J, Amalric R, Fourquet A: Mammographically detected, clinically occult ducal carcinoma in situ treated with breast-conserving surgery and definitive breast irradiation. Cancer J Sci Am 2:158-165, 1996.

12. Lu X-Q, Burdette EC, **Bornstein BA**, Hansen JL, Svensson GK: Design of an ultrasonic therapy system for breast cancer treatment. Int J Hyperthermia 12:375-399, 1996.

13. Nixon AJ, Schnitt SJ, Gelman R, Gage I, **Bornstein B**, Hetelekidis S, Recht A, Silver B, Harris JR, Connolly JL: Relationship of tumor grade to other pathologic features and to treatment outcome for patients with early stage breast carcinoma treated with breast-conserving therapy. Cancer 78:1426-1431, 1996.

REVIEWS AND CHAPTERS

1. **Bornstein B**: System for Positioning and Moving Ultrasonic Transducers for Cancer Therapy by Hyperthermia. Undergraduate Thesis, MIT, 1979. Supervisor: Prof. P. P. Lelē.

2. **Bornstein BA**, Coleman CN: Innovative approaches to local therapy. In Harris JR, Hellman S, Henderson IC, Kinne DW (eds): Breast Diseases. 2nd ed. Philadelphia, JB Lippincott, p673-677, 1990.

3. Calderwood SK, Price BD, Rodman LA, Stevenson MA, **Bornstein BA**: Effects of hyperthermia on patterns of eicosanoid synthesis; potential roles in altered cell behaviour and gene expression. In Nigam S, Honn KV, Marnett LJ, Walden TL (eds): Eicosanoids and other bioactive lipids in cancer, inflammation and radiation injury: proceedings of the second international conference, Sept. 17-21, 1991. p479-483, 1993.

4. **Bornstein BA**, Zouranjian PS, Hansen JL, Fraser SM, Gelwan LA, Teicher BA, Svensson GK: Combined radiation therapy, hyperthermia, and systemic therapy in patients with local-regional recurrence of breast cancer. In Gerner EW, Cetas TC (eds): Hyperthermic Oncology 1992. Vol. 2. Plenary and Symposia Lectures. p329-331. Tucson, Arizona Board of Regents, 1993.

5. Abrams J, Chemiack RM, **Bornstein B**, Boyd M, Brodie A, Davidson N, Fisher J, Jones R, Lazo J, Martin W, Mossman B, Peters W, Redlich C, Witschi H, Hurd S, Kalica A: Summary report of working group on pulmonary complications related to breast cancer therapy. The Heart, Lung, and Blood Newsletter 10 (2):13-18, 1994.

6. Hansen JL, **Bornstein BA**, Svensson GK, Newman WH, Martin GT, Sidney DA, Bowman HF: A quantitative, integrated, clinical focused ultrasound system for deep hyperthermia. In Hayes LJ, Roemer RB (eds): Advances in Heat and Mass Transfer in Biological Systems. Vol. 288. Addendum p1-9. New York, American Society of Mechanical Engineers, 1994. International Mechanical Engineering Congress & Exposition Mechanical Engineers. November 6-11, 1994, Chicago, IL.

7. Parker LM, **Bornstein BA**: Endocrine and cytotoxic therapies for the management of advanced breast cancer. In Bland KI: Management Strategies for the Care of Advanced Primary and Metastatic Breast Cancer. Surgical Oncology Clinics of North America Vol. 4(4). Philadelphia, W. B. Saunders Company, p779-790, October 1995.

8. Hansen JL, Burdette EC, Lu X-Q, **Bornstein BA**, Svensson GK: Experimental verification of a cylindrical multi-transducer ultrasound breast hyperthermia treatment system. In Franconi C, Arcangeli G, Cavaliere R (eds): Hyperthermic Oncology 1996. Vol. 2. Papers presented at the Congress. p388-390. Rome, Italy, Tor Vergata, 1996.

9. Burdette, EC, Hansen JL, Lu X-Q, Neubauer PL, Foard WW, Grossman LJ, **Bornstein BA**, Svensson GK: Real-time computer controlled ultrasound therapy and monitoring system for breast cancer treatment. In Franconi C, Arcangeli G, Cavaliere R (eds): Hyperthermic Oncology 1996. Vol. 2. Papers presented at the Congress. p391-393. Rome, Italy, Tor Vergata, 1996.

10. **Bornstein BA**, Harris JR, Hetelekidis S, Hiramatsu H, Recht A: Joint Center for Radiation Therapy Experience. In Silverstein MJ, Lagios MD, Poller DN, Recht A (eds): Ductal Carcinoma in situ: A Diagnostic and Therapeutic Dilemma. Baltimore, Williams & Wilkins, [In press].

ABSTRACTS

1. Calderwood S, **Bornstein B**, Farnum E, Stevenson MA: Activation of phospholipase A2 by hyperthermia. Thirty-fifth Annual Meeting of the Radiation Research Society and Seventh Annual Meeting of the North American Hyperthermia Group. February 21-26, 1987, Atlanta, GA.

2. **Bornstein B**, Farnum E, Stevenson MA, Calderwood S: Hyperthermia, phospholipase A2 and prostaglandins. Thirty-sixth Annual Meeting of the Radiation Research Society and Eighth Annual Meeting of the North American Hyperthermia Group. April 16-21, 1988, Philadelphia, PA.

3. **Bornstein B**, Cheng CW, Rhodes L, Rashid H, Stomper P, Harris J: Can measurements taken at simulation be used to predict the volume of lung within the radiation therapy treatment fields in breast cancer patients? Thirtieth Annual Meeting of the American Society of Therapeutic Radiology and Oncology. October 9-14, 1988, New Orleans, LA. Int J Radiat Oncol Biol Phys 15(Supp 1):192-193, 1988.

4. Recht A, **Bornstein B**, Connolly JL, Harris JR: Treatment of noninvasive ductal carcinoma with conservative surgery and radiation therapy: results at the Joint Center for Radiation Therapy. EORTC In Situ Breast Cancer Workshop. 1988, Castle Marquette, the Netherlands.

5. Herman T, Jochelson M, Teicher B, Scott P, Hansen J, Gelwan L, **Bornstein B**: A phase I-II trial of cisplatin, hyperthermia and radiation in patients with locally advanced malignancies. Thirty-seventh Annual Meeting of the Radiation Research Society and Ninth Annual Meeting of the North American Hyperthermia Group. March 18-23, 1989, Seattle, WA.

6. Chang S, Hansen J, Kijewski P, **Bornstein B**, Herman T, Svensson G: Transferring CT information to a scanned focused ultrasound hyperthermia system by thermocouple heating effect. Thirty-first Annual Meeting of the American Association of Physicists in Medicine. July 23-27, 1989, Memphis, TN. Medical Physics 16(3):470, 1989.

7. Recht A, **Bornstein B**, Connolly JL, Schnitt SJ, Harris JR: Treatment of ductal carcinoma in-situ (DCIS) with conservative surgery (CS) & radiotherapy (RT). Proceedings of the Fifth European Conference of Clinical Oncology [# O-853]. September 1989, London.

8. Hansen J, Kooy H, Kijewski P, **Bornstein B**, Jochelson M, Herman T, Svensson G: 3-D graphics tools for planning of hyperthermia deep therapy. Thirty-eight Annual Meeting of the Radiation Research Society and Tenth Annual Meeting of the North American Hyperthermia Group. April 7-12, 1990, New Orleans, LA.

9. Cheng CW, Chin L, **Bornstein B**, Harris J: 3D treatment planning in tangential breast irradiation with compensators. Thirty-second Annual Meeting of the American Association of Physicists in Medicine. July 22-26, 1990, St. Louis MI. Medical Physics 17(3):514, 1990.

10. Recht A, **Bornstein BA**, Connolly JL, Schnitt SJ, Harris JR: Treatment of noninvasive ductal carcinoma - experience of the Joint Center for Radiation Therapy. Breast Disease 4:17, 1991.

11. Svensson GK, **Bornstein B**, DelliCarpini D, Hansen J, Herman T, Bowman F, Newman W, Burdette E, Goss S: A weakly focused ultrasound applicator for deep hyperthermia. Thirty-third Annual Meeting of the American Association of Physicists in Medicine. July 21-25, 1991, San Francisco, CA. Medical Physics 18(3):636, 1991.

12. **Bornstein BA**, Zouranjian P, Hansen J, Fraser SM, Svensson G, Teicher BA, Herman TS: Hyperthermia, radiation therapy and chemotherapy in patients with local-regional recurrence of breast carcinoma. Thirty-third Annual Meeting of the American Society of Therapeutic Radiology and Oncology. November 4-8, 1991, Washington D.C. Int J Radiat Oncol Biol Phys 21(Supp 1):116, 1991.

13. Svensson GK, Hansen JL, DelliCarpini D, **Bornstein B**, Herman T, Bowman F, Newman W: SAR and temperature distributions from a spherical focused, segmented ultrasound machine (FSUM). In Gerner EW, Cetas TC (eds): Hyperthermic Oncology 1992. Vol. 1. Summary Papers. Proceedings of the 6th International Congress on Hyperthermic Oncology. p335. Arizona Board of Regents. April 27-May 1, 1992, Tucson, AZ.

14. Bowman HF, Martin GT, Newman WH, Kumar S, Welch C, **Bornstein B**, Herman TS: Human tumor perfusion measurements during hyperthermia therapy. In Gerner EW, Cetas TC (eds): Hyperthermic Oncology 1992. Vol. 1 Addendum. Summary Papers. Proceedings of the 6th International Congress on Hyperthermic Oncology. pA17. Arizona Board of Regents. April 27-May 1, 1992, Tucson, AZ.

15. **Bornstein BA**, Zouranjian PS, Hansen JL, Fraser SM, Gelwan LA, Teicher BA, Svensson GK: Hyperthermia, radiation therapy and chemotherapy in patients with local-regional recurrence of breast carcinoma. In Gerner EW, Cetas TC (eds): Hyperthermic Oncology 1992. Vol. 1. Summary Papers. Proceedings of the 6th International Congress on Hyperthermic Oncology. p56. Arizona Board of Regents. April 27-May 1, 1992, Tucson, AZ.

16. Plunkett ME, Kijewski PK, **Bornstein BA**, Recht A, Harris JR: Breast treatment simulation and planning with a simulator-CT. Thirty-fifth Annual Meeting of the American Association of Physicists in Medicine. August 8-12, 1993, Washington D.C. Medical Physics 20(3):930, 1993.

17. Plunkett ME, **Bornstein BA**, Costello P, Kijewski PK, Harris JR: Use of spiral CT in the assessment of cardiac structures for planing 3D volumetric radiation treatment of the breast. Seventy-ninth Scientific Assembly and Annual Meeting of the Radiological Society of North America. November 28-December 3, 1993, Chicago IL. Radiology 189(P)(Supp):355, 1993.

18. Fenn AJ, **Bornstein BA**, Svensson GK: Minimally invasive monopole phased arrays for hyperthermia treatment of tumors in compressed breast tissue. Seventy-ninth Scientific Assembly and Annual Meeting of the Radiological Society of North America,. November 28-December 3, 1993, Chicago, IL. Radiology 189(P)(Supp):291, 1993.

19. **Bornstein BA**, Herman TS, Buswell L, Hansen J, Zouranjian PS, Fraser SM, Teicher BA, Svensson GK, Coleman CN: Pilot study of local hyperthermia, radiation therapy, etanidazole, and cisplatin for advanced superficial tumors. Forty-second Annual Meeting of the Radiation Research Society and Fourteenth Annual Meeting of the North American Hyperthermia Society. April 29-May 4, 1994, Nashville, TN.

20. Lu X-Q, Svensson GK, Hansen JL, **Bornstein BA**, Harris JR, Burdette EC, Slayton M, Barthe P: Design of an Ultrasound Hyperthermia Unit for Breast Cancer Treatment. Forty-second Annual Meeting of the Radiation Research Society and Fourteenth Annual Meeting of the North American Hyperthermia Society. April 29-May 4, 1994, Nashville, TN.

21. Fenn AJ, **Bornstein BA**, Svensson GK, Bowman HF: Minimally invasive monopole phased arrays for hyperthermia treatment of breast carcinomas: design and phantom tests. 1994 International Symposium on Electromagnetic Compatibility. May 17-19, 1994, Sendai Japan.

22. Svensson GK, Lu X-Q, Hansen JL, **Bornstein BA**, Burdette EC: An innovative design concept for an ultrasound hyperthermia unit for breast cancer treatment. 1994 International Symposium on Electromagnetic Compatibility. May 17-19, 1994, Sendai Japan.

23. Hiramatsu H, **Bornstein B**, Recht A, Silver B, Harris JR: Outcome and risk factors for local failure after conservative surgery and radiotherapy for ductal carcinoma in situ. Thirty-sixth Annual Meeting of the American Society of Therapeutic Radiology and Oncology. October 2-6, 1994, San Francisco, CA. Int J Radiat Oncol Biol Phys 30(Supp 1):153, 1994.

24. Gage I, Nixon A, Silver B, **Bornstein BA**, Gelman R, Recht A, Harris JR: Long-term outcome following breast-conserving therapy in early-stage disease. Thirty-sixth Annual Meeting of the American Society of Therapeutic Radiology and Oncology. October 2-6, 1994, San Francisco, CA. Int J Radiat Oncol Biol Phys 30(Supp 1):153-154, 1994.

25. Lu X-Q, Svensson GK, Hansen JL, **Bornstein BA**, Burdette EC: Experimental verification of the design of an ultrasonic hyperthermia unit for breast cancer treatment. Forty-third Annual Meeting of the Radiation Research Society and Fifteenth Annual Meeting of the North American Hyperthermia Society. April 1-6, 1995, San Jose, CA.

26. Hansen JL, **Bornstein BA**, Lu X-Q, Svensson GK, Bowman HF, Newman WH: Hyperthermia treatment of human deep tumors using the focused segmented ultrasound machine (FSUM). Forty-third Annual Meeting of the Radiation Research Society and Fifteenth Annual Meeting of the North American Hyperthermia Society. April 1-6, 1995, San Jose, CA.

27. Newman WH, Welch CJ, Bowman HF, Dowd JM, Summit SC, Hansen JL, **Bornstein BA**, Svensson GK: Temperature profilometer for quantitative real-time thermal dosimetry. Forty-third Annual Meeting of the Radiation Research Society and Fifteenth Annual Meeting of the North American Hyperthermia Society. April 1-6, 1995, San Jose, CA.

28. Bowman HF, Newman WH, Martin GT, Hsu MM, Ibrahim S, Bodenhofer MF, Hansen JL, Svensson GK, **Bornstein BA**: Routine quantification of blood perfusion during clinical hyperthermia. Forty-third Annual Meeting of the Radiation Research Society and Fifteenth Annual Meeting of the North American Hyperthermia Society. April 1-6, 1995, San Jose, CA.

29. Burdette EC, Svensson GK, Lu X-Q, Cormack R, Hansen JL, Foard WW, Neubauer PL, Admire PJ, **Bornstein BA**, Harris JR: Ultrasound hyperthermia system for breast cancer treatment. Thirty-seventh Annual Meeting of the American Association of Physicists in Medicine. July 23-27, 1995, Boston, MA. Medical Physics 22(6):969, 1995.

30. Hansen JL, Burdette EC, Lu X-Q, **Bornstein BA**, Svensson GK: Experimental verification of a cylindrical multi-transducer ultrasound breast hyperthermia treatment system. In Franconi C, Arcangeli G, Cavaliere R (eds): Hyperthermic Oncology 1996. Monograph 5, Vol. 1. Program Abstracts Symposium and Workshop Summaries. p87. Proceedings of the 7th International Congress on Hyperthermic Oncology. Tor Vergata. April 9-13, 1996, Rome, Italy.

31. Burdette EC, Hansen JL, Lu X-Q, Neubauer PL, Foard WW, Grossman LJ, **Bornstein BA**, Svensson GK: Real-time computer controlled ultrasound therapy and monitoring system for breast cancer treatment. In Franconi C, Arcangeli G, Cavaliere R (eds): Hyperthermic Oncology 1996. Monograph 5, Vol. 1. Program Abstracts Symposium and Workshop Summaries. p88. Proceedings of the 7th International Congress on Hyperthermic Oncology. Tor Vergata. April 9-13, 1996, Rome, Italy.

32. **Bornstein BA**, Peiro G, Connolly JL, Gelman R, Schnitt SJ, Hetelekidis S, Nixon AJ, Recht A, Silver B, Harris JR: The influence of infiltrating lobular carcinoma on the outcome of patients treated with breast-conserving surgery and radiation therapy. Thirty-eighth Annual Meeting of the American Society of Therapeutic Radiology and Oncology. October 27-30, 1996, Los Angeles, CA. Int J Radiat Oncol Biol Phys 36(Supp-1):180, 1996.

33. Nixon AJ, Gelman R, **Bornstein BA**, Abner A, Recht A, Hetelekidis S, Silver B, Harris JR: Non-breast cancer mortality after conservative surgery and radiation therapy to the left breast. Thirty-eighth Annual Meeting of the American Society of Therapeutic Radiology and Oncology. October 27-30, 1996, Los Angeles, CA. Int J Radiat Oncol Biol Phys 36(Supp 1):181, 1996.

34. Hetelekidis S, Silver B, Schnitt SJ, Connolly JL, **Bornstein BA**, Nixon AJ, Recht A, Gelman R, Harris JR: The significance of axillary extracapsular extension in breast cancer. Thirty-eighth Annual Meeting of the American Society of Therapeutic Radiology and Oncology. October 27-30, 1996, Los Angeles, CA. Int J Radiat Oncol Biol Phys 36(Supp 1):275, 1996.

DEPARTMENT OF HEALTH AND HUMAN SERVICES
PUBLIC HEALTH SERVICE
FOOD AND DRUG ADMINISTRATION
STATEMENT OF INVESTIGATOR
(TITLE 21, CODE OF FEDERAL REGULATIONS (CFR) Part 312)
(See instructions on reverse side.)

Form Approved: OMB No. 0910-0014.
Expiration Date: November 30, 1995.
See OMB Statement on Reverse.

NOTE: No investigator may participate in an investigation until he/she provides the sponsor with a completed, signed Statement of Investigator, Form FDA 1572 (21 CFR 312.53(c))

1. NAME AND ADDRESS OF INVESTIGATOR.

Jay R. Harris, M.D.
Joint Center for Radiation therapy
Beth Israel Deaconess Medical Center Division
330 Brookline Avenue
Boston MA 02215

2. EDUCATION, TRAINING, AND EXPERIENCE THAT QUALIFIES THE INVESTIGATOR AS AN EXPERT IN THE CLINICAL INVESTIGATION OF THE DRUG FOR THE USE UNDER INVESTIGATION. ONE OF THE FOLLOWING IS ATTACHED:

☒ CURRICULUM VITAE ☐ OTHER STATEMENT OF QUALIFICATIONS

3. NAME AND ADDRESS OF ANY MEDICAL SCHOOL, HOSPITAL, OR OTHER RESEARCH FACILITY WHERE THE CLINICAL INVESTIGATION(S) WILL BE CONDUCTED.

Dana-Farber Cancer Institute
44 Binney St
Boston MA 02115

4. NAME AND ADDRESS OF ANY CLINICAL LABORATORY FACILITIES TO BE USED IN THE STUDY.

Clinical Laboratory
Dana-Farber Cancer Institute
44 Binney Street, D521
Boston MA 02115

5. NAME AND ADDRESS OF THE INSTITUTIONAL REVIEW BOARD (IRB) THAT IS RESPONSIBLE FOR REVIEW AND APPROVAL OF THE STUDY(IES).

Institutional Review Board
Dana-Farber Cancer Institute
44 Binney St
Boston MA 02115

6. NAMES OF THE SUBINVESTIGATORS (*e.g., research fellows, residents, associates*) WHO WILL BE ASSISTING THE INVESTIGATOR IN THE CONDUCT OF THE INVESTIGATION(S).

7. NAME AND CODE NUMBER, IF ANY, OF THE PROTOCOL(S) IN THE IND FOR THE STUDY(IES) TO BE CONDUCTED BY THE INVESTIGATOR.

Protocol name: Radiation and Thermal therapy for Extensive Intraductal carcinoma.
Protocol number: 95-006

8. ATTACH THE FOLLOWING CLINICAL PROTOCOL INFORMATION.

☒ FOR PHASE 1 INVESTIGATIONS, A GENERAL OUTLINE OF THE PLANNED INVESTIGATION INCLUDING THE ESTIMATED DURATION OF THE STUDY AND THE MAXIMUM NUMBER OF SUBJECTS THAT WILL BE INVOLVED.

☐ FOR PHASE 2 OR 3 INVESTIGATIONS, AN OUTLINE OF THE STUDY PROTOCOL INCLUDING AN APPROXIMATION OF THE NUMBER OF SUBJECTS TO BE TREATED WITH THE DRUG AND THE NUMBER TO BE EMPLOYED AS CONTROLS, IF ANY; THE CLINICAL USES TO BE INVESTIGATED; CHARACTERISTICS OF SUBJECTS BY AGE, SEX, AND CONDITION; THE KIND OF CLINICAL OBSERVATIONS AND LABORATORY TESTS TO BE CONDUCTED; THE ESTIMATED DURATION OF THE STUDY; AND COPIES OR A DESCRIPTION OF CASE REPORT FORMS TO BE USED.

9. COMMITMENTS:

I agree to conduct the study(ies) in accordance with the relevant, current protocol(s) and will only make changes in a protocol after notifying the sponsor, except when necessary to protect the safety, rights, or welfare of subjects.

I agree to personally conduct or supervise the described investigation(s).

I agree to inform any patients, or any persons used as controls, that the drugs are being used for investigational purposes and I will ensure that the requirements relating to obtaining informed consent in 21 CFR Part 50 and institutional review board (IRB) review and approval in 21 CFR Part 56 are met.

I agree to report to the sponsor adverse experiences that occur in the course of the investigation(s) in accordance with 21 CFR 312.64.

I have read and understand the information in the investigator's brochure, including the potential risks and side effects of the drug.

I agree to ensure that all associates, colleagues, and employees assisting in the conduct of the study(ies) are informed about their obligations in meeting the above commitments.

I agree to maintain adequate and accurate records in accordance with 21 CFR 312.62 and to make those records available for inspection in accordance with 21 CFR 312.68.

I will ensure that an IRB that complies with the requirements of 21 CFR Part 56 will be responsible for the initial and continuing review and approval of the clinical investigation. I also agree to promptly report to the IRB all changes in the research activity and all unanticipated problems involving risks to human subjects or others. Additionally, I will not make any changes in the research without IRB approval, except where necessary to eliminate apparent immediate hazards to human subjects.

I agree to comply with all other requirements regarding the obligations of clinical investigators and all other pertinent requirements in 21 CFR Part 312.

INSTRUCTIONS FOR COMPLETING FORM FDA 1572
STATEMENT OF INVESTIGATOR:

1. Complete all sections. Attach a separate page if additional space is needed.
2. Attach curriculum vitae or other statement of qualifications as described in Section 2.
3. Attach protocol outline as described in Section 8.
4. Sign and date below.
5. FORWARD THE COMPLETED FORM AND ATTACHMENTS TO THE SPONSOR. The sponsor will incorporate this information along with other technical data into an Investigational New Drug Application (IND). INVESTIGATORS SHOULD NOT SEND THIS FORM DIRECTLY TO THE FOOD AND DRUG ADMINISTRATION.

10. SIGNATURE OF INVESTIGATOR	11. DATE 11.18.96

Public reporting burden for this collection of information is estimated to average 84 hours per response, including the time for reviewing instructions, searching existing data sources, gathering and maintaining the data needed, and completing reviewing the collection of information. Send comments regarding this burden estimate or any other aspect of this collection of information, including suggestions for reducing this burden to:

Reports Clearance Officer, PHS
Hubert H. Humphrey Building, Room 721-B
200 Independence Avenue, S.W.
Washington, DC 20201
Attn: PRA

and to:

Office of Management and Budget
Paperwork Reduction Project (0910-0014)
Washington, DC 20503

Please DO NOT RETURN this application to either of these addresses.

CURRICULUM VITAE

Name: Jay Robert Harris

Address: 12 Byfield Road
Newton, MA 02168

Date of Birth: June 29, 1944

Place of Birth: Weehawken, New Jersey

Education:

1965	B.A., Cornell University, Ithaca, New York
1969	M.A. (Statistics), Stanford University, Stanford, California
1970	M.D., Stanford University, Stanford, California

Postdoctoral Training:

Internship and Residencies:

1970-1971	Medical Intern, St. Louis Jewish Hospital, St. Louis, MO
1971-1973	Captain, M.D., U.S. Army
1973-1977	Resident in Radiation Therapy, Department of Radiation Therapy, Joint Center for Radiation Therapy, Harvard Medical School, Boston, MA

Licensure and Certification:

1971	Massachusetts License Number 37185
1976	Certified by American Board of Radiology in Therapeutic Radiology

Academic Appointments:

1977-1979	Instructor in Radiation Therapy, Department of Radiation Therapy, Harvard Medical School, Boston, MA
1979-1982	Assistant Professor in Radiation Therapy, Department of Radiation Therapy, Harvard Medical School, Boston, MA
1982-1991	Associate Professor in Radiation Therapy, Department of Radiation Therapy, Harvard Medical School, Boston, MA
1991-	Professor of Radiation Oncology, Department of Radiation Oncology, Harvard Medical School, Boston, MA.

Clinical Appointments:

1977-	Staff Radiation Therapist, Joint Center for Radiation Therapy, Department of Radiation Therapy, Harvard Medical School, Boston, MA
1981-	Clinical Director, Joint Center for Radiation Therapy, Department of Radiation Therapy, Harvard Medical School
1983-	Division Chief, Beth Israel Hospital Division, Joint Center for Radiation Therapy, Department of Radiation Therapy, Harvard Medical School
1983-1985	Acting Head, Joint Center for Radiation Therapy, Department of Radiation Therapy, Harvard Medical School
1985-	Clinical and Educational Director, Joint Center for Radiation Therapy

Major Committee Assignments:

National and Regional:

1984-1985	National Council on Radiation Protection and Measurements, Scientific Committee
1986-	American Cancer Society Breast Cancer Task Force
1987-1995	American Board of Radiology Written and Oral Examination Committee
1991-1993	Scientific Program Chairman, American Society for Therapeutic Radiology and Oncology
1991-1993	President's Panel Special Commission on Breast Cancer
1993-1994	President-Elect, American Society for Therapeutic Radiology and Oncology
1994-1995	President, American Society for Therapeutic Radiology and Oncology
1995-1996	Chairman of the Board, ASTRO
1995-	Trustee, American Board of Radiology

Beth Israel Hospital:

1983-	Medical Executive Committee
1988-	Education Committee
1987-	Radiation Safety Committee

Joint Center for Radiation Therapy:

1985-	Chairman, Quality Assurance Committee
1985-	Vice-Chairman, Credentialing Committee
1988-	Radiation Safety Committee
1987-	Vice President, JCRT Foundation

Harvard Medical School

1992-1994	Promotions and Reappointment Committee
1995-	Subcommittee of Professors

Editorial Boards:

1985-1988	Journal of Clinical Oncology
1987-	Breast Diseases
1990-	Radiotherapy & Oncology
1991-	Associate Editor, Cancer
1993-	Int-J Rad Onc Biol Phys
1993-	Breast Cancer Research and Treatment
1993-	Journal of Surgical Oncology
1995-	Editor, Int J Rad Onc Biol Phys

Ad Hoc Reviewer:

New England Journal of Medicine

Memberships, Offices and Committee Assignments in Professional Societies

1976-	American Society for Therapeutic Radiology and Oncology Program committee, 1989
1978-	American College of Radiology
1978-	New England Society for Radiation Oncologists President, 1988-89
1979-	Radiation Research Society
1980-	American Society of Clinical Oncology Membership Committee, 1985
1983-	New England Cancer Society
1985-	Massachusetts Medical Society
1985-	Massachusetts Radiologic Society
1985-	American Medical Association
1985-	American Society for the Advancement of Science

Research Interest:

1. The utilization of radiation therapy in the management of breast cancer

2. The causes of breast cancer recurrence following conservative surgery and radiation therapy for early breast cancer

Honors:

1991	Gold Medal, Gilbert Fletcher Society

Faculty Supervision:

Geoffrey Beadle, M.D., Fellow in Radiation Therapy, 1982-1983
John Boyages, M.D., Fellow in Radiation Therapy, 1987-1988
Anthony Abner, M.D., Fellow in Radiation Therapy, 1989-1990
Frank Vicini, M.D., Fellow in Radiation Therapy, 1989-1990
Irene Gage, M.D., Fellow in Radiation Therapy, 1993-1994

BIBLIOGRAPHY:

Original Reports

1. Harris JR, Murthy AK, Belli JA: The effect of hyperthermia on the repair of radiation damage in plateau phase cells. Radiology 119: 227-229, 1976.

2. Harris JR, Levene MB: Visual complications following irradiation for pituitary adenomas and craniopharyngiomas. Radiology 120: 167-171, 1976.

3. Murthy A, Harris JR, Belli J: Hyperthermia and radiation response of plateau phase cells: Potentation and radiation damage repair. Radiat Res 70: 241-247, 1977.

4. Levene MB, Harris JR, Hellman S: Treatment of carcinoma of the breast by radiation therapy. Cancer 39: 2840-2845, 1977.

5. Harris JR, Murthy AK, Belli JA: The effect of delay between heat and x-irradiation on the survival response of plateau phase V79 cells. Int J Radiat Oncol Biol Phys 2: 515-519, 1977.

6. Harris JR, Murthy AK, Belli JA: Repair following combined x-ray and heat (41 deg. for one hour) in plateau phase mammalian cells. Cancer Res 37: 3374-3378, 1977.

7. Harris JR, Levene MB, Hellman S: Results of treating stages I and II carcinoma of the breast with primary radiation therapy. Cancer Treat Rep 62: 985-991, 1978.

8. Prosnitz L, Goldenberg I, Packard A, Levene MB, Harris JR, Hellman S, Wallner P, Brady L, Mansfield C, Kramer S: Radiation as initial treatment for early stage cancer of the breast without mastectomy. Cancer 39: 917-923, 1979.

9. Harris JR, Levene MB, Hellman S: Analysis of cosmetic results following primary radiation therapy for stages I and II carcinoma of the breast. Int J Radiat Oncol Biol Phys 5: 257-262, 1979.

10. Bruckman JE, Harris JR, Levene MB, Chaffey JT, Hellman S: Results of treating stage III carcinoma of the breast by primary radiation therapy. Cancer 43: 985-993, 1979.

11. Belli JA, Harris JR: Adriamycin resistance and radiation response. Int J Radiat Oncol Biol Phys 5: 1231-1234, 1979.

12. Harris JR, Timberlake N, Henson P, Schimke P, Belli JA: Adriamycin uptake in V79 and adriamycin-resistant Chinese hamster cells. Int J Radiat Oncol Biol Phys 5: 1235-1239, 1979.

13. Hellman S, Harris JR, Levene MB: Radiation therapy of early carcinoma of the breast without mastectomy. Cancer 46: 988-994, 1980.

14. Harris JR, Botnick L, Bloomer WD, Chaffey JT, Hellman S: Primary radiation therapy for early breast cancer: The experience at the Joint Center for Radiation Therapy. Int J Radiat Oncol Phys 7: 1549-1552, 1981.

15. Salner A, Botnick L, Herzog A, Goldstein M, Harris J, Levene Hellman S: Reversible brachial plexopathy following primary radiation for breast cancer. Cancer Treat Rep 65: 797-802, 1981.

16. Harris JR, Connolly JL, Schnitt SJ, Cohen RB, Hellman S: Clinical pathological study of early breast cancer treated by primary radiation therapy. J Clin Oncol 1:184-189, 1983.

17. Siddon RL, Buck BA, Harris JR, Svensson GK: Three-field technique for breast irradiation using tangential field corner blocks. Int J Radiat Oncol Biol Phys 9: 583-588, 1983.

18. Harris JR. Sawicka J, Gelman R, Hellman S: Management of locally advanced carcinoma of the breast. Int J Radiat Oncol Biol Phys 9:345-349, 1983.

19. Rose CM, Botnick LE, Weinstein M, Silen W, Koufman C, Harris JR, Hellman S: The use of axillary sampling in the definitive treatment of breast cancer by radiation and lumpectomy. Int J Radiat Oncol Biol Phys 9: 339-344, 1983.

20. Harris JR, Hellman S: Primary radiation therapy for early breast cancer. Cancer 51: 2547-2552, 1983.

21. Harris JR, Recht A, Amalric R, Calle R, Clark R, Reid J, Spitalier J, Vilcoq J, Hellman S: Time course and prognosis of local recurrence following primary radiation therapy for early breast cancer. J Clin Oncol 2:37-41, 1984.

22. Harris JR, Hellman S: The role of radiation therapy in the management of locally advanced carcinoma of the breast. Cancer 53: 758-761, 1984.

23. Harris JR, Beadle GF, Hellman S: Clinical studies on the use of radiation therapy as primary treatment of early breast cancer. Cancer 53: 705-711, 1984.

24. Schnitt SJ, Connolly JL, Harris JR, Cohen RB: Radiation induced changes in the breast. Human Pathol 15 (6) : 545-550, 1984.

25. Schnitt SJ, Connolly JL, Harris JR, Hellman S and Cohen RB: Pathologic predictors of early local recurrence in stage I and II breast cancer treated by primary radiation therapy. Cancer 53 (5) : 1049-1057, 1984.

26. Beadle GF, Come S, Henderson IC, Silver B, Hellman S, Harris JR: The effect of adjuvant chemotherapy on the cosmetic results after primary radiation treatment for early stage breast cancer: a preliminary analysis. Int J Radiat Oncol Biol Phys. 10 9 (11): 2131-2137, 1984.

27. Beadle GF, Harris JR: The role of post-operative radiotherapy in the treatment operable breast cancer. Breast Cancer Res Treat 4: 159-169, 1984.

28. Harris JR, Osteen RT: Patients with early breast cancer benefit from effective axillary treatment. Breast Cancer Res Treat 5: 17-21, 1985.

29. Harris JR, Connolly JL, Schnitt SJ, Cady B, Love S, Osteen RT, Patterson WB, Shirley R, Hellman S, Cohen RB, Silen W: The use of pathologic features in selecting the extent of surgical resection necessary for breast cancer patients treated by primary radiation therapy. Ann Surg 201 (2) : 164-169, 1985.

30. Recht A, Silver B, Schnitt S, Connolly J, Hellman S, Harris JR: Breast relapse following primary radiation therapy for early breast cancer. I. Classification, frequency, and salvage. Int J Radiat Oncol Biol Phys 11 (7) : 1271-1276, 1985.

31. Schnitt SJ, Connolly JL, Recht A, Silver B, Harris JR: Breast relapse following primary radiation therapy for early breast cancer. II. Detection, pathologic features and prognostic significance. Int J Radiat Oncol Biol Phys 11 (7) : 1277-1284, 1985.

32. Recht A, Danoff B, Solin LJ, Scnitt S, Connolly J, Botnick L, Goldberg I, Goodman R, Harris JR: Intraductal carcinoma of the breast: results of treatment with excisional biopsy and irradiation. J Clin Oncol 3 (10) : 1339-1343, 1985.

33. Harris JR, Hellman S, Kinne DW: Limited surgery and radiotherapy for early breast cancer. N Engl J Med 313: 1365-1368, 1985.

34. Kaplan WD, Piez CW, Gelman RS, Laffin SA, Rosenbaum EM, Jennings CA, McCormick CA, Harris JR, Henderson IC, Atkins HL: Clinical comparison of two radiocolloids for internal mammary lymphoscintigraphy. J Nucl Med 26: 1382-1385, 1985.

35. Aberizk WJ, Silver B, Henderson IC, Cady B, Harris JR: The use of radiotherapy for treatment of isolated locoregional recurrence of breast carcinoma after mastectomy. Cancer 58 (6) : 1214-1218, 1986.

36. Larson D, Weinstein M, Goldberg I, Silver B, Recht A, Cady B, Silen W, Harris JR: Edema of the arm as a function of the extent of axillary surgery in patients with stage I-II carcinoma of the breast treated with primary radiotherapy. Int J Radiat Oncol Biol Phys 12 (9) : 1575-1582, 1986.

37. Harris JR, Hellman S: Observations on survival curve analysis with particular reference to breast cancer treatment. Cancer 57 (5) : 925-928, 1986.

38. Hellman S, Harris JR: The appropriate breast cancer paradigm. Cancer Res 47 (2): 339-342, 1987.

39. Stomper PC, Recht A, Berenberg AL, Jochelson MS, Harris JR: Mammographic detection of recurrent cancer in the irradiated breast. Am J Roentgenol 148: 39-43, 1987.

40. Schnitt S, Connolly J, Khettry U, Mazoujian G, Brenner M, Silver B, Recht A, Beadle G, Harris JR: Pathologic findings on re-excision of the primary site in breast cancer patients considered for treatment by primary radiation therapy. Cancer 59 (4) : 675-681, 1987.

41. Griem KL, Henderson IC, Gelman R, Ascoli D, Silver B, Recht A, Goodman RL, Hellman S, Harris JR: The 5-year results of a randomized trial of adjuvant radiation therapy after chemotherapy in breast cancer patients treated with mastectomy. J Clin Oncol 5 (10) : 1546-1555,1987.

42. Sheldon T, Hayes DF, Cady B, Parker L, Osteen R, Silver B, Recht A, Come S, Henderson IC, Harris JR: Primary radiation therapy for locally advanced breast cancer. Cancer 60 (6) : 1219-1225,1987.

43. Osteen RT, Connolly JL, Recht A, Silver B, Schnitt SJ, Harris JR: Identification of patients at high risk for local recurrence after conservative surgery and radiation therapy for stage I or II breast cancer. Arch Surg 122: 1248-1252, 1987.

44. Kaplan WD, Andersen JW, Siddon RL, Connolly BT, McCormick CA, Laffin SM, Rosebaum EM, Jennings CA, Recht A, Harris JR: The three-dimensional localization of internal mammary lymph nodes by radionuclide lymphoscintigraphy. J Nucl Med 29 (4) :473-478, 1988.

45. Recht A, Siddon RL, Kaplan WD, Andersen JW, Harris JR: Three dimensional internal mammary lymphoscintigraphy: implications for radiation therapy treatment planning for breast carcinoma. Int J Radiat Oncol Biol Phys 14 (3) : 477-481,1988.

46. Recht A, Connolly JL, Schnitt SJ, Silver B, Rose MA, Love S, Harris JR: The effect of young age on tumor recurrence in the treated breast after conservative surgery and radiotherapy. Int J Radiat Oncol Biol Phys 14 (1): 3-10 1988.

47. Schnitt SJ, Silen W, Sadowsky NL, Connolly JL, Harris JR: Ductal carcinoma in situ (intraductal carcinoma) of the breast. N Engl J Med 318 (14): 898-903, 1988.

48. Recht A, Silen W, Scnitt SJ, Connolly JL, Gelman RS, Rose MA, Silver B, Harris JR: Time-course of local recurrence following conservative surgery and radiotherapy for early stage breast cancer. Int J Radiat Oncol Biol Phys 15 (2): 255-262, 1988.

49. Recht A, Schnitt SJ, Connolly JL, Rose MA, Silver B, Come S, Henderson IC, Slavin S, Harris JR: Prognosis following local or regional recurrence after conservative surgery and radiotherapy for early stage breast carcinoma. Int J Radiat Oncol Biol Phys 12 (1) : 3-9, 1989.

50. Leopold KA, Recht A, Schnitt SJ, Connolly JL, Rose MA, Silver B, Harris JR: Results of conservative surgery and radiation therapy for multiple synchronous cancers of one breast. Int J Radiat Oncol Biol Phys 16 (1): 11-16, 1989.

51. Rose MA, Olivotto I, Cady B, Koufman C, Osteen R, Silver B, Recht A, Harris JR: Conservative surgery and radiation therapy for early breast cancer. Long-term cosmetic results. Arch Surg 124 (2) : 153-157, 1989.

52. Coleman CN, Noll L, Howes AE, Harris JR, Zakher J, Kramer RA: Initial results of a phase I trial of continuous infusion SR 2508 (etanidazole). A Radiation Therapy Oncology Group Study. Int J Radiat Oncol Biol Phys 16 (4): 1085-1087, 1989.

53. Schnitt SJ, Connolly JL, Recht A, Silver B, Harris JR: Influence of infiltrating lobular histology on local tumor control in breast cancer patients treated with conservative surgery and radiation therapy. Cancer 64 (2): 448-454, 1989.

54. Stomper PC, Connolly JL, Meyer JE, Harris JR: Clinically occult ductal carcinoma in situ detected with mammography: Analysis of 100 cases with radiologic-pathologic correlation. Radiology 172: 235-241, 1989.

55. Rose MA, Henderson IC, Gelman R, Boyages J, Gore SM, Come S, Silver B, Recht A, Connolly JL, Schnitt SJ, Colemen CN, Harris JR: Premenopausal breast cancer patients treated with conservative surgery, radiotherapy and adjuvant chemotherapy have a low risk of local failure. Int J Radiat Oncol Biol Phys 17 (4) : 711-717, 1989.

56. Olivotto IA, Rose MA, Osteen RT, Love S, Cady B, Silver B, Recht A, Harris JR: Late cosmetic outcome after conservative surgery and radiotherapy: Analysis of causes of cosmetic failure. Int J Radiat Oncol Biol Phys 17 (4): 747-753, 1989.

57. Epstein AH, Connolly JL, Gelman R, Schnitt SJ, Silver B, Boyages J, Rose MA, Recht A, Harris JR: The predictors of distant relapse following conservative surgery and radiotherapy for early breast cancer are similar to those following mastectomy. Int J Radiat Oncol Biol Phys 17(4): 755-760, 1989.

58. Healy EA, Osteen RT, Schnitt SJ, Gelman R, Stomper PC, Connolly JL, Harris JR: Can the clinical and mammographic findings at presentation predict the presence of an extensive intraductal component in early stage breast cancer? Int J Radiat Oncol Biol Phys 17 (6): 1217-1221, 1989.

59. Chin LM, Cheng CW, Siddon RL, Rice RK, Mijnheer BJ, Harris JR: Three-dimensional photon dose distributions with and without lung corrections for tangential breast intact treatments. Int J Radiat Oncol Biol Phys 17 (6) : 1327-1335, 1989.

60. Stomper P, Connolly J, Meyer J, Harris J: Clinically Occult Ductal carcinoma in situ detected with mammagraphy: analysis of 100 cases with radiologic-pathologic correlation. Radiology (172): 235-241, 1989.

61. Holland R, Connolly JL, Gelman R, Mravunac M, Hendricks JH, Verbeek AL, Schnitt SJ, Silver B, Boyages J, Harris JR: The presence of an extensive intraductal component following a limited excision correlates with prominent residual disease in the remainder of the breast. J Clin Oncol 8 (1) : 113-118, 1990.

62. Bornstein BA, Cheng CW, Rhodes LM, Rashid H, Stomper PC, Siddon RL, Harris JR: Can simulation measurements be used to predict the irradiated lung volume in the tangential fields in patients treated for breast cancer? Int J Radiat Oncol Biol Phys 18 (1) : 181-187, 1990.

63. Loeffler JS, Harris JR, Dahlberg WK, William MS, Little JB: Vitro radiosensitivity of human diploid fibroblasts derived from women with unusual clinical responses to definitive radiation therapy for breast cancer. Radiation Res 121 (2): 227-231, 1990.

64. Gelman R, Gelber R, Henderson IC, Coleman CN, Harris JR: Improved methodology for analyzing local and distant recurrence. J Clin Oncol 8 (3) : 548-555, 1990.

65. Henderson IC, Hayes DF, Parker LM, Love S, Garber JE, Recht A, Breitmeyer JB, Harris JR, Cannellos GP: Adjuvant systemic therapy for patients with node-negative tumors. Cancer 65 (9): 2132-2147, 1990.

66. Eberlein TJ, Connolly JL, Schnitt SJ, Recht A, Osteen RT, Harris JR: Predictors of local recurrence following conservative breast surgery and radiation therapy: The influence of tumor size. Arch Surg 125: 771-777, 1990.

67. Harris JR, Recht A, Connolly J, Cady B, Come S, Henderson IC, Koufman C, Love S, Schnitt S, Osteen R: Conservative surgery and radiotherapy for early breast cancer. Cancer 66: 1427-38, 1990.

68. Henderson IC, Garber JE, Breitmeyer JB, Hayes DF, Harris JR: Comprehensive management of disseminated breast cancer. Cancer 66: 1439-1448,1990.

69. Boyages J, Recht A, Connolly JL, Schnitt SJ, Gelman R, Kooy H, Love S, Osteen RT, Cady B, Silver B, Harris JR: Early breast cancer: predictors of breast recurrence for patients treated with conservative surgery and radiation therapy. Radiotherapy Oncol 19 (1): 29-41, 1990.

70. Bornstein BA, Recht A, Connolly JL, Schnitt SJ, Cady B, Koufman C, Love S, Osteen RT, Harris JR: Results of treating ductal carcinoma in situ of the breast with conservative surgery and radiation therapy. Cancer 67 (1): 7-13, 1991.

71. Recht A, Pierce SM, Abner A, Vicini F, Osteen RT, Love SM, Silver B, Harris JR: Regional nodal failure after conservative surgery and radiotherapy for early stage breast carcinoma. J Clin Oncol 9 (6): 988-996, 1991.

72. Lingos TI, Recht A, Vicini F, Abner A, Silver B, Harris JR: Radiation pneumonitis in breast cancer patients treated with conservative surgery and radiation therapy. Int J Radiat Oncol Biol Phys 21 (2): 335-360, 1991.

73. Abner AL, Recht A, Vicini FA, Silver B, Hayes D, Come S, Harris JR: Cosmetic results after surgery, chemotherapy and radiation therapy for early breast cancer. Int J Radiat Oncol Biol Phys 21 (2): 331-338, 1991.

74. Recht A, Come SE, Gelman RS, Goldstein M, Tishler S, Gore S, Abner A, Vicini F, Sliver B, Connolly JL, Shcnitt SJ, Coleman CN, Harris JR: Integration of conservative surgery, radiotherapy and chemotherapy for the treatment of early-stage node-positive breast cancer: Sequencing, timing and outcome. J Clin Oncol 9 (9): 1662-1667, 1991.

75. Solin LJ, Recht A, Fourquet A, Kurtz J, Kuske R, McNeese M, McCormick B, Cross MA, Schultz DJ, Bornstein BA, Spitalier J, Vilcoq JR, Fowble BL, Harris JR, Goodman RL: Ten-year results of breast-conserving surgery and definitive irradiation for intraductal carcinoma (ductal carcinoma in situ) of the breast. Cancer 68 (11): 2337-2344, 1991.

76. Lamb CC, Eberlein T, Parker LM, Silver B, Harris JR: The results of radical radiotherapy for inflammatory breast cancer. Am J Surg 162: 236-242, 1991.

77. Vicini FA, Eberlein TJ, Connolly J, Recht A, Abner A, Schnitt SJ, Silen W, Harris JR: Extent of resection for patients with stage I -II breast cancer treated with conservative surgery and radiation therapy. Ann Surg 214: 200-204, 1991.

78. Coleman CN, Noll L, Riese N, BuswellL, Howes AE, Loeffler JS, Alexander E III, Wen P, Harris JR, Kramer RA, Hurwitz SJ, Neben TY, Grigsby P: Final report of the Phase I trial of continuous infusion etanidazole (SR2508): A radiation therapy group study. Int J Radiat Oncol Biol Phys 22 (3) :577-580, 1992.

79. Vinci FA, Recht A, Abner A, Boyages J, Cady B, Connolly J, Gelman R, Osteen RT, Schnitt SJ, Silen W, Harris JR: Recurrence in the breast following conservative surgery and radiation therapy for early-stage breast cancer. Monog Natl Cancer Inst, 11: 33-39, 1992.

80. Pierce SM, Recht A, Lingos T, Abner A, Vicini F, Silver B, Herzog A, Harris JR: Long-term radiation complications following conservative surgery (CS) and radiation therapy (RT) in patients with early stage breast cancer. Int J Radiat Oncol Biol Phys 23(5): 915-923, 1992.

81. de la Rochefordiere A, Abner A, Silver B, Vicini F, Recht A, Harris J: Are cosmetic results following conservative surgery and radiation therapy for eary breast cancer dependent on technique? Int J Rad. Oncol Biol Phys (23) 925-931, 1992.

82. Uematsu M, Bornstein B, Recht A, Abner A, Come S, Shulman L, Silver B, Harris J: Long-term results of post-operative radiation therapy following mastectomy with or without chemotherapy in stage I-III breast cancer. Int J Rad Oncol Biol 25:765-770, 1993.

83. Abner Al, Recht A, Eberlein T, Come S, Shulman L, Hayes D, Connolly JL, Schnitt SJ, Silver B, Harris JR: Prognosis following salvage mastectomy for recurrence in the breast after conservative surgery and radiation therapy for early-stage breast cancer. J Clin Oncol 11(1):44-48, 1993.

84. Fisher DE, Schnitt SJ, Christian R, Harris JR, Henderson IC: Chest wall recurrence of ductal carcinoma in situ of the breast after mastectomy. Cancer (71)10:3025-8, 1993 (May 15).

85. Healey EA, Cook EF, Orav EJ, Schnitt SJ, Connolly JL, Harris JR: Contralateral breast cancer: Clinical characteristics and impact on prognosis. J Clin Oncol 11(8):1545-52, 1993 (August).

86. Dow KH, Harris JR, Roy C: Pregnancy after breast-conserving surgery and radiation therapy for breast cancer. Monogr Natl Cancer Inst (16):131-7, 1994.

87. Schnitt SJ, Abner A, Gelman R, Connolly JL, Recht A, Duda RB, Eberlein TJ, Mayzel K, Silver, B, Harris JR: The relationship between microscopic margins of resection and the risk of local recurrence in patients with breast cancer treated with breast-conserving surgery and radiation therapy. Cancer 74(6):1746-51, 1994 (Sept. 15).

88. Nixon AJ, Neuberg D, Hayes EF, Gelman R, Connolly JL, Schnitt S, Abner A, Recht A, Vicini F, Harris JR: Relationship of patient age to pathologic features of the tumor and prognosis for patients with stage I or II breast cancer. J Clin Oncol 12(5):888-94, 1994 (May).

89. Guidi AJ, Fischer L, Harris JR, Schnitt SJ: Microvessel density and distribution in ductal carcinoma in situ of the breast. J Natl Cancer Inst 86(8):614-9, 1994 (Apr 20).

90. Nixon AJ, Recht A, Neuberg D, Connolly JL, Schnitt S, Abner A, Harris JR: The relation between the surgery-radiotherapy interval and treatment outcome in patients treated with breast-conserving surgery and radiation therapy without systemic therapy. Int J Radiat Oncol Biol Phys 30(1):17-21, 1994 (Aug 30).

91. Childers BJ, Goldwyn RM, Ramos D, Chaffey J, Harris JR: Long-term results of irradiation for basal cell carcinoma of the skin of the nose. Plast Reconstr Surg 93: 1169, 1994.

92. Hiramatsu H, Bornstein BA, Recht A, Schnitt SJ, Baum JK, Connolly JL, Duda RB, Guidi AJ, Kaelin CM, Silver B, Harris JR: Local recurrence after conservative surgery and radiation therapy for ductal carcinoma in situ. Cancer J Sci Am 1:55-61, 1995.

93. Gage I, Recht A, Gelman R, Nixon AJ, Silver B, Bornstein BA, Harris JR: Long-term outcome following breast-conserving surgery and radiation therapy. Int J Radiat Oncol Phys 33(2):245-251, 1995.

94. Hughes-Davies L, Sacks D, Rescigno J, Howard S, Harris J: Serum cardiac troponin T levels during treatment of early-stage breast cancer. J Clin Oncol 13(10):2582-2584, 1995.

95. Siziopikou K, Prioleau J, Harris JR, Schnitt S: *bcl*-2 Expression in the spectrum of preinvasive breast lesions. Cancer 77(3): 499-506, 1996.

96. Bodis S, Siziopikou KP, Schnitt SJ, Harris JR, Fisher DE: Extensive apoptosis in ductal carcinoma in situ of the breast. Cancer 77(9): 1831-1835, 1996.

97. Harris JR: Breast-conserving therapy as a model for creating new knowledge in clinical oncology. Int J Radiat Oncol Phys 35(4): 641-648, 1996.

98. Recht A, Come S, Henderson IG, Gelman R, Silver B, Hayes D, Shulman L, Harris J: The sequencing of chemotherapy and radiation therapy after conservative surgery for early-stage breast cancer. N Engl J Med 334:1356-1361, 1996.

99. Schnitt S, Hayman J, Gelman R, Eberlein T, Love S, Mayzel K, Osteen R, Nixon A, Pierce S, Connolly J, Cohen P, Schneider L, Silver B, Recht A, Harris J: A prospective study of consertive surgery alone in the treatment of selected patients with stage I breast cancer. Cancer 77(6):1094-1100, 1996.

100. Nixon AJ, Schnitt SJ, Gelman R, Gage I, Bornstein B, Hetelekidis S, Recht A, Silver B, Harris JR, Connolly JL: Relationship of tumor grade to other pathologic features and to treatment outcome of patients with early stage breast carcinoma treated with breast-conserving therapy. Cancer 78(7):1426-1431, 1996.

101. Gage I, Schnitt SJ, Nixon AJ, Silver B, Recht A, Troyan SL, Eberlein T, Love SM, Gelman R, Harris JR, Connolly JL: Pathologic margin involvement and the risk of recurrence in patients treated with breast-conserving therapy. Cancer 78(9):1921-1928, 1996.

Reviews and Chapters

1. Levene MB, Harris JR, Hellman S: Primary radiation therapy for operable carcinoma of the breast. Surg Clin North Am 58: 767-776, 1978.

2. Harris JR, Levene MB, Hellman S: The role of radiation therapy in the primary treatment of carcinoma of the breast. Semin Oncol 5: 403-416, 1978.

3. Belli JA, Murthy AK, Harris JR: Sequencing of hyperthermia and radiation in the management of neoplastic disease. In: The clinical prospects of hypoxic cell sensitiers and hyperthermia. University of Wisconsin Press. 1978.

4. Belli JA, Hellman S, Harris JR: The radiotherapeutic requirements for the specification of heat distributions in irradiated volumes. In: The clinical prospects of hypoxic cell sensitizers an hyperthermia. University of Wisconsin Press 1978.

5. Harris JR, Levene MB, Hellman S: Primary radiation therapy for early breast cancer. Front Radiat Ther Oncol 14: 83-89, 1980.

6. Levene MB, Harris JR, Hellman S: Status of radiotherapy for early breast cancer. Int J Radiat Oncol Biol Phys 6: 115-116, 1980.

7. Harris JR, Levene MB, Hellman S: Primary radiation therapy without mastectomy for early carcinoma of the breast. In: Kreger W, ed. Annu Rev Med 387-407, 1981.

8. Hellman S, Harris JR, Levene M: Primary radiation in the treatment of early breast cancer. Isr J Med Sci 17: 922-927, 1981.

9. Harris JR, Hellman S: The local and regional management of carcinoma of the breast. In: Carter, Glatstein, Livingston, eds. Principles of cancer treatment. New York: McGraw Hill, 1981.

10. Harris JR, Levene MB, Hellman S: Radiation therapy as primary treatment for early carcinoma of the breast. In: Hoogstraten B, McDivitt R, eds. Experiences in clinical oncology: Breast Cancer. Vol. I CRC Press, 1981.

11. Harris JR, Levene MB, Hellman S: Primary radiation therapy for early breast cancer: The experience at the Joint Center for Radiation Therapy. In: Lewison E, Montague ACW, eds. Diagnosis and treatment of breast cancer: International clinical forum. Baltimore: Williams and Wilkins, 1981; 169-173.

12. Harris JR, Hellman S, Canellos G, Fisher B: Cancer of the breast. In: Principles and practice of oncology, first edition. Philadelphia: J.B. Lippincott Company, 1981; 103-123.

13. Harris JR, Hellman S: Primary radiation therapy without mastectomy for early breast cancer. Medical Grand Rounds 1: 156-165, 1982.

14. Leslie NT, Harris JR, Hellman S: The current status of primary radiation therapy in the treatment of early breast cancer. Breast Cancer Res Treat 2: 213-220, 1982.

15. Harris JR, Levene MB, Hellman S: Radiation therapy for early breast cancer. Front Radiat Ther Oncol Vol. 4. Basel: Karger, 1982.

16. Harris JR, Hellman S: The treatment philosophy, technique, and results of primary radiation for early breast cancer at the Joint Center for Radiation Therapy. Presented at the 26th Annual Clinical Conference on Cancer, the University of Texas, M.D. Anderson Hospital and Tumor Institute at Houston, November 3-6, 1982.

17. Prosnitz LR, Goldenberg IS, Harris JR, Hellman S, Danoff BF, Kramer S, Wallner PE, Brady LW: Radiotherapy for carcinoma of the breast instead of mastectomy: an update. In: Vaeth JM, ed. Conservative surgery and radiation therapy in the treatment of operable breast cancer. Front Radiat Ther Oncol 17: 69-75, 1983.

18. Hellman S, Harris JR: Tumorectomy and radiotherapy in early breast cancer. In: Veronesi U, Staudacher, V et al, eds. il carcinoma della mammella. Milan: Casa Editrice Ambrosiana, 1983.

19. Harris JR, Hellman S: Chemotherapy for breast cancer - a new reality for radiation therapists. Int J Radiat Oncol Biol Phys 9: 417-418, 1983.

20. Svensson GK, Chin LM, Siddon RL, Harris JR: Breast treatment techniques at the Joint Center for Radiation Therapy. In: Harris JR, Hellman S, Silen W, eds. Conservative management of breast cancer. Philadelphia: J.B. Lippincott Company, 1983; 239-255.

21. Rose C, Botnick LE, Goodman RL, Harris JR, Findlay P, Richter M, Silen W, Hellman S: The role of limited axillary sampling in the treatment of breast cancer by primary irradiation. In: Harris JR, Hellman S, Silen W, eds. Conservative management of breast cancer. Philadelphia: J.B. Lippincott Company, 1983, 155-162.

22. Connolly JL, Schnitt SJ, Harris JR, Hellman S, Cohen RB: Pathologic correlates to local tumor control. In: Harris JR, Hellman S, Silen W, eds. Conservative management of breast cancer. Philadelphia: J.B. Lippincott Company, 1983; 123-138.

23. Harris JR, Hellman S: The results of primary radiation therapy for early breast cancer at the Joint Center for Radiation Therapy. In: Harris JR, Hellman S, Silen W, eds. Conservative management of breast cancer. Philadelphia: J.B. Lippincott Company, 1983, 47-53.

24. Harris JR, Hellman S: Adjuvant chemotherapy in breast cancer patients treated by primary radiation therapy. Int J Radiat Oncol Biol Phys 9: 1757-1758, 1983.

25. Harris JR, Levene MB, Hellman S. Radiotherapy and breast carcinoma. In: D'Orsi CJ, Wilson R, eds., Carcinoma of the breast: Diagnosis and Treatment. Boston: Little Brown and Co., 1983.

26. Beadle GF, Silver BJ, Botnick LE, Hellman S, Harris JR: Cosmetic results following primary radiation therapy for early breast cancer. Cancer 54(12): 2911-2918, 1984.

27. Beadle GF, Harris JR, Hellman S: The role of radiation therapy in the treatment of early breast cancer. In: Phillips TL, Pistenma DA, eds. Radiation oncology annual. Vol I. New York: Raven Press, 1984; 37-64.

28. Botnick L, Harris JR, Hellman S: The experience with breast-conserving treatment of early breast cancer at the Joint Center for Radiation Therapy, Boston, U.S.A. In: Peckham, ed. Breast conservation in the management of carcinoma of the breast. London: Edward Arnold, Ltd., 1985.

29. Harris JR, Hellman S: Limited surgery and radiation as primary local treatment for carcinoma of the breast. In: DeVita V, Hellman S, Rosenberg S, eds. Important Advances in Oncology. Philadelphia: J.B. Lippincott Company. : 243-253, 1985.

30. Harris JR, Recht A, Schnitt S, Connolly J, Silver B, Come S, Henderson IC: Current status of conservative surgery and radiotherapy as primary local treatment for early carcinoma of the breast. Breast Cancer Res Treat 5: 245-255, 1985.

31. Harris JR, Hellman S, Canellos G, Fisher B: Cancer of the breast. In: DeVita VT, Hellman S, Rosenberg SA, eds. Cancer: Principles and Practice of Oncology, second edition. Philadelphia: J.B, Lippincott Company. 1119-1177, 1985.

32. Hellman S, Beadle G, Silver B, Harris JR: Primary breast cancer: The experience of the JCRT. In: Veronesi U, and Bonadonna G, eds. Clinical Trials in Cancer Medicine. vol. 6 Academic Press p. 137-144, 1985.

33. Recht A, Harris JR: Primary radiation therapy in early breast cancer. In: Vaeth JM, ed, Body image, self-esteem, and sexuality in cancer patients, 2nd rev ed. Basel: S. Karger Publishers, 96-102, 1986.

34. Henderson IC, Gellman RS, Harris JR, Canellos GP: Duration of therapy in adjuvant chemotherapy trials. NCI Monographs 1: 95-98, 1986.

35. Henderson IC, Harris JR: Breast Cancer: Current trends in Diagnosis and Treatment. In: Harrison's Textbook of Medicine: Update VII, 181-208, 1986.

36. Harris JR: Management of localized breast cancer. Hosp Pract 21 (10) : 61-72, 1986.

37. Recht A, Connolly JL, Schnitt SJ, Cady B, Love S, Osteen RT, Patterson WB, Shirley R, Silen W, Come S, Henderson IC, Silver B, Harris JR: Conservative surgery and radiation therapy for early breast cancer: Results, controversies ad unsolved problems. Semin Oncol 13(4): 434-449, 1986.

38. Connolly JL, Schnitt SJ, Silver B, Recht A, Cohen RB, Harris JR: The influence of pathologic features on clinical outcome of breast cancer patients treated by primary radiation therapy. In: Thomsen K, Ludwig H, eds, XIth World Congress of Gynecology and Obstertrics, Berlin: Springer-Verlag, 1986.

39. Henderson IC, Hayes DF, Come S, Harris JR, Canellos G: New agents and new medical treatments for advanced breast cancer. Semin Oncol 4 (1) 34-64, 1987.

40. Gore SM, Come SE, Griem K, Rose MA, Recht A, Botnick L, Rose C, Beadle G, Silver B, Henderson IC, Harris JR: Influence of the sequencing of chemotherapy and radiation therapy in node-positive breast cancer patients treated by conservative surgery and radiation therapy. In: Adjuvant Therapy of Cancer ed Salmon S, 1987, pp. 365-373.

41. Hellman S, Harris JR: Breast cancer: considerations in local and regional treatment. Radiology 164 (3) : 593-598, 1987.

42. Harris JR, Silver B, Rose MA, Recht A: Conservative surgery and radiation therapy as treatment for patients with early breast cancer: treatment policy at the Harvard Joint Center for Radiation Therapy. Australasian Radiology 31 (2): 119-128, 1987.

43. Harris JR, Henderson IC: Natural History and Staging of Breast Cancer. In: Harris JR, Hellman S, Henderson IC, Kinne DW, eds. Breast Diseases, J.B. Lippincott Company, Philadelphia, 233-258, 1987.

44. Harris JR, Hellman S: Adjuvant Radiotherapy. In: Harris JR, Hellman S, Henderson IC, Kinne DW,eds. Breast Diseases, J.B. Lippincott Company, Philadelphia, 284-298, 1987.

45. Harris JR, Hellman S: Conservative Surgery and Radiotherapy. In: Harris JR, Hellman S, Henderson IC, Kinne DW, eds. Breast Diseases, J.B. Lippincott Company, Philadelphia, 299-323, 1987.

46. Harris JR, Hellman S: Put the "Hockey Stick" on ice. Int J Radiat Oncol Biol Phys 15 (2) : 497-500, 1988.

47. Van Dongen JA, Harris JR, Peterse JL, Fentiman IS, Holland R, Salvadori B, Stewart HJ: In-situ breast cancer: The EORT consensus meeting. Lancet 2 (8653) : 25-27,1989.

48. Boyages J, Recht A, Connolly J, Schnitt S, Rose MA, Silver B, Harris JR: Factors associated with local recurrence as a first site of failure following the conservative treatment of early breast cancer. Recent Results in Cancer Research 115: 92-102, 1989.

49. Recht A, Connolly JL, Schnitt SJ, Harris JR: Therapy of in situ cancer. Hematol Oncol Clin North Am 3 (4): 691-708, 1989.

50. Boyages J, Harris JR: Local therapy of invasive disease. Hematol Oncol Clin North Am 3 (4): 675-690, 1989.

51. Harris JR, Coleman CN: Estimating the risk of second primary tumors following cancer treatment. (Editorial) J Clin Oncol 7 (1): 5-6, 1989.

52. Stomper P, Connolly J, Meyer J, Harris J: Clinically Occult Ductal carcinoma in situ detected with mammography: analysis of 100 cases with radiologic-pathologic correlation. Radiology (172): 235-241, 1989.

53. Recht A, Harris JR: Selection of patients with early-stage breast cancer for conservative surgery and radiation Oncology 4 (2): 23-30, 1990.

54. Sadowsky NL, Semine A, Harris JR: Breast imaging. A critical aspect of breast conserving treatment. Cancer 65 (9) 2113-2118, 1990.

55. Triedman SA, Osteen R, Harris JR: Factors influencing cosmetic outcome of conservative surgery and radiotherapy for breast cancer. Surg Clin North Am 70 (4): 901-916, 1990.

56. Osteen RT, Connolly JL, Costanza ME, Harris JR, Henderson IC, McKenney S: Cancer of the Breast. In: American Cancer Society Cancer Manual, 8th Edition, 171-187, 1990.

57. Harris JR, Schnitt SJ: Is radiotherapy as curative as mastectomy for patients with ductal carcinoma in situ? Int J Radiat Oncol Biol Phys (19) 4: 1091-1092, 1990.

58. Beard CJ, Harris JR: Treatment of stage I breast cancer. Res Staff Phy 36(2) : 17-31, 1990.

59. Pierce SM, Harris JR: The role of radiation therapy in the management of primary breast cancer. CA 41 (2): 85-96, 1991.

60. Pierce SM, Schnitt SJ, Harris JR: What to do about mammographically detected ductal carcinoma in situ? Cancer 70 (10): 2576-2578, 1992 (Editorial).

61. Recht A, Come SE, Harris, JR: Intergration of conservative surgery radiotherapy, and chemotherapy for patients with early stage breast cancer. Semin Radiat Oncol. 2 (2): 107-115, 1992.

62. Harris JR, Lippman ME, Veronesi U, Willett W: Breast Cancer: Recent trends and progress and future prospects. Three part medical review. New England Journal of Medicine 327: 319-328, 327: 390-398, 327: 473-480 1992.

63. Pierce S, Schnitt S, Harris J: What to do about mammographically detected ductal carcinoma in situ? Cancer (70):2576-2578, 1992.

64. Harris JR, Recht A: Sequencing Adjuvant Chemotherapy and Radiotherapy in Breast Cancer Patients: Int J Rad. Onc Biol Phys (26): 183-185, 1993.

65. Harris JR, Recht A: How to combine adjuvant chemotherapy and radiation therapy. Recent Results Cancer Res 127:129-36, 1993.

66. Harris JR, Gelman R: What have we learned about risk factors for local recurrence after breast-conserving surgery and irradiation? Editorial. J Clin Oncol 12(4):647-649, 1994 (April).

67. Recht A, Harris JR, Come SE: Sequencing of irradiation and chemotherapy for early-stage breast cancer. Oncology 8 (3):19-28, 1994 (March).

68. Legler CM, Shapiro CL, Harris JR, Hayes DF: Primary chemotherapy of resectable breast cancer. The Breast Journal 1(1):42-51, 1995.

69. Connolly JL, Harris JR, Schnitt SJ: Understanding the distribution of cancer within the breast is important for optimizing breast-conserving treatment. Cancer 76:1-3, 1995.

70. Hetelekidis S, Schnitt SJ, Morrow M, Harris JR: Management of ductal carcinoma in situ. Ca Cancer J Clin 45:244-253, 1995.

71. Morrow M, Harris JR, Schnitt SJ: Local control following breast-conserving surgery for invasive cancer: results of clinical trials. J Natl Cancer Inst 87 (22):1669-1673, 1995 (November).

72. Nixon A, Troyan S, Harris J: Options in the local management of invasive breast cancer. Semin Oncol 23 (4): 453-463, 1996.

Books

1. Harris JR, Hellman S, Silen W. Conservative Management of Breast Cancer. JB Lippincott Co, Philadelphia, 1983.
2. Harris JR, Hellman S, Henderson IC, Kinne D. Breast Diseases. JB Lippincott Co, Philadelphia, 1987.
3. Harris JR, Hellman S, Henderson IC, Kinne D. Breast Diseases, 2nd Edition, JB Lippincott Co, Philadelphia, 1991.
4. Harris JR, Lippman M, Morrow M, Hellman S. Diseases of the Breast. Lippincott-Raven, Philadelphia, 1996.

DEPARTMENT OF HEALTH AND HUMAN SERVICES
PUBLIC HEALTH SERVICE
FOOD AND DRUG ADMINISTRATION
STATEMENT OF INVESTIGATOR
(TITLE 21, CODE OF FEDERAL REGULATIONS (CFR) Part 312)
(See instructions on reverse side.)

Form Approved: OMB No 0910-0014.
Expiration Date: November 30, 1995.
See OMB Statement on Reverse.

NOTE: No investigator may participate in an investigation until he/she provides the sponsor with a completed, signed Statement of Investigator, Form FDA 1572 (21 CFR 312.53(c))

1. NAME AND ADDRESS OF INVESTIGATOR

Jorgen L. Hansen, M.Sc.
Joint Center for Radiation therapy
330 Brookline Avenue
Boston MA 02215

2. EDUCATION, TRAINING, AND EXPERIENCE THAT QUALIFIES THE INVESTIGATOR AS AN EXPERT IN THE CLINICAL INVESTIGATION OF THE DRUG FOR THE USE UNDER INVESTIGATION. ONE OF THE FOLLOWING IS ATTACHED:

☒ CURRICULUM VITAE ☐ OTHER STATEMENT OF QUALIFICATIONS

3. NAME AND ADDRESS OF ANY MEDICAL SCHOOL, HOSPITAL, OR OTHER RESEARCH FACILITY WHERE THE CLINICAL INVESTIGATION(S) WILL BE CONDUCTED.

Dana-Farber Cancer Institute
44 Binney St
Boston MA 02115

4. NAME AND ADDRESS OF ANY CLINICAL LABORATORY FACILITIES TO BE USED IN THE STUDY.

Clinical Laboratory
Dana-Farber Cancer Institute
44 Binney Street, D521
Boston MA 02115

5. NAME AND ADDRESS OF THE INSTITUTIONAL REVIEW BOARD (IRB) THAT IS RESPONSIBLE FOR REVIEW AND APPROVAL OF THE STUDY(IES).

Institutional Review Board
Dana-Farber Cancer Institute
44 Binney St
Boston MA 02115

6. NAMES OF THE SUBINVESTIGATORS *(e.g., research fellows, residents, associates)* WHO WILL BE ASSISTING THE INVESTIGATOR IN THE CONDUCT OF THE INVESTIGATION(S).

7. NAME AND CODE NUMBER, IF ANY, OF THE PROTOCOL(S) IN THE IND FOR THE STUDY(IES) TO BE CONDUCTED BY THE INVESTIGATOR.

Protocol name: Radiation and Thermal therapy for Extensive Intraductal carcinoma.
Protocol number: 95-006

280

☒ FOR PHASE 1 INVESTIGATIONS, A GENERAL OUTLINE OF THE PLANNED INVESTIGATION INCLUDING THE ESTIMATED DURATION OF THE STUDY AND THE MAXIMUM NUMBER OF SUBJECTS THAT WILL BE INVOLVED.

☐ FOR PHASE 2 OR 3 INVESTIGATIONS, AN OUTLINE OF THE STUDY PROTOCOL INCLUDING AN APPROXIMATION OF THE NUMBER OF SUBJECTS TO BE TREATED WITH THE DRUG AND THE NUMBER TO BE EMPLOYED AS CONTROLS, IF ANY; THE CLINICAL USES TO BE INVESTIGATED; CHARACTERISTICS OF SUBJECTS BY AGE, SEX, AND CONDITION; THE KIND OF CLINICAL OBSERVATIONS AND LABORATORY TESTS TO BE CONDUCTED; THE ESTIMATED DURATION OF THE STUDY; AND COPIES OR A DESCRIPTION OF CASE REPORT FORMS TO BE USED.

9. COMMITMENTS:

I agree to conduct the study(ies) in accordance with the relevant, current protocol(s) and will only make changes in a protocol after notifying the sponsor, except when necessary to protect the safety, rights, or welfare of subjects.

I agree to personally conduct or supervise the described investigation(s).

I agree to inform any patients, or any persons used as controls, that the drugs are being used for investigational purposes and I will ensure that the requirements relating to obtaining informed consent in 21 CFR Part 50 and institutional review board (IRB) review and approval in 21 CFR Part 56 are met.

I agree to report to the sponsor adverse experiences that occur in the course of the investigation(s) in accordance with 21 CFR 312.64.

I have read and understand the information in the investigator's brochure, including the potential risks and side effects of the drug.

I agree to ensure that all associates, colleagues, and employees assisting in the conduct of the study(ies) are informed about their obligations in meeting the above commitments.

I agree to maintain adequate and accurate records in accordance with 21 CFR 312.62 and to make those records available for inspection in accordance with 21 CFR 312.68.

I will ensure that an IRB that complies with the requirements of 21 CFR Part 56 will be responsible for the initial and continuing review and approval of the clinical investigation. I also agree to promptly report to the IRB all changes in the research activity and all unanticipated problems involving risks to human subjects or others. Additionally, I will not make any changes in the research without IRB approval, except where necessary to eliminate apparent immediate hazards to human subjects.

I agree to comply with all other requirements regarding the obligations of clinical investigators and all other pertinent requirements in 21 CFR Part 312.

INSTRUCTIONS FOR COMPLETING FORM FDA 1572
STATEMENT OF INVESTIGATOR:

1. Complete all sections. Attach a separate page if additional space is needed.
2. Attach curriculum vitae or other statement of qualifications as described in Section 2.
3. Attach protocol outline as described in Section 8.
4. Sign and date below.
5. FORWARD THE COMPLETED FORM AND ATTACHMENTS TO THE SPONSOR. The sponsor will incorporate this information along with other technical data into an Investigational New Drug Application (IND). INVESTIGATORS SHOULD NOT SEND THIS FORM DIRECTLY TO THE FOOD AND DRUG ADMINISTRATION.

10. SIGNATURE OF INVESTIGATOR Birger L Hansen	11. DATE 11.14.96

Public reporting burden for this collection of information is estimated to average 84 hours per response, including the time for reviewing instructions, searching existing data sources, gathering and maintaining the data needed, and completing reviewing the collection of information. Send comments regarding this burden estimate or any other aspect of this collection of information, including suggestions for reducing this burden to:

Reports Clearance Officer, PHS
Hubert H. Humphrey Building, Room 721-B
200 Independence Avenue, S.W.
Washington, DC 20201
Attn: PRA

and to:

Office of Management and Budget
Paperwork Reduction Project (0910-0014)
Washington, DC 20503

Please DO NOT RETURN this application to either of these addresses.

Nov 18, 1996

CURRICULUM VITAE

NAME: Jørgen Lindberg Hansen
ADDRESS: 32 Beverly Road, Wellesley, MA 02181-1154
DATE OF BIRTH: April 14, 1947
PLACE OF BIRTH: Vissenbjerg, Denmark
CITIZENSHIP: Denmark, US Permanent Resident

EDUCATION:

1969	Diploma	Danish Airforce (Electronics Engineering)
1980	B.S.	University of Copenhagen, Denmark, (Physics)
1982	M.S.	University of Wisconsin, Madison, (Medical Physics)

Additional Courses :

1969	Maintenance and repair of analog computers and radar's for missile control, El Paso, TX.
1975	Maintenance and repair of Varian Linear Accelerators, Palo Alto, CA.
1977	Maintenance and repair of Philips Linear Accelerators, Crawley, United Kingdom.
1984	Maintenance and Repair of GE Dose Planning System (RTPLAN), London, United Kingdom.
1984	Electron Dose Planning, Umeaa, Sweden
1984	Dose Optimization, U. of Wisconsin, Madison
1986	Physics and Technology of Hyperthermia, Urbino, Italy
1987	Physical Aspects of Hyperthermia, Durham NC.

LICENSURE AND CERTIFICATION:

1989	American Board of Radiology Certificate (Therapeutic Radiological Physics)

ACADEMIC APPOINTMENTS:

1985-1989	Visiting lecturer, Harvard Medical School, Boston, MA.
1989-1991	Lecturer, Harvard Medical School, Boston, MA.
1991-	Instructor, Harvard Medical School, Boston, MA.
1989-	Adjunct Assistant Professor, Mass. College of Pharmacy, MA.

HOSPITAL POSITIONS

1983-1985	Medical Physicist, Radiophysics Laboratory, Vejle Hospital, Denmark
1985-	Medical Physicist, JCRT Harvard Medical School, Boston, MA

OTHER POSITIONS:

1964-1974	Electronics Engineer, Danish Airforce
1974-1975	Electronics Engineer, Radiation Division, Varian Europe, Denmark.
1975-1980	Electronics Engineer, Radiophysics Dept., University Hospital of Copenhagen, Herlev, Denmark

AWARDS AND HONORS:

1980-1982	Fulbright Scholar Medical Physics Department, U. of Wisconsin, Madison.

MEMBERSHIPS, OFFICES AND COMMITTEE ASSIGNMENTS IN PROFESSIONAL SOCIETIES:

1986-	Institute of Electrical and Electronics Engineers.
1987-	North American Hyperthermia Group. (Associate)
1988-	American Association of Physicists in Medicine.
1988-	ASRT Task Group on Hyperthermia.
1990-	Association for Computing Machinery
1991-	Chairman of AAPM's committee for QA of Ultrasound Hyperthermia.

RESEARCH INTERESTS:

Treatment planning of hyperthermia.
Electromagnetic and ultrasound hyperthermia.
Invasive and non-invasive thermometry.

TEACHING EXPERIENCE:

1976-1980	Physics and operation of linear accelerators for radiation therapists.
1981	TA in health physics for graduate students, UW Madison.
1982	TA in diagnostics radiation. Physics for graduate students, UW, Madison.
1987 -	Physics and operation of MW and US hyperthermia equipment for therapists, medical residents, and post doctoral fellows.
1988 -	Medical radiation physics for radiation therapists and residents.

INVITED TALKS:

May 1996	Data acquisition and statistical problems in hyperthermia. Department of Biostatistics, School of Public Health, Harvard Medical School.
May 1996	Advances in hyperthermia at JCRT, Harvard Medical School. Annual meeting of New England chapter of AAPM, Sturbridge, MA.

ORIGINAL REPORTS :

Bowman, M.G. Curley, W.H. Newman, S.C. Summit, S. Chang, **J. Hansen**, T.S. Herman, G.K. Svensson. Use of Effective Conductivity for Hyperthermia Treatment Planning. ASME HTD - V. 126/BED - V 12, 1989. ASME Winter Annual Meeting 1989, San Francisco.

Bruce A. Bornstein, M.D., Pamela Scott Zouranjian, R.T.T., **Jorgen L. Hansen, M.S.**, Suzette M. Frazer, R.N., Lise A. Gelwan, R.N., Beverly A. Teicher, Ph.D., and Goran K. Svensson, Ph.D. Local Hyperthermia, Radiation Therapy, and Chemotherapy in Patients with Local-regional Recurrence of Breast cancer. Int. J. Rad. Oncology Biol. Phys., Vol 25, Nr 1, pp. 79-85, 1993.

Jorgen L. Hansen, Bruce B. Bornstein, Goran K. Svensson, William H. newman, Gregory T. Martin, Daniel A. Sidney, H. Frederick Bowman. A Quantitative, Integrated, Clinical Focused Ultrasound System for Deep Hyperthermia. ASME Winter Annual Meeting, 1994, Chicago.

Jorgen L. Hansen, Chris J. Diederich, Eduardo G. Moros, Paul R. Stauffer, Frank M. Waterman, J. Daniel Bourland. Comprehensive QA for the Sonotherm 1000 Multi-channel Ultrasound Hyperthermia System: Report of Ultrasound Quality Assurance Subcommittee, AAPM Science Council Committee on Hyperthermia. Medical Physics, (In review 1996).

PUBLISHED ABSTRACTS:

Jorgen Hansen, Hanne Kooy, Peter Kijewski, Bruce Bornstein, Maxine Jochelson, Terence Herman, Goran Svensson. 3-D Graphics Tool for Planning of Hyperthermia Deep Therapy. 10th Ann. Meeting of NAHG, New Orleans April 1990.

Hanne Kooy, Mark W. Dopheide, **Jorgen L. Hansen,** Edward Holupka, James Pelagatti, Goran K. Svensson. A Model for Treatment Planning System Architectures. World Congress on Medical Physics and Biomedical Engineering, Kyoto, Japan, 1991.

J.L. Hansen, H.M. Kooy, J.M. Pelagatti, M. Dopheide, G. Svensson. 3-D Geometric Treatment Planning System for Hyperthermia Deep Heating. Medical Physics, Vol. 18, No. 3, May/Jun 1991.

GK Svensson, B. Bornstein, D. DelliCarpini, **J. Hansen,** T. Herman, F. Bowman, W. Newman, E. Burdette, S. Goss. Focussed Ultrasound Array for Deep Hypethermia. Medical Physics, Vol. 18, No. 3, May/Jun 1991.

J.L. Hansen, D. Delli Carpini, G.Martin*, G.K. Svensson. Quality Assurance of a Spherical Focused Segmented Ultrasound Machine. Proc. 6th Int. Congress on Hyperthermic Oncology (ICHO), Tucson, 1992.

G.K. Svensson, **J.L. Hansen,** D. Delli Carpini, B. Bornstein and T. Herman. SAR and Temperature Distribution from a Spherical Fucused, Segmented Ultrasound Machine (FSUM). Proc. 6th Int. Congress on Hyperthermic Oncology (ICHO), Tucson, 1992.

B. A. Bornstein, P. S. Zouranjian, **J. L. Hansen,** S. M. Fraser, L. A. Gelwan, B. A. Teicher, G. K. Svensson. Hyperthermia (HT), Radiation Therapy (RT), and Chemotherapy (CT) in Patients with Local-Regional Recurrence of Breast Carcinoma. Proc. 6th Int. Congress on Hyperthermic Oncology (ICHO), Tucson, 1992.

X.-Q. Lu, G.K. Svensson, **J.L. Hansen,** B.A. Bornstein, J.R. Harris. E.C. Burdette, M. Slayton, P. Barthe. Design of an Ultrasound Hyperthermia Unit for Breast Cancer Treatment. 14th Annual Meeting of the North American Hyperthermia Society, Nashville, TN, 1994.

- B.A. Bornstein, T.S. Herman, L. Buswell, **J. Hansen**, P.S. Zouranjian, S.M. Fraser, B.A. teicher, G.K. Svensson, C.N. Coleman. Pilot Study of Local Hyperthermia (HT), radiation Therapy (RT), Etanidazole (ETA), and Cisplatin (CDDP) for Advanced Superficial Tumors. 14th Annual Meeting of the North American Hyperthermia Society, Nashville, TN, 1994.

E.C. Burdette, G.K. Svensson, X-Q Lu, **J.L. Hansen**, B.A. Bornstein. Ultrasound Thermal Therapy of Intact Breast. Medical Physics, Vol. 21, No. 6, June 1994.

J.L. Hansen, B.A. Bornstein, X-Q. Lu, G.K. Svensson. Hyperthermia Treatment of Human Deep Tumors using the Focused Segmented Ultrasound Machine (FSUM). 15th Annual Meeting of the North American Hyperthermia Society, San Jose, CA, 1995.

X-Q. Lu, G.K. Svensson, **J.L. Hansen**, B.A. Bornstein. Experimental verification of the design of an Ultrasonic Hyperthermia Unit for Breast Cancer Treatment. E.C. Burdette, Dornier Medical Systems, Inc., Champaign, IL 61820. 15th Annual Meeting of the North American Hyperthermia Society, San Jose, CA, 1995.

J.L. Hansen, E.C. Burdette, P. Neubauer, X-Q Lu, B.A. Bornstein, G.K. Svensson. Experimental Verification of a Cylindrical Multi-Transducer Ultrasound Breast Hyperthermia Treatment System. VII International Congress on Hyperthermic Oncology, Rome, Italy, April 1996.

E.C. Burdette, **J.L. Hansen**, P.L. Neubauer, W.W. Foard, L.J. Grossman, B.A. Bornstein, G.K. Svensson. Real-Time Computer Controlled Ultrasound Therapy and Monitoring System for Breast Cancer Treatment. VII Int. Congress on Hyperthermic Oncology, Rome, Italy, April 1996.

DEPARTMENT OF HEALTH AND HUMAN SERVICES
PUBLIC HEALTH SERVICE
FOOD AND DRUG ADMINISTRATION

STATEMENT OF INVESTIGATOR
(TITLE 21, CODE OF FEDERAL REGULATIONS (CFR) Part 312)
(See instructions on reverse side.)

Form Approved: OMB No. 0910-0014.
Expiration Date: November 30, 1995.
See OMB Statement on Reverse.

NOTE: No investigator may participate in an investigation until he/she provides the sponsor with a completed, signed Statement of Investigator, Form FDA 1572 (21 CFR 312.53(c))

1. NAME AND ADDRESS OF INVESTIGATOR.

Abram Recht, M.D.
Joint Center for Radiation therapy
Beth Israel Deaconess Medical Center Division
330 Brookline Avenue
Boston MA 02215

2. EDUCATION, TRAINING, AND EXPERIENCE THAT QUALIFIES THE INVESTIGATOR AS AN EXPERT IN THE CLINICAL INVESTIGATION OF THE DRUG FOR THE USE UNDER INVESTIGATION. ONE OF THE FOLLOWING IS ATTACHED:

☒ CURRICULUM VITAE ☐ OTHER STATEMENT OF QUALIFICATIONS

3. NAME AND ADDRESS OF ANY MEDICAL SCHOOL, HOSPITAL, OR OTHER RESEARCH FACILITY WHERE THE CLINICAL INVESTIGATION(S) WILL BE CONDUCTED.

Dana-Farber Cancer Institute
44 Binney St
Boston MA 02115

4. NAME AND ADDRESS OF ANY CLINICAL LABORATORY FACILITIES TO BE USED IN THE STUDY.

Clinical Laboratory
Dana-Farber Cancer Institute
44 Binney Street, D521
Boston MA 02115

5. NAME AND ADDRESS OF THE INSTITUTIONAL REVIEW BOARD (IRB) THAT IS RESPONSIBLE FOR REVIEW AND APPROVAL OF THE STUDY(IES).

Institutional Review Board
Dana-Farber Cancer Institute
44 Binney St
Boston MA 02115

6. NAMES OF THE SUBINVESTIGATORS *(e.g., research fellows, residents, associates)* WHO WILL BE ASSISTING THE INVESTIGATOR IN THE CONDUCT OF THE INVESTIGATION(S).

7. NAME AND CODE NUMBER, IF ANY, OF THE PROTOCOL(S) IN THE IND FOR THE STUDY(IES) TO BE CONDUCTED BY THE INVESTIGATOR.

Protocol name: Radiation and Thermal therapy for Extensive Intraductal carcinoma.
Protocol number: 95-006

8. ATTACH THE FOLLOWING CLINICAL PROTOCOL INFORMATION.

☒ FOR PHASE 1 INVESTIGATIONS, A GENERAL OUTLINE OF THE PLANNED INVESTIGATION INCLUDING THE ESTIMATED DURATION OF THE STUDY AND THE MAXIMUM NUMBER OF SUBJECTS THAT WILL BE INVOLVED.

☐ FOR PHASE 2 OR 3 INVESTIGATIONS, AN OUTLINE OF THE STUDY PROTOCOL INCLUDING AN APPROXIMATION OF THE NUMBER OF SUBJECTS TO BE TREATED WITH THE DRUG AND THE NUMBER TO BE EMPLOYED AS CONTROLS, IF ANY; THE CLINICAL USES TO BE INVESTIGATED; CHARACTERISTICS OF SUBJECTS BY AGE, SEX, AND CONDITION; THE KIND OF CLINICAL OBSERVATIONS AND LABORATORY TESTS TO BE CONDUCTED; THE ESTIMATED DURATION OF THE STUDY; AND COPIES OR A DESCRIPTION OF CASE REPORT FORMS TO BE USED.

9. COMMITMENTS:

I agree to conduct the study(ies) in accordance with the relevant, current protocol(s) and will only make changes in a protocol after notifying the sponsor, except when necessary to protect the safety, rights, or welfare of subjects.

I agree to personally conduct or supervise the described investigation(s).

I agree to inform any patients, or any persons used as controls, that the drugs are being used for investigational purposes and I will ensure that the requirements relating to obtaining informed consent in 21 CFR Part 50 and institutional review board (IRB) review and approval in 21 CFR Part 56 are met.

I agree to report to the sponsor adverse experiences that occur in the course of the investigation(s) in accordance with 21 CFR 312.64.

I have read and understand the information in the investigator's brochure, including the potential risks and side effects of the drug.

I agree to ensure that all associates, colleagues, and employees assisting in the conduct of the study(ies) are informed about their obligations in meeting the above commitments.

I agree to maintain adequate and accurate records in accordance with 21 CFR 312.62 and to make those records available for inspection in accordance with 21 CFR 312.68.

I will ensure that an IRB that complies with the requirements of 21 CFR Part 56 will be responsible for the initial and continuing review and approval of the clinical investigation. I also agree to promptly report to the IRB all changes in the research activity and all unanticipated problems involving risks to human subjects or others. Additionally, I will not make any changes in the research without IRB approval, except where necessary to eliminate apparent immediate hazards to human subjects.

I agree to comply with all other requirements regarding the obligations of clinical investigators and all other pertinent requirements in 21 CFR Part 312.

INSTRUCTIONS FOR COMPLETING FORM FDA 1572
STATEMENT OF INVESTIGATOR:

1. Complete all sections. Attach a separate page if additional space is needed.
2. Attach curriculum vitae or other statement of qualifications as described in Section 2.
3. Attach protocol outline as described in Section 8.
4. Sign and date below.
5. FORWARD THE COMPLETED FORM AND ATTACHMENTS TO THE SPONSOR. The sponsor will incorporate this information along with other technical data into an Investigational New Drug Application (IND). INVESTIGATORS SHOULD NOT SEND THIS FORM DIRECTLY TO THE FOOD AND DRUG ADMINISTRATION.

10. SIGNATURE OF INVESTIGATOR	11. DATE 11/20/96

Public reporting burden for this collection of information is estimated to average 84 hours per response, including the time for reviewing instructions, searching existing data sources, gathering and maintaining the data needed, and completing reviewing the collection of information. Send comments regarding this burden estimate or any other aspect of this collection of information, including suggestions for reducing this burden to:

Reports Clearance Officer, PHS
Hubert H. Humphrey Building, Room 721-B
200 Independence Avenue, S.W.
Washington, DC 20201
Attn: PRA

and to:

Office of Management and Budget
Paperwork Reduction Project (0910-0014)
Washington, DC 20503

Please DO NOT RETURN this application to either of these addresses.

ABRAM RECHT, M.D.

HISTORY OF PROFESSIONAL AND ADMINISTRATIVE ACTIVITIES

Tuesday, November 12, 1996

GENERAL

Date of Birth: June 13, 1952

Place of Birth: Pittsburgh, PA USA

Current Position:
Associate Professor
Joint Center for Radiation Therapy
Department of Radiation Oncology
Harvard Medical School, Boston, MA

Work:
Department of Radiation Oncology
Beth Israel Deaconess Medical Center
East Campus, Finard Building B25
330 Brookline Avenue
Boston, MA 02215

Phone: (617) 667-2345
FAX: (617) 667-4681
e-mail: arecht@bih.harvard.edu (text only)

Home:
15 Thatcher Street, Apt. 6
Brookline, MA 02146

EDUCATION, TRAINING, LICENSURE AND CERTIFICATION

Education:

1974	B.A.	Yale University, New Haven, CT
1974-75		Yale Law School, New Haven, CT
1975-76		Yale University, New Haven, CT
1980	M.D.	Johns Hopkins Medical School, Baltimore, MD

Postdoctoral Training:

Internship and Residencies:

1980-81	Intern in Medicine, New England Deaconess Hospital, Boston, MA
1981-84	Clinical Fellow, Joint Center for Radiation Therapy, Harvard Medical School, Boston, MA

Licensure and Certification:

1981	Certification of the National Board of Medical Examiners
1982	Permanent Registration, Board of Registration in Medicine, Commonwealth of Massachusetts
1984	Certification of the American Board of Radiology, Therapeutic Radiology
1985	Permanent License, Medical Board of California

ACADEMIC AND HOSPITAL APPOINTMENTS

Academic Appointments:

Harvard Medical School (Boston)

1984-86	Clinical Instructor of Radiation Therapy
1986-1992	Assistant Professor of Radiation Therapy
1992-	Associate Professor of Radiation Oncology

Hospital Appointments:

Beth Israel Deaconess Medical Center (Boston) — successor to Beth Israel Hospital and New England Deaconess Hospital as of October 1, 1996

1996-	Senior Radiation Oncologist

Beth Israel Hospital (Boston)

1984-1985	Assistant Radiation Therapist
1985-1995	Radiation Therapist
1995-1996	Senior Radiation Oncologist

Dana-Farber Cancer Institute (Boston)

1984-1985	Consulting Staff, Radiation Therapy
1985-1986	Clinical Associate with Active Staff Privileges
1986-1990	Assistant Physician with Active Staff Privileges
1990-	Physician with Active Staff Privileges

New England Deaconess Hospital (Boston)

1984-1996	Courtesy Affiliate Staff, Radiation Therapy

Brigham and Women's Hospital (Boston)

1985-	Associate in Radiation Therapy

Children's Hospital Medical Center (Boston)

1985-	Courtesy Staff, Radiation Therapy

Faulkner Hospital (Boston)

1985-	Courtesy Staff, Radiology

Mount Auburn Hospital (Cambridge MA)

1994-	Active Staff, Radiation Oncology

PROFESSIONAL AND ADMINISTRATIVE POSITIONS AND ACTIVITIES

Memberships in Professional Societies:

1980-	American Association for the Advancement of Science
1984-	Massachusetts Medical Society
1984-	Norfolk County (MA) Medical Society
1984-	American Society for Therapeutic Radiology and Oncology
1985-	American Society for Clinical Oncology
1985-	American College of Radiology
1985-	Massachusetts Radiological Society
1985-	New England Society for Radiation Oncology
1987-	European Society for Therapeutic Radiology and Oncology (corresponding member)
1990-	American Society for Breast Disease
1991-	American Medical Writers Association
1994-	European Society of Mastology

Professional Society Committees and Positions:

American Society of Clinical Oncology

1995-	Member, Health Services Research Committee
1996-	Member, Subcommittee on Guideline Methodology, Health Services Research Committee

Workshop, Study-Group, and Review Committee Memberships and Positions:

Joint Center for Radiation Therapy

1994-	Radiation Modifiers Working Group

Longwood Medical Area (Boston) Gynecologic Oncology Group

1987-90	Member

American College of Radiology

1988-	Breast Committee, Patterns of Care Study (development of consensus on best current management)
1994-	Reviewer of the breast cancer portion of the Radiation Oncology Practice Accreditation Program
1995-96	Task Force on Appropriateness Criteria, Expert Panel on Radiation Oncology, Breast Work Group (creation of practice guidelines)

Massachusetts Breast Cancer Research Program

10/95	Research Review Committee (review of grant applications)

National Cancer Institute

2/96	Site review committee, renewal application for National Surgical Adjuvant Breast and Bowel Project

Departmental Positions and Responsibilities:

Joint Center for Radiation Therapy (JCRT) (Boston)

1984-	Deputy coordinator for breast tumors

1985-	Coordinator for gastrointestinal tumors
1988-	Director of JCRT Resident Seminar program
1990-	Deputy Section Chief, Beth Israel Hospital division
1991-	Editor, The Joint Center for Radiation Therapy Handbook (departmental policy manual)
1994-	Member, Clinical Investigations Committee
1995-	Member, Dose-Standardization Subcommittee, Quality Improvement Committeee
1995-	Chair, Scientific Review and Audit Subcommittee, Clinical Investigations Committee
1996-	Deputy Section Chief, Beth Israel Deaconess Medical Center

Hospital Positions and Responsibilties:

Beth Israel Hospital (prior to October 1, 1996), then Beth Israel Deaconess Medical Center (Boston)

1990-	Member, Radiation Safety Committee
1992-	Member, Graduate Medical Education Committee
1994-	Member, Medical Executive Committee, Cancer Subcommittee

Authorship of Departmental Treatment Policies:

1. Recht A, Harris JR
   Primary Radiation Therapy for Early Breast Cancer: Treatment Policy
   Joint Center for Radiation Therapy, September 1985; revised edition, July 1986

2. Recht A, Rose MA, Harris JR
   Ductal Carcinoma in Situ: Treatment Policy
   Joint Center for Radiation Therapy, April 1988

3. Recht A, Pierce SM, Harris JR
   Breast - DCIS, Stages I, II
   in: Recht A, Buck B, eds
   The Joint Center for Radiation Therapy Handbook, April 1994

4. Recht A
   Esophageal Cancer
   in: Recht A, Buck B, eds
   The Joint Center for Radiation Therapy Handbook, April 1994

5. Recht A
   Upper Abdominal Cancers
   in: Recht A, Buck B, eds
   The Joint Center for Radiation Therapy Handbook, April 1994

Editorial Work and Positions:

Ad Hoc Review of Manuscripts

1985-	International Journal of Radiation Oncology, Biology, & Physics
1986-	Journal of Clinical Oncology
1989-	American Journal of Clinical Oncology
1991-	European Journal of Cancer

1991-	Radiotherapy and Oncology
1992-	Cancer
1992-	Plastic and Reconstructive Surgery
1994-	Breast Cancer Research and Treatment

Editorial Boards

1994-	"Cancer Manual", 9th edition, American Cancer Society, Massachusetts Division
1995-	Journal of Clinical Oncology

Journal/Book Editor

1990-92	Guest Editor, Seminars in Radiation Oncology, issue on "Conservative Management of Early Breast Cancer", April 1992
1995-96	Silverstein M, Lagios MD, Poller DN, Recht A, editors Ductal Carcinoma *In Situ* of the Breast Williams and Wilkins, Baltimore (associate editor)

Other Administrative Posts and Committees:

5/89-6/90	Member, Host Committee, preparation for the Sixth International Congress on Breast Diseases, Boston MA, June 1990
6/91-	Member, Breast Cancer Advisory Group, Risk Management Foundation of the Harvard Medical Institutions

CLINICAL AND RESEARCH ACTIVITIES

Clinical Responsibilities and Positions:

7/84-	Radiation Oncologist, Beth Israel Hospital/ Beth Israel Deaconess Medical Center (as of October 1, 1996)
7/84-3/96	Staff Physician, Breast Evaluation Center, Dana-Farber Cancer Institute
12/95-	Radiation Oncologist, Gastrointestinal Cancer Clinic, Dana-Farber Cancer Institute/Brigham and Women's Hospital
5/96-	Radiation Oncologist, Multidisciplinary BreastCare Clinic, Beth Israel Hospital/ Beth Israel Deaconess Medical Center (as of October 1, 1996)

Participant/Discussant in Hospital Clinics and Conferences:

7/84-5/88	Surgical Tumor Conference, Beth Israel Hospital (monthly meetings)
7/84-	Breast Evaluation Center, Dana-Farber Cancer Institute/ Partners Breast Cancer Conference (as of July 1, 1996) (weekly and special monthly)
7/85-	Gynecologic Tumor Board, Beth Israel Hospital/ Beth Israel Deaconess Medical Center (as of October 1, 1996) (weekly)
3/87-	Breast Tumor Conference, Beth Israel Hospital/ Beth Israel Deaconess Medical Center (as of October 1, 1996) (biweekly)
6/87-	Medical-Surgical Gastrointestinal Conference, Beth Israel Hospital (quarterly sessions devoted to GI malignancies)
4/91-4/92	Biliary/Pancreatic Disease Center Conference, Beth Israel Hospital (weekly)
9/91-3/94	Beth Israel (then Longwood) Head and Neck Cancer Clinic, conference and patient clinic (monthly to weekly)
12/95-	Gastrointestinal Cancer Clinic, Dana-Farber Cancer Institute-Brigham and Women's Hospital (weekly and special monthly)

Cooperative Research Group Activities:

Cancer and Acute Leukemia Group B (CALGB)

1986-	Affiliated investigator
1986-89	Radiotherapy representative from DFCI
1986-88	Participant, Quality Assurance Committee in Radiotherapy (QARC)
1986-88	Radiotherapy Committee representative on the Transplantation Planning Core Committee

European Organization for Research on Treatment of Cancer

11/88	Invited participant, EORTC In Situ Breast Cancer Workshop, Castle Marquette, Heemskerk, the Netherlands

9/91	Invited participant and chief rapporteur, EORTC DCIS Consensus Meeting, Leuven, Belgium
2/94	Invited participant and chief rapporteur, EORTC DCIS Consensus Meeting, Venice, Italy

Gastrointestinal Cancer Consortium (GCC)

1986-88	Representative from JCRT/Harvard for radiotherapy
1987-88	Executive Committee, Harvard group

Gastrointestinal Tumor Study Group (GITSG)

1985	Radiotherapy representative from Dana-Farber Cancer Institute (DFCI)/JCRT

German Breast Study Group

1996-	Data Monitoring Committee, GBSG Trial V

Harvard Cooperative Oncology Group (HCOG)

1992-	Member, Breast Committee

National Surgical Adjuvant Breast and Bowel Program (NSABP)

1987-	Affiliated investigator

Radiation Therapy Oncology Group

1995-	Member, Breast Committee

Listed Investigator on Formal Protocols:

Beth Israel Hospital

92-02-17-1929	Concurrent adjuvant chemoradiotherapy for early breast cancer (principal investigator); activated 3/92 (also open at Brigham & Women's Hospital as #91-3981-1, and DFCI as 92-106); closed 11/94

Dana-Farber Cancer Institute (and affiliated hospitals)

85-136	Wide excision and axillary dissection as definitive local treatment for patients with T1N- breast cancer; activated 5/86, closed 7/92
87-072	A phase I trial of radiotherapy and chemotherapy for treatment of non-metastatic carcinoma of the esophagus (co-chairman); activated 11/87, closed 6/88 (replaced by DFCI 87-073)
87-073	A phase I trial of SR 2508 radiosensitizer combined with radiotherapy and chemotherapy for treatment of non-metastatic carcinoma of the esophagus (co-chairman); activated 5/88, closed 12/92
87-126	A phase I protocol of combined modality therapy utilizing whole abdominal radiotherapy with concurrent cisplatin in patients with predominantly abdominal metastatic disease; activated 2/88; closed
92-128	Chemoradiotherapy in high risk breast cancer patients (co-chairman); activated 11/93; closed 3/95

94-012	A Phase II trial of surgical staging and multimodality therapy for resectable esophageal carcinoma (principal investigator); activated 3/94 (also open at BWH since 2/94 as protocol # 94-6345-1); closed 2/96

Gastrointestinal Cancer Consortium

87-01	Colon cancer - surgical adjuvant treatment, high-risk, local recurrence: a randomized comparison of surgery (control arm) vs. surgery plus postoperative irradiation and 5- FU; group activation 3/87, closed 6/88 (as DFCI 87-023, activated 5/87, closed 6/88)

Cancer and Acute Leukemia Group B

8783	Cyclophosphamide, BCNU, etoposide, and autologous marrow transplantation for resistant Hodgkin's disease (radiotherapy chair); activated 12/87; resigned as co-chair, 10/88

National Surgical Adjuvant Breast and Bowel Project

B-17	A clinical trial to evaluate natural history and treatment of patients with non-invasive intraductal adenocarcinoma; group activation 8/85 (as DFCI 88-026, activated 5/88) (DFCI co-chair); closed 12/90

HONORS AND AWARDS, GRANTS, AND MISCELLANEOUS

Honors and Awards:

1973	Phi Beta Kappa, Yale University
1974	Departmental Honors, Archeology, Yale University
1974	B.A., Summa Cum Laude, Yale University
1990	Martin B. Levene Teaching Award, Joint Center for Radiation Therapy (chosen by the residents)

Grants:

1989	Travel Grant, American Society for Therapeutic Radiology and Oncology, for travel to visit a European radiotherapy department and annual meeting of the ESTRO

Visiting Professorships:

12/92	McGill University Dept of Oncology/Réseau interhospitalier de Cancérologie, Université de Montréal Montréal, Québec, Canada
11/95	Department of Radiation Oncology, University of Virginia School of Medicine, Charlottesvile VA
3/96	Department of Radiation Oncology, M.D. Anderson Cancer Center, Houston TX
10/96	Department of Radiation Oncology, Yale University School of Medicine, New Haven CT

Miscellaneous:

4/89	Listed among the 184 leading breast cancer specialists in the US in a poll of academic physicians conducted by Good Housekeeping Magazine
1992	Listed in The Best Doctors in America, 1992-1993, S Naifeh and GW Smith, eds, Aiken SC: Woodward/White
10/92	Listed among the 419 leading adult cancer specialists (51 breast cancer specialists) in the US in a poll of academic physicians conducted by Good Housekeeping Magazine
1993	Listed in The Best Doctors in America, 1994-1995, 2nd ed., S Naifeh and GW Smith, eds, Aiken SC: Woodward/White
1993-	Professional Advisory Committee, the Wellness Community, Newton MA

ABRAM RECHT, M.D.

EDUCATIONAL ACTIVITIES

Tuesday, November 12, 1996

TEACHING EXPERIENCE: MEDICAL STUDENTS/RESIDENTS

Awards and Honors:

6/90	Martin B. Levene Teaching Award, Joint Center for Radiation Therapy (chosen by the residents)

Departmental Teaching/Supervision, Medical Students/Residents:

7/84-	Lectures, one-to-one daily clinical supervision and teaching of residents and medical students, and participation in daily morning teaching conferences and weekly resident seminars, Joint Center for Radiation Therapy, Dept. of Radiation Oncology, Harvard Medical School
7/88-	Director of JCRT Resident Seminar program

Departmental Teaching/Supervision, Other Health Professionals:

7/84-	Lectures to radiation therapy technology students, breast cancer and gastrointestinal cancers, at Joint Center for Radiation Therapy

Teaching, Medical Students/Residents in Other Departments:

1/85	Radiotherapy in the treatment of gynecologic malignancies; Lecture, GYN residents, Beth Israel Hospital
2/86	Radiotherapy in the treatment of gynecologic malignancies; Lecture, GYN residents, Beth Israel Hospital
3/89	Radiotherapy in the treatment of colorectal cancer; Lecture, "Professor's Rounds" for Medical Oncology Fellows, Beth Israel Hospital
12/93	Controversies in Breast-Conservation Therapy; Fellow's Lecture Series, Dana-Farber Cancer Institute
12/94	Ajduvant therapy for colon and rectal cancer; Basic Science Curriculum, Dept of Surgery, Beth Israel Hospital

TEACHING EXPERIENCE: POSTGRADUATE
(Invited Lecturer, Panel/Symposium Participant)

US National Societies:

11/86 Breast cancer - primary irradiation; Refresher Course, 28th Annual Meeting, American Society for Therapeutic Radiology and Oncology, Los Angeles CA (instructor, with JR Harris)

10/87 Breast cancer - primary irradiation; Refresher Course, 29th Annual Meeting, American Society for Therapeutic Radiology and Oncology, Boston MA (instructor, with JR Harris)

10/88 Breast cancer - primary irradiation; Refresher Course, 30th Annual Meeting, American Society for Therapeutic Radiology and Oncology, New Orleans LA (instructor, with JR Harris and MA Rose)

10/88 Controversial Issues in the Treatment of Breast Cancer; Panel, 30th Annual Meeting, American Society for Therapeutic Radiology and Oncology, New Orleans LA

4/89 Role of radiotherapy in cancer of the rectum and colon; Lecture, 17th Annual Spring Meeting, American College of Surgeons, Boston MA

11/92 Cancer of the Breast - Controversies in Treatment; Refresher Course, 33rd Annual Meeting, American Society for Therapeutic Radiology and Oncology, San Diego CA (instructor, with Susan Pierce)

11/92 Breast Cancer - Oral Presentation of Proferred Papers; 33rd Annual Meeting, American Society for Therapeutic Radiology and Oncology, San Diego CA (session co-moderator)

11/92 Panel - The Integration of Conservative Surgery and Radiation and Adjuvant Chemotherapy for Early Stage Breast Cancer; 33rd Annual Meeting, American Society for Therapeutic Radiology and Oncology, San Diego CA (panel member)

11/93 Cancer of the Breast - Controversies in Treatment; Refresher Course, 34th Annual Meeting, American Society for Therapeutic Radiology and Oncology, New Orleans LA (instructor)

5/94 Integration of radiation and chemotherapy for patients with early-stage breast cancer; Educational Symposium, 30th Annual Meeting, American Society of Clinical Oncology, Dallas TX (speaker)

10/94 Cancer of the Breast - Controversies in Treatment; Refresher Course, 35th Annual Meeting, American Society for Therapeutic Radiology and Oncology, San Francisco CA (instructor)

10/94 Breast Cancer - Oral Presentation of Proferred Papers; 35th Annual Meeting, American Society for Therapeutic Radiology and Oncology, San Francisco CA (session co-moderator)

5/95 The role of radiation therapy in organ preservation: implications of treating patients with organ-preserving surgery without radiation therapy; Educational Symposium, 31st Annual Meeting, American Society of Clinical Oncology, Los Angeles CA (speaker)

10/95 Cancer of the Breast - Primary Irradiation; Refresher Course, 36th Annual Meeting, American Society for Therapeutic Radiology and Oncology, Miami Beach FL (instructor)

10/95 Categorical Course on Breast Cancer, 36th Annual Meeting, American Society for Therapeutic Radiology and Oncology, Miami FL (panel member)

10/95 Does adjuvant radiation therapy improve survival?; International Symposium on Breast Cancer, Annual Meeting, American College of Surgeons, New Orleans LA

10/96 Breast Cancer - Oral Presentation of Proferred Papers; 37th Annual Meeting, American Society for Therapeutic Radiology and Oncology, Los Angeles CA (session co-moderator)

International Societies:

11/88 Radiotherapy of ductal carcinoma in situ; EORTC In Situ Breast Cancer Workshop, Castle Marquette, Heemskerk, the Netherlands (invited participant and speaker)

6/90 The role of the radiation therapist in early breast cancer; Sixth International Congress on Breast Diseases, International Society of Senology, Boston (symposium panelist)

6/90 Treatment of noninvasive ductal carcinoma; Sixth International Congress on Breast Diseases, International Society of Senology, Boston (symposium panelist)

9/91 Radiotherapy of ductal carcinoma in situ; EORTC DCIS Consensus Meeting, Leuven, Belgium (invited participant, speaker, and chief rapporteur)

2/94 Ductal carcinoma in situ; EORTC DCIS Consensus Meeting, Venice, Italy (invited participant and chief rapporteur)

9/94 Breast Conserving Therapy - Oral Presentation of Proferred Papers; 6th EORTC Breast Cancer Working Conference, Amsterdam, the Netherlands (session chair)

9/96 Ductal carcinoma in situ; 7th EORTC Breast Cancer Working Conference, Bordeaux, France (rapporteur)

Harvard-Affiliated Hospitals/Harvard Medical School:

2/85 Adjuvant radiotherapy for sarcomas; Medical Oncology Conference, Beth Israel Hospital

6/87 Radiotherapy in the treatment of GI malignancies; Medical-Surgical Gastrointestinal Conference, Beth Israel Hospital

[redacted]

8/87	Adjuvant radiotherapy in colorectal cancer - new protocols; Surgical Grand Rounds, Beth Israel Hospital
2/88	Treatment options and policies for noninvasive ductal carcinoma; Breast Evaluation Center Academic Conference, Dana-Farber Cancer Institute
6/89	New modalities in the treatment of esophageal cancer; Medical-Surgical Gastrointestinal Conference, Beth Israel Hospital
9/89	Treatment of the axilla: a radiotherapist's view (panel); Breast Evaluation Center Academic Conference, Dana-Farber Cancer Institute
5/90	Chemotherapy-radiotherapy interactions in the treatment of early stage breast cancer; Breast Evaluation Center Academic Conference, Dana-Farber Cancer Institute
9/90	The role of radiation therapy in the treatment of upper gastrointestinal cancers; Surgical Grand Rounds, Beth Israel Hospital
3/91	Post-mastectomy radiotherapy in the era of adjuvant systemic treatment; Breast Evaluation Center Academic Conference, Dana-Farber Cancer Institute
3/91	Radiation Oncology; Breast Cancer: State of the Art - Nursing Conference Program, Beth Israel Hospital
4/91	Update of the JCRT experience in the treatment of early-stage breast cancer; Breast Cancer Conference, Harvard Community Health Plan
10/91	New protocol of concurrent chemotherapy-radiotherapy for patients with early-stage breast cancer; Breast Evaluation Center Academic Conference, Dana-Farber Cancer Institute
4/92	Post-mastectomy radiotherapy for early-stage breast cancer; Breast Evaluation Center Morning Conference, Dana-Farber Cancer Institute
5/92	Radiation exposure and the development of breast cancer; Breast Evaluation Center Morning Conference, Dana-Farber Cancer Institute
10/92	Concurrent chemotherapy and radiotherapy protocol for patients with early stage breast Cancer; Protocol Review Conference, Division of Medical Oncology, Beth Israel Hospital
10/92	Combining chemotherapy and radiotherapy in the treatment of patients with early stage breast cancer; Combined Hematology/Oncology Grand Rounds, Beth Israel/Brigham & Women's/New England Deaconess Hospitals
7/93	Integration of chemotherapy and radiotherapy in the treatment of patients with early stage breast cancer; Breast Evaluation Center Morning Conference, Dana-Farber Cancer Institute
12/93	What is the best way to combine irradiation and chemotherapy after conservative surgery?; Controversies in Breast Cancer, Joint Center for Radiation Therapy/Harvard Medical School

4/94	Controversies in the use of radiation therapy for cancer of the esophagus; Multimodality Therapy of Chest Malignancies, Harvard Medical School
11/94	The axilla; Breast Evaluation Center Morning Conference, Dana Farber Cancer Institute (with Susan Troyan)
1/95	Implications of treating patients with early stage breast cancer with conservative surgery without radiation therapy; Beth Israel/Brigham & Women's/New England Deaconess Hospital Hematology/Oncology Grand Rounds
9/95	Local control and survival; Beth Israel Hospital Multidisciplinary Breast Conference
1/95	Adjuvant therapy for rectal cancer; Surgical Grand Rounds, Beth Israel Hospital
2/96	Breast cancer: local control and survival; Combined Hematology/Oncology Grand Rounds, Beth Israel/Brigham & Women's/New England Deaconess Hospitals
4/96	Sequencing of multi-modality treatment; A Comprehensive Approach to the Management of Breast Cancer 1996 (lecture series), Cancer Center, Massachusetts General Hospital
7/96	Sequencing chemotherapy and radiotherapy in the treatment of patients with early-stage breast cancer; Breast Evaluation Center Morning Conference, Dana Farber Cancer Institute
10/96	Radiation therapy as adjuvant treatment for patients with rectal cancer; Lecture Series, Dana Farber Cancer Institute/Brigham & Women's Hospital Gastrointestinal Cancer Clinic

Other American Institutions and Organizations:

8/84	Current concepts in the treatment of breast carcinoma; Conference on the Treatment of Breast Cancer, Don and Sybil Harrington Cancer Center, Amarillo TX
11/84	Conservative treatment of breast carcinoma; Third Annual Lecture in Memory of Dr. John W. Spellman, Dept. of Surgery, St. Elizabeth's Hospital, Boston MA (panel and speaker)
4/85	Breast carcinoma treatment; Visiting Professor Program, Akron City Hospital, Akron OH
8/85	Controversies in carcinoma of the breast; Conference, University of South Florida, held at Orlando FL
9/86	Conservation therapy in early breast cancer - the role of radiation therapy; Cancer Symposium, Central Arkansas Radiation Therapy Institute, Little Rock AK
4/87	Conservative management of early breast cancer; Advances in Radiation Oncology, Central New York Academy of Medicine, New Hartford NY
5/87	Radiation therapy in breast cancer; Current Update in the Treatment of Breast Carcinoma, St. John Hospital, Detroit MI

6/87	Controversies in radiation therapy in 1987; Fourth Annual Symposium on Challenging Topics in Surgery - Cancer of the Breast: Update - 1987, Lincoln Medical and Mental Health Center, Bronx NY
10/87	Radiation therapy following initial diagnosis of breast malignancy; Initial Diagnosis and Treatment of Breast Malignancies, American Cancer Society/St. Mary's Hospital, Milwaukee WI
1/88	Breast cancer - the radiation therapist's approach; and, The Role of radiation in the therapy of colorectal cancer; Eleventh Annual Winter Symposium - Cancer for the Primary Care Physician, St. Mary's Hospital, Grand Junction CO
2/88	Radiotherapeutic management of early breast cancer; Early Diagnosis of Breast Cancer: the Physician's Role (Diagnosis, Medicolegal Issues and Treatment), American Cancer Society, Pinellas County Unit, Tampa FL
3/88	Controversies in primary breast cancer ; Monthly Meeting, Clinical Oncology Association of Georgia, Atlanta GA
4/88	Treatment of ductal carcinoma in situ; Internal Medicine Ground Rounds, Harper Hospital, Detroit MI
4/88	Controversies in the treatment of early-stage invasive breast cancer; Oncology Grand Rounds, Harper Hospital, Detroit MI
5/88	Conservative surgery and radiation therapy for early breast cancer; Breast Cancer Update, American Cancer Society of Indiana, Lake County Unit/Indiana University School of Medicine, Northwest Center, Merrillville IN
10/88	Controversies in the management of early stage breast carcinoma; San Diego County Radiological Society, Radiation Therapy Section, San Diego CA
11/88	Symposium - Preinvasive breast cancer (speaker and panel member); 99th Meeting, New England Cancer Society, Boston MA
3/89	Conservative surgery and radiation therapy in the treatment of early breast cancer; Third Annual Columbus Cancer Conference, Riverside Methodist Hospital, Columbus OH
4/89	Conservative surgery and radiation therapy for early-stage breast cancer; and, Controversies in the treatment of breast cancer; Seminar on Breast Cancer, American Cancer Society, Sarasota Unit, Sarasota FL
7/89	Conservative surgery and radiation therapy for early breast cancer; Breast Cancer: Diagnosis and Treatment Modalities, University of Kentucky Medical Center/St. Claire Medical Center, Morehead KY
9/89	Adjuvant radiotherapy in node-negative breast cancer; Perspectives in the Management of Early Breast Cancer, Macomb Hospital Center, Warren MI
11/89	Conservative surgery and radiation therapy for early stage breast cancer; Breast Cancer 1990, Cancer Care Associates, Rexford NY

2/90	Breast cancer: electron boost vs. implant; The Role of High Energy Electrons in the Treatment of Cancer, 25th Annual San Francisco Cancer Symposium, St. Mary's Hospital and Medical Center, San Francisco CA
9/90	Controversies in the treatment of early breast cancer; The Diagnosis and Management of Early Breast Cancer, Seventh Annual Update in Surgical Pathology, Washington Hospital Center, Washington DC
4/91	Conservative surgery and radiation therapy for early- stage breast cancer; Medical Grand Rounds, St. Elizabeth's Hospital, Boston MA
9/91	Integration of conservative surgery, radiation therapy, and chemotherapy in the treatment of patients with early-stage breast cancer; and, Panel on DCIS; Current Trends in Breast Cancer, Pennsylvania Oncologic Society, Gettysburg PA
11/91	Management of early breast cancer: conservative surgery and radiation therapy; Management of Breast Cancer: Present Strategies - Future Trends, First Annual Cancer Symposium, Crozer Regional Cancer Center, Upland PA
1/92	Radiotherapy and conservative surgery in invasive breast cancer; Why do we fail in conservation treatment of breast cancer?; and, In situ cancer - considerations for therapy; Diagnosis and Treatment of Early Breast Cancer, Dept. of Radiology, University of Alabama at Birmingham, held in Naples FL
3/92	Treatment of in situ breast cancer; and Radiotherapy/chemotherapy integration in breast conservation therapy; Organ Conservation in Curative Cancer Treatment, 27th Annual San Francisco Cancer Symposium, St. Francis Memorial Hospital, San Francisco CA
9/92	The role of radiotherapy in the management of DCIS; and The role of radiotherapy in the treatment of early stage invasive breast cancer; Early Breast Cancer Diagnosis & Treatment: the State-of-the-Art Team Approach, Orlando FL
10/92	Treatment of ductal carcinoma in situ; Annual Meeting, Piedmont Oncology Association, Hilton Head SC
10/92	Integration of chemotherapy and radiotherapy in the treatment of early-stage breast cancer; New York Roentgen Society, Oncology Section, New York NY
1/93	Extensive intraductal component (EIC) and other risk factors for failure of conservation treatment of breast cancer; and, What the diagnostic radiologist should know about conservation treatment of breast cancer; 3rd Annual Mammography Course, Dept. of Radiology, University of Alabama at Birmingham, held at Naples FL
2/93	Conservative therapy in radiation oncology for early stage breast cancer; and Controversies and difficult questions in radiation oncology; New Trends in Breast Cancer, Georgia Division, American Cancer Society, Atlanta GA
6/93	Controversies in the management of early stage breast cancer; Oncology Conference, Goddard Memorial Hospital, Stoughton MA

9/93	Integration of chemotherapy and radiotherapy; National Symposium on Concurrent Modalities of Cancer Treatment, South-Eastern Michigan Division, American Cancer Society and Michigan Institute of Radiation Oncology, Dearborn MI
9/93	Radiation therapy for breast cancer; 13th Annual Breast Imaging Conference, Medical College of Wisconsin, Palm Springs CA
11/93	Treatment options for ductal carcinoma in situ; Conference, Center for Breast Care, St. Elizabeth's Hospital, Boston MA
4/94	Controversies in breast-conservation therapy; McIntyre Symposium on Breast Cancer, Veterans Memorial Medical Center, Meriden CT
5/94	Controversies in breast conservation management; 24th Annual Course, Current Concepts in Radiation Therapy, Department of Therapeutic Radiology-Radiation Oncology, University of Minnesota Medical School, Minneapolis MN
5/94	Management of DCIS; Breast Cancer Symposium, St. Francis Hospital and Medical Center, Hartford CT
6/94	Controversies in breast-conservation therapy; Department of Radiation Oncology, Tufts-New England Medical Center, Boston MA
6/94	Controversies in management of early breast cancers; Diagnosis and Management of Early Breast Cancer, South Nassau Communities Hospital, Oceanside NY
8/94	Radiation therapy for in situ and Stages I/II disease: patient selection and results; and, Radiation strategies and outcome data for advanced local-regional disease; Comprehensive Management of Breast Cancer and Breast Reconstruction, Brown University School of Medicine, Goat Island RI
10/94	Breast; ChemoRadiation 1994, The Cancer Center at Saint Agnes and Kaweah Delta Cancer Care Center/University of California, San Francisco, at Yosemite National Park CA
11/94	Role of radiation therapy for in situ carcinoma; Role of radiation therapy for early invasive carcinoma; and, Integration of chemotherapy and radiotherapy; Multidisciplinary Conference on Diagnosis and Treatment of Early Stage Breast Cancer, Mammography Education Inc, at Maui HI
3/95	The role of radiation therapy in the treatment of early breast cancer; Medical Grand Rounds, St. Elizabeth's Hospital, Boston MA
4/95	Conservative surgery and radiation therapy; Controversies in Breast Cancer, Sacred Heart Hospital and University of Pennsylvania Cancer Center, Allentown PA
5/95	Conservative surgery without radiation therapy for early stage breast cancer: the importance of local control; 25th Annual Course, Current Concepts in Radiation Therapy, Department of Therapeutic Radiology-Radiation Oncology, University of Minnesota Medical School, Minneapolis MN
6/95	Radiation therapy in teh management of breast cancer; American Cancer Society Annual Symposium, Glens Falls Hospital/American Cancer Society Warren-Essex

South Division/Adirondack Education Consortium for Health Organizations, Glens Falls NY

7/95	Debate: Women who undergo breast-preserving therapy for Stage I and II breast cancer greater than 1 cm (ER/PR negative) should receive systemic chemotherapy prior to radiotherapy; Annual Meeting, Southern Association for Oncology, West Palm Beach FL
9/95	Ductal carcinoma in situ; Tumor Board Series, St. Annes's Hospital, Fall River MA
9/95	Early breast cancer: the role of radiotherapy; Perspectives in Breast Cancer, Indiana University Cancer Center, at Phoenix AZ
11/95	Patient selection and integration of chemotherapy and radiation therapy for patients with early-stage invasive breast cancer; Visiting Professors Lecture Series, Department of Radiation Oncology, University of Virginia Health Sciences Center, Charlottesville VA
11/95	Controversies in early-stage breast cancer; Annual Meeting, Mid-Atlantic Society of Radiation Oncology, Annapolis MD
4/96	Local control and survival in breast cancer; Grand Rounds, Hematology/Oncology Division, Department of Veterans Affairs Hospital, Boston MA
5/96	Patient selection for treatment with breast-conserving surgery and radiation therapy; 26th Annual Course, Current Concepts in Radiation Therapy, Department of Therapeutic Radiology-Radiation Oncology, University of Minnesota Medical School, Minneapolis MN
9/96	Radiation therapy for breast conservation; Approaches to the Management of Breast Cancer, Memorial Medical Center, Savannah GA
10/96	Integration of chemotherapy and radiotherapy in the treatment of patients with early-stage breast cancer; Grand Rounds, Yale Cancer Center, New Haven CT

Other Institutions and Organizations Outside the US:

4/87	The role of radiation therapy in conservative breast cancer therapy; First International Symposium on Current Aspects of the Treatment of Breast Cancer, Universitäts-Frauenklinik, Friedrich-Alexander Universität Erlangen-Nürnberg, Erlangen, Federal Republic of Germany
9/88	Loco-regional therapy of breast cancer; Early Cancer: Detection and Management - 25th Clinical Conference, Ontario Cancer Treatment and Research Foundation, Thunder Bay, Ontario, Canada
11/88	Conservative surgery and radiotherapy for early stage breast cancer: update of the JCRT experience; Lecture, Netherlands Cancer Institute, Amsterdam
8/89	Conservative management of breast cancer: the JCRT experience; Lecture, Royal Marsden Hospital, Sutton, Surrey, UK

12/92	Selection factors for integration of conservative surgery and radiotherapy; Management of ductal carcinoma in situ; Integration of breast-conserving surgery, radiotherapy, and chemotherapy for patients with early-stage breast carcinoma; Treatment of regional lymph nodes - the controversy; Visiting Professor, Department of Oncology, McGill University School of Medicine, Montréal PQ, Canada
5/93	The role of radiation therapy in conservative breast cancer therapy; and Radiotherapy for ductal carcinoma in situ; Fourth International Symposium on Current Aspects of the Treatment of Gynecological and Breast Cancers, Universitäts-Frauenklinik, Friedrich-Alexander Universität Erlangen-Nürnberg, Erlangen, Federal Republic of Germany
10/93	The use of margin assessment and histology in the selection of patients for breast conservation therapy; A Symposium on Breast Diseases (Second Annual Symposium), Ottawa Regional Cancer Center, Ottawa ON, Canada
7/96	Integration of chemotherapy and radiotherapy in the treatment of patients with early-stage breast cancer, and, Use of radiotherapy in the treatment of patients with DCIS; International Breast Cancer Symposium, Klinikum Bayreuth and Friedrich-Alexander Universität Erlangen-Nürnberg, Bayreuth, Federal Republic of Germany

PUBLISHED SYLLABI/MATERIALS FOR CORRESPONDENCE COURSES

ONCOLIT 1988	Summary of Literature: Conservative Surgery and Radiation Therapy for Early-Stage Breast Cancer (with JR Harris); published under the auspices of the American Society for Therapeutic Radiology and Oncology
ONCOLIT 1989	Summary of Literature: Conservative Surgery and Radiation Therapy for Early-Stage Breast Cancer (with JR Harris); published under the auspices of the American Society for Therapeutic Radiology and Oncology

PUBLIC EDUCATION/INFORMATION ACTIVITIES

5/85- 6/88	Adviser, Cancer Information Service, Division of Cancer Control, Dana-Farber Cancer Institute, Boston, regarding weekly newspaper column of cancer information (Boston Sunday Globe)
5/86	Interview on newscast, WBZ-TV, Ch. 4, Boston, concerning breast cancer detection and mammography (with Dr. Lucy Hahn, Dept. of Radiology, Beth Israel Hospital)
4/87	Appearence on radio talk-show, WIBX-AM, and news interview, WUTR-TV, Ch. 20, Utica NY, concerning breast cancer treatment
11/92	Interview for the Hometown Radio Interview Program, sponsored by the American Society for Therapeutic Radiology and Oncology
10/94	Interview for the Hometown Radio Interview Program, sponsored by the American Society for Therapeutic Radiology and Oncology

ABRAM RECHT, M.D.

BIBLIOGRAPHY

Tuesday, November 12, 1996

ORIGINAL REPORTS

1. Harris JR, Recht A, Amalric R, Calle R, Clark RM, Reid JG, Spitalier JM, Vilcoq JR, Hellman S
Time course and prognosis of local recurrence following primary radiation therapy for early breast cancer
J Clin Oncol 2: 37-41, 1984

2. Recht A, Silver B, Schnitt S, Connolly J, Hellman S, Harris JR
Breast relapse following primary radiation therapy for early breast cancer. I: Classification, frequency, and salvage
Int J Radiat Oncol Biol Phys 11: 1271-1276, 1985

3. Schnitt S, Connolly J, Recht A, Silver B, Harris JR
Breast relapse following primary radiation therapy for early breast cancer. II: Detection, pathologic features, and prognostic significance
Int J Radiat Oncol Biol Phys 11: 1277-1284, 1985

4. Recht A, Danoff BS, Solin LJ, Schnitt S, Connolly J, Botnick L, Goldberg I, Goodman RL, Harris JR
Intraductal carcinoma of the breast: results of treatment with excisional biopsy and irradiation
J Clin Oncol 3: 1339-1343, 1985

5. Loeffler JS, Leopold KA, Recht A, Weinstein HJ, Tarbell NJ
Emergency pre-biopsy radiation for mediastinal masses: impact upon subsequent pathologic diagnosis and outcome
J Clin Oncol 4: 716-721, 1986

6. Larson D, Weinstein M, Goldberg I, Silver B, Recht A, Cady B, Silen W, Harris JR
Edema of the arm as a function of the extent of axillary surgery in patients with stage I-II carcinoma of the breast treated with primary radiotherapy
Int J Radiat Oncol Biol Phys 12: 1575-1582, 1986

7. Stomper PC, Recht A, Berenberg AL, Jochelson MS, Harris JR
Mammographic detection of recurrent cancer in the irradiated breast
AJR 148: 39-43, 1987

8. Minsky BD, Siddon RL, Recht A, Nagel JS
Dosimetry of aqueous phosphorus 32 after soft tissue infiltration following attempted intravenous administration
Health Physics 52: 87-89, 1987

9. Schnitt SJ, Connolly JL, Khettry U, Mazoujian G, Brenner M, Silver B, Recht A, Beadle G, Harris JR

[redacted]

Pathologic findings on re-excision of the primary site in breast cancer patients considered for treatment by primary radiation therapy
Cancer 59: 675-681, 1987

10. Lederman GS, Recht A, Herman T, Osteen R, Corson J, Antman KH
Long-term survival in peritoneal mesothelioma: the role of radiotherapy and combined modality treatment
Cancer 59: 1882-1886, 1987

11. Lederman GS, Recht A, Loeffler JS, Dubuisson D, Kleefield J, Schnitt SJ
Craniopharyngioma in an elderly patient
Cancer 60: 1077-1080, 1987

12. Griem KL, Henderson IC, Gelman R, Ascoli D, Silver B, Recht A, Goodman RL, Hellman S, Harris JR
The five-year results of a randomized trial of adjuvant radiation therapy after chemotherapy in breast cancer patients treated with mastectomy
J Clin Oncol 5: 1546-1555, 1987

13. Sheldon T, Hayes D, Cady B, Parker L, Osteen R, Silver B, Recht A, Henderson IC, Harris JR
Primary radiation therapy for locally advanced breast cancer
Cancer 60: 1219-1225, 1987

14. Osteen RT, Connolly JL, Recht A, Silver B, Schnitt SJ, Harris JR
Identification of patients at high risk for local recurrence after conservative surgery and radiation therapy for stage I or II breast cancer
Arch Surg 122: 1248-1252, 1987

15. Minsky B, Mies C, Recht A, Rich T, Chaffey J
Colloid carcinoma of the colon and rectum
Cancer 60: 3103-3112, 1987

16. Minsky B, Mies C, Rich T, Recht A, Chaffey J
Potentially curative surgery of colon cancer: patterns of failure and survival
J Clin Oncol 6: 106-118, 1988

17.. Minsky B, Mies C, Rich T, Recht A, Chaffey J
Potentially curative surgery of colon cancer: the influence of blood vessel invasion on survival and patterns of failure
J Clin Oncol 6: 119-127, 1988

18. Recht A, Connolly JL, Schnitt SJ, Love S, Rose MA, Silver BS, Harris JR
The effect of young age on tumor recurrence in the breast after conservative surgery and radiotherapy for early breast cancer
Int J Radiat Oncol Biol Phys 14: 3-10, 1988

19. Recht A, Siddon RL, Kaplan WD, Andersen JW, Harris JR
Three-dimensional internal mammary lymphoscintigraphy: implications for radiation therapy treatment planning for breast carcinoma
Int J Radiat Oncol Biol Phys 14: 477-481, 1988

20. Minsky B, Mies C, Recht A, Rich T, Chaffey J
Resectable adenocarcinoma of the rectosigmoid and rectum: I. Patterns of failure and survival
Cancer 61: 1408-1416, 1988

21. Minsky B, Mies C, Recht A, Rich T, Chaffey J
Resectable adenocarcinoma of the rectosigmoid and rectum: II. The influence of blood vessel invasion on survival and patterns of failure
Cancer 61: 1417-1424, 1988

22. Lederman GS, Recht A, Herman T, Osteen R, Corson J, Antman KH
Combined modality treatment of peritoneal mesotheliomas
NCI Monogr 6: 321-322, 1988

23. Kaplan WD, Andersen, JW Siddon RL, Connolly BT, McCormick CA, Laffin SM, Rosenbaum EM, Jennings CA, Recht A, Harris JR
The three-dimensional localization of internal mammary lymph nodes by radionuclide lymphoscintigraphy
J Nucl Med 29: 473-478, 1988

24. Recht A, Silen W, Schnitt SJ, Connolly JL, Gelman RS, Rose MA, Silver B, Harris JR
Time-course of local recurrence following conservative surgery and radiotherapy for breast cancer
Int J Radiat Oncol Biol Phys 15: 255-261, 1988

25. Recht A, Schnitt SJ, Connolly JL, Rose MA, Silver B, Come S, Henderson IC, Slavin S, Harris JR
Prognosis following local or regional recurrence after conservative surgery and radiotherapy for early stage breast carcinoma
Int J Radiat Oncol Biol Phys 16: 3-9, 1989

26. Leopold KA, Recht A, Schnitt SJ, Connolly JL, Rose MA, Silver B, Harris JR
Results of conservative surgery and radiation therapy for multiple synchronous cancers of one breast
Int J Radiat Oncol Biol Phys 16: 11-16, 1989

27. Rose MA, Olivotto I, Cady B, Koufman C, Osteen R, Silver B, Recht A, Harris JR
Conservative surgery and radiation therapy for early breast cancer: long-term cosmetic results
Arch Surg 124: 153-157, 1989

28. Minsky BD, Rich TA, Recht A, Harvey W, Mies C
Selection criteria for local excision with or without adjuvant radiation therapy for rectal cancer
Cancer 63: 1421-1429, 1989

29. Schnitt SJ, Connolly JL, Recht A, Silver B, Harris JR
The influence of infiltrating lobular histology on local tumor control in breast cancer patients treated with conservative surgery and radiotherapy
Cancer 64: 448-454, 1989

30. Minsky BD, Mies C, Rich TA, Recht A

Lymphatic vessel invasion is an independent prognostic factor for survival in colorectal cancer
Int J Radiat Oncol Biol Phys 17: 311-318, 1989

31. Rose MA, Henderson IC, Gelman R, Boyages J, Gore SM, Come S, Silver B, Recht A, Connolly J, Schnitt S, Coleman CN, Harris JR
Premenopausal breast cancer patients treated with conservative surgery, radiotherapy and adjuvant chemotherapy have a low risk of local failure
Int J Radiat Oncol Biol Phys 17: 711-717, 1989

32. Olivotto IA, Rose MA, Osteen RT, Love S, Cady B, Silver B, Recht A, Harris JR
Late cosmetic outcome after conservative surgery and radiotherapy for early breast cancer: analysis of causes of cosmetic failure
Int J Radiat Oncol Biol Phys 17: 747-753, 1989

33. Epstein AH, Connolly J, Gelman R, Schnitt SJ, Silver B, Boyages J, Rose MA, Recht A, Harris JR
The predictors of distant relapse following conservative surgery and radiotherapy for early breast cancer are similar to those following mastectomy
Int J Radiat Oncol Biol Phys 17: 755-760, 1989

34. Eberlein T, Connolly JL, Schnitt S, Recht A, Osteen RT, Harris JR
Predictors of local recurrence following conservative breast surgery and radiation therapy: the influence of tumor size
Arch Surg 125: 771-777, 1990

35. Boyages J, Recht A, Connolly J, Schnitt S, Kooy H, Love S, Osteen RT, Cady B, Silver B, Harris JR
Early breast cancer: predictors of breast recurrence for patients treated with conservative surgery and radiation therapy
Radiother Oncol 19: 29-41, 1990

36. Henderson IC, Hayes DF, Parker LM, Love S, Garber JE, Recht A, Breitmeyer JB, Harris JR, Canellos GP
Adjuvant systemic therapy for patients with node-negative tumors
Cancer 65: 2132-2147, 1990

37. Harris JR, Recht A, Connolly J, Cady B, Come S, Henderson IC, Koufman C, Love S, Schnitt S, Osteen R
Conservative surgery and radiotherapy for early breast cancer
Cancer 66: 1427-1438, 1990

38. Bornstein BA, Recht A, Connolly JL, Schnitt SJ, Cady B, Koufman C, Love S, Osteen RT, Harris JR
Results of treating ductal carcinoma in situ of the breast with conservative surgery and radiation therapy
Cancer 67: 7-13, 1991

39. Recht A, Pierce SM, Abner A, Vicini F, Osteen RT, Love SM, Silver B, Harris JR
Regional nodal failure after conservative surgery and radiotherapy for early-stage breast carcinoma
J Clin Oncol 9: 988-996, 1991

40. Abner AL, Recht A, Vicini FA, Silver B, Hayes D, Come S, Harris JR
Cosmetic results after conservative surgery, chemotherapy and radiation therapy for early breast cancer
Int J Radiat Oncol Biol Phys 21: 331-338, 1991

41. Lingos TI, Recht A, Vicini F, Abner A, Silver B, Harris JR
Radiation pneumonitis in breast cancer patients treated with conservative surgery and radiation therapy
Int J Radiat Oncol Biol Phys 21: 355-360, 1991

42. Recht A, Come SE, Gelman RS, Goldstein M, Tishler S, Gore SM, Abner AL, Vicini FA, Silver B, Connolly JL, Schnitt SJ, Coleman CN, Harris JR
Integration of conservative surgery, radiotherapy, and chemotherapy for the treatment of early-stage node- positive breast cancer: sequencing, timing, and outcome
J Clin Oncol 9: 1662-1667, 1991

43. Vicini FA, Eberlein TJ, Connolly JL, Recht A, Abner A, Schnitt SJ, Silen W, Harris JR
The optimal extent of resection for patients with Stage I or II breast cancer treated with conservative surgery and radiotherapy
Ann Surg 214: 200-204, 1991

44. Solin LJ, Recht A, Fourquet A, Kurtz J, Kuske R, McNeese M, McCormick B, Cross MA, Schultz DJ, Bornstein BA, Spitalier J-M, Vilcoq JR, Fowble BL, Harris JR, Goodman RL
Ten year results of breast-conserving surgery and definitive irradiation for intraductal carcinoma (ductal carcinoma in situ) of the breast
Cancer 68: 2337-2344, 1991

45. Vicini FA, Recht A, Abner A, Boyages J, Cady B, Connolly JL, Osteeen RT, Schnitt SJ, Silen W, Harris JR
Recurrence in the breast following treatment of patients with early stage breast cancer with conservative surgery and radiation therapy
J Natl Cancer Inst Monogr 11: 33-39, 1992

46. Pierce SM, Recht A, Lingos T, Abner A, Vicini F, Silver B, Herzog A, Harris JR
Long-term radiation complications following conservative surgery (CS) and radiation therapy (RT) in patients with early stage breast cancer
Int J Radiat Oncol Biol Phys 23: 915-923, 1992

47. De la Rochefordière A, Abner A, Silver B, Vicini F, Recht A, Harris JR
Are cosmetic results following conservative surgery and radiotherapy for early breast cancer dependent on technique?
Int J Radiat Oncol Biol Phys 23: 925-931, 1992

48. Abner A, Recht A, Vicini F, Silver B, Harris JR
Prognosis following salvage mastectomy for local failure following conservative surgery and radiation therapy for early stage breast cancer
J Clin Oncol 11: 44-48, 1992

49. Solin LJ, Yeh I-T, Kurtz J, Fourquet A, Recht A, Kuske R, McCormick B, Cross MA, Schultz DJ, Amalric R, LiVolsi VA, Kowalyshyn MJ, Torhorst J, Jacquemier J, Westermann CD, Mazoujian G, Zafrani B, Rosen PP, Goodman RL, Fowble BL
Ductal carcinoma in situ (intraductal carcinoma) of the breast treated with breast-conserving surgery and definitive irradiation: correlation of pathologic parameters with outcome of treatment
Cancer 71: 2532-2542, 1993

50. Uematsu M, Bornstein BA, Recht A, Abner A, Come S, Shulman LN, Silver B, Harris JR
Long-term results of post-operative radiation therapy following mastectomy with or without chemotherapy in Stage I-III breast cancer
Int J Radiat Oncol Biol Phys 25: 765-770, 1993

51. Nixon AJ, Neuberg D, Hayes DF, Gelman R, Connolly JL, Schnitt S, Abner A, Recht A, Vicini F, Harris JR
Relationship of patient age to pathologic features of the tumor and prognosis for patients with Stage I or II breast cancer
J Clin Oncol 12: 888-894, 1994

52. Buswell L, Recht A, Clark J, Ravikumar T, Busse PM, Coleman CN
Combined-modality therapy of esophageal cancer with radiotherapy, etanidazole, and cisplatin-fluorouracil, with or without surgery: neurotoxicity, other toxicities and outcome
Int J Radiat Oncol Biol Phys 29: 535-540, 1994

53. Nixon AJ, Recht A, Neuberg D, Connolly JL, Schnitt S, Abner A, Harris JR
The relation between the surgery-radiotherapy interval and treatment outcome in patients treated with breast-conserving surgery and radiation therapy without systemic therapy
Int J Radiat Oncol Biol Phys 30: 17-21, 1994

54. Schnitt SJ, Abner A, Gelman R, Connolly JL, Recht A, Duda RB, Eberlein TJ, Mayzel K, Silver B, Harris JR
The relationship between microscopic margins of resection and the risk of local recurrence in breast cancer patients treated with breast-conserving surgery and radiation therapy
Cancer 74: 1746-1751, 1994

55. Solin L, Fourquet A, McCormick B, Haffty B, Recht A, Schultz DJ, Barrett W, Fowble BL, Kuske R, Taylor M, McNeese M, Amalric R, Kurtz J
Salvage treatment for local recurrence following breast-conserving surgery and definitive irradiation for ductal carcinoma in situ (intraductal carcinoma) of the breast
Int J Radiat Oncol Biol Phys 30: 3-9, 1994

56. Hiramatsu H, Bornstein B, Recht A, Schnitt SJ, Baum JK, Connolly JL, Duda RB, Guidi AJ, Kaelin CM, Silver B, Harris JR
Local recurrence after conservative surgery and radiation therapy for ductal carcinoma-in-situ: the possible importance of family history
Cancer J Sci Am 1: 55-61, 1995

57. Gage I, Recht A, Gelman R, Nixon A, Silver B, Bornstein BA, Harris JR
Long-term outcome following breast-conserving surgery and radiation therapy
Int J Radiat Oncol Biol Phys 33: 245-251, 1995

58. Solin L, Kurtz J, Fourquet A, Amalric R, Recht A, Bornstein B, Kuske R, Taylor M, Barrett W, Fowble B, Haffty B, Schultz DJ, Yeh I-T, McCormick B, McNeese M
Fifteen-year results of breast-conserving surgery and definitive breast irradiation for ductal carcinoma in situ (intraductal carcinoma) of the breast
J Clin Oncol 14: 754-763, 1996

59. Schnitt SJ, Hayman J, Gelman R, Eberlein TJ, Love SM, Mayzel K, Osteen RT, Nixon AJ, Pierce S, Connolly JL, Cohen P, Schneider L, Silver B, Recht A, Harris JR
A prospective study of conservative surgery alone in the treatment of selected patients with Stage I breast cancer
Cancer 77: 1094-1100, 1996

60. Recht A, Come SE, Henderson IC, Gelman RS, Silver B, Hayes DF, Shulman LN, Harris JR
Five-year results of a randomized trial testing the sequencing of chemotherapy and radiotherapy following conservative surgery for patients with early-stage breast cancer
N Engl J Med 334: 1356-1361, 1996

61. Solin L, McCormick B, Recht A, Haffty B, Taylor M, Kuske R, Bornstein BA, McNeese M, Schultz DJ, Fowble BL, Barrett W, Yeh I-T, Kurtz J, Amalric R, Fourquet A
Mammographically detected, clinically occult ductal carcinoma in situ (intraductal carcinoma) treated with breast-conserving surgery and definitive breast irradiation
Cancer J Sci Am 2: 158-165, 1996

62. Nixon AJ, Schnitt SJ, Gage I, Gelman R, Bornstein B, Hetelekidas S, Recht A, Silver B, Harris JR, Connolly JL
Relationship of tumor grade to other pathologic features and to treatment outcome for patients with early-stage breast cancer treated with breast-conserving therapy
Cancer 78: 1426-1431, 1996

63. Gage, I, Schnitt SJ, Nixon AJ, Silver B, Recht A, Gelman R, Harris JR, Connolly JL
Pathologic margin involvement and the risk of recurrence in patients treated with breast-conserving therapy
Cancer 78: 1921-1928, 1996

64. Monson JM, Nixon A, Chin L, Gage I, Recht A, Silver B, Harris JR
Is machine energy (4-8 MV) associated with outcome for Stage I-II breast cancer patients?
Int J Radiat Oncol Biol Phys, in press

65. Baldini EH, Recht A, Strauss GM , Harpole DH, DeCamp MM, Swanson SJ, Liptay MJ, Mentzer SJ, Sugarbaker DJ
Patterns of failure following trimodality therapy for malignant pleural mesothelioma
Ann Thorac Surg, in press

Abram Recht - Bibliography

EDITOR OF BOOKS AND PERIODICALS

1. Guest Editor: Seminars in Radiation Oncology (W.B. Saunders, Philadelphia), issue on "Conservative Management of Early Breast Cancer", April 1992

2. Associate Editor: Silverstein M, Lagios MD, Poller DN, Recht A, editors: Ductal Carcinoma *In Situ* : A Diagnostic and Therapeutic Dilemma (Williams & Wilkins, Baltimore), in preparation (to be published in 1997)

REVIEWS AND BOOK CHAPTERS

1. Recht A
Review of "Inside Russian Medicine" by William A. Knaus
Johns Hopkins Med J 149: 248-249, 1981

2. Botnick LE, Rose CM, Goldberg I, Recht A
The role of radiation therapy in the treatment of laryngeal carcinoma
Otolaryn Clin N Amer 17: 227-235, 1984

3. Harris JR, Recht A, Schnitt S, Connolly J, Silver B, Come S, Henderson IC
Current status of conservative surgery and radiotherapy as primary local treatment for early carcinoma of the breast
Breast Cancer Res Treat 5: 245-255, 1985

4. Recht A, Harris JR
Primary radiation therapy in early breast cancer,
in: Vaeth JM, ed, Body Image, Self-esteem, and Sexuality in Cancer Patients, 2nd rev ed, Basel: S. Karger, 1986, pp. 96-102

5. Recht A, Connolly JL, Schnitt SJ, Cady B, Love S, Osteen RT, Patterson WB, Shirley R, Silen W, Come S, Henderson IC, Harris JR
Conservative surgery and radiation therapy for early breast cancer: results, controversies, and unsolved problems
Sem Oncol 13: 434-449, 1986

6. Lederman G, Recht A
Radiation therapy of peritoneal mesothelioma
in: Antman K, Aisner J, eds, Asbestos-Related Malignancy, Orlando: Grune & Stratton, 1986, pp. 367-373

7. Connolly JL, Schnitt SJ, Silver B, Recht A, Cohen RB, Harris JR
2. The influence of pathologic features on clinical outcome of breast cancer patients treated by primary radiation therapy
in: Ludwig H, Thomsen K, eds, XIth World Congress of Gynecology and Obstetrics, Berlin: Springer-Verlag, 1986, pp. 590-591

8. Recht A, Hayes DF
Specific sites and emergencies: local recurrence

in: Harris JR, Hellman S, Henderson IC, Kinne DW, eds, Breast Diseases, Philadelphia: JB Lippincott, 1987, pp. 508-524

9. Harris JR, Silver B, Rose MA, Recht A
Nisbet Symposium - Conservative surgery and radiation therapy as treatment for patients with early breast cancer: treatment policy at the Harvard Joint Center for Radiation Therapy
Australas Radiol 31: 119-128, 1987

10. Recht A, Harris JR
Conservative surgery and radiation therapy for early breast cancer
Cancer: Principles and Practice of Oncology Update 1(9): 1-12, 1987

11. Gore SM, Come SE, Griem K, Rose MA, Recht A, Botnick L, Rose C, Beadle G, Silver B, Henderson IC, Harris JR
Influence of the sequencing of chemotherapy and radiation therapy in node-positive breast cancer patients treated by conservative surgery and radiation therapy
in: Salmon SE, ed, Adjuvant Therapy of Cancer V, Orlando: Grune and Stratton, 1987, pp. 365-373

12. Recht A, Harris JR
Developments in the treatment of breast cancer
Resident Staff Physician 33: 75-80, 1987; reprinted in Medical Times 116: 99-109, 1988

13. Schnitt SJ, Connolly JL, Recht A, Silver B, Love SM, Harris JR
Conservative surgery and radiation therapy for early breast cancer: the importance of the pathologic evaluation of the primary tumor in formulating therapeutic recommendations
Surg Pathol 1: 151-158, 1988

14. Connolly JL, Boyages J, Schnitt SJ, Recht A, Silen W, Sadowsky N, Harris JR
In situ carcinoma of the breast
Ann Rev Med 40: 173-180, 1989

15. Antman KH, Pass HI, Recht A
Benign and malignant mesothelioma
in: DeVita VT, Hellman S, Rosenberg SA, eds, Cancer: Principles and Practice of Oncology, 3rd ed, Philadelphia: JB Lippincott, 1989, pp. 1399-1417

16. Boyages J, Recht A, Connolly J, Schnitt S, Rose MA, Silver B, Harris JR
Factors associated with local recurrence as a first site of failure following the conservative treatment of breast cancer
in: Senn H-J, Goldhirsch A, Gelber RD, Osterwalder B, eds, Adjuvant Therapy of Primary Breast Cancer (Recent Results Cancer Res 115), Berlin: Springer-Verlag, 1989, pp. 92-102

17. Recht A
Loco-regional treatment of breast cancer
in: Ontario Cancer Treatment and Research Foundation, ed, Cancer in Ontario 1988: Screening for Cancer, Toronto: OCTRF, 1989, pp. 37-41

18. Recht A, Connolly JL, Schnitt SJ, Harris JR
Therapy of in-situ cancer
Hematol/Oncol Clin N Amer 3(4): 691-708, 1989

19. Recht A, Harris JR
Selection of patients with early-stage breast cancer for conservative surgery and radiation therapy
Oncology 4(2): 23-30, 1990

20. Recht A, Sadowsky N, Cady B
Follow-up of patients following treatment with conservative surgery and radiotherapy
Surg Clin N Amer 70(5): 1179-1186, 1990

21. Harris JR, Recht A
Conservative surgery and radiotherapy
in: Harris JR, Hellman S, Henderson IC, Kinne DW, eds, Breast Diseases, 2nd ed.
Philadelphia: JB Lippincott, 1991, pp. 388-419

22. Recht A, Hayes D
Local recurrence following mastectomy
in: Harris JR, Hellman S, Henderson IC, Kinne DW, eds, Breast Diseases, 2nd ed.
Philadelphia: JB Lippincott, 1991, pp. 527-540

23. Recht A, Eberlein T, Sadowsky NL
Local recurrence following breast conservation
in: Harris JR, Hellman S, Henderson IC, Kinne DW, eds, Breast Diseases, 2nd ed.
Philadelphia: JB Lippincott, 1991, pp. 541-546

24. Recht A, Triedman SA, Harris JR
The 'boost' in the treatment of early stage breast cancer: electrons vs. interstitial implants
in: Vaeth JM, Meyer JL, eds, The Role of High Energy Electrons in the Treatment of Cancer (Frontiers of Radiation Therapy and Oncology, vol 25), Basel: Karger, 1991, pp. 169-179

25. Recht A, Come SE, Harris JR
Integration of conservative surgery, radiotherapy, and chemotherapy for patients with early-stage breast cancer
Sem Radiat Oncol 2: 107-115, 1992

26. Recht A
Radiation therapy
in: McGraw-Hill Encyclopedia of Science and Technology, 7th ed, New York: McGraw-Hill, 1992, vol. 15, pp. 47-48

27. Recht A, Hayes DF, Harris JR
The use of adjuvant therapy in patients treated with conservative surgery and radiotherapy
Henderson IC, ed, Adjuvant Therapy of Breast Cancer, Amsterdam: Kluwer Academic Publ, 1992, pp. 223-237

28. Recht A
Patient selection for treatment with conservative surgery and radiation therapy
Cancer Invest 10: 471-476, 1992

29. Recht A, Come SE

Combined-modality therapy for patients with early stage breast cancer: integration of surgery, radiotherapy, chemotherapy, and tamoxifen
Breast Diseases Updates 1(1): 1-19, 1992

30. Harris JR, Recht A
How to combine adjuvant chemotherapy and radiation therapy
In: Senn H-J, Gelber R, Goldhirsch A, Thürlimann B, eds, Adjuvant Therapy of Breast Cancer IV (Recent Res Cancer Res 127), Berlin: Springer, 1993, pp. 129-136

31. Recht A
Radiotherapy-chemotherapy integration in breast-conservation therapy
in: Meyer JL, ed, Selection Criteria for Conservative Cancer Management (Frontiers of Radiation Therapy and Oncology, vol 27), Basel: Karger, 1993, pp. 89-102

32. Recht A
Treatment of in situ ductal breast cancer
in: Meyer JL, ed, Selection Criteria for Conservative Cancer Management (Frontiers of Radiation Therapy and Oncology, vol 27), Basel: Karger, 1993, pp. 52-61

33. Recht A
Radiotherapy techniques
in: Hayes DF, ed, Atlas of Breast Cancer, London: Mosby Europe-Wolfe, 1993, pp.9.1-9.17

34. Recht A
How should we treat ductal carcinoma in situ?
in: Fletcher GH, Levitt SH, eds, Non-Disseminated Breast Cancer: Controversial Issues in Management (Medical Radiology: Diagnostic Imaging and Radiation Oncology), Berlin: Springer, 1993, pp. 143-154

35. Recht A, Harris JR, Come SE
Sequencing of irradiation and chemotherapy for early-stage breast cancer
Oncology (Huntington) 8(3): 19-28, 1994

36. Shapiro CL, Recht A
Late effects of adjuvant therapy for breast cancer
J Natl Cancer Inst Monogr 16: 101-112, 1994

37. Recht A
The role of radiation therapy in treating patients with potentially resectable carcinoma of the esophagus
Chest 107 (6 suppl.): 233S-240S, 1995

38. Recht A, Houlihan MJ
Conservative surgery without radiotherapy in the treatment of patients with early-stage invasive breast cancer: a review
Ann Surg 222: 9-18, 1995

39. Recht A, Hayes, DF, Eberlein TJ, Sadowsky NL
Local-regional recurrence after mastectomy or breast-conserving therapy
in: Harris JR, Hellman S, Lippman M, Morrow M, eds, Diseases of the Breast, Philadelphia: JB Lippincott, pp. 649-667

40. Recht A, Houlihan MJ
Axillary lymph nodes and breast cancer: a review
Cancer 76: 1491-1512, 1995

41. Recht A
Selection of patients with early-stage invasive breast cancer for treatment with conservative surgery and radiation therapy
Semin Oncol 23 (suppl. 2): 19-30, 1996

42. Quinlan R, Recht A
Cancer of the esophagus
in: American Cancer Society Massachusetts Division, Cancer Manual, 9th ed, Boston: American Cancer Society Massachusetts Division, pp. 356-364

43. Ng AK, Recht A, Busse PM
Sphincter-preservation therapy in distal rectal carcinoma — a review
Cancer, in press

44. Solin LJ, Haffty B, Fourquet A, Amalric R, McNeese M, Kuske R, Taylor M, Barrett W, Fowble B, Bornstein BA, Yeh I-T, Schultz DJ, Kurtz J, Recht A, McCormick B
Long-term outcome after treatment of ductal carcinoma in situ using breast-conserving surgery and definitive breast irradiation: results of an international collaborative study
in: Silverstein MJ, Lagios MD, Poller DN, Recht A, eds, Ductal Carcinoma *in situ*: A Diagnostic and Therapeutic Dilemma, Baltimore: Williams & Wilkins, in press

45. Recht A
Side-effects of radiation therapy
in: Silverstein MJ, Lagios MD, Poller DN, Recht A, eds, Ductal Carcinoma *in situ*: A Diagnostic and Therapeutic Dilemma, Baltimore: Williams & Wilkins, in press

46. Recht A
Randomized trial overview
in: Silverstein MJ, Lagios MD, Poller DN, Recht A, eds, Ductal Carcinoma *in situ*: A Diagnostic and Therapeutic Dilemma, Baltimore: Williams & Wilkins, in press

47. Lagios MD, Poller DN, Recht A, Silverstein MJ
Making sense of it all
in: Silverstein MJ, Lagios MD, Poller DN, Recht A, eds, Ductal Carcinoma *in situ*: A Diagnostic and Therapeutic Dilemma, Baltimore: Williams & Wilkins, in press

48. Bornstein BA, Harris JR, Hetelekidas S, Hiramatsu H, Recht A
The experience of the Joint Center for Radiation Therapy
in: Silverstein MJ, Lagios MD, Poller DN, Recht A, eds, Ductal Carcinoma *in situ*: A Diagnostic and Therapeutic Dilemma, Baltimore: Williams & Wilkins, in press

49. Recht A
Radiation therapy
in: McGraw-Hill Encyclopedia of Science and Technology, 8th ed, New York: McGraw-Hill, in press (to be published in 1997)

PUBLISHED ABSTRACTS AND CONFERENCE PROCEEDINGS

1. Recht A, Silver B, Harris JR
   The patterns of failure within the treated breast following primary radiation therapy (Abstr.)
   Int J Radiat Oncol Biol Phys 10 (suppl. 2): 79, 1984 (also, **oral presentation** given at meeting by AR)

2. Goodman RL, Danoff BF, Recht A, Solin JL, Schnitt S, Connolly JC, Botnick L, Goldberg I, Harris JR
   Intraductal carcinoma of the breast: result of treatment with excisional biopsy and irradiation (Abstr.)
   Int J Radiat Oncol Biol Phys 10 (suppl. 2): 109, 1984

3. Recht A, Schnitt S, Connolly J, Silver B, Harris J
   The use of pathologic features in selecting the extent of surgery for early breast cancers treated by primary therapy
   Proc Am Soc Clin Oncol 4: 60, 1985 **(oral presentation)**

4. Loeffler JS, Leopold K, Leslie NT, Weinstein HT, Recht A
   Emergency pre-biopsy radiation for mediastinal masses - impact upon subsequent pathologic diagnosis and outcome
   Proc Am Soc Clin Oncol 4: 206, 1985

5. Brenner MJ, Schnitt SJ, Connolly JL, Mazougian G, Khettry U, Silver B, Beadle G, Recht A, Cohen RB, Harris JR
   The use of re-excision in primary radiation therapy for stage I and II breast carcinoma (Abstr.)
   Int J Radiat Oncol Biol Phys 11 (suppl. 1): 186, 1985

6. Griem KL, Henderson IC, Gelman R, Recht A, Harris JR
   The role of radiotherapy in patients receiving adjuvant chemotherapy after mastectomy: results of a randomized trial (Abstr.)
   Int J Radiat Oncol Biol Phys 11(suppl. 1): 151, 1985

7. Recht A, Harris JR
   Negative breast biopsies after primary radiation therapy: safety and accuracy (Abstr.)
   Int J Radiat Oncol Biol Phys 11(suppl. 1): 131, 1985 **(oral presentation)**

8. Schnitt SJ, Connolly JL, Silver B, Recht A, Harris JR
   Updated results on the influence of pathologic features on treatment outcome in stage I and II breast cancer patients treated by primary radiation therapy (Abstr.)
   Int J Radiat Oncol Biol Phys 11(suppl. 1): 104-105, 1985

9. Recht A, Stomper PC, Berenberg AL, Jochelson MS, Harris JR
   Accuracy and reliability of mammography in detecting recurrence after primary radiation therapy for early breast carcinoma (Abstr.)
   Am J Clin Oncol (CCT) 9: 110-111, 1986 **(oral presentation)**

10. Griem K, Henderson IC, Gelman R, Ascoli D, Silver B, Recht A, Harris J
    Postoperative radiation therapy (XRT) after adjuvant chemotherapy (CTX) in breast cancer patients: results of a randomized trial

Proc Am Soc Clin Oncol 5: 68, 1986

11. Recht A, Connolly JL, Schnitt SJ, Silver B, Harris JR
Conservative surgery and primary radiotherapy for early breast cancer: the effect of age on breast recurrence (Abstr.)
Int J Radiat Oncol Biol Phys 12 (suppl. 1): 93, 1986 **(oral presentation)**

12. Recht A, Rose MA, Silver B, Connolly JL, Schnitt SJ, Come S, Henderson IC, Harris JR
Prognosis after breast recurrence in patients treated with conservative surgery (S) and radiotherapy (RT)
Proc Am Soc Clin Oncol 6: 53, 1987 **(oral presentation)**

13. Minsky B, Mies C, Rich T, Recht A, Chaffey J
Colloid carcinoma of the colon and rectum
Proc Am Soc Clin Oncol 6: 95, 1987

14. Gore SM, Come SE, Rose MA, Griem KL, Henderson IC, Recht A, Silver BJ, Harris JR
Influence of the sequencing of chemotherapy (CTX) and radiation therapy (RT) in node-positive breast cancer patients treated by conservative surgery and RT
Fifth International Conference on the Adjuvant Therapy of Cancer, Tucson AZ, 1987, p.58

15. Recht A, Rose MA, Silver B, Connolly JL, Schnitt SJ, Come S, Henderson IC, Harris JR
Prognosis following breast recurrence after conservative surgery (S) and radiotherapy (RT) for early stage breast carcinoma (Abstr.)
Int J Radiat Oncol Biol Phys 13 (suppl. 1): 162-163, 1987 **(oral presentation)**

16. Connolly JL, Leopold KA, Recht A, Schnitt SJ, Rose MA, Silver B, Harris JR
Results of conservative surgery and radiation therapy for multiple synchronous cancers of one breast (Abstr.)
Int J Radiat Oncol Biol Phys 13 (suppl. 1): 160-161, 1987

17. Harris JR, Recht A, Silver B, Rose MA, Connolly JL, Schnitt SJ, Gelman RS
Time-course of local recurrence following conservative surgery (S) and radiotherapy (RT) for breast cancer (Abstr.)
Int J Radiat Oncol Biol Phys 13 (suppl. 1): 162, 1987

18. Rose MA, Henderson IC, Gelman R, Boyages J, Recht A, Silver B, Come S, Connolly J, Schnitt S, Coleman CN, Harris JR
The influence of adjuvant chemotherapy on local failure in premenopausal breast cancer patients treated with conservative surgery and radiotherapy (Abstr.)
Int J Radiat Oncol Biol Phys 15 (suppl. 1): 183, 1988

19. Schnitt SJ, Connolly JL, Silver B, Recht A, Rose MA, Harris JR
Infiltrating lobular carcinoma of the breast: results of treatment with conservative surgery (S) and radiotherapy (RT) (Abstr.)
Int J Radiat Oncol Biol Phys 15 (suppl. 1): 194, 1988

20. Olivotto IA, Rose MA, Silver B, Recht A, Harris JR
Long term cosmetic outcome after conservative surgery and radiotherapy for early breast cancer: causes of cosmetic failure (Abstr.)
Int J Radiat Oncol Biol Phys 15 (suppl. 1): 154-155, 1988

21. Boyages J, Recht A, Connolly J, Schnitt S, Rose MA, Silver B, Harris JR
Factors associated with local recurrence as a first site of failure following the conservative treatment of early breast cancer (Abstr.)
Int J Radiat Oncol Biol Phys 15 (suppl. 1): 181-182, 1988

22. Epstein AH, Connolly J, Gelman R, Schnitt S, Silver B, Boyages J, Rose MA, Recht A, Harris JR
The predictors of distant relapse following conservative surgery and radiotherapy for early breast cancer are the same as those following mastectomy (Abstr.)
Int J Radiat Oncol Biol Phys 15 (suppl. 1): 153, 1988

23. Minsky BD, Mies C, Rich TA, Recht A
Lymphatic vessel invasion is an independent prognostic factor for survival in colorectal cancer (Abstr.)
Proc Soc Surg Oncol 1988

24. Rose MA, Olivotto I, Cady B, Koufman C, Osteen R, Silver B, Recht A, Harris JR
Long term cosmetic results of conservative surgery and radiation therapy for early breast cancer (Abstr.)
Proc Soc Surg Oncol 1988

25. Canellos GP, Come S, Henderson IC, Gelman R, Silver B, Recht A, Harris JR
Adjuvant chemotherapy preceding or following primary radiotherapy: preliminary results of a randomized trial (Abstr.)
Proc 2nd Intl Cong on Neo-Adjuvant Chemotherapy, Paris, 1988.

26. Epstein AH, Connolly JL, Schnitt SJ, Recht A, Silver B, Gelman R, Harris JR
Peritumoral lymphatic vessel invasion predicts for distant relapse in node-negative breast carcinoma treated by excision and radiation therapy (Abstr.)
Proc Third International Conference on Breast Cancer, St. Gallen, Switzerland, March 1988

27. Recht A, Harris JR
The role of radiotherapy in the treatment of noninvasive ductal carcinoma (radiobiology) (Abstr.)
Proc EORTC In Situ Breast Cancer Workshop, Castle Marquette, Heemskerk, the Netherlands, November 1988 **(oral presentaion)**

28. Recht A, Bornstein B, Connolly JL, Schnitt SJ, Harris JR
Treatment of noninvasive ductal carcinoma with conservative surgery and radiation therapy: results at the Joint Center for Radiation Therapy (Abstr.)
Proc EORTC In Situ Breast Cancer Workshop, Castle Marquette, Heemskerk, the Netherlands, November 1988 **(oral presentation)**

29. Schnitt SJ, Connolly JL, Khettry U, Mazoujian G, Silver B, Recht A, Harris JR
Pathologic findings on re-excision of the primary site in breast cancer patients considered for treatment by conservative surgery and radiotherapy (Abstr.)
Proc EORTC In Situ Breast Cancer Workshop, Castle Marquette, Heemskerk, the Netherlands, November 1988

30. Boyages J, Recht A, Connolly JL, Schnitt SJ, Silver B, Harris JR

The relationship of an extensive intraductal component (EIC) to local recurrence following conservative surgery (CS) and radiotherapy (RT) for Stage I-II infiltrating ductal carcinoma of the breast (Abstr.)
Proc EORTC In Situ Breast Cancer Workshop, Castle Marquette, Heemskerk, the Netherlands, November 1988

31. Connolly JL, Schnitt SJ, Recht A, Silver B, Boyages J, Harris JR
Quantity and distribution of ductal carcinoma in situ (DCIS) in infiltrating ductal carcinoma: the definition of an extensive intraductal component (EIC) (Abstr.)
Proc EORTC In Situ Breast Cancer Workshop, Castle Marquette, Heemskerk, the Netherlands, November 1988

32. Triedman S, Boyages J, Silver B, Recht A, Harris J
A comparison of local control and cosmetic outcome in patients boosted with electrons (E) or implant (I) in the conservative management of early breast carcinoma (Abstr.)
Proc 17th Intl Congress Radiol, Paris, July 1989

33. Boyages J, Recht A, Connolly J, Schnitt S, Harris J
The relation of patient age to breast recurrence following conservative surgery (CS) and radiation therapy (RT) (Abstr.)
Proc 17th Intl Congress Radiol, Paris, July 1989

34. Recht A, Bornstein B, Connolly JL, Schnitt SJ, Harris JR
Treatment of ductal carcinoma in-situ (DCIS) with conservative surgery (CS) & radiotherapy (RT) (Abstr.)
Proc 5th Europ Conf Clin Oncol # O-853, London, September 1989 **(oral presentation)**

35. Connolly JL, Schnitt SJ, Silver B, Recht A, Gelman R, Harris JR
Prognostic factors in node-negative (N-) breast cancer patients (Abstr.)
Proc American-Canadian Acad Pathol, Boston, March 1990

36. Recht A, Harris JR
Treatment of early invasive breast cancer - experience of the Joint Center for Radiation Therapy (Abstr.)
Proc 6th Intl Congr Soc Senology, Boston, June 1990
Breast Dis 4: 11, 1991 **(oral presentation)**

37. Recht A, Bornstein BA, Connolly JL, Schnitt SJ, Harris JR
Treatment of noninvasive ductal carcinoma - experience of the Joint Center for Radiation Therapy (Abstr.)
Proc 6th Intl Congr Soc Senology, Boston, June 1990
Breast Disease 4: 17, 1991 **(oral presentation)**

38. Vicini FA, Recht A, Abner AL, Connolly J, Schnitt SJ, Silver B, Harris JR
Recurrence in the breast following conservative surgery and radiotherapy (Abstr.)
Proc 6th Intl Congr Soc Senology, Boston, June 1990
Breast Disease 4: 25, 1991

39. Harris JR, Vicini FA, Recht A, Abner AL, Connolly J, Schnitt SJ, Silver B
Recurrence in the breast following conservative surgery and radiotherapy (Abstr.)
Proc NCI Consensus Conf, Treatment of Early Stage Breast Cancer, Bethesda MD, June 1990

40. Recht A, Abner A, Vicini F, Silver B, Harris JR
Regional node failure after conservative surgery (CS) & radiotherapy (RT) for early stage breast carcinoma (Abstr.)
Int J Radiat Oncol Biol Phys 19 (suppl. 1): 130-131, 1990 **(oral presentation)**

41. Abner A, Recht A, Vicini F, Silver B, Harris JR
Cosmetic results after conservative surgery, chemotherapy (CTX) and radiation therapy (RT) for early breast cancer (Abstr.)
Int J Radiat Oncol Biol Phys 19 (suppl. 1): 174, 1990

42. Lingos T, Recht A, Vicini F, Abner A, Silver B, Harris JR
Radiation pneumonitis in breast cancer pts treated with conservative surgery (CS) and radiation therapy (RT) (Abstr.)
Int J Radiat Oncol Biol Phys 19 (suppl. 1): 175-176, 1990

43. Vicini F, Recht A, Abner A, Silver B, Harris JR
The association betweeen very young age and recurrence in the breast in pts treated with conservative surgery (CS) and radiation therapy (RT) (Abstr.)
Int J Radiat Oncol Biol Phys 19 (suppl. 1): 132, 1990

44. Silen W, Vicini F, Connolly J, Schnitt S, Eberlein T, Abner A, Recht A, Harris J
How large a breast resection is required in breast cancer patients treated by conservative surgery and radiotherapy (CS + RT)? (Abstr.)
Proc Am Surg Assoc, Boca Raton FL, April 1991

45. Recht A, Solin LJ, Kurtz JM, Cross MA, Kuske RR, McCormick B, McNeese M, Harris JR, Fowble BL
Conservative surgery and radiotherapy (CS & RT) for ductal carcinoma in situ (DCIS) (Abstr.)
Proc Am Soc Clin Oncol 10: 47, 1991 **(oral presentation)**

46. Recht A, Abner AL, Vicini FA, Connolly JL, Schnitt SJ, Harris JR
The volume of resected breast tissue is related to the risk of local failure after treatment of patients with conservative surgery (CS) and radiotherapy (RT) (Abstr.)
Proc 5th EORTC Breast Cancer Working Conf A120, September 1991, Leuven, Belgium **(oral presentation)**

47. Recht A, Come SE, Gelman RS, Silver B, Harris JR
Conservative surgery (CS), radiotherapy (RT), and chemotherapy (CT) for the treatment of early-stage node- positive breast cancer: sequencing, timing, and breast recurrence (Abstr.)
Proc 5th EORTC Breast Cancer Working Conf A113, September 1991, Leuven, Belgium **(oral presentation)**

48. Abner A, Recht A, Vicini F, Silver B, Harris JR
Prognostic significance of the tumor histology of local recurrence after conservative surgery and radiation therapy for early-stage breast cancer (Abstr.)
Int J Radiat Oncol Biol Phys 21 (supp. 1): 132, 1991

49. Pierce SM, Recht A, Lingos T, Abner A, Vicini F, Silver B, Harris JR
Long-term radiation complications following conservative surgery (CS) and radiation therapy (RT) in early stage breast cancer (Abstr.)

Int J Radiat Oncol Biol Phys 21 (suppl. 1): 133-134, 1991

50. De la Rochefordière A, Abner A, Silver B, Vicini F, Recht A, Harris JR
Are cosmetic results following conservative surgery (CS) and radiotherapy (RT) dependent on technique? (Abstr.)
Int J Radiat Oncol Biol Phys 21 (suppl. 1): 133, 1991

51. Solin LJ, Yeh IT, Kurtz J, Fourquet A, Recht A, Kuske R, McCormick B, Cross MA, Amalric R, Fowble BL
Breast-conserving surgery and irradiation for ductal carcinoma in situ: correlation of pathologic parameters with outcome
Radiother Oncol 24 (suppl.): S36, 1992

52. Abner A, Recht A, Connolly JL, Schnitt SJ, Nixon A, Silver B, Harris JR
The relationship between positive microscopic margins of resection and the risk of local recurrence in patients treated with breast-conserving therapy (Abstr.)
Int J Radiat Oncol Biol Phys 24 (suppl. 1): 130, 1992

53. Nixon AJ, Schnitt S, Connolly JL, Abner A, Silver B, Recht A, Harris JR
Relationship of patient age to pathologic features of the tumor and the risk of local recurrence for patients with Stage I or II breast cancer treated with conservative surgery and radiation therapy (Abstr.)
Int J Radiat Oncol Biol Phys 24 (suppl. 1): 221-222, 1992

54. Buswell L, Recht A, Clark J, Coleman CN
Incidence of peripheral neuropathy (PN) in pts treated with etanidazole (ETA) & cisplatin (CDDP) for esophageal cancer (Abstr.)
Eighth Intl Conf on Chemical Modifiers of Cancer Treatment, Kyoto, June 1993

55. Solin L, Fourquet A, McCormick B, Haffty B, Recht A, Schultz D, Barrett W, Fowble B, Taylor M, Kuske R, McNeese M, Kurtz J
Salvage treatment for recurrence in the breast following breast-conserving surgery and definitive irradiation for ductal carcinoma in situ (intraductal carcinoma) of the breast (Abstr.)
Int J Radiat Oncol Biol Phys 27 (suppl. 1): 146, 1993

56. Abner A, Recht A, Connolly J, Schnitt S, Nixon A, Silver B, Harris JR
Prognosis of pathologic T1 infiltrating cancer of the breast (Abstr.)
Int J Radiat Oncol Biol Phys 27 (suppl. 1): 148, 1993

57. Nixon AJ, Recht A, Neuberg D, Gelman R, Connolly JL, Schnitt S, Harris JR
The relationship between the time from surgery to the start of radiation therapy (RT) and recurrence in patients treated with breast-conserving surgery and RT without systemic therapy (ST)
Int J Radiat Oncol Biol Phys 27 (suppl. 1): 201, 1993

58. Solin L, Fourquet A, McCormick B, Haffty B, Recht A, Schultz D, Barrett W, Fowble B, Taylor M, Kuske R, McNeese M, Kurtz J
Intraductal carcinoma of the breast: long-term results with breast-conserving surgery and definitive irradiation (Abstr.)
Eur J Cancer 29A (suppl. 6): S66, 1993

59. Kurtz J, Solin L, McNeese M, Fourquet A, McCormick B, Haffty B, Recht A, Schultz D, Barrett W, Fowble B, Kuske R, Taylor M, malric R
Importance of invasive recurrence after breast-conserving treatment of ductal carcinoma in situ (DCIS) (Abstr.)
Proc Am Soc Clin Oncol 13: 102, 1994

60. Hiramatsu H, Bornstein B, Recht A, Silver B, Harris JR
Outcome and risk for local failure after conservative surgery and radiotherapy for ductal carcinoma in situ (Abstr.)
Int J Radiat Oncol Biol Phys 30 (suppl. 1): 153, 1994

61. Gage I, Nixon A, Silver B, Bornstein BA, Gelman R, Recht A, Harris JR
Long-term treatment outcome following breast-conserving therapy in early-stage disease (Abstr.)
Int J Radiat Oncol Biol Phys 30 (suppl. 1): 153-154, 1994

62. Gage I, Recht A, Nixon A, Silver B, Bornstein BA, Gelam R, Harris JR
Time-course of recurrence following breast-conserving therapy in early-stage disease (Abstr.)
Eur J Cancer 30A (suppl. 2): S14, 1994 **(oral presentation)**

63. Healey EA, Recht A, Mentzer SJ, Strauss GM, Harpole DH, DeCamp MM, Swanson SJ, Sugarbaker DJ
Patterns of failure following tri-modality therapy for malignant pleural mesothelioma (Abstr.)
Oral presentation, Soc Surg Oncol, annual meeting, Boston, May 1995

64. Harrigan P, Otis D, Recht A, Gelman R, Hauptman P, Hayes D, Henderson IC, Harris JR, Shapiro C
The effect of adjuvant radiation therapy (RT) on cardiac events in breast cancer patients treated with doxorubicin (Dox) (Abstr.)
Proc Am Soc Clin Oncol 14: 102, 1995

65. Solin L, Kurtz J, Fourquet A, Amalric R, Recht A, Kuske R, Taylor M, Barrett W, Fowble B, Haffty B, Schultz D, McCormick B, McNeese M
Fifteen-year outcome of conservation surgery and radiotherapy (CS & RT) for ductal carcinoma in situ (DCIS) (Abstr.)
Proc Am Soc Clin Oncol 14: 107

66. Recht A, Come SE, Silver B, Gelman RS, Hayes DF, Shulman LN, Henderson IC, Harris JR
Sequencing of chemotherapy (CT) and radiotherapy (RT) following conservative surgery (CS) for patients with early-stage breast cancer: results of a randomized trial (Abstr.)
Int J Radiat Oncol Biol Phys 32 (suppl. 1): 148, 1995 **(oral presentation)**

67. Nixon AJ, Gage I, Connolly JL, Schnitt S, Silver B, Hetelekidas S, Recht A, Harris JR
Relationship of tumor grade to other pathologic features and to treatment outcome for patients with early-stage breast cancer treated with breast-conserving therapy (Abstr.)
Int J Radiat Oncol Biol Phys 32 (suppl. 1): 210, 1995

68. Gage I, Nixon AJ, Schnitt SJ, Recht A, Gelman R, Silver B, Connolly JL, Harris JR

Pathologic margin involvement and the risk of recurrence in patients treated with breast-conserving therapy (Abstr.)
Int J Radiat Oncol Biol Phys 32 (suppl. 1): 210, 1995

69. Lingos TI, Nixon AJ, Connolly JL, Schnitt S, Schneider L, Silver B, Recht A, Harris JR
Risk of local failure in breast cancer patients with 4 or more positive lymph nodes treated with breast-conserving surgery (Abstr.)
Int J Radiat Oncol Biol Phys 32 (suppl. 1): 263, 1995

70. Gage I, Schnitt SJ, Connolly JL, Nixon AJ, Recht A, Gelman R, Silver B, Harris JR
Pathologic margin involvement after lumpectomy and the risk of recurrence after breast conserving therapy (Abstr.)
Breast Cancer Res Treat 37 (suppl. 1): 41, 1996

71. Nixon AJ, Hayman J, Schnitt S, Gelman R, Eberlein T, Love S, Mayzel K, Osteen R, Recht A, Harris JR
A prospective trial of consevative surgery without radiation therapy in highly selected patients (Abstr.)
Breast Cancer Res Treat 37 (suppl. 1): 41, 1996

72. Peiró G, Payne S, Schnitt S, Recht A, Silver B, Schneider L, Harris J, Connolly J
Synchronous bilateral breast cancer (SBBC): pathologic features and treatment outcome following conservative surgery and radiotherapy (CS+RT) (Abstr.)
Mod Pathol 9: 22A, 1996

73. Recht A, Shulman LN, Come SE, Hayes DF, Silver B, Harris JR
Acute toxicities of concurrent chemotherapy (CT) & reduced-dose radiotherapy (RT) for patients treated with breast-conserving surgery (Abstr.)
Eur J Cancer 32A (suppl. 2): 22, 1996 (poster)

74. Nixon AJ, Gelman R, Bornstein BA, Abner A, Recht A, Hetelekidas S, Silver B, Harris JR
Non-breast cancer mortality after conservative surgery and radiation therapy (RT) to the left breast (Abstr.)
Int J Radiat Oncol Biol Phys 36 (suppl. 1): 181, 1996

75. Wong JS, Nixon AJ, Recht A, Beard CJ, Busse PM, Chaffey JT, Lingos TI, Silver B, Harris JR
Treatment outcome after tangential radiotherapy alone without axillary dissection in patients with early stage breast cancer with clinically negative axillary nodes (Abstr.)
Int J Radiat Oncol Biol Phys 36 (suppl. 1): 215, 1996

76. Bornstein BA, Peiro G, Connolly JL, Gelman R, Schnitt SJ, Hetelekidas S, Nixon AJ, Recht A Silver B, Harris JR
The influence of infiltrating lobular carcinoma in patients treated with breast-conserving surgery and radiation therapy (Abstr.)
Int J Radiat Oncol Biol Phys 36 (suppl. 1): 180, 1996

77. Hetelekidas S, Silver B, Schnitt SJ, Connolly JL, Bornstein BA, Nixon AJ, Recht A, Gelman R, Harris JR
The significance of axillary extracapsular extension in breast cancer (Abstr.)
Int J Radiat Oncol Biol Phys 36 (suppl. 1): 275, 1996

78. Harrigan PM, Recht A, Payne S, Come SE, Hayes DF, Shulman LN, O'Neill A, Gelman RS, Silver B, Harris JR
Treatment-related cardiac toxicity from doxorubicin (DOX) and radiation therapy (RT) in patients treated with breast-conserving therapy (Abstr.)
Int J Radiat Oncol Biol Phys 36 (suppl. 1): 182, 1996

79. Pierce L, McCormick B, Haffty B, Solin L, Vicini F, Wazer D, Recht A, Strawderman M, Lichter A
The use of radiotherapy in the conservative management of Paget's disease (Abstr.)
Int J Radiat Oncol Biol Phys 36 (suppl. 1): 215, 1996

80. Schnitt S, Connolly J, Recht A, Bornstein B, Nixon A, Hetelekidas S, Silver B, Harris J
Is the presence or extent of lobular carcinoma in situ related to the risk of local recurrence in patients with invasive breast cancer treated with conservative surgery and radiation therapy? (Abstr.)
Breast Cancer Res Treat, in press

81. Gage I, Schnitt SJ, Recht A, Abner A, Monson J, Silver B, Connolly JL, Harris JR
Skin recurrences after breast-conserving therapy for early stage breast cancer (Abstr.)
Breast Cancer Res Treat, in press

EDITORIALS, INVITED COMMENTARIES, MEETING REPORTS

1. Recht A, Schnitt SJ
The role of radiation in the management of intraductal carcinoma of the breast
Breast Diseases: A Year Book Quarterly 1(4): 20-22, 1990

2. Recht A, Harris JR
To boost or not to boost, and how to do it
Int J Radiat Oncol Biol Phys 20: 177-178, 1991

3. Recht A
Conservative management of breast cancer (Guest Editor's Introduction)
Sem Radiat Oncol 2: 73, 1992

4. Van Dongen JA, Fentiman IS, Holland R, Lagios MD, Peterse JL, Millis RR, Recht A
Ductal carcinoma in-situ of the breast: second EORTC consensus meeting
Eur J Cancer 23: 626-629, 1992

5. Recht A
Commentary: Nodal treatment for patients with early stage breast cancer: guilty or innocent?
Radiother Oncol 25: 79-82, 1992

6. Harris JR, Recht A
Sequencing adjuvant chemotherapy and radiotherapy in breast cancer patients
Int J Radiat Oncol Biol Phys 26: 183-185, 1993

7. Recht A
When is more better?
Int J Radiat Oncol Biol Phys 27: 749-751, 1993

8. Recht A
Commentary on Chaudhuri et al, Distribution of estrogen receptor in ductal carcinoma in situ of the breast, Surgery 113: 134-137, 1993
Breast Diseases: A Year Book Quarterly 4(4): 47, 1993

9. Recht A
Commentary on Buchholz et al, Effect of delay in radiation in the combined modality treatment of breast cancer, Int J Radiat Oncol Biol Phys 26: 23-35, 1993
Breast Diseases: A Year Book Quarterly 4(4): 58, 1993

10. Recht A, van Dongen JA, Peterse JL
Ductal carcinoma in situ (conference news)
Lancet 343: 969, 1994

11. Recht A
Commentary on Kantorowitz et al, Effect of conjoint administration of tamoxifen and high-dose radiation on the development of mammary carcinoma, Int J Radiat Oncol Biol Phys 26: 89-94, 1993
Breast Diseases: A Year Book Quarterly 5(1): 68, 1994

[redacted]

12. Recht A, Harris JR
Commentary on DiPacia et al, Ipsilateral breast tumor recurrence following conservative surgery and definitive radiation therapy
Oncology (Huntington) 8(12): 71-75, 1994

13. Recht A, van Dongen JA, Fentiman IS, Holland R, Lagios MD, Peterse JL
Third meeting of the DCIS Working Party of the EORTC (Fondazione Cini, Isola S. Giorgio, Venezia, 28 February 1994) — conference report
Eur J Cancer 30A: 1895-1900, 1994

14. Recht A
Influence of the surgery-radiotherapy interval on the risk of local failure in patients treated with conservative surgery and radiation therapy for early-stage invasive breast cancer
Breast Disease: A Year Book Quartely 6(3): 249-250, 1995

15. Recht A
The return (?) of postmastectomy radiotherapy
J Clin Oncol 13: 2861-2864, 1995

16. Recht A
Commentary on Pierce and Lichter, Defining the role of post-mastectomy radiotherapy: the new evidence
Oncology (Huntington) 10(7): 1006, 1996

LETTERS TO THE EDITOR, CORRECTIONS, AND MISCELLANEOUS

1. Loeffler J, Recht A, Harris JR
Letter to the editor
New Engl J Med 310: 1056, 1984

2. Minsky BD, Recht A
Prognostic factors for colon cancer (reply to correspondence)
J Clin Oncol 6: 1066-1067, 1988

3. Klein RL, Recht A, Swain SM, Marchant DJ
Tumor Board: Treating "aggressive" early breast cancer
Oncology Times 12(11): 5-6, Nov 1990

4. Recht A, Harris JR
Response to letter to the editor by Pezner et al
Int J Radiat Oncol Biol Phys 21: 529, 1991

5. Recht A
Radiotherapy and ductal carcinoma-in-situ of breast (letter)
Lancet 340: 312, 1992

6. Recht A, Coleman CN, Harris JR, Come SE, Gelman RS
Response to letter to the editor by McCormick et al
J Clin Oncol 11: 192-193, 1992

7. Recht A
Response to letter to the editor by Mansfield
Int J Radiat Oncol Biol Phys 30: 504, 1994

8. Recht A
Radiotherapy and management of the axilla in early breast cancer (letter)
Br J Surg 82: 421-422, 1995

9. Recht A
High-dose chemotherapy for metastatic breast cancer (letter)
J Clin Oncol 14: 684-685, 1996

10. Recht A
Effects of radiotherapy and surgery in early breast cancer (letter)
N Engl J Med 334: 989, 1996

11. Recht A, Come SE, Harris JR
Sequencing of chemotherapy and radiotherapy in breast cancer: response to letter to the editor by Dr. James J. Stark (letter)
N Engl J Med 335: 1240, 1996

ARTICLES AND ABSTRACTS SUBMITTED FOR PUBLICATION

1. Pierce LJ, McCormick B, Haffty B, Solin LJ, Vicini F, Wazer D, Recht A, Strawderman M, Lichter AS
The use of radiotherapy in the conservative management of Paget's disease of the breast
Int J Radiat Oncol Biol Phys, submitted for publication 10/96

DEPARTMENT OF HEALTH AND HUMAN SERVICES PUBLIC HEALTH SERVICE FOOD AND DRUG ADMINISTRATION STATEMENT OF INVESTIGATOR *(TITLE 21, CODE OF FEDERAL REGULATIONS (CFR) Part 312)* (See instructions on reverse side.)	Form Approved: OMB No. 0910-0014. Expiration Date: November 30, 1995. *See OMB Statement on Reverse.* NOTE: No investigator may participate in an investigation until he/she provides the sponsor with a completed, signed Statement of Investigator, Form FDA 1572 (21 CFR 312.53(c))

1. NAME AND ADDRESS OF INVESTIGATOR.

Kitt Shaffer, M.D., Ph.D.
Depatmernt of Radiology
Dana-Farber Cancer Institute
44 Binney St
Boston MA 02115

2. EDUCATION, TRAINING, AND EXPERIENCE THAT QUALIFIES THE INVESTIGATOR AS AN EXPERT IN THE CLINICAL INVESTIGATION OF THE DRUG FOR THE USE UNDER INVESTIGATION. ONE OF THE FOLLOWING IS ATTACHED:

☒ CURRICULUM VITAE ☐ OTHER STATEMENT OF QUALIFICATIONS

3. NAME AND ADDRESS OF ANY MEDICAL SCHOOL, HOSPITAL, OR OTHER RESEARCH FACILITY WHERE THE CLINICAL INVESTIGATION(S) WILL BE CONDUCTED.

Dana-Farber Cancer Institute
44 Binney St
Boston MA 02115

4. NAME AND ADDRESS OF ANY CLINICAL LABORATORY FACILITIES TO BE USED IN THE STUDY.

Clinical Laboratory
Dana-Farber Cancer Institute
44 Binney Street, D521
Boston MA 02115

5. NAME AND ADDRESS OF THE INSTITUTIONAL REVIEW BOARD (IRB) THAT IS RESPONSIBLE FOR REVIEW AND APPROVAL OF THE STUDY(IES).

Institutional Review Board
Dana-Farber Cancer Institute
44 Binney St
Boston MA 02115

6. NAMES OF THE SUBINVESTIGATORS *(e.g., research fellows, residents, associates)* WHO WILL BE ASSISTING THE INVESTIGATOR IN THE CONDUCT OF THE INVESTIGATION(S).

7. NAME AND CODE NUMBER, IF ANY, OF THE PROTOCOL(S) IN THE IND FOR THE STUDY(IES) TO BE CONDUCTED BY THE INVESTIGATOR.

Protocol name: Radiation and Thermal therapy for Extensive Intraductal carcinoma.
Protocol number: 95-006

332

CURRICULUM VITAE

DATE PREPARED: 5/28/96

NAME: Kitt Shaffer, M.D., Ph.D.

ADDRESS: 14C Bellis Circle
Cambridge, Massachusetts 02140

PLACE OF BIRTH: Kansas City, Missouri, U.S.A.

EDUCATION:

1976	B.A.	Kansas State University Manhattan, Kansas
1983	M.D.	Tufts University School of Medicine, Boston, Massachusetts
1983	Ph.D.	University of Kansas (Anatomy) Kansas City, Kansas

POST DOCTORAL TRAINING:

1983-84	Medical/ surgical internship	Newton-Wellesley Hospital Newton Lower Falls, Massachusetts
1984-88	Radiology residency	New England Medical Center Boston, Massachusetts
1988-89	Clinical fellowship	Thoracic Radiology Brigham and Women's Hospital, Boston, Massachusetts

LICENSURE AND CERTIFICATION:

1979	National Board of Medical Examiners, Part 1
1983	National Board of Medical Examiners, Part 2
1984	National Board of Medical Examiners, Part 3
1985	Massachusetts medical license
1987	American Board of Radiology

ACADEMIC APPOINTMENTS:

1976-77	Graduate Teaching Assistant	Division of Biology Kansas State University, Manhattan, Kansas
1979-81	Graduate Teaching Assistant	Department of Anatomy University of Kansas Medical School, Kansas City, Kansas
1989-	Instructor in Radiology	Harvard Medical School Boston, Massachusetts

HOSPITAL APPOINTMENTS:

1989-91	Clinical Staff member, Division of Thoracic Radiology, Brigham and Women's Hospital, Boston, Massachusetts
1991-92	Acting Co-Director, Division of Thoracic Radiology, Brigham and Women's Hospital, Boston, Massachusetts
1992-93	Clinical Director of Radiology, Dana-Farber Cancer Institute, Boston, Massachusetts

AWARDS AND HONORS:

1981	first place in Graduate Student Research Central States Electron Microscopy Society
1982	Alpha Omega Alpha medical honor society Tufts University School of Medicine
1988	Warren Widrich Award for Radiology Boston Veteran's Administration Hospital
1992-95	Editor's Recognition Award for Excellence in Reviewing-Radiology

MAJOR COMMITTEE ASSIGNMENTS:

1989	Radiology residency selection committee-BWH
1990	CT clinical research committee-BWH
1990	Radiology forms committee-BWH
1990	Radiology quality improvement committee-BWH
1991	Education committee-BWH

MEMBERSHIPS IN PROFESSIONAL SOCIETIES:

1980-1983	Tissue Culture Association
1981-1983	Electron Microscopy Society of America
1983-1988	National Association of Residents and Interns
1977-	American Medical Association
1977-	American Medical Women's Association
1980-	Amer. Assoc. for the Advancement of Science
1981-	Sigma Xi
1982-	Massachusetts Medical Society
1983-	Radiological Society of North America
1991-	Reviewer for Radiology
1983-	New England Roentgen Ray Society
1983-	American Association of Women Radiologists
1990-	American College of Radiology

MAJOR RESEARCH INTERESTS:

1. Imaging and diagnosis of mediastinal masses with special attention to anatomic considerations, subdivisions of mediastinal compartments, and use of CT and MR in the mediastinum.

2. Teaching methods for radiology and radiological anatomy at the resident and medical student level, with emphasis on computer-assisted instruction and one-on-one discussion.

3. Speech-controlled radiology reporting using computer voice recognition technology, formulation of standard reports and partial standard report assembly.

4. Imaging and treatment of advanced lung carcinoma using a

combined chemotherapeutic-surgical approach, with emphasis on application of MR in staging and follow-up.

5. Imaging of lung transplants and complications thereof.

6. Imaging of lymphoma and breast carcinoma using radiography, CT and nuclear medicine.

No research grant support.

PRINCIPAL CLINICAL RESPONSIBILITIES:

1988-	Staff Radiologist Division of Thoracic Radiology Brigham and Women's Hospital Boston, Massachusetts
1991-	Clinical Director of Radiology Dana-Farber Cancer Institute Boston, Massachusetts

MAJOR ADMINISTRATIVE RESPONSIBILITIES:

1991-92	Acting Co-Director, Division of Thoracic Radiology Brigham and Women's Hospital Boston, Massachusetts
1992-	Clinical Director of Radiology Dana-Farber Cancer Institute Boston, Massachusetts
1996-	Director of Medical Student Education Department of Radiology, Brigham and Women's Hospital, Boston, Massachusetts

TEACHING EXPERIENCE:

1979-1980	Laboratory instructor, first-year medical gross anatomy University of Kansas Medical School 15 students, 20 hours/week
1980-1981	Laboratory instructor, first-year medical

	histology University of Kansas Medical School 30 students, 10 hours/week
1980-1981	Lecturer, first-year medical anatomy University of Kansas Medical School 150 students, 1 hour/2 weeks
1984-1988	Lecturer, first-year medical radiographic anatomy Tufts University School of Medicine 30 students, 2 hours/month
1984-1988	Lecturer, fourth-year medical radiology Tufts University School of Medicine 10 students, 4 hours/month
1985-1988	Lecturer, second-year medical physiology Tufts University School of Medicine 30 students, 4 hours/semester
1988-pres	Lecturer, Radiology noon conference Brigham and Women's Hospital 15 residents, 1 hour/2 months
1988-pres	Lecturer, Radiology noon conference New England Medical Center 15 residents, 1 hour/month
1988-pres	Lecturer, third-year medical Radiology Brigham and Women's Hospital 10 students, 3 hours/month
1988-1992	morning teaching rounds, Thoracic Radiology Brigham and Women's Hospital 2 residents and fellow, 6 hours/month
1989-1992	Lecturer, second-year medical Pathology Harvard Medical School 25 students, 2 hours/semester
1990-pres	Lecturer, Radiology afternoon conference Boston Veteran's Administration Hospital 10 residents, 1 hour/2 months
1993-pres	Lecturer, noon conference, BU Radiology Boston City Hospital 10 residents, 1 hour/2 months
1994-pres	Lecturer, noon conference, Lahey Clinic Lahey Clinic, Department of Radiology 10 residents, 1 hour/2 months

BIBLIOGRAPHY:

Original Reports-

1. Shaffer KS. A study of surface features and cytoskeletal elements in a cloned high passage feline embryo cell line (FEF). Anat Rec 1981;199:231A-232A.

2. Robbins AH, Horrovitz DM, Srinivasan MK, Vincent ME, Shaffer K, Sadowsky N, Sonnenfeld M. Speech-controlled generation of radiology reports. Radiology 1987;164:69-573.

3. Robbins AH, Vincent ME, Shaffer K, Maietta RK, Srinivasan MK. Radiology reports: assessment of a 5,000-word speech recognizer. Radiology 1988;167:853-855.

4. Shaffer K, Pugatch RD. Small pulmonary nodules: dynamic CT with a single-breath technique. Radiology 1989;173:567-568.

5. Shaffer K, Pugatch RD, Sugarbaker D. Primary mediastinal leiomyoma: case report with review of the literature. Annals of Thoracic Surgery 1990; 50:301-302.

6. Stark P, Jacobson F, Shaffer K. Mediastinal shift: pushed or pulled? International Journal of Critical and Coronary Care Medicine 1991; 2:314-315.

7. Meyer JE, Christian RL, Frenna TH, Sonnenfeld MR, Waitzkin ED, Shaffer K. Image Guided Aspiration of Occult Breast "Cysts". Archives of Surgery 1992; 127(4):4335.

8. Meyer JE, Frenna TH, Polger M, Sonnenfeld MR, Shaffer K. Enlarging Occult Fibroadenomas. Radiology 1992;183:639-641.

9. Patz E, Shaffer K, Pugatch R.D., Jochelson M, Piwinica-Worms D, Sugarbaker D, Sarin M. Preoperative evaluation of malignant pleural mesothelioma: CT and MRI findings in 35 cases. AJR 1992; 159:961-966.

10. Stark P, Jacobson F, Shaffer K. Standard imaging in silicosis

and coal worker's pneumoconiosis. Radiologic Clinics of North America 1992; 30:1147-1154.

11. Patz E, Stark P, Shaffer K, Pugatch RD. Identification of internal mammary lymph nodes: the value of the frontal chest radiograph. J Thoracic Imaging 1993; 8:81-84.

12. Kirn D, Mauch P Shaffer K, Pinkus G, Shipp MA, Kaplan WD, Tung N, Wheeler C, Beard CJ, Canellos GP, Shulman LN. Large-cell and immunoblastic lymphoma of the mediastinum: prognostic features and treatment outcome in 57 patients. J Clin Oncol 1993; 11:1336-1343.

13. Shaffer K, Rosado-de-Christenson ML, Patz EF, Young S, Farver CF. Thoracic lymphangioma in adults: CT and MR imaging features. AJR 1994; 162:283-289.

14. Seltzer SE, Kelly P, Adams DF, Viera MA, Fener E, Rondeau R, Kazanjian N, Laffel G, Shaffer K, Williamson D, Aliabadi P, Gillis AE, Holman BL. Expediting the turnaround of radiology reports: use of total quality management to fadilitate radiologists' report signing. AJR 1994; 162:775-781.

15. Janicek MJ, Shaffer K. Scintigraphic and radiographic patterns of skeletal metastases in breast cancer: value of sequential imaging in predicting outcome. Skeletal Radiology 1995; 24:597-600.

16. Beard CJ, Kijewski P, Bussiere M, Gelman R, Plunkett M, Shaffer K, Costello P, Coleman CN. Analysis of prostate and seminal vesicle motion. International Journal of Rad Oncol Biol Phys 1996; 34:451-458.

17. DiPiro PJ, Meyer JE, Shaffer K, Denison CM, Frenna TH, Rolfs AT. The utility of the routine magnification view after breast conservation therapy for carcinoma. Radiology 1996; 198:341-343.

18. Shaffer K, Smith D , Kirn D , Kaplan W, Canellos W, Peter Mauch P, Shulman LN. Primary mediastinal large B-cell lymphoma: radiologic findings at presentation. AJR, in the press.

Proceedings of Meetings-

1. Stark, P., Shaffer, K., Patz, E, Thordarson, S., McKinney, M., Manifestations of esophageal disease on plain chest radiographs. RSNA poster, 1990.

2. Shaffer, K., Patz, E., Stark P., Jacobson, R., Multimodality Imaging of Single- and Double-Lung Transplants. RSNA poster, 1991.

3. Seltzer, S., Silverman, S., Shaffer, K., Schwartz, R., Adams, D., Hooton, S., Chiango, B., Spiral CT Scanning: A Valuable Technological Improvement in CT Performance. RSNA Poster, 1991.

4. Shaffer, K. "Lung Transplantation", presented as invited lecture at the Categorical Refresher Course, "Chest Radiology: A Multimodality Approach". 1992 RSNA meeting, Chicago, Illinois.

5. Shaffer, K. Kirn, D, Kaplan W., Mauch P, Pinkus, G, Freedman, A, Tung N, Wheeler, C., Canellos, G, Shulman, LN. Radiology of large cell lymphoma of the mediastinum. 1993 meeting of the American Roentgen Ray Society, San Francisco, CA.

DEPARTMENT OF HEALTH AND HUMAN SERVICES **PUBLIC HEALTH SERVICE** FOOD AND DRUG ADMINISTRATION **STATEMENT OF INVESTIGATOR** ***(TITLE 21, CODE OF FEDERAL REGULATIONS (CFR) Part 312)*** **(See instructions on reverse side.)**	Form Approved: OMB No. 0910-0014. Expiration Date: November 30, 1995. *See OMB Statement on Reverse.* NOTE: No investigator may participate in an investigation until he/she provides the sponsor with a completed, signed Statement of Investigator, Form FDA 1572 (21 CFR 312.53(c))

1. NAME AND ADDRESS OF INVESTIGATOR.

Charles L. Shapiro, M.D.
Breast Evaluation Center
Dana-Farber Cancer Institute
44 Binney St
Boston MA 02115

2. EDUCATION, TRAINING, AND EXPERIENCE THAT QUALIFIES THE INVESTIGATOR AS AN EXPERT IN THE CLINICAL INVESTIGATION OF THE DRUG FOR THE USE UNDER INVESTIGATION. ONE OF THE FOLLOWING IS ATTACHED:

☒ CURRICULUM VITAE ☐ OTHER STATEMENT OF QUALIFICATIONS

3. NAME AND ADDRESS OF ANY MEDICAL SCHOOL, HOSPITAL, OR OTHER RESEARCH FACILITY WHERE THE CLINICAL INVESTIGATION(S) WILL BE CONDUCTED.

Dana-Farber Cancer Institute
44 Binney St
Boston MA 02115

4. NAME AND ADDRESS OF ANY CLINICAL LABORATORY FACILITIES TO BE USED IN THE STUDY.

Clinical Laboratory
Dana-Farber Cancer Institute
44 Binney Street, D521
Boston MA 02115

5. NAME AND ADDRESS OF THE INSTITUTIONAL REVIEW BOARD (IRB) THAT IS RESPONSIBLE FOR REVIEW AND APPROVAL OF THE STUDY(IES).

Institutional Review Board
Dana-Farber Cancer Institute
44 Binney St
Boston MA 02115

6. NAMES OF THE SUBINVESTIGATORS *(e.g., research fellows, residents, associates)* WHO WILL BE ASSISTING THE INVESTIGATOR IN THE CONDUCT OF THE INVESTIGATION(S).

7. NAME AND CODE NUMBER, IF ANY, OF THE PROTOCOL(S) IN THE IND FOR THE STUDY(IES) TO BE CONDUCTED BY THE INVESTIGATOR.

Protocol name: Radiation and Thermal therapy for Extensive Intraductal carcinoma.
Protocol number: 95-006

8. ATTACH THE FOLLOWING CLINICAL PROTOCOL INFORMATION.

☒ FOR PHASE 1 INVESTIGATIONS, A GENERAL OUTLINE OF THE PLANNED INVESTIGATION INCLUDING THE ESTIMATED DURATION OF THE STUDY AND THE MAXIMUM NUMBER OF SUBJECTS THAT WILL BE INVOLVED.

☐ FOR PHASE 2 OR 3 INVESTIGATIONS, AN OUTLINE OF THE STUDY PROTOCOL INCLUDING AN APPROXIMATION OF THE NUMBER OF SUBJECTS TO BE TREATED WITH THE DRUG AND THE NUMBER TO BE EMPLOYED AS CONTROLS, IF ANY; THE CLINICAL USES TO BE INVESTIGATED; CHARACTERISTICS OF SUBJECTS BY AGE, SEX, AND CONDITION; THE KIND OF CLINICAL OBSERVATIONS AND LABORATORY TESTS TO BE CONDUCTED; THE ESTIMATED DURATION OF THE STUDY; AND COPIES OR A DESCRIPTION OF CASE REPORT FORMS TO BE USED.

9. COMMITMENTS:

I agree to conduct the study(ies) in accordance with the relevant, current protocol(s) and will only make changes in a protocol after notifying the sponsor, except when necessary to protect the safety, rights, or welfare of subjects.

I agree to personally conduct or supervise the described investigation(s).

I agree to inform any patients, or any persons used as controls, that the drugs are being used for investigational purposes and I will ensure that the requirements relating to obtaining informed consent in 21 CFR Part 50 and institutional review board (IRB) review and approval in 21 CFR Part 56 are met.

I agree to report to the sponsor adverse experiences that occur in the course of the investigation(s) in accordance with 21 CFR 312.64.

I have read and understand the information in the investigator's brochure, including the potential risks and side effects of the drug.

I agree to ensure that all associates, colleagues, and employees assisting in the conduct of the study(ies) are informed about their obligations in meeting the above commitments.

I agree to maintain adequate and accurate records in accordance with 21 CFR 312.62 and to make those records available for inspection in accordance with 21 CFR 312.68.

I will ensure that an IRB that complies with the requirements of 21 CFR Part 56 will be responsible for the initial and continuing review and approval of the clinical investigation. I also agree to promptly report to the IRB all changes in the research activity and all unanticipated problems involving risks to human subjects or others. Additionally, I will not make any changes in the research without IRB approval, except where necessary to eliminate apparent immediate hazards to human subjects.

I agree to comply with all other requirements regarding the obligations of clinical investigators and all other pertinent requirements in 21 CFR Part 312.

INSTRUCTIONS FOR COMPLETING FORM FDA 1572
STATEMENT OF INVESTIGATOR:

1. Complete all sections. Attach a separate page if additional space is needed.
2. Attach curriculum vitae or other statement of qualifications as described in Section 2.
3. Attach protocol outline as described in Section 8.
4. Sign and date below.
5. FORWARD THE COMPLETED FORM AND ATTACHMENTS TO THE SPONSOR. The sponsor will incorporate this information along with other technical data into an Investigational New Drug Application (IND). INVESTIGATORS SHOULD NOT SEND THIS FORM DIRECTLY TO THE FOOD AND DRUG ADMINISTRATION.

10. SIGNATURE OF INVESTIGATOR	11. DATE 11/21/96

Public reporting burden for this collection of information is estimated to average 84 hours per response, including the time for reviewing instructions, searching existing data sources, gathering and maintaining the data needed, and completing reviewing the collection of information. Send comments regarding this burden estimate or any other aspect of this collection of information, including suggestions for reducing this burden to:

Reports Clearance Officer, PHS
Hubert H. Humphrey Building, Room 721-B
200 Independence Avenue, S.W.
Washington, DC 20201
Attn: PRA

and to:

Office of Management and Budget
Paperwork Reduction Project (0910-0014)
Washington, DC 20503

Please DO NOT RETURN this application to either of these addresses.

CURRICULUM VITÆ

Date prepared: 8/96

Name: Charles Louis Shapiro

Address: 4 Fairbanks Road, Lexington, MA 02173

Place of Birth: Brooklyn, New York

Education:

1979	B.S.	State University of New York, Binghamton, NY
1984	M.D.	State University of New York, Buffalo, NY

Postdoctoral Training:

Internship and Residency:

1984-1985	Intern in Medicine, Temple University Hospital, Philadelphia, PA
1985-1986	Junior Assistant Resident, Internal Medicine, Temple University Hospital
1986-1987	Senior Assistant Resident, Internal Medicine, Temple University Hospital

Fellowships:

1988-1991	Clinical Fellow in Medicine, Harvard Medical School
1988-1991	Fellow in Medical Oncology, Dana-Farber Cancer Institute
1988-1991	Clinical Fellow in Medicine, Brigham and Women's Hospital

Licensure and Certification:

1984	Pennsylvania License Registration
1987	American Board of Internal Medicine Certificate
1988	Massachusetts License Registration
1991	American Board of Internal Medicine, Medical Oncology Certificate

Academic Appointments:

1991-1996	Instructor in Medicine, Harvard Medical School
1996-	Assistant Professor of Medicine, harvard Medical School

Hospital Appointments:

1991-1992	Clinical Associate, Dana-Farber Cancer Institute
1991-1996	Instructor in Medicine, Dana-Farber Cancer Institute
1991-	Associate Physician, Brigham and Women's Hospital
1991-1994	Staff Physician, New England Deaconess Hospital

Awards and Honors:

1979	B.S. with Outstanding Academic Achievement
1984	Alpha Omega Alpha
1984	John Watson Award for Scholarship in Medicine
1984	Baccilli Award for Academic Excellence
1991	Honorary Member of the Sociedad Venezolana de Mastologia

Major Committee Assignments:

1993-	Medical Records Committee, Dana-Farber Cancer Institute
1996-	Drug Use Evaluation Committee, Dana-Farber Cancer Institute
1996-	Scientific Review Committee, Dana-Farber Cancer Institute
1996-	Pharmacy and Therapuetics Committee, Dana-Farber Cancer Institute

Research Interests:

1. Treatment-related toxicities of cancer therapy
2. Phase I/II clinical evaluations of new drugs and new drug combinations
3. Evaluation and management of bone metastasis

Research Funding Information:

Past:	1991-1994	American Cancer Society Clinical Oncology Career Development Award	PI
	1992-1994	NIH/P01 Optimization of hyperthermia: biologic and physical studies	Co-PI
	1992-1995	NIH Improving quality of breast cancer care in elderly women	Co-PI
Current:	1994-1999	NIH/R29 Premature ovarian failure in breast cancer patients	PI

Principal Clinical and Hospital Service Responsibilities:

Dana-Farber Cancer Institute:

1989-1994	Coordinator, Breast Evaluation Center Academic Conferences
1991-1994	Coordinator, Breast Evaluation Center Protocol Development Conferences
1996-	Associate Director, Breast Program, Dana-Farber Cancer Institute

Self Report of Teaching:

Local Contributions

Harvard Medical School

1993-1995	Dana-Farber Cancer Institue Cancer Medicine Course Lecturer - "Renal Cell Carcinoma" 500 CME students and postdoctural fellows 20 hours of preparation for handout/lecture, and 30 minute lecture every other year
1994-1996	Brigham and Womens Hospital and Dana-Farber Cancer Institute Urologic Oncology Course Lecturer - "Immunotherapy" 200 CME students and postdoctural fellows 20 hours of preparation for handout/lecture, and 45 minute lecture every other year
1994-1996	Deaconess Hospital Modern Surgical Oncology for the General Surgeon Lecturer - "How does venous access help the chemotherapist?" Lecturer - "Selection of Adjuvant Chemotherapy by Use of Prognostic Indicators" 150 CME students and postdoctural fellows 20 hours of preparation for handouts/lecture and 45 minute lecture every other year
1996-	Dana-Farber Cancer Institute Attending 3 interns, 1 resident, and 2 oncology fellows 2 months/year

1994-	Emerson Hospital, Concord MA Tumor Board Discussant 15 CME students 3 hours of preparation/month

Regional, National, and International Contributions

Invited Presentations:

1993	National Cancer Institute Symposia on Breast Cancer in Young Women Invited speaker; "Late effects of adjuvant therapy"
1995	University of Louisville Oncology Minisymposia Invited speaker; "Late effects of adjuvant therapy"
1995	Chemotherapy Foundation Symposium XII Invited speaker; "Liposomal Adriamycin for Breast Cancer"

BIBLIOGRAPHY

Original Reports:

1. Shapiro CL, Jensen RA, Wilson KA, Bowen JR. An assay for activity of arogenate dehydratase based upon the selective oxidation of arogenate. Anal Biochem 1981; 110:27-30.

2. Byng GS, Whitaker RJ, Shapiro CL, Jenson RA. The aromatic amino acid pathway branches at L-arogenate in euglena gracilis. Molec Cell Biol 1981; 1:426-438.

3. Shapiro CL, Yeap BY, Godleski J, Jochelson MS, Shipp MA, Skarin AT, Canellos GP. Drug-related pulmonary toxicity in non-Hodgkin's lymphoma: comparative results with three different treatment regimens. Cancer 1991; 68:699-705.

4. Shapiro CL, Haft R, Gantz NM, Doern GV, Christiansen JC, Wallace RJ. *Tsukamurella paurometabolum*: A novel pathogen causing catheter-related bacteremia in oncology patients. Clinical Infectious Disease 1992; 14: 200-203.

5. Gewirtz AM, Shapiro CL, Shen YM, Boyd R, Colman RW. Cellular and molecular regulation of factor v expression in human megakaryocytes. J Cell Physiol 1992; 153: 277-287.

6. Shapiro CL, Gelman RS, Hayes DF, Osteen R, Obando A, Canellos GP, Frei E III, Henderson IC. Comparison of adjuvant chemotherapy with methotrexate and fluorouracil with and without cyclophosphamide in breast cancer patients with one to three positive axillary lymph nodes. J Natl Cancer Inst 1993; 85:812-817.

7. Costanza ME, Berry D, Henderson IC, Ratain MJ, Wu K, Shapiro CL, Duggan D, Kalra J, Berkowitz I, Lyss AP. Amonafide: An active agent in the treatment of previously untreated advanced breast cancer — a Cancer and Leukemia Group B study (CALGB 8642). Clin Can Res 1995; 1:699-704.

8. Shapiro CL, Dezube BJ, Tretyakov O, Wright J, Cap B, Henderson IC, Hayes DF. Dose escalation of thioTEPA combined with pentoxifylline for advanced breast cancer. Clin Cancer Res 1995; 1(8):791-796.

9. Soiffer RJ, Murray C, Shapiro C, Collins H, Chartier S, Lazo S, Ritz J. Selective manipulation of NK cells through administration of low doses of interleukin-2 by continuous and bolus infusion. Clin Cancer Res, in press.

BIBLIOGRAPHY

10. Shapiro CL, Ayash L, Webb I, Gelman R, Keating J, Williams L, Demetri G, Clark P, Elias A, Duggan D, Hayes D, Hurd D, Henderson IC. Repetitive cycles of cyclophosphamide, thiotepa, and carboplatin (CTCb) intensification with peripheral blood progenitor cells and filgrastim (G-CSF) in advanced breast cancer patients. J Clin Oncol, in press.

11. Renshaw AA, Henske EP, Loughlin KR, Shapiro C, Weinberg DS. Aggressive variants of chromophobe renal cell carcinoma. Cancer, in press.

BIBLIOGRAPHY

Proceedings of Meetings:

1. Shapiro CL, Dezube BJ, Wright J, Teicher BA, Pardee AB, Frei E III, Henderson IC. Phase I/II trial of thioTEPA and pentoxifylline in advanced breast cancer. In: Mandell GL, Novick WJ, Jr., eds. Pentoxifylline, Leukocytes and Cytokines (conference proceedings). Scottsdale, AZ, 1991.

2. Shapiro CL. Liposomal Encapsulated Doxorubicin for Breast Cancer: Current and Future Status. In: Chemotherapy Foundation Symposium XIII Innovative Cancer Chemotherapy for Tomorrow. New York, NY Cancer Investigation 14: (supplement 1) 29-30, 1996.

BIBLIOGRAPHY

Reviews and Educationally Relevant Publications:

1. Shapiro CL, Henderson IC. High dose chemotherapy with autologous bone marrow transplantation for breast cancer: promise and perspective. Oncol J Club 1990; 2:12-14.
2. Shapiro CL, Sugarbaker DJ. Malignant effusions in breast cancer. In: Harris JR, Hellman S, Henderson IC, Kinne DW, eds. Breast Diseases Philadelphia: JB Lippincott, 1991:735-744.
3. Henderson IC, Shapiro CL. Adjuvant chemotherapy: an overview. In: Powles TP, Smith I, eds. Medical Management of Breast Cancer London: Martin Dunitz, 1991:197-215.
4. Henderson IC, Shapiro CL. Hexamethylmelamine use in the treatment of metastatic breast cancer. Cancer Treat Rev 1991; 18 (suppl A):91-98.
5. Shapiro CL, Mayer RJ. Breast cancer during pregnancy. Adv Oncol 1992; 8:25-29.
6. Shapiro CL, Mauch PM. Radiation-associated breast cancer after Hodgkin's disease: risks and screening in perspective. J Clin Oncol 1992; 10:1662-1665.
7. Shapiro CL. The relevance of quality of life assessment to the evaluation of combined-modality therapy. Semin Surg Oncol 1993; 9:65-69.
8. Shapiro CL, Hayes DF. Breast cancer screening, prevention, and therapy. Cont Int Med 1993; 5: 60-9.
9. Shapiro CL, Henderson IC. Disease of the breast. In: Rakel RE, ed. Conn's Current Medical Therapy. Philadelphia: WB Saunders, 1993: 1041-1047.
10. Shapiro CL. Bisphosphonates in breast cancer patients with skeletal metastases. Hematol Oncol Clin of N Amer 1994; 8:153-163.

11. Shapiro CL, Henderson IC. Adjuvant therapy of breast cancer. Hematol Oncol Clin of N Amer 1994; 8:213-231.

12. Shapiro CL, Henderson IC. Late cardiac effects of adjuvant therapy: Too soon to tell? Ann Oncol 1994; 5:196-8.

13. Shapiro CL, Recht A. Late effects of adjuvant therapy for breast cancer. J Natl Cancer Inst Monographs 1994; 16:101-112.

14. Legler CM, Shapiro CL, Harris JR, Hayes, DF. Primary chemotherapy of resectable breast cancer. The Breast Journal 1995; 1:42-51.

15. Hayes DF, Henderson IC, Shapiro CL. Treatment of metastatic breast cancer: Present and future prospects. Semin Oncol 1995; 22:5-21.

16. Shapiro CL, Kantoff PW. Hormonal therapy of cancer. In: Macdonald JS, Haller DG, Mayer RJ, eds. Manual of Oncologic Therapeutics. Philadephia: J.B. Lippincott Company, 1995:138-142.

17. Shapiro, CL. Central venous access catheters. Surg Oncol Clinics of North America 1995; 4(3):443-451.

18. Shapiro, CL, Garnick M, Kantoff PW. Tumors of the kidney, ureter, and bladder. In: Cecil Textbook of Medicine, 20th ed., in press.

19. Inouye P, Schnaper LA, Buyske J, Shank BM, Shapiro CL, Berry DA, Wilder KL, Hughes KS. Carcinoma of the Breast in the Geriatric Population: Is Radiation Therapy Necessary? Contemporary Surgery (in press)

BIBLIOGRAPHY

Books and Monographs:

1. Shapiro CL, Henderson IC, eds. New directions in breast cancer research and therapeutics. Hematol Oncol Clin of N Amer. Philadelphia: WB Saunders, 1994; 8:1.

BIBLIOGRAPHY

Abstracts:

1. Shapiro, CL, Colman RW, Gewirtz A. Factor V (FV) expression in human megakaryocytes: relationship to cell size, ploidy level and maturation stage. Blood 68 (suppl. 1289):353a, 1986. Presented to the American Society of Hematology, San Francisco CA, December 1986.

2. Shapiro CL, Henderson IC, Gelman RS, Harris JR, Canellos GP, Frei III E. A randomized trial of cyclophosphamide (C), methotrexate (M), and fluorouracil (F) vs. MF in moderate risk breast cancer patients: Results after a median follow-up of 7.2 years. Proc Am Assoc Cancer Res 1990; 31:A1098. Presented to the American Association of Cancer Research, Washington DC, March 1990.

3. Shapiro CL, Henderson IC, Gelman RS, Harris JR, Canellos GP, Frei III E. A randomized trial of 15 vs. 30 weeks of adjuvant chemotherapy in high risk breast cancer patients: Results after a median follow-up of 9.1 years. Proc Am Soc Clin Oncol 1991; 10:44. Presented to the American Society of Clinical Onocology, Houston, TX, May 1991.

4. Demetri GD, Younger J, Shapiro C, Douville L, Colecchi S, Armstrong S, McGuire B, Henderson IC. A Phase I Study of Dose-Intensified CAF Chemotherapy with Adjunctive r-metHuG-CSF (GCSF) in Patients with Advanced Breast Cancer. Proc Am Soc Clin Oncol 1992; 11: A255 Presented to the American Society of Clinical Onocology, San Diego, CA, May 1992.

5. Demetri GD, Hayes DF, Shapiro C, Parker L, Merica EA, Henderson. Dose-intensification of mitoxantrone with adjunctive G-CSF (filgrastim) in patients with advanced breast cancer: a Phase I trial. Am Soc Hematol 1992.

6. Shapiro CL, Dezube BJ, Wright J, Renaud R, Gelman R, Rosowsky A, Tretyakova O, Hayes DF, Frei III E, Henderson IC. Phase I/II trial of thiotepa (T) and pentoxifylline (P) in advanced breast cancer patients (pts). Proc Am Acad Cancer Res 1993; 34:284. Presented to the American Association of Cancer Research, Orlando FL, 1993.

7. Demetri GD, Younger J, Henderson IC, Shapiro CL, Renaud RC, Colecchi CH, Tomita-Cameron D, Russell TL, Malta E, Hayes DF. A Phase I study of dose- and schedule-intensified CAF chemotherapy with adjunctive filgrastim (r-metHuG-CSF) in patients with advanced breast cancer. Proc Am Soc Clin Oncol 1993; 12:72.

8. Shapiro CL, Hurd D, Clark P, Demetri GD, Ayash L, Blumsack R, Gelman R, Cruz J, Antman K, Elias A, Hayes D, Duggan D, Henderson IC. Repetitive cycles of cyclophosphamide, thiotepa, and carboplatin (CTCb) intensification with peripheral blood progenitor cells (PBPC) and filgrastim (G-CSF) in advanced breast cancer patients (pts). Proc Am Soc Clin Oncol 1994;13:A67. Presented to the American Society of Clinical Oncology, Dallas, TX, May 1994.

9. Samuels BL, Trump DL, Rosner G, Vogelzang NJ, Lyss AP, Shapiro CL, Schilsky RL. Multidrug resistance (MDR) modulation in renal cell carcinoma (RCC) using cyclosporine A (CSA) or tamoxifen (Tam) (CALGB 9163). Proc Am Soc Clin Oncol:1994.

10. Harrigan P, Recht OA, Gelman R, Hauptman P, Hayes D, Henderson IC, Harris JR, Shapiro C. The effect of adjuvant radiation therapy (RT) on cardiac events in breast cancer patients treated with doxorubicin (DOX). Proc Am Soc Clin Oncol 1995;14;A102. Presented to the American Society of Clinical Oncology, Los Angeles, CA, May 1995.

11. Ayash L, Antman K, Wheeler C, Fairclough D, Schwartz G, Shapiro C, Richardson P, Fairclough D, Reich E, Warren D, Lynch C, Schnipper L, Frei E, Elias A. High-dose multimodality therapy with autologous stem cell support for Stage IIIB breast cancer: The DFCI/BIH experience. Proc Am Soc Clin Oncol 1995;14;318.

12. Shapiro CL, Ervin T, Azarnia N, Keating J, Suppers V, Ayash L, Hayes D, and the D-99 Study Group. Phase II Trial of High Dose Liposome-Encapsulated Doxorubisin (D-99) with G-CSF in Metastatic Breast Cancer: Proc Am Soc Clin Oncol 1996;15;115. Presented to the American Society of Clinical Oncology, Philadelphia, PA, May 1996.

DEPARTMENT OF HEALTH AND HUMAN SERVICES
PUBLIC HEALTH SERVICE
FOOD AND DRUG ADMINISTRATION
STATEMENT OF INVESTIGATOR
(TITLE 21, CODE OF FEDERAL REGULATIONS (CFR) Part 312)
(See instructions on reverse side.)

Form Approved: OMB No. 0910-0014.
Expiration Date: November 30, 1995.
See OMB Statement on Reverse.

NOTE: No investigator may participate in an investigation until he/she provides the sponsor with a completed, signed Statement of Investigator, Form FDA 1572 (21 CFR 312.53(c))

1. NAME AND ADDRESS OF INVESTIGATOR.

Barbera L. Smith, M.D., Ph.D.
Comprehensive Breast Health Center
Massachusetts General Hospital
Emerson Place
Boston MA 02114

2. EDUCATION, TRAINING, AND EXPERIENCE THAT QUALIFIES THE INVESTIGATOR AS AN EXPERT IN THE CLINICAL INVESTIGATION OF THE DRUG FOR THE USE UNDER INVESTIGATION. ONE OF THE FOLLOWING IS ATTACHED:

☒ CURRICULUM VITAE ☐ OTHER STATEMENT OF QUALIFICATIONS

3. NAME AND ADDRESS OF ANY MEDICAL SCHOOL, HOSPITAL, OR OTHER RESEARCH FACILITY WHERE THE CLINICAL INVESTIGATION(S) WILL BE CONDUCTED.

Dana-Farber Cancer Institute
44 Binney St
Boston MA 02115

4. NAME AND ADDRESS OF ANY CLINICAL LABORATORY FACILITIES TO BE USED IN THE STUDY.

Clinical Laboratory
Dana-Farber Cancer Institute
44 Binney Street, D521
Boston MA 02115

5. NAME AND ADDRESS OF THE INSTITUTIONAL REVIEW BOARD (IRB) THAT IS RESPONSIBLE FOR REVIEW AND APPROVAL OF THE STUDY(IES).

Institutional Review Board
Dana-Farber Cancer Institute
44 Binney St
Boston MA 02115

6. NAMES OF THE SUBINVESTIGATORS (*e.g., research fellows, residents, associates*) WHO WILL BE ASSISTING THE INVESTIGATOR IN THE CONDUCT OF THE INVESTIGATION(S).

7. NAME AND CODE NUMBER, IF ANY, OF THE PROTOCOL(S) IN THE IND FOR THE STUDY(IES) TO BE CONDUCTED BY THE INVESTIGATOR.

Protocol name: Radiation and Thermal therapy for Extensive Intraductal carcinoma.
Protocol number: 95-006

CURRICULUM VITAE

Updated: 08/96

Name: Barbara L. Smith, M.D., Ph.D.

Address: Massachusetts General Hospital
Comprehensive Breast Health Center
Zero Emerson Place, Suite 112, Boston, MA 02114

Date of Birth: May 14, 1955

Place of Birth: Longbeach, California

Education:

1977 S.B.	Massachusetts Institute of Technology
1983 Ph.D.	Harvard Graduate School of Arts and Sciences
1983 M.D.	Harvard/MIT Division of Health Sciences and Technology, Harvard Medical School

Postdoctoral Training:

Internship and Residencies:

1983 - 1984	Intern in General Surgery, Brigham and Women's Hospital Boston, MA
1984 - 1988	Resident in General Surgery, Brigham and Women's Hospital, Boston, MA
1988 - 1989	Chief Resident in Surgery, Brigham and Women's Hospital, Boston, MA

Licensure and Certification:

1988	Massachusetts License Registration
1990	Board Certified, American Board of Surgery

Academic Appointments:

1978 - 1980	Teaching Assistant, Harvard Medical School
1983 - 1989	Clinical Fellow in Surgery, Harvard Medical School
1989 - 1994	Instructor in Surgery, Harvard Medical School
1994 -	Assistant Professor, Harvard Medical School

Hospital Appointments:

1988 - 1992	Associate Surgeon, Brigham and Women's Hospital, Boston, MA
1989 - 1990	Staff Surgeon, West Roxbury Veteran's Administration Medical Center, West Roxbury, MA

1989 - 1992	Associate Surgeon, Dana Farber Cancer Institute, Boston, MA
1992 -	Director, Comprehensive Breast Health Center, Massachusetts General Hospital, Boston, MA
1995 -	Director Massachusetts General Hospital/Brigham and Women's Hospital Partners Comprehensive Breast Health Center, Boston, MA
1996 -	Associate Visiting Surgeon, Massachusetts General Hospital, Boston, MA

Awards and Honors:

1973	Highest female score in state, New York State Regents' Scholarship Exam
1977	Phi Beta Kappa, MIT
1977	MIT Alumnae Association Award to an Outstanding Senior
1984, 1988	Medical Student Teaching Award, Brigham and Women's Hospital

Major Committee Assignments

National and Regional

1994	NIH Study Section, Pathology B, ad hoc member

Brigham and Women's Hospital

1989 - 1992	Breast Surgery Task Force, Length of Stay Reduction Program
1990 - 1992	Associate Director Surgical Residency Program
1991 - 1992	Member Executive Committee, Brigham Surgical Group

Massachusetts General Hospital

1993	Chairman, Breast Center Task Force
1993 - 1994	Chairman, Oncology Subcommittee, Task Force on the Future of Clinical Research
1993 -	Member, Women's Health Committee
1993 -	Member, Cancer Affairs Committee
1994 -	Member, Information Systems Committee, MGH Cancer Center

Membership, Offices and Committee Assignments in Professional Societies:

1983 -	American Medical Association
1988 -	Massachusetts Medical Society
1991 -	New England Cancer Society
1991 -	Association for Academic Surgery 1993 - Program Committee 1994 - Chairman, Membership Committee
1991 -	Breast Cancer Advisory Group, Harvard Risk Management Foundation, Chairman, Surgical Subcommittee

1991 -	Cancer and Leukemia Group B
	1993 - Surgical Principal Investigator, Massachusetts General Hospital
	1993 - Member, Breast Surgery Committee
1992 -	Fellow, American College of Surgeons
1992-	Massachusetts Chapter American Cancer Society, Breast Cancer Task Force
1993-1994	Medical Vice President, Board of Directors, Central Boston Unit, American Cancer Society
1993 -	Massachusetts Chapter, American College of Surgeons
1994 -	Society of Surgical Oncology

Editorial Boards

1993 -	Advisory Board, Harvard Women's Health Watch

Major Research Interests:

1. Investigation of early molecular level changes in early breast cancer, with particular attention to oncogenes and suppressor genes.
2. Investigation of molecular level changes in high risk or premalignant breast tissues including breast tissue of women with lobular carcinoma in situ or a family history of breast cancer.
3. In vitro culture of breast epithelial cells.
4. Collection of a bank of malignant and non-malignant breast tissues with a related clinical database for ongoing and future investigations.

Research Funding Information:

Past:	1978 - 1983	NIH/Medical Scientist Training Program Grant
	1987 - 1988	American Cancer Society Regular Clinical Fellowship
	1988 - 1992	American Cancer Society Career Development Award Cellular and Molecular Changes in Breast Cancer
Current:	1993 - 1995	NIH/1 RO1 CA61226-01 PI Detection of markers of malignancy in breast specimens.

Principal Clinical and Hospital Responsibilities:

1989 - 1992	Member, Division of Surgical Oncology, Brigham and Women's Hospital, Boston, MA
1989 - 1992	Attending Surgeon, Breast Evaluation Clinic, Dana Farber Cancer Institute, Boston, MA

357

1992 -	Assistant Visiting Surgeon , Massachusetts General Hospital, Boston, MA
1992 -	Director, Comprehensive Breast Health Center, Massachusetts General Hospital, Boston, MA
1992 -	Member, Division of Surgical Oncology, Massachusetts General Hospital, Boston, MA
1995-	Director MGH-BWH Partners Comprehensive Breast Health Center

Local Contributions

Harvard Medical School

1978 - 1980	Microbiology, lecturer and teaching assistant microbiology course first year medical students

Brigham and Women's Hospital

1990 - 1992	Introduction to Clinical Medicine, surgery instructor, post graduate course, two-three second year Harvard Medical students for six 3.5 hour sessions per year
1992	General Surgery, lecturer, Controversies in Surgery course, "Indications for Mastectomy" 5/92

Massachusetts General Hospital

1992 -	Surgery, Attending, Massachusetts General Hospital - teaching residents and medical students on the ward service and breast surgery techniques in the operating room
1993, 1995	Introduction to Clinical Medicine, surgery instructor
1993	Primary Care of Women, lecturer, post graduate course, "Evaluation of Breast Problems" 7/93
1993	Management Decisions for the General Surgeon, lecturer, post graduate course in "Surgical Treatment of Breast Cancer: Mastectomy vs Less" 9/93
1993	Advances in Cancer Management for the Surgeon, lecturer, post graduate course, "Management of High Risk Patients" 11/93
1993	Surgical Grand Rounds - "Management of Locally Advanced Breast Cancer"

1994	Primary Care of Women, lecturer, post graduate course in "Evaluation of Breast Problems" 7/94
1994	Plastic Surgery Grand Rounds - "Management of High Risk Patients"
1994	Management Decisions for the General Surgeon, lecturer, post graduate course, "Current Issues in Breast Cancer Management" 9/94
1994	Advances in Cancer Management for the Surgeon, lecturer, post graduate course in "Identification and Management of Patients at High Risk for Breast Cancer" 11/94
1994	Surgical Grand Rounds - "Management of High Risk Patients, MGH 11/94
1994	Obstetrics and Gynecology Grand Rounds, "High Risk Patients - New Developments", Massachusetts General Hospital, Boston, MA
1994	Lecturer Nurse Practitioner Program MGH Institute of Health Professions "Management of Breast Disease"

Regional, National, and International Contributions

Invited Presentations

1991 -	Pathology Grand Rounds, "Breast Cancer Update for Pathologists and Surgeons", Baystate Medical Center, Springfield, MA
1993	1993 Update in Obstetrics and Gynecology, lecturer, post graduate course, in "Early Detection of Breast Cancer", Brigham and Women's Hospital, Boston, MA 3/93
1993	Invited speaker; "Update on Surgical Management of Breast Cancer", Middlesex Medical Society, Burlington, MA 4/93
1993	Surgical Grand Rounds,"Axillary Dissection", Salem Hospital, Salem, MA 4/93
1993	Invited speaker, Michigan Medical Society, Carcinoma of the Breast: A National Liability Epidemic, "Risk Management in Breast Cancer", Grand Rapids, MI 6/93
1993	Invited speaker, Michigan Medical Society, Carcinoma of the Breast: A National Liability Epidemic, "Risk Management in Breast Cancer", Novi, MI 6/93
1993	Invited speaker, The University of New Mexico,"Treatment of Breast Cancer: Mastectomy vs Less" and "Sterotactic Core Needle Biopsy", Albuquerque, NM 7/93

1993	The Fourth Annual Fundamentals of Surgical Research, lecturer, a course for residents, "Statistical Tests", Association for Academic Surgery, Philadelphia, PA 7/93
1993	Lecturer, Mount Auburn Hospital, Seminar on Breast Health, "Current Treatment Options for Breast Cancer", Newton, MA 9/93
1993	Invited speaker, Harvard-Radcliffe University Health Services, Breast Cancer Support Group, "Early Detection - Forum on Breast Cancer", Cambridge, M 10/93
1993	Invited speaker, Beijing/Chinese Medical Association, "Epidemiology and Therapy of Breast Malignancy", Beijing, China 10/93
1993	Grand Rounds - Lawrence Memorial Hospital "Breast Cancer: A Selective Review", Medford, MA 12/93
1994	Invited speaker, New England Surgical Society, Spring Meeting, "Identification and Management of Patients at High Risk for Breast Cancer, Massachusetts General Hospital, Boston, MA 3/94
1994	1994 Update in Obstretics and Gynecology, lecturer, post graduate course, "Early Detection of Breast Cancer", Brigham and Women's Hospital, Boston, MA 3/94
1994	Invited speaker and course co-director, University of Arkansas Medical Sciences, Advances in the Diagnosis and Treatment of Breast Cancer, "Axillary Dissection", Little Rock, AK 4/94
1994	Invited speaker, Symposium on Breast Diseases, "Management of Ductal Carcinoma in Situ, Middlesex Hospital, Middleton, CT 4/94
1994	Surgical Grand Rounds, "Identification and Management of the High Risk Breast Cancer Patient", New England Deaconess Hospital. Boston, MA 6/94
1994	The Fifth Annual Fundamentals of Surgical Research, lecturer, a course for residents, "Statistical Tests", Association for Academic Surgery, Durham, NC 7/94
1994	Invited speaker, American College of Surgeons, 80th Annual Clinical Congress, "Management of the Abnormal Screening Mammogram" Chicago, Illinois 10/94
1994	Invited speaker, American College of Surgeons, 80th Annual Clinical Congress, "Partial Mastectomy:Operative Technique Standardization", Chicago, Illinois 10/94

1994	Invited speaker, "Current Management of Breast Cancer", Alumnae Seminar XV, Women's Health: " What We Need -What We Get", sponsored by the alumnae of Barnard, Bryne Mawr, Mount Holyoke, Radcliffe, Smith, Vassar and Wellesley, New Canaan, CT 10/94
1994	Surgical Grand Rounds, "Molecular Markers and Prognostic Factors in Breast Cancer", Beth Israel Hospital, Boston, MA 10/94
1995	Surgical Grand Rounds, "Breast Cancer Risk Identification and Management of High Risk Patients", The Cambridge Hospital, Cambridge, MA 1/95
1995	Harvard-MIT Division of Health Sciences and Technology - Program Speaker - Dinner Seminar - "Evolution of Treatment for Breast Cancer", Cambridge, MA, 2/95
1995	37th American Cancer Society Science Writers Seminar, Moderator, Breast Cancer Sessions, New Orleans, LA 3/95
1995	1995 Update in Obstetrics and Gynecology, lecturer, post graduate course, in "Early Detection of Breast Cancer", Brigham and Women's Hospital, Boston, MA 3/95
1995	Invited speaker, John O. Vetta, M.D. Memorial Lectureship, "Risk Factors in Breast Carcinoma, Lenox Hill Hospital, New York, NY 4/95
1995	Invited speaker and course co-director, Advances in the Diagnosis and Treatment of Breast Cancer, post graduate course in "Practice Guidelines in Managing Breast Disease", Philadelphia, PA 4/95
1995	Invited speaker, American College of Surgeons, 81st Annual Clinical Congress, "Management of High Risk Patients - Clinical and Medicolegal Issues", Boston, MA 5/95
1995	Invited speaker, "Breast Cancer Risk:What is New", Concord Hospital, Concord, NH 6/95
1996	Invited speaker, "Benign and High Risk Breast Disease," Brigham and Women's Hospital, Boston, MA 2/96
1996	Invited speaker, "Early Detection of Breast Cancer," Post-graduate course, Brigham and Women's Hospital, Boston, MA 3/96
1996	Invited speaker, "Recent Advances in Breast Cancer," MGH Plastic Surgery Grand Rounds 4/96

1996	Invited speaker, "Adjuvant Chemotherapy for Breast Cancer," Grand Rounds, Bigelow Amphitheater, MGH
1996	Invited Speaker, Journal Club, MGH Breast Rounds 5/96
1996	Invited Speaker, "Cancer of the Breast," Harvard Medical School Post-graduate Course in General Surgery, Blake Auditorium, MGH 9/96
1996	Invited Speaker, "Evaluation of Breast Problems," Pri-Med Conference, Hynes Auditorium, Boston, MA 9/96
1996	Invited speaker, Institute for International Research workshop on how to "Develop a Breast Cancer Disease Management" program, Ritten House Hotel, Philadelphia, PA 11/96
1996	Invited speaker, HMS post-graduate course, "Treatment of Early Breast Cancer," Charles Hotel, Cambridge, MA 11/96
1997	Invited speaker, BWH ICM Course, "Breast Examination," Duncan Reid Conference Room, BWH 3/97

Bibliography

Original Reports:

1. Cherington PV, Smith BL, Pardee AB. Loss of epidermal growth factor requirement and malignant transformation. Proc Natl Acad Sci 1979;76:3937-3941.
2. Smith BL, Sager R. The multistep origin of tumor-forming ability in CHEF cells. Cancer Res 1982;42:389-396.
3. Smith BL, Anisowicz A, Chodish LA, Sager R. DNA transfer of focus- and tumor-forming ability into non-tumorigenic CHEF cells. Proc Natl Acad Sci 1982;79:1964-68.
4. Kitchin R, Gadi I, Smith BL, Sager R. Chromosome analysis of transformed mutants and tumor-derived CHEF/18 cells. Somatic Cell Molec Genet 1982;8:677-689.
5. Dubey DP, Staunton DE, Smith LB, Yunis EG, Sager R. Lysis of Chinese hamster embryo fibroblast mutants by human natural cytotoxic (NK) cells. Proc Natl Acad Sci 1983;80:7303-3707.
6. Smith BL, Sager R. Genetic analysis of tumorigenesis: XXI. Suppressor genes in CHEF cells. Somat Cell Molec Genet 1985;11:25-34.

7. Osteen RT, Smith BL. Results of conservative surgery and radiation therapy in breast cancer. Surg Clin North Am 1990;70:1005-1021.

8. Thompson RW, Smith BL. Multiple jejunoileal diverticulosis. Surgical Rounds 1991; 14:945-947.

9. Smith BL, Bertagnolli M, Klein B, Batter S, Chang M, Douville LM, Eberlein TJ. Evaluation of the Contralateral Breast: The role of biopsy at the time of treatment of primary breast cancer. Ann Surg 1992;216:17-21.

10. Eberlein TJ, Crespo LD, Smith BL, Hergrueter CA, Douville LM, Eriksson E. Prospective evaluation of immediate reconstruction following mastectomy. Ann Surg, 1993;218:29-36.

11. Yanushpolsky DB, Brown DL, Smith BL. Localization of small ovarian Sertoli-Leydig cell tumors by transvaginal sonography with color Doppler. Ultrasound Obstet Gynecol, 1994, 5:133-135.

12. Hulka CA, Smith BL, Sgroi DC, et al. Echo-planar imaging of the breast: differentiating benign from malignant lesions. Radiology, in press, 1995

13. Souba WW, Tanabe KK, Gadd MA, Smith BL, Bushman MS. Attitudes and Opinions Towards Surgical Research: A Survey of Surgical Residents and Their Chairpersons. Annals of Surgery, 1996; 223, No. 4, 377-383

Reviews:

1. Sager R, Bennett F, Smith BL. Altered growth factor requirements of transformed mutants and tumor-derived cell populations of CHEF cell origin. In: Sato G, Pardee AB, Sirbasku D, eds. Growth of Cells in Hormonally Defined Media. New York: Cold Spring Harbor Laboratory, 1981: 231-241.

2. Smith BL. Fibroadenomas. Breast Diseases Eds. J Harris, S Helman, IC Henderson, D Kinne. Philadelphia: J.B. Lippincott, 1991: 34-37.

3. Smith BL. Mammary duct ectasia/periductal mastitis and breast infections. Breast Diseases. Eds. JR Harris, S. Hellman,, IC Henderson, D Kinne. Philadelphia: J.B. Lippincott Co., 1991: 38-42.

4. Smith, BL, Canzanelli C, Christian R, Hoover H, Houlihan MJ, Ryan E. Draft-Algorithm for Management of Common Breast Problems. Forum, Risk Management Foundation of the Harvard Medical Institutions Inc 1992, 13:9.

5. Bennett S, Smith, BL. Benign breast disease and breast implants. In: Carlson K, Eisenstadt S, ed. Primary Care of Women. St. Louis, MO: Mosby Yearbook, in press.

6. Smith BL. The Breast. In: Ryan KJ, Berkowitz R, Barbieri, RL, eds. Kistner's Gynecology, Principles and Practice. 6th ed. St. Louis: Mosby, in press, 5/94.

7. Smith BL, Souba WW. Benign Disease of the Breast. In Current Practice of Surgery, editors Copeland EM, Levine BA, Howard RJ, et al. Churchill, Livingston, NY, 1994

8. Garber J, Smith BL. Management of the high risk and the concerned patient. In Diseases of the Breast, editors Harris JR, Hellman S, Lippman M, Morrow M. JP Lippincot, Philadelphia, in press.

9. Kopans DB, Smith BL. Preoperative, imaging guided needle localization, and biopsy of non-palpable breast lesions. In Diseases of the Breast, editors Harris JR, Hellman S, Lippman M. Morrow M. JP Lippincot, Philadelphia, PA, in press.

10. Smith BL, Souba WW. Diagnosis and Management of Breast Disease. In: Scientific American Surgery, in press, 1995

11. Smith BL, Schnitt SJ, Harris JR. A Prognostic Index for Ductal Carcinoma In Situ of the Breast, CANCER, June 1, 1996; Vol. 77, No. 11, pp.2189-2192..

12. Smith BL. The Breast: Current Problems in Obstetrics, Gynecology, and Fertility, January/February 1996, Vol. XIX, No. 1, pp. 1-36.

13. Cady, B, Steele GD, Morrow M, Gardner B, Smith BL, Lee NC, Lawson HW, and Winchester DP. Evaluation of Common Breast Problems: Guidance for Primary Care Physicians - to be submitted to JAMA

Abstracts:

1. Sager R, Cherington PV, Smith BL, Pardee AB. Growth factor requirements of Chinese hamster cell hybrids, clonal progeny and tumorigenic derivatives. Fed Proc 1979;38:(3).

2. Smith BL, Sager R. Anchorage independence, a genetic step toward malignancy. Genetics 1980;94:599.

3. Eberlein TJ, Crespo LD, Smith BL, Hergrueter CA, Eriksson E. Prospective evaluation of immediate reconstruction following mastectomy. Presented at the Am College Surgeons Plenary Session, October 1991.

4. Hulka CA, Weisskoff RM, Smith BL, et al. Dynamic echo-planar imaging of breast lesions: a method of physiologic evaluation. Presented at RSNA, Chicago, 1994.

5. Smith B, Sgroi D, Koerner F, et al. Molecular analysis of p53 mutations in breast cancer using fine needle aspirates, 1995 submitted

6. Smith B, Gadd M, MacDonald D, Grudberg S, Chi F, Souba C. Overestimation of breast cancer risk among woman attending a breast center, 1995 submitted; to be published

7. FitzGerald MG, MacDonald BJ, Hoover I, O'Neil E, Unsal H, Romero P, Englert C, Sgroi DC, Smith BL, Younger JW, Garber JE, Duda RB, Mayzel KA, Isselbacher KJ, Friend SH, Haber DA. Incidence of BRCA1 germline mutations in early onset breast cancer.

DEPARTMENT OF HEALTH AND HUMAN SERVICES
PUBLIC HEALTH SERVICE
FOOD AND DRUG ADMINISTRATION

STATEMENT OF INVESTIGATOR
(TITLE 21, CODE OF FEDERAL REGULATIONS (CFR) Part 312)
(See instructions on reverse side.)

Form Approved: OMB No. 0910-0014.
Expiration Date: November 30, 1995.
See OMB Statement on Reverse.

NOTE: No investigator may participate in an investigation until he/she provides the sponsor with a completed, signed Statement of Investigator, Form FDA 1572 (21 CFR 312.53(c))

1. NAME AND ADDRESS OF INVESTIGATOR.

Goran K. Svensson, Ph.D.
Joint Center for Radiation therapy
330 Brookline Avenue
Boston MA 02215

2. EDUCATION, TRAINING, AND EXPERIENCE THAT QUALIFIES THE INVESTIGATOR AS AN EXPERT IN THE CLINICAL INVESTIGATION OF THE DRUG FOR THE USE UNDER INVESTIGATION. ONE OF THE FOLLOWING IS ATTACHED:

☒ CURRICULUM VITAE ☐ OTHER STATEMENT OF QUALIFICATIONS

3. NAME AND ADDRESS OF ANY MEDICAL SCHOOL, HOSPITAL, OR OTHER RESEARCH FACILITY WHERE THE CLINICAL INVESTIGATION(S) WILL BE CONDUCTED.

Dana-Farber Cancer Institute
44 Binney St
Boston MA 02115

4. NAME AND ADDRESS OF ANY CLINICAL LABORATORY FACILITIES TO BE USED IN THE STUDY.

Clinical Laboratory
Dana-Farber Cancer Institute
44 Binney Street, D521
Boston MA 02115

5. NAME AND ADDRESS OF THE INSTITUTIONAL REVIEW BOARD (IRB) THAT IS RESPONSIBLE FOR REVIEW AND APPROVAL OF THE STUDY(IES).

Institutional Review Board
Dana-Farber Cancer Institute
44 Binney St
Boston MA 02115

6. NAMES OF THE SUBINVESTIGATORS (*e.g., research fellows, residents, associates*) WHO WILL BE ASSISTING THE INVESTIGATOR IN THE CONDUCT OF THE INVESTIGATION(S).

7. NAME AND CODE NUMBER, IF ANY, OF THE PROTOCOL(S) IN THE IND FOR THE STUDY(IES) TO BE CONDUCTED BY THE INVESTIGATOR.

Protocol name: Radiation and Thermal therapy for Extensive Intraductal carcinoma.
Protocol number: 95-006

3606

8. ATTACH THE FOLLOWING CLINICAL PROTOCOL INFORMATION.

☐ FOR PHASE 1 INVESTIGATIONS, A GENERAL OUTLINE OF THE PLANNED INVESTIGATION INCLUDING THE ESTIMATED DURATION OF THE STUDY AND THE MAXIMUM NUMBER OF SUBJECTS THAT WILL BE INVOLVED.

☐ FOR PHASE 2 OR 3 INVESTIGATIONS, AN OUTLINE OF THE STUDY PROTOCOL INCLUDING AN APPROXIMATION OF THE NUMBER OF SUBJECTS TO BE TREATED WITH THE DRUG AND THE NUMBER TO BE EMPLOYED AS CONTROLS, IF ANY; THE CLINICAL USES TO BE INVESTIGATED; CHARACTERISTICS OF SUBJECTS BY AGE, SEX, AND CONDITION; THE KIND OF CLINICAL OBSERVATIONS AND LABORATORY TESTS TO BE CONDUCTED; THE ESTIMATED DURATION OF THE STUDY; AND COPIES OR A DESCRIPTION OF CASE REPORT FORMS TO BE USED.

9. COMMITMENTS:

I agree to conduct the study(ies) in accordance with the relevant, current protocol(s) and will only make changes in a protocol after notifying the sponsor, except when necessary to protect the safety, rights, or welfare of subjects.

I agree to personally conduct or supervise the described investigation(s).

I agree to inform any patients, or any persons used as controls, that the drugs are being used for investigational purposes and I will ensure that the requirements relating to obtaining informed consent in 21 CFR Part 50 and institutional review board (IRB) review and approval in 21 CFR Part 56 are met.

I agree to report to the sponsor adverse experiences that occur in the course of the investigation(s) in accordance with 21 CFR 312.64.

I have read and understand the information in the investigator's brochure, including the potential risks and side effects of the drug.

I agree to ensure that all associates, colleagues, and employees assisting in the conduct of the study(ies) are informed about their obligations in meeting the above commitments.

I agree to maintain adequate and accurate records in accordance with 21 CFR 312.62 and to make those records available for inspection in accordance with 21 CFR 312.68.

I will ensure that an IRB that complies with the requirements of 21 CFR Part 56 will be responsible for the initial and continuing review and approval of the clinical investigation. I also agree to promptly report to the IRB all changes in the research activity and all unanticipated problems involving risks to human subjects or others. Additionally, I will not make any changes in the research without IRB approval, except where necessary to eliminate apparent immediate hazards to human subjects.

I agree to comply with all other requirements regarding the obligations of clinical investigators and all other pertinent requirements in 21 CFR Part 312.

INSTRUCTIONS FOR COMPLETING FORM FDA 1572
STATEMENT OF INVESTIGATOR:

1. Complete all sections. Attach a separate page if additional space is needed.
2. Attach curriculum vitae or other statement of qualifications as described in Section 2.
3. Attach protocol outline as described in Section 8.
4. Sign and date below.
5. FORWARD THE COMPLETED FORM AND ATTACHMENTS TO THE SPONSOR. The sponsor will incorporate this information along with other technical data into an Investigational New Drug Application (IND). INVESTIGATORS SHOULD NOT SEND THIS FORM DIRECTLY TO THE FOOD AND DRUG ADMINISTRATION.

10. SIGNATURE OF INVESTIGATOR	11. DATE 11/14/96

Public reporting burden for this collection of information is estimated to average 84 hours per response, including the time for reviewing instructions, searching existing data sources, gathering and maintaining the data needed, and completing reviewing the collection of information. Send comments regarding this burden estimate or any other aspect of this collection of information, including suggestions for reducing this burden to:

Reports Clearance Officer, PHS
Hubert H. Humphrey Building, Room 721-B
200 Independence Avenue, S.W.
Washington, DC 20201
Attn: PRA

and to:

Office of Management and Budget
Paperwork Reduction Project (0910-0014)
Washington, DC 20503

Please DO NOT RETURN this application to either of these addresses.

November 18, 1996

CURRICULUM VITAE

NAME:	Göran K. Svensson
ADDRESS:	77 Brush Hill Road, Sherborn, MA 01770
PLACE OF BIRTH;	Göteborg, Sweden
CITIZENSHIP:	U.S.

EDUCATION:

1960	M.Sc. (Fil. kand.), University of Lund, Sweden
1963	M.Sc. (Fil. kand.), University of Lund, Sweden
1967	Ph.D. (Fil. lic.), University of Lund, Sweden

CERTIFICATION:

1984	American Board of Radiology, certified in Therapeutic Radiological Physics.

ACADEMIC APPOINTMENTS:

1962-1967	Research Engineer, University of Lund, Sweden
1967-1971	Health Physicist-Staff Member, Stanford University (SLAC), Stanford, CA
1971-1977	Assistant Professor in Radiation Therapy, Harvard Medical School, Boston, MA
1973-1984	Lecturer in Medical Radiological Physics, Harvard School of Public Health, Boston, MA
1979-1984	Associate Professor of Radiation Therapy, Harvard-MIT Division of Health Sciences and Technology, Boston, MA
1977-	Associate Professor of Radiation Therapy, Harvard Medical School, Boston, MA

HOSPITAL APPOINTMENTS:

1971-1983	Head of Clinical Physics Section, Joint Center for Radiation Therapy, Boston, MA
1983-1986	Head of Engineering Section, Joint Center for Radiation Therapy, Boston, MA
1986-1987	Acting Director, Division of Physics and Engineering, Joint Center for Radiation Therapy, Boston, MA
1987-	Director of Physics Division, Joint Center for Radiation Therapy, Boston, MA.

MAJOR COMMITTEE ASSIGNMENTS:

International.

1979-1983	International Cancer of the Cervix Study. Expertise in Radiation therapy physics. World Health Organization
1984	Task group on Quality Assurance in Radiation Therapy. World Health Organization.
1980-1986	Committee on Quality Assurance in Radiation Therapy. International Commission on Radiation Units and Measurements (ICRU).

National and Regional.

1978-1980	Committee for Radiation Oncology Studies. Expertise in Radiation therapy physics. National Cancer Institute (NCI).
1978-1984	Planning committees and site visits for the Patterns of Care Study. (NCI).
1986-	Clinical Trials Committee. Expertise in Radiation therapy physics. National Cancer Institute (NCI).
1987, 1990	Site visit the Radiological Physics Program, Houston Texas (NCI)
1993	Site visit chairman for PO1 program. National Cancer Institute (NCI).

University and Hospital.

1985-	Harvard University Radiation Safety Committee.
1989-	Brigham Women's Radiation Safety Committee.

MEMBERSHIPS, OFFICES, AND COMMITTEE ASSIGNMENTS IN PROFESSIONAL SOCIETIES:

1968-1984	Member Health Physics Society
1968-	Member American Association of Physicists in Medicine (AAPM)
1979-1982	Radiation Therapy Committee of the AAPM
1985-1987	Radiation Therapy Committee of the AAPM
1980-	Member American Society of Therapeutic Radiology and Oncology (ASTRO)
1984-	Member American College of Radiology (ACR)
1984-	Commission on Radiation Therapy of the ACR: a)Committee on Quality Assessment b)Committee on Radiation Therapy Physics

MAJOR RESEARCH INTERESTS:

1. Hyperthermia
2. Improved radiation treatment techniques
3. Quality Assurance

RESEARCH FUNDING INFORMATION:

Past:

1979 - 1982	NIH/NCI 5 PO1 CA17588 PI: M.B. Levene. Optimization of dose distribution in Cancer radiation Therapy. PI for project I: GK Svensson. Patient Data Acquisition for Treatment Planning.
1983	DFCI Biomedical Research Grant. PI: GK Svensson. Evaluation of the clinical use of a CT/Simulator. (see paper 24)
1987-1992	NIH/NCI T32 CA 09234 PI. GK Svensson. Training program in the Physics of Radiation Therapy.

Current:

1992 - 1995	NIH/NCI 5 PO1 CA31303: PI: CN Coleman. Optimization of hyperthermia. PI for project III and Core: GK Svensson. Improved methods for ultrasound treatment planning and treatment.
1993-1996	USAMRDC DAMD17-93-C-3098 PI: GK Svensson. Use of combination thermal therapy in breast-conserving treatment of extensive intraductal breast cancer.

PRINCIPAL HOSPITAL SERVICE RESPONSIBILITIES:

1987-	Member of the JCRT senior management team. Clinical and academic short and long range planning for JCRT and its member hospitals.

MAJOR ADMINISTRATIVE RESPONSIBILITIES:

1986-	Director of the Physics Division.

SELF REPORT OF TEACHING:

1. Local Contributions

a. Advising responsibilities.

1977	Ph.D. Thesis advisor for one student, HSPH.
1979	Ph.D. Thesis advisor for one student, HSPH.
1980	Ph.D. Thesis advisor for one student, HSPH.
1983	M.Sc. Thesis advisor for one student, MIT-Nuclear Engineering,
1987-1994	Preceptor for one postdoctoral fellow per year. JCRT.
1990	Ph.D. Thesis advisor for one student, MIT-Nuclear Engineering.
1994	Ph.D. Thesis advisor for two students, MIT-HST Program.

b. Leadership roles.

1972-	Lectures and tutoring (annually) of radiation therapy residents, HMS.
1974-1984	Lecture-series for graduate students (annual), HSPH.
1976	Organized a series of seminars for the Department of Radiation Therapy, HMS.
1992-1994	Hyperthermia lectures for the Harvard-MIT HST program.
1987-	Program Director for postdoctoral training program.
1992-	Organize weekly Radiological Physics Seminars and Research Seminars.
1992-	Organize weekly lecture for JCRT postdoctoral fellows.

2. Regional, National and International Contributions.

a. Invited presentations.

1984	Invited speaker. Quality assurance in radiation therapy Pan American Health Organization, Washington DC.
1984	Invited Speaker. Quality assurance in radiation therapy World Health Organization meeting on Radiation Therapy for the developing world. Schloss Reisensburg, Germany.
1984 -1987.	RSNA refresher course faculty. Annual course on quality assurance.
1990	Invited speaker. Quality Assurance in Radiation Therapy. International Congress on Radiation Oncology. Paris, France.
1992	Invited speaker. Varian 14th users meeting. A dedicated facility for stereotactic Radiosurgery/Radiotherapy.
1993	Invited speaker. Quality Assurance in Radiation Therapy. International Congress on Radiation Oncology, Kyoto, Japan.
1994	Invited speaker. Simulation of a multi transducer, dual frequency ultrasound applicator for hyperthermia treatment of breast cancer. IEEE conference. Sendai, Japan

b. Professional leadership role related to teaching.

1981	Member of NCI funded Committee on Radiation Oncology Studies. Participated in writing Criteria for Radiation Oncology in Multidisciplinary Cancer Management. The 1981 "Blue Book"
1982	Member of Task force. Participated in writing document on Quality Assurance in Radiation Therapy. A Manual for Technologists. American College of Radiology and Bureau of Radiological Health.
1984	Chairman for AAPM task force and editor of document on Physical Aspects of Quality Assurance in Radiation Therapy. American Association of Physicists in Medicine.
1986	Hosted three day meeting on Quality Assurance in Radiation Oncology for the International Commission on Radiological Units and Measurements. Boston, MA
1990	Wrote the Physics Model QA program for the American College of Radiology ; Committee on Quality Assurance in Radiation Oncology.

BIBLIOGRAPHY

ORIGINAL REPORTS:

1. **Svensson G**, Bjarngard B. Ionization chamber system with earthed wall for intracavity use. Phys Med Biol. 1964; 4:465-467.

2. **Svensson G**, Liden K. The quantitative accumulation of 95Zr and 140Ba in carpets of forest moss. Health Phys. 1965; 11:1033-1042.

3. **Svensson G**, Liden K. The transport of 137Cs from lichen to animal and man. Health Phys. 1964; 11:1393-1400.

4. **Svensson G**. Radiation protection dosimetry at 1.2 GeV electron synchrotron at the University of Lund. Excerptum Acta Radiol Suppl. 1966; 254:138-145.

5. Jenkins TM, Baumgarten A, Busick D, McCall RC, Murray J, Nelson WR, **Svensson GK**. Beam safety considerations at the Stanford Linear Accelerator Center. Nucl Safety. 1970; 11:435-444.

6. Nelson WR, Kase KR, **Svensson GK**. Muon shielding around high energy accelerators. Nucl Instr Meth. 1974; 120:413-429.

7. Larsen RD, **Svensson GK**, Bjarngard BE. The use of wedge filters to improve dose distribution with the partial rotation technique. Radiol. 1975; 117:441-445.

8. Bjarngard BE, Piontek RW, **Svensson GK**. Electron scattering and collimation system for 12 MeV linear accelerator. Med Phys. 1976; 3:153-158.

9. **Svensson GK**, Bjarngard BE, Chen GTY, Weichselbaum RR. Superficial doses in treatment of breast with tangential fields using 4 MV x-rays. Int J Rad Onc Biol Phys. 1977; 2:705-710.

10. Hellman S, **Svensson GK**. Particle radiation therapy: constraints and requirements. Int J Rad Onc Biol Phys. 1978; 3:21-25.

11. Bjarngard BE, Chen GRY, Piontek RW, **Svensson GK**. Analysis of dose distributions in whole body electron therapy. Int J Rad Onc Biol Phys. 1978; 2:319-324.

12. Harris JR, Levene MB, **Svensson GK**, Hellman S. Analysis of cosmetic results following primary radiation therapy for stages I and II carcinoma of the breast. Int J Rad Onc Biol Phys. 1979; 5:257-261.

13. **Svensson GK**, Bjarngard BE, Larsen RD, Levene MB. A modified three-field technique for breast treatment. Int J Rad Onc Biol Phys. 1980; 6:689-694

14. **Svensson GK**, Larsen RD, Chen TS. The use of a 4 MV linear accelerator for whole body irradiation. Int J Rad Onc Biol Phys. 1980; 6:761-765.

15. Chin LM, Kijewski PK, **Svensson GK**, Chaffey MB, Levene MB, Bjarngard BE. A computer-controlled radiation therapy machine for pelvic and para-aortic nodal areas. Int J Rad Onc Biol Phys. 1981; 7:61-70.

16. Brown LH, **Svensson GK**, Bjarngard BE. Day's integration of scatter dose with an analytical expression. Med Phys. 1981; 8:184-189.

17. Siddon RL, Tonnesen GL, **Svensson GK**. Three-field technique for breast treatment using a rotatable half-beam block. Int J Rad Onc Biol Phys. 1981; 7:1473-1477.

18. Wolbarst AB, Chin LM, **Svensson GK**. Optimization of radiation therapy: integral-response of a model biological system. Int J Rad Onc Biol Phys. 1982; 8:1761-1769.

19. Bjarngard BE, Brown LH, **Svensson GK**. Scatter dose decrement values for rectangular fields. Med Phys. 1982; 9:830-834.

20. Siddon RL, Buck BA, Harris JR, **Svensson GK**. Three-field technique for breast irradiation using tangential field corner blocks. Int J Rad Oncol Biol Phys. 1983; 9:583-588.

21. Chin LM, Kijewski PK, **Svensson GK**, Bjarngard BE. Dose optimization with computer-controlled gantry rotation, collimator motion and dose rate variation. Int J Rad Onc Biol Phys. 1983; 9:723-729.

22. Kase KR, **Svensson GK**, Wolbarst AB, Marks MA. Measurements of dose from secondary radiation outside a treatment field. Int J Rad Onc Biol Phys. 1983; 9:1177-1183.

23. **Svensson GK**. Quality assurance in radiation therapy: physics efforts. Int J Rad Onc Biol Phys. 1984; 10:Suppl. 1.

24. Kijewski MF, Judy PF, **Svensson GK**. Image quality of an analog radiation therapy simulator-based tomographic scanner. Med Phys. 1984; 11:502-507.

25. Buck BA, Siddon RL, **Svensson GK**. A beam alignment device for matching non-coplanar fields. Int J Rad Onc Biol Phys. 1985; 11:1039-1043.

26. Chin LM, Siddon RL, **Svensson GK**, Rose C. Progress in 3-D treatment planning for photon beam therapy. Int J Rad Onc Biol Phys. 1985; 11:2011-2020.

27. Atari NA, **Svensson GK**. A high resolution digital dosimetric system for spatial characterization of radiation fields using a thermoluminescent CaF2:Dy crystal. Med Phys. 1986; 13:354-360.

28. Kase KR, **Svensson GK**. Head scatter data for several linear accelerators (4-18 MV). Med Phys. 1986; 13:530-532.

29. Rice RK, Hansen JL, **Svensson GK**, Siddon RL. Measured dose distributions for small beams in 6 MV x-rays. Phys Med Biol 1987, 32:1087-1099.

30. Herman TS, Teicher B A, Jochelson M, Clark J, **Svensson GK**, and Coleman CN. Rationale for use of local hyperthermia with radiation therapy and selected anti-cancer drugs in locally advanced human malignancies. Int J Hyperthermia 1988, 4(2):143-158.

31. Chin LM, Harter KW, **Svensson GK**, Cassaday JR. An external beam treatment technique for retinoblastoma. Int J Rad Oncol Biol Phys 1988, 15:455-460.

32. Saunders WM, Winston KR, Siddon RL, **Svensson GK**, Kijewski PK, Rice RK, Hansen JL, and Barth NH. Radiosurgery for arteriovenous malformations of the brain using a standard linear accelerator: rationale and technique. Int J Rad Onc Biol Phys 1988; 15:441-448.

33. Brahme A, Chavaudra J, Landberg T, McCullough EC, Nusslin F, Rawlinson JA, **Svensson G**, Svensson H. Accuracy requirements and quality assurance of external beam therapy with photons and electrons. Acta Oncologica, Supplement 1 pp 1-76, Stockholm 1988.

34 **Svensson GK**, Quality assurance in external beam radiation therapy. Radiographics 1989, 9:169-182, No.1.

35. Tsai JS, Buck BA, **Svensson GK**, Alexander E, Cheng CW, Mannarino EG, Loeffler JS. Quality assurance in stereotactic radiosurgery using a standard linear accelerator. Int J Rad Onc Biol Phys 1991; 21:737-747.

36. Nedzi LA, Kooy HM, Alexander E, **Svensson GK**, Loeffler JS. Dynamic field shaping for stereotactic radiosurgery: a modeling study. Int J Rad Onc Biol Phys 1991: 25: 859-869.

37. Marcus KC, **Svensson GK**, Rhodes LP, Mauch PM. Mantle irradiation in the upright position: a technique to reduce the volume of lung irradiated in patients with bulky mediastinal Hodgkin's disease. Int J Rad Onc Biol Phys. 1992; 23:443-447.

38. Bornstein BA, Zouranjian PS, Hansen JL, Fraser SM, Gelwan LA, Teicher BA, **Svensson GK.** Local hyperthermia, radiation therapy, and chemotherapy in patients with local-regional recurrence of breast carcinoma. Int J Rad Oncol Biol Phys 1992, 25: 79-85.

39. Holupka EJ, Humm JL, Tarbell NJ, **Svensson GK**. Effect of set-up error on the dose across the junction of matching cranial-spinal fields in the treatment of medulloblastoma. Int J Rad Oncol Biol Phys 27:345-352, 1993.

40. Purdy JA, Biggs, PJ, Bowers C, Daily E, Downes W, Fraass BA, Karzmark CJ, Kahn F, Morgan P, Morton R, Palta J, Rosen II, Thorson T, **Svensson G**, Ting J: Medical accelerator safety considerations. Med Phys 20 (4), Jul/Aug 1993.

41. Bornstein BA, Herman TS, Hansen JL, Buswell L, Zouranjian PS, Fraser M, Teicher BA, **Svensson GK**, Coleman CN: Pilot study of Local Hyperthermia, Radiation Therapy, Etanidazole, and Cisplatin for Advanced Superficial Tumors. Int J Hyperthermia, 1994.

42. Collins AK, Makrigiorgos GM, **Svensson GK.** Coumarin chemical dosimeter for radiation therapy. Med Phys 21 (11), 1741-1747, November 1994.

43. Lu X-Q, Burdette EC, Bornstein BA, Hansen JL, and **Svensson GK**.: Design of an ultrasonic therapy system for breast cancer treatment. Int J Hyperthermia, 12, No 3 :375-399, 1996.

44. Holupka EJ, Kaplan ID, Burdette EC, and **Svensson GK:** Ultrasound Image Fusion for External Beam Radiotherapy for Prostate Cancer. Int J Rad Oncol Phys Biol 35:975-984, 1996.

PROCEEDINGS OF MEETINGS.

P1. Bentgsson L, Naversten Y, **Svensson G**. Maternal and infantile metabolism of Cesium. Proc of the IAEA Symp on the Assessment of Radioactivity in Man. IAEA Vienna, 1964, IT:21-32.

P2. **Svensson G**. The increasing 137Cs level in forest moss in relation toi the total 137Cs fallout from 1961 through 1965. Proc Intern Symp on Radioecological Concentration Processes, Stockholm, Sweden, 25-29 April, 1966. New York: Pergamon, 1966: 539-545.

P3. **Svensson G**, McCall RC, Jenkins T, Nelson WR. The use of thermoluminescent dosimeters in high energy health physics. Proc Second Intern Conf on Luminescence Dosimetry, held at Gatlinburg, Tennessee, 23-26 September, 1968:737-750.

P4. **Svensson G**, Nelson WR. Measurement of radial and longitudinal dose distribution in a water phantom irradiated with a 10 GeV electron beam. Proc Second Intern Conf on Accelerator Dosimetry, held in Stanford, California, 5-7 November, 1969:185-208.

P5. Gay R, **Svensson GK**. An experimental evaluation of the use of the fission fragment registration method for particle fluence measurements. 1970; SLAC-TN-70-33.

P6. Wycoff JM, Pruitt JS, **Svensson GK**. Dose vs. angle and depth produced by 20 to 100 MeV electrons incident on thick targets. Proc (CERN 71-16, Vol II) Int Congress on Protection Against Accelerator and Space Radiation. CERN, Geneva, Switzerland, 26-30 April, 1971.

P7. Clemens J, Bjarngard BE, Boyer A, Goitein M, Larsen R, **Svensson G**. Computer automation of compensating filter design. Proc Fifth Intern Conf on the Use of Computers in Radiation Therapy. The University Press of New Englan d, Hanover, 1976;220-226.

P8. Kase KR, Bjarngard BE, Maddox J, **Svensson GK**. Dose control in radiation therapy. Proc Symp on Measurements for the Safe Use of Radiation. NBS SP456:344-350, Washington, DC. March, 1976.

P9. Kase KR, **Svensson GK**, Chen DT. Radial distribution of scattered and leakage radiation dose for radiotherapy equipment. In: Biomedical Dosimetry: Physical Aspects, Instrumentation, Calibration. IAEA, Vienna, Austria, 1981:111-124.

P10. Bowman HF, Curley MG, Newman WH, Summit SC, Chang S, Hansen J, Herman TS and **Svensson GK**. Use of effective conductivity: Will it permit quantitative hyperthermia treatment planning? Proceedings of the Annual International Conference of the IEEE Engineering in Medicine and Biology Society, Vol 11, 1989, Kim Y and Spellman FA, Eds. Part I, pgs 1-8.

P11. Bowman HF, Curley MG. Newman WH, Summit SC, Chang S, Hansen J, Herman TS and **Svensson GK**. Use of effective conductivity for hyperthermia treatment planning. Bioheat Transfer: Applications in Hyperthermia , Emerging Horizons in Instrumentation and Modeling. ASME HTD-V 126/BED-V12. p 23-28, 1989.

P12. Bowman HF, Newman WH, Curley MG, Summit SC, Kumar S, Martin GT, Hansen J, **Svensson GK.** Tumor hyperthermia: dense thermometry, dosimetry, and effects of perfusion. In: Advances in Biological Heat and Mass Transfer, HTD-volume 189/BED, 18:23-31, ASME, 1991.

P13. Fenn AJ, Bornstein BA, **Svensson GK**, Bowman HF: Minimal invasive monopole phased arrays for hyperthermia treatment of breast carcinomas: design and phantom tests. In: Proceedings of the IEEE Int'l Symposium on Electromagnetic Compatibility, Sendai, Japan, May 1994. Pages 556 - 559.

P14. **Svensson GK**, Lu, X-Q, Hansen JL, Bornstein BA, Burdette EC. Simulation of a multi-transducer, dual frequency ultrasound applicator for hyperthermia treatment of breast cancer. Proceedings of the IEEE Int'l Symposium on Electromagnetic Compatibility, Sendai, Japan May 1994. Pages 433 - 436.

P15. Hansen JL, Bornstein BA, **Svensson GK,** Newman WH, Martin GT, Sidney DA, Bowman HF: A quantitative, integrated, clinical focused ultrasound system for deep hyperthermia. Proceedings of the ASME Winter Annual Meeting, November, 6 - 11, 1994 Chicago, Illinois.

REVIEWS AND EDUCATIONALLY RELEVANT PUBLICATIONS.

R1. **Svensson GK**, ed. Physical Aspects of Quality Assurance in Radiation Therapy, AAPM Report No. 13. American Institute of Physics. New York, May 1984.

BOOKS AND MONOGRAPHS..

B1. **Svensson GK**, Chin LM, Siddon RL, Harris JR. Breast treatment techniques at the Joint Center for Radiation Therapy. In: Harris JR, Hellman S, Silen W, eds. Conservative Management of Breast Cancer. Philadelphia: JP Lippincott Co., 1983:239-255.

B2. **Svensson GK,** Chin LM. Computer-controlled radiation therapy of cancer of the uterine cervix with pelvic and para-aortic lymph node involvement. In: Wright AE, Boyer AL, eds. Advances in Radiation Therapy Treatment Planning. New York: Amer Inst Phys, 1983d:450-455.

B3. **Svensson GK**. Quality assurance in radiation therapy. In: Wright AE, Boyer AL, eds. Advances in Radiation Therapy Treatment Planning. New York: Amer Inst Phys, 1983:244-246.

B4. **Svensson GK**. Quality assurance in radiation therapy: AAPM efforts. In: Bäuml A (ed) Quality assurance in radiation therapy. Munich (MMV Medizin Verlag) 1986; 59-66.

ABSTRACTS

A1. **Svensson GK**, McCall RC, Babcock G. an improved TLD reader. Health Phys. 1970; 19:92.

A2. **Svensson GK**, Bjarngard BE, Maddox BJ, Piontek RW. The properties of lithium borate and ferrous sulfate in a range modulated proton beam. Med Phys. 1974; 1:101.

A3. Chin L, **Svensson GK**. Evaluation of parameters in compensating filter design. Med Phys. 1975; 2:170.

A4. **Svensson GK**, Kase KR, Chin LM, Harris JR. Dose to the opposite breast as a result of primary radiation therapy for carcinoma of the breast. Int J Rad Onc Biol Phys. 1981; 7:1209.

A5. Wolbarst AB, Chin LM, **Svensson GK**. Optimization of radiation therapy: Integral response of a model biological system. Med Phys. 1982; 9:618.

A6 Cobb PD, Kase KR, **Svensson G**. Dosimetry of "improved" Fletcher ovoids(1) with Ra-226 sources. Med Phys. 1982; 9:625.

A7. **Svensson GK**, Chin LM. Uncertainties in radiation therapy. Med Phys. 1983; 10:518.

A8. Nizin PS, Singh S, Podmore PR, **Svensson GK**. A two-dimensional wedge design. Med Phys. 1985; 12:538.

A9. Cobb PD, **Svensson GK**. Radiation exposure and risk assessment from radiation procedures. Med Phys. 1985; 12:520.

A10. Tsai J, **Svensson GK**, and Bjarngard BE. The characteristics of small x-ray beams from linear accelerators. Med Phys. 1988; 15:473.

A11. Tsai J, **Svensson GK**, Loeffler JS. Collimator design for stereotactic radiosurgery using linear accelerators. Med Phys. 1990; 17:544.

A12. Hansen JL, Kooy HM, Pelagatti JM, Dopheide M, **Svensson GK**. 3-D geometric treatment planning system for hyperthermia deep heating. Med Phys. 1991; 18:635.

A13. **Svensson GK**, Bornstein B, Delli Carpini D, Hansen JL, Herman T. Focused ultrasound array for deep hyperthermia. Med Phys. 1991; 18:636.

A14. Collins AK, Makrigiorgos GM, **Svensson GK**. Coumarin chemical dosimetry for radiation therapy. Med Phys. 1993; 20:913.

A15. Collins AK, Makrigiorgos GM, **Svensson GK**. Dose rate dependence in the coumarin chemical dosimeter. Radiation Research Society - 41nd Annual Meeting, North American Hyperthermia Society - 13 th Annual Meeting. Dallas, Texas. March 20 to March 25, 1993.

A16. Fenn AJ, Bornstein BA, **Svensson GK.** Minimally invasive monopole phased arrays for hyperthermia treatment of breast carcinomas. Radiological Society of North America, Chicago IL. November 28 to December 3, 1993.

A17. Bornstein BA, Herman TS, Buswell L, Hansen J, Zouranjian PS, Fraser SM, Teicher BA, **Svensson GK,** Coleman CN. Pilot study of local hyperthermia (HT), radiation therapy (RT), etanidazole (ETA) and cisplain (CDDP) for advanced superficial tumors. Radiation Research Society - 42nd Annual Meeting, North American Hyperthermia Society - 14th Annual Meeting. Nashville,Tennessee April 29 to May 4, 1994.

A18. Lu XQ, **Svensson GK,** Hansen JL, Bornstein BA, Harris JR, Burdette EC, Slayton M, Barthe P. Design of an ultrasound hyperthermia unit for breast cancer treatment. Radiation Research Society - 42nd Annual Meeting, North American Hyperthermia Society - 14th Annual Meeting. Nashville,Tennessee April 29 to May 4, 1994.

A19. Holupka EJ, Kaplan ID, Burdette EC, **Svensson GK.** Fusion of ultrasound and simulator images for the treatment of prostate cancer. Med. Phys. 1994.

DEPARTMENT OF THE ARMY
US ARMY MEDICAL RESEARCH AND MATERIEL COMMAND
504 SCOTT STREET
FORT DETRICK, MARYLAND 21702-5012

REPLY TO
ATTENTION OF:

MCMR-RMI-S (70-1y)

21 JUN 2001

MEMORANDUM FOR Administrator, Defense Technical Information Center (DTIC-OCA), 8725 John J. Kingman Road, Fort Belvoir, VA 22060-6218

SUBJECT: Request Change in Distribution Statement

1. The U.S. Army Medical Research and Materiel Command has reexamined the need for the limitation assigned to technical reports. Request the limited distribution statement for reports on the enclosed list be changed to "Approved for public release; distribution unlimited." These reports should be released to the National Technical Information Service.

2. Point of contact for this request is Ms. Judy Pawlus at DSN 343-7322 or by e-mail at judy.pawlus@det.amedd.army.mil.

FOR THE COMMANDER:

Encl

PHYLLIS M. RINEHART
Deputy Chief of Staff for
Information Management

Reports to be changed to "Approved for public release; distribution unlimited"

Grant Number	Accession Document Number
DAMD17-94-J-4147	ADB221256
DAMD17-93-C-3098	ADB231640
DAMD17-94-J-4203	ADB221482
DAMD17-94-J-4245	ADB219584
DAMD17-94-J-4245	ADB233368
DAMD17-94-J-4191	ADB259074
DAMD17-94-J-4191	ADB248915
DAMD17-94-J-4191	ADB235877
DAMD17-94-J-4191	ADB222463
DAMD17-94-J-4271	ADB219183
DAMD17-94-J-4271	ADB233330
DAMD17-94-J-4271	ADB246547
DAMD17-94-J-4271	ADB258564
DAMD17-94-J-4251	ADB225344
DAMD17-94-J-4251	ADB234439
DAMD17-94-J-4251	ADB248851
DAMD17-94-J-4251	ADB259028
DAMD17-94-J-4499	ADB221883
DAMD17-94-J-4499	ADB233109
DAMD17-94-J-4499	ADB247447
DAMD17-94-J-4499	ADB258779
DAMD17-94-J-4437	ADB258772
DAMD17-94-J-4437	ADB249591
DAMD17-94-J-4437	ADB233377
DAMD17-94-J-4437	ADB221789
DAMD17-96-1-6092	ADB231798
DAMD17-96-1-6092	ADB239339
DAMD17-96-1-6092	ADB253632
DAMD17-96-1-6092	ADB261420
DAMD17-95-C-5078	ADB232058
DAMD17-95-C-5078	ADB232057
DAMD17-95-C-5078	ADB242387
DAMD17-95-C-5078	ADB253038
DAMD17-95-C-5078	ADB261561
DAMD17-94-J-4433	ADB221274
DAMD17-94-J-4433	ADB236087
DAMD17-94-J-4433	ADB254499
DAMD17-94-J-4413	ADB232293
DAMD17-94-J-4413	ADB240900

Encl