UNCLASSIFIED

AD NUMBER
ADB017877
LIMITATION CHANGES
TO: **Approved for public release; distribution is unlimited.**
FROM: **Distribution authorized to U.S. Gov't. agencies only; Administrative/Operational Use; AUG 1976. Other requests shall be referred to Air Force Armament Lab., Eglin AFB, FL.**
AUTHORITY
USADTC ltr. 10 Dec 1979

THIS PAGE IS UNCLASSIFIED

AD B017877

2

AFATL-TR-76-95

ELECTRO-MECHANICAL TIMER DEVELOPMENT

KDI PRECISION PRODUCTS, INC.
3975 MCMANN ROAD
CINCINNATI, OHIO 45245

D D C
PR 28 1976
C

AUGUST 1976

FINAL REPORT: 28 JANUARY 1975 - 30 JUNE 1976

Distribution limited to U. S. Government agencies only; this report documents test and evaluation; distribution limitation applied August 1976. Other requests for this document must be referred to the Air Force Armament Laboratory (DLJF), Eglin Air Force Base, Florida 32542.

AIR FORCE ARMAMENT LABORATORY
AIR FORCE SYSTEMS COMMAND • UNITED STATES AIR FORCE
EGLIN AIR FORCE BASE, FLORIDA

AD NO.
DDC FILE COPY

UNCLASSIFIED
SECURITY CLASSIFICATION OF THIS PAGE (When Data Entered)

REPORT DOCUMENTATION PAGE

READ INSTRUCTIONS BEFORE COMPLETING FORM

1. REPORT NUMBER: AFATL-TR-76-95
2. GOVT ACCESSION NO.:
3. RECIPIENT'S CATALOG NUMBER:

4. TITLE (and Subtitle): ELECTRO-MECHANICAL TIMER DEVELOPMENT.
5. TYPE OF REPORT & PERIOD COVERED: Final, 28 Jan 1975 to 30 Jun 76
6. PERFORMING ORG. REPORT NUMBER: 1335
7. AUTHOR(s): FRANCIS G. KRAMER, JR / JAMES A. HEWLETT
8. CONTRACT OR GRANT NUMBER(s): F08635-75-C-0061

9. PERFORMING ORGANIZATION NAME AND ADDRESS:
KDI Precision Products, Inc.
3975 McMann Road
Cincinnati, Ohio 45245

10. PROGRAM ELEMENT, PROJECT, TASK AREA & WORK UNIT NUMBERS:
Program Element 62602F
JON 2508-06-13

11. CONTROLLING OFFICE NAME AND ADDRESS:
Air Force Armament Laboratory
Armament Development and Test Center
Eglin Air Force Base, Florida 32542

12. REPORT DATE: Aug[redacted]976
13. NUMBER OF PAGES: 75

14. MONITORING AGENCY NAME & ADDRESS (if different from Controlling Office):
15. SECURITY CLASS. (of this report): Unclassified
15a. DECLASSIFICATION DOWNGRADING SCHEDULE:

16. DISTRIBUTION STATEMENT (of this Report)

Distribution limited to U.S. Government agencies only; this report documents test and evaluation; distribution limitation applied August 1976. Other requests for this document must be referred to the Air Force Armament Laboratory (DLJF), Eglin Air Force Base, Florida 32542.

17. DISTRIBUTION STATEMENT (of the abstract entered in Block 20, if different from Report)

18. SUPPLEMENTARY NOTES

AVAILABLE IN DDC.

19. KEY WORDS (Continue on reverse side if necessary and identify by block number) ELECTRONIC TIMER, MECHANICAL SAFETY, CODE ACTUATED, FAIL-SAFE, EXTERNAL ENVIRONMENTAL SOURCE, MISSILE AND BOMB FUZES, THERMAL BATTERY INITIATION EXTERNAL TIMING SYNCHRONIZATION, EXTERNAL POWERED RESET TO SAFE CONDITION, NON-ACCUMULATION OF ARMING TIME, HERMETICALLY SEALED, ENVIRONMENTAL COMPATIBILITY, MECHANICAL SET TIME.

20. ABSTRACT (Continue on reverse side if necessary and identify by block number)

This report documents the design and development of a fail-safe electro-mechanical timer (EMT) compatible with the requirements of MIL-STD-1316 and suitable for missile and bomb fuze applications. The EMT provides the accuracy and versatility of an electronic timer while assuring the safety of a mechanically out-of-line, interrupted firing train. This innovative design provides delayed mechanical arming without requiring stored

DD FORM 1 JAN 73 1473 EDITION OF 1 NOV 65 IS OBSOLETE

UNCLASSIFIED
SECURITY CLASSIFICATION OF THIS PAGE (When Data Entered)

energy devices. The EMT employs pulsed miniature solenoids which convert electrical power into mechanical energy for advancing a ratchet wheel and gear train, thus accomplishing the mechanical arming stroke of a fuze rotor. All electrical power for the arming event can be derived from an external environmental source such as a slipstream, fluidic, or acoustic generator. Models of the EMT have been successfully powered by a FZU-32/B Airstream Generator. Provisions for thermal battery initiation are also readily incorporated. The EMT requires appropriate electrical energy throughout the entire arming period. Interruptions of prime power due to non-sustained environmental conditions cause restoration of the EMT to the safe condition, thus preventing fuze arming due to anomalous deployment conditions or possible interference sources. The EMT can be implemented to respond only to external logic commands or codes, and can also be time synchronized by an external frequency source or clock. A mechanical time setting feature can also be readily incorporated. The EMT can be exercised through its entire cycle, electrically powered externally and reset to the safe condition. Satisfactory EMT performance has been demonstrated over the temperature range from -65°F to 220°F and when subjected to aircraft vibration levels and cycling time durations as specified in MIL-STD-810C, Method 514.2, Curves D and H from Figure 514.2-2. Prototype timers have been delivered to the Sponsor for evaluation. The unique EMT developed during this program fully complies with all the requirements of MIL-STD-1316, and thus represents an improvement in fuzing state-of-the-art.

PREFACE

This report documents the exploratory development of an Electro-Mechanical Timer, performed from 28 January 1975 to 30 June 1976 by KDI Precision Products, Inc., 3975 McMann Road, Cincinnati, Ohio 45245 for the Air Force Armament Laboratory (AFATL), Eglin Air Force Base, Florida under Contract F08635-75-C-0061.

Technical guidance and program direction were provided by Mr. Richard Mabry and Capt. John Violini of AFATL.

This technical report has been reviewed and is approved for publication.

FOR THE COMMANDER

William F. Brockman

William F. Brockman, Colonel, USAF
Chief, Munitions Division

[illegible] ☐
[illegible] ☑
☐

(The reverse of this page is blank)

TABLE OF CONTENTS

TABLE OF CONTENTS (CONCLUDED)

LIST OF FIGURES

LIST OF FIGURES

LIST OF TABLES

SECTION I

INTRODUCTION

This report documents the design and development of an inherently fail-safe, electro-mechanical timer (EMT), compatible with the requirements of MIL-STD-1316, and suitable for missile and bomb fuze applications. Present fuze timer mechanisms exhibit failure modes that can permit timing cycle completion earlier than intended. Since fuze timing mechanisms are generally employed to prevent initiation of an explosive firing train prior to a preselected safe arming time, early functioning can introduce safety hazards to personnel and to the delivery vehicle. The EMT features an inherently fail-safe design preventing failure modes which cause arming prior to an established minimum safe time. This unique design offers the versatility and accuracy of an electronic timer while maintaining the safety features of a mechanical timer.

MIL-STD-1316 requires the arming of weapon system fuzes to be dependent upon environments associated with their deployment, to insure the maximum degree of safety to personnel and delivery vehicles. Sustained air flow around the munition projectile represents one distinctive and measurable environmental parameter commonly employed for fuzing. All power for the arming event can be derived from an external environmental energy source such as a side-well (slipstream), fluidic, or acoustic electric generator. The EMT is therefore designed to operate when powered from an alternating current environmental energy source. However, the power circuits of the EMT are easily modified to accept direct current voltage source inputs such as thermal batteries. Versions of the EMT have been successfully interfaced with the FZU-32/B Airstream Generator.

The EMT, shown in Figure 1 with and without its hermetic seal cover, has been configured to fit in the standard bomb fuze well. Employing no stored energy devices, the EMT utilizes pulsed miniature solenoids which convert electrical power, derived from the environmental power source of the in-flight munition, into mechanical energy which advances a ratchet wheel and gear train to accomplish the arming stroke of a mechanical rotor. The mechanical energy derived from repetitive solenoid operation is accumulated on a rotor spring which provides all the energy required for arming, provided the gear train has advanced to the commit-to-arm position.

The EMT requires the integration of electrical energy over the entire arming time in order for proper arming to occur. Interruption of prime power due to non-sustained environmental conditions retracts the solenoids, releasing the gear train, which causes the energy accumulated on the rotor spring to counter-rotate the gear train to the zero-time or start (safe)

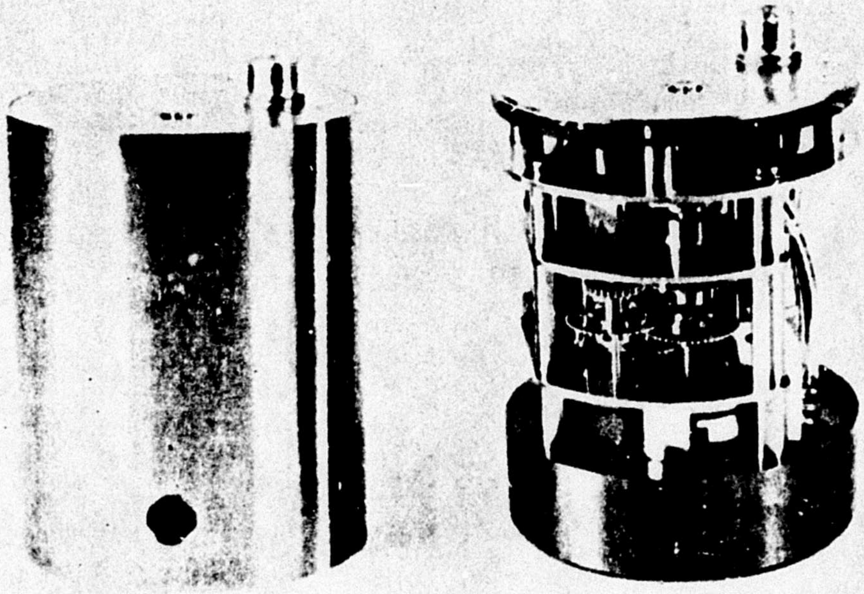

Figure 1. EMT Assemblies

position. When electrical power is restored to the EMT, the complete timing cycle must be experienced to effect arming. This non-accumulation of arming time prevents the hazards of erratic power application caused by anomalous conditions, false starts, lightning, or other interference sources.

The EMT also facilitates timing cycle initiation by external logic commands or codes, with the option of timing synchronization by an external frequency source or digital clock signal. The mechanical system of the EMT can be reset to the safe condition by externally-applied electrical power, thus permitting complete operational checkout, test, and reset of the hermetically sealed unit.

Possible failures in the EMT or in the application of electrical power from the remote environmental source will return the EMT to the safe condition. Under no circumstances can the EMT arm in less time than a prescribed minimum mechanical arming time for which the EMT is designed to assure safe separation from the delivery vehicle. Furthermore, the minimum arming time can be selected by a mechanical setting mechanism to optimize the safety and arming parameters for the particular weapon system or specific deployment conditions.

Reliable fail-safe operation has been demonstrated with the EMT subjected to extreme environmental conditions. Satisfactory EMT performance was achieved over the temperature range from -65°F to 220°F and when tested at aircraft vibration conditions as specified in MIL-STD-810C, Method 514.2, Curves D and H from Figure 514.2-2.

Prototype timers have been fabricated and delivered to the Sponsor for further evaluation. The unique, inherently fail-safe electro-mechanical timer, demonstrated during this program, promises to comply fully with all the requirements of MIL-STD-1316 while offering accuracy and versatility for numerous bomb and missile fuzing applications.

SECTION II

TECHNICAL DISCUSSION

1. PRINCIPLE OF EMT OPERATION

The EMT transforms electrical power from a remote source, such as a side-well generator, to mechanical energy which drives a timing mechanism and appropriately moves an explosive-loaded rotor into firing train alignment, thus arming the fuze. A simplified block diagram of the EMT is shown in Figure 2. Electrical-to-mechanical energy transformation is accomplished by miniature solenoids which provide a mechanical stroke when electrically pulsed. The solenoid stroke drives a pawl which engages a ratchet wheel coupled to an escapement gear train, timing disc, and rotor spring. A complete solenoid stroke engagement and withdrawal is required to effect a one-tooth rotation of the ratchet wheel. A hold pawl, energized by a second solenoid, engages the ratchet to prevent counter-rotation as the solenoid drive pawl is disengaged from the ratchet wheel. Successive drive solenoid strokes advance the ratchet wheel and gear train, thus rotating the timing disc and winding the rotor spring.

Rather than gradually moving the rotor into alignment, a snap-action move is desired for positive in-line out-of-line transfer. Therefore, the rotor is restrained by a ball lock until the timing disc rotates 120 degrees whereupon the arming rotor is released and abruptly driven and locked into the in-line position by the wound rotor spring. Thus, fuze arming is accomplished.

Arming time can be controlled by the electronic drive signal characteristics which can be established within the EMT or can be programmed by an external synchronizing source. Any failures or interruption in the application of power to the EMT will result in return of the EMT gear train to the initial time-set condition.

The EMT can be completely functioned through its timing cycle and reset to the safe starting condition, thus facilitating complete exercise of all units prior to tactical deployment.

2. IMPLEMENTATION CONSIDERATIONS

a. General Considerations

Sponsor requirements initially established 0.3 watt as the input power design criterion, and although size was not specifically defined, compatibility with typical fuze well installation guided overall timer dimensions. However, power limitations were subsequently relaxed in the second program phase to

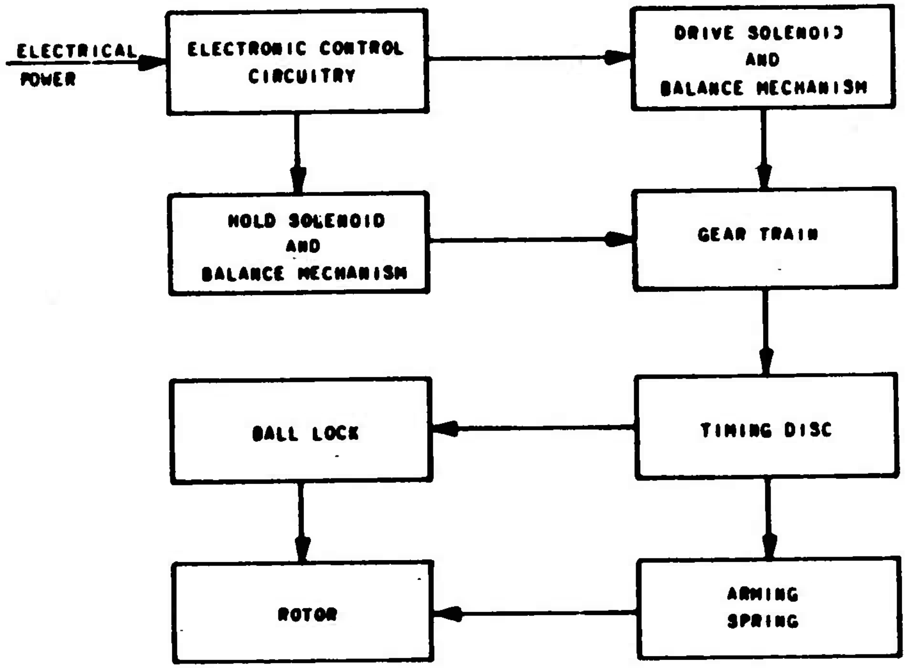

Figure 2. EMT Simplified Block Diagram

facilitate incorporation of powerful solenoids for the achievement of a rugged demonstration model compatible with potential missile application.

Implementation of the drive and hold solenoids and associated electronics involves careful consideration of several design parameters in addition to available electrical power and component size. Important features include mechanical force requirements, stroke length, response time, at-rest inertia, and travel momentum. Interfaces with the mechanical gear train and rotor mechanism are complicated by the increasing load presented by the rotor spring being wound as the ratchet wheel is advanced.

b. Balance Mechanism

Environmental factors such as shock, vibration, and temperature extremes also pose important criteria for timer implementation consideration. Therefore, both the drive and hold solenoids apply a translational force to a balance mechanism which is incorporated to counteract gravitational, vibrational, and aerodynamic forces. This design technique is illustrated in Figure 3. The drive solenoid is repetitively energized to rotate the ratchet wheel one tooth. The rate at which the ratchet wheel can be advanced is controlled by the balance mechanism return spring. This spring directly determines the mechanical resonance of the balance mechanism and correspondingly influences the time required for the drive solenoid to rotate the ratchet wheel a single tooth. Thus, the maximum rate of advancement of the gear train is controlled by the physical parameters of the balance mechanism.

c. Electronic Drive

Initially, the electronic signals to control the drive and hold solenoids were provided by a fixed electronic time base generator. However, it was impractical to establish a simple time base circuit which would assure reliable EMT operation throughout the range of mechanical load variations, electrical variables, and environmental effects. In addition, fail-safe performance was unsatisfactory.

Therefore, the EMT was designed to employ electronic drive circuitry which was controlled by the actual movements and positions of the solenoids. The electrical drive functions were carefully integrated with the solenoid and mechanism characteristics, resulting in synchronization between electrical drive and mechanical response which facilitates optimization of system performance, in particular fail-safe capability.

Specifically, the pulsing signals to the drive solenoid must be controlled by the actual mechanical position of the

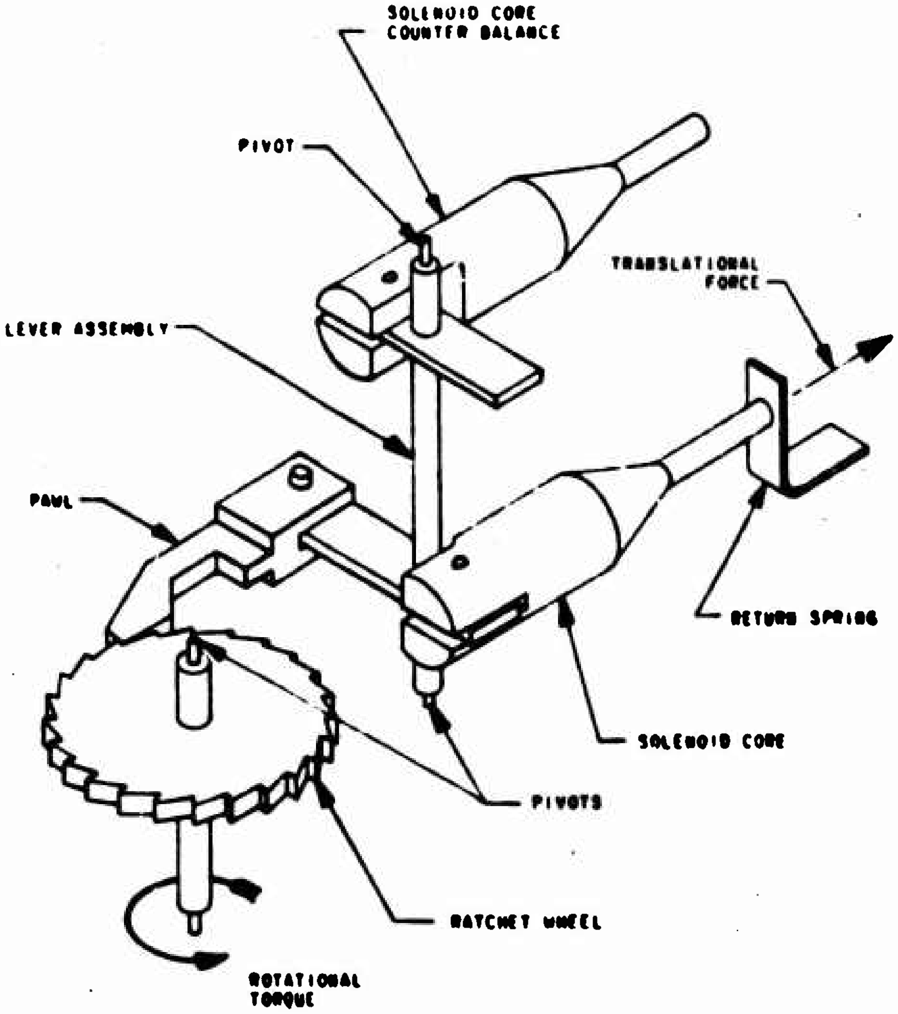

Figure 3. Solenoid/Balance Mechanism Ratchet Wheel Technique Illustration

drive pawl with respect to the ratchet wheel to assure maximum efficiency and performance reliability. An energizing signal can be provided to the drive solenoid only when the drive pawl is fully extracted, and this signal must be discontinued when the pawl has engaged the ratchet wheel and has stroked the wheel to advance the timer one tooth. The drive pawl is then extracted to the original position by a return spring attached through mechanical linkages to the solenoid core. This action completes one cycle of the electrical time base, at which time another in-stroke is initiated and the timer is advanced another tooth. Hence, variations in mechanical load due, for example to the rotor spring wind up, are compensated, as are electronic time base inconsistencies, since the application of power to the drive solenoid is synchronized with its actual stroke position. Thus, reliable timer operation is achieved for all dynamic conditions actually experienced. Approximately 90 percent of the total work that the solenoid performs to supply the required input shaft torque is expended in extending the pallet return spring. This charged spring supplies the restoring force for the pawl pallet linkages, while simultaneously providing mechanical control of the in-stroke time. Fail-safe operation is achieved by allowing the mechanical system restoring forces and load, interacting with the magnetic forces, to constitute the major control of the operating time base.

(1) Mechanical Position Switches

Mechanical position switches, actuated by a moving contact integral to the drive pallet assembly, provide the necessary position feedback information to the electronic circuits. These switches, properly designed, afford the most practical approach to position sensing. A small actuator of insignificant mass is required to implement the switching. The resulting switches are readily adjustable, easily packaged, fast reacting, and accurate in determining the position of the mechanism. Several alternate position sensing techniques were investigated during the program, including optical and magnetic sensors. Distinct limitations (outlined below) were evident, discouraging EMT incorporation at this time, although continued state-of-the-art advances in applicable component technologies can be expected to improve their potential utility.

(2) Optical Position Sensors

Presently available optical sensors require high emitter and detector bias currents to achieve satisfactory operation over moderate temperature ranges, seriously impacting EMT power source requirements. Degraded and marginal performance is exhibited at the upper temperature extremes. Manufacturers of these devices would not guarantee the performance of existing switches at 220°F; nor were they willing to undertake efforts to develop a switch with this performance capability. Furthermore, voltage amplification is required after the detection stage to provide compatibility with conventional digital logic circuits, resulting in added circuit complexity and increased cost, with reduced reliability. The large size of existing switch configurations, coupled with the need to provide a bulky actuator mechanically initiated from the pallet assembly, presented packaging design problems. The increased solenoid force requirements necessitated by the added moment of inertia of the actuator at the pallet, aggravated solenoid size and prime power demands. Therefore, the extensive effort required for the incorporation of optical switches in the EMT at this time was abandoned in favor of concentrating on more fundamental program goals.

(3) Magnetic Position Sensors

Magnetic switches, operating on the Hall Effect principle of magnetically induced voltages in biased crystals, were investigated for applicability to solenoid position sensing. The major impediment presented by these devices is the ambiguity in position sensing due to the inherent hysteresis of the magnet materials. Furthermore, high levels of magnetic intensity are required to reliably exceed the minimum thresholds of these devices, necessitating relatively large and heavy magnets located integral to the pallet assembly. This increased moment of inertia, demanding increased solenoid forces to function, the resulting prohibitive size, coupled with the position sensing ambiguities, precluded use of magnetic switches for this application.

3. DETAILED DESCRIPTION

a. Physical Description

Configured to fit in the standard 3-inch bomb fuze well, the initial EMT design occupies 25.32 cubic inches, having a 2.875-inch diameter and length of 3.902 inches. The hermetically sealed unit weighs 2 pounds, 3 ounces. Detailed assembly drawing, Figure 4, depicts the major components of the EMT. The corresponding timer parts are tabulated in Table 1. Figures 5 through 8 provide different views of the EMT hardware to illustrate the assembly details.

A window in the hermetic cover provides a visual inspection port to determine the fuze rotor position. The green dot indicates the safe condition and the red dot indicates the armed position of the rotor. A seven-pin hermetic connector accomplishes the electrical interfaces for external powering, safety monitoring, and reset after exercising, as well as optimal time synchronization and coded command initiation.

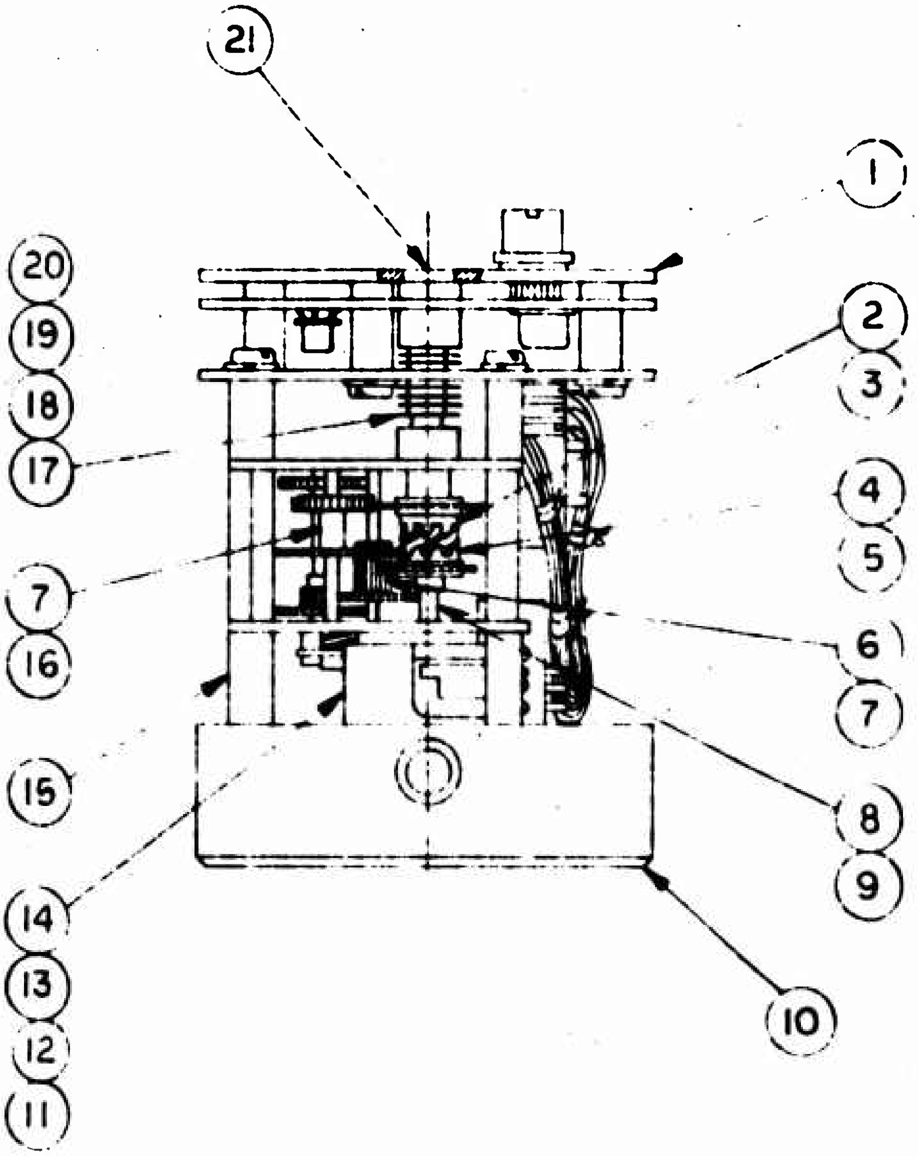

Figure 4 EMT Detailed Assembly Drawing

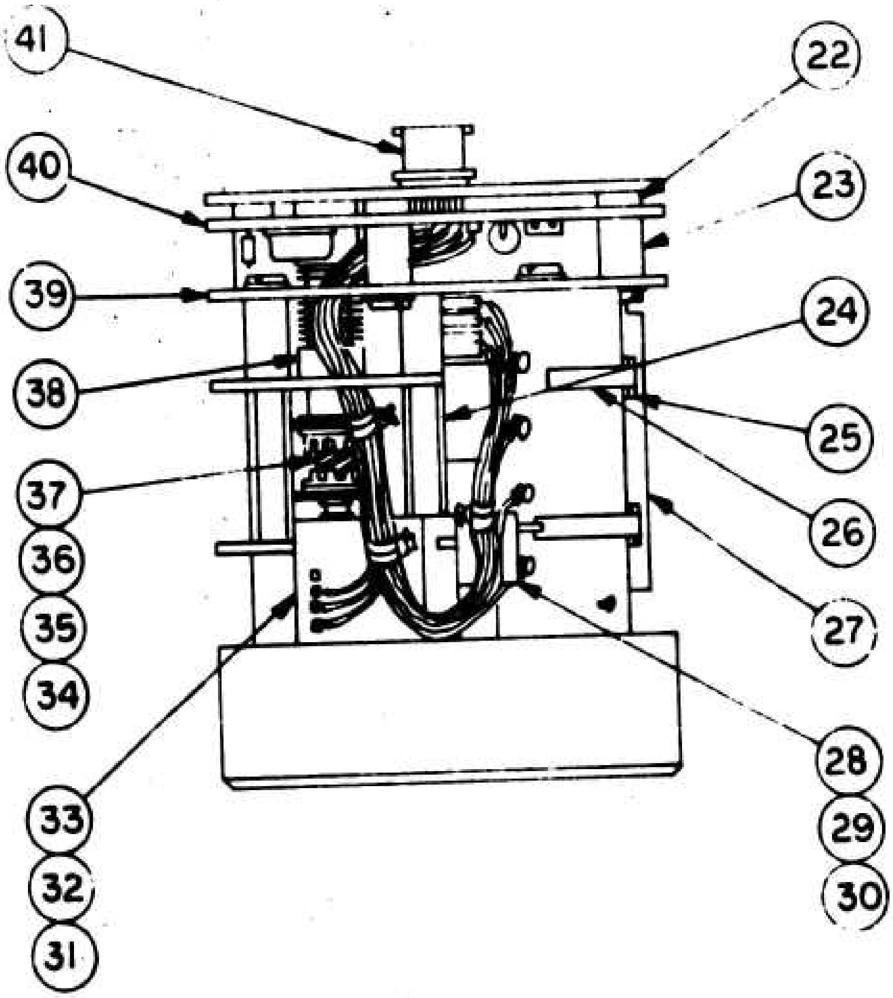

Figure 4. EMT Detailed Assembly Drawing (Continued)

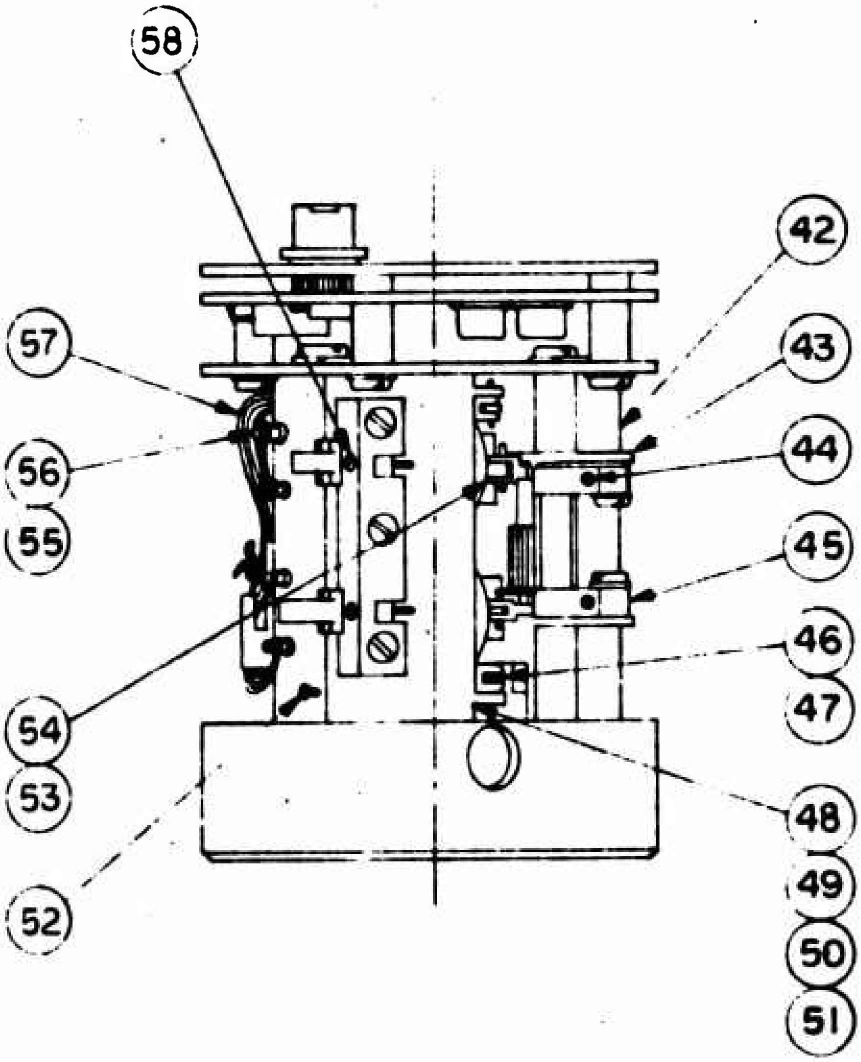

Figure 4. EMT Detailed Assembly Drawing (Continued)

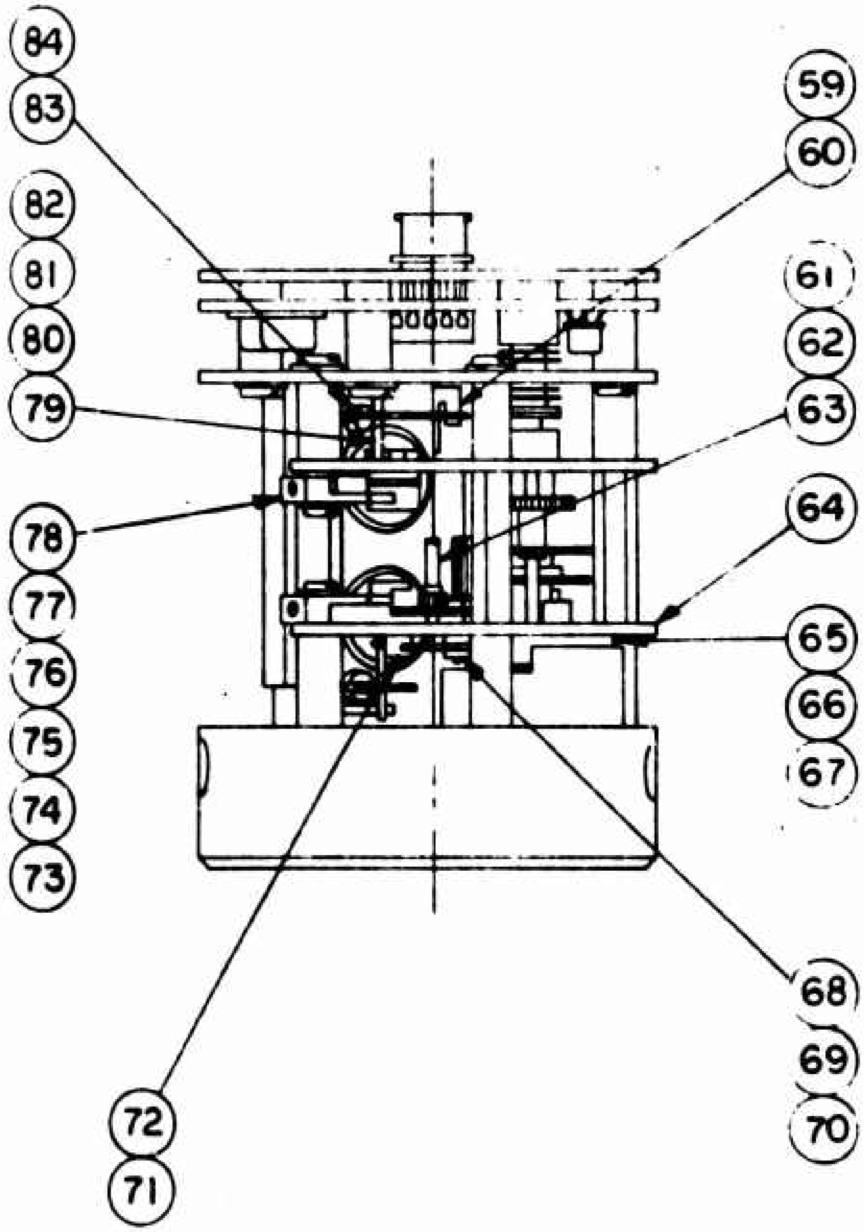

Figure 4. EMT Detailed Assembly Drawing (Concluded)

TABLE 1. EMT PARTS LIST

Item	Qty	Part Number	Description
1	1	111148	Plate No. 1
2	1	111099	Clutch, Reset
3	1	111158	Gear, Drive
4	1	111158	Gear, Drive
5	1	111100	Clutch Drive
6	1	111088	Pinion, Drive
7	2	111157	Gear, Drive
8	1	111076	Disc, Timing-Rotor
9	1	111092	Shaft, Timing Disc
10	1	111127	Block, Detonator
11	1	111083	Spring, Rotor Arming
12	1	111124	P.W. Board, Rotor
13	1	111075	Rotor
14	1	111086	Shaft, Rotor
15	4	111146	Spacer
16	1	111090	Pinion, Reset
17	1	111078	Bellows
18	1	111105	Retainer, Clutch Pivot
19	1	111104	Retainer, Clutch Pivot
20	1	111103	Rod, Clutch Reset
21	1	111102	Sleeve, Reset Rod
22	4	111118	P.W. Board Mounting Post
23	4	111147	Spacer
24	4	111085	Pillar
25	2	111108	Slider, Spring Mounting
26	2	111154	Spring, Solenoid Return
27	1	111107	Block, Spring Adjust
28	1	111160	Contact, Hold Solenoid Switch
29	1	111161	Contact, Hold Solenoid Switch
30	1	111162	P.W. Board, Hold Solenoid Switch
31	3	111123	Contact Spring, Rotor
32	3	111119	Lug, Terminal
33	1	111111	Switch, Housing, Rotor
34	1	111095	Pin, Clutch
35	1	111098	Spring, Clutch
36	1	111094	Pivot, Clutch
37	1	111093	Shaft, Clutch
38	1	111101	Bearing, Sleeve
39	1	111149	Plate No. 2
40	1	111125	P.W. Board
41	1	VR7/4AG15	Connector, Electrical (Viking)
42	4	111145	Spacer
43	1	111150	Plate No. 3

TABLE 1. EMT PARTS LIST (Concluded)

Item	Qty	Part Number	Description
44	2	111138	Regulator Screw (Mod)
45	1	111128	Guide Block, Hold Pawl
46	1	111153	Armature, Solenoid
47	4	111134	Pivot Pin, Armature
48	1	111115	Housing, Solenoid
49	2	111114	Coil Assembly, Solenoid
50	2	111113	Front Plate, Solenoid
51	2	111116	End Plug, Solenoid
52	1	------	Screw, Pan Head, 0-80x1/2 lg
53	2	111091	Pin, Pallet Pawl
54	2	111132	Pawl, Ratchet Wheel
55	4	111030	Insulator
56	4	111031	Terminal
57	AR	------	Wire, Type E (Belden)
58	2	110061	Regulator, Screw
59	1	111164	P.W. Board, Limit Switch
60	2	111163	Contact, Limit Switch
61	1	111156	Shaft, Ratchet Wheel
62	1	111155	Pinion, Ratchet Wheel
63	2	111036	Ratchet Wheel
64	1	111151	Plate No. 4
65	1	111074	Mounting Plate, Rotor
66	1	111097	Locator Pin, Mounting Plate
67	2	111096	Pin, Rotor Stop
68	1	111080	Shaft, Stop Disc
69	1	111081	Disc, Stop
70	1	111084	Spring, Stop Disc Return
71	1	------	Screw, RH, 2-56x3/8 lg
72	1	111082	Support, Screw
73	2	111130	Guide Pin, Pawl
74	1	111129	Stop Pin, Drive Pawl
75	1	111133	Guide Plate, Drive Pawl
76	1	111131	Guide Block, Drive Pawl
77	2	111140	Spring, Pawl Return
78	2	111137	Spring Adjust Block
79	4	111106	Bearing, Pallet Shaft
80	4	111073	Pallet
81	2	111110	Shaft, Pallet
82	1	111167	Limit Switch Contact
83	2	111109	Pin, Armature
84	3	111152	Armature, Solenoid

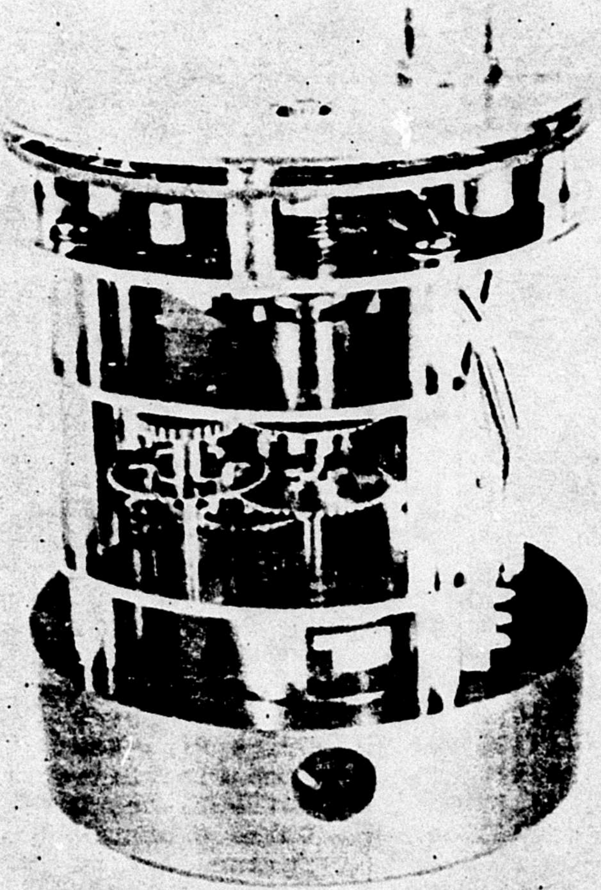

Figure 5. EMT Mechanism Assembly-Fuze Rotor and Gear Train View

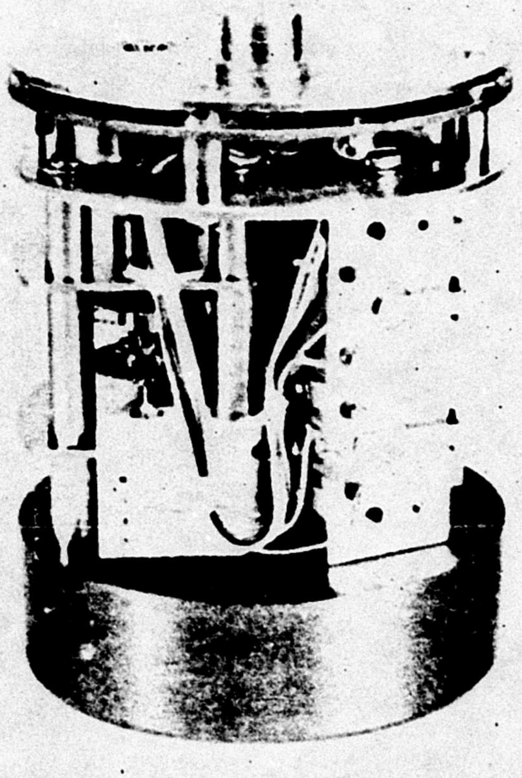

Figure 6. EMT Mechanism Assembly-Rotor Switch and Return Springs View

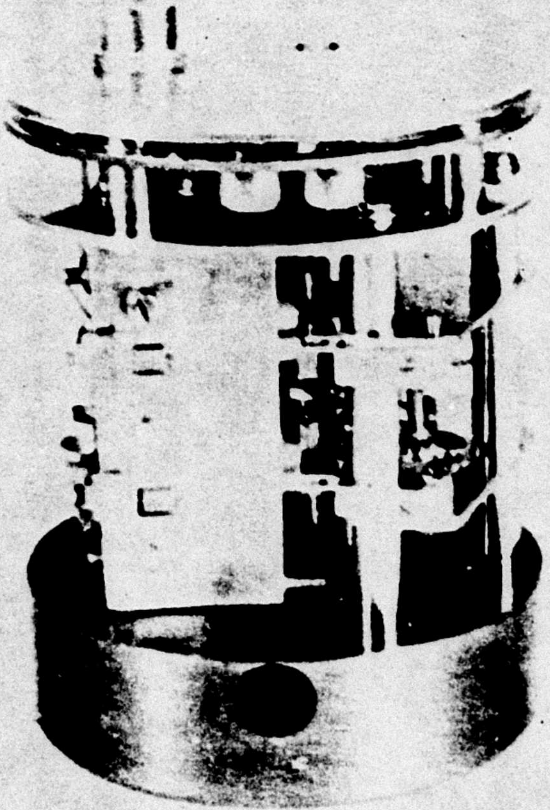

Figure 7. EMT Mechanism Assembly-Solenoid Assembly View

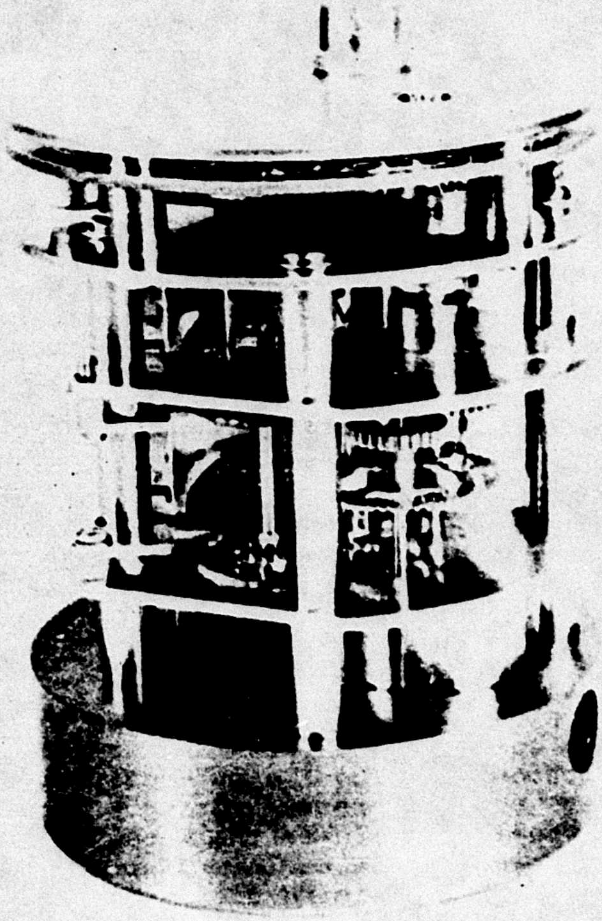

Figure 8. EMT Mechanism Assembly-Balance Mechanism and Ratchet Wheel Drive View

b. Functional Operation

(1) Arming Sequence

The EMT is designed to operate from an external environmental energy source such as a side-well electric generator. The functional block diagram, Figure 9, illustrates the arming sequence of the EMT. Sustained air flow around the deployed munition activates the airstream generator which provides an alternating current voltage to the EMT. This voltage is full wave rectified and filtered to provide the direct current voltage to arm the timer. An electrical switch, located at the fuze rotor, senses the timer safety condition. When the rotor is locked out-of-line in the safe condition, electrical power is connected through the closed contacts of the rotor switch to the timer. As the rotor moves from the out-of-line position, electrical power is disconnected from the timer by opening the rotor switch contacts.

Powering of the electronic circuits energizes the hold solenoid through the normally-closed contacts of the hold solenoid switch. Motion of the hold solenoid armature rotates the balance mechanism and charges a return spring. The hold pawl engages the hold ratchet wheel, providing accurate positioning of the companion drive ratchet wheel, located on the same shaft. Full stroke of the hold solenoid causes the return spring to open the hold solenoid switch which reduces the current to the hold solenoid winding.

The drive solenoid is deenergized and the balance mechanism is maintained at the rest position due to the bias exerted on the armature by the drive solenoid return spring. An out-position limit switch, integral to the drive solenoid balance mechanism, senses the at-rest position of the balance mechanism and provides a low logic level to the timer electronics. The timing cycle is initiated by application of a high level digital logic command at the electrical connector. When this command is applied, the drive solenoid energizes and its associated balance mechanism rotates, opening the out-position limit switch and charging the drive solenoid return spring. The drive pawl engages the ratchet wheel and strokes the wheel for one-tooth advancement; the hold pawl retaining this displacement. The gear train is advanced and the timing disc, integral to the output shaft, rotates from the zero-set position. The arming spring, anchored between the timing disc and the fuze rotor, is loaded by the timing disc displacement, applying force between the timing disc and rotor. The timing disc-rotor-ball lock relationship is schematically illustrated in Figure 10. Full stroke of the drive solenoid closes an in-position limit switch which is integral to the drive solenoid balance mechanism. The in-position switch closure provides a low logic level to the electronics which subsequently deenergizes the drive solenoid.

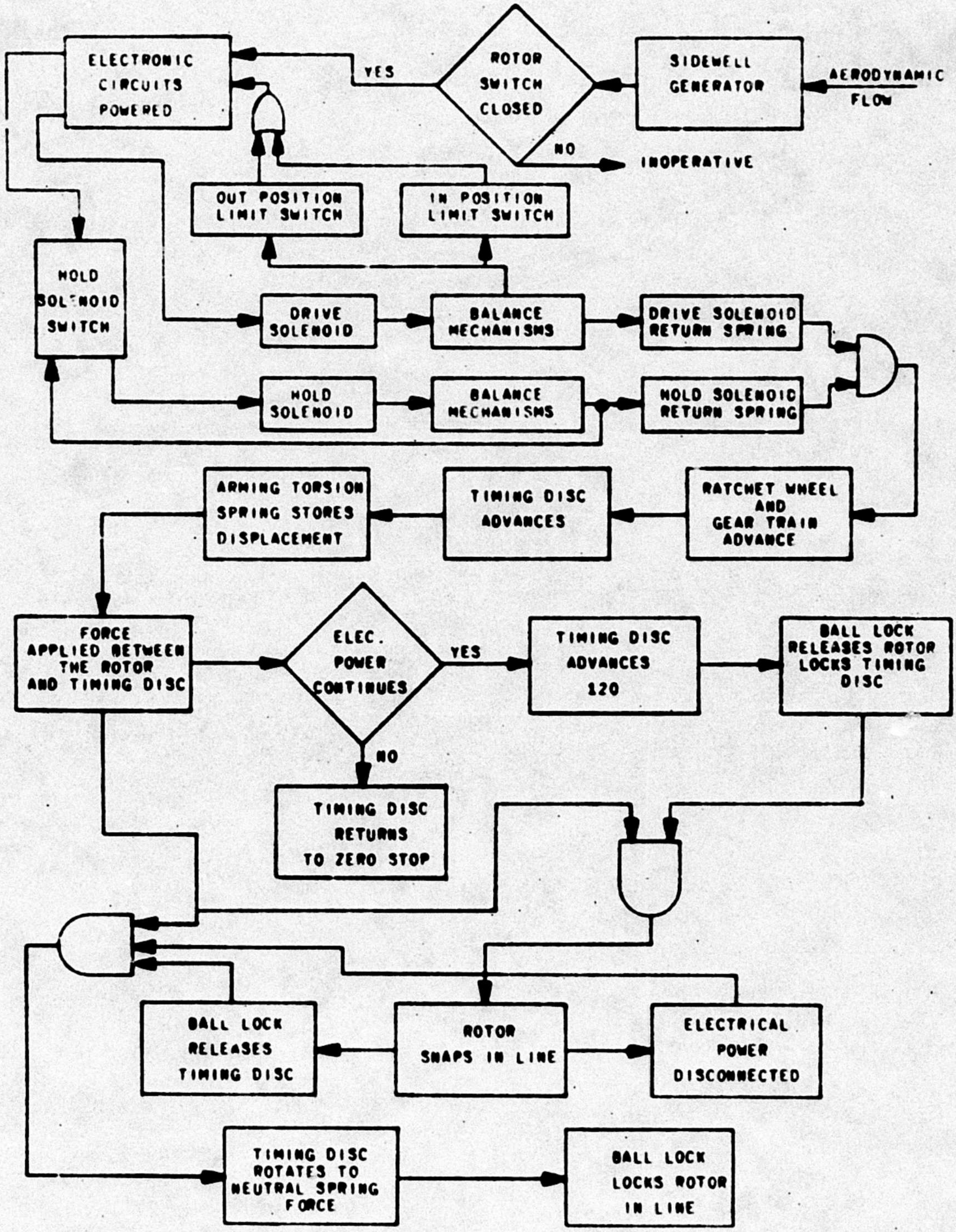

Figure 9. EMT Functional Block Diagram

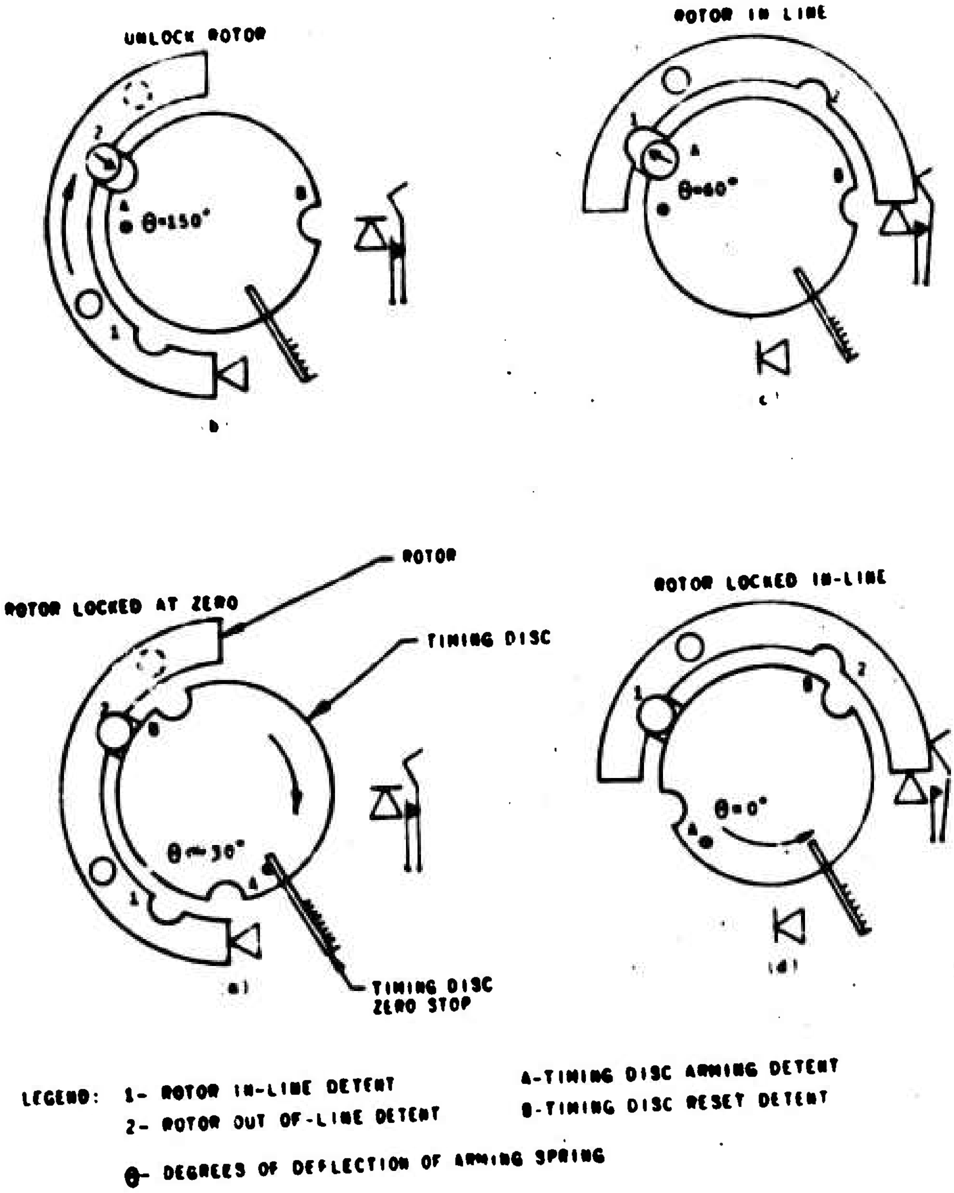

Figure 10. LMT Arming Sequence

The fully charged drive solenoid return spring counter-rotates the drive balance mechanism, opening the in-position limit switch and disengaging the drive pawl from the ratchet wheel. The drive balance mechanism returns to the rest position, closing the out-position limit switch. The drive solenoid is energized and the ratchet wheel is advanced another tooth, resulting in further displacement of the timing disc and increased force between the timing disc and rotor. This repetitive cycling is continued contingent upon uninterrupted application of power from the external energy source, until the timing disc has rotated 120 degrees from the zero-set position. At this angular displacement, the ball lock enters the timing disc arming detent and the rotor is released. The cocked arming spring snaps the rotor 90 degrees to the in-line position. As the rotor travels to the armed position, the rotor switch opens removing power from the electronics. The hold and drive solenoids deenergize and the return springs counter-rotate the balance mechanisms. The pawls disengage the ratchet wheels and the balance mechanisms are returned to the rest position. The ball lock enters the rotor in-line detent. The arming spring unloads to a neutral position, counter-rotating the timing disc, and causing the ball lock to lock the rotor at the in-line position.

(2) Reset Sequence, Prime Power Interruption

The EMT requires the integration of electrical energy over the entire arming time in order for proper arming to occur. Interruption of prime power, due, for example, to non-sustained environmental conditions, causes the EMT to reset to the zero-time condition.

When environmental power is lost prior to the rotor being released, the electronic circuits are not powered even though the rotor switch is closed. Therefore, the hold and drive solenoids deenergize, closing the hold solenoid switch. The return springs counter-rotate the balance mechanisms, disengaging the pawls from the ratchet wheels. The balance mechanisms are returned to the rest position and the out-position limit switch is closed. Since the ball lock has not entered the timing disc arming detent due to non-alignment, the charged arming spring unloads. The timing disc, gear train and ratchet wheels counter-rotate to the zero-set position. The timer has therefore been restored to the pre-arm ready position, remaining in the safe condition with the rotor locked out-of-line. Reapplication of prime power, concurrent with the digital logic arming command, initiates a new timing cycle. Hence, the complete timing cycle must be experienced uninterruptedly to effect arming.

(3) Remote Reset-to-Safe Condition Sequence

The EMT mechanical system can be reset to the safe condition by externally-applied electrical power, permitting complete operational check-out, test, and resetting of the hermetically-sealed unit. Completion of an operational check and test leaves the timer in the armed condition with the rotor locked in-line. The power source and the snap ring retaining the reset shaft are removed. The accessibility of this shaft is shown in Figure 11. The reset shaft will pop up due to the bias exerted on it by the partially compressed bellows. Further extraction of the reset shaft extends the bellows disengaging the timing disc from the drive clutch and engaging the timing disc with the reset clutch. The external application of +28 Vdc reset power, via the electrical connector, powers the electronic circuits. Timer operation is identical to that described in the foregoing arming sequence with the exception that the timing disc counter-rotates from the armed position to the zero-set position, charging the arming spring in the opposite sense, applying counter-force between the rotor and timing disc. When the timing disc rotates 120 degrees, the ball lock enters the timing disc reset detent and the rotor is released. This operation is schematically presented in Figure 12. The cocked arming spring forces the rotor to snap out-of-line, closing the rotor switch. Removal of the reset power causes the hold and drive solenoids to deenergize and the return springs counter-rotate the balance mechanisms. The pawls disengage the ratchet wheels and the balance mechanisms are returned to the rest positions, closing the out-position limit switch. The ball lock enters the rotor out-of-line detent permitting the arming spring to unload. The timing disc counterrotates locking the rotor out-of-line. The EMT is now restored to the safe condition and is ready for another arming cycle.

4. DESIGN AND DEVELOPMENT DISCUSSION

a. Program Summary

The advanced development program for the EMT encompassed two sequential research and development efforts. The purpose of the first effort was to investigate concepts for an inherently fail-safe electro-mechanical timer, select a design approach and demonstrate the design with simple experimental hardware. The second program phase involved design and development of an EMT directly applicable to potential missile fuzing applications.

The design emphasis during the initial program phase was directed towards achieving a small, inexpensive, low power consuming timer suitable for application to munitions produced in large quantities, such as general purpose bombs. Prototype timers with 2-second arming times were delivered to the Air Force Armament Laboratory (AFATL), culminating the initial effort.

The design concept derived during the initial phase employed a solenoid-drive escapement to convert electrical energy

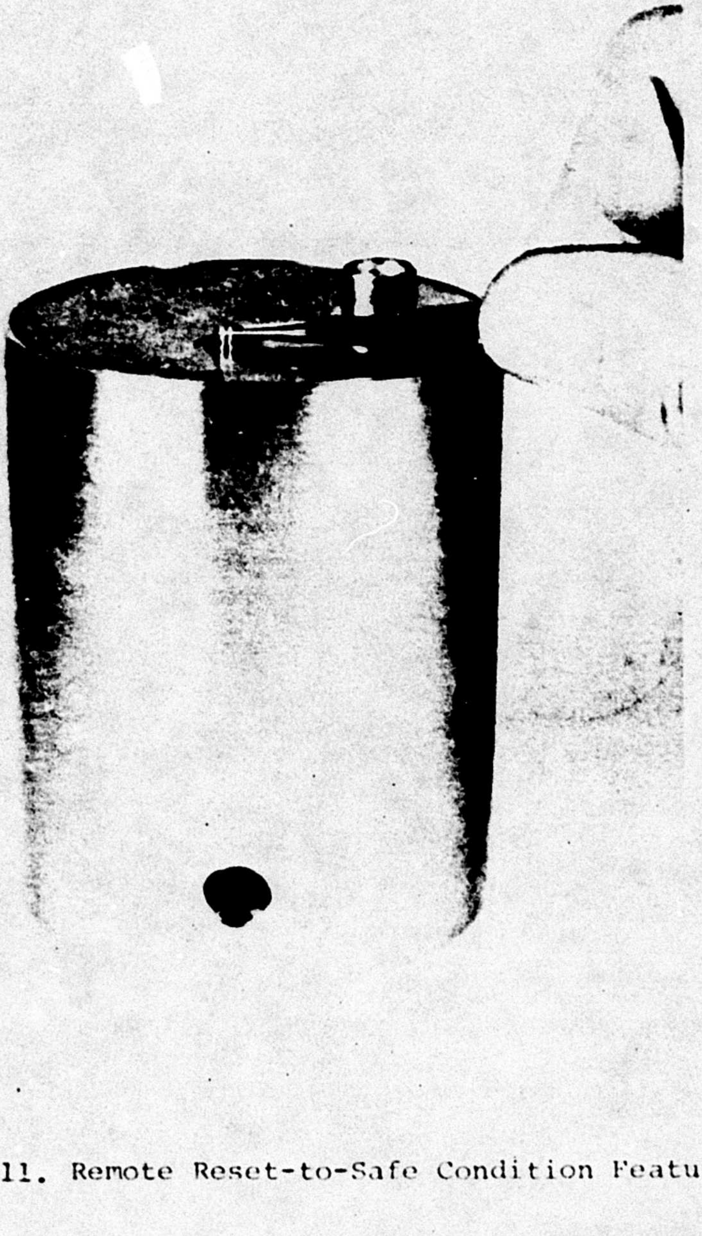

Figure 11. Remote Reset-to-Safe Condition Feature

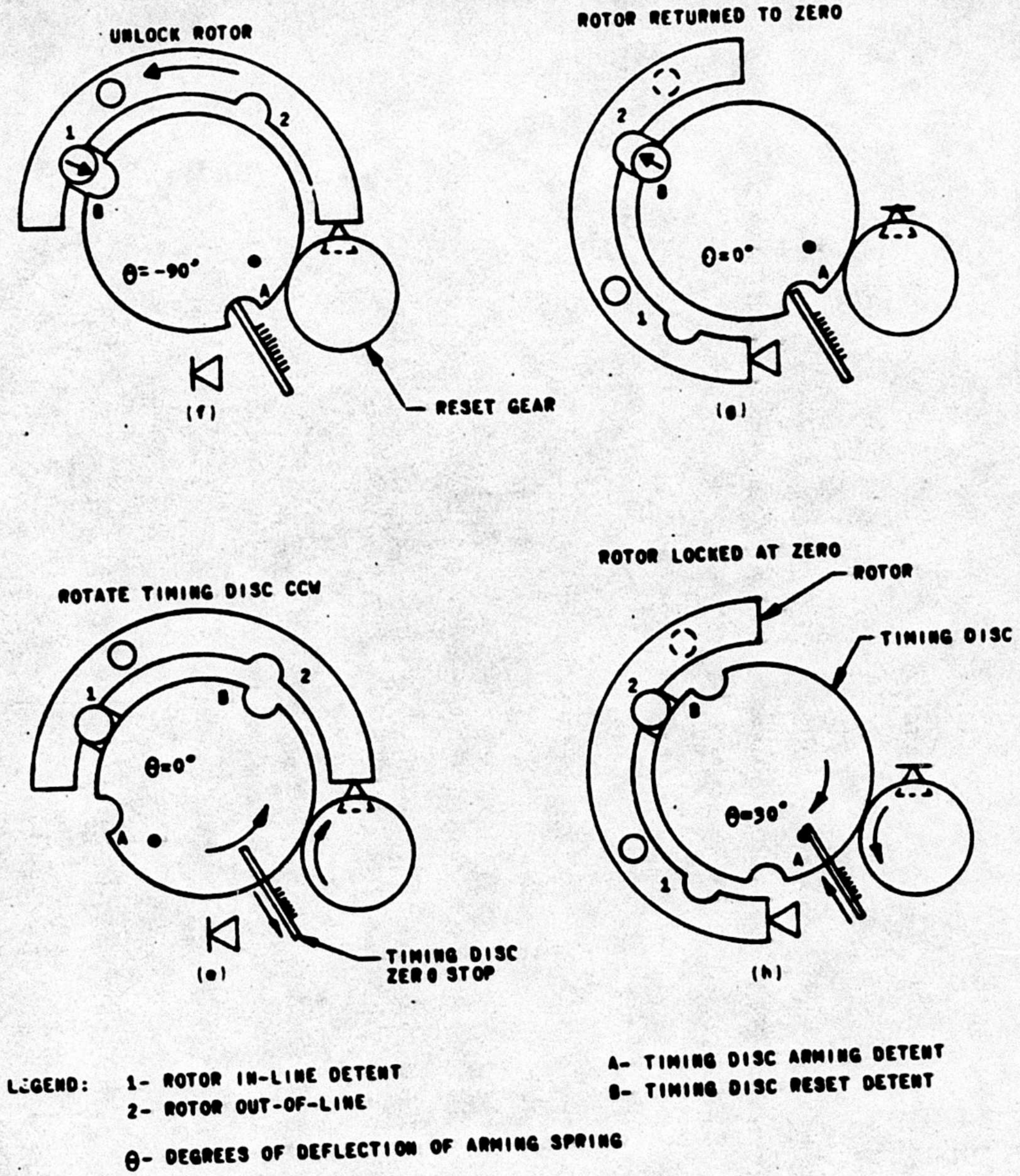

Figure 12. EMT Reset Sequence

into a mechanical output. Two solenoid assemblies were employed, each having a dynamic counterbalance located diametrically about a pivot shaft and packaged in a separate housing. The gearing, rotor, some mechanical linkages, and housing for the counterbalancing armatures were fabricated from moldable high strength plastic materials. This resulted in smaller mass moments of inertia, compared to metal parts, thus requiring less torque to drive the gear train and rotate the rotor to the in-line position. Solenoid power consumption was also minimized, resulting in an overall drain of 0.3 watt, and compatibility with the FZU-32/B Sidewell Generator was shown. The design concept to achieve inherently fail-safe operation was demonstrated by two experimental models and the fundamental design for an inexpensive, cost-effective timer was achieved.

Efforts during the second phase of the program were concentrated on deriving a highly reliable, rugged EMT offering long shelf life potential for missile applications. The following changes to the initial EMT design were incorporated:

- Stainless steel gears and parts were employed for ruggedization and improved shelf life.
- The gear train, associated shafts, and adjustments were made more accessible by employing two ratchet wheels on a longer common shaft. This increased the overall EMT length, but provided the necessary access and ease of assembly.
- The solenoids and their counterbalances were incorporated into one subassembly to enhance reliability, ease of assembly, and performance.
- A heavy-duty stainless steel rotor was installed to accommodate an electric detonator.
- An electrically-driven reset-to-safe feature was included.
- Hermetic seal techniques were employed.
- Leaf-type pallet return springs and adjustments were developed.
- A simplified stroke adjustment was developed for the hold solenoid to provide proper ratchet wheel positioning for the drive solenoid.
- Limit switch fabrication techniques were improved to provide reliable operation throughout temperature and vibration environments.

- The arming time was changed to 5 seconds for potential application to the Hard Structure Munition program.
- Power consumption was increased to 3 watts to accommodate the heavy-duty design.

Several sets of experimental hardware were fabricated during this program and two prototypes were delivered to AFATL. Details of the hardware design and resulting performance characteristics are described in the following section.

b. Design Description and Performance Results

The design of a ruggedized, reliable EMT configuration for potential missile applications was derived and demonstration hardware was fabricated and evaluated. Design and performance details are described herein.

(1) Electronic Control Circuits

(a) Prime Power Application

Electronic control circuits provide the electrical drive signals for the drive and hold solenoids and insure that conditions for proper fail-safe operation exist prior to mechanical timer arming. The electrical circuits of the EMT consist of the basic elements outlined in the block diagram of Figure 13, and shown packaged in the subassembly photo of Figure 14. Component symbols identified in the following discussions refer to the schematic drawing of Figure 15.

The EMT is electrically powered by the application of alternating current from a remote energy source, such as an airstream generator applied via the electrical connector. This voltage is full wave rectified by the miniature rectifier module, Z1, and filtered by the capacitor, C3, providing the required direct current electrical power for the electronic circuits. Provisions can be readily incorporated for DC voltage excitation, such as from a thermal battery source, by bypassing the rectifier.

A double pole rotor switch, S3, is normally closed when the rotor is in the safe out-of-line position. The DC power is applied to the electronic control circuits through the S3B contacts of the rotor switch. Switch contacts S3A and S3B are opened when the rotor moves to the in-line position. The S3A contacts provide the means to electrically determine the rotor position, providing a safety monitor for post-inspection and trial operation. The S3B contact opening upon rotor arming prevents further application of the excitation voltage to the drive circuits; thus minimizing electrical power consumption from the remote source.

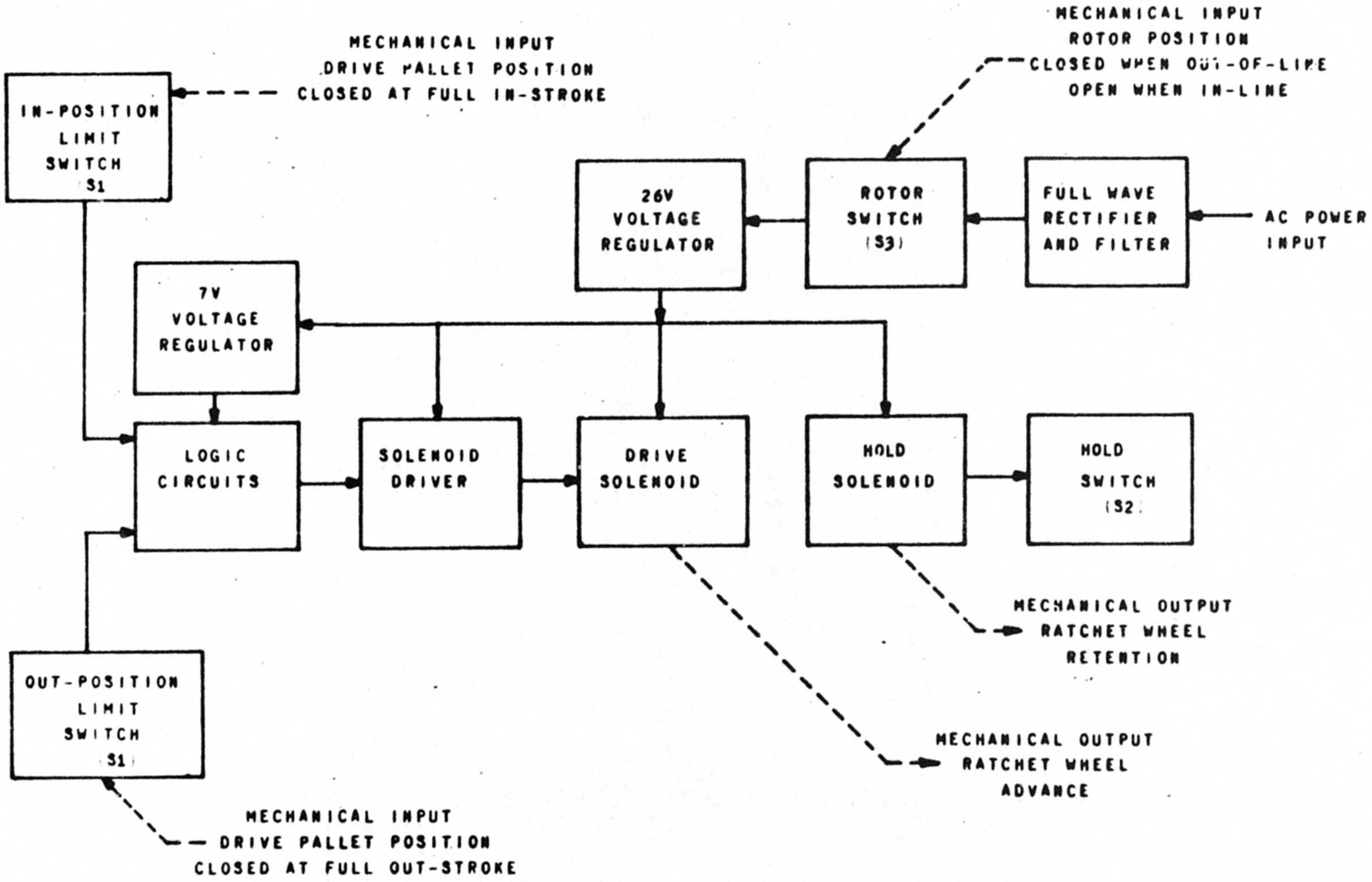

Figure 13. Functional Block Diagram, Electronic Control Circuits

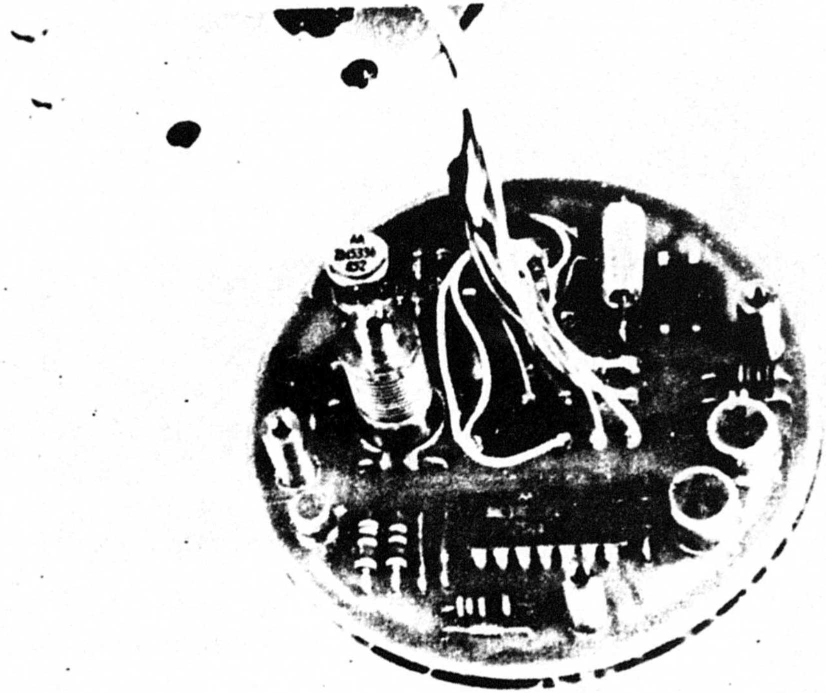

Figure 14. EMT Electronic Subassembly

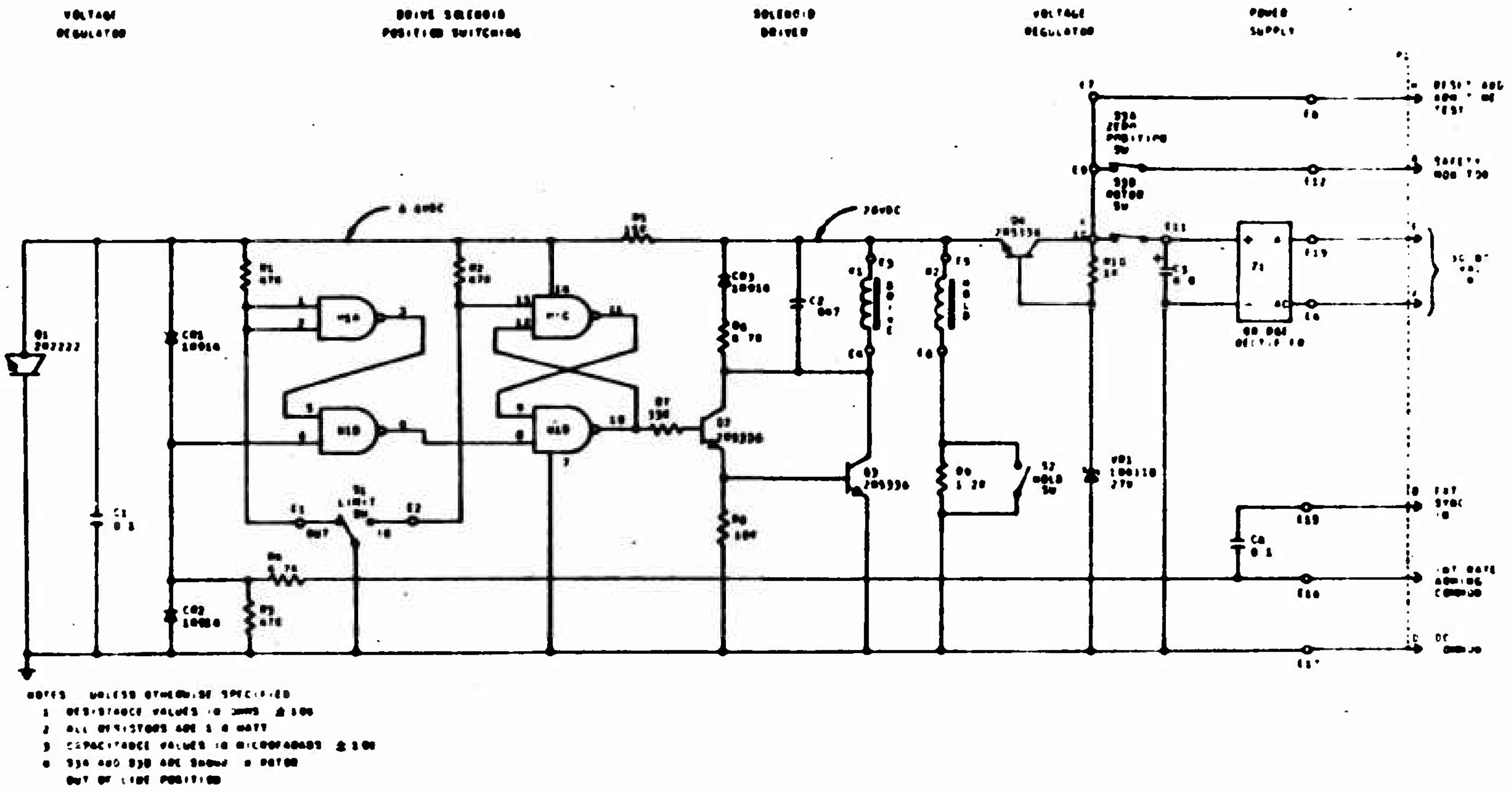

Figure 15. EMT Schematic Diagram

(b) Voltage Regulator

A voltage regulator furnishes a nominal 26 Vdc to the solenoids and associated driver circuitry. Components VR1, R10, and Q4 comprise this simple series regulator. Zener diode, VR1, provides a constant base bias voltage for the regulator transistor, Q4, with the zener current established by R10. The low level integrated circuit, U1, is powered from the 7-volt regulator composed of R5 and Q1. These voltage regulators provide constant voltage sources for the electronic switching and solenoid circuits assuring near uniform arming time over the wide range of input AC voltages.

(c) Hold Solenoid and Hold Switch

Upon EMT activation, 26 Vdc is applied to the hold solenoid, K2, which energizes through the normally closed hold switch, S2. At full insertion of the hold pawl into the ratchet wheel, the extension pin of the solenoid armature actuates the solenoid return spring which in turn opens the hold switch. The removal of the hold switch closure places a resistance, R9, in series with the solenoid winding, reducing the holding current to approximately one-third the pull-in current. Interruption of power for any reason, prior to rotor release for arming, causes the hold solenoid to deenergize, permitting the timer to mechanically return to its zero-set position. Hence, there is no accumulation of arming time, facilitating fail-safe performance.

(d) Drive Solenoid and Switching Circuits

Prior to timer initiation, limit switch, S1, is positioned to the OUT position due to the bias exerted upon the solenoid armature by the return spring. The moving contact of the limit switch is attached to the drive pallet of the mechanical linkages which advance the ratchet wheel and provides the electrical ground for the switches. Therefore, when power is applied to the EMT, a low logic level is supplied through S1-OUT to inputs 1 and 2 of the Quad Nand integrated circuit, U1, changing its output 3 and input 5 to a high logic level. Resistor R3 maintains a low logic level at input 6, in the absence of a command or sync signal, which causes output 4 and input 8 to be high. The high level at input 13, coupled with a low level at input 12, causes output 11 to be high. The two high levels at inputs 8 and 9 causes the output 10 to remain low. Consequently, Q2 and Q3 remain in the off state and the drive solenoid, K1, is not energized.

When a high logic level arming command signal is applied, input 6 goes to a high level causing 4 and 8 to go to a low level. Output 10 in turn goes to a high level which causes Q2 and Q3 to conduct at saturation through the coil of the drive solenoid, K1. K1 energizes opening S1-OUT and permitting inputs

1 and 2 to go high which subsequently applies a high to input 8. The drive pawl engages the ratchet wheel and is stroked to advance one tooth. The hold pawl retains this displacement. At the full stroke of the drive solenoid the moving contact of the limit switch engages the S1-IN contact and supplies a low logic level to input 13 causing output 11 to go to a low level. Output 10 goes to a low level, causing Q2 and Q3 to cease conduction. K1 deenergizes and the pallet/pawl mechanical linkages are returned to the rest position by the return spring. At the full extracted position, inputs 1 and 2 are again supplied a low logic level through S1-OUT and the switching cycle is repeated, resulting in another one-tooth advancement of the ratchet wheel. This cyclic operation is continued for 200 operations at which time the rotor is released and is driven in-line by the charged arming spring. As the rotor moves in-line, rotor switch contacts S3A and S3B open to indicate an armed condition and to remove the DC voltage from the electronics, inhibiting further driving cycles.

(e) Electronic Time Base

The operating time base is the time required to complete one full in-stroke and one full out-stroke. This time base is represented by the waveform measured at the collectors of the driver transistors Q2 and Q3. An illustration of a typical waveform is presented in Figure 16. The time to complete the in-stroke, t_{IN}, is a function of the inductance of the solenoid coil and the work the solenoid must perform against the return spring and frictional forces to accelerate the gear train mass for one tooth of angular rotation. The time to complete the out-stroke, t_{OUT}, is a function of the solenoid magnetic field rate of collapse and the work the return spring must perform to return the solenoid armature and mechanical linkages to the full extracted position against the frictional forces. Since 200 teeth of ratchet wheel advancement must be achieved to arm the timer, a typical operating time base of 26 milliseconds would produce arming in 5.2 seconds. A detailed timer speed analysis is presented in paragraph c(2) of this section.

Large voltage spikes of several hundred volts are generated by the solenoid inductances when deenergized due to the reversal of the magnetic field, in accordance with Lenz's Law for magnetic circuits. A damping circuit, consisting of C2, R6, and CR3, is provided in shunt with the drive solenoid coil to reduce these voltages to acceptable levels, insuring that the maximum voltage ratings of the electronic components are not exceeded. Figure 17 depicts the major components of the drive and hold solenoid assembly.

(2) External Timing Synchronization

Timing synchronization by an external frequency source, such as a digital clock, is readily accommodated. Removal of

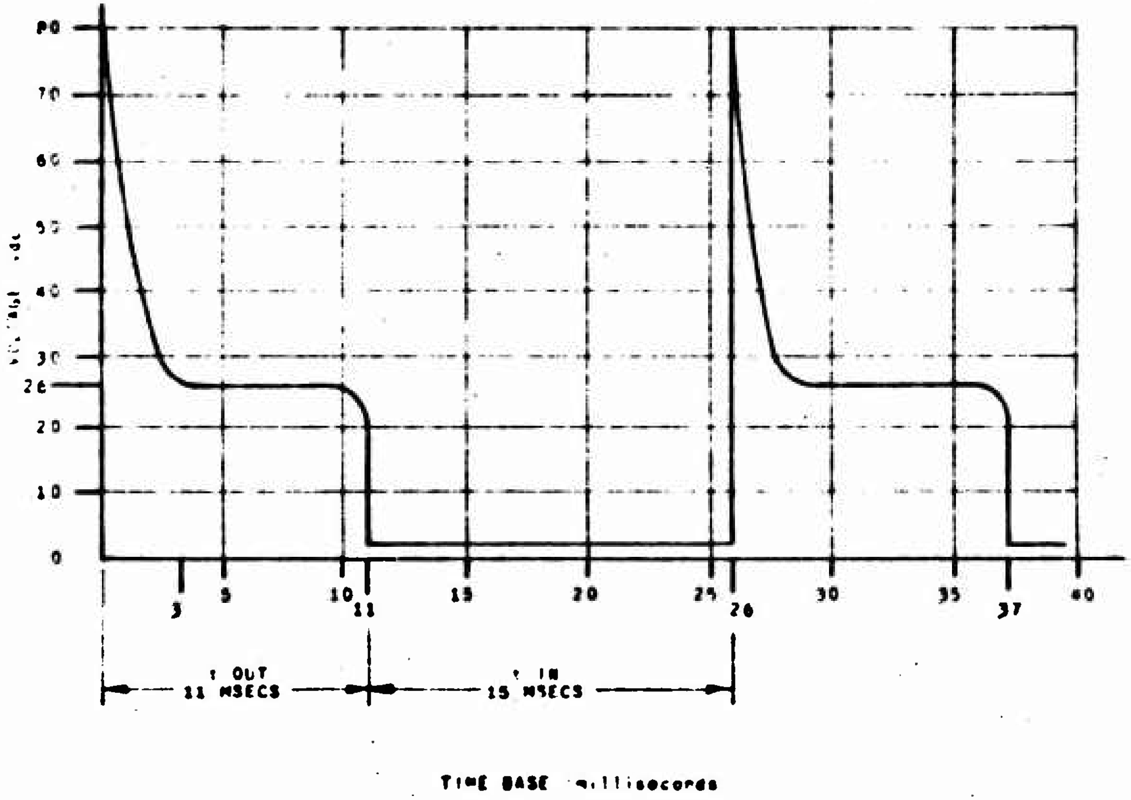

Figure 16. Typical Electronic Time Base Waveform

Figure 17. Solenoid Assembly Major Components

the internal rate arming command, concurrent with the application of the timing signal at the electrical connector interface, implements this feature. A negative clamp is provided by CR2 to insure continuous operation and non-damage of the integrated circuit input gates should the driving signal have large negative excursions. Large positive voltage excursions of the timing signal, greater than 7 volts, cause CR1 to conduct, disabling the timer function. Hence, added safety features are provided to accommodate fail-safe operation should the external driving source malfunction.

The position switching and solenoid pulsing theory of operation is identical to that described previously. As the driving signal goes to a high logic level, K1 is energized and advances the timer ratchet wheel one tooth, the hold solenoid maintaining this displacement. At full travel of the pallet assembly, the current in the solenoid is shut off via the position sensing limit switch, S1-IN, and the armature and linkages are mechanically returned to the rest position, closing S1-OUT. The ratchet wheel is advanced one tooth each time the driving source goes to a high level and S1-OUT is actuated. After 200 teeth are advanced, the timer arms. Therefore, certain frequency constraints have been imposed upon the timing signal. Since the timer cannot be advanced unless S1-OUT is closed, attempts to pulse the solenoids will be ignored until the full in and out stroke cycle has been completed. Thus, the EMT cannot run faster than its inherent time base, and external driving signals with repetition rates faster than this response will produce erratic advancement of the gear train. The EMT can be armed at a rate slower than its inherent arming rate. An external source exhibiting a time base longer than the inherent EMT operating response time will advance the timer at the slower rate. Hence, permissible frequencies of the external timing source are restricted to any value below that corresponding to the inherent time base of the EMT. Therefore, a degree of uniqueness has been imposed on the amplitude and repetition rate of the driving source, enhancing system safety.

(3) Fail-Safe Operation at Overvoltage

The timer has demonstrated inherently fail-safe operation in the event of certain component failures in the electronics. A shorted 26-volt regulator was of major concern since it was intuitively felt that this failure, permitting the solenoids and driver circuitry to operate at higher voltages, could cause the timer to arm drastically short of the set time. However, by allowing the mechanical components of the timer to substantially control the electrical time base, fail-safe arm times are achieved.

Simulation of this failure is implemented by removing the anode of the voltage regulator diode, VR1, from the circuit common. The emitter of Q4 will rise up with the collector applying the unregulated overvoltage to the drive circuits. High voltage components were selected and installed in the timer for this test to insure nondestructive operation of the solenoid drive circuits at the higher voltage levels.

When overvoltage is applied, a larger magnetic field is induced in the solenoid producing a greater solenoid pulling force and decreasing the time for the in-stroke. At the completion of the in-stroke, a switching signal is supplied through the limit switch, S1-IN, that opens the solenoid conduction path. The pallet return spring must now supply the force to return the drive mechanism. However, this spring must counteract a larger magnetic field that is slower to collapse and generates an increased force tending to hold the solenoid core at the full-in position. Hence, the time for the out-stroke is increased. Another in-stroke cycle cannot be initiated until the full-out stroke has been completed and the out-position limit switch actuated. The in-stroke and out-stroke times are compensatory, producing a high degree of inherent fail-safe capability even when remote failure modes are considered. Production timers would be fabricated using component ratings consistent with the regulated voltage and reliability requirements. Therefore, excessive voltage to the electronics, as occasioned by a shorted regulator, will cause component burnout or other failure modes resulting in failure to function.

Reliable, fail-safe operation was demonstrated by two experimental timers (B and C) when overvoltaged with operational voltage regulators. Fail-safe capability approaching 90 percent of nominal arm time was achieved.

Figures 18 and 19 are graphic presentations of arm time as a function of DC excitation voltage with the voltage regulator both operational and disabled for the prototype timers delivered to AFATL. Tables 2 and 3 tabulate the test data for this measurement. Both timers exhibited fail-safe operation when overvoltaged with disabled regulators. The mechanical drive of timer B jammed at 40 volts of DC excitation and failed to function. Deviations of less than 10 percent of nominal arm time were experienced prior to jamming. Timer C operated when excited with a 50 Vdc source. The significant difference between the arm time of timer C, when overvoltage was applied, was traced to the inability to reliably reset the timer to the zero-set position and is discussed in detail in Section II, Temperature Tests.

Full compensation of the electrical and mechanical components of the EMT is demonstrated in Figure 20. The data for this graph were obtained from a prototype timer and demonstrated at the Design Review with AFATL. The arm time at the nominal solenoid operating voltage of 26 volts is 6.6 seconds. This

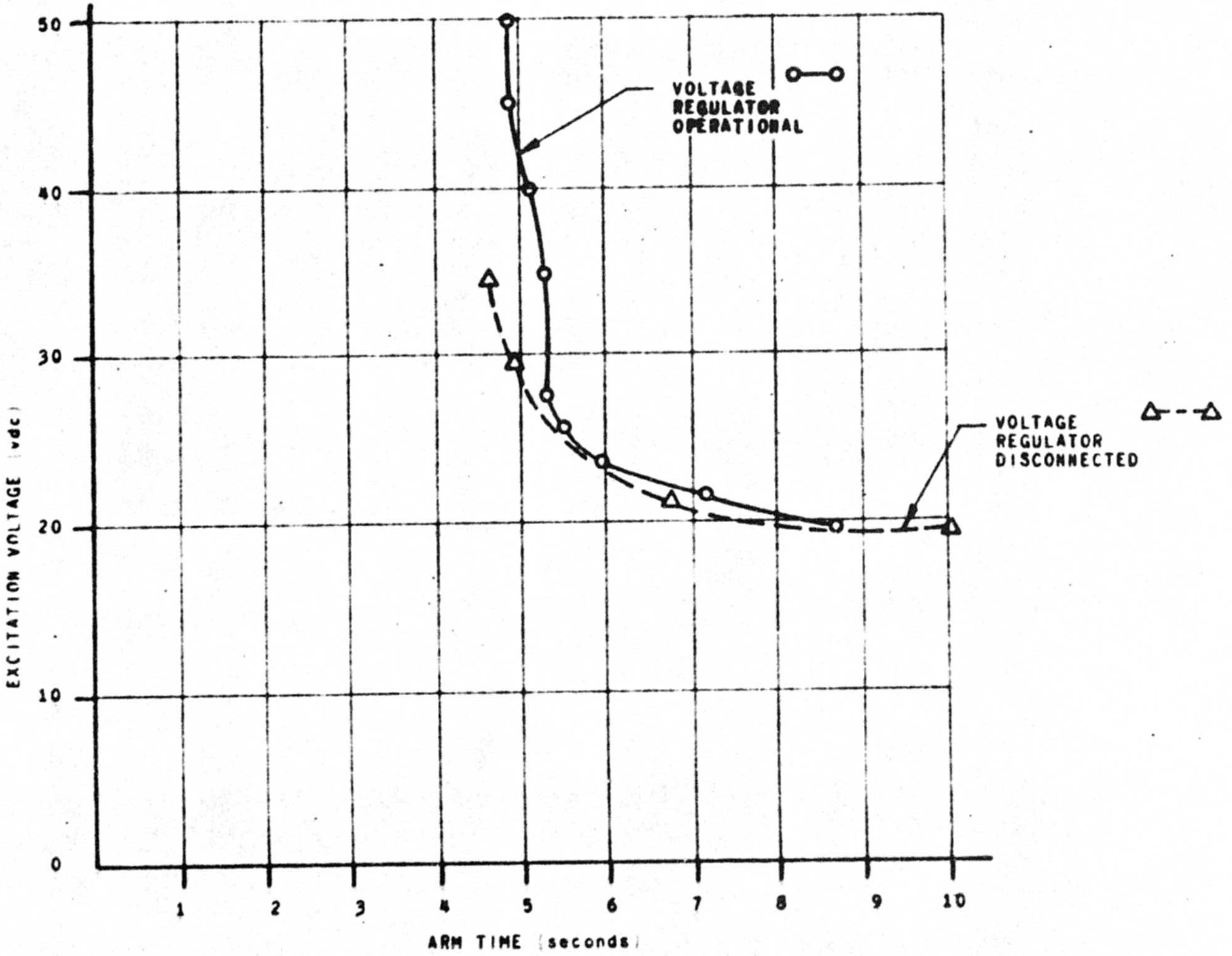

Figure 18. Arm Time Versus DC Excitation Voltage Prototype Timer B

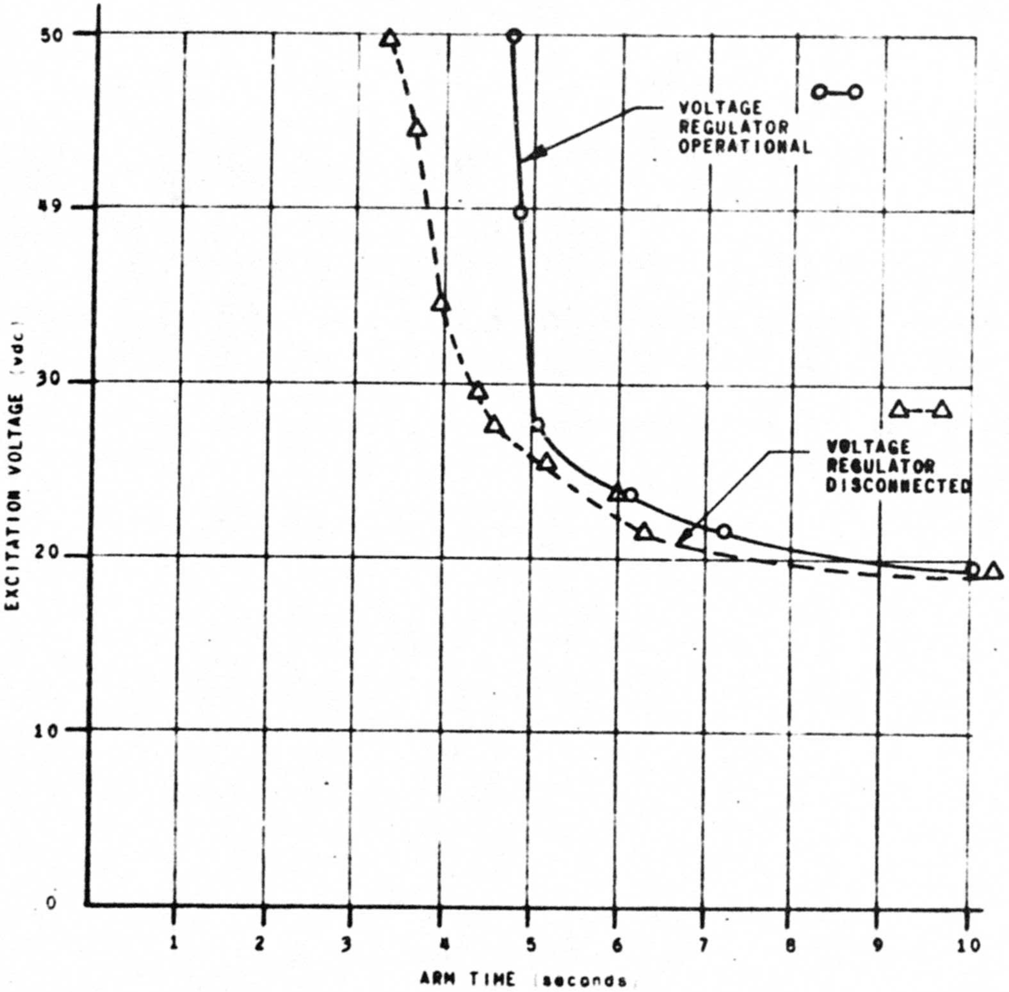

Figure 19. Arm Time Versus DC Excitation Voltage, Prototype Timer C

TABLE 2. ARM TIME TEST DATA VERSUS DC EXCITATION VOLTAGE, TIMER B

Excitation Voltage (Vdc)	Arm Time Regulator Operational (secs)	Arm Time Regulator Disabled (secs)
18	NO FUNCTION	NO FUNCTION
20	8.7	10.0
22	7.2	6.8
24	6.0	6.8
26	5.6	5.9
28	5.4	5.1
30	5.4	5.0
32	5.4	4.8
35	5.4	4.7
40	5.2	NO FUNCTION
45	4.9	NO FUNCTION
50	4.9	NO FUNCTION

TABLE 3. ARM TIME TEST DATA VERSUS DC EXCITATION VOLTAGE, TIMER C

Excitation Voltage (Vdc)	Arm Time Regulator Operational (secs)	Arm Time Regulator Disabled (secs)
18	NO FUNCTION	NO FUNCTION
20	10.0	10.2
22	7.2	6.3
24	6.1	6.0
26	5.0	5.2
28	5.2	4.6
30	5.1	4.4
32	5.0	4.2
35	5.0	4.0
40	4.9	4.0
45	5.0	3.7
50	4.8	3.4

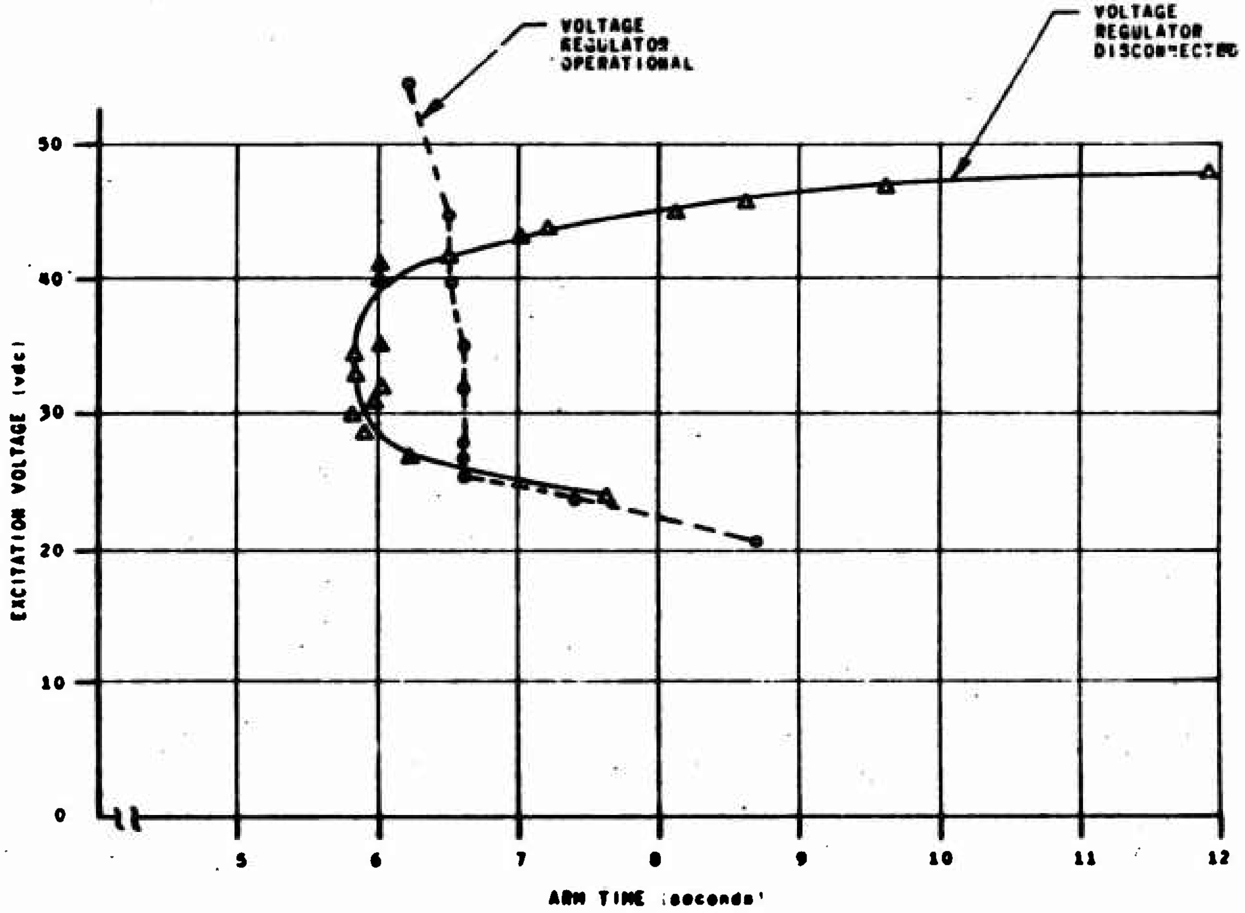

Figure 20. Arm Time Versus DC Excitation Voltage, Design Review Prototype Timer

identical arm time is evidenced at 41 volts where the mechanical and electrical components are fully compensatory. The minimum arm time of 5.8 seconds occurs at 35 volts. Hence, the ratio of minimum arm time to the inherent arm time at the nominal regulated voltage is 88 percent, representing the fail-safe capability for this timer.

c. Mechanical Subsystem

(1) Gear Train

The gear train consists of an input shaft, an intermediate shaft, an output shaft, and a reset shaft. A 20.25:1 step down ratio exists between the input shaft and both the output and reset shafts. A 4.5:1 step down ratio exists between the input shaft and the intermediate shaft. A 32.5:1 ratio exists between the input shaft through the reset shaft to the output shaft.

The input shaft supports two 30-tooth ratchet wheels and a 10-tooth pinion. The intermediate shaft supports a 45-tooth gear and a 10-tooth pinion. The output shaft supports a 45-tooth gear with drive clutch, a 45-tooth gear with reset clutch, and the timing disc. The reset shaft supports a 45-tooth gear and a 28-tooth pinion. Figures 21 through 23 feature the mechanical components of the EMT.

(2) Timer Speed Analysis

The prototype timers were designed to operate at an average speed of 0.025 second per tooth advancement of the ratchet wheel. The timing disc attached to the output shaft rotates 120 degrees to load and unlock the rotor. The timing disc is driven by a 20.25:1 gear train which is driven by a 30-tooth ratchet wheel. The ratchet wheel must therefore turn 120 degrees times 20.25 or 2430 degrees. Three hundred and sixty degrees divided by 30 teeth equals 12 degrees per tooth advancement of the ratchet wheel. Two thousand four hundred and thirty degrees divided by 12 degrees per tooth yields 202 teeth of ratchet wheel advancement to release the rotor. Five seconds of arm time divided by 202 teeth equals 0.025 second per tooth.

Test data on the two prototype units, as tabulated in Tables 2 and 3 of the preceding section, substantiate that the units operate at the design speed.

d. EMT Accuracy

The accuracy of the EMT is primarily controlled by the force generated by the solenoids, the flux density of the magnetic circuit, the stability of the operating time base,

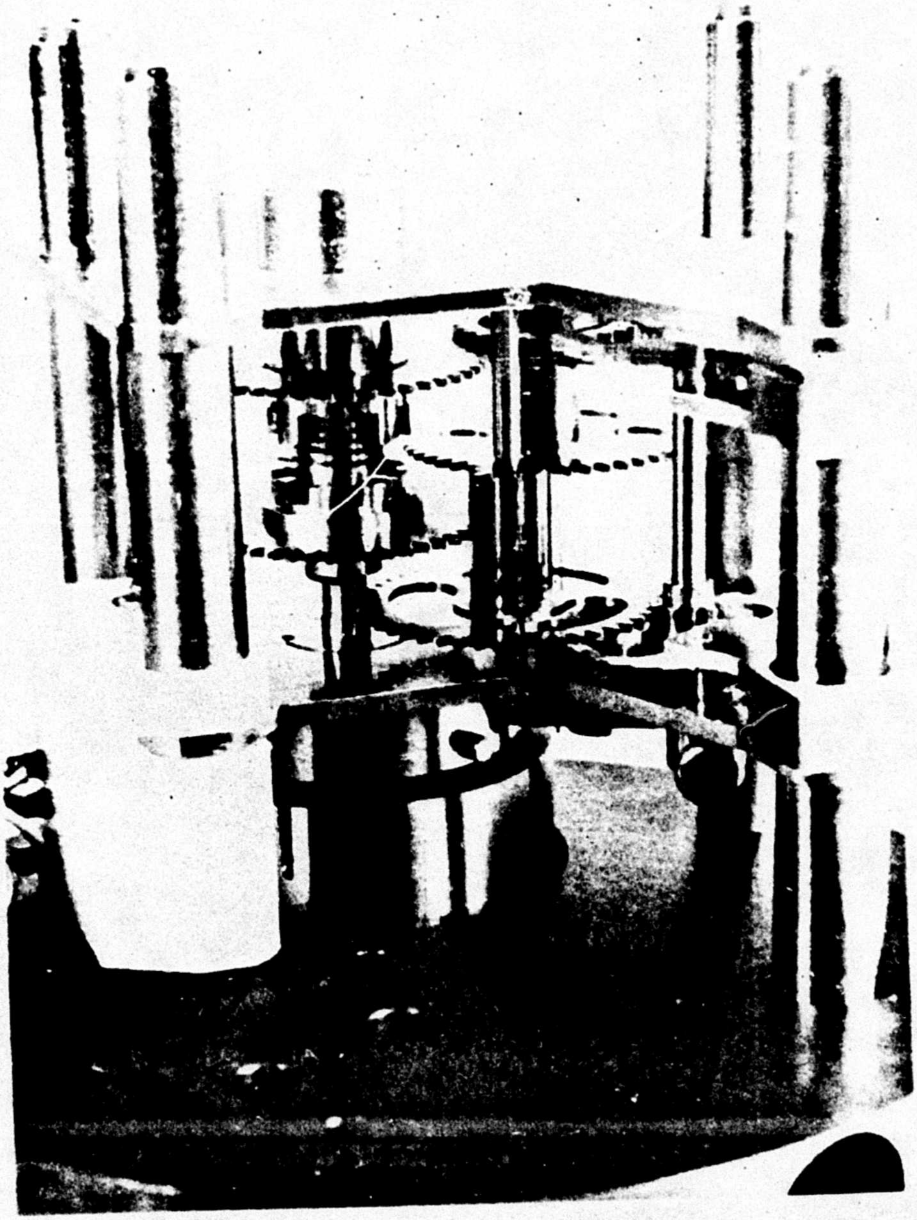

Figure 21. EMT Mechanical Subsystem

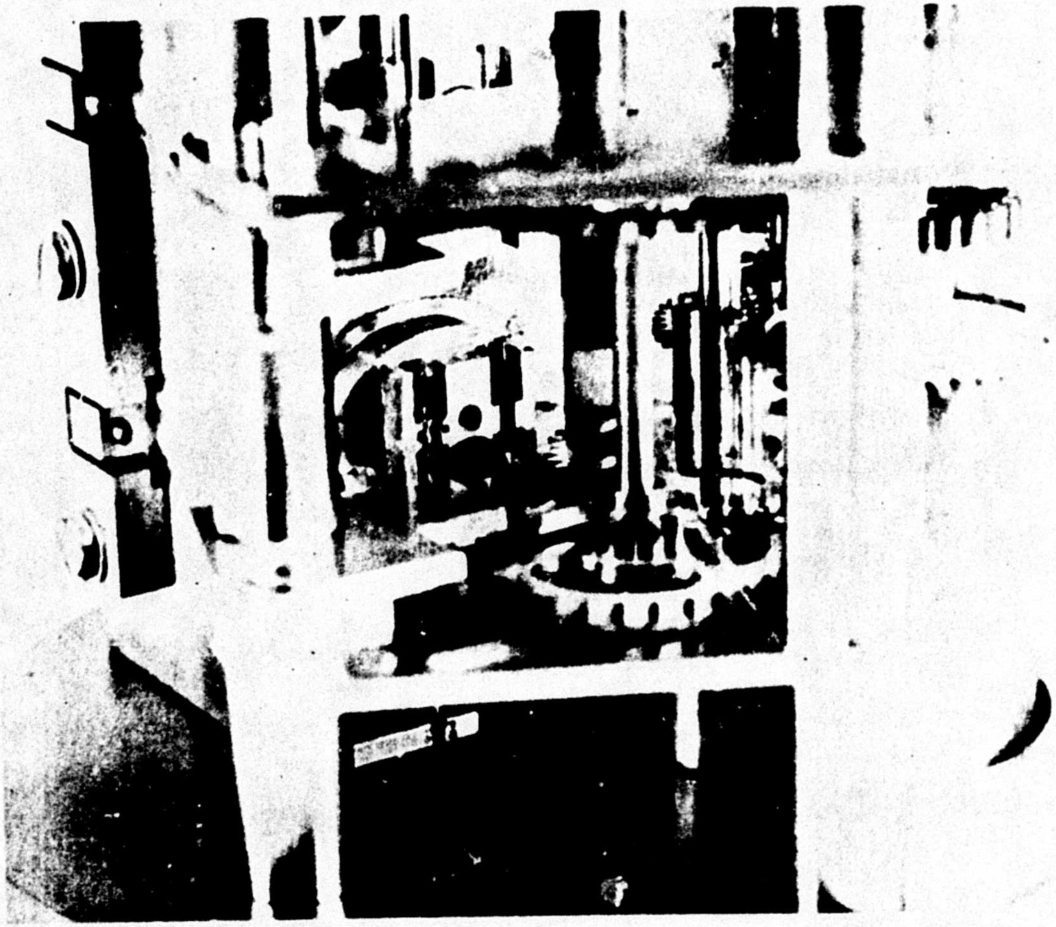

Figure 22. Gear Train Assembly-Ratchet Wheel Feature

Figure 23. Gear Train Assembly-Clutch Drive Feature

the ability to start the gear train advancement from the same zero-set position, the uniformity of the frictional and restoring forces, and variations to these parameters introduced when the timer is subjected to extreme environmental conditions. Design techniques have been developed which establish the criteria in each of these areas to realize a highly accurate timer.

(1) Solenoid Force Requirements

The solenoid design is predicated upon the force that the solenoid must generate to provide the torques required to accelerate the gear train for one tooth of ratchet wheel displacement and to align the rotor while performing work against the pallet return spring and frictional forces. A detailed analysis of the moments, torques and forces, and magnetic circuit criteria is presented in the Appendix.

The total moment of inertia of the gear train, referenced to the input shaft, is 1.24 x 10^{-6} in-lb-sec^2. The torque required to rotate the input shaft 12 degrees, one ratchet wheel tooth of angular displacement, in 8 milliseconds, is 8.1 x 10^{-3} in-lb. The rotor spring torque required to align the rotor with 90 degrees rotation in 0.05 second is 8.85 x 10^{-2} in-lb. The total input shaft torque required is the summation of the required gear train torque plus the arming spring torque and is equal to 1.25 x 10^{-2} in-lb. The pallet return spring torque is 7.02 x 10^{-3} in-lb. The magnetic force required of the solenoids, neglecting friction, is then determined to be 0.231 pound or 1.03 Newtons. The ampere-turns to supply this force across the required air gap is 202.

The available ampere-turns are approximately equal to 370, based on 7500 turns of No. 38AWG wire having a DC resistance of 525 ohms and operating from 26 volts. Calculating the ampere-turns expended in the iron and other air gaps, neglecting eddy current losses, results in 351 ampere-turns to supply the required force at the air gap.

The magnetic field intensity within the iron is calculated to be 1.58 Oersteds. The saturation level of the iron is 1.28 Oersteds, indicating that the magnetic circuit operates into saturation levels. The ampere-turns required to realize 1.28 Oersteds of magnetic field intensity in the iron is calculated to be 301, producing a solenoid force of 2.28 Newtons.

Although no additional force can be achieved across the air gap once saturation levels are reached, it is imperative that saturated conditions be employed to insure reliable operation and accuracy over a wide range of parameter variations. Timer accuracy is not degraded due to fluctuations in excitation voltage nor can the timer arm drastically short of the set time when overvoltaged, since the solenoid is force-limited at saturation.

As shown, a force ratio of 2.28:1.03 is achieved at saturation, which is the solenoid force referenced to the minimum force required to accelerate the gear train mass and perform work. This provides a comfortable margin for friction and other forces not considered in the solenoid design analysis. Typical timer mechanisms and safe and arm devices, fabricated using similar techniques, show that the required torques and forces to function may be increased to a maximum of 5 percent to accommodate these friction forces for worst case operating conditions. Therefore, 0.05 Newton of additional force is required, providing a ratio of solenoid force-to-frictional-forces of 2.28:0.05 or 45.6:1. A timing variation of 2.2 percent could be expected as a function of variations in the frictional and other forces. For a 5-second timer, this corresponds to 0.11 second of ambiguity in set time. Since time is an inverse square root function of force, the timer can only arm slower as friction is increased. Operating the magnetic circuit at minimum flux levels to realize 1.08 Newtons of force would result in a ratio to frictional forces of 1.08:0.05 or 21.6:1. A timing variation of approximately 4 percent could be expected as these forces varied in temperature and vibration. This translates to an arm time variation of 0.2 second for a 5-second timer.

Hence, engineering trade-offs exist to determine the most efficient level to operate the magnetic circuit, providing the required performance with adequate operating margins, while insuring that power consumption from the driving source is simultaneously conserved. Extensive development and testing has proven the existing operating parameters to be near optimum.

(2) Environmental Evaluation

(a) Temperature Tests

The two prototype timers delivered to AFATL were tested over the specified temperature range of -65°F to 220°F. Minimum soak time at each temperature was 2 hours with 4-hour soak times at the temperature extremes. Continuous and reliable operation was demonstrated by both timers. Arm time as a function of temperature was measured at a constant DC excitation voltage. The average direct current, Idc, in milliamperes (ma) required was recorded. The test data for the two timers are presented in Tables 4 and 5.

Timer B exhibited near uniform arm time over the temperature range. Timer C performed with the same consistency except at the very high temperature extremes, where arm times were measured to be approximately 0.6 second faster than at ambient. This small deviation in the arm time of timer C is attributed to the ambiguity that exists in the zero-set position of the gear train assembly. When the EMT is returned manually to the

TABLE 4. TEMPERATURE TEST DATA, TIMER B

Temperature (°F)	DC Voltage (volts)	Current (ma)	Arm Time (secs)
+220	30	31	5.3
+130	30	32	5.0
+75	30	33	5.2
+50	30	33	5.2
+20	30	34	5.3
0	30	34	5.3
-30	30	34	5.1
-65	30	34	5.4

TABLE 5. TEMPERATURE TEST DATA, TIMER C

Temperature (°F)	DC Voltage (volts)	Current (ma)	Arm Time (secs)
+220	30	30	4.4
+190	30	31	4.5
+140	30	32	4.8
+70	30	33	5.0
+35	30	34	5.1
0	30	34	5.3
-30	30	35	5.1
-65	30	35	5.3

out-of-line position, as was the case when these measurements were performed, the zero-set position of the gear train can be positioned anywhere within two revolutions of the ratchet wheel. A 0.66 revolution from the initial ratchet wheel position provides 20 teeth of preset rotation. This results in arm times 10 percent faster than the arm times referenced in the zero position of the gear train where a full 200 teeth must be advanced to arm the timer. Hence, these variations in arm time are related to measurement technique relative to reset conditions and are not environmentally induced.

This conclusion is readily substantiated by measurements performed on a solenoid assembly having an identical configuration as the prototype models and divorced from the gear train. The solenoid assembly was operated at constant voltage over the prescribed temperature range and the operating time base was recorded. The data and measurement parameters are listed in Table 6. Assuming that the time for the in-stroke, t_{IN}, is increased 10 milliseconds to accommodate the acceleration of the gear train mass, the operating time base at 70°F is 26 milliseconds/tooth. The corresponding arm time is then 5.2 seconds for 200 teeth. The time bases at 220°F and -65°F are 25 and 26.5 milliseconds respectively, resulting in arm times of 5.0 and 5.3 seconds. Hence, a 0.3-second variation in arm time would be experienced over the entire operating temperature range.

TABLE 6. TEMPERATURE TEST DATA, SOLENOID ASSEMBLY

Temperature	Vdc	Idc	t_{OUT}	t_{IN}	t_{Total}
°F	(Volts)	(ma)	(msecs)	(msecs)	(msecs)
+220	25	8.5	8	7	15
+150	25	8.5	9	7	16
+70	25	9	8	8	16
+32	25	10	8	8	16
0	25	10	8	8	16
-30	25	10	8	8	16
-65	25	10	8.5	8	16.5

Future models of the EMT should incorporate a torsion spring, integral to the input shaft, that will provide a constant bias for the gear train to reliably insure initiation from a zero-set position. Hence, improvement in the uniformity of arm time of the EMT, when subjected to extreme environmental conditions, is readily achievable. As tested, the prototype units have exhibited a high degree of reliable and consistent performance.

(b) Vibration Tests

The environmental test model timer, timer A, was subjected to transportation vibration levels as specified in MIL-STD-810C, Method 514.2, Curves D and H from Figure 514.2-2. The displacements and levels as a function of frequency, recorded in Hertz, are summarized as follows:

FREQUENCY	DISPLACEMENT/LEVEL
9-14 Hz	0.1 inch
14-23 Hz	1 g
23-74 Hz	0.036 inch
74-2000 Hz	10 g

Vibration testing was conducted in three planes; a vertical plane, a horizontal plane, and a horizontal plane of 90 degrees rotation. The horizontal planes were selected to present the greatest impediment to timer operation by requiring near orthogonal loading of the drive and hold pawls and respective guide springs. Three hours of logarithmic frequency cycling was conducted in each plane with both timers exhibiting no apparent resonances in this frequency range. The cycling was interrupted at selected frequency points during the test and both timers were operated at the specified vibration parameters. Arming times as a function of frequency were measured and the average operating current was recorded. Tables 7 through 9 tabulate these measurements. Consistent and reliable operation of timer A was evidenced during and after the test with no mechanical damage or performance degradation.

(3) Accuracy Prediction

The accuracy prediction for the EMT is based on limited data from two prototype models and from previous calculations with assumptions derived from experience with mechanical timing devices. Therefore, data averaging techniques were employed to obtain expected deviations relevant to the conditions to which the data are applicable. The zero-set criteria are based upon gear train ratchet wheel start within two teeth. The timing error budget is as follows:

TABLE 7. VIBRATION TEST DATA, VERTICAL PLANE, TIMER A

Frequency (Hz)	Excitation Voltage (Vdc)	Operating Current (ma)	Arm Time (secs)
STATIC PRE-TEST	30	66	5.6
10	30	65	5.6
25	30	65	5.6
50	30	65	6.0
75	30	66	5.9
100	30	65	6.0
200	30	65	5.8
300	30	65	5.6
400	30	65	5.8
600	30	65	5.4
800	30	65	5.5
1000	30	65	5.4
1100	30	65	5.4
1500	30	66	5.5
2000	30	66	5.4
STATIC POST-TEST	30	65	5.4

TABLE 8. VIBRATION TEST DATA, HORIZONTAL PLANE, TIMER A

Frequency (Hz)	Excitation Voltage (Vdc)	Operating Current (ma)	Arm Time (secs)
STATIC PRE-TEST	30	65	5.6
10	30	65	5.6
25	30	65	5.7
50	30	66	5.8
75	30	66	5.7
100	30	66	5.8
200	30	65	5.8
300	30	66	5.8
400	30	65	5.6
600	30	65	5.8
800	30	65	5.4
1000	30	65	5.4
1100	30	65	5.5
1500	30	65	5.4
2000	30	65	5.4
STATIC POST-TEST	30	65	5.6

TABLE 9. VIBRATION TEST DATA, HORIZONTAL, 90-DEGREE PLANE, TIMER A

Frequency (Hz)	Excitation Voltage (Vdc)	Operating Current (ma)	Arm Time (secs)
STATIC PRE-TEST	30	65	5.7
10	30	65	5.9
25	30	65	6.0
50	30	65	6.0
75	30	66	6.0
100	30	65	5.8
200	30	66	6.0
300	30	65	5.8
400	30	65	5.8
600	30	66	5.5
800	30	66	5.8
1000	30	66	5.8
1100	30	66	6.0
1500	30	65	5.4
2000	30	65	6.0
STATIC POST-TEST	30	65	5.7

VARIABLE	ARM TIME DEVIATION FROM NOMINAL 5 SECONDS
Functional Forces	± 0.11 second
Zero-Set Position	± 0.05 second
Temperature	± 0.05 second
Vibration	± 0.02 second
Other Forces	± 0.02 second

The sum of the arm time deviation is seen to be ±0.25 second from nominal, which corresponds to ±5 percent of 5 seconds arm time for worst case conditions. This accuracy tolerance is considered achievable in production with the present EMT configuration modified to include a zero-set bias spring on the input shaft.

e. Prime Power Requirements

The EMT is designed to operate from an isolated, remotely located, AC voltage source. Candidate power sources include sidewell, fluidic and acoustic electric generators. Permissible excitation voltage frequency range is from 1000 to 6000 Hz. The root-mean-square voltage of the source is from 30 to 100 volts.

The prime power requirements for the EMT were measured using a DC voltage source for convenience and accuracy. The minimum operating power requirements are as follows:

PEAK REQUIREMENTS

Input Voltage - 30 Vdc
Input Current - 130 ma
Input Power - 3.9 Watts

AVERAGE REQUIREMENTS

Input Voltage - 30 Vdc
Input Current - 32 ma
Input Power - 0.96 Watt

The foremost requirement for an advanced R&D program of this nature is to develop and demonstrate a concept. As the development progressed, operating features and design restraints were added to the original concept to realize a prototype EMT readily integrated into future development efforts for specific applications. The Air Force Armament Laboratory realized the advantage afforded by continued efforts and exercised the trade-offs between prime power consumption and improved performance.

The trade-offs to improve performance involved a dynamically balanced system to insure operation under high gravitational forces, a 40:1 force-to-friction ratio for accuracy and repeatability of arm time; and realizing prototype hardware which performed satisfactorily over the temperature range from -65°F to 220°F and while subjected to aircraft vibration levels. Hence, a reliable, environmentally resistant, inherently fail-safe EMT concept easily adapted to specific munition applications has been demonstrated.

f. Mechanically Selectable Timing

A concept was evolved to mechanically select arming times while maintaining all the features of the existing EMT design, including fail-safe operation. This concept, illustrated in Figure 24, employs a constant mesh gear train to advance a timing gear that is engaged with the timing disc when the minimum time is selected. Arming times greater than the minimum are achieved by rotating the timing gear away from the timing disc, thus increasing the rotational travel required for arming. This is accomplished by incorporating the timing gear on a threaded shaft integral with the timing disc, affording the necessary rotational displacement.

The timing gear is positioned on the threaded output shaft by the time-set gear, integral to the time-set knob, via the time-set pinion. A calibrated arm time dial is provided with graduations corresponding to the detented time-set positions. At the minimum set time, in this case 5 seconds, the timing gear is rotated down the output shaft until the relief engages the timing disc drive pin. Hence, ratchet wheel rotation immediately results in timing disc displacement through the ratchet wheel pinion, idler gear, and timing gear. When the timing disc is displaced 120 degrees, the rotor snaps to the armed position.

When longer arming times are selected, the timing gear is appropriately positioned on the output shaft requiring a predetermined rotation of the timing gear prior to engagement of the gear relief to the timing disc drive pin. Further advancement of the ratchet wheel initiates the required 120 degrees of timing disc rotation for fuze rotor arming. A time-set pin is provided to engage a relief in the timing gear to accurately position the gear for the maximum set time. Therefore, a wide range of arming times are available constrained only by the size of the mechanism, specifically the length of the threaded output shaft and idler gear thickness.

The set-time mechanism also provides a return to the zero-set position when prime power is interrupted as occassioned by non-sustained environmental requirements. A zero-set spring is anchored between the bottom plate and the intermediate shaft that supports the zero-set gear. The idler gear is

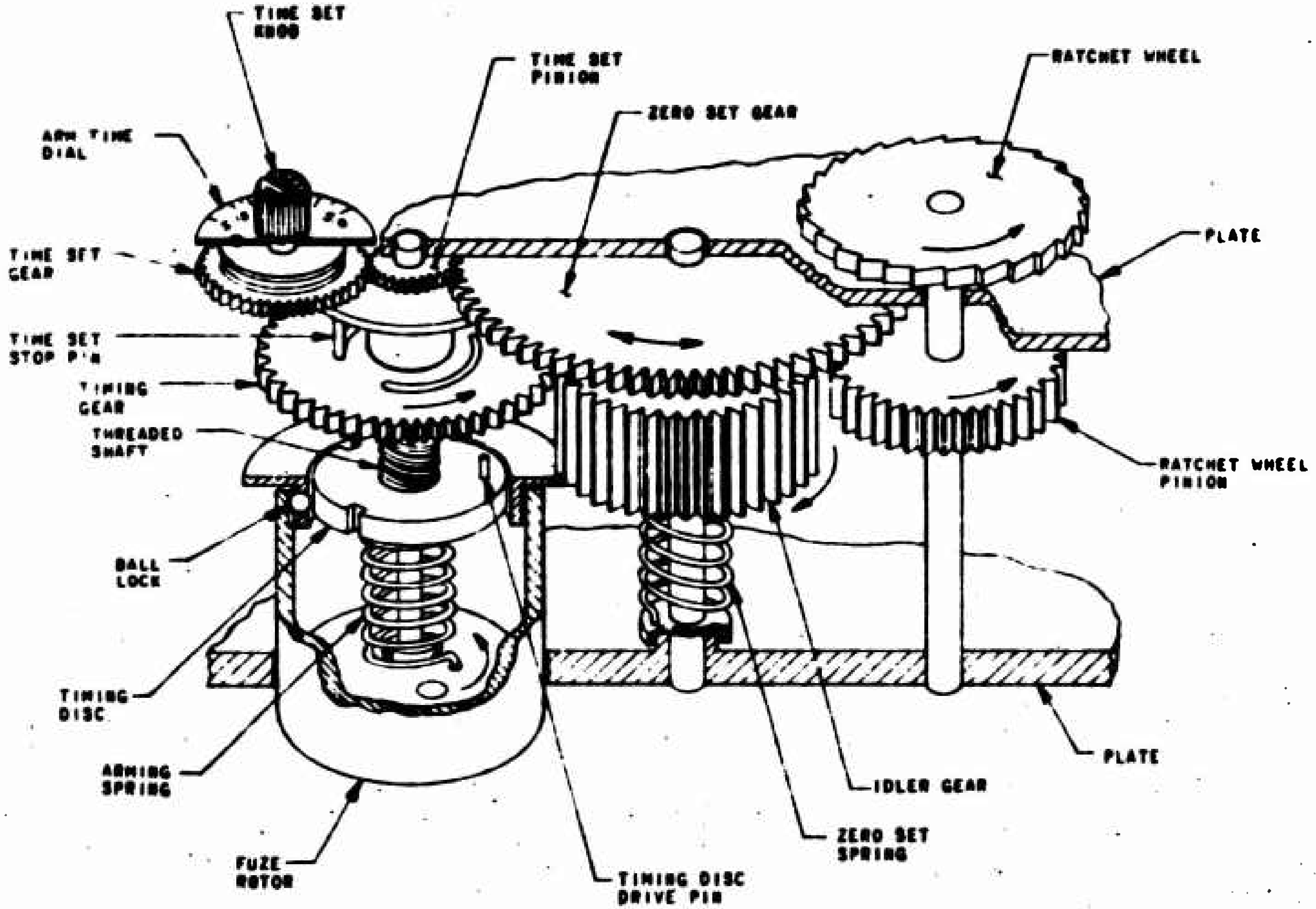

Figure 24. EMT Fail-Safe Mechanical Set-Time Mechanism

positioned on this shaft but is not integral with it. Therefore, rotation of the time-set gear, during arm time selection, charges the zero-set spring providing the required force to reset the entire gear train, including the timing gear, when the hold solenoid pawl disengages the ratchet wheel. Furthermore, the ratchet wheel is identically returned and held at the zero-set position due to the small bias introduced to the zero-set spring, resulting in accurate, repeatable timing cycles.

Fail-safe cycles are insured at any selected time settings, since the operating time base of the electro-mechanical system is independent of gear train displacement and is identical to that employed in the fixed delay timer. Therefore, fail-safe operation, 85 to 90 percent of the set time, is readily achievable for any selected time setting.

SECTION III

CONCLUSIONS

The concept of an inherently fail-safe, electro-mechanical timer has been demonstrated, achieving program objectives. Two fundamental timer designs were developed during this program. The first design features a small, lightweight, inexpensive timer compatible with presently available environmental power generators and suitable for munitions produced in large quantities, such as general purpose bombs. The second design embodies a highly reliable, rugged timer for sophisticated guided weapon applications. Prototype timers were fabricated and tested, demonstrating a high degree of arming time repeatability and accuracy. Arming time, as a function of excitation potential, was nearly constant over the specified range of input voltages and environmental conditions. Fail-safe operation was demonstrated with simulated electronic and mechanical failures.

The mechanical design simplicity and the unique generation of the electrical time base offers a high degree of flexibility for numerous applications. Options such as synchronization to an external electrical timing source, command initiation, and remote timer reset have been readily incorporated into the fundamental design. Mechanical time set features can also be incorporated. The simplicity of the design insures high performance reliability, repeatability, and system cost-effectiveness.

The EMT has been designed for external resetting after operation, thus permitting complete exercise of all units. No one-shot components are employed to accomplish the timing or arming functions. Failures within timer or with external power sources result in either restoration of the EMT to the safe condition or lengthening of the arm time.

The electro-mechanical timer concept demonstrated on this program offers the versatility and accuracy of an electronic timer while affording the safety of a mechanical timer and rotor assembly, including an out-of-line interrupted safe firing train. This unique, inherently fail-safe, Electro-Mechanical Timer concept promises to fully comply with all the requirements of MIL-STD-1316A. Compliance with the proposed MIL-STD-1316B requirement of dual rotor locks can be accomplished by a simple modification to incorporate a second rotor lock to be activated by the hold solenoid. The resulting versatility, accuracy, and safety represents an improvement in the fuzing state-of-the-art for many weapon systems applications.

APPENDIX

SOLENOID DESIGN REQUIREMENTS ANALYSIS

SOLENOID DESIGN ANALYSIS

ARMATURE: Volume = Cylinder plus cone

$V = \pi d^2 \ell/4 + \pi d^2 h/12 = (\ell + h/3)\ \pi d^2/4$

$I = Mr^2 = Md^2/4$, but $M = V\delta/g$

$I = d^2 V\delta/4g$ substituting for V

$I = (\ell + h/3)\ \pi d^4 \delta/16g$

$\delta = 0.283$ lb./in.^{3} , $g = 386.4$ in./sec.^{2}

$\ell = 0.80$ in., $h = 0.162$ in., $d = 0.187$ in.

$I = (0.801 + 0.$ [illegible] $0.187)^4 (0.283)/16\ (386.4)$

$I \approx 1.50 \times 10^{-7}$ [illegible] sec.^{2}

PALLET SHAFT: Volume = 3 cylinders

$V = \pi d_1^{\,2} \ell_1/4 + \pi d_2^{\,2} \ell_2/4 + \pi d_3^{\,2} \ell_3/4$

$V = (d_1^{\,2} \ell_1 + d_2^{\,2} \ell_2 + d_3^{\,2} \ell_3)\ \pi/4$

$I = Mr^2/2 = Md^2/8$, but $M = V\delta/g$

substituting for M

$I = V\delta d^2/8g$

substituting for V

$I = (d_1^{\,4} \ell_1 + d_2^{\,4} \ell_2 + d_3^{\,4} \ell_3)\delta\pi/32g$

$d_1 = 0.06$, $d_2 = 0.045$, $d_3 = 0.031$

$\ell_1 = 0.47$, $\ell_2 = 0.212$, $\ell_3 = 0.1$

$$I = \left[(0.06)^4 (0.47) + (0.045)^4 (0.212) + (0.031)^4 (0.1)\right] \times (0.283)\ \pi/32\ (386.4)$$

$I = 5.07 \times 10^{-10}$ in. lb. sec.^{2}

PALLET: Volume = rectangular prism

$$V = \ell wh$$

$$I = (\ell^2 + h^2)m/12 + Mr^2$$

where r is the distance from the rotational center to the center of gravity and is 0.043 in.

substituting $V\delta/g$ for M

$$I = (\ell^2 + h^2)V\delta/12g + V\delta r^2/g$$

$$I = (\ell^2/12 + h^2/12 + r^2)V\delta/g$$

substituting for V

$$I = (\ell^2/12 + h^2/12 + r^2)\ \ell wh\delta/g$$

$\ell = 0.375$, $h = 0.092$, $w = 0.031$

$\delta = 0.283$, $g = 386.4$

$$I = \left[(0.375)^2/12 + (0.092)^2/12 + (0.043)^2\right] \times (0.375)(0.092)(0.031)(0.283)/386.4$$

$$I = 1.12 \times 10^{-8} \text{ in. lb. sec.}^2$$

PAWL: Mass determined by weight

$$M = W/g$$

$$I = Mr^2 = Wr^2/g$$

$w = 1.06 \times 10^{-3}$ pounds, $r = 0.187$

$$I = (1.06 \times 10^{-3})(0.187)^2/386.4$$

$$I = 9.59 \times 10^{-8} \text{ in. lb. sec.}^2$$

RATCHET WHEEL: Volume = disc = $\pi d^2h/4$

$$I = Mr^2/2 = Md^2/8 \text{ and } M = V\delta/g$$

substituting for M

$$I = V\delta d^2/8g$$

substituting for V

$$I = \delta d^4 \pi h/32g$$

$$h = 0.04,\ d = 0.641$$

$$\delta = 0.283,\ g = 386.4$$

$$I = (0.283)(0.641)^4(0.04)\pi/32\ (386.4)$$

$$I = 4.86 \times 10^{-7} \text{ in. lb. sec.}^2$$

No. 1 PINION SHAFT: Volume = 2 cylinders

$$V = \pi d_1{}^2 \ell_1/4 + \pi d_2{}^2 \ell_2/4$$

$$V = (d_1{}^2 \ell_1 + d_2{}^2 \ell_2)\pi/4$$

$$I = Mr^2/2 = Md^2/8 \text{ and } M = V\delta/g$$

substituting for M

$$I = V\delta d^2/8g$$

substituting for V

$$I = (d_1{}^4 \ell_1 + d_2{}^4 \ell_2)\delta\pi/32g$$

$$\ell_1 = 0.075,\ \ell_2 = 0.876$$

$$d_1 = 0.154,\ d_2 = 0.08$$

$$I = \left[(0.154)^4(0.075) + (0.08)^4(0.876)\right]\ (0.283)\pi/32\ (386.4)$$

$$I = 5.59 \times 10^{-9} \text{ in. lb. sec.}^2$$

NO. 2 GEAR: Volume = disc = $\pi d^2 h/4$

$$I = Mr^2/2 = Md^2/8 = V\delta d^2/8g$$

$$I = \pi d^4 h\delta/32g$$

$$d = 0.701,\ h = 0.025$$

$$I = (0.701)^4(0.025)(0.283)\pi/32\ (386.4)$$

$$I = 4.34 \times 10^{-7} \text{ in. lb. sec.}^2$$

No. 3 PINION & SHAFT: Volume = 2 cylinders

$$V = (d_1{}^2\ell_1 + d_2{}^2\ell_2)\pi/4$$

$$I = Mr^2/2 = Md^2/8 = V\delta d^2/8g$$

$$I = (d_1{}^4\ell_1 + d_2{}^4\ell_2)\delta\pi/32g$$

$$d_1 = 0.156, \; d_2 = 0.071$$

$$\ell_1 = 0.331, \; \ell_2 = 0.545$$

$$I = \left[(0.156)^4(0.331) + (0.07)^4(0.545)\right] (0.283)\; \pi/32\; (386.4)$$

$$I = 1.5 \times 10^{-8} \text{ in. lb. sec.}^2$$

No. 4 Gear = No. 5 Gear = No. 7 Gear = No. 2 Gear = 4.34×10^{-7} in. lb. sec.^{2}

CLUTCH, DRIVE: Volume = 2 cylinders

$$V = (d_1{}^2\ell_1 + d_2{}^2\ell_2)\pi/4$$

$$I = (d_1{}^4\ell_1 + d_2{}^2\ell_2)\delta\pi/32g$$

$$d_1 = 0.204, \; d_2 = 0.347$$

$$\ell_1 = 0.104, \; \ell_2 = 0.159$$

$$I = \left[(0.204)^4(0.104) + (0.347)^4(0.159)\right] (0.283)\pi/32\; (386.4)$$

$$I = 1.79 \times 10^{-7} \text{ in. lb. sec.}^2$$

NO. 6 PINION & SHAFT: Volume = 3 cylinders

$$V = (d_1{}^2\ell_1 + d_2{}^2\ell_2 + d_3{}^2\ell_3)\pi/4$$

$$I = (d_1{}^4\ell_1 + d_2{}^4\ell_2 + d_3{}^4\ell_3)\delta\pi/32g$$

$$d_1 = 0.435, \; d_2 = 0.168, \; d_3 = 0.07$$

$$\ell_1 = 0.075, \; \ell_2 = 0.252, \; \ell_3 = 0.54$$

$$I = \left[(0.435)^4(0.075) + (0.168)^4(0.252) + (0.07)^4(0.54)\right]$$

$$\times\; (0.283)\pi/32\; (386.4)$$

$$I = 2.08 \times 10^{-7} \text{ in. lb. sec.}^2$$

CLUTCH, RESET: Volume = 2 cylinders

$$V = (d_1{}^2\ell_1 + d_1{}^2\ell_2)\pi/4$$

$$I = Mr^2/2 = Md^2/8 = V\delta d^2/8g$$

$$I = (d_1{}^4\ell_1 + d_2{}^4\ell_2)\delta\pi/32g$$

$$d_1 = 0.275,\ d_2 = 0.347$$

$$\ell_1 = 0.157,\ \ell_2 = 0.212$$

$$I = \left[(0.275)^4(0.157) + (0.347)^4(0.212)\right] (0.283)\pi/32\ (386.4)$$

$$I = 2.86 \times 10^{-7} \text{ in. lb. sec.}^2$$

TIMING DISC: Volume = 2 cylinders

$$V = (d_1{}^2\ell_1 + d_2{}^2\ell_2)\pi/4$$

$$I = (d_1{}^4\ell_1 + d_2{}^4\ell_2)\delta\pi/32g$$

$$d_1 = 0.66,\ d_2 = 0.22$$

$$\ell_1 = 0.12,\ \ell_2 = 0.065$$

$$I = \left[(0.66)^4(0.12) + (0.22)^4(0.065)\right] (0.283)\pi/32\ (386.4)$$

$$I = 1.65 \times 10^{-6} \text{ in. lb. sec.}^2$$

OUTPUT SHAFT: Volume = 2 cylinders

$$V = (d_1{}^2\ell_1 + d_2{}^2\ell_2)\pi/4$$

$$I = (d_1{}^4\ell_1 + d_2{}^4\ell_2)\delta\pi/32g$$

$$d_1 = 0.215,\ d_2 = 0.1$$

$$\ell_1 = 0.343,\ \ell_2 = 0.289$$

$$I = \left[(0.215)^4(0.343) + (0.1)^4(0.289)\right] (0.283)\pi/32\ (386.4)$$

$$I = 5.48 \times 10^{-8} \text{ in. lb. sec.}^2$$

ROTOR: Volume = 3 cylinders

$$V = (d_1^2\ell_1 - d_2^2\ell_2 - d_3^2\ell_3 + d_4^2\ell_4)\pi/4$$

$$I = (d_1^4\ell_1 - d_2^4\ell_2 - d_3^4\ell_3 + d_4^4\ell_4)\delta\pi/32g$$

$$d_1 = 1.0,\ d_2 = 0.875,\ d_3 = 0.36,\ d_4 = 0.245$$

$$\ell_1 = 1.075,\ \ell_2 = 0.160,\ \ell_3 = 0.18,\ \ell_4 = 0.095$$

$$I = \Big[(1)^4(1.075) - (0.875)^4(0.16) - (0.36)^4(0.18) + (0.245)^4(0.095)\Big]\ (0.283)\pi/32\ (386.4)$$

$$I = 7.04 \times 10^{-5} \text{ in. lb. sec.}^2$$

The gear train consists of an input shaft, an intermediate shaft, an output shaft, and reset shaft. A 20.25:1 step down ratio exists between the input and both the output and reset shafts. A 4.5:1 step down ratio exists between the input shaft and the intermediate shaft. A 32.5446:1 ratio exists between the input shaft through the reset shaft to the output shaft.

The input shaft supports two ratchet wheels and the No. 1 pinion. The intermediate shaft supports the No. 2 gear and the No. 3 pinion. The output shaft supports the No. 4 gear with drive clutch, No. 7 gear with reset clutch, and the timing disc. The reset shaft supports the No. 5 gear and the No. 6 pinion.

Therefore, the moments of inertia of the shafts referenced to the input shaft can be determined.

I_{41} = Moment of inertia of reset shaft referenced to the input shaft.

$$I_{41} = (I_6 + I_5)/20.25$$

$$= 2.08 \times 10^{-7}/20.25 + 4.34 \times 10^{-7}/20.25$$

$$I_{41} = 3.17 \times 10^{-8} \text{ in. lb. sec.}^2$$

I_{51} = Moment of inertia of the reset clutch and gear referenced to the input shaft.

$$I_{51} = (I_7 + I_{RC})/32.5446$$

$$= (4.34 \times 10^{-7} + 2.86 \times 10^{-7})/32.5446$$

$$I_{51} = 2.21 \times 10^{-8} \text{ in. lb. sec.}^2$$

I_{31} = Moment of inertia of the output shaft referenced to the input shaft.

= $(I_{TD} + I_4 + I_{DC})/20.25$

= $(1.65 \times 10^{-6} + 4.34 \times 10^{-7} + 1.79 \times 10^{-7})/20.25$

I_{31} = 1.12×10^{-7} in. lb. sec.^{2}

I_{21} = Moment of inertia of the intermediate shaft referenced to the input shaft.

= $(I_2 + I_3)/4.5$

= $(4.34 \times 10^{-7} + 1.5 \times 10^{-8})/4.5$

I_{21} = 9.98×10^{-8} in. lb. sec.^{2}

I_{11} = Moment of inertia of the input shaft.

= $2I_{RW} + I_1$

= $2(4.86 \times 10^{-7}) + 5.59 \times 10^{-9}$

I_{11} = 9.78×10^{-7} in. lb. sec.^{2}

I_T = Total moment of inertia at the input shaft.

$$I_T = I_{11} + I_{21} + I_{31} + I_{41} + I_{51}$$

$$I_{TOTAL} = 3.17 \times 10^{-8} + 2.21 \times 10^{-8} + 1.12 \times 10^{-7} + 9.98 \times 10^{-8} + 9.78 \times 10^{-7}$$

$$I_{TOTAL} = 1.24 \times 10^{-6} \text{ in. lb. sec.}^2$$

Torque required to rotate the input shaft 12 degrees or 0.209 radian or one ratchet wheel tooth in 8×10^{-3} second is:

T = $I\alpha$ but $\alpha = 2\theta/t^2$

T = $2I\theta/t^2$

= $2(1.24 \times 10^{-6})\ (0.209)/(8 \times 10^{-3})^2$

T = 8.1×10^{-3} in. lb.

Calculate the rotor spring torque required to align the rotor 90 degrees rotation in 0.05 second.

$T = I\alpha$ and $\alpha = 2\theta/t^2$

$T = 2I\theta/t^2$

$T = 2(7.04 \times 10^{-5})(\pi/2)/(5 \times 10^{-2})^2$

$T = 8.85 \times 10^{-2}$ in. lb.

Total input shaft torque is the gear train torque plus the rotor spring torque referenced to the input shaft.

$T_T = 8.1 \times 10^{-1} + 8.85 \times 10^{-2}/20.25$

$T_T = 1.25 \times 10^{-2}$ in. lb.

(The reverse of this page is blank)

INITIAL DISTRIBUTION

HQ USAF/RDQRM	2
HQ USAF/SAMI	1
HQ USAF/XOXFM	1
AFIS/INTA	1
AFSC/DLCA	1
AFSC/IGFG	1
AFSC/SDZA	1
AFAL/IHO	1
AFWAL/Tech Lib	1
ASD/ENFEA	1
FTD/PDXA-2	1
AFML/LTM	1
AUL (AU/LSE-70-239)	2
DDC	2
Ogden ALC/MMWM	2
TAC/DRA	1
6510 ARG/SSD	1
HQ USAFE/DOQ	1
HQ PACAF/DOO	1
SARRI-LW	1
SARPA-TS-S#59	1
Redstone Sci Info Center	2
NAVAIR SYS COMD/Air-954	1
NAV SURFACE WPN CENTER/Tech Lib	2
NAV ORDNANCE STN/Tech Lib	1
NAV AIR TEST CENTER/CT-176 TID	2
USNWC (Code 533)	1
Sandia Lab/Div 3141	1
TAWC/TRADOCLO	1
ADTC/SES	1
AFATL/DL	1
AFATL/DLOSL	9
AFATL/DLJ	1
AFATL/DLJF	6
USAF/AFRD	1
SAFRD	1
NAV WPNS EVAL FAC/Weapons Dept	1

(The reverse of this page is blank)