UNCLASSIFIED

AD NUMBER

ADB011678

NEW LIMITATION CHANGE

TO

Approved for public release, distribution unlimited

FROM

Distribution authorized to U.S. Gov't. agencies only; Test and Evaluation; FEB 1976. Other requests shall be referred to Air Force Flight Dynamics Lab., Wright-Patterson AFB, OH 45433.

AUTHORITY

AFFDL ltr, 27 Dec 1977

THIS PAGE IS UNCLASSIFIED

THIS REPORT HAS BEEN DELIMITED
AND CLEARED FOR PUBLIC RELEASE
UNDER DOD DIRECTIVE 5200.20 AND
NO RESTRICTIONS ARE IMPOSED UPON
ITS USE AND DISCLOSURE.

DISTRIBUTION STATEMENT A

APPROVED FOR PUBLIC RELEASE;
DISTRIBUTION UNLIMITED.

AFFDL-TR-76-8

ADB011678

ADVANCED METALLIC AIR VEHICLE STRUCTURE PROGRAM

FIFTH INTERIM REPORT

GENERAL DYNAMICS
FORT WORTH DIVISION

AD No.
DDC FILE COPY

FEBRUARY 1976

DDC
RECEIVED
JUN 15 1976
A

TECHNICAL REPORT AFFDL-TR-76-8

Distribution limited to U.S. Government agencies only; Test and Evaluation; December 1975. Other requests for this document must be referred to Air Force Flight Dynamics Laboratory (FB-A), Wright-Patterson Air Force Base, Ohio 45433.

AIR FORCE FLIGHT DYNAMICS LABORATORY
AIR FORCE WRIGHT AERONAUTICAL LABORATORIES
Air Force Systems Command
Wright-Patterson Air Force Base, Ohio 45433

NOTICE

When Government drawings, specifications, or other data are used for any purpose other than in connection with a definitely related Government procurement operation, the United States Government thereby incurs no responsibility nor any obligation whatsoever; and the fact that the Government may have formulated, furnished, or in any way supplied the said drawings, specifications, or other data, is not to be regarded by implification or otherwise as in any manner licensing the holder or any other person or corporation, or conveying any rights or permission to manufacture, use, or sell any patented invention that may in any way be related thereto.

This technical report has been reviewed and is approved for publication.

CHARLES R. WAITZ
Project Engineer

J. SCOTT FORD II, Lt. Col, USAF
Program Manager
AMS Program Office

FOR THE COMMANDER

GERALD G. LEIGH, Lt. Col, USAF
Chief, Structures Division

Copies of this report should not be returned unless return is required by security considerations, contractual obligations, or notice on a specific document.

AIR FORCE - 19 MAY 76 - 200

(9) Interim rept. no. 5
16 Dec 74 - 21 Oct 75

SECURITY CLASSIFICATION OF THIS PAGE (When Data Entered)

(19) REPORT DOCUMENTATION PAGE

READ INSTRUCTIONS BEFORE COMPLETING FORM

(18) 1. REPORT NUMBER: AFFDL-TR-76-8

2. GOVT ACCESSION NO.

3. RECIPIENT'S CATALOG NUMBER

(6) 4. TITLE (and Subtitle): ADVANCED METALLIC AIR VEHICLE STRUCTURE PROGRAM. ~~FIFTH INTERIM REPORT~~

5. TYPE OF REPORT & PERIOD COVERED: Interim Report 12/16/74 - 10/21/75

6. PERFORMING ORG. REPORT NUMBER

(10) 7. AUTHOR(s): R. C. Bissell, K. D. Mabry, R. E. Miller, R. S. Chambers

8. CONTRACT OR GRANT NUMBER(s): (15) F33615-73-C-3001

9. PERFORMING ORGANIZATION NAME AND ADDRESS: General Dynamics Fort Worth Division, P.O. Box 748, Fort Worth, Texas 76101

10. PROGRAM ELEMENT, PROJECT, TASK AREA & WORK UNIT NUMBERS: 486U 0104

11. CONTROLLING OFFICE NAME AND ADDRESS: Air Force Flight Dynamics Laboratory (FBA), Wright Patterson AFB, Ohio 45433

12. REPORT DATE: February 1976

13. NUMBER OF PAGES: (11) 92

14. MONITORING AGENCY NAME & ADDRESS (if different from Controlling Office): Air Force Flight Dynamics Laboratory (FBA), Wright-Patterson AFB, Ohio 45433

15. SECURITY CLASS. (of this report): Unclassified

15a. DECLASSIFICATION/DOWNGRADING SCHEDULE

16. DISTRIBUTION STATEMENT (of this Report): Distribution limited to U.S. Government Agencies only; Test and Evaluation; December 1975. Other requests for this document must be referred to Air Force Flight Dynamics Laboratory (FB-A), Wright-Patterson Air Force Base, Ohio 45433.

17. DISTRIBUTION STATEMENT (of the abstract entered in Block 20, if different from Report): Distribution Unlimited (12) 146 p.

18. SUPPLEMENTARY NOTES: (16) HF-486U (17) 1

19. KEY WORDS (Continue on reverse side if necessary and identify by block number): Structural Design, Stress Analysis, Fracture Mechanics, Materials, Manufacturing Technology, Damage Tolerance.

20. ABSTRACT (Continue on reverse side if necessary and identify by block number)

This report covers the final stages of manufacture of the wing carrythrough structure (WCTS), mating of the WCTS to the upper test structure, completion of the hardware and software elements of the test set-up leading to an operational test system, and start of the fatigue test program of the AMAVS WCTS. Included are design and analysis supporting the WCTS manufacture, mating task, and test system preparation activities. (over)

DD FORM 1 JAN 73 1473 EDITION OF 1 NOV 65 IS OBSOLETE

UNCLASSIFIED

SECURITY CLASSIFICATION OF THIS PAGE (When Data Entered)

402 709

Also included is the analytical task of incorporating updated loads/spectrum data from Rockwell International (RI) into the AMAVS program.

Following completion of the test system, operational check-outs were accomplished and strain surveys for the existing load conditions were made. The updated loads/spectrum data was then incorporated, further system check-outs made, and the fatigue test was started on 21 October 1975.

F O R E W O R D

This report covers the period 16 December 1974 through 21 October 1975. The efforts reported herein were sponsored by the Air Force Flight Dynamics Laboratory (AFFDL) under joint management and technical direction of AFFDL and the Air Force Materials Laboratory (AFML), Wright-Patterson Air Force Base, Ohio.

This work was performed under Contract F33615-73-C-3001 "Advanced Metallic Air Vehicle Structure" (AMAVS) as a part of the Advanced Metallic Structures, Advanced Development Programs (AMS ADP), Program Element 63211F, Project Number 486U0104. J. S. Ford II, Lt. Col., USAF (AFFDL/FBA), is the ADP Manager, with Mr. N. G. Tupper (AFML) serving as Deputy ADP Manager. Mr. C. R. Waitz (AFFDL/FBA) is the Project Engineer for the AMAVS Program.

Earlier documentation of this program is contained in the following AFFDL-TR-XX-Y reports:

Phase Reports			Interim Reports	
Ph I	Prel. Design	- 73-40	1st	73-1
Ph II	Detail Design	- 74-17	2nd	73-77
Ph III	Fabrication	-	3rd	74-98
			4th	75-40

Principal General Dynamics contributors to this report were:

R. C. Bissell - Program Manager
R. E. Miller - Stress Analysis
K. D. Mabry - Structural Design
R. S. Chambers - Stress Analysis

This work was performed during the period 16 December 1974 through 21 October 1975. It was submitted by the authors in November 1975.

TABLE OF CONTENTS

Section		Page
1	INTRODUCTION	1
2	TECHNICAL DISCIPLINES PROGRESS	3
	2.1 Engineering	3
	2.1.1 Structural Design	3
	2.1.2 Structural Analysis	4
	2.1.3 Fatigue and Fracture Analysis	54
	2.2 Testing	77
	2.2.1 Material Testing	77
	2.2.2 Component Tests	85
	2.2.3 Full Scale Testing	85
3	FACTORY PROGRESS	89
	3.1 Fabrication of the WCTS	89
	3.2 Mating of the WCTS	91

PRECEDING PAGE BLANK-NOT FILMED

LIST OF ILLUSTRATIONS

Figure		Page
2.1.2-1	Strain Gage Locations WCTS Lower Plate Assembly.	25
2.1.2-2	Strain Gage Locations WCTS Upper Cover	27
2.1.2-3	Strain Gage Locations WCTS Y_F932 Bulkhead	29
2.1.2-4	Strain Gage Locations WCTS Y_F992 Bulkhead	33
2.1.2-5	Strain Gage Locations WCTS Ribs	37
2.1.2-6	Strain Gage Locations - Shear Struts	39
2.1.2-7	Strain Survey Stresses of Upper Pivot Lug	41
2.1.2-8	Strain Survey Stresses of Lower Pivot Lug	43
2.1.3-1	Control Point 1, Y_F992 Bulkhead Inboard Panel, Fuel Transfer Hole @ X_F29	58
2.1.3-2	Control Point 2, Lower Plate Assembly, Wing Pivot Lug	59
2.1.3-3	Control Point 3, Lower Plate, Lug .875 Diameter Taper-lok Hole	60
2.1.3-4	Control Point 4, Lower Plate Assembly, Aft Outboard Cutout	61
2.1.3-5	Control Point 5, Bulkhead Y_F932, Lower Attach Flange	62
2.1.3-6	Control Point 6, Upper Lug Installation Aft Outboard Longeron Attachment	63
2.2.1-1	Drawing 603R100-11, 10 Nickel Steel - Electron Beam Welding Properties - Development Test Program	81

PRECEDING PAGE BLANK-NOT FILMED

LIST OF ILLUSTRATIONS
(CONTINUED)

Figure		Page
2.2.1-2	Drawing 603R100-12, 10 Nickel Steel - GTA Welding Properties - Development Test Program	83

LIST OF TABLES

Table		Page
2.1.2-I	Basic Fatigue Load Conditions	6
2.1.2-II	Updated AMAVS Spectrum Data for Fatigue Test	8
2.1.2-III	Analytic Spectrum	12
2.1.2-IV	Typical Test and Predicted Stresses	20
2.1.2-V	Simulated Fuselage Longeron Comparisons	45
2.1.2-VI	Ram Loads for Basic Revised NA75-346 and General Dynamics Modified Conditions	47
2.1.2-VII	Strain Survey Data Cycle for First Flight Using "Every 100th Flight" Spectrum	51
2.1.2-VIII	Baseline Data Cycle for Fifth Flight Using "Every Flight" Spectrum	52
2.1.2-IX	Periodic Data Cycle for 100 Flight Increments Using "Every 10th Flight" Spectrum	53
2.1.3-I	Wing Bending Moment Spectrum at the Wing Pivot Flight-By-Flight Composite Mission	57
2.1.3-II	Summary - WCTS Fatigue Damage - Phase II Loads and Spectrum	64
2.1.3-III	Stress Spectra for NBB Control Point No. 1 Y_F992 Bulkhead, Lower Plate	65
2.1.3-IV	Stress Spectra for NBB Control Point No. 2 Lower Plate Lug - Pivot Bore	66

LIST OF TABLES
(CONTINUED)

Table		Page
2.1.3-V	Stress Spectra for NBB Control Point No. 3 Lower Plate Lug 0.875 Diameter Taper-lok Hole	67
2.1.3-VI	Stress Spectra for NBB Control Point No. 4 Lower Plate, Aft Outboard Cutout	68
2.1.3-VII	Stress Spectra for NBB Control Point No. 5 Y_F932 Bulkhead Lower Flange	69
2.1.3-VIII	Stress Spectra for NBB Control Point No. 6 Upper Aft Outboard Longeron Attachment	70
2.1.3-IX	Summary of Wing Pivot Data for Fatigue Analysis	72
2.1.3-X	Summary - Preliminary. WCTS Fatigue Damage Analysis - 1975 Loads Update	76
2.2.1-I	Credible Option Material Tests Completed 16 December 1974 through 15 October 1975	78
2.2.1-II	Credible Option Deferred Tests	79

SECTION 1

INTRODUCTION

This interim report summarizes the accomplishments of the Advanced Metallic Air Vehicle Structure (AMAVS) Program from 16 December 1974 to 21 October 1975. This work is part of the Air Force's Advanced Metallic Structures, Advanced Development Program. It was performed under contract to the Air Force Flight Dynamics Laboratory (AFFDL) by the Fort Worth Division of General Dynamics at Fort Worth, Texas.

The ten months covered by this report include the final activities of Phase III (Fabrication), the mating operation at WPAFB, and the Phase IV test support activities leading to start of the fatigue portion of the Full Scale Test Program. Also included is the additional material testing funded under the "Credible Option" task and design activities required to comply with the contractual drawing requirements. Tasks accomplished in Phase III, Fabrication, and during the mating operation at WPAFB are reported in AFFDL-XX-Y, to be published, and included the following significant items:

1. Fabrication of the "No-Box" Box (NBB) configuration of the Wing Carrythrough Structure (WCTS).

2. Instrumentation of the WCTS and fit-checking of test fixture parts to the WCTS.

3. Mating of the test fixture upper structure to the WCTS at WPAFB.

4. Installation of the dummy gear assemblies, positioning of the mated upper structure on the test fixture base and installation of the dummy wings.

Fabrication of all program hardware items, including the WCTS and Full Scale Test fixture parts was completed. Reassembly of the test fixture and mating of the WCTS to the upper test fixture was accomplished at WPAFB. Completion of the hydraulic, electrical/electronic, and other systems to create an operational test system was accomplished by Structural Test Facility personnel. A baseline NDI inspection on the WCTS, strain surveys to verify load

distribution, reprogramming of control/data systems to incorporate updated loads from Rockwell International (RI), and system check-out runs were accomplished prior to start of the fatigue test on 21 October 1975.

A contract change to incorporate updated loads/spectrum data from RI was received in July, 1975. Intent of this change was to incorporate the updated DVT-2 spectrum data into the AMAVS program. Ram loads and fatigue spectrum data were generated from the RI data and provided to AFFDL/FBT for use in reprogramming of the computer programs. A preliminary fatigue analysis of the WCTS using the updated data was accomplished. Static loads data from RI will allow completion of the additional analyses required, i.e. stress, fracture, and fatigue.

Material testing funded as part of the "Credible Option" task was completed except for certain portions which were deferred in December, 1974 because of budgetary constraints. The deferred testing, comprising mechanical property testing on EB/GTA welded 10 Nickel steel and crack growth testing on both 6Al-4V titanium and 10 Nickel steel, was reinstated 16 September 1975 and will be completed in early 1976.

SECTION 2

TECHNICAL DISCIPLINES PROGRESS

The progress made by the technical groups during the final stages of Phase III, Manufacturing, and the initial stages of Phase IV, Test and Evaluation, is reported in this section.

2.1 ENGINEERING

The engineering functions progress for the period 16 December 1974 to 21 October 1975 is detailed below.

2.1.1 Structural Design

Design activities during this reporting period include the implementation of two structural design changes and the updating of Engineering Drawings for the NBB configuration. The Design Group also provided full time Engineering support during (1) the final stages of the Wing Carrythrough Structure (WCTS) fabrication (2) mating of the WCTS to the upper test fixture (3) mating of the dummy landing gears and dummy wings and (4) full scale test system set-up and check-out.

2.1.1.1 Design Changes

A design change was incorporated to provide adequate fastener strength to the wing sweep actuator fitting assembly. The original titanium Hi-lok fasteners attaching the aluminum splice plate to the basic support fittings were replaced with steel Hi-loks. In addition, four (4) steel Hi-loks were added to the splice plate of each assembly.

Another design change was also required to increase fastener strength. This change added a total of seventy-two (72) steel Hi-lok fasteners to the existing fastener pattern attaching the upper panels to the XF39 ribs.

2.1.1.2 Engineering Drawing Update

The NBB drawings require the incorporation of all outstanding Engineering Change Notices (ECN) to reflect the configuration of the Wing Carrythrough Structure (WCTS) as it was fabricated. A total of 211 ECNs were outstanding on 92 drawings at the time

the WCTS was completed. To date, 122 ECNs have been incorporated on 54 drawings.

Updating of the Engineering drawings also includes the preparation of Parts List (PL) for all 27 NBB assembly and installation drawings onto Air Force forms. Preliminary preparation of all PLs was accomplished, but final completion is dependent on the ECN incorporation.

The FSIL configuration consists of 101 drawings of which 76 were completed at the time the NBB was selected for fabrication. No additional work has been accomplished toward completion of the 25 remaining drawings.

2.1.2 Structural Analysis

2.1.2.1 General

During the reporting period, activities of Structural Analysis personnel included the following:

1. Performed structural liaison during completion of WCTS and simulated fuselage manufacture, prefitting of landing gears and dummy wings, and during moving and installation in the test fixture at AFFDL's Structural Test Facility at WPAFB.

2. Performed stress analysis of structural design changes found to be necessary.

3. Updated additional portions of the preliminary stress analysis to reflect results from the NBB 5 series of math models.

4. Participated further in planning for the full scale test program including completion of estimated and allowable stress data at strain gage points for the simulated fuselage, review of AFFDL test plans, and instrumentation coordination.

5. Witnessed a portion of the full scale operational checkout strain survey and reviewed all strain survey data collected by AFFDL.

6. Coordinated loads update information and furnished necessary information to affected AFFDL and General Dynamics sections.

7. Coordinated the planned usage of data gathering channels for subsequent testing.

8. Converted General Dynamics TNI overall WCTS model to General Dynamics UGO program for more efficient stress determination during loads update efforts.

2.1.2.2 Design Loads

In order to preserve the credible option concept, current B-1 fatigue test spectrum loads were furnished formally by Rockwell International (RI) in Report NA 75-346 and its revisions for use in AMAVS fatigue testing and fatigue and fracture analysis. In general, data was presented in the form of node forces from a current RI math model for a set of basic conditions. With a few exceptions, the basic conditions are 1g or Δ1g. A list of the basic conditions, grouped according to wing sweep angle, is given in Table 2.1.2-I. The maximum and minimum load sets for each fatigue step in the fatigue test spectrum were specified as linear combinations of the basic conditions. In addition, the frequency of application of each load set was specified. (Table 2.1.2-II) Supplementary data for such items as wing sweeping friction effects was also included in NA 75-346.

Subsequent to the receipt of the fatigue test spectrum data from RI, information was provided on the B-1 analytic spectrum for AMAVS fatigue and fracture analysis. Necessary RI math model loads were furnished as well as a definition of the load combinations for each load step. The analytic spectrum data is presented in Table 2.1.2-III.

Table 2.1.2-I BASIC FATIGUE LOAD CONDITIONS

COND. NO.	DESCRIPTION	RUN WING POS.	STRUCTURAL LOADS CONDITION	NUMBER
10100	Inertia Ground Cond.	15.0	+ 481001774	1001110000
60100	Inertia Ground Cond.	15.0	+ 481001784	1001110000
120100	Inertia Ground Cond.	15.0	+ 481001794	1001110000
16100	Braking Ground Cond.	15.0	+ 800010770	1000000000
66100	Braking Ground Cond.	15.0	+ 800010780	1000000000
126100	Braking Ground Cond.	15.0	+ 800010790	1000000000
31210	Post Take-Off Flight	15.0	+ 011002809	1003092000
32210	Post Take-Off Flight	15.0	+ 019102809	1003092000
111210	Pre Landing Flight	15.0	+ 011008819	1003092000
111310	Pre Landing Flight	15.0	+ 011008819	1003092012
112210	Pre Landing Flight	15.0	+ 019108819	1003092000
113210	Pre Landing Flight	15.0	+ 319108819	1005092000
41430	Climb and Descent	25.0	+ 011003825	1153032100
42430	Climb and Descent	25.0	+ 019103825	1153032100
81430	Climb and Descent	25.0	+ 011003835	1153032100
81530	Climb and Descent	25.0	+ 011003835	1153032112
82430	Climb and Descent	25.0	+ 019103835	1153032100
82530	Climb and Descent	25.0	+ 019103835	1153032112
51440	Subsonic Cruise	25.0	+ 011004845	1253030300
52440	Subsonic Cruise	25.0	+ 019104845	1253030300
53440	Subsonic Cruise	25.0	+ 319104845	1255030300
21440	Subsonic Cruise	25.0	+ 011004855	1253030300
22440	Subsonic Cruise	25.0	+ 019104855	1253030300
101440	Subsonic Cruise	25.0	+ 011004865	1253030300
102440	Subsonic Cruise	25.0	+ 019104865	1253030300
31440	Refuel Flight Cond.	25.0	+ 011005875	1253030300
32440	Refuel Flight Cond.	25.0	+ 019105875	1253030300
111620	Terrain Following-Out	55.0	+ 011007925	1003060200
112620	Terrain Following-Out	55.0	+ 019107925	1003060200
113620	Terrain Following-Out	55.0	+ 319107925	1005060200
91770	Climb and Descent	67.5	+ 011003885	1453081300

Table 2.1.2-I BASIC FATIGUE LOAD CONDITIONS (CONT'D.)

COND. NO.	DESCRIPTION	RUN	WING POS.	STRUCTURAL LOADS CONDITION	NUMBER
91870	Climb and Descent		67.5	+ 011003885	1453081312
92770	Climb and Descent		67.5	+ 019103885	1453081300
92870	Climb and Descent		67.5	+ 019103885	1453081312
111780	Supersonic Cruise		67.5	+ 011004895	1553081500
112780	Supersonic Cruise		67.5	+ 019104895	1553081500
51750	Terrain Following-In		67.5	+ 011006905	1003080500
52750	Terrain Following-In		67.5	+ 019106905	1003080500
53750	Terrain Following-In		67.5	+ 319106905	1005080500
71760	Terrain Following-Out		67.5	+ 011007915	1003080700
72760	Terrain Following-Out		67.5	+ 019107915	1003080700
73760	Terrain Following-Out		67.5	+ 319107915	1005080700
53755	Terrain Following-In SCAS On		67.5	+ 319206905	1005080500
73765	Terrain Following-Out SCAS O		67.5	+ 319207915	1005080700
17100	Towing		15.0	N.A.	N.A.

* Revised 9/24/75

TABLE 2.1.2-II

UPDATED AMAVS SPECTRUM DATA FOR FATIGUE TEST

MISSION

STEP	WING ANGLE	FAT. COND.	MAXIMUM					FAT. COND.	MINIMUM					EVERY 100TH	EVERY 10TH	EVERY
1	15	3	1.51 X	60100				503	.49 X	60100				1		
2		4	1.43 X	60100				504	.57 X	60100					1	
3		5	1.35 X	60100				505	.64 X	60100						1
4		8	1.00 X	66100.5	+ 1.00 X	60100		508	1.00 X	60100						1
5		12	1.48 X	10100				512	.52 X	10100				1		
6		13	1.39 X	10100				513	.61 X	10100					1	
7		14	1.32 X	10100				514	.68 X	10100						1
8		16	1.00 X	16100.5	+ 1.00 X	10100		516	1.00 X	10100						1
9		18	1.00 X	31210	+ .72 X	32210		518	1.00 X	31210	- .76 X	32210		1		
10		19	1.00 X	31210	+ .48 X	32210		519	1.00 X	31210	- .54 X	32210			1	
11		20	1.00 X	31210	+ .28 X	32210		520	1.00 X	31210	- .37 X	32210				1
12	15	21	1.00 X	31210	- 1.00 X	1345.15		521	1.00 X	31210	+ 1.00 X	1345.15				1
13	25	22	1.00 X	41430	- 1.00 X	1345.25		522	1.00 X	41430	+ 1.00 X	1345.25				1
14		23	1.00 X	41430	+ .85 X	42430		523	1.00 X	41430	- .89 X	42430		1		
15		24	1.00 X	41430	+ .62 X	42430		524	1.00 X	41430	- .65 X	42430			1	
16		25	1.00 X	41430	+ .42 X	42430		525	1.00 X	41430	- .48 X	42430				1
17		26	1.00 X	41430	+ .24 X	42430		526	1.00 X	41430	- .00 X	42430				1
18		27	1.00 X	41430	+ .00 X	42430		527	1.00 X	41430	- .34 X	42430				1
19		28	1.00 X	51440	+ .85 X	53440		528	1.00 X	51440	- .85 X	53440		1		
20		29	1.00 X	51440	+ .57 X	53440		529	1.00 X	51440	- .57 X	53440			1	
21		30	1.00 X	51440	+ .34 X	53440		530	1.00 X	51440	- .34 X	53440				1
22		31	1.00 X	51440	+ .22 X	53440		531	1.00 X	51440	- .22 X	53440				1
23		32	1.00 X	51440	+ .95 X	52440		532	1.00 X	51440	- .80 X	52440		1		
24		33	1.00 X	51440	+ .75 X	52440		533	1.00 X	51440	- .63 X	52440			1	
25		34	1.00 X	51440	+ .55 X	52440		534	1.00 X	51440	- .48 X	52440				1
26		35	1.00 X	51440	+ .32 X	52440		535	1.00 X	51440	- .00 X	52440				1
27		36	1.00 X	51440	+ .00 X	52440		536	1.00 X	51440	- .35 X	52440				1
28	25	37	1.00 X	51440	- 1.00 X	1072.25		537	1.00 X	51440	- 1.00 X	1072.25				1
29	67.5	38	1.00 X	91770	- 1.00 X	1072.675		538	1.00 X	91770	- 1.00 X	1072.675				1
30		39	1.00 X	91770	+ 1.63 X	92770		539	1.00 X	91770	- 1.53 X	92770		1		
31		40	1.00 X	91770	+ 1.14 X	92770		540	1.00 X	91770	- 1.07 X	92770			1	
32		41	1.00 X	91770	+ .71 X	92770		541	1.00 X	91770	- .73 X	92770				1
33		42	1.00 X	91770	+ .35 X	92770		542	1.00 X	91770	- .00 X	92770				1
34		44	1.00 X	111780	+ 1.57 X	112780		544	1.00 X	111780	- 1.18 X	112780		1		
35	67.5	45	1.00 X	111780	+ 1.12 X	112780		545	1.00 X	111780	- .81 X	112780			1	

TABLE 2.1.2-II (Cont'd)

STEP	WING ANGLE	FAT. COND.	MAXIMUM				FAT. COND.	MINIMUM				MISSION EVERY 100TH	EVERY 10TH	EVERY
36	67.5	46	1.00 X 111780	+ .69 X 112780			546	1.00 X 111780	- .51 X 112780					1
37		49	1.00 X 91870	+ 1.63 X 92870			549	1.00 X 91870	- 1.53 X 92870			1		
38		50	1.00 X 91870	+ 1.14 X 92870			550	1.00 X 91870	- 1.07 X 92870				1	
39		51	1.00 X 91870	+ .71 X 92870			551	1.00 X 91870	- .73 X 92870					1
40	67.5	54	1.00 X 91770	+ 1.00 X 1072.675			554	1.00 X 91770	+ 1.00 X 1072.675					1
41	25	55	1.00 X 31440	+ 1.00 X 1072.25			555	1.00 X 31440	+ 1.00 X 1072.25					1
42		56	1.00 X 31440	+ .68 X 32440			556	1.00 X 31440	- .85 X 32440			1		
43		57	1.00 X 31440	+ .56 X 32440			557	1.00 X 31440	- .67 X 32440				1	
44		58	1.00 X 31440	+ .38 X 32440			558	1.00 X 31440	- .52 X 32440					1
45		59	1.00 X 31440	+ .26 X 32440			559	1.00 X 31440	- .00 X 32440					1
46		60	1.00 X 31440	+ .00 X 32440			560	1.00 X 31440	- .37 X 32440					1
47		61	1.00 X 21440	+ 1.00 X 22440			561	1.00 X 21440	- .82 X 22440			1		
48		62	1.00 X 21440	+ .78 X 22440			562	1.00 X 21440	- .62 X 22440				1	
49		63	1.00 X 21440	+ .58 X 22440			563	1.00 X 21440	- .45 X 22440					1
50		64	1.00 X 21440	+ .34 X 22440			564	1.00 X 21440	- .00 X 22440					1
51		65	1.00 X 21440	+ .00 X 22440			565	1.00 X 21440	- .30 X 22440					1
52		66	1.00 X 41430	+ .85 X 42430			566	1.00 X 41430	- .89 X 42430			1		
53		67	1.00 X 41430	+ .62 X 42430			567	1.00 X 41430	- .65 X 42430				1	
54		68	1.00 X 41430	+ .42 X 42430			568	1.00 X 41430	- .48 X 42430					1
55		69	1.00 X 41430	+ .24 X 42430			569	1.00 X 41430	- .00 X 42430					1
56	25	71	1.00 X 41430	- 1.00 X 1057.25			571	1.00 X 41430	+ 1.00 X 1057.25					1
57	67.5	72	1.00 X 51750	- 1.00 X 1057.675			572	1.00 X 51750	+ 1.00 X 1057.675					1
58*		73	1.00 X 51750	- .50 X 52750	+ .65 X 53755		573	1.00 X 51750	- .50 X 52750	- .65 X 53755		1		
59*		74	1.00 X 51750	- .50 X 52750	+ .51 X 53755		574	1.00 X 51750	- .50 X 52750	- .51 X 53755			1	
60*		75	1.00 X 51750	- .50 X 52750	+ .40 X 53755		575	1.00 X 51750	- .50 X 52750	- .41 X 53755				1
61*		78	1.00 X 51750	+ .71 X 53755			578	1.00 X 51750	- .71 X 53755			1		
62*		79	1.00 X 51750	+ .56 X 53755			579	1.00 X 51750	- .56 X 53755				1	
63*		80	1.00 X 51750	+ .44 X 53755			580	1.00 X 51750	- .45 X 53755					1
64*		83	1.00 X 51750	+ .70 X 52750	+ .65 X 53755		583	1.00 X 51750	+ .70 X 52750	- .66 X 53755		1		
65*		84	1.00 X 51750	+ .70 X 52750	+ .52 X 53755		584	1.00 X 51750	+ .70 X 52750	- .53 X 53755			1	
66*		85	1.00 X 51750	+ .70 X 52750	+ .41 X 53755		585	1.00 X 51750	+ .70 X 52750	- .42 X 53755				1
67		88	1.00 X 51750	+ 2.00 X 52750			588	1.00 X 51750	- .00 X 52750					1
68		89	1.00 X 51750	+ 1.50 X 52750			589	1.00 X 51750	- .00 X 52750					1
69		90	1.00 X 51750	+ 1.18 X 52750			590	1.00 X 51750	- .66 X 52750					1
70	67.5	91	1.00 X 51750	+ 1.08 X 52750			591	1.00 X 51750	- .61 X 52750					11

TABLE 2.1.2-II (Cont'd)

STEP	WING ANGLE	FAT. COND.	MAXIMUM	FAT. COND	MINIMUM	MISSION EVERY 100TH	MISSION EVERY 10TH	MISSION EVERY
71	67.5	92	1.00 X 51750 + .90 X 52750	592	1.00 X 51750 - .58 X 52750			29
72		93	1.00 X 51750 + .70 X 52750	593	1.00 X 51750 - .52 X 52750			1
73*		96	1.00 X 71760 + .80 X 73765	596	1.00 X 71760 - .81 X 73765	1		
74*		97	1.00 X 71760 + .64 X 73765	597	1.00 X 71760 - .64 X 73765		1	
75*		98	1.00 X 71760 + .50 X 73765	598	1.00 X 71760 - .50 X 73765			1
76		102	1.00 X 71760 + .39 X 72760	602	1.00 X 71760 - .39 X 72760	1		
77		103	1.00 X 71760 + .36 X 72760	603	1.00 X 71760 - .35 X 72760		1	
78		104	1.00 X 71760 + .31 X 72760	604	1.00 X 71760 - .30 X 72760			1
79	67.5	106	1.00 X 71760 + 1.00 X 1044.675	606	1.00 X 71760 + 1.00 X 1044.675			1
80	55	107	1.00 X 111620 + 1.00 X 1044.55	607	1.00 X 111620 + 1.00 X 1044.55			1
81		108	1.00 X 111620 - .50 X 112620 + .59 X 113620	608	1.00 X 111620 - .50 X 112620 - .59 X 113620	1		
82		109	1.00 X 111620 - .50 X 112620 + .46 X 113620	609	1.00 X 111620 - .50 X 112620 - .47 X 113620		1	
83		110	1.00 X 111620 - .50 X 112620 + .34 X 113620	610	1.00 X 111620 - .50 X 112620 - .35 X 113620			1
84		113	1.00 X 111620 + .65 X 113620	613	1.00 X 111620 - .65 X 113620	1		
85		114	1.00 X 111620 + .51 X 113620	614	1.00 X 111620 - .52 X 113620		1	
86		115	1.00 X 111620 + .38 X 113620	615	1.00 X 111620 - .39 X 113620			1
87		117	1.00 X 111620 + .60 X 112620 + .60 X 113620	617	1.00 X 111620 + .60 X 112620 - .61 X 113620	1		
88		118	1.00 X 111620 + .60 X 112620 + .46 X 113620	618	1.00 X 111620 + .60 X 112620 - .47 X 113620		1	
89		119	1.00 X 111620 + .60 X 112620 + .34 X 113620	619	1.00 X 111620 + .60 X 112620 - .35 X 113620			1
90		121	1.00 X 111620 + .96 X 112620	621	1.00 X 111620 - .66 X 112620			1
91		122	1.00 X 111620 + .83 X 112620	622	1.00 X 111620 - .61 X 112620			6
92		123	1.00 X 111620 + .61 X 112620	623	1.00 X 111620 - .50 X 112620			8
93	55	125	1.00 X 111620 + 1.00 X 1057.55	625	1.00 X 111620 + 1.00 X 1057.55			1
94	25	126	1.00 X 81430 + 1.00 X 1057.25	626	1.00 X 81430 + 1.00 X 1057.25			1
95		127	1.00 X 81430 + .95 X 82430	627	1.00 X 81430 - .87 X 82430	1		
96		128	1.00 X 81430 + .70 X 82430	628	1.00 X 81430 - .70 X 82430		1	
97		129	1.00 X 81430 + .48 X 82430	629	1.00 X 81430 - .65 X 82430			1
98		132	1.00 X 101440 + .95 X 102440	632	1.00 X 101440 - .78 X 102440	1		
99		133	1.00 X 101440 + .73 X 102440	633	1.00 X 101440 - .63 X 102440		1	
100		134	1.00 X 101440 + .51 X 102440	634	1.00 X 101440 - .47 X 102440			1
101		137	1.00 X 81530 + .95 X 82530	637	1.00 X 81530 - .87 X 82530	1		
102		138	1.00 X 81530 + .70 X 82530	638	1.00 X 81530 - .70 X 82530		1	
103		139	1.00 X 81530 + .48 X 82530	639	1.00 X 81530 - .65 X 82530			1
104	25	142	1.00 X 81430 + 1.00 X 1248.25	642	1.00 X 81430 + 1.00 X 1248.25			1
105	15	143	1.00 X 111210 + 1.00 X 1248.15	643	1.00 X 111210 + 1.00 X 1248.15			1

TABLE 2.1.2-II (Cont'd)

STEP	WING ANGLE	FAT. COND.	MAXIMUM	FAT. COND.	MINIMUM	MISSION EVERY 100TH	EVERY 10TH	EVERY
106	15	144	1.00 X 111210 + 1.06 X 113210	644	1.00 X 111210 - 1.06 X 113210	1		
107		145	1.00 X 111210 + .77 X 113210	645	1.00 X 111210 - .77 X 113210		1	
108		146	1.00 X 111210 + .54 X 113210	646	1.00 X 111210 - .56 X 113210			1
109		147	1.00 X 111210 + .32 X 113210	647	1.00 X 111210 - .32 X 113210			1
110		148	1.00 X 111210 + 1.03 X 112210	648	1.00 X 111210 - .80 X 112210	1		
111		149	1.00 X 111210 + .75 X 112210	649	1.00 X 111210 - .67 X 112210		1	
112		150	1.00 X 111210 + .52 X 112210	650	1.00 X 111210 - .53 X 112210			1
113		151	1.00 X 111210 + .27 X 112210	651	1.00 X 111210 - .00 X 112210			1
114		153	1.00 X 111310	653	1.00 X 111310			1
115		154	1.54 X 120100	654	.46 X 120100	1		
116		155	1.46 X 120100	655	.54 X 120100		1	
117		156	1.38 X 120100	656	.62 X 120100			1
118		159	1.00 X 126100.5 + 1.00 X 120100	659	1.00 X 120100			1
119		163	1.00 X 111210 + .52 X 112210	663	1.00 X 111210 - .53 X 112210			1
120	15	164	1.00 X 111210 - 1.00 X 1248.15	664	1.00 X 111210 - 1.00 X 1248.15			1
121	25	165	1.00 X 81430 - 1.00 X 1248.25	665	1.00 X 81430 - 1.00 X 1248.25			1
122	25	166	1.00 X 81430 + .48 X 82430	666	1.00 X 81430 - .55 X 82430			1
123	25	167	1.00 X 81430 + 1.00 X 1248.25	667	1.00 X 81430 + 1.00 X 1248.25			1
124	15	168	1.00 X 111210 + 1.00 X 1248.15	668	1.00 X 111210 + 1.00 X 1248.15			1
125		169	1.00 X 111210 + .52 X 112210	669	1.00 X 111210 - .53 X 112210			1
126		170	1.00 X 111310	670	1.00 X 111310			1
127		171	1.38 X 120100	671	.62 X 120100			1
128		172	1.00 X 126100.5 + 1.00 X 120100	672	1.00 X 120100			1
129		175	1.38 X 120100	675	.62 X 120100		1	
130		176	1.00 X 126100.5 + 1.00 X 120100	676	1.00 X 120100		1	
131		177	1.00 X 111210 + .52 X 112210	677	1.00 X 111210 - .53 X 112210		1	
132	15	178	1.00 X 111210 - 1.00 X 1248.15	678	1.00 X 111210 - 1.00 X 1248.15		1	
133	25	179	1.00 X 81430 - 1.00 X 1248.25	679	1.00 X 81430 - 1.00 X 1248.25		1	
134	25	180	1.00 X 81430 + .48 X 82430	680	1.00 X 81430 - .55 X 82430		1	
135	25	181	1.00 X 81430 + 1.00 X 1248.25	681	1.00 X 81430 + 1.00 X 1248.25		1	
136	15	182	1.00 X 111210 + 1.00 X 1248.15	682	1.00 X 111210 + 1.00 X 1248.15		1	
137		183	1.00 X 111210 + .52 X 112210	683	1.00 X 111210 - .60 X 112210		1	
138		184	1.00 X 111310	684	1.00 X 111310		1	
139		185	1.38 X 120100	685	.62 X 120100		1	
140	15	186	1.00 X 126100.5 + 1.00 X 120100	686	1.00 X 120100		1	

AMAVS
UPDATED ANALYTIC
FATIGUE SPECTRUM

Table 2.1.2-III

10/14/75
Revised 10/23/75

MISSION

STEP	WING ANGLE	FAT. COND.	MAXIMUM	FAT. COND	MINIMUM	EVERY 100TH	EVERY 10TH	EVERY
1	15	1	1.00 X 60100 + .78 X 17100	501	1.00 X 60100 - .78 X 17100			4
2	1	2	1.00 X 60100 + .39 X 17100	502	1.00 X 60100 - .39 X 17100			3
3	15	3	1.51 X 60100	503	.49 X 60100	1		
4		4	1.43 X 60100	504	.57 X 60100		1	
5		5	1.35 X 60100	505	.64 X 60100			1
6		6	1.28 X 60100	506	.71 X 60100			7
7		7	1.21 X 60100	507	.79 X 60100			42
8		8	1.00 X 66100 + 1.00 X 60100	508	1.00 X 60100			1
9		9	1.00 X 60100 + .53 X 66100	509	1.00 X 60100			3
10		10	1.00 X 10100 + 1.00 X 17100	510	1.00 X 10100 - 1.00 X 17100			2
11		11	1.00 X 10100 + 1.00 X 17100	511	1.00 X 10100 - 1.00 X 17100			1
12		12	1.48 X 10100	512	.52 X 10100	1		
13		13	1.39 X 10100	513	.61 X 10100			
14		14	1.32 X 10100	514	.68 X 10100			1
15		15	1.23 X 10100	515	.77 X 10100			15
16		16	1.00 X 16100 + 1.00 X 10100	516	1.00 X 10100			1
17		17	1.00 X 10100 + .53 X 16100	517	1.00 X 10100			1
18		18	1.00 X 31210 + .72 X 32210	518	1.00 X 31210 - .76 X 32210	1		
19		19	1.00 X 31210 + .48 X 32210	519	1.00 X 31210 - .54 X 32210		1	
20		20	1.00 X 31210 + .28 X 32210	520	1.00 X 31210 - .37 X 32210			1
21	15	21	1.00 X 31210 - 1.00 X 1345.15	521	1.00 X 31210 - 1.00 X 1345.15			1
22	25	22	1.00 X 41430 - 1.00 X 1345.25	522	1.00 X 41430 - 1.00 X 1345.25			1
23		23	1.00 X 41430 + .85 X 42430	523	1.00 X 41430 - .89 X 42430	1		
24		24	1.00 X 41430 + .62 X 42430	524	1.00 X 41430 - .65 X 42430		1	
25		25	1.00 X 41430 + .42 X 42430	525	1.00 X 41430 - .48 X 42430			1
26		26	1.00 X 41430 + .24 X 42430	526	1.00 X 41430 - .00 X 42430			4
27		27	1.00 X 41430 + .00 X 42430	527	1.00 X 41430 - .34 X 42430			3
28		28	1.00 X 51440 + .85 X 53440	528	1.00 X 51440 - .85 X 53440	1		
29		29	1.00 X 51440 + .57 X 53440	529	1.00 X 51440 - .57 X 53440		1	
30		30	1.00 X 51440 + .34 X 53440	530	1.00 X 51440 - .34 X 53440			1
31		31	1.00 X 51440 + .22 X 53440	531	1.00 X 51440 - .22 X 53440			1
32		32	1.00 X 51440 + .95 X 52440	532	1.00 X 51440 - .80 X 52440	1		
33		33	1.00 X 51440 + .75 X 52440	533	1.00 X 51440 - .63 X 52440		1	
34		34	1.00 X 51440 + .55 X 52440	534	1.00 X 51440 - .48 X 52440			1
35		35	1.00 X 51440 + .32 X 52440	535	1.00 X 51440 - .00 X 52440			19

AMAVS
UPDATED ANALYTIC
FATIGUE SPECTRUM

Table 2.1.2-III (CONT'D)

10/14/75

MISSION

STEP	WING ANGLE	FAT. COND.	MAXIMUM	FAT. COND.	MINIMUM	EVERY 100TH	EVERY 10TH	EVERY
36	25	36	1.00 X 51440 + .00 X 52440	536	1.00 X 51440 - .35 X 52440			6
37	25	37	1.00 X 51440 - 1.00 X 1072.25	537	1.00 X 51440 - 1.00 X 1072.25			1
38	67.5	38	1.00 X 91770 - 1.00 X 1072.675	538	1.00 X 91770 - 1.00 X 1072.675			1
39		39	1.00 X 91770 + 1.63 X 92770	539	1.00 X 91770 - 1.53 X 92770	1		
40		40	1.00 X 91770 + 1.14 X 92770	540	1.00 X 91770 - 1.07 X 92770		1	
41		41	1.00 X 91770 + .71 X 92770	541	1.00 X 91770 - .73 X 92770			1
42		42	1.00 X 91770 + .35 X 92770	542	1.00 X 91770 - .00 X 92770			8
43		43	1.00 X 91770	543	1.00 X 91770 - .45 X 92770			7
44		44	1.00 X 111780 + 1.57 X 112780	544	1.00 X 111780 - 1.18 X 112780	1		
45	67.5	45	1.00 X 111780 + 1.12 X 112780	545	1.00 X 111780 - .81 X 112780		1	
46	67.5	46	1.00 X 111780 + .69 X 112780	546	1.00 X 111780 - .51 X 112780			1
47		47	1.00 X 111780 + .32 X 112780	547	1.00 X 111780			5
48		48	1.00 X 111780	548	1.00 X 111780 - .31 X 112780			2
49		49	1.00 X 91870 + 1.63 X 92870	549	1.00 X 91870 - 1.53 X 92870	1		
50		50	1.00 X 91870 + 1.14 X 92870	550	1.00 X 91870 - 1.07 X 92870		1	
51		51	1.00 X 91870 + .71 X 92870	551	1.00 X 91870 - .73 X 92870			1
52		52	1.00 X 91870 + .35 X 92870	552	1.00 X 91870			8
53		53	1.00 X 91870	553	1.00 X 91870 - .45 X 92870			7
54	67.5	54	1.00 X 91770 + 1.00 X 1072.675	554	1.00 X 91770 + 1.00 X 1072.675			1
55	25	55	1.00 X 31440 + 1.00 X 1072.25	555	1.00 X 31440 + 1.00 X 1072.25			1
56		56	1.00 X 31440 + .68 X 32440	556	1.00 X 31440 - .85 X 32440	1		
57		57	1.00 X 31440 + .56 X 32440	557	1.00 X 31440 - .67 X 32440		1	
58		58	1.00 X 31440 + .38 X 32440	558	1.00 X 31440 - .52 X 32440			1
59		59	1.00 X 31440 + .26 X 32440	559	1.00 X 31440 - .00 X 32440			10
60		60	1.00 X 31440 + .00 X 32440	560	1.00 X 31440 - .37 X 32440			15
61		61	1.00 X 21440 + 1.00 X 22440	561	1.00 X 21440 - .82 X 22440	1		
62		62	1.00 X 21440 + .78 X 22440	562	1.00 X 21440 - .62 X 22440		1	
63		63	1.00 X 21440 + .58 X 22440	563	1.00 X 21440 - .45 X 22440			1
64		64	1.00 X 21440 + .34 X 22440	564	1.00 X 21440 - .00 X 22440			28
65		65	1.00 X 21440 + .00 X 22440	565	1.00 X 21440 - .30 X 22440			8
66		66	1.00 X 41430 + .85 X 42430	566	1.00 X 41430 - .89 X 42430	1		
67		67	1.00 X 41430 + .62 X 42430	567	1.00 X 41430 - .65 X 42430		1	
68		68	1.00 X 41430 + .42 X 42430	568	1.00 X 41430 - .48 X 42430			1
69		69	1.00 X 41430 + .24 X 42430	569	1.00 X 41430 - .00 X 42430			4
70		70	1.00 X 41430	570	1.00 X 41430 - .34 X 42430			3

AMAVS
UPDATED ANALYTIC
FATIGUE SPECTRUM

Table 2.1.2-III (CONT'D.)

10/14/75

MISSION

	WING ANGLE	FAT. COND.	MAXIMUM	FAT. COND.	MINIMUM	EVERY 100TH	EVERY 10TH	EVERY
71	25	71	1.00 X 41430 - 1.00 X 1057.25	571	1.00 X 41430 - 1.00 X 1057.25			1
72	67.5	72	1.00 X 51750 - 1.00 X 1057.675	572	1.00 X 51750 - 1.00 X 1057.675			1
73		73	1.00 X 51750 - .50 X 52750 + .65 X 53755	573	1.00 X 51750 - .50 X 52750 - .65 X 53755	1		
74		74	1.00 X 51750 - .50 X 52750 + .51 X 53755	574	1.00 X 51750 - .50 X 52750 - .51 X 53755		1	
75		75	1.00 X 51750 - .50 X 52750 + .40 X 53755	575	1.00 X 51750 - .50 X 52750 - .41 X 53755			1
76		76	1.00 X 51750 - .50 X 52750 + .29 X 053755	576	1.00 X 51750 - .50 X 52750 - .30 X 053755			10
77		77	1.00 X 51750 - .50 X 52750 + .22 X 053755	577	1.00 X 51750 - .50 X 52750 - .22 X 053755			17
78		78	1.00 X 51750 + .71 X 53755	578	1.00 X 51750 + .71 X 53755	1		
79		79	1.00 X 51750 + .56 X 53755	579	1.00 X 51750 + .56 X 53755		1	
80		80	1.00 X 51750 + .44 X 53755	580	1.00 X 51750 + .45 X 53755			1
81		81	1.00 X 51750 + .34 X 53755	581	1.00 X 51750 - .34 X 53755			10
82		82	1.00 X 51750 + .24 X 53755	582	1.00 X 51750 - .25 X 53755			61
83		83	1.00 X 51750 + .70 X 52750 + .65 X 53755	583	1.00 X 51750 + .70 X 52750 - .66 X 53755	1		
84		84	1.00 X 51750 + .70 X 52750 + .52 X 53755	584	1.00 X 51750 + .70 X 52750 - .53 X 53755		1	
85		85	1.00 X 51750 + .70 X 52750 + .41 X 53755	585	1.00 X 51750 + .70 X 52750 - .42 X 53755			1
86		86	1.00 X 51750 + .70 X 52750 + .40 X 53755	586	1.00 X 51750 + .70 X 52750 - .31 X 53755			10
87		87	1.00 X 51750 + .70 X 52750 + .23 X 53755	587	1.00 X 51750 + .70 X 52750 - .23 X [illegible]			26
88		88	1.00 X 51750 + 2.00 X 52750	588	1.00 X 51750 - .00 X 52750			1
89		89	1.00 X 51750 + 1.50 X 52750	589	1.00 X 51750 - .00 X 52750			1
90		90	1.00 X 51750 + 1.18 X 52750	590	1.00 X 51750 - .66 X 52750			1
91	67.5	91	1.00 X 51750 + 1.08 X 52750	591	1.00 X 52750 - .61 X 52750			11
92	67.5	92	1.00 X 51750 + .90 X 52750	592	1.00 X 51750 - .58 X 52750			29
93		93	1.00 X 51750 + .70 X 52750	593	1.00 X 51750 - .52 X 52750			46
94		94	1.00 X 51750 + .50 X 52750	594	1.00 X 51750 - .43 X 52750			75
95		95	1.00 X 51750 + .30 X 52750	595	1.00 X 51750 - .29 X 52750			86
96		96	1.00 X 71760 + .80 X 73765	596	1.00 X 71760 - .81 X 73765	1		
97		97	1.00 X 71760 + .64 X 73765	597	1.00 X 71760 - .64 X 73765		1	
98		98	1.00 X 71760 + .50 X 73765	598	1.00 X 71760 - .50 X 73765			1
99		99	1.00 X 71760 + .37 X 73765	599	1.00 X 71760 - .37 X 73765			10
100		100	1.00 X 71760 + .28 X 73765	600	1.00 X 71760 - .28 X 73765			20
101		101	1.00 X 71760 + .22 X 73765	601	1.00 X 71760 - .23 X 73765			42
102		102	1.00 X 71760 + .39 X 72760	602	1.00 X 71760 - .39 X 72760	1		
103		103	1.00 X 71760 + .36 X 72760	603	1.00 X 71760 - .35 X 72760		1	
104		104	1.00 X 71760 + .31 X 72760	604	1.00 X 71760 - .30 X 72760			1
105		105	1.00 X 71760 + .24 X 72760	605	1.00 X 71760 - .23 X 72760			3

AMAVS
UPDATED ANALYTIC
FATIGUE SPECTRUM

Table 2.1.2-III (CONT'D.)

STEP	WING ANGLE	FAT. COND.	MAXIMUM	FAT. COND.	MINIMUM	MISSION EVERY 100TH	EVERY 10TH	EVERY
106	67.5	106	1.00 X 71760 + 1.00 X 1044.675	606	1.00 X 71760 + 1.00 X 1044.675			1
107	55	107	1.00 X 111620 + 1.00 X 1044.55	607	1.00 X 111620 + 1.00 X 1044.55			1
108		108	1.00 X 111620 - .50 X 112620 + .59 X 113620	608	1.00 X 111620 - .50 X 112620 - .59 X 113620	1		
109		109	1.00 X 111620 - .50 X 112620 + .46 X 113620	609	1.00 X 111620 - .50 X 112620 - .47 X 113620		1	
110		110	1.00 X 111620 - .50 X 112620 + .34 X 113620	610	1.00 X 111620 - .50 X 112620 - .35 X 113620			1
111		111	1.00 X 111620 - .50 X 112620 + .24 X 113620	611	1.00 X 111620 - .50 X 112620 - .24 X 113620			4
112		113	1.00 X 111620 + .65 X 113620	613	1.00 X 111620 - .65 X 113620	1		
113		114	1.00 X 111620 + .51 X 113620	614	1.00 X 111620 - .52 X 113620		1	
114		115	1.00 X 111620 + .38 X 113620	615	1.00 X 111620 - .39 X 113620			1
115		215	1.00 X 111620 + .28 X 113620	715	1.00 X 111620 - .29 X 113620			4
116		116	1.00 X 111620 + .22 X 113620	616	1.00 X 111620 - .23 X 113620			7
117		117	1.00 X 111620 + .60 X 112620 + .60 X 113620	617	1.00 X 111620 + .60 X 112620 - .61 X 113620	1		
118		118	1.00 X 111620 + .60 X 112620 + .46 X 113620	618	1.00 X 111620 + .60 X 112620 - .47 X 113620		1	
119		119	1.00 X 111620 + .60 X 112620 + .34 X 113620	619	1.00 X 111620 + .60 X 112620 - .35 X 113620			1
120		120	1.00 X 111620 + .60 X 112620 + .24 X 113620	620	1.00 X 111620 + .60 X 112620 - .25 X 113620			4
121		121	1.00 X 111620 + .96 X 112620	621	1.00 X 111620 - .66 X 112620			1
122		122	1.00 X 111620 + .83 X 112620	622	1.00 X 111620 - .61 X 112620			6
123		123	1.00 X 111620 + .61 X 112620	623	1.00 X 111620 - .50 X 112620			8
124		124	1.00 X 111620 + .34 X 112620	624	1.00 X 111620 - .32 X 112620			9
125	55	125	1.00 X 111620 + 1.00 X 1057.55	625	1.00 X 111620 + 1.00 X 1057.55			1
126	25	126	1.00 X 81430 + 1.00 X 1057.25	626	1.00 X 81430 + 1.00 X 1057.25			1
127		127	1.00 X 81430 + .95 X 82430	627	1.00 X 81430 - .87 X 82430	1		
128		128	1.00 X 81430 + .70 X 82430	628	1.00 X 81430 - .70 X 82430		1	
129		129	1.00 X 81430 + .48 X 82430	629	1.00 X 81430 - .65 X 82430			1
130		130	1.00 X 81430 + .26 X 82430	630	1.00 X 81430			10
131		131	1.00 X 81430	631	1.00 X 81430 - .41 X 82430			8
132		132	1.00 X 101440 + .95 X 102440	632	1.00 X 101440 - .78 X 102440	1		
133		133	1.00 X 101440 + .73 X 102440	633	1.00 X 101440 - .63 X 102440		1	
134		134	1.00 X 101440 + .51 X 102440	634	1.00 X 101440 - .47 X 102440			1
135		135	1.00 X 101440 + .29 X 102440	635	1.00 X 101440			12
136		136	1.00 X 101440	636	1.00 X 101440 - .36 X 102440			3
137		137	1.00 X 81530 + .95 X 82530	637	1.00 X 81530 - .87 X 82530	1		
138		138	1.00 X 81530 + .70 X 82530	638	1.00 X 81530 - .70 X 82530		1	
139		139	1.00 X 81530 + .48 X 82530	639	1.00 X 81530 - .65 X 82530			1
140		140	1.00 X 81530 + .26 X 82530	640	1.00 X 81530			10

AMAUS
UPDATED ANALYTIC
FATIGUE SPECTRUM

Table 2.1.2-III (CONT'D.)

10/14/75
Revised 10/23/75

MISSION

STEP	WING ANGLE	FAT. COND.	MAXIMUM	FAT. COND.	MINIMUM	EVERY 100TH	EVERY 10TH	EVERY
141	25	141	1.00 X 81530	641	1.00 X 81530 - .41 X 82530			8
142	25	142	1.00 X 81430 + 1.00 X 1248.25	642	1.00 X 81430 + 1.00 X 1248.25			1
143	15	143	1.00 X 111210 + 1.00 X 1248.15	643	1.00 X 111210 + 1.00 X 1248.15			1
144	15	144	1.00 X 111210 + 1.06 X 113210	644	1.00 X 111210 - 1.06 X 113210	1		
145		145	1.00 X 111210 + .77 X 113210	645	1.00 X 111210 - .77 X 113210		1	
146		146	1.00 X 111210 + .54 X 113210	646	1.00 X 111210 - .56 X 113210			1
147		147	1.00 X 111210 + .32 X 113210	647	1.00 X 111210 - .32 X 113210			87
148		148	1.00 X 111210 + 1.03 X 112210	648	1.00 X 111210 - .80 X 112210	1		
149		149	1.00 X 111210 + .75 X 112210	649	1.00 X 111210 - .67 X 112210		1	
150		150	1.00 X 111210 + .52 X 112210	650	1.00 X 111210 - .53 X 112210			1
151		151	1.00 X 111210 + .27 X 112210	651	1.00 X 111210 - .00 X 112210			17
152		152	1.00 X 111210	652	1.00 X 111210 - .39 X 112210			13
153		153	1.00 X 111310	653	1.00 X 111310			1
154		154	1.54 X 120100	654	.46 X 120100	1		
155		155	1.46 X 120100	655	.54 X 120100		1	
156		156	1.38 X 120100	656	.62 X 120100			1
157		157	1.31 X 120100	657	.69 X 120100			10
158		158	1.22 X 120100	658	.78 X 120100			104
159		159	1.00 X 126100 + 1.00 X 120100	659	1.00 X 120100			3
160		160	1.00 X 120100 + .53 X 126100	660	1.00 X 120100			6
161		161	1.00 X 120100 + .49 X 17100	661	1.00 X 120100 - .49 X 17100			6
162		162	1.00 X 120100 + .24 X 1/100	662	1.00 X 120100 - .24 X 17100			5
163		163	1.00 X 111210 + .52 X 112210	663	1.00 X 111210 - .53 X 112210			1
164	15	164	1.00 X 111210 - 1.00 X 1248.15	664	1.00 X 111210 - 1.00 X 1248.15			1
165	25	165	1.00 X 81430 - 1.00 X 1248.25	665	1.00 X 81430 - 1.00 X 1248.25			1
166	25	166	1.00 X 81430 + .48 X 82430	666	1.00 X 81430 - .55 X 82430			1
167	25	167	1.00 X 81430 + 1.00 X 1248.25	667	1.00 X 81430 + 1.00 X 1248.25			1
168	15	168	1.00 X 111210 + 1.00 X 1248.15	668	1.00 X 111210 + 1.00 X 1248.15			1
169		169	1.00 X 111210 + .52 X 112210	669	1.00 X 111210 - .53 X 112210			1
170		170	1.00 X 111310	670	1.00 X 111310			1
171		171	1.38 X 120100	671	.62 X 120100			1
172		172	1.00 X 126100 + 1.00 X 120100	672	1.00 X 120100			1
173		173	1.00 X 120100 + .49 X 17100	673	1.00 X 120100 - .49 X 17100			1
174		174	1.00 X 120100 + .49 X 17100	674	1.00 X 120100 - .49 X 17100		1	
175		175	1.38 X 120100	675	.62 X 120100		1	

AMAVS
UPDATED ANALYTIC
FATIGUE SPECTRUM

Table 2.1.2-III (CONT'D)

10/14/75

STEP	WING ANGLE	FAT. COND.			MAXIMUM				FAT. COND			MINIMUM				EVERY 100TH	MISSION EVERY 10TH	EVERY	
176	15	176	1.00 X	126100	+ 1.00 X	120100			676	1.00 X	120100						1		
177	|	177	1.00 X	111210	+ .52 X	112210			677	1.00 X	111210	- .53 X	112210				1		
178	15	178	1.00 X	111210	- 1.00 X	1248.15			678	1.00 X	111210	- 1.00 X	1248.15				1		
179	25	179	1.00 X	81430	- 1.00 X	1248.25			679	1.00 X	81430	- 1.00 X	1248.25				1		
180	25	180	1.00 X	81430	+ .48 X	82430			680	1.00 X	81430	- .55 X	82430				1		
181	25	181	1.00 X	81430	+ 1.00 X	1248.25			681	1.00 X	81430	+ 1.00 X	1248.25				1		
182	15	182	1.00 X	111210	+ 1.00 X	1248.15			682	1.00 X	111210	+ 1.00 X	1248.15				1		
183	|	183	1.00 X	111210	+ .52 X	112210			683	1.00 X	111210	- .60 X	112210				1		
184	|	184	1.00 X	111310					684	1.00 X	111310						1		
185	|	185	1.38 X	120100					685	.62 X	120100						1		
186	15	186	1.00 X	126100	+ 1.00 X	120100			686	1.00 X	120100						1		
187	|	187	1.00 X	120100	+ .49 X	17100			687	1.00 X	120100	- .49 X	17100				1		

2.1.2.3 Analysis of Structural Changes

The existing titanium Hi-Lok pattern attaching the X7223903 aluminum splice plate to the basic wing sweep actuator fittings was found to be structurally deficient so a new pattern using eight additional steel Hi-Loks per airplane was developed and analyzed.

It was also found that the fastener patterns at X_F39 and X_F84 for the upper cover chordwise splices were not adequate for the final math model loads and patterns incorporating added and increased size fasteners were analyzed to arrive at an acceptable configuration.

2.1.2.4 Strain Survey, Full Scale Test

AFFDL Structural Test Facility personnel first performed the test operations check out and strain survey task through the static application of each of the fatigue test conditions specified in FZS-219, Rev. B. This included loading at selected increments to the following percentages of limit load which represented maximums for the original spectrum:

85.1% of AS2000	($\Lambda = 15^o$)	
92.1% of AS5000	($\Lambda = 15^o$)	
60.8% of AS7000	($\Lambda = 15^o$)	Taxi
71.3% of AS9000	($\Lambda = 25^o$)	
64.2% of AS10000	($\Lambda = 67.5^o$)	

For the flight conditions, 5 psig internal pressure was applied at maximum loads.

Since equipment limitations prevented reading and recording all strain gage channels simultaneously, the gages not connected for the first series were connected and runs for AS 2000 and AS 10000 were repeated since a review of the initial data indicated that they were representative conditions.

Following these tests, the updated fatigue conditions were reviewed and it was decided that Fatigue Condition 117 should be run since it was for a 55° sweep angle for which no prior data had been obtained. Loads were applied in increments up to 100% of the condition and 5 psig. internal pressure was applied. Finally, the test was rerun with the disconnected channels connected.

Computer printouts of all sensor readings were received from AFFDL and the raw data was reviewed. It was found, in general, that no excessively high stresses existed in the WCTS although some were less than predicted and some were greater.

Sample data for several representative points is shown in Table 2.1.2-IV. No significant nonlinear behavior was observed. The left hand instrumented shear strut (Gage 7001) showed better agreement with predicted loads than did the right hand strut. (Gage 7002). Complete agreement was not expected since these loads are very sensitive to upper lug angles which have manufacturing variations. In addition, the right hand strut attachment had some variable looseness for a portion of the testing.

One area of concern was the lugs where bending was indicated by corresponding gages on upper and lower surfaces. The measured and predicted stresses are shown in Figures 2.1.2-7 and 2.1.2-8 for the upper and lower lugs. Although bending was present, it was decided that no tension stresses were high enough to indicate a potential fatigue problem.

As a measure of the efficacy of the test fixture in applying the fuselage interface loads to the WCTS, the axial stresses in the longerons near 932 and 992 were compared with those predicted by the simulated fuselage math model for corresponding locations. The comparisons are shown in Table 2.1.2-V. Relatively good agreement was obtained for the major members, particularly since the predicted stresses are based on estimations of effective axial area to supplement the relatively gross finite element simulation of the simulated fuselage and adjacent structure. Preliminary review of the data indicates that shear flows do not agree as well, but because of the limited number of strain gages, a full comparison is not possible. By way of additional comparison, ratios of the predicted simulated fuselage longeron loads to the NARSAP values furnished by RI are included in the table.

It should be noted that for all strain survey data presented small corrections for zero shift were not made in most instances so that stresses as obtained from gages are preliminary in nature. In addition, axial stresses from axial gages reflect no correction for biaxial stresses.

As a part of the strain survey, deflections of the fixture and of the specimen relative to the test fixture were measured. In general, the wing tip deflections were greater than predicted. A full review of the data has not been made, but a portion of the discrepancy appears to lie in greater than expected fixture deflections which allowed fuselage pitch to occur.

Further review of the test data is planned.

Table 2.1.2-IV

TYPICAL TEST AND PREDICTED STRESSES - 0 PSIG INTERNAL PRESSURE

GAGE	.851XAS2000 PREDICTED KSI	(2) TEST KSI	.642XAS10000 P KSI	(2) T KSI	1.0XFC117 T KSI	(3) GENERAL LOCATION
1050 R	79.4	72.3	55.7	48.4	43.1	Lower Plate - 10Ni. St.
1051 R	81.1	75.0	48.0	41.1	38.8	Lower Plate - 10 Ni. St.
1056 AX	65.3	65.9	36.4	35.1	32.7	Lower Plate - 10 Ni. St.
1057 AX	65.3	53.6	36.4	32.2	29.1	Lower Plate - 10 Ni. St.
1059 R	73.8	77.9	40.6	40.0	39.2	Lower Plate - 10 Ni. St.
1061 R	74.9	69.4	-37.7	-35.4	29.7	Lower Plate - 10 Ni. St.
1062 R	61.3	69.2	-39.0	-26.2	26.9	Lower Plate - 10 Ni. St.
1071 AX	51.1	50.9	32.9	32.1	27.7	Lower Plate - 10 Ni. St.
1072 AX	50.0	63.4	32.9	42.4	37.1	Lower Plate - 10 Ni. St.
1073 AX	51.1	71.4	32.9	45.8	39.3	Lower Plate - 10 Ni. St.
1075 AX	28.0	22.6	14.4	12.1	11.4	Lower Plate - 6AL4V Ti.
1076 AX	28.8	28.1	10.1	11.7	12.2	Lower Plate - 6AL4V Ti.
1079 AX	72.2	68.4	26.6	21.9	25.3	Lower Plate - 10 Ni. St.
1080 AX	68.4	73.7	24.7	25.7	28.3	Lower Plate - 10 Ni. St.
1081 AX	60.2	59.0	19.7	18.6	21.2	Lower Plate - 10 Ni. St.
1082 AX	64.1	64.1	23.1	22.0	25.2	Lower Plate - 10 Ni. St.

NOTES: (1) Principal Stresses for Rosettes (2) At Max Fatigue Load (3) See Figures 2.1.2-1 thru 2.1.2-6 (4) Predicted Stresses not Available for FC117 (5) R=Rosette, AX.=AXIAL

Table 2.1.2-IV (CONT'D.)

	P	T	P	T	T	GENERAL LOCATION
1084 AX	43.1	42.7	17.1	16.5	17.4	Lower Plate - 6AL4V Ti.
1085 AX	68.9	69.7	27.8	25.3	28.1	Lower Plate - 10 Ni St.
1087 AX	67.5	70.5	32.5	31.8	32.4	Lower Plate - 10 Ni St.
1088 AX	65.6	63.0	34.7	24.8	24.6	Lower Plate - 10 Ni St.
1098 AX	24.0	17.8	13.0	8.1	8.1	Lower Plate - 6AL4V Ti.
1102 AX	43.4	49.7	18.4	21.5	20.0	Lower Plate - 10 Ni St.
1104 AX	51.1	44.1	23.8	20.7	20.0	Lower Plate - 6AL4V Ti.
1106 AX	43.8	41.5	20.5	17.9	17.0	Lower Plate - 6AL4V Ti.
1109 AX	24.8	23.7	11.5	12.4	11.2	Lower Plate - 6AL4V Ti.
1112 AX	38.6	65.3	13.3	26.8	27.2	Lower Plate - 10 Ni. St.
2042 AX	-45.5	-73.4	-15.5	-28.6	-30.1	Upper Cover - 10 Ni. St.
2050 AX	-23.7	-26.5	-8.7	-12.4	-12.5	Upper Cover - 1C Ni. St.
2054 R	-32.9	-30.8	-3.9	-3.8	-8.0	Upper Cover - 10 Ni. St.
2058 AX	-28.9	-28.6	-11.2	-11.3	-11.7	Upper Cover - 10 Ni. St.
2064 AX	-26.9	-28.6	-11.2	-12.4	-12.4	Upper Cover - 2024 AL.
2070 AX	-26.5	-26.2	-11.7	-11.5	-11.4	Upper Cover - 2024 AL.
2072 AX	-14.6	-13.6	-6.8	-6.2	-5.8	Upper Cover - 2024 AL.
2074 AX	-23.4	-18.3	-10.7	-7.8	-7.7	Upper Cover - 2024 AL.
2077 R	-21.0	-23.0	-13.6	-12.4	-11.6	Upper Cover - 2024 AL.

Table 2.1.2-IV (CONT'D.)

	P	T	P	T	T	
3005 R	24.4	41.4	21.0	33.6	29.1	Y_F932 Bhd - 6AL 4V Ti.
3007 AX	31.2	83.8	16.2	48.7	42.5	Y_F932 Bhd - 10 Ni. St.
3008 AX	43.8	40.2	26.9	26.0	22.4	Y_F932 Bhd - 10 Ni. St.
3009 AX	51.1	48.7	32.9	28.3	24.7	Y_F932 Bhd - 10 Ni. St.
3010 AX	51.1	54.2	32.9	35.8	29.8	Y_F932 Bhd - 10 Ni. St.
3011 AX	13.6	14.5	2.4	1.0	0	Y_F932 Bhd - 10 Ni. St.
3012 AX	44.7	66.1	29.3	45.5	38.0	Y_F932 Bhd - 10 Ni. St.
3013 AX	50.8	55.7	33.8	36.0	31.7	Y_F932 Bhd - 10 Ni. St.
3014 AX	50.8	44.4	33.8	28.6	24.0	Y_F932 Bhd - 10 Ni. St.
3017 R	-22.1	-32.0	-28.2	-31.6	-23.2	Y_F932 Bhd - 10 Ni. St.
3020 AX	-37.5	-19.7	-28.2	-15.7	-14.1	Y_F932 Bhd - 6AL 4V Ti.
3022 AX	-56.0	-57.4	-34.9	-37.6	-32.4	Y_F932 Bhd - 10 Ni. St.
3025	-60.4	-59.1	-38.1	-35.2	-30.4	Y_F932 Bhd - 10 Ni. St.
4003 AX	56.5	31.1	24.8	13.8	14.3	Y_F992 Bhd - 6AL 4V Ti.
4005 AX	61.3	57.6	29.5	22.7	23.4	Y_F992 Bhd - 10 Ni. St.
4006 AX	65.8	52.2	29.5	23.5	24.8	Y_F992 Bhd - 10 Ni. St.
4007 AX	69.2	63.0	29.1	23.8	26.9	Y_F992 Bhd - 10 Ni. St.
4008 AX	69.2	69.7	29.6	27.6	29.8	Y_F992 Bhd - 10 Ni. St.

Table 2.1.2-IV (CONT'D.)

	P	T	P	T	T	
4009 AX	18.7	17.7	22.3	20.9	16.3	Y_F992 Bhd - 10 Ni. St.
4010 AX	60.8	42.1	26.8	20.6	20.3	Y_F992 Bhd - 10 Ni. St.
4011 AX	68.7	64.0	27.0	22.2	25.5	Y_F992 Bhd - 10 Ni. St.
4012 AX	68.7	69.5	27.0	24.0	26.9	Y_F992 Bhd - 10 Ni. St.
4018 AX	-9.1	-1.7	7.0	8.7	5.3	Y_F992 Bhd - 10 Ni. St.
4022 AX	-68.7	-70.3	-15.0	-13.2	-17.6	Y_F992 Bhd - 10 Ni. St.
4026 AX	-29.1	-24.1	-4.6	-4.1	-5.9	Y_F992 Bhd - 6AL 4V Ti.
4027 AX	-56.8	-49.6	-17.5	-14.5	-17.2	Y_F992 Bhd - 10 Ni. St.
4028 AX	-55.1	-41.3	-15.0	-10.0	-13.2	Y_F992 Bhd - 10 Ni. St.
5302 AX	14.2	3.0	47.1	6.0	6.8	Closure Rib 6AL 4V Ti.
5303 AX	14.2	-1.2	47.1	.5	0	Closure Rib 6AL 4V Ti.
7001) Load Cells	-20.7	-10.1	-27.1	-23.0	-8.6	Shear Strut, Left
) Values in						
7002) KIPS.	-20.7	0	-27.1	-16.8	-2.6	Shear Strut, Right

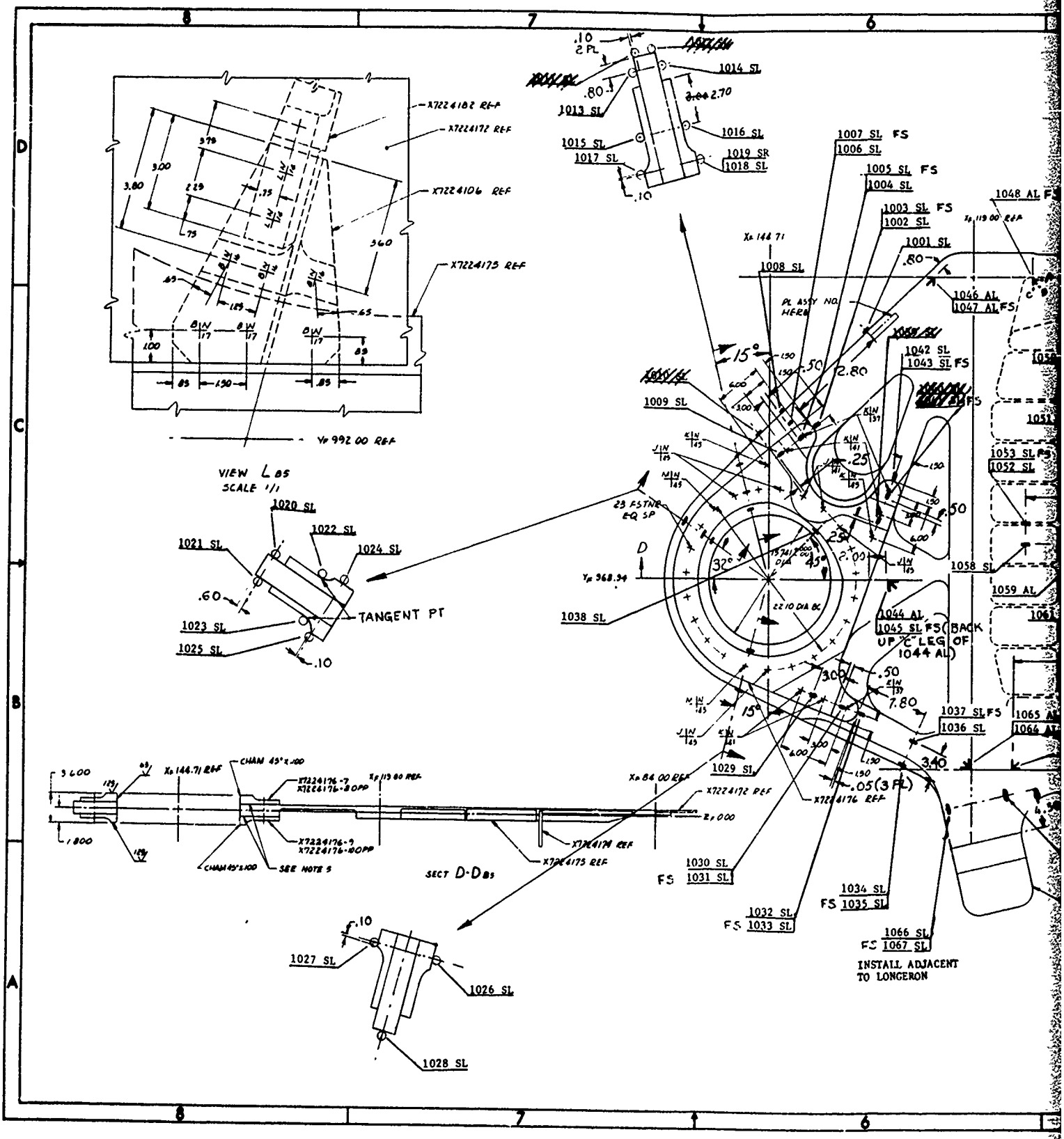

PRECEDING PAGE BLANK-NOT FILMED

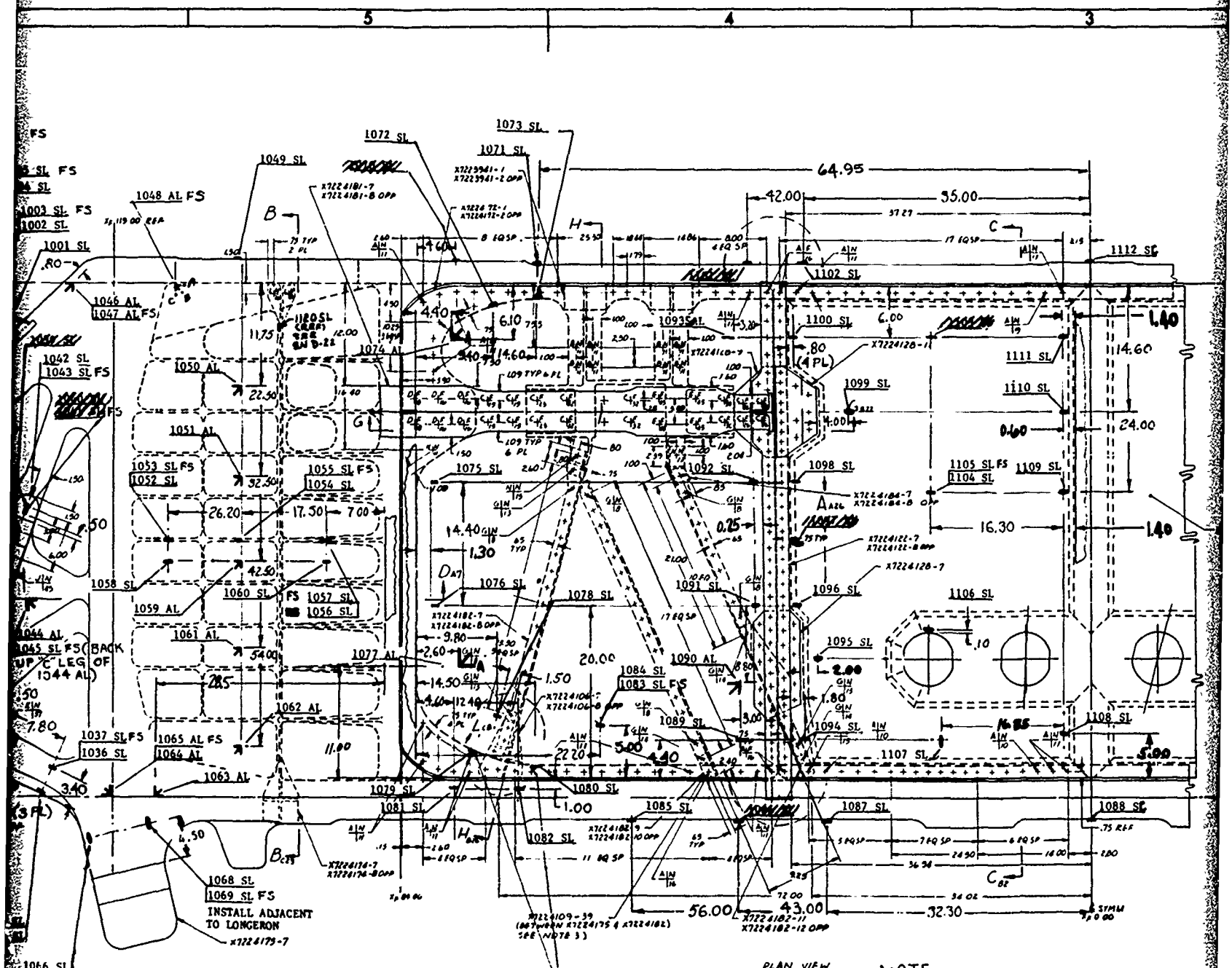
1073 SL
1072 SL
1071 SL
1049 SL
1048 AL FS
1003 SL FS
1002 SL
1001 SL
1046 AL
1047 AL FS
1042 SL
1043 SL FS
1050 AL
1051 AL
1053 SL FS
1052 SL
1055 SL FS
1054 SL
1058 SL
1059 AL
1060 SL
1057 SL
1056 SL
1061 AL
1044 AL
1045 SL FS (BACK UP C LEG OF 1044 AL)
1037 SL FS
1036 SL
1065 AL FS
1064 AL
1062 AL
1063 AL
1068 SL
1069 SL FS
INSTALL ADJACENT TO LONGERON
1066 SL
1067 SL
INSTALL ADJACENT TO LONGERON
1074 AL
1075 SL
1076 SL
1077 AL
1078 SL
1079 SL
1081 SL
1082 SL
1080 SL
1084 SL
1083 SL FS
1085 SL
1086 SL
1087 SL
1088 SL
1089 SL
1090 AL
1091 SL
1092 SL
1093 SL
1094 SL
1095 SL
1096 SL
1098 SL
1099 SL
1100 SL
1102 SL
1105 SL FS
1104 SL
1109 SL
1106 SL
1107 SL
1108 SL
1110 SL
1111 SL
1112 SL
64.95
42.00
35.00
56.00
43.00
32.30
24.00
16.30
14.60
TYP FOR 1072 SL, 1073 SL, 1079 SL & 1080 SL
PLAN VIEW -1 ASSY
NOTE:
GAGES 1001, 1008, 1010, 1049, 1070, 1071, 1101, 1112, 1085, 1086, 1087 & 1088 TO BE LOCATED ON CENTER OF THICKNESS OF PLATE
X7224170

2

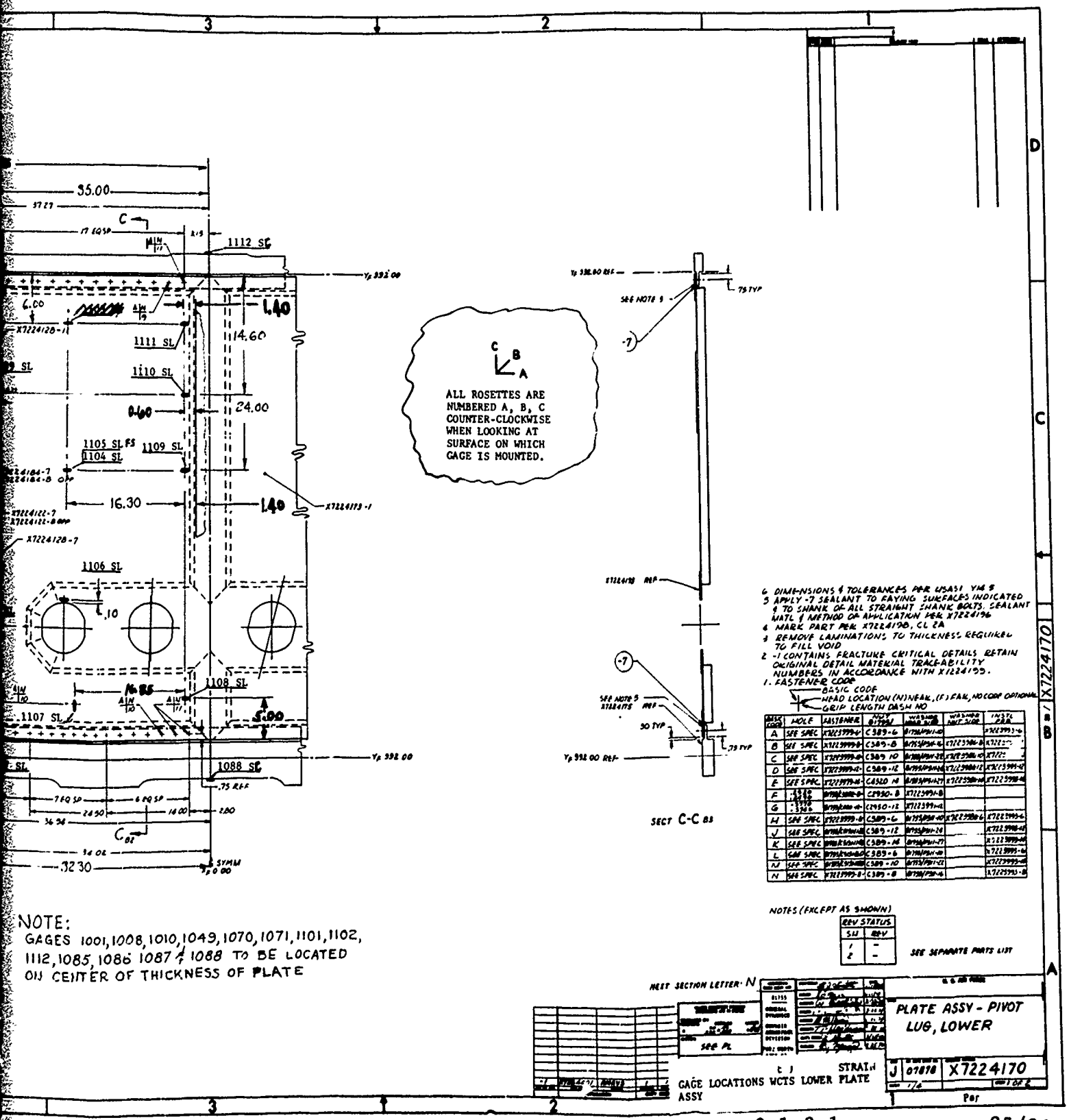

NOTE:
GAGES 1001, 1008, 1010, 1049, 1070, 1071, 1101, 1102, 1112, 1085, 1086 1087 & 1088 TO BE LOCATED ON CENTER OF THICKNESS OF PLATE

Figure 2.1.2-1

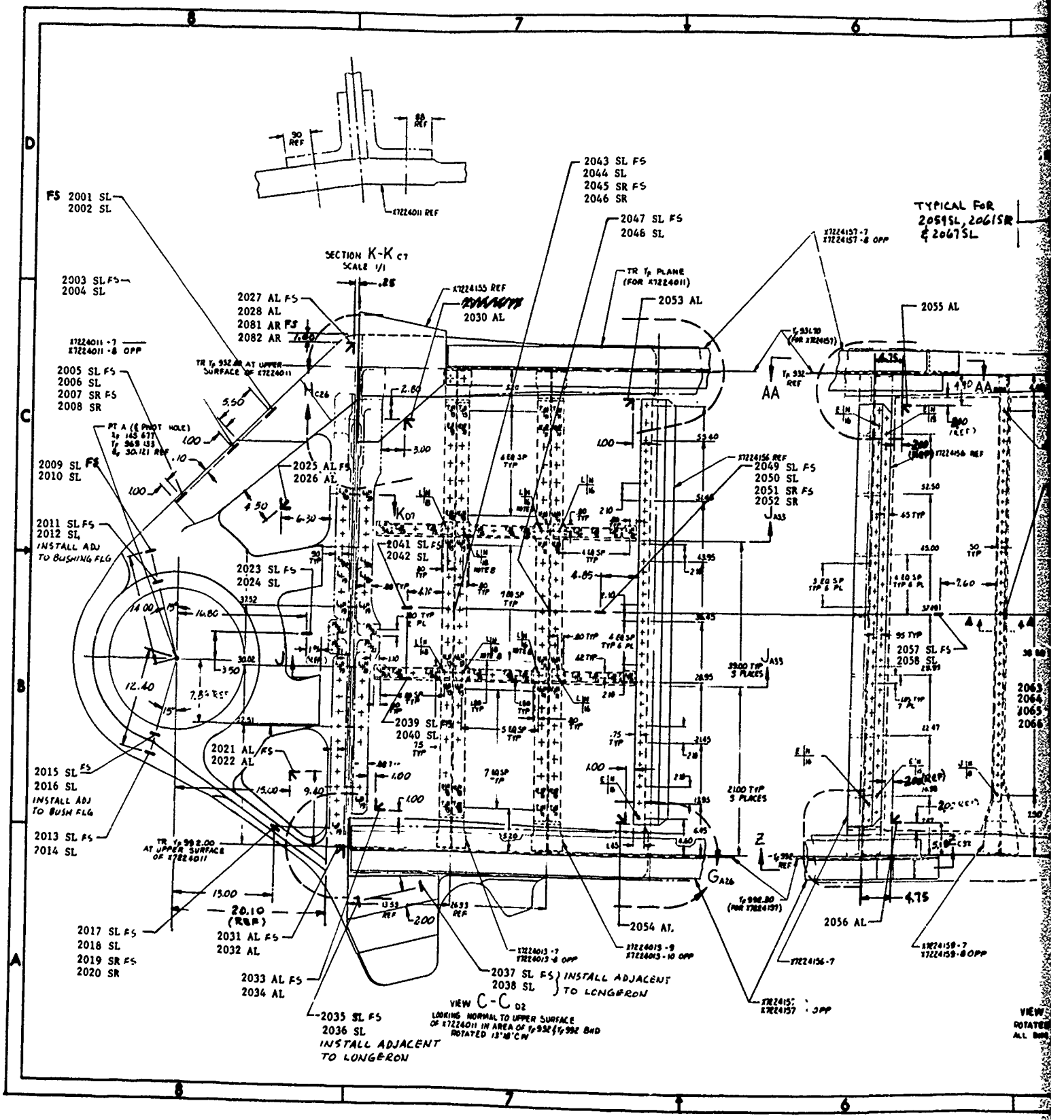
SECTION K-K
SCALE 1/1
VIEW C-C
LOOKING NORMAL TO UPPER SURFACE OF X7224011 IN AREA OF
ROTATED 13°18' CW
TYPICAL FOR 2059SL, 2061SR & 2067SL
FS 2001 SL
2002 SL
2003 SL FS
2004 SL
2005 SL FS
2006 SL
2007 SR FS
2008 SR
2009 SL FS
2010 SL
2011 SL FS
2012 SL
INSTALL ADJ TO BUSHING FLG
2013 SL FS
2014 SL
2015 SL FS
2016 SL
INSTALL ADJ TO BUSH FLG
2017 SL FS
2018 SL
2019 SR FS
2020 SR
2021 AL FS
2022 AL
2023 SL FS
2024 SL
2025 AL FS
2026 AL
2027 AL FS
2028 AL
2081 AR FS
2082 AR
2029 AL
2030 AL
2031 AL FS
2032 AL
2033 AL FS
2034 AL
2035 SL FS
2036 SL
INSTALL ADJACENT TO LONGERON
2037 SL FS
2038 SL
INSTALL ADJACENT TO LONGERON
2039 SL FS
2040 SL
2041 SL FS
2042 SL
2043 SL FS
2044 SL
2045 SR FS
2046 SR
2047 SL FS
2048 SL
2049 SL FS
2050 SL
2051 SR FS
2052 SR
2053 AL
2054 AL
2055 AL
2056 AL
2057 SL FS
2058 SL
2063
2064
2065
2066
TR Tp PLANE (FOR X7224011)
TR Tp 932.00 AT UPPER SURFACE OF X7224011
PT A (℄ PIVOT HOLE)
X7224011 REF
X7224155 REF
X7224156 REF
X7224157-7
X7224157-8 OPP
X7224159-7
X7224159-8 OPP
X7224156-7
X7224013-9
X7224013-10 OPP
X7224013-7
X7224013-8 OPP
2100 TYP 5 PLACES
3900 TYP 5 PLACES
VIEW ROTATED ALL BHD

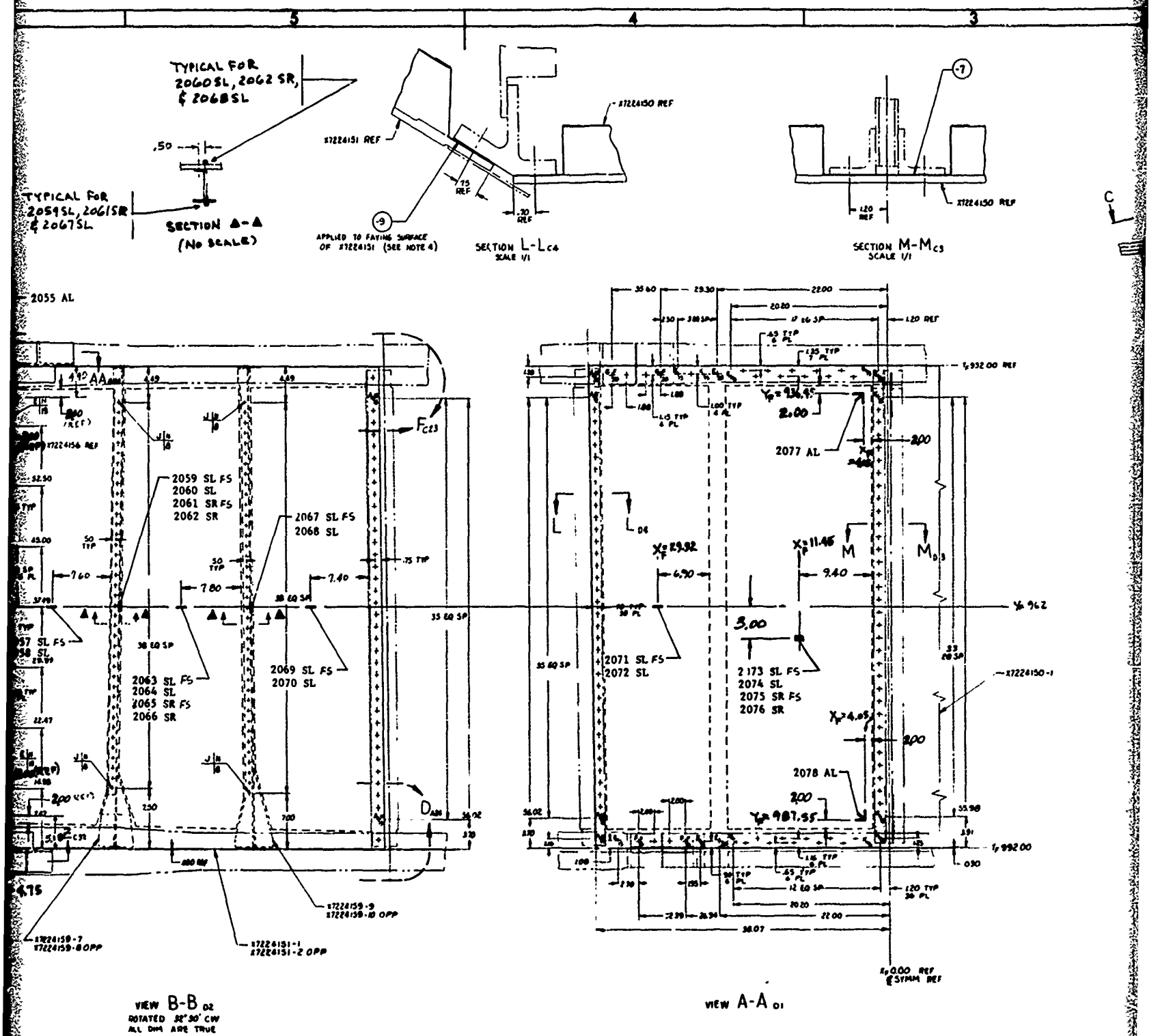

F33615-73-C-3081 | X7224010 | 1

2.

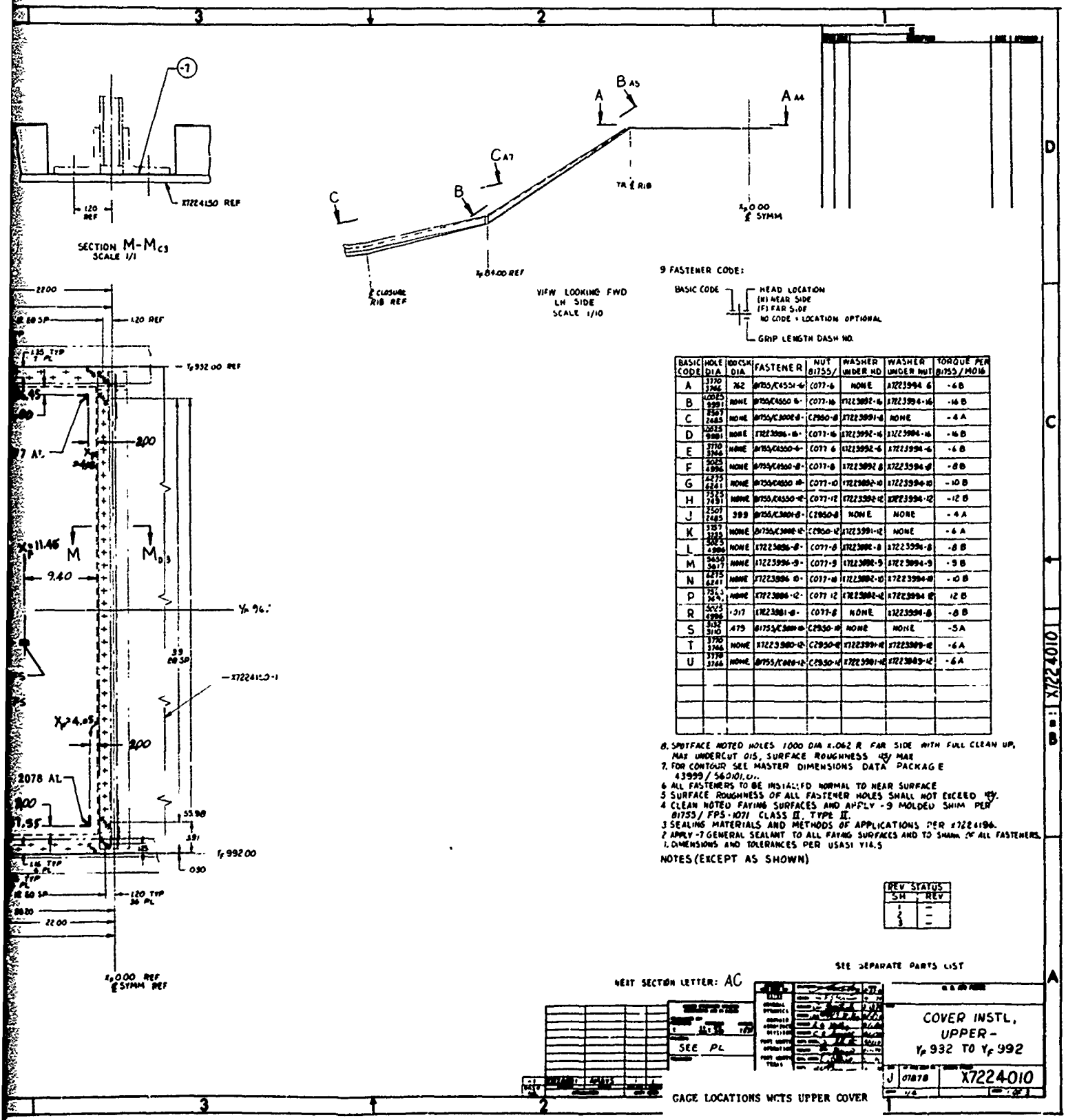

BASIC CODE	HOLE DIA	100 CSK DIA	FASTENER	NUT B1755/	WASHER UNDER HD	WASHER UNDER NUT	TORQUE PER B1755/M016
A	3770 3746	.762	B1755/C4551-6	C077-6	NONE	X7223994-6	-6 B
B	.2025 9991	NONE	B1755/C4550-6	C077-16	X7223992-16	X7223994-16	-16 B
C	2507 2485	NONE	B1755/C3001-8	C2950-8	X7223991-8	NONE	-4 A
D	.2025 9981	NONE	X7223996-16	C077-16	X7223992-16	X7223994-16	-16 B
E	3770 3746	NONE	B1755/C4550-6	C077-6	X7223992-6	X7223994-6	-6 B
F	5025 4996	NONE	B1755/C4550-8	C077-8	X7223992-8	X7223994-8	-8 B
G	6275 6241	NONE	B1755/C4550-10	C077-10	X7223992-10	X7223994-10	-10 B
H	7525 7491	NONE	B1755/C4550-12	C077-12	X7223992-12	X7223994-12	-12 B
J	2507 2485	.999	B1755/C3001-8	C2950-8	NONE	NONE	-4 A
K	3157 3125	NONE	B1755/C3001-12	C2950-12	X7223991-12	NONE	-6 A
L	5025 4996	NONE	X7223996-8	C077-8	X7223992-8	X7223994-8	-8 B
M	5650 5617	NONE	X7223996-9	C077-9	X7223992-9	X7223994-9	-9 B
N	6275 6241	NONE	X7223996-10	C077-10	X7223992-10	X7223994-10	-10 B
P	7525 7491	NONE	X7223996-12	C077-12	X7223992-12	X7223994-12	-12 B
R	5025 4996	.317	X7223981-8	C077-8	NONE	X7223994-8	-8 B
S	3132 3110	.479	B1755/C3001-6	C2950-6	NONE	NONE	-5 A
T	3770 3746	NONE	X7223980-12	C2950-12	X7223991-12	X7223989-12	-6 A
U	3770 3746	NONE	B1755/C4551-12	C2950-12	X7223981-12	X7223989-12	-6 A

Figure 2.1.2-2

3

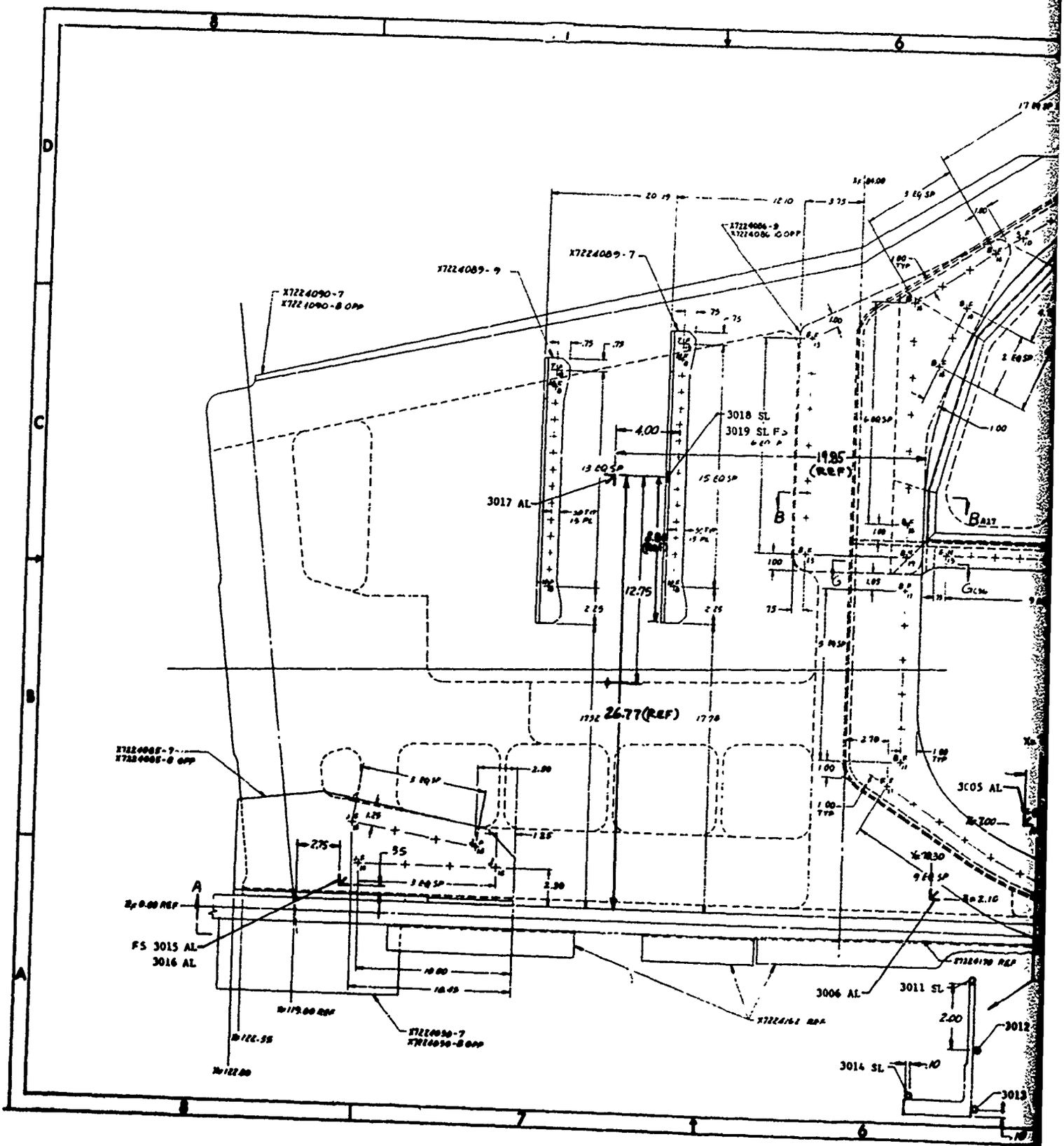
X7224089-9
X7224089-7
X7224090-7
X7224090-8 OPP
X7224086-9
X7224086-10 OPP
3018 SL
3019 SL
3017 AL
4.00
19.85 (REF)
12.75
26.77 (REF)
3005 AL
3006 AL
3011 SL
3012
3013
3014 SL
FS 3015 AL
3016 AL
X7224090-7
X7224090-8 OPP
X7224170 REF
X7224161 REF
2.00

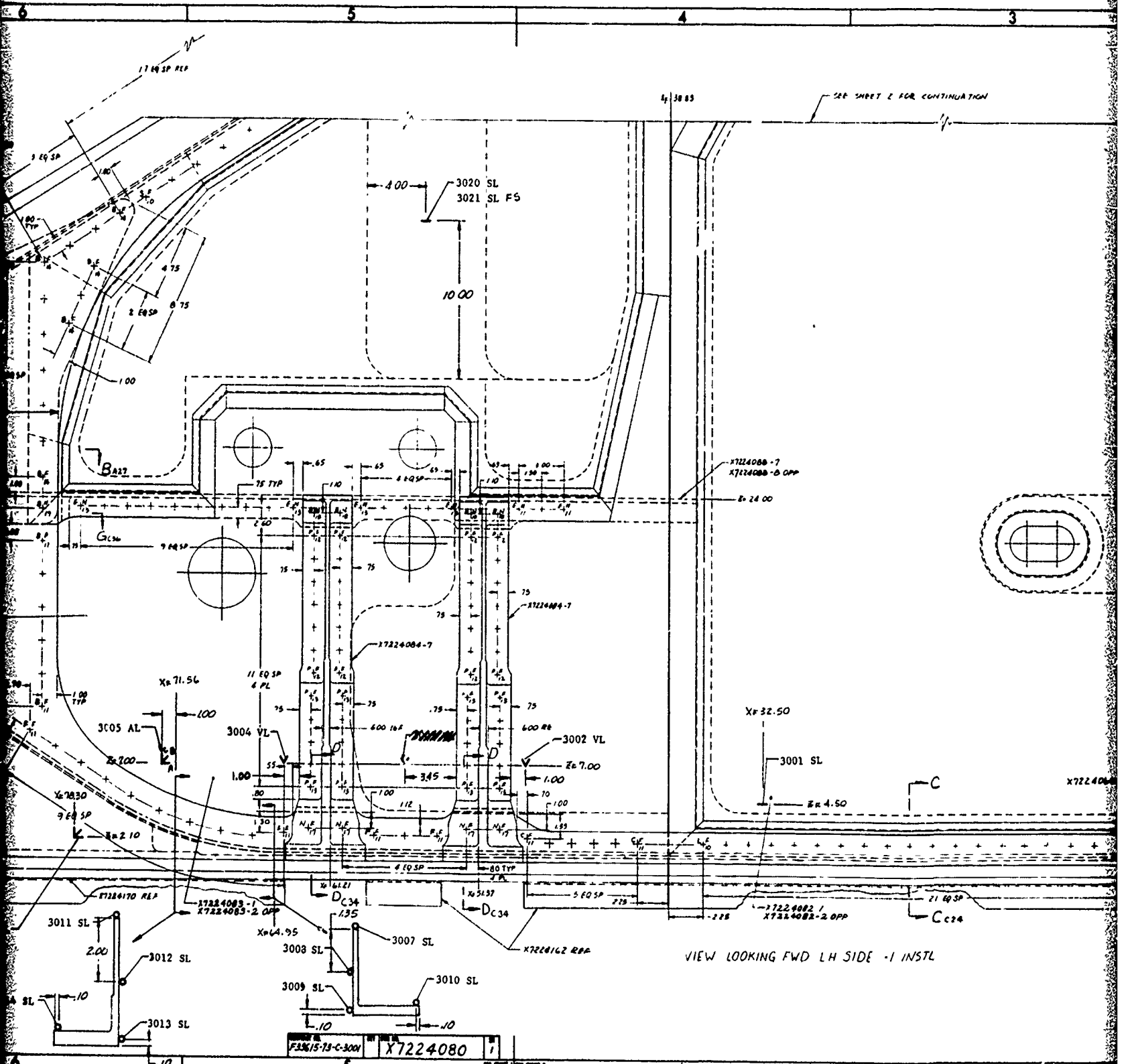
SEE SHEET 2 FOR CONTINUATION
3020 SL
3021 SL FS
10.00
4.00
3005 AL
3004 VL
3002 VL
3001 SL
3011 SL
3012 SL
3013 SL
3008 SL
3009 SL
3007 SL
3010 SL
X7224080-7
X7224080-8 OPP
X7224084-7
X7224083-1
X7224083-2 OPP
X7224082-1
X7224082-2 OPP
X7224162 REF
X7224170 REF
VIEW LOOKING FWD LH SIDE -1 INSTL
F33615-73-C-3001
X7224080

2

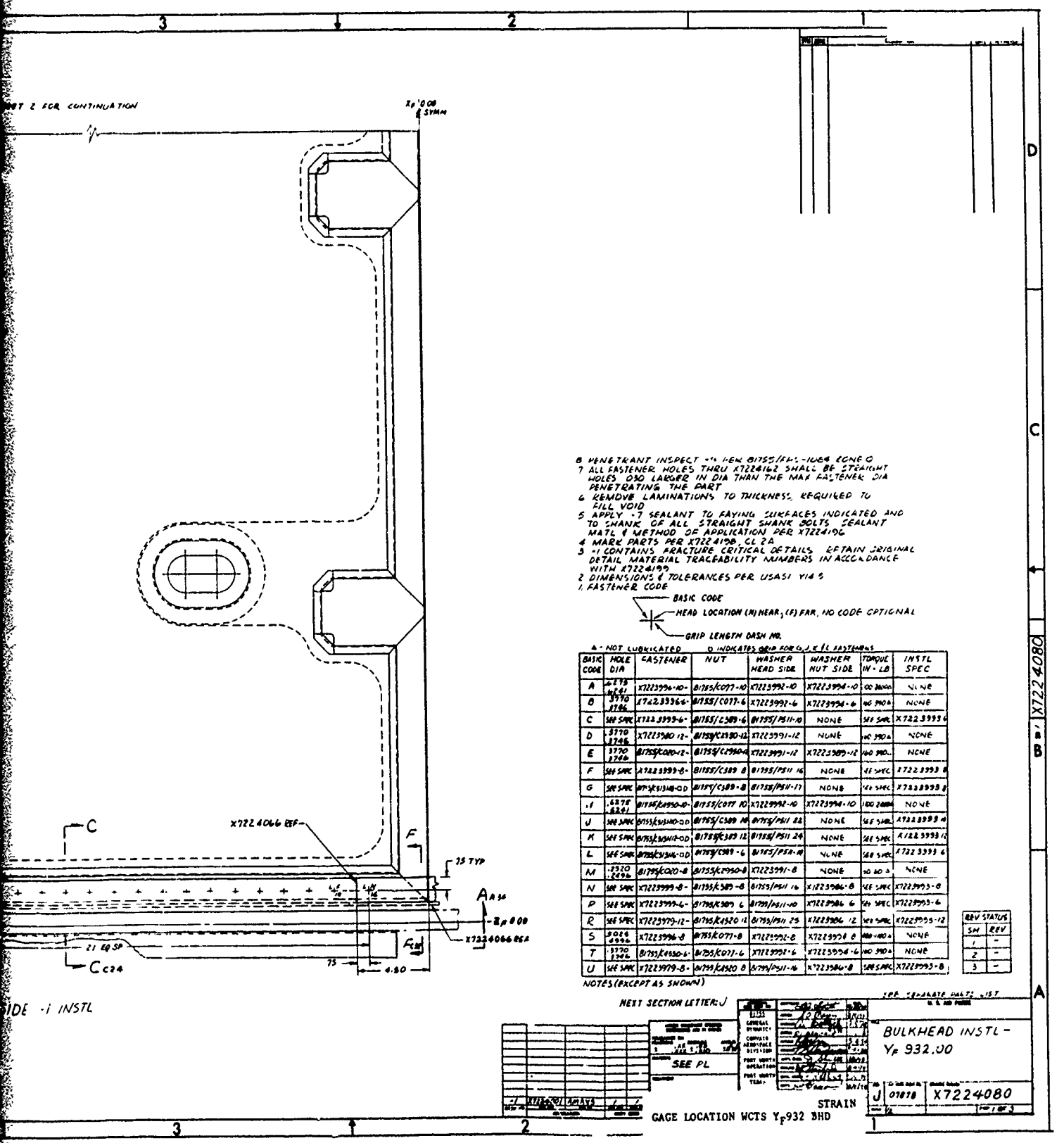

8 PENETRANT INSPECT PER MIL-STD 1907 CONE O
7 ALL FASTENER HOLES THRU X7224162 SHALL BE STRAIGHT HOLES .030 LARGER IN DIA THAN THE MAX FASTENER DIA PENETRATING THE PART
6 REMOVE LAMINATIONS TO THICKNESS REQUIRED TO FILL VOID
5 APPLY -7 SEALANT TO FAYING SURFACES INDICATED AND TO SHANK OF ALL STRAIGHT SHANK BOLTS. SEALANT MATL & METHOD OF APPLICATION PER X7224196
4 MARK PARTS PER X7224198, CL 2A
3 -1 CONTAINS FRACTURE CRITICAL DETAILS. RETAIN ORIGINAL DETAIL MATERIAL TRACEABILITY NUMBERS IN ACCORDANCE WITH X7224199
2 DIMENSIONS & TOLERANCES PER USASI Y14.5
1. FASTENER CODE

BASIC CODE
HEAD LOCATION (N) NEAR, (F) FAR, NO CODE OPTIONAL
GRIP LENGTH DASH NO.

A - NOT LUBRICATED D INDICATES GRIP FOR G, J, K & L FASTENERS

BASIC CODE	HOLE DIA	FASTENER	NUT	WASHER HEAD SIDE	WASHER NUT SIDE	TORQUE IN-LB	INSTL SPEC
A	.6275 .6241	X7223996-10-	B1755/C077-10	X7223992-10	X7223994-10	100 200	NONE
B	.3770 .3746	X7223964-	B1755/C077-6	X7223992-6	X7223994-6	60 390	NONE
C	SEE SPEC	X7223999-6-	B1755/C389-6	B1755/PS11-10	NONE	SEE SPEC	X7223999-6
D	.3770 .3746	X7223980 12-	B1755/C2980-12	X7223991-12	NONE	60 390	NONE
E	.3770 .3746	B1755/C080-12-	B1755/C2980-12	X7223991-12	X7223989-12	60 390	NONE
F	SEE SPEC	X7223999-8-	B1755/C389 8	B1755/PS11 16	NONE	SEE SPEC	X7223999 8
G	SEE SPEC	B1755/C3348-OD	B1755/C389-8	B1755/PS11-17	NONE	SEE SPEC	X7223999 8
H	.6275 .6241	B1755/C2950-10-	B1755/C077 10	X7223992-10	X7223994-10	100 200	NONE
J	SEE SPEC	B1755/C3340-OD	B1755/C389 16	B1755/PS11 22	NONE	SEE SPEC	X7223999 16
K	SEE SPEC	B1755/C3348-OD	B1755/C389 12	B1755/PS11 24	NONE	SEE SPEC	X7223999 12
L	SEE SPEC	B1755/C3346-OD	B1755/C389-6	B1755/PS11-19	NONE	SEE SPEC	X7223999 6
M	.3770 .3746	B1755/C020-8	B1755/C2950-8	X7223991-8	NONE	30 60	NONE
N	SEE SPEC	X7223999-8-	B1755/C389-8	B1755/PS11 16	X7223986-8	SEE SPEC	X7223993-8
P	SEE SPEC	X7223999-6-	B1755/C389 6	B1755/PS11-10	X7223986 6	SEE SPEC	X7223993-6
R	SEE SPEC	X7223979-12-	B1755/C4520 12	B1755/PS11 25	X7223986 12	SEE SPEC	X7223993-12
S	.5026 .4996	X7223996-8	B1755/C077-8	X7223992-8	X7223994 8	100 200	NONE
T	.3770 .3746	B1755/C4550-6-	B1755/C077-6	X7223992-6	X7223994-6	60 390	NONE
U	SEE SPEC	X7223979-8-	B1755/C4520 8	B1755/PS11-16	X7223986-8	SEE SPEC	X7223993-8

NOTES (EXCEPT AS SHOWN)

REV STATUS	
SH	REV
1	-
2	-
3	-

Figure 2.1.2-3

3

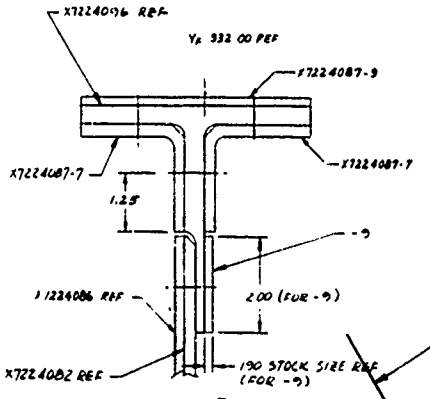

SECT E-E 028
SCALE 1/1

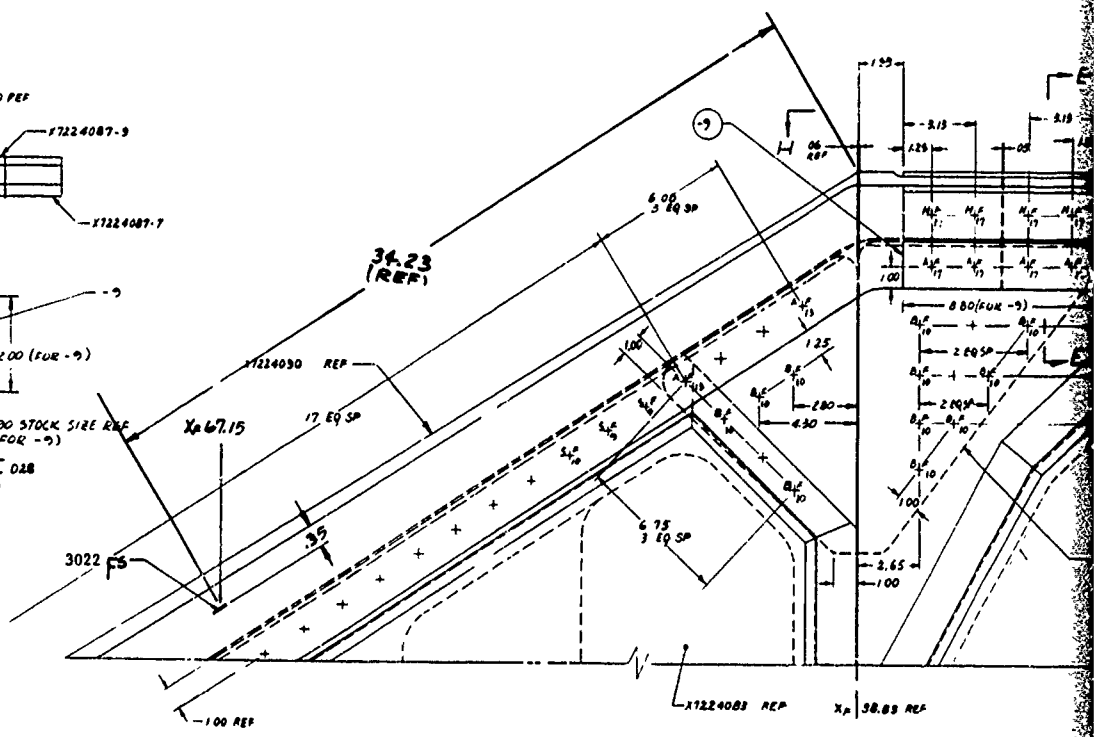

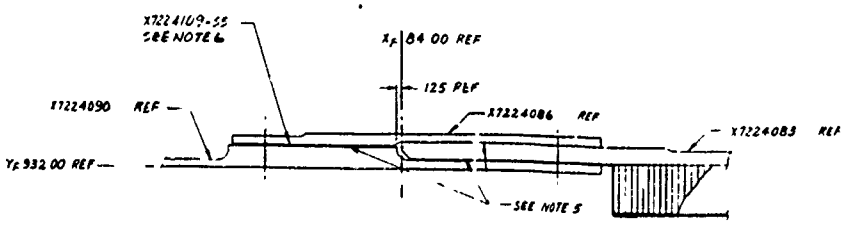

SECT B-B 06
SCALE 1/1

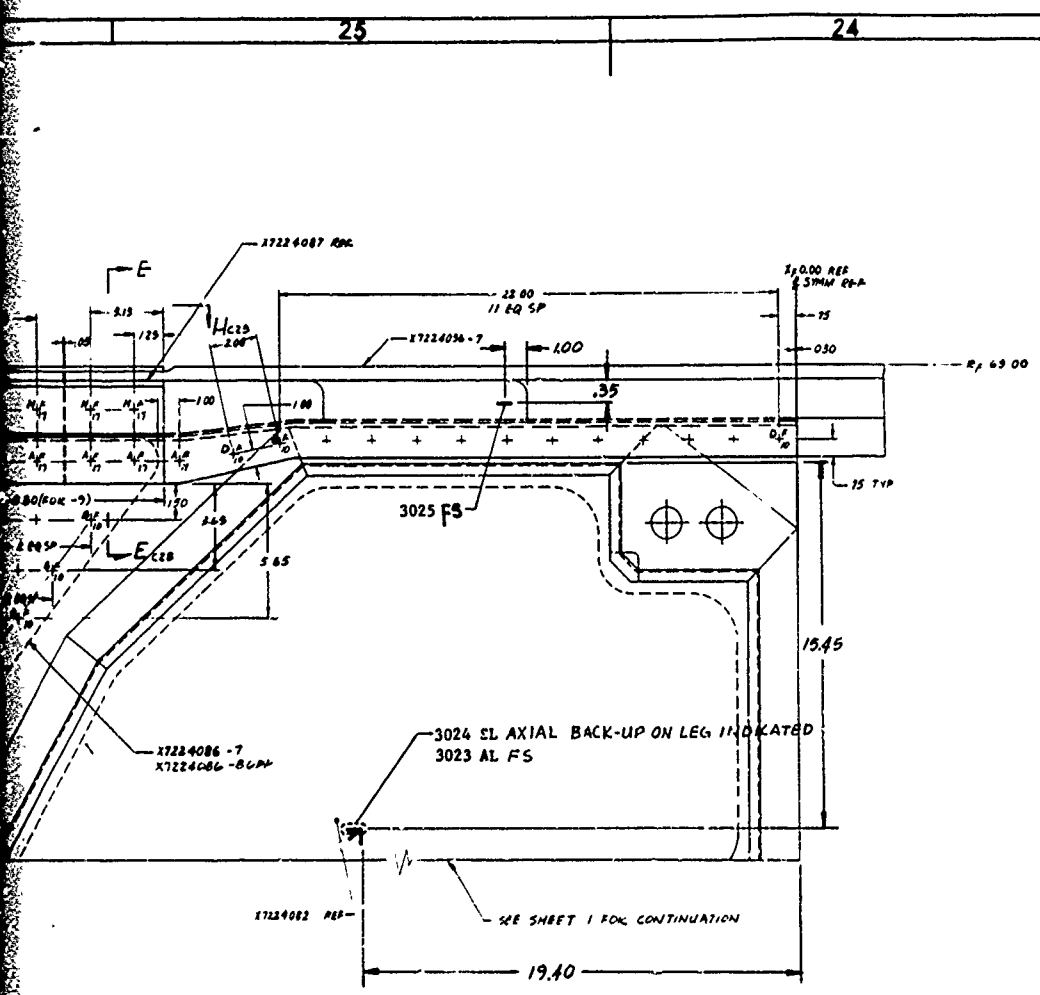

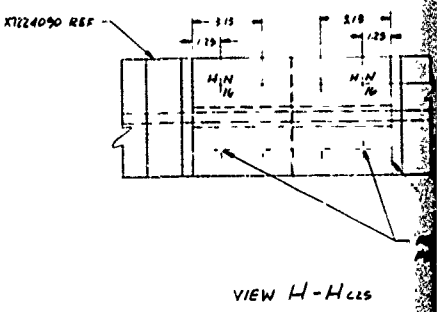

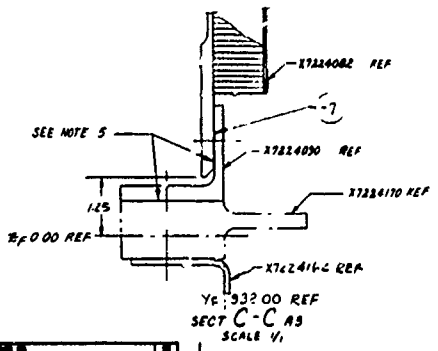

F33615-73 C3001	X7224080	2

25 24 23

2

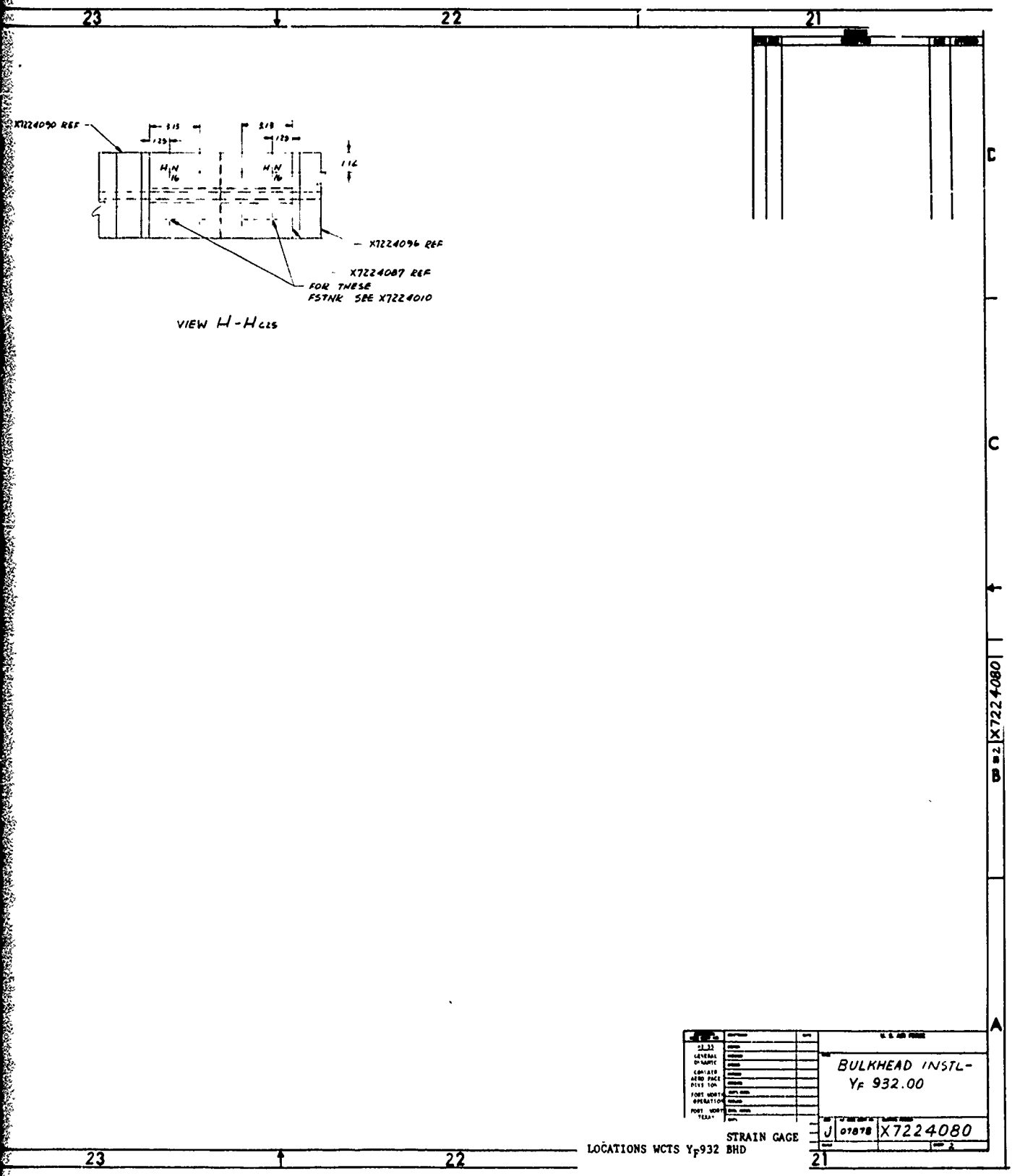

Figure 2.1.2-3
(CONT)

3

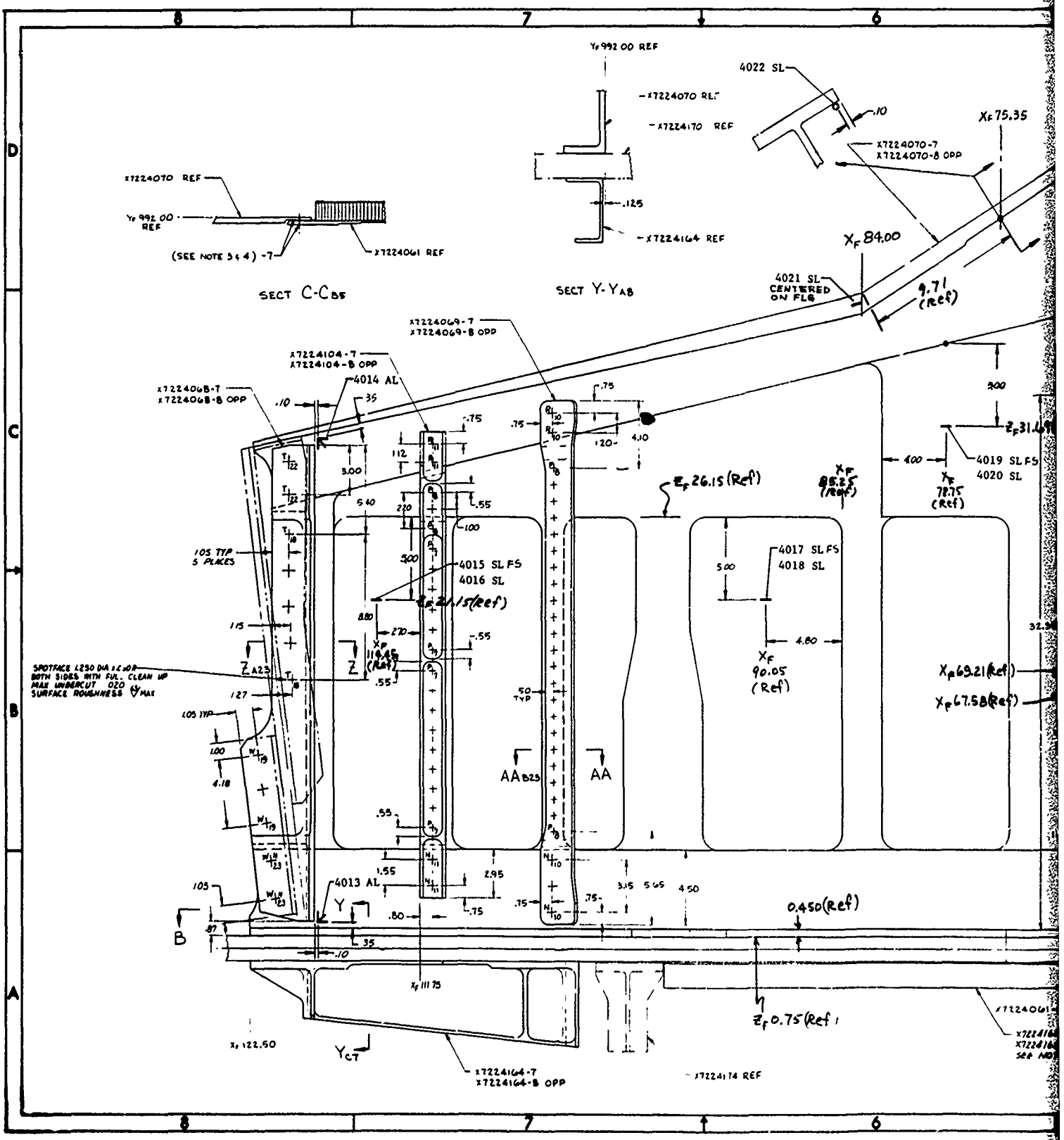
SECT C-C BS
SECT Y-Y AB
X7224070 REF
Y_F 992.00 REF
(SEE NOTE 3 & 4) -7
X7224061 REF
X7224070 REF
X7224170 REF
X7224164 REF
4022 SL
X7224070-7
X7224070-8 OPP
X_F 75.35
X_F 84.00
4021 SL
CENTERED ON FLG
9.71 (Ref)
X7224069-7
X7224069-8 OPP
X7224104-7
X7224104-8 OPP
4014 AL
X7224068-7
X7224068-8 OPP
Z_F 26.15 (Ref)
X_F 85.25 (Ref)
X_F 78.75 (Ref)
4019 SL FS
4020 SL
Z_F 31.69
4017 SL FS
4018 SL
4015 SL FS
4016 SL
Z_F 21.15 (Ref)
X_F 114.45 (Ref)
X_F 90.05 (Ref)
X_F 69.21 (Ref)
X_F 67.58 (Ref)
.105 TYP 5 PLACES
SPOTFACE 1.250 DIA x .010 DP BOTH SIDES WITH FUL. CLEAN UP MAX UNDERCUT .020 SURFACE ROUGHNESS 63 MAX
AA B23
AA
4013 AL
0.450 (Ref)
X_F 111.75
Z_F 0.75 (Ref)
X_F 122.50
Y_CT
X7224164-7
X7224164-8 OPP
X7224174 REF
X7224061

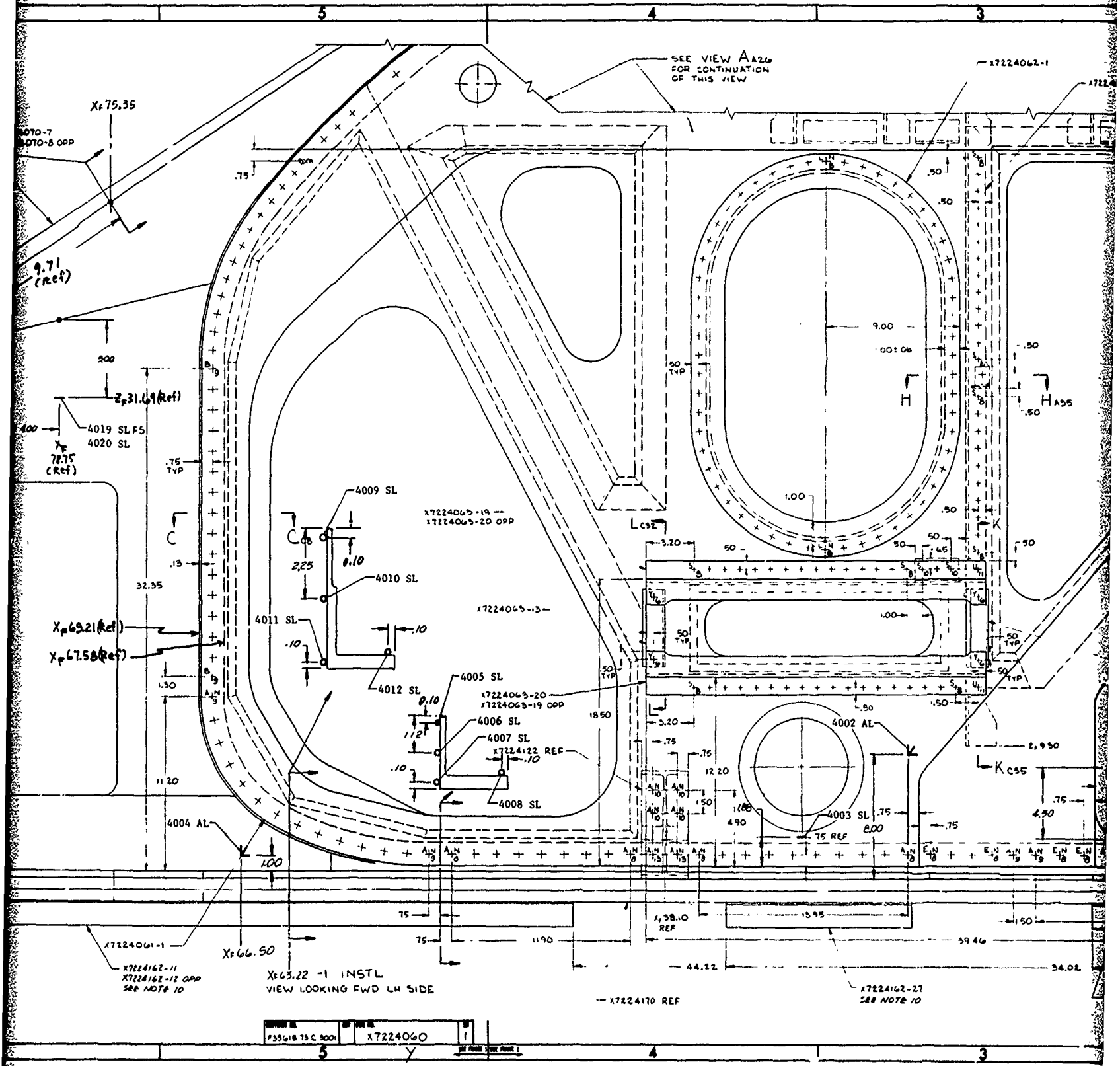
SEE VIEW A A26 FOR CONTINUATION OF THIS VIEW
X7224062-1
X7224
Xf 75.35
9.71 (Ref)
Zp 31.69 (Ref)
4019 SL FS
4020 SL
Xf 78.75 (Ref)
4009 SL
X7224063-19
X7224063-20 OPP
4010 SL
X7224063-13
4011 SL
4012 SL
Xp 69.21 (Ref)
Xp 67.58 (Ref)
4005 SL
X7224063-20
X7224063-19 OPP
4006 SL
4007 SL
X7224122 REF
4008 SL
4002 AL
4003 SL
4004 AL
X7224061-1
X7224162-11
X7224162-12 OPP
SEE NOTE 10
Xf 66.50
Xf 63.22 -1 INSTL
VIEW LOOKING FWD LH SIDE
X7224170 REF
X7224162-27
SEE NOTE 10
X7224060

2

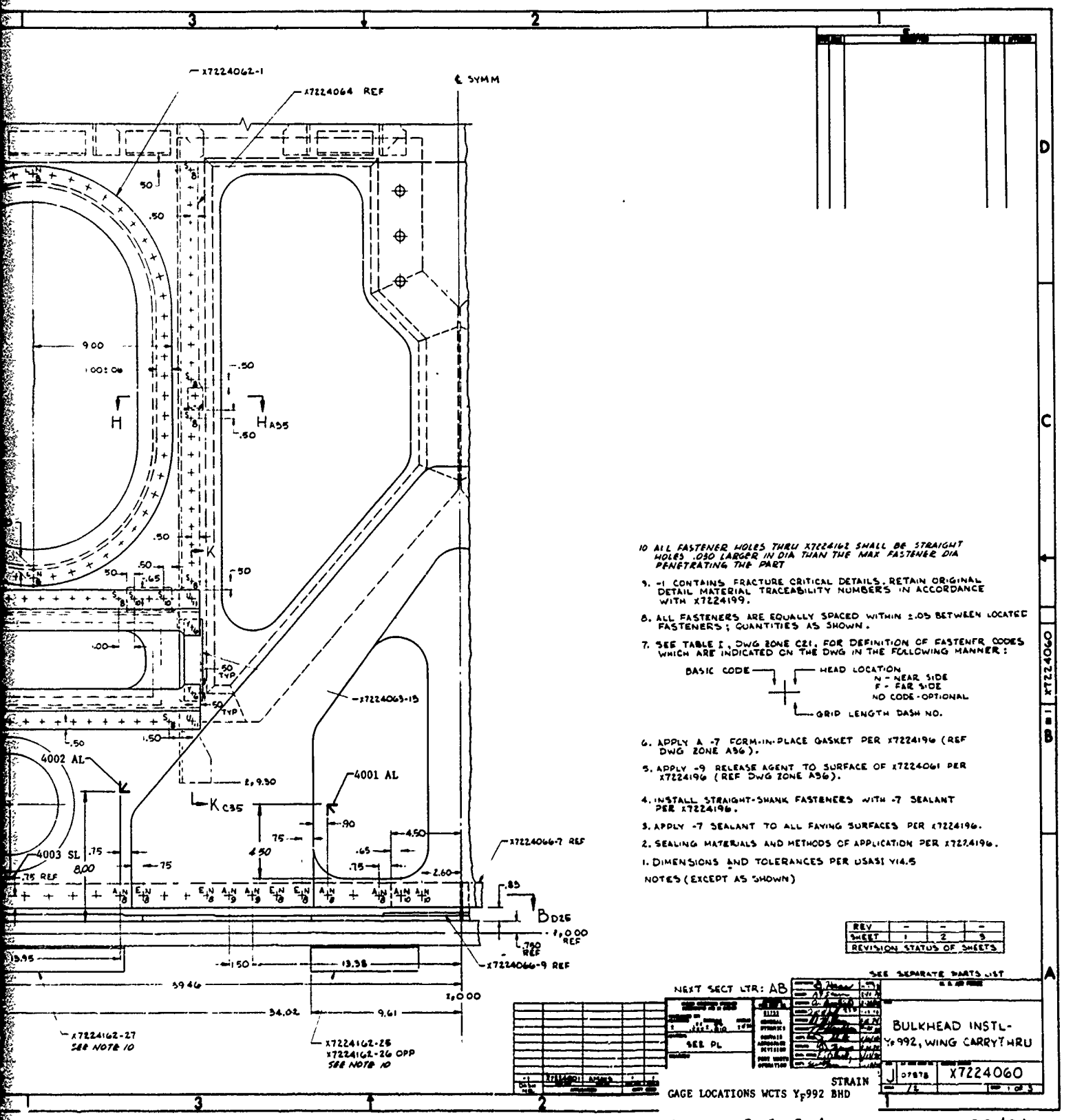
X7224062-1
X7224064 REF
℄ SYMM
9.00
1.00±.06
H
H A35
K
K C35
X7224065-15
4002 AL
4001 AL
4003 SL
8.00
4.50
X7224066-7 REF
B D25
X7224066-9 REF
39.46
34.02
9.61
X7224162-27
SEE NOTE 10
X7224162-26
X7224162-26 OPP
SEE NOTE 10
10 ALL FASTENER HOLES THRU X7224162 SHALL BE STRAIGHT HOLES .030 LARGER IN DIA THAN THE MAX FASTENER DIA PENETRATING THE PART
9. -1 CONTAINS FRACTURE CRITICAL DETAILS. RETAIN ORIGINAL DETAIL MATERIAL TRACEABILITY NUMBERS IN ACCORDANCE WITH X7224199.
8. ALL FASTENERS ARE EQUALLY SPACED WITHIN ±.05 BETWEEN LOCATED FASTENERS; QUANTITIES AS SHOWN.
7. SEE TABLE I, DWG ZONE C21, FOR DEFINITION OF FASTENER CODES WHICH ARE INDICATED ON THE DWG IN THE FOLLOWING MANNER:
BASIC CODE
HEAD LOCATION
N - NEAR SIDE
F - FAR SIDE
NO CODE - OPTIONAL
GRID LENGTH DASH NO.
6. APPLY A -7 FORM-IN-PLACE GASKET PER X7224196 (REF DWG ZONE A36).
5. APPLY -9 RELEASE AGENT TO SURFACE OF X7224061 PER X7224196 (REF DWG ZONE A36).
4. INSTALL STRAIGHT-SHANK FASTENERS WITH -7 SEALANT PER X7224196.
3. APPLY -7 SEALANT TO ALL FAYING SURFACES PER X7224196.
2. SEALING MATERIALS AND METHODS OF APPLICATION PER X7224196.
1. DIMENSIONS AND TOLERANCES PER USASI Y14.5
NOTES (EXCEPT AS SHOWN)
REV
SHEET
REVISION STATUS OF SHEETS
SEE SEPARATE PARTS LIST
NEXT SECT LTR: AB
SEE PL
BULKHEAD INSTL-
Y=992, WING CARRY THRU
X7224060
STRAIN
GAGE LOCATIONS WCTS Y=992 BHD

Figure 2.1.2-4

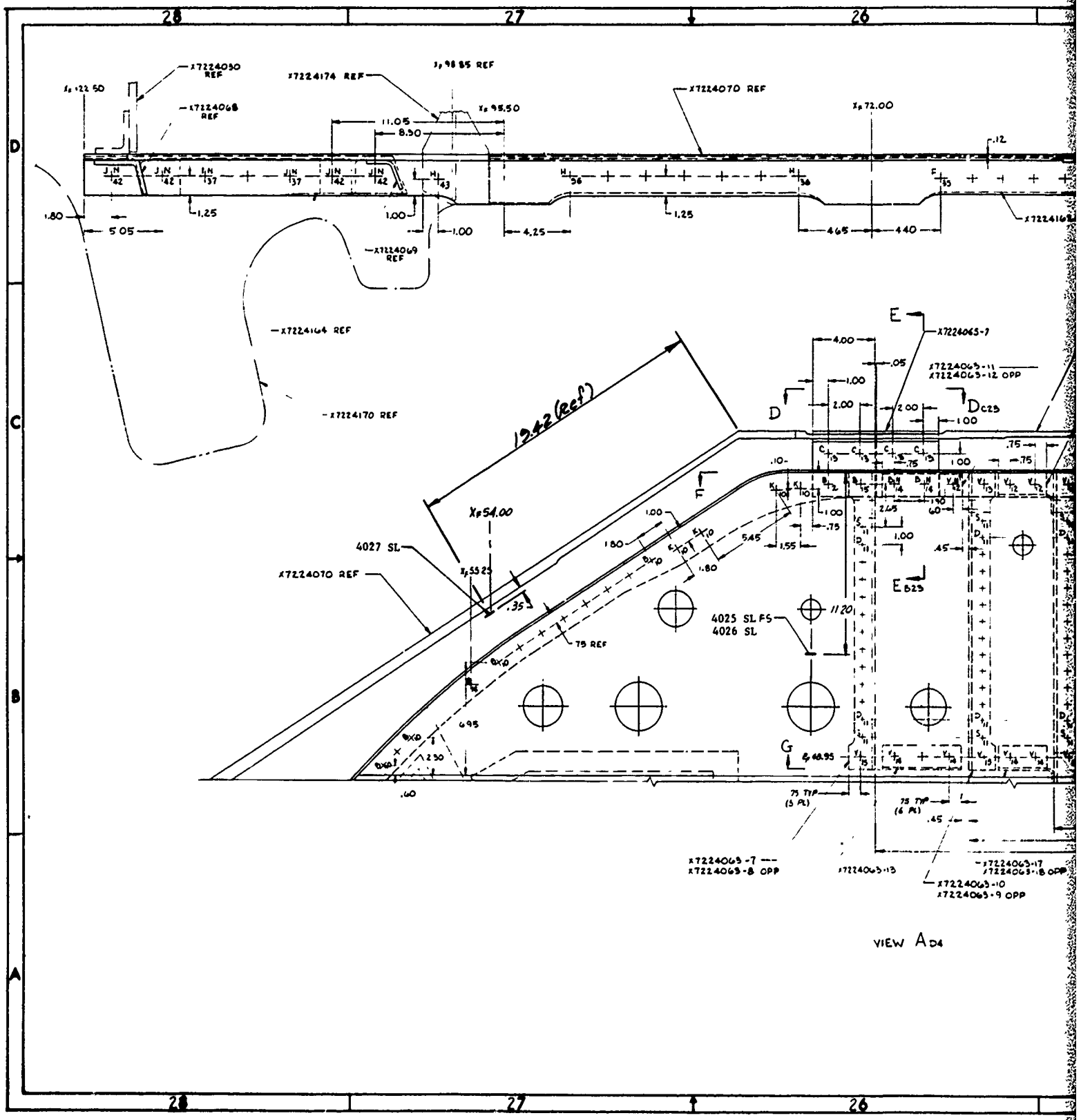
X7224050 REF
X7224068 REF
X7224174 REF
X7224070 REF
X7224069 REF
X7224164 REF
X7224170 REF
X7224065-7
X7224065-11
X7224065-12 OPP
12.42 (ref)
X=54.00
4027 SL
X7224070 REF
4025 SL FS
4026 SL
X7224065-7
X7224065-8 OPP
X7224065-13
X7224065-17
X7224065-18 OPP
X7224065-10
X7224065-9 OPP
VIEW A D4

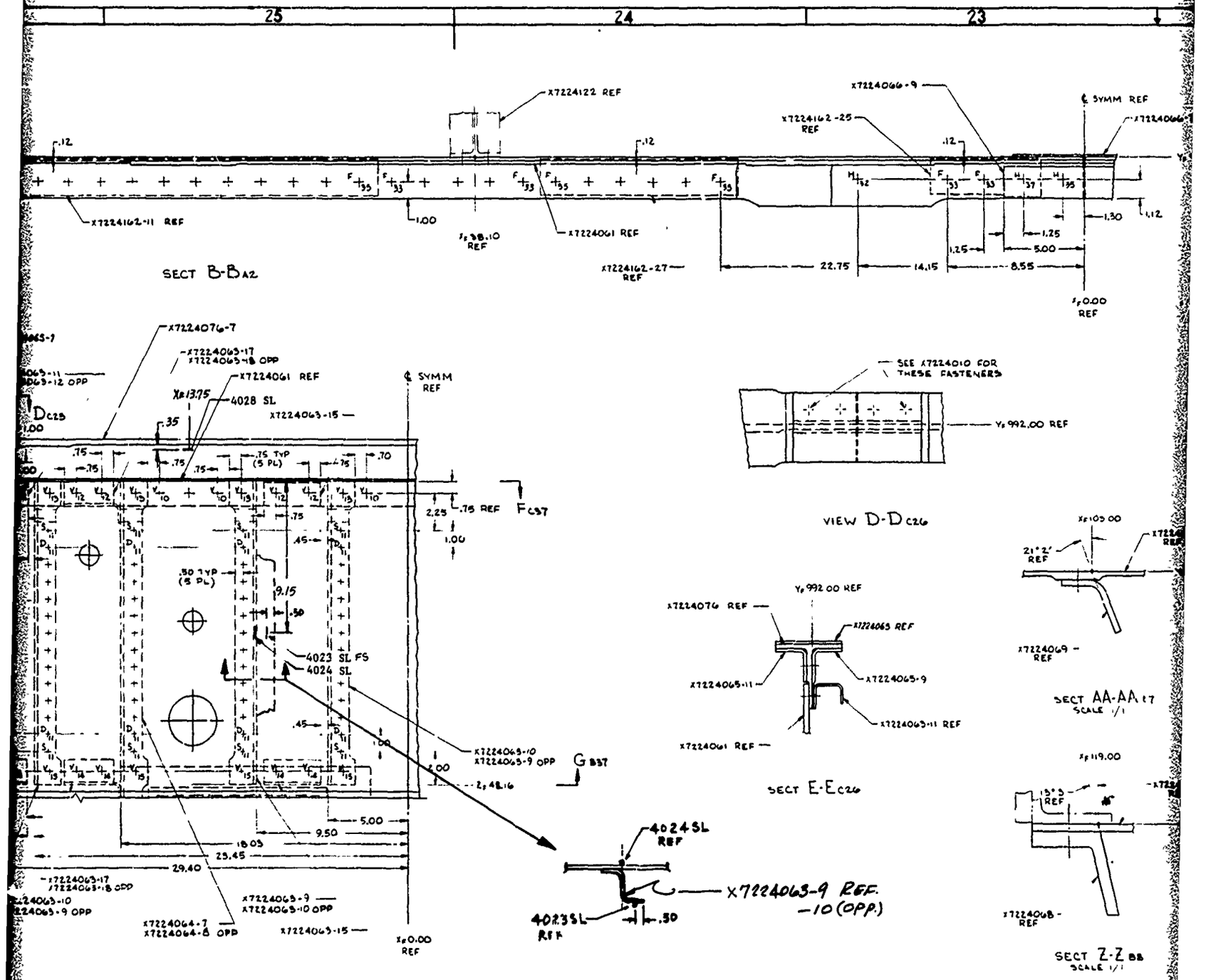
25
24
23
X7224122 REF
X7224066-9
X7224162-25 REF
℄ SYMM REF
X7224066-7
X7224162-11 REF
X7224061 REF
X7224162-27 REF
22.75
14.15
8.55
5.00
1.25
1.30
1.12
1.00
.12
Xf 0.00 REF
SECT B-B A2
X7224076-7
X7224063-17
X7224063-18 OPP
X7224061 REF
X=13.75
4028 SL
X7224063-15
.35
.75
.75 TYP (5 PL)
.70
.75 REF
F C37
2.25
1.00
.50 TYP (5 PL)
9.15
.50
4023 SL FS
4024 SL
.45
X7224063-10
X7224063-9 OPP
G B37
2.00
Z 48.16
5.00
9.50
18.05
23.45
29.40
X7224063-17
X7224063-18 OPP
X7224063-10
X7224063-9 OPP
X7224064-7
X7224064-8 OPP
X7224063-9
X7224063-10 OPP
X7224063-15
Xf 0.00 REF
SEE X7224010 FOR THESE FASTENERS
Y= 992.00 REF
VIEW D-D C26
Y= 992.00 REF
X7224076 REF
X7224063 REF
X7224063-11
X7224063-9
X7224063-11 REF
X7224061 REF
SECT E-E C26
4024 SL REF
X7224063-9 REF.
-10 (OPP.)
4023 SL REF
.50
Xf 105.00
21°2' REF
X7224069 - REF
SECT AA-AA
SCALE 1/1
Xf 119.00
13°5 REF
X7224068 - REF
SECT Z-Z
SCALE 1/1
X7224060
2

2

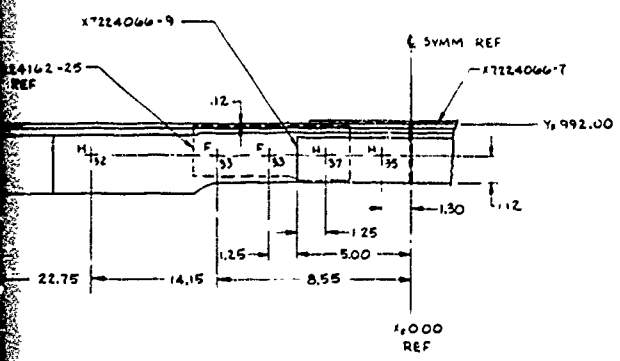

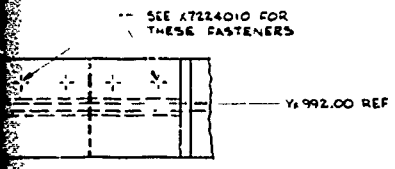

VIEW D-D C26

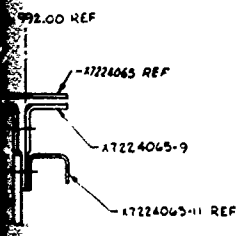

E-E C26

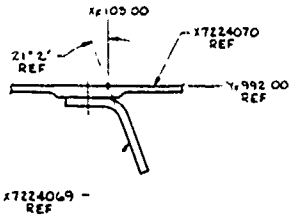

SECT AA-AA 67
SCALE 1/1

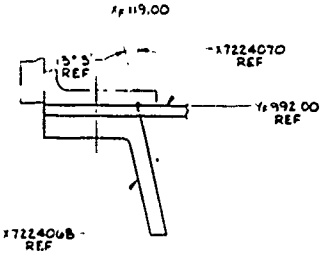

SECT Z-Z BB
SCALE 1/1

-9 REF.
-10 (OPP.)

TABLE I
FASTENER CODES
(SEE NOTE 7)

BASIC CODE	HOLE DIA	FASTENER	NUT	WASHER (UNDER BOLT)	WASHER (UNDER NUT)	INSTL SPEC	TORQUE (IN-LB)
A	SEE SPEC	X7223999-6-	B1755/C589-6	B1755/P511-10	NONE	X7223993-6	SEE SPEC
B	.3770/3746	X7223996-6-	B1755/C077-6	X7223992-6	X7223994-6	NONE	160-390 Δ
C	.5025/4996	B1755/C4550-8-	B1755/C077-8	X7223992-8	X7223994-8	NONE	470-1100 Δ
D	.2520/2496	B1755/C020-8-	B1755/C2950-8	X7223991-8	X7223989-8	NONE	30-60 Δ
E	SEE SPEC	X7223985-6-	B1755/C589-6	NONE	NONE	X7223983-6	SEE SPEC
F	SEE SPEC	B1755/C513H8-	B1755/C589-8	B1755/P511-17	NONE	X7223993-8	SEE SPEC
G	.3148/3121	X7223996-5-	B1755/C077-5	X7223992-5	X7223994-5	NONE	100-225 Δ
H	SEE SPEC	B1755/C513H10-	B1755/C589-10	B1755/P511-22	NONE	X7223993-10	SEE SPEC
J	SEE SPEC	B1755/C513H12-	B1755/C589-12	B1755/P511-24	NONE	X7223993-12	SEE SPEC
K	.5025/4996	X7223996-8-	B1755/C077-8	X7223992-8	X7223994-8	NONE	480-1100 Δ
L	.289/.281	X7223996-4-	NAS1474C4	X7223992-4	NONE	NONE	50-100 Δ
M	.2520/2496	X7223995-4-	B1755/C906-4	X7223988-4	X7223987-4	NONE	00-110 ⊠
N	SEE SPEC	B1755/C513H6-	B1755/C589-6	B1755/P511-10	NONE	X7223993-6	SEE SPEC
P	2520/2496	B1755/C3002-8-	B1755/C2950-8	X7223991-8	NONE	NONE	50-100 Δ
R	5770/5746	B1755/C3002-12-	B1755/C2950-12	X7223991-12	NONE	NONE	160-390 Δ
S	.2520/2496	X7223980-8-	B1755/C2950-8	X7223991-8	X7223989-8	NONE	50-100 Δ
T	6275/6241	X7223996-10-	B1755/C077-10	X7223992-10	X7223994-10	NONE	1100-2400 Δ
U	.3145/3121	X7223980-10-	B1755/C2950-10	X7223991-10	X7223989-10	NONE	60-140 Δ
V	3770/3746	X7223980-12-	B1755/C2950-12	X7223991-12	X7223989-12	NONE	160-390 Δ
W	SEE SPEC	X7223985-10-	B1755/C589-10	B1755/P511-22	X7223986-10	X7223993-10	SEE SPEC
Y	.2520/.2496	B1755/C020-8-	B1755/C2950-8	X7223991-8	NONE	NONE	30-60 Δ

Δ - NOT LUBRICATED
⊠ - APPLY MIL-T-5544 THREAD COMPOUND TO FAYING SURFACES OF NUT SIDE WASHER, BOLT THREADS AND NUT THREADS.

BULKHEAD INSTL-
Y 992, WING CARRYTHRU

J 07878 X7224060

STRAIN GAGE LOCATIONS WCTS Y_F 992 BHD

Figure 2.1.2-4
(CONT)

3

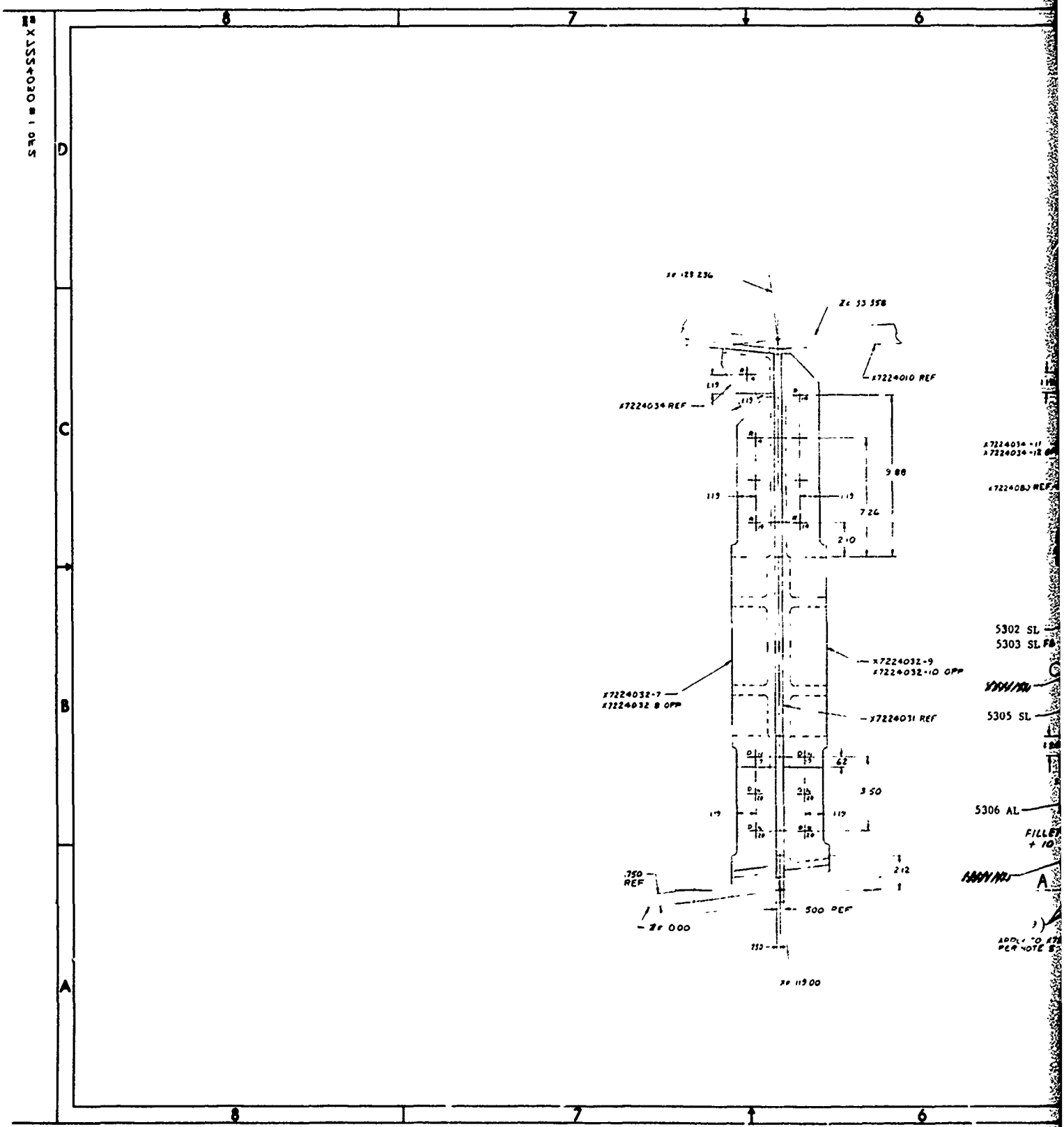
8
7
6
D
C
B
A
Z= 53 358
X7224010 REF
X7224034 REF
9 88
7 26
2 10
5302 SL
5303 SL
X7224032-9
X7224032-10 OPP
X7224032-7
X7224032 8 OPP
X7224031 REF
5305 SL
3 50
5306 AL
.750
REF
2 12
500 REF
Z= 000
Z= 119 00

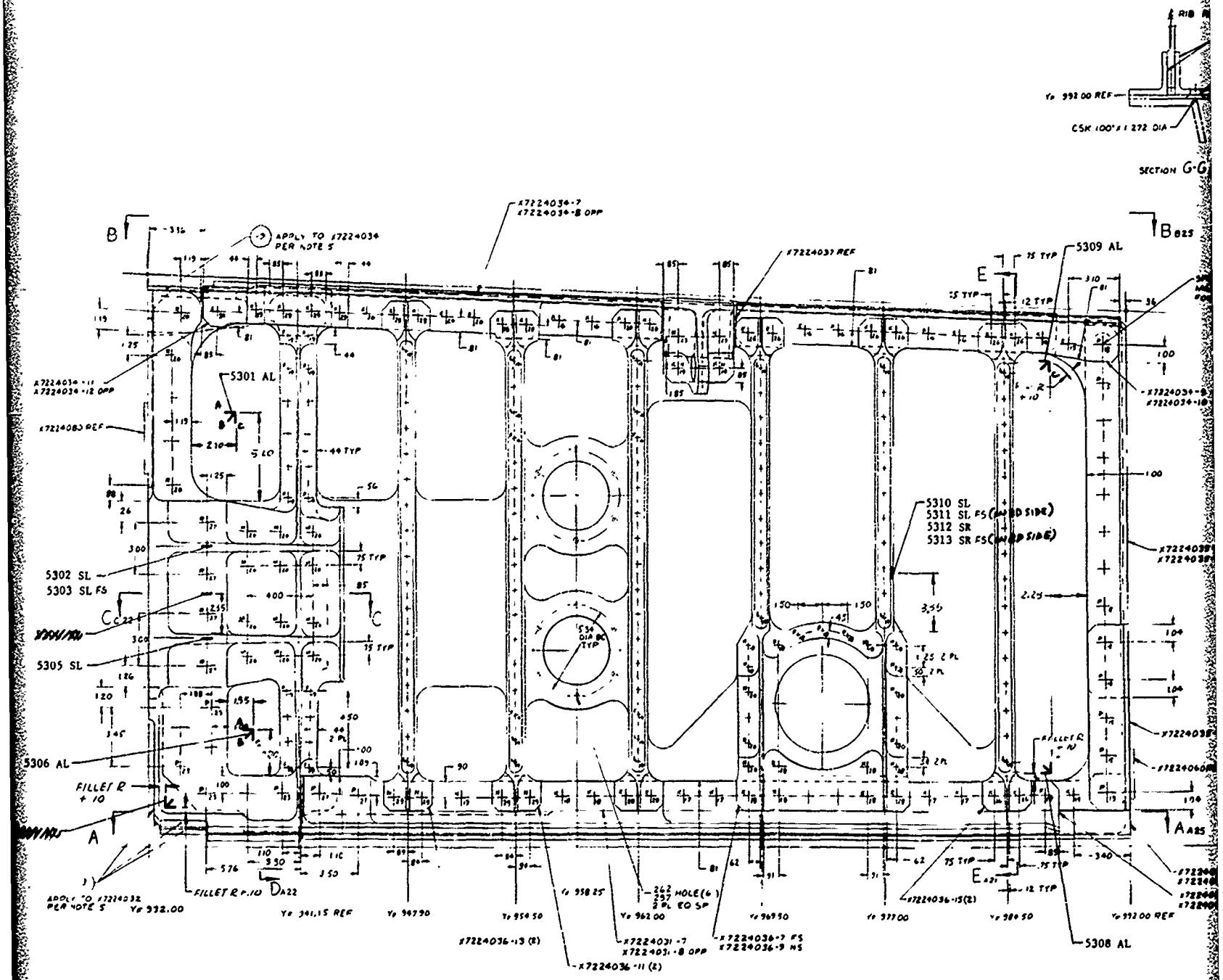

F354-5-13 C 3001	X7224030	1

2

COPY AVAILABLE TO DDC DOES NOT PERMIT FULLY LEGIBLE PRODUCTION

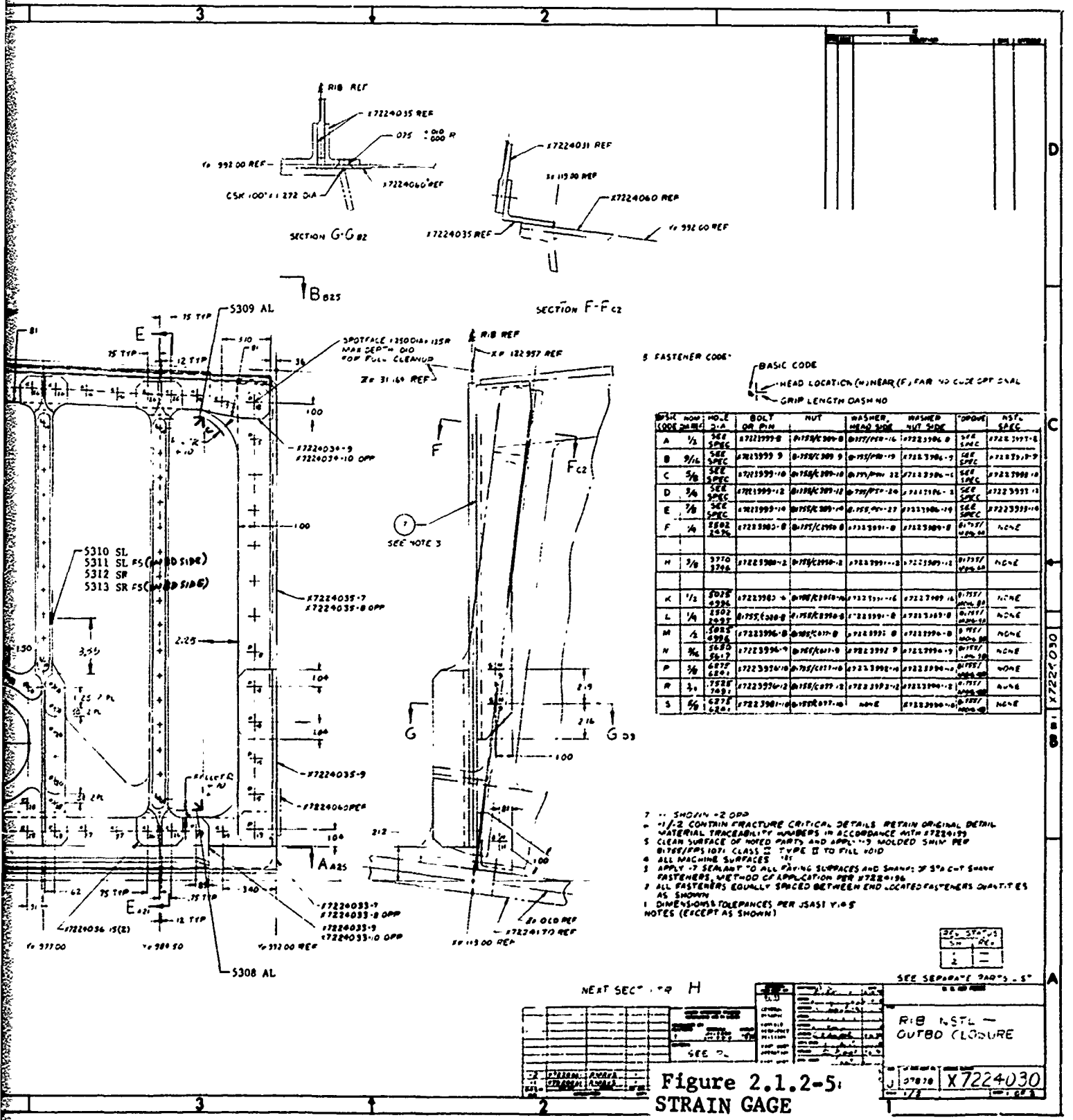

Figure 2.1.2-5: STRAIN GAGE LOCATIONS WCTS RIBS

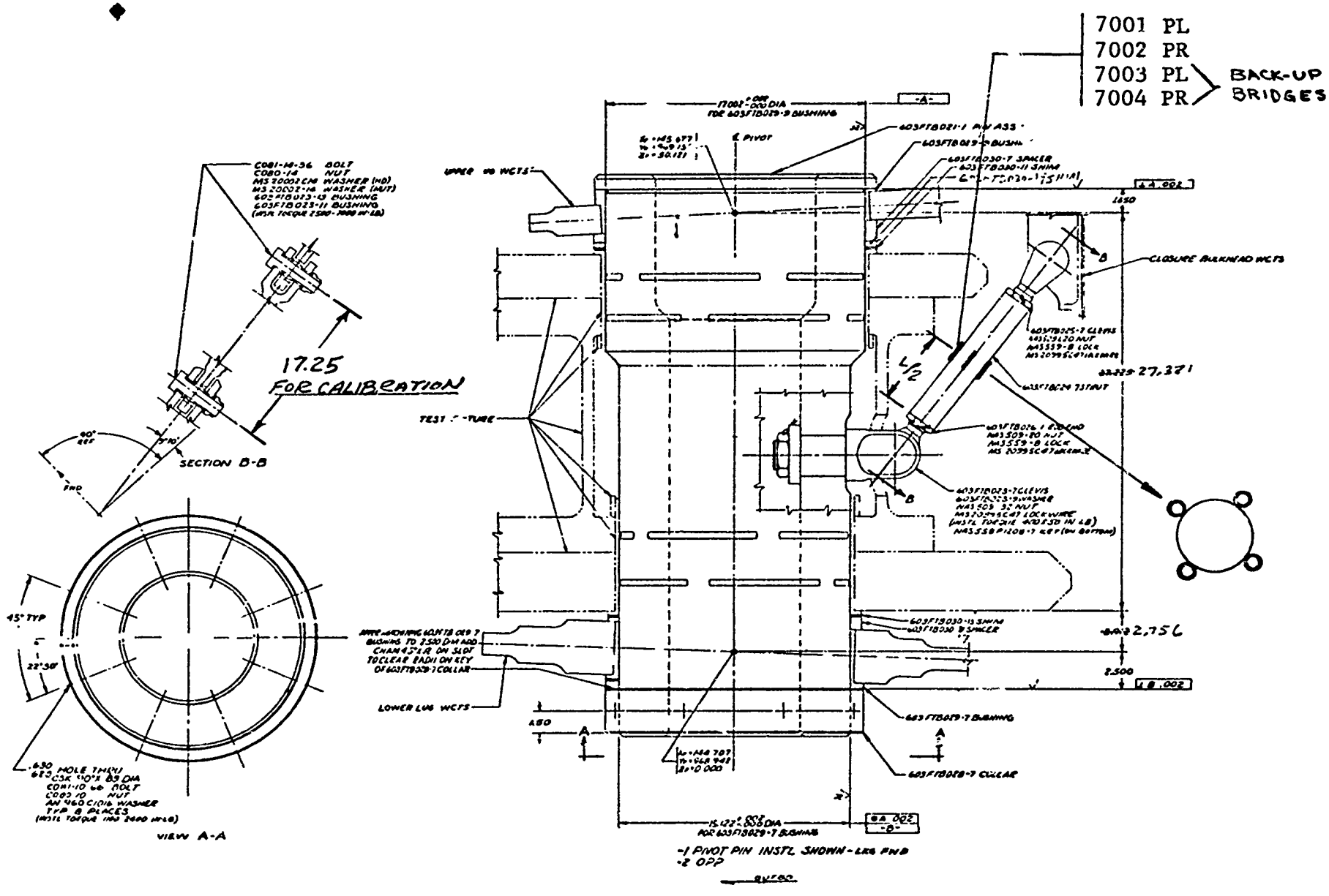

Figure 2.1.2-6 STRAIN GAGE LOCATIONS SIMULATED FUSELAGE STRUCTURE

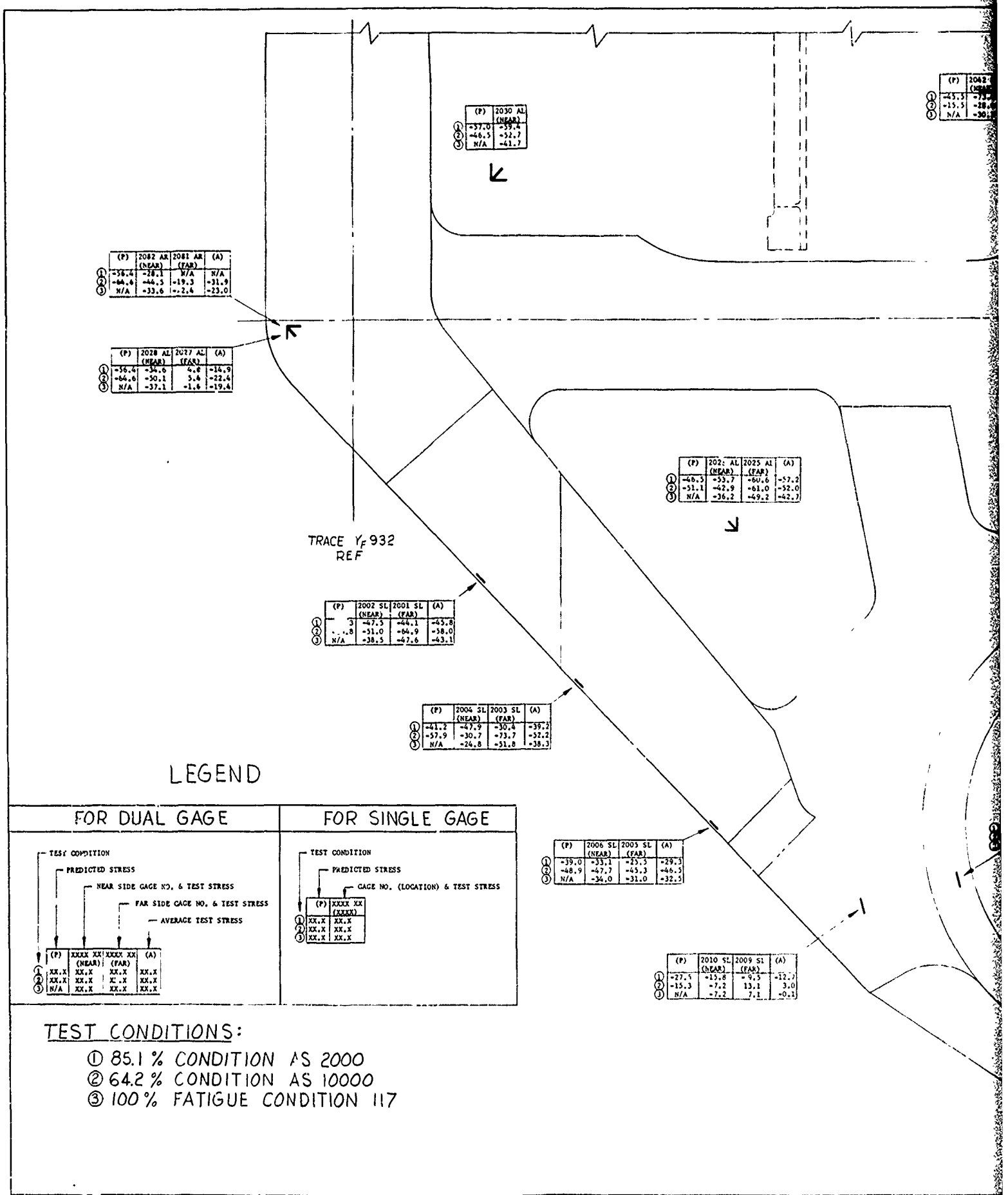

	(P)	2030 AL (NEAR)
①	-57.0	-59.4
②	-46.5	-52.7
③	N/A	-41.7

	(P)	2082 AR (NEAR)	2081 AR (FAR)	(A)
①	-56.4	-28.1	N/A	N/A
②	-64.6	-44.5	-19.3	-31.9
③	N/A	-33.6	-2.4	-23.0

	(P)	2028 AL (NEAR)	2027 AL (FAR)	(A)
①	-56.4	-34.6	4.8	-14.9
②	-64.6	-50.1	5.4	-22.4
③	N/A	-37.1	-1.6	-19.4

	(P)	2025 AL (NEAR)	2025 AL (FAR)	(A)
①	-46.5	-53.7	-60.6	-57.2
②	-51.1	-42.9	-61.0	-52.0
③	N/A	-36.2	-49.2	-42.7

	(P)	2002 SL (NEAR)	2001 SL (FAR)	(A)
①	3	-47.5	-44.1	-45.8
②	[illegible].8	-51.0	-64.9	-58.0
③	N/A	-38.5	-47.6	-43.1

	(P)	2004 SL (NEAR)	2003 SL (FAR)	(A)
①	-41.2	-47.9	-30.4	-39.2
②	-57.9	-30.7	-73.7	-52.2
③	N/A	-24.8	-51.8	-38.3

	(P)	2006 SL (NEAR)	2005 SL (FAR)	(A)
①	-39.0	-33.1	-25.5	-29.3
②	-48.9	-47.7	-45.3	-46.5
③	N/A	-34.0	-31.0	-32.5

	(P)	2010 SL (NEAR)	2009 SL (FAR)	(A)
①	-27.5	-15.8	-9.5	-12.7
②	-15.3	-7.2	13.1	3.0
③	N/A	-7.2	7.1	-0.1

	(P)	XXXX XX (NEAR)	XXXX XX (FAR)	(A)
①	XX.X	XX.X	XX.X	XX.X
②	XX.X	XX.X	XX.X	XX.X
③	N/A	XX.X	XX.X	XX.X

	(P)	XXXX XX (XXXX)
①	XX.X	XX.X
②	XX.X	XX.X
③	XX.X	XX.X

TEST CONDITIONS:

① 85.1 % CONDITION AS 2000
② 64.2 % CONDITION AS 10000
③ 100 % FATIGUE CONDITION 117

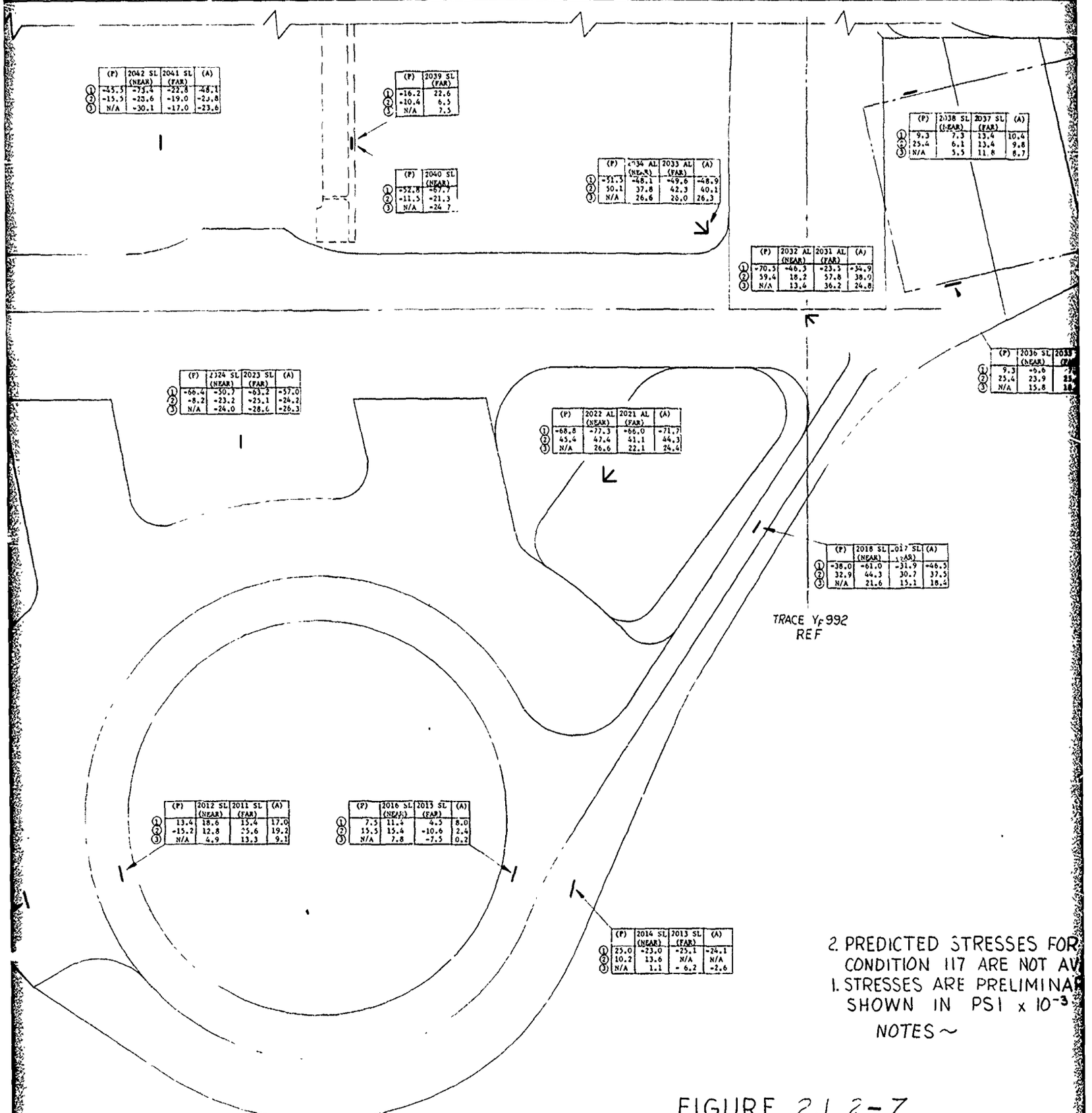

FIGURE 2.1.2-7
STRAIN SURVEY STRESSES OF UPPER PIVOT LUG

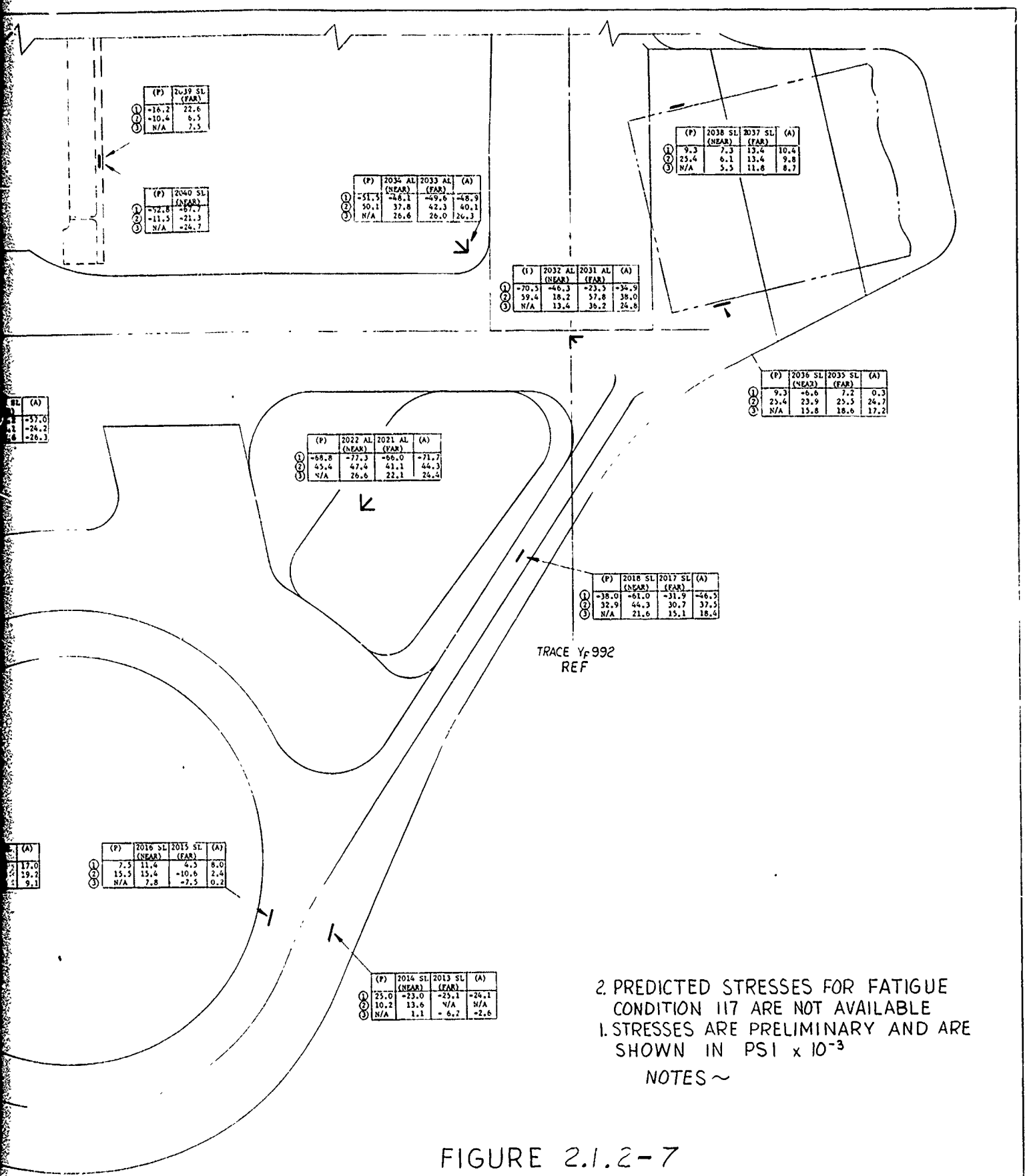

FIGURE 2.1.2-7
STRAIN SURVEY STRESSES OF UPPER PIVOT LUG

3

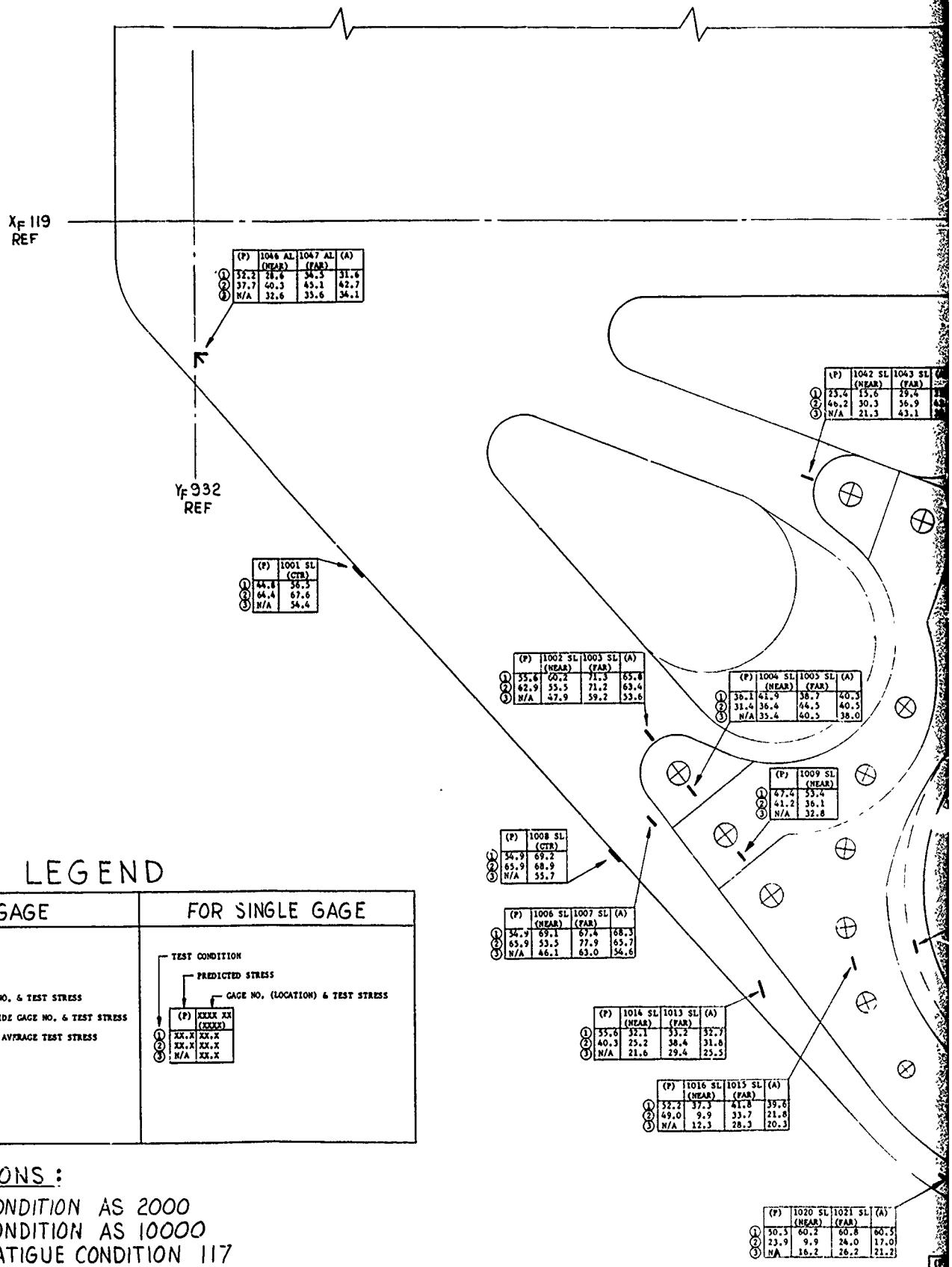

LEGEND

FOR DUAL GAGE

TEST CONDITION
PREDICTED STRESS
NEAR SIDE GAGE NO. & TEST STRESS
FAR SIDE GAGE NO. & TEST STRESS
AVERAGE TEST STRESS

	(P)	XXXX XX (NEAR)	XXXX XX (FAR)	(A)
①	XX.X	XX.X	XX.X	XX.X
②	XX.X	XX.X	XX.X	XX.X
③	N/A	XX.X	XX.X	XX.X

FOR SINGLE GAGE

TEST CONDITION
PREDICTED STRESS
GAGE NO. (LOCATION) & TEST STRESS

	(P)	XXXX XX (XXXX)
①	XX.X	XX.X
②	XX.X	XX.X
③	N/A	XX.X

TEST CONDITIONS:

① 85.1 % CONDITION AS 2000
② 64.2% CONDITION AS 10000
③ 100 % FATIGUE CONDITION 117

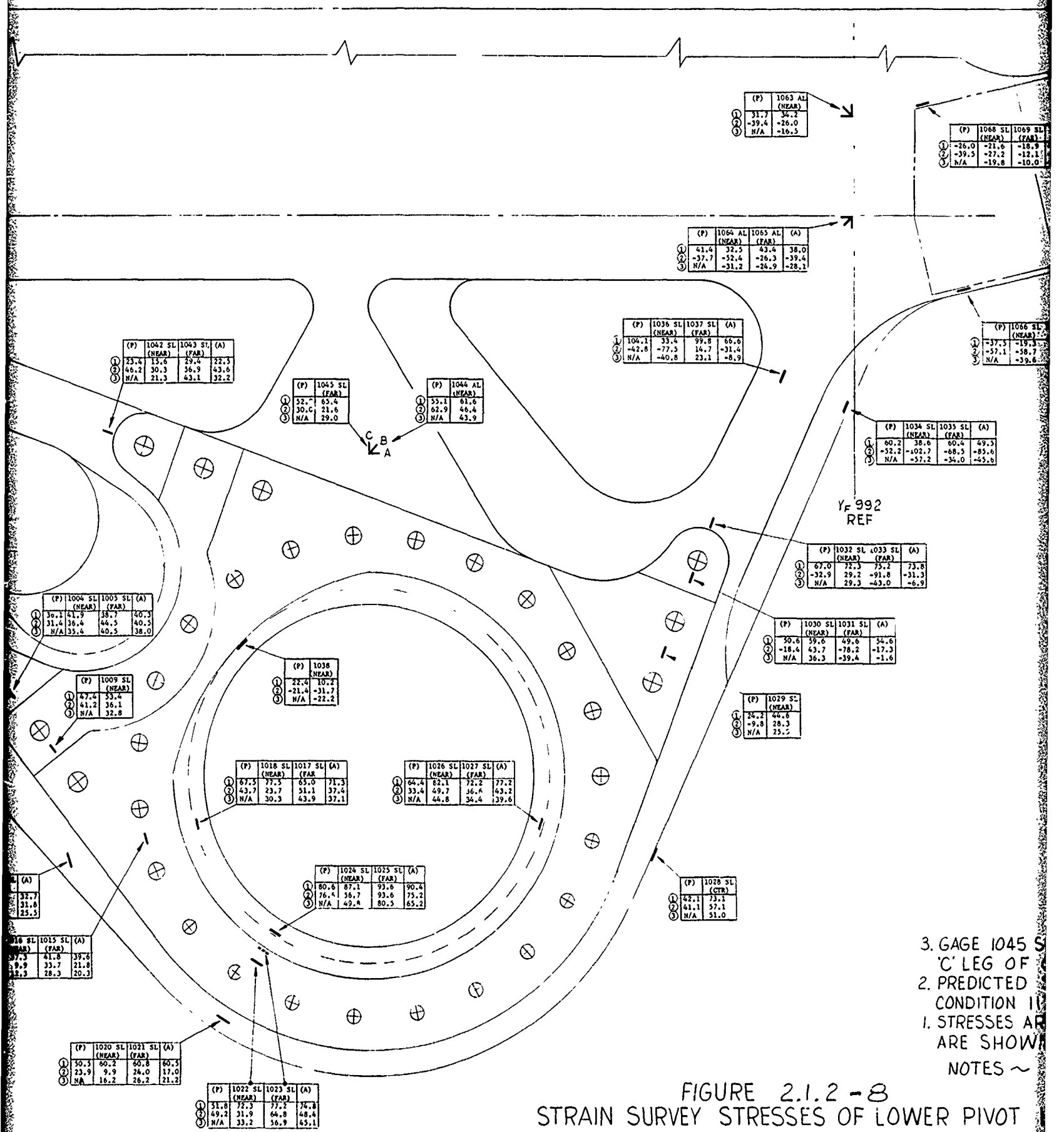

FIGURE 2.1.2 - 8
STRAIN SURVEY STRESSES OF LOWER PIVOT

2

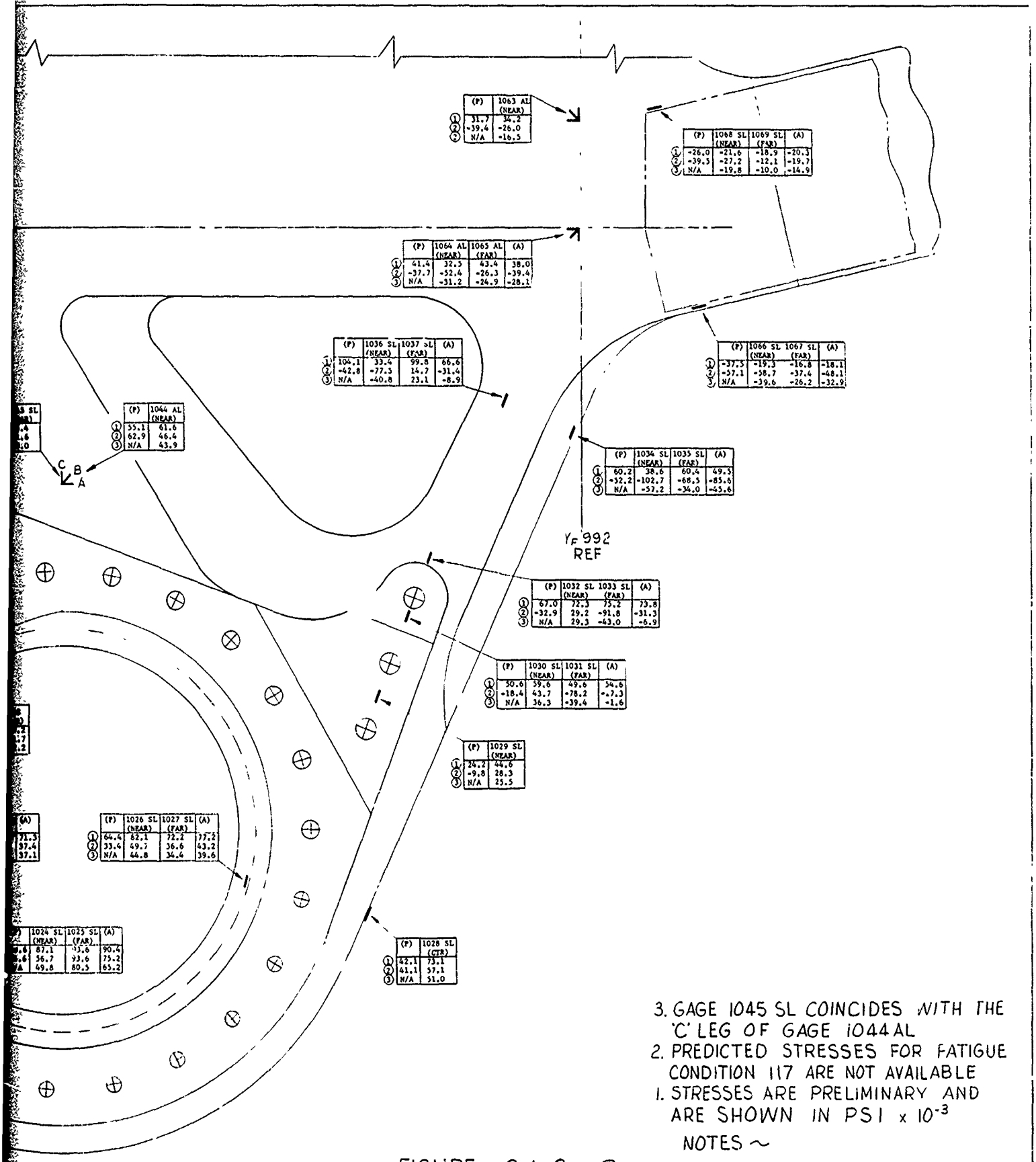

3. GAGE 1045 SL COINCIDES WITH THE 'C' LEG OF GAGE 1044 AL
2. PREDICTED STRESSES FOR FATIGUE CONDITION 117 ARE NOT AVAILABLE
1. STRESSES ARE PRELIMINARY AND ARE SHOWN IN PSI x 10^{-3}

NOTES ~

FIGURE 2.1.2-8
STRAIN SURVEY STRESSES OF LOWER PIVOT LUG

3

Table 2.1.2-V SIMULATED FUSELAGE LONGERON COMPARISONS

AFFDL-TR-74-17 MEMBER NUMBER	STRAIN GAGE	.851 AS 2000 (3) (4) PRED STRESS KSI	TEST STRESS KSI	R (1)	.642 AS 10000 (3) PRED STRESS KSI	TEST STRESS KSI	R (1)	DESCRIPTION	
146	7101 7102	51.7	57.2	1.09	30.6	32.0	1.01	Upper Centerline, Y_F932	(2)
148	7103 7104	50.5	49.2	1.05	28.5	30.8	1.06	25° , Y_F932	(2)
150	7105	22.7	N.A.	.84	14.3	N.A.	.78	X_F39 Upper ,	
157	7106 7107	-8.2	-8.4	1.65	-11.4	-13.2	1.08	Outboard Upper , Y_F932	(2)
162	7108 7109	-14.4	-9.7	1.09	-3.0	1.0	.66	Outboard Lower , Y_F932	(2)
141	7110 7111	-10.6	-11.2	.65	-4.0	-4.6	.76	XF 52, Lower , Y_F932	(2)
256	7201 7202	27.6	26.9	.92	23.4	21.1	.93	Upper Centerline, Y_F992	(2)
259	7208 7209	32.9	34.4	1.24	26.8	25.1	1.29	25° Outboard , Y_F992	(2)
260	7207	6.7	7.8	.90	4.6	6.1	.79	25° Inboard , Y_F992	
262	7210	4.5	3.6	.92	3.9	2.8	1.31	XF 54 Upper , Y_F992	
266	7211 7212	7.2	.7	3.57	14.4	15.6	2.23	XF 103 Upper , YF992	
267	7215 7216	7.6	1.5	.93	22.9	18.2	1.05	Outboard Upper , Y_F992	(2)
275	7217 7218	-16.4	-12.6	1.07	-25.0	-24.6	1.05	Outboard Lower , Y_F992	(2)
282	7213 7214	-11.5	-23.7	.60	-19.2	-36.5	.98	XF 103 Lower , Y_F992	(2)
286	7205 7206	-13.7	-8.5	1.34	-13.3	-8.4	1.71	Lower Centerline, Y_F992	
258	7204	-1.2	-.7	-3.0	-2.7	-.9	-9.0	ZF 48 Centerline, YF992	
257	7203	7.1	20.0	.62	- .8	11.9	-.1	ZF 69 Centerline, Y_F992	

NOTES: (1) R=Load Sim. Fus. Model / NARSAP Load (2) Major Long. (3) At Max. Fat. Load. (4) Av. of Adjacent Gages Where Available

2.1.2.5 Full Scale Fatigue Test Updated Ram Loads and Reactions

In generating the updated ram and reaction loads from the updated RI data, the basic assumptions and formulas used in developing the original test loads for FZS-219 were retained. However, HP 9830 programs were written to allow expeditious handling of the larger number of conditions involved and to provide faster reaction capability for revisions received from RI.

Unlike the previous fatigue spectrum, the ground conditions included braking which would require the application of drag loads at the landing gear with fore and aft loads on the dummy wings and upper test fixture fuselage for full test simulation. Since the drag loads are critical primarily for local gear attach structure, it was decided that only the sweeping moment portion of the condition would be included for cycling. This simplification precluded extensive modification of the test set up since the sweeping moment portion can be applied with the existing set up. Consideration is being given jointly by General Dynamics and AFFDL to running a low load level static test to obtain the incremental effects of a drag load for use in fatigue analysis.

A complete set of basic condition ram loads was completed first for the data from NA 75-346 and then for its revision. These loads were then combined using factors from Table 2.1.2-II to get the fatigue condition loads for each spectrum step. A partial set of maximum fatigue conditions was prepared using NA 75-346 data and a complete set (280) was developed for the most current revised data received. Because one load ram per wing can be chosen somewhat arbitrarily, the basic condition ram loads and consequently those for the fatigue conditions loads were modified to avoid exceeding current ram capabilities so far as possible. All loads calculated were furnished to AFFDL on a progressive basis to allow closer coordination. Current basic condition ram loads are shown in Table 2.1.2-VI.

Revised 8-4-75
* Revised 8-15-75
** Revised 9-24-75

TABLE 2.1.2-VI

RAM LOADS FOR BASIC REVISED NA75-346 AND G/D MODIFIED CONDITIONS

COND. / LOAD (KIPS)	10100	16100.5	21440	22440	31210	31440	32210	32440	41430	42430	51440	51750	52440	52750	53440	53750	** 53755	60100	66100.5
W1	* 22.892	** -.185	40.684	34.213	40.747	50.073	48.196	41.517	41.694	38.967	38.744	.526	37.035	2.038	40.363	-.608	- .842	* 28.092	**- .269
W2	*-51.000	** -.110	25.876	30.529	41.118	11.694	33.998	19.182	19.987	18.755	24.231	1.897	22.516	3.160	4.715	-.758	- .515	* -51.167	**- .051
W3	* 6.511	-.200	20.000	18.000	20.000	17.590	18.000	17.000	22.000	16.000	25.000	19.000	20.000	5.000	22.000	14.500	20.000	* 8.000	-.100
W4	*-13.626	** .845	12.430	3.949	13.512	15.889	-12.060	5.215	10.006	4.677	3.675	26.599	- .318	34.079	1.971	25.133	17.703	* -14.195	** .616
PSA FWD	.280	**-83.242	2.662	-11.209	-33.205	-3.436	-209.135	-17.296	-18.974	-38.484	-7.038	0	-20.909	0	-97.401	0	0	.313	**-72.859
PSA AFT	0	0	.669	-2.819	0	-.864	0	-4.350	-4.773	-9.680	-1.770	-109.641	-5.259	-63.082	-24.499	-118.253	-134.657	0	0
PSRA	0.011	**-12.866	.121	-2.183	-5.419	-.960	-32.088	-3.262	-3.730	-6.992	-1.596	-10.782	-3.897	-6.403	-17.560	-11.477	- 12.971	.018	**-11.260
F1	40.259		-37.426	-29.324	-43.712	-49.589	-30.992	-41.652	-45.423	-34.255	-43.279	-49.791	-35.255	-27.455	-79.510	-137.322	- 94.691	20.805	
F2	-175.269		-28.974	-28.726	-53.638	-12.071	-43.248	-11.698	-14.497	-15.465	-14.601	64.891	-14.135	27.955	70.070	181.192	140.017	-119.975	
F3	-6.689	0	-6.540	-7.320	-6.487	-2.254	-7.050	-2.954	-6.421	-7.394	-6.800	-3.880	-7.547	-7.177	.011	5.790	3.677	-6.520	0
F4	1.295		1.428	.728	1.475	-2.022	.970	-2.652	1.535	.662	1.194	3.816	.525	.857	-1.078	-1.414	-1.517	1.446	
F5L	180.535		0	0	0	0	0	0	0	0	0	0	0	0	0	0	0	139.972	
F5R	180.535		0	0	0	0	0	0	0	0	0	0	0	0	0	0	0	139.972	
F6	-80.007		-40.431	-47.486	-9.370	-33.016	-43.244	-40.180	-31.774	-41.096	-34.343	-49.214	-41.431	-33.350	-75.533	-47.371	-72.770	-57.781	
F7	-70.213		-86.039	-61.184	-118.890	-91.934	-51.606	-66.590	-90.676	-59.024	-85.427	-61.516	-60.499	-49.150	-51.497	-76.999	-46.946	-59.379	

TABLE 2.1.2-VI (CONT'D)

RAM LOADS FOR BASIC REVISED NA75-346 AND G/D MODIFIED CONDITIONS

Revised 8-4-75
** Revised 9-24-75

COND / LOAD (XIPS)	71760	72760	73760	74765	81430	81530	82430	82530	91770	91870	92770	92870	101440	102440	111210	111310	111620	111780	112210
W1	-2.596	2.619	-.390	-.282	34.591	32.915	31.778	31.738	-.858	-1.459	.702	.770	33.786	32.267	26.485	34.524	2.895	-1.911	38.846
W2	-2.820	1.355	-.947	-.548	17.522	18.939	16.469	16.502	-1.220	-.667	-.005	.025	12.163	10.225	35.862	24.833	9.856	-1.959	19.951
W3	-2.500	6.000	1.000	20.00	16.000	16.372	9.956	9.965	8.700	8.000	11.500	12.000	14.000	9.000	25.500	20.000	25.000	2.000	8.000
W4	61.406	35.020	12.493	8.960	14.727	14.764	9.447	9.445	49.776	50.688	41.054	40.379	12.561	8.534	.840	9.472	15.048	45.704	1.639
PSA FWD	0	0	0	0	-5.544	231.696	-25.061	-18.086	0	0	0	0	-11.450	-25.329	90.094	233.281	-7.016	0	-85.408
PSA AFT	-90.037	-128.891	-223.253	-227.348	-1.395	58.278	-6.303	-4.549	49.613	177.870	9.025	-55.095	-2.880	-6.371	0	0	-22.802	65.824	0
PSRA	-9.053	-12.376	-20.844	-21.226	-1.355	40.561	-4.604	-3.372	3.527	15.101	-.089	-5.877	-2.356	-4.638	13.569	35.668	-3.952	5.102	-13.092
F1	-40.886	-14.814	-70.961	**-76.746	-44.593	-44.126	-33.292	-33.293	-36.942	-36.263	-26.568	-26.901	-51.874	-43.789	-34.623	-34.540	-52.173	-38.539	-23.744
F2	53.470	16.258	108.675	**117.474	-3.107	-8.994	-4.480	-4.621	36.142	34.266	24.264	25.193	13.406	13.711	-35.451	-38.312	51.209	34.543	-29.834
F3	.270	-4.296	1.800	** -5.701	-6.925	-7.124	-7.935	-7.952	-6.108	-6.290	-6.508	-6.419	-3.542	-4.313	-3.469	-3.656	-1.761	-3.774	-7.609
F4	.242	-3.856	1.616	** 2.181	1.083	.904	.177	.161	1.816	1.652	1.456	1.537	-3.180	-3.871	4.185	4.016	-1.581	-3.388	.469
FSL	0	0	0	0	0	0	0	0	0	0	0	0	0	0	0	0	0	0	0
FSR	0	0	0	0	0	0	0	0	0	0	0	0	0	0	0	0	0	0	0
F6	-65.476	-41.231	-65.374	**-51.429	-34.058	-18.932	-42.996	-42.542	-23.584	-21.259	-25.185	-26.335	-26.953	-33.584	-14.744	-6.636	-22.725	3.855	-35.653
F7	-54.308	-41.603	-31.312	**-40.229	-78.042	-88.908	-46.612	-46.934	-84.228	-85.683	-73.959	-73.237	-72.801	-48.036	-93.658	-99.534	-78.441	-80.545	-40.009

TABLE 2.1.2-VI (CONT'D)

Revised 3-4-75
** Revised 9-24-75

RAM LOADS FOR BASIC REVISED NA75-346 AND G/D MODIFIED CONDITIONS

LOAD (KIPS) \ COND.	112620	112780	113210	11362'	120100	126100.5	1044.55	1044.675	1057.25	1057.55	1057.675	1072.25	1072.675	1248.15	1248.25	1345.15	1345.25
W1	7.122	-.243	40.652	4.046	21.560	** -.319	.083	.081	.084	.084	.083	.086	.079	.101	.103	.102	.106
W2	6.699	-.416	-1.982	3.166	-38.167	** .191	-.051	-.049	-.052	-.051	-.051	-.054	-.048	-.062	-.064	-.064	-.066
W3	17.000	5.500	12.000	25.000	2.800	0	0	0	0	0	0	0	0	0	0	0	0
W4	16.360	31.260	-2.783	3.505	-5.727	** .353	-.084	-.084	-.076	-.086	-.086	-.079	-.081	-.093	-.097	-.088	-.097
PSA FWD	-11.120	0	-115.369	-35.137	.191	**-55.883	7.206	0	18.621	7.296	0	18.886	0	25.138	21.986	27.092	23.695
PSA AFT	-36.140	8.553	0	-114.195	0	0	23.421	35.981	4.769	23.712	36.429	4.837	36.946	0	5.631	0	6.068
PSRA	-5.671	.058	-17.848	-16.517	.009	** -8.637	3.248	3.248	3.288	3.288	3.288	3.335	3.335	3.882	3.883	4.184	4.184
F1	-42.681	-26.321	-43.113	-55.850	8.292												
F2	43.583	23.069	34.023	83.020	-64.118												
F3	-4.095	-3.850	.246	.975	-2.419												
F4	-3.675	-3.456	-.672	.875	-2.171	0	0	0	0	0	0	0	0	0	0	0	0
F5L	0	0	0	0	89.304												
F5R	0	0	0	0	89.304												
F6	-30.246	-.039	-74.725	-33.098	-47.894												
F7	-57.046	-61.607	-10.831	-56.756	-31.230												

2.1.2.6 Fatigue Test Instrumentation and Data Recording Requirements

Following the operational checkout strain survey, a reduced number of strain gage channels was selected for use during the fatigue testing since equipment limitations prevented the simultaneous use of all channels. The channels were selected on the basis of results from the strain survey. A small number of gages were added in areas of particular interest.

Prior to the 1975 fatigue loads update, data points for obtaining baseline and comparative data were defined on page 2-41 of FZS-219B. Because of the updated spectrum, it was necessary to redefine these points. The first flight strain survey has added significance in that only one of the updated conditions has been previously applied (FC 117). The currently defined points are shown in Tables 2.1.2-VII, -VIII, and -IX. The points were chosen, in general, because they were at relatively high loads for representative types of conditions or because they occurred during significant transitions.

Table 2.1.2-VII

Strain Survey Data Cycle For 1st Flight Using "Every 100th Flight" Spectrum

All points are at 100% of the given fatigue condition except as noted for transition points.

Point Designation and Data Point Numbers	Fatigue Condition	Point Designation and Data Point Numbers	Fatigue Condition
1-1	12	1-19	61
1-2	14	1-20	561
1-3	16	1-21	63
1-4	516 to 18 *	1-22	563
1-5	18	1-23	88
1-6	18 to 518 *	1-24	588
1-7	518	1-25	96
1-8	20	1-26	117
1-9	520	1-27	617
1-10	34	1-28	119
1-11	537	1-29	619
1-12	537 to 38 *	1-30	122
1-13	38	1-31	127
1-14	39	1-32	637
1-15	539	1-33	148
1-16	549	1-34	150
1-17	51	1-35	166
1-18	560	1-36	169

* These points are to be taken midway between noted end conditions where each loads ram has undergone one-half of its straight line load change.

Table 2.1.2-VIII

Baseline Data Cycle for 5th Flight Using "Every Flight" Spectrum

All points are at 100% of the given fatigue condition except as noted for the transition point.

Point Designation	Fatigue Condition	Data Point Number
37	14	1-2
38	16	1-3
39	516 to 20 *	5-1
40	20	1-8
41	520	1-9
42	34	1-10
43	51	1-17
44	63	1-21
45	563	1-22
46	88	1-23
47	119	1-28
48	619	1-29
49	122	1-30
50	150	1-34
51	166	1-35
52	169	1-36

* These points are to be taken midway between noted end conditions where each loads ram has undergone one-half of its straight line load change.

Table 2.1.2-IX

Periodic Data Cycle For 160 Flight Increments Using "Every 10th Flight" Spectrum

All points are at 100% of the given fatigue condition.

Point Designation	Fatigue Condition	Data Point Number
53	14 **	1-2
54	20 **	1-8
55	34 **	1-10
56	51	1-17
57	63	1-21
58	88 **	1-23
59	119 **	1-28
60	122	1-30
61	150	1-34
62	166	1-35

** To be printed out in format shown in Table 7-1 (Ref. Sec. 7.0, FZS-219) for comparison with data previously recorded in 1st and 5th test flights. Other data recorded is to be retained on tape.

2.1.2.7 Stress Determination for Final Fatigue Analysis

Current plans are to obtain stresses for fatigue analysis by loading the current NBB 5 finite element model with the updated fatigue conditions from the analytic spectrum (Table 2.1.2-III. The model was changed from TN1 to UGO to facilitate handling of the larger number of conditions and to take advantage of shorter run times resulting from the "frontal" approach. UGO is currently being used for F-16 structural analysis at General Dynamics.

To load the models, panel point loads must be determined. A program was developed that uses NARSAP data as input and produces node loads that can be merged directly with the current model for stress determination. Other output provides various checks on input data and intermediate values. The program was written for the HP 9830 for development purposes and then programmed in FORTRAN for running on IBM 370 equipment. The program which handles symmetric and asymmetric conditions has now been completed and is on production. The GD program number is CM 7. It is operational from the time sharing terminals for more efficient turnaround.

Subsequent to the development of CM 7, it was found that the current RI loads data presentation is no longer in the NARSAP format, but rather in more detail in some areas. In order to take advantage of CM 7, an HP 9830 program was written which converts the NA 75-346 data to quasi - NARSAP form for input into CM 7 at the TSO terminals. The quasi-NARSAP data has been obtained for the basic conditions which are combined to form the fatigue conditions. Initial CM 7 runs were made and are being checked out.

2.1.3 Fatigue and Fracture Analysis

During the reporting period, the fatigue analysis for the spectrum current at the time of WCTS final design was completed. The results were reported in FZS-219, Revision A, 3 Feb. 1975, Section 2.3 (AMAVS Full Scale Test Program Test Plan, Vol. I). However, for completeness, the results are presented in Section 2.1.3.1 of this report. Subsequent to this analysis, the 1975 updated test fatigue spectrum became available as a part of the "credible option" concept and a preliminary fatigue analysis was made using the updated test spectrum. A further discussion and results of the preliminary analysis are presented in Section 2.1.3.2.

2.1.3.1 Fatigue Analysis for WCTS Phase II Design Loads

For each of the five mission segments defined by a single static load condition, the limit wing bending moment (M_X) noted in Table 2.1.3-I is used to relate the wing bending moments to the WCTS internal loads and stresses. The noted static conditions were used to determine the fatigue loads as a percentage of design limit load. Using linear stress/load coefficients for selected WCTS areas, the fatigue loads were converted to a stress spectrum for each fatigue control point by range-pair-counting techniques. The range-pair-counting procedures developed by RI and described in their report TFD 72-358 "A Method of Counting Spectrum Load Cycles," 10 March 1972 were used to derive analytical stress spectra. A computer program was developed to range-pair count the stress spectra for each distinct flight type (i.e., flights 1, 10, 100).

Selection of the WCTS control points was based on the stress/load state of individual sections of the structure. Primarily tensile-loaded elements of the WCTS were identified as control points based on the evaluation of finite element math model stresses, stress analysis results, and the details of the design configuration.

Stress-state distributions for the five fatigue spectrum mission segments (Conditions AS2000, AS10000, AS5000, AS9000 and AS7000; representing post-take-off, TFR, prelanding, climb-cruise-refuel, and ground/taxi, respectively) were considered in the selection of control points. Based on these selection criteria the following WCTS structural areas were identified as fatigue control points:

- Control Point 1, Figure 2.1.3-1, X7224061 Y_F992 Bhd. Inbd. Panel, Fuel Transfer Hole @ X_F29.

- Control Point 2, Figure 2.1.3-2, X7224170 Lower Lug, Pivot Bore.

- Control Point 3, Figure 2.1.3-3, X7224170 Lower Plate, Lug: .875 Dia. Taper-Lok hole.

- Control Point 4, Figure 2.1.3-4, X7224170 Lower Plate Assy., Aft Outb'd Cutout, X_F68-72, Y_F992, Z_F0.

- Control Point 5, Figure 2.1.3-5, X7224080 Bhd., Y_F932, Lower Attach Flange X_F65, Y_F932, Z_F0.

o Control Point 6, Figure 2.1.3-6, X7224011 Upper Aft, Outboard Longeron Attachment.

The range-pair counting spectrum development procedure noted was used to derive analytical stress spectra from the basic flight-by-flight stress spectra for each of the selected control points. Fatigue analyses were conducted for each control point to evaluate the fatigue damage associated with each design range-pair-counted spectrum. The results of these analyses are summarized in Table 2.1.3-II. Comparisons of the basic flight-by-flight stress spectrum and the corresponding range-pair-counted stress spectrum for each of the six selected control points are shown in Tables 2.1.3-III through -VIII.

Table 2.1.3-I

WING BENDING MOMENT SPECTRUM AT THE WING
PIVOT FLIGHT-BY-FLIGHT COMPOSITE MISSION

Load Step	Mission Segment	*Bending Mom x 10^6 in-lb Limit		Wing Angle	*Bending Mom x 10^6 in-lb Max	Min	% of Condition Max	Min	**Analytic Spectrum Cycles/Mission
1	Ground (Cond AS7000)	- 13.0		15°	- 1.5	- 7.9	11.5	60.8	1
2	Post Takeoff	68.15	M	15°	58.0	35.1	85.1	51.5	0.01
3	(Cond AS2000)				52.2	35.1	76.6	51.5	0.1
4					40.4	35.1	59.3	51.5	2
5					35.1	28.2	51.5	41.4	2
6			G		41.2	38.7	60.5	56.8	2
7					41.5	24.7	60.9	36.2	1
8					34.4	30.3	50.5	44.5	29
9	Climb, Cruise &	64.38	M	25°	27.0	12.3	41.9	19.1	1
10	Refuel				33.1	27.0	51.4	41.9	22
11	(Cond AS9000)				27.0	23.0	41.9	35.7	22
12					36.3	19.3	56.4	30.0	1
13					19.3	7.6	30.0	11.8	1
14					25.5	19.3	39.6	30.0	58
15					19.3	16.3	30.0	25.3	58
16	Fly-Up	34.25		67.5°	22.0	8.2	64.2	23.9	1
17	(Cond AS10000)				15.0	8.5	43.8	24.8	1
18	Terrain Following	34.25	G	67.5°	20.8	15.5	60.7	45.3	0.1
19	(Cond AS10000)				17.7	9.0	51.7	26.3	1
20					14.5	11.1	42.3	32.4	7
21					15.6	2.6	45.5	7.6	1
22					10.3	5.8	30.1	16.9	132
23					9.2	- 1.4	26.9	- 4.1	1
24					6.3	2.7	18.4	7.9	132
25			M		21.0	1.2	61.3	3.5	1
26					15.9	2.2	46.4	6.4	9
27					10.3	4.5	30.1	13.1	95
28	Prelanding	62.23	M	15°	57.3	32.2	92.1	51.7	0.01
29	(Cond AS5000)				51.6	- 8.6	82.9	- 13.8	0.1
30					44.4	32.2	71.3	51.7	1
31	Ground (Cond AS7000)	- 13.0		15°	- 1.5	- 7.9	11.5	60.8	1
32	Takeoff (Cond AS2000)	68.15		15°	49.9	33.7	73.2	49.4	1
33	Climb (Cond AS9000)	64.38		25°	45.9	27.0	71.3	41.9	1
34	Prelanding	62.23	M	15°	32.2	21.5	51.7	34.5	1
35	(Cond AS5000)				37.3	32.2	59.9	51.7	19
36			--		32.2	28.7	51.7	46.1	19
37			G		47.8	29.8	76.8	47.9	1
38					40.9	35.0	65.7	56.2	4
39					41.7	20.9	67.0	33.6	1
40					37.7	24.8	60.6	39.9	9
41					35.7	26.8	57.4	43.1	48
42					33.0	28.7	53.0	46.1	294
43	Ground	- 13.0		15°	- 1.5	- 7.9	11.5	60.8	8
44	(Cond AS7000)				- 2.0	- 7.3	15.4	56.2	154

NOTES: ** (1) This composite mission table contains 1143.32 cycles per mission and 1,463,449.6 cycles per life.
(2) Legend: M -- Maneuver Load G -- Gust Load
* (3) Bending Moment is in the Fuselage Reference System. Wing roll moment component, M_x, only is shown.

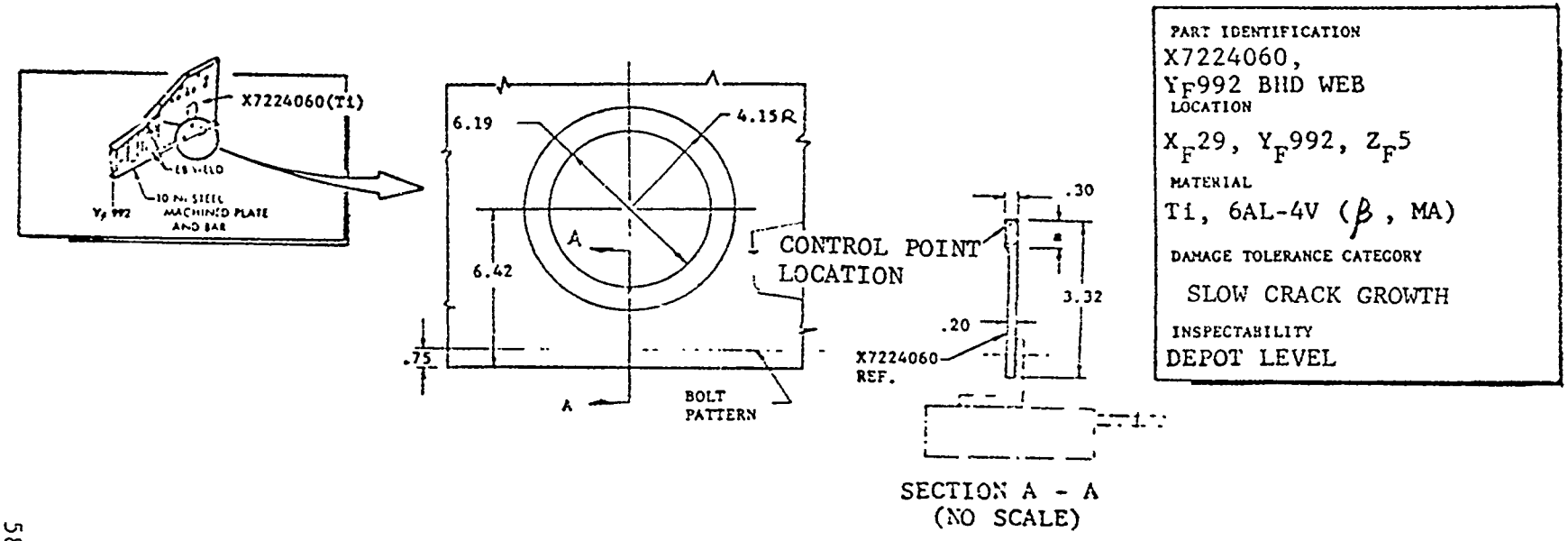

GROSS SECTION ULTIMATE EFFECTIVE STRESS FOR CONDITIONS IN FATIGUE SPECTRUM, KSI					STRESS, KSI					STRESS CONCENTRATION FACTOR	
AS2000	AS10000	AS5000	AS9000	AS7000	GROSS SECTION LIMIT	MAXIMUM SPECTRUM	NET SECTION LIMIT	NET SECTION ULTIMATE	ALLOWABLE	ANALYSIS	CALCULATED
55.28	27.47	52.17	50.03	-1.30	36.87	37.82	43.51	65.23	80	5.0	2.17

Figure 2.1.3-1 CONTROL POINT 1, Y_F992 BHD. INBD. PANEL, FUEL TRANSFER HOLE @ X_F29

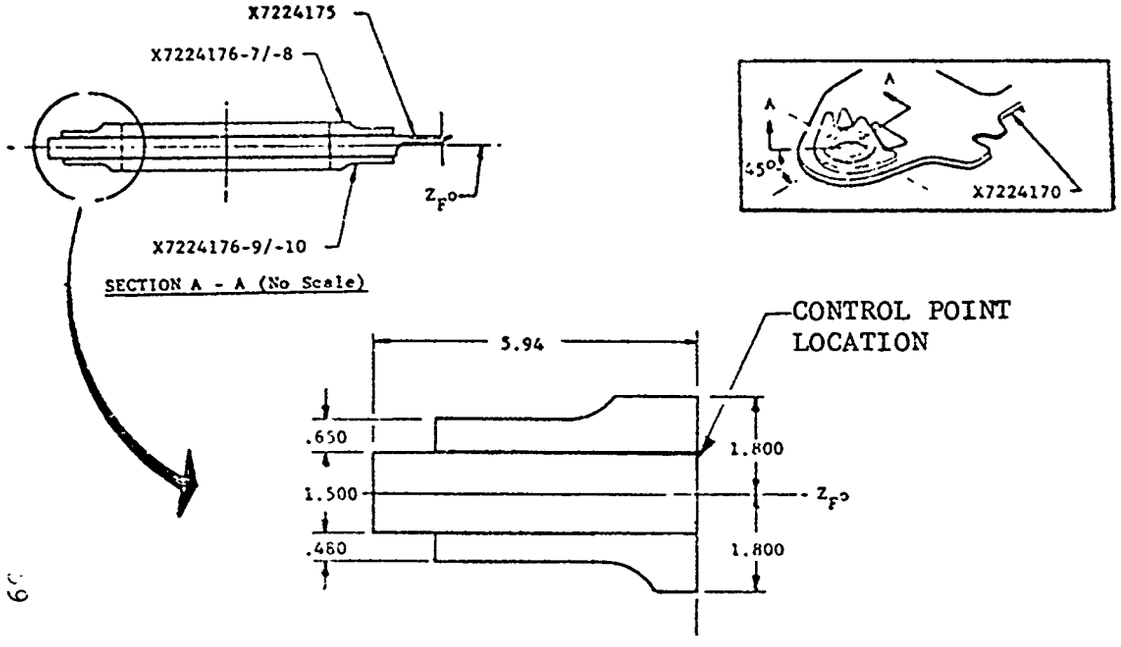

PART IDENTIFICATION
X7224170
PLATE ASSY, PIVOT LUG, LWR.
LOCATION
X_F141.18, Y_F951, Z_F0
MATERIAL
10 Ni STEEL
DAMAGE TOLERANCE CATEGORY
SLOW CRACK GROWTH
INSPECTABILITY
DEPOT LEVEL

GROSS SECTION ULTIMATE EFFECTIVE STRESS FOR CONDITIONS IN FATIGUE SPECTRUM, KSI					STRESS, KSI					STRESS CONCENTRATION FACTOR	
AS2000	AS10000	AS5000	AS9000	AS7000	GROSS SECTION LIMIT	MAXIMUM SPECTRUM	NET SECTION LIMIT	NET SECTION ULTIMATE	ALLOWABLE	ANALYSIS	CALCULATED
73.08	108.85	89.96	95.01	0	72.60	61.76	81.14	121.71	131	5.0	2.30

Figure 2.1.3-2 CONTROL POINT 2, LOWER PLATE ASSY., WING PIVOT LUG

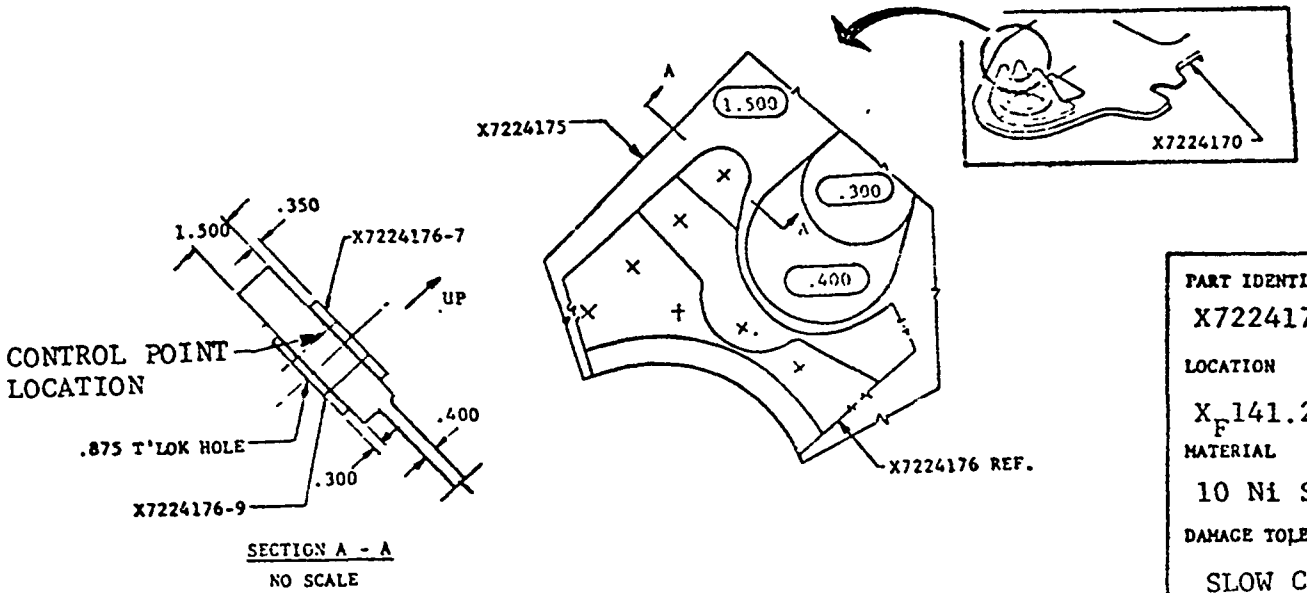

PART IDENTIFICATION
X7224170
LOCATION
X_F141.2, Y_F951.5, Z_F0
MATERIAL
10 Ni STEEL
DAMAGE TOLERANCE CATEGORY
SLOW CRACK GROWTH
INSPECTABILITY
DEPOT LEVEL

GROSS SECT. FOR COND.		ULTIMATE EFFECTIVE STRESS NS IN FATIGUE SPECTRUM, KSI			STRESS, KSI					STRESS CONCENTRATION FACTOR	
AS2000	AS10000	AS5000	AS9000	AS7000	GROSS SECTION LIMIT	MAXIMUM SPECTRUM	NET SECTION LIMIT	NET SECTION ULTIMATE	ALLOWABLE	ANALYSIS	CALCULATED
90.54	124.00	77.26	84.13	-4.81	82.71	56.28	87.67	131.44	131.00	5.00	2.92

Figure 2.1.3-3 CONTROL POINT 3, LOWER PLATE, LUG .875 DIA. TAPER-LOK HOLE

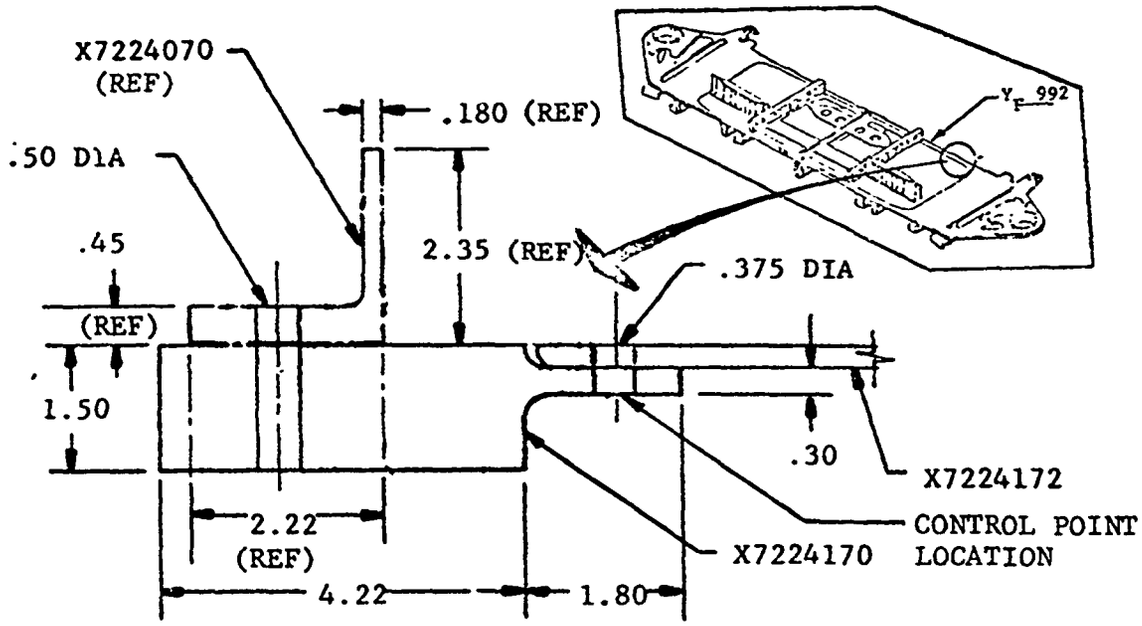

PART IDENTIFICATION
X7224170 LWR PLATE ASSY
X7224172 LWR PLATE, WEB
LOCATION
X_F68; Y_F992; Z_F0
MATERIAL
10 Ni STEEL
DAMAGE TOLERANCE CATEGORY
SLOW CRACK GROWTH
INSPECTABILITY
DEPOT LEVEL

GROSS SECTION ULTIMATE EFFECTIVE STRESS FOR CONDITIONS IN FATIGUE SPECTRUM, KSI					STRESS, KSI					STRESS CONCENTRATION FACTOR	
AS2000	AS10000	AS5000	AS9000	AS7000	GROSS SECTION LIMIT	MAXIMUM SPECTRUM	NET SECTION LIMIT	NET SECTION ULTIMATE	ALLOWABLE	ANALYSIS	CALCULATED
128	62	123	118	-21	85.38	86.41	97.63	146.38	150	5.0	3.6

Figure 2.1.3-4 CONTROL POINT 4 LOWER PLATE ASSY., AFT OUTB'D CUTOUT

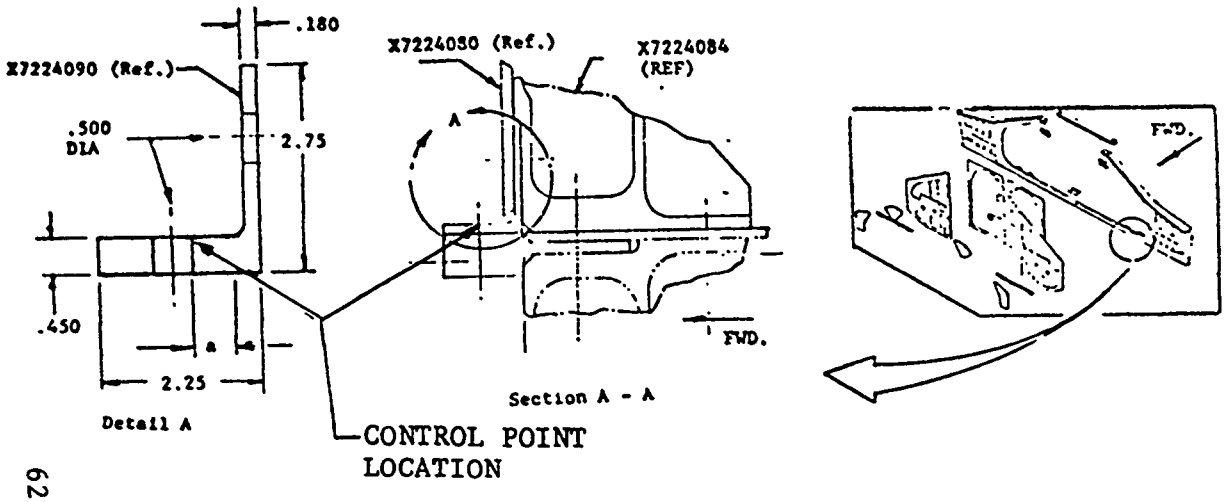

PART IDENTIFICATION

X7224090 BHD.

LOCATION

X_F65-X_F72; Y_F932; Z_F1

MATERIAL

10 Ni STEEL

DAMAGE TOLERANCE CATEGORY

SLOW CRACK GROWTH

INSPECTABILITY

DEPOT LEVEL

GROSS SECTION ULTIMATE EFFECTIVE STRESS FOR CONDITIONS IN FATIGUE SPECTRUM, KSI					STRESS, KSI					STRESS CONCENTRATION FACTOR	
AS2000	AS10000	AS5000	AS9000	AS7000	GROSS SECTION LIMIT	MAXIMUM SPECTRUM	NET SECTION LIMIT	NET SECTION ULTIMATE	ALLOWABLE	ANALYSIS	CALCULATED
90.0	77.0	69.0	86.0	-22.0	60.03	65.56	77.04	115.56	150.0	5.00	3.31

Figure 2.1.3-5 CONTROL POINT 5, BHD., Y_F932, LOWER ATTACH FLANGE

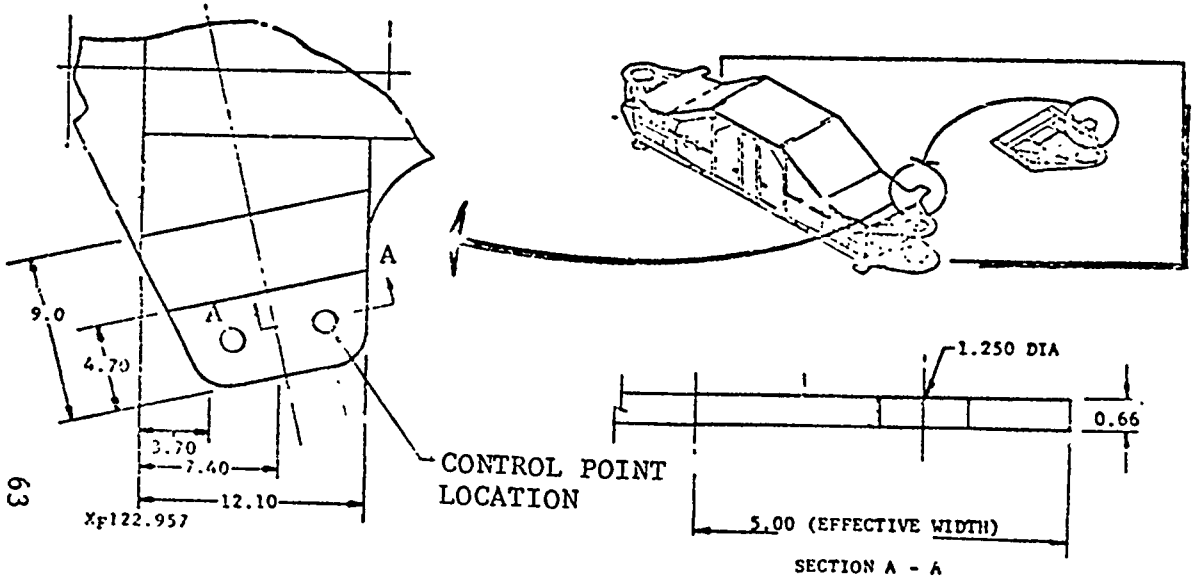

PART IDENTIFICATION
X7224011 PIVOT LUG, UPPER

LOCATION
X_F115.7, Y_F1006

MATERIAL
10 Ni STEEL

DAMAGE TOLERANCE CATEGORY
SLOW CRACK GROWTH

INSPECTABILITY
DEPOT LEVEL

GROSS SECTION ULTIMATE EFFECTIVE STRESS FOR CONDITIONS IN FATIGUE SPECTRUM, KSI					STRESS, KSI					STRESS CONCENTRATION FACTOR	
AS2000	AS10000	AS5000	AS9000	AS7000	GROSS SECTION LIMIT	MAXIMUM SPECTRUM	NET SECTION LIMIT	NET SECTION ULTIMATE	ALLOWABLE	ANALYSIS	CALCULATED
23.91	93.13	13.64	28.53	19.99	62.12	53.17	82.82	124.17	130.00	5.00	3.89

Figure 2.1.3-6 CONTROL POINT 6, UPPER LUG INSTL. AFT OUTB'D LONGERON ATTACHMENT

Table 2.1.3-II

SUMMARY - WCTS FATIGUE DAMAGE
PHASE II LOADS & SPECTRUM

Fatigue Damage, $\sum n/N$; 1280 Flights; S.F. 1.0; K_T 5.0						
Mission Segment	Fatigue Control Point No. (Ref. Figures 2-4 thru 2-9)					
	1	2	3	4	5	6
Ground(1)	0.	0.	0.	0.	0.	0.
Post-Takeoff	0.0124	0.0015	0.0136	0.0759	0.0451	0.
Climb, Cruise, Refuel	0.	0.0120	0.0003	0.0249	0.0102	0.
Fly-up	0.	0.0445	0.0544	0.	0.0157	0.0467
TFR	0.0007	0.1441	0.1997	0.0007	0.0255	0.1570
Prelanding	0.0211	0.0362	0.0162	0.1084	0.0291	0.
Ground(1)	0.	0.	0.	0.	0.	0.
Takeoff	0.0254	0.	0.0327	0.0410	0.0635	0.
Climb	0.	0.0163	0.	0.0098	0.0029	0.
Prelanding	0.0024	0.0404	0.0067	0.3213	0.0111	0.
round(1)	0.	0.	0.	0.	0.	0.
Total Damage, $\sum n/N$(2)	0.0620	0.2950	0.3236	0.5820	0.2031	0.2037

NOTES: (1) The "Ground" mission segments indicate no fatigue damage because these cycles are "paired" in the range-pair spectra (Ref. Tables 2.1.3-III thru 2.1.3-VIII) within other flight conditions to form "ground-air-ground" cycles. Hence, damage resulting from these ground cycles is included in the flight mission segment damages.

(2) Fatigue damages shown are conservative since a stress concentration factor of 5.0 was used for all points in the analysis. The stress concentration factor of 5.0 was used to provide a conservative evaluation to establish fatigue design allowables and to provide conservatism in the development of the spectrum to be used for test. Fatigue damages based on calculated K_T's are considerably less as shown below.

Control Point	1	2	3	4	5	6
Calculated K_T	2.17	2.30	2.92	3.60	3.31	3.89
$\sum n/N$; S.F. 1.0	0.0	0.0	0.0028	0.1473	0.0274	0.0367

Table 2.1.3-III

STRESS SPECTRA FOR NBB CONTROL POINT NO 1 Y, 992 BULKHEAD, LOWER PLATE
(REFERENCE FIGURE 2.1.3-1)

MISSION SEGMENT	LIMIT STRESS (KSI)	BASIC SPECTRUM						RANGE PAIR COUNTED SPECTRUM									
			% CONDITION		STRESS (KSI)				STRESS (KSI)		CYCLES PER FLIGHT				FATIGUE DAMAGE(1) SF 1.0; 1280 FLIGHTS	
		STEP	MAX	MIN	MAX	MIN	n	STEP	MAX	MIN	100TH	10TH	EVERY	COMPOSITE	K_T 5.0	K_T 2.17
GROUND	-1.02	1	11.5	60.8	- .12	- .62	1	1	- .12	- 62	1	1	0	.10		
POST TAKE-OFF	43.51	2	85.1	51.5	37.03	22.41	.01	2	37.03	-. 89	1	0	0	01	.0005	.0
		3	76.6	51.5	33.33	22.41	.10	3	33.33	22.41	1	0	0	.01		
								4	33 33	- .89	0	1	0	.09	0027	.0
		4	59.3	51.5	25.80	22.41	2	5	25.80	22.41	2	2	1	1 10		
								6	25 80	18 01	0	0	1	90		
		5	51.5	41 4	22.41	18.01	2	7	22.41	18 01	1	1	1	1		
		6	60 5	56.8	26 32	24.71	2	8	26.32	24.71	2	2	2	2		
		7	60.9	36.2	26.50	15.75	1	9	26.50	18.01	1	1	0	.1		
								10	26.50	-.62	0	0	1	.9	.0092	.0
		8	50.5	44.5	21.97	19.36	29	11	21.97	19.36	28	28	28	28		
								12	21.97	15.75	1	1	1	1		
CLIMB, CRUISE, REFUEL	39.37	9	41.9	19.1	16 50	7.52	1	13	20.24	16.50	21	21	21	21		
		10	51.4	41.9	20.24	16.50	22	14	20.24	14.06	1	1	1	1		
		11	41.9	35.7	16.50	14.06	22	15	16.50	14.06	21	21	21	21		
		12	56.4	30.0	22.20	11.81	1	16	22.20	7.52	1	1	1	1		
		13	30.0	11.8	11.81	4.65	1	17	15.59	11 81	57	57	57	57		
		14	39.6	30 0	15 59	11.81	58	18	15.59	4 65	1	1	1	1		
		15	30 0	25 3	11.81	9.96	58	19	11.81	9 96	57	57	57	57		
FLY-UP	21 62	16	64.2	23.9	13.88	5.17	1	20	13.88	9.96	1	.	1	1		
		17	43.8	24.8	9.47	5.36	1	21	9.47	5.36	1	1	1	1		
TFR	21.62	18	60.7	45.3	13.12	9.79	.10	22	13.12	5.17	1	1	0	.1		
		19	51.7	26.3	11.18	5.69	1	23	11.18	9.79	1	1	0	.1		
								24	11.18	5.17	0	0	1	.9		
		20	42.3	32.4	9.15	7.00	7	25	9.15	7.00	7	7	7	7		
		21	45.5	7.6	9.84	1.64	1	26	9.84	5.69	1	1	1	1		
		22	30.1	16.9	6.51	3.65	132	27	6.51	3.65	131	131	131	131		
								28	6.51	1.64	1	1	:	1		
		23	26.9	-4.1	5.82	- .89	1	29	5.82	3.65	1	1	1	1		
		24	18.4	7.9	3.98	1.71	132	30	3.98	1.71	132	132	132	132		
		25	61.3	3.5	13.25	.76	1	31	13.25	.76	1	1	1	1		
		26	46.4	6.4	10.03	1.38	9	32	10.03	1.38	9	9	9	9		
		27	30.1	13.1	6.51	2.83	95	33	6.51	2.83	95	95	95	95	.0007	.0
PRE-LANDING	41.06	28	92.1	51.7	37.82	21 .	.01	34	37.82	-5.67	1	0	0	.01	.0002	.0
		29	82.9	-13.8	34.04	-5.67	.10	35	34.04	21.23	1	0	0	.01		
								36	34.04	-5.67	0	1	0	0[illegible]	.0040	.0
		30	71.3	51.7	29.28	21.23	1	37	29.20	- .62	1	1	1	1	.016[illegible]	0
GROUND	-1.02	31	11.5	60.8	- .12	- .62	1									
TAKE-OFF	43 51	32	73.2	49 4	31.85	21.49	1	38	31.85	- .62	1	1	0	.10	.0023	.0
								39	31 85	- .89	0	0	1	90	0231	0
CLIMB	39.37	33	71.3	41.9	28.07	16.50	1	40	28.07	21 49	1	1	1	1		
PRE-LANDING	41.06	34	51.7	34.5	21.23	14.17	1	41	21.23	16.50	1	1	1	1		
		35	59.9	51.7	24.59	21.23	19	42	24.59	21.23	18	18	18	18		
								43	24.59	18.93	1	1	1	1		
		36	51.7	46.1	21.23	18.93	19	44	21.23	18.93	18	18	18	18		
		37	76.8	47.9	31.53	19.67	1	45	31.53	14 17	1	1	1	1	0024	.0
		38	65.7	56.2	26.98	23.08	4	46	26.98	23.08	4	4	4	4		
		39	67.0	33.6	27.51	13.80	1	47	27.51	19 67	1	1	1	1		
		40	60.6	39.9	24.88	16.38	9	48	24.88	16.38	8	8	8	8		
								49	24.88	13.80	1	1	1	1		
		41	57.4	43.1	23.57	17.70	48	50	23.57	17 70	47	47	47	47		
								51	23.57	16.38	1	1	:	1		
		42	53.0	46 1	21.74	18.93	294	52	21 74	18.93	293	293	293	293		
								53	21.74	17 70	:	1	1	1		
GROUND	-1.02	43	11.5	60 8	- .12	- .62	8	54	- 12	- 62	7	7	7	7		
								55	- 16	- .[illegible]	155	155	155	155		
		44	15.4	56.2	- .16	- .[illegible]	154	56	- 16	- 62	0	0	1	.9		
											$\sum$ [illegible]; SF 1 0, 1280 FLIGHTS				0 0[illegible]	0 0
															K_T 5 0	K_T 2 17

(1.) The calculated stress concentration factor (K_T) at Control Point No 1 is 2.17

Table 2.1.3-IV

STRESS SPECTRA FOR NBB CONTROL POINT NO. 2 LOWER PLATE LUG - PIVOT BORE
(REFERENCE FIGURE 2.1.3-2)

MISSION SEGMENT	LIMIT STRESS (KSI)	BASIC SPECTRUM						RANGE-PAIR COUNTED SPECTRUM								
			% CONDITION STRESS (KSI)						STRESS (KSI)		CYCLES PER FLIGHT				FATIGUE DAMAGE(1) IF 1 = 1280 FLIGHTS	
		STEP	MAX	MIN	MAX	MIN	n	STEP	MAX	MIN	100TH	10TH	EVERY	COMPOSITE	K_T 5.0	K_T 2.30
GROUND	0	1	11.5	60.8	0	0	1	1	0	0	1	1	1	1.0	0	0
POST-TAKE-OFF	54.48	2	85.1	51.5	46.36	28.06	01	2	46.36	8.36	1	0	0	.01	.0002	0.0
		3	76.6	51.5	41.73	28.06	10	3	41.73	28.06	1	0	0	.01		
								4	41.73	8.36	0	1	0	.09	0013	0.0
		4	59.3	51.5	32.31	28.06	2	5	32.31	28.06	2	2	1	1.10		
								6	32.31	22.55	0	0	1	.90		
		5	51.5	41.4	28.06	22.55	2	7	28.06	22.55	1	1	1	1.0		
		6	60.5	46.8	37.96	30.94	2	8	32.96	30.94	2	2	2	2.0		
		7	69.9	36.2	33.18	19.72	1	9	33.18	22.55	1	1	0	0.10		
								10	33.18	13.53	0	0	1	.90		
			[illegible]	44.5	27.51	24.24	29	11	27.51	24.24	29	29	29	29.0		
CLIMB-CRUISE-REFUEL	70.82		[illegible]	[illegible]	29.67	13.53	1	12	29.67	19.72	1	1	1	1.0		
		[illegible]	[illegible]	[illegible]	36.50	29.67	22	13	36.40	29.67	21	21	21	21.0		
								14	36.40	25.28	1	1	1	1.0		
		11	41.9	[illegible]	29.67	25.28	22	15	29.67	25.28	21	21	21	21.0		
		12	56.4	39.7	39.94	21.25	[illegible]	16	39.94	13.53	1	1	0	0.10	.0008	0.0
		13	30.0	11.8	21.25	8.36	[illegible]	17	39.94	8.36	0	0	1	0.9	.0112	0.0
		14	39.6	30.0	28.04	21.25	58	18	[illegible]	21.25	57	57	57	57.0		
								19	[illegible]	17.92	1	1	1	1.0		
		15	30.0	25.3	21.25	17.92	58	20	21.25	17.92	57	57	57	57.0		
FLY-UP	61.14	16	64.2	23.9	52.09	19.39	1	21	52.09	-3.35	1	1	1	1.0	0445	0.0
		17	43.8	24.8	35.54	20.12	1	22	35.54	20.12	1	1	1	1.0		
TFR	81.14	18	60.7	45.3	49.25	35.76	.10	23	49.25	19.39	1	1	0	0.10	.0018	0.0
		19	51.7	26.3	41.95	21.34	1	24	41.95	36.76	1	1	0	.10		
								25	41.95	19.39	0	0	1	.90	0054	0.0
		20	42.3	32.4	34.32	26.29	7	26	34.32	26.29	7	7	7	7.0		
		21	45.5	7.6	36.92	6.17	1	27	36.92	21.34	1	1	1	1.0		
		22	30.1	16.9	24.42	13.71	132	28	24.42	13.71	131	131	131	131.0		
								29	24.42	6.17	1	1	1	1.0		
		23	26.9	-4.1	21.83	-3.33	1	30	21.83	13.71	1	1	1	1.0		
		24	18.4	7.9	14.93	6.41	132	31	14.93	6.41	132	132	132	132.0		
		25	61.3	3.5	49.74	2.84	1	32	49.74	2.84	1	1	0	.10	0033	0.0
								33	49.74	0	0	0	1	.90	0324	0.0
		26	46.4	6.4	37.65	5.19	9	34	37.65	5.19	9	9	9	9.0	1012	0.0
		27	30.1	13.1	24.42	10.63	95	35	24.42	10.63	95	95	95	95.0		0.0
PRE-LANDING	67.06	28	92.1	51.7	61.76	34.67	.01	36	61.76	-9.25	1	0	0	.01	.0008	0.0
		29	82.9	-13.8	55.59	-9.65	10	37	55.59	-9.25	0	1	0	.09	0053	0.0
								38	55.59	34.67	1	0	0	.01	0001	0.0
		30	71.3	51.7	47.81	34.67	1	39	47.81	2.84	0	0	1	90	0268	
								40	47.81	0.0	1	1	0	.10	0032	0.0
GROUND	0	31	11.5	60.8	0	0	1									
TAKE-OFF	54.48	32	73.2	49.4	39.88	25.91	1	41	39.88	25.91	1	1	1	1.0		
CLIMB	70.92	33	71.3	41.9	50.49	29.67	1	42	50.49	23.14	1	1	1	1.0	.0163	0.0
PRE-LANDING	67.06	34	51.7	34.5	34.67	23.14	1	43	34.67	29.67	1	1	1	1.0		
		35	59.9	51.7	40.17	34.67	19	44	40.17	34.67	18	18	18	18.0		
								45	40.17	30.91	1	1	1	1.0		
		36	51.7	46.1	34.67	30.91	19	46	34.67	30.91	18	18	18	18.0		
		37	76.8	47.9	51.50	32.12	1	47	51.50	0.0	1	1	1	1.0	.0394	0.0
		38	65.7	56.2	44.06	37.69	4	48	44.06	37.69	4	4	4	4.0		
		39	67.0	33.4	44.93	22.53	1	49	44.93	32.12	1	1	1	1.0	0001	0.0
		40	60.6	39.9	40.64	26.76	9	50	40.64	26.76	8	8	8	8.0		
								51	40.64	22.53	1	1	1	1.0	0009	0.0
		41	57.4	43.1	38.49	28.90	48.0	52	38.49	28.90	47	47	47	47.0		
								53	38.49	26.76	1	1	1	1.0		
		42	54.0	46.1	35.54	30.91	294	54	35.54	30.91	293	293	293	293.0		
								55	35.54	28.90	1	1	1	1.0		
GROUND	0	43	11.5	60.8	0	0	8	56	0	0	1	1	1	1.0		
		44	15.4	52.2	0	0	154									
									$\sum$ n/N, S.F. 1.0, 1280 FLIGHTS						0.2950	0.0
															K_T 5.0	K_T 2.30

(1) CALCULATED STRESS CONCENTRATION FACTOR, K_T = 2.3

Table 2.1.3-V

STRESS SPECTRA FOR NBB CONTROL POINT NO. 3 LOWER PLATE - TUG 0.875 DIA. TAPER-LOK HOLE
(REFERENCE FIGURE 2.1.3-3)

MISSION SEGMENT	LIMIT STRESS (KSI)	BASIC SPECTRUM						RANGE-PAIR COUNTED SPECTRUM								
			% CONDITION STRESS (KSI)						STRESS (KSI)		CYCLES PER FLIGHT				FATIGUE DAMAGE(1) SF 1.0; 1280 FLIGHTS	
		STEP	MAX	MIN	MAX	MIN	n	STEP	MAX	MIN	100TH	10TH	EVERY	COMPOSITE	K_T 5.0	K_T 7.92
GROUND	-3.40	1	11.5	60.8	-.39	-2.07	1	1	-.39	-2.07	1	1	1	1		
POST TAKE-OFF	64.01	2	81.5	51.5	54.47	32.97	.01	2	54.47	7.02	1	0	0	.01	.0004	
		3	76.6	51.5	49.03	32.97	.10	3	49.03	32.97	1	0	0	.01		
								4	49.03	7.02	0	1	0	.09	.0025	
		4	59.3	51.5	37.96	32.97	2	5	37.96	32.97	2	2	1	1.10		
								6	37.96	26.50	0	0	1	.90		
		5	51.5	41.4	32.97	26.50	2	7	32.97	26.50	1	1	1	1		
		6	60.5	56.8	38.73	36.36	2	8	38.73	36.36	2	2	2	2		
		7	60.9	36.2	38.98	23.17	1	9	38.98	26.50	1	1	0	.10		
								10	38.98	7.02	0	0	1	.90	0.07	
		8	50.5	44.5	32.33	28.48	29	11	32.33	28.48	28	28	28	28		
								12	32.33	23.17	1	1	1	1		
CLIMB, CRUISE, REFUEL	59.48	9	41.9	19.1	24.92	11.36	1	13	30.57	24.92	21	21	21	21		
		10	51.4	41.9	30.57	24.92	22	14	30.57	21.23	1	1	1	1		
		11	41.9	35.7	24.92	21.23	22	15	24.92	21.23	21	21	21	21		
		12	56.4	30.0	33.55	17.84	1	16	33.55	11.15	1	1	1	1	.0003	
		13	30.0	11.8	17.84	7.02	1	17	23.55	17.84	57	57	57	57		
		14	39.6	30.0	23.55	17.84	58	18	23.55	15.05	1	1	1	1		
		15	30.0	25.3	17.84	15.05	58	19	17.84	15.05	57	57	57	57		
FLY-UP	87.67	16	64.2	23.9	56.28	20.95	1	20	56.28	-7.54	1	1	0	.10	.0059	.0003
								21	56.28	-5.59	0	0	1	.90	0485	0018
		17	43.8	24.8	38.40	21.74	1	22	38.40	21.74	1	1	1	1		
TFR	87.67	18	60.7	45.3	53.22	39.71	.1	23	53.22	20.95	1	1	0	10	.0022	
		19	51.7	26.3	45.33	23.06	1	24	45.33	39.71	1	1	0	.09		
								25	45.33	20.95	0	0	1	90	.0095	
		20	42.3	32.4	37.08	28.41	7	26	37.08	28.41	7	7	7	7		
		21	45.5	7.6	39.6	6.66	1	27	39.89	23.06	1	1	1	1	.0002	
		22	30.1	16.9	26.39	14.82		28	26.39	14.82	131	131	131	131		
								29	26.39	6.66	1	1	1	1		
		23	26.9	-4.1	23.58	-3.59	1	30	23.58	14.82	1	1	1	1		
		24	18.4	7.9	16.13	6.93	132	31	16.13	6.93	132	132	132	132		
		25	61.3	3.[illegible]	53.74	3.[illegible]	1	32	53.74	-3.59	1	1	0	.10	.0048	0001
								33	53.74	-2.07	0	0	1	.90	.0417	.0006
		26	46.4	6.4	40.68	5.61	9	34	40.68	5.61	9	9	8	8.1	1255	
								35	40.68	3.07	0	0	1	.9	0158	
		27	30.1	13.1	26.39	11.48	95	36	26.39	11.48	95	95	95	95		
PRE-LANDING	54.63	28	92.1	51.7	50.31	28.24	.01	37	50.31	3.07	1	0	0	.01	0003	
		29	82.9	-13.8	45.29	-7.54	10	38	45.29	28.24	1	0	0	.01		
								39	45.29	3.07	0	1	0	09	.0023	
		30	71.3	51.7	38.95	28.24	1	40	38.95	-2.07	1	1	0	.10	0019	
								41	38.95	3.07	0	0	1	90	0117	
GROUND	-3.40	31	11.1	60.8	-.39	-2.07	1									
TAKE-OFF	64.01	32	73.2	49.4	46.96	31.62	1	42	46.86	-2.07	1	1	1	1	0327	
CLIMB	59.48	33	71.3	41.9	42.41	24.92	1	43	42.41	31.62	1	1	1	1		
PRE-LANDING	54.63	34	51.7	34.5	28.24	18.45	1	44	28.24	24.92		1	1	1		
		35	59.9	51.[illegible]	32.72	28.24	19	45	32.72	28.24	18	18	18	18		
								46	32.72	25.18	1	1	1	1		
		36	51.7	46.1	28.24	25.18	19	47	28.24	25.18	18	18	18	18		
		37	76.8	47.9	41.96	26.17	1	48	41.96	18.95	1	1	1	1	0067	
		38	65.7	56.2	35.89	30.70	4	49	35.89	30.70	4	4	4	4		
		39	67.0	33.6	36.60	18.36	1	50	36.60	26.17	1		1	1		
		40	60.6	39.9	33.11	21.80	9	51	33.11	21.80	8	8	8	8		
								52	33.11	18.36	1	1	1	1		
		41	57.4	43.1	31.36	23.55	48	53	31.36	23.55	47	47	47	47		
								54	31.36	21.80	[illegible]	1	[illegible]	1		
		42	53.0	46.1	28.95	25.18	294	55	28.95	25.18	293	293	293	293		
								56	28.95	23.55	1	1	1	1		
GROUND	-3.0	43	11.5	60.8	-.39	-2.07	8	57	-.39	-2.07	7	7	7	7		
		44	15.4	56.2	-.52	-1.91	154	58	-.52	-1.91	154	154	154	154		
										$\sum$ n/N, SF 1.0: 1280 FLIGHTS					0.3236	0.0028
															K_T 5.0	K_T 7.92

(1) The calculated stress concentration factor (K_T) at Control Point No. 3 is 2.92

Table 2.1.3-VI

STRESS SPECTRA FOR NBB CONTROL POINT NO. 4 LOWER PLATE, AFT OUTBOARD CUTOUT
(Reference Figure 2.1.3-4)

MISSION SEGMENT	LIMIT STRESS (KSI)	BASIC SPECTRUM						RANGE PAIR COUNTED SPECTRUM								
			% CONDITION		STRESS (KSI)				STRESS (KSI)		CYCLES PER FLIGHT				FATIGUE DAMAGE(1) SF 1.0, 1280 FLIGHTS	
		STEP	MAX	MIN	MAX	MIN	n	STEP	MAX	MIN	100TH	10TH	EVERY	COMPOSITE	K_T 5.0	K_T 3.60
GROUND	-16.02	1	11.5	60.8	-1.84	-9.74	1	1	-1.84	-9.74	1	1	1	1		
POST TAKE-OFF	97.63	2	85.1	51.5	83.08	50.28	.01	2	83.08	-1.84	1	0	0	.01	.0014	.0007
		3	76.6	51.5	74.78	50.28	.10	3	74.78	50.28	1	0	0	.01	.0002	
								4	74.78	-1.84	0	1	0	.09	.0098	0046
		4	59.3	51.5	57.89	50.28	2	5	57.89	50.28	2	2	1	1.10		
								6	57.89	40.42	0	0	1	.90	0086	
		5	51.5	41.4	50.28	40.42	2	7	50.28	40.42	1	1	1	1		
		6	60.5	56.8	59.07	55.45	2	8	59.07	55.45	2	2	2	2		
		7	60.9	36.2	59.46	35.34	1	9	59.46	40.42	1	1	0	.1	0012	
								10	59.46	-1.84	0	0	1	.9	0535	0243
		8	50.5	44.5	49.30	43.45	29	11	49.30	43.45	28	28	28	28		
								12	49.30	35.34	1	1	1	1	0012	
CLIMB, CRUISE, REFUEL	90.01	9	41.9	19.1	37.71	17.19	1	13	46.27	37.71	21	21	21	21		
		10	51.4	41.9	46.27	37.71	22	14	46.27	32.13	1	1	1	1	.0007	
		11	41.9	35.7	37.71	32.13	22	15	37.71	32.13	21	21	21	21		
		12	56.4	30.0	50.77	27.00	1	16	50.77	17.19	1	1	1	1	.0218	0013
		13	30.0	11.8	27.00	10.62	1	17	35.64	27.00	57	57	57	57		
		14	39.6	30.0	35.64	27.00	58	18	35.64	10.62	1	1	1	1	0024	
		15	30.0	25.3	27.00	22.77	58	19	27.00	22.77	57	57	57	57		
FLY-UP	47.29	16	64.2	23.9	30.36	11.30	1	20	30.36	22.77	1	0	0	.01		
		17	43.8	24.8	20.71	11.73	1	21	20.71	11.73	1	1	1	1		
TFR	47.29	18	60.7	45.3	28.71	21.42	.10	22	28.71	11.30	1	1	0	.10		
		19	51.7	26.3	24.45	17.44	1	23	24.45	21.42	1	1	0	.10		
								24	24.45	11.30	0	0	1	.9		
		20	42.3	32.4	20.00	15.32	7	25	20.00	15.32	7	7	7	7		
		21	45.5	7.6	21.52	3.59	1	26	21.52	12.44	1	1	1	1		
		22	30.1	16.9	14.32	7.99	132	27	14.23	7.99	131	131	131	131		
								28	14.23	3.59	1	1	1	1		
								29	12.72	7.99	1	1	1	1		
		23	26.9	-4.1	12.72	-1.94	1	29	12.72	7.99	1	1	1	1		
		24	18.4	7.9	8.70	3.74	132	30	8.70	3.74	132	132	132	132		
		25	61.3	3.5	28.99	1.66	1	31	28.99	1.66	1	1	1	1	0007	
		26	46.4	6.4	21.94	3.03	9	32	21.94	3.03	9	9	9	9		
		27	30.1	13.1	14.23	6.19	95	33	14.23	6.19	95	95	95	95		
PRE-LANDING	93.82	28	92.1	51.7	86.41	48.50	.01	34	86.41	-2.95	1	0	0	.01	.0018	.0010
		29	82.9	-13.8	77.78	-12.95	.10	35	77.78	48.50	1	0	0	.01	.0003	.0001
								36	77.78	-12.95	0	1	0	.09	0125	.0062
		30	71.3	51.7	66.89	48.50	1	37	66.89	-1.74	1	1	1	1	0938	0423
GROUND	-16.02	31	11.5	[illegible]	-1.84	-9.74	1									
TAKE-OFF	97.63	32	73.2	[illegible]	71.47	48.23	1	38	71.47	32.37	1	1	1	1	0410	0146
CLIMB	90.01	33	71.3	41.9	64.18	37.71	1	39	64.18	48.23	1	1	1	1	0098	
PRE-LANDING	93.82	34	51.7	34.5	48.50	32.37	1	40	48.50	37.[illegible]	1	1	1	1		
		35	59.9	51.[illegible]	56.20	48.50	19	41	56.20	48.50	18	18	18	18		
								42	56.20	43.2	1	1	1	1	0018	
		36	51.7	46.1	48.50	43.25	19	43	48.50	43.2[illegible]	18	18	18	18		
		37	76.8	47.9	72.05	44.94	1	44	72.05	-9.74	1	1	1	1	1116	0520
		38	65.7	56.2	61.64	52.73	4	45	61.64	52.73	4	4	4	4	0003	
		39	67.0	33.6	62.86	31.52	1	46	62.86	44.94	1	1	1	1	.0115	
		40	60.6	39.9	56.85	37.43	9	47	56.85	37.43	8	8	8	8	0917	
								48	56.85	31.52	1	1	1	1	.0174	
		41	57.4	43.1	53.85	40.44	48	49	53.85	40.44	47	47	47	47	.0803	
								50	53.85	37.43	1	1	1	1	.0065	
		42	53.0	46.1	49.72	43.25	294	51	49.72	43.25	293	293	293	293		
								52	49.72	40.44	1	1	1	1		
GROUND	-16.02	43	11.5	60.8	-1.84	-9.74	8	53	-1.84	-9.74	7	7	7	7		
		44	15.4	56.2	-2.47	-9.00	154	54	-2.47	-9.00	154	154	154	154		
										$\sum$ n/N SF 1.0, 1280 FLIGHTS					0.5820	0.1473
															K_T 5.0	K_T 3.60

(1) The calculated stress concentration factor (k_t) at Control Point No. 4 is 3.60

Table 2.1.3-VII

STRESS SPECTRA FOR NBB CONTROL POINT NO. 5 Y_B 932 BHD LOWER FLANGE
(REFERENCE FIGURE 2.1.3-5)

MISSION SEGMENT	LIMIT STRESS (KSI)	BASIC SPECTRUM						RANGE-PAIR COUNTED SPECTRUM									
		STEP	% CONDITION STRESS (KSI) MAX	% CONDITION STRESS (KSI) MIN	STRESS (KSI) MAX	STRESS (KSI) MIN	n	STEP	STRESS (KSI) MAX	STRESS (KSI) MIN	CYCLES PER FLIGHT 100TH	CYCLES PER FLIGHT 10TH	CYCLES PER FLIGHT EVERY	CYCLES PER FLIGHT COMPOSITE	FATIGUE DAMAGE(1) SF 1 0, 1280 FLIGHTS K_T 5 0	FATIGUE DAMAGE(1) SF 1 0, 1280 FLIGHTS K_T 3 31
GROUND	-18.83	1	11 5	60.8	-2 17	-11.45	1	1	-2 17	-11 45	1	1	1	1		
POST TAKE-OFF	77 04	2	85 1	51 5	65 56	39 68	.01	2	65 56	-11.45	1	0	0	01	0009	.0002
		3	76 6	51.5	59.01	39.68	10	3	59 01	39.68	1	0	0	01	0001	
								4	59.01	-11 45	0	1	0	09	0064	.0015
		4	59.3	51 5	45.68	39 68	2	5	45.68	39.68	2	2	1	1 10		
								6	45 68	31.89	0	0	1	90	0004	
		5	51.5	41.4	39.68	31 89	2	7	39 68	31.89	1	1	1	1		
		6	60 5	56.8	46.61	43 76	2	8	46 61	43.76	2	2	2	2		
		7	60 9	36.2	46.92	27 89	1	9	46 92	31 89	1	1	0	.10	0001	
								10	46 92	-11 45	0	0	1		0372	0070
		8	50 5	44.5	38 91	34 28	29	11	38 91	34.28	28	28	28	28		
								12	38 91	27.89	1	1	1	1		
CLIMB, CRUISE, REFUEL	73.62	9	41.9	19 1	30.85	14.06	1	13	37.84	30.85	21	21	21	21		
		10	51.4	41.9	37.84	30.85	22	14	37 84	26 28	1	1	1	1		
		11	41 9	35 7	30.85	26 28	22	15	30.85	26.28	21	21	21	21		
		12	56.4	30 0	41.52	22 09	1	16	41 52	14.06	1	1	1	1	0102	
		13	30.0	11 8	22 09	8 69	1	17	29 15	22.09	57	57	57	57		
		14	39.6	30 0	29.15	22.09	58	18	29 15	18 63	1	1	1	1		
		15	30.0	25 3	22.09	18 63	58	19	22 09	18.63	57	57	57	57		
FLY-UP	65 91	16	64 2	23 9	42.31	15.75	1	20	42 31	8 69	1	1	1	1	0157	
		17	43.8	24 8	28 87	16 35	1	21	28 87	16.35	1	1	1	1		
TFR	55 91	18	60.7	45.3	40 01	29.86	10	22	40 01	15 75	1	1	0	.10	.0006	
		19	51 7	26.3	34.08	17.33	1	23	34 08	29.86	1	1	0	.10		
								24	34.08	15 75	0	0	1	.90		
		20	42.3	32 4	27.88	21 35	7	25	27 88	21.35	7	7	7	7		
		21	45.5	7.6	29.99	5.01	1	26	29 99	17.33	1	1	1	1		
		22	30 1	16 9	19.84	11 14	132	27	19 84	11.14	131	131	131	131		
								28	19 84	5.01	1	1	1	1		
		23	26 9	-4 1	17.73	-2 70	1	29	17 73	11 14	1	1	1	1		
		24	18 4	7 9	12.13	5 21	132	30	12 13	5.21	132	132	132	132		
		25	61.3	3.5	40.40	2.31	1	31	40 40	2 31	1	1	1	1	0178	0006
		26	46 4	6.4	30.58	4.22	9	32	30.58	4.22	9	9	9	9	0071	
		27	30 1	13.1	19.84	8 63	95	33	19 84	8.63	95	95	95	95		
PRE-LANDING	59.07	28	92.1	51 7	54.40	30 54	.01	34	54.40	-2.70	1	0	0	.01	0005	0001
		29	82.9	-13.8	48.97	-8 15	.10	35	48 97	30 54	1	0	0	01	0001	
								36	48 97	-2.70	0	1	0	09	0033	0006
		30	71 3	51.7	42.12	30 54	1	37	42 12	-8.15	1	1	0	10	0029	0005
								38	42 12	-2.70	0	0	1	51	0223	0021
GROUND	-18 83	31	11 5	60.8	-2 17	-11 45	1									
TAKE-OFF	77 04	32	73.2	49.4	56.39	38.06	1	39	56 39	-11 45	1	1	1	1	0635	0148
CLIMB	73.62	33	71.3	41.9	52.49	30.85	1	40	52 49	38.06	1	1	1	1	0029	
PRE-LANDING	59 07	34	51.7	34 5	30 54	20 36	1	41	35 58	30 54	18	18	18	18		
		35	59.9	51.7	35.38	30.54	19	42	35 38	27 23	1	1	1	1		
		36	51 7	46 1	30.54	27.23	19	43	30 54	27.23	18	18	18	18		
		37	76 8	47 9	45.37	28.29	1	44	45 37	20 38	1	1	1	4	0111	
		38	65.7	56.7	38 81	33 20	4	45	38 81	33 20	4	4	4	4		
		39	67.0	33.6	39.58	19.85	1	46	39 58	28.29	1	1	1	1		
		40	60.6	39.9	35 80	23 57	9	47	35 80	23 57	8	8	8	8		
								48	35 80	19.85	1	1	1	1		
		41	57.4	43.1	33.91	25.46	48	49	33 91	25.46	47	47	47	47		
								50	33 91	23 57	1	1	1	1		
		42	53.0	46.1	31 31	27.23	294	51	31 31	27.23	293	293	293	293		
								52	31 31	25.46	1	1	1			
GROUND	-18 83	43	11.5	60.8	-2 17	-11 45	8	53	-2 17	-11.45	7	7	7	7		
		44	15.4	56 2	-2 90	-10.58	154	54	-2 90	-10.58	154	154	154	154		
										$\sum$ n/N; S.F 1 0, 1280 FLIGHTS					7031	0.0274
															K_T 5 0	K_T 3 31

(1) The calculated stress concentration factor (K_T) at Control Point No. 5 is 3 31

Table 2.1.3-VIII

STRESS SPECTRA FOR NBB CONTROL POINT NO. 6 UPPER AFT OUTBOARD LONGERON ATTACHMENT
(REFERENCE FIGURE 2.1.3-6)

MISSION SEGMENT	LIMIT STRESS (KSI)	BASIC SPECTRUM						RANGE-PAIR COUNTED SPECTRUM								
		% CONDITION		STRESS (KSI)				STRESS (KSI)			CYCLES PER FLIGHT				FATIGUE DAMAGE (1) SF 1.0, 1280 FLIGHTS	
		STEP	MAX	MIN	MAX	MIN	n	STEP	MAX	MIN	100TH	10TH	EVERY	COMPOSITE	K_T 5.0	K_T 3.89
GROUND	17.78	1	60.8	11.5	10.81	2.04	1	1	10.81	2.04	1	1	1	1		
POST TAKE-OFF	21.26	2	85.1	51.5	18.09	10.95	.01	2	18.90	10.81	1	0	0	.01		
		3	76.6	51.5	16.29	10.95	.10	3	16.29	10.95	1	0	0	.01		
								4	16.29	10.81	0	1	0	.09		
		4	59.3	51.5	12.61	10.95	2	5	12.61	10.95	1	1	0	.10		
								6	12.61	10.81	0	0	1	.90		
		5	51.5	41.4	10.95	8.90	2	7	10.95	2.04	1	1	1	1		
								8	12.61	8.80	1	1	1	1		
								9	10.95	8.80	1	1	1	1		
		6	60.5	55.8	12.86	12.08	2	10	12.86	12.08	2	2	2	2		
		7	60.9	36.2	12.95	7.70	1	11	12.95	4.85	1	1	1	1		
		8	50.5	44.5	10.74	9.46	29	12	10.74	9.46	28	28	28	28		
								13	10.74	7.70	1	1	1	1		
CLIMB, CRUISE, REFUEL	25.37	9	41.9	19.1	10.63	4.85	1	14	10.63	9.46	1	1	1	1		
		10	51.4	41.9	13.04	10.63	22	15	13.04	10.63	21	21	21	21		
								16	13.04	9.06	1	1	1	1		
		11	41.9	35.7	10.63	9.06	22	17	10.63	9.06	21	21	21	21		
		12	56.4	30.0	14.31	7.61	1	18	14.31	2.99	1	1	1	1		
		13	30.0	11.8	7.61	2.99	1	19	10.05	7.61	57	57	57	57		
		14	39.6	30.0	10.05	7.61	58	20	10.05	6.42	1	1	1	1		
		15	30.0	25.3	7.61	6.42	68	21	7.61	6.42	57	57	57	57		
FLY-UP	82.82	16	64.2	23.9	53.17	19.79	1	22	53.17	-3.40	1	1	1	1	0467	0226
		17	43.8	24.8	36.28	20.54	1	23	36.28	20.54	1	1	1	1		
TFR	82.82	18	60.7	45.3	50.27	37.52	10	24	50.27	19.79	1	1	0	10	0019	
		19	51.7	26.3	42.82	21.78	1	25	42.82	37.52	1	1	0	10		
								26	42.82	19.79	0	0	1	90	0067	
		20	42.3	32.4	35.03	26.83	7	27	35.03	26.83	7	7	7	7		
		21	45.5	7.6	37.68	6.29	1	28	37.68	21.78	1	1	1	1		
		22	30.1	16.9	24.93	14.00	132	29	24.93	14.00	131	131	131	131		
								30	24.93	6.29	1	1	1	1		
		23	26.9	-4.1	22.28	-3.40	1	31	22.28	14.00	1	1	1	1		
		24	18.4	7.9	15.24	6.54	132	32	15.24	6.54	132	132	132	132		
		25	61.3	3.5	50.77	2.90	1	33	50.77	-1.67	1	1	0	10	0040	
								34	50.77	2.90	0	0	1	90	0315	0017
		26	46.4	6.4	38.43	5.30	9	35	38.43	5.30	8	8	8	8	.0995	0124
								36	38.43	2.90	1	1	0	10	0014	
								37	38.43	4.08	0	0	1	90	0120	
		27	30.1	13.1	24.93	10.85	95	38	24.93	10.85	94	94	94	94		
								39	24.93	5.30	1	1	1	1		
PRE-LANDING	12.13	28	92.1	51.7	11.17	6.27	01	40	11.17	10.85	1	0	0	01		
		29	82.9	-13.8	10.06	-1.67	10	41	10.06	6.27	1	1	0	10		
		30	71.3	51.7	8.65	6.27	1	42	10.81	8.65	1	1	1	1		
GROUND	17.78	31	11.5	60.8	10.81	2.04	1									
TAKE OFF	21.26	32	73.2	49.4	15.56	10.50	1	43	15.56	10.50	1	1	0	10		
								44	15.56	10.81	0	0	1	90		
CLIMB	25.37	33	71.3	41.9	18.09	10.63	1	45	18.09	4.08	1	1	0	10		
								46	18.09	10.50	0	0	1	90		
PRE-LANDING	12.13	34	51.7	34.5	6.27	4.18	1	47	7.27	6.27	18	18	18	18		
		35	59.9	51.7	7.27	6.27	19	48	7.27	5.59	1	1	1	1		
		36	51.7	46.1	6.27	5.59	19	49	6.27	5.59	18	18	18	18		
		37	76.8	47.9	9.32	5.81	1	50	9.32	4.18	1	1	1	1		
		38	65.7	56.2	7.97	6.82	4	51	7.97	6.82	4	4	4	4		
		39	67.0	33.6	8.13	4.08	1	52	8.13	5.81	1	1	1	1		
		40	60.6	39.9	7.35	4.84	9	53	7.35	4.84	9	9	9	9		
		41	57.4	43.1	6.96	5.23	48	54	6.96	5.23	48	48	48	48		
		42	53.0	46.1	6.43	5.59	294	55	6.43	5.59	293	293	293	293		
GROUND	17.78	43	60.8	11.5	10.81	2.04	8	56	9.99	6.43	8	8	8	8		
		44	56.2	15.4	9.99	2.74	154	57	9.99	2.74	154	154	154	154		
										$\sum$ n/N, SF 1.0, 1280 FLIGHTS					.2097	0.0367
															K_T 5.0	K_T 3.89

(1) The calculated stress concentration factor (K_T) at Control Point No. 6 is 3.89

2.1.3.2 Fatigue Analysis Using 1975 Updated Loads

Upon receipt of the 1975 updated fatigue loads it became necessary to determine whether fatigue testing using the updated loads would be feasible. Consequently, a preliminary fatigue analysis was run to determine the impact of the updated loads.

Since stress math model data was not available, the following approach was used to develop the fatigue stress spectrum. Because the spectrum was no longer defined as simple percentages of five basic conditions, but rather as linear combinations of several basic conditions (See Table 2.1.2-II), it was decided that, in general, ratios of Mx (rolling moment at pivot) would be used to estimate stress levels from existing NBB-5 series math models for corresponding wing sweep angles. i.e. , σ update = σ NBB-5 X $\frac{\text{Mx update}}{\text{Mx NBB-5}}$ The updated moments used are essentially as shown in Table 2.1.3-IX. This table reflects some small changes and corrections made after the preliminary fatigue analysis was run, but the effects on the fatigue analysis were considered insignificant. For the 55° conditions, the stresses were related to both Mx and My using constants obtained by considering AS 10000 (67.5°) and AS 9000 (25°) simultaneously since no 55° models had previously been run. In addition, the constants were used for the 67.5° steps 67, 68, 69, 70, 71 and 72 to account for variations of Mx/My from the value for AS 10000 because the ratioed AS 10000 stresses were unrealistically conservative without correction for the variations. Using the noted assumptions and range pair counting the test spectrum data, a preliminary damage summary for the control points of FZS-219B was obtained. The summary is given in Table 2.1.3-X. Although damages for Kt=5.0 at control points 2, 3, 4, and 5 are significantly higher than for the previous spectrum, no serious problems are indicated when actual calculated Kt's are used. It should be noted that some conservatism exists since all corrections for Mx/My were not made for the preliminary run in order to expedite the analysis.

Preparations are being made to perform a complete fatigue analysis using stresses from NBB5 series models and the RI analytic fatigue spectrum.

2.1.3.3 UD 1 Documentation and Implementation

Procedure UD 1 for computing stress intensity factors for fracture analysis was put on production and customer instructions were completed.

8-8-75
* Revised 10/16/75
** Revised 10/23/75
Including 501 Data

TABLE 2.1.3-IX

SUMMARY OF WING PIVOT DATA FOR FATIGUE ANALYSIS (Revised)

LOAD STEP	MISSION SEGMENT	Λ	LOAD TYPE	FATIGUE CONDITION NUMBER	MAX $M_X/10^6$	MAX $M_Y/10^6$	FATIGUE CONDITION NUMBER	MIN $M_X/10^6$	MIN $M_Y/10^6$	NOTES
1	Ground	15	Taxi	3**	- 6.705	0.861	503**	- 2.176	0.279	
2				4**	- 6.349	0.816	504**	- 2.531	0.325	
3				5**	- 5.994	0.770	505**	- 2.842	0.365	
4			Braking	8**	- 4.440	0.570	508**	- 4.440	0.570	Drag Cond.
5			Taxi	12	- 9.943	1.484	512	- 3.494	0.522	
6				13	- 9.339	1.394	513	- 4.098	0.612	
7				14	- 8.868	1.324	514	- 4.568	0.682	
8			Braking	16	- 6.718	1.003	516	- 6.718	1.003	Drag Cond.
9	Post Take-Off	15	Maneuver	18	58.030	-13.894	518	11.001	- 8.508	
10				19	50.404	-13.021	519	17.992	- 9.308	
11				20	44.048	-12.293	520	23.394	- 9.927	
12	Wing Sweep	15	IG	21	35.151	-11.274	521	35.151	-11.274	Sweep
13	Wing Sweep	25	IC	22	29.111	-11.150	522	29.111	-11.150	Sweep
14	Subsonic Climb	25	Maneuver	23	50.798	-17.440	523	6.403	- 4.564	
15				24	44.930	-15.738	524	12.526	- 6.340	
16				25	39.827	-14.258	525	16.864	- 7.598	
17				26	35.234	-12.926	526	29.111	-11.150	
18				27	29.111	-11.150	527	20.436	- 8.634	
19	Subsonic Cruise	25	Gust	28	48.331	-18.305	528	9.527	- 3.067	
20				29	41.940	-15.796	529	15.918	- 5.577	
21				30	36.690	-13.734	530	21.168	- 7.639	
22				31	33.951	-12.659	531	23.907	- 8.715	
23			Maneuver	32	53.642	-17.986	532	8.118	- 4.540	
24				33	48.440	-16.449	533	12.540	- 5.846	
25				34	43.237	-14.912	534	16.442	- 6.998	
26				35	37.254	-13.145	535	28.929	-10.687	
27				36	28.929	-10.687	536	19.824	- 7.997	
28	Wing Sweep	25	IG	37	28.929	-10.687	537	28.929	-10.687	Sweep
29	Wing Sweep	67.5	IG	38	8.702	-16.344	538	8.702	-16.344	Sweep
30	Supersonic Climb	67.5	Maneuver	39	23.400	-41.033	539	- 5.095	6.830	
31				40	18.982	-33.611	540	- 0.947	- 0.138	
32				41	15.104	-27.098	541	2.119	- 5.287	
33				42	11.858	-21.645	542	8.702	-16.344	
34	Supersonic Cruise	67.5	Maneuver	44	14.888	-28.806	544	- 0.785	- 0.578	
35				45	12.323	-24.187	545	1.323	- 4.376	

8-8-75
* Revised 10/16/75
** Revised 10/23/75

TABLE 2.1.3-IX (Cont'd)

LOAD STEP	MISSION SEGMENT	Λ	LOAD TYPE	FATIGUE CONDITION NUMBER	MAX $M_X/10^6$	MAX $M_Y/10^6$	FATIGUE CONDITION NUMBER	MIN $M_X/10^6$	MIN $M_Y/10^6$	NOTES
36				46	9.873	-19.773	546	3.033	- 7.455	
37	Supersonic Desc.	67.5	Maneuver	49	23.380	-41.040	549	- 5.293	6.763	
38				50	18.933	-33.627	550	- 1.120	- 0.196	
39				51	15.032	-27.122	551	1.966	- 5.339	
40	Wing Sweep	67.5	IG	54	8.702	-16.344	554	8.707	-16.344	Sweep
41	Wing Sweep	25	IG	55	29.842	-10.941	555	29.842	-10.941	Sweep
42	Refuel	25	Maneuver	56	48.175	-16.352	556	6.927	- 4.178	
43				57	44.940	-15.397	557	11.779	- 5.610	
44				58	40.087	-13.965	558	15.823	- 6.804	
45				59	36.852	-13.010	559	29.842	-10.941	
46	Refuel	25	Maneuver	60	29.842	-10.941	560	19.867	- 7.997	
47	Subsonic Cruise	25	Maneuver	61	57.857	-19.048	561	7.854	- 4.443	
48				62	51.812	-17.283	562	13.348	- 6.048	
49				63	46.318	-15.678	563	18.019	- 7.412	
50				64	39.724	-13.752	564	30.382	-11.023	
51				65	30.382	-11.023	565	22.140	- 8.616	
52	Subsonic Descent	25	Maneuver	66	50.798	-17.440	566	6.403	- 4.564	
53				67	44.930	-15.738	567	12.526	- 6.340	
54				68	39.827	-14.258	568	16.864	- 7.598	
55				69	35.234	-12.926	569	29.111	-11.150	
56	Wing Sweep	25	IG	71	29.111	-11.150	571	29.111	-11.150	Sweep
57	Wing Sweep	67.5	IG	72	9.054	-14.241	572	9.054	-14.241	Sweep
58	Terrain Follow.85	6[illegible]	Gust	73**	9.393	-16.857	573**	0.710	- 0.871	
59				74**	8.458	-15.135	574**	1.645	- 2.593	
60				75**	7.723	-13.783	575**	2.313	- 3.822	
61				78**	13.796	-22.971	578**	4.312	- 5.510	
62				79**	12.795	-21.127	579**	5.314	- 7.354	
63				80**	11.992	-19.651	580**	6.048	- 8.707	
64				83**	18.999	-29.761	583**	10.249	-13.652	
65				84**	18.131	-28.162	584**	11.118	-15.251	
66				85**	17.396	-26.810	585**	11.852	-16.603	
67	Fly-up	67.5	Maneuver	88	25.064	-35.747	588	9.054	-14.241	
68				89	21.061	-30.370	589	9.054	-14.241	
69	Terrain Follow.85	67.5	Maneuver	90	18.500	-26.929	590	3.771	- 7.144	
70				91	17.699	-25.854	591	4.171	- 7.681	

8-8-75
* Revised 10/16/75
** Revised 10/23/75

TABLE 2.1.3-IX (Cont'd)

LOAD STEP	MISSION SEGMENT	Λ	LOAD TYPE	FATIGUE CONDITION NUMBER	MAX $M_X/10^6$	MAX $M_Y/10^6$	FATIGUE CONDITION NUMBER	MIN $M_X/10^6$	MIN $M_Y/10^6$	NOTES
71				92	16.258	-23.918	592	4.411	- 8.004	
72				93	14.657	-21.768	593	4.892	- 8.649	
73	errain Follow.95	67.5	Gust	96**	11.090	-22.881	596**	2.399	- 6.856	
74				97**	10.225	-21.288	597**	3.316	- 8.548	
75				98**	9.471	-19.895	598**	4.072	- 9.942	
76			Maneuver	102	9.919	-19.342	602	3.624	-10.494	
77				103	9.677	-19.002	603	3.946	-10.948	
78				104	9.274	-18.435	604	4.350	-11.515	
79	Wing Sweep	67.5	1G	106	6.771	-14.918	606	6.771	-14.918	Sweep
80	Wing Sweep	55	1G	107	11.995	-13.624	607	11.995	-13.624	Sweep
81	Terrain Follow.55	55	1G	108	11.583	-14.419	608	1.268	- 1.997	
82				109	10.446	-13.050	609	2.317	- 3.260	
83				110*	9.397	-11.787	610	3.366	- 4.524	
84				113	17.677	-20.466	613	6.313	- 6.782	
85				114	16.453	-18.993	614	7.449	- 8.150	
86				115	15.317	-17.624	615	8.586	- 9.519	
87				117	23.923	-26.440	617	13.346	-13.702	
88				118	22.699	-24.966	618	14.570	-15.176	
89				119	21.650	-23.703	619	15.619	-16.439	
90			Maneuver	121	22.689	-24.023	621	4.643	- 6.475	
91	Terrain Follow.55	55	Maneuver	122	21.240	-22.615	622	5.200	- 7.016	
92				123	18.790	-20.232	623	6.425	- 8.208	
93	Wing Sweep	55	1G	125	11.995	-13.[illegible]	625	11.995	-13.[illegible]24	Sweep
94	Wing Sweep	25	1G	126	24.890	-10.052	626	24.890	-10.052	Sweep
95	Subsonic Climb	25	Maneuver	127	45.131	-16.036	627	6.354	- 4.572	
96				128	39.804	-14.461	628	9.976	- 5.643	
97				129	35.117	-13.075	629	11.041	- 5.958	
98	Subsonic Cruise	25	Ma[illegible]ver	132	40.503	-14.105	632	7.152	- 4.266	
99				133	36.262	-12.854	633	10.044	- 5.119	
100				134	32.021	-11.603	634	13.128	- 6.029	
101	Subsonic Descent	25	Maneuver	137	44.888	-16.472	637	6.123	- 4.986	
102				138	39.563	-14.895	638	9.744	- 6.059	
103				139	34.877	-13.506	639	10.809	- 6.374	
104	Wing Sweep	25	1G	142	24.890	-10.052	642	24.890	-10.052	Sweep
105	Wing Sweep	15	1G	143	27.174	-10.239	643	27.174	-10.239	Sweep

8-8-75
* Revised 10/16/75
** Revised 10/23/75

TABLE 2.1.3-IX (Cont'd)

LOAD STEP	MISSION SEGMENT	Λ	LOAD TYPE	FATIGUE CONDITION NUMBER	MAX $M_X/10^6$	MAX $M_Y/10^6$	FATIGUE CONDITION NUMBER	MIN $M_X/10^6$	MIN $M_Y/10^6$	NOTES
106	Pre-Landing	15	Gust	144	46.229	-14.272	644	8.119	- 6.207	
107				145	41.015	-13.168	645	13.332	- 7.310	
108				146	36.881	-12.293	646	17.107	- 8.109	
109				147	32.926	-11.457	647	21.421	- 9.022	
110			Maneuver	148	51.467	-13.780	648	8.305	- 7.489	
111				149	44.863	-12.817	649	11.372	- 7.936	
112				150	39.438	-12.027	650	14.673	- 8.417	
113				151	33.542	-11.167	651	27.174	-10.239	
114				153	27.096	-10.475	653	27.096	-10.475	
115	Ground	15	Taxi	154	- 4.702	0.611	654	- 1.405	0.182	
116				155	- 4.458	0.579	655	- 1.649	0.214	
117				156	- 4.214	0.547	656	- 1.893	0.246	
118			Braking	159*	- 3.054	0.397	659	- 3.054	0.397	Drag Cond
119	Post Take-Off	15	Maneuver	163	39 438	-12.027	663	14.673	- 8.417	
120	Wing Sweep	15	IG	164	27.174	-10.239	664	27.174	-10.239	Sweep
121	Wing Sweep	25	IG	165	24.890	-10.052	665	24.890	-10.052	Sweep
122	Subsonic Climb	25	Maneuver	166	35.117	-13.075	666	13.172	- 6.588	
123	Wing Sweep	25	IG	167	24.890	-10.052	667	24.890	-10.052	Sweep
124	Wing Sweep	15	IG	168	27.174	-10.239	668	27.174	-10.239	Sweep
125	Pre-Landing	15	Maneuver	169	39.438	-12.027	669	14.673	- 8.417	
126				170	27.096	-10.475	670	27.096	-10.475	
127	Ground	15	Taxi	171	- 4.214	0.547	671	- 1.893	0.246	
128			Braking	172	- 3.054	0.397	672	- 3.054	0.397	Drag Cond
129			Taxi	175	- 4.214	0.547	675	- 1.893	0.246	
130			Braking	176	- 3.054	0.397	676	- 3.054	0.397	Drag Cond
131	Post Take-Off	15	Maneuver	177	39.438	-12.027	677	14.673	- 8.417	
132	Wing Sweep	15	IG	178	27.174	-10.239	678	27.174	-10.239	Sweep
133	Wing Sweep	25	IG	179	24.890	-10.052	679	24.890	-10.052	Sweep
134	Subsonic Climb	25	Maneuver	180	35.117	-13.075	680	13.172	- 6.588	
135	Wing Sweep	25	IG	181	24.890	-10.052	681	24.890	-10.052	Sweep
136	Wing Sweep	15	IG	182	27.174	-10.239	682	27.174	-10.239	Sweep
137	Pre-Landing	15	Maneuver	183	39.438	-12.027	683	13.022	- 8.177	
138				184	27.096	-10.475	684	27.096	-10.475	
139	Ground	15	Taxi	185	- 4.214	0.547	685	- 1.893	0.246	
140			Braking	186	- 3.054	0.397	686	- 3.054	0.397	Drag Cond

TABLE 2.1.3-X
SUMMARY - PRELIMINARY WCTS FATIGUE DAMAGE ANALYSIS
1975 LOADS UPDATE

MISSION SEGMENT	C.P.1	C.P.2	C.P.3	C.P.4	C.P.5	C.P.6
Ground	0.0	0.0	0.0	0.0	0.0	0.0
Post-Take-Off	0.0135	0.0010	0.0181	0.0934	0.0365	0.0
Subsonic Climb-Cruise	0.0012	0.0518	0.0097	0.1028	0.0420	0.0
Supersonic Climb -	0.0	0.0144	0.0263	0.0001	0.0021	0.0263
Cruise-Descent	--	--	--	--	--	--
Refuel	0.0004	0.0154	0.0003	0.0453	0.0191	0.0
Subsonic Cr.- Des.	0.0162	0.0552	0.0428	0.1494	0.0820	0.0
TFR (67.5°-.85M)	0.0	0.0002	0.0007	0.0	0.0	0.0
Fly-Up	0.0	0.0552	0.0672	0.0065	0.0243	0.0461
TFR (67.5°-.85M)	0.0	0.1588	0.2934	0.0	0.0042	0.0871
TFR (67.5°-.95M)	0.0	0.0	0.0	0.0	0.0	0.0
TFR (55°-.55M)	0.0	0.0712	0.0828	0.0005	0.0138	0.0098
Subsonic Climb -	0.0003	0.0189	0.0018	0.0630	0.0304	0.0
Cruise-Descent	--	--	--	--	--	--
Prelanding	0.0085	0.0247	0.0034	0.1101	0.0071	0.0
Ground	0.0	0.0	0.0	0.0	0.0	0.0
Post-Take-Off	0.0002	0.0	0.0145	0.0304	0.0308	0.0
Subsonic Climb	0.0	0.0045	0.0	0.0160	0.0057	0.0
Prelanding	0.0088	0.0232	0.0006	0.0630	0.0019	0.0
Ground	0.0	0.0	0.0	0.0	0.0	0.0
Post-Take-Off	0.0	0.0	0.0014	0.0030	0.0028	0.0
Subsonic Climb	0.0	0.0004	0.0	0.0016	0.0006	0.0
Prelanding	0.0008	0.0023	0.0001	0.0065	0.0002	0.0
Ground	0.0	0.0	0.0	0.0	0.0	0.0
Damage: $\sum n/N$ (Kt=5.0)	0.0499	0.4972	0.5633	0.6916	0.3035	0.1693
Calculated Kt	2.17	2.30	2.92	3.60	3.31	3.89
Damage: $\sum n/N$ (Calc. Kt)	0.0	0.0	.0022	.1514	.0207	.0134

NOTES: 1. Range Pair Counted
2. 1280 Flights, Scatter Factor = 1.0

2.2 TESTING

Material testing, component testing, and full scale test activities during this reporting period are described in this section.

2.2.1 Material Testing

All material testing to be accomplished at Fort Worth was completed except for the Credible Option Tests deferred in December 1974. Table 2.2.1-I summarizes the tests completed during this report period.

The deferred tests include spectrum environmental fatigue crack growth (4), 10 Nickel steel weldments (60), and fracture mechanics tests regarding holes with cracks and fasteners installed (15). Specimen fabrication and testing has been resumed and the scheduled tests are listed in Table 2.2.1-II.

Specimen fabrication is required only from the 10 Nickel steel weldments. The plates were welded and inspected prior to this report period. The drawings depicting the weldments were revised to include specimen identification and to replace flat tension specimens with round specimens for a reduction in machining cost. These revised drawings were released and are shown in Figures 2.2.1-1 and 2.2.1-2. Material allocation plans, defining specimen location within the weldments, were prepared and released.

There are (16) notched fatigue specimens (FTJ 10940-151) at WPAFB to be tested to determine the effect of spectrum truncation on the fatigue life of 10 Nickel steel. The required spectra has been generated and supplied to AFFDL, programming has been completed, but testing has not begun.

Test results for all of the above tests will be incorporated into the Material Property Data Test Report, FZM 6148.

Table 2.2.1-I

CREDIBLE OPTION MATERIAL TEST COMPLETED
FROM 16 DECEMBER 1974 THRU 15 OCTOBER 1975

MATERIAL	TYPE TEST	SPECIMEN NO.	QTY
10 Nickel Steel	Tension	FTJ10940-1	18
	Compression	FTJ10940-38	9
	Shear	FTJ10940-161	6
	Bearing	FTJ10940-62	6
	Bearing	FTJ10940-63	6
	Charpy	FTJ10940-100	36
	Fatigue	FTJ10940-134	18
	Fatigue	FTJ10940-202	54
	Fatigue Crack Growth	FTJ10940-199	6
	Stress Corrosion	FTJ10940-135	2
	Stress Corrosion	FTJ10940-136	6
	Fracture Toughness	FTJ10940-201	4
Beta Annealed 6AL-4V	Tension	FTJ10940-1	4
	Tension	FTJ10940-8	4
	Compression	FTJ10940-38	4
	Fracture Toughness	FTJ10940-138	6
	Fracture Toughness	FTJ10940-139	6
	Stress Corrosion	FTJ10940-135	9
	Fatigue	FTJ10940-133	12
	Fatigue	FTJ10940-134	12
	Fatigue Crack Growth	FTJ10940-199	2
	TOTAL		230

Table 2.2.1-II

CREDIBLE OPTION DEFERRED TESTS

TYPE TEST	SPECIMEN NUMBER	QTY	TYPE SPECIMEN	MATERIAL
Spectrum Environmental Crack Growth	FTJ10940-152 FTJ10940-185 FTJ10940-186	1 1 2 (4)	Cracked Hole Surface Flaw Cracked Hole	Titanium Steel Steel
Fracture Mechanics	603FTB063-1 thru -17 603FTB064-1 thru 9 603FTB064-11	9 5 1 (15)	Unloaded Holes Loaded Holes Loaded Holes	Steel Steel Titanium
10 Nickel Steel Weldments	FTJ10940-1 FTJ10940-2 FTJ10940-100 FTJ10940-124 FTJ10940-142 FTJ10940-147 FTJ10940-200	6 4 15 24 3 6 2 (60)	Tension Tension Charpy Fatigue Stress Corrosion Fat Crack Growth Fracture Toughness	Steel Steel Steel Steel Steel Steel Steel

10 NICKEL STEEL E.B. WELD

MANUFACTURING RESEARCH				NON DESTRUCTIVE INSPECTION	ENGINEERING	
SPECIMEN	STOCK THK	"T" THK	ASSY QTY		SPECIMEN	TYPE TEST
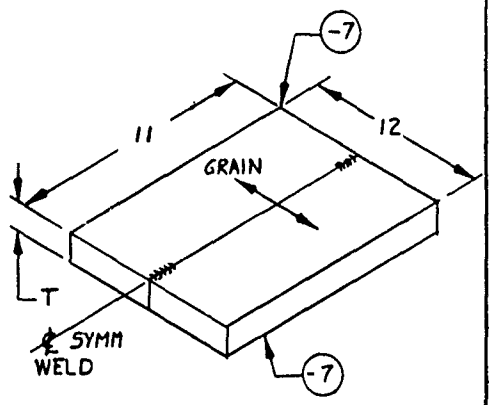 -1 ASSY	2.50	1.60	2	RADIOGRAPHIC X-RAY MAGNETIC PARTICLE	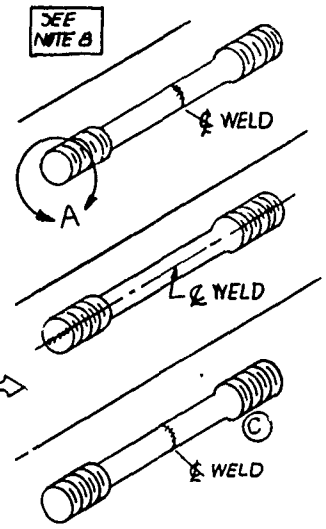	TENSI
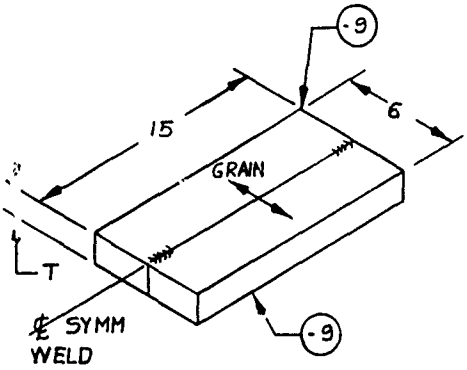 -3 ASSY	2.50	1.60	5		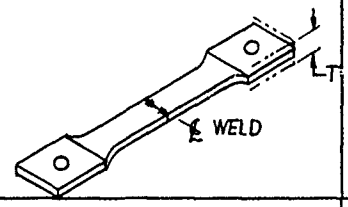	FATIG
					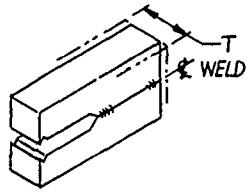	FATIGU CRAC GROW
						STRE CORRO
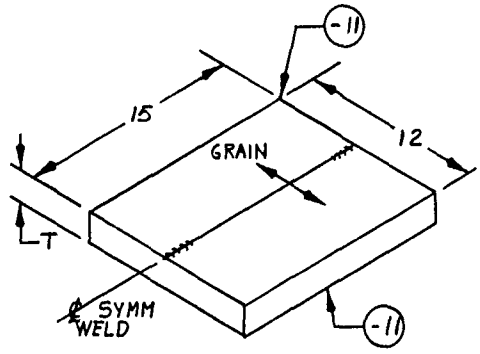 -5 ASSY (SEE NOTE 5)	1.90	1.60	3		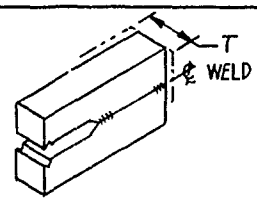	FRACT TOUGHN
					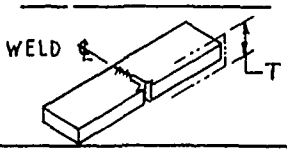	
					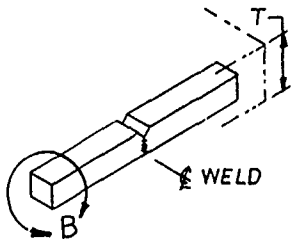	CV N 0°F -65

B. WELD

ENGINEERING TEST

MEN	TYPE OF TEST	TEST SPEC PART Nº	QUANTITY	MAKE FROM	SPECIMEN IDENTIFICATION
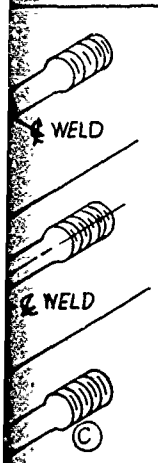	TENSION	TRANVERSE WELD SPEC FTJ10940-1	1	-1 ASSY	H-95-2
			15	-3	H-89-5 UPPER H-89-4, -9, 1-10 MIDDLE H-89-6 LOWER H-91-1, -4, 1-7 UPPER H-91-3, -6, 1-9 MIDDLE H-91-2, -5, -8, 1-17 LOWER
		LONGITUDINAL WELD SPEC. FTJ10940-3	1	-1 ASSY	H-94-7
			3	-3 ASSY	H-89-13 UPPER H-92-3 H-93-3
		Ⓒ FTJ10940-1 TRANVERSE WELD SPEC	2	-5 ASSY	F410132-3 MIDDLE F410132B-3 MIDDLE Ⓒ
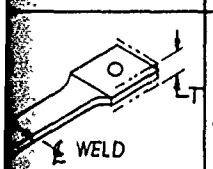	FATIGUE	FTJ10940-124	6	-1 ASSY	H-94-1, -3, 1-5 H-94-2, -4, 1-6
			6	-5 ASSY	F410132-1, -2 MIDDLE F410132A-1, -2 MIDDLE F410132B-1, -2 MIDDLE Ⓒ
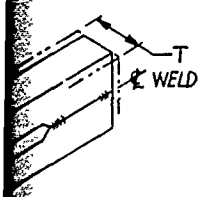	FATIGUE CRACK GROWTH	FTJ10940-147	1	-1 ASSY	H-94-8
			3	-3 ASSY	H-89-8 LOWER H-92-4 H-93-4
			1	-5 ASSY	F410132-4 MIDDLE Ⓒ
	STRESS CORROSION	FTJ10940-142	3	-3 ASSY	H-89-7 MIDDLE H-90-3 MIDDLE H-91-16 MIDDLE
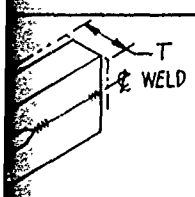	FRACTURE TOUGHNESS	FTJ10940-195	6	-3 ASSY	H-90-1 & -2 MIDDLE H-92-1 & -2 MIDDLE H-93-1 & -2 MIDDLE
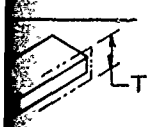		FTJ10940-200	2	-5 ASSY	F410132-5 MIDDLE F410132B-4 MIDDLE Ⓒ
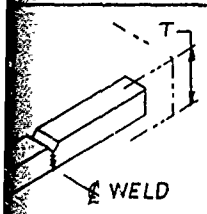	CVN 0°F	FTJ10940-100	1	-1 ASSY	H-95-1
			15	-3 ASSY	H-89-1 & -11 H-91-11 & -14 UPPER H-89-3, H-90-4:2 & -5:2, H-91-10 & -13, H-92-5:1, -6:1 MIDDLE H-89-2 & -12, H-91-12 & -15 LOWER
	-65°	FTJ10940-100	3 (NOTE 4)	-5 ASSY	F410132A-3, -4, -5 MIDDLE Ⓒ

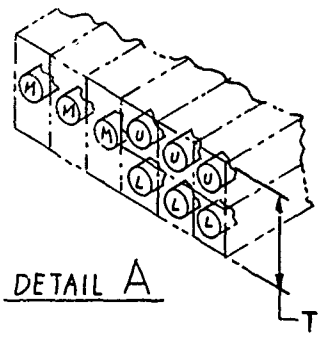

DETAIL A

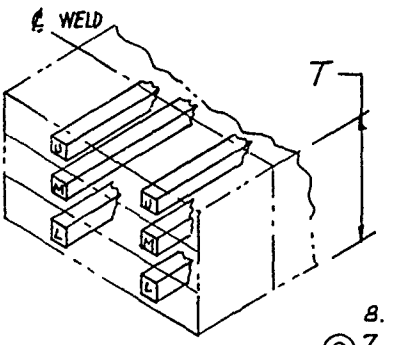

DETAIL B

NOTES:

1. MACHINING O
2. ALL WELDIN
3. ALL TESTING
4. FTJ10940-100 MA
5. GTA WELD RE ONE (1) PLAT
6. AGE ALL WEL
7. Ⓒ
8. WELD SPECIME

2

REVISIONS				
SYM	ZONE	DESCRIPTION	DATE	APPROVED
A		FTJ10940-195 WAS -146 T THK 1.60 WAS 2.100	10-1-73	
B		REVISED & REDRAWN	8-27-74	
C		ADDED SPECIMEN IDENTIFICATION FOR -5 PLATE ASSYS. REMOVED NOTE 7 STATING IDENT TO BE ADDED REPLACED FTJ10940-149 WITH FTJ10940-1	7-23-75	

SPECIMEN IDENTIFICATION
2
5 UPPER -9,1-10 MIDDLE LOWER 4,1-7 UPPER -6,1-9 MIDDLE 5-8,1-17 LOWER
7
-13 UPPER 3 3
2-3 MIDDLE 2B-3 MIDDLE (D)
-1,-3,1-5 -2,-4,1-6
2-1,-2 MIDDLE 2A-1,-2 MIDDLE 2B-1,-2 MIDDLE (C)
4
-0 LOWER 4 4
2-4 MIDDLE (C)
-7 MIDDLE 3 MIDDLE 16 MIDDLE
1-2 MIDDLE 1-2 MIDDLE 1-2 MIDDLE
132-5 MIDDLE 132B-4 MIDDLE (D)
1
1-11 H-91-11 1-14 UPPER 3, H-90-4:2 1-5:2 } MIDDLE 10 1-13, H-92-5:1,-6:1 } 2 1-12, H-91-12 1-15 LOWER
132A-3,-4,-5 MIDDLE (C)

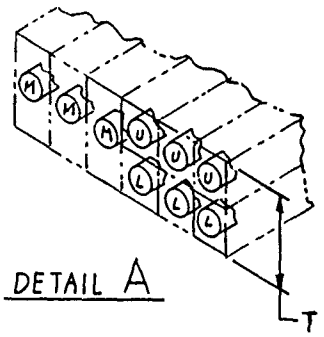

DETAIL A

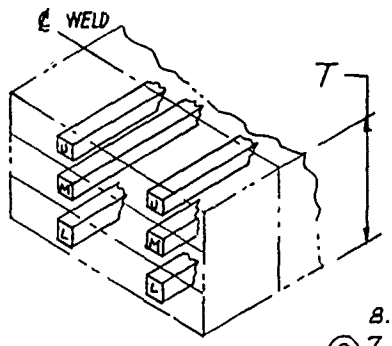

DETAIL B

(C) 7

8. WELD SPECIMEN H95-3 SHIPPED TO NRL FOR DWTT
6. AGE ALL WELDED ASSY'S TO COND STA PER FPS-1096
5. GTA WELD REPAIR TWO (2) PLATES COMPLETE LENGTH & ONE (1) PLATE 7.50 INCHES
4. FTJ10940-100 MADE FROM -5 ASSY TO BE UN REPAIRED WELDED PLATE
3. ALL TESTING TO BE ACCOMPLISHED BY E.T.L.
2. ALL WELDING TO BE ACCOMPLISHED BY MFG. ENGR.
1. MACHINING OF ENGR SPECIMENS TO BE ACCOMPLISHED BY E.T.L.

NOTES:

Figure 2.2.1-1

PRELIMINARY DESIGN DRAWING

10 NICKEL STEEL - ELECTRON BEAM WELDING PROPERTIES - DEVELOPMENT TEST PROGRAM

BY | APPROVED | SCALE — | DATE 4-12-73

GENERAL DYNAMICS
Convair Aerospace Division
Fort Worth Operation

603R100-11 'C'

SHEET 1 OF 1

3

10 NICKEL STEEL GTA WELD

MANUFACTURING RESEARCH				NON DESTRUCTIVE INSPECTION	ENGINEERING	
SPECIMEN	STOCK THK	"T" THK	ASSY QTY		SPECIMEN	TYPE TEST
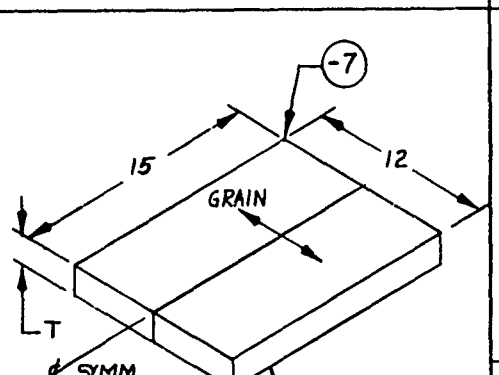 -1 ASSY	.80	.50	5		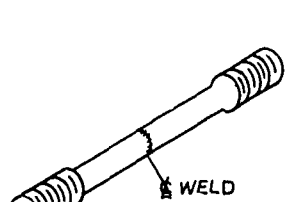	TENSIC
					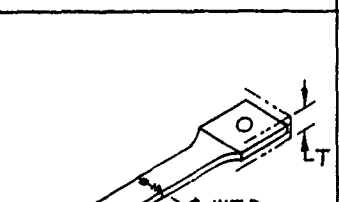	FATIGU
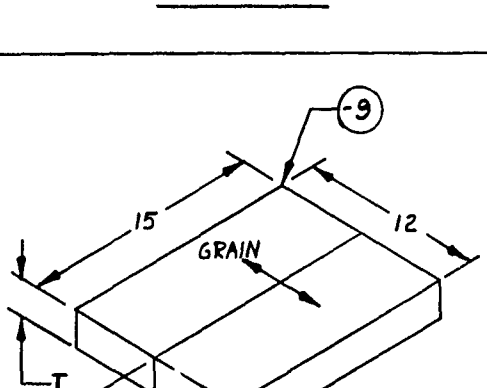 -3 ASSY	1.62	1.30	3	RADIOGRAPHIC (X-RAY) MAGNETIC PARTICLE		FATIGUE CRACK GROWT
						STRES CORROSI
					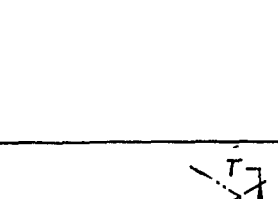	CVN

LD

INEERING TEST

	TYPE OF TEST	TEST SPEC PART Nº	QUANTITY	MAKE FROM	SPECIMEN IDENTIFICATION
	TENSION	FTJ10940-2 (A)	4	-1 ASSY	F410128-3,-4 F410128C-3,-4
		FTJ10940-1 (A)	4	-3 ASSY	F410131-3,-4 F410131A-3,-4
LT	FATIGUE	FTJ10940-124	12	-1 ASSY	F410128-1,-2 F410128A-3,-4 F410128B-3,-4 F410128C-1,-2 F410128D-2,-3,-4,-5
			6	-3 ASSY	F410131-1,-2 F410131A-1,-2 F410131B-1,-2
LT WELD	FATIGUE CRACK GROWTH	FTJ10940-147	5	-1 ASSY	F410128A-1,-2 F410128B-1,-2 F410128D-1
	STRESS CORROSION	FTJ10940-142	3	-3 ASSY	F410131-5 F410131B-3,-4
T	CVN	FTJ10940-100	4 @-65°	-1 ASSY	F410128-5,-6 F410128C-5,-6
			4 @ 0°		F410128-7,-8 F410128C-7,-8
			4 @ 0°	-3 ASSY	F410131A-5,-6 F410131B-5,-6

NOTES:

(A) 7. EQUAL SIZE FLATS PE
FTJ10940-2
(A) 6. ALL SPECIMENS TO BE TAK
(A) 5.
4 AGE ALL WELDED ASSYS TO C
3. ALL TESTING TO BE ACCOM
2. ALL WELDING TO BE ACCON
1. MACHINING OF ALL SPECIME

SYM	ZONE
A	

PRE
W
DE
BY
GER
Conv
Fort Wo

2

REVISIONS				
SYM	ZONE	DESCRIPTION	DATE	APPROVED
A		ADDED SPECIMEN IDENTIFICATION. REMOVED NOTE 5, STATING IDENT. TO BE ADDED. REPLACED FTJ10940-149 WITH FTJ10940-1&-2. ADDED NOTES 6 AND 7	9-23-76	

MEN FICATION
-4
-4
-4 -2 -3, -4, -5
-2 -2
-1, -2 -1, -2
-3, -4
-6 -6
-8 -8
-5, -6 -5, -6

(A) 7. EQUAL SIZE FLATS PERMITTED IN THREAD AREA OF FTJ10940-2

(A) 6. ALL SPECIMENS TO BE TAKEN FROM MIDDLE OF PLATES

(A) 5.

4 AGE ALL WELDED ASSYS TO COND STA PER FPS-1096

3. ALL TESTING TO BE ACCOMPLISHED BY E.T.L

2. ALL WELDING TO BE ACCOMPLISHED BY MFG ENG R

1. MACHINING OF ALL SPECIMENS TO BE ACCOMPLISHED BY E.T.L.

NOTES:

Figure 2.2.1-2

PRELIMINARY DESIGN DRAWING

10 NICKEL STEEL - GTA
WELDING PROPERTIES -
DEVELOPMENT TEST PROGRAM

BY [illegible] APPROVED [illegible] 9/6/76 SCALE — DATE 9-6-76

GENERAL DYNAMICS
Convair Aerospace Division
Fort Worth Operation

603R100-12 A

SHEET 1 OF 1

3

2.2.2 Component Tests

All component tests to be conducted at Fort Worth were completed prior to this reporting period. Three Credible Option Fastener Evaluation Tests (603FTB059) were tested to four fatigue lives at WPAFB with no failures. A carry-on test program for these specimens was defined and submitted to the AFFDL. The plan requires the induction of a flaw in one of the Taper-Lok holes and application of an additional fatigue life. To date this testing has not been started.

2.2.3 Full Scale Testing

Full scale fatigue testing of the WCTS has begun, and is in the early stages of the first fatigue life. The majority of the full scale test activity was devoted to the mating of the WCTS in the upper test fixture, test set-up operations and conducting the pre-test strain surveys.

2.2.3.1 Mating of the WCTS

The mating of the full scale test article to the upper test fixture was accomplished by General Dynamics during the period 18 February to 12 April 1975, as described in Section 3.2.

2.2.3.2 Test Set-Up Operations

Completion of the test set-up was accomplished by Structural Test Facility personnel and included the following:

- Mating of the dummy landing gears and dummy wings to the WCTS
- Mating the upper test fixture to the lower fixture
- Installation and check-out of the load control system, the counter-balance system, and the attitude control system
- Pressurization check of the WCTS
- Hook-up and check-out of the hydraulic system and the control/data systems.
- Conducting Category IV Baseline NDI/Inspections.

An in-depth review of the Structural Test Program was conducted on 28, 29 and 30 May by General Dynamics and AFFDL personnel. The review covered all phases of the test operation plans with emphasis on the safety of the wing carrythrough test structure. In general, the Structural Test Facility plans were quite acceptable; however, a few changes were proposed by General Dynamics. The most significant changes recommended are listed below. These recommendations have since been reviewed by Structural Test Facility personnel and, where appropriate, have been incorporated into the test system.

- Incorporate a redundant run/dump solenoid pressure valve in the hydraulic distribution and control system

- The programmed "Abort" mode should be programmed to return to zero load at a rate nearly equal to the loading rate

- Record the fuselage and wing shear, moment, and torsion voltage output in the back-up overload system on a direct writing oscillograph

- An independent dump system should be utilized on the roll control hydraulics

- An external timing marker should be utilized on all strip chart recorders for coordination of charts

- Collars should be placed around rods on fuselage counterbalance rams to protect against total power failure

- An emergency light source should be available for controlled test shut-down in event of power failure

- Collars should be placed on W1 wing rams to limit roll to $3\frac{1}{2}$ - 4°

- During removal of Epoxy paint by grinding for mag rubber and dye penetrant inspection, all grinding marks should be polished out

- Lubrication of the wing pivot pin should be accomplished under a counter-balance system "active" status.

2.2.3.3 Strain Survey

All five strain survey conditions required per the FZS-219B Test Plan have been run plus one fatigue condition from the revised Rockwell International fatigue spectrum. Instrumentation available for monitoring these conditions consisted of 558 strain gage channels (402 gages), 38 load cells, 46 deflection pots, and one pressure transducer. These 643 channels along with one program channel represent the total 644 channels available to the AMAVS Program.

The results of these surveys have been reviewed for compatibility with the predicted stress magnitude and distribution. Generally the test results had good correlation with the predicted values, but some deviations did occur. These variations were analyzed and it was concluded that none represented an appreciable impact on the fatigue test. Additional evaluation will be required in some areas, however, prior to static tests.

Significant bending in both the upper and lower pivot lugs was observed during the aft wing sweep condition (AS 10000). One strain gage*, located in the outboard lower corner of the forward opening, monitored exceptionally high stresses as compared with predicted values and adjacent gage results. An additional gage* has been added on the RH side in this same area and will be monitored during future tests for comparison with the LH gage.

2.2.3.4 Full Scale Test Support

A design engineer was on site at the Structural Test Facility at Wright Patterson Air Force Base during the period 18 February to 30 June 1975. During this period, technical support was provided the General Dynamics factory crew during the mating operation of the wing carrythrough to the upper test fixture. Also, technical support was provided to Air Force Flight Dynamics Laboratory personnel during the mating of the dummy landing gears, the dummy wings, and the wing sweep actuator.

* LH gage number - 3007 SL
RH gage number (added) - 3007 SR

SECTION 3

FACTORY PROGRESS

Fabrication and assembly of the WCTS was completed during this reporting period. The WCTS was also mated to the upper test fixture at Wright Patterson Air Force Base.

3.1 FABRICATION OF THE WCTS

All remaining planned Fort Worth Operations were completed prior to shipment of the WCTS to WPAFB on 14 February 1975. These operations consisted of the following:

- The installation of the upper cover center panel with sealant and fasteners. The holes had already been drilled and reamed.
- Drill, ream and installation of both upper pivot lugs including their support beams
- Drill, ream and installation of both upper cover contoured panels including their support beams
- The installation of the upper fairing supports at Y_F932 and Y_F992 bulkheads, and the upper cover splices at X_F84 rib. These installations included hole drilling and reaming.
- The drilling and reaming of full size holes to interface with the forward longerons at Y_F932 and the lower centerline longeron at Y_F992. Undersize index holes were drilled in the aft longeron tabs to locate the aft simulated fuselage.
- Taper-Lok installations were completed in the Y_F932 and Y_F992 bulkheads.
- The final installation of the aft removable access covers, creating formed-in-place gaskets
- Drill, ream and final installation of the MLG trunnion fittings and side load fitting

PRECEDING PAGE BLANK-NOT FILMED

In addition to the deferred WCTS assembly items, the mating task consisted of the following:

Forward Fuselage

- o Assembly and installation of the aft section of the outboard shear web, including the splice to the WCTS
- o The splicing of the weapon's bay skin to the WCTS
- o The splicing of the upper and lower skins to the WCTS
- o The splicing of the centerline simulated fuselage upper longerons
- o The splicing of the 25° longerons
- o The splicing of the weapon's bay longerons to the WCTS
- o The splicing of the outboard upper and lower longerons to the WCTS fittings.

Aft Fuselage

- o Attaching the upper centerline longeron and the 25° longeron to the WCTS
- o Completing the assembly of the 603FTB205 and 603FTB206 outboard shear webs, including splicing to the WCTS at X_F119 and X_F103 respectively
- o Splicing of the upper and lower outboard longerons to the WCTS. These splices utilize 1-1/4 inch taper-loks and 1-3/8 inch straight shank bolts.
- o Splicing of the upper and lower outboard MLG longerons to the WCTS
- o Splicing of the lower centerline longeron to the WCTS
- o Splicing of the centerline web and the routing tunnel webs to the WCTS
- o Installation of the upper and lower skin panels, including splicing to the WCTS.

- The boring and facing of the upper and lower pivot lugs

- The installation of the lower fairing support structure.

Prior to drilling of the longeron interface holes, the WCTS was removed from the assembly fixture to allow final coordination between the fixture and the tooling gage. All drill plates on the assembly fixture were found to be within acceptable tolerances and no changes were made.

Several WCTS assembly operations were deferred to facilitate mating with the forward and aft upper test fixtures at WPAFB. These deferred items are listed below:

- Final location and installation of the forward outboard longeron interface fittings. Full size interface holes were pre-drilled at Fort Worth.

- The assembly and installation of the wing sweep actuator fittings. This operation was deferred to allow taper reaming of the lower longeron fittings.

- Holes and fasteners in the upper cover in area of the centerline rib and common to the simulated fuselage longeron

- Fasteners in the upper cover contoured panels at the X_F39 rib, common to the upper fairing of the simulated fuselage

- Taper-lok installations through the Y_F932 bulkhead and the closure rib, and through the X_F103 stiffener on the Y_F992 bulkhead

- Miscellaneous fastener installations common to the mating structure of the forward and aft simulated fuselages.

3.2 MATING OF THE WCTS

The mating of the WCTS to the forward and aft upper test fixtures was accomplished by General Dynamics at WPAFB commencing 18 February 1975. The major portion of this task was completed on 26 March at which time most of the factory crew returned to Fort Worth. A smaller crew, consisting of four factory and one inspection personnel, remained at WPAFB an additional three weeks to complete the mating task.

There were some mating tasks left open at the time the last of the factory crew returned to Fort Worth. They were accomplished by the AFFDL Structural Test Facility personnel with the assistance of the on-site General Dynamics Engineering Representative. The most major items left open were necessary to facilitate the mating of the dummy landing gears and to permit Category IV baseline inspections. These included the installation of the upper and lower aft skin panels. The other tasks left open were of a minor nature and were deferred to permit the remaining factory crew to return to Fort Worth without an additional extension.

☆ U. S. GOVERNMENT PRINTING OFFICE: 1976 — 657-630/703