UNCLASSIFIED

AD NUMBER
ADB001308
LIMITATION CHANGES
TO: **Approved for public release; distribution is unlimited.**
FROM: **Distribution authorized to U.S. Gov't. agencies only; Test and Evaluation; MAY 1974. Other requests shall be referred to Air Force Armament Laboratory, Attn: DLJF, Eglin AFB, FL 32542.**
AUTHORITY
AFATL ltr, 3 Jan 1977

THIS PAGE IS UNCLASSIFIED

THIS REPORT HAS BEEN DELIMITED
AND CLEARED FOR PUBLIC RELEASE
UNDER DOD DIRECTIVE 5200.20 AND
NO RESTRICTIONS ARE IMPOSED UPON
ITS USE AND DISCLOSURE.

DISTRIBUTION STATEMENT A

APPROVED FOR PUBLIC RELEASE;
DISTRIBUTION UNLIMITED.

AFATL-TR-74-88

ADB001308

DESIGN AND DEVELOPMENT OF FZU-32/B BOMB FUZE INITIATOR

FAIRCHILD CAMERA AND INSTRUMENT CORPORATION

TECHNICAL REPORT AFATL-TR-74-88

MAY 1974

Distribution limited to U. S. Government agencies only; this report documents test and evaluation; distribution limitation applied May 1974 . Other requests for this document must be referred to the Air Force Armament Laboratory (DLJF), Eglin Air Force Base, Florida 32542.

DDC
RECEIVED
FEB 3 1975
B

AIR FORCE ARMAMENT LABORATORY
AIR FORCE SYSTEMS COMMAND • UNITED STATES AIR FORCE
EGLIN AIR FORCE BASE, FLORIDA

Design And Development Of FZU-32/B Bomb Fuze Initiator

John Miazza

Distribution limited to U. S. Government agencies only; this report documents test and evaluation; distribution limitation applied May 1974 . Other requests for this document must be referred to the Air Force Armament Laboratory (DLJF), Eglin Air Force Base, Florida 32542.

FOREWORD

This technical report describes the design and development program for the FZU-32/B Bomb Fuze Initiator. The program described herein was conducted by Fairchild Camera and Instrument Corporation, 300 Robbins Lane, Syosset, New York 11791, for the Air Force Armament Laboratory, Armament Development Test Center, Eglin Air Force Base, Florida, under Contract No. F08635-72-C-0152. The work performed under this contract was monitored by Captain Stanley G. Hull (DLJF). This effort was started on 23 June 1972 and was completed on 15 November 1973.

This technical report has been reviewed and is approved for publication.

FOR THE COMMANDER

FENDRICK J. SMITH, JR., Colonel, USAF
Chief, Munitions Division

ABSTRACT

The primary objective of this program under Contract No. F08635-72-C-0152 was to develop a cost effective, production engineered FZU-24/B Bomb Fuze Initiator. The initiator is an electric generating device which, when installed in the fuze charging well of general purpose bombs, is capable of deriving energy from the airstream passing the bomb in free fall and converting the energy into electric energy suitable for powering a bomb fuze. The objective was to be accomplished by means of a production engineering effort carried through the evolution of design, fabrication, assembly, test, and evaluation. The baseline for the design was Harry Diamond Laboratories' Drawing No. 11716160. A quantity of 60 units was fabricated and tested in accordance with the production engineered design. After some additional redesign to correct identified deficiencies, 220 units were fabricated. These units were subjected to environmental, wind tunnel, and flight testing and performance requirements were met. ADTC-TR-74-1, FMU-114/B and FZU-32/B Initiator Functional Evaluation, January 1974, and ADTC-TR-74-52, Functional Test of the FZU-32/B Bomb Fuze Initiator, July 1974, document the results of these tests. The final unit design was designated the FZU-32/B Bomb Fuze Initiator.

Distribution limited to U. S. Government agencies only; this report documents test and evaluation; distribution limitation applied May 1974. Other requests for this document must be referred to the Air Force Armament Laboratory (DLJF), Eglin Air Force Base, Florida 32542

(The reverse of this page is blank)

TABLE OF CONTENTS

(The reverse of this page is blank)

SECTION I

INTRODUCTION

The design and development of this bomb fuze initiator was undertaken as part of the development of a proximity fuzing system for general purpose bombs. This fuzing system contains a proximity sensor (MK43 TDD), a fuze, and a bomb fuze initiator. Existing fuzes considered capable of satisfying the requirements of this fuze system, namely, reliable safing and arming and above-ground detonation upon receipt of a signal from a proximity sensor, were those of the U.S. Navy M990 series of electric fuzes and the MK344/376 Electronic Bomb Fuzes.

These fuzes require electrical power to initiate their operation and are not in themselves compatible with the Air Force aircraft/fuze interface. A principal factor in the incompatibility was the unavailability of electrical power for the fuze. In an effort to solve this problem, Harry Diamond Laboratories (HDL) investigated the parameters and designed the FZU-24/B Bomb Fuze Initiator.

The report, HDL-TM-70-21, Air Flow at the Centerwell Region of One Low-drag Bomb, dated September 1970, indicated the feasibility of extracting power from the slipstream by means of an air-driven generator installed in the centerwell, or fuze charging well, of general purpose bombs. There are certain problems inherent in this approach. These include limited space between the rack and the surface of the bomb, the presence of the suspension lug just forward of the charging well so as to obstruct the airstream, and the relatively high voltage output required. However, initial models of the FZU-24/B initiator were built by HDL and successfully drop tested at Eglin Air Force Base.

Fairchild Camera and Instrument Corporation was among those submitting a proposal for the production engineering/development of the FZU-24/B Bomb Fuze Initiator. The product baseline for the development was the configuration designed and fabricated by Harry Diamond Laboratories.

The baseline device employs an air turbine that rotates the armature of a four-pole generator. The generator output then passes through a transformer and rectifier circuit and finally to a regulator that limits the voltage to 300 VDC. The generator itself is approximately 7/8 inch in diameter by 1 inch long and is manufactured in Norway by Kongsberg Våpenfabrikk. The unit is shown in Figure 1 and a schematic of the electronic circuit is shown in Figure 2. Air is introduced into the turbine cavity through a 0.44-square inch orifice, ducted through the turbine

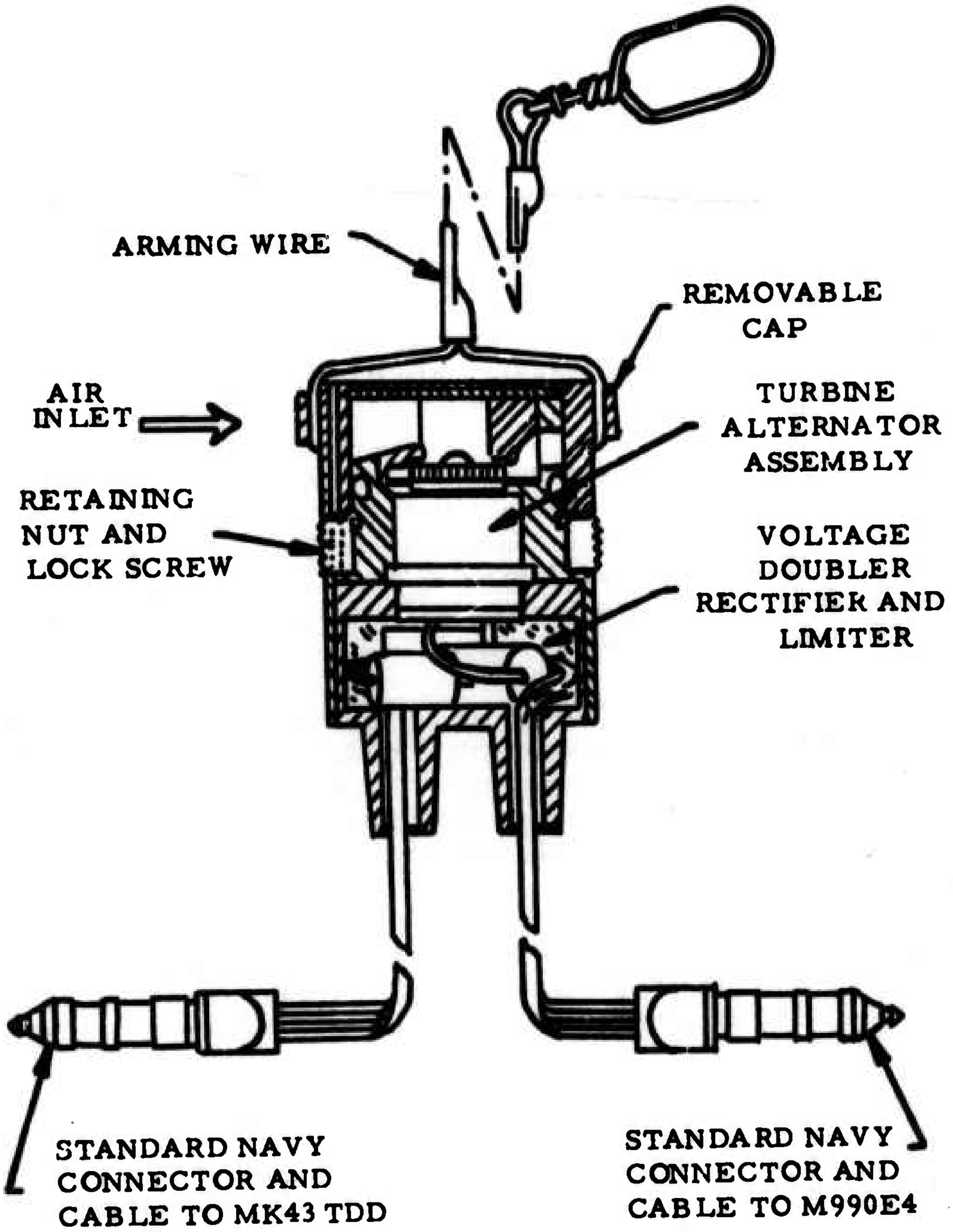

Figure 1. Alternator-type Charging Device

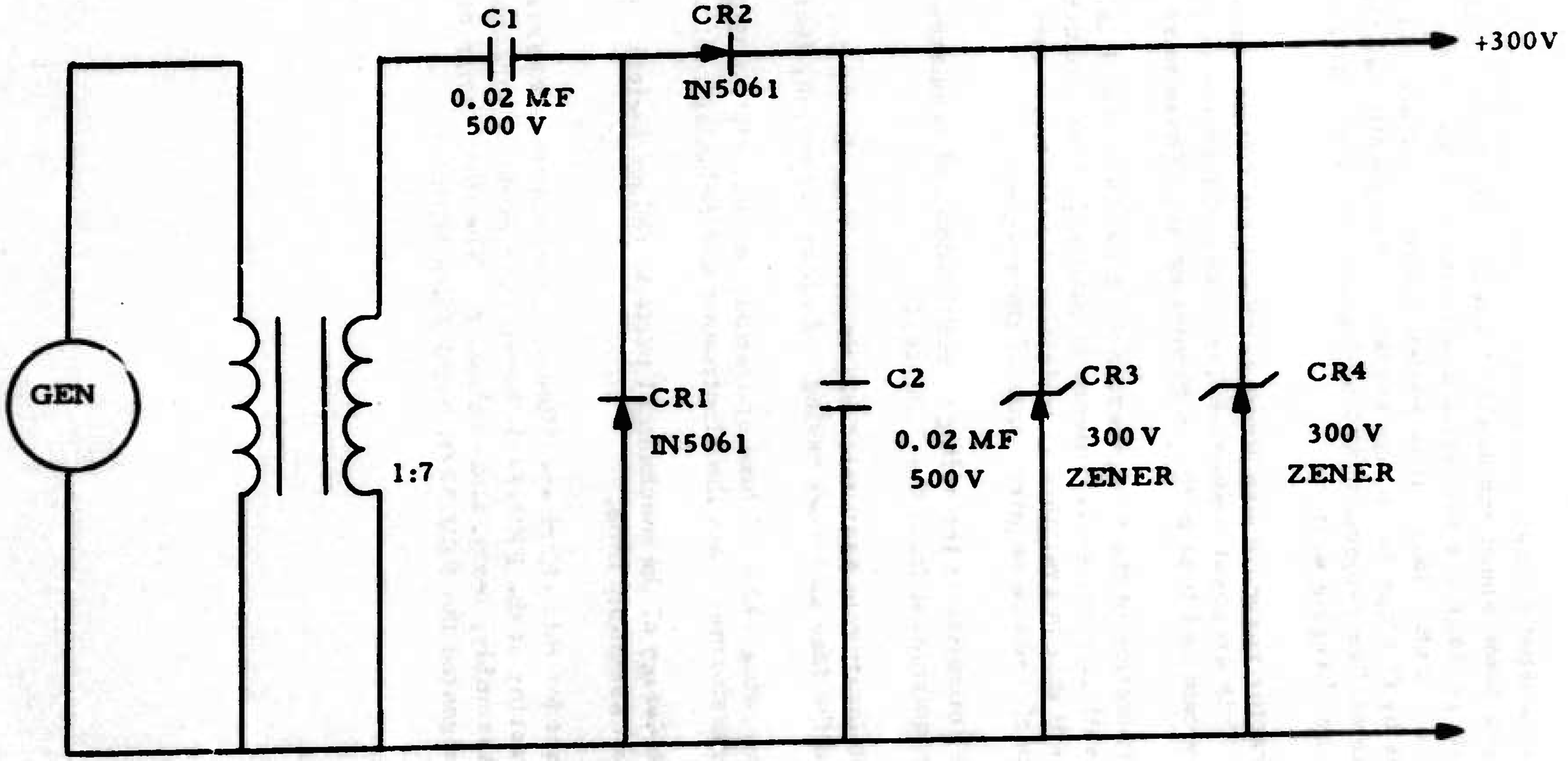

Figure 2. Schematic of Electronic Circuit

blades and exhausted downstream from two ports. Turbine velocity is dependent upon bomb speed and angle of attack. The turbine, generator, and electronic package are packaged in a metal container 1.9 inches in diameter by 1.4 inches long. It is sealed against moisture and other contaminants by O-rings and epoxy sealants. The plastic cap that closes the air intake orifice projects 0.625 inch above the bomb surface when installed in the charging well.

The contractor response was Proposal No. ORD-CP-84, dated 10 April 1972. This proposal contained five principal features in response to the fuze system and fuze initiator requirements. These were:

(1) Retention of the Kongsberg NVT generator, which is a well-proven, environmentally qualified, high production unit that is available at satisfactory costs and meets the performance requirements of the system.

(2) Elimination of the voltage rectification and regulation requirement from the FZU-24/B.

(3) Relocation of associated electronics from the FZU-24/B to the fuze as a cost saving and space conserving feature.

(4) Allowing 190 VDC fuze operation, thereby eliminating a transformer from the electronics and reducing costs.

(5) Redesign of the mechanical parts to reduce material cost and assembly time.

The contract for this effort specified an effort that encompassed production engineering of the FZU-24/B Bomb Fuze Initiator through design, fabrication, assembly, tests, and evaluation. The final design of the initiator was designated the FZU-32/B Bomb Fuze Initiator.

SECTION II

TECHNICAL DESCRIPTION

The FZU-32/B Bomb Fuze Initiator is a non-explosive device for generating electrical energy, derived from the airstream, for initiating or charging an electronic bomb fuze. Mechanically, it is capable of being installed in the standard charging well of general purpose bombs. Electrically, it is compatible with the FMU-114/B Bomb Fuze. (See Figure 3 for a photograph of the unit, and Figure 4 for a cutaway view.)

The device is cylindrical in shape and is 2 inches long by 2 inches in diameter, excluding the projecting electrical connector shells at one end and the lanyard and attaching hardware fastened to the other end. The top end, where the lanyard is attached, is closed with a tear-off type cover. The lanyard, about 8 inches long, is attached to a bracket that is riveted to the tear portion of the cover. The other end of the lanyard is attached to a swivel-type D-ring that is compatible with bomb rack solenoids.

A decal on the tear-off portion of the cover has "FZU-32/B" lettering for identification and an arrow with the letters "FWD" pointing toward the front of the initiator. The cover is crimped onto the unit housing and captivates a retaining ring that has an external 2-12 UN-3A thread. A No. 6-32 hexagon socket set screw is used as a locking device for the retainer ring. The other end or bottom of the unit has two connectors projecting about 3/8 inch (see Figure 4). These connectors mate with cable connectors, from a fuze, threaded through the plumbing of the bomb. When snapped together, the mated connector pairs fit within the two holes in the bottom of the charging well, thus preventing the device from rotating.

Internally, the FZU-32/B initiator contains a spring-loaded, pop-up air intake scoop under the cover, which deploys when the tear-off portion of the cover is removed. The direction of scoop inlet is coordinated with the decal arrow so that it faces the nose of the bomb when the initiator is properly installed. The air intake scoop is attached to a flow partition that guides the air through the blades of the radial flow turbine (part of the electric generator). The air is exhausted behind and to the sides of the air intake scoop.

The electric generator is manufactured by A/S Kongsberg Våpenfabrikk of Norway and is their standard NVT-24 generator Part No. 343349. This is a permanent magnet-type, four-pole, AC generator that operates at an unregulated frequency. It is capable of producing 0.5 to 1.5 watts, depending upon turbine speed and electrical load.

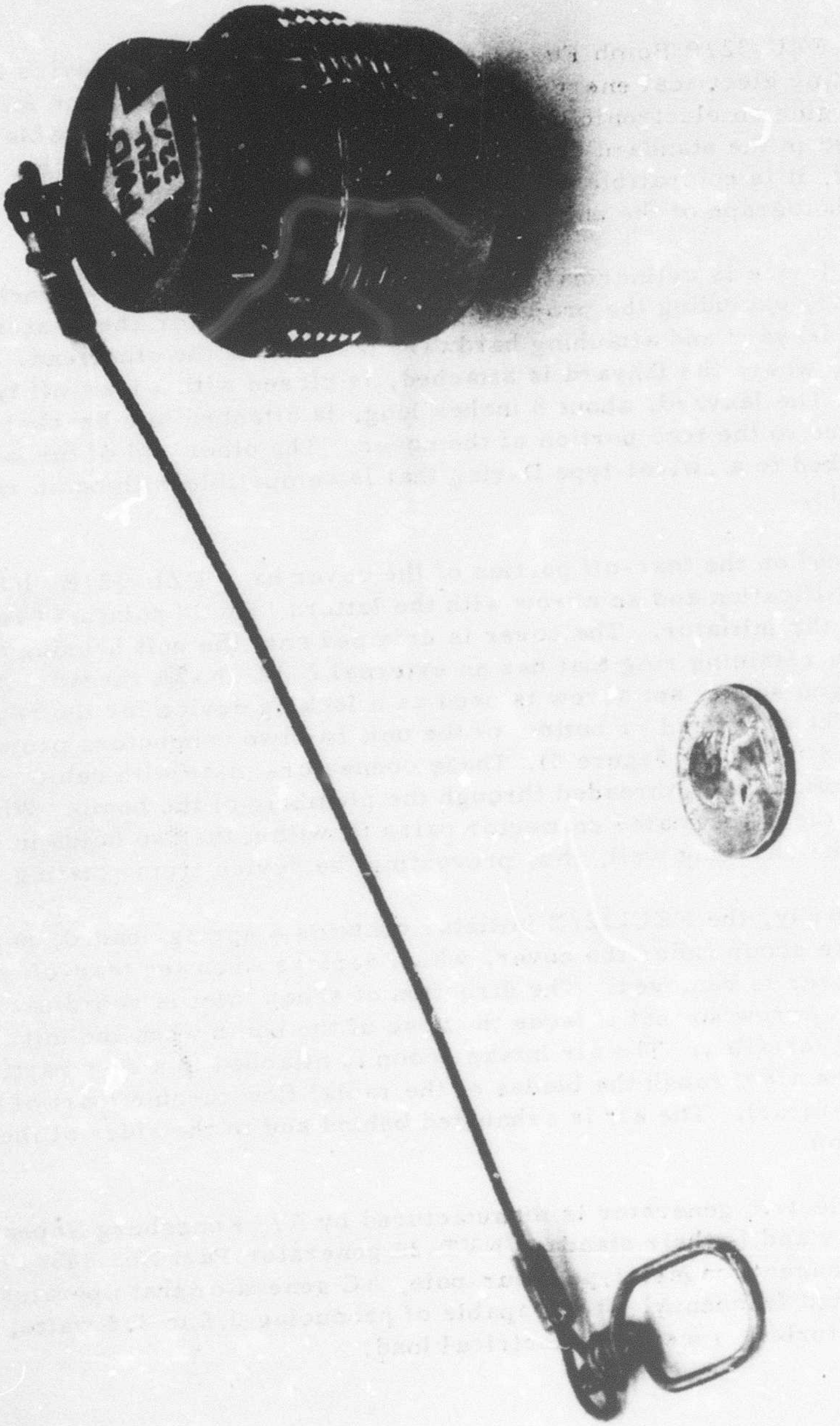

Figure 3. Top View of FZU-32/B Bomb Fuze Initiator

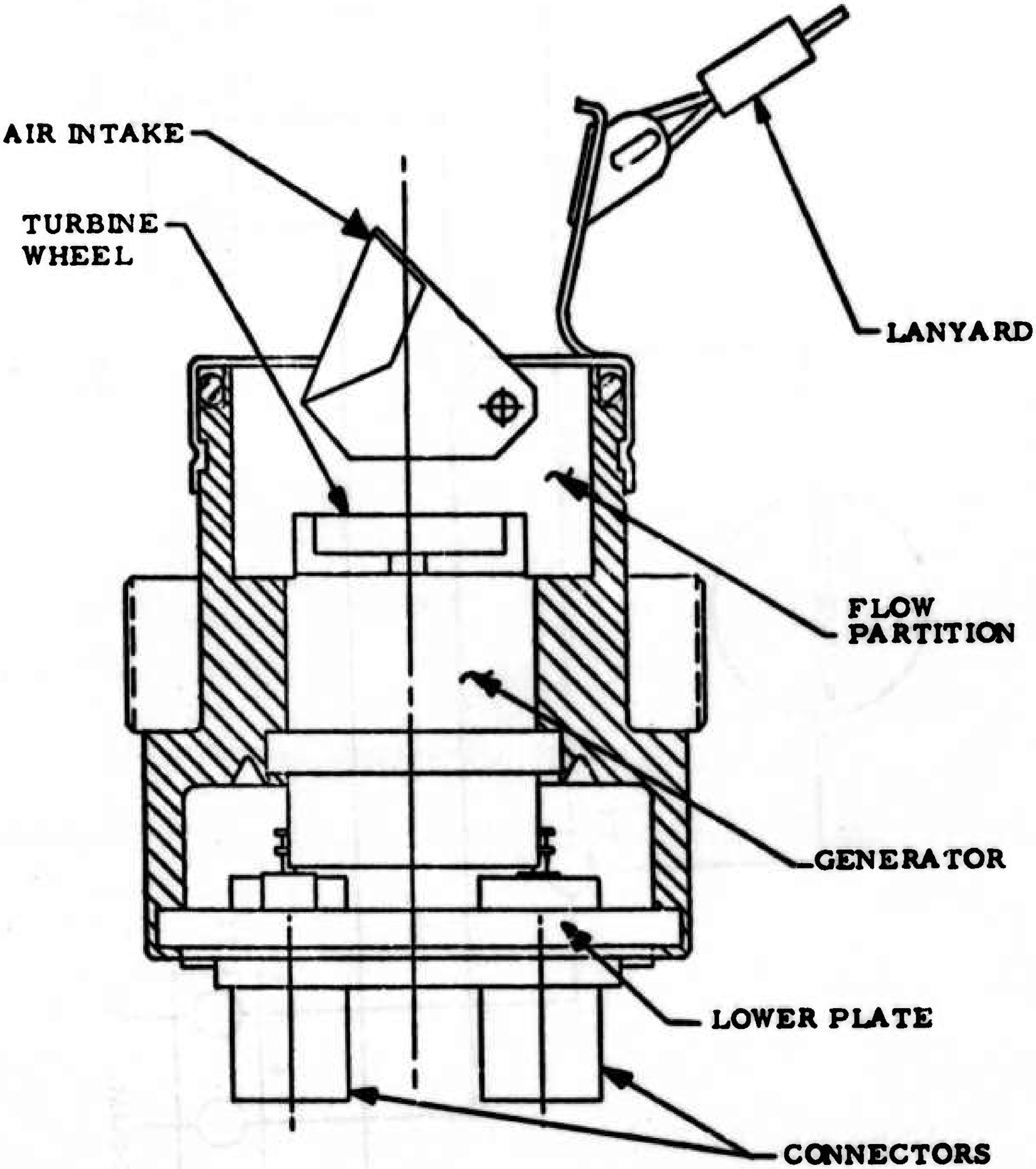

Figure 4. FZU-32/B Bomb Fuze Initiator

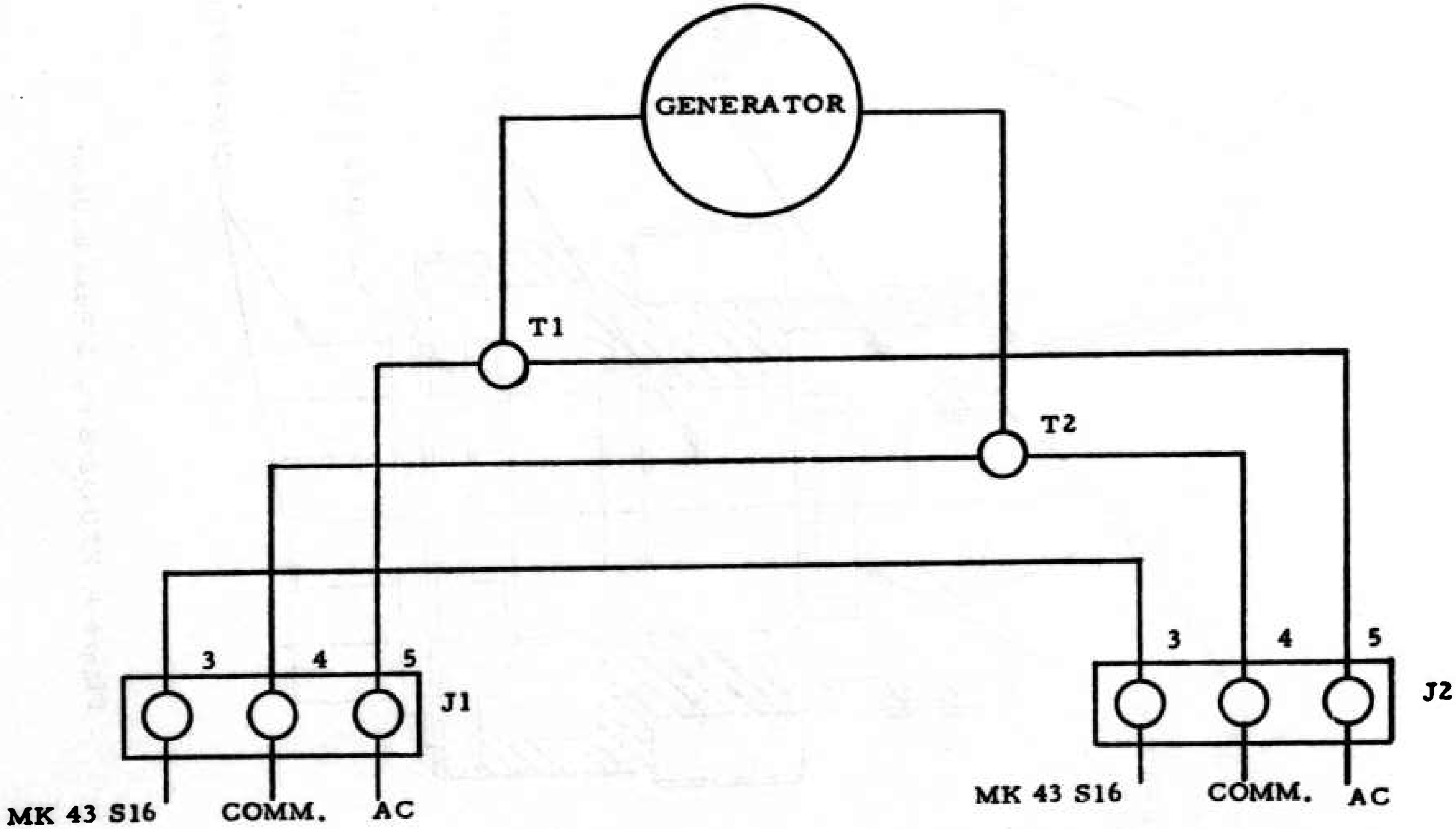

Figure 5. FZU-32/B Bomb Fuze Initiator Schematic Diagram

There are three connector pins in each of the connector shells. These are wired so that corresponding pins have identical signals on each connector. Thus, power can be delivered to fuzes installed in either the nose or tail fuze wells. (See Figure 5 for the electrical schematic of the unit.) The bottom cavity of the unit between the connector plate and the generator is filled with a semi-flexible, epoxy potting compound. The top of the unit has an O-ring seal between the cover and the housing. The generator is, therefore, fully sealed from the outside environment.

2.1 INSTALLATION

The FZU-32/B Bomb Fuze Initiator is positioned so the orientation arrow is pointing toward the bomb nose. The FZU-32/B is then installed by first attaching the cable end connector from the FMU-114/B Fuze, which is drawn through the bomb plumbing to the charging well, to the appropriate connector on the bottom of the initiator. The initiator, with connector mated, is than lowered into the charging well, allowing the cable to retract into the plumbing. The mated connector shells also fit into the internal plumbing when the inititator is completely installed. The retaining ring is screwed tight and locked by tightening a set screw.

When the bomb is installed on the aircraft, the swivel D-ring on the end of the lanyard is inserted into the arming solenoid of the aircraft bomb rack.

2.2 OPERATION

When a normal armed bomb release occurs, the lanyard D-ring assembly is retained by the bomb rack solenoid, thus pulling the tear-off top from the cover which allows the air intake scoop to rotate upward into the airstream. The resultant air pressure build-up causes the turbine to rotate and drive the generator. This produces an unregulated alternating current output of approximately 46 volts and 2 KHz at a calibrated airspeed of 280 knots into a 3000-ohm load when installed in a MK82 Bomb.

2.3 MAINTENANCE

The FZU-32/B Bomb Fuze Initiator is environmentally sealed until the tear-off cover is opened; therefore, it requires no field maintenance.

(The reverse of this page is blank)

SECTION III

PROGRAM PERFORMANCE

The objectives of this program were to develop a design for the bomb fuze initiator which was economically producible and would be compatible with the FMU-114/B Fuze, to document the design, build test units, and evaluate the design by environmental and functional performance testing. These objectives were accomplished as described in the following paragraphs.

The first objectives were the generation of development specifications and program plans and making basic design decisions. Generally the design followed the ideas presented in the contractor proposal, ORD-CP-84, dated 10 April 1972. A design review, which was held at the contractor facility on 1 and 2 August 1972, was attended by representatives of Eglin Air Force Base and Kongsberg, the selected generator manufacturer. During the meeting it was decided that the course of further action should include:

(1) Removal of the transformer from the unit, with the voltage step-up function being relegated to a less expensive quadrupler network (as opposed to the transformer) which is to be located within the fuze. This approach allows for more needed space within the unit. Since the quadrupler is added to an existing board there is an overall cost savings by including this electronics within the fuze.

(2) Change of the protective cap system to one which was less costly and would not protrude as high above the bomb surface. Accordingly, an inexpensive tear cover approach was selected. Reduction in protrusion directed the use of a pop-up type of air scoop. The scoop design includes sheetmetal parts that are less costly than the baseline system.

Generator characteristics were reviewed, and the decision was made to use the Kongsberg NVT-24 turbine generator. Further, an objective was established to find other means for establishing and controlling a fixed starting airspeed rather than using the locking torque of the generator. The generator manufacturer directed his design so as to obtain maximum power independent of starting speed. For this application generator operation at low airspeeds is inconsistent with safety considerations. At that time it was expected that the unit would operate at low airspeeds. A means of preventing undesirable low speed operations was set as a goal. The study to find such a means (consistent with low cost and high reliability) was not fruitful.

The Viking Thorkom Series connector was selected for use in interconnecting with other system components. Purchase orders were released for the initial 60 units. Concurrently, the design of assembly tooling and a wind tunnel test fixture was started. (Refer paragraph 4.2 for the details of this test fixture.)

Eighteen completed units were shipped to Eglin Air Force Base on 2 November 1972, and two additional units were shipped on 22 November 1972. Environmental testing of 28 units was begun at the contractor facility on 27 November 1972. All contractor environmental testing was completed by 5 February 1973. Subsequently, the units were all performance tested in the aerodynamic test fixture. One FZU-32/B failed to function properly. This unit had been subjected to the 5-foot drop test along the generator axis, turbine end down. After the test, the generator could not be turned.

Failure analysis of the item revealed that the generator case had parted along its seams (the assembly is made with snap-fit parts), and this had jammed the rotor and turbine. The original Kongsberg installation for this device employed axial O-ring pressure, which held the generator case under compression. It was planned to employ a similar mounting using a snap-ring as the shoulder against the end of the generator. Unfortunately, the baseline drawing of the generator contained a dimensional error. To correct this discrepancy, it was necessary to remove the shoulder from the housing. Thus, the generator case was not under compression and the case parted under the shock of the 5-foot drop test.

The design was corrected with a minimum expenditure of time by specifying the use of Eccobond 285 epoxy to reinforce the snap joints of the case.

Based on the results of the environmental and performance testing of the 38 units plus additional engineering evaluation tests, the design of the initiator was modified. Chiefly, the changes were:

(1) Redesign of the air intake and flow partition to improve the airflow.

(2) Redesign of the housing to reduce fabrication costs and facilitate assembly.

A design review was held at the contractor facility on 28 March 1973. Approval for the design was received on 2 April 1973, and purchase orders for the next 220 units were placed by 25 April 1973.

Assembly of these units commenced on 4 June 1973. A potential interference between the bottom of the generator and the connectors was encountered during assembly of the units. This was resolved by adding a 0.015-inch-thick shim under the connector flange. By 2 July 1973, 200 units were delivered to Eglin Air Force Base. Environmental tests were completed on the 20 units retained by the contractor by 9 July 1973.

Copies of the test plan and environmental and performance test reports were submitted. This effectively completed the contractor's part in the program except for field test support for Air Force testing of the delivered units and delivery of documentation.

Assistance to Air Force personnel was rendered in the form of performance testing of 51 units, which had been subjected to various MIL-STD environmental tests by personnel at Eglin Air Force Base. A Special Post-Environment Test Report on the FZU-32/B Bomb Fuze Initiator was written on the results. One of the 51 units failed to perform properly. All primary objectives of the program were fulfilled, and the program was successfully completed.

(The reverse of this page is blank)

SECTION IV

TEST PROGRAM

4.1 OBJECTIVES AND PROCEDURES

A test program was conducted to verify design performance and environmental capabilities of the initiator. In this way, the final design could be established with more confidence. Accordingly, test procedure documentation was generated as described below.

4.1.1 Equipment Test Plan (FZU-32/B Initial Design)

The Equipment Test Plan for the FZU-32/B Bomb Fuze Initiator, Fairchild Document No. 564-001, was prepared to delineate the tests to be performed during the development phase of the initiator. Tests for establishing acceptance test levels, life tests, and reliability/environmental demonstration tests were included in this test plan. The Equipment Test Plan included details of the following tests to be performed:

(1) Test to establish acceptance test levels.

(2) Life tests - 450 KTAS/15 seconds.

(3) Environmental tests per MIL-STD-104 (Procedure 1), 105, 107 (48 hours), 109, 111, 112, 113, 116, MIL-STD-810B, Method 514, Procedure II, curve H of sinosoidal vibration, Method 504, Procedure I and Method 516.

(4) Reliability tests at 250 to 450 KTAS and maximum attainable velocity.

4.1.2 Environmental Test Procedures

Fairchild Document No. 564-003, Environmental Test Procedures for the FZU-32/B Bomb Fuze Initator, was prepared to provide a method for evaluating the ability of the initiator to experience various environments without degradation of functional and/or safety requirements.

4.1.3 Test Plan for FZU-32/B Bomb Fuze Initiator (Final Design)

The Test Plan for the FZU-32/B Bomb Fuze Initiator, Fairchild Document No. 564-004, was prepared in order to provide a method for evaluating the final design of the bomb fuze initiator. This document describes the testing procedures, the test equipment, and the test data accumulation methods

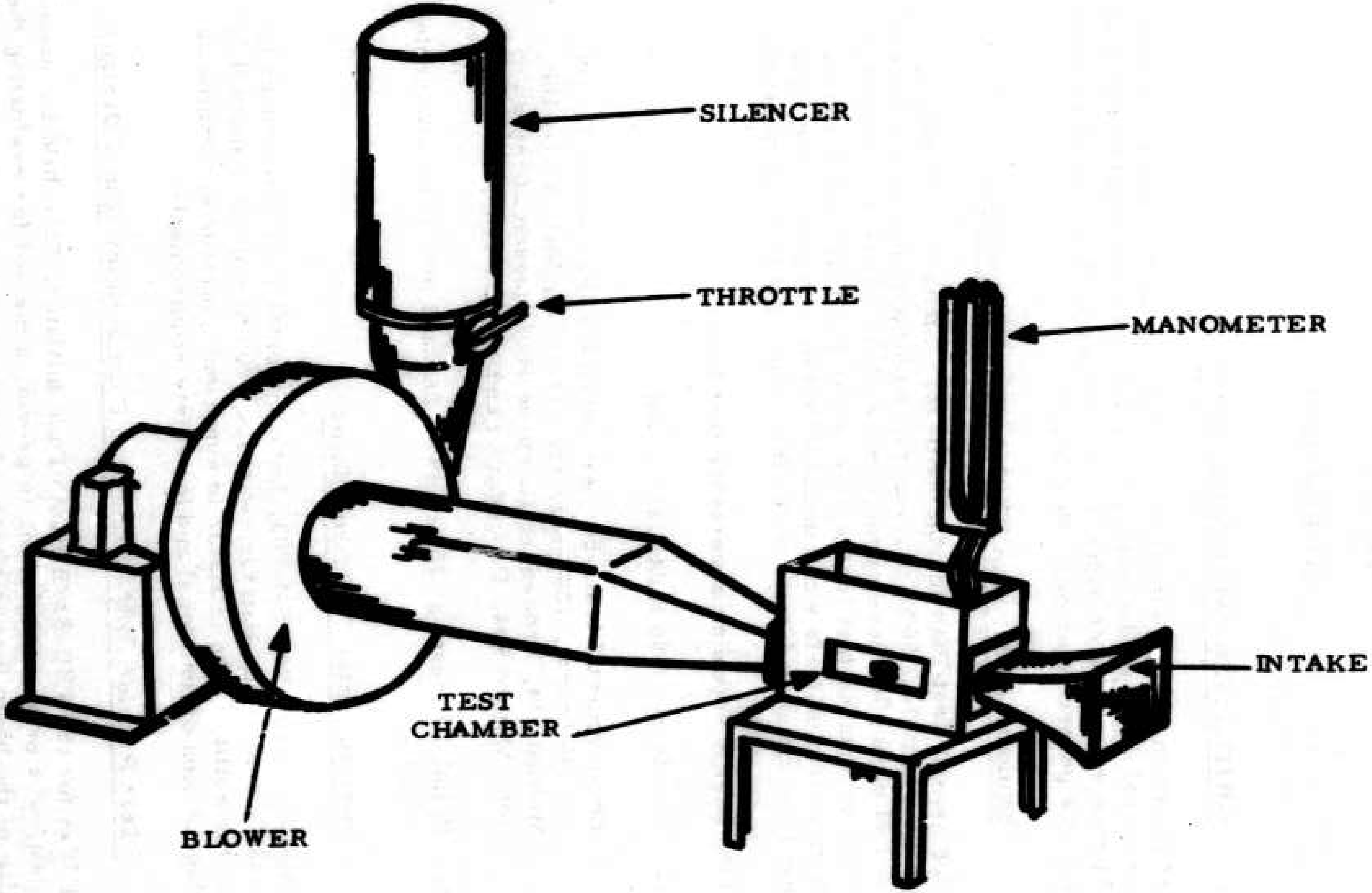

Figure 6. Wind Tunnel Test Fixture

to be utilized in the environmental testing of the FZU-32/B. The Test Plan included details of the following tests to be performed:

(1) MIL-STD-331, Test 104, Transportation Vibration.

(2) MIL-STD-331, Five-Foot Drop.

(3) Temperature cycling: 2 hours at +160°F followed by 2 hours at -65°F.

(4) Performance Test (Post-Environment).

(5) Engineering Evaluation.

4.2 SPECIAL TEST EQUIPMENT

In order to accomplish simulated performance testing on the bomb fuze initiators, a small wind tunnel test fixture was designed and built (see Figure 6).

This fixture was designed to simulate, as far as practical, a typical bomb charging well installation of the bomb fuze initiator in a MK82 Bomb. To this end, a MS3314 suspension lug was placed 3.5 inches (on centers) ahead of the charging well in which the initiator is installed. The tunnel throat measures 5 inches wide by 2-1/2 inches high. A flared bell is used to smooth the input airflow, which comes directly from the room. Air is drawn through the tunnel with a 25 HP blower, which is throttled at the outlet. This arrangement creates a tunnel throat static pressure that is below room ambient pressure, giving a simulated altitude dependent on air flow. Pitot and static tubes are installed forward of the initiator.

Investigation of the operating characteristics of the wind tunnel test fixture showed that the total or stagnation pressure was always very close to the room ambient pressure from which the air was drawn. This indicated a high efficiency in the inlet and tunnel area and allowed static pressure to be calculated from the differential or impact pressure by means of the following equations: $\Delta p = qc$ by definition and $pt = po$ by observation. Therefore, $ps = pt - qc = pt - \Delta p$, giving $ps = po - \Delta p$

where:
Δp = differential pressure pitot-static
qc = impact pressure in tunnel
ps = static pressure in tunnel
pt = total or stagnation pressure
po = room ambient pressure

The pressure altitude can be determined from room ambient pressure and the observed differential pressure by means of standard tables. Since

Δp is equal to the impact pressure, qc, the indicated or calibrated airspeed can also be determined from standard tables[1].

While this fixture performed well for all testing done, it must be emphasized that the only control is on the impact pressure. Altitude is essentially programmed by the nature of the equipment and is not subject to independent control. For the range of values (of qc) employed, the tunnel simulated altitudes between 3500 and 5000 feet. For purposes of duplication of results, it is important that the fixture to be used have the same characteristics as the one described herein. Impact pressure (or Δp) was recorded in centimeters of mercury. (For purposes of cross reference and to indicate the tunnel operating altitude, refer to Table I.) The values in Table I are based on the assumption that room ambient pressure, po, was standard sea level pressure and that the total stagnation pressure reaches room ambient pressure in all cases. Note that the wind tunnel test fixture can only attain a maximum impact pressure of 23 cm Hg.

TABLE I. CHARACTERISTICS OF SPECIAL PURPOSE WIND TUNNEL TEST FIXTURE

CALIBRATED AIRSPEED (knots)	IMPACT PRESSURE (Cm Hg)	TUNNEL ALTITUDE (feet)
200	4.98	1850
220	6.06	2050
240	7.25	2750
260	8.56	3250
280	9.98	3850
300	11.54	4500
320	13.22	5200
350	16.00	6400
400	21.34	8850
450	27.66	12,000
500	35.06	16,150
550	43.67	21,800
600	53.66	30,200

---

[1] Report No. 837, "Standard Nomenclature for Airspeeds with Tables and Charts for Use in Calculation of Airspeed", William S. Aiken Jr., National Advisory Committee for Aeronautics.

4.3 TEST RESULTS

Thirty-four initiators were subjected to environmental tests in accordance with the Equipment Test Plan, Document No. 564-001, and the Environmental Test Procedures, Document No. 564-003. Upon completion of the environmental tests, the units were performance tested in the special purpose wind tunnel test fixture. The data resulting from these tests are summarized in Appendix I under the heading, "Initial Lot Development Tests." Fifteen of the units were recapped and submitted to additional environments and then retested. The results after recapping did not indicate any significant change in performance. Maximum output tests were conducted without the suspension lug present. The presence of the suspension lug reduces the air flow into the turbine. These recapped units averaged 95.6 volts output at an average airspeed of 400 knots. The starting speed for these tests averaged 240 knots. These same units were subjected to hot and cold temperature tests. The wind tunnel facility was not capable of introducing air at the hot or cold temperature extreme, thus the test items were soaked at the desired temperature and as quickly as practical run in the tunnel with ambient air. The actual temperatures at the time of test were, therefore, either lower on hot units or higher on cold units. The test results at extreme temperatures showed a trend toward slightly higher outputs at cold temperature and lower outputs at hot temperature.

The units performed satisfactorily after all environments except for one failure (S/N 51) as a result of the 5-foot drop test. The cause of this failure and the corrective action taken were discussed in Section III.

After design modifications to correct deficiencies discovered in the first configuration, six units (S/N 1 to 6) from the final group of units fabricated were subjected to engineering evaluation tests in accordance with the Test Plan, Document No. 564-004. The data from these tests are summarized under the general heading "Final Design" (July 1973) in the data sheets included in Appendix I. These data show that satisfactory performance (i.e., output above 0.5 watt when tied to a 3000-ohm load) under the conditions simulated in the special purpose wind tunnel test fixture begins at speeds of 250 to 270 knots. Thus, a minimum impact pressure of 9.5 cm Hg in the wind tunnel test fixture should be established as a minimum acceptance test level.

Fourteen units were subjected to environmental tests in accordance with the Test Plan and subsequently subjected to functional tests at 300 knots. The data from these tests are also summarized under "Final Design" in Appendix I. All units performed satisfactorily.

Fifty-one units from the final lot were subjected to a number of environmental tests at Eglin Air Force Base. Subsequently, these units were performance tested at the contractor facility in the special purpose wind tunnel test fixture by Air Force and contractor personnel. A summary of the data is included in Appendix I under the heading "Post-Environmental Performance, Air Force Applied Environment." One item failed to perform properly after being exposed to MIL-STD-331, Test 105, Temperature Humidity. The item failed to start until approximately 400 knots airflow was achieved and then the output was very erratic. This failure was attributed to an unidentified form of metal contamination that caused corrosion of the magnetic rotor in the generator. This failure was judged to be a random failure and not caused by the environmental test.

SECTION V

CONCLUSIONS AND RECOMMENDATIONS

5.1 CONCLUSIONS

It is concluded that the FZU-32/B Bomb Fuze Initiator design is a viable approach to the problem of providing power to operate an electronic fuze during bomb free fall. Units built to this design have adequately demonstrated ruggedness and reliability. After extensive environmental and performance testing, only two failures of completed units were observed. The cause of one was corrected in the design, and the cause of the other (some form of random material contamination) is correctable through stricter quality control. Thus, it is felt that the contractual requirements for safety, reliability, and physical and functional compatibility have been met. Specifically, the FZU-32/B initiator is a satisfactory means for supplying the electrical energy required by the FMU-114/B Bomb Fuze.

Another prime objective of the contractual requirements for the FZU-32/B initiator specified the preparation of a cost analysis. This analysis, which is presented in Tables II and III, projects a unit production cost for quantities of 10,000, 30,000 and 50,000 units, with fabrication, inspection and assembly conducted on a one shift, 8-hour day, 5 days a week basis.

The costs are based on in-house estimates and vendor quotations and are valid only for the period June to September 1974. Inflationary conditions coupled with raw material cost or availability cannot be reliably estimated. The foreign source generator is also subject to wide variation in costs. The quoted price in 1972 was $6.75 each in lots of 50,000. The most recent quotation (1974) is for $9.66 for the same lot size.

5.2 RECOMMENDATIONS

The following recommendations are applicable to any future development and production programs:

The method of mounting the generator into the housing should be changed to that employed in the later configuration of the initiator fabricated for another contractor. This method presses the turbine end of the generator against an O-ring as in a typical Kongsberg installation and eliminates the necessity to epoxy the generator case together. This also improves assembly efficiency. The unit projects about 0.025 inch higher above the bomb surface but this is an acceptable amount for the intended use of the FZU-32/B.

TABLE II. FABRICATION ESTIMATE

PART	PART NO.	QTY	TOOLING/ SETUP ($)	PIECE PART COST		
				10,000	30,000	50,000
Retaining Ring	744028	1		1.560	1.490	1.410
Cotter Pin	MS24665-298	1		.010	.010	.010
O Ring	MS28775-125	1		.080	.070	.070
Set Screw	MS51021-125	1		.020	.019	.017
Cover	744018	1	4,750	.224	.201	.186
Lower Tab	744019	1		.035	.025	.020
Rivet	SNT-50191E1	1		.194	.152	.135
Identification Plate	744020	1		.098	.088	.079
Lanyard Assembly	744026	1		.719	.647	.540
Pin	744016	1		.080	.071	.062
Spring	744015	1	4,500	.013	.010	.009
Air Intake	744014	1	7,600	.049	.038	.035
Flow Partition	744013	1	12,360	.751	.747	.745
Housing	744021	1	9,088	1.035	1.025	1.023
Generator	744023	1		10.650	9.980	9.660
Plate	744010	1	6,630	.291	.281	.279
Receptacle	TFR07-101	2		.740	.712	.704
Contact Pin	TP-100	10		.640	.630	.620
Contact Dummy	TD-100	4		.280	.280	.280
Rivet	MS16535-79	8		.031	.022	.020
Terminal	MIL-T-55155/7	2		.240	.200	.200
Sundries				.400	.390	.390
Inspection				.048	.046	.045
			44,928	18.188	17.134	16.539

TABLE III. ASSEMBLY ESTIMATE

ASSEMBLY NAME	NUMBER	SETUP (Hrs)	TOOLING ($)	TIME (Minutes)		
				10,000	30,000	50,000
Plate Assembly	744022	90	200	12.00	10.70	8.33
Air Intake Assembly	744017	38		1.59	1.37	1.21
Housing Assembly	744024	40	500	7.80	6.85	6.07
Cover Assembly	744027	30		1.80	1.71	1.52
Initiator-unsealed	744025	102		1.20	1.04	.92
Initiator	744029		2,500	2.40	2.40	2.14
Inspection				2.14	1.93	1.61
		300	3,200	28.93	26.00	21.80

While it was impractical to employ expensive production tooling for this program because of the small quantity of units involved, the flow partition and lower plate assembly are suitable for high volume production processes by changes in material. The flow partition should be an investment casting. The plate should be a molded plastic part.

The generator is presently procured as a modified version of a standard production item, which normally has reduction gearing in the rear housing. For the initiator application, the gearing is left out but the housing remains. Cost and space advantages should be attainable with a special unit eliminating the rear housing, provided the quantity would justify the cost of retooling.

It is recommended that the acceptance performance requirements for the bomb fuze initiator be based on impact pressure, qc. It is suggested that a single, pre-capping acceptance test be performed on each unit to demonstrate satisfactory performance as indicated in the paragraph that follows.

In a wind tunnel operating with an impact pressure of 10 cm Hg, where the stagnation pressure is approximately equal to sea level pressure and the unit loaded with a 3000-ohm resistive load, the output voltage should be a minimum of 41 VAC and the frequency should be a minimum of 1800 Hz. The wind tunnel configuration must simulate the bomb charging well installation with the lug installed the proper distance forward of the initiator and oriented to permit flow through the eye hole.

APPENDIX I

DETAILED TEST DATA

FZU-32/B BOMB FUZE INITIATOR DATA SHEET DATE 1-25-73 through 1-31-73

PERSONNEL L. Seitz, D. Johnson
TYPE OF TEST Initial Lot Development Tests
TEST CONFIGURATION Post-Environment Functional Tests
GENERAL First Design Cut 3000-Ohm Load

DATA SUMMARY SHEET 1 OF 4

DATA		FREQ.	OUTPUT VOLTAGE (RMS)	AIR VELOCITY (KNOTS)	CAP REMOVAL FORCE (LB)	NOTES Prior Environment
RUN	S/N	(KHz)				
	48	2.45	52	390	36	None, 15 seconds Life Test
	52	2.46	53	395	51	None, 15 seconds Life Test
	53	2.92	51	397	33	None, 15 seconds Life Test
	101	2.84	54	392	39	None, 15 seconds Life Test
	23	1.08	37	300	36	Rain
A.	29	1.68	46	300	37	Aircraft Vibration, Procedure II, Curve H
B.	29	2.16	52	345	--	Aircraft Vibration, Procedure II, Curve H
A.	33	1.36	37	300	36	Temperature Altitude
B.	33	2.64	52	390	--	Temperature Altitude
A.	36	0	0	245	35	Rain
B.	36	1.18	37	275	--	Rain

FZU-32/B BOMB FUZE INITIATOR DATA SHEET DATE 1-25-73 through 1-31-73

PERSONNEL L. Seitz, D. Johnson
TYPE OF TEST Initial Lot Development Tests
TEST CONFIGURATION Post-Environment Functional Tests
GENERAL First Design Cut 3000-Ohm Load

DATA SUMMARY

SHEET 2 OF 4

DATA		FREQ. (KHz)	OUTPUT VOLTAGE (RMS)	AIR VELOCITY (KNOTS)	CAP REMOVAL FORCE (LB)	NOTES Prior Environment
RUN	S/N					
C.	36	2.20	52	350	--	Rain
	37	2.56	54	396	36	Rain
	40	1.45	43	396	32	Temperature-Humidity
	50	3.06	56	393	38	5-Foot Drop
	51	0*	0*	396	36	5-Foot Drop
	24	1.64	45	310	37	Salt Spray
	25	1.01	30	250	36	Mechanical Shock
	26	1.72	46	280	--	Salt Spray
	27	1.65	45	302	37	Mechanical Shock
	28	1.15	34	301	46	Aircraft Vibration, Procedure II Curve H
	30	1.59	44	301	41	Temperature Altitude

*Unit failed test, no output, rotor jammed.

FZU-32/B BOMB FUZE INITIATOR **DATA SHEET** **DATE** 1-25-73 through 1-31-73

PERSONNEL L. Seitz, D. Johnson
TYPE OF TEST Initial Lot Development Tests
TEST CONFIGURATION Post-Environment Functional Tests
GENERAL First Design Cut 3000-Ohm Load

SHEET 3 OF 4

DATA SUMMARY

DATA		FREQ. (KHz)	OUTPUT VOLTAGE (RMS)	AIR VELOCITY (KNOTS)	CAP REMOVAL FORCE (LB)	NOTES Prior Environment
RUN	S/N					
	31	2.61	56	390	36	Aircraft Vibration, Procedure II Curve H
	32	1.84	44	302	39	Mechanical Shock
	34	1.42	41	292	42	Sand and Dust
	35	1.48	42	317	46	Sand and Dust
	39	2.34	55		36	Temperature - Humidity
	38	1.63	44	300	36	Thermal Shock
	44	1.67	44	300	39	Transportation Vibration, -65°F
	45	2.52	50	397	36	Transportation Vibration, Ambient
	46	1.35	39	300	37	Transportation Vibration, Ambient
	47	2.68	59	395	38	Transportation Vibration, Ambient
	55	2.76	55	393	34	Thermal Shock

FZU-32/B BOMB FUZE INITIATOR **DATA SHEET** **DATE** 1-25-73 through 1-31-73

PERSONNEL L. Seitz, D. Johnson
TYPE OF TEST Initial Lot Development Tests
TEST CONFIGURATION Post-Environment Functional Tests
GENERAL First Design Cut 3000-Ohm Load

DATA SUMMARY **SHEET 4 OF 4**

DATA		FREQ. (KHz)	OUTPUT VOLTAGE (RMS)	AIR VELOCITY (KNOTS)	CAP REMOVAL FORCE (LB)	NOTES Prior Environment
RUN	S/N					
	56	1.73	45	300	31	Thermal Shock
	43	2.67	52	395	36	None, 15 seconds Life Test
	49	2.37	54	396	38	None, 15 seconds Life Test

FZU-32/B BOMB FUZE INITIATOR DATA SHEET DATE February 1973

PERSONNEL L. Seitz, D. Johnson
TYPE OF TEST Initial Lot Development Tests
TEST CONFIGURATION Post-Environment Functional Tests
GENERAL First Design Cut 3000-Ohm Load

DATA SUMMARY

SHEET 1 OF 3

DATA		FREQ. (KHz)	OUTPUT VOLTAGE (RMS)	AIR VELOCITY (KNOTS)	CAP REMOVAL FORCE (LB)	NOTES Prior Environment
RUN	S/N					
	41	1.70	47	300	37	Extreme Temperature Storage
	42	1.16	35	300	36	Extreme Temperature Storage
		The following units, previously tested, were recapped and re-used				
		in tests indicated below:				
a.	26	2.79	69	365	30	Cold conditioned at -65°F for 2 hours
b.	26	1.41	44	255	--	
a.	30	3.83	87.5	395	39	Hot conditioned at +160°F for 2 hours
b.	30	5.16	103	465	--	
	32	3.04	69	370	29	Cold conditioned at -65°F for 2 hours
	36	2.4	66	395	29	Hot conditioned at +160°F for 2 hours
	50	2.18	67	375	27	Cold conditioned at -65°F for 2 hours

FZU-32/B BOMB FUZE INITIATOR DATA SHEET DATE February 1973

PERSONNEL L. Seitz, D. Johnson
TYPE OF TEST Initial Lot Development Tests
TEST CONFIGURATION Post-Environment Functional Tests
GENERAL First Design Cut 3000-Ohm Load

SHEET 2 OF 3

DATA SUMMARY

DATA		FREQ. (KHz)	OUTPUT VOLTAGE (RMS)	AIR VELOCITY (KNOTS)	CAP REMOVAL FORCE (LB)	NOTES Prior Environment
RUN	S/N					
	52	2.10	60	377	36	Hot conditioned at +160°F for 2 hours
	24	5.13	103	445	41	Maximum Velocity Output Check
	27	5.56	108	447	41	Maximum Velocity Output Check
	31	5.03	101	440	35	Maximum Velocity Output Check
	37	5.12	98	446	29	Maximum Velocity Output Check
	38	4.79	86	448	32	Maximum Velocity Output Check
	48	4.05	84	415	31	Maximum Velocity Output Check
	56	4.57	92	452	33	Maximum Velocity Output Check
	101	5.45	93	463	36	Maximum Velocity Output Check
a.	24	1.41	44	246	--	Performance Check
b.		5.08	102	445	--	Performance Check

FZU-32/B BOMB FUZE INITIATOR DATA SHEET DATE February 1973

PERSONNEL L. Seitz, D. Johnson

TYPE OF TEST Initial Lot Development Tests

TEST CONFIGURATION Post-Environment Functional Tests

GENERAL First Design Cut 3000-Ohm Load

SHEET 3 OF 3

DATA SUMMARY

DATA		FREQ. (KHz)	OUTPUT VOLTAGE (RMS)	AIR VELOCITY (KNOTS)	CAP REMOVAL FORCE (LB)	NOTES
RUN	S/N					
c.		1.74	54	290	--	Performance Check
d.		2.99	76	395	--	Performance Check
e.		4.0	90	460	--	Performance Check

FZU-32/B BOMB FUZE INITIATOR **DATA SHEET** **DATE** July 1973

PERSONNEL W. Girolamo, D. Johnson
TYPE OF TEST Performance Development Tests
TEST CONFIGURATION 3,374K Ohm Load
GENERAL Final Design

DATA SUMMARY **SHEET** 1 **OF** 3

DATA		FREQ.	OUTPUT VOLTAGE (RMS)	AIR VELOCITY (KNOTS)	NOTES
RUN	S/N	(KHz)			
a.	1		37	230	
b.	1		47.5	270	
c.	1		60.0	340	
d.	1		65.5	400	
a.	2	1.4	40	245	
b.	2	2.1	50	300	
c.	2	3.4	62.5	400	
a.	3	1.4	36	245	
b.	3	2.1	49	300	
c.	3	3.6	62	400	
a.	4	1.1	33	245	

FZU-32/B BOMB FUZE INITIATOR **DATA SHEET** **DATE** July 1973

PERSONNEL W. Girolamo, D. Johnson
TYPE OF TEST Performance Development Tests
TEST CONFIGURATION
GENERAL Final Design

DATA SUMMARY **SHEET** 2 **OF** 3

DATA		FREQ.	OUTPUT VOLTAGE	AIR VELOCITY	NOTES
RUN	S/N	(KHz)	(RMS)	(KNOTS)	Prior Environment
b.	4	2.1	49.5	300	3.374K Ohm Load
c.	4	3.4	62.5	400	3.374K Ohm Load
a.	5	1.0	31	245	3.374K Ohm Load
b.	5	1.9	48	300	3.374K Ohm Load
c.	5	3.2	61.5	400	3.374K Ohm Load
a.	6	1.3	35	245	3.374K Ohm Load
b.	6	2.1	51.5	300	3.374K Ohm Load
c.	6	3.5	63	400	3.374K Ohm Load
	82	2.5	54	300	5-Foot Drop, 3000 Ohm Load
	93	2.1	48	300	Temperature Cycling, 3000 Ohm Load
	100	2.1	48	300	5-Foot Drop, 3000 Ohm Load

FZU-32/B BOMB FUZE INITIATOR DATA SHEET DATE July 1973

PERSONNEL W. Girolamo, D. Johnson
TYPE OF TEST Performance Development Tests
TEST CONFIGURATION 3000 Ohm Load
GENERAL Final Design

DATA SUMMARY SHEET 3 OF 3

DATA		FREQ.	OUTPUT VOLTAGE	AIR VELOCITY	NOTES
RUN	S/N	(KHz)	(RMS)	(KNOTS)	Prior Environment
	96	2.2	49	300	Transportation Vibration, Ambient
	99	2.0	46	300	Temperature Cycling
	222	2.3	50	300	5-Foot Drop
	146	2.3	49	300	5-Foot Drop
	220	1.9	45	300	5-Foot Drop
	98	1.8	45	300	Transportation Vibration, Ambient
	202	1.9	45	300	Transportation Vibration, Ambient
	217	1.9	45	300	Temperature Cycling
	111	2.0	46	300	Transportation Vibration, Ambient
	187	1.8	43	300	Temperature Cycling
	223	2.3	47	300.	5-Foot Drop

FZU-32/B BOMB FUZE INITIATOR DATA SHEET DATE 8-28-73

PERSONNEL Air Force: Capt. S. Hull, Y. Poret; Fairchild: D. Johnson, C. Hartvik
TYPE OF TEST MIL-STD Tests (U.S. Air Force) - Post Environment Functional Tests (Fairchild)
TEST CONFIGURATION 3000-Ohm Load
GENERAL Final Design

DATA SUMMARY

SHEET 1 OF 3

DATA		FREQ. (KHz)	OUTPUT VOLTAGE (RMS)	AIR VELOCITY (KNOTS)	CAP REMOVAL FORCE (LB)	NOTES
RUN	S/N					
1	194	2.4	50	296	41	Set up confirmation unit
2	18	2.2	50	253	39	
3	57	2.3	50	265	51	
4	49	2.3	49	263	41	
5	26	2.2	49	267	45	
6	7	2.0	45	275	59	
7	36	2.2	47	268	35	
8	16	2.0	45	268	46	
9	20	1.9	46	277	46	
10	53	2.0	46	270	45	
11	15	2.0	46	265	41	

FZU-32/B BOMB FUZE INITIATOR DATA SHEET DATE 8-28-73

PERSONNEL Air Force: Capt. S. Hull, Y. Poret; Fairchild: D. Johnson, C. Hartvik
TYPE OF TEST MIL-STD Tests (U.S. Air Force) - Post Environment Functional Tests (Fairchild)
TEST CONFIGURATION 3000-Ohm Load
GENERAL Final Design

DATA SUMMARY

SHEET 2 OF 3

DATA		FREQ.	OUTPUT VOLTAGE (RMS)	AIR VELOCITY (KNOTS)	CAP REMOVAL FORCE (LB)	NOTES
RUN	S/N	(KHz)				
12	42	2.0	47	268	50	
13	58	1.8	44	270	40	
14	141	2.1	45	270	50	
15	207	2.0	47	275	45	
16	210	2.2	47	275	54	
17	40	2.15	47	275	50	
18	64	2.0	45	268	44	
19	8	1.0	20 to 40	350	40	No start, manually turned turbine started, erratic frequency and voltage
20	50	2.0	46	268	50	
21	62	2.1	46	268	49	
22	34	2.0	46	272	42	

FZU-32/B BOMB FUZE INITIATOR **DATA SHEET** **DATE** 8-28-73

PERSONNEL Air Force: Capt. S. Hull, Y. Poret; Fairchild: D. Johnson, C. Hartvik
TYPE OF TEST MIL-STD Tests (U.S. Air Force) - Post Environment Functional Tests (Fairchild)
TEST CONFIGURATION 3000-Ohm Load
GENERAL Final Design

SHEET 3 **OF** 3

DATA SUMMARY

DATA		FREQ.	OUTPUT VOLTAGE (RMS)	AIR VELOCITY (KNOTS)	CAP REMOVAL FORCE (LB)	NOTES
RUN	S/N	(KHz)				
23	59	2.0	44	268	45	
24	61	2.0	46-47	275	53	
25	10	----	----	----	----	Tested with fuze - Acceptable
26	13	----	----	----	----	Tested with fuze - Acceptable
27	47	2.2	48	275	56	

FZU-32/B BOMB FUZE INITIATOR DATA SHEET DATE 10-18-73

PERSONNEL Air Force: Capt. S. Hull, Y. Poret; Fairchild: J. Miazza, C. Hartvik
TYPE OF TEST Post-Environmental Performance, Air Force applied environment.
TEST CONFIGURATION Final Design
GENERAL 3000-Ohm Load

DATA SUMMARY

SHEET 1 OF 3

DATA		FREQ. (KHz)	OUTPUT VOLTAGE (RMS)	AIR VELOCITY (KNOTS)	CAP REMOVAL FORCE (LB)	NOTES Prior Environment
RUN	S/N					
1c	19	2.10	44	290	50	Transportation Vibration, Temperature Humidity, Thermal Shock, A/C Vibration
2b	144	Not Recorded	42	290	41	Same as above
3b	166	1.90	45	286	46	Same as above
4b	176	1.80	44	288	42	Waterproof Test
5b	215	1.80	45	290	47	Same as above
6	78	2.30	50	302	51	Same as above
7	89	2.10	47	298	52	Same as above
8	174	2.00	46	288	57	A/C Vibration
9	173	2.20	47	294	46	Same as above
10	195	2.10	47	296	56	Same as above
11	211	1.80	43	290	47	Same as above

FZU-32/B BOMB FUZE INITIATOR **DATA SHEET** **DATE** 10-18-73

PERSONNEL Air Force: Capt. S. Hull, Y. Poret; Fairchild: J. Miazza, C. Hartvik
TYPE OF TEST Post-Environmental Performance, Air Force applied environment.
TEST CONFIGURATION Final Design
GENERAL 3000-Ohm Load

DATA SUMMARY **SHEET 2 OF 3**

DATA		FREQ.	OUTPUT VOLTAGE (RMS)	AIR VELOCITY (KNOTS)	CAP REMOVAL FORCE (LB)	NOTES Prior Environment
RUN	S/N	(KHz)				
12	199	2.00	47	290	58	Mechanical Shock
13	229	1.80	44	296	41	Same as above
14	106	1.80	43	294	57	Transportation Vibration at +160°F., Temperature - Humidity
15	151	1.90	46	296	Not Recorded	Same as above
16	152	1.90	45	288	44	Same as above
17	123	1.90	45	292	57	Transportation Vibration at -65°F
18	165	2.20	49	302	55	Transportation Vibration an Ambient Temperature
19	135	2.30	51	290	46	Transportation Vibration at +160°F
20	113	2.00	48	290	48	Transportation Vibration at Ambient Temperature
21	32	1.80	44	278	53	Sand and Dust
22	48	1.90	44	288	Not Recorded	Sand and Dust

FZU-32/B BOMB FUZE INITIATOR **DATA SHEET** **DATE** 10-18-73

PERSONNEL Air Force: Capt. [illegible] Hull, Y. Poret; Fairchild: J. Miazza, C. Hartvik

TYPE OF TEST Post Environmental Performance, Air Force applied environment.

TEST CONFIGURATION Final Design

GENERAL 3000-Ohm Load

DATA SUMMARY **SHEET** 3 **OF** 3

DATA		FREQ. (KHz)	OUTPUT VOLTAGE (RMS)	AIR VELOCITY (KNOTS)	CAP REMOVAL FORCE (LB)	NOTES Prior Environment
RUN	S/N					
23	9	1.70	41	280	58	Sand and Dust
24	46	1.80	44	290	56	Same as above
25	44	1.80	45	290	44	Same as above

INITIAL DISTRIBUTION

Hq USAF/RDQRM	2
Hq USAF/XOXFCM	1
AFSC/IGFG	1
AFSC/SDWM	1
ASD/ENYS	1
FTD/PDXA	1
TAC/DRAR	1
TAC/LGWM	1
SAC/LGW	1
SAC/NRI	1
AFWL/SUL	1
AFWL/SECA	1
AF Sp Com Ctr/SUR	4
AUL/AUL/LSE-70-239	1
57 FWW (DOTH)	1
USAFTFWC (DR)	1
Hq DARD/DARD-DDA	1
Comdr/USN Ord Lab/Code 730	2
Comdr/USNWC/Code 753	2
Sandia Lab/Tech Lib	1
DDC	2
HQUSAFE (LGWHM)	1
HQUSAFE (DOA)	2
AFATL/DLOSL	2
USAFTAWC (TEFA)	1
AFATL/DL	1
AFATL/DLOU	1
AFATL/DLY	1
AFATL/DLXP	1
AFATL/DLJ	1
USAF/XOOW	1
AFWL/LR	2
AFAL/TEO	1
ADTC/XRC	1
AFATL/DLMP	1
ADTC/SES	1
AFATL/DLJF	8
Comdr/USNWC (Code 3354)	1
AMXDO-DA	2
Hq USAF/SAMI	1
TAWC/TRADOCLO	1
Hq 4950 TESTW/MMNOP	2

(The reverse of this page is blank)

UNCLASSIFIED
Security Classification

DOCUMENT CONTROL DATA - R & D

(Security classification of title, body of abstract and indexing annotation must be entered when the overall report is classified)

1. ORIGINATING ACTIVITY (Corporate author)
Fairchild Camera and Instrument Corporation
300 Robbins Lane, Syosset, NY 11791

2a. REPORT SECURITY CLASSIFICATION
UNCLASSIFIED

2b. GROUP

3. REPORT TITLE
DESIGN AND DEVELOPMENT OF
FZU-32/B BOMB FUZE INITIATOR

4. DESCRIPTIVE NOTES (Type of report and inclusive dates)
Final Report (23 June 1972 to 15 November 1973)

5. AUTHOR(S) (First name, middle initial, last name)
John Miazza

6. REPORT DATE
May 1974

7a. TOTAL NO. OF PAGES
45

7b. NO. OF REFS

8a. CONTRACT OR GRANT NO.
F08635-72-C-0152

b. PROJECT NO. 2517

c. Task No. 17

d. Work Unit No. 002

9a. ORIGINATOR'S REPORT NUMBER(S)
ORD-AP-31

9b. OTHER REPORT NO(S) (Any other numbers that may be assigned this report)
AFATL-TR-74-88

10. DISTRIBUTION STATEMENT Distribution limited to U.S. Government agencies only; this report documents test and evaluation; distribution limitation applied May 1974. Other requests for this document must be referred to the Air Force Armament Laboratory (DLJF), Eglin Air Force Base, Florida 32542.

11. SUPPLEMENTARY NOTES
Available in DDC

12. SPONSORING MILITARY ACTIVITY
Air Force Armament Laboratory
Air Force Systems Command
Eglin Air Force Base, Florida 32542

13. ABSTRACT

The primary objective of this program was to develop a cost effective, production engineered FZU-24/B Bomb Fuze Initiator. The initiator is an electric generating device which, when installed in the fuze charging well of general purpose bombs, is capable of deriving energy from the airstream passing the bomb in free fall and converting the energy into electric energy suitable for powering a bomb fuze. The objective was to be accomplished by means of a production engineering effort carried through the evolution of design, fabrication, assembly, test, and evaluation. The baseline for the design was Harry Diamond Laboratories' Drawing No. 11716160. A quantity of 60 units was fabricated and tested, in accordance with the production engineered design. After some additional redesign to correct identified deficiencies, 220 units were fabricated. These units were subjected to environmental, wind tunnel, and flight testing and performance requirements were met. The final unit design was designated the FZU-32/B Bomb Fuze Initiator.

DD FORM 1 NOV 65 1473

UNCLASSIFIED
Security Classification

14. KEY WORDS	LINK A ROLE	LINK A WT	LINK B ROLE	LINK B WT	LINK C ROLE	LINK C WT
FZU-32/B Bomb Fuze Initiator General Purpose Bombs FZU-24/B Bomb Fuze Initiator MK344 Electronic Bomb Fuze MK376 Electronic Bomb Fuze FMU-114/B Bomb Fuze General Purpose Bomb Proximity Fuzing System						