15906

# Fault Diagnostics in Power Electronics Based Brake-by-Wire Systems

Abul Masrur[1], Senior Member, IEEE, Hongjie Wu[2], Member, IEEE, Chunting Chris Mi[2], Senior Member, IEEE, ZhiHang Chen[2], Yi L. Murphey[2], Senior Member, IEEE.

[1]*U. S. Army RDECOM-TARDEC, Warren, Michigan, USA.*

[2]*Department of Electrical and Computer Engineering, University of Michigan-Dearborn, Dearborn, Michigan, USA.*

***Abstract*** - A dc motor based brake-by-wire system is studied for the purpose of fault diagnostics of the power electronic switches. The voltage and current generated in the switching circuit under normal and six faulted conditions are observed. A hierarchical fuzzy diagnostic system has been developed to detect certain types of fault conditions in any specific solid state power switch at the moment immediately after the occurrence of the fault. The hierarchical fuzzy diagnostic system has been tested and validated using data from both simulation and lab setup with a 1/3 hp DC motor and a DC/DC converter. The system performance has been compared with two different fuzzy diagnostic systems and the results are presented. The hierarchical fuzzy diagnostic system trained on the simulated model has the capability of detecting certain types of faulty conditions occurring in a brake-by-wire system setup in a lab in less than 0.0009s and pinpointing to the specific type of faults within less than 0.013s.

***Keywords*** - fuzzy logic, multi-class fault detection, brake-by-wire, power electronics, dc motor, dc-dc converter.

# Report Documentation Page

*Form Approved*
*OMB No. 0704-0188*



| 1. REPORT DATE | 2. REPORT TYPE | 3. DATES COVERED |
|---|---|---|
| **22 MAY 2006** | **Journal Article** | **22-05-2006 to 22-05-2006** |

| | |
|---|---|
| 4. TITLE AND SUBTITLE<br>**Fault Diagnostics in Power Electronics Based Brake-by-Wire Systems** | 5a. CONTRACT NUMBER<br>5b. GRANT NUMBER<br>5c. PROGRAM ELEMENT NUMBER |
| 6. AUTHOR(S)<br>**Abul Masrur; Hongjie Wu; Chunting Mi; ZhiHang Chen; Yi Murphey** | 5d. PROJECT NUMBER<br>5e. TASK NUMBER<br>5f. WORK UNIT NUMBER |
| 7. PERFORMING ORGANIZATION NAME(S) AND ADDRESS(ES)<br>**Department of Electrical and Computer Engineering,University of Michigan-Dearborn,Dearborn,MI,48128** | 8. PERFORMING ORGANIZATION REPORT NUMBER<br>**; #15906** |
| 9. SPONSORING/MONITORING AGENCY NAME(S) AND ADDRESS(ES)<br>**U.S. Army TARDEC, 6501 E.11 Mile Rd, Warren, MI, 48397-5000** | 10. SPONSOR/MONITOR'S ACRONYM(S)<br>**TARDEC**<br>11. SPONSOR/MONITOR'S REPORT NUMBER(S)<br>**#15906** |

12. DISTRIBUTION/AVAILABILITY STATEMENT
**Approved for public release; distribution unlimited**

13. SUPPLEMENTARY NOTES

14. ABSTRACT
**A de motor based brake-by-wire system is studied for the purpose of fault diagnostics of the power electronic switches. The voltage and current generated in the switching circuit under normal and six faulted conditions are observed. A hierarchical fuzzy diagnostic system has been developed to detect certain types of fault conditions in any specific solid state power switch at the moment immediately after the occurrence of the fault. The hierarchical fuzzy diagnostic system has been tested and validated using data from both simulation and lab setup with a I /3 hp DC motor and a DC/DC converter. The system performance has been compared with two different fuzzy diagnostic systems and the results are presented. The hierarchical fuzzy diagnostic system trained on the simulated model has the capability of detecting certain types of faulty conditions occurring in a brake-by-wire system setup in a lab in less than 0.0009s and pinpointing to the specific type of faults within less than 0.013s.**

15. SUBJECT TERMS
**fuzzy logic, multi-class fault detection, brake-by-wire, power electronics, de motor, de-de converter.**

| 16. SECURITY CLASSIFICATION OF: | | | 17. LIMITATION OF ABSTRACT | 18. NUMBER OF PAGES | 19a. NAME OF RESPONSIBLE PERSON |
|---|---|---|---|---|---|
| a. REPORT | b. ABSTRACT | c. THIS PAGE | | | |
| **unclassified** | **unclassified** | **unclassified** | **Same as Report (SAR)** | **22** | |

## I. INTRODUCTION

The automotive industry has given increased attention towards the replacement of mechanical/hydraulic systems in vehicles using either fully or partially electric systems. In addition to the main propulsion, work has progressed towards the replacement of various auxiliary devices, which are currently operated using mechanical, hydraulic, or pneumatic methods. These devices include steering, brakes, suspension, and various mechanical pumps. The mechanical systems are relatively heavy and difficult to package. On the other hand, electrical systems are easier to package since the wiring is flexible. Electrical systems use motors and solenoids as actuators and have fast response. However, if the motor system fails, the entire electrical system related to the motor ceases to function properly. A motor system consists of battery, wiring, power electronics, embedded controller, and the motor itself.

In this paper we present our research on fault diagnostics in brake-by-wire systems. Brake-by-wire systems and other X-by-wire systems with fully electro-mechanical devices or partial mechanical backup systems have been studied by various researchers [1-12]. Some of these works discuss the behavior of the brake in the context of the whole vehicle and how the brake system behavior influences the overall vehicle performance. Others discuss electro-hydraulic systems including slip control, precise computation of the brake force, traction control, etc. However, in the literature, research work on fault diagnostics in the motor and its controller in brake-by-wire systems has not been reported in depth. Fault diagnostics technology for internal combustion (IC) engine vehicles has been well investigated [13-15], but much less so in electrical system diagnostics. Moseler and Isermann et al described a black box type model using a polynomial differential-algebraic equation with application to a brushless dc machine [12]. There the authors estimated system parameters under normal and faulted conditions, and compared the same with the current system parameter values, and if any discrepancy with the normal

condition was seen, a faulty condition was declared. However, the parameter-estimated model can easily lose the intuitive focus of the system, and in general cannot point towards the specific problem and its location. In addition, the model can encounter a topological change after a fault, and hence the premises based on which the model was originally developed and the parameters estimated, may not hold anymore.

This paper is focused on the power electronics switches since they are often considered to be the weakest link in the brake-by-wire system, i.e. in the whole link from the brake pedal to the brake shoe actuator. The objective is to accurately locate any faults within the power electronics of a brake-by-wire system as soon as they occur. We developed a brake-by-wire (BBW) system model using Simplorer software that implements the full control of the power electronics switches and emulates six different faulty conditions. We also developed a bench setup for a brake-by-wire system. The simulated model and the bench tests are compared under normal and faulty conditions. A hierarchical fuzzy diagnostic system has been developed and trained to detect all specified faulty conditions in a brake-by-wire system. The hierarchical fuzzy diagnostic system is designed based on the structure of the BBW system. It has the capabilities of detecting faulty conditions immediately after they occur, and pinpointing to specific faulty conditions within less than 0.02s on the bench setup BBW. The performance of the hierarchical fuzzy diagnostic system is also compared with two other fuzzy diagnostic systems, and the results are presented in the paper.

## II. A Theoretical Model Of The Brake-By-Wire System

Figure 1 illustrates a quarter-model of the system architecture of a fully electro-mechanical brake-by-wire system currently under study. The motor selected for the study is a brushed DC motor, which is inexpensive and is available in the automotive industry abundantly. The motor can be either permanent

magnet based or have a field winding. The system has 4 actuator motors corresponding to each wheel. The position signal from the brake pedal is fed to a controller which generates a control signal to activate one or more of the four brake motors. Each motor may have a separate control wire from the controller to allow the four actuators to run independently, which is more robust during a failure of one or more of the actuators.

We developed a simulation model for the brake-by-wire system illustrated in Figure 1. The block diagram of the simulated system is shown in Figure 2. The input to the system is the pedal position and pedal speed, which are transformed to $T_{ref}$, the reference torque.

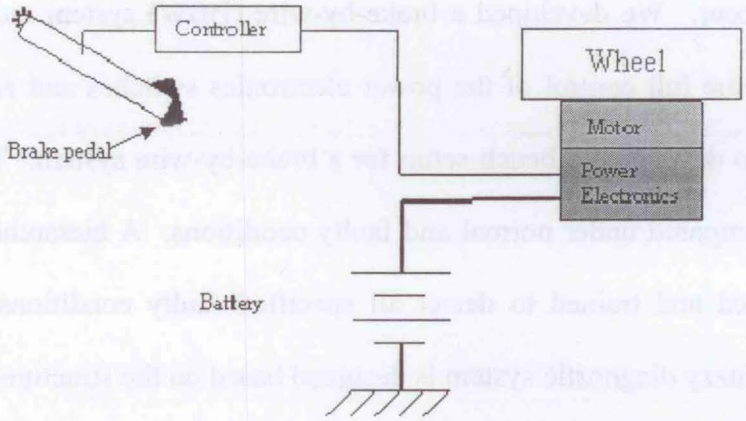


Figure 1. Architecture of a brake-by-wire system.

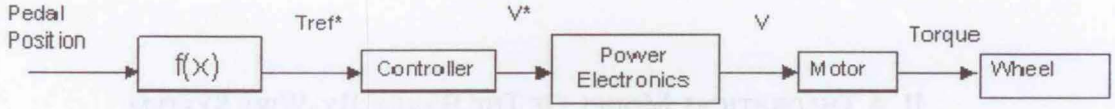


Figure 2. The system diagram for a brake-by-wire system

The electromechanical system can be described through the following equations:

$$V_a = R_a I_a + L_a \frac{dI_a}{dt} + K\Phi\omega \tag{1}$$

$$T = K\Phi I_a \tag{2}$$

$$T = J\frac{d\omega}{dt} + B\omega + T_L \tag{3}$$

where $V_a$ is the armature voltage, $I_a$ is the armature current, $R_a$ is the armature resistance, $L_a$ is the armature leakage inductance, K is motor constant, $\Phi$ is total flux per pole, $\omega$ is angular speed of the motor, $T$ is the output torque of the motor, J is inertia, B is damping, and $T_L$ is the load torque (braking force).

The motor voltage can be derived from the brake pedal position and pedal force. If the pedal force (or corresponding torque) is $T_{ref}$, then the required motor voltage in Figure 2 is given by:

$$V_a^* = R_a \frac{T_{ref}}{K\Phi} + \frac{L_a}{K\Phi}\frac{dT_{ref}}{dt} + K\Phi\omega \tag{4}$$

The power electronics circuit to actuate the motor is illustrated in Figure 3. Based on (4), a reference voltage is obtained from the dc battery through PWM (pulse width modulation) techniques. In Figure 3, the motor voltage is

$$V_a^* = (2D-1)V_B \tag{5}$$

where D is the switching duty ratio of switch A, and $V_B$ is the battery voltage.

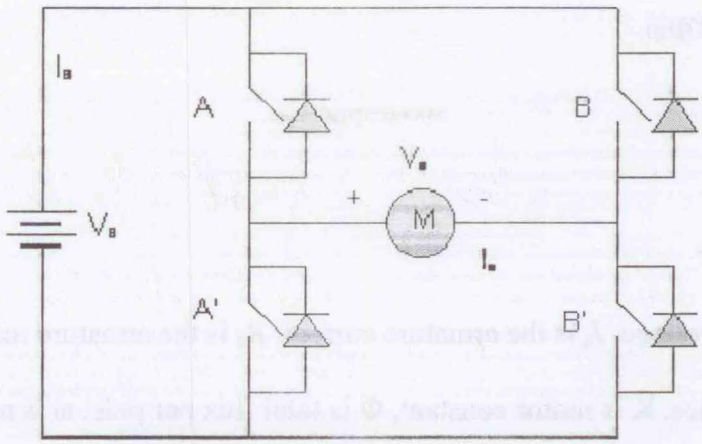


Figure 3. The inverter circuit diagram for the brake-by-wire system

## III. Simulation Studies of Faulty Conditions of Brake-by-Wire Systems

The system model shown in Figure 3 is implemented by using Simplorer based simulation. The simulated brake-by-wire system can simulate various faulty conditions of the four-switch scheme shown in Figure 3. Figure 4 shows the simulated current and voltage waveforms under normal and different faulty conditions. The ratings and parameters of the test motor are shown in Table I. It should be noted that the particular motor used was a higher voltage motor, rather than one would normally encounter in an automotive environment. This is due to the limitation of available resources. Nevertheless, the principles are well illustrated. In these simulations, the duty ratio of switch A is set to 70%.

Table I Parameters of the Motor used in the simulation and experiment setup

| | | | |
|---|---|---|---|
| Rated voltage | 125V | Rated current | 3.2 A |
| Rated Power | 1/3 hp | Rated speed | 1800rpm |
| Armature resistance Ra | 8.98 Ω | Armature leakage inductance | 5.35mH |
| Machine constant KΦ | 0.475volt-sec/rad | Inertia | $0.6\times10^{-3}$ kg.m$^2$ |

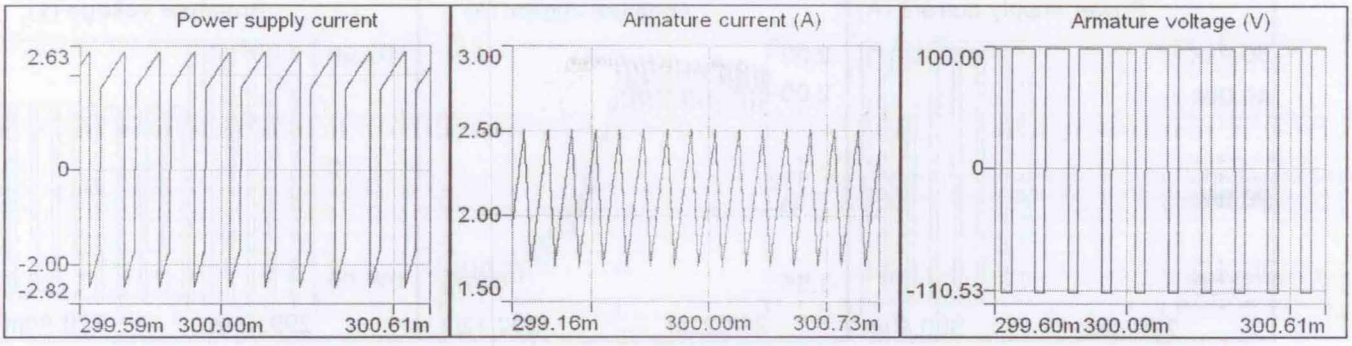


(a). Simulated battery current, motor current, and motor voltage under the normal operation

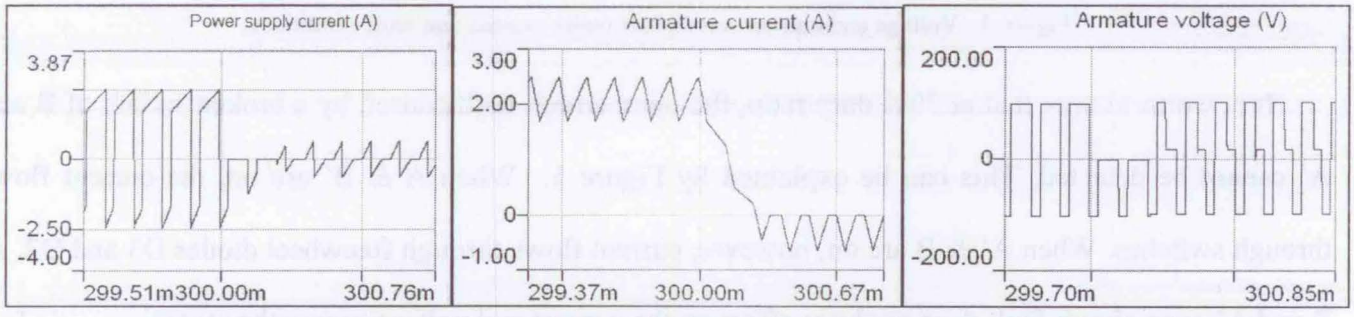


(b) Battery current, motor current, and motor voltage under the faulty operation of switch A open circuit.

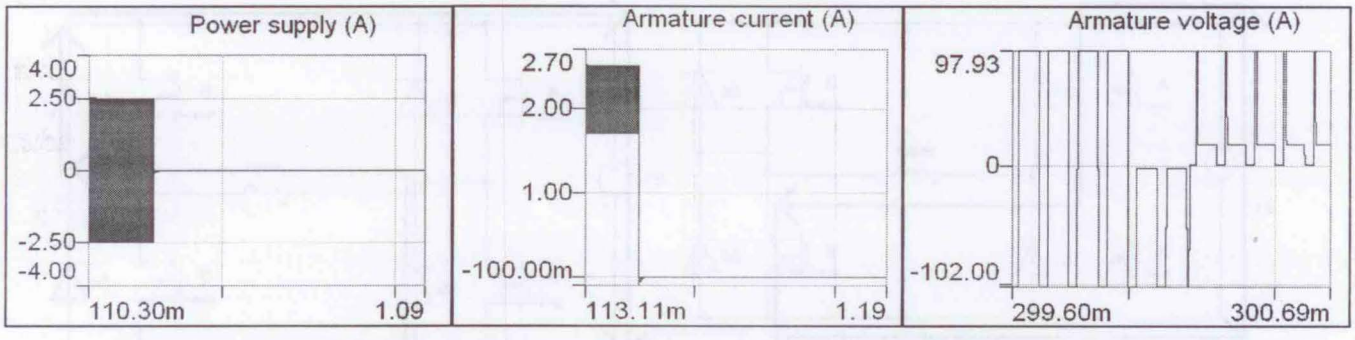


(c). Battery current, motor current, and motor voltage under the faulty operation of both switch A and A' open.

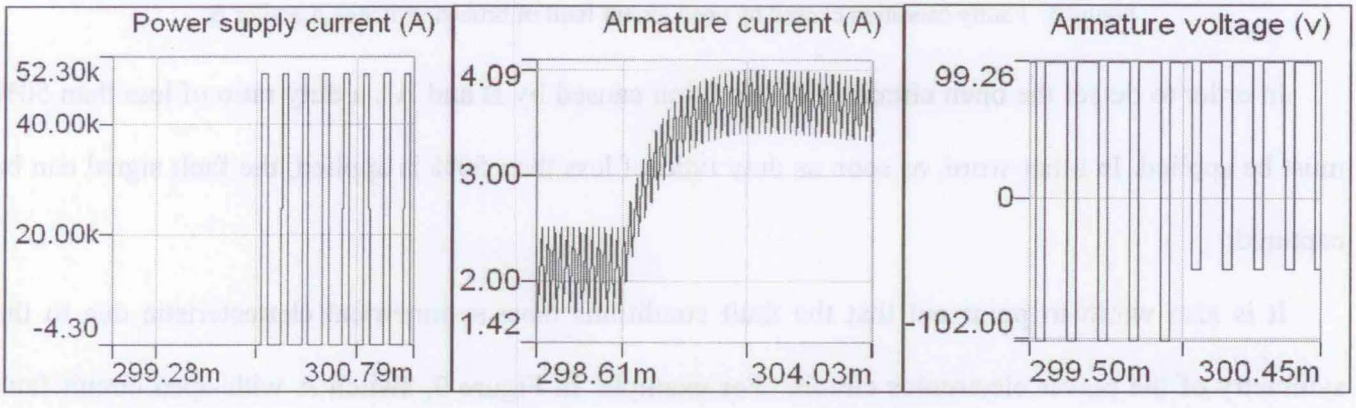


(d). Battery current, motor current, motor voltage under the faulty operation of switch A short circuit

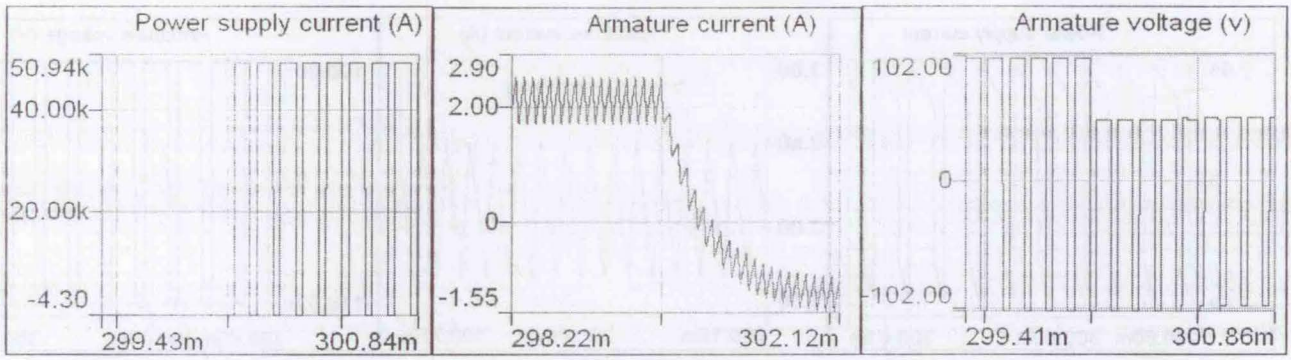


(e). Battery current, motor current, motor voltage under the faulty operation of switch AA' short circuit.

Figure 4. Voltage and current waveforms under normal and fault conditions.

It is worth to note that at 70% duty ratio, the open circuit fault caused by a broken switch of B and A' cannot be detected. This can be explained by Figure 5. When A & B' are on, the current flows through switches. When A' & B are on, however, current flows through freewheel diodes D3 and D2, so B and A' open circuit fault does not have effect on the current and voltage across the motor.

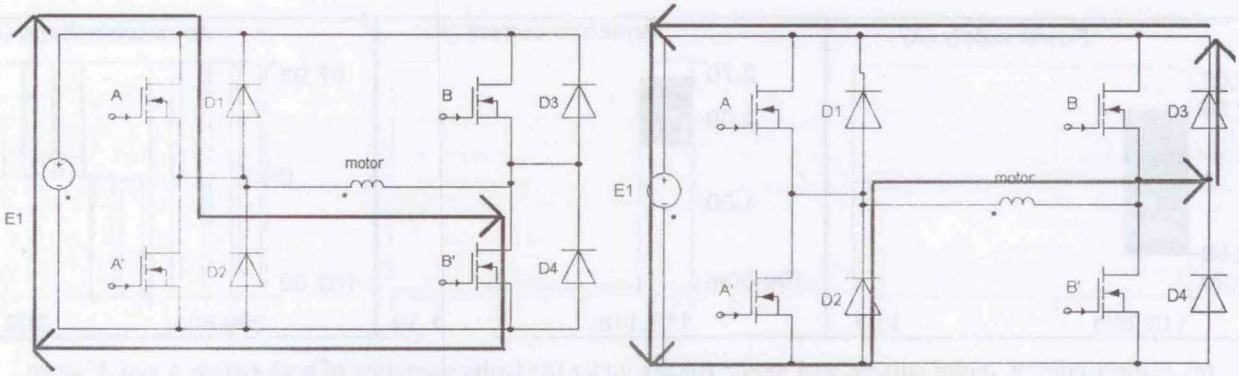


When (A and B') close AND (A' and B) open

When (A' and B) close AND (A and B' ) open

Figure 5. Faulty condition caused by open circuit fault of broken switches A and/or B'

In order to detect the open circuit fault condition caused by B and A', a duty ratio of less than 50% must be applied. In other word, as soon as duty ratio of less than 50% is applied, the fault signal can be captured.

It is also worth to point out that the fault conditions have symmetrical characteristic due to the symmetry of the power electronics circuit. For example, in Figure 3, switch A with open circuit fault

will result the same behavior as B' open circuit fault; similarly, B open circuit fault will result the same behavior as A' open circuit fault. In summary, at any given time one of the six faulty classes can occur in a circuit shown in Figure 3. They are: A open or B' open, A' open or B open, AA' open or BB' open, A or B' short, A' or B short, AA' short or BB' short.

A bench setup was implemented consisting of a permanent magnet (PM) brushed DC motor, a full bridge converter, and a dSPACE controller. The bench setup system has the capabilities to generate current and voltage signals under normal operating condition as well as various faulty conditions. The signals generated by the bench setup and the simulation model have similar behaviors.

For the lab setup experiments, we emulated the open circuit faults caused by simulating any one or more of the switches open. The parameters of the motor tested are same as those used in the simulation as shown in Table I. The faults being tested include: A or B' open; B or A' open, both A and B' open; both B and A' open. Figure 6 gives an example of the signals generated by the simulation program and the lab setup test when the circuit has a fault caused by switch A open circuited. In the experiments, the sampling of data has limited rate. Therefore, only average gets sampled, whereas in the simulation, the data can be sampled at very high rate to show the detailed switching behavior. For ease of comparison, the simulation data has to be processed. For this comparison, the simulated data was processed using 1000 point moving average. It can be seem that the test data matches the simulation very well.

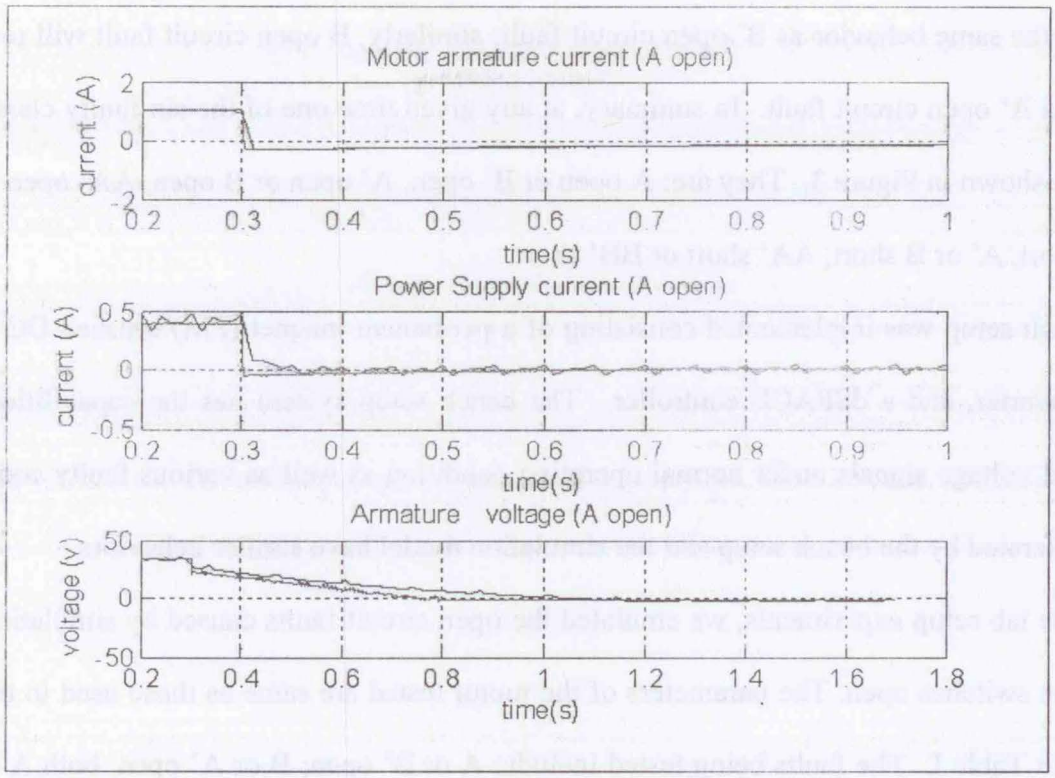


Figure 6. Comparison of simulated and tested motor current, power supply current, and motor voltage in a fault condition (Switch A open) The "RED" curves were generated by the simulation program, the "BLUE" curves were generated by the lab setup for the simulation.

## IV. A Hierarchical Fuzzy Diagnostic System for Fault Detection in a Brake-By-Wire System

As we have shown in the previous section, the faulty conditions manifest in three output signals, i.e. motor current, power supply and motor voltages, denoted as $I_{mot}$, $I_{bat}$ and $V_{mot}$ respectively.

Fault diagnostics in Brake-By-Wire (B-B-W) is performed by developing an intelligent system that has the capability of detecting six different classes of faults as soon as they occur. Figure 7 illustrates the major computational blocks involved in the proposed fuzzy B-B-W fault diagnostic system that consists of two stages, offline training and online diagnostics. During the training stage, a set of training data is generated by either a simulation program, lab setup, or physical data from a B-B-W device. The training data set should contain three signals, $I^i_{mot}[t_0, t_e]$, $I^i_{bat}[t_0, t_e]$, $V^i_{mot}[t_0, t_e]$, generated under the

scenario of i-th faulty condition, for i = 1, …, k, where k is the number of faulty conditions to be detected. The time interval $[t_0, t_e]$ represents the simulation time used to generate the signals.

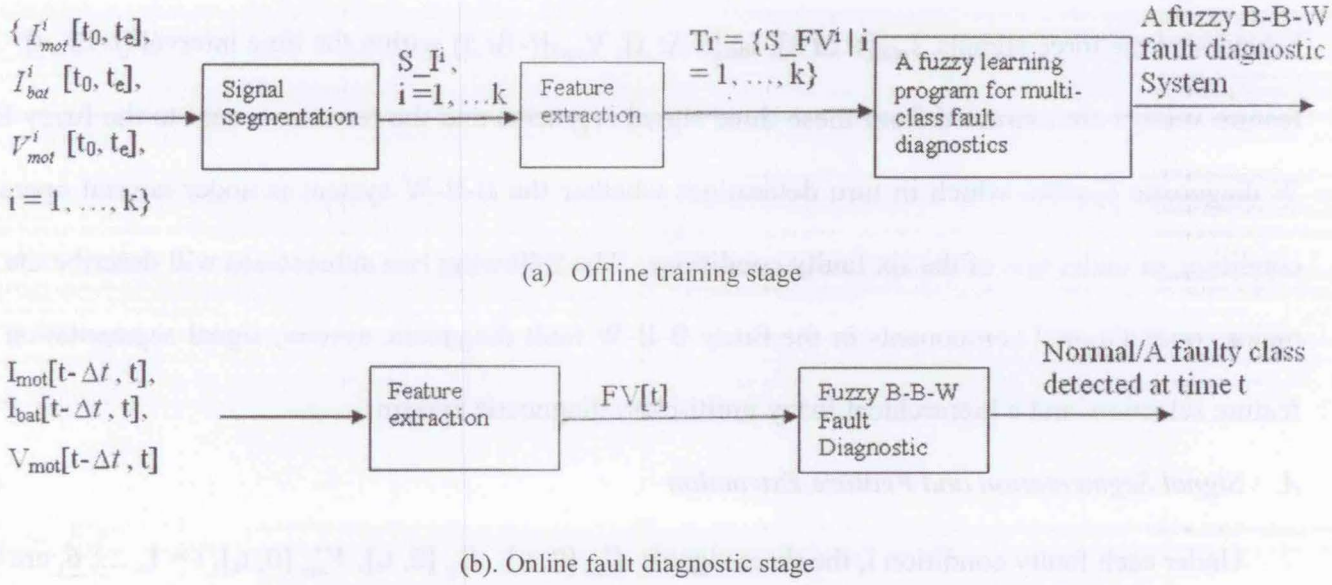


Figure 7. Computational steps in a fuzzy B-B-W fault diagnostic system.

Based on the B-B-W system presented in Figure 3 and the simulation model described in Section III, we need to design a fault diagnostic system that has the capability of detecting the following six faulty classes as soon as they occur in the system.

- Class 1: switch A or B' is open
- Class 2: switch B or A' is open
- Class 3: both switches A and A' are open
- Class 4: Switch A is short or B' is short
- Class 5: Switch A' is short or B is short
- Class 6: Both switches A and A' are short or both switches B and B' are short

The first computational step is to segment the signals of i-th faulty class into a set of segments, $S\_I^i$, and extract the signal features from each segment in $S\_I^i$, for i = 1, …, k. All feature vectors extracted

from signal segments form a training data set which is used by a fuzzy learning algorithm to generate a fuzzy knowledge base that consists of fuzzy rules and fuzzy membership functions. At the online diagnostic stage, at any given time t, the condition of the B-B-W system is detected based on the behavior of the three signals, $I_{mot}[t-\Delta t, t]$, $I_{bat}[t-\Delta t, t]$, $V_{mot}[t-\Delta t, t]$ within the time interval $[t-\Delta t, t]$. The feature vectors are extracted from these three signal segments and the results are sent to the fuzzy B-B-W diagnostic system, which in turn determines whether the B-B-W system is under normal operation condition, or under one of the six faulty conditions. The following two subsections will describe the two major computational components in the fuzzy B-B-W fault diagnostic system, signal segmentation and feature selection, and a hierarchical fuzzy multi-class diagnostic system.

*A. Signal Segmentation and Feature Extraction*

Under each faulty condition i, the three signals $I^i_{mot}[0, t_e]$, $I^i_{bat}[0, t_e]$, $V^i_{mot}[0, t_e]$, i = 1, …, 6, are first segmented into three sequence of segments denoted as $S\_I^i_{mot}$, $S\_I^i_{bat}$, $S\_V^i_{mot}$, where

$$S\_I^i_{mot} = \{S\_I^i_{mot}[(j-1)\Delta t, j\Delta t] \mid j = 1,\ldots,n, \& n\Delta t = t_e\} \tag{6}$$

$$S\_I^i_{bat} = \{S\_I^i_{bat}[(j-1)\Delta t, j\Delta t] \mid j = 1,\ldots,n, \& n\Delta t = t_e\} \tag{7}$$

$$S\_V^i_{mot} = \{S\_V^i_{mot}[(j-1)\Delta t, j\Delta t] \mid j = 1,\ldots,n, \& n\Delta t = t_e\} \tag{8}$$

We use $S\_I^i$ to denote all the segments generated from $I^i_{mot}[0, t_e]$, $I^i_{bat}[0, t_e]$, $V^i_{mot}[0, t_e]$, i.e. $S\_I^i = \{ S\_I^i_{mot}, S\_I^i_{bat}, S\_V^i_{mot} \}$

Since the three signals are acquired simultaneously, they are segmented into three sequences that consist of the same number of fixed sized segments. In every sequence, the two adjacent segments are overlapped by 1/3 of each segment in order to maintain continuity of information flow between segments. Figure 8 illustrates the segmentation scheme. Each blue line indicates the beginning of a segment, and the first subsequent red line indicates the ending of the previous segment and the second

one indicates the ending of the current segment. The signal between a red line and the subsequent blue line is the overlap portion of the two adjacent segments.

Each segment is represented by three features, minimum, maximum, and average values within the segment. At time interval $[(j-1)\Delta t, j\Delta t]$, a feature vector is defined as:

$$FV_j^i = \langle \min\_\alpha_j^i, \max\_\alpha_j^i, ave\_\alpha_j^i, \min\_\beta_j^i, \max\_\beta_j^i, ave\_\beta_j^i, \min\_V_j^i, \max\_V_j^i, ave\_V_j^i \rangle$$

where $\alpha_j^i$, $\beta_j^i$, and $V_j^i$ are the j$^{th}$ segment of $I_{mot}^i$, $I_{bat}^i$, and $V_{mot}^i$, respectively, generated by simulating the i$^{th}$ faulty class. The output from the feature extraction block at the training stage is a set of feature vectors, $FV^i$, defined as follows: $FV^i = \{ FV_j^i \mid j = 1,...,n \}$. The training data used by the fuzzy learning program contain all the feature vectors in $FV^i$ for all i = 1, …., k.

At the online diagnostic stage, fault detection is based on the three signals acquired within the time interval [t-$\Delta t$, t]. From the three signal segments, $I_{mot}$[t-$\Delta t$,t], $I_{bat}$[t-$\Delta t$,t], $V_{mot}$[t-$\Delta t$,t], a feature vector FV[t] is extracted, where FV[t] =

$$\{ \min\_\alpha(t), \max\_\alpha(t), ave\_\alpha(t), \min\_\beta(t), \max\_\beta(t), ave\_\beta(t), \min\_V(t), \max\_V(t), ave\_V(t) \}.$$

The fuzzy B-B-W fault diagnostic system will use the fuzzy knowledge bases generated at the training stage to derive the diagnostic decision, with the B-B-W system under normal or one of the six faulty conditions.

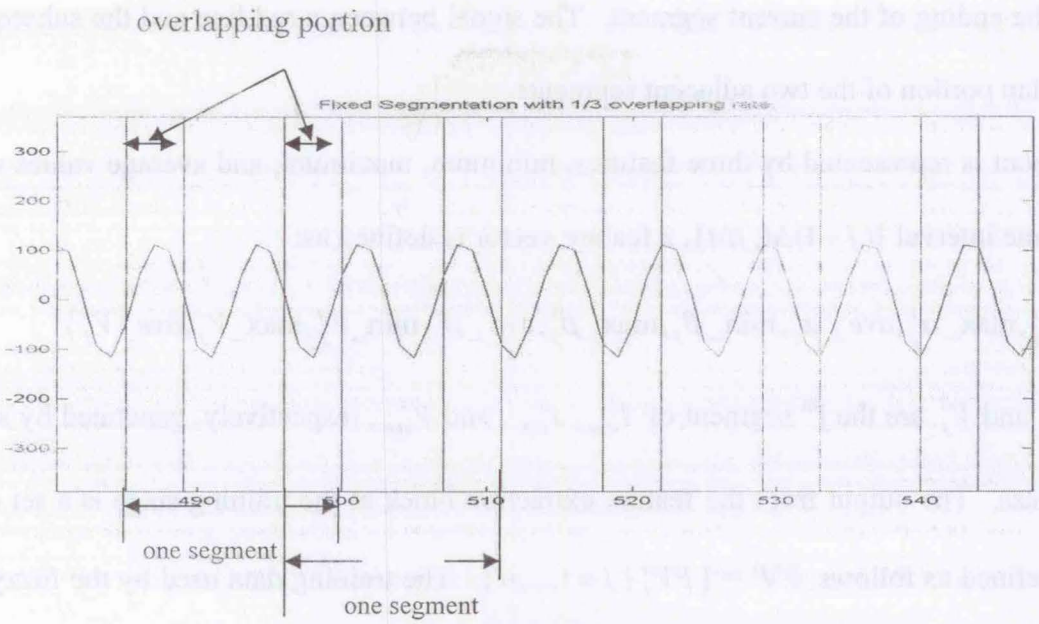


Figure 8. Illustration of the signal segmentation process.

*B. A hierarchical fuzzy diagnostic system for B-B-W fault detection*

Fuzzy logic has been popular in engineering fault diagnostics [16-20]. However, there has not been much discussion in the literature on different fuzzy system architectures for multi-class fault detection. There are a number of approaches that can be used to model a fuzzy multi-class classification problem. In this paper we present a hierarchical fuzzy diagnostic system, F, designed on the basis of the B-B-W system structure. Figure 9 illustrates the diagnostic stage of F. F has six fault diagnostic systems, $F^i$, for i = 1, 2, …, 6. $F^1$ is designed to detect normal condition from abnormal condition. This is the first diagnostic system that F calls to detect the current condition of the B-B-W system. When the $F^1$ decides that the current condition of B-B-W is normal, F immediately exits to process the next signal segment. Since most of the time a B-B-W is under normal condition, this system architecture ensures a fast detection. When $F^1$ detects an abnormal condition, it activates $F^2$, which is designed to detect whether the B-B-W system is in short or open circuit condition. If it is in the short circuit condition, then $F^3$ is activated, which decides whether the B-B-W system is single switch or double switch short. If it is

single switch short, $F^5$ is called to find out whether A or B' is short, or whether A' or B is short. If $F^2$ decides that the B-B-W system is in an open circuit fault, $F^4$ is called to find out whether the B-B-W system is single switch or double switch open. If it is single switch open, $F^6$ is called to find out whether A or B' is open, or A' or B is open.

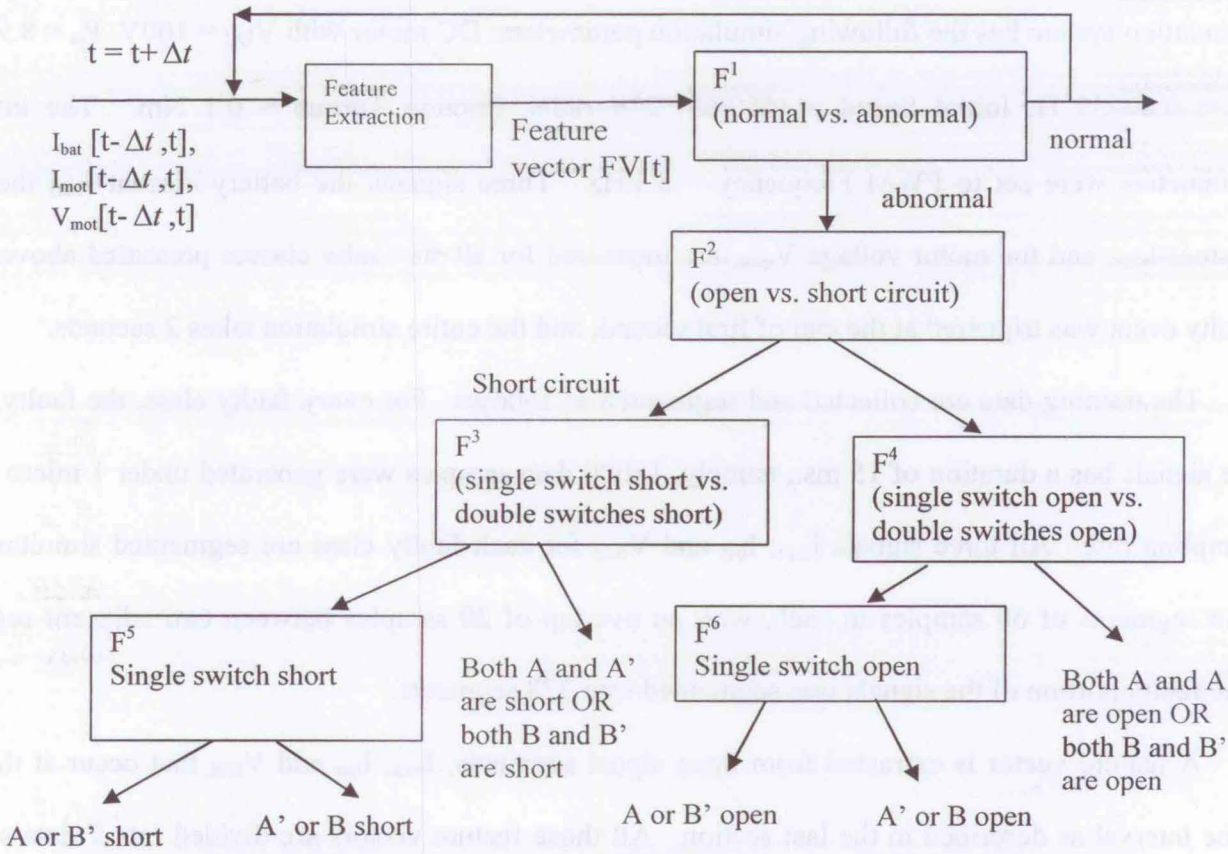


Figure 9: A hierarchical fuzzy diagnostic system for fault detection in a brake-by-wire system.

Fuzzy reasoning is performed within the context of a fuzzy system model, which consists of control, solution variables, fuzzy sets, proposition (rule) statements, and the underlying control mechanisms that tie all these together into a cohesive reasoning environment. All six fuzzy diagnostic systems in F share the same input space, a 9-dimensional feature space as described in the last section. Therefore each fuzzy system has 9 control variables, FV = $\{ I_{mot}^{\min}, I_{mot}^{\max}, I_{mot}^{ave}, I_{bat}^{\min}, I_{bat}^{\max}, I_{bat}^{ave}, V_{mot}^{\min}, V_{mot}^{\max}, V_{mot}^{ave} \}$, and one solution variable, y, to indicate whether the input vector FV is likely to be in class 0 or class 1. The

fuzzy learning algorithm presented in [20] is used to generate fuzzy knowledge base for each fuzzy system based on the data generated by the simulation model presented in the last section.

## V. EXPERIMENTS AND SYSTEM EVALUATION

We use the simulation model described in the last section to generate training and testing data. The simulation system has the following simulation parameters: DC motor with $V_{DC} = 100V$, $R_a = 8.98$ ohm, $L_a = 0.00535$ H, Initial Speed = $(650/60)*2*\pi$ rad/s, Friction Torque = 0.1 Nm. The inverter's parameters were set to PWM Frequency = 5 kHz. Three signals, the battery current $I_{bat}$, the motor current $I_{mot}$, and the motor voltage $V_{mot}$, are measured for all six faulty classes presented above. Each faulty event was triggered at the end of first second, and the entire simulation takes 2 seconds.

The training data are collected and segmented as follows. For every faulty class, the faulty part of the signals has a duration of 15 ms., namely, 15000 data samples were generated under 1 micro second sampling rate. All three signals $I_{mot}$, $I_{bat}$ and $V_{mot}$ for each faulty class are segmented simultaneously into segments of 60 samples in each, with an overlap of 20 samples between two adjacent segments. The faulty portion of the signals was segmented into 378 segments.

A feature vector is extracted from three signal segments, $I_{mot}$, $I_{bat}$ and $V_{mot}$ that occur at the same time interval as described in the last section. All those feature vectors are divided into 7 data sets, $C_0$, $C_1$, ..., $C_6$, where $C_0$ contains the feature vectors extracted from the normal signal segments, and $C_1$, ..., $C_6$ contain the feature vectors representing the respective faulty classes. Each $C_i$ is divided randomly into a training and a test set in a ratio of 2:1.

For the purpose of evaluating the structured hierarchical fuzzy diagnostic system, we implemented two additional fuzzy diagnostic systems modeled with a fault-against-normal scheme. Figure 10 and 11 illustrate the architectures of these two systems. The single 7-class fuzzy classification system has the

same 9 control variables as the structured fuzzy diagnostic system, and it has one output variable that has 7 terms representing the normal class and the 6 faulty classes.

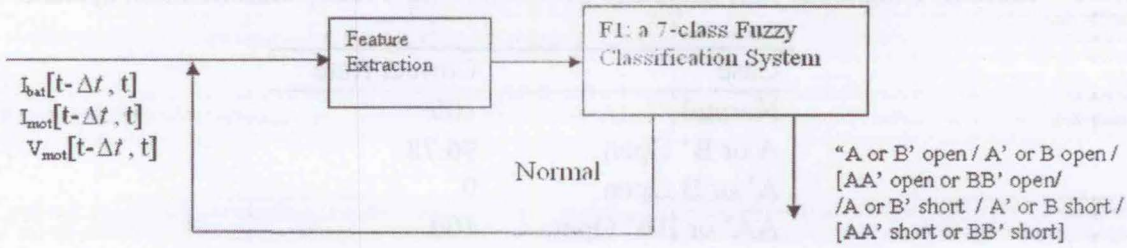


Figure 10. A single 7-class fuzzy fault classification system.

The fuzzy diagnostic system shown in Figure 11 is a set of six independently trained fuzzy diagnostic systems, each of which was trained by one faulty class against the normal class. The decision module, WTA (Winner-Take-All), selects the output class that has the highest fuzzy belief value.

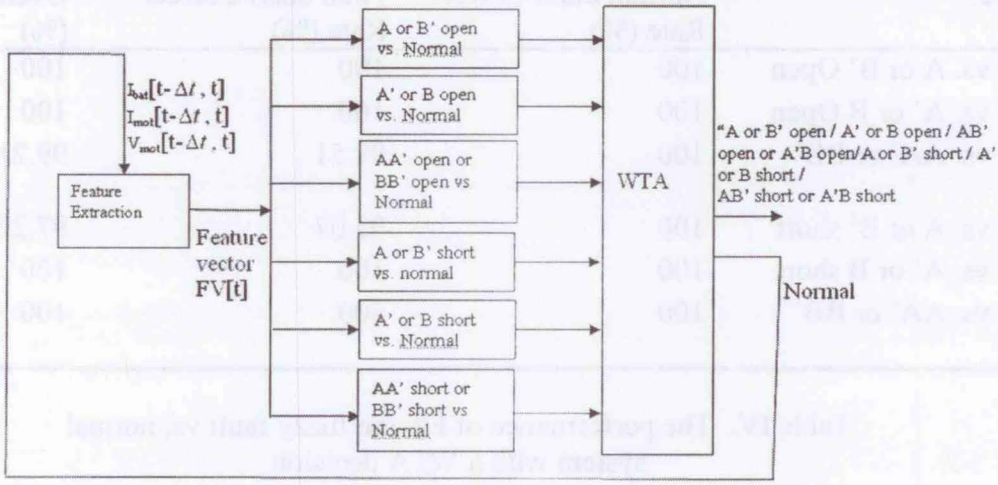


Figure 11. F2: A fuzzy diagnostic system modeled using a fault-against-normal scheme.

Table II through Table VI shows the performances of these three fuzzy diagnostic systems on the test data set. Table II shows that the single fuzzy system for 7-class fault diagnostic system completely missed the faulty class A' or B open. Table III lists the detailed performances of the six individual fuzzy diagnostic systems used in the fault vs normal scheme, and Table IV lists the entire system performance after a WTA scheme is applied to the outputs from the six fuzzy diagnostic systems. The faulty class A or B' open has a rather low detection rate. The performances of all the six fuzzy diagnostic system in the hierarchical fuzzy diagnostic system are listed in Table V. All six individual fuzzy diagnostic

systems performed well. Table VI lists the performance of the hierarchical fuzzy diagnostic system on all classes. It gave 100% detection on the normal class and three faulty classes, and more than 99% on the other three faulty classes.

Table II. Diagnostic performances of F1: the single fuzzy classification system.

| Case | Correct Rate |
|---|---|
| Normal | 100 |
| A or B' Open | 96.78 |
| A' or B Open | 0 |
| AA' or BB' Open | 100 |
| A or B' short | 100 |
| A' or B short | 100 |
| AA' or BB' short | 100 |
| Total | 84.27 |

Table III. The performances of six fuzzy diagnostics modeled using Fault vs. Normal scheme used in F2.

| Faulty Type | Normal class Correct Rate (%) | Fault class Correct Rate (%) | Overall Correct Rate (%) |
|---|---|---|---|
| $F^1$: normal vs. A or B' Open | 100 | 100 | 100 |
| $F^2$: normal vs. A' or B Open | 100 | 100 | 100 |
| $F^3$: normal vs. AA' or BB' Open | 100 | 98.51 | 99.21 |
| $F^4$: normal vs. A or B' short | 100 | 95.07 | 97.22 |
| $F^5$: normal vs. A' or B short | 100 | 100 | 100 |
| $F^6$: normal vs. AA' or BB' short | 100 | 100 | 100 |

Table IV. The performance of F2: the fuzzy fault vs. normal system with a WTA decision

| Case | Correct Rate |
|---|---|
| Normal | 100 |
| A or B' Open | 85.48 |
| A' or B Open | 100 |
| AA' or BB' Open | 95.52 |
| A or B' short | 95.07 |
| A' or B short | 100 |
| AA' or BB' short | 100 |
| Total | 96.44 |

Table V. The performances of the six fuzzy diagnostics used in F3: the hierarchical fault diagnostic system

| Faulty Type | Class 0 correct rate (%) | Class 1 Correct Rate (%) | Overall Correct Rate (%) |
|---|---|---|---|
| $F^1$: class 0: normal vs. class 1 abnormal | 100 | 100 | 100 |
| $F^2$: class 0: open vs. class 1: short fault | 100 | 100 | 100 |
| F3: class 0: single switches short vs. class 1: double switches short | 100 | 98.51 | 99.21 |
| F4: class 0: single switches open vs. class 1: double switches open | 99.25 | 99.25 | 99.25 |
| F5: class 0: A or B' short vs. class 1: A' or B short | 100 | 100 | 100 |
| F6: class 0: A or B' short vs. class 1: A' or B short | 100 | 99.30 | 100 |

Table VI: Overall performance of F3: the hierarchical fuzzy fault diagnostic system

| Case | Correct Rate |
|---|---|
| Normal | 100 |
| A or B' Open | 99.19 |
| A' or B Open | 99.30 |
| AA' or BB' Open | 99.25 |
| A or B' short | 100 |
| A' or B short | 100 |
| AA' or BB' short | 100 |
| Total | 99.68 |

In order to evaluate the robustness of the proposed diagnostic method, we conducted a set of experiments using the data acquired through the lab test set up described in the last section. Due to sampling rate limitation of the data acquisition system, we were able to sample data at about every 10ms and only three faulty classes were generated: class 1: A or B' open; class 2: A' or B open; class 3: AA' or BB' open. Three fuzzy systems are: $F^1$ is trained to detect normal vs. abnormal, $F^2$ is trained to identify whether the current fault is {A or B' open, A' or B open} or AA' or BB' open, and $F^3$ is trained to identify whether the current fault is {A or B'} open, or {A' or B} open. All three systems are trained on simulation data and tested on the lab generated data.

Since the motor voltage signal from lab data is asynchronous and has a sampling rate that is different from motor current and battery current, we cannot mix the three signals in system training. Therefore only battery current, $I_{bat}$, and motor current, $I_{mot}$ are used in system test on lab data.

When the hierarchy fuzzy diagnostic system, which is trained on the simulation data described earlier, is tested on the lab generated data, it detected 100% correctly for normal condition and 100% correct on fault conditions as soon as they occurred. However the identification of the type of faulty condition took a few segments after the faulty conditions occur. For class 1: A or B' open, was identified correctly at the 5th segments after the faulty condition occurred; class 2: A' or B open was identified immediately as class 2 fault as soon as it occurred; class 3: AA' or BB' open was identified correctly at the 14th segment after the faulty condition occurred. The hierarchical fuzzy diagnostic system takes about 0.0009s to make a diagnostic decision for a given signal segment on a computer with Windows XP system and a P M 1.73 processor. Any abnormal conditions are detected within 0.0009s after they occur. For the faulty class identity, class 2 is immediately identified, which takes 0.0009s; the class 1 is identified in 0.0045s, and class 2 is identified in 0.0126s.

These results show that the proposed hierarchical fuzzy diagnostic system trained based on a simulated B-B-W model has the capability of correctly identifying all faulty conditions in real-time over a wide operating domain.

## VI. Discussion And Conclusions

We have presented an analytical model of the brake-by-wire system using an electromechanical actuator and implemented a simulation of the same using the Simplorer software by Ansoft. We also developed a bench setup model of brake-by-wire system. A dc motor was used as an actuator, since it is more abundantly available with the present automotive supplier base. A very simple system was used, since cost effectiveness is of prime concern in the automotive industry. However the methodology illustrated is easily extendible to other kinds of motors and the principles discussed here still remain valid. Both the simulated and the bench test systems have the capabilities of generating current and voltage signals under normal operating condition and faulty conditions. An innovative hierarchical fuzzy diagnostic system has been developed based on the structure of a B-B-W system to perform fault

diagnostics. The hierarchical fuzzy diagnostic system gives 99.68% classification accuracy on all signal segments generated by the simulation model. While tested on the data generated by the BBW system in a bench setup, the hierarchical fuzzy diagnostic system has the capability of detecting any faulty conditions in less than 0.0009s and pinpointing to the specific type of faults within less than 0.013s. This indicates that the proposed hierarchical fuzzy diagnostic system has the promise of being implemented easily in a real time environment in the automobile and operating robustly in a wide range of conditions. Although a brake-by-wire system was used with application in automotive environment in mind, the methodology is equally applicable to other systems where such motors are used, including manufacturing and other non-mobile platforms. These will be studied and reported by the authors in their possible future work.

## VII. References


[1] W. Jonner, H. Winner, L. Dreilich, and E. Schunck, "Electrohydraulic brake system – the first approach to brake-by-wire technology", SAE paper no. 960991, 1996.

[2] R. Schwarz, R. Isermann, J. Bohm, J. Nell, P. Rietch, "Modeling and control of an electromechanical disk brake", SAE paper no. 980600, 1998.

[3] R. Schwarz, R. Isermann, J. Bohm, J. Nell, P. Rietch, "Clamping force estimation for a brake-by-wire actuator", SAE paper no. 1999-01-0482, 1999.

[4] Kihong Park, Seung-Jin Heo, "A study on the brake-by-wire system using hardware-in-the-loop simulation", Int. J. of Veh. Design, Vol. 36, No. 1, 2004, pg. 38-49.

[5] S. Underwood, A. Khalil, I. Husain, H. Klode, B. Lequesne, S. Gopalakrishnan, A. Omekanda, "Switched reluctance motor based electromechanical brake-by-wire system", Int. J. of Vehicle Autonomous Systems, Vol. 2, No. 3/4, p. 278-276, 2004.

[6] N. Ueki, J. Kubo, T. Takayama, I. Kanari, M. Uchiyama, "Vehicle dynamics electric control system for safe driving", Hitachi website article: http://www.hitachi.com/ICSFiles/afieldfile/2004/11/26/r2004_04_104_3.pdf

[7] "Electro Mechanical and Electro Hydraulical Brake from Continental Teves", website article": http://www.contitevesna.com/word/PressKits/Frankfurt/Brakes%201%20EMB_e.doc

[8] ECE staff, "Brush dc motor", ECN magazine, 5/15/2005.

[9] T. Takayama and E. Suda, "The present and future of electric power steering", Int. J. of Vehicle Design, Vol 15, No. 3/4/5, 1994, pp. 243-254.

[10] M. Lefebvre, "Brush dc motors turning more advanced", ECN magazine, 3/1/2002.

[11] R. Isermann, R. Schwarz, S. Stolzl, "Fault tolerant drive-by-wire systems", IEEE Control Sys. Mag., Oct 2002, pp. 64-81.

[12] O. Moseler, R. Isermann, "Application of Model-Based Fault Detection to a Brushless DC Motor ", IEEE Trans. on Industrial Electronics, Vol. 47, No. 5, Oct. 2000, pp. 1015-1020.

[13] M. Nyberg, "Model-based Diagnosis of an Automotive Engine Using Several Types of Fault Models", IEEE Trans. on Control Systems Technology, Vol. 10, No. 5, 2002, pp 679-689.

[14] Yi Lu Murphey, Hong Guo, Jacob A. Crossman, and Mark Coleman, "Automotive Signal Diagnostics Using Wavelets and Machine Learning," IEEE Trans. on Veh. Tech., Nov. 2000, pp. 1650-1662

[15] Jacob A. Crossman, Hong Guo, Yi Lu Murphey, and John Cardillo, "Automotive Signal Fault Diagnostics: Part I: signal fault analysis, feature extraction, and quasi optimal signal selection," IEEE Trans. on Veh. Tech., July 2003, pp. 1063-1075.

[16] B. Das, J. V. Reddy, "Fuzzy-Logic-Based Fault Classification Scheme for Digital Distance Protection", IEEE Trans. on Power Delivery, Vol. 20, No. 2, April 2005, pp. 609 - 616

[17] D. Fuessel, R. Isermann, "Hierarchical motor diagnosis utilizing structural knowledge and a self-learning neuro-fuzzy scheme", IEEE Trans. on Industrial Electronics, Volume: 47, No. 5, Oct. 2000, pp. 1070-1077

[18] S. Vasilic, M. Kezunovic, "Fuzzy ART Neural Network Algorithm for Classifying the Power System Faults", IEEE Trans. on Power Delivery, Issue: 99 , 2004, pp. 1-9

[19] Z. Chen, B. Zhang, Y. Murphey, H. Jia, and M. A. Masrur, "Robust Fault Diagnosis in Electric Drives Using Machine Learning", International Symposium on Vehicular Power and Propulsion, IEEE Vehicular Tech. Society, Paris, Oct. 2004.

[20] Yi Lu, Tie Qi Chen, and Brennan Hamilton, "A Fuzzy System for Automotive Fault Diagnosis: -- Fast Rule Generation and Self-Tuning," IEEE Trans. on Vehicular Technology, Vol. 49, No. 1, Mar. 2000, pp. 651-660