ERDC/CERL TR-10-9

Construction Engineering Research Laboratory

US Army Corps of Engineers®
Engineer Research and Development Center

Military Training Lands Historic Context

Miscellaneous Training Sites

Adam Smith, Manroop K. Chawla, Sunny Adams, and Daniel D. Archibald

March 2010

Approved for public release; distribution is unlimited.

ERDC/CERL TR-10-9
March 2010

Military Training Lands Historic Context

Miscellaneous Training Sites

Adam Smith, Manroop K. Chawla, Sunny Adams, and Daniel D. Archibald

Construction Engineering Research Laboratory (CERL)
U.S. Army Engineer Research and Development Center
2902 Newmark Dr.
Champaign, IL 61822-1076

Final Report

Approved for public release; distribution is unlimited.

Prepared for Legacy Resource Management Program
Cultural Resources Management
1225 South Clark Street, Suite 1500
Arlington, VA 22202

Abstract: This work provides an historic context for military training lands, written to satisfy a part of Section 110 of the National Historic Preservation Act (NHPA) of 1966 as amended. Cultural resources personnel at the installation level and their contractors will use this historic context to determine whether military training resources are eligible for the National Register of Historic Places (NRHP), and whether an adverse effect will take place. This overall project covered five types of military training: small arms ranges, large arms ranges, training villages and sites, bivouac areas, and large-scale operation areas. This document provides an historic context of small arms ranges on military training lands for the U.S. Army, U.S. Navy, U.S. Army Air Corps/U.S. Air Force, and the U.S. Marines, with a focus on the landscape outside the developed core of military installations. This work determined that that military training lands are significant enough in our nation's history to be surveyed for eligibility to the NRHP. However, training lands must be viewed as a whole; individual buildings on a training range are rarely eligible for the NRHP; buildings in their larger context (and the integrity of that larger context) are important.

Table of Contents

List of Figures v

Preface xvi

Unit Conversion Factors xvii

1 Introduction 1

Background 1
Objectives 2
Approach 2
Literature review 2
Archival research 3
Site visits 3
Analysis 3
Scope 3
Mode of technology transfer 4

2 Miscellaneous Training Areas 5

Bayonet training 5
Calisthenics 31
Cavalry courses 31
Chow 33
Driver training 37
Engineer training 42
Fireman's training tower 69
Gas chamber 70
Hand to hand combat 73
Map training 78
Obstacle courses 79
Rappel towers 98
Sanitation 102
Signal training 111

3 Evaluating Properties Under the Military Training Lands Historic Context 115

Criteria for evaluation 115
Criterion consideration G 116
Army cold war guidelines and contexts 116
Air Force cold war guidelines and context 117
Significance 118
Aspects of integrity 120
Character defining features 121
Context example photographs 121
Bayonet training area 122

4 Conclusions 123

References 124

Report Documentation Page 125

List of Figures

Figure		Page
1	Seabees during bayonet training at Camp Endicott, Davisville, RI, May 1943 (NARA College Park, RG 80-G, Box 172, Photo 38061)	6
2	Learning some of the fundamentals of bayonet fighting at MCRD San Diego, CA, 8 June 1954 (NARA College Park, RG 127-GC-68, Box 5, Photo A226850)	6
3	ATC Facilities, bayonet training court, plan, Fort Bragg, NC, 1966 (Standard Drawing 28-13-117 Sheet 17; "Construction of ranges, phase 1, U.S. ATC facilities, Fort Bragg, NC, bayonet training court," 28 June 1966)	7
4	Every Marines boot spends hours on the bayonet course learning just how to jab the cold steel when it counts; after practice each recruit must run a course against time and form at MCB San Diego, CA, February 1944 (NARA College Park, RG 127-GC-68, Box 5, Photo 35374)	7
5	Bayonet dummy, Fort Bragg, NC, 1966 (Standard Drawing 28-13-117 Sheet 25, "Bayonet dummy," 28 June 1966)	8
6	Multi-purpose bayonet target, Fort Bragg, NC, 1966 (Standard Drawing 28-13-117 Sheet 26, "Bayonet dummy—details," 28 June 1966)	9
7	ATC facilities, bayonet training court, instructor's platform, Fort Bragg, NC, 1966 (Standard Drawing 28-13-117 Sheet 17, "Construction of Ranges, Phase 1, U.S. ATC Facilities, Fort Bragg, NC, Bayonet Training Court," 28 June 1966)	9
8	Attack wave jumping barbed wire entanglement at Fort Sheridan, IL, November 1917 (New York Public Library, Digital Number 117158)	10
9	Jump and bayonet practice at Fort Sheridan, IL, November 1917 (New York Public Library, Digital Number 117160)	10
10	Soldiers running through the bayonet course at Camp Wheeler, GA, 1918 (New York Public Library, Digital Number 117148)	11
11	Assault course at Camp Lee, VA, 1918 (New York Public Library, Digital Number 117093)	11
12	Soldiers charging with bayonets at unknown location, 1918 (New York Public Library, Digital Number 117189)	12
13	Combat conditioning including Judo and knife and physical drill under arms at MCRD San Diego, CA, undated (NARA College Park, RG 127-GC-68, Box 5, Photo 402885)	12
14	Bayonet assault course, typical layout, Fort Bragg, NC, 1951 (Standard Drawing 28-13-33 Sheet 1 of 1, "Bayonet assault course, typical layout and details," 21 November 1951)	13
15	Bayonet assault course, dummy in a fixed frame and details of parry & thrust dummy, Fort Bragg, NC, 1951 (Standard Drawing 28-13-33 Sheet 1 of 1, "Bayonet assault course, typical layout and details," 21 November 1951)	14
16	Bayonet assault course, detail of horizontal butt stroke dummy, Fort Bragg, NC, 1951 (Standard Drawing 28-13-33 Sheet 1 of 1, "Bayonet assault course, typical layout and details," 21 November 1951)	15
17	Bayonet assault course, detail of parry & vertical butt stroke dummy, Fort Bragg, NC, 1951 (Standard Drawing 28-13-33 Sheet 1 of 1, "Bayonet assault course, typical layout and details," 21 November 1951)	16

Figure **Page**

18 Bayonet assault course, swinging dummy & frame, Fort Bragg, NC, 1951 (Standard Drawing 28-13-33 Sheet 1 of 1, “Bayonet assault course, typical layout and details,” 21 November 1951) 17

19 Bayonet assault course, individual prone shelter with prone dummy, Fort Bragg, NC, 1951 (Standard Drawing 28-13-33 Sheet 1 of 1, “Bayonet assault course, typical layout and details,” 21 November 1951) 17

20 Bayonet assault course, prone shelter with exposed head, Fort Bragg, NC, 1951 (Standard Drawing 28-13-33 Sheet 1 of 1, “Bayonet assault course, typical layout and details,” 21 November 1951) 18

21 Bayonet assault course, shell hole with prone dummy, Fort Bragg, NC, 1951 (Standard Drawing 28-13-33 Sheet 1 of 1, “Bayonet assault course, typical layout and details,” 21 November 1951) 18

22 Bayonet assault course, double-apron fence, Fort Bragg, NC, 1951 (Standard Drawing 28-13-33 Sheet 1 of 1, “Bayonet assault course, typical layout and details,” 21 November 1951) 19

23 Bayonet assault course, tunnel crawl, 1951 (Standard Drawing 28-13-33 Sheet 1 of 1, “Bayonet assault course, typical layout and details,” 21 November 1951) 19

24 Bayonet assault course, hurdles, Fort Bragg, NC, 1951 (Standard Drawing 28-13-33 Sheet 1 of 1, “Bayonet assault course, typical layout and details,” 21 November 1951) 19

25 Bayonet assault course, trench & log balance, Fort Bragg, NC, 1951 (Standard Drawing 28-13-33 Sheet 1 of 1, “Bayonet assault course, typical layout and details,” 21 November 1951) 20

26 Bayonet assault course, trip wire, 1951 (Standard Drawing 28-13-33 Sheet 1 of 1, “Bayonet assault course, typical layout and details,” 21 November 1951) 20

27 Bayonet assault course, log balance & horizontal ladder, Fort Bragg, NC, 1951 (Standard Drawing 28-13-33 Sheet 1 of 1, “Bayonet assault course, typical layout and details,” 21 November 1951) 21

28 Bayonet assault course, ditch jump, Fort Bragg, NC, 1951 (Standard Drawing 28-13-33 Sheet 1 of 1, “Bayonet assault course, typical layout and details,” 21 November 1951) 21

29 Bayonet assault course, wall scale, Fort Bragg, NC, 1951 (Standard Drawing 28-13-33 Sheet 1 of 1; “Bayonet assault course, typical layout and details,” 21 November 1951) 22

30 Bayonet assault course, optional surprise dummy, Fort Bragg, NC, 1951 (Standard Drawing 28-13-33 Sheet 1 of 1, “Bayonet assault course, typical layout and details,” 21 November 1951) 22

31 ATC facilities, bayonet assault course, plan, Fort Bragg, NC, 1966 (Standard Drawing 28-13-117 Sheet 16, "Construction of ranges, phase 1, U.S. ATC facilities, Fort Bragg, NC, bayonet assault course," 28 June 1966) 23

32 ATC facilities, bayonet assault course, log wall, Fort Bragg, NC, 1966 (Standard Drawing 28-13-117 Sheet 16, “Construction of ranges, phase 1, U.S. ATC Facilities, Fort Bragg, NC, bayonet assault course,” 28 June 1966) 24

33 ATC facilities, bayonet assault course, hurdles, Fort Bragg, NC, 1966 (Standard Drawing 28-13-117 Sheet 16, “Construction of ranges, phase 1, U.S. ATC Facilities, Fort Bragg, NC, bayonet assault course,” 28 June 1966) 24

34 ATC facilities, bayonet assault course, bayonet targets, Fort Bragg, NC, 1966 (Standard Drawing 28-13-117 Sheet 16, “Construction of ranges, phase 1, U.S. ATC Facilities, Fort Bragg, NC, bayonet assault course,” 28 June 1966) 25

Figure **Page**

35 ATC facilities, bayonet assault course, prone target in crater, Fort Bragg, NC, 1966 (Standard Drawing 28-13-117 Sheet 16, Construction of ranges, phase 1, U.S. ATC Facilities, Fort Bragg, NC, bayonet assault course," 28 June 1966) 25

36 ATC facilities, bayonet assault course, log balance and horizontal ladder, Fort Bragg, NC, 1966 (Standard Drawing 28-13-117 Sheet 16, "Construction of ranges, phase 1, U.S. ATC Facilities, Fort Bragg, NC, bayonet assault course," 28 June 1966) 26

37 ATC facilities, bayonet assault course, tunnel crawl, plan, Fort Bragg, NC, 1966 (Standard Drawing 28-13-117 Sheet 16, "Construction of ranges, phase 1, U.S. ATC Facilities, Fort Bragg, NC, bayonet assault course," 28 June 1966) 26

38 ATC facilities, bayonet assault course, fence vault, Fort Bragg, NC, 1966 (Standard Drawing 28-13-117 Sheet 16, "Construction of ranges, phase 1, U.S. ATC Facilities, Fort Bragg, NC, bayonet assault course," 28 June 1966) 27

39 ATC facilities, bayonet assault course, double apron fence, Fort Bragg, NC, 1966 (Standard Drawing 28-13-117 Sheet 16, "Construction of ranges, phase 1, U.S. ATC facilities, Fort Bragg, NC, bayonet assault course," 28 June 1966) 27

40 Pugil area, plan, partial elevation and section, Fort Bragg, NC, 1966 (Standard Drawing 28-13-117 Sheet 20, "Construction of ranges, phase I, U.S. ATC Facilities, Fort Bragg, NC, Pugil Area," 28 June 1966) 28

41 Bayonet (pugil) training at Camp Lee, VA, 1917 (New York Public Library, Digital Number 117110) 29

42 Bayonet (pugil) training at Camp Lee, VA, December 1917 (New York Public Library, Digital Number 117111) 30

43 Bayonet (pugil) drill at unknown location, circa 1918 (New York Public Library, Digital Number 437672) 30

44 Recruits going through a phase in bayonet training where they are taught basic fundamentals in offensive and defensive moves with a bayonet and rifle; pugil sticks are used in place of rifles and they are cushioned on the end; helmets and gloves are worn for protection at MCRD Parris Island, SC, 1967 (NARA College Park, RG 127-GG-921, Box 33, Photo A601743) 31

45 Calisthenics at unknown location, circa 1917 (New York Public Library, Digital Number 117085) 31

46 Cavalrymen taking the jump at Fort Riley, KS, 1928 (NARA College Park, RG 111-SC WWI, Box 691, Photo 93398) 32

47 Major B.T. Merchant on "Jack Snipe" landing from table jump, 6-ft drop at Fort Riley, Kansas, undated (NARA College Park, RG 111-SC WWI, Box 691, Photo 93397) 32

48 Mounted pistol course, circa 1932 (Basic Field Manual, Volume III, Basic weapons, part one rifle company, chapter 3 – automatic pistol marksmanship, 5 April 1932, p. 40) 33

49 Men standing at mess line on training, Fort Knox, KY,1941 (Training 1 vol. 2; BK 80-2877; 1st ARMD REGT Fort Knox, 1941; Patton Museum of Cavalry and Armor, Fort Knox, KY) 34

50 Chow time in the field at NAS Jacksonville, 5 May 1942 (NARA College Park, RG 80-G, Box 283, Photo 64653) 34

51 Chow time in the field at NAS Jacksonville, 5 May 1942 (NARA College Park, RG 80-G, Box 283, Photo 64652) 35

Figure **Page**

52 These Marines were served turkey and all that goes with it Thanksgiving Day despite the fact they were in the field engaged in a truck driving combat problem at Camp Lejune, NC, 25 November 1943 (NARA College Park, RG 127-GC, Box 17, Photo 6111) 36

53 Recruits get a taste of "living in the field" as their Drill Instructor shows them the proper way to open combat rations at MCRD Parris Island, South Carolina, 9 February 1961 (NARA College Park, RG 127-GG-925, Box 32, Photo 601425) 36

54 Basic driver training on the light vehicle drivers course at Fort Jackson, SC, 12 October 1962 (NARA College Park, RG 111-SC post-1955, Box 378, Photo SC600477) 37

55 Scout cars being driven over one of the obstacles on the obstacle course at Fort Jackson, SC, 22 April 1943 (NARA College Park, RG 111-SC WWII, Box 155, Photo SC173960) 37

56 Wheeled vehicle driving course for precision driving, Fort Bragg, NC, 1951 (Standard Drawing 28-13-50 Sheet 1 of 1, "Wheeled vehicle driving course, plans and details," 21 November 1951) 38

57 Tracked vehicle driving courses, Fort Bragg, NC, 1952 (Standard Drawing 28-13-51 Sheet 1 of 1, "Tracked vehicle driving course, plans and details," 18 February 1952) 38

58 Wheeled & tracked vehicle driving courses, ranges A-F, Fort Bragg, NC, 1951-1952 (Standard Drawing 28-13-50 Sheet 1 of 1, "Wheeled vehicle driving course, plans and details," 21 November 1951. Standard Drawing 28-13-51 Sheet 1 of 1, Tracked vehicle driving course, plans and details," 18 February 1952) 39

59 Tracked vehicle driving course, elevation and depression and traffic markers, Fort Bragg, NC, 1952 (Standard Drawing 28-13-51 Sheet 1 of 1, "Tracked vehicle driving course, plans and details," 18 February 1952) 40

60 Wheeled vehicle driving course, simulated flat car, Fort Bragg, NC, 1951 (Standard Drawing 28-13-50 Sheet 1 of 1, "Wheeled vehicle driving course, plans and details," 21 November 1951) 40

61 Wheeled vehicle driving course, backing stalls, Fort Bragg, NC, 1951 (Standard Drawing 28-13-50 Sheet 1 of 1, "Wheeled vehicle driving course, plans and details," 21 November 1951) 41

62 Tracked vehicle driving course, backing stalls, Fort Bragg, NC, 1952 (Standard Drawing 28-13-51 Sheet 1 of 1, "Tracked vehicle driving course, plans and details." 18 February 1952) 41

63 Wheeled vehicle driving course, timber mock-up of bridge treadway, Fort Bragg, NC, 1951 (Standard Drawing 28-13-50 Sheet 1 of 1, "Wheeled vehicle driving course, plans and details," 21 November 1951) 41

64 A 75 mm howitzer crossing an engineer pontoon bridge at Fort Knox, KY, 13 December 1940 (NARA College Park, RG 111-SC WWII, Box 56, Photo SC136351) 42

65 A floating treadway bridge at Fort Knox, KY, April 1942 (NARA College Park, RG 111-SC WWII, Box 42, Photo SC131444) 43

66 Aluminum balk pontoon bridge construction on Smith Lake at Fort Bragg, NC, 1951 (NARA College Park, RG 111-SC WWII, Box 207, Photo SC370521) 43

67 Engineers building a heavy equipment bridge across Smith Lake at Fort Bragg, NC, 1 April 1951 (NARA College Park, RG 111-SC WWII, Box 212, Photo SC376463) 44

68 Floating bridge area, masonry covered storage building, plan and rear elevation, Fort Bragg, NC, 1952 (Standard Drawing 28-13-97 Sheet 2 of 4, "Bridging area, floating bridge, covered storage building-masonry," 19 May 1952) 44

Figure **Page**

69 Fixed bridge area, masonry covered storage building, plan, elevations, and details, Fort Bragg, NC, 1952 (Standard Drawing 28-13-97 Sheet 1 of 4, "Bridging area, fixed bridge, covered storage building-masonry," 9 May 1952) 45

70 Placing dynamite to practice demolishing bridge at Fort Bragg, NC, undated (post-WWII) (NARA College Park, RG 111-SC WWII, Box 95, Photo SC147013) 46

71 Camouflage demonstration area, typical layout diagram, Fort Bragg, NC, 1952 (Standard Drawing 28-13-63 Sheet 1 of 1, "Typical layout diagram for a camouflage demonstration area," 8 February 1952) 47

72 Camouflage demonstration area for air forces, typical layout diagram, Fort Bragg, NC, 1952 (Standard Drawing 28-13-64 Sheet 1 of 1, "Typical layout diagram for a camouflage demonstration area, for Air Forces," 8 February 1952) 48

73 Camouflage demonstration area, symbols for camouflage, general plan, Fort Bragg, NC, 1952 (Standard Drawing 28-13-65 Sheet 1 of 1, "Symbols for camouflage, general plan," 5 January 1952) 49

74 Camouflage demonstration area, dummy trees and bushes, Fort Bragg, NC, 1951 (Standard Drawing 28-13-74 Sheet 1 of 1, "Details, typical diagram-camouflage demonstration area, dummy trees, bush, rock and M.G. emplacement," 7 December 1951) 50

75 Camouflage demonstration area, dummy rock, Fort Bragg, NC, 1951 (Standard Drawing 28-13-74 Sheet 1 of 1, "Details, typical diagram-camouflage demonstration area, dummy trees, bush, rock and M.G. emplacement," 7 December 1951) 51

76 Camouflage demonstration area, observation post (dug in type), Fort Bragg, NC, 1951 (Standard Drawing 28-13-77 Sheet 1 of 1, "Details, typical diagram-camouflage demonstration area, observation posts and machine gun emplacements," 7 December 1951) 51

77 Camouflage demonstration area, trenches, Fort Bragg, NC, 1952 (Standard Drawing 28-13-86 Sheet 1 of 1, "Details, typical diagram-camouflage demonstration area, storage methods and quick action drape for plane," 5 January 1952) 52

78 Camouflage demonstration area, foxhole defenses, Fort Bragg, NC, 1951 (Standard Drawing 28-13-82 Sheet 1 of 1, "Details, typical diagram-camouflage demonstration area, field installations and supplies," 7 December 1951) 52

79 Camouflage Demonstration Area, Dummy M.G. Emplacement, Fort Bragg, NC, 1951 (Standard Drawing 28-13-74 Sheet 1 of 1; Details, Typical Diagram-Camouflage Demonstration Area, Dummy Trees, Bush, Rock and M.G. Emplacement; 7 December 1951) 53

80 Camouflage demonstration area, 155 mm gun emplacement, special trench and camouflage of blast marks, Fort Bragg, NC, 1952 (Standard Drawing 28-13-80 Sheet 1 of 2, "Details, typical diagram-camouflage demonstration area, 155 mm Gun emplacement," 30 January 1952) 53

81 Camouflage demonstration area, one 30 caliber machine gun emplacement (two man foxhole) under cantilever, flat top, artificial material, Fort Bragg, NC, 1951 (Standard Drawing 28-13-77 Sheet 1 of 1, "Details, typical diagram-camouflage demonstration area, observation posts and machine gun emplacements," 7 December 1951) 54

82 Camouflage demonstration area, one 50 caliber machine gun emplacement (standing type foxhole-3-man) under flat top with natural material, etc., Fort Bragg, NC, 1951 (Standard Drawing 28-13-77 Sheet 1 of 1, "Details, typical diagram-camouflage demonstration area, observation posts and machine gun emplacements," 7 December 1951) 55

Figure **Page**

83 Camouflage demonstration area, buggy-top over m.g. emplacement, Fort Bragg, NC, 1951 (Standard Drawing 28-13-87 Sheet 1 of 1, “Details, typical diagram-camouflage demonstration area, terraced flat top for plane and buggy – top for M.G. emplacement," 7 December 1951) 56

84 Camouflage demonstration area, emplacement for 155 mm howitzer, Fort Bragg, NC, 1952 (Standard Drawing 28-13-79 Sheet 1 of 2, “Details, typical diagram-camouflage demonstration area, emplacement for 155 mm howitzer,” 8 February 1952) 57

85 Camouflage demonstration area, 155 mm gun emplacement, plan and section through ramp, Fort Bragg, NC, 1952 (Standard Drawing 28-13-80 Sheet 1 of 2, "Details, typical diagram-camouflage demonstration area, 155 mm gun emplacement," 30 January 1952) 58

86 Camouflage demonstration area, 155 mm gun emplacement, Fort Bragg, NC, 1952 (Standard Drawing 28-13-80 Sheet 2 of 2, “Details, typical diagram-camouflage demonstration area, 155 mm gun emplacement,” 30 January 1952) 59

87 Camouflage demonstration area, 155 mm gun emplacement, ammunition shelter, Fort Bragg, NC, 1952 (Standard Drawing 28-13-80 Sheet 1 of 2, "Details, typical diagram-camouflage demonstration area, 155 mm gun emplacement," 30 January 1952) 60

88 Camouflage demonstration area, roadside bank storage location, Fort Bragg, NC, 1952 (Standard Drawing 28-13-86 Sheet 1 of 1, "Details, typical diagram-camouflage demonstration area, storage methods and quick action drape for plane," 5 January 1952) 60

89 Camouflage demonstration area, ammunition boxes, Fort Bragg, NC, 1951 (Standard Drawing 28-13-82 Sheet 1 of 1, "Details, typical diagram-camouflage demonstration area, field installations and supplies," 7 December 1951) 60

90 Camouflage demonstration area, bomb storage unit plan, Fort Bragg, NC, 1952 (Standard Drawing 28-13-86 Sheet 1 of 1, "Details, typical diagram-camouflage demonstration area, storage methods and quick action drape for plane," 5 January 1952) 61

91 Camouflage demonstration area, bomb storage unit section, Fort Bragg, NC, 1952 (Standard Drawing 28-13-86 Sheet 1 of 1, "Details, typical diagram-camouflage demonstration area, storage methods and quick action drape for plane," 5 January 1952) 61

92 Camouflage demonstration area, mobile field kitchen, Fort Bragg, NC, 1951 (Standard Drawing 28-13-82 Sheet 1 of 1, "Details, typical diagram-camouflage demonstration area, field installations and supplies," 7 December 1951) 62

93 Camouflage demonstration area, taped path, road signs, and sanitation facilities, Fort Bragg, NC, 1951 (Standard Drawing 28-13-82 Sheet 1 of 1, "Details, typical diagram-camouflage demonstration area, field installations and supplies," 7 December 1951) 62

94 Camouflage demonstration area, overhead road screens, Fort Bragg, NC, 1951 (Standard Drawing 28-13-66 Sheet 1 of 1, "Details, typical diagram-camouflage demonstration area, garnishing strip plant and overhead road screens," 7 December 1951) 63

95 Camouflage demonstration area, bill of materials, echelon road screens, lateral road screens, and mat loom, Fort Bragg, NC, 1951 (Standard Drawing 28-13-67 Sheet 1 of 1, "Details, typical diagram-camouflage demonstration area, road screens and mat loom," 7 December 1951) 63

Figure **Page**

96 Camouflage demonstration area, fly-top overhead screen plan and details, Fort Bragg, NC, 1951 (Standard Drawing 28-13-81 Sheet 1 of 1, "Details, typical diagram-camouflage demonstration area, fly-top overhead screen," 7 December 1951) 64

97 Camouflage demonstration area, wet water point, Fort Bragg, NC, 1951 (Standard Drawing 28-13-83 Sheet 1 of 1, "Details, typical diagram-camouflage demonstration area, water points," 7 December 1951) 65

98 Camouflage demonstration area, dry water point, Fort Bragg, NC, 1951 (Standard Drawing 28-13-83 Sheet 1 of 1, "Details, typical diagram-camouflage demonstration area, water points," 7 December 1951) 65

99 Camouflage demonstration area, quick action drape for L-19, Fort Bragg, NC, 1952 (Standard Drawing 28-13-86 Sheet 1 of 1, "Details, typical diagram-camouflage demonstration area, storage methods and quick action drape for plane," 5 January 1952) 66

100 Camouflage demonstration area, terraced flat top for plane, Fort Bragg, NC, 1951 (Standard Drawing 28-13-87 Sheet 1 of 1, "Details, typical diagram-camouflage demonstration area, terraced flat top for plane and buggy – top for M.G. emplacement," 7 December 1951) 67

101 Camouflage demonstration area, camouflage net for single engine plane, Fort Bragg, NC, 1952 (Standard Drawing 28-13-70 Sheet 1 of 2, "Details, typical diagram-camouflage demonstration area, camouflage net for single engine plane," 8 February 1952) 68

102 Firefighter's training tower, Fort Bragg, NC, 1951 (Standard Drawing 28-13-48 Sheet 1 of 1, "Fireman's training tower, plans, elevations, & details," 21 November 1951) 69

103 Gas chamber, roof ventilator details, Fort Bragg, NC, 1952 (Standard Drawing 28-13-46 Sheet 2 of 2, "Gas chamber, details," 28 February 1952) 70

104 CBR area electrical layout, Fort Bragg, NC, 1966 (Standard Drawing 28-13-117 Sheet 28, "Electrical distribution," 28 June 1966) 70

105 Gas chamber, Fort Bragg, NC, 1952 (Standard Drawing 28-13-46 Sheet 1 of 2, "Gas chamber, plan, elevation, and details," 22 February 1952) 71

106 Gas chamber, typical cross section, Fort Bragg, NC, 1952 (Standard Drawing 28-13-46 Sheet 2 of 2, "Gas chamber, details," 28 February 1952) 72

107 Gas chamber, sections through porticos, Fort Bragg, NC, 1952 (Standard Drawing 28-13-46 Sheet 2 of 2, "Gas chamber, details," 28 February 1952) 72

108 All tricks and techniques of hand-to-hand combat are taught to aviation cadets at Navy Pre-Flight School, Del Monte, CA, December 1942 (NARA College Park, RG 80-G, Box 1694, Photo 417671) 73

109 Judo instructor showing a new trick at MCRD Parris Island, SC, undated (NARA College Park, RG 127-GC, Box 34, Photo 15288) 74

110 Marine recruits practicing an effective judo hold in the disarming of an opponent at MCB San Diego, CA, undated (NARA College Park, RG 127-GC, Box 3, Photo 42693) 74

111 General training at MCB San Diego, CA, 1942 (NARA College Park, RG 127-GC-46, Box 3, Photo 402614) 75

112 Struggle pit on the leader's course at Fort Jackson, SC, 8 January 1952 (NARA College Park, RG 111-SC WWII, Box 226, Photo SC39401) 75

Figure **Page**

113 Hand-to-hand combat area, plan , Fort Bragg, NC, 1966 (Standard Drawing 28-13-117 Sheet 18, "Construction of ranges, phase I, U.S. ATC facilities, Fort Bragg, NC, hand-to-hand combat area," 28 June 1966) 76

114 Hand-to-hand combat area, section, Fort Bragg, NC, 1966 (Standard Drawing 28-13-117 Sheet 18, "Construction of ranges, phase I, U.S. ATC facilities, Fort Bragg, NC, hand-to-hand combat area," 28 June 1966) 77

115 Hand-to-hand combat area, platform, Fort Bragg, NC, 1966 (Standard Drawing 28-13-117 Sheet 18, “Construction of ranges, phase I, U.S. ATC facilities, Fort Bragg, NC, hand-to-hand combat area,” 28 June 1966) 77

116 Hand-to-hand combat area, walls, Fort Bragg, NC, 1966 (Standard Drawing 28-13-117 Sheet 18, “Construction of ranges, phase I, U.S. ATC facilities, Fort Bragg, NC, hand-to-hand combat area,” 28 June 1966) 77

117 Basic trainees learn how to disarm an opponent with a knife in hand-to-hand combat training at Fort Jackson, SC, 12 August 1962 (NARA College Park, RG 111-SC post-1955, Box 376, Photo SC598114) 78

118 Map reading course at Fort Campbell, KY, 27 May 1966 (NARA College Park, RG 111-SC post-1955, Box 401, Photo SC630284) 78

119 National Guard training through barbed wire course at Fort Sill, OK, 1918 (New York Public Library, Digital Number 437655) 79

120 Barbed wire portion on new obstacle course at NAS Lakehurst, New Jersey, 20 February 1943 (NARA College Park, RG 80-G, Box 1887, Photo 450288) 79

121 Stevedores going under barbed wire netting at Camp Peary, VA, 16 June 1943 (NARA College Park, RG 80-G, Box 427, Photo 101087) 80

122 Obstacle course phase of raider training at Amphibious Training Base Fort Pierce, FL, 9 December 1943 (NARA College Park, RG 80-G, Box 862, Photo 264391) 80

123 Marines training on the obstacle course go over an 8-ft fence on the double at Camp Lejeune, NC, November 1942 (NARA College Park, RG 127-GC, Box 22, Photo 5019) 81

124 Men climbing and jumping rail fence at Navy pre-flight school, Saint Mary’s College, Moraga, CA, December 1942 (NARA College Park, RG 80-G, Box 1694, Photo 417671) 81

125 Seabees swarm down one of the cargo nets obstacles on the Commando Course at Camp Endicott, Davisville, RI, 27 March 1943 (NARA College Park, RG 80-G, Box 184, Photo 40993) 82

126 Obstacle course at Fort Jackson, SC, 28 April 1943 (NARA College Park, RG 111-SC WWII, Box 155, Photo SC173955) 82

127 Obstacle course at Fort Jackson, SC, 28 April 1943 (NARA College Park, RG 111-SC WWII, Box 155, Photo SC173956) 83

128 Seabees go over an obstacle built of logs at Camp Endicott, Davisville, RI, May 1943 (NARA College Park, RG 80-G, Box 172, Photo 38081) 83

129 Aviation cadets during physical training program at Maxwell Field, Montgomery, AL, 28 September 1944 (NARA College Park, RG 342-FH, Box 2207, Photo 4A-18378) 84

130 Airmen during obstacle course portion of a physical training program at Chico Army Air Field, CA, 4 December 1945 (NARA College Park, RG 342-FH, Box 2207, Photo 4A-18349) 84

131 Recruit conditioning program at MCRD Parris Island, SC, 10 August 1956 (NARA College Park, RG 127-GC, Box 34, Photo A69268) 85

Figure **Page**

132 Recruits maneuvering through the “Tough One” at MCRD Parris Island, SC, 9 February 1961 (NARA College Park, RG 127-GC, Box 34, Photo A601417) 85

133 Airmen during overhead bars portion of a physical training program at Chico Army Air Field, CA, 4 December 1945 (NARA College Park, RG 342-FH, Box 2207, Photo 4A-18346) 86

134 A recruit platoon runs one of the many obstacle courses at MCRD Parris Island, SC, 19 September 1956 (NARA College Park, RG 127-GC, Box 34, Photo A600481) 86

135 Rope bridge portion on new obstacle course at NAS Lakehurst, NJ, 20 February 1943 (NARA College Park, RG 80-G, Box 1887, Photo 450293) 87

136 Trainees on rope bridge on the commando course at Camp Endicott, Davisville, RI, March 27 March 1943 (NARA College Park, RG 80-G, Box 184, Photo 40990) 87

137 Seabees on the commando course at Camp Endicott, Davisville, RI, March 1943 (NARA College Park, RG 80-G, Box 172, Photo 38087) 88

138 Recondo students walk across rope crossing at Fort Campbell, KY, 6 April 1959 (NARA College Park, RG 111-SC post-1955, Box 348, Photo SC565919) 88

139 Crawling through tunnels on the obstacle course at Fort Jackson, SC, 28 April 1943 (NARA College Park, RG 111-SC WWII, Box 155, Photo SC173954) 89

140 Bombing class advancing from shellhole to shellhole at Camp Wheeler, CA, 1918 (New York Public Library, Digital Number 117147) 89

141 New obstacle course at NAS Lakehurst, New Jersey, 20 February 1943 (NARA College Park, RG 80-G, Box 188, Photo 45028) 90

142 Airmen during obstacle course portion of a physical training program at Chico Army Air Field, CA, 4 December 1945 (NARA College Park, RG 342-FH, Box 2207, Photo 4A-18347) 90

143 Recruits go through daily physical workouts at the obstacle course at MCRD Parris Island, SC, 1967 (NARA College Park, RG 127-GG-921, Box 33, Photo A601758) 91

144 Litter obstacle course, layout of litter obstacle course, Fort Bragg, NC, 1951 (Standard Drawing 28-13-39 Sheet 1 of 1, "Litter obstacle course, layout and details," 21 November 1951) 92

145 Litter obstacle course, major wire obstacle, Fort Bragg, NC, 1951 (Standard Drawing 28-13-39 Sheet 1 of 1, "Litter obstacle course, layout and details," 21 November 1951) 92

146 Litter obstacle course, wire fence and logs, Fort Bragg, NC, 1951 (Standard Drawing 28-13-39 Sheet 1 of 1, "Litter obstacle course, layout and details," 21 November 1951) 93

147 Litter obstacle course, low hurdle, Fort Bragg, NC, 1951 (Standard Drawing 28-13-39 Sheet 1 of 1, "Litter obstacle course, layout and details," 21 November 1951) 93

148 Litter obstacle course, posts or stumps and high log obstacles, Fort Bragg, NC, 1951 (Standard Drawing 28-13-39 Sheet 1 of 1, "Litter obstacle course, layout and details," 21 November 1951) 94

149 Litter obstacle course, culvert & ditch and high wall, Fort Bragg, NC, 1951 (Standard Drawing 28-13-39 Sheet 1 of 1, "Litter obstacle course, layout and details," 21 November 1951) 94

150 Litter obstacle course, partially blown bridge, Fort Bragg, NC, 1951 (Standard Drawing 28-13-39 Sheet 1 of 1, "Litter obstacle course, layout and details," 21 November 1951) 95

Figure **Page**

151 Litter obstacle course, steps, Fort Bragg, NC, 1951 (Standard Drawing 28-13-39 Sheet 1 of 1, "Litter obstacle course, layout and details," 21 November 1951) 95

152 Physical combat proficiency test area, layout plan, track detail, and typical marker post, Fort Bragg, NC, 1966 (Standard Drawing 28-13-117 Sheet 19, "Construction of ranges, phase I, U.S. ATC Facilities, Fort Bragg, NC, physical combat proficiency test area," 28 June 1966) 96

153 Physical combat proficiency test area, quarter-mile track and test area, Fort Bragg, NC, 1966 (Standard Drawing 28-13-117 Sheet 19, "Construction of ranges, phase I, U.S. ATC facilities, Fort Bragg, NC, physical combat proficiency test area," 28 June 1966) 96

154 Physical combat proficiency test area, dodge, run and jump course, Fort Bragg, NC, 1966 (Standard Drawing 28-13-117 Sheet 19, "Construction of ranges, phase I, U.S. ATC facilities, Fort Bragg, NC, physical combat proficiency test area," 28 June 1966) 97

155 Physical combat proficiency test area, horizontal ladder facility, Fort Bragg, NC, 1966 (Standard Drawing 28-13-117 Sheet 19, "Construction of ranges, phase I, U.S. ATC facilities, Fort Bragg, NC, physical combat proficiency test area," 28 June 1966) 98

156 Special forces rappelling training tower at Fort Bragg, NC, 22 March 1961 (NARA College Park, RG 111-SC post-1955, Box 362, Photo SC581114) 99

157 Special forces rappelling training tower at Fort Bragg, NC, 18 September 1963 (NARA College Park, RG 111-SC post-1955, Box 385, Photo SC609492) 100

158 Training on victory tower at Fort Jackson, SC, 10 April 1978 (NARA College Park, RG 111-SC post-1955, Box 435, Photo SC675251) 101

159 Suspension traverse at Fort Bragg, NC, 11 March 1965 (NARA College Park, RG 111-SC post-1955, Box 389, Photo SC614386) 102

160 Sanitation display area, Fort Bragg, NC, 1952 (Standard Drawing 28-13-41 Sheet 1 of 3, "Sanitation display area, field facilities, layout plan," 11 April 1952) 102

161 Sanitation display area legend, Fort Bragg, NC, 1952 (Standard Drawing 28-13-41 Sheet 1 of 3, "Sanitation display area, field facilities, layout plan," 11 April 1952) 103

162 Sanitation display area, lyster bag, Fort Bragg, NC, 1952 (Standard Drawing 28-13-41 Sheet 2 of 3, "Sanitation display area, field facilities, details," 11 April 1952) 104

163 Sanitation display area, table for water purification, Fort Bragg, NC, 1952 (Standard Drawing 28-13-41 Sheet 2 of 3, "Sanitation display area, field facilities, details," 11 April 1952) 104

164 Sanitation display area, helmet rack washstand, Fort Bragg, NC, 1952 (Standard Drawing 28-13-41 Sheet 2 of 3, "Sanitation display area, field facilities, details," 11 April 1952) 105

165 Sanitation display area, hand washing devices, Fort Bragg, NC, 1952 (Standard Drawing 28-13-41 Sheet 2 of 3, "Sanitation display area, field facilities, details," 11 April 1952) 106

166 Sanitation display area, hand washing devices, Fort Bragg, NC, 1952 (Standard Drawing 28-13-41 Sheet 2 of 3, "Sanitation display area, field facilities, details," 11 April 1952) 106

167 Sanitation display area, improved field shower, Fort Bragg, NC, 1952 (Standard Drawing 28-13-41 Sheet 2 of 3, "Sanitation display area, field facilities, details," 11 April 1952) 107

168 Sanitation display area, suspended food container, Fort Bragg, NC, 1952 (Standard Drawing 28-13-41 Sheet 2 of 3, "Sanitation display area, field facilities, details," 11 April 1952) 108

Figure **Page**

169 Sanitation display area, raised food container, Fort Bragg, NC, 1952 (Standard Drawing 28-13-41 Sheet 2 of 3, "Sanitation display area, field facilities, details," 11 April 1952) 108

170 Sanitation display area, gasoline mess-kit washing unit, Fort Bragg, NC, 1952 (Standard Drawing 28-13-41 Sheet 3 of 3, "Sanitation display area, field facilities, details," 11 April 1952) 109

171 Sanitation display area, incinerator drum on cross trench, Fort Bragg, NC, 1952 (Standard Drawing 28-13-41 Sheet 3 of 3, "Sanitation display area, field facilities, details," 11 April 1952) 109

172 Sanitation display area, straddle trench latrine, Fort Bragg, NC, 1952 (Standard Drawing 28-13-41 Sheet 3 of 3, "Sanitation display area, field facilities, details," 11 April 1952) 110

173 Sanitation display area, bucket latrine, Fort Bragg, NC, 1952 (Standard Drawing 28-13-41 Sheet 3 of 3, "Sanitation display area, field facilities, details," 11 April 1952) 110

174 Sanitation display area, pit latrine, Fort Bragg, NC, 1952 (Standard Drawing 28-13-41 Sheet 3 of 3, "Sanitation display area, field facilities, details," 11 April 1952) 111

175 Sanitation display area, pipe and funnel type urinal, Fort Bragg, NC, 1952 (Standard Drawing 28-13-41 Sheet 3 of 3, "Sanitation display area, field facilities, details," 11 April 1952) 111

176 Signal Corps semaphore training at unknown location, February 1918 (New York Public Library, Digital Number 117092) 112

177 CMTC students on range message center at Camp Vail, NJ, 1923 (NARA College Park, RG 111-SC WWI, Box 700, Photo 94910) 112

178 An arm and shoulder exercise while on poles at Fort Jackson, SC, 23 April 1943 (NARA College Park, RG 111-SC WWII, Box 161, Photo SC175417) 113

179 Bayonet Training Area (Training Dummies and Bleachers), Fort Bragg, NC, 17 May 2006 122

180 Bayonet Training Dummy, Fort Bragg, NC, 17 May 2006 122

181 Bayonet Training Area (Training Dummies and Bayonet Assault Course), Fort Bragg, NC, 17 May 2006 122

Preface

This study was conducted for the Legacy Resource Management Program, Cultural Resources Management, under project "Activity A1450-MIPR to ERDC PN05-265." Funding was provided by Military Interdepartmental Purchase Request (MIPR) W31RYO51541162. The Legacy Resource Management Program technical monitor was Hillori Schenker, Cultural Resources Specialist.

The work was performed by the Land and Heritage Conservation Branch (CN-C) of the Installations Division (CN), Construction Engineering Research Laboratory (CERL). The CERL Project Manager was Adam Smith. Daniel Archibald, was primary compiler of the historical information; Sunny Adams was assistant architectural historian; Manroop Chawla was environmentalist, and Daniel Smith (IMCOM) was the military training history expert. Special thanks are owed to those that assisted with the development of this historic context: Holly Reed, Teresa Roy, and Donna Larker in the Still Pictures Room at the National Archives in College Park, MD; Andrew Knight, Priscilla Dyson, and Ivy Yarbough in the Cartographic and Architectural Record Room at the National Archives in College Park, MD; Pat Lacey, ERDC-CERL Librarian; Michelle Michael at Fort Bragg, NC; John Doss at Fort Bragg, NC; Laurie Rush at Fort Drum, NY; Ruth Lewis at Fort Gordon, GA; Pam Anderson at Naval Base, Norfolk, Virginia; Jim Dolph at Portsmouth Navy Yard; and Brian Lione, former Deputy Federal Preservation Officer, Office of the Secretary of Defense. Dr. Christopher White is Chief, CN-C, and Dr. John T. Bandy is Chief, CN. The Director of CERL is Dr. Ilker R. Adiguzel.

CERL is an element of the U.S. Army Engineer Research and Development Center (ERDC), U.S. Army Corps of Engineers. The Commander and Executive Director of ERDC is COL Gary E. Johnston, and the Director of ERDC is Dr. Jeffery P. Holland.

Unit Conversion Factors

Multiply	By	To Obtain
acres	4,046.873	square meters
degrees Fahrenheit	(F-32)/1.8	degrees Celsius
feet	0.3048	meters
gallons (U.S. liquid)	3.785412 E-03	cubic meters
horsepower (550 foot-pounds force per second)	745.6999	watts
inches	0.0254	meters
miles (U.S. statute)	1,609.347	meters
square feet	0.09290304	square meters
square miles	2.589998 E+06	square meters
square yards	0.8361274	square meters
yards	0.9144	meters

1 Introduction

Background

Through the years, laws have been enacted to preserve our national cultural heritage. The Antiquities Act of 1906, which was the first major Federal preservation legislation to be enacted, was instrumental in securing protection for archeological resources on Federal property. The benefits derived from this Act and subsequent legislation precipitated an expanded and broader need for the preservation of historic cultural resources. This growing awareness was codified in the most sweeping legislation to date, the National Historic Preservation Act of 1966 (NHPA).

The NHPA was created to provide guidelines and requirements aimed at preserving tangible elements of our past primarily through the creation of the National Register of Historic Places (NRHP). Contained within this piece of legislation (Sections 110 and 106) are requirements for Federal agencies to address their cultural resources, defined as any prehistoric or historic district, site, building, structure, or object. Section 110 requires Federal agencies to inventory and evaluate their cultural resources. Section 106 requires the determination of effect of Federal undertakings on properties listed on, deemed eligible for, or potentially eligible for the NRHP, and requires Federal agencies to take into account the effect of a project on a property and to afford the State Historic Preservation Officer/Tribal Historic Preservation Officer (SHPO/THPO) a reasonable opportunity to comment on the undertaking.

According to National Register Bulletin #15, "How to Apply the National Register of Criteria for Evaluation," and National Register Bulletin #16a, "How to Complete the National Register Registration Form define historic contexts," for a building, structure, object, or a district to be eligible for the National Register, it must:

> represent a significant part of the history, architecture, archeology, engineering, or culture of an area, and it must have the characteristics that make it a good representative of properties associated with that aspect of the past. The significance of a historic property can be judged and explained only when it is evaluated within its historic context. ... Historic contexts are those patterns or trends in history by which a specific occurrence, property, or site is understood and its meaning (and ultimately its significance) within history or prehistory is made clear.

> A historic context is necessary to help researchers and persons involved in inventorying buildings for eligibility to the National Register, address these five factors:
>
> 1. The facet of prehistory or history of the local area, State, or the nation that the property represents
> 2. Whether that facet of prehistory or history is significant
> 3. Whether it is a type of property that has relevance and importance in illustrating the historic context
> 4. How the property illustrates that history
> 5. Whether the property possesses the physical features necessary to convey the aspect of prehistory or history with which it is associated.
>
> *National Register Bulletin #15*

This project work was undertaken to develop a historic context for the development of military training lands used by the U.S. Department of Defense (DOD) and its forerunners.

Objectives

The initial objective of this project was to develop a historic context for the development of military training lands used by the DOD and its forerunners.

Approach

This work was performed in four steps:

1. A literature review was done in the area of military training.
2. Original photographs and training plans were gathered from a variety of archival centers.
3. A site visit was made to a large-scale training installation to photograph extant training facilities.
4. Data was collected and analyzed, and conclusions were drawn.

Literature review

The research team used secondary literature to determine the general history of military training throughout the development of War Department and the Navy Department (and subsequently the DOD—Army, Navy, and Air Force). The military literature review consisted of reading the various training manuals pushed out by those departments and a variety of military training histories published by and for those departments.

Archival research

The research team then located primary research materials and additional secondary materials to establish a strategy to best use these resources. The research team conducted four visits to the National Archives in Washington, DC and the National Archives at College Park, MD. They occurred during the weeks of 6 February 2006, 27 February 2006, 17 April 2006, and 22 May 2006. Other archival depositaries visited were the Library of Congress, 27 February 2006; the Naval Photo Library at the Washington Navy Yard, 17 April 2006; the History Office at the Corps of Engineers, Alexandria, VA, 17 April 2006; and a variety of installation museums, cultural resources offices, and archives across the country.

Site visits

Two members of the research conducted a site visit to Fort Bragg, NC. Fort Bragg was chosen for the site visit because it had one of the largest groupings of different training lands in the DOD; the complexity of its training lands; and the level of historical background that Fort Bragg had on its training lands.

Analysis

After the initial research was complete, the team analyzed the gathered information. The researchers outlined the historical context for military training, identified changes in history and use over time, identified important chronological periods, established a geographical context, and identified historical themes. The analysis resulted in an outline of military training divided into eight significant periods:

- Pre-Civil War (up to 1861)
- Civil War (1861-1865)
- National Expansion (1865-1916)
- World War I (1917-1920)
- Interwar (1921-1940)
- World War II (1941-1945)
- Early Cold War (1946-1955)
- Late Cold War (1956-1989).

Scope

Military training that occurred inside buildings and the Cold War missile programs are not part of this historic context.

The complexity of military training across the services required four historic contexts to be developed, each geared to a particular type of training:

1. Small arms ranges
2. Large arms ranges
3. Training villages, mock sites, and large-scale operation areas
4. Miscellaneous training sites.

This report details the history of miscellaneous training sites.

Mode of technology transfer

This report will be made accessible through the World Wide Web (WWW) at URL: http://www.cecer.army.mil

2 Miscellaneous Training Areas

The U.S. military created a variety of training areas to teach new soldiers map reading, hand-to-hand combat, bayonet techniques and other basic skills. Training areas or ranges were also created to instruct engineers, cavalrymen, firefighters, and other personnel in the more specialized duties of their specific military roles. This report contains a variety of such "miscellaneous" training areas. This chapter lists these areas alphabetically, and gives descriptions, drawings, and historical photographs where available. Present-day photographs and evaluation material follow the list of ranges.

Bayonet training

Soldiers were trained to use bayonets (knives that could be attached to the muzzle of the rifle barrel) as a close combat fighting weapon. Initial training included learning how to affix and remove the bayonet, and performing drill motions as a group ("American Training Bayonet"). This may have been performed at a bayonet training court. After basic skills were mastered, soldiers ran a timed bayonet assault course that gave them experience moving with a bayonet, maneuvering obstacles, and using offensive and defensive fighting techniques ("Bayonet Training"). Additional bayonet training was completed using pugil sticks to give soldiers a simulated fighting experience of using the bayonet in close combat.

Figure 1. Seabees during bayonet training at Camp Endicott, Davisville, RI, May 1943 (NARA College Park, RG 80-G, Box 172, Photo 38061).

Figure 2. Learning some of the fundamentals of bayonet fighting at MCRD San Diego, CA, 8 June 1954 (NARA College Park, RG 127-GC-68, Box 5, Photo A226850).

Bayonet training court

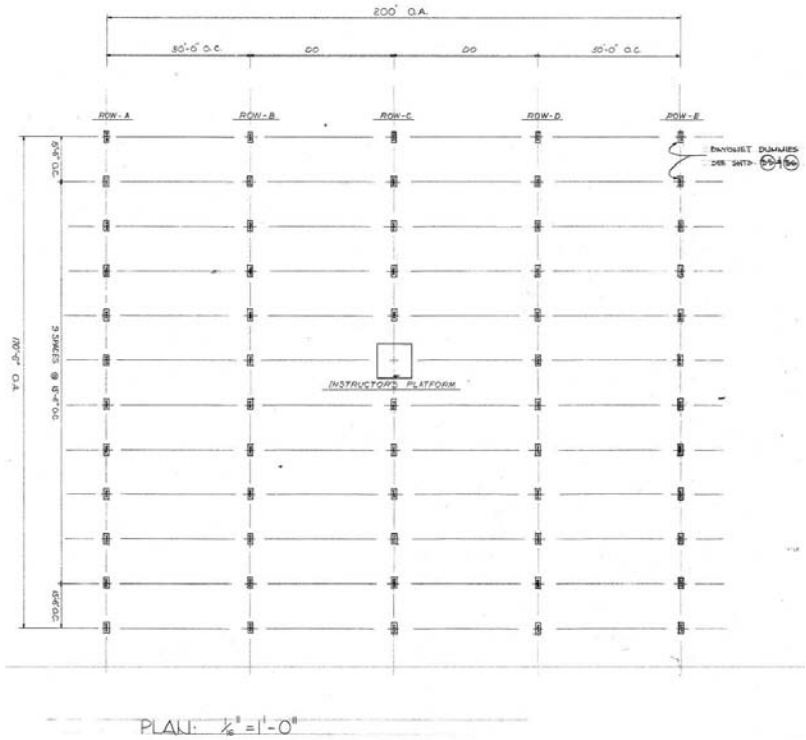

Figure 3. ATC Facilities, bayonet training court, plan, Fort Bragg, NC, 1966 (Standard Drawing 28-13-117 Sheet 17; "Construction of ranges, phase 1, U.S. ATC facilities, Fort Bragg, NC, bayonet training court," 28 June 1966).

Bayonet dummies

Figure 4. Every Marines boot spends hours on the bayonet course learning just how to jab the cold steel when it counts; after practice each recruit must run a course against time and form at MCB San Diego, CA, February 1944 (NARA College Park, RG 127-GC-68, Box 5, Photo 35374).

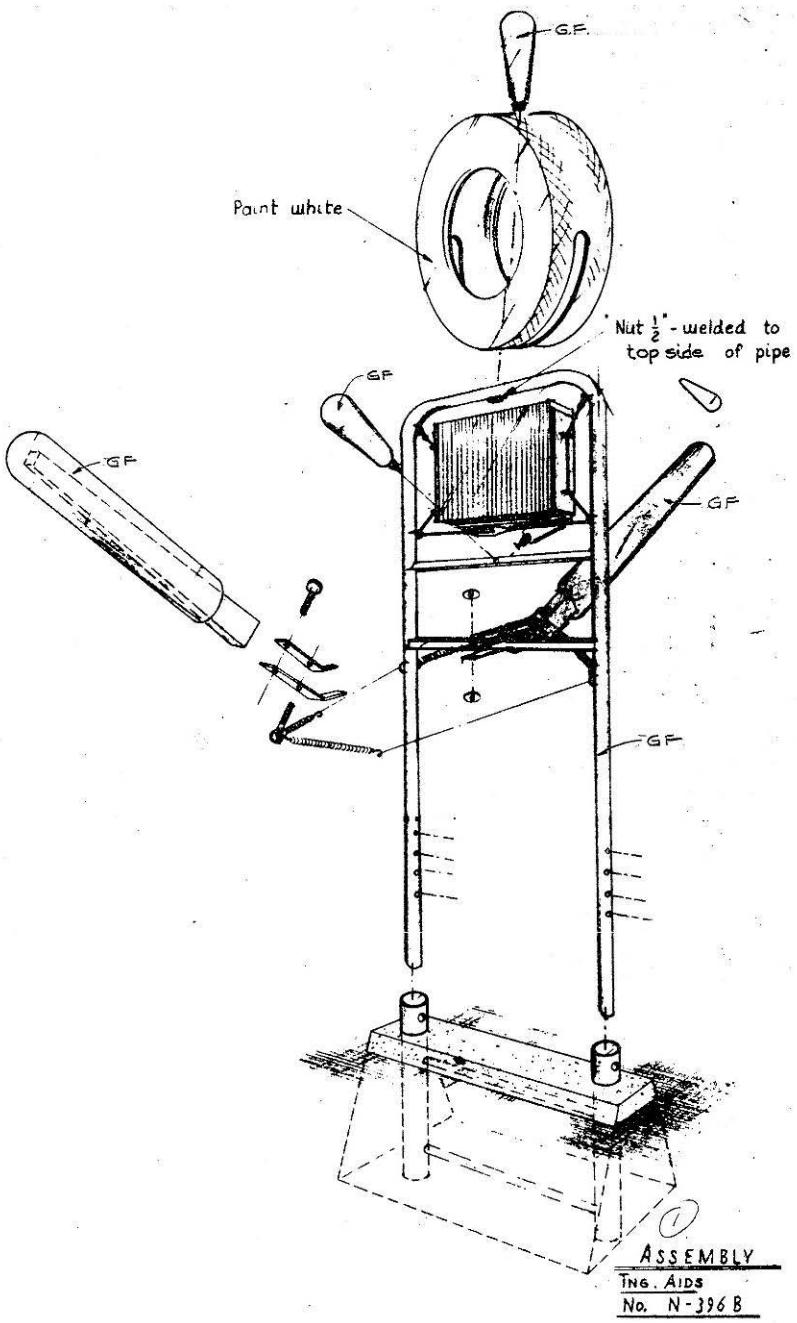

Figure 5. Bayonet dummy, Fort Bragg, NC, 1966 (Standard Drawing 28-13-117 Sheet 25, "Bayonet dummy," 28 June 1966).

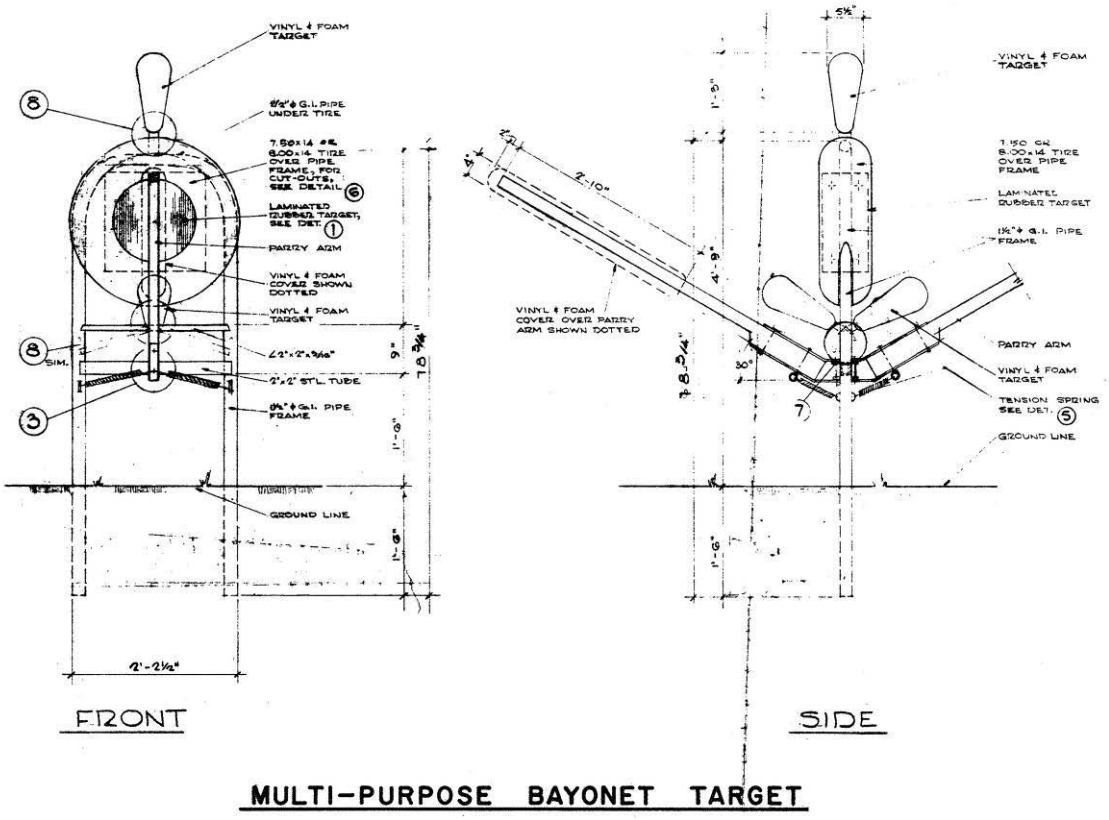

Figure 6. Multi-purpose bayonet target, Fort Bragg, NC, 1966 (Standard Drawing 28-13-117 Sheet 26, "Bayonet dummy—details," 28 June 1966).

Instructor's platform

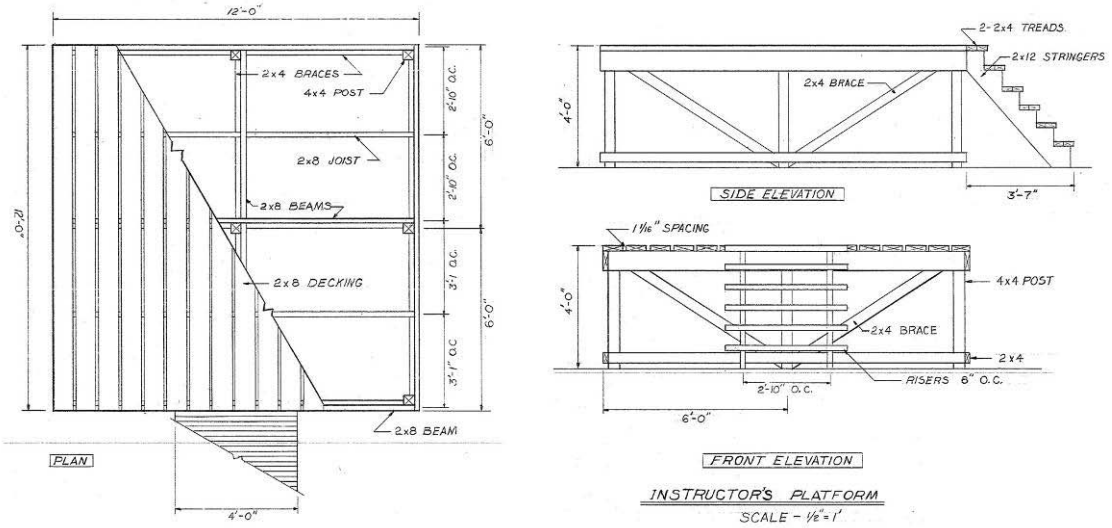

Figure 7. ATC facilities, bayonet training court, instructor's platform, Fort Bragg, NC, 1966 (Standard Drawing 28-13-117 Sheet 17, "Construction of Ranges, Phase 1, U.S. ATC Facilities, Fort Bragg, NC, Bayonet Training Court," 28 June 1966).

Bayonet assault courses

Figure 8. Attack wave jumping barbed wire entanglement at Fort Sheridan, IL, November 1917 (New York Public Library, Digital Number 117158).

Figure 9. Jump and bayonet practice at Fort Sheridan, IL, November 1917 (New York Public Library, Digital Number 117160).

Figure 10. Soldiers running through the bayonet course at Camp Wheeler, GA, 1918 (New York Public Library, Digital Number 117148).

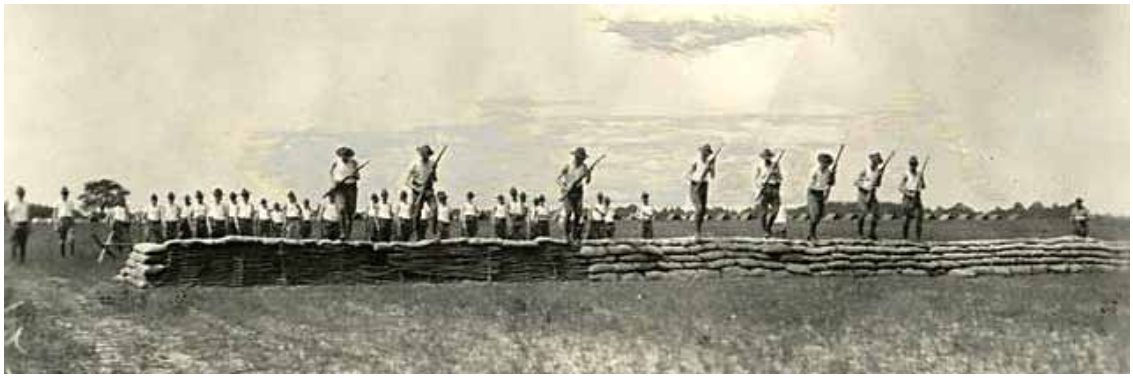

Figure 11. Assault course at Camp Lee, VA, 1918 (New York Public Library, Digital Number 117093).

Figure 12. Soldiers charging with bayonets at unknown location, 1918 (New York Public Library, Digital Number 117189).

Figure 13. Combat conditioning including Judo and knife and physical drill under arms at MCRD San Diego, CA, undated (NARA College Park, RG 127-GC-68, Box 5, Photo 402885).

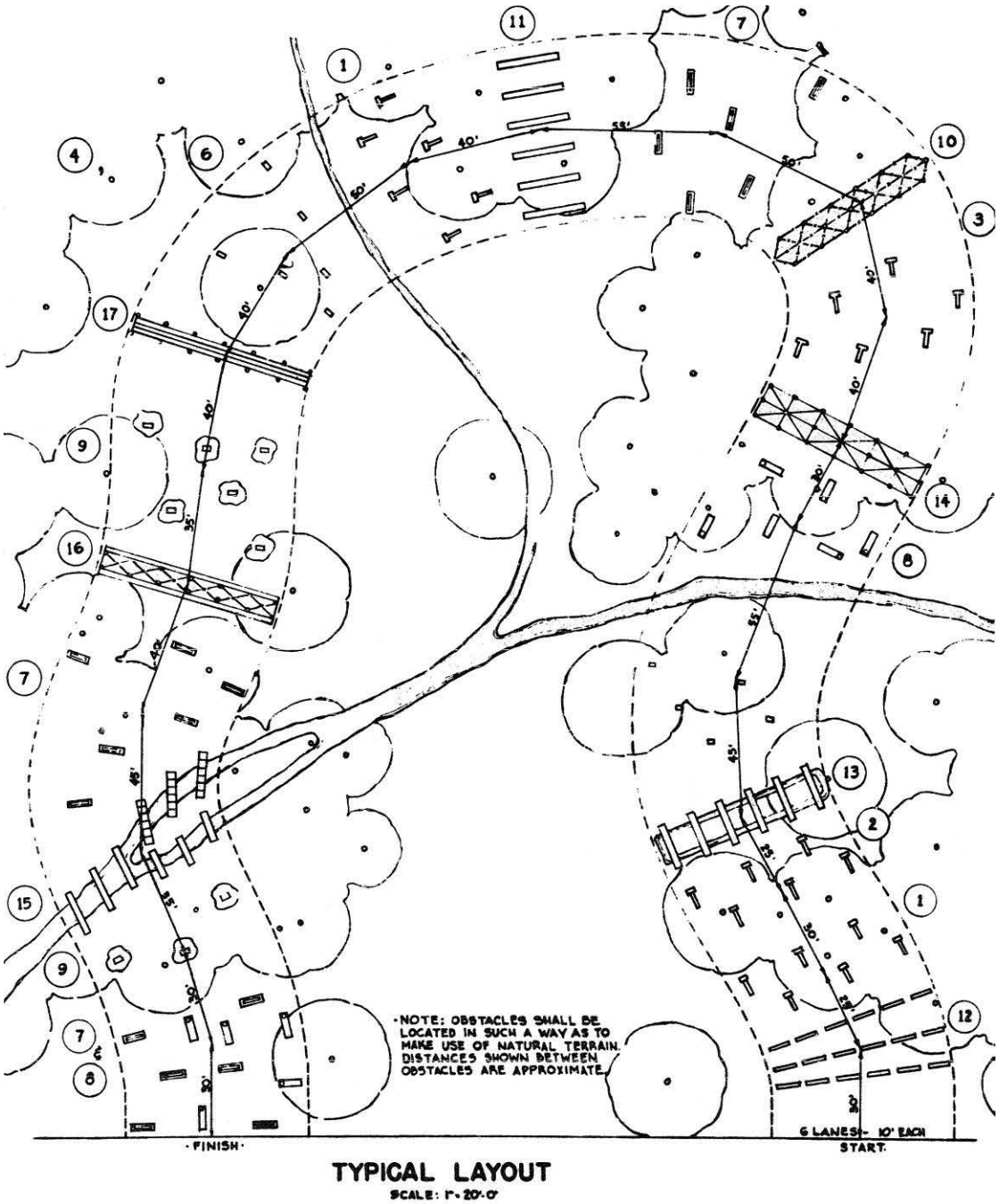

Figure 14. Bayonet assault course, typical layout, Fort Bragg, NC, 1951 (Standard Drawing 28-13-33 Sheet 1 of 1, "Bayonet assault course, typical layout and details," 21 November 1951).

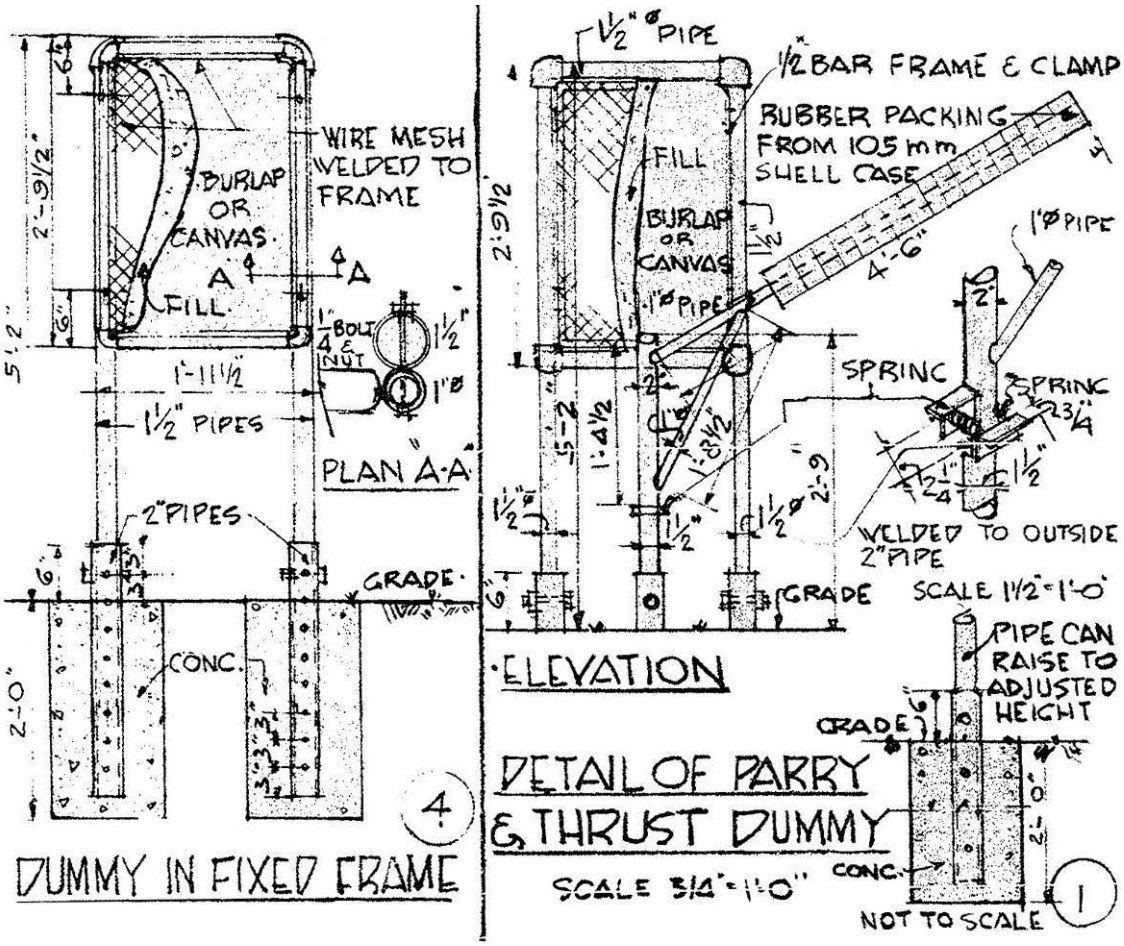

Figure 15. Bayonet assault course, dummy in a fixed frame and details of parry & thrust dummy, Fort Bragg, NC, 1951 (Standard Drawing 28-13-33 Sheet 1 of 1, "Bayonet assault course, typical layout and details," 21 November 1951).

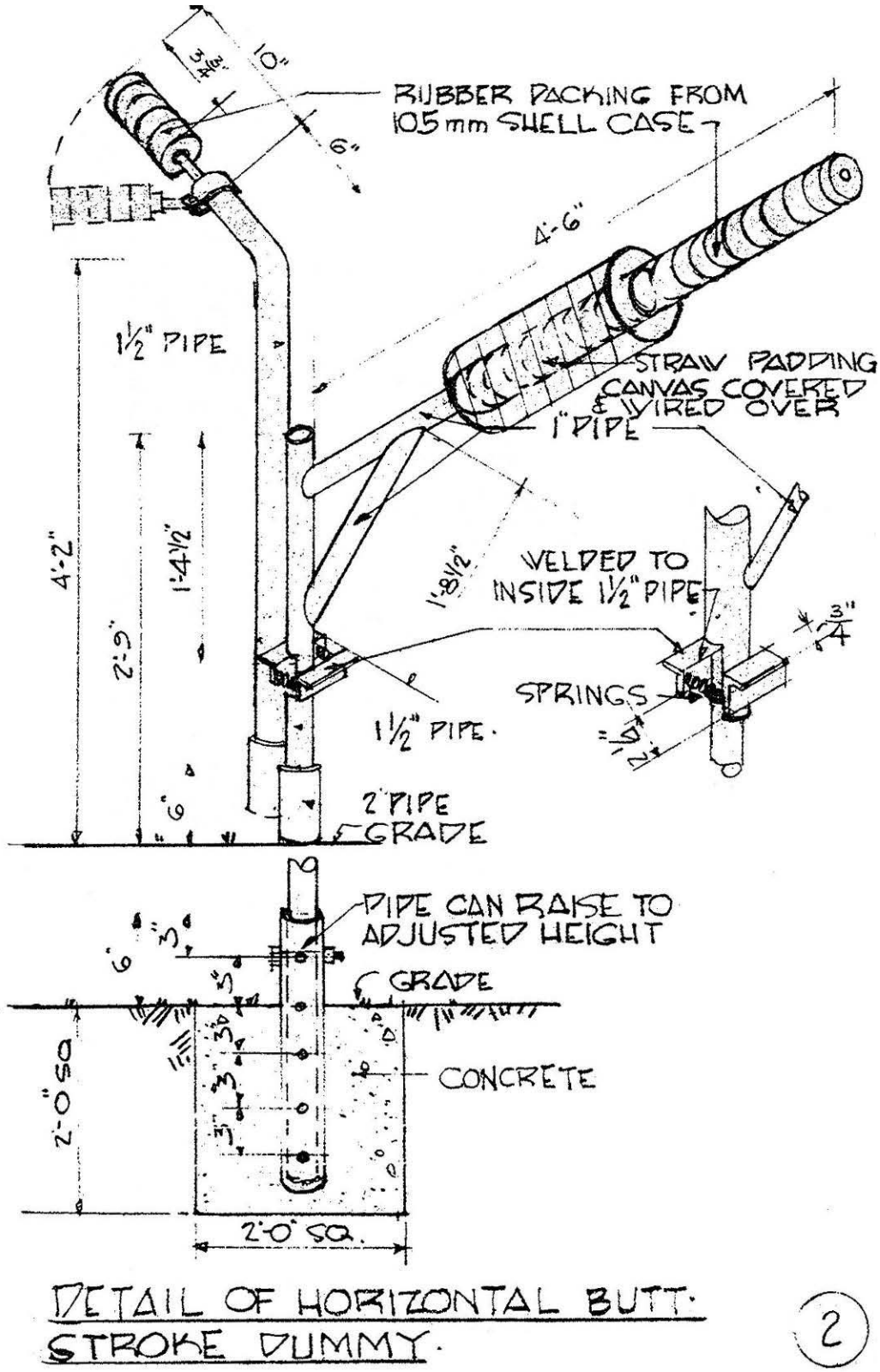

Figure 16. Bayonet assault course, detail of horizontal butt stroke dummy, Fort Bragg, NC, 1951 (Standard Drawing 28-13-33 Sheet 1 of 1, "Bayonet assault course, typical layout and details," 21 November 1951).

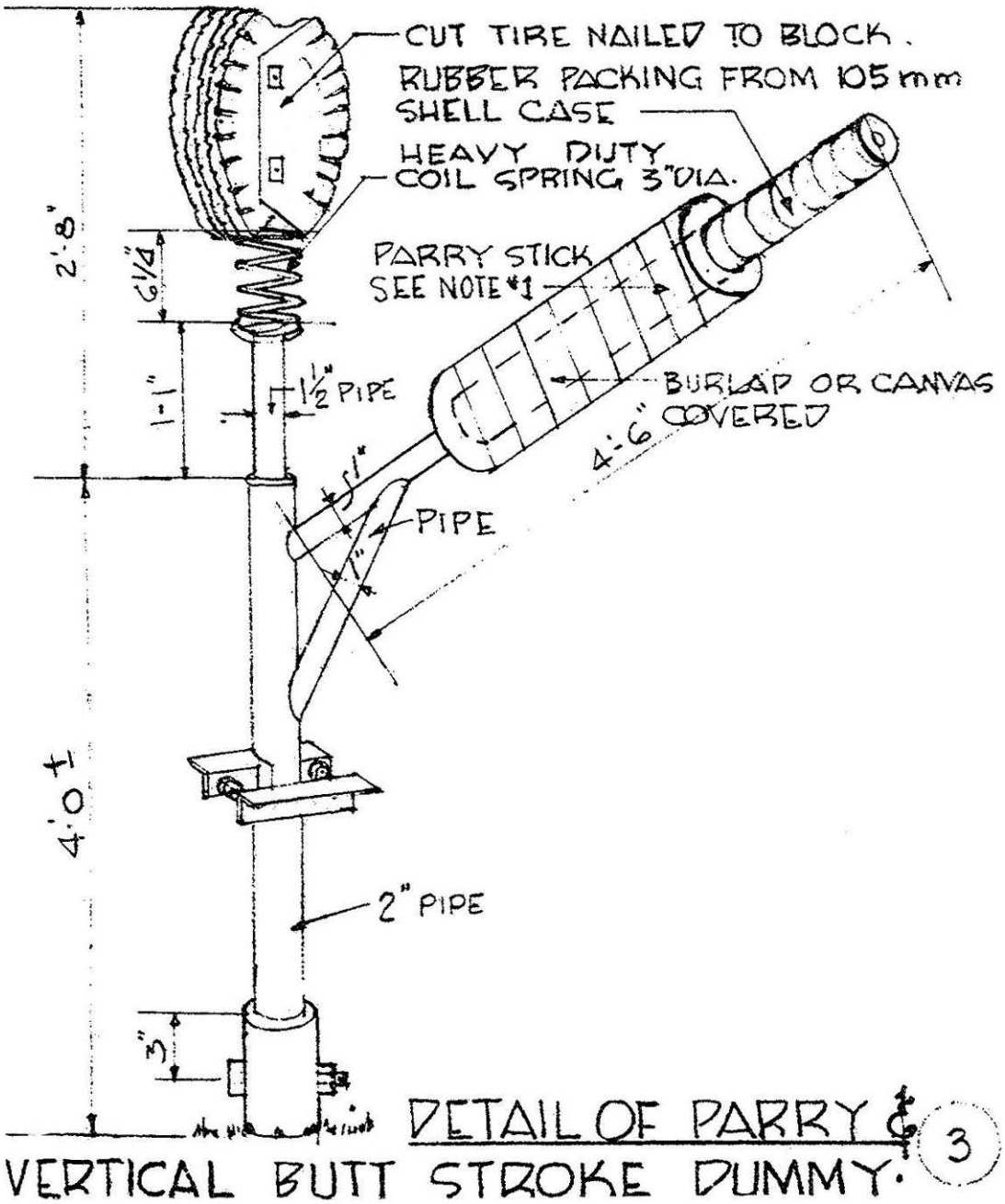

Figure 17. Bayonet assault course, detail of parry & vertical butt stroke dummy, Fort Bragg, NC, 1951 (Standard Drawing 28-13-33 Sheet 1 of 1, "Bayonet assault course, typical layout and details," 21 November 1951).

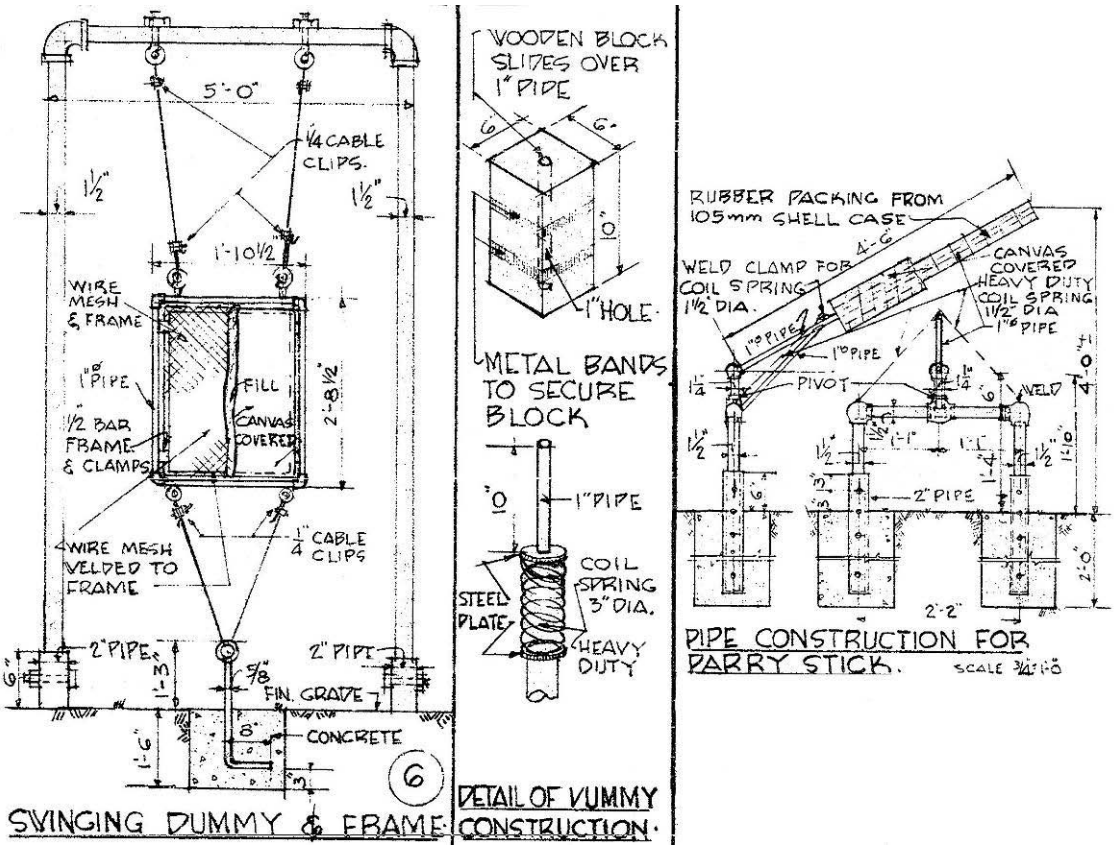

Figure 18. Bayonet assault course, swinging dummy & frame, Fort Bragg, NC, 1951 (Standard Drawing 28-13-33 Sheet 1 of 1, "Bayonet assault course, typical layout and details," 21 November 1951).

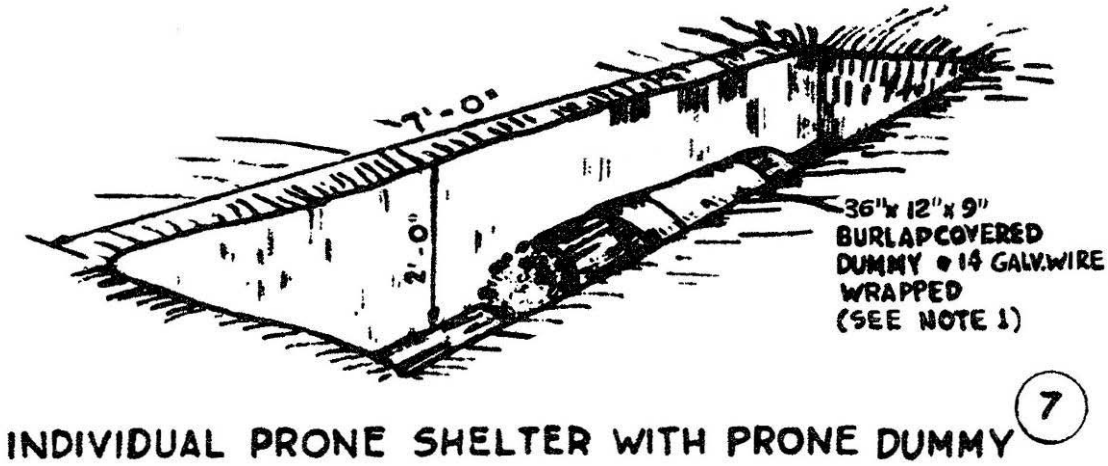

Figure 19. Bayonet assault course, individual prone shelter with prone dummy, Fort Bragg, NC, 1951 (Standard Drawing 28-13-33 Sheet 1 of 1, "Bayonet assault course, typical layout and details," 21 November 1951).

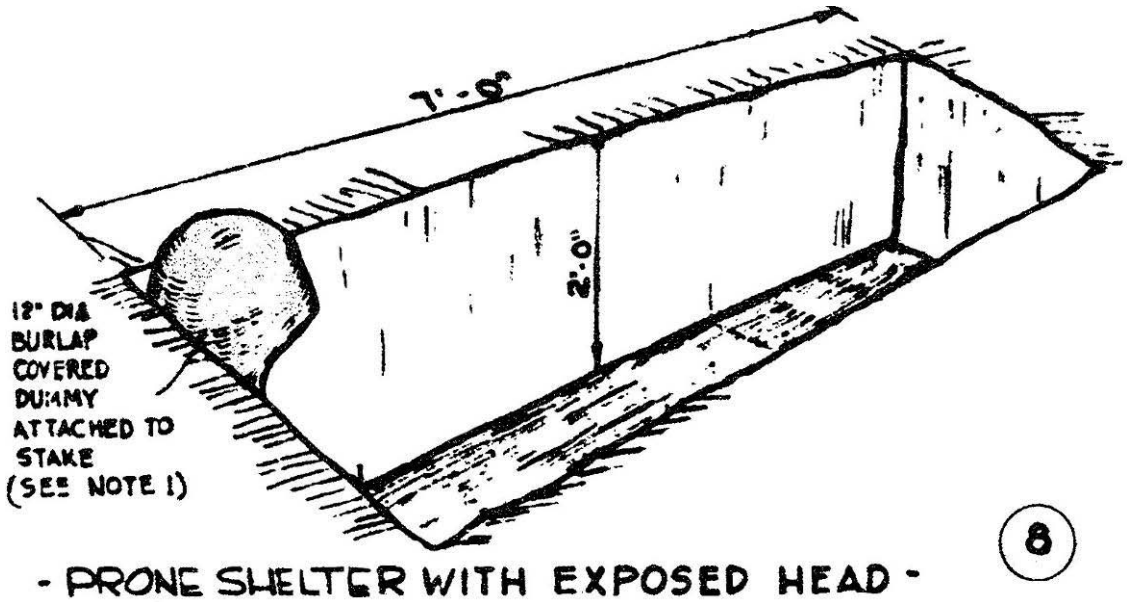

Figure 20. Bayonet assault course, prone shelter with exposed head, Fort Bragg, NC, 1951 (Standard Drawing 28-13-33 Sheet 1 of 1, "Bayonet assault course, typical layout and details," 21 November 1951).

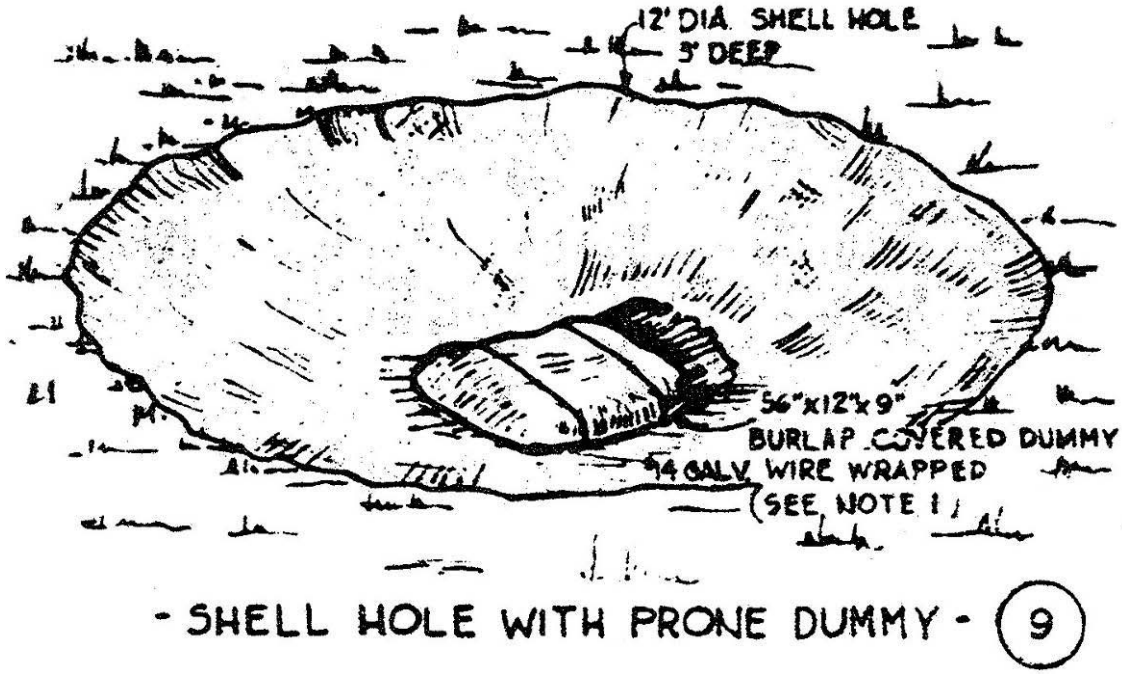

Figure 21. Bayonet assault course, shell hole with prone dummy, Fort Bragg, NC, 1951 (Standard Drawing 28-13-33 Sheet 1 of 1, "Bayonet assault course, typical layout and details," 21 November 1951).

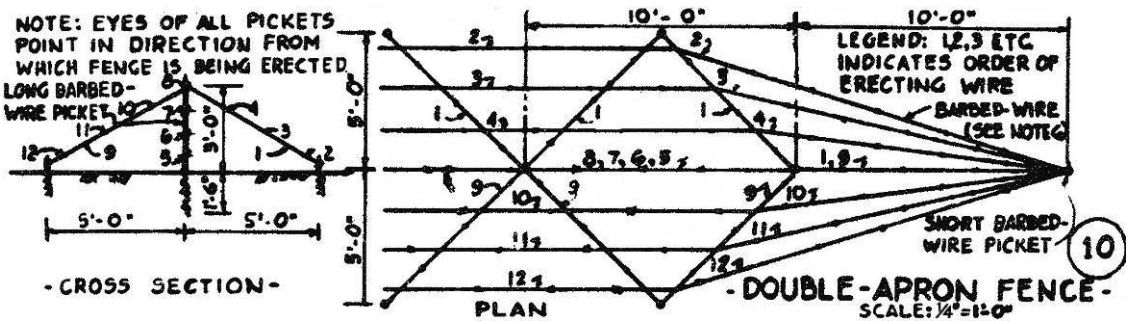

Figure 22. Bayonet assault course, double-apron fence, Fort Bragg, NC, 1951 (Standard Drawing 28-13-33 Sheet 1 of 1, "Bayonet assault course, typical layout and details," 21 November 1951).

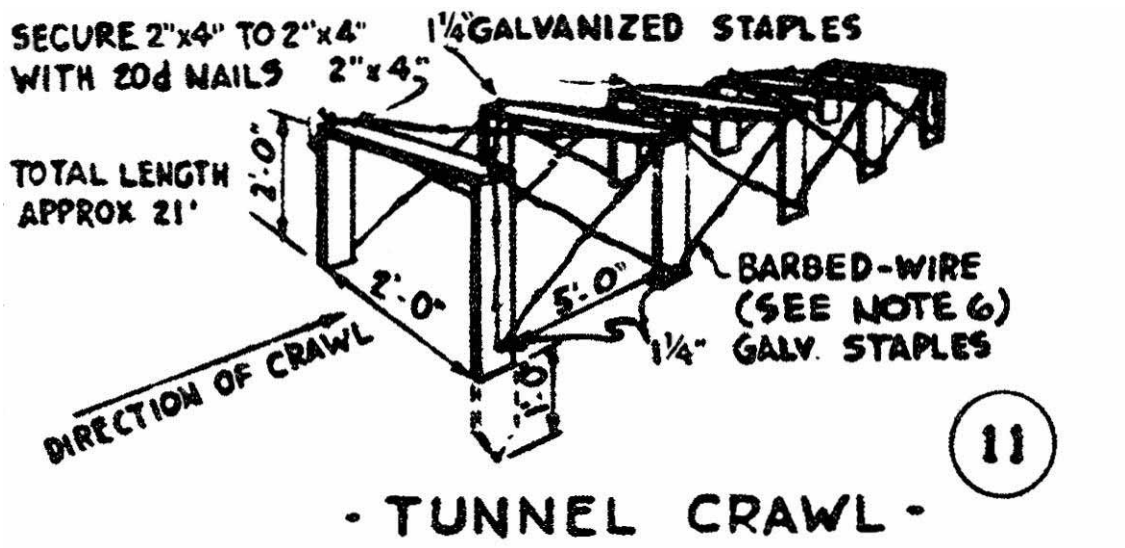

Figure 23. Bayonet assault course, tunnel crawl, 1951 (Standard Drawing 28-13-33 Sheet 1 of 1, "Bayonet assault course, typical layout and details," 21 November 1951).

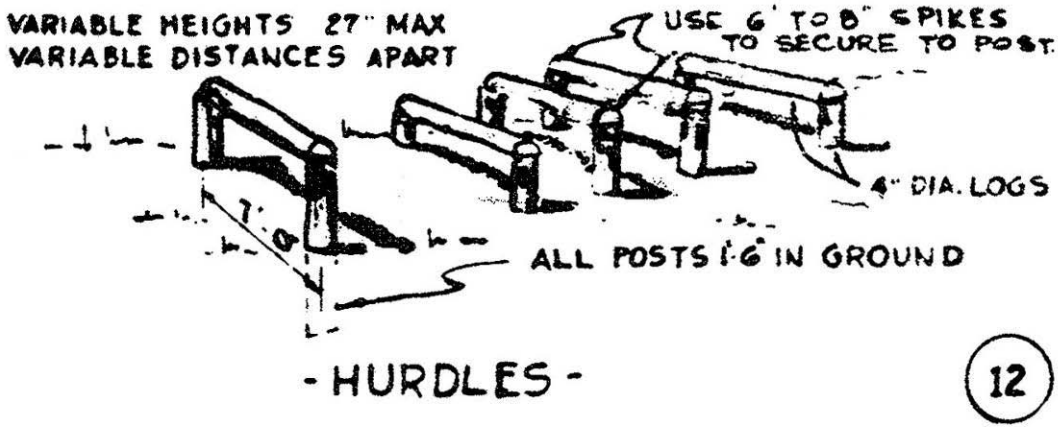

Figure 24. Bayonet assault course, hurdles, Fort Bragg, NC, 1951 (Standard Drawing 28-13-33 Sheet 1 of 1, "Bayonet assault course, typical layout and details," 21 November 1951).

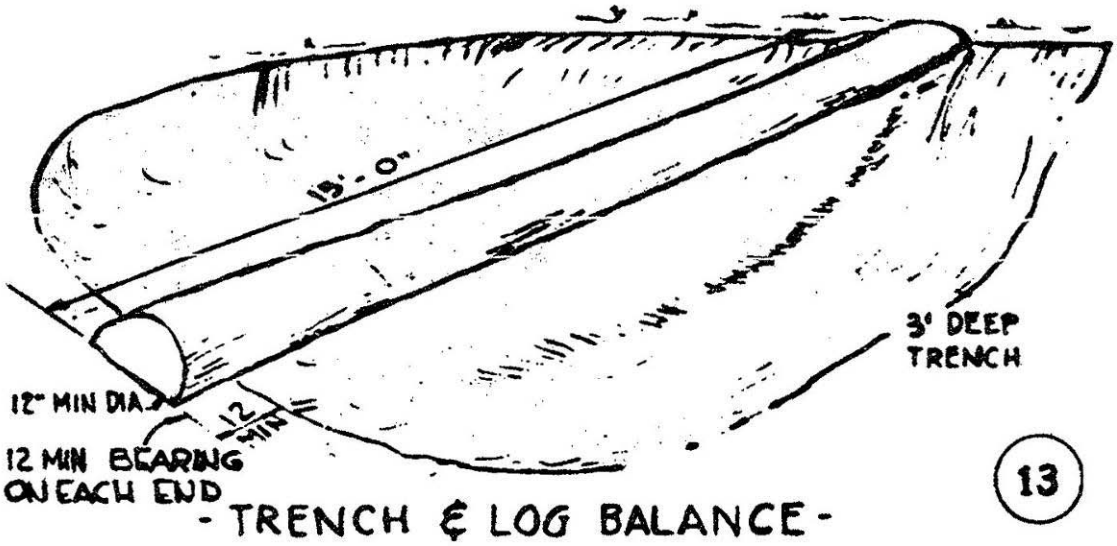

Figure 25. Bayonet assault course, trench & log balance, Fort Bragg, NC, 1951 (Standard Drawing 28-13-33 Sheet 1 of 1, "Bayonet assault course, typical layout and details," 21 November 1951).

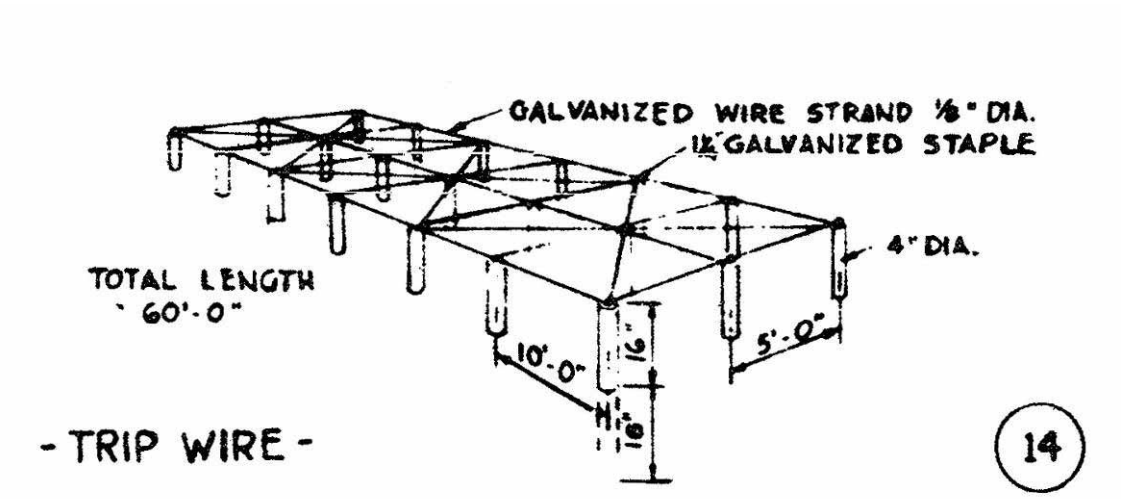

Figure 26. Bayonet assault course, trip wire, 1951 (Standard Drawing 28-13-33 Sheet 1 of 1, "Bayonet assault course, typical layout and details," 21 November 1951).

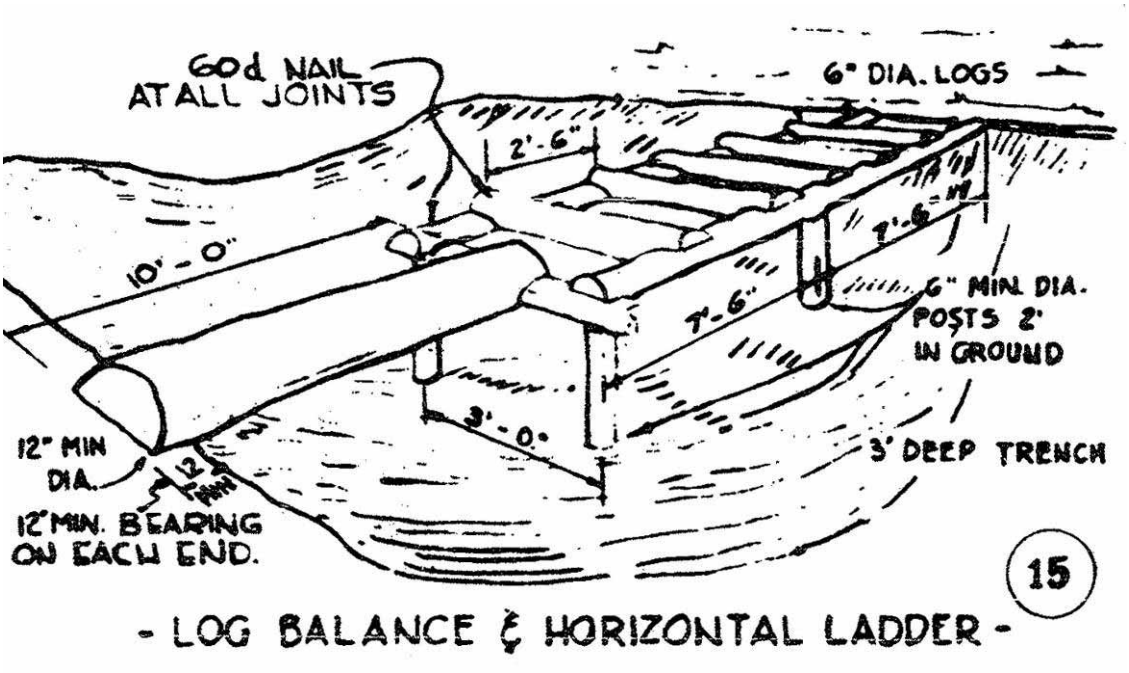

Figure 27. Bayonet assault course, log balance & horizontal ladder, Fort Bragg, NC, 1951 (Standard Drawing 28-13-33 Sheet 1 of 1, "Bayonet assault course, typical layout and details," 21 November 1951).

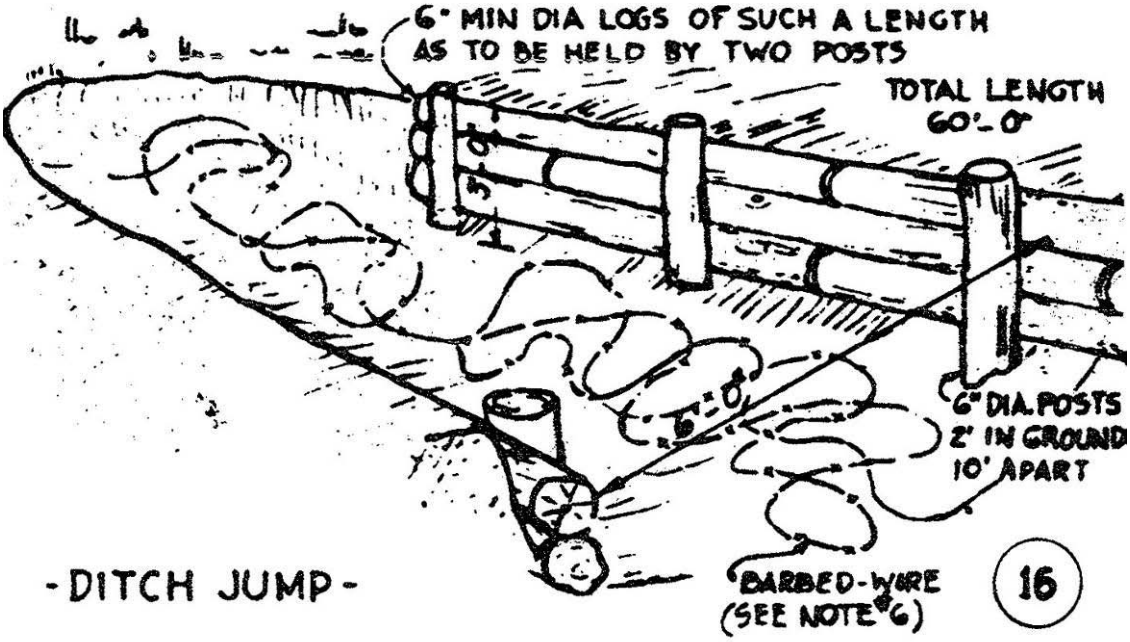

Figure 28. Bayonet assault course, ditch jump, Fort Bragg, NC, 1951 (Standard Drawing 28-13-33 Sheet 1 of 1, "Bayonet assault course, typical layout and details," 21 November 1951).

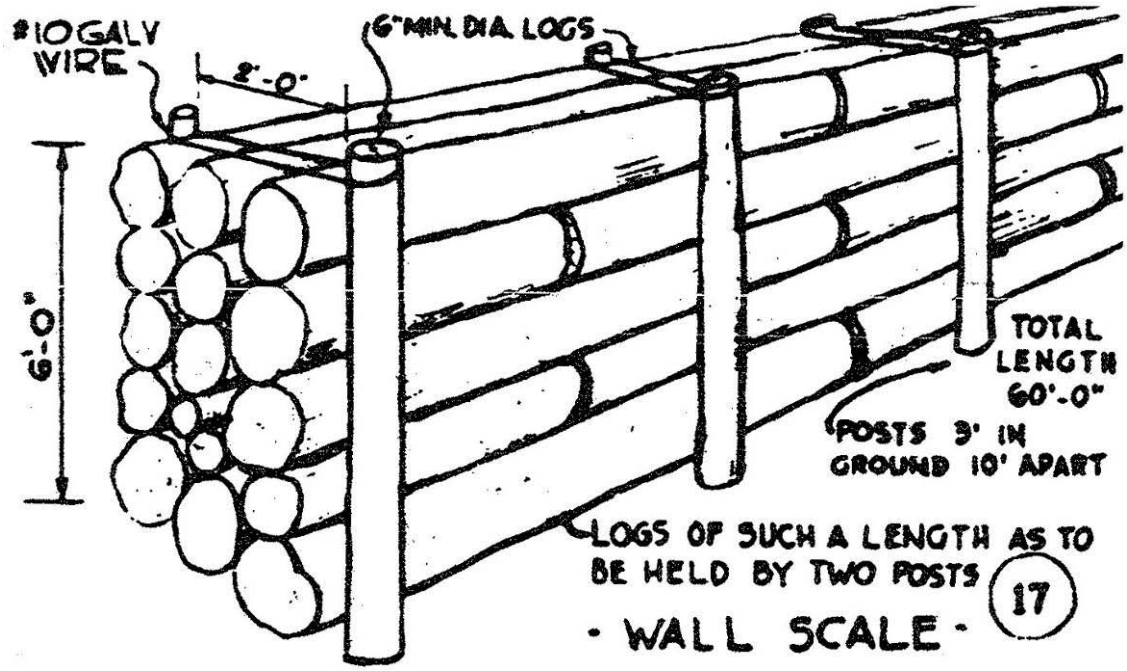

Figure 29. Bayonet assault course, wall scale, Fort Bragg, NC, 1951 (Standard Drawing 28-13-33 Sheet 1 of 1; "Bayonet assault course, typical layout and details," 21 November 1951).

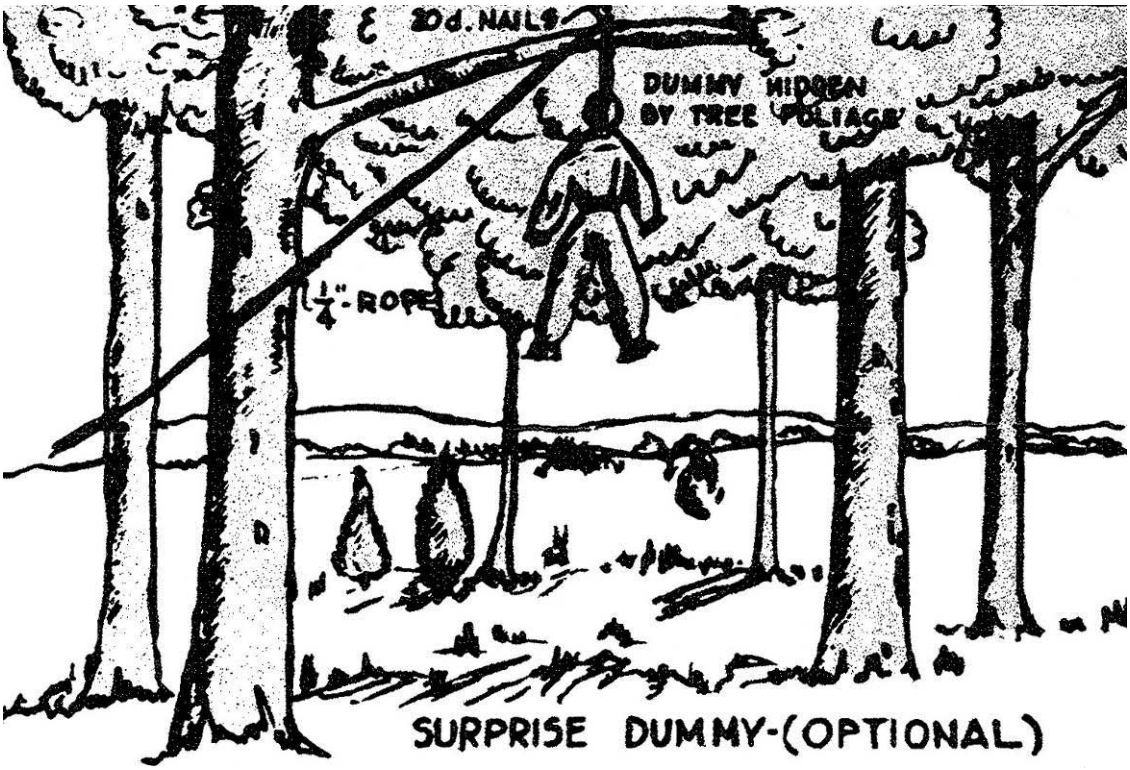

Figure 30. Bayonet assault course, optional surprise dummy, Fort Bragg, NC, 1951 (Standard Drawing 28-13-33 Sheet 1 of 1, "Bayonet assault course, typical layout and details," 21 November 1951).

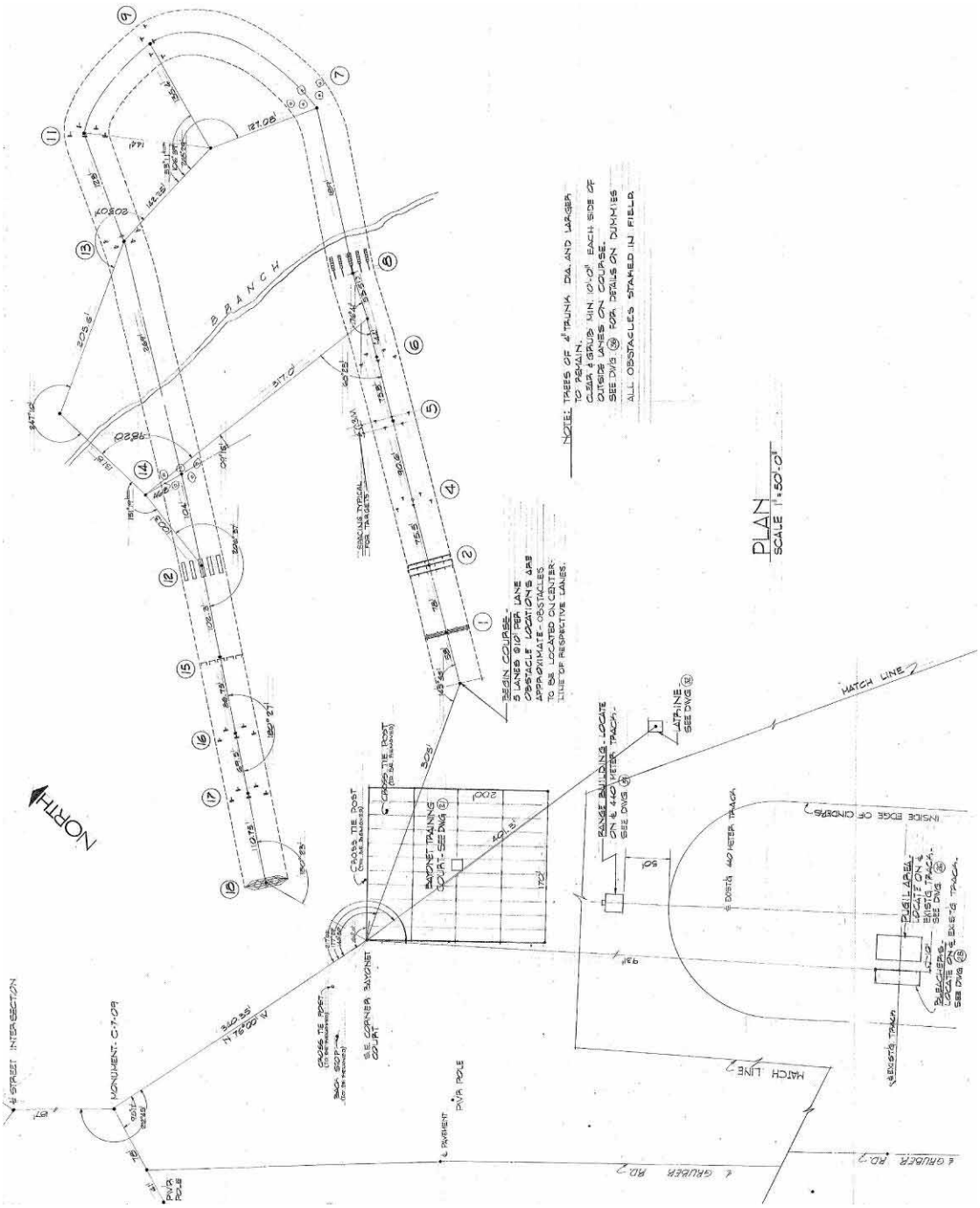

Figure 31. ATC facilities, bayonet assault course, plan, Fort Bragg, NC, 1966 (Standard Drawing 28-13-117 Sheet 16, "Construction of ranges, phase 1, U.S. ATC facilities, Fort Bragg, NC, bayonet assault course," 28 June 1966).

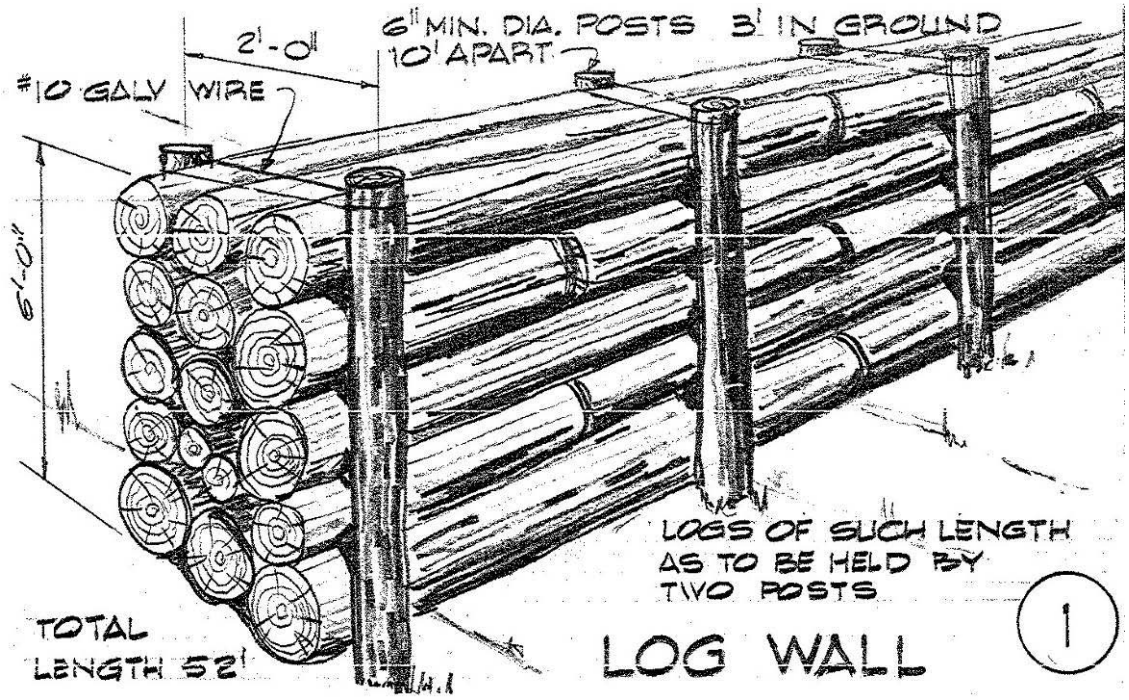

Figure 32. ATC facilities, bayonet assault course, log wall, Fort Bragg, NC, 1966 (Standard Drawing 28-13-117 Sheet 16, "Construction of ranges, phase 1, U.S. ATC Facilities, Fort Bragg, NC, bayonet assault course," 28 June 1966).

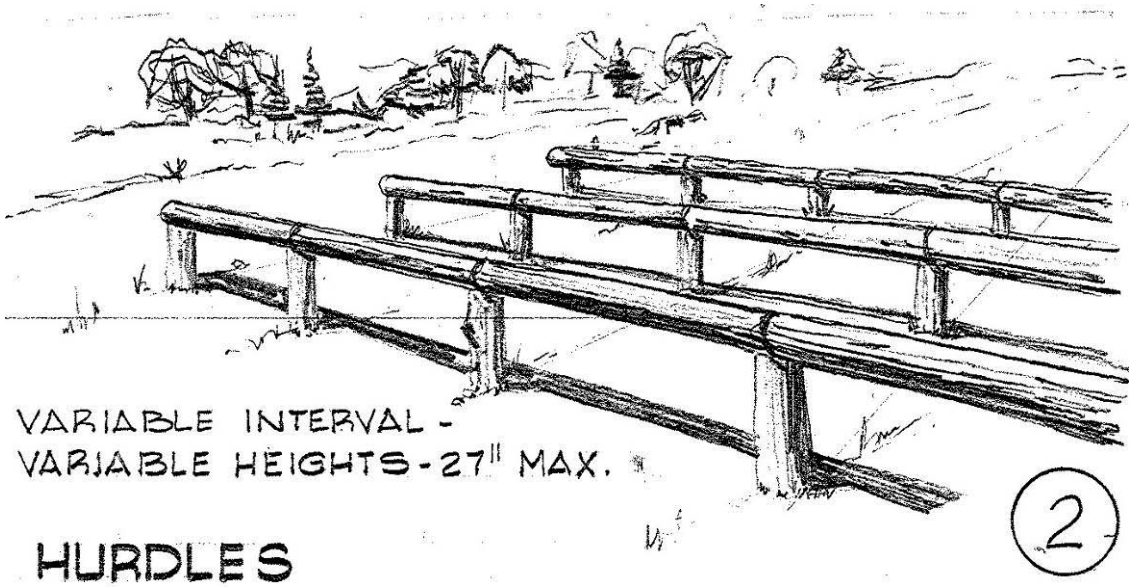

Figure 33. ATC facilities, bayonet assault course, hurdles, Fort Bragg, NC, 1966 (Standard Drawing 28-13-117 Sheet 16, "Construction of ranges, phase 1, U.S. ATC Facilities, Fort Bragg, NC, bayonet assault course," 28 June 1966).

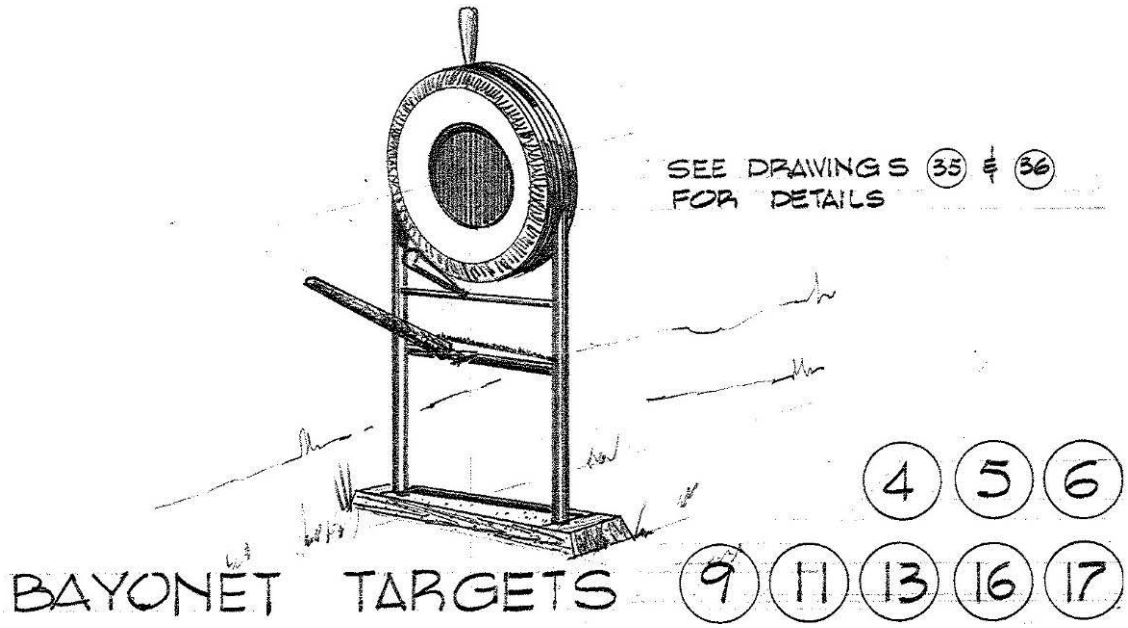

Figure 34. ATC facilities, bayonet assault course, bayonet targets, Fort Bragg, NC, 1966 (Standard Drawing 28-13-117 Sheet 16, "Construction of ranges, phase 1, U.S. ATC Facilities, Fort Bragg, NC, bayonet assault course," 28 June 1966).

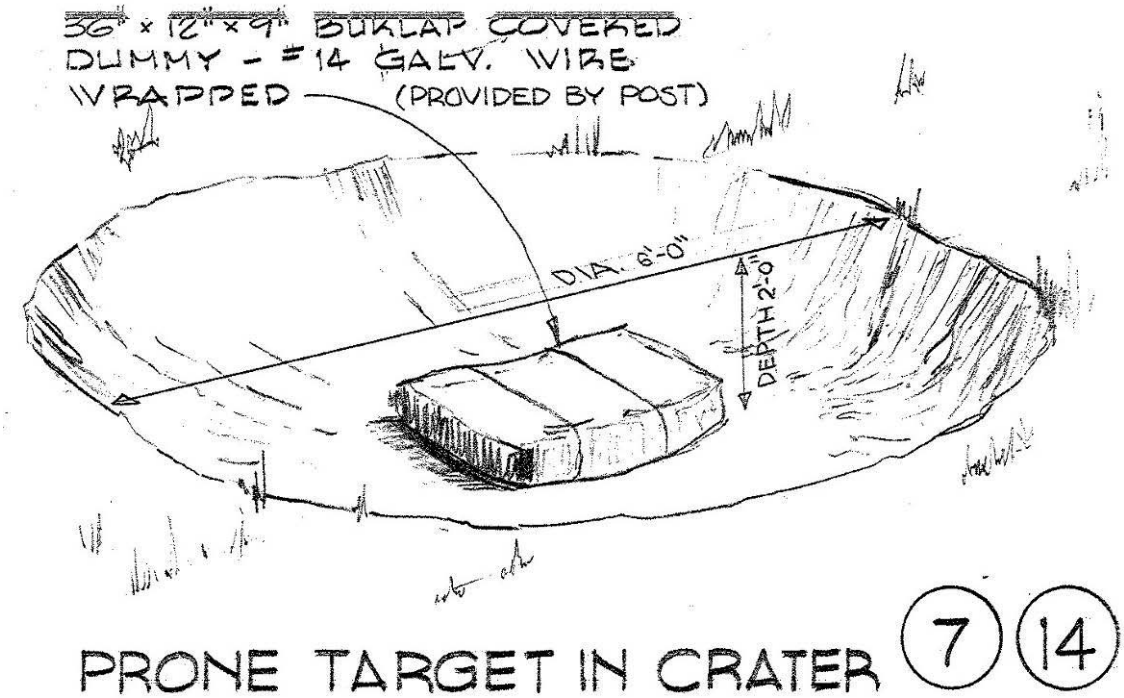

Figure 35. ATC facilities, bayonet assault course, prone target in crater, Fort Bragg, NC, 1966 (Standard Drawing 28-13-117 Sheet 16, Construction of ranges, phase 1, U.S. ATC Facilities, Fort Bragg, NC, bayonet assault course," 28 June 1966).

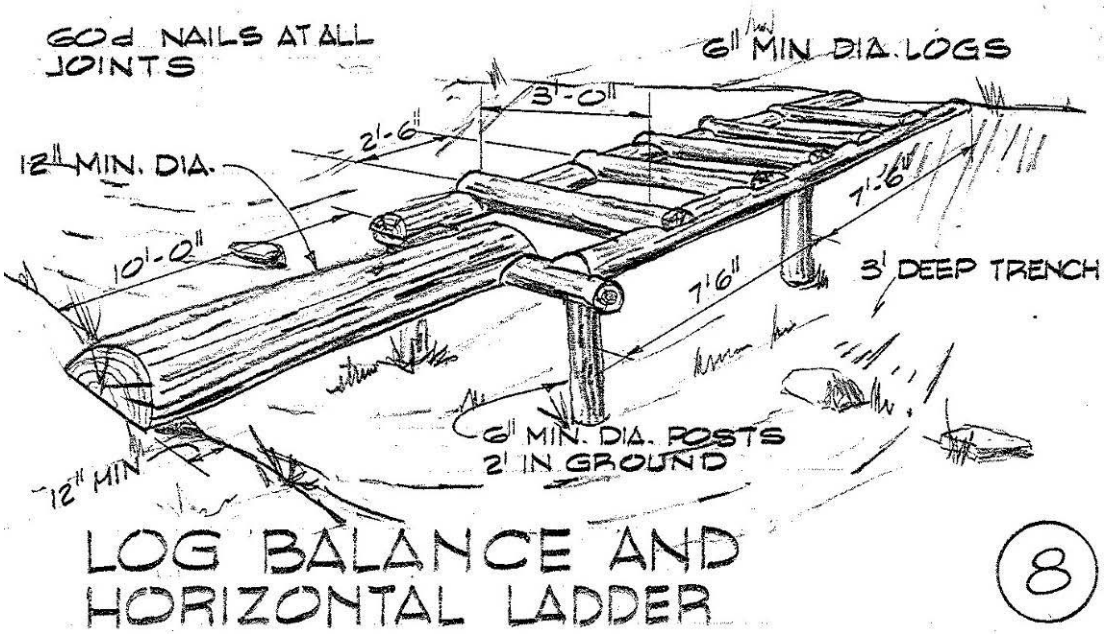

Figure 36. ATC facilities, bayonet assault course, log balance and horizontal ladder, Fort Bragg, NC, 1966 (Standard Drawing 28-13-117 Sheet 16, "Construction of ranges, phase 1, U.S. ATC Facilities, Fort Bragg, NC, bayonet assault course," 28 June 1966).

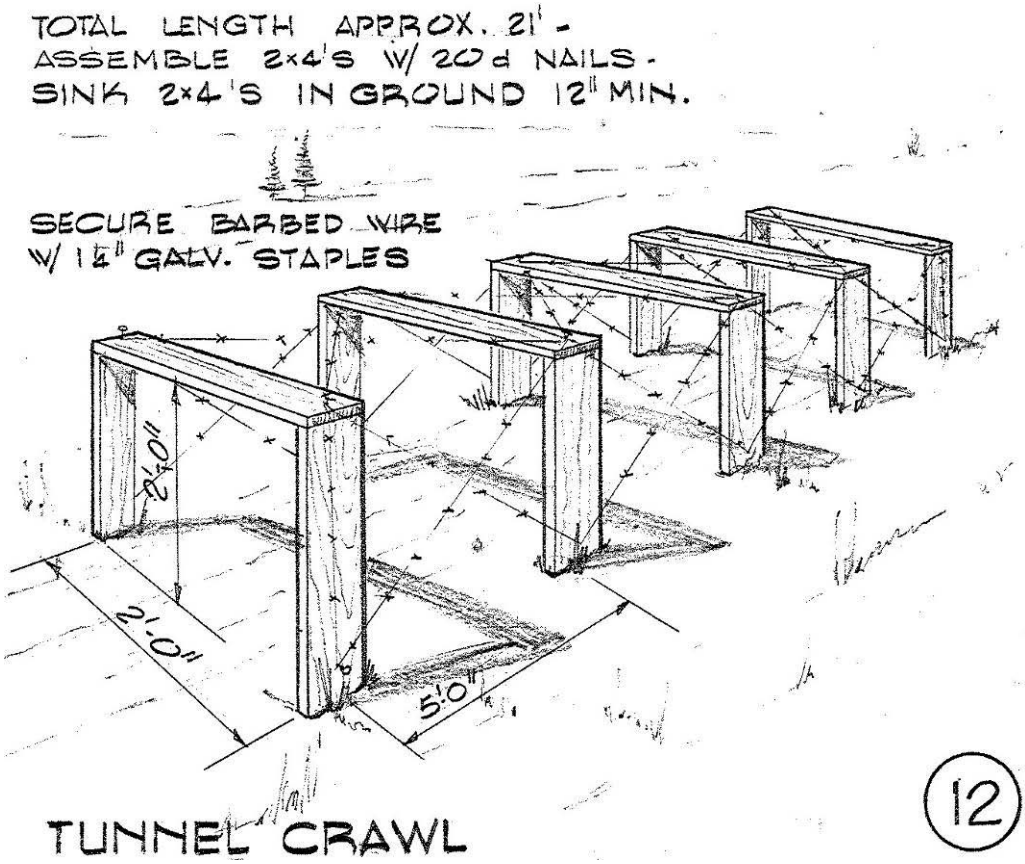

Figure 37. ATC facilities, bayonet assault course, tunnel crawl, plan, Fort Bragg, NC, 1966 (Standard Drawing 28-13-117 Sheet 16, "Construction of ranges, phase 1, U.S. ATC Facilities, Fort Bragg, NC, bayonet assault course," 28 June 1966).

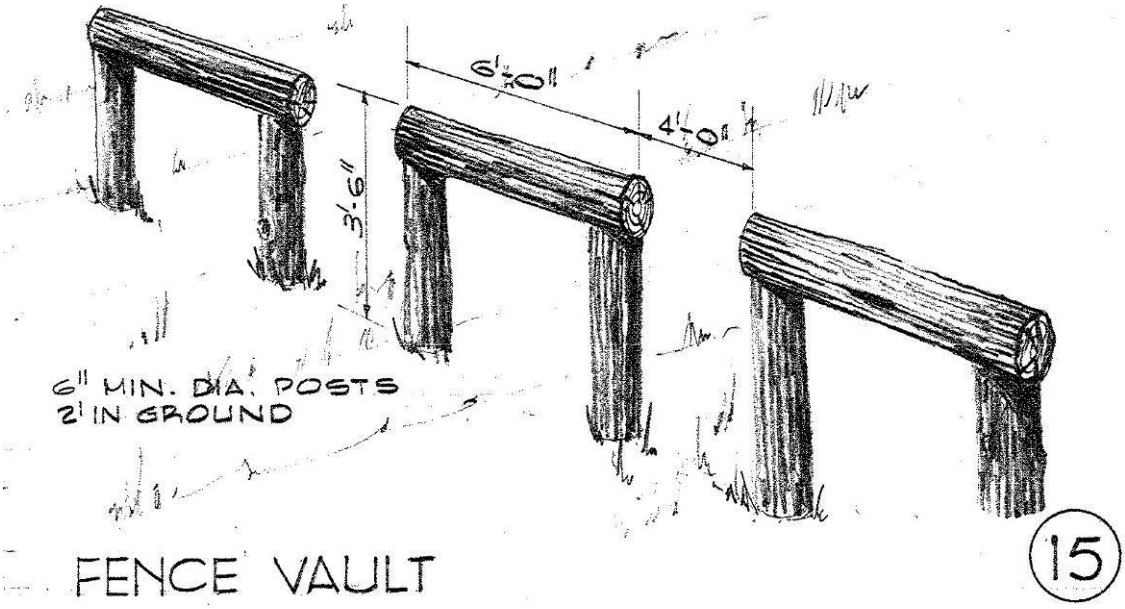

Figure 38. ATC facilities, bayonet assault course, fence vault, Fort Bragg, NC, 1966 (Standard Drawing 28-13-117 Sheet 16, "Construction of ranges, phase 1, U.S. ATC Facilities, Fort Bragg, NC, bayonet assault course," 28 June 1966).

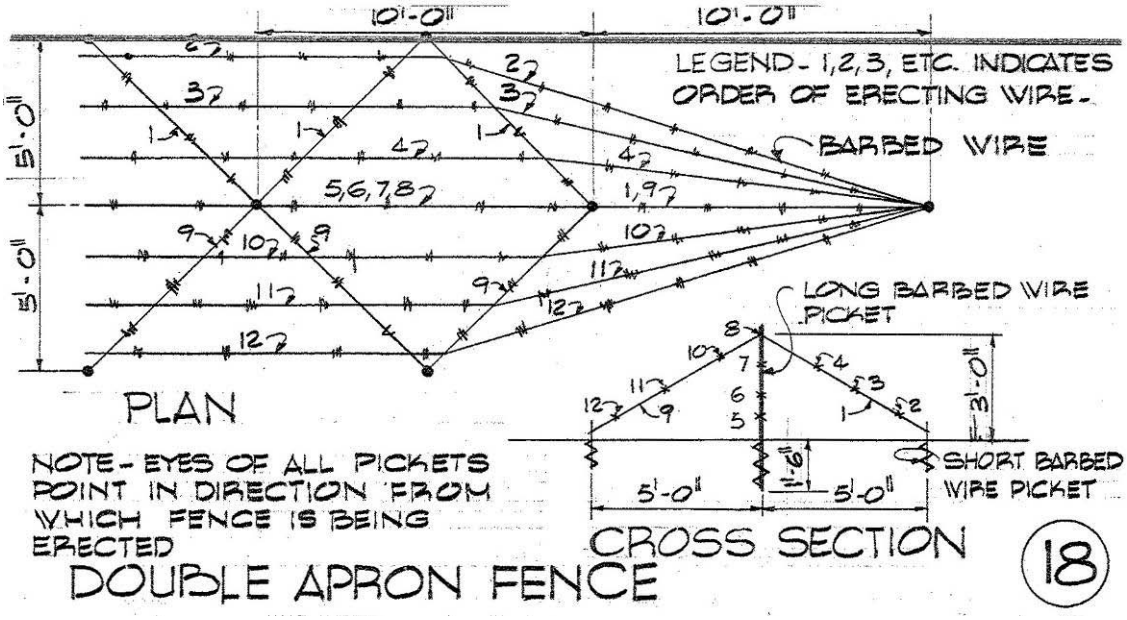

Figure 39. ATC facilities, bayonet assault course, double apron fence, Fort Bragg, NC, 1966 (Standard Drawing 28-13-117 Sheet 16, "Construction of ranges, phase 1, U.S. ATC facilities, Fort Bragg, NC, bayonet assault course," 28 June 1966).

Bayonet pugil training

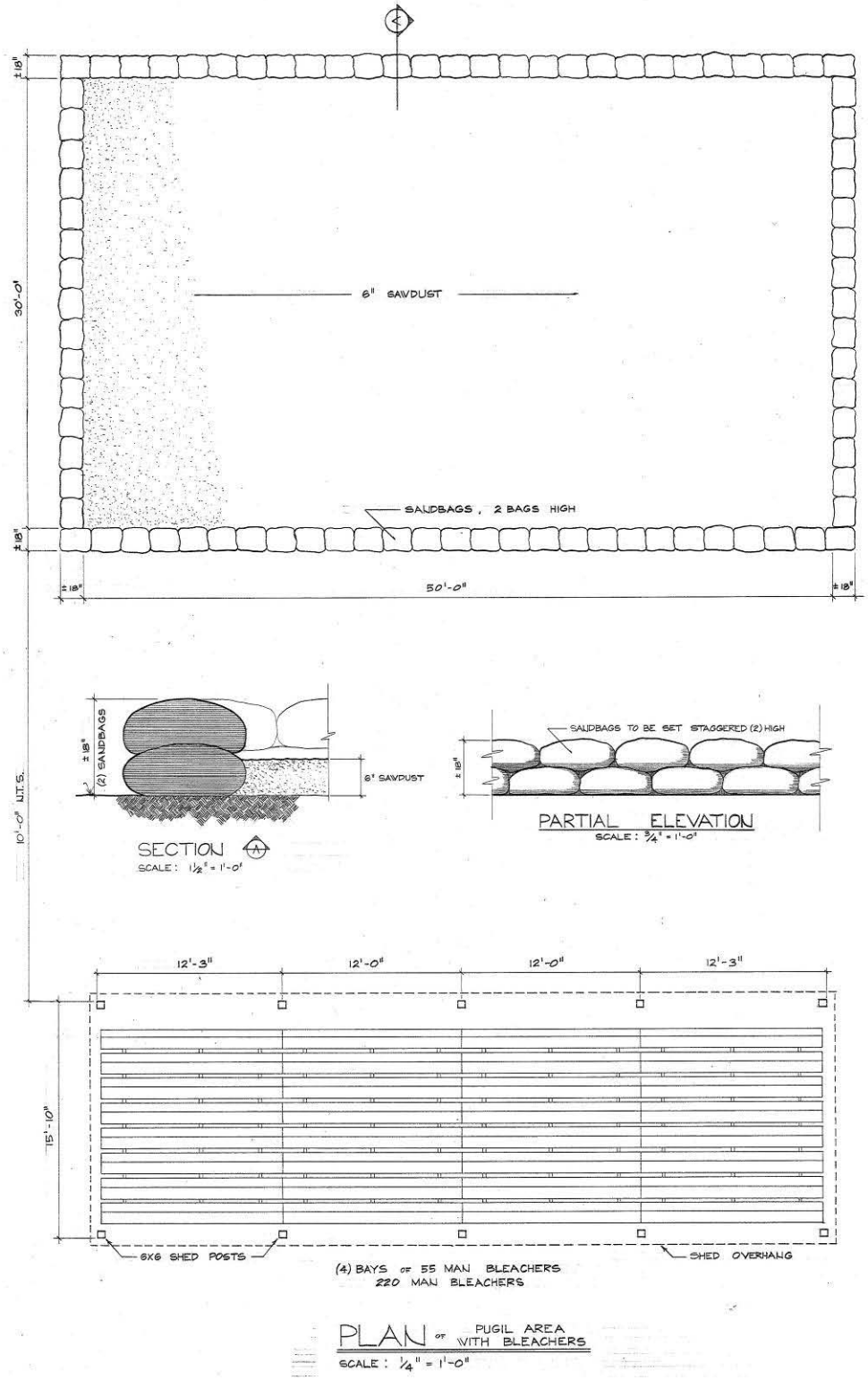

Figure 40. Pugil area, plan, partial elevation and section, Fort Bragg, NC, 1966 (Standard Drawing 28-13-117 Sheet 20, "Construction of ranges, phase I, U.S. ATC Facilities, Fort Bragg, NC, Pugil Area," 28 June 1966).

Figure 41. Bayonet (pugil) training at Camp Lee, VA, 1917 (New York Public Library, Digital Number 117110).

Figure 42. Bayonet (pugil) training at Camp Lee, VA, December 1917 (New York Public Library, Digital Number 117111).

Figure 43. Bayonet (pugil) drill at unknown location, circa 1918 (New York Public Library, Digital Number 437672).

Figure 44. Recruits going through a phase in bayonet training where they are taught basic fundamentals in offensive and defensive moves with a bayonet and rifle; pugil sticks are used in place of rifles and they are cushioned on the end; helmets and gloves are worn for protection at MCRD Parris Island, SC, 1967 (NARA College Park, RG 127-GG-921, Box 33, Photo A601743).

Calisthenics

Figure 45. Calisthenics at unknown location, circa 1917 (New York Public Library, Digital Number 117085).

Cavalry courses

Several courses were set up to train cavalrymen to maneuver various objects and fire weapons from horseback.

Figure 46. Cavalrymen taking the jump at Fort Riley, KS, 1928 (NARA College Park, RG 111-SC WWI, Box 691, Photo 93398).

Figure 47. Major B.T. Merchant on "Jack Snipe" landing from table jump, 6-ft drop at Fort Riley, Kansas, undated (NARA College Park, RG 111-SC WWI, Box 691, Photo 93397).

Mounted pistol course

Pistols were the easiest weapons for cavalrymen to aim and fire while on horseback, and mounted pistol courses were created to train them to fire accurately. The course shown in Figure 48 below had stationary targets 5 yards away from the riding course on either side (set at 90- and 45-degree angles from the direction of the rider). Firing lines are shown in orange and targets are shown in yellow.

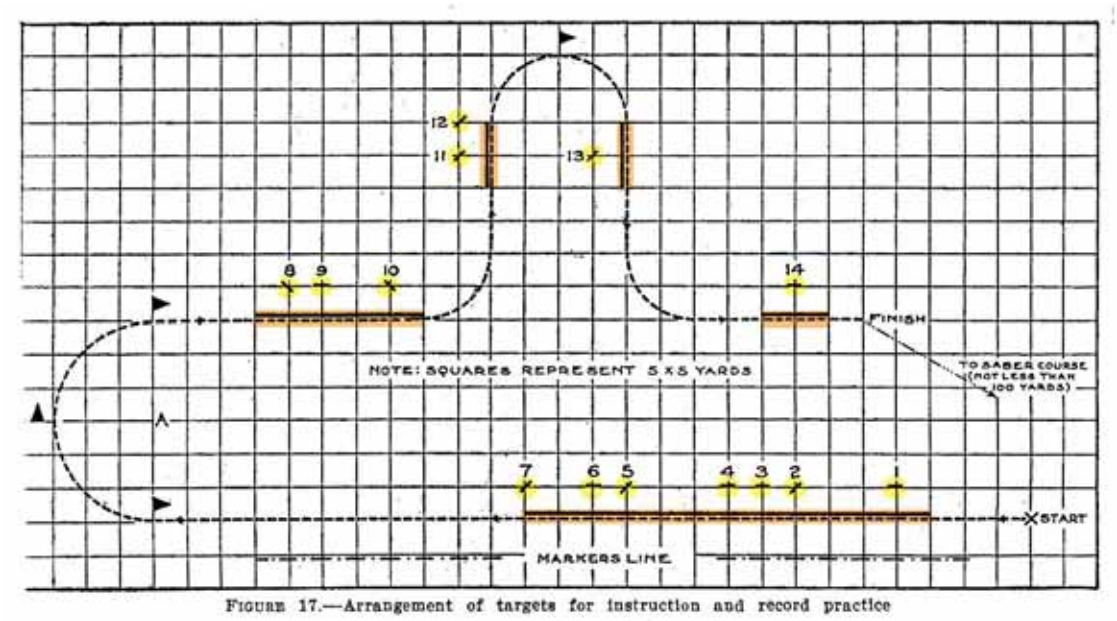

Figure 48. Mounted pistol course, circa 1932 (Basic Field Manual, Volume III, Basic weapons, part one rifle company, chapter 3 – automatic pistol marksmanship, 5 April 1932, p. 40).

Chow

Soldiers ate their meals on site while engaged in training exercises in the field.

Figure 49. Men standing at mess line on training, Fort Knox, KY,1941 (Training 1 vol. 2; BK 80-2877; 1st ARMD REGT Fort Knox, 1941; Patton Museum of Cavalry and Armor, Fort Knox, KY).

Figure 50. Chow time in the field at NAS Jacksonville, 5 May 1942 (NARA College Park, RG 80-G, Box 283, Photo 64653).

Figure 51. Chow time in the field at NAS Jacksonville, 5 May 1942 (NARA College Park, RG 80-G, Box 283, Photo 64652).

Figure 52. These Marines were served turkey and all that goes with it Thanksgiving Day despite the fact they were in the field engaged in a truck driving combat problem at Camp Lejune, NC, 25 November 1943 (NARA College Park, RG 127-GC, Box 17, Photo 6111).

Figure 53. Recruits get a taste of "living in the field" as their Drill Instructor shows them the proper way to open combat rations at MCRD Parris Island, South Carolina, 9 February 1961 (NARA College Park, RG 127-GG-925, Box 32, Photo 601425).

Driver training

Drivers of military vehicles learned all of the necessary driving skills for their particular job on a variety of training courses such as those shown below.

Light vehicle drivers course

Figure 54. Basic driver training on the light vehicle drivers course at Fort Jackson, SC, 12 October 1962 (NARA College Park, RG 111-SC post-1955, Box 378, Photo SC600477).

Driver obstacle course

Figure 55. Scout cars being driven over one of the obstacles on the obstacle course at Fort Jackson, SC, 22 April 1943 (NARA College Park, RG 111-SC WWII, Box 155, Photo SC173960).

Wheeled vehicle driving course for precision driving

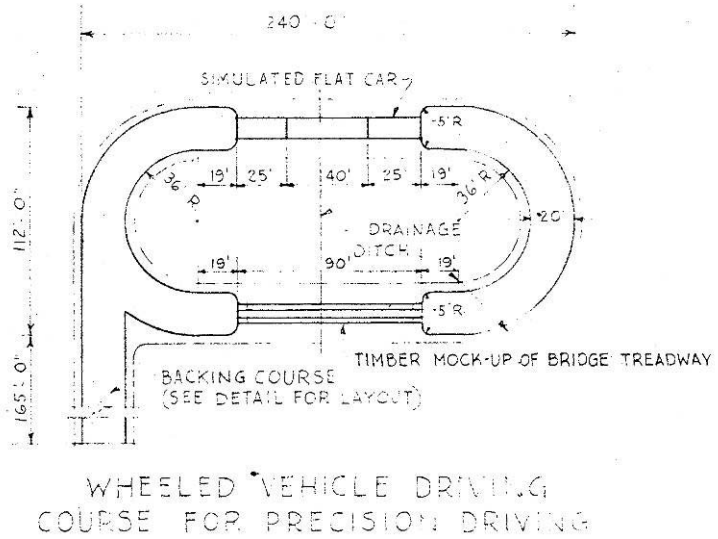

Figure 56. Wheeled vehicle driving course for precision driving, Fort Bragg, NC, 1951 (Standard Drawing 28-13-50 Sheet 1 of 1, "Wheeled vehicle driving course, plans and details," 21 November 1951).

Tracked vehicle driving courses

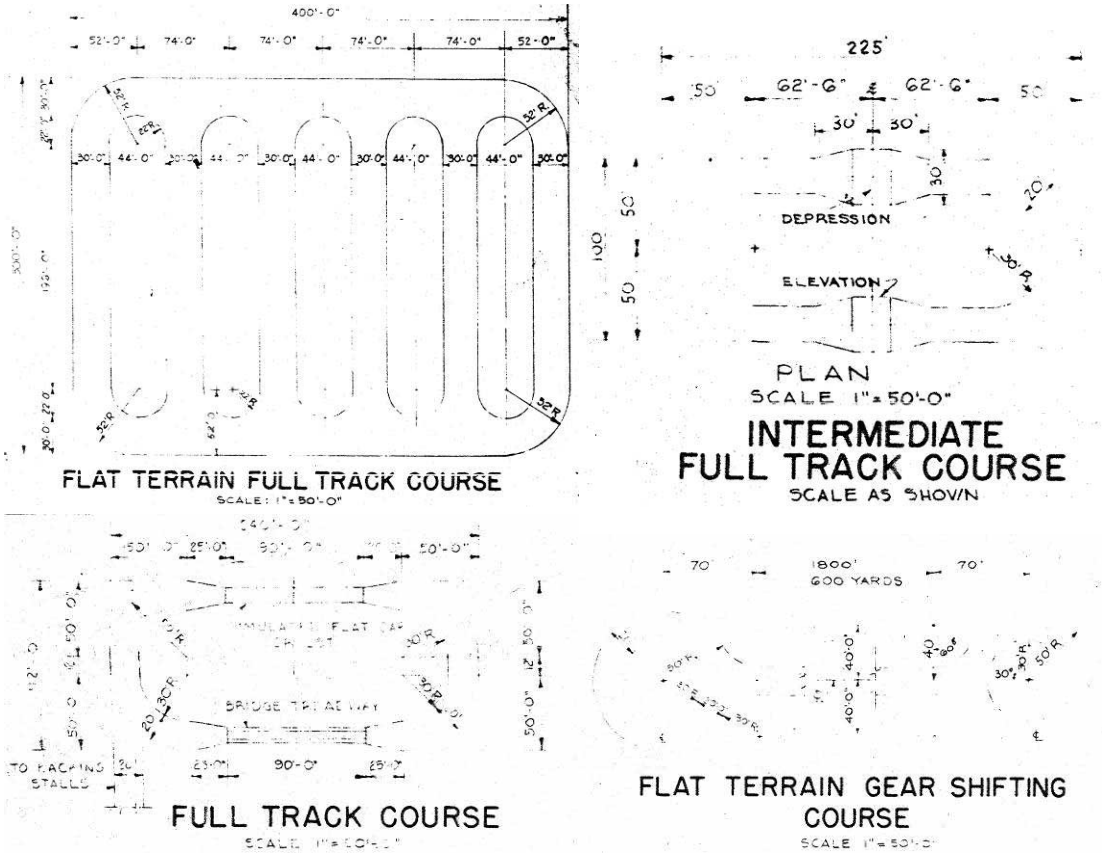

Figure 57. Tracked vehicle driving courses, Fort Bragg, NC, 1952 (Standard Drawing 28-13-51 Sheet 1 of 1, "Tracked vehicle driving course, plans and details," 18 February 1952).

Wheeled and tracked driving courses

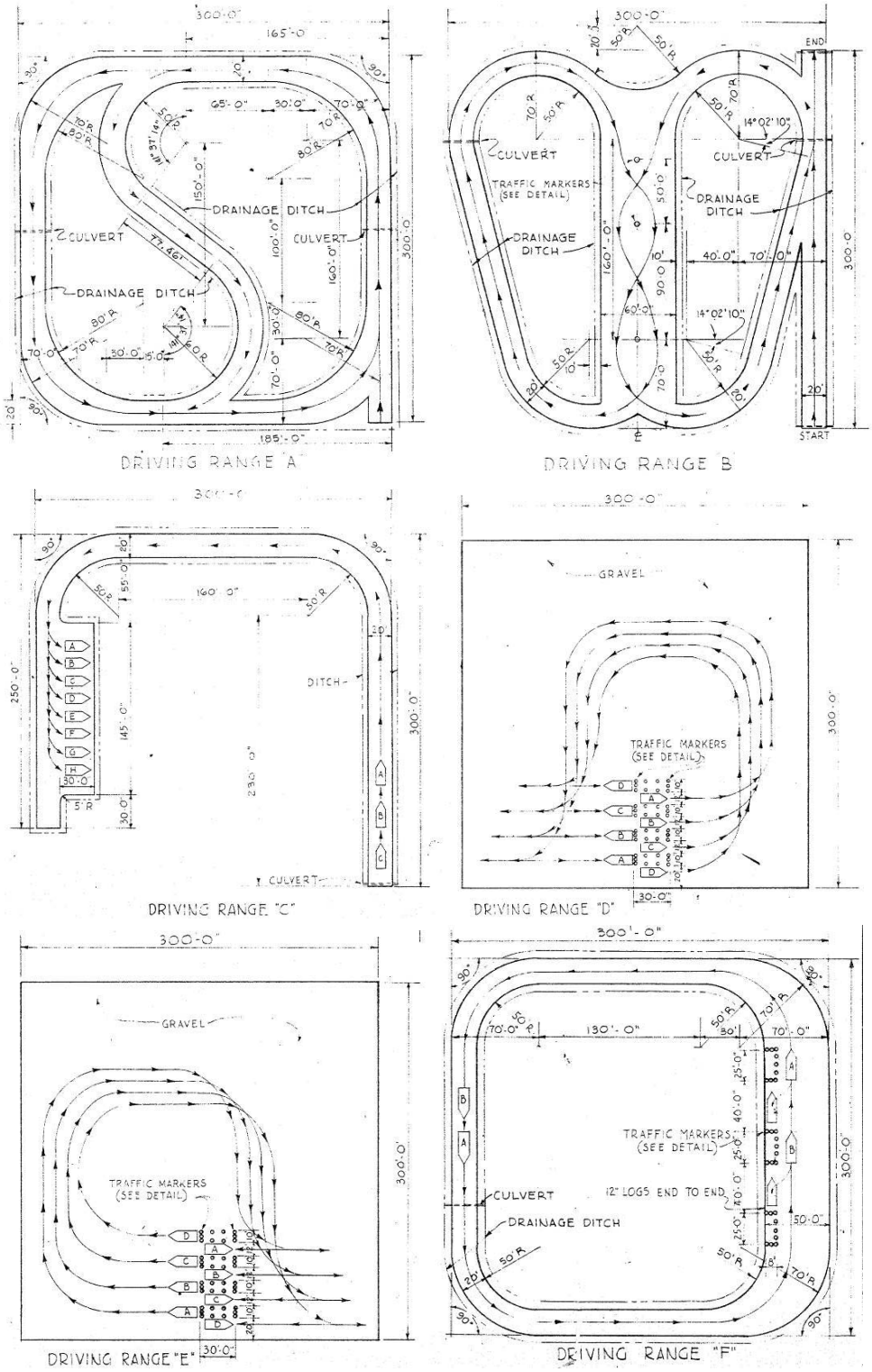

Figure 58. Wheeled & tracked vehicle driving courses, ranges A-F, Fort Bragg, NC, 1951-1952 (Standard Drawing 28-13-50 Sheet 1 of 1, "Wheeled vehicle driving course, plans and details," 21 November 1951. Standard Drawing 28-13-51 Sheet 1 of 1, Tracked vehicle driving course, plans and details," 18 February 1952).

Elevations and depressions, and traffic markers

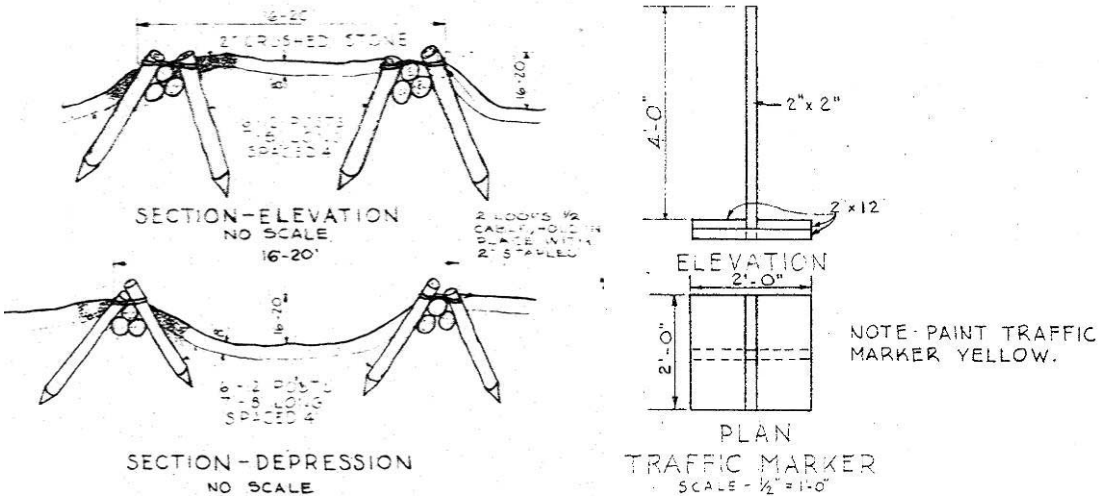

Figure 59. Tracked vehicle driving course, elevation and depression and traffic markers, Fort Bragg, NC, 1952 (Standard Drawing 28-13-51 Sheet 1 of 1, "Tracked vehicle driving course, plans and details," 18 February 1952).

Simulated flat cars

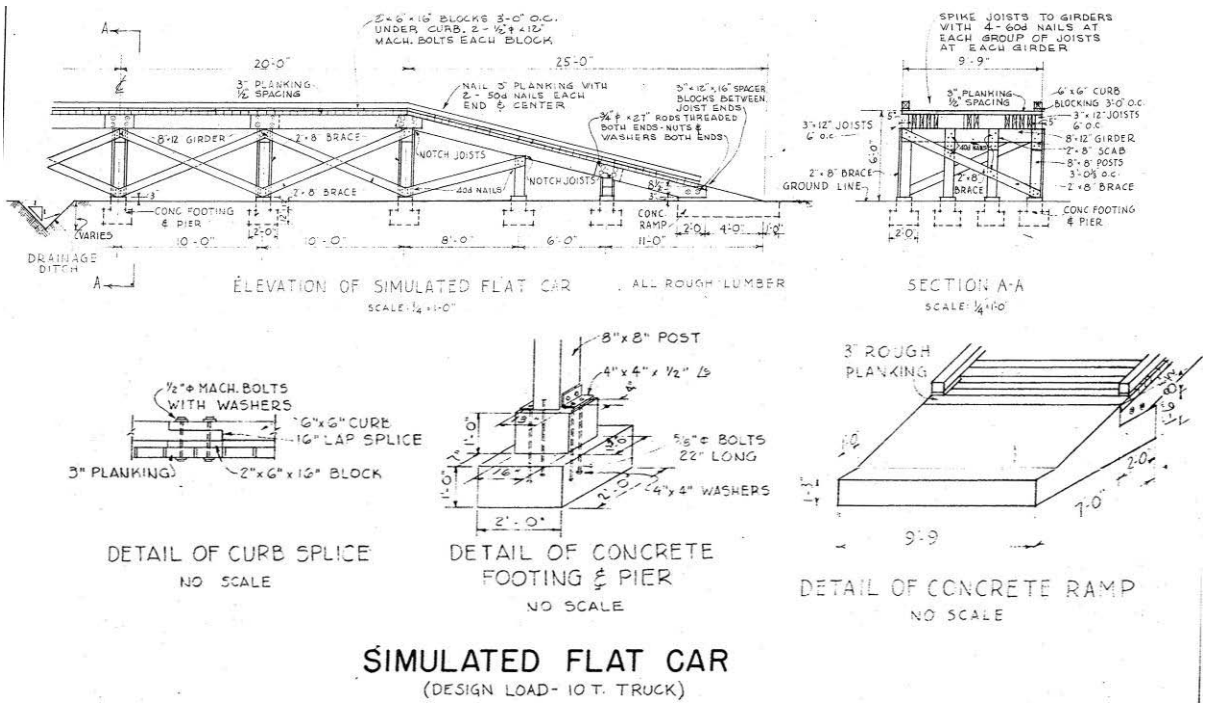

Figure 60. Wheeled vehicle driving course, simulated flat car, Fort Bragg, NC, 1951 (Standard Drawing 28-13-50 Sheet 1 of 1, "Wheeled vehicle driving course, plans and details," 21 November 1951).

Backing stalls

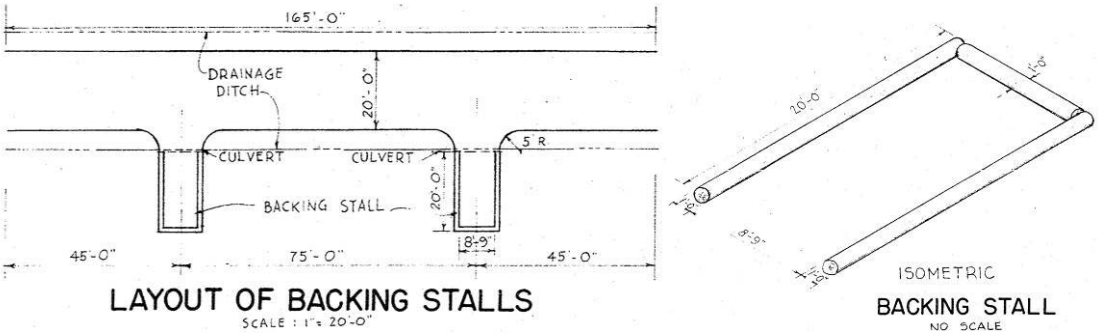

Figure 61. Wheeled vehicle driving course, backing stalls, Fort Bragg, NC, 1951 (Standard Drawing 28-13-50 Sheet 1 of 1, "Wheeled vehicle driving course, plans and details," 21 November 1951).

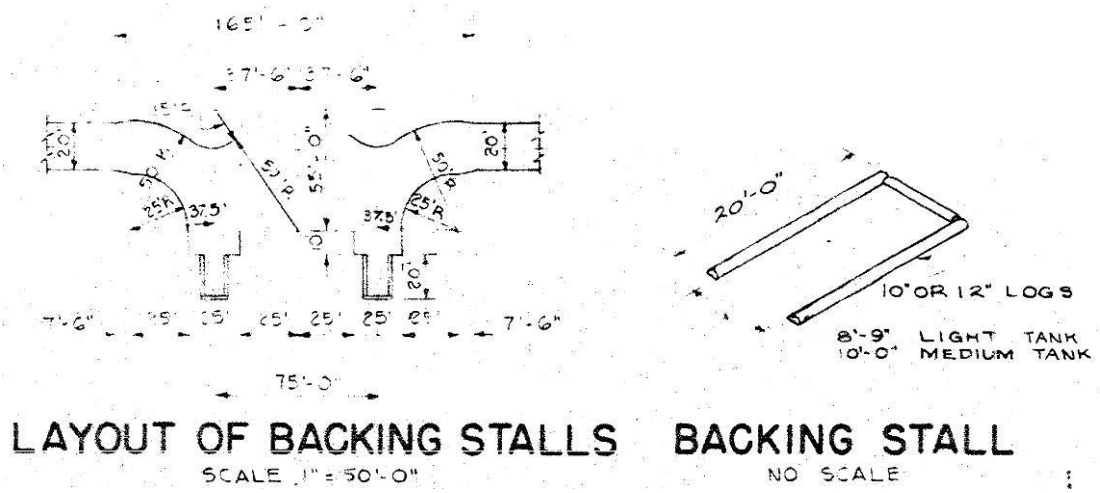

Figure 62. Tracked vehicle driving course, backing stalls, Fort Bragg, NC, 1952 (Standard Drawing 28-13-51 Sheet 1 of 1, "Tracked vehicle driving course, plans and details." 18 February 1952).

Timber mock-up of bridge treadways

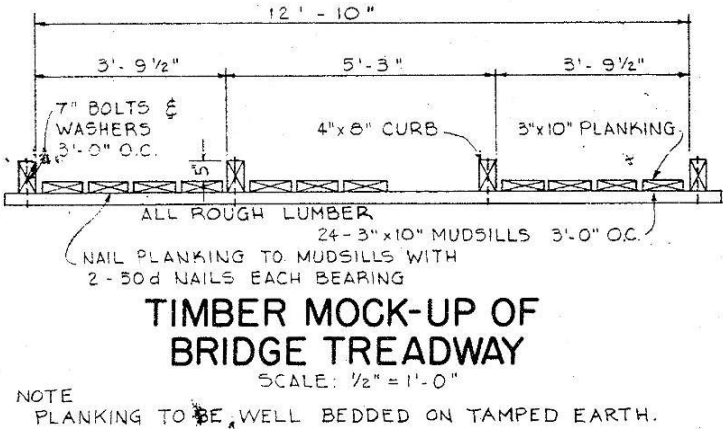

Figure 63. Wheeled vehicle driving course, timber mock-up of bridge treadway, Fort Bragg, NC, 1951 (Standard Drawing 28-13-50 Sheet 1 of 1, "Wheeled vehicle driving course, plans and details," 21 November 1951).

Engineer training

Training areas were established to teach engineers construction, maintenance, repair, and demolition of roads, heavy and light pontoon bridges, treadway bridges, air bases, fortifications, obstacles, and other structures. Some of these training areas had permanent storage buildings and other facilities on site. Some engineers were trained in specialties such as water supply, railway, oil field, camouflage, topographic and other areas. Engineers also participated in exercises where they practiced these skills in the field. Examples of Engineer training sites are shown below.

Pontoon bridge construction

Figure 64. A 75 mm howitzer crossing an engineer pontoon bridge at Fort Knox, KY, 13 December 1940 (NARA College Park, RG 111-SC WWII, Box 56, Photo SC136351).

Figure 65. A floating treadway bridge at Fort Knox, KY, April 1942 (NARA College Park, RG 111-SC WWII, Box 42, Photo SC131444).

Figure 66. Aluminum balk pontoon bridge construction on Smith Lake at Fort Bragg, NC, 1951 (NARA College Park, RG 111-SC WWII, Box 207, Photo SC370521).

Figure 67. Engineers building a heavy equipment bridge across Smith Lake at Fort Bragg, NC, 1 April 1951 (NARA College Park, RG 111-SC WWII, Box 212, Photo SC376463).

Floating bridge area storage building

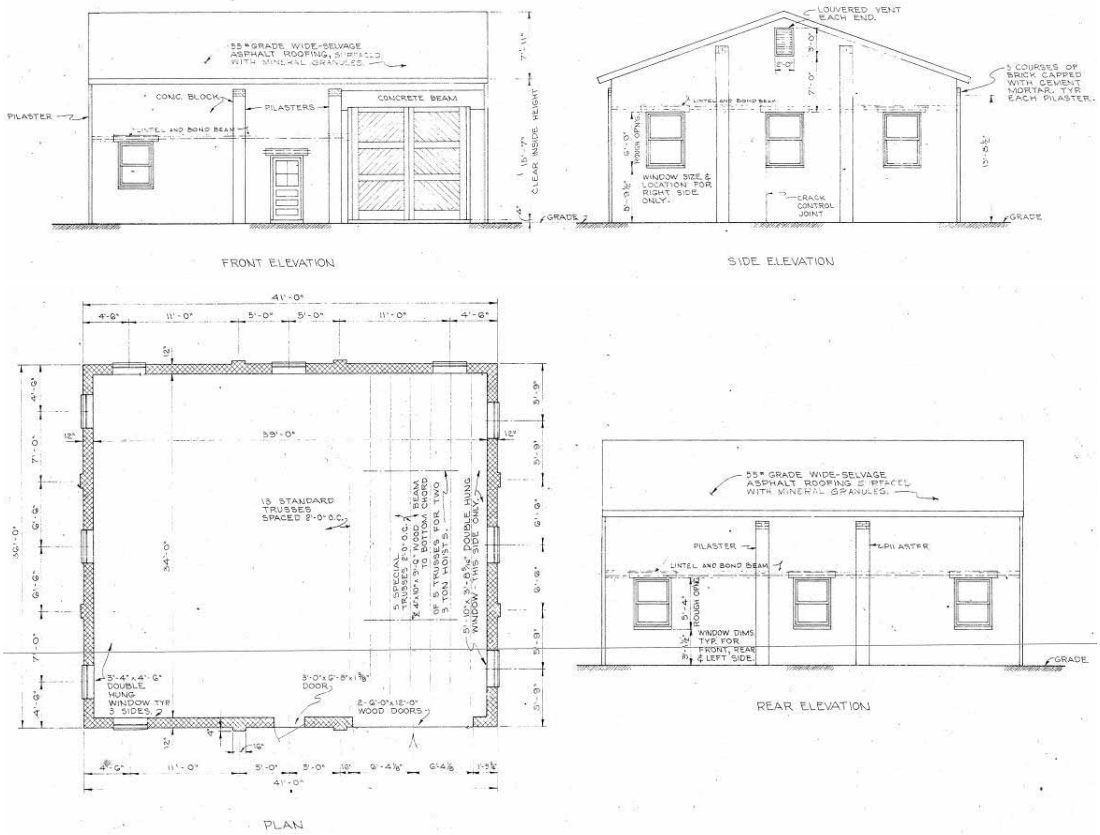

Figure 68. Floating bridge area, masonry covered storage building, plan and rear elevation, Fort Bragg, NC, 1952 (Standard Drawing 28-13-97 Sheet 2 of 4, "Bridging area, floating bridge, covered storage building-masonry," 19 May 1952).

Fixed bridge area storage building

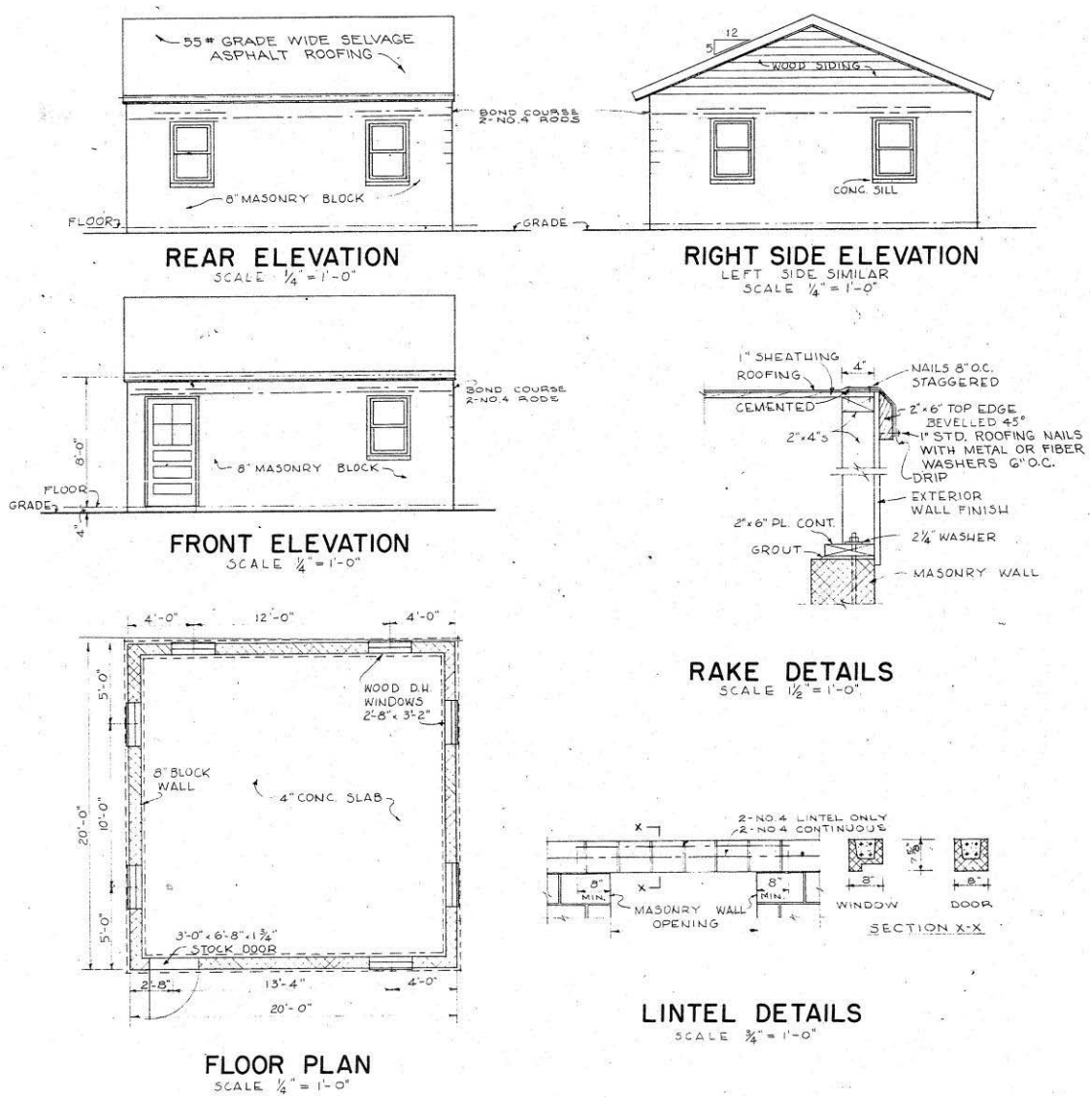

Figure 69. Fixed bridge area, masonry covered storage building, plan, elevations, and details, Fort Bragg, NC, 1952 (Standard Drawing 28-13-97 Sheet 1 of 4, "Bridging area, fixed bridge, covered storage building-masonry," 9 May 1952).

Bridge demolition practice

Figure 70. Placing dynamite to practice demolishing bridge at Fort Bragg, NC, undated (post-WWII) (NARA College Park, RG 111-SC WWII, Box 95, Photo SC147013).

Camouflage demonstration area

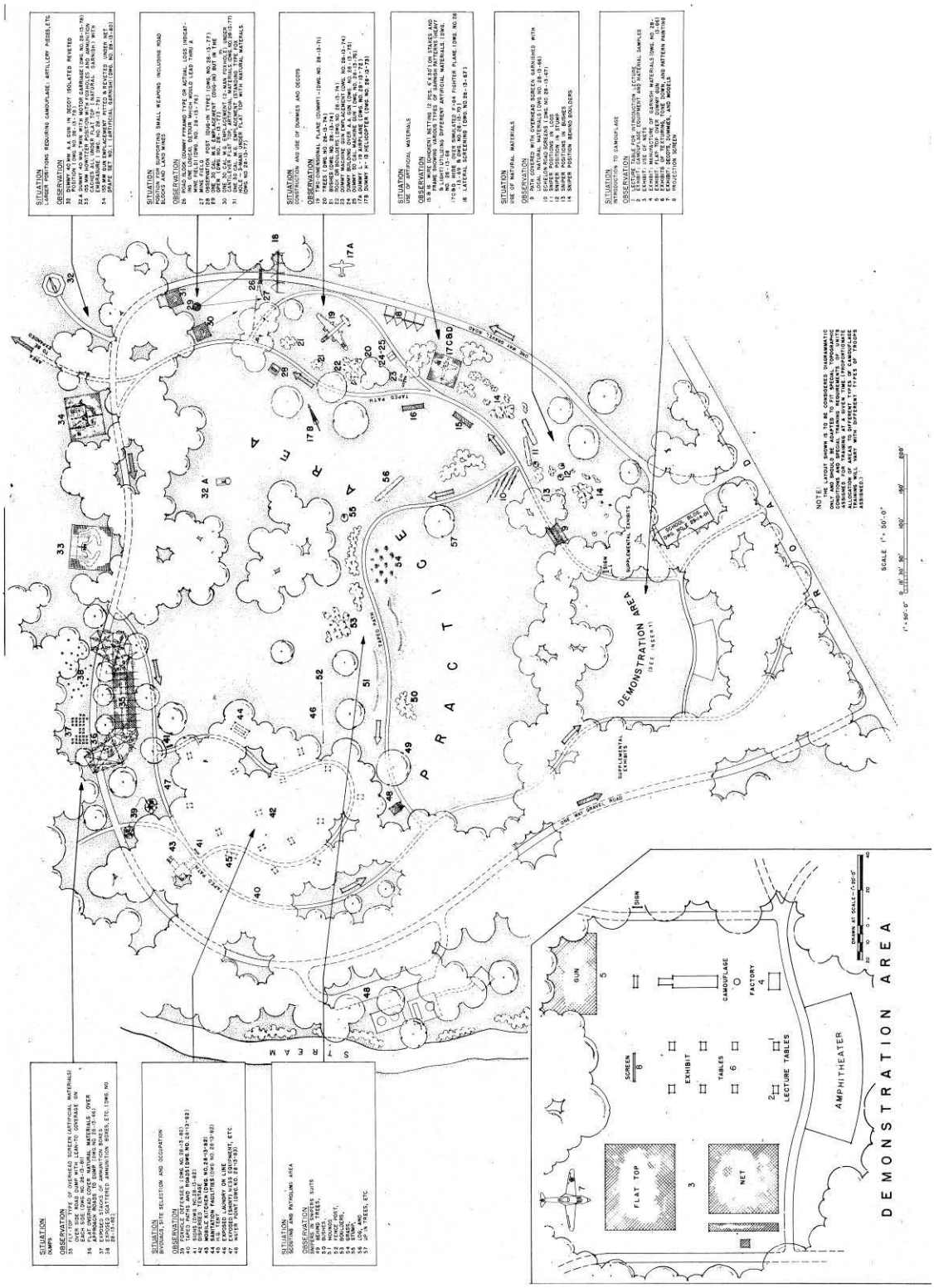

Figure 71. Camouflage demonstration area, typical layout diagram, Fort Bragg, NC, 1952 (Standard Drawing 28-13-63 Sheet 1 of 1, "Typical layout diagram for a camouflage demonstration area," 8 February 1952).

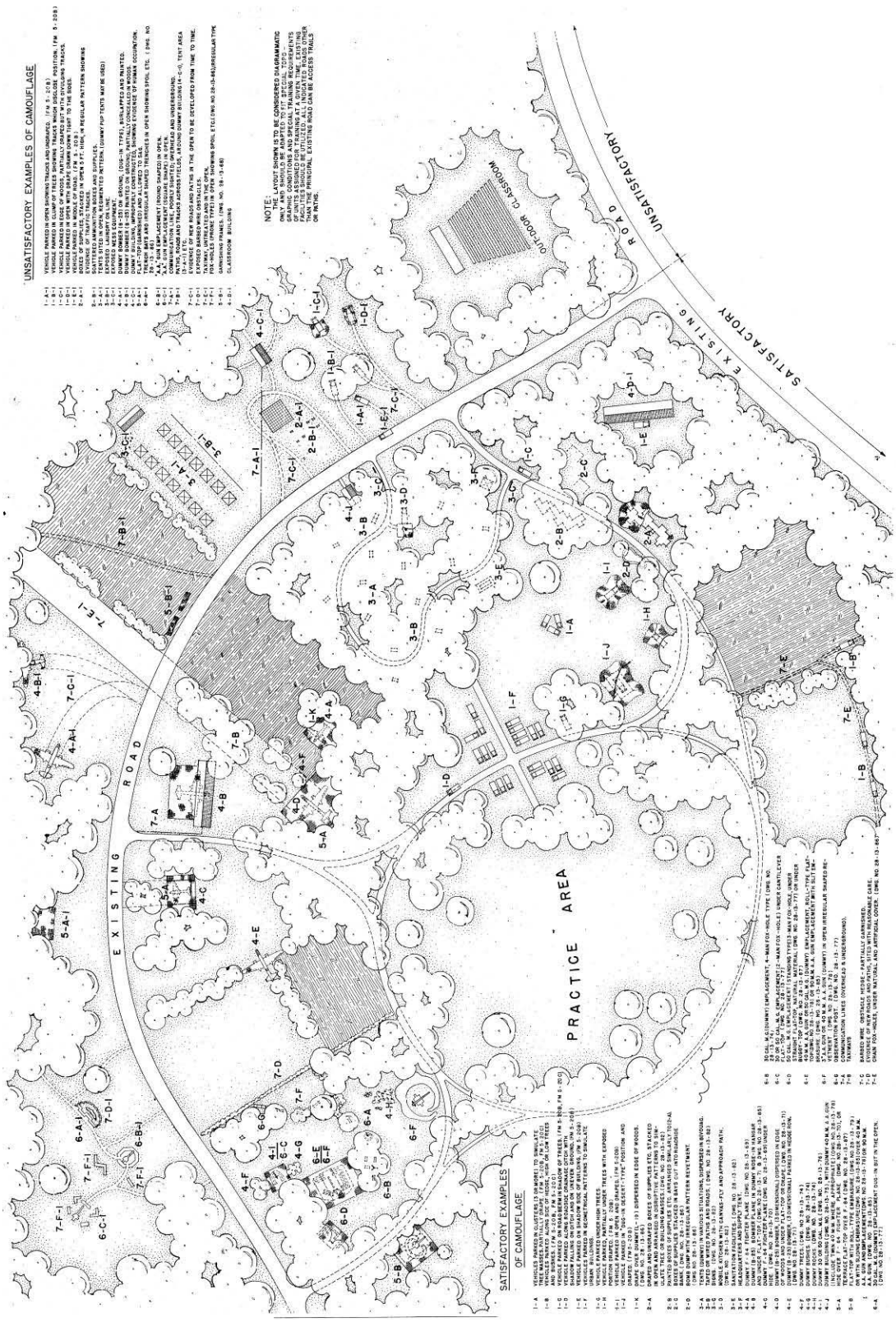

Figure 72. Camouflage demonstration area for air forces, typical layout diagram, Fort Bragg, NC, 1952 (Standard Drawing 28-13-64 Sheet 1 of 1, "Typical layout diagram for a camouflage demonstration area, for Air Forces," 8 February 1952).

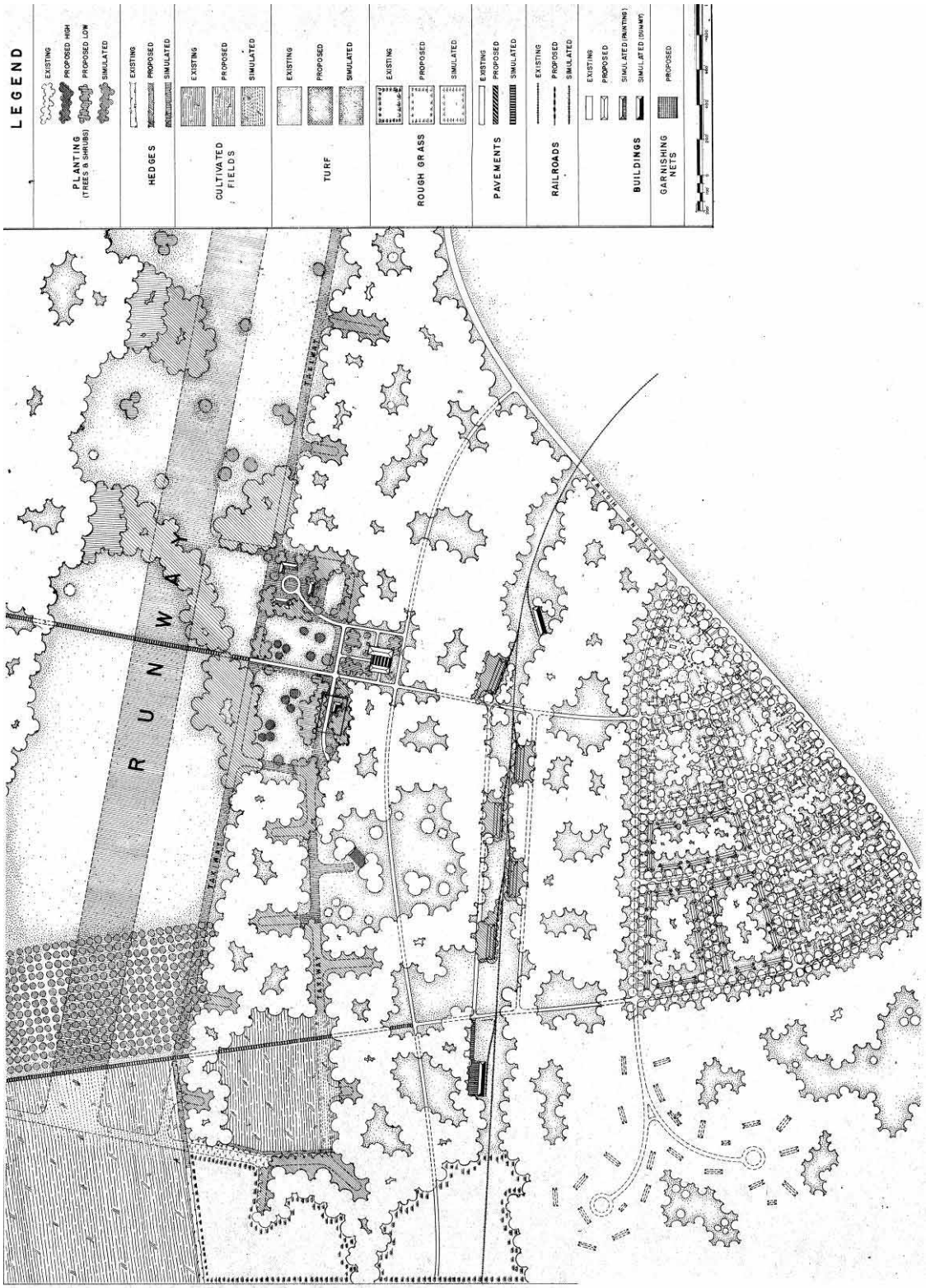

Figure 73. Camouflage demonstration area, symbols for camouflage, general plan, Fort Bragg, NC, 1952 (Standard Drawing 28-13-65 Sheet 1 of 1, "Symbols for camouflage, general plan," 5 January 1952).

Dummy trees, bushes, and rocks

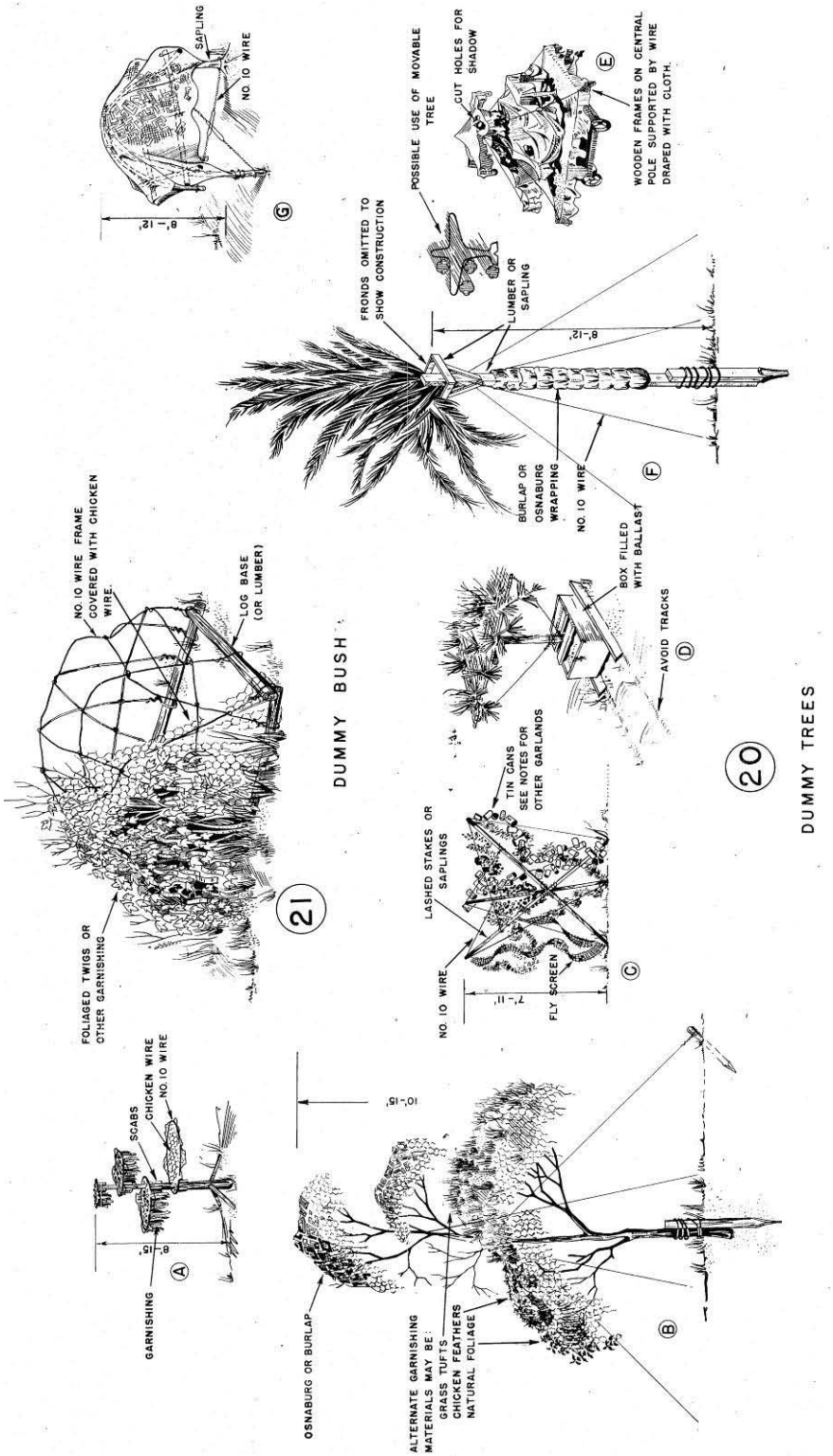

Figure 74. Camouflage demonstration area, dummy trees and bushes, Fort Bragg, NC, 1951 (Standard Drawing 28-13-74 Sheet 1 of 1, "Details, typical diagram-camouflage demonstration area, dummy trees, bush, rock and M.G. emplacement," 7 December 1951).

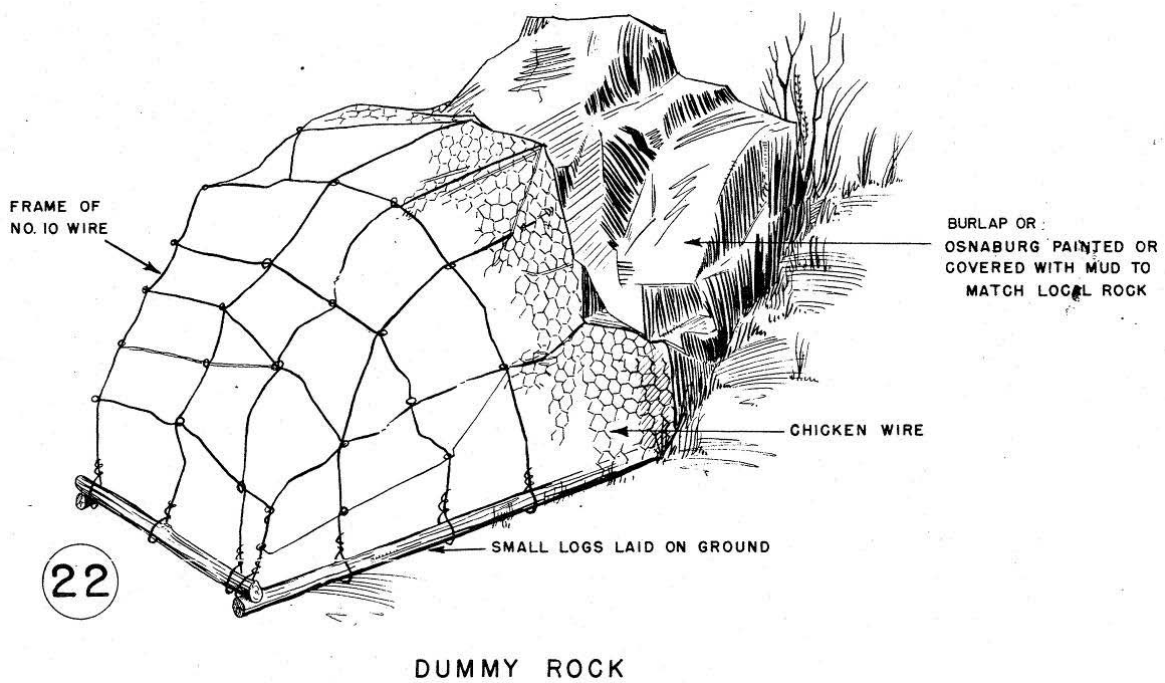

Figure 75. Camouflage demonstration area, dummy rock, Fort Bragg, NC, 1951 (Standard Drawing 28-13-74 Sheet 1 of 1, "Details, typical diagram-camouflage demonstration area, dummy trees, bush, rock and M.G. emplacement," 7 December 1951).

Observation posts

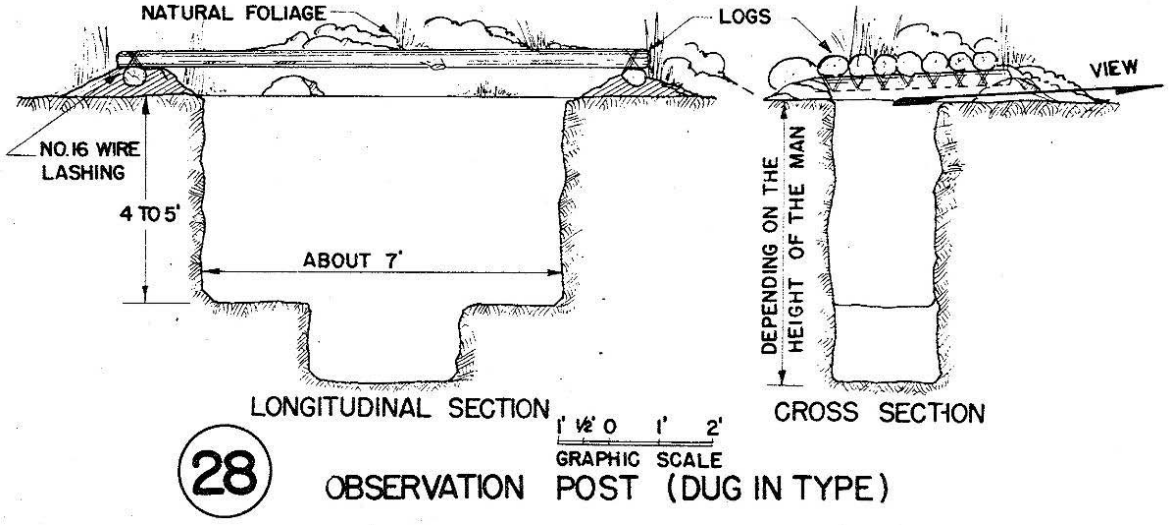

Figure 76. Camouflage demonstration area, observation post (dug in type), Fort Bragg, NC, 1951 (Standard Drawing 28-13-77 Sheet 1 of 1, "Details, typical diagram-camouflage demonstration area, observation posts and machine gun emplacements," 7 December 1951).

Trenches, foxholes, etc.

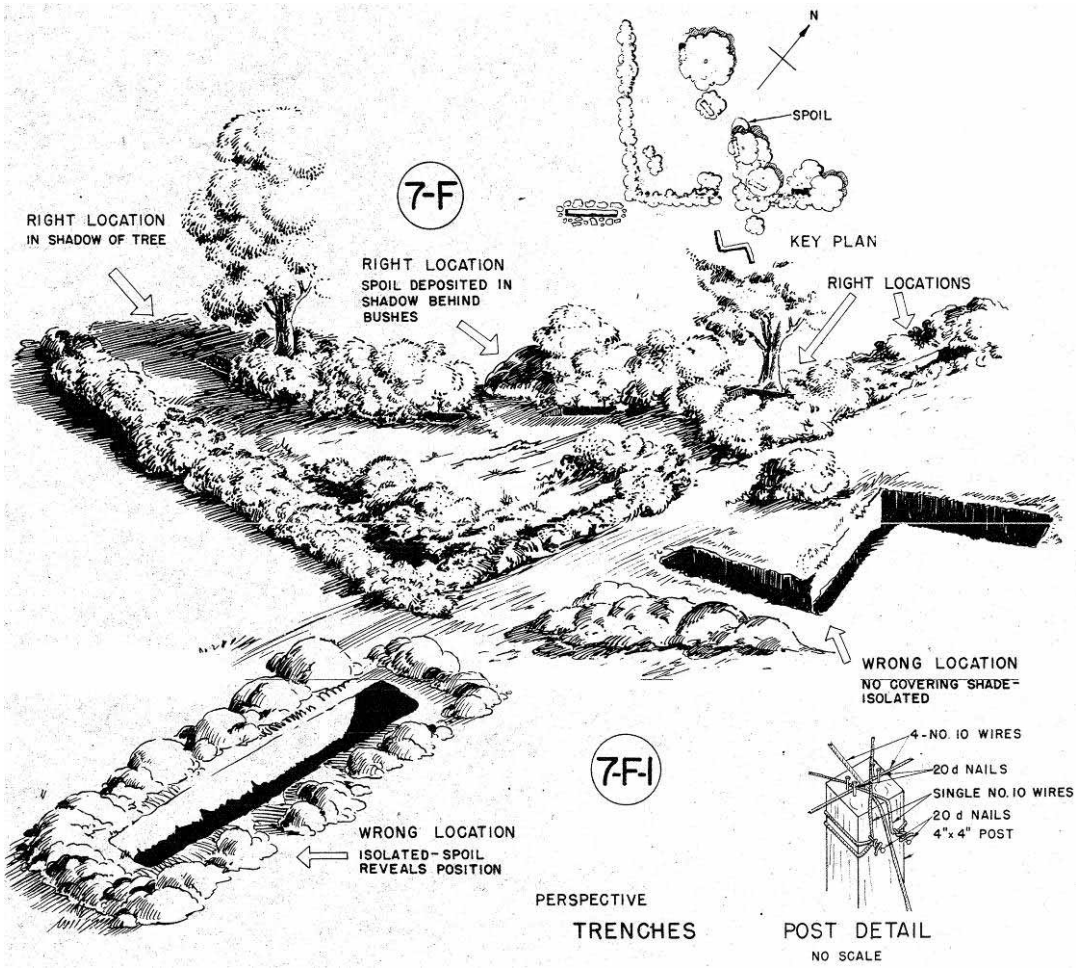

Figure 77. Camouflage demonstration area, trenches, Fort Bragg, NC, 1952 (Standard Drawing 28-13-86 Sheet 1 of 1, "Details, typical diagram-camouflage demonstration area, storage methods and quick action drape for plane," 5 January 1952).

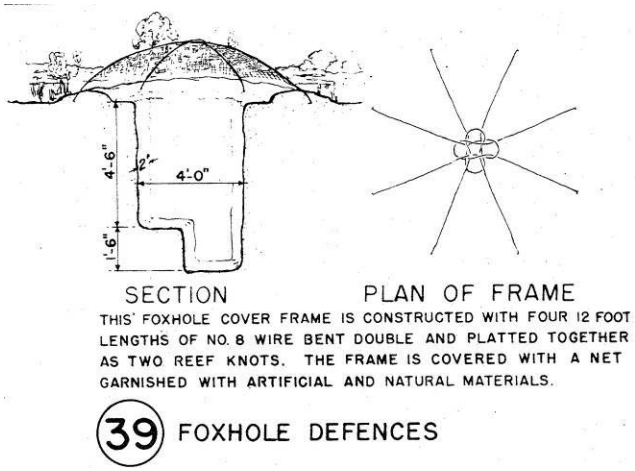

Figure 78. Camouflage demonstration area, foxhole defenses, Fort Bragg, NC, 1951 (Standard Drawing 28-13-82 Sheet 1 of 1, "Details, typical diagram-camouflage demonstration area, field installations and supplies," 7 December 1951).

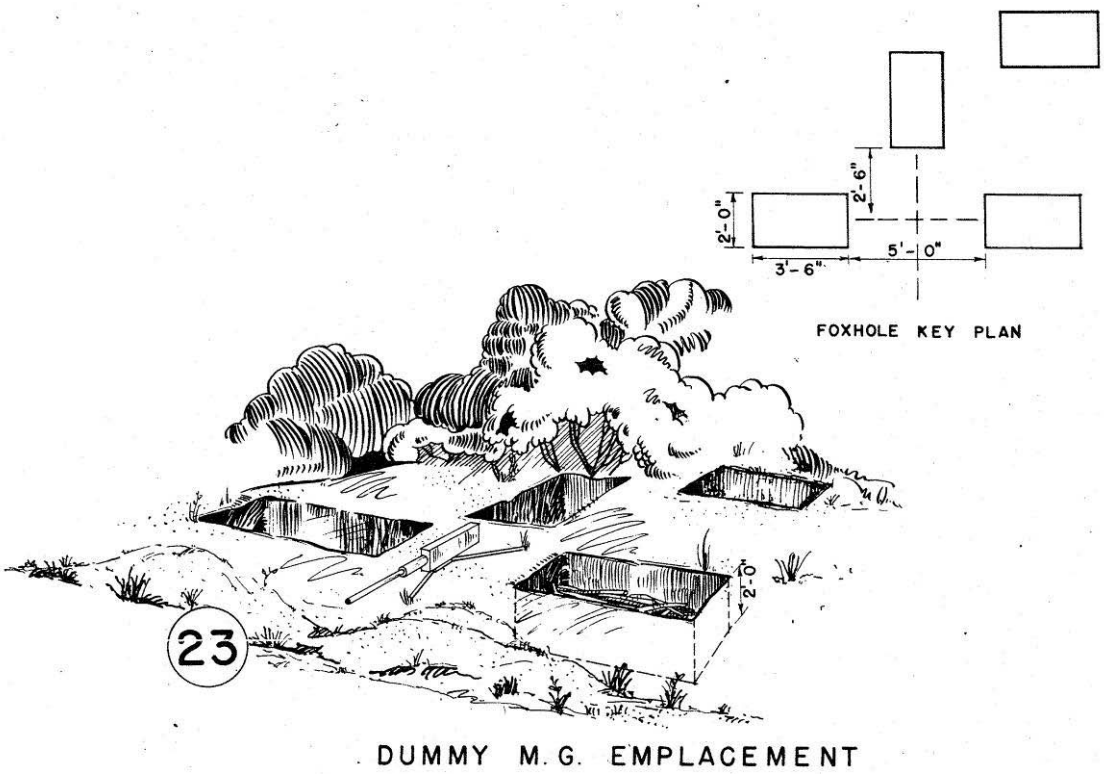

Figure 79. Camouflage Demonstration Area, Dummy M.G. Emplacement, Fort Bragg, NC, 1951 (Standard Drawing 28-13-74 Sheet 1 of 1; Details, Typical Diagram-Camouflage Demonstration Area, Dummy Trees, Bush, Rock and M.G. Emplacement; 7 December 1951).

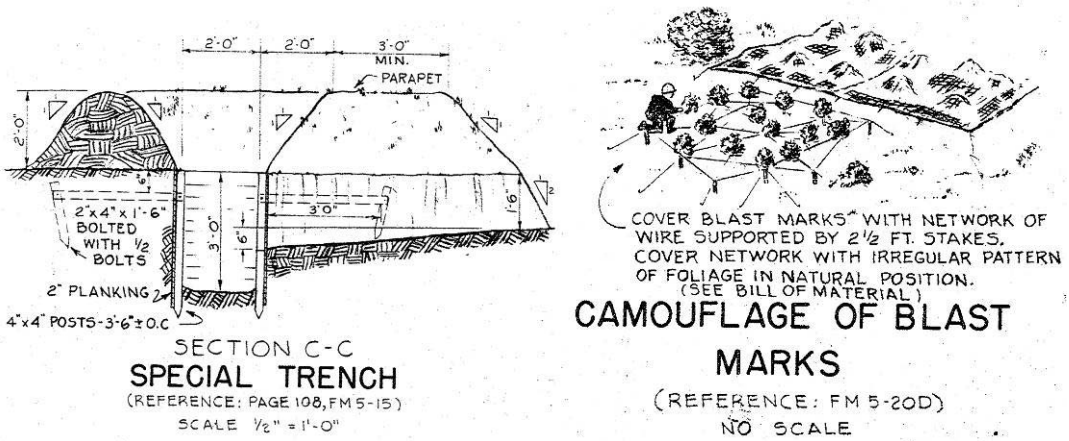

Figure 80. Camouflage demonstration area, 155 mm gun emplacement, special trench and camouflage of blast marks, Fort Bragg, NC, 1952 (Standard Drawing 28-13-80 Sheet 1 of 2, "Details, typical diagram-camouflage demonstration area, 155 mm Gun emplacement," 30 January 1952).

Gun emplacements

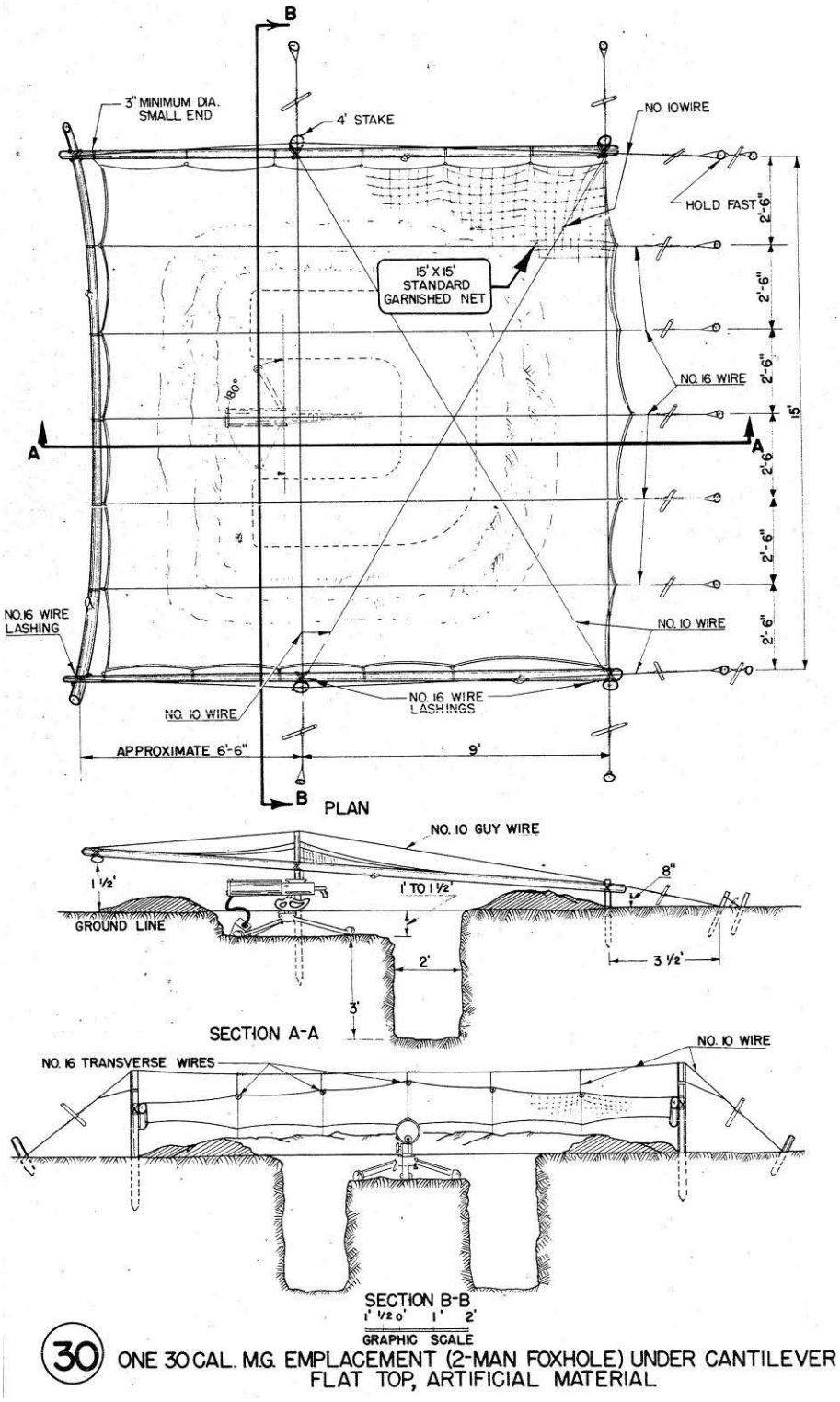

Figure 81. Camouflage demonstration area, one 30 caliber machine gun emplacement (two man foxhole) under cantilever, flat top, artificial material, Fort Bragg, NC, 1951 (Standard Drawing 28-13-77 Sheet 1 of 1, "Details, typical diagram-camouflage demonstration area, observation posts and machine gun emplacements," 7 December 1951).

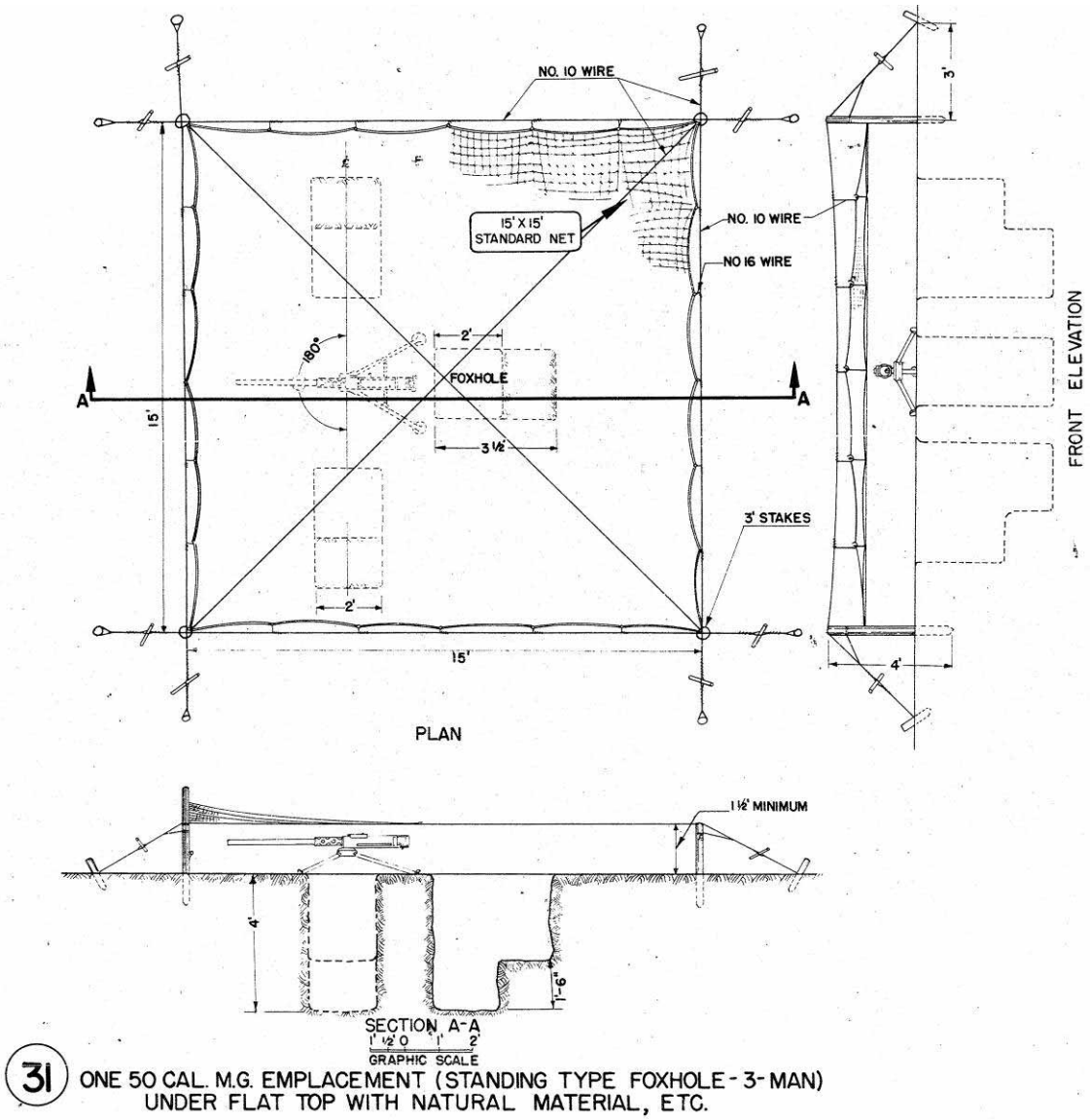

Figure 82. Camouflage demonstration area, one 50 caliber machine gun emplacement (standing type foxhole-3-man) under flat top with natural material, etc., Fort Bragg, NC, 1951 (Standard Drawing 28-13-77 Sheet 1 of 1, "Details, typical diagram-camouflage demonstration area, observation posts and machine gun emplacements," 7 December 1951).

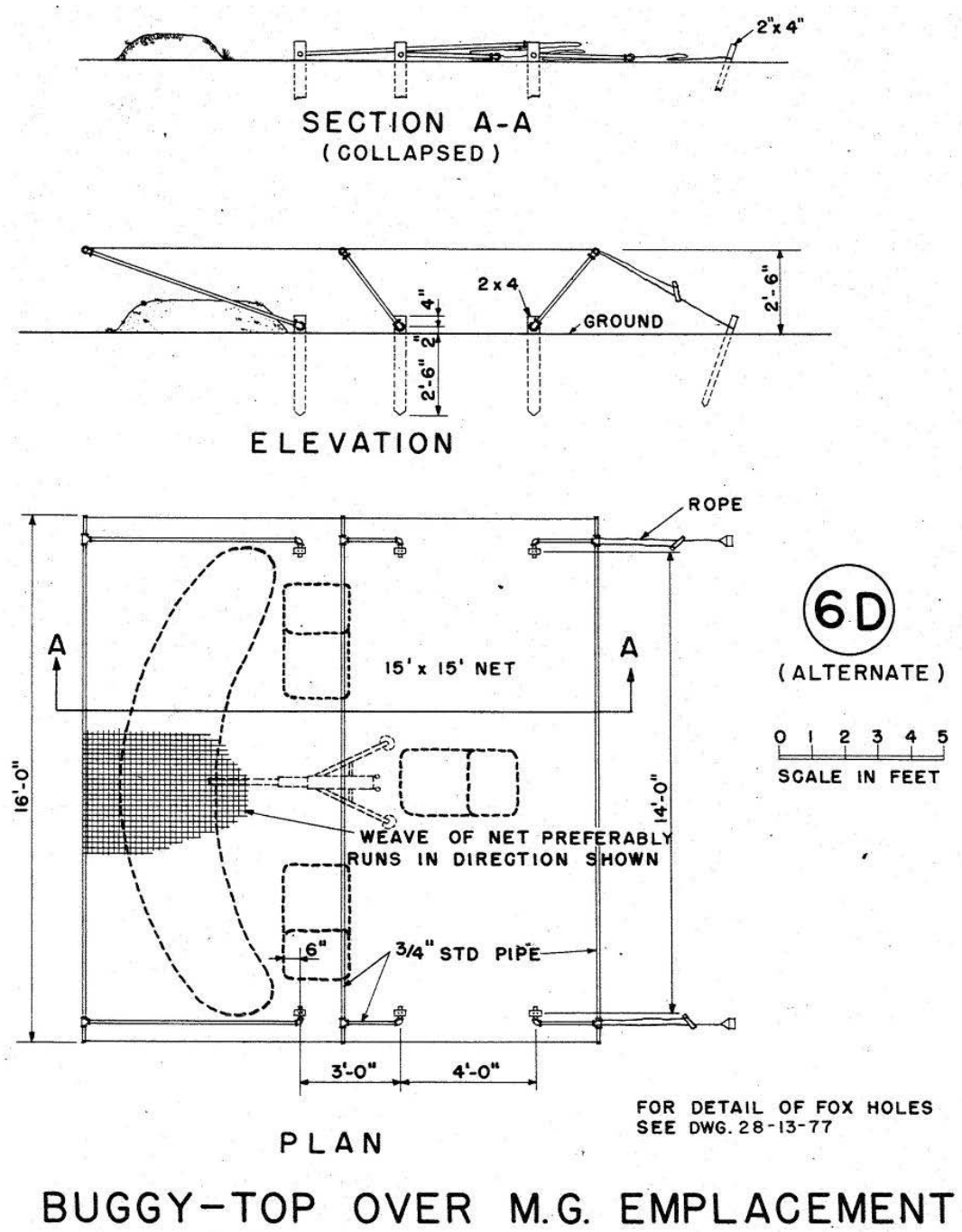

Figure 83. Camouflage demonstration area, buggy-top over m.g. emplacement, Fort Bragg, NC, 1951 (Standard Drawing 28-13-87 Sheet 1 of 1, "Details, typical diagram-camouflage demonstration area, terraced flat top for plane and buggy – top for M.G. emplacement," 7 December 1951).

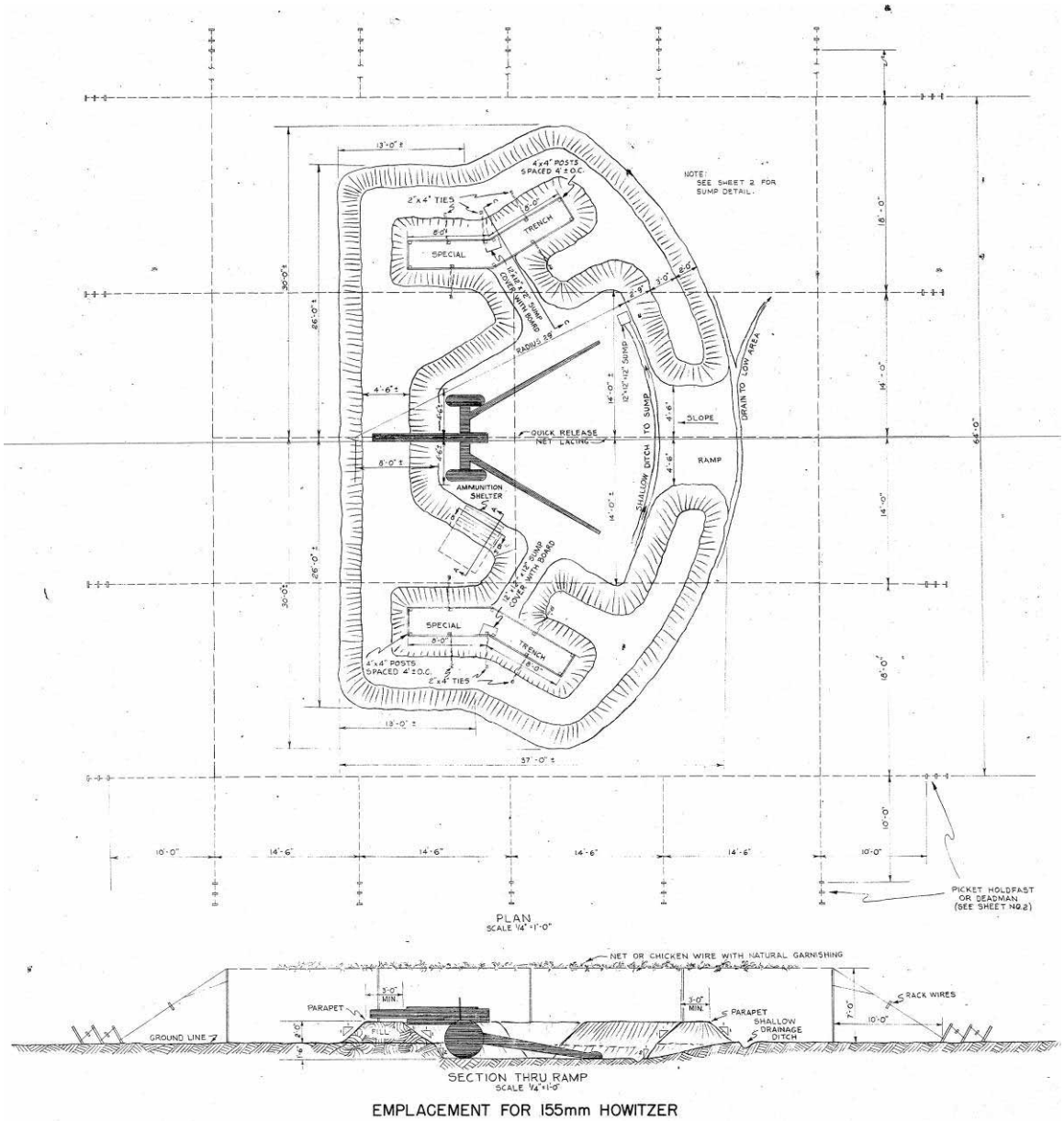

Figure 84. Camouflage demonstration area, emplacement for 155 mm howitzer, Fort Bragg, NC, 1952 (Standard Drawing 28-13-79 Sheet 1 of 2, "Details, typical diagram-camouflage demonstration area, emplacement for 155 mm howitzer," 8 February 1952).

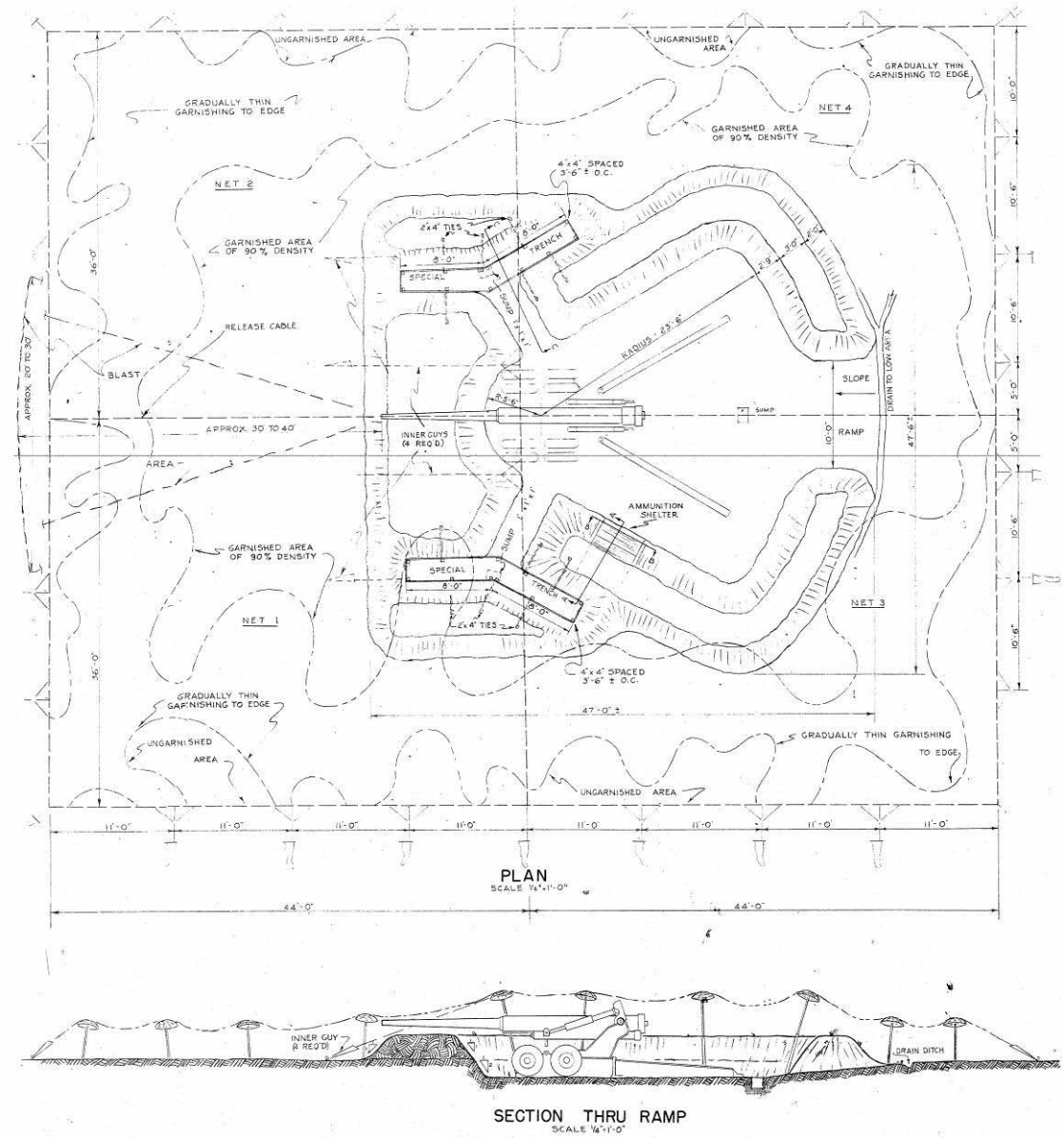

Figure 85. Camouflage demonstration area, 155 mm gun emplacement, plan and section through ramp, Fort Bragg, NC, 1952 (Standard Drawing 28-13-80 Sheet 1 of 2, "Details, typical diagram-camouflage demonstration area, 155 mm gun emplacement," 30 January 1952).

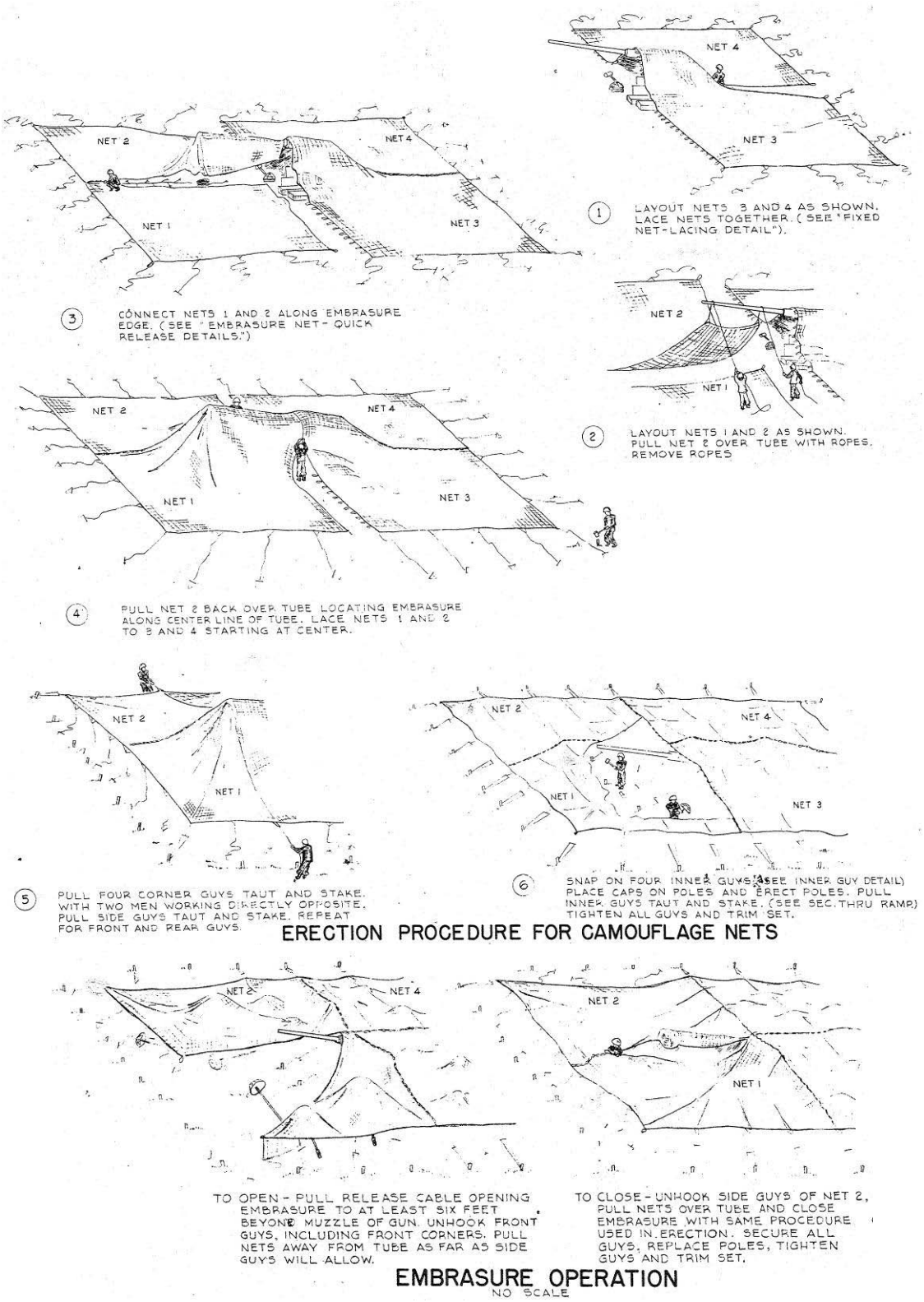

Figure 86. Camouflage demonstration area, 155 mm gun emplacement, Fort Bragg, NC, 1952 (Standard Drawing 28-13-80 Sheet 2 of 2, "Details, typical diagram-camouflage demonstration area, 155 mm gun emplacement," 30 January 1952).

Ammunition coverings

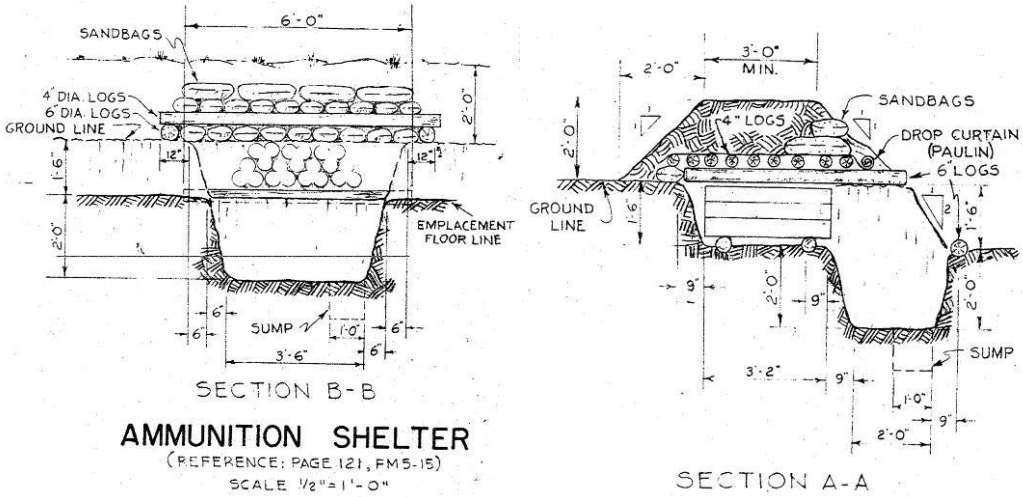

Figure 87. Camouflage demonstration area, 155 mm gun emplacement, ammunition shelter, Fort Bragg, NC, 1952 (Standard Drawing 28-13-80 Sheet 1 of 2, "Details, typical diagram-camouflage demonstration area, 155 mm gun emplacement," 30 January 1952).

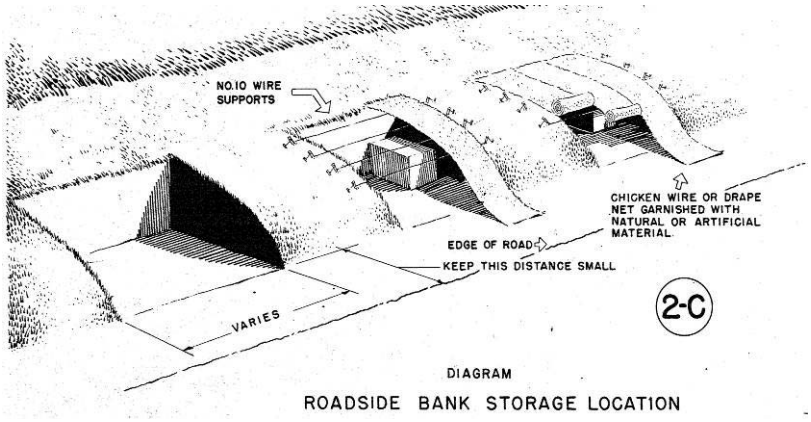

Figure 88. Camouflage demonstration area, roadside bank storage location, Fort Bragg, NC, 1952 (Standard Drawing 28-13-86 Sheet 1 of 1, "Details, typical diagram-camouflage demonstration area, storage methods and quick action drape for plane," 5 January 1952).

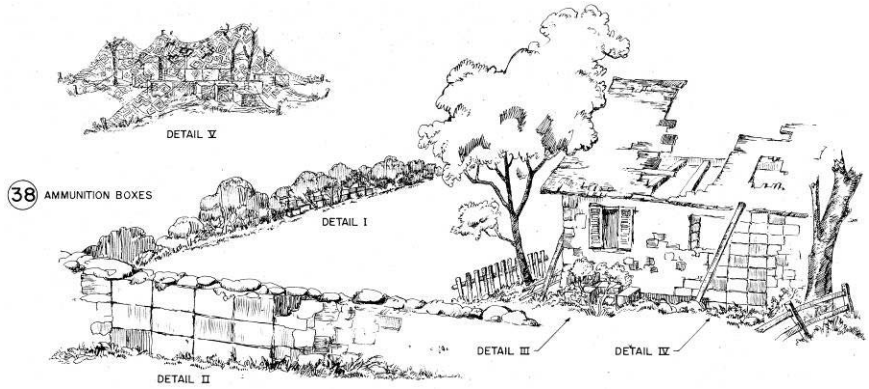

Figure 89. Camouflage demonstration area, ammunition boxes, Fort Bragg, NC, 1951 (Standard Drawing 28-13-82 Sheet 1 of 1, "Details, typical diagram-camouflage demonstration area, field installations and supplies," 7 December 1951).

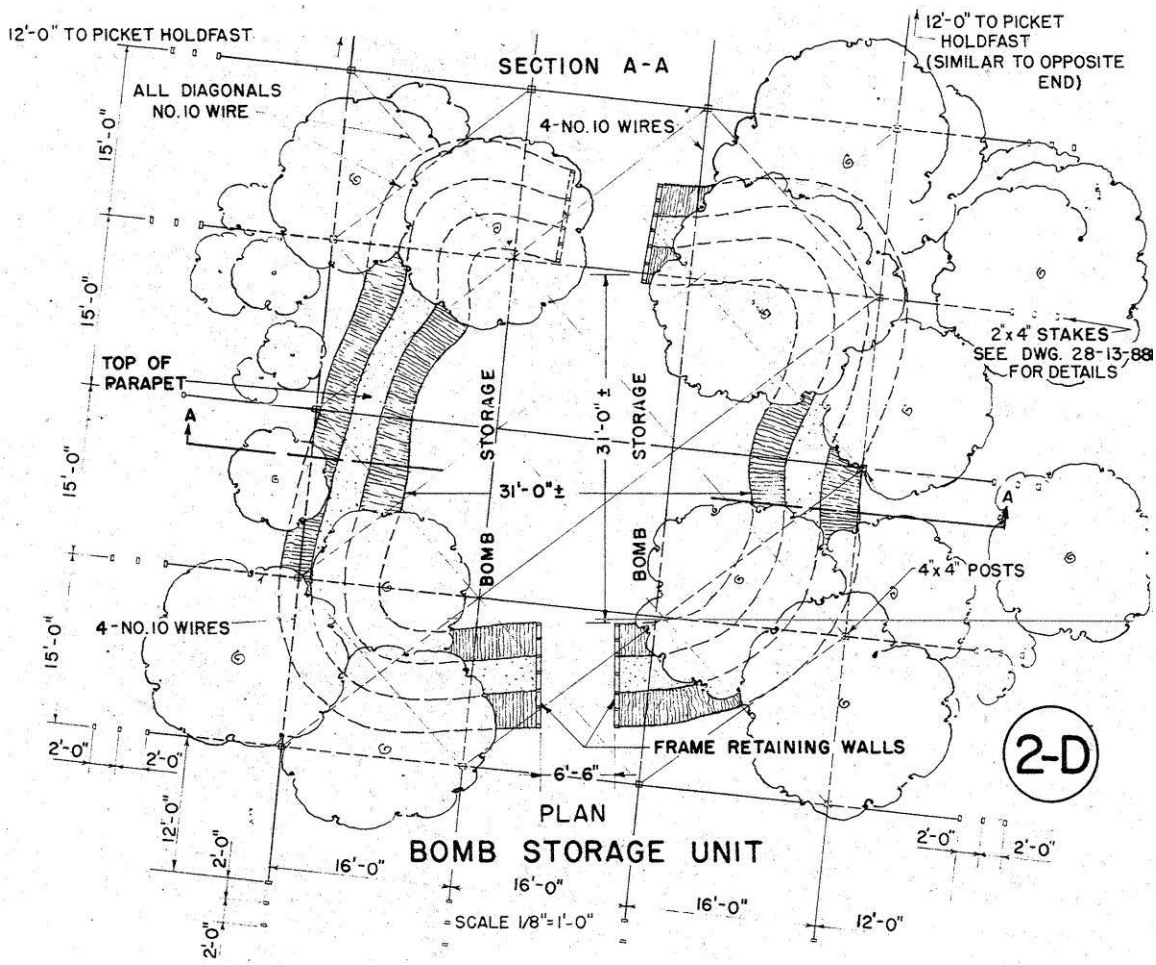

Figure 90. Camouflage demonstration area, bomb storage unit plan, Fort Bragg, NC, 1952 (Standard Drawing 28-13-86 Sheet 1 of 1, "Details, typical diagram-camouflage demonstration area, storage methods and quick action drape for plane," 5 January 1952).

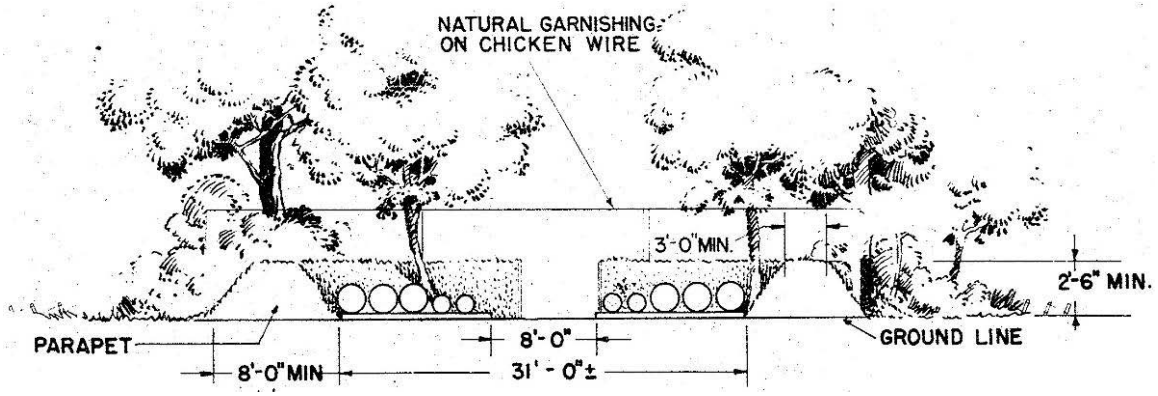

Figure 91. Camouflage demonstration area, bomb storage unit section, Fort Bragg, NC, 1952 (Standard Drawing 28-13-86 Sheet 1 of 1, "Details, typical diagram-camouflage demonstration area, storage methods and quick action drape for plane," 5 January 1952).

Kitchen and sanitation areas

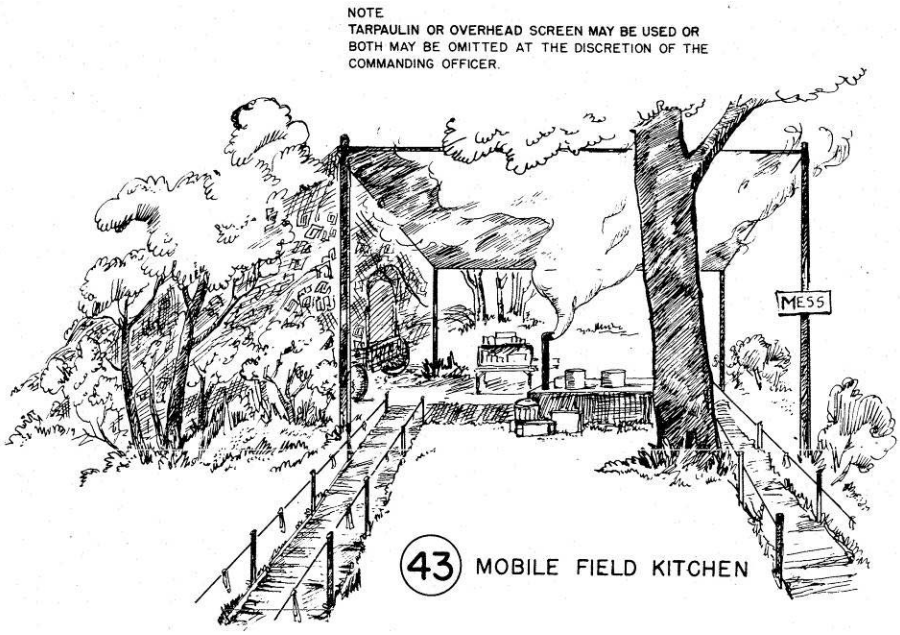

Figure 92. Camouflage demonstration area, mobile field kitchen, Fort Bragg, NC, 1951 (Standard Drawing 28-13-82 Sheet 1 of 1, "Details, typical diagram-camouflage demonstration area, field installations and supplies," 7 December 1951).

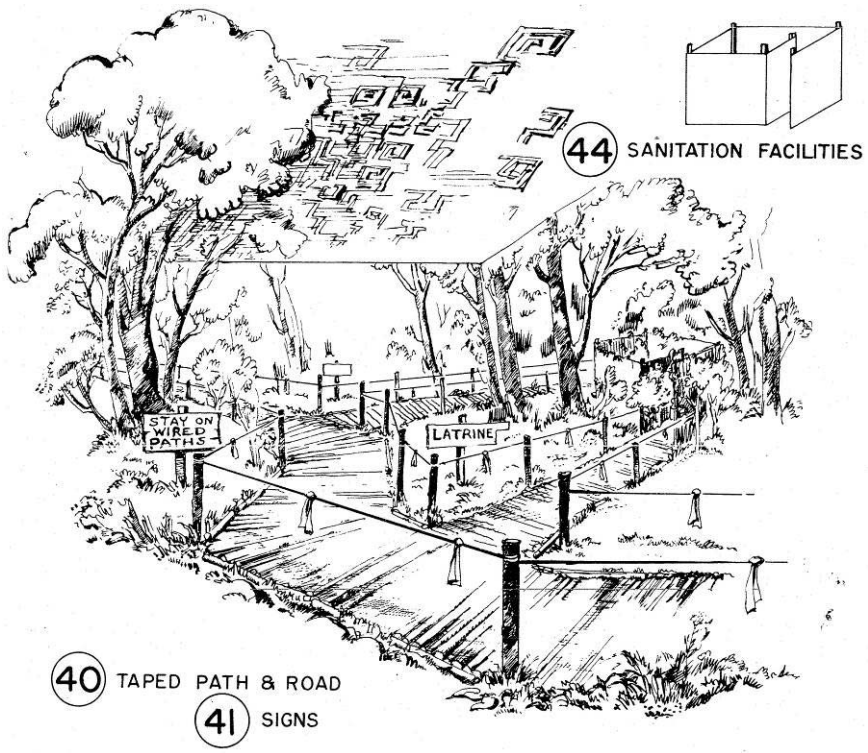

Figure 93. Camouflage demonstration area, taped path, road signs, and sanitation facilities, Fort Bragg, NC, 1951 (Standard Drawing 28-13-82 Sheet 1 of 1, "Details, typical diagram-camouflage demonstration area, field installations and supplies," 7 December 1951).

Road screens

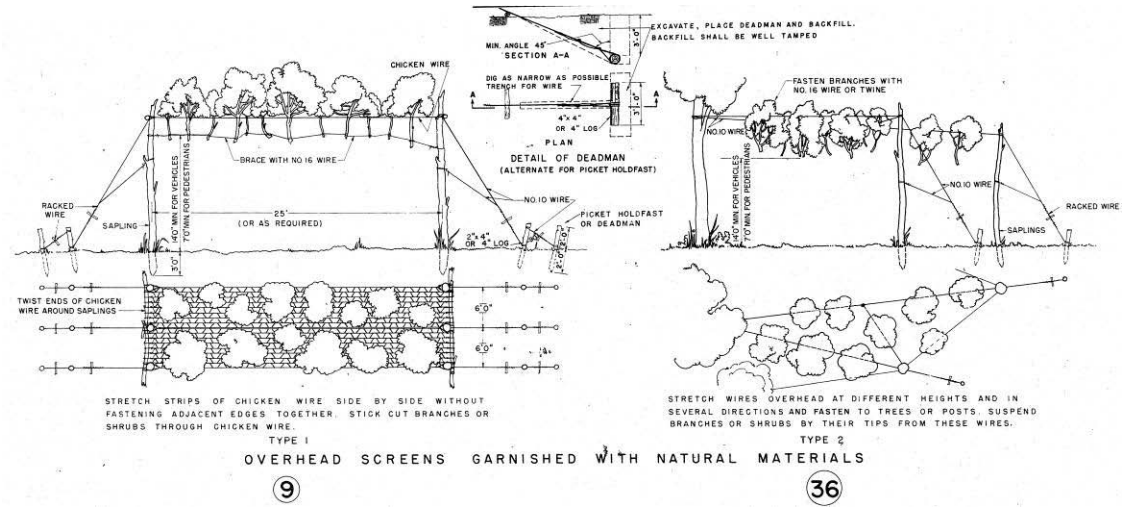

Figure 94. Camouflage demonstration area, overhead road screens, Fort Bragg, NC, 1951 (Standard Drawing 28-13-66 Sheet 1 of 1, "Details, typical diagram-camouflage demonstration area, garnishing strip plant and overhead road screens," 7 December 1951).

BILL OF MATERIALS

ECHELON ROAD SCREENS - OBSERVATION NO. 10

(QUANTITIES BELOW COVER REQUIREMENTS FOR 3 UNITS)

DESCRIPTION	QUANTITY	SIZE	NOTE
STAKES	6	5"-7" DIA. X 14'-0"	
STAKES	12	3" DIA. X 2'-0"	
WIRE		NO. 10	DEPENDS ON FILLER USED IN MAT
WIRE		NO. 16	
BRANCHES, RUSHES, ETC. AS REQUIRED.			

LATERAL ROAD SCREENS - OBSERVATION NO. 18

(QUANTITIES BELOW COVER REQUIREMENTS FOR 4 BAYS)

DESCRIPTION	QUANTITY	SIZE	NOTE
STAKES	5	5"-7" DIA. X 14'-0"	
STAKES	11	3" DIA. X 2'-0"	
WIRE		NO. 10	DEPENDS ON FILLER USED IN MAT.
WIRE		NO. 16	
MAT FILLER AS REQ'D			

MAT LOOM

DESCRIPTION	QUANTITY	SIZE	NOTE
LUMBER	11	2"X4"X12'-0"	
LUMBER	1	2"X6"X8'-0"	
LUMBER	2 OR AS REQ'D	2"X2"X12'-0"	HANDBARS
WIRE	AS REQ'D	NO. 10	
WIRE	AS REQ'D	NO. 16	
NAILS	3 LB	16d	COMMON

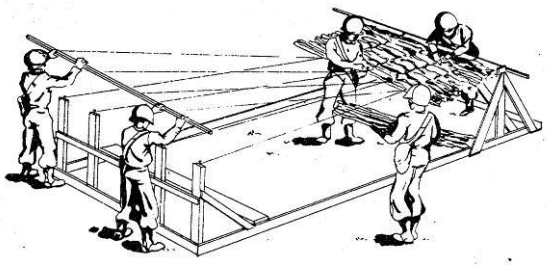

Figure 95. Camouflage demonstration area, bill of materials, echelon road screens, lateral road screens, and mat loom, Fort Bragg, NC, 1951 (Standard Drawing 28-13-67 Sheet 1 of 1, "Details, typical diagram-camouflage demonstration area, road screens and mat loom," 7 December 1951).

Vehicle coverings

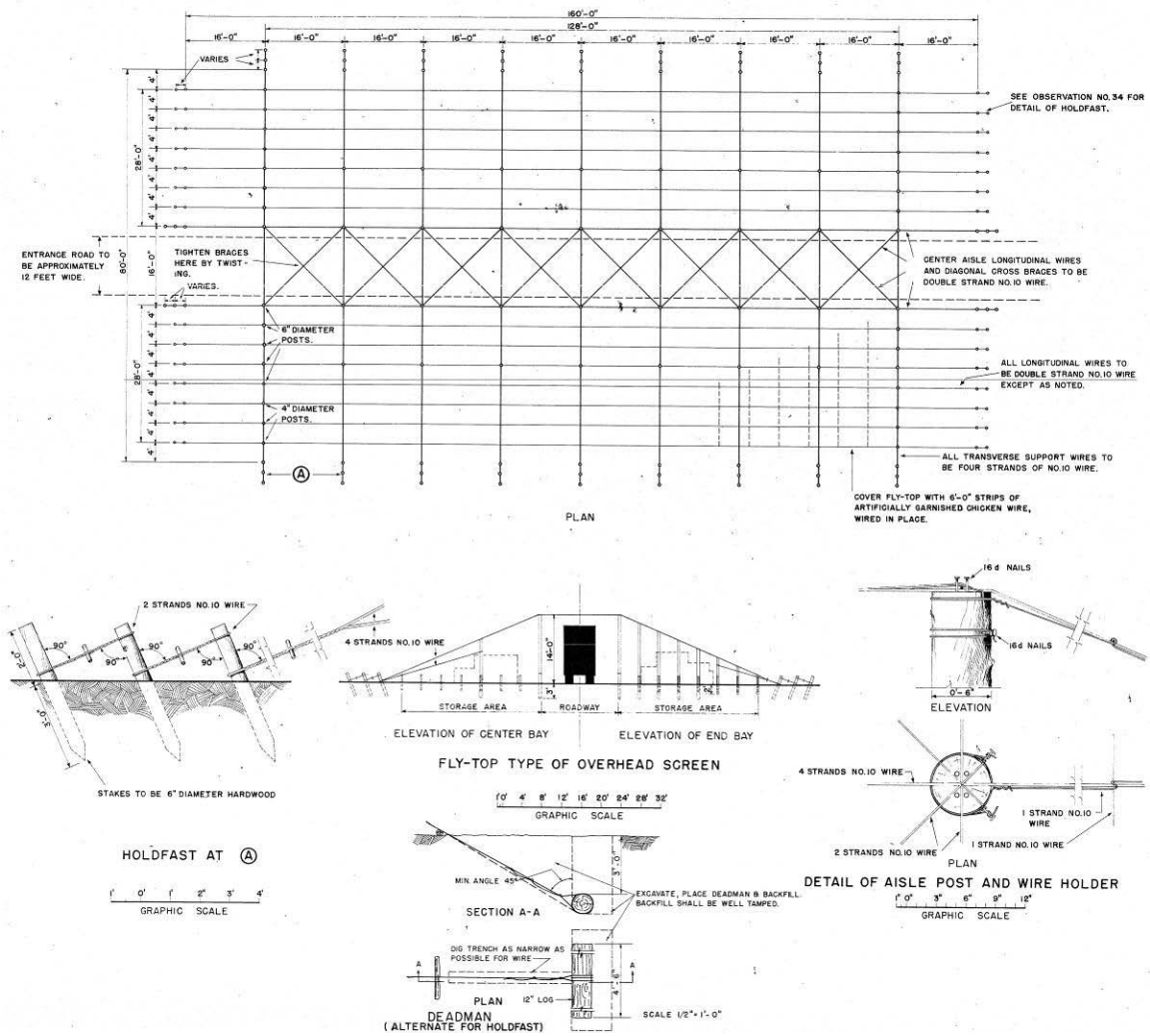

Figure 96. Camouflage demonstration area, fly-top overhead screen plan and details, Fort Bragg, NC, 1951 (Standard Drawing 28-13-81 Sheet 1 of 1, "Details, typical diagram-camouflage demonstration area, fly-top overhead screen," 7 December 1951).

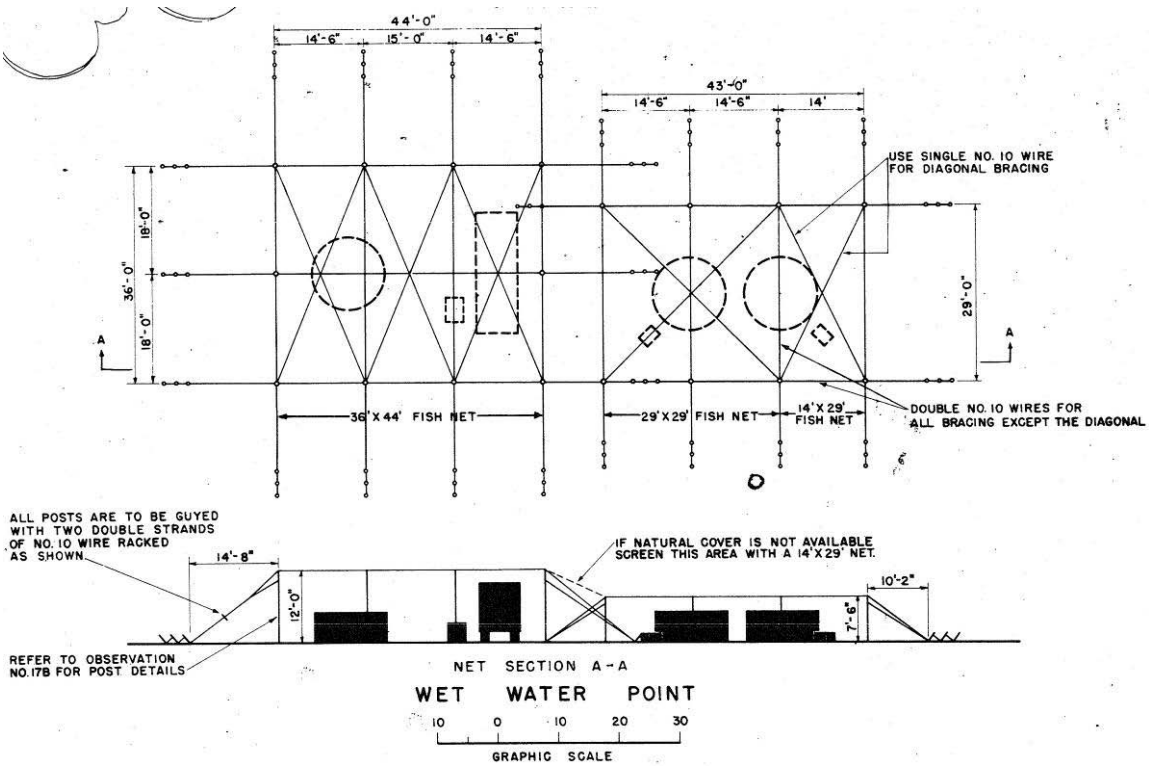

Figure 97. Camouflage demonstration area, wet water point, Fort Bragg, NC, 1951 (Standard Drawing 28-13-83 Sheet 1 of 1, "Details, typical diagram-camouflage demonstration area, water points," 7 December 1951).

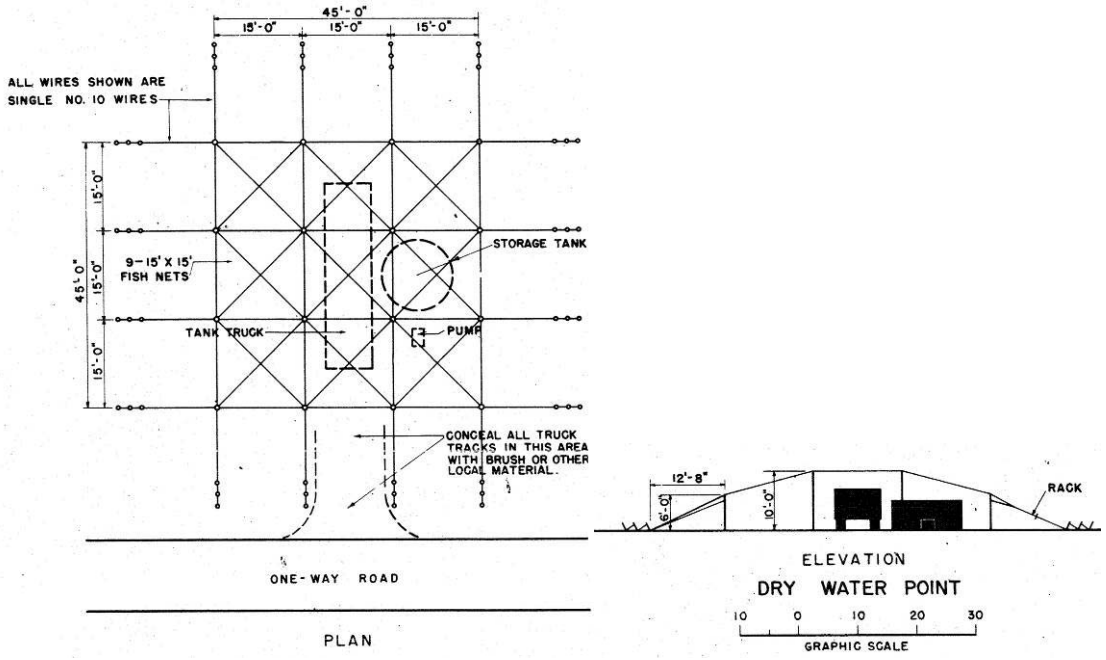

Figure 98. Camouflage demonstration area, dry water point, Fort Bragg, NC, 1951 (Standard Drawing 28-13-83 Sheet 1 of 1, "Details, typical diagram-camouflage demonstration area, water points," 7 December 1951).

Airplane coverings

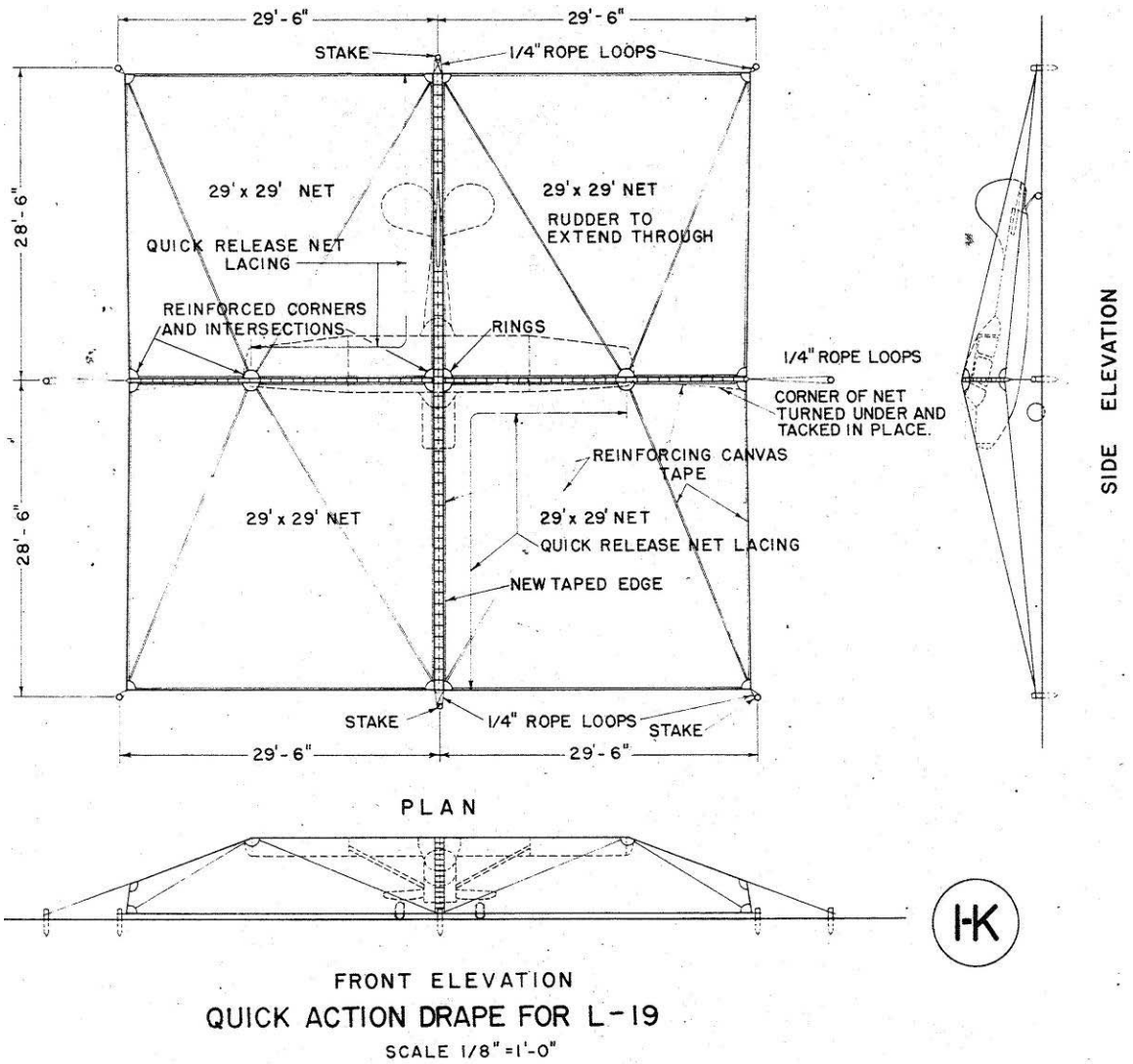

Figure 99. Camouflage demonstration area, quick action drape for L-19, Fort Bragg, NC, 1952 (Standard Drawing 28-13-86 Sheet 1 of 1, "Details, typical diagram-camouflage demonstration area, storage methods and quick action drape for plane," 5 January 1952).

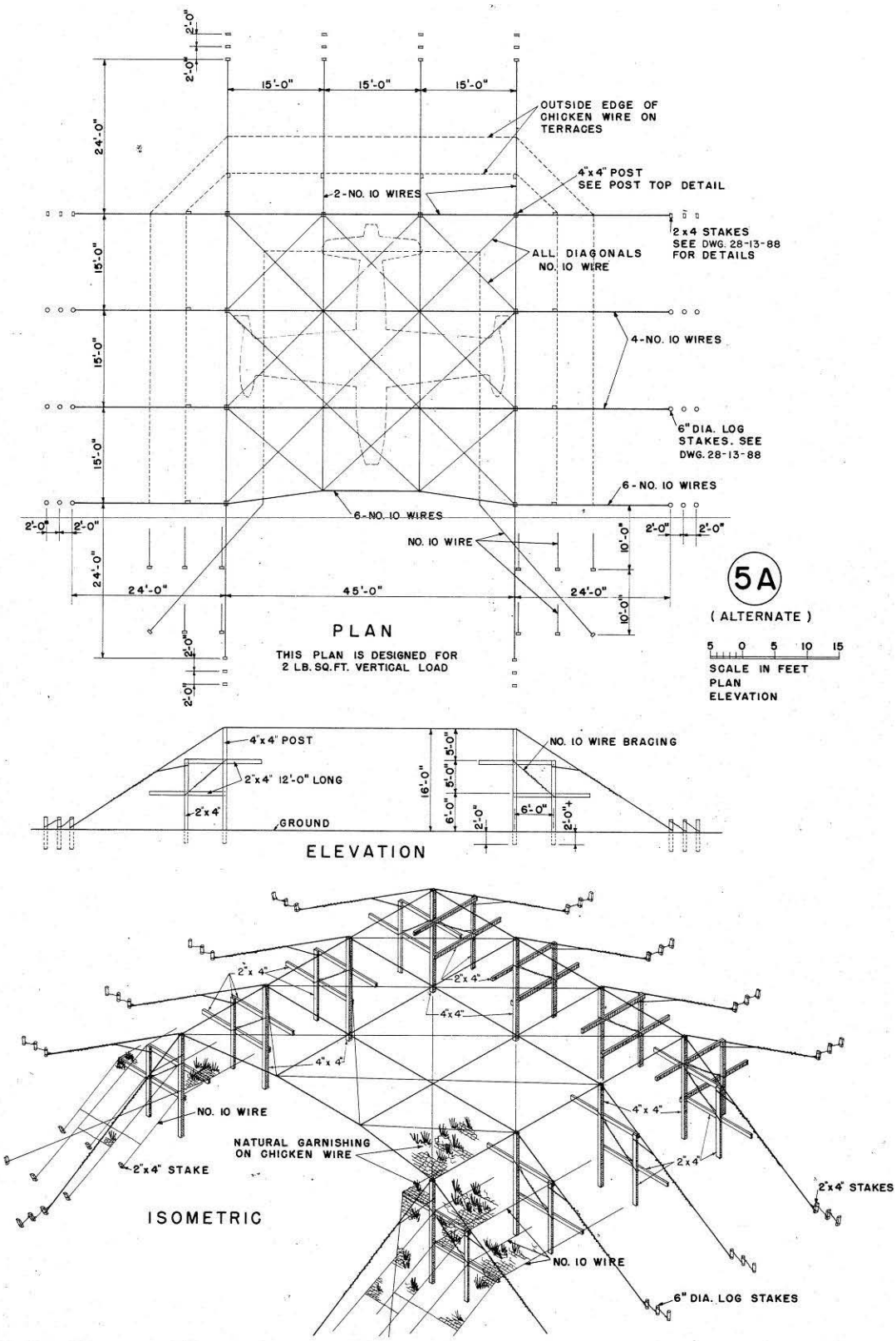

Figure 100. Camouflage demonstration area, terraced flat top for plane, Fort Bragg, NC, 1951 (Standard Drawing 28-13-87 Sheet 1 of 1, "Details, typical diagram-camouflage demonstration area, terraced flat top for plane and buggy – top for M.G. emplacement," 7 December 1951).

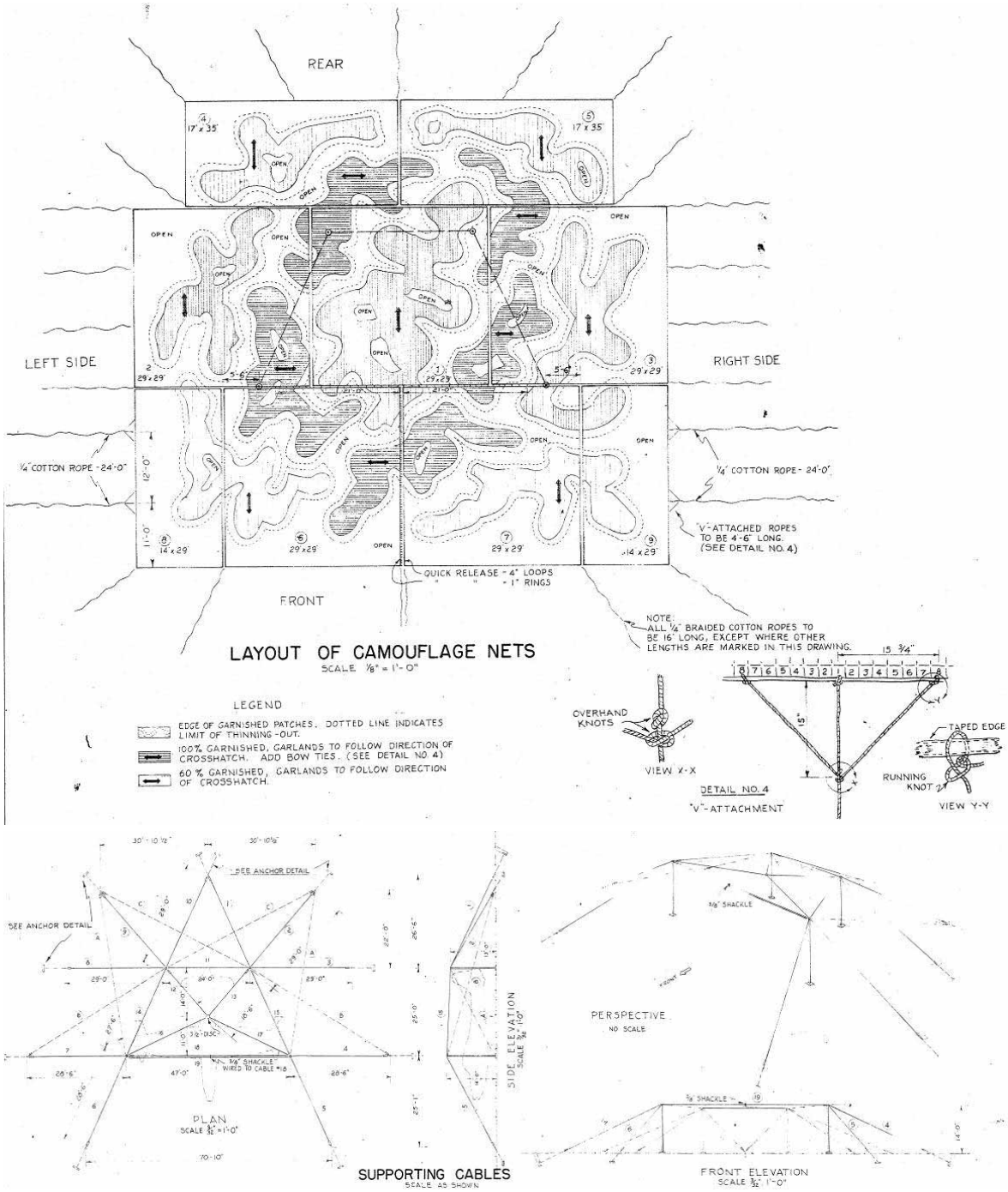

Figure 101. Camouflage demonstration area, camouflage net for single engine plane, Fort Bragg, NC, 1952 (Standard Drawing 28-13-70 Sheet 1 of 2, "Details, typical diagram-camouflage demonstration area, camouflage net for single engine plane," 8 February 1952).

Fireman's training tower

Training towers with ladders, balconies, shafts, staircases, smoke rooms, and other features were used to train firefighters.

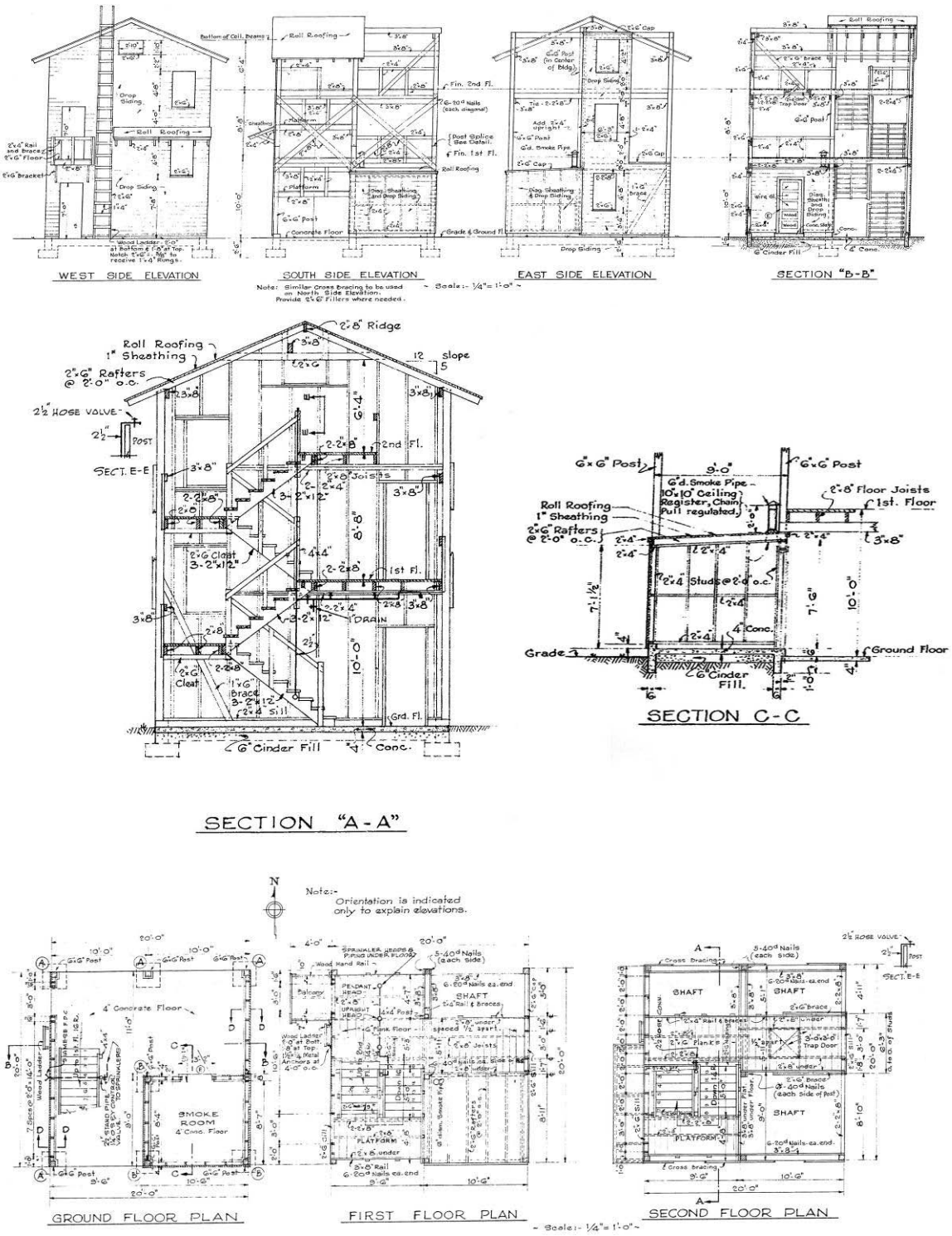

Figure 102. Firefighter's training tower, Fort Bragg, NC, 1951 (Standard Drawing 28-13-48 Sheet 1 of 1, "Fireman's training tower, plans, elevations, & details," 21 November 1951).

Gas chamber

The gas chamber exposed soldiers to non-lethal gas and trained them mentally how to handle a chemical attack.

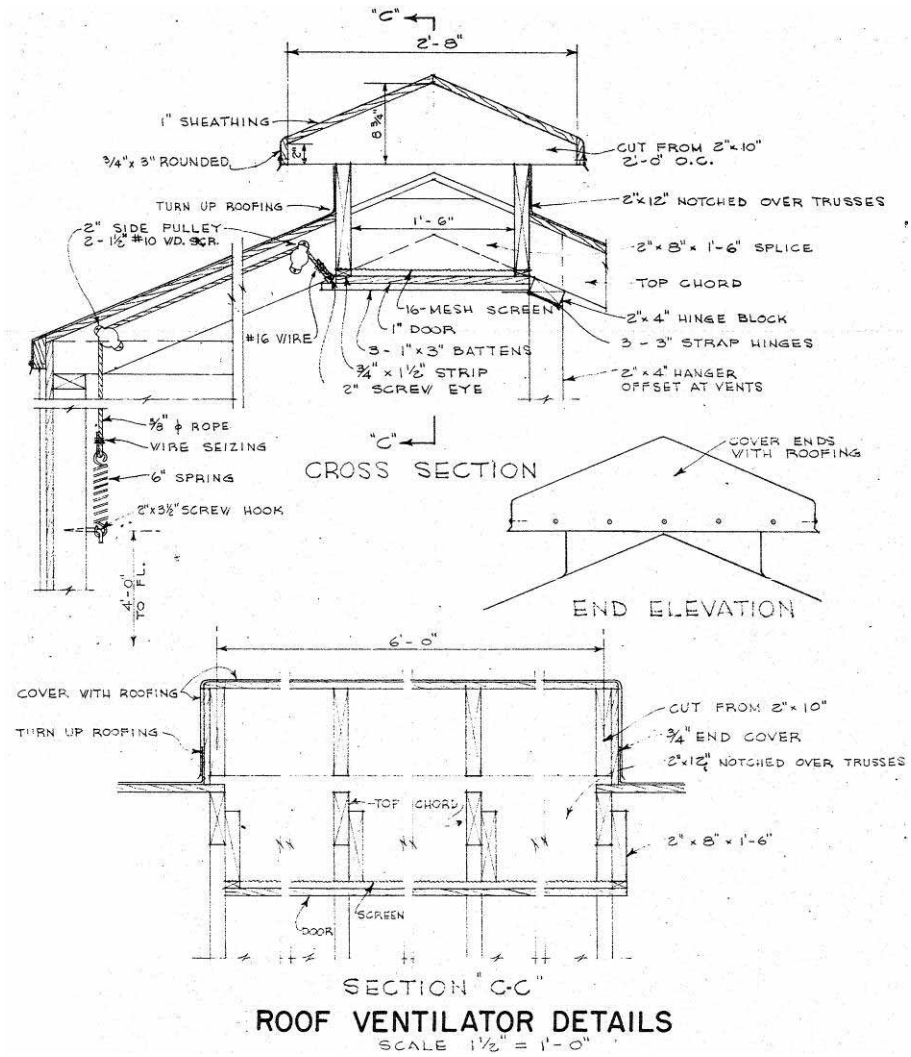

Figure 103. Gas chamber, roof ventilator details, Fort Bragg, NC, 1952 (Standard Drawing 28-13-46 Sheet 2 of 2, "Gas chamber, details," 28 February 1952).

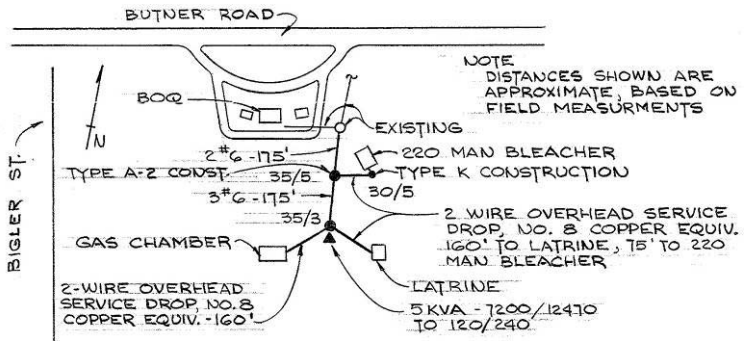

Figure 104. CBR area electrical layout, Fort Bragg, NC, 1966 (Standard Drawing 28-13-117 Sheet 28, "Electrical distribution," 28 June 1966).

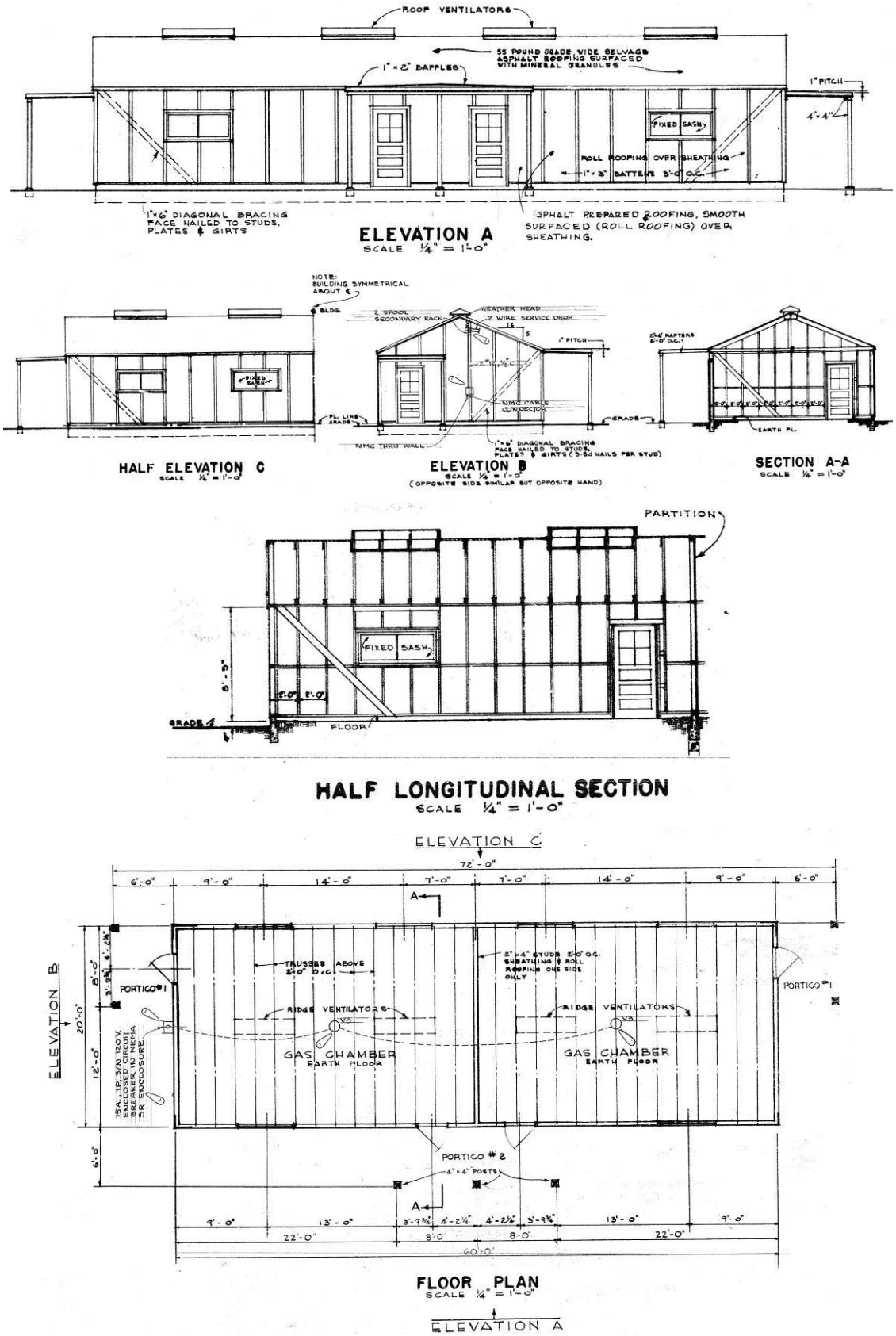

Figure 105. Gas chamber, Fort Bragg, NC, 1952 (Standard Drawing 28-13-46 Sheet 1 of 2, "Gas chamber, plan, elevation, and details," 22 February 1952).

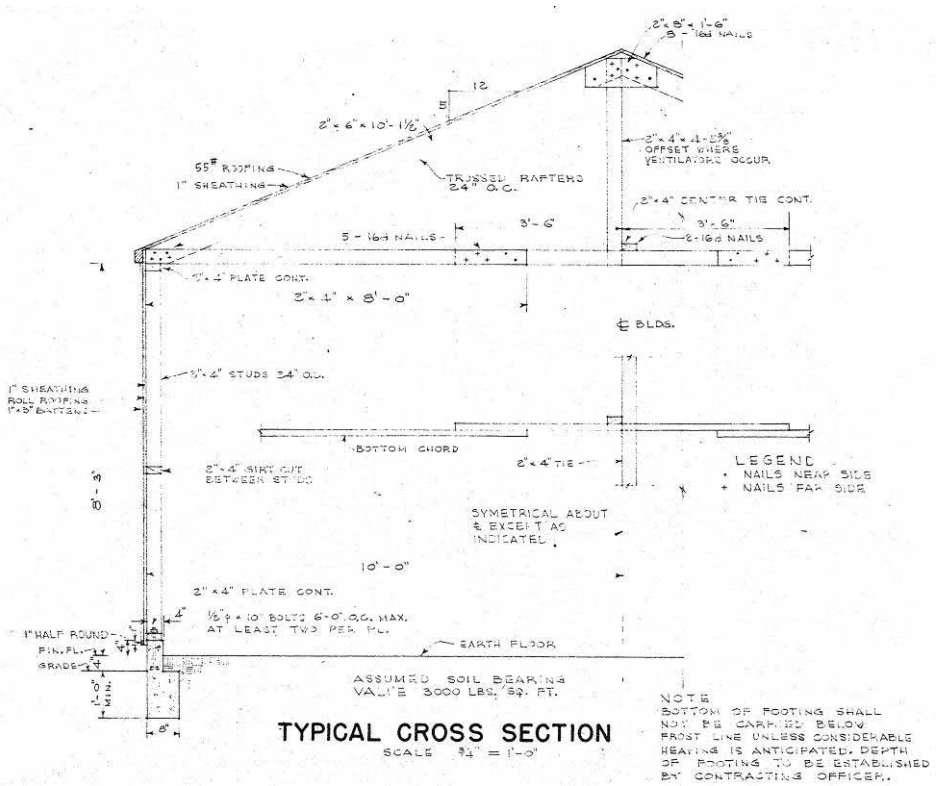

Figure 106. Gas chamber, typical cross section, Fort Bragg, NC, 1952 (Standard Drawing 28-13-46 Sheet 2 of 2, "Gas chamber, details," 28 February 1952).

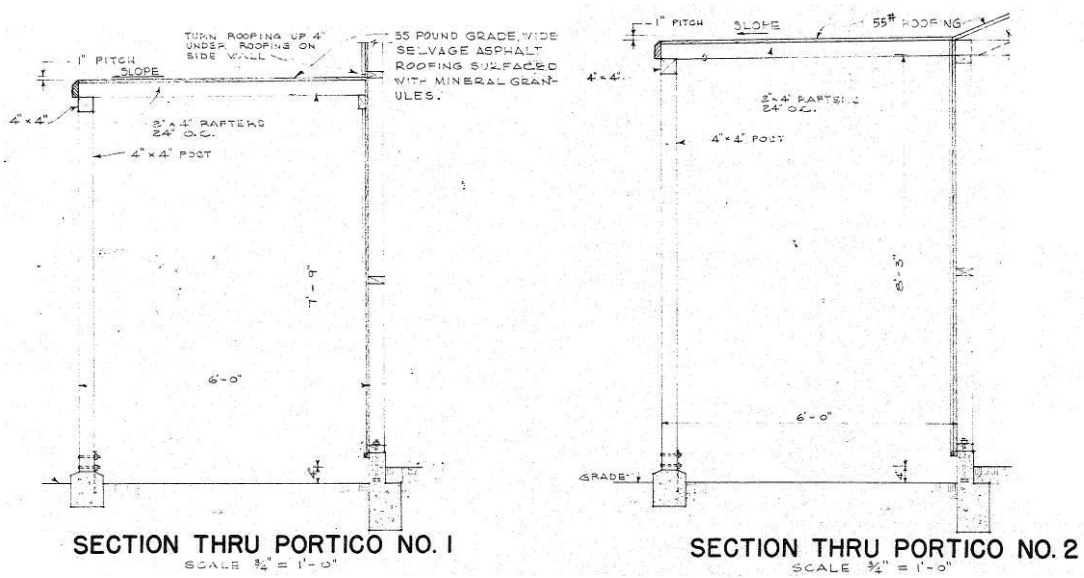

Figure 107. Gas chamber, sections through porticos, Fort Bragg, NC, 1952 (Standard Drawing 28-13-46 Sheet 2 of 2, "Gas chamber, details," 28 February 1952).

Hand to hand combat

Soldiers were taught close combat fighting skills in struggle pits, hand-to-hand combat areas, and a variety of other training areas such as those shown below.

Figure 108. All tricks and techniques of hand-to-hand combat are taught to aviation cadets at Navy Pre-Flight School, Del Monte, CA, December 1942 (NARA College Park, RG 80-G, Box 1694, Photo 417671).

Figure 109. Judo instructor showing a new trick at MCRD Parris Island, SC, undated (NARA College Park, RG 127-GC, Box 34, Photo 15288).

Figure 110. Marine recruits practicing an effective judo hold in the disarming of an opponent at MCB San Diego, CA, undated (NARA College Park, RG 127-GC, Box 3, Photo 42693).

Figure 111. General training at MCB San Diego, CA, 1942 (NARA College Park, RG 127-GC-46, Box 3, Photo 402614).

Struggle pit

Figure 112. Struggle pit on the leader's course at Fort Jackson, SC, 8 January 1952 (NARA College Park, RG 111-SC WWII, Box 226, Photo SC39401).

Hand to hand combat area

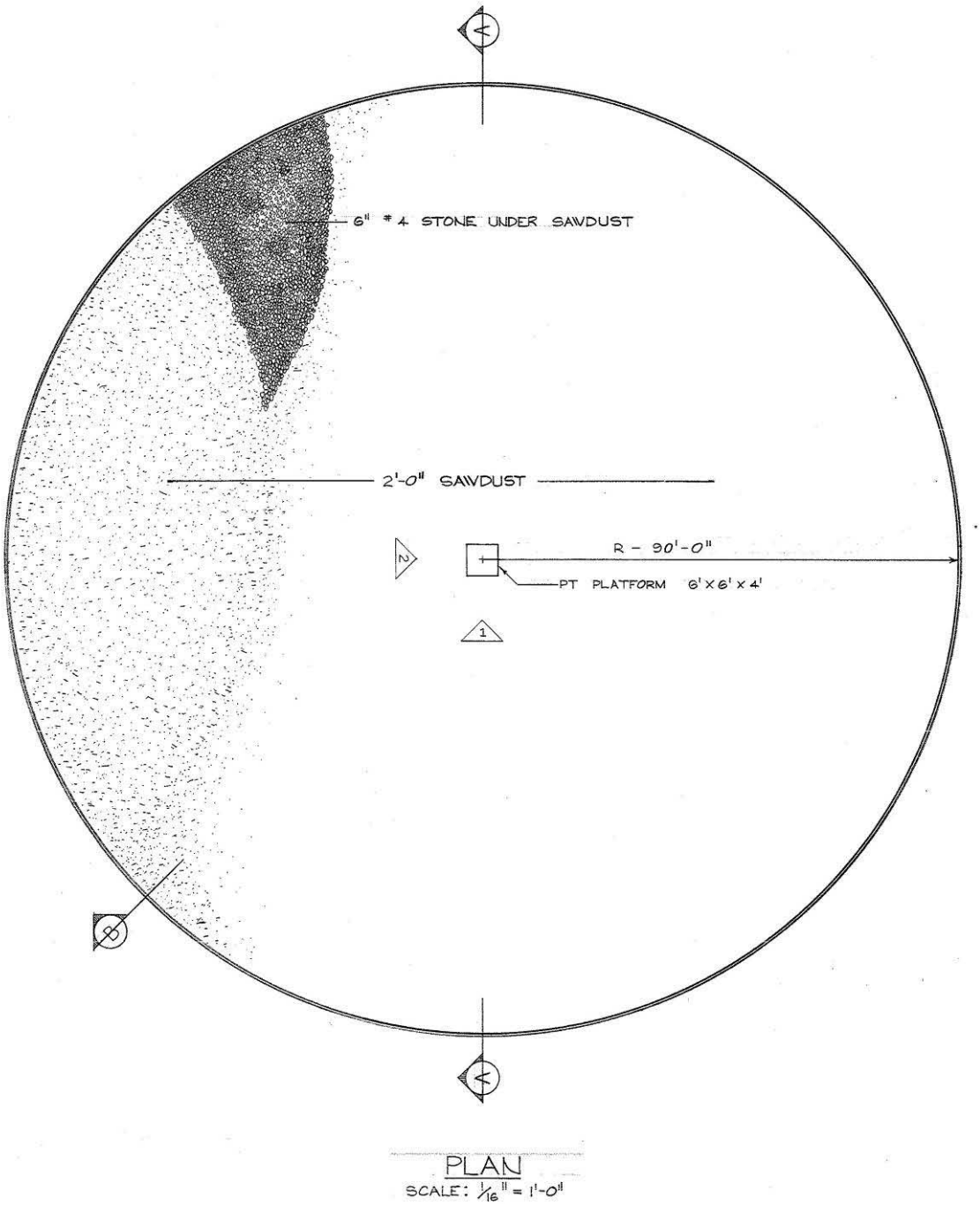

Figure 113. Hand-to-hand combat area, plan , Fort Bragg, NC, 1966 (Standard Drawing 28-13-117 Sheet 18, "Construction of ranges, phase I, U.S. ATC facilities, Fort Bragg, NC, hand-to-hand combat area," 28 June 1966).

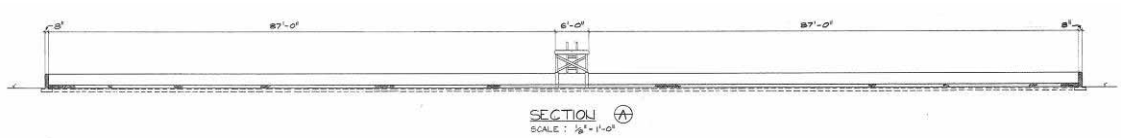

Figure 114. Hand-to-hand combat area, section, Fort Bragg, NC, 1966 (Standard Drawing 28-13-117 Sheet 18, "Construction of ranges, phase I, U.S. ATC facilities, Fort Bragg, NC, hand-to-hand combat area," 28 June 1966).

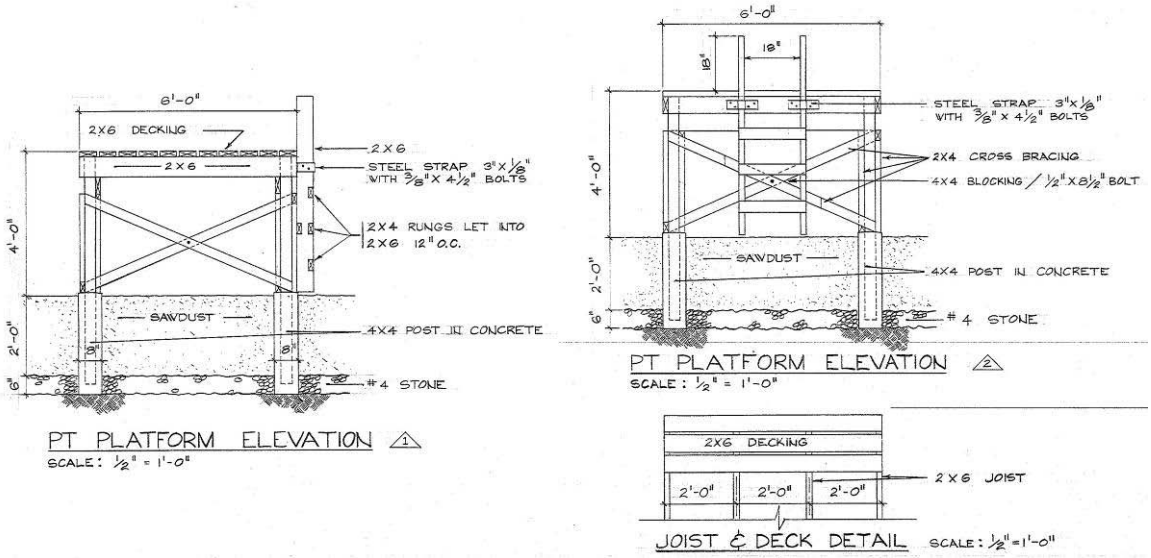

Figure 115. Hand-to-hand combat area, platform, Fort Bragg, NC, 1966 (Standard Drawing 28-13-117 Sheet 18, "Construction of ranges, phase I, U.S. ATC facilities, Fort Bragg, NC, hand-to-hand combat area," 28 June 1966).

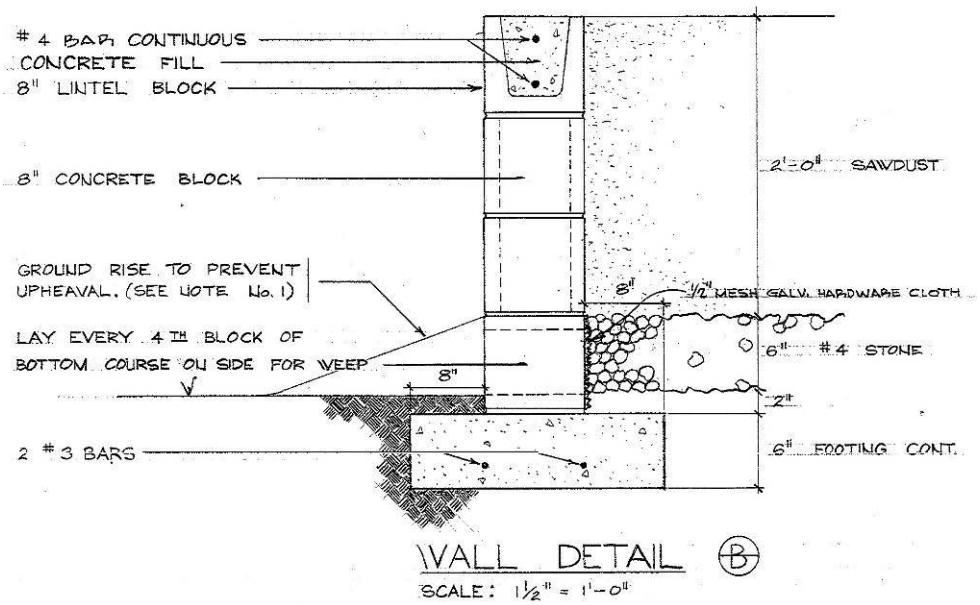

Figure 116. Hand-to-hand combat area, walls, Fort Bragg, NC, 1966 (Standard Drawing 28-13-117 Sheet 18, "Construction of ranges, phase I, U.S. ATC facilities, Fort Bragg, NC, hand-to-hand combat area," 28 June 1966).

Figure 117. Basic trainees learn how to disarm an opponent with a knife in hand-to-hand combat training at Fort Jackson, SC, 12 August 1962 (NARA College Park, RG 111-SC post-1955, Box 376, Photo SC598114).

Map training

Various map-reading courses were used to teach soldiers one of their first basic skills.

Figure 118. Map reading course at Fort Campbell, KY, 27 May 1966 (NARA College Park, RG 111-SC post-1955, Box 401, Photo SC630284).

Obstacle courses

Obstacle courses were an important part of the physical conditioning and battle preparation of troops. Through obstacle courses, soldiers improved their agility, speed, upper body strength, and ability to maneuver obstacles quickly. Varieties of obstacles are shown below.

Barbed wire

Figure 119. National Guard training through barbed wire course at Fort Sill, OK, 1918 (New York Public Library, Digital Number 437655).

Figure 120. Barbed wire portion on new obstacle course at NAS Lakehurst, New Jersey, 20 February 1943 (NARA College Park, RG 80-G, Box 1887, Photo 450288).

Figure 121. Stevedores going under barbed wire netting at Camp Peary, VA, 16 June 1943 (NARA College Park, RG 80-G, Box 427, Photo 101087).

Figure 122. Obstacle course phase of raider training at Amphibious Training Base Fort Pierce, FL, 9 December 1943 (NARA College Park, RG 80-G, Box 862, Photo 264391).

Climbing walls/fences/nets

Figure 123. Marines training on the obstacle course go over an 8-ft fence on the double at Camp Lejeune, NC, November 1942 (NARA College Park, RG 127-GC, Box 22, Photo 5019).

Figure 124. Men climbing and jumping rail fence at Navy pre-flight school, Saint Mary's College, Moraga, CA, December 1942 (NARA College Park, RG 80-G, Box 1694, Photo 417671).

Figure 125. Seabees swarm down one of the cargo nets obstacles on the Commando Course at Camp Endicott, Davisville, RI, 27 March 1943 (NARA College Park, RG 80-G, Box 184, Photo 40993).

Figure 126. Obstacle course at Fort Jackson, SC, 28 April 1943 (NARA College Park, RG 111-SC WWII, Box 155, Photo SC173955).

Figure 127. Obstacle course at Fort Jackson, SC, 28 April 1943 (NARA College Park, RG 111-SC WWII, Box 155, Photo SC173956).

Figure 128. Seabees go over an obstacle built of logs at Camp Endicott, Davisville, RI, May 1943 (NARA College Park, RG 80-G, Box 172, Photo 38081).

Figure 129. Aviation cadets during physical training program at Maxwell Field, Montgomery, AL, 28 September 1944 (NARA College Park, RG 342-FH, Box 2207, Photo 4A-18378).

Figure 130. Airmen during obstacle course portion of a physical training program at Chico Army Air Field, CA, 4 December 1945 (NARA College Park, RG 342-FH, Box 2207, Photo 4A-18349).

Figure 131. Recruit conditioning program at MCRD Parris Island, SC, 10 August 1956 (NARA College Park, RG 127-GC, Box 34, Photo A69268).

Figure 132. Recruits maneuvering through the "Tough One" at MCRD Parris Island, SC, 9 February 1961 (NARA College Park, RG 127-GC, Box 34, Photo A601417).

Overhead bars

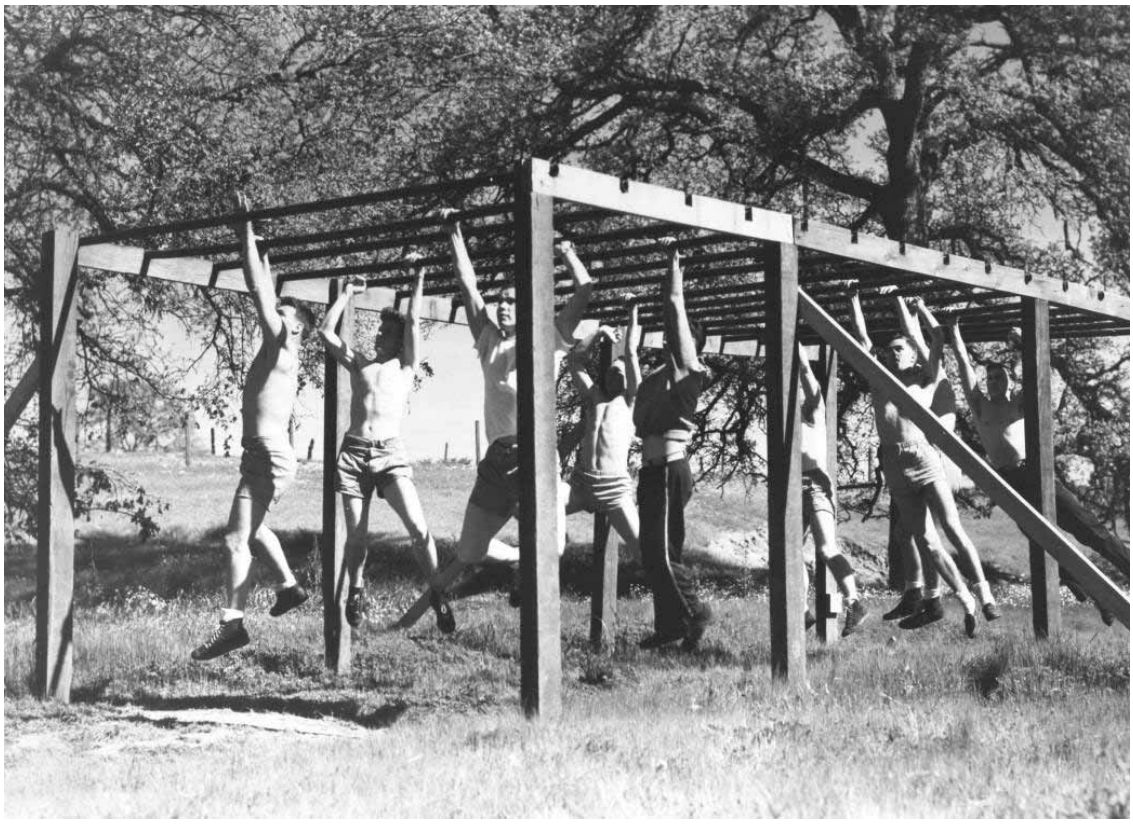

Figure 133. Airmen during overhead bars portion of a physical training program at Chico Army Air Field, CA, 4 December 1945 (NARA College Park, RG 342-FH, Box 2207, Photo 4A-18346).

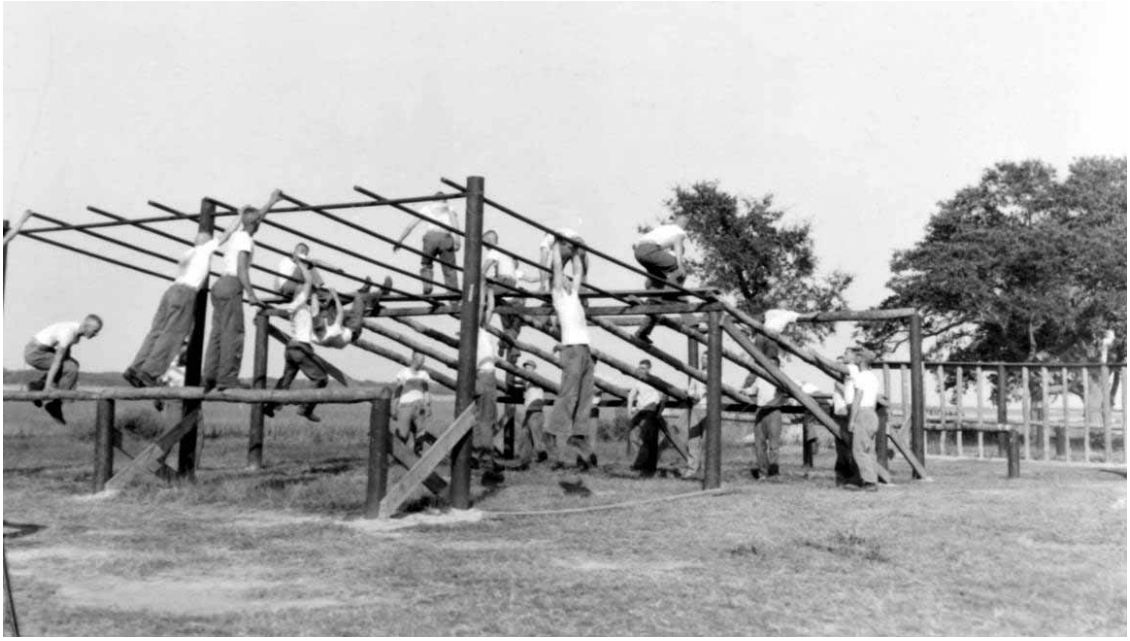

Figure 134. A recruit platoon runs one of the many obstacle courses at MCRD Parris Island, SC, 19 September 1956 (NARA College Park, RG 127-GC, Box 34, Photo A600481).

Ropes

Figure 135. Rope bridge portion on new obstacle course at NAS Lakehurst, NJ, 20 February 1943 (NARA College Park, RG 80-G, Box 1887, Photo 450293).

Figure 136. Trainees on rope bridge on the commando course at Camp Endicott, Davisville, RI, March 27 March 1943 (NARA College Park, RG 80-G, Box 184, Photo 40990).

Figure 137. Seabees on the commando course at Camp Endicott, Davisville, RI, March 1943 (NARA College Park, RG 80-G, Box 172, Photo 38087).

Figure 138. Recondo students walk across rope crossing at Fort Campbell, KY, 6 April 1959 (NARA College Park, RG 111-SC post-1955, Box 348, Photo SC565919).

Tunnels

Figure 139. Crawling through tunnels on the obstacle course at Fort Jackson, SC, 28 April 1943 (NARA College Park, RG 111-SC WWII, Box 155, Photo SC173954).

Shell holes

Figure 140. Bombing class advancing from shellhole to shellhole at Camp Wheeler, CA, 1918 (New York Public Library, Digital Number 117147).

Bridges

Figure 141. New obstacle course at NAS Lakehurst, New Jersey, 20 February 1943 (NARA College Park, RG 80-G, Box 188, Photo 45028).

Figure 142. Airmen during obstacle course portion of a physical training program at Chico Army Air Field, CA, 4 December 1945 (NARA College Park, RG 342-FH, Box 2207, Photo 4A-18347).

Weight stations

Figure 143. Recruits go through daily physical workouts at the obstacle course at MCRD Parris Island, SC, 1967 (NARA College Park, RG 127-GG-921, Box 33, Photo A601758).

Litter obstacle course

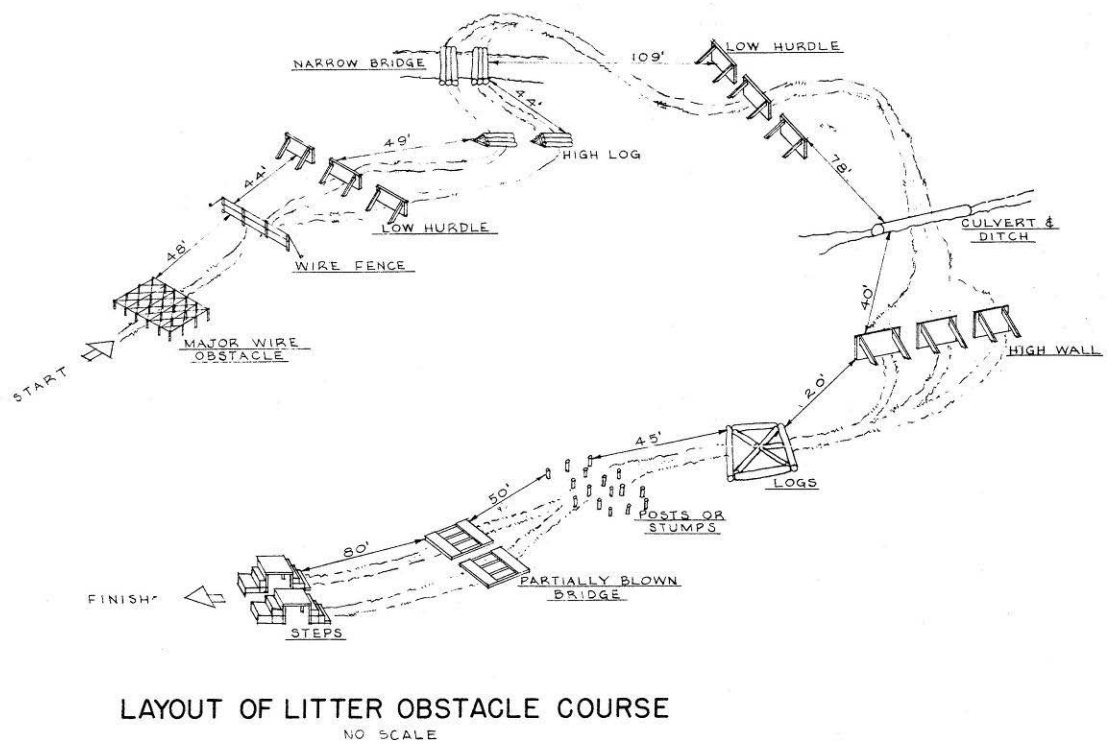

Figure 144. Litter obstacle course, layout of litter obstacle course, Fort Bragg, NC, 1951 (Standard Drawing 28-13-39 Sheet 1 of 1, "Litter obstacle course, layout and details," 21 November 1951).

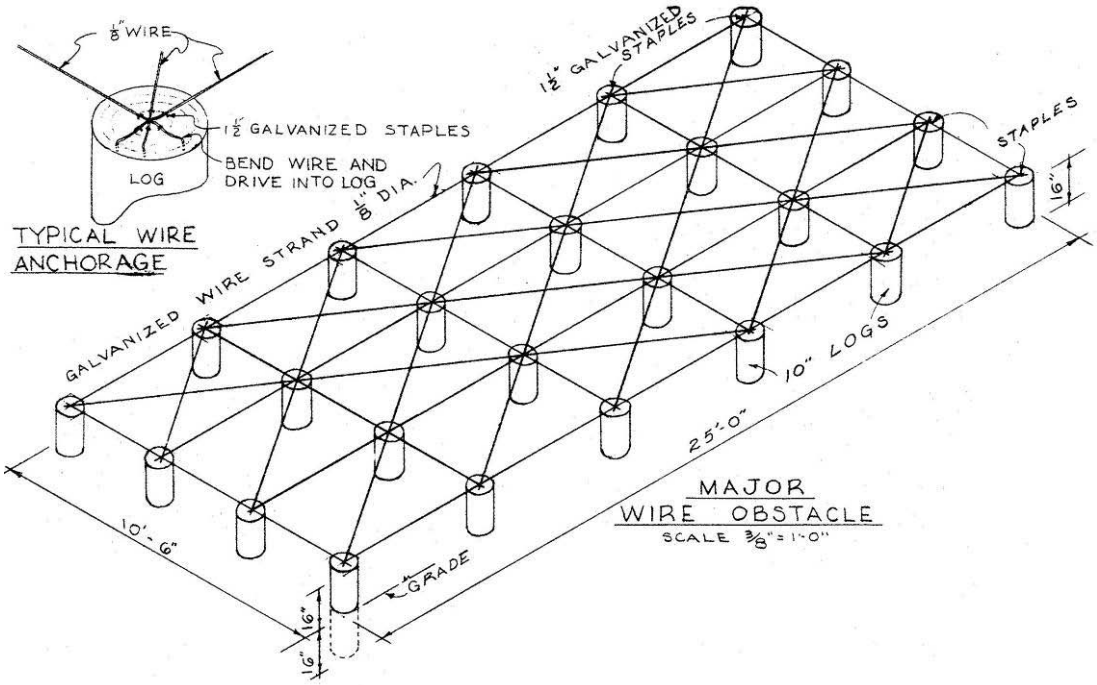

Figure 145. Litter obstacle course, major wire obstacle, Fort Bragg, NC, 1951 (Standard Drawing 28-13-39 Sheet 1 of 1, "Litter obstacle course, layout and details," 21 November 1951).

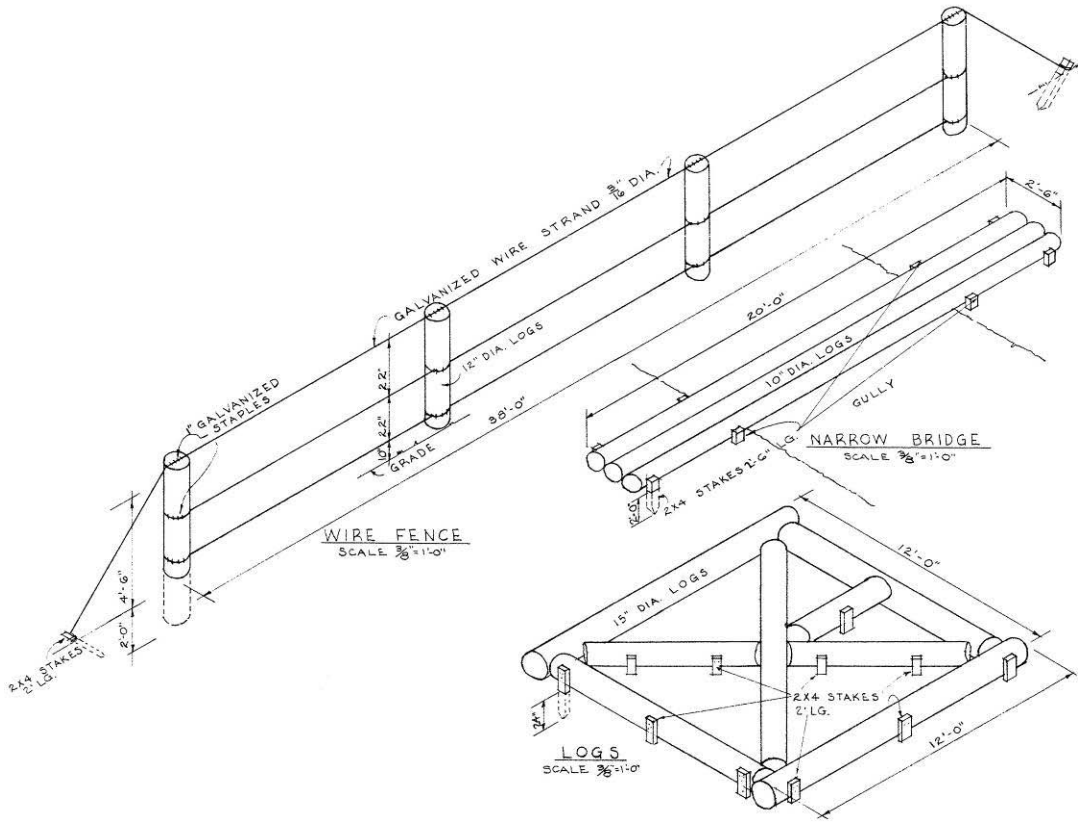

Figure 146. Litter obstacle course, wire fence and logs, Fort Bragg, NC, 1951 (Standard Drawing 28-13-39 Sheet 1 of 1, "Litter obstacle course, layout and details," 21 November 1951).

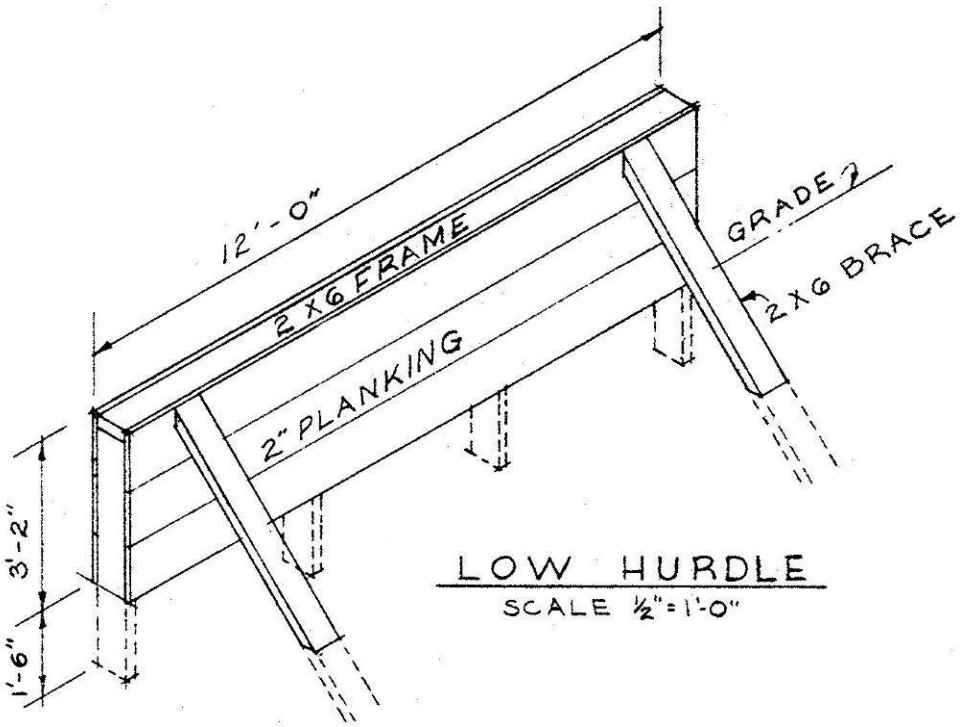

Figure 147. Litter obstacle course, low hurdle, Fort Bragg, NC, 1951 (Standard Drawing 28-13-39 Sheet 1 of 1, "Litter obstacle course, layout and details," 21 November 1951).

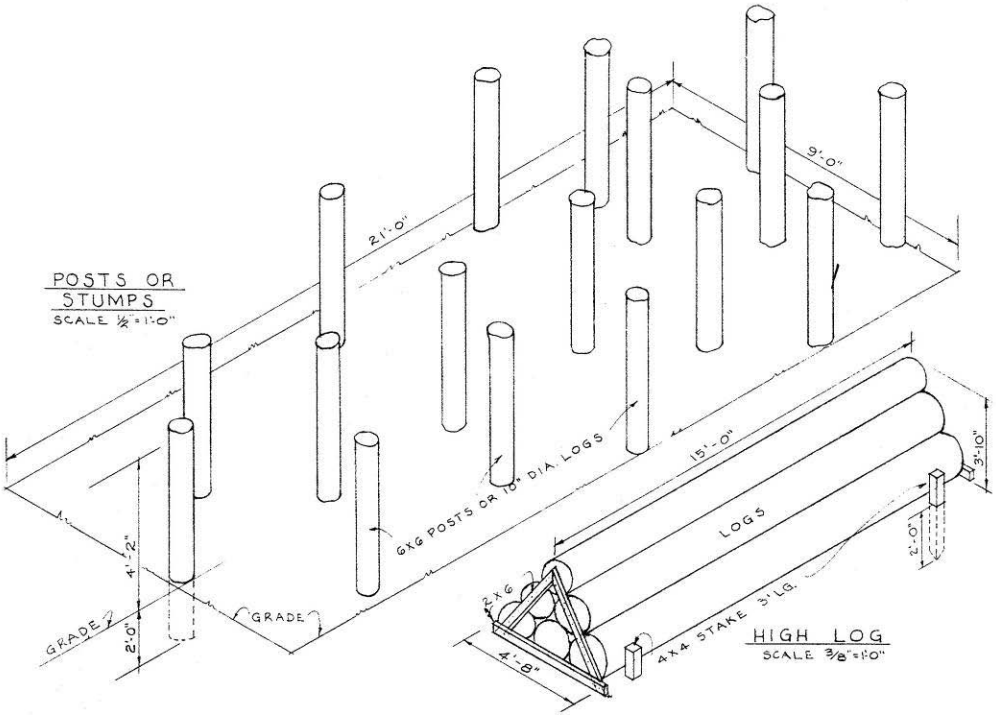

Figure 148. Litter obstacle course, posts or stumps and high log obstacles, Fort Bragg, NC, 1951 (Standard Drawing 28-13-39 Sheet 1 of 1, "Litter obstacle course, layout and details," 21 November 1951).

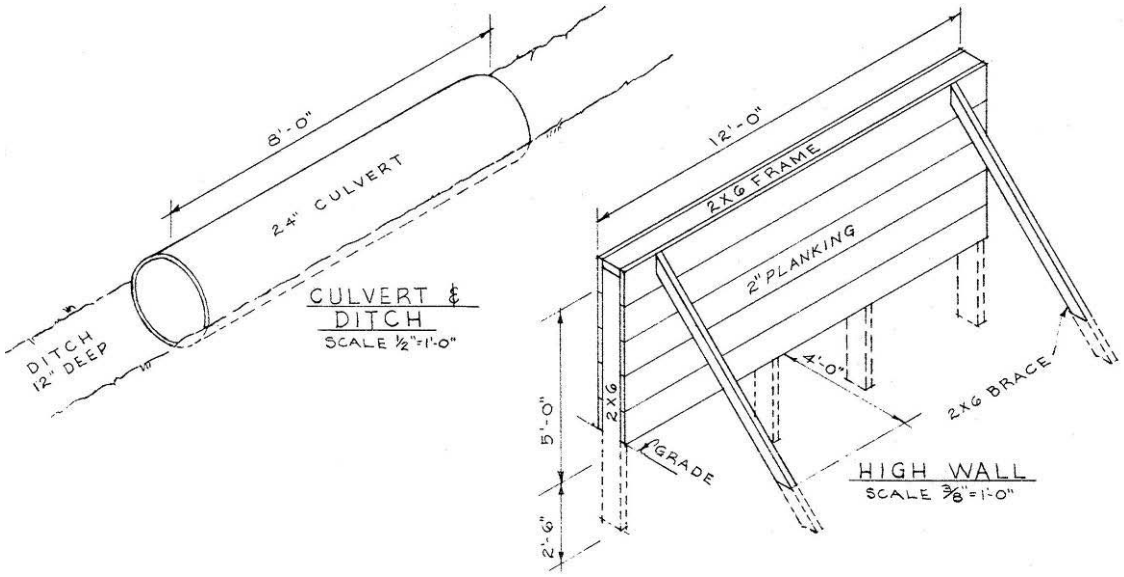

Figure 149. Litter obstacle course, culvert & ditch and high wall, Fort Bragg, NC, 1951 (Standard Drawing 28-13-39 Sheet 1 of 1, "Litter obstacle course, layout and details," 21 November 1951).

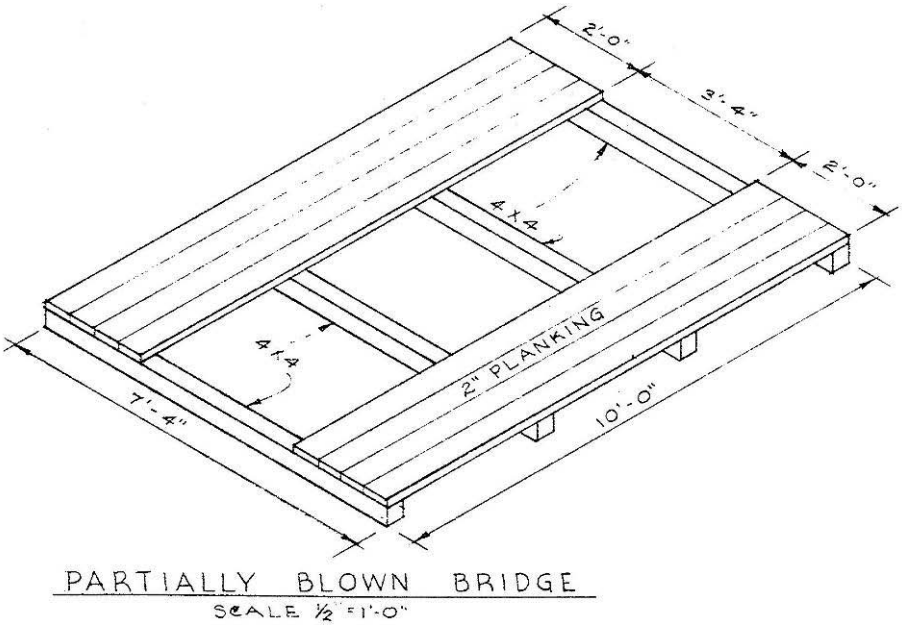

Figure 150. Litter obstacle course, partially blown bridge, Fort Bragg, NC, 1951 (Standard Drawing 28-13-39 Sheet 1 of 1, "Litter obstacle course, layout and details," 21 November 1951).

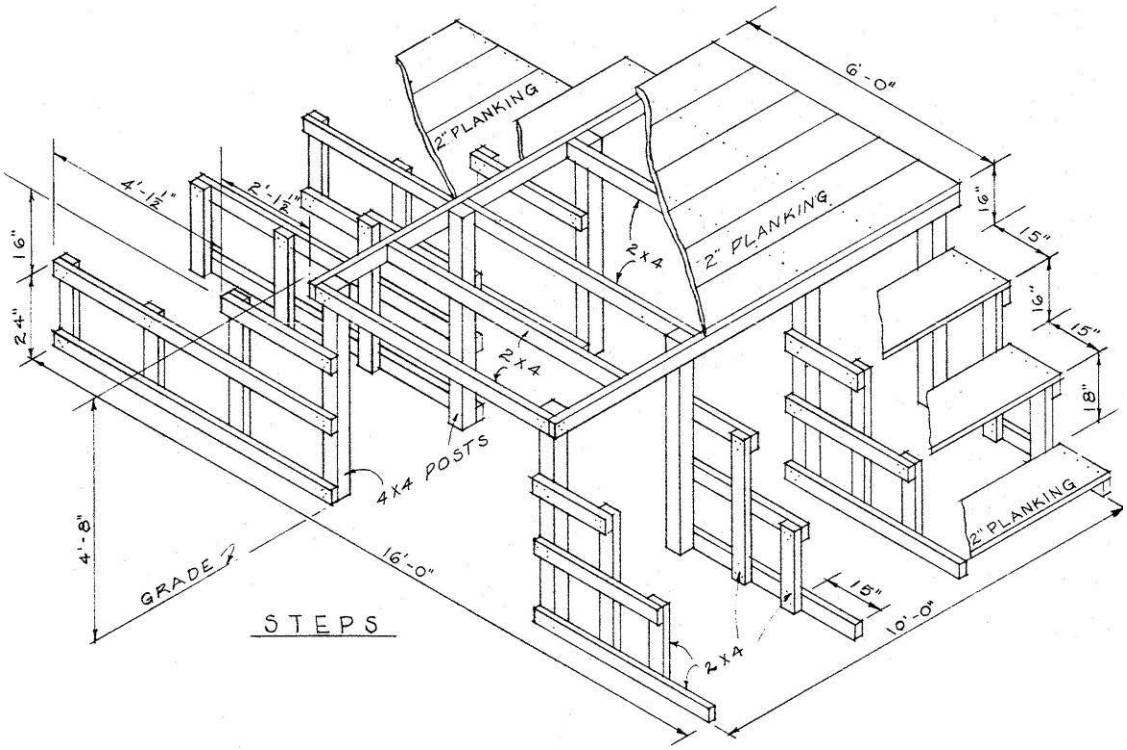

Figure 151. Litter obstacle course, steps, Fort Bragg, NC, 1951 (Standard Drawing 28-13-39 Sheet 1 of 1, "Litter obstacle course, layout and details," 21 November 1951).

Physical combat proficiency test area

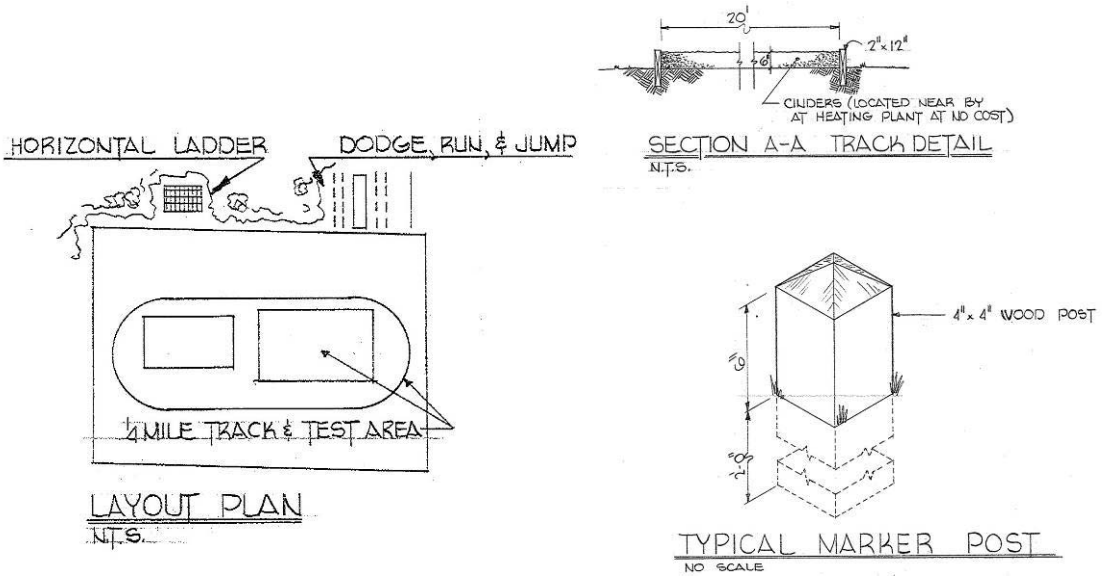

Figure 152. Physical combat proficiency test area, layout plan, track detail, and typical marker post, Fort Bragg, NC, 1966 (Standard Drawing 28-13-117 Sheet 19, "Construction of ranges, phase I, U.S. ATC Facilities, Fort Bragg, NC, physical combat proficiency test area," 28 June 1966).

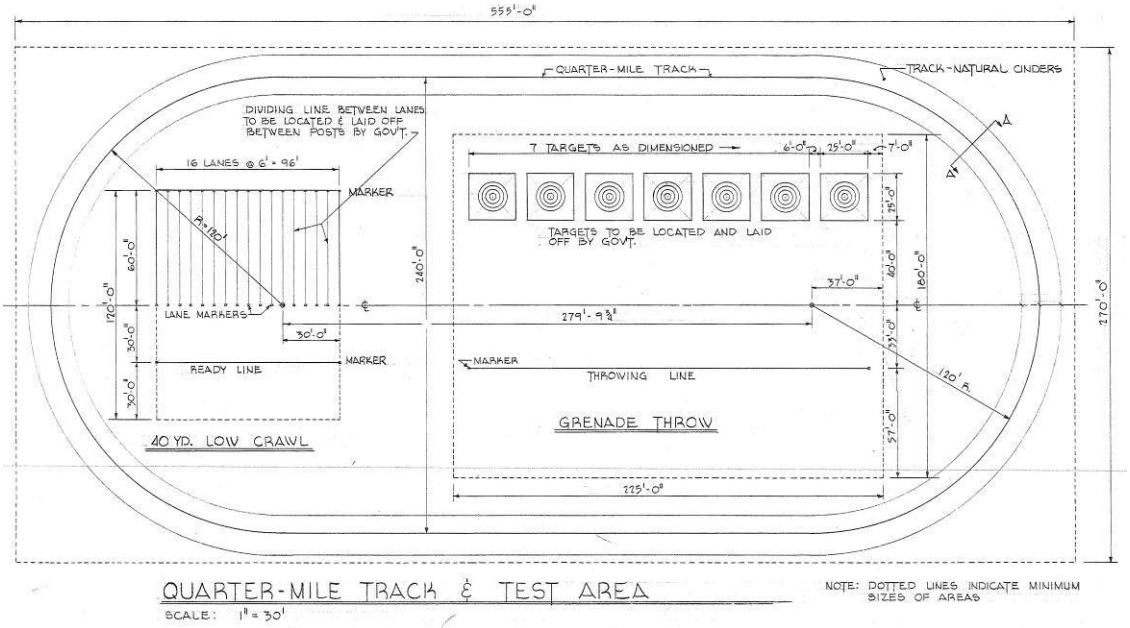

Figure 153. Physical combat proficiency test area, quarter-mile track and test area, Fort Bragg, NC, 1966 (Standard Drawing 28-13-117 Sheet 19, "Construction of ranges, phase I, U.S. ATC facilities, Fort Bragg, NC, physical combat proficiency test area," 28 June 1966).

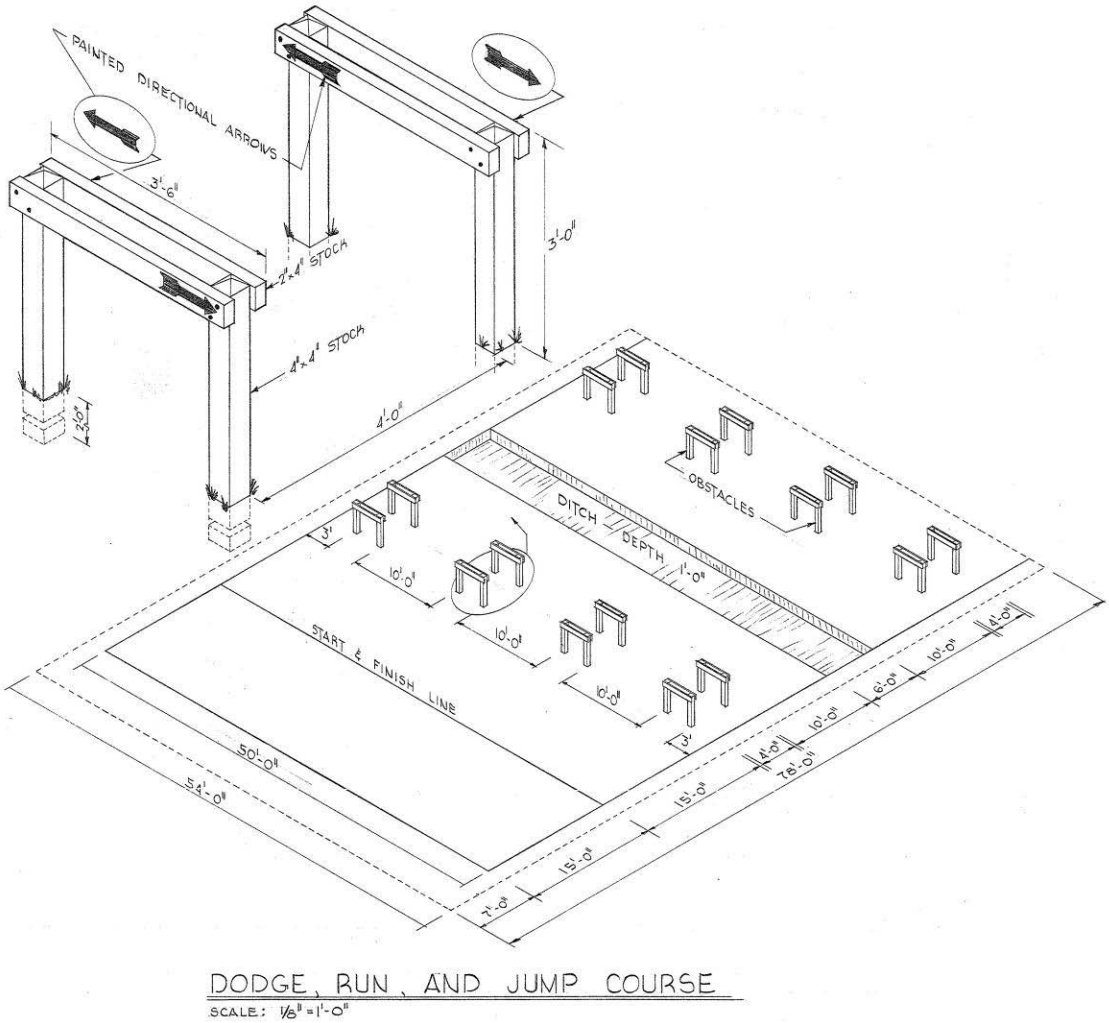

Figure 154. Physical combat proficiency test area, dodge, run and jump course, Fort Bragg, NC, 1966 (Standard Drawing 28-13-117 Sheet 19, "Construction of ranges, phase I, U.S. ATC facilities, Fort Bragg, NC, physical combat proficiency test area," 28 June 1966).

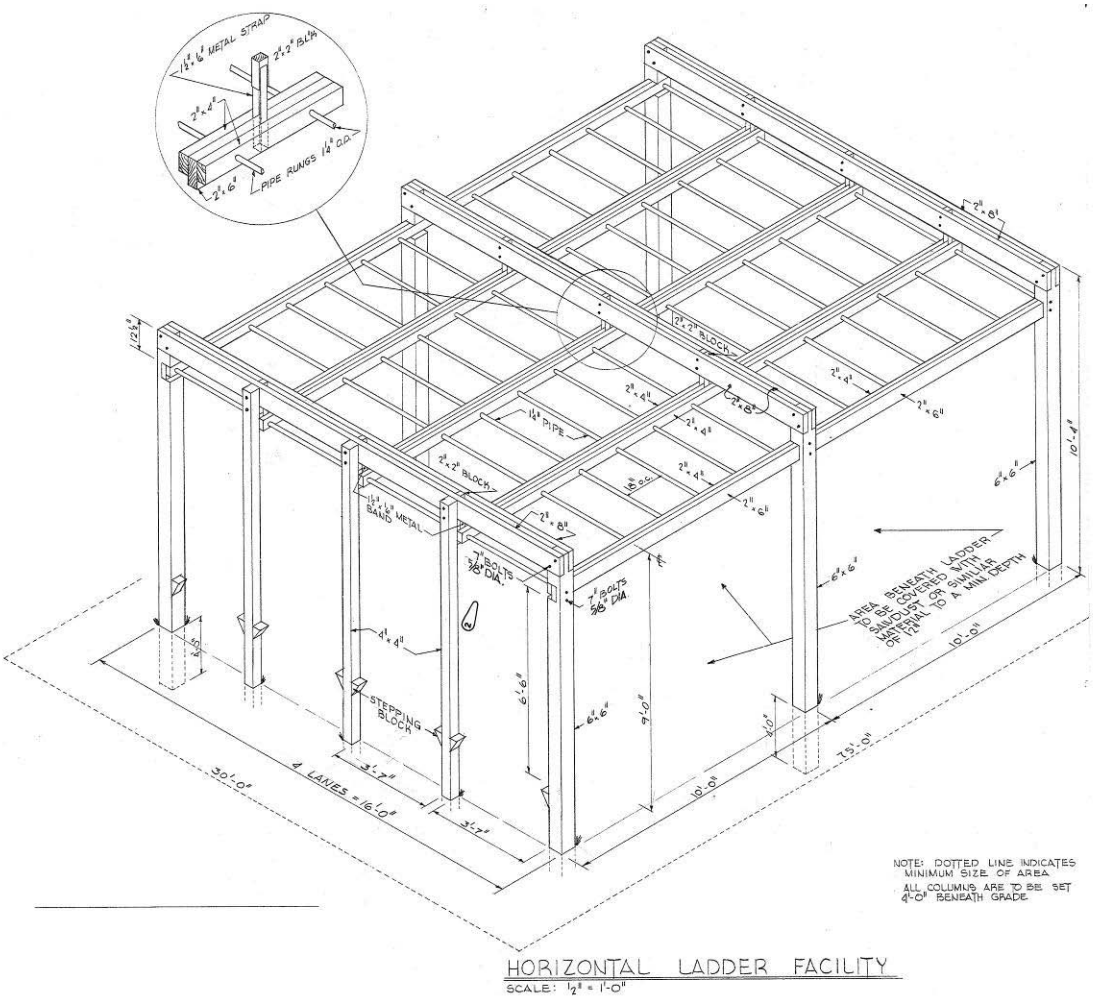

Figure 155. Physical combat proficiency test area, horizontal ladder facility, Fort Bragg, NC, 1966 (Standard Drawing 28-13-117 Sheet 19, "Construction of ranges, phase I, U.S. ATC facilities, Fort Bragg, NC, physical combat proficiency test area," 28 June 1966).

Rappel towers

Rappel towers were used to teach soldiers how to "deploy from helicopters, navigate difficult terrain, and gain access to buildings during raids. While conducting controlled slides down ropes, soldiers learn the proper way to brake, regulate speed and land safely" ("Rappelling").

Figure 156. Special forces rappelling training tower at Fort Bragg, NC, 22 March 1961 (NARA College Park, RG 111-SC post-1955, Box 362, Photo SC581114).

Figure 157. Special forces rappelling training tower at Fort Bragg, NC, 18 September 1963 (NARA College Park, RG 111-SC post-1955, Box 385, Photo SC609492).

Figure 158. Training on victory tower at Fort Jackson, SC, 10 April 1978 (NARA College Park, RG 111-SC post-1955, Box 435, Photo SC675251).

Suspension traverse

Figure 159. Suspension traverse at Fort Bragg, NC, 11 March 1965 (NARA College Park, RG 111-SC post-1955, Box 389, Photo SC614386).

Sanitation

Training in personal hygiene, waste disposal, and sanitation were some of the first skills new soldiers learned in preparation to live in the field. A sanitation display area was one way such skills were taught to large numbers of new recruits (see below).

Sanitation display area

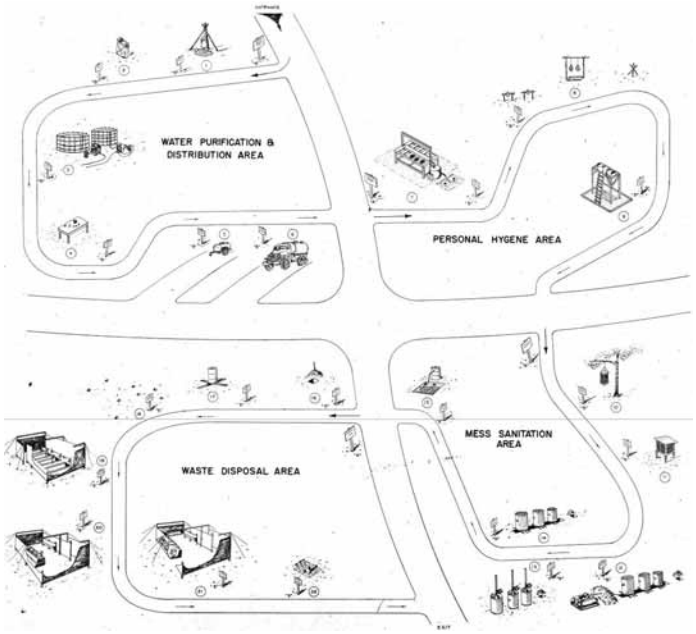

Figure 160. Sanitation display area, Fort Bragg, NC, 1952 (Standard Drawing 28-13-41 Sheet 1 of 3, "Sanitation display area, field facilities, layout plan," 11 April 1952).

LEGEND

WATER PURIFICATION & DISTRIBUTION AREA

1. LYSTER BAG - 36 GAL.
2. WATER CAN - 5 GAL.
3. WATER POINT - TWO 3,000-GAL. TANKS WITH SAND AND DIATOMACEOUS FILTERS AND PUMPING UNIT.
4. WATER PURIFICATION - CANTEEN, WATER PURIFICATION TABLETS, CHLORINE, CALCIUM HYPOCHLORITE AMPULE, AND ORTHOTOLIDINE TESTING KIT WITH TABLETS.
5. TRAILER, WATER TANK - 250 GAL.
6. TRUCK, 2 1/2-TON, WATER TANK - 700 GAL.

PERSONAL HYGENE AREA

7. HELMET RACK, WASH STAND.
8. HAND-WASHING DEVICES
9. IMPROVISED FIELD SHOWER

MESS SANITATION AREA

10. FOOD STORAGE (SUSPENDED CONTAINER)
11. FOOD STORAGE (RAISED CONTAINER)
12. MESS KIT WASHING UNIT, IMPROVED GASOLINE BURNER
13. MESS KIT WASHING UNIT, "IMMERSION HEATERS"
14. MESS KIT WASHING UNIT, "FIRE TRENCH WITH THREE CONTAINERS"
15. BARREL (BAFFLE PRINCIPLE) AND SOAKAGE PIT

WASTE DISPOSAL AREA

16. GARBAGE PIT
17. INCINERATOR - OIL DRUM TYPE ON CROSS TRENCH
18. WASTE DISPOSAL - CAT HOLE
19. LATRINE - STRADDLE TRENCH TYPE
20. LATRINE - DEEP PIT TYPE
21. LATRINE - BUCKET TYPE
22. URINAL - PIPE AND FUNNEL TYPE WITH SOAKAGE PIT.

NOTE:
THIS LAYOUT IS DIAGRAMMATIC AND IS NOT TO SCALE. IT SHOULD BE USED ONLY AS A GUIDE AND SHOULD BE ADJUSTED TO MEET LOCAL CONDITIONS.

Figure 161. Sanitation display area legend, Fort Bragg, NC, 1952 (Standard Drawing 28-13-41 Sheet 1 of 3, "Sanitation display area, field facilities, layout plan," 11 April 1952).

Water purification and distribution area

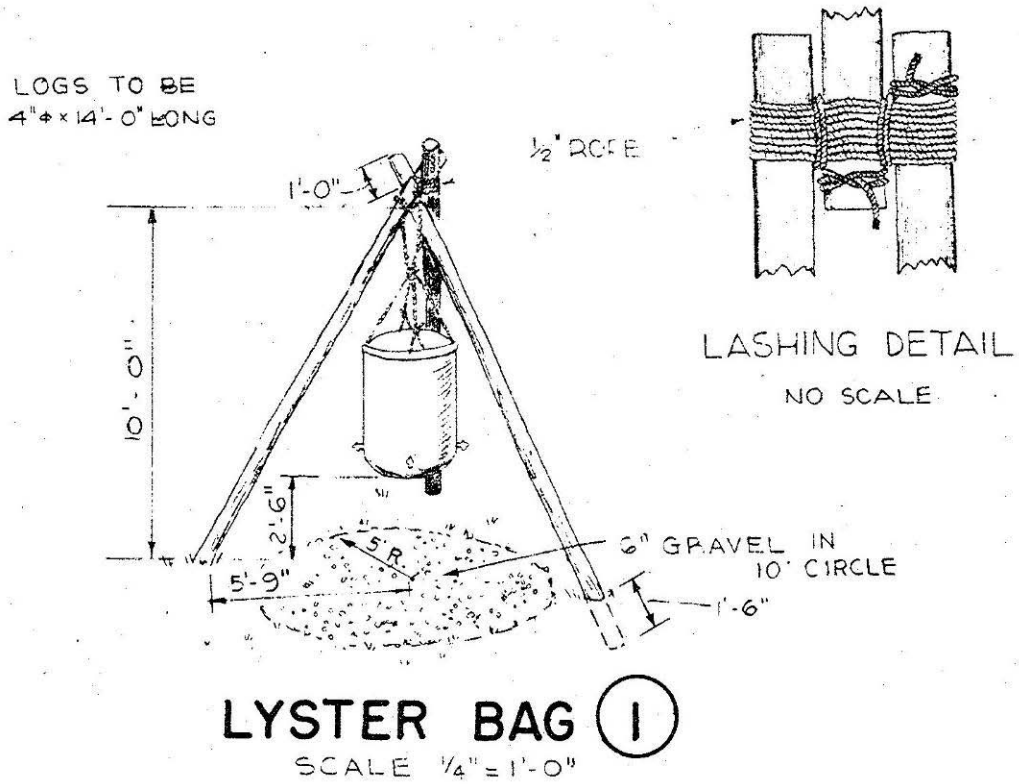

Figure 162. Sanitation display area, lyster bag, Fort Bragg, NC, 1952 (Standard Drawing 28-13-41 Sheet 2 of 3, "Sanitation display area, field facilities, details," 11 April 1952).

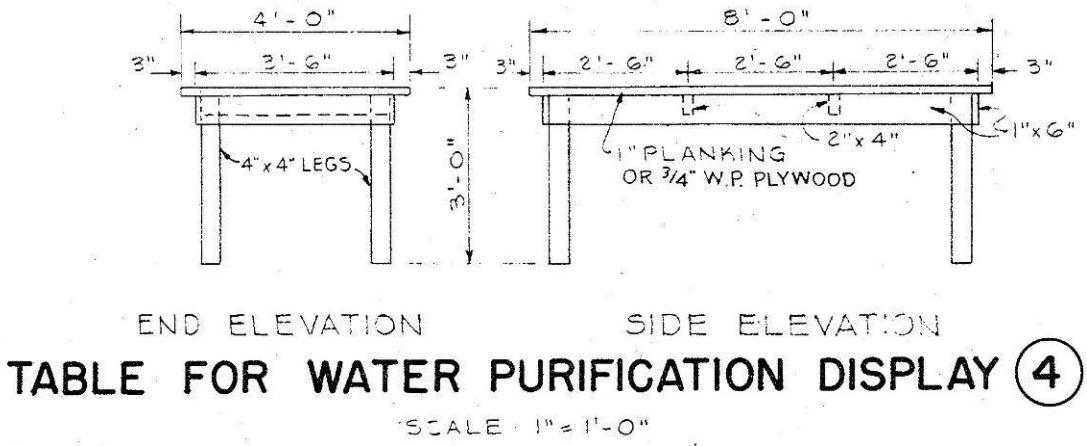

Figure 163. Sanitation display area, table for water purification, Fort Bragg, NC, 1952 (Standard Drawing 28-13-41 Sheet 2 of 3, "Sanitation display area, field facilities, details," 11 April 1952).

Personal hygiene area

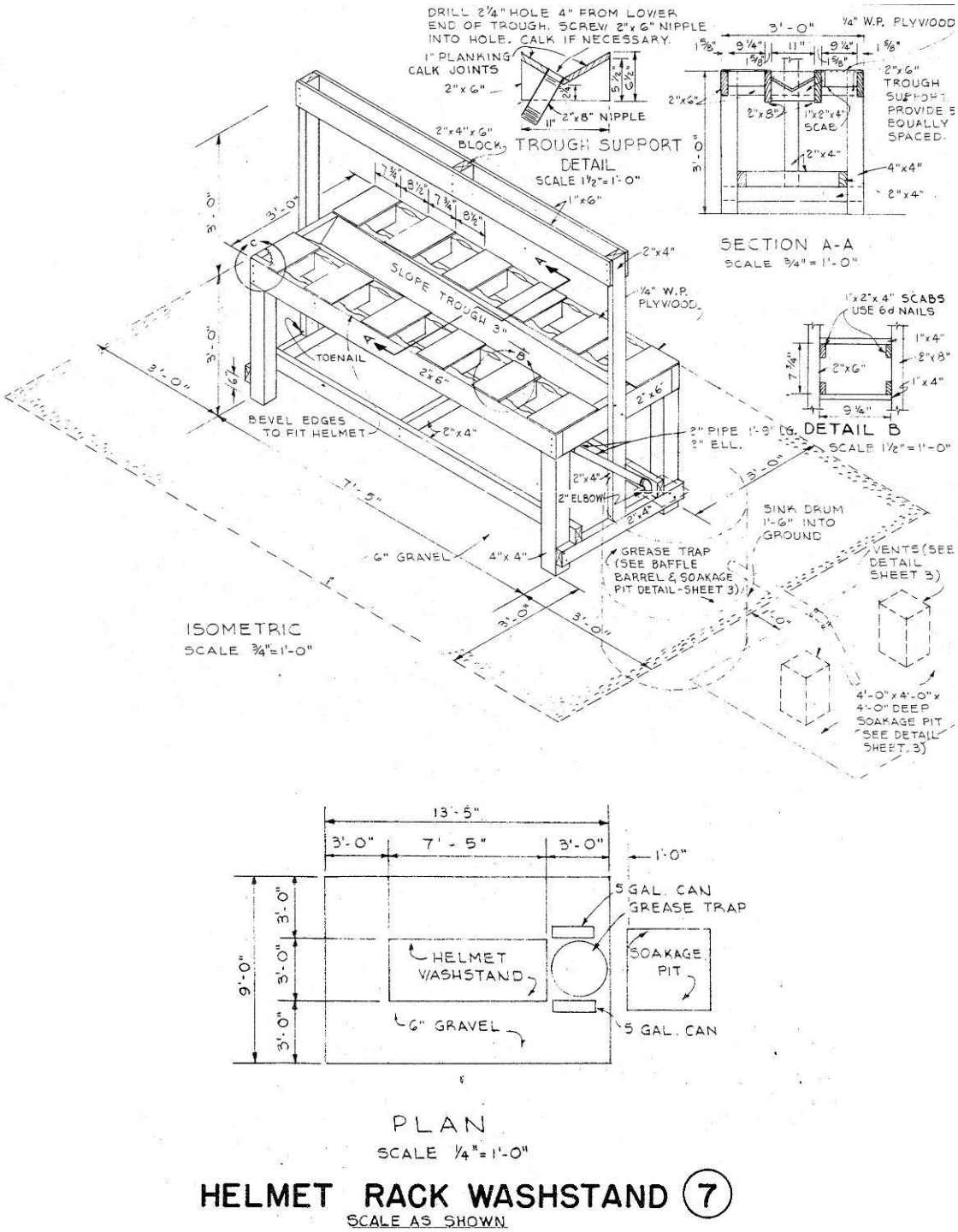

Figure 164. Sanitation display area, helmet rack washstand, Fort Bragg, NC, 1952 (Standard Drawing 28-13-41 Sheet 2 of 3, "Sanitation display area, field facilities, details," 11 April 1952).

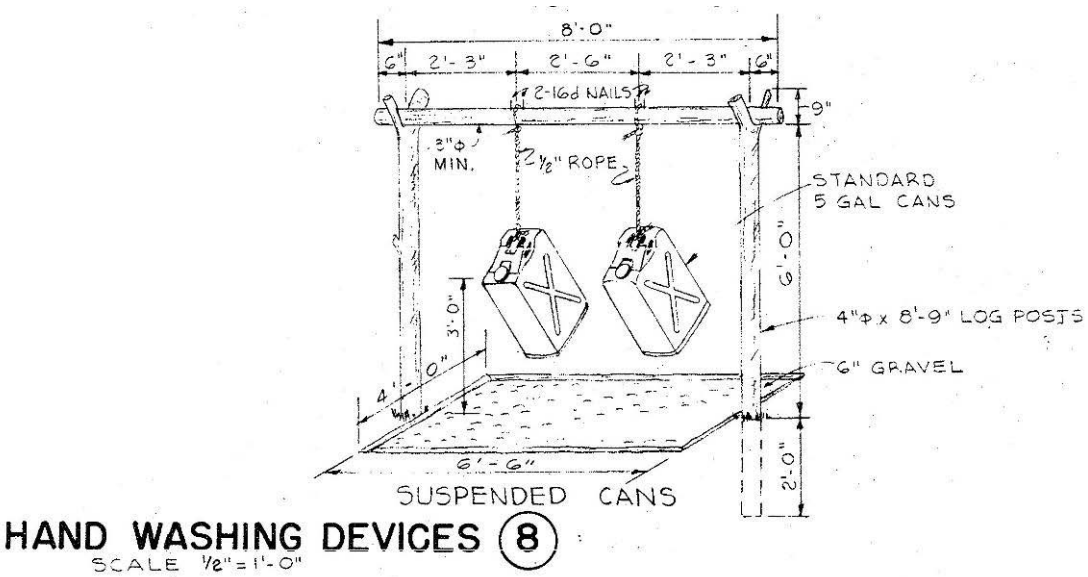

Figure 165. Sanitation display area, hand washing devices, Fort Bragg, NC, 1952 (Standard Drawing 28-13-41 Sheet 2 of 3, "Sanitation display area, field facilities, details," 11 April 1952).

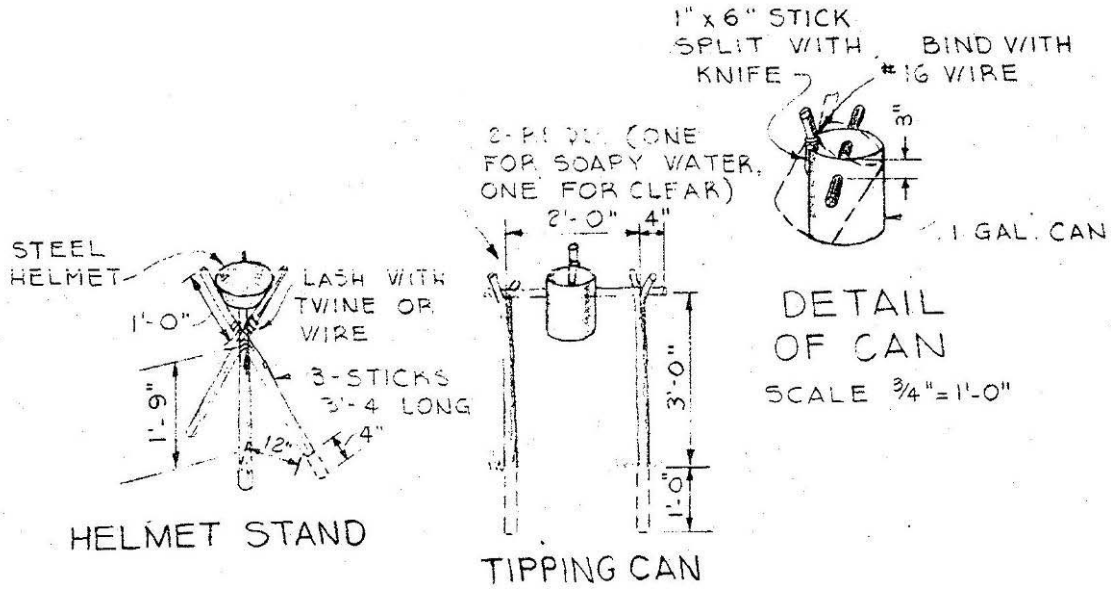

Figure 166. Sanitation display area, hand washing devices, Fort Bragg, NC, 1952 (Standard Drawing 28-13-41 Sheet 2 of 3, "Sanitation display area, field facilities, details," 11 April 1952).

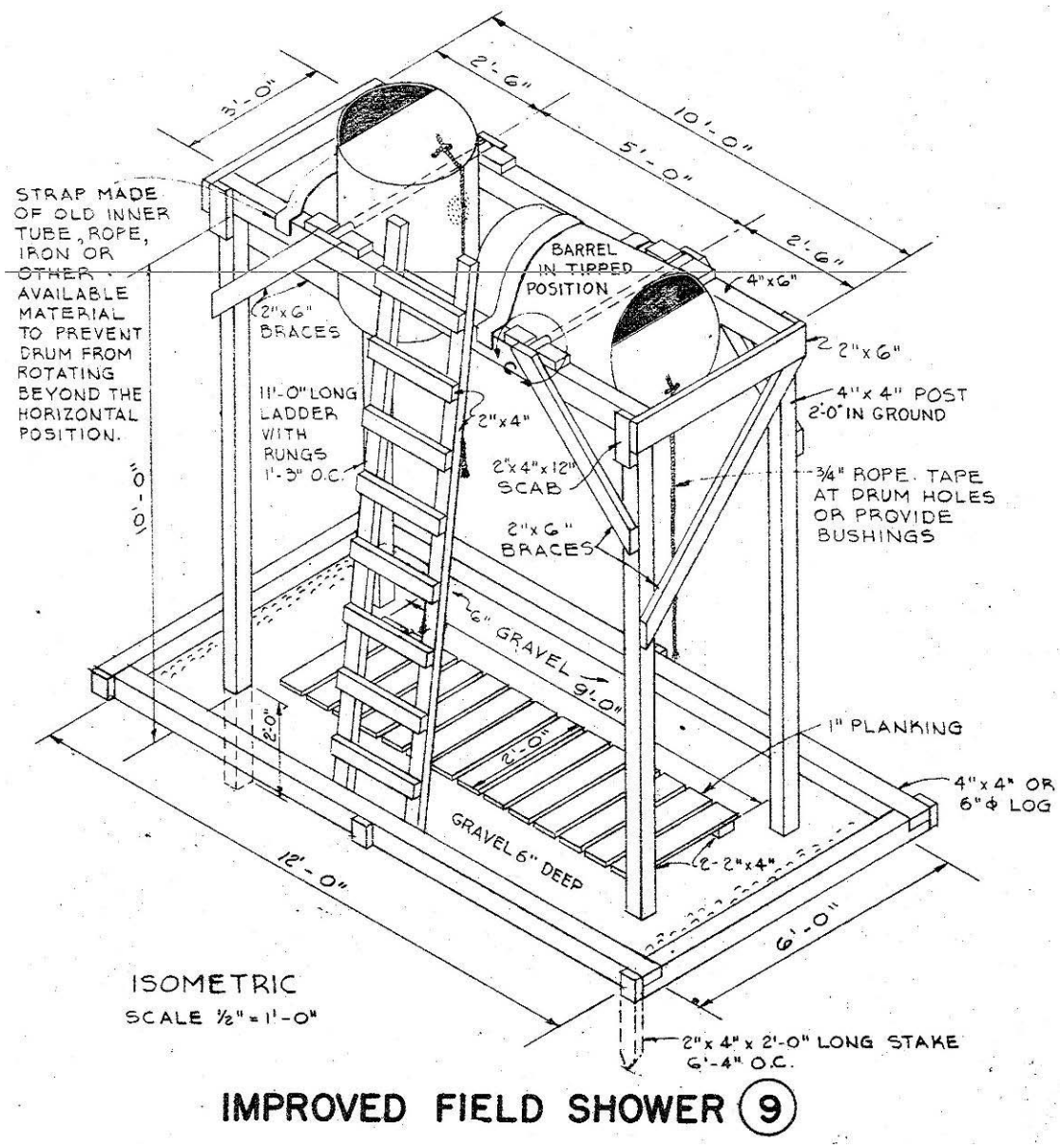

Figure 167. Sanitation display area, improved field shower, Fort Bragg, NC, 1952 (Standard Drawing 28-13-41 Sheet 2 of 3, "Sanitation display area, field facilities, details," 11 April 1952).

Mess sanitation area

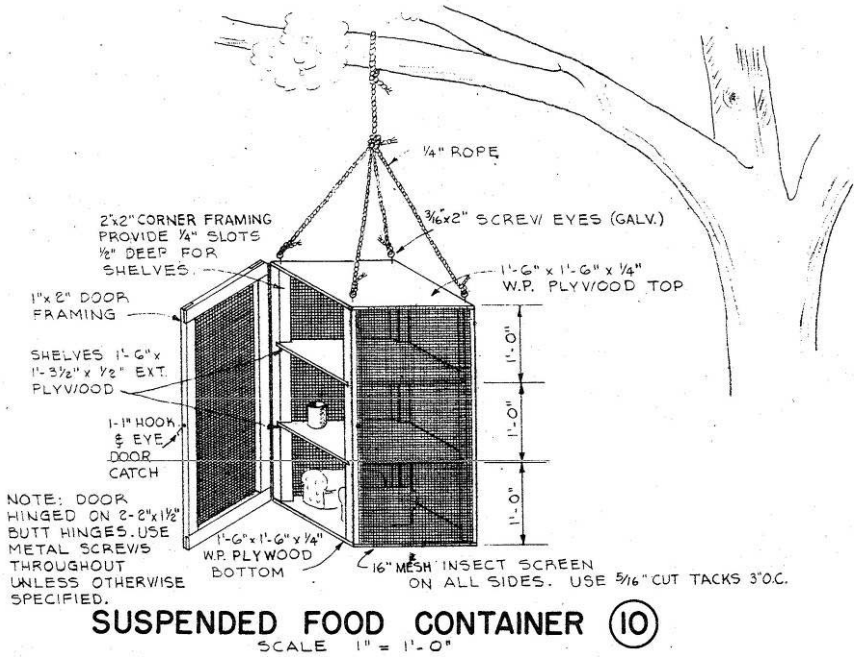

Figure 168. Sanitation display area, suspended food container, Fort Bragg, NC, 1952 (Standard Drawing 28-13-41 Sheet 2 of 3, "Sanitation display area, field facilities, details," 11 April 1952).

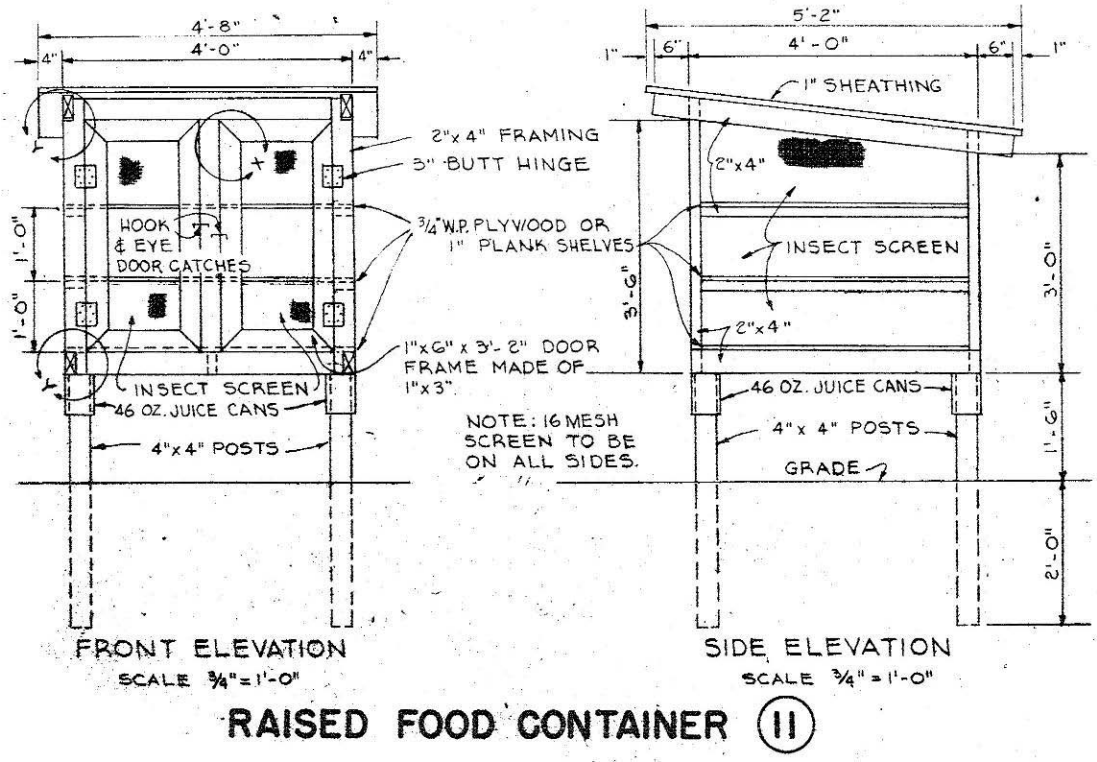

Figure 169. Sanitation display area, raised food container, Fort Bragg, NC, 1952 (Standard Drawing 28-13-41 Sheet 2 of 3, "Sanitation display area, field facilities, details," 11 April 1952).

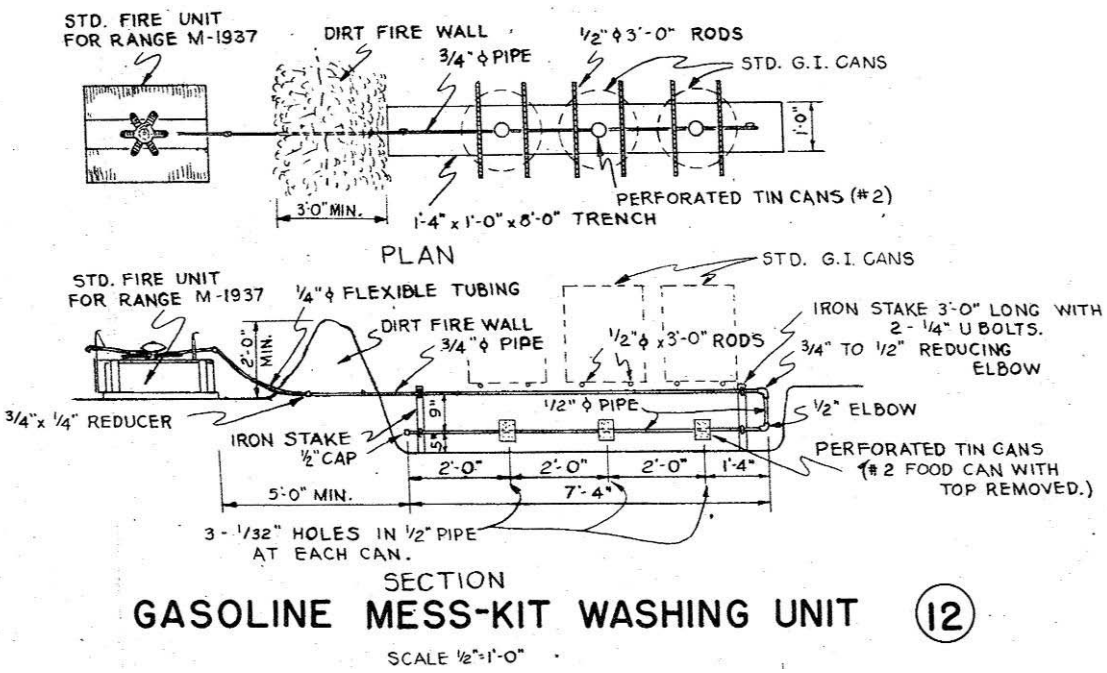

Figure 170. Sanitation display area, gasoline mess-kit washing unit, Fort Bragg, NC, 1952 (Standard Drawing 28-13-41 Sheet 3 of 3, "Sanitation display area, field facilities, details," 11 April 1952).

Waste disposal area

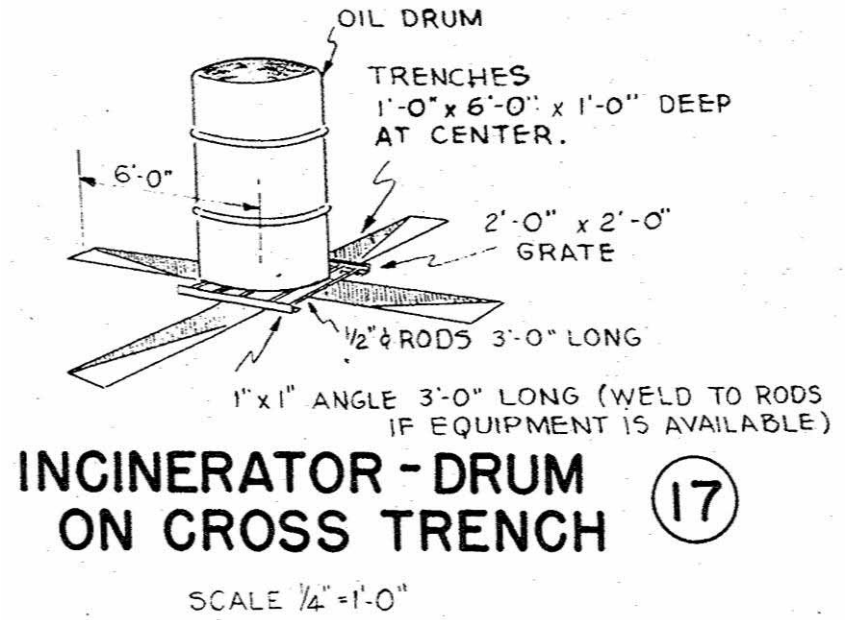

Figure 171. Sanitation display area, incinerator drum on cross trench, Fort Bragg, NC, 1952 (Standard Drawing 28-13-41 Sheet 3 of 3, "Sanitation display area, field facilities, details," 11 April 1952).

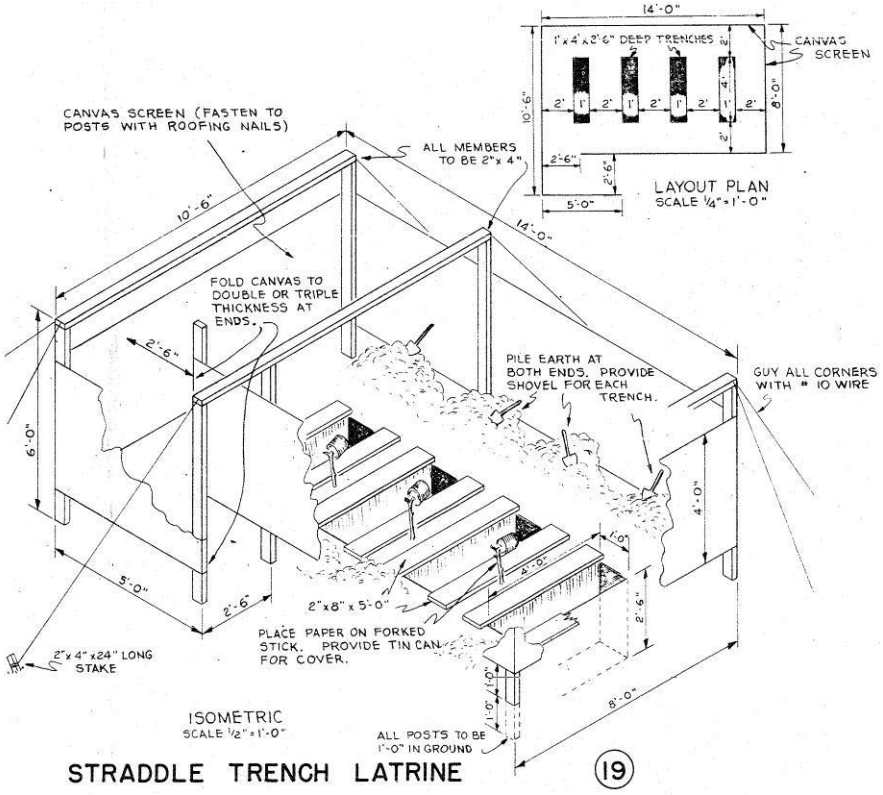

Figure 172. Sanitation display area, straddle trench latrine, Fort Bragg, NC, 1952 (Standard Drawing 28-13-41 Sheet 3 of 3, "Sanitation display area, field facilities, details," 11 April 1952).

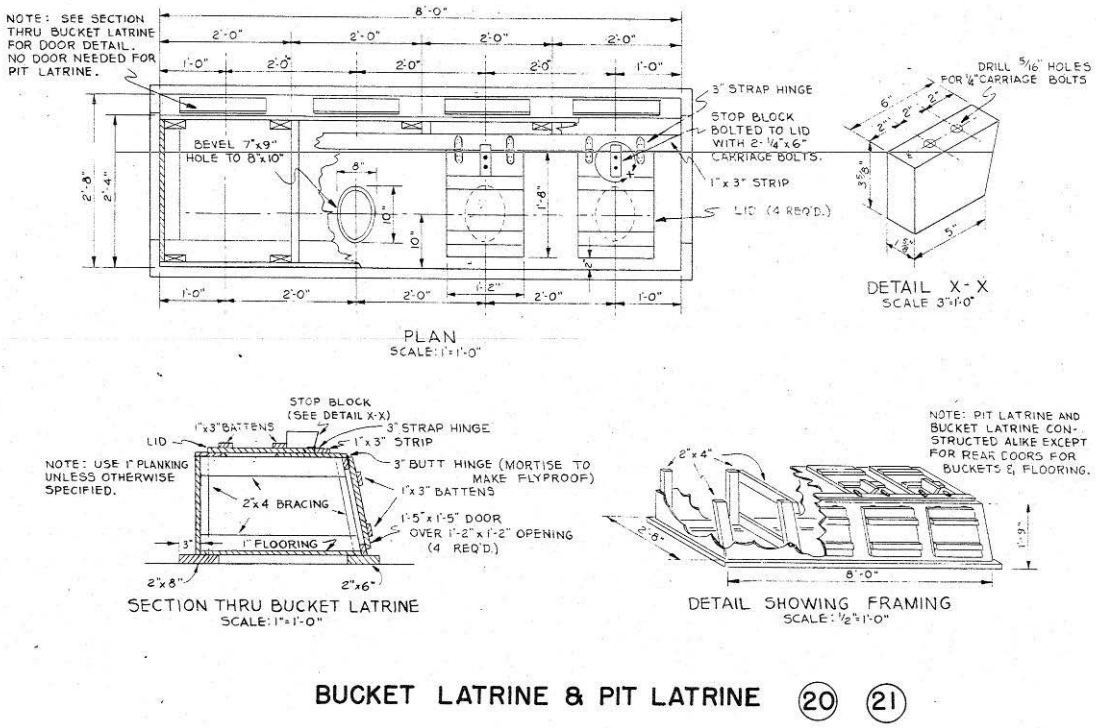

Figure 173. Sanitation display area, bucket latrine, Fort Bragg, NC, 1952 (Standard Drawing 28-13-41 Sheet 3 of 3, "Sanitation display area, field facilities, details," 11 April 1952).

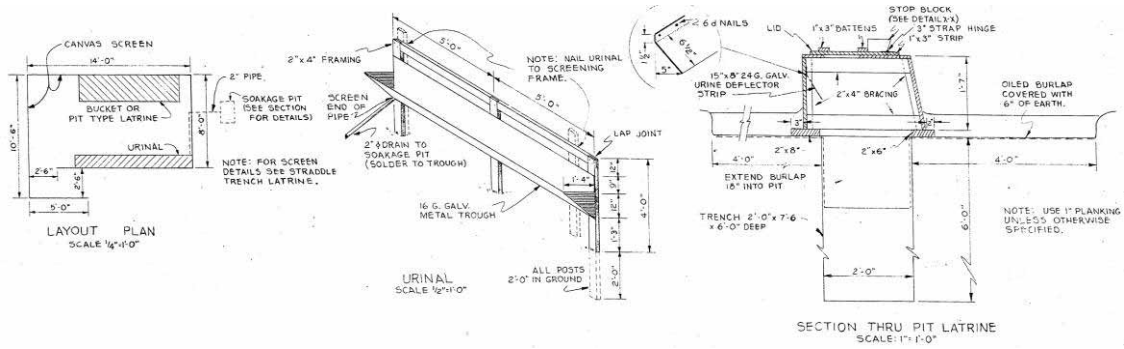

Figure 174. Sanitation display area, pit latrine, Fort Bragg, NC, 1952 (Standard Drawing 28-13-41 Sheet 3 of 3, "Sanitation display area, field facilities, details," 11 April 1952).

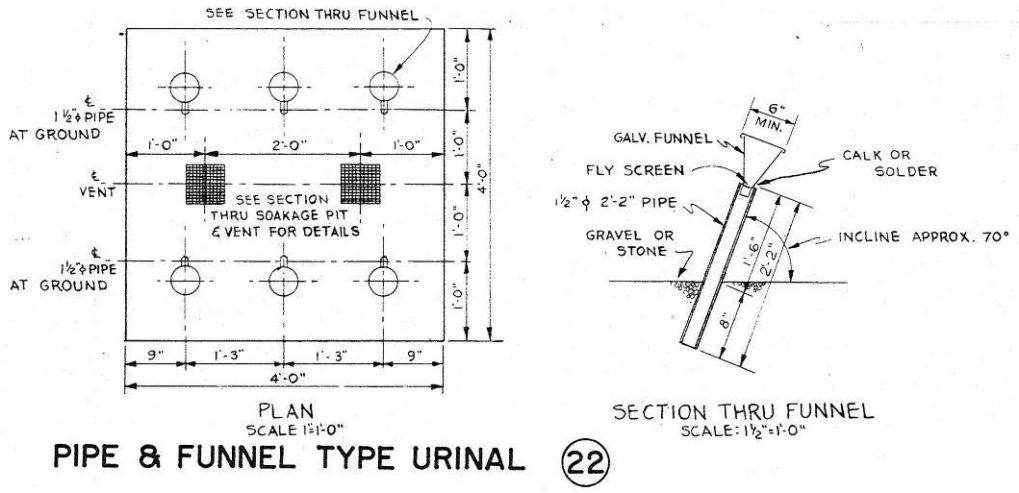

Figure 175. Sanitation display area, pipe and funnel type urinal, Fort Bragg, NC, 1952 (Standard Drawing 28-13-41 Sheet 3 of 3, "Sanitation display area, field facilities, details," 11 April 1952).

Signal training

Signal corps training began in 1860 when the U.S. military adopted Albert J. Myer's system of "wig wag flags" and night torches to send messages in battle. Members of the signal corps were trained to spell words and transmit common phrases by waving the flag or torch to different positions in different sequences. This system was used on and off along with heliographs (mirrors used to send messages by reflecting the sun) until 1912, when it was replaced by semaphore flags and lights (see Figure 176). Horseback messengers, pigeons, balloons, telegraphs, and telephones were also used from the latter half of the nineteenth century until WWI and beyond. Radio, radar, and telephones were used extensively during WWII. In addition to training in laying wires and repairing lines, recruits were also taught skills in pole and tree climbing to elevate wires above tanks and other vehicles that would cut them down (see Figure 178). Soldiers also received training in cryptography and in operating message centers. Since

WWII, members of the signal corps have been trained in working with photography, satellites, and other communications systems. In addition to learning the basics of the messaging system used, training historically included hikes and bivouac to areas where messaging could be practiced on high points and between long distances. In the spring of 1943, the typical Signal Corps recruit underwent 3 weeks of basic training, 4 days of field operations, and lastly, an overnight march to a location for final specialist training (Stokes).

Semaphore training

Figure 176. Signal Corps semaphore training at unknown location, February 1918 (New York Public Library, Digital Number 117092).

Range message center

Figure 177. CMTC students on range message center at Camp Vail, NJ, 1923 (NARA College Park, RG 111-SC WWI, Box 700, Photo 94910).

Pole climbing

Figure 178. An arm and shoulder exercise while on poles at Fort Jackson, SC, 23 April 1943 (NARA College Park, RG 111-SC WWII, Box 161, Photo SC175417).

3 Evaluating Properties Under the Military Training Lands Historic Context

Cultural resources are identified and managed within the Department of Defense (DoD) in accordance with Federal laws and military regulations. The identification of historically significant properties and resources can be achieved only through evaluation of their position within the larger historic context. According to the NRHP, historic contexts are defined as "... the patterns, themes, or trends in history by which a specific occurrence, property, or site is understood and its meaning (and ultimately its significance) within prehistory or history is made clear" (NRB #15, 7). A historic property is determined to be significant or not significant based on the application of standardized National Register Criteria within the property's historical context.

Criteria for evaluation

The NRHP Criteria for Evaluation (36 CFR Part 60.4) describe how properties and districts are significant for their association with important events or persons (Criterion A and Criterion B), for their importance in design or construction (Criterion C), or for their information potential (Criterion D). The following is a brief description of each of the four NRHP Criteria for Evaluation (excerpted from National Register Bulletin #15: How to Apply the National Register Criteria for Evaluation):

A. Event—associated with events that have made a significant contribution to the broad patterns of our history; or

B. Person—associated with the lives of persons significant in our past; or

C. Design/Construction—embody the distinctive characteristics of a type, period, or method of construction, or that represent the work of a master, or that possess high artistic values, or that represents a significant and distinguishable entity whose components may lack individual distinction; or

D. Information Potential—yielded, or is likely to yield, information important in prehistory or history.

Criterion consideration G

Generally, buildings, structures, landscapes, etc. constructed within the last 50 years are not eligible for the National Register unless they can be classified as exceptionally important under Criterion Consideration G in the National Register Bulletin #15. "The National Register Criteria for Evaluation excludes properties that achieved significance within the past 50 years unless they are of exceptional importance. Fifty years is a general estimate of the time needed to develop historical perspective and to evaluate significance. This consideration guards against the listing of prosperities of passing contemporary interest and ensures that the National Register is a list of truly historic places."

Although the National Register Criteria do not explicitly define the term exceptional importance, National Register Consideration G and the National Register Bulletin #22: *Guidelines for Evaluating and Nominating Properties that have Achieved Significance within the Past Fifty Years* offers guidance for identifying and evaluating properties that have achieved significance in the past 50 years. Both of these sources stress that, for such properties, sufficient historical perspective must exist to make justifiable determinations of exceptional importance. Proof that sufficient historical perspective exists usually comes in the form of scholarly research and other sources of historical evidence associated with a particular historic context. The significance of Cold War era properties may lie at the national level in association with military themes directly tied to the Cold War, or at the state or local level under other themes.

The Army and Air Force have all issued interim guidelines for managing Cold War resources. The Navy is still working on draft version of guidance. These guidelines are not meant to replace the NHPA and its implementing regulations (Sections 106 and 110). The intent of the guidance is to set up an initial framework for the inventory and evaluation of the Cold War historic properties.

Army cold war guidelines and contexts

The Army developed its "interim Policy for Cold War Era Properties" in 1995. Applying to Army, Army National Guard, and Army Reserve installations, this policy stated that in applying the criteria of exceptional importance, the Army would "focus on the production and combat subsystems of the Army and their associated Real Property and technology that is of unmistakable and extraordinary importance by virtue of a direct and influen-

tial relationship to Cold War tactics, strategy, and events" (Department of the Army Cultural Resources Interim Policy Statements, 1995).

The Interim Policy was set into guidance with *The Thematic Study and Guidelines: Identification and Evaluation of U.S. Army Cold War Era Military-Industrial Historic Properties* in 1997. This guidance is a thematic study on historic properties associated with the military-industrial theme of the Cold War and provides guidelines for the identification and evaluation of Cold War era military-industrial historic properties in the Army. The context focuses in on what the Army did in direct response to the Cold War and directly associated with a major Army mission.

The Cold War context states that only "properties that are directly related to the Cold War military-industrial context" are exceptionally important. They must meet "any or all" of the following conditions:

1. They were specifically constructed or used prior to 1989 to:
   a. Meet the perceived Soviet/communist military threat;
   b. Project a force designed to influence Soviet policy; and
   c. Affect global opinion of the relationship between the superpowers.
2. Through the architectural or engineering design, they clearly reflect one of the Cold War themes:
   a. Basic Scientific Research (Laboratories)
   b. Materiel Development (Research, Development, Engineering Centers, and Proving Grounds)
   c. Wholesale Logistical Operations (Ammunition Production Facilities)
   d. Air Defense, Ballistic Missile Defense, and Army Missiles
   e. Command and Control, Communications, Computer, and Intelligence
   f. Army School System
   g. Operational Forces
   h. Army Medical Activities
   i. Miscellaneous (Nuclear and Aviation).
3. They are directly related to the United States/Soviet relationship through association with a milestone event of the period.
4. They are directly related to the United States/Soviet relationship through association with the life of a person during the Cold War period.

Air Force cold war guidelines and context

The U.S. Air Force recognizes five property type groups in the Interim Guidance that may convey important aspects of the Cold War. These five properties include:

1. Operational and Support Installations
   a. Air Force bases, including Command Centers
   b. Missile Stations
   c. Launch Complexes
2. Combat Weapons Systems and Combat Support Systems
   a. Missiles
   b. Aircraft (Fixed Wing and Rotary)
   c. Ground Vehicles and Equipment
3. Training Facilities
   a. Warfighting, Combat Support, and Intelligence Schools
   b. Launch Complexes
   c. Combat Training Ranges
   d. Impact Areas; Targets
   e. POW (Prisoner of War) Training Camps
4. Materiel Development Facilities
   a. Research Laboratories
   b. Manufacturing Sites
   c. Test Sites
   d. Proving Grounds
5. Intelligence Facilities
   a. Radar Sites
   b. Listening Posts.

Significance

Military training ranges need to be researched and evaluated as a whole landscape, including all the buildings/structures, firing lines, target mechanisms, etc. and not evaluated as individual elements that sit on the range. Military training ranges were originally designed and intended to be utilized as a whole complex. Each structure/element provides a vital role in the functioning of the range and the overall effectiveness of the training procedures for the soldiers.

The overall importance of particular ranges depends on the mission of whichever installation the research is focusing on. The mission critical ranges are what is important and need to be evaluated as a historic district. For example, a large arms range like a tank range needs to be examined and evaluated from the parking lot all the way out to the target butt, regardless of individual building or range element construction date. Thus just looking at an individual observation tower, latrine, firing targets, etc. should not be done. Look at the entire range. But go one step further and look at all of the ranges and training lands on the installation as one large

group to see if there is even information for a large district. No individual building/structure/element will ever be individually significant.

Once the training range is inventoried and evaluated as a complex, the next step is to determine if a particular range/buildings are significant to the individual installation being researched. For example, all ranges at Fort Jackson, SC could possibly be evaluated as one large district because Fort Jackson is the home of basic training; whereas the tank ranges located at Fort Knox, KY would be important to the mission because Fort Knox was the home of the Armor division. Ultimately, the researcher needs to look at the overall mission of the installation before deciding what is important on the ranges.

For instance, a large arms range, like the field artillery range, may have been constructed in 1944 but may contain buildings and structures from the entire stretch of the Cold War. As individual building elements and training mechanisms wore out they typically were replaced with new materials and technologies. The ranges will always be ranges and used for training, therefore, continue use of the landscape and structures are important. It is important to evaluate the location of replacement elements. Is the newer observation tower in the same location as the original? Are the replacement latrines, bleachers, and storage buildings located in the same spot on the range landscape?

Properties considered under the Large Arms Range Context are training ranges that the War Department, Navy Department, and Department of Defense constructed for their personnel and are associated with one of the following military training periods:

- Pre-Civil War (up to 1861)
- Civil War (1861-1865)
- National Expansion (1865-1916)
- World War I (1917-1920)
- Interwar (1921-1940)
- World War II (1941-1945)
- Early Cold War (1946-1955)
- Late Cold War (1956-1989).

The researcher still has to be able to identify that firing range to what period it is significant for no matter if there are replacement structures or elements located on the range.

Aspects of integrity

In addition to possessing historical significance, training ranges must also retain sufficient physical integrity of the features that convey their significance to be eligible to the NRHP (NRB #15, 44).

Training lands/ranges will either retain integrity (that is, convey their significance) or they will not. Within the concept of integrity, the National Register criteria recognize seven aspects or qualities that, in various combinations, define integrity.

To retain historic integrity a property will always possess several, and usually most, of the aspects. The retention of specific aspects of integrity is paramount for training lands/ranges to convey their significance. Determining which of these aspects are most important to a particular training land/range requires knowing which association is significant.

Although some training lands/ranges may not meet integrity standards for individual eligibility to the National Register, they may meet a standard as a contributing resource to a larger training district. Training lands/ranges are considered to be significant if they possess a majority of the following Seven Aspects of Integrity (NRB #15, 44-45):

1. **Location.** Location is the place where the historic property was constructed or the place where the historic event occurred.
2. **Design.** Design is the combination of elements that create the form, plan, space, structure, and style of a property. It results from conscious decisions made during the original conception and planning of a property (or its significant alteration) and applies to activities as diverse as community planning, engineering, architecture, and landscape architecture. Design includes such elements as organization of space, proportion, scale, technology, ornamentation, and materials.
3. **Setting.** Setting is the physical environment of a historic property. Setting refers to the character of the place in which the property played its historical role. It involves how, not just where, the property is situated and its relationship to surrounding features and open space.
4. **Materials.** Materials are the physical elements that were combined or deposited during a particular period of time and in a particular pattern or configuration to form a historic property.
5. **Workmanship.** Workmanship is the physical evidence of the crafts of a particular culture or people during any given period in history or prehistory.

6. **Feeling.** Feeling is a property's expression of the aesthetic or historic sense of a particular time period.
7. **Association.** Association is the direct link between an important historic event or person and a historic property.

Character defining features

The character defining features of a range depend on the associated NRHP Criteria and the associated property type. A large arms range typically was designed and constructed with the following:

- a set of cleared and leveled firing points laid out on a firing line and associated features (foxholes, trenches, sandbags, embankments, etc.)
- stationary or moving targets (cables, pulleys, tracks, pop-up targets, miniature airplanes, etc.)
- embankments or walls (built up behind targets to catch ammunition, in front of targets for concealment and protection, at firing lines for firing support, between ranges to protect from adjacent fire)
- buildings (control or observation tower, bleachers, latrines, target storage houses, ammunition storage buildings)
- typical features include multiple range layouts, firing lines, targets, embankments/trenches, and buildings.

Context example photographs

Two members of the research team conducted a site visit to Fort Bragg, NC. Fort Bragg was chosen for the site visit because it had one of the largest groupings of different training lands in the Department of Defense; the complexity of its training lands; and the level of historical background that Fort Bragg had on its training lands. There are few examples gathered from other installations. In addition to the photographs taken at Fort Bragg, the researchers searched the previous ERDC/CERL pertaining to training lands and used some of these for examples in the evaluation chapter.

When the researcher is tasked to research and inventory items on a military training range, the researcher is going to find things that are on the real property list, items that are not listed on the real property list, abandoned structures, and foundations. It is the task of the researcher to inventory and document all elements of the range, the role of the elements and the condition of the elements.

Below, is a photographic representation of a variety of examples of miscellaneous training areas elements. The examples should be used as a guide to help identify key character defining features which will ultimately help determine the integrity of each range.

Bayonet training area

Figure 179. Bayonet Training Area (Training Dummies and Bleachers), Fort Bragg, NC, 17 May 2006.

Figure 180. Bayonet Training Dummy, Fort Bragg, NC, 17 May 2006.

Figure 181. Bayonet Training Area (Training Dummies and Bayonet Assault Course), Fort Bragg, NC, 17 May 2006.

4 Conclusions

This work developed a historic context for the development of military training lands used by the DOD and its forerunners. This overall project covered five types of military training:

1. Small arms ranges
2. Large arms ranges
3. Training villages and sites
4. Bivouac areas
5. Large-scale operation areas.

This document provides an historic context of miscellaneous training sites on military training lands for the U.S. Army, U.S. Navy, U.S. Army Air Corps/U.S. Air Force, and the U.S. Marines, with a focus on the landscape outside the developed core of military installations. This work concludes that military training lands are significant enough in our nation's history to be surveyed for eligibility to the NRHP. However, training lands must be viewed as a whole; individual buildings on a training range are rarely eligible for the NRHP; buildings in their larger context (and the integrity of that larger context) are important.

References

"Bayonet Training: Charging with Lethal Precision." Website. Accessed 12 Nov. 2008, http://www.marines.com/main/index/making_marines/recruit_training/training_matrix/bayonet_training

"Rappelling: Descent Into Battle." Website. Accessed 12 Nov. 2008, http://www.marines.com/main/index/making_marines/recruit_training/training_matrix/rappelling_fast_roping

Stokes, Carol. 2008. "Signal Corps Meets Training Demand." Army Communicator. Fort Gordon, GA: U.S. Army Signal Center, http://www.gordon.army.mil/ocos/ac/WWII/TRAINING.asp

"The American Training Bayonet 1858-1912." Website. Accessed 12 Nov. 2008, http://alliancemartialarts.com/bayonet.html

REPORT DOCUMENTATION PAGE

Form Approved
OMB No. 0704-0188

Public reporting burden for this collection of information is estimated to average 1 hour per response, including the time for reviewing instructions, searching existing data sources, gathering and maintaining the data needed, and completing and reviewing this collection of information. Send comments regarding this burden estimate or any other aspect of this collection of information, including suggestions for reducing this burden to Department of Defense, Washington Headquarters Services, Directorate for Information Operations and Reports (0704-0188), 1215 Jefferson Davis Highway, Suite 1204, Arlington, VA 22202-4302. Respondents should be aware that notwithstanding any other provision of law, no person shall be subject to any penalty for failing to comply with a collection of information if it does not display a currently valid OMB control number. PLEASE DO NOT RETURN YOUR FORM TO THE ABOVE ADDRESS.

1. REPORT DATE (DD-MM-YYYY)
30-03-2010

2. REPORT TYPE
Final

3. DATES COVERED (From - To)

4. TITLE AND SUBTITLE
Military Training Lands Historic Context:
Miscellaneous Training Areas

5a. CONTRACT NUMBER

5b. GRANT NUMBER

5c. PROGRAM ELEMENT

6. AUTHOR(S)
Adam Smith, Manroop Chawla, Sunny Adams, and Dan Archibald

5d. PROJECT NUMBER

5e. TASK NUMBER

5f. WORK UNIT NUMBER

7. PERFORMING ORGANIZATION NAME(S) AND ADDRESS(ES)
U.S. Army Engineer Research and Development Center (ERDC)
Construction Engineering Research Laboratory (CERL)
PO Box 9005,
Champaign, IL 61826-9005

8. PERFORMING ORGANIZATION REPORT NUMBER
ERDC/CERL TR-10-9

9. SPONSORING / MONITORING AGENCY NAME(S) AND ADDRESS(ES)

10. SPONSOR/MONITOR'S ACRONYM(S)

11. SPONSOR/MONITOR'S REPORT NUMBER(S)

12. DISTRIBUTION / AVAILABILITY STATEMENT
Approved for public release; distribution is unlimited.

13. SUPPLEMENTARY NOTES

14. ABSTRACT

This work provides an historic context for military training lands, written to satisfy a part of Section 110 of the National Historic Preservation Act (NHPA) of 1966 as amended. Cultural resources personnel at the installation level and their contractors will use this historic context to determine whether military training resources are eligible for the National Register of Historic Places (NRHP), and whether an adverse effect will take place. This overall project covered five types of military training: small arms ranges, large arms ranges, training villages and sites, bivouac areas, and large-scale operation areas. This document provides an historic context of small arms ranges on military training lands for the U.S. Army, U.S. Navy, U.S. Army Air Corps/U.S. Air Force, and the U.S. Marines, with a focus on the landscape outside the developed core of military installations. This work determined that that military training lands are significant enough in our nation's history to be surveyed for eligibility to the NRHP. However, training lands must be viewed as a whole; individual buildings on a training range are rarely eligible for the NRHP; buildings in their larger context (and the integrity of that larger context) are important.

15. SUBJECT TERMS
Military training, Army training, Navy training, Marines training, Air Force training, National Register of Historic Places (NRHP), Army Air Corps training, historic, survey

16. SECURITY CLASSIFICATION OF:			17. LIMITATION OF ABSTRACT	18. NUMBER OF PAGES	19a. NAME OF RESPONSIBLE PERSON
a. REPORT	b. ABSTRACT	c. THIS PAGE			19b. TELEPHONE NUMBER (include area code)
Unclassified	Unclassified	Unclassified	SAR	146	