Unmanned Systems Technology Laboratory, Inc.
510 Clearwater Loop #2
Post Falls, ID 83854

USTLAB TR – 01.004 Version 2, July 2001
Milestone 4, Unlimited DOD Distribution Version

μAUV – MicroAUV
Preliminary System Design Document

DISTRIBUTION STATEMENT A
Approved for Public Release
Distribution Unlimited

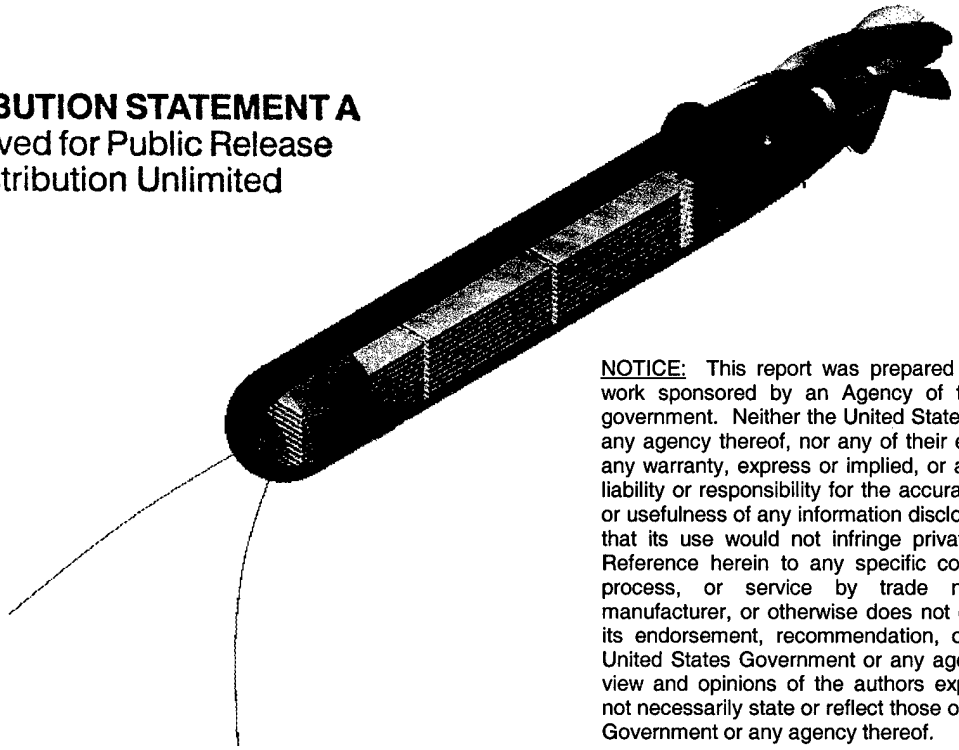

NOTICE: This report was prepared as an account of work sponsored by an Agency of the United States government. Neither the United States government, nor any agency thereof, nor any of their employees, makes any warranty, express or implied, or assumes any legal liability or responsibility for the accuracy, completeness, or usefulness of any information disclosed, or represents that its use would not infringe privately owned rights. Reference herein to any specific commercial product, process, or service by trade name, trademark, manufacturer, or otherwise does not constitute or imply its endorsement, recommendation, or favoring by the United States Government or any agency thereof. The view and opinions of the authors expressed herein do not necessarily state or reflect those of the United States Government or any agency thereof.

by john cranney, david l. stone,

with help from
Dr. Denise Wilson and Todd Massengill
University of Washington

20020318 080

Sponsored by:

Defense Advanced Research Projects Agency
(Micro AUV)
ARPA Order No. K017/19
Issued by DARPA/CMD under contract No.
MDA972-01-C-0011, CLIN 0001AA

NOTICE: DOD RIGHTS IN TECHNICAL DATA – NONCOMMERCIAL ITEMS (NOV 1995)
Unlimited Distribution to Government Agencies and DOD Contractors

This page
intentionally left blank.

Abstract

This Micro-miniature Autonomous Underwater Vehicle (MicroAUV) Project pursues a viable design of a very small AUV. Current MEMS industry miniaturization of electronics enables a "Clean Sheet" design of an underwater vehicle that could achieve an "order of magnitude" improvement in specific endurance (range per pound mass of vehicle) over currently fielded systems. Specifically, the authors target a 2-15 lb MicroAUV that can demonstrate a 20 nautical mile per pound mass specific range capability. The design includes a 20% payload fraction in weight and/or volume and a ~10% margin for payload power. MicroAUV shall provide the endurance of other vehicles currently in the fleet and between 80 ~ 200 lbm displacement. Groups (fleets, swarms, etc.) of 10 and larger MicroAUVs will provide all of the capabilities of larger vehicles with increased mission robustness, as the tactical impact of loss of one vehicle will be mitigated by the swarm.

An initial report[1], was provided to underscore the scope of possibility within the opportunity described above. A second report[2] discussed MEMS attributes of design and a notional design concept, as well as integrating attributes of MEMS enabled power issues into the power and sizing analysis.

This unlimited DOD distribution report version and attachments provide Milestone 4 objectives, specifically:

1. Completes the power and sizing analysis.
2. Identifies the right size of MicroAUV to be approximately 50 to 125 centimeters *(20 to 50 inches)* in length and 5 to 12 centimeters *(2 to 5 inches)* in diameter. Further, shows that variation in performance is critically tied to maximizing diameter for given vehicle length and minimizing onboard instrumentation and payload power.
3. Defines how, at this size, MicroAUV can achieve between 10 and 20 Nm/lbm. The final specific range capability will depend on how design margins are consumed as the design matures.
4. Discusses attributes of the preliminary system design of MicroAUV.
5. Identifies specific attributes of demonstration to be conducted in this, the 1st year of this effort.

Items 1,2, and 3 are technically defended in Attachment 1 *("Hydrodynamic Analysis")* to this report and summarized herein. Items 4 and 5 are presented herein.

The "physics of the small" provides the possibility to improve endurance by designing to a "sweet spot" of vehicle hull diameter, length, shape and prismatic coefficient, wherein at low Reynolds Number (4×10^5) flow, a minimum hydrodynamic drag is achievable and enhances maximum endurance capability.

Report Disclaimer: "The views and conclusions contained in this document are those of the authors and should not be interpreted as representing the official policies, either express or implied, of the Defense Advance Research Projects Agency or the U. S. Government."

Declaration of Technical Data Conformity: The Contractor, USTLAB, hereby declares that, to the best of its knowledge and belief, the technical data delivered herewith under Contract No. MDA972-01-C-0011 is complete, accurate, and complies with all requirements of the contract.

INDEX

LIST OF FIGURES 5
EXECUTIVE SUMMARY: 6
Goal 6
Hydrodynamic Results 7
Vehicle Design 8
Conclusions: 10
INTRODUCTION 11
METHODS & PROCEDURES 11
ASSUMPTIONS & APPROXIMATIONS 11
REQUIREMENTS FLOWDOWN 12
SYSTEM DESIGN 14
Concept of Operations 14
System Functional Architecture *(how it all works together)* 15
100 Hull & System Level Architecture 18
Hull Geometry 18
Hull Strength 19
Change in Buoyancy at Depth 19
Naval Architecture Solution 21
200 Propulsion & Actuation 22
Propeller 22
Motor 23
Steering and Diving 24
Ballast 24
300 Power 24
Power Budget 24
Battery 25
Endurance Results 26
400 GNC (Guidance, Navigation, & Control) 26
Power Control 27
Flight Control 27
Navigation 29
Guidance 29
Fault Recovery Control 29
GNC Components 30
500 Communication, Imaging and Ranging (CIR) System 38
MEMS Acoustic(MA) Sensor Description 40
MEMS Optical (MO) Sensor Description 42
Dual Use Signal Processing 42
600 Payload 43

ATTACHMENTS

Attachment 1: MicroAUV Hydrodynamic Analyses and Results
Attachment 2: Bibliography

List of Figures

FIGURE 1. Specific Endurance Goal 6
FIGURE 2. MicroAUV 6
FIGURE 3. MicroAUV Specific Endurance Parametric Results 7
FIGURE 4. Hydrodynamic drag 8
FIGURE 5. MicroAUV System Schematic 9
FIGURE 6. Some MA Chip Designs for the acoustic imaging array 10
FIGURE 7. Requirements Flow down 12
FIGURE 8. MicroAUV State Diagram 14
FIGURE 9. Hull Geometry 18
FIGURE 10. MicroAUV Hull 19
FIGURE 11. 8.26 cm Dia MicroAUV & Water 21
FIGURE 12. Propeller RPM Design 22
FIGURE 13. Conceptual Pancake Shape Memory Actuator 24
FIGURE 14. Gross Power Budget for MicroAUV Endurance 25
FIGURE 15. Valence Lithium Polymer Battery 25
FIGURE 16. 8.26 MicroAUV 26
FIGURE 17. GNC Schematic 27
FIGURE 18. Actuation Control Schematic 27
FIGURE 19. Steering and Diving Control 28
FIGURE 20. Tilt Compensated Compass 32
FIGURE 21. Compass Specification 32
FIGURE 22. Viosense LDV Sketch 34
FIGURE 23. Range Error vs Intra-Swarm Unit Range 36
FIGURE 24. Clock Synchronization Range Error 37
FIGURE 25. CIR Imaging System 39
FIGURE 26. Acoustic Pulse Power 40
FIGURE 27. 8 x 8 MEMS Acoustic Sensor 41
FIGURE 28. Pixel Side & Top View 41

EXECUTIVE SUMMARY:

GOAL

Our MicroAUV Team goal remains,

"Use current MEMS technologies and a keen focus on multi-functional use of materials to "clean sheet" design an optimally sized micro miniature autonomous underwater vehicle (MicroAUV) that can achieve 20 Nm/lbm displacement and be produced and maintained at low cost."

Further, through miniaturization and fabricating system electronics into the hull, design MicroAUV to provide better than 10x the current 'endurance per lbm of vehicle displacement' over other vehicles currently in the fleet. Specifically, we seek to build MicroAUV at 2~15 lbm displacement and with 20 Nm/lbm endurance to achieve the functions of larger vehicles of 80~200 lbm displacement which have ~1 Nm/lbm displacement. Figure 1 shows our goal relative to other platforms, as submitted in our proposal.

FIGURE 1. SPECIFIC ENDURANCE GOAL

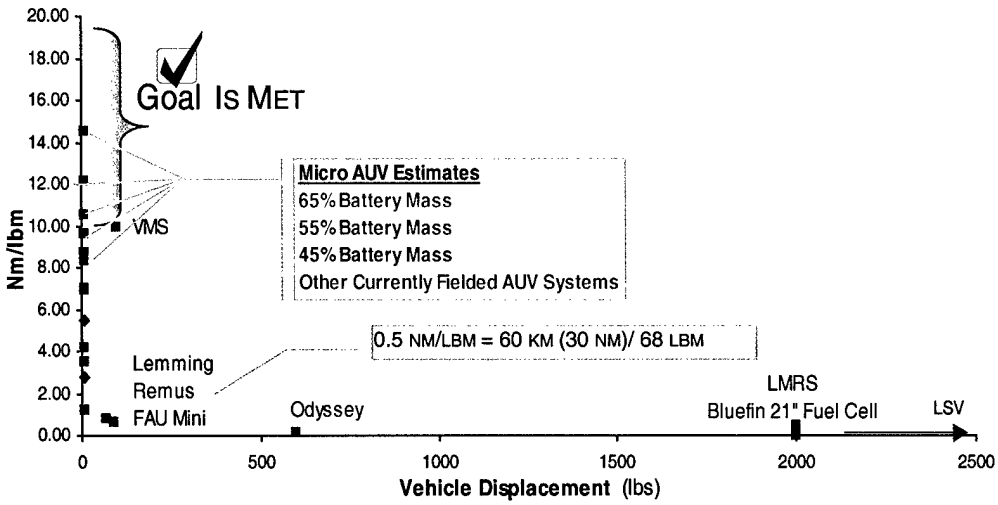

FIGURE 2. MICROAUV

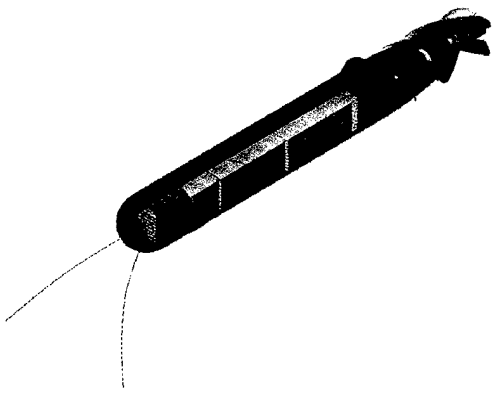

Figure 2 displays an 8.26 cm *(3¼ in)* diameter, 64 cm *(25 in)* long MicroAUV configuration *(L/D = 7.7)*, which will achieve 14 to 17 Nm/lbm and 7.5 Nm/lbm at payload peak power. A propeller and counter-torque planes provide dynamic control.

Increases in diameter and/or length provide gradual increases in specific endurance up to a limit of around 20 Nm/lbm. Decreasing Diameter and Length substantially impacts endurance because of the mass and volume required for other components.

The instrumentation section is embedded into the nose and the hull section as conformal PCB and MEMS electronics. Batteries are shown in gray, motor in dark blue. Payload is not shown. "Cat Whiskers provide obstacle 'bump' detection and possibly velocity measurement.

HYDRODYNAMIC RESULTS

Analytically, we defined many vehicle design concepts, defining a trade space of permutations in vehicle design attributes, including parametric variations in:

- diameter,
- length,
- shape (Prismatic Coefficient)
- forward velocity,
- low and high instrumentation power rates *(including 100% design margin for reasonably developed instrumentation power budget estimates)*
- design margins (0%, 10%, & 20%) in overall vehicle system mass & volume budgets
- operating profile (steady-state and high maneuvering) and affects on instrumentation power and propulsive efficiency and forward speed of advance through water and over ground

For each vehicle, we calculated the hydrodynamic drag and the ensuing propulsive power. We added in electronic hotel load and payload and integrated the trajectory through time until the onboard battery energy was fully depleted. Using actual speed of advance over ground, we then calculated the range (distance traveled). Dividing by vehicle mass, we derived the specific endurance (or specific range of the vehicle). As shown in Figure 3, we have identified a regime of vehicle design where the maximum performance is achieved.

FIGURE 3. MICROAUV SPECIFIC ENDURANCE PARAMETRIC RESULTS

Figure 3 presents 162 surface plots of endurance over the parametric space of:

3 instrumentation power values
3 design margins
2 operating profiles
9 diameters
& 132 lengths and 15 operating speeds

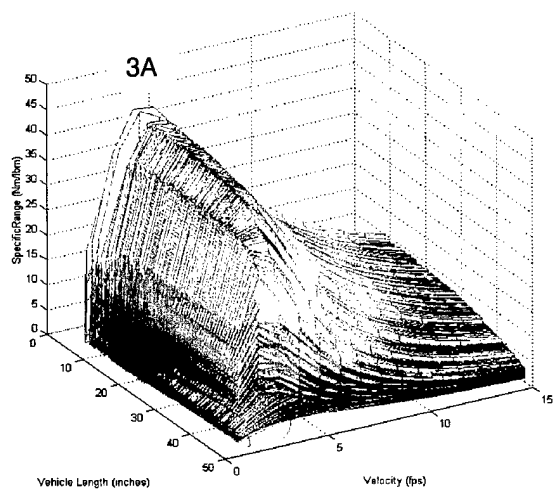

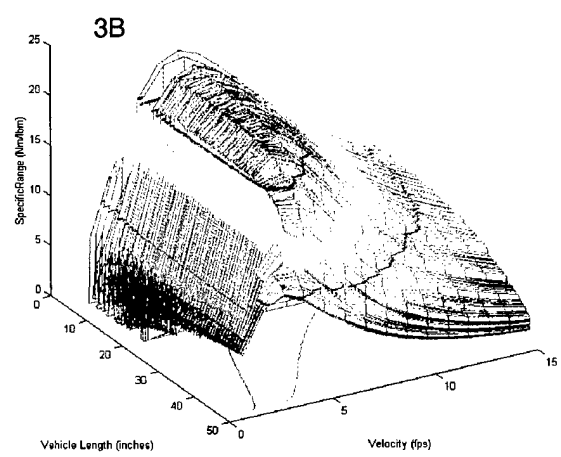

Larger diameter *(smaller L/D)* vehicle shapes provide results that define the upper most surfaces. The optimum condition is visible as the top surface, and relates to:

Minimum Instrumentation Power
Zero design margin
Steady state operating profile
5 inch diameter *(smallest L/D's for the respective lengths)*

Figure 3A optimistically depicts the maximum specific endurance possible in an aggressive application oriented design (~45 Nm/lbm). Figure 3B shows more realistic curves and are derived by constraining the parametric trade space to an average instrumentation power defined in sections below, to 10% design margin, and to a steady state operating profile. The red

isobar intersects the surfaces, defining an area of length and velocity wherein 10 Nm/lbm specific endurance is achievable. The black isobar similarly defines 20 Nm/lbm specific endurance.

When viewed against velocity, the maximum occurs between 3~6 fps. Analytically, MicroAUV can be built to achieve the 20 Nm/lbm goal at:

Lengths	25 ~ 125	centimeters	*(10 ~ 50 inches)*
Diameters	5 ~ 12	centimeters	*(2 ~ 5 inches)*
L/D	$\simeq 7$		

Attachment 1 provides technical defense of these analytical data. These length and diameter specifications represent the lowest, "reasonably sized" MicroAUV possible and are achievable as consequence of:

FIGURE 4. HYDRODYNAMIC DRAG

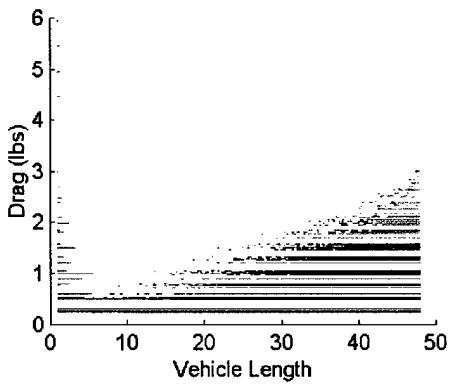

1. Reaching toward a sweet spot (minimum) in hydrodynamic drag based on the small vehicle size. This is fully addressed in Attachment 1, and can be viewed in Figure 4. Ideally we would select a vehicle of 10 inch length. However, a vehicle of 10 inches and 5 inch diameter does not allow practical load out of all components.

2. Novel methods towards reducing instrumentation mass and power budget allocations and maximizing propulsion efficiency at this scale.

3. Packaging payload, motor and all necessary components to achieve a ~20 hour endurance.

Our goal[4] includes developing MicroAUV so that manufacturing and maintenance costs are kept low. This goal and the MEMS based availability of sensors:

- enables consideration for a low or minimal level of instrumentation as redundancy and robustness is shifted towards many MicroAUVs in a swarm, vice the high reliability per vehicle in a large, tactically-critical individual vehicle scenario.

The many vehicle swarm enables consideration for low level of onboard intelligence per unit, while the large number of units can provide needed probabilities for mission success. Hence, small real estate for processing throughput further adds to reducing the instrumentation power suite.

The MicroAUV design approach can be applied to larger vehicles to increase endurance over current capabilities. Mitigation of this approach occurs:

- in the larger size (mass and volume) of electronics due to higher levels of sensing, communication, and autonomy than MicroAUV is envisioned to have.
- departure from the hydrodynamic sweet spot for small vehicles

VEHICLE DESIGN

As stated above, our chosen vehicle size of 8.26 cm (3¼ in) diameter, 64 cm (25 in) length, and 6.2 lbm (2.8 Kg);

- is proximal to the hydrodynamic sweet spot,
- is capable to host the 20% neutrally-buoyant volume for payload, and
- has a BG of 0.25 cm (3%)

We pursue minimal, yet sufficient onboard hardware to enable MicroAUV to:

- Continually advance in environments of opportunity

- Communicate with (sense) the environment, sufficient to:
  - discern trajectory (obstacle avoidance)
  - measure some physical field parameter
- Carry and support a payload of some purpose
- Communicate with other "near by" units, and/or a supervisory node.

Per our goal, our vision remains:

- to place few capabilities on MicroAUV, sufficient only to enable mobility, sensing and networking
- that many MicroAUVs, operating together, can achieve an overall high system tactical effectiveness

The MicroAUV functional system architecture is shown in figure 6, and provides a foundation that can be responsive to all of the above goals.

FIGURE 5. MICROAUV SYSTEM SCHEMATIC

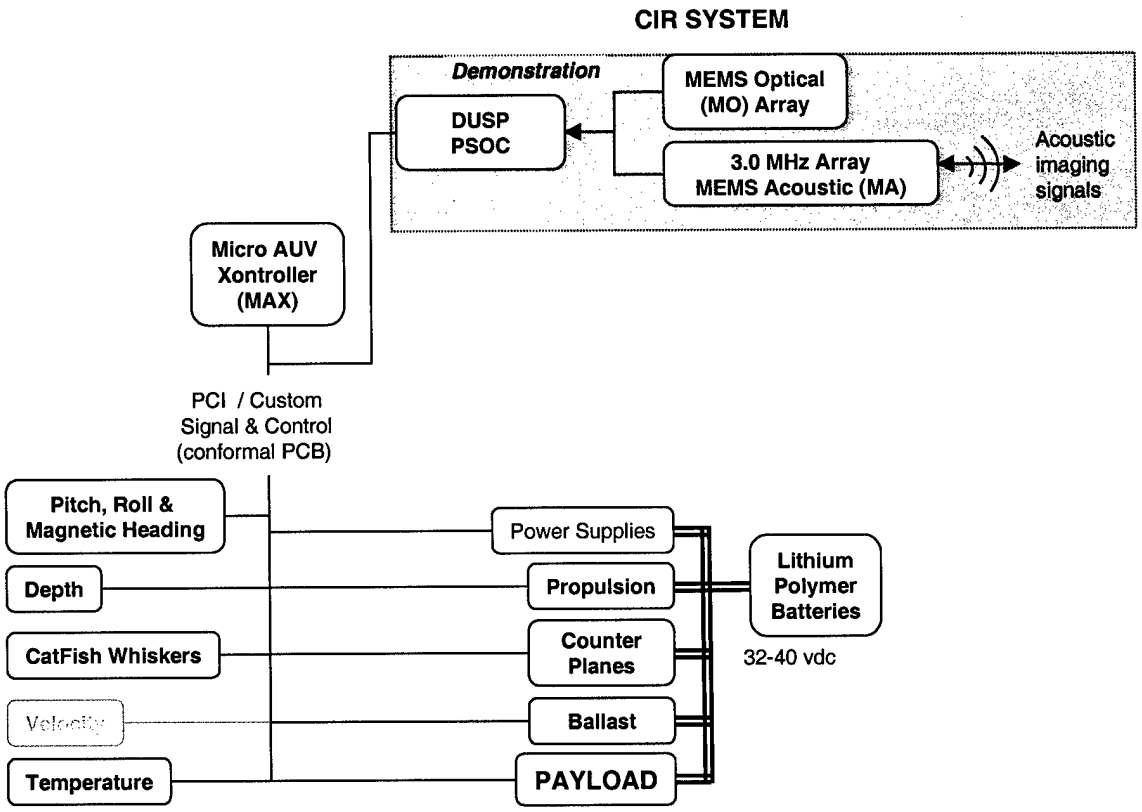

Each component is more fully described in the System Design section. To enable MicroAUV as a disposable device, novel attributes of dual functionality and robust signal management (multiple sensor input) achieve a certain reliability and economy of the platform. These include:

- A single "dual use" processor accomplishes some of the signal processing for the MO and for the MA sensors
- Three systems provide obstacle detection:
  MA (MEMS Acoustic),
  MO (MEMS Optical)
  'Catfish Whiskers' Bump Detector.
- Pressure & Temperature: One or more 'no power' MEMS devices

Our USTLAB and UW team members are finalizing the sensor designs for the MA and MO devices shown in the sketch above.

Four of the MA chips, shown in Figure 7, are among a set of devices that the team will produce *(through Carnegie Mellon's ASIMPS program)* this summer for characterization tests to be conducted this fall.

FIGURE 6. SOME MA CHIP DESIGNS FOR THE ACOUSTIC IMAGING ARRAY

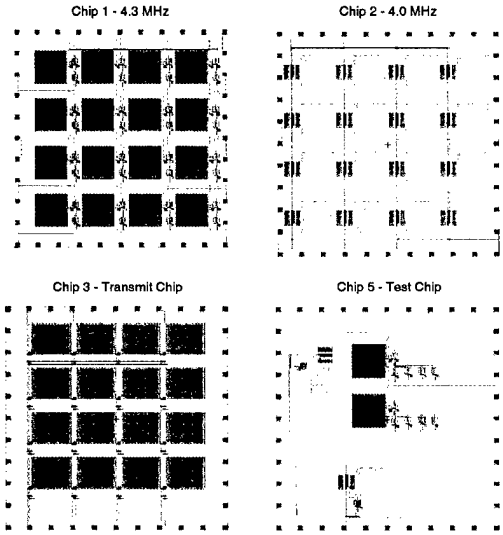

CONCLUSIONS:

Vehicle: MicroAUV consists of all components to:

- proceed at 4~6 kts,
- sense the local environment,
- avoid obstacles,
- maintain a geomagnetic track heading,
- prosecute a trajectory of certain engineering definition, and
- carry a payload of some tactical value

for a duration of 50~100 nm at a vehicle displaced weight of ~6.2 lbms.

Cost: Conformal PCB manufacture of the control architecture, complete with embedded MEMS sensors and other low level circuit devices, can be accomplished at reasonable costs. After Conformal PCB fabrication and assembly of other components, the conformal assembly can be fabricated integral with the hull structure using composite reinforced plastic fabrication processes without damage to the internal electronics. Final total cost is anticipated to be between $2000 and $5000 per unit. A proprietary detailed cost estimate breakdown has been provided by separate document.

INTRODUCTION

The MicroAUV program pursues a novel underwater vehicle design to achieve an order of magnitude increase in "specific endurance" (range per lbm of vehicle) over currently fielded systems, by incorporating COTS MEMS electronics and additional proprietary innovation.

Currently fielded systems are captured in the body of such vehicles as WHOI REMUS, ABE, FAU Mini, LM CETUS, and others. The specific endurance of these platforms is represented in Figure 1 above. Note that VMS (Variable Mooring System) is a glider vehicle, vice using active propulsion drive to accomplish speed of advance. Micro AUV goals will be to achieve the VMS endurance or better on active propulsion drive technology. Nominally, our goal is 20 Nautical Miles per pound mass displacement.

Current vehicle data were extracted from a FY2000 study on AUV developments[3]. Also, analysis of the Large-Scale Vehicle (LSV) propulsion power at 6 kts, rendered a specific endurance of 0.008 nm/lbm as summarized in our previous report[2].

METHODS & PROCEDURES

We have pursued the development of MicroAUV's design on several fronts.

COTS MEMS	Commercially "Off The Shelf" (COTS) MEMS devices, where appropriate for economy and reliability, are implemented into several component devices in the architecture of Figure 6.
Custom MEMS	USTLAB (Stone) and UW pursue custom MEMS design of an acoustic and optical dual imaging system, complete with a dual image processor.
Conventional Parts	We acquired design data of all other components needed for MicroAUV from conventional commercial sources.
Naval Architecture	We "assembled" design budgets for mass, volume and power for all components into a virtual (solid model) design space using SolidWorks™, and built the vehicle above by assembling these components as shown.

Having "collected" the power of all components and overall vehicle size, we applied operational profiles and hydrodynamics to define overall system power budgets. We then integrate our hydrodynamic analysis to calculate vehicle endurance as discussed in Attachment 1: "Hydrodynamic Analyses and Results".

ASSUMPTIONS & APPROXIMATIONS

As stated in the Executive Summary, we pursue minimal, yet sufficient onboard hardware to enable MicroAUV to:

- Continually advance in environments of opportunity
- Communicate with (sense) the environment, sufficient to:
  - ~ discern trajectory (obstacle avoidance)
  - ~ measure some physical field parameter
- Carry and support a payload of some purpose
- Communicate with other "near by" units, and/or a supervisory node.

Our 'design-guiding' approximations, assumptions and/or goals include:

- the vehicle is expendable
- minimal but sufficient capability
- elegant

- robust in simplicity not complexity
- the vehicle does not cost much, when made in large production runs
- many MicroAUVs, operating together, can achieve an overall high system tactical effectiveness

We developed and submitted a MicroAUV Performance Specification, which defines expectations of MicroAUV that are stated in the following section.

REQUIREMENTS FLOWDOWN

To examine High Maneuvering scenarios, MicroAUV design goal is constant through water speed at ~5 kts. "High Maneuvering" will likely be accomplished at this same propeller speed with a net reduction in Speed of Advance (SOA) over ground, due to the maneuvering.

In endurance calculations, we estimate "high maneuvering" at the same speed to calculate gross power consumed and use 70% SOA as the net SOA in calculating range achieved.

The draft ***"μ-AUV Performance Specification"*** [4] (PRS) was submitted in February. Figure 8 references the requirements of that specification to the location of salient design discussion in this document.

FIGURE 7. REQUIREMENTS FLOW DOWN

Requirement	Reference
1.0 Cost effective	
Manufacturable, 10x reduction in cost	See "Conclusions" above.
3.1 Key Performance Parameters (KPP)	
μAUV shall be a self-propelled, submersible, unmanned, autonomous vehicle, capable of local relevant or global relevant navigation in any marine environment of opportunity	Enabled by all attributes of integrated system design presented herein. 400 GNC & 500 CIR in the proprietary version of this report address capability for local and global relevant navigation
3.1.1 High endurance	
20 Nm/lbm (largely transit, payload at ave. power) 10 Hrs/lbm of operation (largely maneuvering) OR 10 Hrs/lbm of operation (payload at heavy power)	Attach 1 justifies specific range of 20 Nm/lbm 300 addresses hours of operation in other modes.
3.1.2 ~ 3.1.5 Payload	
Weight ≥ 20% of vehicle displaced volume, Power ≥ 0.3 watts average, ≥ 5 watts peak, Energy ~ 10% of overall MicroAUV Energy Budget.	100 Naval Arch justifies Payload Weight Margin Attach 1 justifies average power for endurance, 300 justifies peak power and 10% energy budget
3.1.6 Mission Profiles	
Steady State Transit, Maneuvering, Hybrid 50/50 Profile	Attach 1 examines operations profile and impact on range. 400 GNC Flight Control, Guidance
3.2.1 Speed	
Sustained Speed 3~6 kts	Attach 1 examines speed impact on range 200 and 300 address capability to deliver

FIGURE 7. REQUIREMENTS FLOW DOWN (Continued)

3.2.2 Maneuvers

forward transit, navigate within nominal turning diameters, maneuver around obstacles, reach and maintain the surface	Section 200 provides discussion on actuation to accomplish Imaging Portion of 500 CIR System address capability for obstacle detection

3.2.3 ~ 3.2.8 Sensors, Control and Communication

	Accuracy	Resolution	Reference
Pressure, Depth	0.5 feet	0.1 feet	400 Depth
Velocities, u, v, w Altitude, h	0.1 kts 1 ft	0.01 kts 0.1 ft	400 Velocity
Heading, Yaw, Pitch & Roll Angles	0.1 deg	0.01 degree	400 Heading, Pitch & Roll
Accurate Time	0.0001 sec	0.00001 sec	400 Clock
Rotation Rates	0.1 deg/sec		Deleted. See 400 Rate Gyro
Angular acceleration	0.012 deg/sec^2		Deleted. See 400 Rate Gyro
Linear Acceleration	0.001g		Deleted, except for Bump Detector, See 400 Velocity and Acceleration
Control Update Rate	1~10 Hz		System Design and Section 400 MAX
Control Surface Position	0.1 deg	0.01 deg	Section 200 Steering & Diving
Communication	Standard Interfaces & Protocols		400 MAX –pre & post mission setup and maintenance. 500 CIR –Proprietary Design for In Water AComms

3.3 Other Performance *(Design Guidance, Not Required for Prototype)*

Swarm Performance	Proprietary Design. Not included herein.
Reconfigurable Programming & Payload	400 GNC addresses Programming & Payload Control 100 Nav Arch addresses Payload Mass
Utility: user friendly, <1 standard service connections.	300 Power/Battery 400 MAX
95% Reliability	Proven Standards in Fabrication practices are being considered. Reliability will be formally addressed post demonstration.
Closed Loop Dynamic Stability	Control Design is TBD → Control Rpt (M5)
Script Maneuver	Control Design is TBD → Control Rpt (M5) However, actuation (section 200) has been sized for substantial control authority

SYSTEM DESIGN

MicroAUV is

- a viable system design, as presented in our proprietary report and referred to herein.
- defended by salient analysis of the operational power budget (see hydrodynamic analyses completed in attachment 1).
- functionally operable

Fundamental aspects of design in developing this system architecture are to achieve maximum simplicity and elegance. By designing to accomplish necessary & sufficient sensory and logical functions without unnecessary functions, power can be kept low and endurance high. A vehicle of extreme high specific endurance (10x existing) and some useful capability provides the opportunity to complete missions otherwise too costly or complicated for larger, single use platforms.

Concept of Operations

The vehicle state diagram is shown in Figure 9. MicroAUV is designed for all of these tasks, except that the Payload end games are understood to be accomplishable by a yet to be defined Payload, whose interface requirements of the vehicle are specified in the requirements document and addressed herein, as appropriate.

FIGURE 8. MICROAUV STATE DIAGRAM

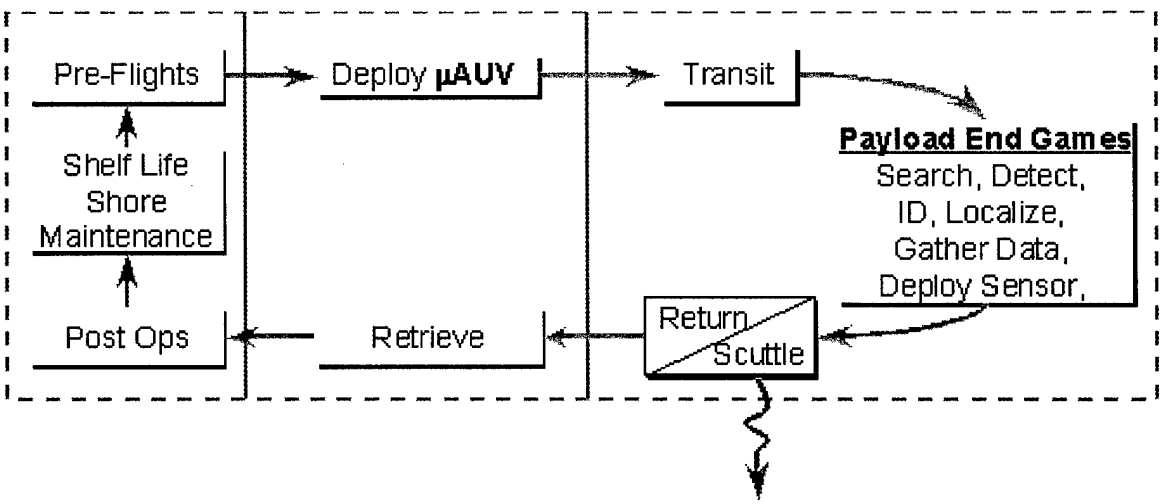

Discussion to follow in System Functional Architecture addresses how the various components within MicroAUV interface to accomplish the vehicle mission. The assumptions and approximations, derived from the requirements specification[4] are relied upon in conceptualizing actual missions.

For instance, in littoral waters, a single MicroAUV, operating without peers or a supervisory submerged node, and when detecting the needed data, as preprogrammed, could surface and (using the payload) transmit an RF burst and homing signal. A surface or airborne supervisory node could receive the signal, identify, and localize MicroAUV and hence its target of interest.

System Functional Architecture *(how it all works together)*

The top-level functional architecture of MicroAUV is shown in Figure 5. Sections 100 through 600 discuss and defend individual subsystem designs. How these components integrate, interface and function at the top level is discussed immediately below *(which is best read with Figure 5 in ready reference).*

To that end, signal processing is developed as analog circuitry where possible, while ensuring programmable reconfigurability by placing decisions in the "Control I&C" chip (hardware and software) and by keeping those decisions as simple as possible.

Propulsion, Steering, Diving, and Ballast Control.

MicroAUV is optimally designed to transit at slow speed. It is not ideally suited to hold station or conduct substantially dynamic maneuvers. Current design of motor, propulsion and steering and diving is a single, variable pitch (morphable propeller blade) propeller to achieve both thrusting and steering control. Present design pursues a six-bladed propeller. Torque on the hull, induced by Motor/Propeller rotation and blade pitch is countered by MicroAUV's body moment of inertia (see Naval Architecture Solution below). Steering and Diving is accomplished by varying analog voltage to each blade, wherein shape memory material distorts each blade pitch from a default no-voltage, preloaded pitch condition.

The voltage signal is passed to the blades via slip ring assemblies into a hollow shaft. For a six-bladed propeller, 13 wires (6 differential voltage signal pairs and signal ground) are planned. This technology is proven at much larger scale on Large Scale Vehicle (LSV Kokanee) wherein more than 270 signal lines are ported to the rotating propeller. Our challenge is to microminiaturize the design, including the variable voltage controller, which will need to vary at up to 2~5 Hz to support the propeller rotation speed (see section 200) and lag time of the propeller blades.

When MicroAUV goes deep, buoyancy loss is anticipated. Amount of buoyancy loss is identified in section 100 as ~0.01 lbm and not significant at nominal vehicle speeds.

Presently, MicroAUV will use a Ballast Diaphragm only as an ON/OFF control to hold on the surface or not. No active buoyancy control is used in normal operations because such capability:

is not needed
requires intelligence (which takes power), and
consumes raw power in continual readjusting.

Power

The Battery stack is discussed in section 300. It will provide 32+ to 40 vdc and will directly feed the controller(s) for the motor and the propeller (or control surfaces), as well as the ballast diaphragm, when used. Step down voltage control design is being pursued to provide signal power for I&C operation.

Sensors and Micro AUV Xontroller (MAX)

As the data flows and interfaces are developed, we will quantify the computational throughput and set system clocking somewhere between 1 Hz and 10 Hz, as appropriate to accomplish all operations.

Steady state flight is controlled by commanded heading and depth and closed loop control with damped proportional feedback. Heading and Depth commands are scripted and set as default commands, which are overwritten each clock cycle, as emerging data so defines.

In steering or diving changes, the maximum open loop control authority *(in the variable blade propeller pitch design)* will be constrained to provide an effective pitch or yaw angle (>10°) and not exceed a safe limit (< 50° or °/sec, TBR). In this way, changes will be executed as ON/OFF logic commands, maintaining simple computational load.

At 5 kts forward speed, it is not necessary to control vehicle angular rates or accelerations and these sensors have been deleted in the design. A pitch and roll compensated magnetic heading provides for good accuracy at <1 degree magnetic (see 400 Heading, Pitch and Roll) and also provides pitch and roll.

The "Catfish Whiskers" serves two functions:

Primary Function: Detect bumps ~2 ft ahead of MicroAUV bow. This signal provides an interrupt to MAX, which immediately initiates propeller reversal/stop sequence.

Secondary Function: Outputs steady load signal, providing indication of velocity.

The need for a speed or velocity sensor is questionable. At 5 kts forward speed and a size less than 10 lbms, speed would be used to enhance navigation or to detect faults *(eg ... forward velocity less than ... some limit)* and would not otherwise affect real time flight control. If we can secure such a signal from the Bump Detector, with no additional signal power, then it will be used. If not, other velocity sensors are extremely costly and/or power hungry and have been deleted.

Structural strength of the vehicle and the bump detectors mitigate a crash at 5 kts *(2.6 meters/sec)* forward speed (a fast walk) to a hard object (<3 g) so that damage does not occur. Hence, control updates are important for efficient control, less for safety.

The CIR MAMO Imaging (see discussion below and Section 500) subsystem provides for illumination (detection) of obstacles within 15 meters ahead of the vehicle. A 1 Hz update clocking provides sufficient signal responsiveness to provide needed flight controllability that MicroAUV can:

sense obstacles at 15 meters	t_0-6 seconds
confirm at 12 meters	t_0-5 seconds
re-plan trajectory & command output changes	t_0-4 seconds
achieve control output changes, and	t_0-3 to t_0-2 seconds
redirect vehicle trajectory effectively	t_0

This synergistically requires sufficient control authority in the propulsion, steering & diving open loop design to achieve needed maneuverability within 2 seconds of achieving a mode change in these actuators. "ON/OFF/REVERSE" propeller control can easily accomplish this kind of change for propulsion.

Scheduling blade variation in propeller, with rotational speed to affect steering and diving and to achieve this kind of responsiveness is not so easily understood. Design analysis will be pursued to quantify and understand open loop performance and to then create sufficient control law to be effective.

CIR System (see section 500)

The Communication, Imaging, and Ranging system is a subset of the GNC system and provides the multiple functions of scene detection, communications, and ranging to achieve local navigation (relative to obstacles, comms guidance, ranging to other units or supervisory node).

In general, MicroAUV is being developed with limited intelligence and with a focus on power, energy, and endurance.

However, Communications and Ranging will enable several capabilities unique to operating in a swarm and will "connect" the swarm to a global reference frame through a supervisory node,

and avoids the costly power demand of a global navigation system on each vehicle. The communication and ranging design attributes and the functionality to achieve local and global navigation reference are of proprietary design and are only addressed in the Proprietary version of this report.

Imaging Alone and Obstacle Avoidance

The CIR will have its own controller and operate at a clock cycle somewhere between 0.1 Hz and 10 Hz, currently selected to be 1 Hz.

In response to Key Performance Parameter *(MicroAUV Spec 3.1, see Requirements Flowdown above)*

> *"µAUV shall be a self-propelled, submersible, unmanned, autonomous vehicle, capable of local relevant or global relevant navigation in any marine environment of opportunity"*

the Imaging subsystem will enable local navigation in any marine environment by detecting obstacles, both acoustically and/or optically. Although not specified in the requirements, but to support the operational timing discussed above, our design goal is to segment and detect 2 meter wide pixels at 15 meters range, over a sector screen of ~15 meters square. Imaging will advise MAX of the presence of objects (or the lack thereof) in each "pixel" (logically 1's or 0's). The MAX adjusts current trajectory based on the screen image.

The imaging device planned here is not currently being sized to conduct image classification. The team is developing an understanding of some limited classification that could be done, so that the MEMS Optical sensor (32x32 to 128x128 resolution) could be used in a target validation role. This is only an understanding of the design team and is not being done to support MicroAUV at this time as a preponderance of optical sensing and classification systems are being developed and the team views such activity as a Payload function.

Payload

The MicroAUV Performance Specification does not specify requirements of the Payload functional interface with MicroAUV. However, it is reasonable to anticipate that the payload will identify data that warrants redirection of MicroAUV. These data structures will be proposed in the control architecture report of Milestone 5, but are nominally envisioned to be trajectory change requests in the way of sectors or local way points that may require the MAX to return to a previous location and hold station. Such requests can be in the form of

"sector"	drive toward a current sector of the local environmental scene
"heading"	drive to new heading and maintain
"depth"	drive to new depth and maintain
"waypoint"	relative to current position, return to old or go to new position

100 HULL & SYSTEM LEVEL ARCHITECTURE

Payload Requirement		Payload Weight ≥ 20% of vehicle displaced volume	
Initial Depth Requirement	Not Specified	**Recommended Change**	< 600 ft (< 200 m)

Hull Geometry

Hull Geometry will be a body of rotation, consisting of three geometric sections (Figure 10A);

- A forward hemispherical or ellipsoid section of small length
- A middle right circular cylinder constituting most of the vehicle length
- An after ellipsoid section, tapered to support the novel propeller

FIGURE 9. HULL GEOMETRY

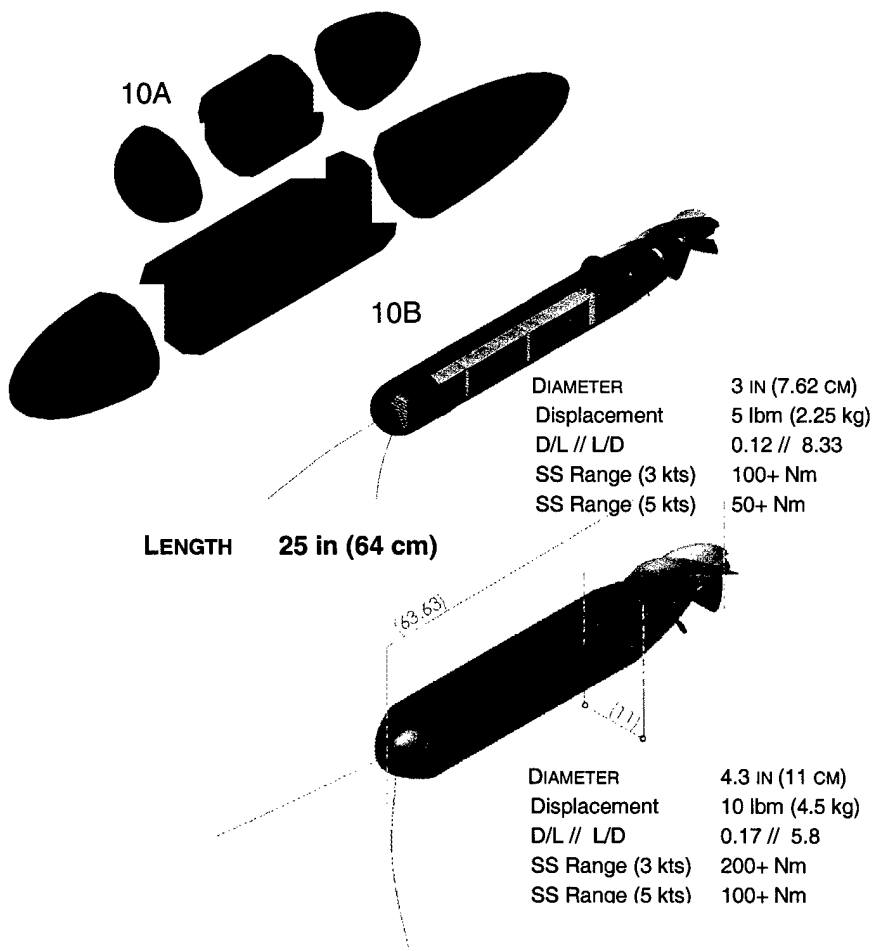

We examined flatter shapes and undulatory propulsive methods and reported on these in our Feasibility Study[1]. In general:

1. development costs associated with these approaches remain substantial and
2. the net efficiency achievable is not clearly better than bodies of rotation shapes and rotary propulsive means.

Initially, we targeted one shape and two sizes as our candidate hull design (Fig. 10B).

The endurance values shown are developed in Attachment 1, using instrumentation power, propulsive input power and payload power as defined in sections to follow.

The smaller diameter vehicle was our initial default design. The larger vehicle was to be carried along in design and provide a backup, should it become necessary to:

- Accommodate uncertainty in how design margins evolve as the final vehicle design evolves
- Ensure the rotational speed of the propeller is optimally minimized (see section 200).
- Ensure growth volume for payload

However, as we completed the load out on the smaller vehicle we found that we could accomplish all specifications except that we were uncertain about the impacts of adding the payload. One way was to add ~10 cm to hull length to accommodate the payload requirement of 20% neutrally buoyant displaced volume. Another way was to remove batteries, which reduced the specific endurance from ~17 Nm/lbm to ~13 Nm/lbm (see section 300).

Also, section 200 discusses proper propeller design, which implied a larger diameter propeller. In consideration of these two issues *(payload and propeller design)*, we examined increasing hull diameter without increasing length, just large enough to increase displaced volume from 5 lbm to 6.2 lbm, providing the necessary 20% volume and mass allocations for payload. The hull is as shown in the assembly of Figure 5 above and in Figure 13 below.

The bow is filled with solid '**ρc**' material, encasing the sensors (Figure11, sensors not shown). Aft of the sensor head is a free flow volume (ballast tank) and then a pressure hemi-head, covering pressure hull of the vehicle. This free flow volume is discussed in the ballast section.

On a yet to be determined location aft of the forward perpendicular and near the motor, the hull will be separated by a screw, o-ring fitting so that the two halves can be screwed together upon final assembly and during maintenance servicing (battery replacement, re-programming).

Hull Strength

The Hull is a thin wall cylinder of thickness designed to support stresses to 600 ft (300 psi). Using Phenol Formaldehyde Glass Reinforced Plastic (GRP), typical strengths run from 20,000 to 42,000 psi[5,6]. Hoop stress "S" = pr/2t, where p is ambient pressure, r is radius and t is thickness of hull. MicroAUV Hull thickness is currently designed to be 0.2 cm, of which 0.1 cm will be conformal PCB board, and 0.1 cm will be structural hull. *(components on the inside of the conformal PCB hull form).* Solving for S;

S = (300*4.13)/(2*0.1) *{note: using cm for r to get cm for t, other units all cancel}*

S = 6200 psi

Safety Factor = 3.22 ~ 6.77

Using other proven design and analysis software[7], the external pressure that will cause failure in composite wound GRP, thin walled tube of 1.6 in inner diameter is ~1300 psi (or SF is ~4.3).

FIGURE 10. MICROAUV HULL

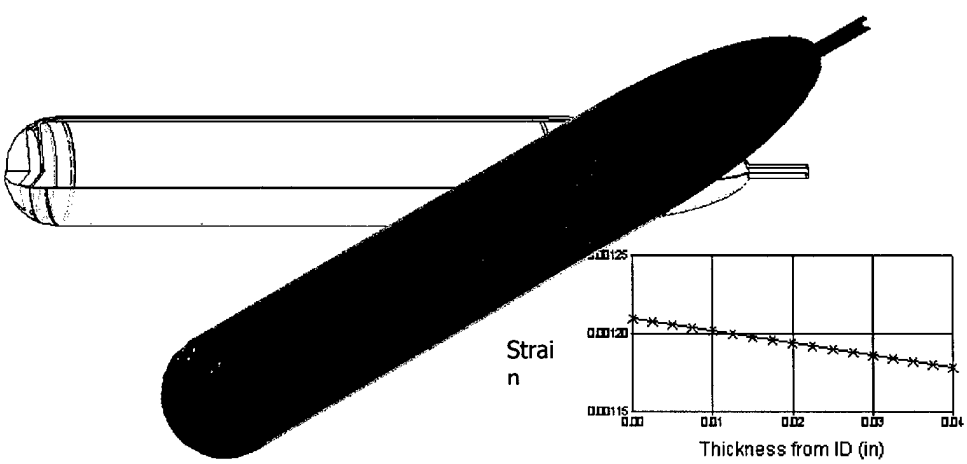

Change in Buoyancy at Depth

The plot in 11 shows the hull strain as function of thickness of hull, for a hull diameter of 8.26 cm under 300 psi external pressure. Our thickness of 0.1 cm (0.04 in) identifies a strain of 0.00118

in/in (or cm/cm). This equates to a diametric reduction in hull diameter from 8.26 cm to 8.25 cm and a net change in displacement from ~6.20 lbm to ~6.19 lbm.

Naval Architecture Solution

Figure 11A depicts the mass and inertia of a volume equal to that of the MicroAUV design and filled with water. The design of Figure 2 is repeated in Figure 11B. This figure includes most components, appropriate masses and volumes, and component lay down *(payload and ballast control not shown).* The green origin is the reference stacking point and the red origin is the center of mass. Mass and Center of Mass relative to origin is indicated.

FIGURE 11. 8.26 CM DIA MICROAUV & WATER

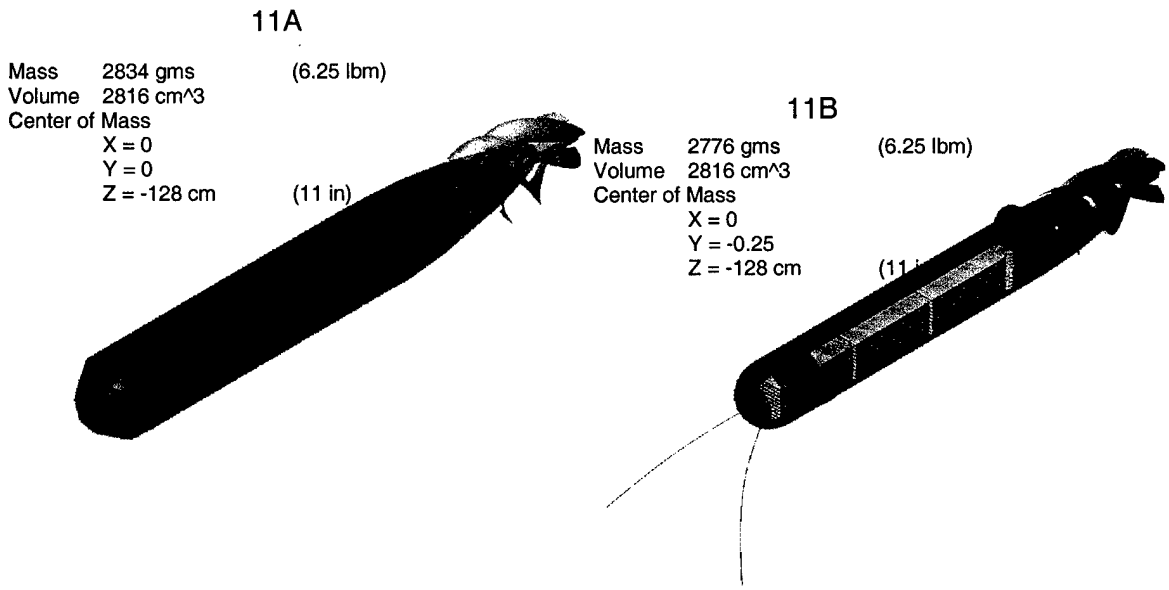

The mass design margin is now ~2% (0.13 lbm). The righting moment arm (BG) is 0.25 cm (~3% of hull diameter). The BG is an acceptable limit and will aid control counter rotational planes yet we will be working to increase it as we consume the mass design margin in structure and other components.

200 PROPULSION & ACTUATION

Speed Requirement	Sustained Speed 3~6 kts
Maneuverabiltiy Requirement	forward transit, navigate within nominal turning diameters, maneuver around obstacles,

Propeller

As stated in our first report[1], it is uncertain as to whether an undulating propulsion methodology will gain sufficient efficiency over rotary propellers for sustained operation. In summary of that observation, Fish[8] noted that fish can sustain velocities of 1 to 2 body lengths per second for long periods and that velocities of 3+ body lengths per second equate to "sprinting", which fish cannot sustained for very long.

Other efforts to develop undulatory motion are ongoing under sponsorship from DARPA and ONR. Although nature's design can achieve substantial performance[9,10] of ≥80% hydro-mechanical efficiency, creating the electromechanical devices to achieve the equivalent hydro-mechanical motion of undulatory propulsion is not trivial. Considerable mechanical losses in man's imitation of nature keep system overall drive train efficiencies below those anticipated with rotary devices.

At a size of 64 centimeters in length, goal speed of 3 to 5 kts *(150 ~ 250 cm/sec)* equates to 2.5 to 4 body lengths per second. It appears there could be some value in developing an undulatory propulsion method, when such methods could achieve system efficiencies greater than the ~60% possible with a finely tuned rotary propulsion system.

FIGURE 12. PROPELLER RPM DESIGN

$$SOA = \pi \times d \times {}^{RPM}\!/_{60} \times \sin(PitchAngle)$$

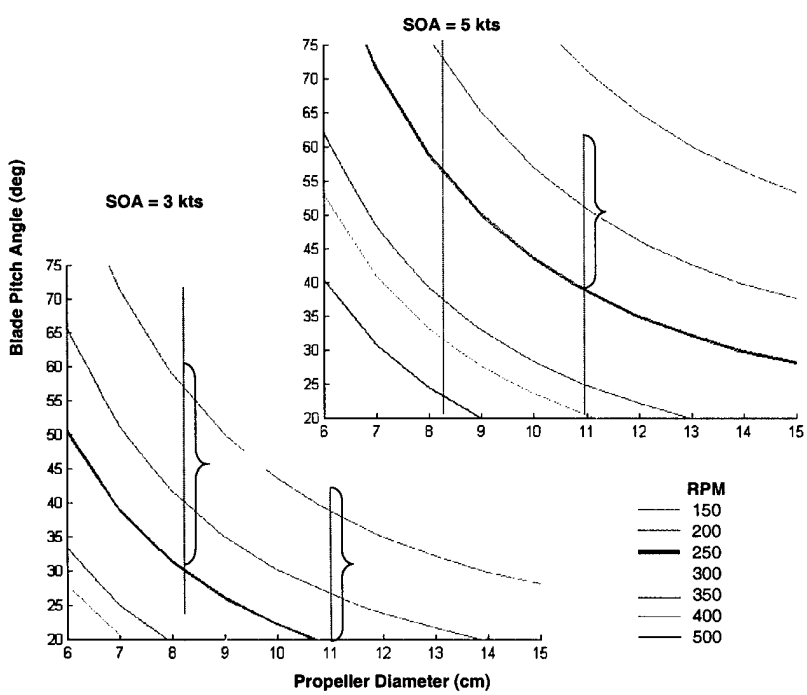

MicroAUV uses rotary propulsion designed for one speed. To keep turbulence down, a minimum achievable rotational speed is desired. Intuitively, one revolution per second (60 RPM) seems ideally slow enough and five revolutions per second (300 RPM) seems too fast. Using the equation, prop diameter (d) and pitch angle are varied for a given Speed Of Advance (SOA) to evaluate nominal rotational speed (RPM) in Figure 16.

The colored lines are contours of constant RPM.

These relationships are used to define the right propeller diameter and shape, which is defined in the proprietary report.

Current design intent is to manage "off-nominal" operating conditions somewhat by using morphable structure technology in the blade material.

Electro Active Polymer (EAP) technology has advanced considerably[11]. Shape Memory Actuators have historically consumed considerable heating power and were previously inefficient. Today, integrated and actively controlled with Thermal Electric material, SMATE actuators are also a viable technology. EAP or SMATE material can be examined to develop a "morphable" propeller.

For instance, Shape Memory Alloy with Thermal Electric (SMATE) control to actively manage the propeller blade shape could be integrated into the propeller design. Further, management of the blades can be accomplished at 60 Hz rate and thus tuned to occur at some point about the circumference, actively vectoring thrust for steering and diving control.

Motor

A Rare earth motor, capable of achieving electromechanical efficiencies of 70% to 80% is selected. Several motors have been examined. Current motor for prototype demonstration is a 5000 rpm motor with a 7:1 gearing reduction to a nominal 70 RPM shaft output. We have one of these motor(s), in anticipation of the vehicle prototype demonstration in FY 2002.

The motor specifications are challenging in reaching for small size, low rpm and high electromechanical efficiency. Specifications include:

Nominal Supply Voltage	12 or 24 vdc
Loaded Speed Range *(after reduction gearing)*	0 to ~200 RPM
Stall Torque	≥ 30 oz-in
Peak Output	~ 25 watts
Overall EM Efficiency	≥ 80%
Weight	320 g *(11 oz, or 13% of 5 lbm)*

When operating at nominal speed, we anticipate that the assembled electro-mechanical Drive Train Efficiency (DTE ~ including propeller) would be somewhere between 52.5% to 60%. These efficiencies are allocated in our hydrodynamic power and endurance analyses for "hi-maneuvering" and "Fly Straight & Level – Steady State" modes respectively (Attachment 1). The final gearing design will be developed to be integrated with the power and rpm desired. From the discussion above, it is clear we will need a slightly different transmission to provide a shaft RPM between 100 and 200 at motor nominal speed (maximum efficiency).

Overall Propulsion system Drive Train Efficiency at optimum operating condition is estimated as:

Propeller Hydro-mechanical Efficiency	89%
Gearing Mechanical Efficiency	85%
Motor Electro-Mechanical Efficiency	80%
Gross	60%

With reductions in efficiency at off-nominal operating conditions.

Steering and Diving

Maneuverabiltiy Requirement			forward transit, navigate within nominal turning diameters, maneuver around obstacles,	
Initial Sensing Requirement	0.1 deg	0.01 deg	**Recommended Change**	Delete. Operate Closed Loop on Heading and Depth

As stated above, our morphable propeller shall be controlled using damped heading error and/or sector orientation (pitch&heading error). Hence, no control surface angle need be measured.

Ballast

Maneuverabiltiy Requirement	reach and maintain the surface

FIGURE 13. CONCEPTUAL PANCAKE SHAPE MEMORY ACTUATOR

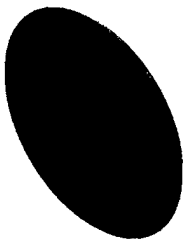

We are pursuing development of a shape memory device shaped much like a pancake (Figure 20) with a local university. The device occupies a large flat area on the order of 5~10 cm in diameter. The device moves normal to the flat plane ~1 cm with a large force. We are acquiring more specific engineering data on this device, but initial data indicate this device could possibly generate sufficient force and displacement to expand a pancake shaped bellows to create 0.1 lbs of water displacement. The actuator fails "as is", which means no power is required to maintain its position, once positioned.

The bow sensor head placement is a '**ρc**' plastic filled void (to support acoustic signal transmissivity in the imaging system). Just aft of the encased sensor head, is a free flood area, where the ballast muscle is installed. The after section of this free flood is closed by a pressure hull for MicroAUV.

When retracted (deflated), MicroAUV is neutrally buoyant and when expanded, 0.1 lbm (2% hull displacement) of positive buoyancy is applied. This positive buoyancy keeps MicroAUV at the surface without propulsion or power applied (for comms, pickup, etc).

300 POWER

Payload Power Requirement	Power $\geq$ 0.3 watts average, $\geq$ 5 watts peak, Energy ~ 10% of overall MicroAUV Energy Budget.

Power Budget

The Power Budget consists of hotel loads (instrumentation power), propulsion loads, and payload power.

- Payload power, as stated in the MicroAUV PRS[4], requires 0.3 watts average and 5 watts peak.
- Nominal Hydro Drag Power is calculated at 5 watts for our 8.26 hull diameter and ~64 centimeter length at 4~5 kts forward velocity (see Attachment 1).
- Hotel Loads (IP) are collected in the budget in Figure 14 (following page).

FIGURE 14. GROSS POWER BUDGET FOR MICROAUV ENDURANCE

		Operating Profiles FSL-SS	Hi-Mnvrs	50/50
Instrumentation Power {IP}		1.74	2.08	1.91
Payload	*(embedded in Instr Power)*	0.3	0.3	0.3
Hydro Drag {HD}	*f {hull, speed} ***	5	5	5
Drive Train Efficiency {DTE}	*f {prop design, speed, sterng & diving} ~ estimates*	60.0%	52.5%	56.3%
*** this is captured in the MatLab Drag Analyses, shown here from spreadsheet data*				
	Total Power (watts) {IP + HD/DTE}	**9.95**	**11.42**	**10.64**
	Speed Through Water (kts)	5	5	5
	Speed of Advance (kts)	5	3.5	4.25

Notes

1. The powering of High Maneuvering scenario goes up only 14% in the analysis. However the net SOA drops by 30% due to the expectation that the vehicle is driving around "stuff" a lot more and driving down it's intended trajectory less. The aggregate equivalent power increase can be viewed as ~44% in these analyses.
2. The Payload peak power is not addressed here, as this is the power for endurance analysis. It is addressed in Battery and the power delivery rate specification therein stated.

FIGURE 15. VALENCE LITHIUM POLYMER BATTERY

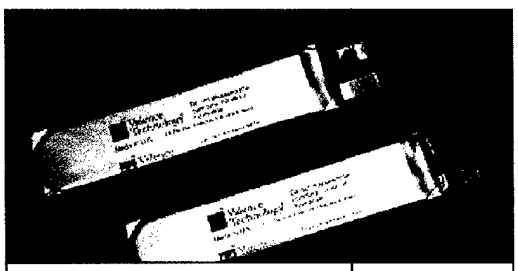

Nominal Voltage		3.8 V
Standard Charge: Constant Current to 4.2 V followed by Constant Voltage to C/20		C/2 to 4.2 V
Dimensions		
Width	25 mm (Max)	
Height	110 mm (Max)	
Nominal Thickness	Nominal Capacity	Nominal Weight
3.3 mm	620 mAh	18 g
4.3 mm	830 mAh	23 g
5.4 mm	1030 mAh	28 g
6.4 mm	1235 mAh	34 g
8.4 mm	1650 mAh	44 g

**Nominal Voltage and Capacities for C/5 Rate @ 23°C

Battery

A Lithium Polymer battery will be used. Final battery selection will be developed as current battery capabilities are reviewed in detail design stage, wherein we will also specify the battery fabrication to optimally utilize all of the vehicle volume and Reserve Buoyancy in considering the mass, dimensions and configuration of the battery cells. Several battery vendors have been examined, including Valence[12] and Telcordia, which offers the Plion™[13] flexible battery system. A custom fabrication will be examined in the final design.

These Lithium battery products can achieve 2 to 5 times Nickel Cadmium power densities in a neutrally buoyant packaging arrangement.

For purposes of completing the endurance in our Matlab™ hydrodynamic analysis calculations, we use a **VALENCE Inc.** lithium polymer battery, **Model 25 Series (IMP0X/25/110)**™ (Figure 23). These batteries are commercially available, "current, off-the-shelf (COTS)" technology and afford a small size, as to be considered more easily packable within the energy mass budget. Battery cell mass, shown on the specification sheet renders an average specific energy of 0.138 watt-hrs/gram and a specific gravity of 1.96. We use the specific energy in Attachment 1,

to convert the derived vehicle energy mass budget into energy watt-hour quantities and watts at the 5 hour rate. We then apply the operations scenario to calculate endurance.

FIGURE 16. 8.26 MICROAUV

Valence Lithium Polymer Model 25 Series (IMP0X/25/110)™	
11 Cell Stack	**6 Stack Battery**
41.8 vdc	41.8 vdc
830 mAh	4980 mAh
0.166 A	0.996 A
6.9 watts	41.6 watts
34.7 whrs	208 whrs

In our 8.26-cm MicroAUV design, we have packaged 6 stacks of 11 cells each. The eleven cells are wired in series to create 41.8 vdc. The six stacks are wired in parallel to provide up to 5000 mAh. This provides the onboard power and energy capabilities described in Figure 24. Note that at Peak Payload powering (~5 watts) in the High Maneuvering scenario above, the total power demand is ~16 watts or ~40% of the battery "5 hour delivery rate" capability.

Endurance Results

At 208 watt hours energy and ~10 watts consumption, endurance is ~20 hours. At 5 kts SOA, this is 100 Nm and a specific endurance (SE) of 17 Nm/lbm. At 4.25 SOA, SE is 14 Nm/lbm. At a steady state transit, When the payload demand is at peak (5 watts), this drops our endurance to 13 hours, 45 Nm range *(3.5 kts SOA ~ see Power Budget above),* and 7.5 Nm/lbm.

400 GNC (GUIDANCE, NAVIGATION, & CONTROL)

The phrase "No-Power Sensors" generates considerable "buzz" in some literature and other DOD programs today. Many concepts are emerging for devices that truly require no power by using the energy of the parameter they sense to provide the signal. However, viable commercial sources of such devices seem to be "down the road".

Still, the term "no power" also captures sensors with such trivial levels of power that from a paradigm of larger vehicles and larger power budgets, the sensors' integral contribution to hotel load is sufficiently insignificant that subsequent impact on endurance is within the noise of the vehicle design margins.

MEMS devices are in this latter category of "no power" sensors and play an integral part in MicroAUV design, as these are the MEMS based components used herein.

Figure 17 displays the GNC Schematic.

FIGURE 17. GNC SCHEMATIC

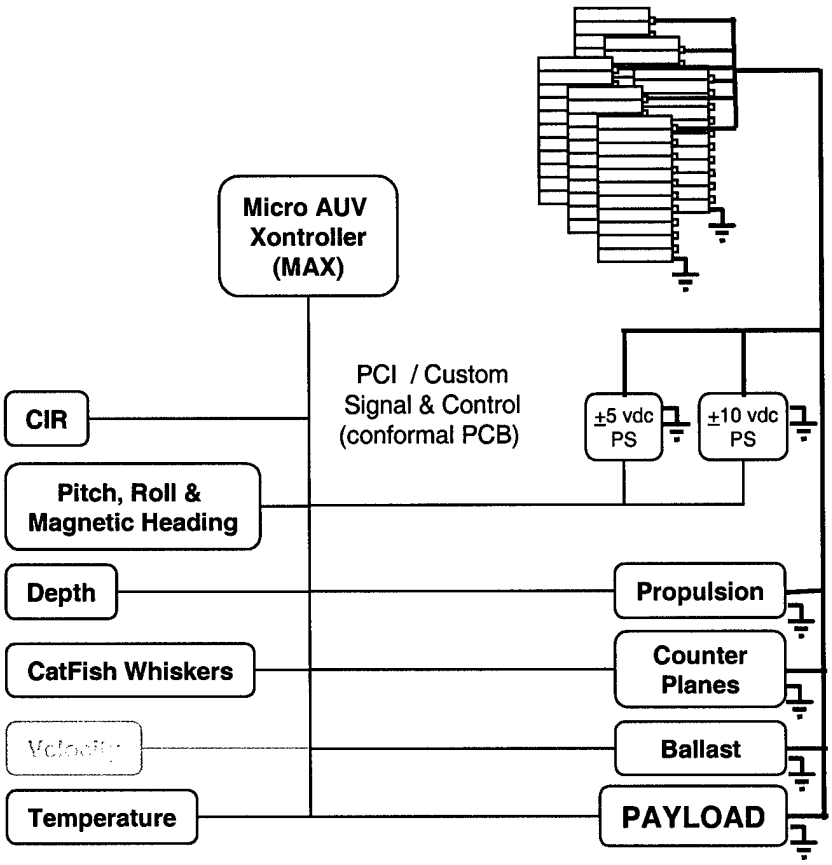

FIGURE 18. ACTUATION CONTROL SCHEMATIC

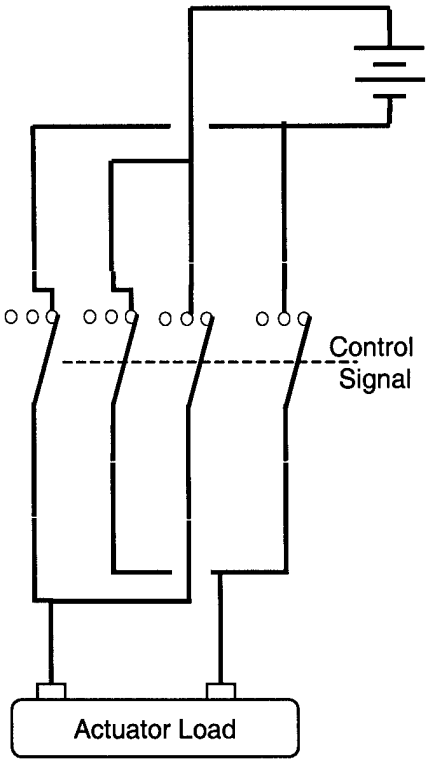

Power Control

The battery provides power directly to Control Power Supplies and to "Actuation". Power Supplies (5 & 10 vdc) provide signal level power to all devices, as appropriate. Control and Indication signals pass between the MAX and each device as appropriate. The MAX provides TTL level circuit control over the Conformal PCB to all devices, including the three-way switch (+vdc / OFF / -vdc) shown in the schematic of Figure 18. This switch design is used for all three actuation loads to achieve discrete vehicle control and thus simplify the computation logic. A manually activated power on switch will turn on the Control Power Supplies and enable system start up.

Flight Control

Thus:

- The Motor Is Either In Forward Or Reverse Or Off
- The Counterplanes Are "Twisted (Morphed)"
  Into the Flow Stream,
  Out Of the Flow Stream, Or
  Relaxed To Neutral (Unpowered) Shape

- The Ballast Diaphragm Is Expanded, Retracted, Or Off
  (Either Left In Expanded Or Left In Retracted)

Nominal, Flight Control Is Resolved To Three Lower Level Control Loops, Using Damped Proportional Control As:

- Desired Heading Vs Actual Compass Heading
  → Defines Steering Commands
- Desired Depth Vs Actual Depth
  → Defines Pitch Commands
- Bump Detection
  → Defines Propulsion Reversal And/Or Pitch

Transforming Steering Commands And Pitch Commands To Heading is intuitive, But Not Readily Quantifiable And Requires Some Testing To Develop.

Also, the Imaging portion of the CIR sensor defines the presence of obstacles (or lack thereof) in sectors in the forward local scene. MicroAUV flight control design seeks to identify an open loop transformation directly between the Imaging data from the CIR and steering control commands (Figure 19).

FIGURE 19. STEERING AND DIVING CONTROL

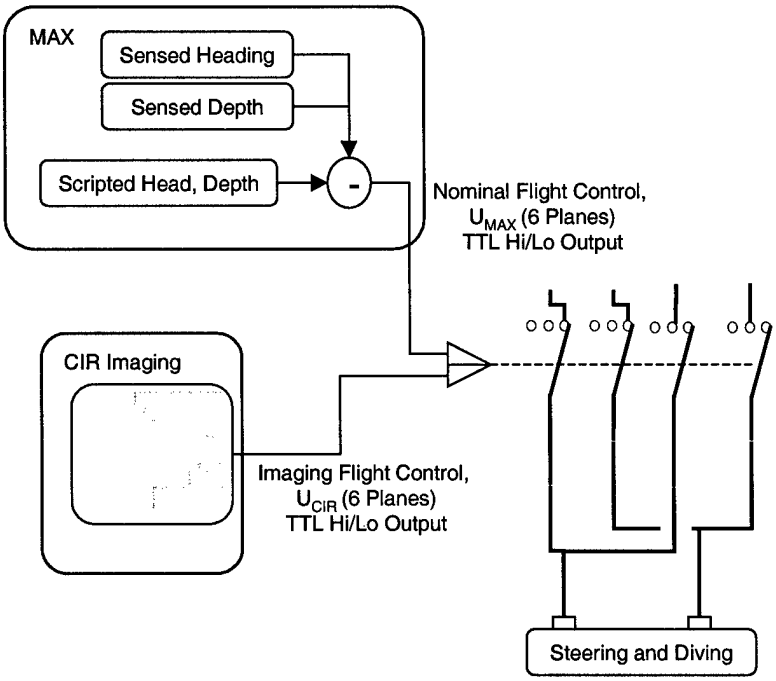

In other words, as the local scene data indicates areas to avoid (or areas to go toward), output from the CIR controller, directly to the Counterplanes could override control commands from the nominal flight control loops (above) in an analog manner. Such voting is often typically constructed in software.

The analog approach provides an opportunity to reduce control power. Pending:

- confidence in the scene image
- knowing the open loop control

the analog approach mimics biological flight control inasmuch as the individual has a desired heading, but veers around obstacles.

The CIR Imaging processor scales or "thresholds" the Imaging control output, so that it does not override the MAX control output when the way is sufficiently clear.

Similarly, the circuitry can be developed to enable Payload to "take over" flight control. In other words, as all other scene data is quiescent (non-threatening, nor requiring action for the sustained vitality of the vehicle), control lines could be connected to allow Payload to output vehicle control. This requires providing the open loop control law to the Payload provider and allowing their design to develop around this approach.

Navigation

As biological systems are minimal, yet sufficient, so is MicroAUV.

Operationally, during transit and/or search and survey, MicroAUV cares only where it is in a local sense. Specifically, it only cares:

- what its heading and depth are *(see Depth and Heading Sensors below)*
- whether obstacles are present and whether they interfere with current trajectory *(see section 500 CIR ~ Imaging)*
- where other peer units and/or supervisory nodes are in the locally relevant reference frame *(see section 500 CIR ~ Communications & Ranging)*

When, in the course of operations, MicroAUV (or its payload) finds a target of interest, relaying the accurate location to the user is accomplished through identifying itself and allowing the user to locate MicroAUV through supervisory and/or monitoring nodes. Notionally, the Payload does not provide locally relevant navigation information to MicroAUV. The Payload does provide trajectory requests and that may be in the form of digital data to be managed by the MAX (see section 600) or directly to flight control as discussed in the Concept of Operations.

MicroAUV is not being developed to resolve global relevant position "Alone". The vehicle does not resolve a global navigation fix, such as might be provided by GPS or other. The only global relevant navigation sensor is magnetic heading. However, through the supervisory node, MicroAUV(s) connect to the global reference frame, where appropriate *(section 500).*

Guidance

Vehicle Guidance is in two high level command modes.

- Mission Modes: user defines and MicroAUV pursues a schedule of headings, depths, and/or RPM, which may be adjusted according to programmed relative positions to maintain. The user may program several mission mode scripts and criteria for entering each mode, such as high maneuvering, search patterns, scuttle trajectory, ... etc.
- Homing Mode: MicroAUV pursues toward a homing beacon or returns according to a provided heading (either downloaded pre-mission or received in flight).

Fault Recovery Control

Design of fault identification and recovery is not a present component of MicroAUV design. However, the real estate is being established to accommodate such configurable fault identification and recovery actions as:

Sensor Threshold ***'i'*** Exceeded → Output Override Control
Payload Threshold ***'i'*** Exceeded → Output Control Request
(normal ops to MicroAUV, not really a fault)
Payload Threshold ***'k'*** Exceeded → Output Override Control

Between 5 and 15 Fault Identification and Recovery Actions will be established in the Conformal PCB architecture.

GNC Components

Micro AUV Xontroller (MAX)

Requirement	
Control Update Rate	1~10 Hz
Communications Protocol	Standard Interfaces & Protocols

Connectivity to the controller for on bench maintenance, pre and post flight checkouts and data uploads use an infrared data link, much like laptop computers and palm held devices.

Gains, priorities and desired outputs for mission objectives are scheduled (added, deleted, or adjusted) through a Graphic User Interface (GUI) design tool as a pre-mission checkout. Initially, these changes are made to a simulation model of MicroAUV, and tested in the simulation for proper functionality. The simulation tests the changes and reports results, including automatic assessment of proximity to control issues, fault conditions (or thresholds, if implemented), and overall stability of the algorithm as consequence of the scheduled changes made. Upon successful completion of the simulation test of the software, the user can port the changes to the appropriate chip within the MAX.

To provide for this reconfigurability, logical decisions are made in a Hybrid "Proprietary" Logic control algorithm, hosted on the MAX. This can be accomplished with less than 20 kilobytes of operational code on MAX

The intended initial hardware for the MAX is a commercially available microchip controller, which features a 14-bit instruction set, 5 to 8 channels of 10-bit Analog-to-Digital Converters, interrupt handling capability, various serial interface capabilities, Capture/Compare/PWM, Brown-out Detection and an 8-level deep stack. The MAX controller family provides performance and versatility to meet the most demanding requirements of today's cost-sensitive analog designs. Plus, with FLASH program memory, these devices can be reprogrammed over the entire operating voltage range. Note the low power these components use, Nominal CMOS voltage and a current of 2 mA at operation and 15 microamps at idle.

PIC16F87X Family Comparison Chart

	Data RAM	Speed MHz	I/O Ports	ADC 10-Bits	Serial I/O
PIC16F873A	192	20	22	5	USART/MSSP
[redacted]					
PIC16F874A	192	20	33	8	USART/MSSP
[redacted]					
PIC16F876A	368	20	22	5	USART/MSSP
[redacted]					
PIC16F877A	368	20	33	8	USART/MSSP

Temperature Sensor

Temperature Sensors are prolific in the MEMS industry and a cots MEMS RTD bridge will be integrated into the design, and acquired and assembled into the hull in year two. The Temperature sensor may be of value in some navigation situations (transit to cold channel... dive to certain temp, .. etc.). The cost of implementation is trivial and the power consumption can be none, if it is not being used.

Depth (Pressure) Sensors

Initial Requirement	0.5 feet (.15 meters)	0.1 ft (.03 meters)	**Recommended Change**	1 meter 4 meters	d<30 m 30>d<200 m
Range	0~600 ft				

More than ten established industrial providers of sensors[14] were examined for off the shelf products to meet our initial specification. Typical low cost, low power, mass produced pressure sensors have a Full Scale Operating Range (FSOR) with an accuracy of ~2%. Higher accuracies (0.25%) are available, but tend to require considerable higher voltage and power to operate added stabilizing circuitry (for temperature and input voltage variation). MicroAUV Performance Spec defines an accuracy of 0.5 ft for depths up to 600 ft (200 meters ~ 0.25 psi for 0 to 300 psi range). Typical sensor accuracies of 2% Full Scale Operating Range would equate to 12 ft (4 meters, 6 psi) for a "0~600 ft" FSOR.

MicroAUV's depth requirement was extracted from that of Large Scale Vehicle, which conducts highly accurate scientific trials in hydrodynamics and requires the depth accuracy to ensure vehicle "porpoising" at high speed is minimized. MicroAUV's need for this depth requirement was not technically justified and is not obvious in all scenarios. For a long transit with a commanded depth of 200 ft, in 600 fathom water, MicroAUV is not concerned about measuring depth to 0.5 ft. In keeping power demand low and in converting to metric units, we recommend the change above and will implement the following design accordingly.

To accommodate the requirement, two absolute sensors, each of 2% FSOR accuracy provide the indication as follows:

- a low range sensor for 0~30 meters (0~45 psi ... ~ 2% accuracy equates to ~1 psi)
- a medium range sensor for 0~200 m (0~300 psi ... ~ 4 meters accuracy as above).

In MicroAUV, the low range sensor will be developed to accommodate saturation at depths greater than 30 meters without affecting performance at 0~30 meters. This will be accomplished through implementing some mechanical stop that prevents overstraining the sensor.

Although many similar devices are available, we have not located COTS devices that exactly meet our performance requirement and which have a small footprint and minimum power.

The pressure sensor will be implemented as either:

- a custom MEMS design of the two sensors above
- derived from customization of an existing MEMS design (through some Manufacturer ~ yet to be identified)
- partially derived as a dual function from our MEMS Acoustic (MA) imaging device (discussed in the next section), utilizing the bias load (bias signal) as a method to detect absolute pressure, hence eliminating the need for a dedicated single purpose COTS Pressure sensor

Detail design of the Pressure sensor will be completed pursuant to results obtained from our MEMS Acoustic tests at the end of this year's work (ie the possibility of gaining pressure data from the MEMS sensor).

Current COTS products include entran EPI subminiature pressure probes[15] (<2 mm) or ICS Sensors PCB mountable sensors at <10 milliwatts power. Based on using MEMS sized devices and integrated circuitry, we are estimating the pressure sensor requires 5 milliwatts of power.

Heading, Pitch, Roll

Initial Requirement	0.1 deg	0.01 deg	**Recommended Change**	1 deg	0.08 deg

FIGURE 20. TILT COMPENSATED COMPASS

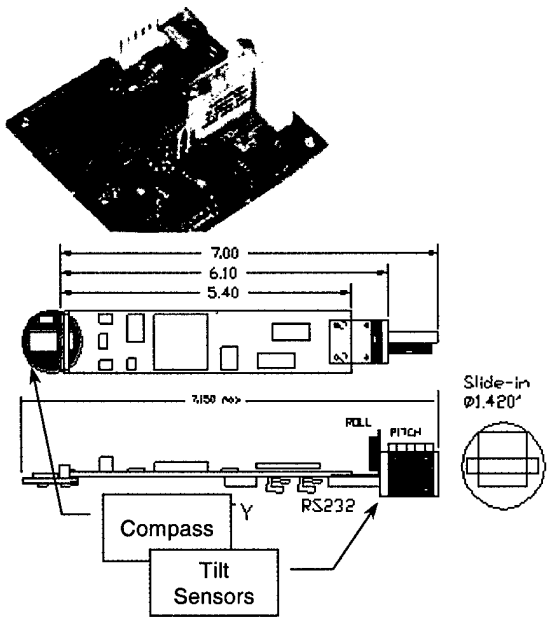

Several tilt compensated magnetic heading devices were located. By integrating a simple MEMS compass with two tilt sensors a more reliable compass heading and pitch and roll angle measurements can be acquire. Two configurations are shown in the Figure 20. MicroAUV uses one version of the tilt sensors, compass and supporting circuitry in available real estate as appropriate. We have acquired a bench test COTS unit as shown in the picture of Figure 20 and are working with vendor to transition their design (sensor and applicable circuitry) into our custom implementation of their application specific integrated circuit.

FIGURE 21. COMPASS SPECIFICATION

Parameter	Specification	Units/description
Azimuth Range	0--360	deg, continuous
Azimuth Resolution	12 (0.08)	bit (deg)
Azimuth Repeatability	< 0.25	deg, typical
Azimuth Accuracy	< 1	deg, typical
Magnetic Field	+-2	Gauss typical
Magnetic Resolution	< 1	mGauss typical
Pitch Range	+70 to -70	arcdeg linear
Roll Range	+70 to -70	arcdeg linear
Pitch Range	+80 to -80	arcdeg near-linear
Roll Range	+80 to -80	arcdeg near-linear
Tilt Resolution	12	bit full scale, both axis
Tilt Repeatability	<2;	bits
Temperature	-30 to +85	deg C
Communication	300--38400 baud,8,N,1	RS-232 and RS-422 standards
Supply	5 +-10%	Vdc regulated
Size	1.15"diam x 7.15"L	assembly
NMEA-0183 mode	5 select modes	1999 Revision

This compensated compass provides performance to 0.25 degree and as expanded in the table of figure 21. As this is one of the best performances in low power heading sensors that we have located, we recommend the change in requirement to accommodate using this sensor. This device draws 3.3 milli-amps at voltage for a net power demand of 18 mwatts.

"Catfish Whiskers" Bump Detector

Initial Requirement			**Recommended Change**	
Velocity	0.1 kt	0.01 kt		Delete
Acceleration	0.001 g			1 g, Bump Detector

MicroAUV has one forward and one reverse speed. Velocity speed control is open loop. Discerning actual velocity over ground for use in navigation could be of value in a system designed to find a target and autonomously record actual position to a high level of accuracy. It is not so critical in the operations of MicroAUV as discussed in the Concept of Operations above. The velocity sensing requirement should be eliminated. (see Laser Doppler Velocity Sensor, discussion to follow).

Furthermore, there is no value in measuring acceleration to the accuracy indicated in the specification for MicroAUVs kinematics of <10 fps velocities and kinematic inertias of < 60 lb-ft/sec.

However, an additional "Catfish Whiskers" bump detector concept is made possible by the slow speed of MicroAUV. Although obstacle detection provided by the CIR Imaging System is intended to prevent collision, assurance of maintaining vehicle integrity could be provided if an imminent (and unexpected collision) were detected just moments prior to occurring. If so, forward propulsion could be secured or even reversed *(although there may be insufficient time to accomplish the later),* mitigating the impact and damage.

If "Catfish Whiskers" can reach far enough into the forward line of travel to sense an imminent collision, the protection stated above may be achievable. To do this, the "Catfish Whiskers" would need to sense into the line of travel an amount equal to two clock cycles plus the response time of the whiskers. This is necessary to ensure that MAX can receive the sensed imminent collision (bump) and command propeller action and that said action could be accomplished in time to positively affect the actual collision. A "Catfish Whiskers" response time on the order of 1 clock cycle (0.1 seconds @ 10 Hz rate) seems to be a reasonable goal to achieve. Thus, the "Catfish Whiskers" need to reach >0.3 seconds into the line of travel or:

@ 5 kts (8.445 fps)	~2.53 ft. or 0.8 meters
@ 3 kts (5 fps)	~1.5 ft. or 0.5 meters

Catfish Whiskers of 1+ meter length and with a bending arc induced by forward velocity, this may be possible yet seems like a long reach for a fiber based sensor, specially relevant to the body length. If the design is achievable from a material structural strength perspective and it does not induce substantial additional drag, then detection would essentially be the forward edge of the sensor, detecting an acceleration approximately equal to speed over 1 clock cycle, or:

@ 5 kts (8.445 fps)	84.45 fps^2 or 3 g's
@ 3 kts (5 fps)	50 fps^2 or 2 g's

We recommend the acceleration detection criteria be changed as above, which is sufficient to discern sensing an acceleration > 1g and thus detecting the imminent collision.

The Whiskers will serve two functions:

Primary: Detect bumps ~2 ft ahead of MicroAUV bow. This signal provides an interrupt to MAX, which immediately initiates propeller stop/reversal sequence.

Secondary: Output bias load signal as a function of the steady state strain on the wire due to forward velocity, providing indication of velocity. MicroAUV's strain measurement of hydrodynamic drag and hence velocimeter

The need for a speed or velocity sensor is questionable. At 5 kts forward speed and a size less than 10 lbms, speed would be used to enhance navigation or to detect faults *(eg ... forward velocity less than ... some limit)* and would not otherwise affect real time flight control. If we can secure such a signal from the Bump Detector, with no additional signal power, then it will be used. If not, other sensors are extremely costly and/or power hungry and have been deleted.

We do not yet have a good handle for the increased drag and affect on endurance from the implementation of the "catfish whiskers" and intend to gather that understanding in the testing of vehicle subsystems towards testing of the vehicle (year two). An engineering estimate of the drag reduction will be provided in the Control Architecture Report (M5). Currently, based on projected area, we reasonably estimate the increase in overall drag will be less than 5%.

Laser Doppler Velocity Sensor

Initially we were pursuing a velocity sensor for MicroAUV. The following discussion captures our results. However, due to the power demand and the cost of the device *(~$20,000, ... on the same order of cost of the rest of the vehicle)* we are currently not pursuing its implementation on MicroAUV and make the recommendation on velocity sensor requirements proposed in the previous section.

Non-impacting velocity sensors have been a continual challenge for large vehicle marine applications. In large vehicle applications, laser technology to reach far enough into the water stream to ensure the measurement is not contaminated by laminar flow around the hull, has not been demonstrated in the public domain at power levels that would make it viable for MicroAUV.

Caltech developed a micro Laser Doppler Velocimeter that reaches up to 8 cm into the water column (is now licensed to Viosense, Inc.[16]) under Dr. Tang's MEMS program at DARPA.

FIGURE 22. VIOSENSE LDV SKETCH

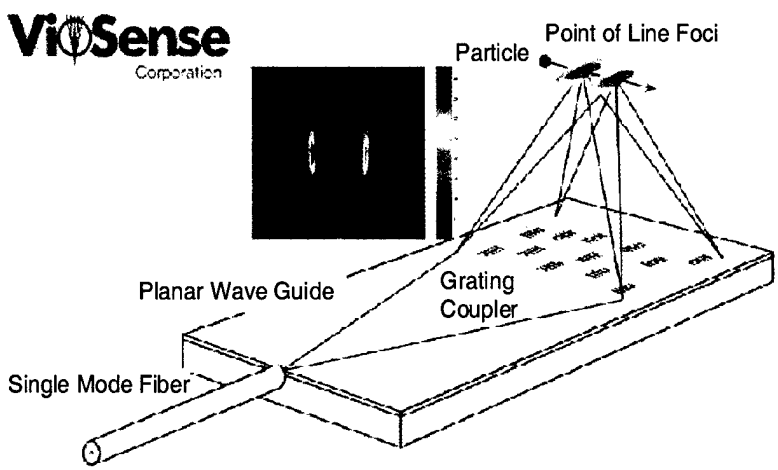

If mounted on MicroAUV, this would equate to 1 body diameters into the water column and could sufficiently achieve a ~0.2 % of velocity measurement accuracy. Integrated with heading and ranging information, the LDV could enable a relative position estimator to enable multiple MicroAUVs to operate in close proximity with a high level of positional navigability (knowing where each one is). For continuous operations, the laser requires approximately 100 milliwatts and the supporting electronics also about 100 milliwatts. But MicroAUV would attempt to operate the LDV at approximately 10% duty cycle, sampling somewhere between "100 milliseconds duration every 10 seconds" and "10 milliseconds duration every 1 second". Hence, average power demand is proposed to be ~20 milliwatts for MicroAUV.

However, as above, it is not currently scheduled in the MicroAUV architecture.

Acceleration – Presently Deleted.

See discussion and recommendation under Bump Detector.

It is not clear that MicroAUV will need to sense acceleration in order to achieve adequate flight control. Surges at shallow depths (because of wave action) may need to be damped out in the control system or we may resolve that MicroAUV moves through those regimes robustly by passive design (just ignores the surging and keeps on going). If acceleration is sensed, it would be used for flight control and perhaps augmenting position estimator (relative to other units). However, at 5~6 kts forward speed these dynamics may be benign and the acceleration sensor may be eliminated.

If acceleration sensing other than the bump detector discussed above is installed, we will most likely use something like the Analog Devices ADXL ±2 g Dual Axis Accelerometer[17] at 0.18 milliwatts power. We have acquired 4 samples of these and some other devices for testing in our current concepts.

Rate Gyro – Presently Deleted.

Initial Requirement			**Recommended Change**	
Rates	0.1 deg/sec			Delete
Acceleration	0.012 deg/sec^2			Delete

Given the dynamic period of MicroAUV (on the order of 1~3 seconds) and the mission, we are currently planning flight control using proportional feedback of zeroth order state data (angular measurements in heading, positional measurements in depth). Other uses for Rates and angular acceleration are not foreseeable in MicroAUV.

We recommend deleting these requirements.

Should we implement rate measurements, current rate gyro selected is an Analog Devices ±150 degree per second, Single Chip Rate Gyro, model No. ADXRS 150 at ~25 milliWatts power[18]. This device is in the beta testing stage and although it is not currently commercially available, we also have 4 confidential samples from Analog Device on hand.

Altitude Sensor – presently deleted

Initial Requirement	1 ft.		**Recommended Change**	Delete

We are still examining altitude sensing. Operationally, it is not clear that this is necessary. In submerged, terrain following scenarios, we may be able to use the Imaging Subsystem to accomplish terrain following. In other scenarios, we anticipate altitude sensing would be unnecessary. The established best way of accomplishing altitude sensing is by acoustic bounce off the bottom. For shallow water applications, existing COTS systems are generally bulky relative to MicroAUV design. Some acoustic ranging devices may be viable, but MEMS miniaturization of systems does not yet support MicroAUV goals. We intend to examine shallow water bottom interference of our CIR signal and other acoustic devices to accomplish altitude sensing, if need be.

Moreover, the bump detector is considered a viable method to detect altitude, when altitude is close enough to MicroAUV to be of concern.

We recommend deleting the specific requirement to measure altitude above the bottom.

If we do implement a bottom sounding altitude measurement, a single transducer of 1.5 square inch area would be in tune at ~40 kHz frequency. The physics to get a return from 15 to 30 meter altitude equate to a signal energy of <2 milliwatts-seconds, depending on how we structure the Pulse width and the Pulse Repetition Rate. This item is not budgeted.

Clock

Requirement	0.0001 sec	0.00001 sec

The above requirement was extracted from another program (Large Scale Vehicle) and not based on operational requirements of MicroAUVs. This number or a recommended adjustment needs to be validated or technically defended, as follows.

In our concept of operations, MicroAUVs operate ~15 meters apart but should also have the capability to range to another unit from as far out as communications will support. Our analysis examines whether a synchronous design could support ranging from as far away as 300+ meters (20 x nominal), although we expect ranging communications to be discernible to 30 meters and not discernible at ranges further than 100 meters.

Analysis: Initial Conditions:

Speed of Sound in Water is 1425 meters/sec (4670 fps).

Each MicroAUV transmits every 2 seconds as discussed in section 500.

Nominal speed of advance (SOA) is 5 kts (2.58 m/s, or 8.445 fps).

Distance between units = 5 meters to 300 meters

Clock cycle delays 200 nanoseconds

Allocate 3 "clock cycles" of resultant bias error in each transmit receive communication, as a result of initial alignment on system power up and/or variance in manufacturing.

Allocate 1 "clock cycle" random error

Allocate "n" seconds synchronization clock error

Assume a 20-hour operation (prior to retreival)

Relative Velocity Difference (v-diff) = VRU-VTU (Velocity Receive Unit – Velocity Transmit Unit in magnitude and direction)

Problem Formulation:

Actual Range = Range Measurement + Range Error_{LOR}
(LOR ~ Line of Range, normalized to unit length)

Range Error_{LOR} = (((3 + 1) x 200) x 10^{-9} sec + n) x 1425 mps + Range/1425 * |v-diff x LOR|
{ v-diff x LOR is magnitude and sin (angle) of Relative Velocity Difference}

If both units are on approximately the same heading and speed, 2nd term drops out. Estimate Clock cycle error to be several orders of magnitude less than allowable total error, so they drop out as well.

FIGURE 23. RANGE ERROR VS INTRA-SWARM UNIT RANGE

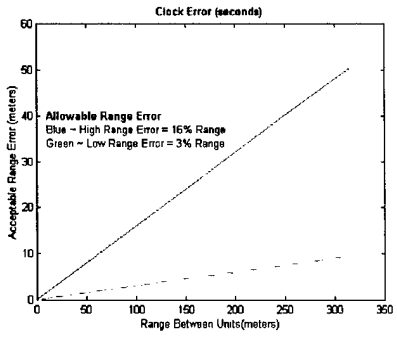

We are estimating that the allowable bias range error can be:

Range Error_{LOR} = {3% to 16%} x Actual Range

{nominally, larger range error is acceptable as distance between units increases. For 5 meters, this equates to 0.15 meter range error }.

Actual Range = 5 to 300 meters

Figure 23 shows the allowable Range Error. Solving for n:

'n' ≅ Range_Error_{LOR}/1425

Figure 24 shows the clock Synchronization error as a function of the range.

FIGURE 24. CLOCK SYNCHRONIZATION RANGE ERROR

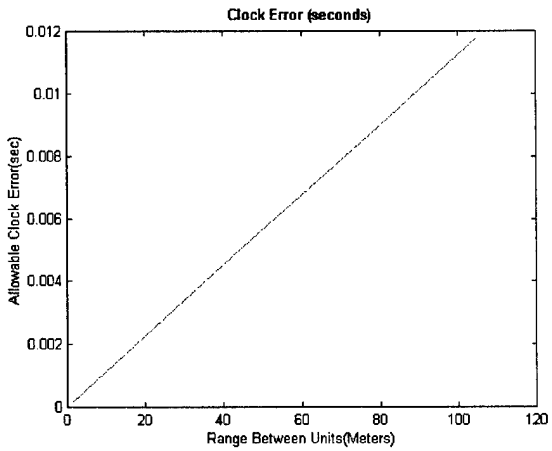

Hence, if we can keep synchronized clock error to less than 0.001 seconds, then we can keep range error *{due to synchronization}* to < 1.4 meters. At the specified requirement of 0.0001 seconds, this equates to an equivalent error of <0.14 meters. The latter is more than adequate for actual ranges to ~5 meters, at which time this error is borderline and may be unacceptable in some dynamic situations. Hence, the requirement is a valid goal. Should it be difficult to achieve, it may become appropriate to relax the requirement by one order of magnitude.

The drift of such a device must be sufficiently small that this error is not achieved in 40 hours of operation (100%) design margin. This equates to $2.5*10^{-6}$ seconds per hour error growth (drift) in the clock.

An internal clock, such as is available in the our COTS controller provides the CPU clock cycle and controls real time operation of onboard events. Such a clock (operating at 20 MHz provides a period of 50 nanoseconds accuracy. However, with internal gate switching and other events at low scale, achievable clock cycles are on the order of 200 nanoseconds (4 x period) or $0.2 * 10^{-6}$ seconds. This is better than the requirement. It is sufficient to use the internal clock as the acomms synchronization clock.

500 COMMUNICATION, IMAGING AND RANGING (CIR) SYSTEM

Maneuvers		Maneuver Around Obstacles	
Communication	Standard Interfaces & Protocols	**Recommended Change**	Add "For Maintenance Evolutions" *(this will omit requirement for operations, which we recommend)*
		CIR design is custom design to enable max data bandwidth between units at very "low power" and at "low, yet appropriate ranges"	
Imaging	Not Specified	Implicit in "manuever around obstacles", no change required.	
Other Performance		Swarm Performance CIR enables collaborative work by providing method to communicate and range with other units.	

Three approaches to obstacle avoidance and/or maneuvering around obstacles can be pursued:

1. Detect the obstacle sufficiently far ahead and steer away from it
2. Detect the obstacle by bump detection and recoil. Re-act to manuever around.
3. Do not detect the obstacle, but develop robust vehicle platform to work around the obstacle by perseverance

As consequence of its small size, MicroAUV has a proclivity to persevere around obstacles, as in 3 above. However, MicroAUV design also pursues development of functional capability to achieve 1 and 2 above. The bump detector enables 2. This CIR system design enables 1 and is the most sophisticated of the three methods.

At ~5 kts (8.5 fps, 2.5 mps) forward speed, the imaging envelope need only be up to 15 meters ahead. This allows for the vehicle to detect and maneuver away in the 6 second scenario discussed in the "System Functional Architecture, Sensors and Micro AUV Xontroller (MAX)" section above.

As either "density of obstacles" or "speed of advance (SOA)" reduces, it may be possible to operate "imaging" at reduced sampling frequency, essentially flying blind. As clutter builds, detected either by imaging or bump detection, the CIR could then operate at increased frequency and/or a shorter range of vision.

Our optical and acoustic imaging designs and power estimates image up to 15 meters and beyond. Testing, planned this fall, will quantify actual range of performance beyond 15 meters.

In low clutter steady state transits, imaging (obstacle detection) could be relaxed to as low as 0.1 Hz (every 10 seconds). The vehicle would advance ~26 meters in this clock cycle. With a heading accuracy of <1 degree and with random noise inputs such as a cross tidal currents of up to 5 kts, the vehicle could travel "on heading" but "off desired path" by as much as the advance distance (26 meters).

However, pre mission planning and sensing of tidal current and other disturbances enable the operator to compensate and schedule a heading that Micro AUV could "fly" and that would "come closer" to achieving the desired track "line of bearing".

In general, MicroAUV is being developed with limited intelligence and with a focus on power, energy, and endurance.

However, extending the CIR design to include the Communications and Ranging subsets will enable several capabilities unique to operating in a swarm and will "connect" the swarm to a

global reference frame through a supervisory node, and avoids the costly power demand of a global navigation system. A proprietary implementation of this is discussed in a separate document.

FIGURE 25. CIR IMAGING SYSTEM

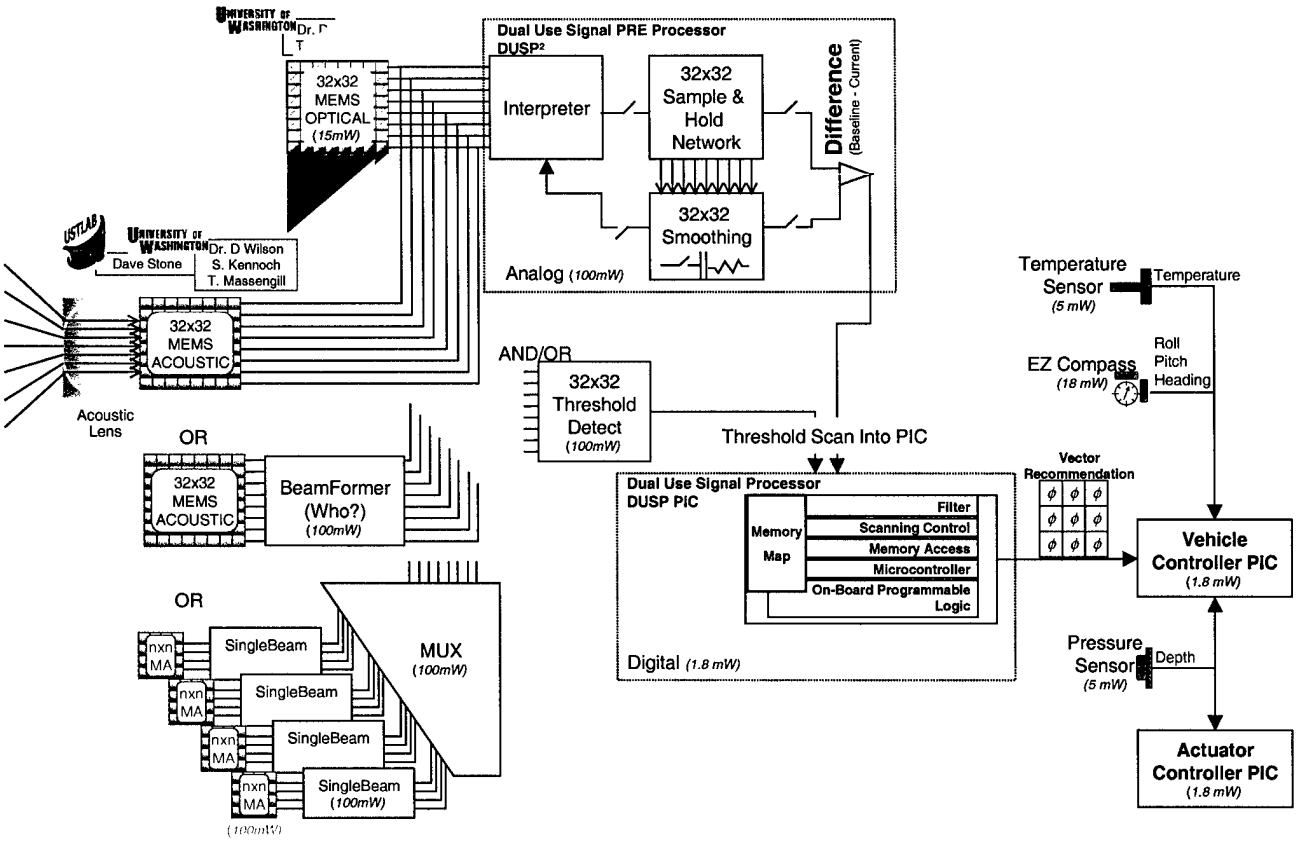

Functional design of the CIR Imaging System is shown in the schematic of Figure 25. MEMS Acoustic and MEMS Optical (MAMO) Imaging sensors are similarly designed in array size and signal management, although they sense different media. Collectively, these devices enable robust imaging of the local environment. Because of the multi-functional roles of these several devices, a modest reduction in the aggregate power demand of these functions is anticipated, but not planned at this time.

The CIR is our team's customized design, as we found no commercially available equivalent. This is because the CIR fulfills a unique application of low power and low range with sufficient sensing fidelity, whereas commercial imaging systems continue towards ever increasing growth in fidelity and image processing complexity and acoustic developments are targeting the 40 kbaud-kyard nominal naval goal.

The Dual Use Signal Processor (DUSP) completes Imaging Signal Processor functions for the MEMS Optical chip sensor array. The MEMS acoustic sensor array output is fed to a threshold detect processor. The DUSP PIC (programmable interface controller) handles signals from both a MEMS Acoustic (MA) chip array and a MEMS Optical (MO) chip array. MAMO interfaces to the DUSP are described in the MAMO DUSP Interface Control Document (ICD)[19]. Four separate 4x4 array prototype design versions of the MA Chip, designed by USTLAB (Stone) and UW (Wilson, Massengill, Kennoch), are proceeding to foundry and will be delivered to support characterization tests in November timeframe. MicroAUV uses one of three methods to accomplish acoustic array beamforming (shown). The final method will be selected after

characterization trials. A simulation of the above concept is being developed by UW and is anticipated to be partially operational by 1 September 2001.

We have identified the MEMS Acoustic and MEMS Optical imaging design to implement multiple functionality of several components. These multi-functional uses include:

DUSP – alternatively processes:

- the acoustic image data or
- the optical image data

in the same way and hence one signal processing design can be implemented

Acoustic Imaging Power Budget

As presented in our initial report, the estimated raw power to transmit and receive over 30 meters is on the order of 1~2 milliwatts. The acoustic power of the CIR System is based:

- on theoretical analysis provided in our initial report and revised as attachment 4 to this report. This power is required to transmit a signal out to a certain distance with a return.
- operational power of the other onboard electronics to accomplish signal process needs.

Figure 26 shows the theoretical output associated with a continuous wave acoustic energy transmission at 3 ~ 4 MHz versus range^2. The range shown is the distance this signal would transmit to, reflect off an obstacle, and return from and still be observable at a strength of ~4.2 decibels re 1 micro-Pascal @ 1 meter (10 millivolts), a conservative Signal to Noise Ratio for detection.

FIGURE 26. ACOUSTIC PULSE POWER

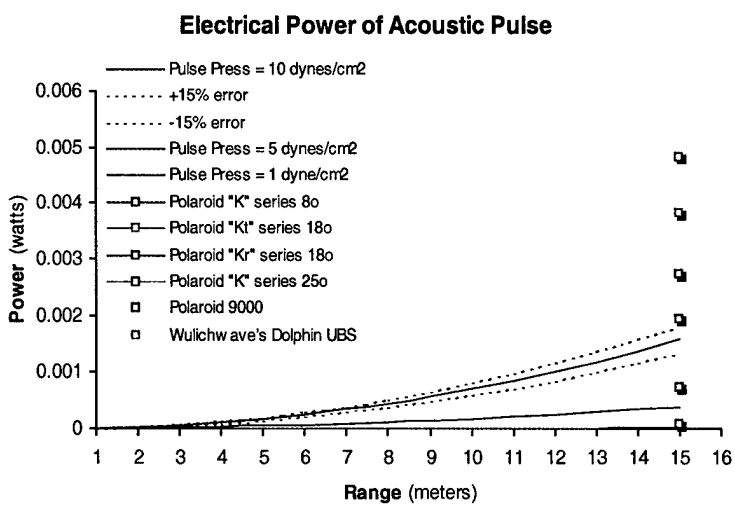

We have demonstrated detection sensor capabilities able to discern signal presence down to considerably lower levels in other applications.

Figure 22 in section 300 Power, tabulates current estimate of the subcomponent power levels for the CIR. Current allocation for acoustic devices is high to allocate for losses we are not yet certain of and to provide for margin to increase output power based on possible operating scenarios of the vehicle.

MEMS Acoustic(MA) Sensor Description

The MEMS Acoustic (MA) sensor consists of an array of piezoelectric-capacitive spring mesh membranes coated with a piezoelectric material. Ultimately the MA array will be a 32 X 32 array to be consistent with the MEMS Optical (MO) array which is also a 32 X 32 array. Due to fabrication limitations in the prototyping process, the initial prototype MA will be a 4 X 4 array on a 2.5 mm X 2.5 mm chip. We will lay out the chip with bond pads and circuitry along two edges of the chip and the 4 X 4 acoustic array biased towards the other two edges.

FIGURE 27. 8 X 8 MEMS ACOUSTIC SENSOR

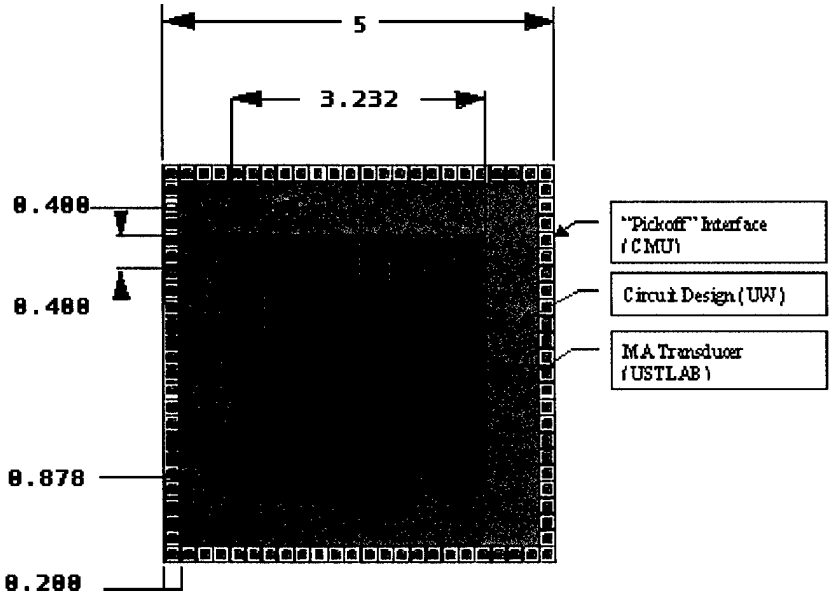

MEMS Acoustic (MA) Sensor Fabrication

The MA device is being fabricated through the Carnegie Mellon University and DARPA MTO sponsored Carbon Metal Oxide Semiconductor (CMOS) Application-Specific Integrated MEMS Process Service (ASIMPS) program.

The CMOS-MEMS ASIMPS process enables placing an acoustic MEMS transducer array and associated circuitry integrated on the same the MA sensor chip. A baseline array element (pixel) will nominally be a 400 μm X 400 μm square membrane. This dimension represents one wavelength at the tuned frequency of 3.75 MHz. Each pixel in the acoustic array will be a trampoline-like membrane with a capacitive, piezoelectric material coating (Figure 40).

FIGURE 28. PIXEL SIDE & TOP VIEW

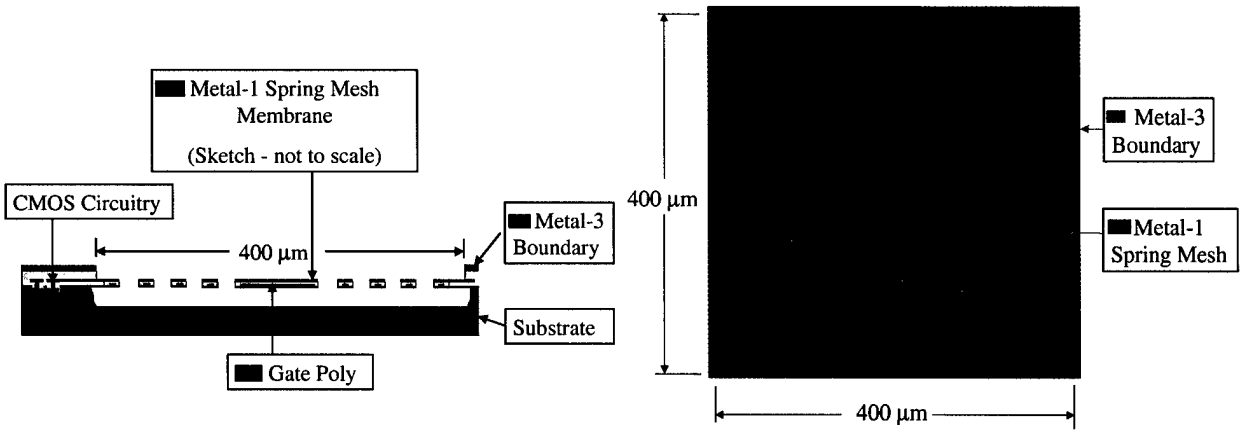

The trampoline-like membrane will be made up of an etched serpentine spring mesh in the metal-1/polysilicon layers, which will then be coated by gaseous deposition of a piezoelectric film.

The black areas in the top view will be etched away and the blue metal-1 spring will be under etched to release the mesh membrane from the substrate. The metal-3 boundary will act as a mask and prevent etching in that region. The metal-3 layer also protects the underlying CMOS circuitry. The mesh membrane will then be coated with a piezoelectric material using a gaseous deposition. The coating will fill in the gaps between the spring mesh and complete the membrane film.

The spring mesh elements will be 1.5 μm wide with a 1.5 μm spacing between elements. This spacing will allow sufficient space for etch release of the membrane, and will be close enough to allow fill in by the gaseous deposition of the piezoelectric coating. The spring mesh will give the membrane flexibility, while also providing the electrical connectivity through the metal-1 CMOS layer to the surrounding circuitry. The ground plane will be the underlying substrate.

MA IMAGING

Transmit

Each MA piezoelectric pixel element in the array will be excited by a 3 MHz sinusoidal electrical excitation energy, which will cause the membrane to vibrate at the resonant frequency. The acoustic signal will travel outward. The membrane vibration will cause a velocity change in the surrounding fluid and the membrane vibration will be transformed into an acoustic wave. The acoustic wave will travel out from the device at the speed of sound, which is nominally 1500 m/sec in seawater.

Receipt

The returning echo acoustic wave from an obstacle will induce vibration in the membrane, which will then cause a change in the capacitance of the plate and will induce a voltage signal on the membrane. To illuminate a "screen" in the field of view (15 meters out) ~19 milliseconds later, processor electronics will start acquiring energy from each pixel as it is excited. Beam forming will be used to detect the field of view without cross contamination of pixel data. The excitation signal will be the source signal reverberated off obstacles in the "field of view". Energy acquisition will continue for another 30~40 milliseconds to achieve a 1 meter or better resolution and illuminate a total area of 10~15 meters at ~15 meters range. Energy acquisition will stop to ensure each pixel is not contaminated by incoming energy from obstacles in other locations on the gross area being illuminated. The illuminated volume will be about 1 cm thick.

The Dual Use Signal Processor will sample each pixel membrane element, form an image and provide the data to the Vehicle Control Computer for to support obstacle avoidance and navigation decisions.

The device design provides extensibility towards additional components and functionality, sufficient to support the communication and/or ranging of the CIR notional concept, as discussed in separate document.

<u>MEMS Optical (MO) Sensor Description</u>

UW continues to pursue a custom CMOS-MEMS "Camera on a Chip" design, built in-house at UW for this effort. The USTLAB/UW team has also identified several commercially available "Camera on a Chip" devices. Details on these two options are described in the UW report on the Integrated Sensing and Dual-Use Signal Processing, provided as attachment to our previous report[2]. The accepted back up sensor is a Mitsubishi Black & White CMOS Image Sensor, model number M64285FP. This sensor is a 32x32 array low power device and consumes 15 mW during steady state operations.

<u>Dual Use Signal Processing</u>

The Dual Use Signal Processor[20] receives data from either the MA or the MO. The processing steps applied will be smoothing, segmentation, detection, and avoidance. The smoothing algorithm will help minimize noise, and will extract signal from the image data by difference processing a baseline and current image. This information will then be processed through a threshold detector that will generate output data to the memory map where values exceed the threshold. Segmentation will break the image up into segments that will be used to identify

areas to avoid or maneuver towards depending on signal in that segment of the image. The segmentation algorithm will generate a matrix of probabilities that an object exists in that segment. By evaluating these probabilities the location of the object can be detected and a navigation decision made to avoid the region with the obstacle. This processing would be the same for both MA and MO sensors.

The University of Washington has identified methods to reduce CPU throughput power and DSP power by developing custom designs per discussions provided in previous sections. Also, UW (Massengill) has identified a 16-bit MicroChip controller, which consumes extremely low power. We are uncertain of the computational throughput demand for our MicroAUV application and are anticipating a distributed processing capability, using 22 MicroChip controllers to accommodate all computational needs. We have also allocated an additional 100 mW for the CIR MAMO DUSP. Moreover, we have increased instrumentation power design margin to 100%. Power is summarized below and is approximately 75% of our initial estimate (which was 2.14 and 3.41 watts).

600 PAYLOAD

In accordance with our specification, we have allocated 0.3 watts continuous duty power to a payload of undetermined function. Accommodating for 5 watts peak power to the payload is not used in estimating endurance, but would be necessary in developing the final configuration of the battery to ensure the proper alignment of voltage "busing" and current rating of cells to get the peak power requirement.

References

1 cranney, j.c., stone d. l., et al, "USTLAB TR-01.001 MicroAUV – Scope of Possibility" dtd January 2001

2 cranney, j.c., stone d. l., et al, USTLAB TR – 01.003 MAY 2001, Milestone 3, "Six (6) Month Technical Report" μAUV–MEMS Report dtd May 2001

3 cranney, j., "Unmanned Underwater Vehicle Survey Market Survey", SAIC Contract PO 8200010646, Jan 2000

4 cranney, j. USTLAB TR – 01.002, MicroAUV Performance Specification, February 2001

5 Marks, L.S., Baumeister, T., "Mark's Handbook for Mechanical Engineers", McGraw Hill, 1987

6 Advanced Composites, Inc., 1154 S. 300 W., Salt Lake City, UT 84101, http://www.advancedcomposites.com/custom.htm

7 Peak Innovations, Littleton CO, http://www.compositepro.com

8 Fish, F.E. "Review of Natural Underwater Modes of Propulsion", pg 51, Dept of Biology, West Chester University, West Chester PA1983

9 Taylor, G. I., "Analysis of the Swimming of MicroScopic Organisms", Proceeding of the Royal Society, vol 209, 1950, pp447-4612

10 Lighthill, M.J., "Aquatic Animal Propulsion of High Hydro-Mechanical Efficiency", J. Fluid Mechanics, 1970, Vol 44 part2 pp 265-301,

11 Nasa Electro Active Polymer technology links page, http://ndeaa.jpl.nasa.gov/nasa-nde/lommas/eap/EAP-web.htm

12 Valence Technology, Inc., Lithium Ion Battery Products, http://www.valence.com/products/Series25/25MDL_1.htm

13 Telcordia Plion flexible battery system, http://www.telcordia.com/research/whatwedo/products/plion.html

14 http://www.park-zone.com/piezo/metallized_piezo_film.htm , http://www.analogdevices.com , http://www.entran.com/pstock.htm , http://content.honeywell.com/sensing/prodinfo/pressure , http://www.sensorone.com , http://www.park-zone.com/pressure_transducers.htm , http://www.schaevitz.com , http://www.seyonic.com/flow.htm , http://www.atmos.com/pressure/pressure.html , http://www.sensotec.com/index.html , http://www.sensotec.com/index.html

15 Entran Subminiature Probes, http://www.entran.com/ptoc.htm

16 "MEMS Velocimeter", DARPA MTO MEMS PI Meeting, 8,9 Feb 2001, Berkeley CA, PI Dr. Mory Gharib, Co-Is: Darius, Modarress, Dan Wilson, Frederic Taugwalder, Dominique Fourquette; in cooperation with JPL, Viosense Corporation. http://www.viosense.com

17 Analog Devices ADXL202E Dual Axis ±2 g Accelerometer, http://products.analog.com/products/info.asp?product=ADXL202

18 Analog Devices ADXRS150 +150 deg/sec Single Chip Yaw Rate Gyro, with Signal Conditioning, Preliminary Analog Devices Confidential data sheet (available upon request from Analog Devices).

19 USTLAB – 0502-001 "MAMO DUSP ICD, MicroAUV MEMS Acoustic, MEMS Optical, Dual Use Signal Processor – Imaging Subsystem - Interface Control Document", MAY 2001

20 Dual-Use Signal Processor and Integrated Sensor Computing for μAUV, Todd M. Massengill, and Denise M. Wilson, University of Washington, dated 19 April 2001

Unlimited Distribution to Government Agencies and DOD Contractors

Unmanned Systems Technology Laboratory, Inc.
510 Clearwater Loop #2
Post Falls, ID 83854

USTLAB TR – 01.004 Attachment 1 JUNE 2001
Milestone 4

μAUV – MicroAUV Hydrodynamic Analysis

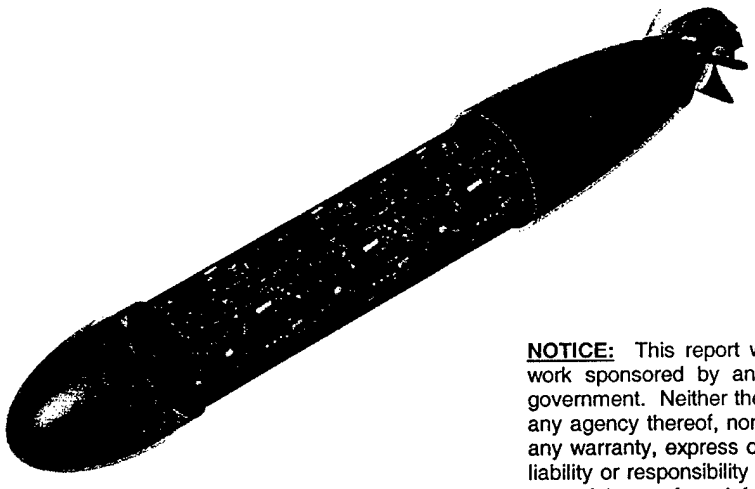

NOTICE: This report was prepared as an account of work sponsored by an Agency of the United States government. Neither the United States government, nor any agency thereof, nor any of their employees, makes any warranty, express or implied, or assumes any legal liability or responsibility for the accuracy, completeness, or usefulness of any information disclosed, or represents that its use would not infringe privately owned rights. Reference herein to any specific commercial product, process, or service by trade name, trademark, manufacturer, or otherwise does not constitute or imply its endorsement, recommendation, or favoring by the United States Government or any agency thereof. The view and opinions of the authors expressed herein do not necessarily state or reflect those of the United States Government or any agency thereof.

by john cranney

Sponsored by:
Defense Advanced Research Projects Agency
(Micro AUV)
ARPA Order No. K017/19
Issued by DARPA/CMD under contract No.
MDA972-01-C-0011, CLIN 0001AA

NOTICE: DOD RIGHTS IN TECHNICAL DATA – NONCOMMERCIAL ITEMS (NOV 1995)
Unlimited Distribution to Government Agencies and DOD Contractors

Abstract

This Micro-miniature Autonomous Underwater Vehicle (MicroAUV) Project pursues a viable design of a very small AUV. Current MEMS industry miniaturization of electronics enables a "Clean Sheet" design of an underwater vehicle that could achieve an "order of magnitude" improvement in specific endurance (range per pound mass of vehicle) over currently fielded systems. Specifically, the authors target a 2-15 lb MicroAUV that can demonstrate a 20 nautical mile per pound mass specific range capability. The design includes a 20% payload fraction in weight and/or volume and a ~10% margin for payload power. MicroAUV shall provide the endurance of other vehicles currently in the fleet and between 80 ~ 200 lbm displacement. Groups (fleets, swarms, etc.) of 10 and larger MicroAUVs will provide all of the capabilities of larger vehicles with increased mission robustness, as the tactical impact of loss of one vehicle will be mitigated by the swarm.

An initial report[1], was provided to underscore the scope of possibility within the opportunity described above. A second report[2] discussed MEMS attributes of design and a notional design concept, as well as integrating attributes of MEMS enabled power issues into the power and sizing analysis.

This report completes the following demonstrable milestone objectives:

1. Completes the power and sizing analysis
2. Identifies the right size of MicroAUV to be approximately 50 to 125 centimeters *(20 to 50 inches)* in length and 5 to 12 centimeters *(2 to 5 inches)* in diameter
3. Defines how, at this size, MicroAUV can achieve between 10 and 20 Nm/lbm. The final specific range capability will depend on how design margins are consumed as the design matures.
4. Defines the demonstration of a prototype vehicle to be completed at Milestone 6.

The "physics of the small" provides the possibility to improve endurance by designing to a "sweet spot" of vehicle hull diameter, length, shape and prismatic coefficient, wherein at low Reynolds Number (4×10^5) flow, a minimum hydrodynamic drag is achievable and enhances maximum endurance capability.

Report Disclaimer: "The views and conclusions contained in this document are those of the authors and should not be interpreted as representing the official policies, either express or implied, of the Defense Advance Research Projects Agency or the U. S. Government."

Declaration of Technical Data Conformity: The Contractor, USTLAB, hereby declares that, to the best of its knowledge and belief, the technical data delivered herewith under Contract No. MDA972-01-C-0011 is complete, accurate, and complies with all requirements of the contract.

INDEX

LIST OF FIGURES	3
EXECUTIVE SUMMARY	4
HYDRODYNAMIC ANALYSES METHODS & PROCEDURES	7
ASSUMPTIONS & APPROXIMATIONS	9
RESULTS	10
CONCLUSIONS	18
RECOMMENDATIONS	18

List of Figures

FIGURE 1. Specific Endurance Goal 4
FIGURE 2. MicroAUV Specific Endurance Parametric Results 5
FIGURE 3. 12.6 Lbm MicroAUV 6
FIGURE 4. Hull Section Assemblies 7
FIGURE 5. Prismatic Coefficient 7
FIGURE 6. Initial Specific Endurance Results 8
FIGURE 7. Length to Configuration Number 10
FIGURE 8. Length to Diameter vs Configuration 10
FIGURE 9. Coefficient of Skin Friction Drag 11
FIGURE 10. Coefficient of Pressure Drag 11
FIGURE 11. Wetted Surface Areas 12
FIGURE 12. Skin Drag Force 12
FIGURE 13. Pressure Drag Force 13
FIGURE 14. Total Drag 13
FIGURE 15. Volume and Energy 14
FIGURE 16. Duration 15
FIGURE 17. Range 16
FIGURE 18. Specific Range 17
FIGURE 19. 12.6 Lbm MicroAUV 18

Executive Summary

Our MicroAUV Team goal remains,

"Use current MEMS technologies and a keen focus on multi-functional use of materials to "clean sheet" design an optimally sized micro miniature autonomous underwater vehicle (MicroAUV) that can achieve 20 Nm/lbm displacement."

Further, through miniaturization, design MicroAUV to provide better than 10x the current 'endurance per lbm of vehicle displacement' over other vehicles currently in the fleet. Specifically, we seek to build MicroAUV at 2~15 lbm displacement and with 20 Nm/lbm endurance to achieve the functions of larger vehicles of 80~200 lbm displacement which have ~1 Nm/lbm displacement. Figure 1 shows our goal relative to other platforms, as submitted in our proposal.

FIGURE 1. SPECIFIC ENDURANCE GOAL

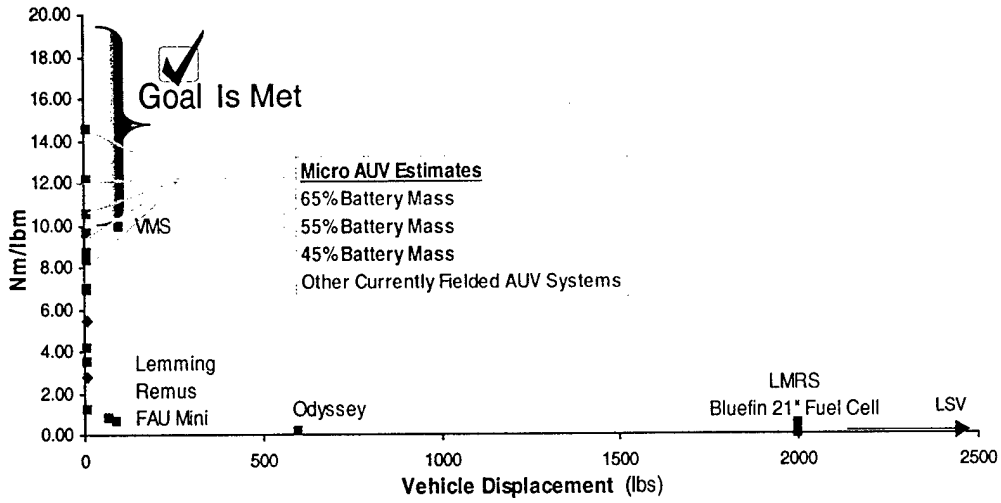

Currently fielded systems are captured in the body of such vehicles as REMUS, CETUS, and others. The specific endurance of these platforms is represented in Figure 1 above. Note that VMS (Variable Mooring System) is a glider vehicle, vice using active propulsion drive to accomplish speed of advance. Micro AUV goals will be to achieve the VMS endurance or better on active propulsion drive technology. Nominally, our goal is 20 Nautical Miles per pound mass displacement.

Current vehicle data were extracted from a FY2000 study on AUV developments[3]. Also, analysis of the Large Scale Vehicle (LSV) propulsion power at 6 kts, rendered a specific endurance of 0.008 nm/lbm as summarized in our previous report[2].

Analytically, we defined many vehicle design concepts, defining a trade space of permutations in vehicle design attributes, including parametric variations in:

- diameter,
- length,
- shape (Prismatic Coefficient)
- forward velocity,
- low and high instrumentation power rates *(including 100% design margin for reasonably developed instrumentation power budget estimates)*
- design margins (0%, 10%, & 20%) in overall vehicle system mass & volume budgets

- operating profile (steady-state and high maneuvering) and affects on instrumentation power and propulsive efficiency and forward speed of advance through water and over ground

For each vehicle, we calculated the hydrodynamic drag and the ensuing propulsive power and integrated the trajectory through time until the onboard battery energy was fully depleted. Using actual speed of advance over ground, we then calculated the range (distance traveled). Finally, dividing by vehicle total mass, we calculated the specific endurance (or specific range of the vehicle). As shown in Figure 2, we have identified a regime of vehicle design where the maximum performance is achieved.

FIGURE 2. MICROAUV SPECIFIC ENDURANCE PARAMETRIC RESULTS

Figure 2 presents 162 surface plots of endurance over the parametric space of:

3 instrumentation power values
3 design margins
2 operating profiles
9 diameters
& 132 lengths and 15 operating speeds

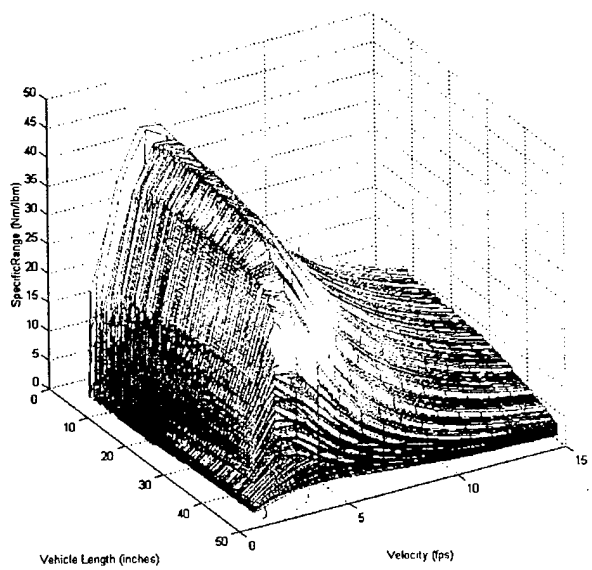

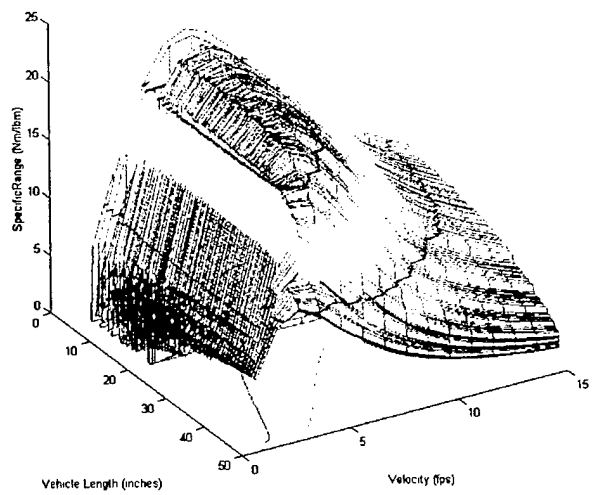

Larger diameter *(smaller L/D)* vehicle shapes provide results that define the upper most surfaces. The optimum condition, visible as the top surface in 2A, relates to:

Minimum Instrumentation Power
Zero design margin
Steady state operating profile
5 inch diameter *(smallest L/D's for the respective lengths)*

Figure 2A optimistically depicts a maximum specific endurance of ~45 Nm/lbm possible. Figure 2B shows more realistic curves and are derived by constraining the parametric trade space to an average instrumentation power, 10% design margin, and a steady state operating profile. The red isobar draws a boundary around an area of datum on length, diameter and velocity wherein 10 Nm/lbm specific endurance is achievable. The black isobar similarly defines 20 Nm/lbm specific endurance.

When viewed against velocity, the maximum occurs between 3~5 fps. This maximum is primarily due to the impact of the instrumentation power on the overall power budget. As the Instrumentation power increases the maximum specific range value would decrease as the peak shifts towards higher velocity. With regards to length, the surface crest's downward slope towards increasing length is consistent with the reduction in the "diameter over length" ratio

(D/L). Although we considered a range of diameters, our maximum diameter is constrained to 5 inches for all lengths and consequently as the length increases, D/L decreases, and the volume to surface area ratio (V/A) also decreases. Reducing V/A reduces net available energy storage, decreasing gross endurance.

In summary, MicroAUV can be built at:

Lengths	25 ~ 125	centimeters (10 ~ 50 inches)
Diameters	5 ~ 12	centimeters (2 ~ 5 inches)
L/D	≤ 7	(D/L > 0.14)

And at these configurations, achieve the 20 Nm/lbm goal.

FIGURE 3. 12.6 LBM MICROAUV

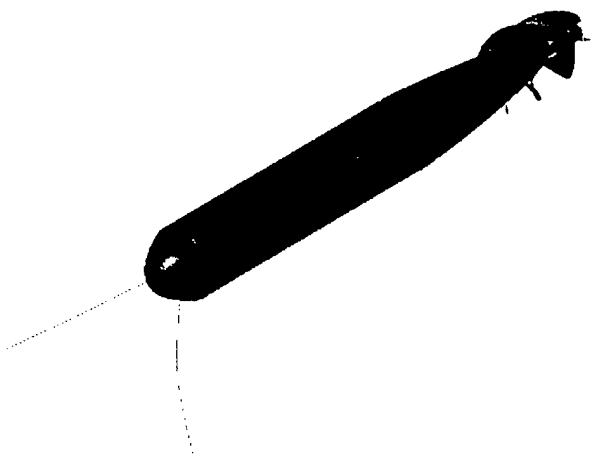

To prove these performance numbers, we will test a prototype vehicle. The design of our prototype vehicle is extracted from our Preliminary MicroAUV design shown in Figure 3. Our desired prototype configuration is:

Length	25 in (64 cm)
Diameter	3 in (7.6 cm)
Displacement	5 lbm (2.25 kg)
D/L	0.12
SS Range (3 kts)	100+ Nm
SS Range (5 kts)	50+ Nm

However, we may be challenged to achieve packing densities needed and may resort to a slightly larger diameter vehicle for the prototype performance trials.

Length	25 in (64 cm)
Diameter	4.3 in (11 cm)
Displacement	10 lbm (4.5 kg)
D/L	0.17
SS Range (3 kts)	200+ Nm
SS Range (5 kts)	100+ Nm

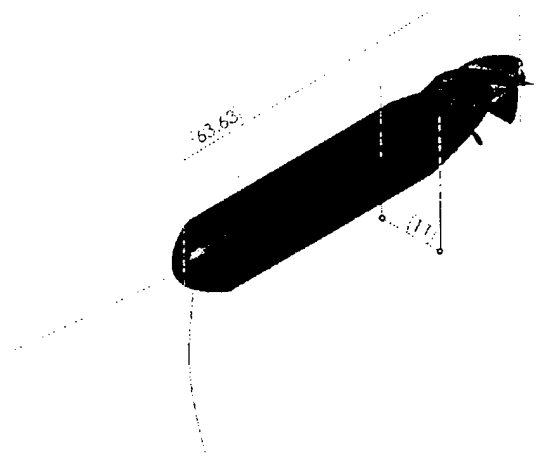

Hydrodynamic Analyses Methods & Procedures

These hydrodynamic analyses are conducted by first developing viable naval architecture solutions for vehicle design based on MEMS components.

Naval Architecture We "assembled" design budgets for mass, volume and power for all components into a virtual design analysis, including a parameter space of various vehicle size and Length-to-Diameter configurations, which were further decimated into a forward, middle and after body section as shown in Figure 4.

FIGURE 4. HULL SECTION ASSEMBLIES

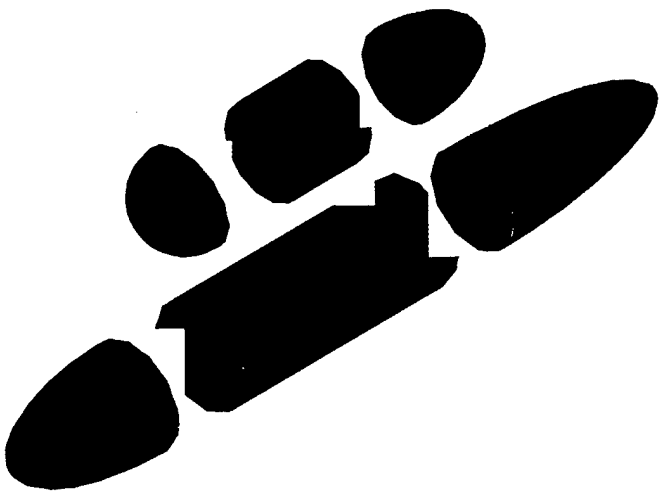

To develop the purely hydrodynamic drag based aspect of these analyses, we first assembled (modeled in Matlab™) 1188 separate vehicle 'configurations' by defining a three-section hull of nominal diameter from 1" to 5" in ½ inch increments (9 variations). The forward and after hull sections are ½ of an ellipsoid volume, formed by rotating an ellipse around the longer axis, which is coincident with the hull axis. The formula for volume and surface area of these bodies of rotation is established[4]. The center section is a right circular cylinder, for which volume and surface area are easily calculable. For each body diameter, each hull section is varied from a min to a max in 11 increments. The length variations were "built" in the following manner:

1. summing each ith length of forward and after hull section to create 11 length sums
2. adding each of these 11 forward and aft hull sums to each of the 11 hull midsection lengths for a total of 121 configurations
3. including the 11 hull midsections lengths (without elliptical ends) for a total of 132 length configurations for each of 9 diameters {9 x 132 = 1188 configurations}

Prismatic Coefficient for these vehicles vary from that of a pure prismoid solid rotated about the long axis (~Albacore hull, Cp ~0.667) to a right circular cylindrical shape (Cp=1).

FIGURE 5. PRISMATIC COEFFICIENT

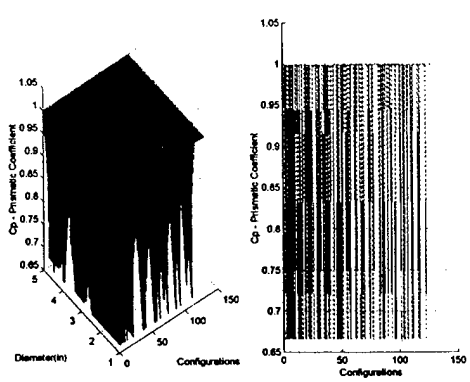

Further, the prismatic coefficient is readily definable in the manner in which we "assembled" our body configurations. Figure 4 shows that each configuration included a middle section whose prismatic coefficient is 1 and a front and aft ellipsoid body of rotation whose Prismatic coefficient is 0.667. For each configuration, Prismatic Coefficients oscillate between 0.667 and 1 (figure 5).

In previous reports, we documented point design analyses of 10 individual vehicle configurations and achieved the initial specific endurance results of Figure 6.

FIGURE 6. INITIAL SPECIFIC ENDURANCE RESULTS

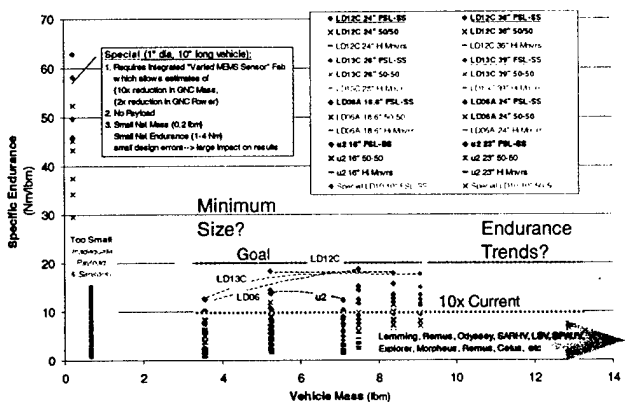

Although our analysis results displayed "trends", the small variability in the results 'data set' indicated the necessity for a more thorough examination of the trade space to:

- discern exactly which direction the trends favor
- find an optimum vehicle size and a minimum feasible vehicle size (which may not be the same)

Thus, we created the iterative design space of vehicle configurations discussed in the *"Methods & Procedures"* section above.

Investigators in the body of hydrodynamic science for small vehicles (Goldstein[5], Taylor[6], Lighthill[7], others) address limitations in how N_R and C_D based calculations are not reliable to accurately evaluate all of the "physics of the small". They more fully develop hydrodynamics as analogue relationships, which apply and are integrated across body lengths and shapes. Numerous potential field and other based models for calculating hydrodynamic thrust and drag for small regimes have been developed.

Those analytical models have been transitioned to non-linear finite element (FEA) methods and now provide "reliable" methods to calculate real drag, proven through empirical comparisons to body drag trials. These latter methods appear especially salient in regimes of small N_R. In general terms, these methods calculate pressure differentials across elemental size components and include viscous affects to resolve elemental drag and then integrate across the body structure to resolve total drag. These analytical methods resolve many of the non-trivial uncertainties and errors associated with C_D based hydrodynamic force and power calculations.

However, in pursuit of our goal and as a first order approximation, we used Jackson's[8] relationships for vehicle drag coefficients, C_f and C_r:

$$C_f = \frac{0.075}{[\log_{10} N_R - 2]^2} \qquad C_r = C_f[1.5(D/L)^{3/2} + 7(D/L)^3 + 0.002(C_P - .6)]$$

$$C_D = C_r + C_f$$

$$F = \tfrac{1}{2}\rho \cdot C_D \cdot A \cdot V^2$$

and extend our analysis to calculate estimates of total drag force and areas where the math is not well formed. Further, we integrated operational profiles with the hydrodynamic analyses to define overall system power budgets, and then integrated with onboard energy storage to calculate net vehicle endurance.

Assumptions & Approximations

We developed and submitted a MicroAUV Performance Specification, which defines expectations of MicroAUV including:

Specific Endurance	20 nm/lb.	
Payload Power	0.3 watts average	5 watts peak power
Speed	min > 3 kts	max ≥ 6 kts
Transit or **FSL-SS**	Fly Straight & Level @ Steady State Speed (FSL-SS), Maximum propulsive efficiency.	
High Maneuvering	Minimum propulsive efficiency	
50/50	Consists of 50% mix of the above two modes	

To examine High Maneuvering scenarios, we modeled "High Maneuvering" to be accomplished at each steady state speed through water with a net reduction in Speed of Advance (SOA) over ground due to the maneuvering. Hence, in endurance calculations, we estimate "high maneuvering" at the same speed (power out) and use an SOA of 70% lower (~3.5 kts) in endurance calculations for a net reduction in range.

For tactical and cost reasons which drive, but are not otherwise integral to these design analyses, the loss of MicroAUV is envisioned as an expendable event wherein the loss of a larger vehicle is envisioned to be a costly and perhaps unacceptable event. Outlay for infrastructure follows different rules across these different design goal regimes. Redundant systems are excluded in MicroAUV and mandated in more costly systems. Implementation of considerable redundant design would increase mass and hotel power, and thus reducing endurance.

The vehicle design attributes that we developed for our analyses are summarized as:

- Hull Material ~ Plastic Composite over conformal PCB assembly, $SG_P \simeq 1.3$
- Propeller Material ~ Plastic Composite; SG_P=1.15
- Hull Mass = 12% of overall Displacement
- Payload Mass = 20% of overall Vehicle Displacement
- Motor & DriveTrain Mass = 13% of overall Vehicle Displacement
- Propeller Mass (Dry) = 5% of overall Vehicle Displacement
- Propeller Displaced Mass (Wet) = (SG_P – SG_{H2O}) * Propeller Mass (Dry)
- Total Instrumentation Mass = 134 grams
- Design Margins between 0%, 10%, or 20% of overall Vehicle Displacement
- Instrumentation Power = 0.730, 1.160 or 5.860 watts (steady state, high maneuvering, peak payload, see basic report for power budget breakdown)
- Drive Train Efficiency = 60% or 52.5% (steady state or high maneuvering)
- Speed of Advance over ground = 100% or 70% of speed through water (steady state or high maneuvering)

And the trade space of vehicle design attributes includes the following:

- 9 diameters, in 0.5 inch *(~1 cm)* increments from 1~5 inches *(2~12 cm)*,
- 132 lengths (as above)
- shape as defined by each combination of diameter and length of each the forward, middle and after sections (Prismatic Coefficient)
- 15 forward velocities from 1 to 15 fps, (0.6 to 9 kts)
- 2 Instrumentation Power schedules; being low power for steady state conditions and high power aligned with high maneuvering operating conditions *(includes 100% design power margin for reasonably developed instrumentation power budget estimates)*
- 3 design margins (as above)
- 2 operating profiles (steady-state and high maneuvering) and affects on instrumentation power and propulsive efficiency and forward speed of advance through water and over ground, as above.

RESULTS

As configurations were defined and analyses completed, data were sorted by length. Actual length is plotted against configuration number in figure 7. Henceforth, other parameters are compared to configuration number or length, interchangeably.

FIGURE 7. LENGTH TO CONFIGURATION NUMBER

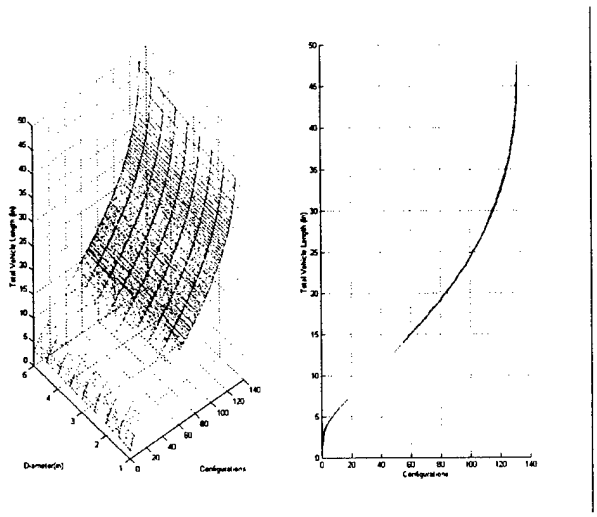

For each configuration, Length (L) to Diameter (D) ratio is calculated to show variation in bluntness over the configuration set of data examined. L/D and D/L are shown in figure 8.

FIGURE 8. LENGTH TO DIAMETER VS CONFIGURATION

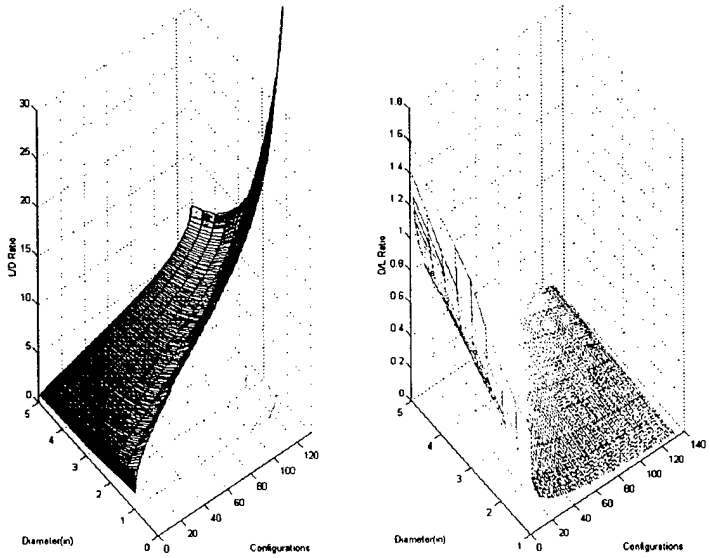

Again, using Jackson's equations, we examine the hydrodynamics of each body of rotation.

Length remains a contributor in calculating N_R and subsequently C_f. Figure 9 shows C_f vary as a function of vehicle configuration (length to 48 inches) and velocity, which we varied in our analyses from 1 fps to 15 fps in 1-fps increments.

FIGURE 9. COEFFICIENT OF SKIN FRICTION DRAG

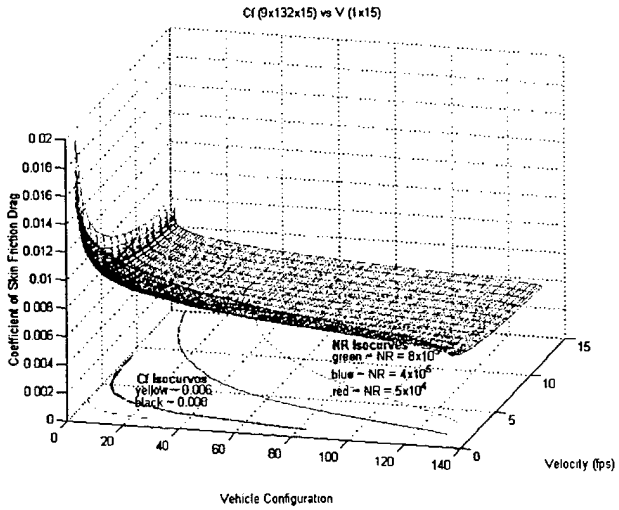

Note that as C_f is a function of Reynolds number and diameter is an integral piece of length, the figure is actually 9 plots for 9 different diameters. However, diameter in and of itself does not grossly affect the data and the 9 separate plots for the 9 diameters emerge as a near single surface. This is consistent with the manner in which we developed the configurations as linear multiples of diameter, forcing the L/D variations to follow the same relationship for each set of length~diameter configurations.

Figure 16 shows C_r as a function of length and velocity, derived from its dependence on C_f, L/D and Prismatic Coefficient.

FIGURE 10. COEFFICIENT OF PRESSURE DRAG

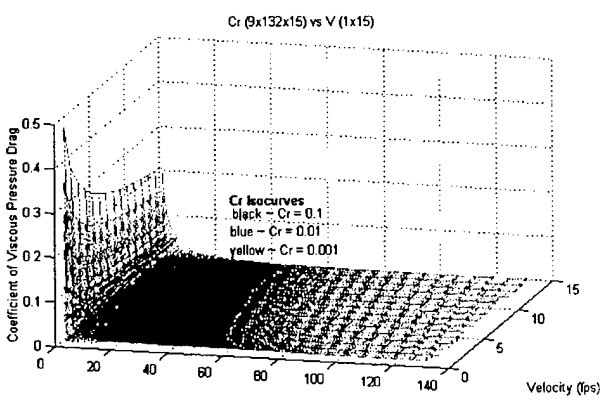

Note that both drag coefficients approach asymptotic increases towards positive values as configuration (length) tends toward very small numbers and that C_r is several magnitudes larger than C_f in areas of lower length, but both approach similar orders of magnitude at lengths > 20". The 9 surface plots (for 9 diameters) variance in the regime of the knee of the curve is more pronounced as diameter is a more direct influence in the quantitative relationship.

To calculate total drag,

- wetted surface area is calculated and used with C_f to get skin friction drag
- projected area is calculated and used with C_r to get pressure drag.

Figure 11 displays surface area and varies $\pm$ 50 in^2 for each length, as consequence of the varying diameters within each length regime.

FIGURE 11. WETTED SURFACE AREAS

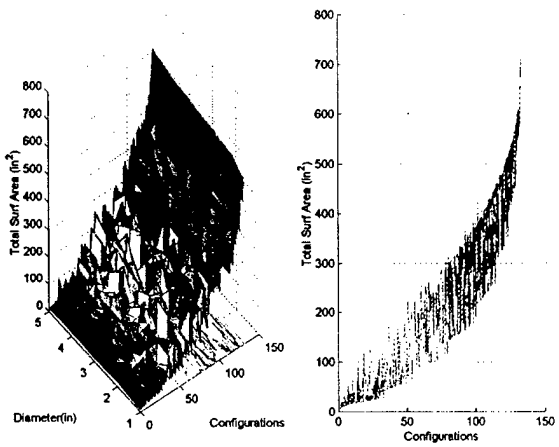

Again, 132 configurations represent lengths varying from ~2" to 48" and each length has several configurations of varying diameter.

Thus Drag is calculated, as shown in the Executive Summary and repeated in Figures 12~14. Note that figures 12~14, each represent 9 surface plots, replicated, one on top of the other for each of 9 diameters considered.

FIGURE 12. SKIN DRAG FORCE

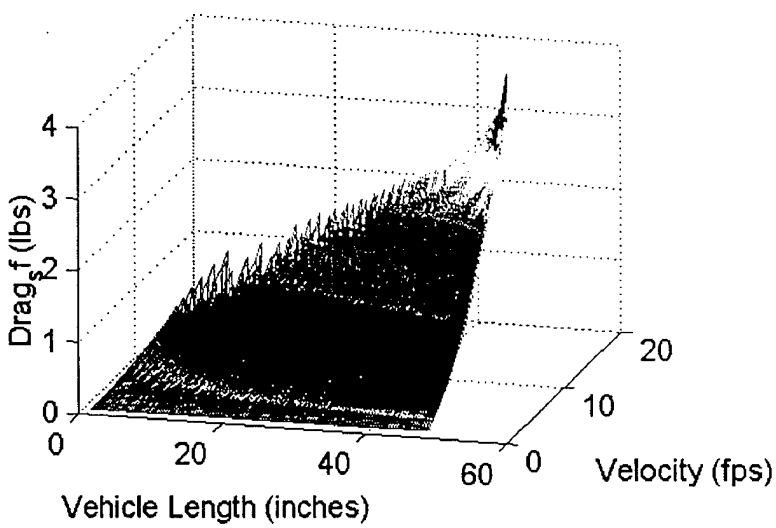

Note that surface area is increasing considerably with length and so the combination of length, velocity, and drag coefficient combine to make skin drag reach substantial values.

FIGURE 13. PRESSURE DRAG FORCE

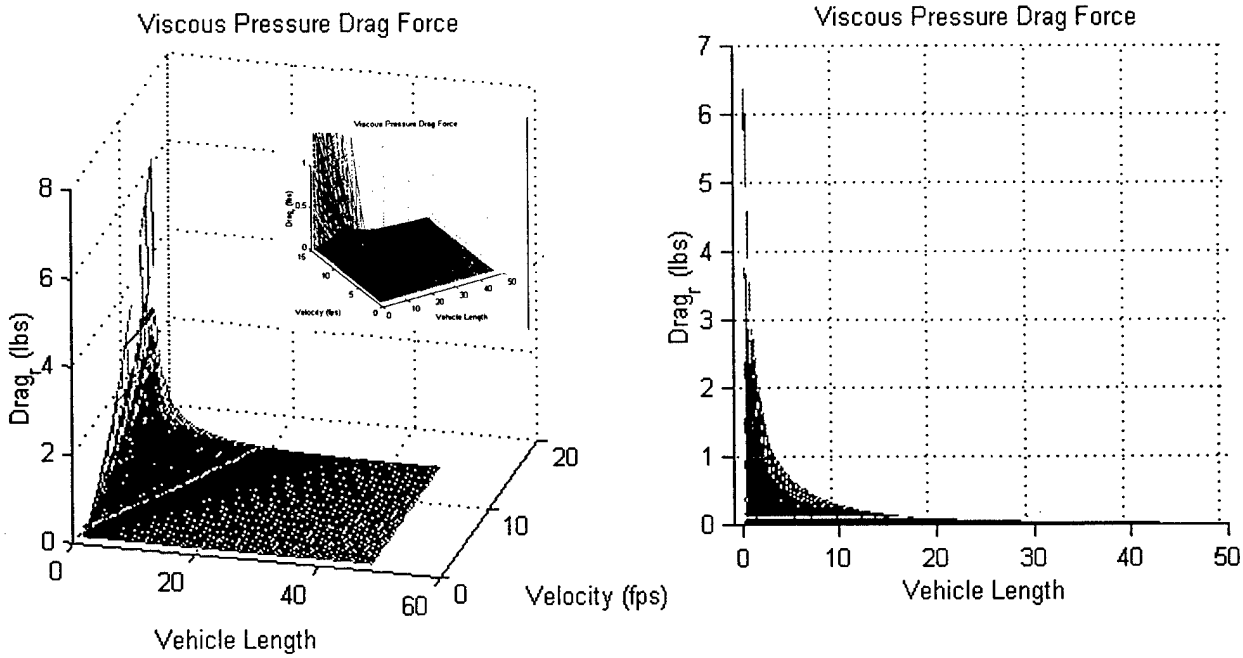

The velocity range does not go high enough yet to drive form drag high enough to be observable for the longer lengths shown. However, the D/L ratio dominates in the lower lengths, driving drag force to observable values above 2 fps. Note again, that the figure represents 9 surface plots of Drag for each of 9 diameters from 0.5" to 5.0" in ½" increments. Because of the sorting of the data on length and the smallness of the results, the influence of the diameter is not readily discernible, but does define the volume shown in the regime of 0~10 inches length.

Hence, combining these two forces renders total drag and defines a minimum saddle in the regime of 10-20 inches in length, regardless of diameter, although the lower diameters do not substantially contribute to the rise in drag at lower lengths as these surface plots are for the larger diameter vehicles.

FIGURE 14. TOTAL DRAG

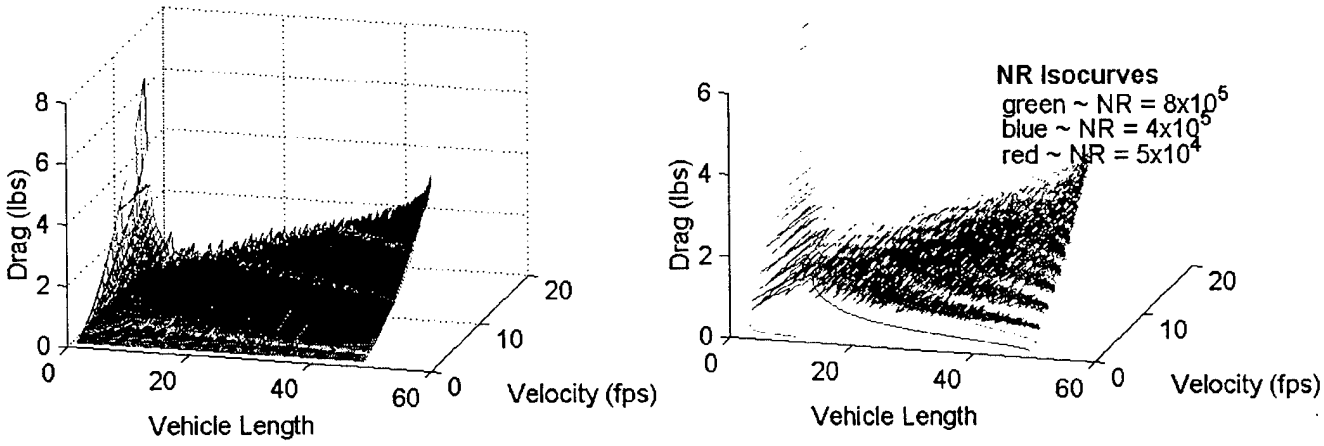

Observe the "knee" of the drag occurs in a regime that tends to align with the NR=4x10^5 curve (the blue curve) on the zero plane of figure 14B. Although drag still reduces at velocities below this regime, the rate of change is smaller. This becomes significant when drag is resolved to propulsive power and then integrated to get energy and duration of run and range.

Figure 15 defines the overall volume of each configuration, which is used to calculate displacement, allocate budgets for all devices save energy and analytically install energy to occupy the remainder of the vehicle mass.

FIGURE 15. VOLUME AND ENERGY

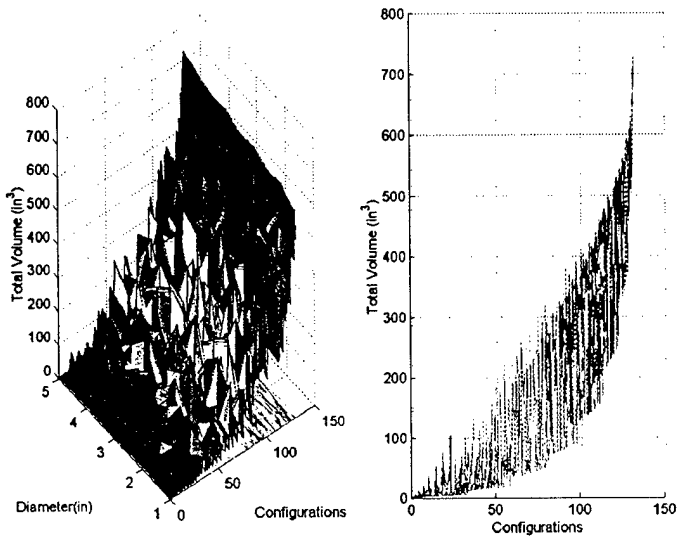

We convert this volume to displaced mass and allocate appropriate budget margins for such things as instrumentation, motor, hull, etc. This leaves a certain amount of mass remainder for energy, which we convert to actual watt hours by using the selected Lithium Polymer battery and its energy density.

Where the vehicle size and subsequent energy mass is less than zero, a null datum is set. The right most figure depicts configurations that can store energy.

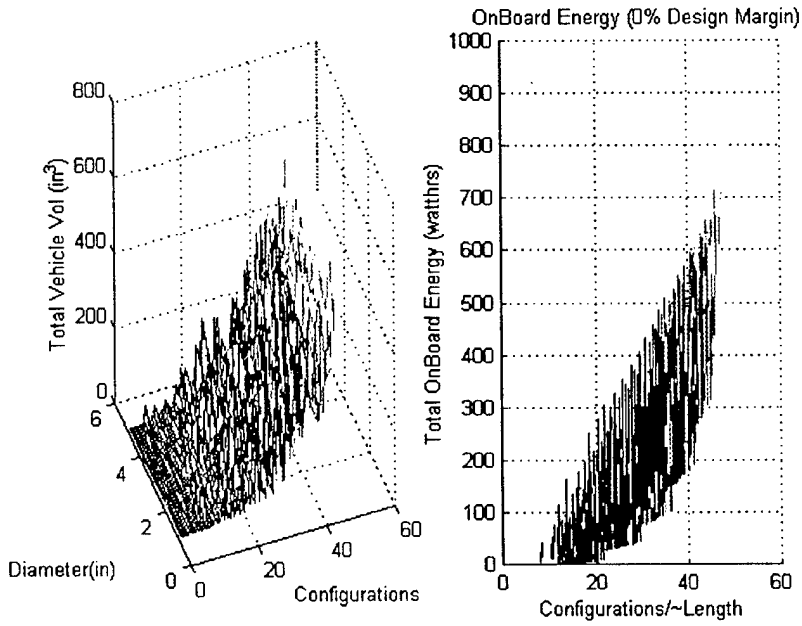

Integrating instrumentation power and drive train efficiencies, we calculate total power usage and divide into onboard energy to derive hours of operation (Figure 17)

FIGURE 16. DURATION

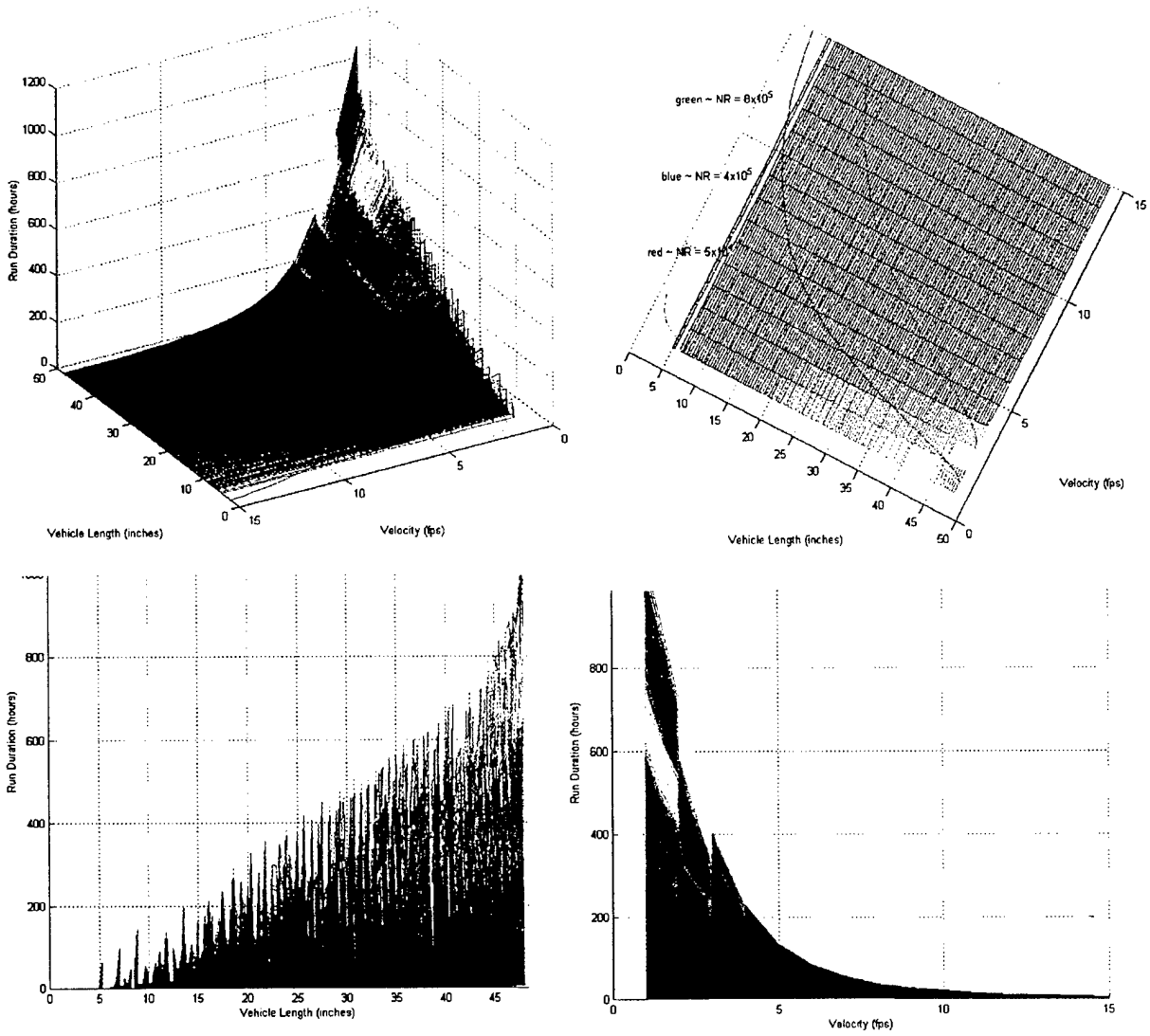

Observe:

1. The peak occurs along the NR~$4x10^5$ Reynold's Number curve
2. the approximately linear relationship relative to length (or energy storage), which is noisy because of multiple diameters at each length.
3. The asymptotically decreasing relationship with increasing velocity (increasing power rate) defining less time for travel at increasing velocity (hence, less achievable range)

We then multiply hours of operation times Speed of Advance (including consideration for steady state or high maneuvering) to derive Gross Range for each vehicle (Figure 18)

FIGURE 17. RANGE

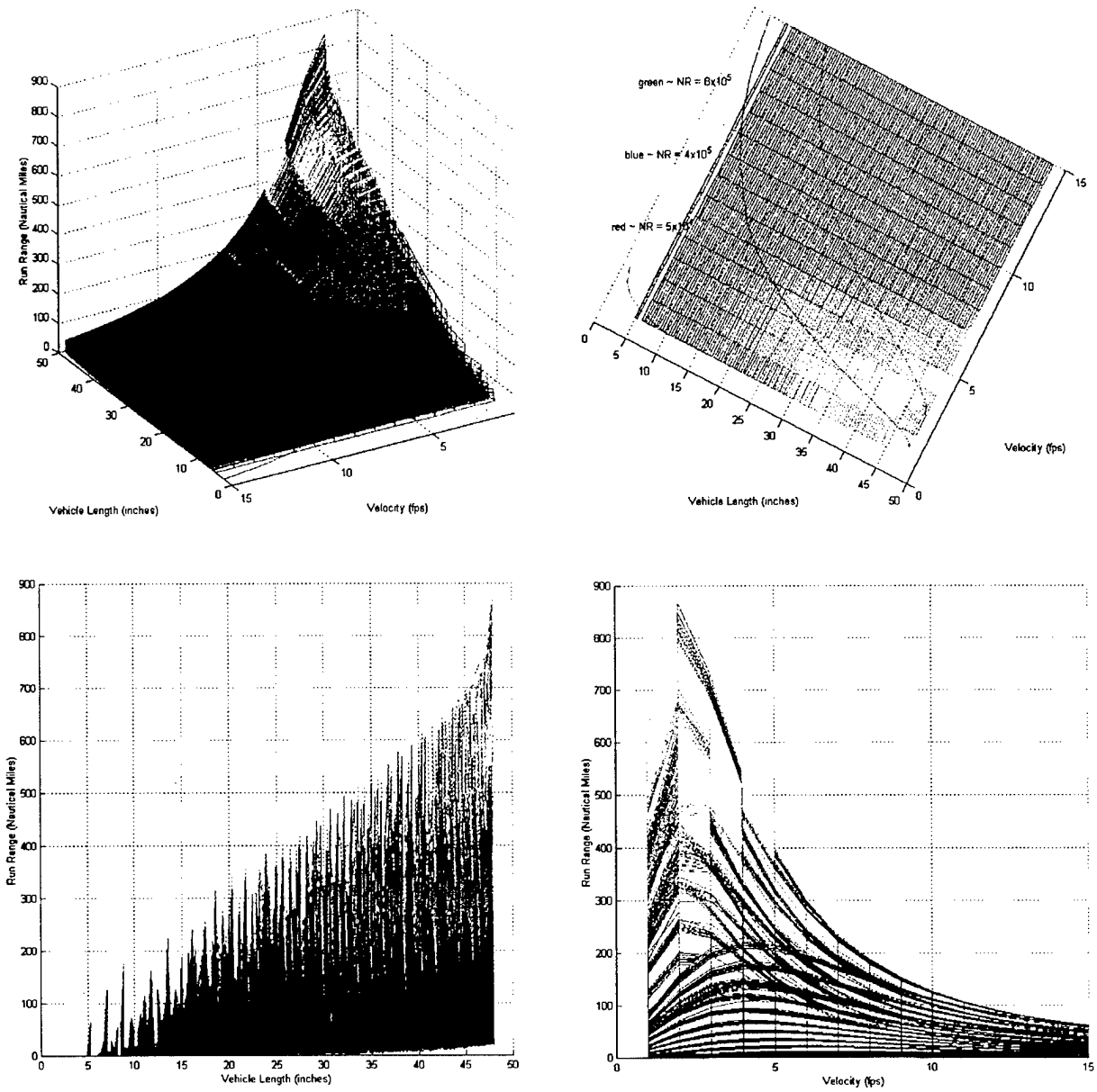

Again, note:

1. The peak occurs along the NR~$4x10^5$ to NR~$8x10^6$ Reynold's Number curves
2. the approximately linear relationship relative to length (or energy storage), remains and is still noisy because of multiple diameters at each length.
3. The maximum "Range" occurs at ~2 fps for largest diameters and reduces and shifts right as diameters reduce and/or as hotel loads increase.

We finally divide by individual mass of each vehicle to get specific range (Figure 18)

FIGURE 18. SPECIFIC RANGE

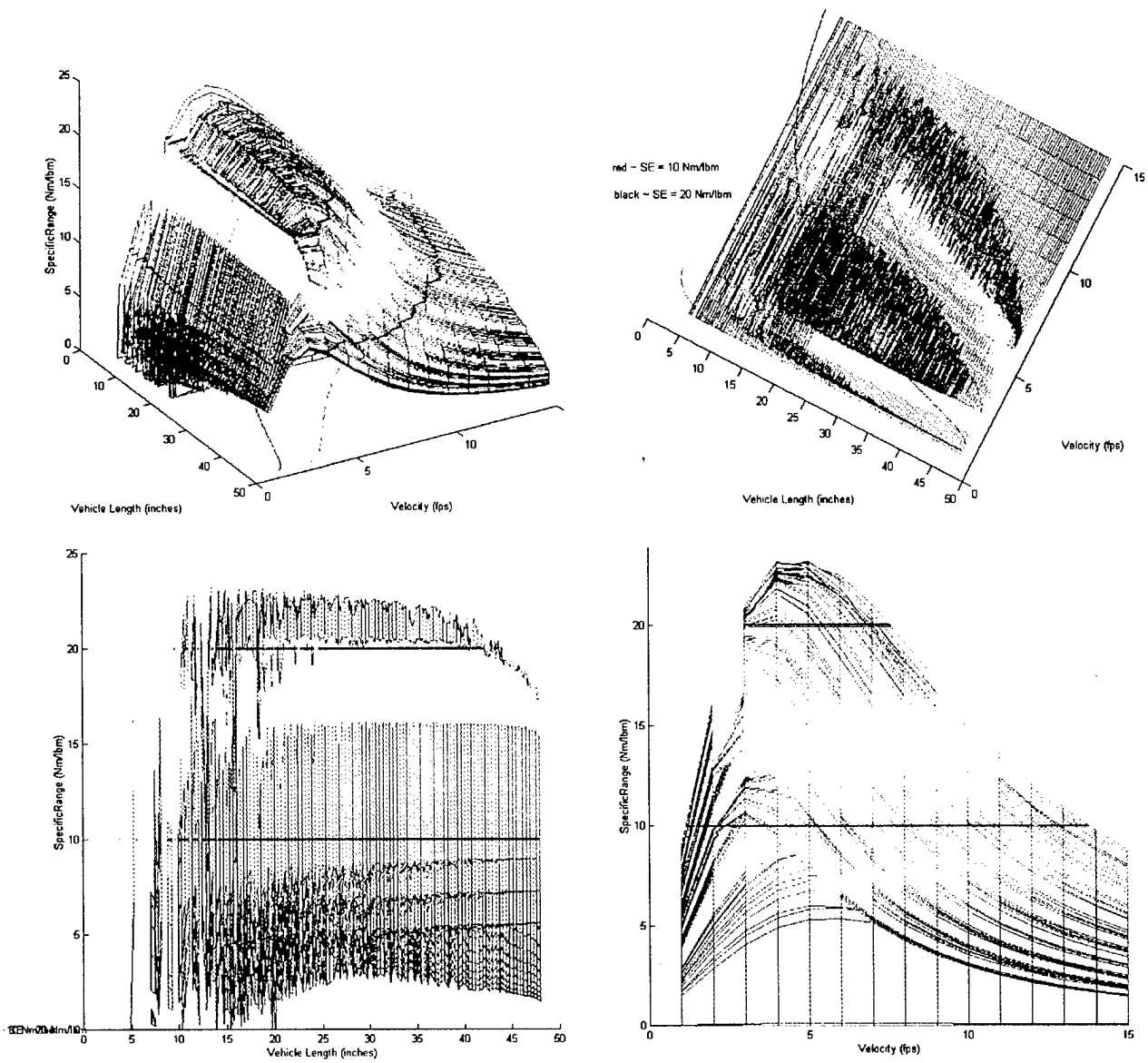

Finally, note:

1. The peak occurs along the NR~$4x10^5$ to NR~$8x10^6$ Reynold's Number curves
2. the approximately linear relationship relative to length (or energy storage), is observable as a near zero slope *(range per size relative to size)* and is still noisy because of multiple diameters at each length.
3. The maximum "Specific Range" occurs at ~5 fps for a wide range of vehicle diameters and certain other parameters, yet the peak is not sharp. All other parameters of a specific operation being similar, then operating anywhere between 3 to 8 fps may be achieved without large loss in Specific Range capability.

CONCLUSIONS

Our requirement has been to develop MicroAUV design capable of 20 Nautical Miles per pound mass displacement. The data above demonstrates the capability to achieve that design. In summary, MicroAUV can be built at:

Lengths	25 ~ 125	centimeters (10 ~ 50 inches)
Diameters	5 ~ 12	centimeters (2 ~ 5 inches)
L/D	≤ 7	(D/L > 0.14)

And at these configurations, achieve the 20 Nm/lbm goal.

RECOMMENDATIONS

In support of validating these hydrodynamic analyses, we recommend conducting in-water demonstrations of prototype hull designs.

FIGURE 19. 12.6 LBM MICROAUV

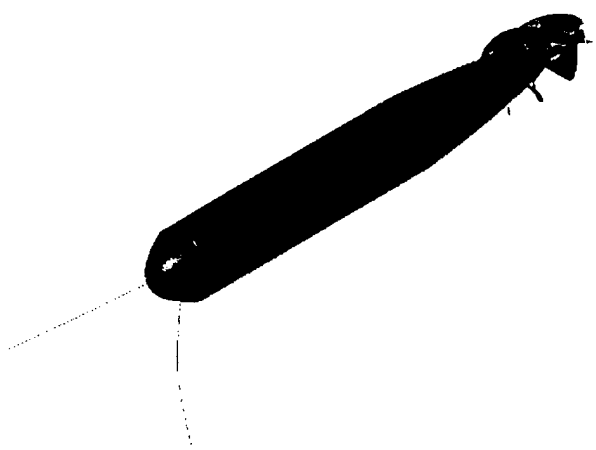

To prove these performance numbers, we will test a prototype vehicle. The design of our prototype vehicle is extracted from our Preliminary MicroAUV design shown in Figure 3. Our desired prototype configuration is:

Length	25 in (64 cm)
Diameter	3 in (7.6 cm)
Displacement	5 lbm (2.25 kg)
D/L	0.12
SS Range (3 kts)	100+ Nm
SS Range (5 kts)	50+ Nm

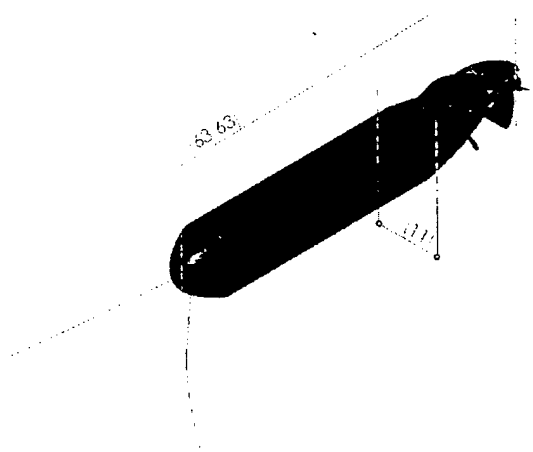

However, we may be challenged to achieve packing densities needed and may resort to a slightly larger diameter vehicle for the prototype performance trials.

Length	25 in (64 cm)
Diameter	4.3 in (11 cm)
Displacement	10 lbm (4.5 kg)
D/L	0.17
SS Range (3 kts)	200+ Nm
SS Range (5 kts)	100+ Nm

We would also like to initiate an independent NRL FEFLO (Finite Element Fluid Flow) analyses to repeat our rough analyses above and validate compare our findings.

References

1 cranney, j.c., stone d. l., et al, "USTLAB TR-01.001 MicroAUV – Scope of Possibility" dtd January 2001

2 cranney, j.c., stone d. l., et al, USTLAB TR – 01.003 MAY 2001, Milestone 3, "Six (6) Month Technical Report" μAUV–MEMS Report

3 cranney, j., "Unmanned Underwater Vehicle Survey Market Survey", SAIC Contract PO 8200010646, Jan 2000

4 Volume formula for an ellipsoid body of rotation volume, http://www.sisweb.com/math/geometry/areasvols.htm and surface area of ellipsoid body of rotation volume, http://www.math.ucla.edu/~ronmiech/Calculus_Problems/32A/chap9/section3/564d27/564_27.html

5 S. Goldstein, ***Modern Developments in Fluid Dynamics***, Oxford, Clarendon Press, 1938

6 Taylor, G. I., "Analysis of the Swimming of MicroScopic Organisms", Proceeding of the Royal Society, vol 209, 1950, pp447-4612

7 Lighthill, M.J., "Aquatic Animal Propulsion of High Hydro-Mechanical Efficiency", J. Fluid Mechanics, 1970, Vol 44 part2 pp 265-301,

8 Jackson, H., ***"Submarine Design Notes"***, MIT Press, 1981

Bibliography

1. Abbott, Ira H., and Von Doenhoff, Albert E., *Theory of Wing Sections, Including a Summary of Airfoil Data*, Cover Publications Inc, NY NY, 1959

   Discussions on Drag Coefficients and Shape Implications to Coefficients. Prolific tabulated coefficient data on various shapes.

2. ANSI/NISO Z39.18-1995, "Scientific and Technical Reports – Elements, Organization, and Design", 1995,

   Provides guidance on developing Technical report, including defines elements of report, organization and format.

3. Bechert, D.W., Bruse, M., Hage, W., Meyer, R. "Fluid Mechanics of Biological Surfaces and their Technological Application", 1st International Symposium on Aqua Bio-Mechanisms, ISABMEC 2000, Sponsored by Tokai University & U.S. Office of Naval Research, NSF,

   Discussion on Aquatic Fluid Flow on Biological Surfaces and also on the multi-functionality of components of organisms in biology

4. Curtin, Thomas B., Bellingham, James G., Catipovic, Josko, and Webb, Doug, "Autonomous Ocean Sampling Networks", Oceanography, Vol 6, No. 3 1993

   Provides overall system concept for multiple networks of multiple ocean vehicles operating collaboratively to prosecute a survey mission in the undersea environment.

5. Jones, K.D., Lai, J.C.S., Tuncer, I.H., and Platzer, M.F. "Computational And Experimental Investigation of Flapping Foil Propulsion" 1st International Symposium on Aqua Bio-Mechanisms, ISABMEC 2000, Sponsored by Tokai University & U.S. Office of Naval Research, NSF.

   Discussion on flapping foils in fluid medium and thrust and drag and power efficiencies. Predominantly 2D problem prosecution.

6. Purcell, E. M. Life at Low Reynolds Number, Lyman Laboratory, Harvard University, Cambridge Mass June 1976, http://brodylab.eng.uci.edu/~jpbrody/reynolds/lowpurcell.html

   A nice discussion on low reynolds number flow (in the regime of 10-1 and smaller). Not really relevant to this effort at the scale that MicroAUV is approaching. Would be relevant if we could design a MicroAUV all in one MEMS Microchip.

7. White, Frank M. *Fluid Mechanics*, McGraw-Hill, 1979,

   Graduate Level text on Fluid Mechanics at gross scale, including considerable discussion on Coefficient of skin friction and form drag for bodies in a fluid.

8. AUSI, Minutes of 10th International Symposium on Unmanned Untethered Submersible Technology, 1997

Various papers on underwater vehicles and underwater vehicle technologies. Relevant to developing general understanding of current UUV systems and control methodologies for UUVs

9. Bureau of Naval Personnel, *Principles of Naval Engineering*, revised, 1970,

   Introduction to theory and design of Naval Engineering machinery and systems, provided some background to hull design.

10. Harmouth, Henning F. *Acoustic Imaging with Electronic Circuits.* New York: Academic Press, 1979.

    A discussion of the formation of acoustic images by the utilization of electronic spatial filter arrays.

11. Malvino, Albert Paul, Phd. *Digital Computer Electronics.* New York: McGraw-Hill, 1977.

    An introduction to computers and microprocessors with emphasis on logic design, digital devices, bus structure, computer architecture, and microprogramming.

12. Paul, Phillip H., Arnold, Don W., and Rakestraw, David J., Electrokinetic Generation of High Pressures using Porous MicroStructures. Sandia National Laboratory

    Discusses MEMS based micropore pump, operating at 1000 to 7000 vdc to pump liquids through porous microtubes at very high rates. Examined applicability to MicroAUV, which failed due to high voltage requirement.

13. Passafiume, John F. and Douglas, Michael. *Digital Logic Design.* New York: John Wiley and Sons, 1985.

    An introduction to the fundamentals of digital logic design and circuitry with exercises in logic gates, truth tables, expression reduction, multiplexers, decoders, adders, flip-flops, counters, and registers.

14. Sandberg, W.C., Ramamurti, R. Westneat, M.M. and Walker, J.A. "3-D Unsteady Computations on Flapping Aquatic Flight" 1st International Symposium on Aqua Bio-Mechanisms, ISABMEC 2000, Sponsored by Tokai University & U.S. Office of Naval Research, NSF

15. Sandberg, W.C., Ramamurti, R. Westneat, M.M. and Walker, J.A. "3-D Computations of Flapping Aquatic Flight", Naval Research Laboratory, April 2001

    The above two documents discuss analytical approach to using NRL's FEFLO facility to model unsteady flapping of bird wrasse (a small reef fish) and establishes for the reader an understanding of the FEFLO capability.

16. Sedra, Adel S., and Smith, Kenneth C. *Microelectronic Circuits Fourth Edition.* New York: Oxford University Press, 1998.

    A core textbook in electronic circuits. The objective is to develop an ability to analyze and design electronic circuits, both analog and digital, discrete and integrated. Emphasis is placed on transister circuit design, IC design, and VLSI.

17. Urick, Robert J. *Principles of Underwater Sound, 3rd Edition.* New York, McGraw-Hill,1983.

    An introduction to basic sonar physics, transmission loss, transducer arrays-directivity index, noise background, scattering, reflection, sound generation, the sonar equations, and their practical application to sonar problems