FINAL SUBMITTAL

VOLUME IV
APPENDICES H-I

FEASIBILITY STUDY FOR EXPANSION OF ENERGY MONITORING AND CONTROL SYSTEM (EMCS) FORT DRUM, NEW YORK

Prepared for

NORFOLK DISTRICT
CORPS OF ENGINEERS, CENAO-EN-MC
803 FRONT STREET, NORFOLK, VIRGINIA 23510

Under

U.S. ARMY ENGINEER DISTRICT, MOBILE
INDEFINITE DELIVERY A-E CONTRACT
CONTRACT NO. DACA01-94-D-0033
DELIVERY ORDER NO. 0006

DISTRIBUTION STATEMENT A
Approved for public release
Distribution Unlimited

EMC No. 1406-006
January 1997

19971022 114

By

E M C Engineers, Inc.
9755 Dogwood Road, Suite 220
Roswell, Georgia 30075
770-642-1864

v:\1406-006\reports\final

DTIC QUALITY INSPECTED 3

DEPARTMENT OF THE ARMY
CONSTRUCTION ENGINEERING RESEARCH LABORATORIES, CORPS OF ENGINEERS
P.O. BOX 9005
CHAMPAIGN, ILLINOIS 61826-9005

REPLY TO
ATTENTION OF: TR-I Library

17 Sep 1997

Based on SOW, these Energy Studies are unclassified/unlimited. Distribution A. Approved for public release.

Marie Wakefield,
Librarian Engineering

This report has been prepared at the request of the client, and the observations, conclusions, and recommendations contained herein constitute the opinions of E M C Engineers, Inc. In preparing this report, EMC has relied on some information supplied by the client, the client's employees, and others, which we gratefully acknowledge. Because no warranties were given with this source of information, E M C Engineers, Inc. cannot make certification or give assurances except as explicitly defined in this report.

TABLE OF CONTENTS

EXECUTIVE SUMMARY

VOLUME I

EXECUTIVE SUMMARY

Section — Page

1.0 INTRODUCTION

1.1 Authority for Energy Monitoring and Control System Feasibility Study 1-1
1.2 Purpose of Energy Monitoring and Control System Feasibility Study 1-1
1.3 Scope of Work 1-1
1.4 Approach 1-2
1.5 Work Accomplished 1-3

2.0 FACILITY DATA

2.1 General 2-1
2.2 Buildings Included in Analysis 2-1
2.3 Energy Sources 2-9
2.3.1 Electricity 2-9
2.3.1.1 Electrical Demand Charges 2-9
2.3.1.2 Electrical Energy Charges 2-9
2.3.2 No. 2 Fuel Oil 2-9
2.3.3 High Temperature Hot Water (HTHW) 2-10
2.3.4 Natural Gas 2-10
2.3.5 Liquefied Petroleum Gas (LPG) 2-10
2.4 Energy Consumption Analysis 2-10
2.4.1 Electricity 2-10
2.4.2 No. 2 Fuel Oil 2-12
2.4.3 High Temperature Hot Water (HTHW) 2-13
2.4.4 Natural Gas 2-15
2.4.5 Justification of Resource Unit Costs for Economic Analysis 2-16
2.5 Existing Controls and EMCS 2-17
2.5.1 Existing Controls 2-17
2.5.2 Trane Tracer 100 EMCS 2-27

3.0 ENERGY MONITORING AND CONTROL SYSTEM APPLICATION

3.1 Energy Conserving EMCS Functions 3-1
3.2 EMCS Monitoring Functions 3-1

TABLE OF CONTENTS
(continued)

Section			Page
4.0	ENERGY MONITORING AND CONTROL SYSTEM REQUIREMENTS		
	4.1	General	4-1
	4.2	Configurations	4-1
	4.3	Data Transmission Media	4-2
	4.4	Sensor and Actuators	4-4
	4.5	EMCS Operations and Maintenance	4-4
		4.5.1 EMCS Operations	4-4
		4.5.2 EMCS Maintenance	4-4
	4.6	Authority	4-5
	4.7	Repair of Existing Controls	4-5
5.0	ANALYSIS METHODOLOGY		
	5.1	Procedures	5-1
	5.2	I/O Summary Tables	5-2
	5.3	Energy Savings	5-2
	5.4	Construction Costs	5-3
	5.5	EMCS Prioritization	5-3
	5.6	EMCS Alternatives Evaluation	5-3
6.0	RESULTS OF ANALYSIS		
	6.1	General	6-1
	6.2	Building Summary	6-1
	6.3	Resulting Configuration	6-1
	6.4	Energy Savings	6-4
	6.5	Implementation Costs	6-5
	6.6	Economic Summary	6-6
	6.7	Life Cycle Cost Analysis	6-7
	6.8	DD1391	6-7
7.	CONCLUSIONS AND RECOMMENDATIONS		

LIST OF TABLES

Table		Page
ES-1	System Economics	ES-4
ES-2	Similar Buildings	ES-5
ES-3	Energy Savings Summary	ES-7
ES-4	Energy Cost Savings Summary	ES-7
2-1	Buildings Evaluated for EMCS	2-2
2-2	Buildings of Similar Construction	2-7
2-3	Electrical Consumption - FY94	2-11
2-4	No. 2 Fuel Oil Consumption - FY94	2-12
2-5	HTHW Consumption - FY94	2-14
2-6	Natural Gas Consumption - FY93	2-15
6-1	Building Economic Summary	6-2
6-2	Energy Savings Summary	6-4
6-3	Implementation Costs	6-5
6-4	System Economics	6-6

LIST OF FIGURES

Figure		Page
2-1	Electrical Consumption - FY94	2-11
2-2	No. 2 Fuel Oil Consumption - FY94	2-13
2-3	HTHW Consumption - FY94	2-14
2-4	Natural Gas Consumption - FY93	2-16
2-5	Trane Tracer 100 EMCS	2-18

APPENDICES

A SCOPE OF WORK AND CONTRACT DOCUMENTS

B EMCS APPLICATIONS PROGRAMS

C TYPICAL HVAC SYSTEM

- C.1 TYPICAL HVAC SYSTEM SCHEMATICS
- C.2 TYPICAL HVAC SYSTEM I/O SUMMARY TABLES
- C.3 TYPICAL HVAC SYSTEM COST ESTIMATES
- C.4 TYPICAL HVAC SYSTEM MANUFACTURERS' CUTSHEETS

D ALGORITHMS AND ENERGY CONSTANTS USED IN ANALYSIS

E HVAC SYSTEM ECONOMIC SUMMARY

F COST ESTIMATES

Volume II

G ENERGY CALCULATIONS, PART 1

- G.1 ENERGY CONSTANT CALCULATIONS
- G.2 ENERGY SAVINGS CALCULATIONS

Volume III

G ENERGY CALCULATIONS, PART 2

Volume IV

H FIELD SURVEY NOTES

I COMPUTER SIMULATIONS

LIST OF ABBREVIATIONS

AC	-	air conditioning
ACC	-	anticipated contract cost
ACCU	-	air cooled condensing unit
ACM	-	asbestos containing material
ACU(s)	-	auxiliary control unit(s)
AHU	-	air handling unit
AI	-	analog input
AO	-	analog output
ASCII	-	American Standard Code for Information Interchange
ASHRAE	-	American Society of Heating, Refrigeration, and Air conditioning Engineers
B/C	-	benefit-to-cost ratio
BCD	-	binary coded decimal
BLDG	-	building
BEACON	-	Building Energy Simulation Program
Btu	-	British thermal units
Btuh	-	British thermal units per hour
B/W	-	black and white
C	-	Celsius
CCC	-	central communications controller
ccf	-	one hundred (100) cubic feet
CCU	-	central control unit

cf	-	cubic foot, cubic feet
cfm	-	cubic feet per minute
CLM	-	command line mnemonic
CLMI	-	command line mnemonic interpreter
COE	-	Corps of Engineers
COS	-	central operator station
CPU	-	central processing unit
CRT	-	cathode ray tube
CU(s)	-	control unit(s)
CWE	-	current working estimate
d	-	day(s)
DCP	-	duty cycle program
DEH	-	Directorate of Engineering and Housing
DHW	-	direct memory access
DI	-	digital input
DO	-	digital output
DOD	-	Department of Defense
DPW	-	Department of Public Works
DTM	-	data transmission media
DX	-	direct expansion
E/C	-	energy-to-cost ratio
ECIP	-	Energy Conservation Investment Program
ECO	-	energy conservation opportunity

EEAP	-	energy engineering analysis program
eff	-	efficiency
elec.	-	electricity
EMC	-	EMC Engineers, Inc.
EMCS	-	energy monitoring and control system
EMI	-	electromagnetic interference
ESCO	-	energy service company
EZ-DOE	-	Building Energy Simulation Program
F	-	Fahrenheit
FO	-	fiber optic(s)
ft	-	foot, feet
ft^2	-	square feet
FY	-	fiscal year
gal	-	gallon(s)
hp	-	horsepower
hr	-	hours(s)
H & V	-	heating and ventilating
HVAC	-	heating, ventilation, and air conditioning
in.	-	inch(es)
I/O	-	input/output
kBtu	-	one thousand British thermal units
kcf	-	one thousand cubic feet

klb	-	one thousand pounds
kva	-	kilovolt - ampere
kW	-	kilowatt, one thousand watts
kWh	-	kilowatt-hour, one thousand watt-hours
lb	-	pound(s)
LCCA	-	life cycle cost analysis
LCCID	-	life cycle cost in design
LED	-	light emitting diode
LPG	-	liquefied petroleum gas
MAU	-	make-up air unit
MBtu	-	one million Btu
MCR	-	master control room
MHz	-	megahertz
Mh	-	man-hours(s)
mo	-	months(s)
MW	-	megawatt, one million watts
MWh	-	megawatt-hour, one million watt-hours
MZAHU	-	Multizone air handling unit
NA	-	Not active or Not applicable
NG	-	natural gas
NOAA	-	National Oceanic and Atmospheric Administration
no.	-	number
OA	-	outside air

O&M	-	operation and maintenance
PC	-	personal computer
PM	-	preventative maintenance
PROM	-	programmable read-only memory
psi(a)(g)	-	pounds per square inch (absolute) (gage)
RAM	-	random access memory
RCU(s)	-	remote control unit(s)
RTC	-	real-time clock
RTDOS/E	-	real-time disk operating system /executive
S&A	-	Supervision and Administration
scfm	-	sea-level cubic feet per minute
SES	-	shared energy savings
SIOH	-	supervision, inspection, and overhead
SIR	-	savings-to-investment ratio
SPW	-	single present worth
sq.ft.	-	square feet
st/sp	-	start/stop
stm	-	steam
SZAHU	-	single zone air handling unit
t	-	ton
temp	-	temperature
TRY	-	test reference year

UA	-	overall heat transfer coefficient (Btu/hr/ft^2/°F)
UCU(s)	-	unitary control unit(s)
UH	-	unit heater
UMCS	-	utility monitoring and control system
UPW	-	uniform present worth
VAV	-	variable air volume
wk	-	week(s)
yr	-	year(s)

APPENDIX H

FIELD SURVEY NOTES

FIELD SURVEY NOTES

BUILDING 36

E M C ENGINEERS, INC.

PROJECT: UMCS STUDY
CLIENT CONTRACT NO.: DACA01-94-D-0033
CLIENT PROJ. ENG: STEVE ROWLEY
LOCATION: FORT DRUM, NY BLDG: 36

EMC NO.: 1406-006
DATE: 10-NOV-94
PREPARED BY: CSW
CHECKED BY: BG
FILE: 36BDS

VI. BUILDING DATA SURVEY OBSERVATIONS

BLDG NO: 36 BLDG NAME: WILCOX DENTAL CLINIC

ZONE NO.	1	FUNCTION: MAIN BLDG (SECTIONS A & B OF PRESENT BUILDING)						
OCCUPANCY HOURS:	M-F	700	TO	1600	SAT	0	TO	0
	SUN	0	TO	0				
PRESENT TEMP	WINTER OCC	70.0 øF		UNOCC	øF			
	SUMMER OCC	øF		UNOCC	øF			

ZONE NO.	2	FUNCTION: ADDITION (SECTION C)						
OCCUPANCY HOURS:	M-F	700	TO	1630	SAT	0	TO	0
	SUN	0	TO	0				
PRESENT TEMP	WINTER OCC	øF		UNOCC	øF			
	SUMMER OCC	øF		UNOCC	øF			

ZONE NO.		FUNCTION:						
OCCUPANCY HOURS:	M-F		TO		SAT		TO	
	SUN		TO					
PRESENT TEMP	WINTER OCC	øF		UNOCC	øF			
	SUMMER OCC	øF		UNOCC	øF			

REMARKS:

E M C ENGINEERS, INC.

PROJECT: UMCS STUDY
CLIENT CONTRACT NO.: DACA01-94-D-0033
CLIENT PROJ. ENG: STEVE ROWLEY
LOCATION: FORT DRUM, NY BLDG: **36**

EMC NO.: 1406-006
DATE: 10-NOV-94
PREPARED BY: **CSW**
CHECKED BY: BG
FILE: **36AC1M**

AIR HANDLING UNIT SURVEY OBSERVATIONS

AC1M	AHU NO.	**MAIN MER**	LOCATION (RM)
	REF. SYS. SERVING AHU	**A & B**	SERVES AREA

UNIT TYPE:

X	SINGLE ZN		2-PIPE FC		4-PIPE FC		UNIT HTR		H&V
	MULTIZONE		DOUBLE DT		REHEAT		INDUCTION		VAV
	NUMBER OF ZONES				OTHER				
	COMMENT:								

NAMEPLATE:

					MFG.				MODEL
2.0	SUPPLY FAN HP				MFG.				MODEL
	RET/EXH FAN HP				MFG.				MODEL
760	CFM-HTG	760	CFM-CLG	**34%**	MIN %OA	**100%**	MAX %OA	**16.7%**	% HTG AREA SERVED
COMMENT:									

COILS:

X	NONE		STM		HW		ELEC		MOD VLV	PREHEAT
~~X~~	NONE		STM	X	HW		ELEC		MOD VLV	HEATING
X	NONE		STM		HW		ELEC		MOD VLV	REHEAT
X	NONE		STM		HW		EVAP MEDIA		MOD VLV	HUMID.
	NONE		DX	**X**	CW				MOD VLV	COOLING

OPERATION:

HOURS ON:	S	M	T	W	T	F	S	COMMENTS
PRESENT START TIME	**0**	**0**	**0**	**0**	**0**	**0**	**0**	TIMECLOCK?
PRESENT STOP TIME	**0**	**2400**	**2400**	**2400**	**2400**	**2400**	**0**	
REQUIRED START TIME	**0**	**700**	**700**	**700**	**700**	**700**	**0**	
REQUIRED STOP TIME	**0**	**1600**	**1600**	**1600**	**1600**	**1600**	**0**	

MONTHS ON:

J	F	M	A	M	J	J	A	S	O	N	D
1	**1**	**1**	**1**	**0**	**0**	**0**	**0**	**0**	**1**	**1**	**1**

CONTROLS:

		PNEUMATIC		ELECTRIC		ELEC'NIC		DDC	COMMENTS
THERMOSTAT TYPE:		SINGLE STPT		DUAL SETPNT		SETBACK			
SPACE SETPOINT (°F):		OCC HEAT		UNOCC HEAT		OCC COOL		UNOCC COOL	
OTHER SETPOINTS (°F):		HOT DECK		COLD DECK		MIXED AIR		OTHER	
DAMPER CONTROL:	**Y**	MIN OA (Y/N)	**Y**	MAX OA (Y/N)	**Y**	RA (Y/N)	**Y**	EA (Y/N)	
		MA CONTROL		ECONO-DB		ECONO-ENT		OTHER	
DEMAND LIMIT:		(Y = YES ; N = NO)							

COMMENTS:

E M C ENGINEERS, INC.

PROJECT: UMCS STUDY
CLIENT CONTRACT NO.: DACA01-94-D-0033
CLIENT PROJ. ENG: STEVE ROWLEY
LOCATION: FORT DRUM, NY BLDG: **36**

EMC NO.: 1406-006
DATE: 10-NOV-94
PREPARED BY: **CSW**
CHECKED BY: BG
FILE: **36AC2M**

AIR HANDLING UNIT SURVEY OBSERVATIONS

AC2M	AHU NO.	**MAIN MER**	LOCATION (RM)
	REF. SYS. SERVING AHU	**A & B**	SERVES AREA

UNIT TYPE:

	SINGLE ZN		2-PIPE FC		4-PIPE FC		UNIT HTR		H&V
X	MULTIZONE		DOUBLE DT		REHEAT		INDUCTION		VAV
4	NUMBER OF ZONES				OTHER				
	COMMENT:								

NAMEPLATE:

					MFG.				MODEL
5.0	SUPPLY FAN HP				MFG.				MODEL
	RET/EXH FAN HP				MFG.				MODEL
4255	CFM-HTG		CFM-CLG	**34%**	MIN %OA	**100%**	MAX %OA	**16.7%**	% HTG AREA SERVED
COMMENT:									

COILS:

X	NONE		STM		HW		ELEC		MOD VLV	PREHEAT
X	NONE		STM		HW		ELEC		MOD VLV	HEATING
X	NONE		STM		HW		ELEC		MOD VLV	REHEAT
X	NONE		STM		HW		EVAP MEDIA		MOD VLV	HUMID.
	NONE		DX	X	CW				MOD VLV	COOLING

OPERATION:

HOURS ON:	S	M	T	W	T	F	S	COMMENTS
PRESENT START TIME	**0**	**0**	**0**	**0**	**0**	**0**	**0**	TIMECLOCK?
PRESENT STOP TIME	**0**	**2400**	**2400**	**2400**	**2400**	**2400**	**0**	
REQUIRED START TIME	**0**	**700**	**700**	**700**	**700**	**700**	**0**	
REQUIRED STOP TIME	**0**	**1600**	**1600**	**1600**	**1600**	**1600**	**0**	

MONTHS ON:

J	F	M	A	M	J	J	A	S	O	N	D
1	**1**	**1**	**1**	**0**	**0**	**0**	**0**	**0**	**1**	**1**	**1**

CONTROLS:

		PNEUMATIC		ELECTRIC		ELEC'NIC		DDC	COMMENTS
THERMOSTAT TYPE:		SINGLE STPT		DUAL SETPNT		SETBACK			
SPACE SETPOINT (°F):		OCC HEAT		UNOCC HEAT		OCC COOL		UNOCC COOL	
OTHER SETPOINTS (°F):		HOT DECK		COLD DECK		MIXED AIR		OTHER	
DAMPER CONTROL:	Y	MIN OA (Y/N)	Y	MAX OA (Y/N)	Y	RA (Y/N)	Y	EA (Y/N)	
		MA CONTROL		ECONO-DB		ECONO-ENT		OTHER	
DEMAND LIMIT:		(Y = YES ; N = NO)							
COMMENTS:									

E M C ENGINEERS, INC.

PROJECT: UMCS STUDY
CLIENT CONTRACT NO.: DACA01-94-D-0033
CLIENT PROJ. ENG: STEVE ROWLEY
LOCATION: FORT DRUM, NY BLDG: **36**

EMC NO.: 1406-006
DATE: 10-NOV-94
PREPARED BY: **CSW**
CHECKED BY: BG
FILE: **36AC3M**

AIR HANDLING UNIT SURVEY OBSERVATIONS

AC3M	AHU NO.	**MAIN MER**	LOCATION (RM)
	REF. SYS. SERVING AHU	**A & B**	SERVES AREA

UNIT TYPE:

	SINGLE ZN		2-PIPE FC		4-PIPE FC		UNIT HTR		H&V
X	MULTIZONE		DOUBLE DT		REHEAT		INDUCTION		VAV
4	NUMBER OF ZONES				OTHER				
	COMMENT:								

NAMEPLATE:

					MFG.				MODEL
10.0	SUPPLY FAN HP				MFG.				MODEL
	RET/EXH FAN HP				MFG.		13%		MODEL
4630	CFM-HTG	4630	CFM-CLG	**37%**	MIN %OA	**100%**	MAX %OA	**16.7%**	% HTG AREA SERVED
COMMENT:								8%	

COILS:

X	NONE		STM		HW		ELEC		MOD VLV	PREHEAT
~~X~~	NONE		STM	X	HW		ELEC		MOD VLV	HEATING
X	NONE		STM		HW		ELEC		MOD VLV	REHEAT
X	NONE		STM		HW		EVAP MEDIA		MOD VLV	HUMID.
	NONE		DX	X	CW				MOD VLV	COOLING

OPERATION:

HOURS ON:	S	M	T	W	T	F	S	COMMENTS
PRESENT START TIME	**0**	**0**	**0**	**0**	**0**	**0**	**0**	TIMECLOCK?
PRESENT STOP TIME	**0**	**2400**	**2400**	**2400**	**2400**	**2400**	**0**	
REQUIRED START TIME	**0**	**700**	**700**	**700**	**700**	**700**	**0**	
REQUIRED STOP TIME	**0**	**1600**	**1600**	**1600**	**1600**	**1600**	**0**	

MONTHS ON:

J	F	M	A	M	J	J	A	S	O	N	D
1	**1**	**1**	**1**	**0**	**0**	**0**	**0**	**0**	**1**	**1**	**1**

CONTROLS:

		PNEUMATIC		ELECTRIC		ELEC'NIC		DDC	COMMENTS
THERMOSTAT TYPE:		SINGLE STPT		DUAL SETPNT		SETBACK			
SPACE SETPOINT (°F):		OCC HEAT		UNOCC HEAT		OCC COOL		UNOCC COOL	
OTHER SETPOINTS (°F):		HOT DECK		COLD DECK		MIXED AIR		OTHER	
DAMPER CONTROL:	Y	MIN OA (Y/N)	Y	MAX OA (Y/N)	Y	RA (Y/N)	Y	EA (Y/N)	
		MA CONTROL		ECONO-DB		ECONO-ENT		OTHER	
DEMAND LIMIT:		(Y = YES ; N = NO)							

COMMENTS:

E M C ENGINEERS, INC.

PROJECT: UMCS STUDY
CLIENT CONTRACT NO.: DACA01-94-D-0033
CLIENT PROJ. ENG: STEVE ROWLEY
LOCATION: FORT DRUM, NY BLDG: **36**

EMC NO.: 1406-006
DATE: 10-NOV-94
PREPARED BY: **CSW**
CHECKED BY: BG
FILE: **36AC4M**

AIR HANDLING UNIT SURVEY OBSERVATIONS

AC4M	AHU NO.	**MAIN MER**	LOCATION (RM)
	REF. SYS. SERVING AHU	**A & B**	SERVES AREA

UNIT TYPE:

	SINGLE ZN		2-PIPE FC		4-PIPE FC		UNIT HTR		H&V
X	MULTIZONE		DOUBLE DT		REHEAT		INDUCTION		VAV
3	NUMBER OF ZONES				OTHER				
	COMMENT:								

NAMEPLATE:

					MFG.				MODEL
10.0	SUPPLY FAN HP				MFG.				MODEL
	RET/EXH FAN HP				MFG.				MODEL
7490	CFM-HTG		CFM-CLG	33%	MIN %OA	100%	MAX %OA	16.7%	% HTG AREA SERVED
COMMENT:								4%?	

COILS:

X	NONE		STM		HW		ELEC		MOD VLV	PREHEAT
X	NONE		STM		HW		ELEC		MOD VLV	HEATING
X	NONE		STM		HW		ELEC		MOD VLV	REHEAT
X	NONE		STM		HW		EVAP MEDIA		MOD VLV	HUMID.
	NONE		DX	X	CW				MOD VLV	COOLING

OPERATION:

HOURS ON:	S	M	T	W	T	F	S	COMMENTS
PRESENT START TIME	0	0	0	0	0	0	0	TIMECLOCK?
PRESENT STOP TIME	0	2400	2400	2400	2400	2400	0	
REQUIRED START TIME	0	700	700	700	700	700	0	
REQUIRED STOP TIME	0	1600	1600	1600	1600	1600	0	

MONTHS ON:

J	F	M	A	M	J	J	A	S	O	N	D
1	1	1	1	0	0	0	0	0	1	1	1

CONTROLS:

		PNEUMATIC		ELECTRIC		ELEC'NIC		DDC	COMMENTS
THERMOSTAT TYPE:		SINGLE STPT		DUAL SETPNT		SETBACK			
SPACE SETPOINT (°F):		OCC HEAT		UNOCC HEAT		OCC COOL		UNOCC COOL	
OTHER SETPOINTS (°F):		HOT DECK		COLD DECK		MIXED AIR		OTHER	
DAMPER CONTROL:	Y	MIN OA (Y/N)	Y	MAX OA (Y/N)	Y	RA (Y/N)	Y	EA (Y/N)	
		MA CONTROL		ECONO-DB		ECONO-ENT		OTHER	
DEMAND LIMIT:		(Y = YES ; N = NO)							
COMMENTS:									

E M C ENGINEERS, INC.

PROJECT: UMCS STUDY
CLIENT CONTRACT NO.: DACA01-94-D-0033
CLIENT PROJ. ENG: STEVE ROWLEY
LOCATION: FORT DRUM, NY BLDG:

EMC NO.: 1406-006
DATE: 10-NOV-94
PREPARED BY: **CSW**
CHECKED BY: BG
FILE: **36ACC1M**

REFRIGERATION EQUIPMENT SURVEY OBSERVATIONS

ACC1M	CHILLER/COMPRESSOR NO.	OUTSIDE MAIN MER	LOCATION (RM)

UNIT TYPE:

	CENTRIFUGAL WITH WATER SIDE COOLING TOWER						OTHER
	RECIPROCATING WITH WATER SIDE COOLING TOWER						AHU'S SERVED
X	RECIPROCATING WITH AIR COOLED CONDENSING UNIT						AC1,2,3,4
	ABSORBTION WITH WATER SIDE COOLING TOWER						
	AIR COOLED CONDENSING UNIT						
X	CHW		DX		OTHER		

NAMEPLATE:

CHILLER **TRANE**		MFG.	**CGAA0254MDSICD3C4P362ER**		MODEL				SERIAL NO.
	VOLTS		AMPS		PH		HZ	**20.8**	CAPACITY (TONS)
TOWER		MFG.			MODEL				# OF FANS
	VOLTS		AMPS		PH		HZ		HP each
CW PUMP		MFG.			MODEL				SERIAL NO.
	VOLTS		AMPS		PH		HZ	**7.5**	HP
CNW PUMP		MFG.			MODEL				SERIAL NO.
	VOLTS		AMPS		PH		HZ		HP
COMMENTS:									

OPERATION:

HOURS ON:	S	M	T	W	T	F	S	COMMENT
PRESENT START TIME	**0**	**0**	**0**	**0**	**0**	**0**	**0**	TIMECLOCK?
PRESENT STOP TIME	**0**	**2400**	**2400**	**2400**	**2400**	**2400**	**0**	
REQUIRED START TIME	**0**	**700**	**700**	**700**	**700**	**700**	**0**	
REQUIRED STOP TIME	**0**	**1600**	**1600**	**1600**	**1600**	**1600**	**0**	

MONTHS ON:

J	F	M	A	M	J	J	A	S	O	N	D
0	**0**	**0**	**0**	**1**	**1**	**1**	**1**	**1**	**0**	**0**	**0**

CONTROLS:

		PNEUMATIC		ELECTRIC		ELEC'NIC		DDC	COMMENTS
SETPOINTS		CWS (oF)		CWR (oF)		CNWS (oF)		CNWR (oF)	
PANEL INDICATORS									
- PRESSURE		LITE-HI		LITE-LOW		GAUGES			
- TEMPERATURE		LITE-HI		LITE-LOW		GAUGES			
- OTHER									
COMMENTS:									

E M C ENGINEERS, INC.

PROJECT: UMCS STUDY
CLIENT CONTRACT NO.: DACA01-94-D-0033
CLIENT PROJ. ENG: STEVE ROWLEY
LOCATION: FORT DRUM, NY BLDG:

EMC NO.: 1406-006
DATE: 10-NOV-94
PREPARED BY: **CSW**
CHECKED BY: BG
FILE: **36ACC2M**

REFRIGERATION EQUIPMENT SURVEY OBSERVATIONS

ACC2M	CHILLER/COMPRESSOR NO.	**OUTSIDE MAIN MER**	LOCATION (RM)

UNIT TYPE:

	CENTRIFUGAL WITH WATER SIDE COOLING TOWER		OTHER
	RECIPROCATING WITH WATER SIDE COOLING TOWER		AHU'S SERVED
X	RECIPROCATING WITH AIR COOLED CONDENSING UNIT		AC1,2,3,4
	ABSORBTION WITH WATER SIDE COOLING TOWER		
	AIR COOLED CONDENSING UNIT		

X	CHW		DX		OTHER		

NAMEPLATE:

CHILLER **TRANE**		MFG.	**CGAA0254MDSICD3C4P362ER**		MODEL				SERIAL NO.
	VOLTS		AMPS		PH		HZ	**20.8**	CAPACITY (TONS)
TOWER		MFG.			MODEL				# OF FANS
	VOLTS		AMPS		PH		HZ		HP each
CW PUMP		MFG.			MODEL				SERIAL NO.
	VOLTS		AMPS		PH		HZ	**7.5**	HP
CNW PUMP		MFG.			MODEL				SERIAL NO.
	VOLTS		AMPS		PH		HZ		HP

COMMENTS:

OPERATION:

HOURS ON:	S	M	T	W	T	F	S	COMMENT
PRESENT START TIME	**0**	**0**	**0**	**0**	**0**	**0**	**0**	TIMECLOCK?
PRESENT STOP TIME	**0**	**2400**	**2400**	**2400**	**2400**	**2400**	**0**	
REQUIRED START TIME	**0**	**700**	**700**	**700**	**700**	**700**	**0**	
REQUIRED STOP TIME	**0**	**1600**	**1600**	**1600**	**1600**	**1600**	**0**	

MONTHS ON:

J	F	M	A	M	J	J	A	S	O	N	D
0	**0**	**0**	**0**	**1**	**1**	**1**	**1**	**1**	**0**	**0**	**0**

CONTROLS:

		PNEUMATIC		ELECTRIC		ELEC'NIC		DDC	COMMENTS
SETPOINTS		CWS (oF)		CWR (oF)		CNWS (oF)		CNWR (oF)	
PANEL INDICATORS									
- PRESSURE		LITE-HI		LITE-LOW		GAUGES			
- TEMPERATURE		LITE-HI		LITE-LOW		GAUGES			
- OTHER									

COMMENTS:

E M C ENGINEERS, INC.

PROJECT: UMCS STUDY
CLIENT CONTRACT NO.: DACA01-94-D-0033
CLIENT PROJ. ENG: STEVE ROWLEY
LOCATION: FORT DRUM, NY BLDG: **36**

EMC NO.: 1406-006
DATE: Dec-94
PREPARED BY: **CSW**
CHECKED BY: BG
FILE: **36AHU1A**

AIR HANDLING UNIT SURVEY OBSERVATIONS

AHU1A	AHU NO.	**ADDITION MER**	LOCATION (RM)
	REF. SYS. SERVING AHU	**ADDITION (AREA C)**	SERVES AREA

UNIT TYPE:

	SINGLE ZN		2-PIPE FC		4-PIPE FC		UNIT HTR		H&V
X	MULTIZONE		DOUBLE DT		REHEAT		INDUCTION		VAV
6	NUMBER OF ZONES				OTHER				
	COMMENT:								

NAMEPLATE:

					MFG.				MODEL
7.5	SUPPLY FAN HP				MFG.				MODEL
	RET/EXH FAN HP				MFG.	100%			MODEL
6950	CFM-HTG	[illegible]	CFM-CLG	**23%**	MIN %OA	**10000%**	MAX %OA	**33.0%**	% HTG AREA SERVED
COMMENT:								15%	

COILS:

X	NONE		STM		HW		ELEC		MOD VLV	PREHEAT
	NONE		STM	X	HW		ELEC		MOD VLV	HEATING
X	NONE		STM		HW		ELEC		MOD VLV	REHEAT
X	NONE		STM		HW		EVAP MEDIA		MOD VLV	HUMID.
	NONE	X	DX		CW				MOD VLV	COOLING

OPERATION:

HOURS ON:	S	M	T	W	T	F	S	COMMENTS
PRESENT START TIME	**0**	**0**	**0**	**0**	**0**	**0**	**0**	TIMECLOCK?
PRESENT STOP TIME	**0**	**2400**	**2400**	**2400**	**2400**	**2400**	**0**	
REQUIRED START TIME	**0**	**700**	**700**	**700**	**700**	**700**	**0**	
REQUIRED STOP TIME	**0**	**1600**	**1600**	**1600**	**1600**	**1600**	**0**	

MONTHS ON:

J	F	M	A	M	J	J	A	S	O	N	D
0	**0**	**0**	**0**	**1**	**1**	**1**	**1**	**1**	**0**	**0**	**0**

CONTROLS:

	X	PNEUMATIC		ELECTRIC		ELEC'NIC		DDC	COMMENTS
THERMOSTAT TYPE:		SINGLE STPT		DUAL SETPNT		SETBACK			
SPACE SETPOINT (°F):		OCC HEAT		UNOCC HEAT		OCC COOL		UNOCC COOL	
OTHER SETPOINTS (°F):		HOT DECK		COLD DECK		MIXED AIR		OTHER	
DAMPER CONTROL:	Y	MIN OA (Y/N)	Y	MAX OA (Y/N)	Y	RA (Y/N)	Y	EA (Y/N)	
		MA CONTROL		ECONO-DB		ECONO-ENT		OTHER	
DEMAND LIMIT:		(Y = YES ; N = NO)							

COMMENTS: **ADDITION HAS A HUMIDIFIER WITH 50 LBS/HR CAPACITY**

E M C ENGINEERS, INC.

PROJECT: UMCS STUDY
CLIENT CONTRACT NO.: DACA01-94-D-0033
CLIENT PROJ. ENG: STEVE ROWLEY
LOCATION: FORT DRUM, NY BLDG:

EMC NO.: 1406-006
DATE: 10-NOV-94
PREPARED BY: **CSW**
CHECKED BY: BG
FILE: **36B1&2M**

BOILER & CONVERTER SURVEY OBSERVATIONS

B1&2M	BOILER/CONVERTER NO.	**MAIN MER**	LOCATION (RM)
	SOURCE OF HEATING (PLANT)	MAIN BLDG (SECTIONS A & B)	SERVES AREA

UNIT TYPE:

	STEAM		PSIG	X	HW		TEMP.	BOILER TYPE:
X	NO.2 OIL		NO.6 OIL		N.GAS		ELEC	FUELS:
	STM/HW		HTHW/HW		HTHW/STM		OTHER	CONVERTER TYPE:
	SPACE HEAT		DHW		OTHER			USE:
COMMENT:							26% ~~67%~~	% HTG AREA SERVED
							Each ~~8~~	BB RADIATION ONLY

NAMEPLATE:

	MFG.		MODEL	**1004000**	CAPACITY OUTPUT (BTUH)
					CAPACITY INPUT (BTUH)
	MFG.		MODEL	**1004000**	CAPACITY OUTPUT (BTUH)
					CAPACITY INPUT (BTUH)
0.1667	HW PUMP 1 - HP	**ERR**	MFG.		MODEL
0.1667	HW PUMP 2 - HP		MFG.		MODEL
	HW PUMP 3 - HP		MFG.		MODEL
COMMENT:					

OPERATION:

HOURS ON:	S	M	T	W	T	F	S	COMMENT
PRESENT START TIME	**0**	**0**	**0**	**0**	**0**	**0**	**0**	TIMECLOCK?
PRESENT STOP TIME	**0**	**2400**	**2400**	**2400**	**2400**	**2400**	**0**	
REQUIRED START TIME	**0**	**700**	**700**	**700**	**700**	**700**	**0**	
REQUIRED STOP TIME	**0**	**1600**	**1600**	**1600**	**1600**	**1600**	**0**	

MONTHS ON:

J	F	M	A	M	J	J	A	S	O	N	D
1	**1**	**1**	**1**	**0**	**0**	**0**	**0**	**0**	**1**	**1**	**1**

CONTROLS:

		PNEUMATIC		ELECTRIC		ELEC'NIC		DDC	COMMENTS
SETPOINTS		PSIG		HW SUPPLY					
RESET CONTROL (oF):		HW HIGH		HW LOW		OA LOW		OA HIGH	
BURNER CONTROLS		O2 TRIM (Y/N)		OTHER					
COMMENTS:									

E M C ENGINEERS, INC.

PROJECT: UMCS STUDY
CLIENT CONTRACT NO.: DACA01-94-D-0033
CLIENT PROJ. ENG: STEVE ROWLEY
LOCATION: FORT DRUM, NY BLDG: **36**

EMC NO.: 1406-006
DATE: 10-NOV-94
PREPARED BY: **CSW**
CHECKED BY: BG
FILE: **36B3M**

BOILER & CONVERTER SURVEY OBSERVATIONS

B3M	BOILER/CONVERTER NO.	**MAIN MER**	LOCATION (RM)
	SOURCE OF HEATING (PLANT)	MAIN BLDG (SECTIONS A & B)	SERVES AREA

UNIT TYPE:

X	STEAM		PSIG		HW		TEMP.		BOILER TYPE:
	NO.2 OIL		NO.6 OIL		N.GAS	X	ELEC		FUELS:
	STM/HW		HTHW/HW		HTHW/STM		OTHER		CONVERTER TYPE:
	SPACE HEAT		DHW		OTHER				USE:
COMMENT:							**67%**	% HTG AREA SERVED	
								BB RADIATION ONLY	

NAMEPLATE:

	MFG.		MODEL	**381150**	CAPACITY OUTPUT (BTUH)
					CAPACITY INPUT (BTUH)
	MFG.		MODEL		CAPACITY OUTPUT (BTUH)
					CAPACITY INPUT (BTUH)
	HW PUMP 1 - HP		MFG.		MODEL
	HW PUMP 2 - HP		MFG.		MODEL
	HW PUMP 3 - HP		MFG.		MODEL
COMMENT:					

OPERATION:

HOURS ON:	S	M	T	W	T	F	S	COMMENT
PRESENT START TIME	**0**	**0**	**0**	**0**	**0**	**0**	**0**	TIMECLOCK?
PRESENT STOP TIME	**0**	**2400**	**2400**	**2400**	**2400**	**2400**	**0**	
REQUIRED START TIME	**0**	**700**	**700**	**700**	**700**	**700**	**0**	
REQUIRED STOP TIME	**0**	**1600**	**1600**	**1600**	**1600**	**1600**	**0**	

MONTHS ON:

J	F	M	A	M	J	J	A	S	O	N	D
1	**1**	**1**	**1**	**0**	**0**	**0**	**0**	**0**	**1**	**1**	**1**

CONTROLS:

		PNEUMATIC		ELECTRIC		ELEC'NIC		DDC	COMMENTS
SETPOINTS		PSIG		HW SUPPLY					
RESET CONTROL (oF):		HW HIGH		HW LOW		OA LOW		OA HIGH	
BURNER CONTROLS		O2 TRIM (Y/N)		OTHER					
COMMENTS:									

E M C ENGINEERS, INC.

PROJECT: UMCS STUDY
CLIENT CONTRACT NO.: DACA01-94-D-0033
CLIENT PROJ. ENG: STEVE ROWLEY
LOCATION: FORT DRUM, NY BLDG: **36**

EMC NO.: 1406-006
DATE: 10-NOV-94
PREPARED BY: **CSW**
CHECKED BY: BG
FILE: **36HV1M**

AIR HANDLING UNIT SURVEY OBSERVATIONS

HV1	AHU NO.		LOCATION (RM)
	REF. SYS. SERVING AHU	**MAIN BLDG**	SERVES AREA

UNIT TYPE:

X	SINGLE ZN		2-PIPE FC		4-PIPE FC		UNIT HTR	**X**	H&V
	MULTIZONE		DOUBLE DT		REHEAT		INDUCTION		VAV
	NUMBER OF ZONES				OTHER				
	COMMENT:								

NAMEPLATE:

				MFG.				MODEL
1.0	SUPPLY FAN HP			MFG.				MODEL
	RET/EXH FAN HP			MFG.		2.5		MODEL
600	CFM-HTG		CFM-CLG	**100%**	MIN %OA	**100%**	MAX %OA	**5.0%**	% HTG AREA SERVED
COMMENT:									

COILS:

X	NONE		STM		HW		ELEC		MOD VLV	PREHEAT
	NONE		STM	**X**	HW		ELEC		MOD VLV	HEATING
X	NONE		STM		HW		ELEC		MOD VLV	REHEAT
X	NONE		STM		HW		EVAP MEDIA		MOD VLV	HUMID.
X	NONE		DX		CW				MOD VLV	COOLING

OPERATION:

HOURS ON:	S	M	T	W	T	F	S	COMMENTS
PRESENT START TIME	**0**	**0**	**0**	**0**	**0**	**0**	**0**	TIMECLOCK?
PRESENT STOP TIME	**0**	**2400**	**2400**	**2400**	**2400**	**2400**	**0**	
REQUIRED START TIME	**0**	**700**	**700**	**700**	**700**	**700**	**0**	
REQUIRED STOP TIME	**0**	**1600**	**1600**	**1600**	**1600**	**1600**	**0**	

MONTHS ON:

J	F	M	A	M	J	J	A	S	O	N	D
1	**1**	**1**	**1**	**0**	**0**	**0**	**0**	**0**	**1**	**1**	**1**

CONTROLS:

		PNEUMATIC		ELECTRIC		ELEC'NIC		DDC	COMMENTS
THERMOSTAT TYPE:		SINGLE STPT		DUAL SETPNT		SETBACK			
SPACE SETPOINT (°F):		OCC HEAT		UNOCC HEAT		OCC COOL		UNOCC COOL	
OTHER SETPOINTS (°F):		HOT DECK		COLD DECK		MIXED AIR		OTHER	
DAMPER CONTROL:	**N**	MIN OA (Y/N)	**Y**	MAX OA (Y/N)	**N**	RA (Y/N)	**Y**	EA (Y/N)	
		MA CONTROL		ECONO-DB		ECONO-ENT		OTHER	
DEMAND LIMIT:		(Y = YES ; N = NO)							
COMMENTS:									

FIELD SURVEY NOTES

BUILDING 119

E M C ENGINEERS, INC.

PROJECT: UMCS STUDY
CLIENT CONTRACT NO.: DACA01-94-D-0033
CLIENT PROJ. ENG: STEVE ROWLEY
LOCATION: FORT DRUM, NY BLDG: 119

EMC NO.: 1406-006
DATE: 11/07/94
PREPARED BY: BG
CHECKED BY:
FILE: 119BDS

VI. BUILDING DATA SURVEY OBSERVATIONS

BLDG NO: 119 BLDG NAME: BN HQ & CLASSROOM

ZONE NO.		FUNCTION: ZONE OF P175						
OCCUPANCY HOURS:	M-F	700	TO	1800	SAT	0	TO	0
	SUN	0	TO	0				
PRESENT TEMP	WINTER OCC	71.0 øF		UNOCC	øF			
	SUMMER OCC	øF		UNOCC	øF			

ZONE NO.		FUNCTION:						
OCCUPANCY HOURS:	M-F		TO		SAT		TO	
	SUN		TO					
PRESENT TEMP	WINTER OCC	øF		UNOCC	øF			
	SUMMER OCC	øF		UNOCC	øF			

ZONE NO.		FUNCTION:						
OCCUPANCY HOURS:	M-F		TO		SAT		TO	
	SUN		TO					
PRESENT TEMP	WINTER OCC	øF		UNOCC	øF			
	SUMMER OCC	øF		UNOCC	øF			

REMARKS:

	FT	BTUH/	BTUH
HV1			68464
HV2			68464
HV3			39123
FIN TUBE		930	
COVECTOR		1600	
CH1			17700
CH2			17700
UH1			31200

E M C ENGINEERS, INC.

PROJECT: UMCS STUDY
CLIENT CONTRACT NO.: DACA01-94-D-0033
CLIENT PROJ. ENG: STEVE ROWLEY
LOCATION: FORT DRUM, NY BLDG: **119**

EMC NO.: 1406-006
DATE: Dec-94
PREPARED BY: **CSW**
CHECKED BY: BG
FILE: **119HV1**

AIR HANDLING UNIT SURVEY OBSERVATIONS

HV1	AHU NO.	**MER**	LOCATION (RM)
	REF. SYS. SERVING AHU	**CLASSROOMS**	SERVES AREA

UNIT TYPE:

X	SINGLE ZN		2-PIPE FC		4-PIPE FC		UNIT HTR	**1**	H&V
	MULTIZONE		DOUBLE DT		REHEAT		INDUCTION		VAV
	NUMBER OF ZONES				OTHER				
	COMMENT:								

NAMEPLATE:

	JOHN ZINK				MFG.	**HWBC- 4UL**			MODEL
0.8	SUPPLY FAN HP				MFG.				MODEL
	RET/EXH FAN HP				MFG.				MODEL
1800	CFM-HTG		CFM-CLG	**100%**	MIN %OA	**100%**	MAX %OA	**10.0%**	% HTG AREA SERVED
COMMENT:									

COILS:

X	NONE		STM		HW		ELEC		MOD VLV	PREHEAT
	NONE		STM	**X**	HW		ELEC		MOD VLV	HEATING
X	NONE		STM		HW		ELEC		MOD VLV	REHEAT
X	NONE		STM		HW		EVAP MEDIA		MOD VLV	HUMID.
X	NONE		DX		CW				MOD VLV	COOLING

OPERATION:

HOURS ON:	S	M	T	W	T	F	S	COMMENTS
PRESENT START TIME	**0**	**600**	**600**	**600**	**600**	**600**	**0**	TIMECLOCK?
PRESENT STOP TIME	**0**	**1800**	**1800**	**1800**	**1800**	**1800**	**0**	
REQUIRED START TIME	**0**	**600**	**600**	**600**	**600**	**600**	**0**	
REQUIRED STOP TIME	**0**	**1800**	**1800**	**1800**	**1800**	**1800**	**0**	

MONTHS ON:

J	F	M	A	M	J	J	A	S	O	N	D
1	**1**	**1**	**1**	X **0**	X **0**	X **0**	X **0**	X **0**	**1**	**1**	**1**

X - Ventilation

CONTROLS:

		PNEUMATIC		ELECTRIC		ELEC'NIC		DDC	COMMENTS
THERMOSTAT TYPE:		SINGLE STPT		DUAL SETPNT		SETBACK			
SPACE SETPOINT (°F):		OCC HEAT		UNOCC HEAT		OCC COOL		UNOCC COOL	
OTHER SETPOINTS (°F):		HOT DECK		COLD DECK		MIXED AIR		OTHER	
DAMPER CONTROL:	**N**	MIN OA (Y/N)	**Y**	MAX OA (Y/N)	**N**	RA (Y/N)	**Y**	EA (Y/N)	
		MA CONTROL		ECONO-DB		ECONO-ENT		OTHER	
DEMAND LIMIT:		(Y = YES ; N = NO)							

COMMENTS:

HV-1&2 68464 BTUH (EACH)

HV-3 39123 BTUH

E M C ENGINEERS, INC.

PROJECT: UMCS STUDY
CLIENT CONTRACT NO.: DACA01-94-D-0033
CLIENT PROJ. ENG: STEVE ROWLEY
LOCATION: FORT DRUM, NY BLDG: **119**

EMC NO.: 1406-006
DATE: Dec-94
PREPARED BY: **CSW/BG**
CHECKED BY: BG
FILE: **119HV2**

AIR HANDLING UNIT SURVEY OBSERVATIONS

HV2	AHU NO.	**MER**	LOCATION (RM)
	REF. SYS. SERVING AHU	**CLASSROOMS**	SERVES AREA

UNIT TYPE:

X	SINGLE ZN		2-PIPE FC		4-PIPE FC		UNIT HTR	**1**	H&V
	MULTIZONE		DOUBLE DT		REHEAT		INDUCTION		VAV
	NUMBER OF ZONES				OTHER				
	COMMENT:								

NAMEPLATE:

	JOHN ZINK				MFG.	**HWBC- 4UL**			MODEL
0.8	SUPPLY FAN HP				MFG.				MODEL
	RET/EXH FAN HP				MFG.				MODEL
1800	CFM-HTG		CFM-CLG	**100%**	MIN %OA	**100%**	MAX %OA	**10.0%**	% HTG AREA SERVED
COMMENT:									

COILS:

X	NONE		STM		HW		ELEC		MOD VLV	PREHEAT
	NONE		STM	**X**	HW		ELEC		MOD VLV	HEATING
X	NONE		STM		HW		ELEC		MOD VLV	REHEAT
X	NONE		STM		HW		EVAP MEDIA		MOD VLV	HUMID.
X	NONE		DX		CW				MOD VLV	COOLING

OPERATION:

HOURS ON:	S	M	T	W	T	F	S	COMMENTS
PRESENT START TIME	**0**	**600**	**600**	**600**	**600**	**600**	**0**	TIMECLOCK?
PRESENT STOP TIME	**0**	**1800**	**1800**	**1800**	**1800**	**1800**	**0**	
REQUIRED START TIME	**0**	**600**	**600**	**600**	**600**	**600**	**0**	
REQUIRED STOP TIME	**0**	**1800**	**1800**	**1800**	**1800**	**1800**	**0**	

MONTHS ON:

J	F	M	A	M	J	J	A	S	O	N	D
1	**1**	**1**	**1**	X **0**	X **0**	X **0**	X **0**	X **0**	**1**	**1**	**1**

CONTROLS:

		PNEUMATIC		ELECTRIC		ELEC'NIC		DDC	COMMENTS
THERMOSTAT TYPE:		SINGLE STPT		DUAL SETPNT		SETBACK			
SPACE SETPOINT (°F):		OCC HEAT		UNOCC HEAT		OCC COOL		UNOCC COOL	
OTHER SETPOINTS (°F):		HOT DECK		COLD DECK		MIXED AIR		OTHER	
DAMPER CONTROL:	**N**	MIN OA (Y/N)	**Y**	MAX OA (Y/N)	**N**	RA (Y/N)	**Y**	EA (Y/N)	
		MA CONTROL		ECONO-DB		ECONO-ENT		OTHER	
DEMAND LIMIT:		(Y = YES ; N = NO)							

COMMENTS:

HV-1&2 68464 BTUH (EACH)

HV-3 39123 BTUH

E M C ENGINEERS, INC.

PROJECT: UMCS STUDY
CLIENT CONTRACT NO.: DACA01-94-D-0033
CLIENT PROJ. ENG: STEVE ROWLEY
LOCATION: FORT DRUM, NY BLDG: **119**

EMC NO.: 1406-006
DATE: Dec-94
PREPARED BY: **CSW**
CHECKED BY: BG
FILE: **119HV3**

AIR HANDLING UNIT SURVEY OBSERVATIONS

HV3	AHU NO.	**MER**	LOCATION (RM)
	REF. SYS. SERVING AHU	**LOBBY**	SERVES AREA

UNIT TYPE:

X	SINGLE ZN		2-PIPE FC		4-PIPE FC		UNIT HTR	**1**	H&V
	MULTIZONE		DOUBLE DT		REHEAT		INDUCTION		VAV
	NUMBER OF ZONES				OTHER				
	COMMENT:								

NAMEPLATE:

JOHN ZINK				MFG.	**HWBC- 4UL**			MODEL
0.3	SUPPLY FAN HP			MFG.				MODEL
	RET/EXH FAN HP			MFG.				MODEL
1000	CFM-HTG		CFM-CLG	**100%** MIN %OA	**100%**	MAX %OA	**5.0%**	% HTG AREA SERVED
COMMENT:								

COILS:

X	NONE		STM		HW		ELEC		MOD VLV	PREHEAT
	NONE		STM	**X**	HW		ELEC		MOD VLV	HEATING
X	NONE		STM		HW		ELEC		MOD VLV	REHEAT
X	NONE		STM		HW		EVAP MEDIA		MOD VLV	HUMID.
X	NONE		DX		CW				MOD VLV	COOLING

OPERATION:

HOURS ON:	S	M	T	W	T	F	S	COMMENTS
PRESENT START TIME	**0**	**600**	**600**	**600**	**600**	**600**	**0**	TIMECLOCK?
PRESENT STOP TIME	**0**	**1800**	**1800**	**1800**	**1800**	**1800**	**0**	
REQUIRED START TIME	**0**	**600**	**600**	**600**	**600**	**600**	**0**	
REQUIRED STOP TIME	**0**	**1800**	**1800**	**1800**	**1800**	**1800**	**0**	

MONTHS ON:

J	F	M	A	M	J	J	A	S	O	N	D
1	**1**	**1**	**1**	X **0**	X **0**	X **0**	X **0**	X **0**	**1**	**1**	**1**

CONTROLS:

		PNEUMATIC		ELECTRIC		ELEC'NIC		DDC	COMMENTS
THERMOSTAT TYPE:		SINGLE STPT		DUAL SETPNT		SETBACK			
SPACE SETPOINT (°F):		OCC HEAT		UNOCC HEAT		OCC COOL		UNOCC COOL	
OTHER SETPOINTS (°F):		HOT DECK		COLD DECK		MIXED AIR		OTHER	
DAMPER CONTROL:	**N**	MIN OA (Y/N)	**Y**	MAX OA (Y/N)	**N**	RA (Y/N)	**Y**	EA (Y/N)	
		MA CONTROL		ECONO-DB		ECONO-ENT		OTHER	
DEMAND LIMIT:		(Y = YES ; N = NO)							

COMMENTS:

HV-1&2 68464 BTUH (EACH)

HV-3 39123 BTUH

E M C ENGINEERS, INC.

PROJECT: UMCS STUDY
CLIENT CONTRACT NO.: DACA01-94-D-0033
CLIENT PROJ. ENG: STEVE ROWLEY
LOCATION: FORT DRUM, NY BLDG: **119**

EMC NO.: 1406-006
DATE: 09-Nov
PREPARED BY: **BG**
CHECKED BY:
FILE: **119HXAHU**

BOILER & CONVERTER SURVEY OBSERVATIONS

HX-1	BOILER/CONVERTER NO.	**MER**	LOCATION (RM)
COGEN	SOURCE OF HEATING (PLANT)	**BLDG UH/AHU**	SERVES AREA

UNIT TYPE:

	STEAM		PSIG		HW		TEMP.		BOILER TYPE:
	NO.2 OIL		NO.6 OIL		N.GAS		ELEC		FUELS:
	STM/HW	X	HTHW/HW		HTHW/STM		OTHER		CONVERTER TYPE:
X	SPACE HEA		DHW		OTHER				USE:
COMMENT:	~~170 EWT, 200LWT~~								% HTG AREA SERVED
	GLYCOL HOT WATER								BB RADIATION ONLY

NAMEPLATE:

B&G	MFG.		MODEL	**176051**	CAPACITY OUTPUT (BTUH)	
					CAPACITY INPUT (BTUH)	
	MFG.		MODEL		CAPACITY OUTPUT (BTUH)	
					CAPACITY INPUT (BTUH)	
2	HW PUMP 1 - HP		MFG.			MODEL
	HW PUMP 2 - HP		MFG.			MODEL
	HW PUMP 3 - HP		MFG.			MODEL
COMMENT:	**SECOND HP PUMP AS BACKUP**					
	PACKAGE CONVERTOR					

OPERATION:

HOURS ON:	S	M	T	W	T	F	S	COMMENT
PRESENT START TIME	**O**	**600**	**600**	**600**	**600**	**600**	**O**	TIMECLOCK?
PRESENT STOP TIME	**O**	**1800**	**1800**	**1800**	**1800**	**1800**	**O**	
REQUIRED START TIME								
REQUIRED STOP TIME								

MONTHS ON:

J	F	M	A	M	J	J	A	S	O	N	D
1	**1**	**1**	**1**						**1**	**1**	**1**

CONTROLS:

	X	PNEUMATIC		ELECTRIC		ELEC'NIC		DDC	COMMENTS
SETPOINTS		PSIG	**200**	HW SUPPLY					
RESET CONTROL (oF):		HW HIGH		HW LOW		OA LOW		OA HIGH	
BURNER CONTROLS		O2 TRIM (Y/N)		OTHER					
COMMENTS:									

E M C ENGINEERS, INC.

PROJECT: UMCS STUDY
CLIENT CONTRACT NO.: DACA01-94-D-0033
CLIENT PROJ. ENG: STEVE ROWLEY
LOCATION: FORT DRUM, NY BLDG: **119**

EMC NO.: 1406-006
DATE: Nov-94
PREPARED BY: **BG**
CHECKED BY:
FILE: **119HXPER**

BOILER & CONVERTER SURVEY OBSERVATIONS

HX-2	BOILER/CONVERTER NO.	**MER**	LOCATION (RM)
COGEN	SOURCE OF HEATING (PLANT)	**PEREMETER**	SERVES AREA

UNIT TYPE:

	STEAM		PSIG		HW		TEMP.		BOILER TYPE:
	NO.2 OIL		NO.6 OIL		N.GAS		ELEC		FUELS:
	STM/HW	X	HTHW/HW		HTHW/STM		OTHER		CONVERTER TYPE:
X	SPACE HEA		DHW		OTHER				USE:
COMMENT:	~~170 EWT, 200LWT~~						**75%**	% HTG AREA SERVED	
								BB RADIATION ONLY	

NAMEPLATE:

B&G	MFG.		MODEL	**230000**	CAPACITY OUTPUT (BTUH)
					CAPACITY INPUT (BTUH)
	MFG.		MODEL		CAPACITY OUTPUT (BTUH)
					CAPACITY INPUT (BTUH)
2	HW PUMP 1 - HP		MFG.		MODEL
	HW PUMP 2 - HP		MFG.		MODEL
	HW PUMP 3 - HP		MFG.		MODEL
COMMENT:	**SECOND 1 HP PUMP AS BACKUP**				
	PACKAGE CONVERTOR				

OPERATION:

HOURS ON:	S	M	T	W	T	F	S	COMMENT
PRESENT START TIME	**0**	**600**	**600**	**600**	**600**	**600**	**0**	TIMECLOCK?
PRESENT STOP TIME	**0**	**1800**	**1800**	**1800**	**1800**	**1800**	**0**	
REQUIRED START TIME								
REQUIRED STOP TIME								

MONTHS ON:

J	F	M	A	M	J	J	A	S	O	N	D
1	**1**	**1**	**1**	**1**					**1**	**1**	**1**

CONTROLS:

	X	PNEUMATIC		ELECTRIC		ELEC'NIC		DDC	COMMENTS
SETPOINTS		PSIG	**200**	HW SUPPLY					
RESET CONTROL (oF):		HW HIGH		HW LOW		OA LOW		OA HIGH	
BURNER CONTROLS		O2 TRIM (Y/N)		OTHER					
COMMENTS:									

FIELD SURVEY NOTES

BUILDING 173

E M C ENGINEERS, INC.

PROJECT: UMCS STUDY
CLIENT CONTRACT NO.: DACA01-94-D-0033
CLIENT PROJ. ENG: STEVE ROWLEY
LOCATION: FORT DRUM, NY BLDG: BARRACKS

EMC NO.: 1406-006
DATE: Dec-94
PREPARED BY: CSW
CHECKED BY: BG
FILE: 173BDS

VI. BUILDING DATA SURVEY OBSERVATIONS

BLDG NO: 173 BLDG NAME: BARRACKS, ZONE OF 175

ZONE NO.	1	FUNCTION: ENTIRE BLDG						
OCCUPANCY HOURS:	M-F	0	TO	2400	SAT	0	TO	2400
	SUN	0	TO	2400				
PRESENT TEMP	WINTER OCC	70.0 øF		UNOCC	70.0 øF			
	SUMMER OCC	øF		UNOCC	øF			

ZONE NO.		FUNCTION:						
OCCUPANCY HOURS:	M-F		TO		SAT		TO	
	SUN		TO					
PRESENT TEMP	WINTER OCC	øF		UNOCC	øF			
	SUMMER OCC	øF		UNOCC	øF			

ZONE NO.		FUNCTION:						
OCCUPANCY HOURS:	M-F		TO		SAT		TO	
	SUN		TO					
PRESENT TEMP	WINTER OCC	øF		UNOCC	øF			
	SUMMER OCC	øF		UNOCC	øF			

REMARKS: CONVECTOR: C-1 3.8 MBH LOCATED AT STAIRS & LAUNDRY
EXHAUST FANS ARE INCLUDED ON BUILDING 175 BDS SHEET

CONDENSATE RETURN UNIT: 3HP
HEATING CIRCULATION PUMP: 1.5 HP

E M C ENGINEERS, INC.

PROJECT: UMCS STUDY
CLIENT CONTRACT NO.: DACA01-94-D-0033
CLIENT PROJ. ENG: STEVE ROWLEY
LOCATION: FORT DRUM, NY BLDG: **BRKS & MESS HALL**

EMC NO.: 1406-006
DATE: 16-NOV-94
PREPARED BY: **BG**
CHECKED BY:
FILE: **175B3**

BOILER & CONVERTER SURVEY OBSERVATIONS

B3	BOILER/CONVERTER NO.	MECH ROOM, BLDG 175	LOCATION (RM)
NONE	SOURCE OF HEATING (PLANT)	**BARRACKS**	SERVES AREA

UNIT TYPE:

X	STEAM		PSIG		HW		TEMP.	BOILER TYPE:
X	NO.2 OIL		NO.6 OIL		N.GAS		ELEC	FUELS:
	STM/HW		HTHW/HW		HTHW/STM		OTHER	CONVERTER TYPE:
	SPACE HEAT		DHW		OTHER			USE:
COMMENT:								% HTG AREA SERVED
								BB RADIATION ONLY

NAMEPLATE:

KEWANEE	MFG.	**HF-125**	MODEL	**4184000**	CAPACITY OUTPUT (BTUH)	
					CAPACITY INPUT (BTUH)	
	MFG.		MODEL		CAPACITY OUTPUT (BTUH)	
					CAPACITY INPUT (BTUH)	
3	HW PUMP 1 - HP		MFG.			MODEL
	HW PUMP 2 - HP		MFG.			MODEL
	HW PUMP 3 - HP		MFG.			MODEL
COMMENT:						

OPERATION:

HOURS ON:	S	M	T	W	T	F	S	COMMENT
PRESENT START TIME	**0**	**0**	**0**	**0**	**0**	**0**	**0**	TIMECLOCK?
PRESENT STOP TIME	**2400**	**2400**	**2400**	**2400**	**2400**	**2400**	**2400**	
REQUIRED START TIME	**0**	**0**	**0**	**0**	**0**	**0**	**0**	
REQUIRED STOP TIME	**2400**	**2400**	**2400**	**2400**	**2400**	**2400**	**2400**	

MONTHS ON:

J	F	M	A	M	J	J	A	S	O	N	D
1	**1**	**1**	**1**	**1**	**1**	**1**	**1**	**1**	**1**	**1**	**1**

CONTROLS:

	X	PNEUMATIC		ELECTRIC		ELEC'NIC		DDC	COMMENTS
SETPOINTS		PSIG		HW SUPPLY					
RESET CONTROL (oF):		HW HIGH		HW LOW		OA LOW		OA HIGH	
BURNER CONTROLS		O2 TRIM (Y/N)		OTHER					
COMMENTS:									
BLDG 173 IS A ZONE OF 175.									

E M C ENGINEERS, INC.

PROJECT: UMCS STUDY
CLIENT CONTRACT NO.: DACA01-94-D-0033
CLIENT PROJ. ENG: STEVE ROWLEY
LOCATION: FORT DRUM, NY BLDG: **BARRACKS**

EMC NO.: 1406-006
DATE: Dec-94
PREPARED BY:
CHECKED BY: CSW
FILE: **173BDS** BG

PERIMETER RADIATION SURVEY OBSERVATIONS

RAD	PER RAD NO.	**MECH ROOM, BLD 175**	LOCATION (RM)
B3	SOURCE OF HEATING	BARRACKS	SERVES AREA

UNIT TYPE:

	STEAM	X	HW		ELECTRIC				
	OTHER								
	COMMENT:								

NAMEPLATE:

1.5	HW PUMP 1 - HP		MFG.		MODEL
	HW PUMP 2 - HP		MFG.		MODEL
	HW PUMP 3 - HP		MFG.		MODEL
	HW PUMP 4 - HP		MFG.		MODEL
COMMENT:					% AREA HEATING

OPERATION:

HOURS ON:	S	M	T	W	T	F	S	COMMENT
PRESENT START TIME	**0**	**0**	**0**	**0**	**0**	**0**	**0**	TIMECLOCK?
PRESENT STOP TIME	**2400**	**2400**	**2400**	**2400**	**2400**	**2400**	**2400**	
REQUIRED START TIME	**0**	**0**	**0**	**0**	**0**	**0**	**0**	
REQUIRED STOP TIME	**2400**	**2400**	**2400**	**2400**	**2400**	**2400**	**2400**	

MONTHS ON:

J	F	M	A	M	J	J	A	S	O	N	D
1	**1**	**1**	**1**	**0**	**0**	**0**	**0**	**0**	**1**	**1**	**1**

CONTROLS:

	X	PNEUMATIC		ELECTRIC		ELEC'NIC		DDC	COMMENTS
RADIATION CONTROL:		NONE		2-WAY VLV		3-WAY VLV		OTHER	
SPACE SETPOINT (øF):		OCC HEAT		UNOCC HEAT		OCC COOL		UNOCC COOL	
RESET CONTROL (øF):		HW HIGH		HW LOW		OA LOW		OA HIGH	
COMMENTS:									

E M C ENGINEERS, INC.

PROJECT: UMCS STUDY
CLIENT CONTRACT NO.: DACA01-94-D-0033
CLIENT PROJ. ENG: STEVE ROWLEY
LOCATION: FORT DRUM, NY BLDG: **BARRACKS**

EMC NO.: 1406-006
DATE: 16-NOV-94
PREPARED BY: **CSW**
CHECKED BY: BG
FILE: **173HX4&5**

BOILER & CONVERTER SURVEY OBSERVATIONS

HX4&5	BOILER/CONVERTER NO.	MECH ROOM, BLDG 175	LOCATION (RM)
B3	SOURCE OF HEATING (PLANT)	BARRACKS, ADMIN	SERVES AREA

UNIT TYPE:

	STEAM		PSIG		HW		TEMP.	BOILER TYPE:
	NO.2 OIL		NO.6 OIL		N.GAS		ELEC	FUELS:
X	STM/HW		HTHW/HW		HTHW/STM		OTHER	CONVERTER TYPE:
	SPACE HEAT		DHW		OTHER			USE:
COMME HX-5 IS STAND-BY FOR HX-4								% HTG AREA SERVED
								BB RADIATION ONLY

NAMEPLATE:

	MFG.		MODEL	**1787900**	CAPACITY OUTPUT (BTUH)
					CAPACITY INPUT (BTUH)
	MFG.		MODEL		CAPACITY OUTPUT (BTUH)
					CAPACITY INPUT (BTUH)
0.0833	HW PUMP 1 - HP	**B&G**	MFG.		MODEL
	HW PUMP 2 - HP		MFG.		MODEL
	HW PUMP 3 - HP		MFG.		MODEL
COMMENT:					

OPERATION:

HOURS ON:	S	M	T	W	T	F	S	COMMENT
PRESENT START TIME	**0**	**0**	**0**	**0**	**0**	**0**	**0**	TIMECLOCK?
PRESENT STOP TIME	**2400**	**2400**	**2400**	**2400**	**2400**	**2400**	**2400**	
REQUIRED START TIME	**0**	**0**	**0**	**0**	**0**	**0**	**0**	
REQUIRED STOP TIME	**2400**	**2400**	**2400**	**2400**	**2400**	**2400**	**2400**	

MONTHS ON:

J	F	M	A	M	J	J	A	S	O	N	D
1	**1**	**1**	**1**	**0**	**0**	**0**	**0**	**0**	**1**	**1**	**1**

CONTROLS:

	X	PNEUMATIC		ELECTRIC		ELEC'NIC		DDC	COMMENTS
SETPOINTS		PSIG		HW SUPPLY					
RESET CONTROL (oF):		HW HIGH		HW LOW		OA LOW		OA HIGH	
BURNER CONTROLS		O2 TRIM (Y/N)		OTHER					
COMMENTS:									

FIELD SURVEY NOTES

BUILDING 174

E M C ENGINEERS, INC.

PROJECT: UMCS STUDY
CLIENT CONTRACT NO.: DACA01-94-D-0033
CLIENT PROJ. ENG: STEVE ROWLEY
LOCATION: FORT DRUM, NY BLDG: **174**

EMC NO.: 1406-006
DATE: Dec-94
PREPARED BY: **CSW**
CHECKED BY: BG
FILE: **174AHU2**

AIR HANDLING UNIT SURVEY OBSERVATIONS

AHU-2	AHU NO.	**MER**	LOCATION (RM)
	REF. SYS. SERVING AHU		SERVES AREA

UNIT TYPE:

X	SINGLE ZN		2-PIPE FC		4-PIPE FC		UNIT HTR	**X**	H&V
	MULTIZONE		DOUBLE DT		REHEAT		INDUCTION		VAV
	NUMBER OF ZONES				OTHER				
	COMMENT:								

NAMEPLATE:

					MFG.				MODEL
10.0	SUPPLY FAN HP				MFG.				MODEL
	RET/EXH FAN HP				MFG.				MODEL
11700	CFM-HTG		CFM-CLG	**6%**	MIN %OA	**100%**	MAX %OA	**50.0%**	% HTG AREA SERVED
COMMENT:									

COILS:

X	NONE		STM		HW		ELEC		MOD VLV	PREHEAT
	NONE		STM	**X**	HW		ELEC		MOD VLV	HEATING
X	NONE		STM		HW		ELEC		MOD VLV	REHEAT
X	NONE		STM		HW		EVAP MEDIA		MOD VLV	HUMID.
X	NONE		DX		CW				MOD VLV	COOLING

OPERATION:

HOURS ON:	S	M	T	W	T	F	S	COMMENTS
PRESENT START TIME								TIMECLOCK?
PRESENT STOP TIME								
REQUIRED START TIME								
REQUIRED STOP TIME								

MONTHS ON:

J	F	M	A	M	J	J	A	S	O	N	D
1	**1**	**1**	**1**	**0**	**0**	**0**	**0**	**0**	**1**	**1**	**1**

CONTROLS:

		PNEUMATIC		ELECTRIC		ELEC'NIC		DDC	COMMENTS
THERMOSTAT TYPE:		SINGLE STPT		DUAL SETPNT		SETBACK			
SPACE SETPOINT (°F):		OCC HEAT		UNOCC HEAT		OCC COOL		UNOCC COOL	
OTHER SETPOINTS (°F):		HOT DECK		COLD DECK		MIXED AIR		OTHER	
DAMPER CONTROL:	**Y**	MIN OA (Y/N)	**Y**	MAX OA (Y/N)	**Y**	RA (Y/N)	**N**	EA (Y/N)	
		MA CONTROL		ECONO-DB		ECONO-ENT		OTHER	
DEMAND LIMIT:		(Y = YES ; N = NO)							
COMMENTS:									

E M C ENGINEERS, INC.

PROJECT: UMCS STUDY
CLIENT CONTRACT NO.: DACA01-94-D-0033
CLIENT PROJ. ENG: STEVE ROWLEY
LOCATION: FORT DRUM, NY BLDG: **174**

EMC NO.: 1406-006
DATE: Dec-94
PREPARED BY: **CSW**
CHECKED BY: BG
FILE: **174AHU1**

AIR HANDLING UNIT SURVEY OBSERVATIONS

AHU-1	AHU NO.	**MER**	LOCATION (RM)
	REF. SYS. SERVING AHU		SERVES AREA

UNIT TYPE:

	SINGLE ZN		2-PIPE FC		4-PIPE FC		UNIT HTR	X	H&V
X	MULTIZONE		DOUBLE DT		REHEAT		INDUCTION		VAV
2	NUMBER OF ZONES				OTHER				
	COMMENT:								

NAMEPLATE:

					MFG.				MODEL
10.0	SUPPLY FAN HP				MFG.				MODEL
	RET/EXH FAN HP				MFG.				MODEL
11700	CFM-HTG		CFM-CLG	8%	MIN %OA	100%	MAX %OA	50.0%	% HTG AREA SERVED
COMMENT:									

COILS:

X	NONE		STM		HW		ELEC		MOD VLV	PREHEAT
	NONE		STM	X	HW		ELEC		MOD VLV	HEATING
X	NONE		STM		HW		ELEC		MOD VLV	REHEAT
X	NONE		STM		HW		EVAP MEDIA		MOD VLV	HUMID.
X	NONE		DX		CW				MOD VLV	COOLING

OPERATION:

HOURS ON:	S	M	T	W	T	F	S	COMMENTS
PRESENT START TIME								TIMECLOCK?
PRESENT STOP TIME								
REQUIRED START TIME								
REQUIRED STOP TIME								

MONTHS ON:

J	F	M	A	M	J	J	A	S	O	N	D
1	1	1	1	0	0	0	0	0	1	1	1

CONTROLS:

		PNEUMATIC		ELECTRIC		ELEC'NIC		DDC	COMMENTS
THERMOSTAT TYPE:		SINGLE STPT		DUAL SETPNT		SETBACK			
SPACE SETPOINT (°F):		OCC HEAT		UNOCC HEAT		OCC COOL		UNOCC COOL	
OTHER SETPOINTS (°F):		HOT DECK		COLD DECK		MIXED AIR		OTHER	
DAMPER CONTROL:	Y	MIN OA (Y/N)	Y	MAX OA (Y/N)	Y	RA (Y/N)	N	EA (Y/N)	
		MA CONTROL		ECONO-DB		ECONO-ENT		OTHER	
DEMAND LIMIT:		(Y = YES ; N = NO)							

COMMENTS: ******NOTE: THIS BUILDING RECEIVES CONVERTED HW FROM BLDG 175**

TOTAL HEATING FOR BLDG 1735.7 MBH

BUILDING HAS 5 DEHUMIDIFIERS WITH 3000 WATT MOTORS EACH

FIELD SURVEY NOTES

BUILDING 175

E M C ENGINEERS, INC.

PROJECT: UMCS STUDY
CLIENT CONTRACT NO.: DACA01-94-D-0033
CLIENT PROJ. ENG: STEVE ROWLEY
LOCATION: FORT DRUM, NY BLDG: 175

EMC NO.: 1406-006
DATE: 16-NOV-94
PREPARED BY: CSW
CHECKED BY: BG
FILE: 175BDS

VI. BUILDING DATA SURVEY OBSERVATIONS

BLDG NO: 175 BLDG NAME: BARRACKS AND MESS HALL

ZONE NO.	1	FUNCTION: KITCHEN, DINING							
OCCUPANCY HOURS:	M-F	0	TO	2400	SAT	0	TO	2400	
	SUN	0	TO	2400					
PRESENT TEMP	WINTER OCC	øF		UNOCC	øF				
	SUMMER OCC	øF		UNOCC	øF				

ZONE NO.		FUNCTION: ADMIN							
OCCUPANCY HOURS:	M-F		TO		SAT		TO		
	SUN		TO						
PRESENT TEMP	WINTER OCC	øF		UNOCC	øF				
	SUMMER OCC	øF		UNOCC	øF				

ZONE NO.		FUNCTION:							
OCCUPANCY HOURS:	M-F		TO		SAT		TO		
	SUN		TO						
PRESENT TEMP	WINTER OCC	øF		UNOCC	øF				
	SUMMER OCC	øF		UNOCC	øF				

REMARKS:

E M C ENGINEERS, INC.

PROJECT: UMCS STUDY
CLIENT CONTRACT NO.: DACA01-94-D-0033
CLIENT PROJ. ENG: STEVE ROWLEY
LOCATION: FORT DRUM, NY BLDG: **175**

EMC NO.: 1406-006
DATE: 16-NOV-94
PREPARED BY: **BG**
CHECKED BY:
FILE: **175B1&2**

BOILER & CONVERTER SURVEY OBSERVATIONS

B1&2	BOILER/CONVERTER NO.	MECH 1		LOCATION (RM)
	SOURCE OF HEATING (PLANT)			SERVES AREA

UNIT TYPE:

X	STEAM		PSIG		HW		TEMP.	BOILER TYPE:
X	NO.2 OIL		NO.6 OIL		N.GAS		ELEC	FUELS:
	STM/HW		HTHW/HW		HTHW/STM		OTHER	CONVERTER TYPE:
	SPACE HEAT		DHW		OTHER			USE:
COMMENT:								% HTG AREA SERVED
								BB RADIATION ONLY

NAMEPLATE:

KEWANEE	MFG.	**HF-125**	MODEL	**4184000**	CAPACITY OUTPUT (BTUH)
					CAPACITY INPUT (BTUH)
	MFG.		MODEL	**4184000**	CAPACITY OUTPUT (BTUH)
					CAPACITY INPUT (BTUH)
3	HW PUMP 1 - HP		MFG.		MODEL
3	HW PUMP 2 - HP		MFG.		MODEL
	HW PUMP 3 - HP		MFG.		MODEL
COMMENT:					

OPERATION:

HOURS ON:	S	M	T	W	T	F	S	COMMENT
PRESENT START TIME								TIMECLOCK?
PRESENT STOP TIME								
REQUIRED START TIME								
REQUIRED STOP TIME								

MONTHS ON:

J	F	M	A	M	J	J	A	S	O	N	D

CONTROLS:

		PNEUMATIC		ELECTRIC		ELEC'NIC		DDC	COMMENTS
SETPOINTS		PSIG		HW SUPPLY					
RESET CONTROL (oF):		HW HIGH		HW LOW		OA LOW		OA HIGH	
BURNER CONTROLS		O2 TRIM (Y/N)		OTHER					
COMMENTS:									

PROJECT: UMCS STUDY
CLIENT CONTRACT NO.: DACA01-94-D-0033
CLIENT PROJ. ENG: STEVE ROWLEY
LOCATION: FORT DRUM, NY BLDG: 175

EMC NO.: 1406-006
DATE: 16-Nov-94
PREPARED BY: BG
CHECKED BY:
FILE: 175DHW

DOMESTIC HW SURVEY OBSERVATIONS

DHW	BOILER/CONVERTER NO.		LOCATION (RM)
	SOURCE OF HEATING (PLANT)		SERVES AREA

UNIT TYPE:

	NO.2 OIL		NO.6 OIL		N.GAS		ELEC		FUELS:
X	STM/HW		HTHW/HW		HTHW/STM		OTHER		CONVERTER TYPE:

COMMENT:

NAMEPLATE:

	MFG.		MODEL		CAPACITY OUTPUT (BTUH,KW)
	MFG.		MODEL		CAPACITY OUTPUT (BTUH,KW)

DOMESTIC HW CIRCULATION PUMP:

1	HW PUMP 1 - HP	BALDOR	MFG.	JM3115	MODEL
1	HW PUMP 2 - HP	MARATHON	MFG.		MODEL
	HW PUMP 3 - HP		MFG.		MODEL

COMMENT:

DIMENSION:	DIAMETER (INCHS)		HEIGHT OR LENGTH (INCHES)	GALLON

OPERATION:

HOURS ON:	S	M	T	W	T	F	S	COMMENT
PRESENT START TIME	0	0	0	0	0	0	0	TIMECLOCK?
PRESENT STOP TIME	2400	2400	2400	2400	2400	2400	2400	
REQUIRED START TIME	0	0	0	0	0	0	0	
REQUIRED STOP TIME	2400	2400	2400	2400	2400	2400	2400	

MONTHS ON:

J	F	M	A	M	J	J	A	S	O	N	D
1	1	1	1	1	1	1	1	1	1	1	1

CONTROLS:

		PNEUMATIC		ELECTRIC		ELEC'NIC		DDC	COMMENTS
SETPOINTS				HW SUPPLY					

COMMENTS:

E M C ENGINEERS, INC.

PROJECT: UMCS STUDY
CLIENT CONTRACT NO.: DACA01-94-D-0033
CLIENT PROJ. ENG: STEVE ROWLEY
LOCATION: FORT DRUM, NY BLDG: **175**

EMC NO.: 1406-006
DATE: 16-NOV-94
PREPARED BY: **CSW**
CHECKED BY: BG
FILE: **175HV1**

AIR HANDLING UNIT SURVEY OBSERVATIONS

HV1	AHU NO.	**MER 2**	LOCATION (RM)
	REF. SYS. SERVING AHU	**KITCHEN,DINING,ADMIN**	SERVES AREA

UNIT TYPE:

X	SINGLE ZN		2-PIPE FC		4-PIPE FC		UNIT HTR	**X**	H&V
	MULTIZONE		DOUBLE DT		REHEAT		INDUCTION		VAV
	NUMBER OF ZONES				OTHER				
	COMMENT:								

NAMEPLATE:

CENTRALAIRE				MFG.	**L1420 SER#16171MO1**				MODEL
10.0	SUPPLY FAN HP		**GOULD**	MFG.	**6-33-/77903**				MODEL
	RET/EXH FAN HP			MFG.					MODEL
10500	CFM-HTG	**0**	CFM-CLG	MIN %OA	**100%**	MAX %OA	**7.8%**	% HTG AREA SERVED	
COMMENT:									

COILS:

X	NONE		STM		HW		ELEC	MOD VLV	PREHEAT
	NONE		STM	**X**	HW		ELEC	MOD VLV	HEATING
X	NONE		STM		HW		ELEC	MOD VLV	REHEAT
X	NONE		STM		HW		EVAP MEDIA	MOD VLV	HUMID.
X	NONE		DX		CW			MOD VLV	COOLING

OPERATION:

HOURS ON:	S	M	T	W	T	F	S	COMMENTS
PRESENT START TIME	**0**	**0**	**0**	**0**	**0**	**0**	**0**	TIMECLOCK?
PRESENT STOP TIME	**2400**	**2400**	**2400**	**2400**	**2400**	**2400**	**2400**	**NO**
REQUIRED START TIME	**0**	**0**	**0**	**0**	**0**		**0**	
REQUIRED STOP TIME	**2400**	**2400**	**2400**	**2400**	**2400**	**2400**	**2400**	

MONTHS ON:

J	F	M	A	M	J	J	A	S	O	N	D
1	**1**	**1**	**1**	**1**	**1**	**1**	**1**	**1**	**1**	**1**	**1**

CONTROLS:

	X	PNEUMATIC		ELECTRIC		ELEC'NIC		DDC	COMMENTS
THERMOSTAT TYPE:		SINGLE STPT		DUAL SETPNT		SETBACK			
SPACE SETPOINT (°F):		OCC HEAT		UNOCC HEAT		OCC COOL		UNOCC COOL	
OTHER SETPOINTS (°F):		HOT DECK		COLD DECK		MIXED AIR		OTHER	
DAMPER CONTROL:	**Y**	MIN OA (Y/N)	**Y**	MAX OA (Y/N)	**Y**	RA (Y/N)	**N**	EA (Y/N)	
		MA CONTROL		ECONO-DB		ECONO-ENT		OTHER	
DEMAND LIMIT:		(Y = YES ; N = NO)							

COMMENTS:

E M C ENGINEERS, INC.

PROJECT: UMCS STUDY
CLIENT CONTRACT NO.: DACA01-94-D-0033
CLIENT PROJ. ENG: STEVE ROWLEY
LOCATION: FORT DRUM, NY BLDG: **175**

EMC NO.: 1406-006
DATE: 16-NOV-94
PREPARED BY: **CSW**
CHECKED BY: BG
FILE: **175HV2**

AIR HANDLING UNIT SURVEY OBSERVATIONS

HV2	AHU NO.	**MER 2**	LOCATION (RM)
	REF. SYS. SERVING AHU	**KITCHEN,DINING,ADMIN**	SERVES AREA

UNIT TYPE:

X	SINGLE ZN		2-PIPE FC		4-PIPE FC		UNIT HTR	X	H&V
	MULTIZONE		DOUBLE DT		REHEAT		INDUCTION		VAV
	NUMBER OF ZONES				OTHER				
	COMMENT:								

NAMEPLATE:

CENTRALAIRE				MFG.	**L1420 SER#16171MO1**			MODEL
10.0	SUPPLY FAN HP		**GOULD**	MFG.	**6-33-/77903**			MODEL
	RET/EXH FAN HP			MFG.				MODEL
10500	CFM-HTG	**0**	CFM-CLG	MIN %OA	**100%**	MAX %OA	**7.8%**	% HTG AREA SERVED
COMMENT:								

COILS:

X	NONE		STM		HW		ELEC	MOD VLV	PREHEAT
	NONE		STM	X	HW		ELEC	MOD VLV	HEATING
X	NONE		STM		HW		ELEC	MOD VLV	REHEAT
X	NONE		STM		HW		EVAP MEDIA	MOD VLV	HUMID.
X	NONE		DX		CW			MOD VLV	COOLING

OPERATION:

HOURS ON:	S	M	T	W	T	F	S	COMMENTS
PRESENT START TIME	**0**	**0**	**0**	**0**	**0**	**0**	**0**	TIMECLOCK?
PRESENT STOP TIME	**2400**	**2400**	**2400**	**2400**	**2400**	**2400**	**2400**	**NO**
REQUIRED START TIME	**0**	**0**	**0**	**0**	**0**		**0**	
REQUIRED STOP TIME	**2400**	**2400**	**2400**	**2400**	**2400**	**2400**	**2400**	

MONTHS ON:

J	F	M	A	M	J	J	A	S	O	N	D
1	**1**	**1**	**1**	**1**	**1**	**1**	**1**	**1**	**1**	**1**	**1**

CONTROLS:

	X	PNEUMATIC		ELECTRIC		ELEC'NIC	DDC	COMMENTS
THERMOSTAT TYPE:		SINGLE STPT		DUAL SETPNT		SETBACK		
SPACE SETPOINT (°F):		OCC HEAT		UNOCC HEAT		OCC COOL	UNOCC COOL	
OTHER SETPOINTS (°F):		HOT DECK		COLD DECK		MIXED AIR	OTHER	
DAMPER CONTROL:	Y	MIN OA (Y/N)	Y	MAX OA (Y/N)	Y	RA (Y/N)	N EA (Y/N)	
		MA CONTROL		ECONO-DB		ECONO-ENT	OTHER	
DEMAND LIMIT:		(Y = YES ; N = NO)						
COMMENTS:								

E M C ENGINEERS, INC.

PROJECT: UMCS STUDY
CLIENT CONTRACT NO.: DACA01-94-D-0033
CLIENT PROJ. ENG: STEVE ROWLEY
LOCATION: FORT DRUM, NY BLDG: 175

EMC NO.: 1406-006
DATE: 16-NOV-94
PREPARED BY: CSW
CHECKED BY: BG
FILE: 175HX1&2

BOILER & CONVERTER SURVEY OBSERVATIONS

HX1&2	BOILER/CONVERTER NO.	HEATING PLANT (BSMNT)	LOCATION (RM)
	SOURCE OF HEATING (PLANT)	BLDG. HEATING	SERVES AREA

UNIT TYPE:

	STEAM		PSIG		HW		TEMP.	BOILER TYPE:
	NO.2 OIL		NO.6 OIL		N.GAS		ELEC	FUELS:
	STM/HW	X	HTHW/HW		HTHW/STM		OTHER	CONVERTER TYPE:
	SPACE HEAT		DHW		OTHER			USE:
COMME HX-2 IS STAND-BY FOR HX-1								% HTG AREA SERVED
								BB RADIATION ONLY

NAMEPLATE:

	MFG.		MODEL		CAPACITY OUTPUT (BTUH)
					CAPACITY INPUT (BTUH)
	MFG.		MODEL		CAPACITY OUTPUT (BTUH)
					CAPACITY INPUT (BTUH)
7.5	HW PUMP 1 - HP	MARATHON	MFG.	HVF213CTER7359BB-	MODEL
	HW PUMP 2 - HP		MFG.		MODEL
7.5	HW PUMP 3 - HP	BALDOR	MFG.		MODEL
COMMENT:					

OPERATION:

HOURS ON:	S	M	T	W	T	F	S	COMMENT
PRESENT START TIME	0	0	0	0	0	0	0	TIMECLOCK?
PRESENT STOP TIME	2400	2400	2400	2400	2400	2400	2400	
REQUIRED START TIME	0	0	0	0	0	0	0	
REQUIRED STOP TIME	2400	2400	2400	2400	2400	2400	2400	

MONTHS ON:

J	F	M	A	M	J	J	A	S	O	N	D
1	1	1	1	0	0	0	0	0	1	1	1

CONTROLS:

		PNEUMATIC		ELECTRIC		ELEC'NIC		DDC	COMMENTS
SETPOINTS		PSIG		HW SUPPLY					
RESET CONTROL (oF):		HW HIGH		HW LOW		OA LOW		OA HIGH	
BURNER CONTROLS		O2 TRIM (Y/N)		OTHER					
COMMENTS:									

E M C ENGINEERS, INC.

PROJECT: UMCS STUDY
CLIENT CONTRACT NO.: DACA01-94-D-0033
CLIENT PROJ. ENG: STEVE ROWLEY
LOCATION: FORT DRUM, NY BLDG: 175

EMC NO.: 1406-006
DATE: 16-NOV-94
PREPARED BY: **BG**
CHECKED BY:
FILE: **175HX3**

BOILER & CONVERTER SURVEY OBSERVATIONS

HX3	BOILER/CONVERTER NO.	BACH MECH ROOM	LOCATION (RM)
	SOURCE OF HEATING (PLANT)		SERVES AREA

UNIT TYPE:

	STEAM		PSIG		HW		TEMP.		BOILER TYPE:
	NO.2 OIL		NO.6 OIL		N.GAS		ELEC		FUELS:
X	STM/HW		HTHW/HW		HTHW/STM		OTHER		CONVERTER TYPE:
	SPACE HEAT		DHW		OTHER				USE:
COMME HX-2 IS STAND-BY FOR HX-1									% HTG AREA SERVED
									BB RADIATION ONLY

NAMEPLATE:

OLD DOMINION	MFG.		MODEL		CAPACITY OUTPUT (BTUH)
					CAPACITY INPUT (BTUH)
	MFG.		MODEL		CAPACITY OUTPUT (BTUH)
					CAPACITY INPUT (BTUH)
	HW PUMP 1 - HP	**MARATHON**	MFG.	**HVF213CTER7359BB-**	MODEL
	HW PUMP 2 - HP		MFG.		MODEL
	HW PUMP 3 - HP	**BALDOR**	MFG.		MODEL
COMMENT:					

OPERATION:

HOURS ON:	S	M	T	W	T	F	S	COMMENT
PRESENT START TIME	**0**	**0**	**0**	**0**	**0**	**0**	**0**	TIMECLOCK?
PRESENT STOP TIME	**2400**	**2400**	**2400**	**2400**	**2400**	**2400**	**2400**	
REQUIRED START TIME	**0**	**0**	**0**	**0**	**0**	**0**	**0**	
REQUIRED STOP TIME	**2400**	**2400**	**2400**	**2400**	**2400**	**2400**	**2400**	

MONTHS ON:

J	F	M	A	M	J	J	A	S	O	N	D
1	**1**	**1**	**1**	**1**	**1**	**1**	**1**	**1**	**1**	**1**	**1**

CONTROLS:

		PNEUMATIC		ELECTRIC		ELEC'NIC		DDC	COMMENTS
SETPOINTS		PSIG		HW SUPPLY					
RESET CONTROL (oF):		HW HIGH		HW LOW		OA LOW		OA HIGH	
BURNER CONTROLS		O2 TRIM (Y/N)		OTHER					
COMMENTS:									

E M C ENGINEERS, INC.

PROJECT: UMCS STUDY
CLIENT CONTRACT NO.: DACA01-94-D-0033
CLIENT PROJ. ENG: STEVE ROWLEY
LOCATION: FORT DRUM, NY BLDG: **175**

EMC NO.: 1406-006
DATE: 16-NOV-94
PREPARED BY: **CSW**
CHECKED BY: BG
FILE: **175HX4&5**

BOILER & CONVERTER SURVEY OBSERVATIONS

HX4&5	BOILER/CONVERTER NO.	MECH ROOM	LOCATION (RM)
	SOURCE OF HEATING (PLANT)	BARRACKS, ADMIN	SERVES AREA

UNIT TYPE:

	STEAM		PSIG		HW		TEMP.	BOILER TYPE:
	NO.2 OIL		NO.6 OIL		N.GAS		ELEC	FUELS:
X	STM/HW		HTHW/HW		HTHW/STM		OTHER	CONVERTER TYPE:
	SPACE HEAT		DHW		OTHER			USE:
COMME HX-5 IS STAND-BY FOR HX-4								% HTG AREA SERVED
								BB RADIATION ONLY

NAMEPLATE:

	MFG.		MODEL		CAPACITY OUTPUT (BTUH)
					CAPACITY INPUT (BTUH)
	MFG.		MODEL		CAPACITY OUTPUT (BTUH)
					CAPACITY INPUT (BTUH)
0.0833	HW PUMP 1 - HP	**B&G**	MFG.		MODEL
	HW PUMP 2 - HP		MFG.		MODEL
	HW PUMP 3 - HP		MFG.		MODEL
COMMENT:					

OPERATION:

HOURS ON:	S	M	T	W	T	F	S	COMMENT
PRESENT START TIME	**0**	**0**	**0**	**0**	**0**	**0**	**0**	TIMECLOCK?
PRESENT STOP TIME	**2400**	**2400**	**2400**	**2400**	**2400**	**2400**	**2400**	
REQUIRED START TIME	**0**	**0**	**0**	**0**	**0**	**0**	**0**	
REQUIRED STOP TIME	**2400**	**2400**	**2400**	**2400**	**2400**	**2400**	**2400**	

MONTHS ON:

J	F	M	A	M	J	J	A	S	O	N	D
1	**1**	**1**	**1**	**0**	**0**	**0**	**0**	**0**	**1**	**1**	**1**

CONTROLS:

		PNEUMATIC		ELECTRIC		ELEC'NIC		DDC	COMMENTS
SETPOINTS		PSIG		HW SUPPLY					
RESET CONTROL (oF):		HW HIGH		HW LOW		OA LOW		OA HIGH	
BURNER CONTROLS		O2 TRIM (Y/N)		OTHER					
COMMENTS:									

FIELD SURVEY NOTES

BUILDING 1240

E M C ENGINEERS, INC.

PROJECT: UMCS STUDY
CLIENT CONTRACT NO.: DACA01-94-D-0033
CLIENT PROJ. ENG: STEVE ROWLEY
LOCATION: FORT DRUM, NY BLDG: TOE MAINT

EMC NO.: 1406-006
DATE: Dec-94
PREPARED BY: CSW/BG
CHECKED BY:
FILE: 1240BDS

VI. BUILDING DATA SURVEY OBSERVATIONS

BLDG NO: 1240 BLDG NAME: TOE MAINT

ZONE NO.	1	FUNCTION: TOE MAINT						
OCCUPANCY HOURS:	M-F	600	TO	1800	SAT		TO	
	SUN		TO					
PRESENT TEMP	WINTER OCC	68.0 øF		UNOCC	50.0 øF			
	SUMMER OCC	72.0 øF		UNOCC	øF			

ZONE NO.		FUNCTION:						
OCCUPANCY HOURS:	M-F		TO		SAT		TO	
	SUN		TO					
PRESENT TEMP	WINTER OCC	øF		UNOCC	øF			
	SUMMER OCC	øF		UNOCC	øF			

ZONE NO.		FUNCTION:						
OCCUPANCY HOURS:	M-F		TO		SAT		TO	
	SUN		TO					
PRESENT TEMP	WINTER OCC	øF		UNOCC	øF			
	SUMMER OCC	øF		UNOCC	øF			

REMARKS: TOTAL POWER OF EXHAUST FANS: 5HP
TOTAL POWER OF AIR COMPRESSORS: 80 HP

TOTAL HEAT OUTPUT OF UNIT HEATERS AND CONVECTORS: 507 MBH

PROJECT: UMCS STUDY
CLIENT CONTRACT NO.: DACA01-94-D-0033
CLIENT PROJ. ENG: STEVE ROWLEY
LOCATION: FORT DRUM, NY BLDG: **1240**

EMC NO.: 1406-006
DATE: 11-NOV-94
PREPARED BY: **CSW**
CHECKED BY: BG
FILE: **1240DHW**

DOMESTIC HW SURVEY OBSERVATIONS

DHW	BOILER/CONVERTER NO.	BOILER RM	LOCATION (RM)
	SOURCE OF HEATING (PLANT)	WATER HTG.	SERVES AREA

UNIT TYPE:

X	NO.2 OIL		NO.6 OIL		N.GAS		ELEC		FUELS:
	STM/HW		HTHW/HW		HTHW/STM		OTHER		CONVERTER TYPE:
COMMENT:									

NAMEPLATE:

BOCK	MFG.	**73 E**	SER #283271	MODEL	**250**	CAPACITY OUTPUT (BTUH,KW)
	MFG.			MODEL		CAPACITY OUTPUT (BTUH,KW)
DOMESTIC HW CIRCULATION PUMP:						
	HW PUMP 1 - HP			MFG.		MODEL
	HW PUMP 2 - HP			MFG.		MODEL
	HW PUMP 3 - HP			MFG.		MODEL
COMMENT:						

DIMENSION:	DIAMETER (INCHS)		HEIGHT OR LENGTH (INCHES)	GALLON

OPERATION:

HOURS ON:	S	M	T	W	T	F	S	COMMENT
PRESENT START TIME	**0**	**0**	**0**	**0**	**0**	**0**	**0**	TIMECLOCK?
PRESENT STOP TIME	**2400**	**2400**	**2400**	**2400**	**2400**	**2400**	**2400**	
REQUIRED START TIME	**0**	**600**	**600**	**600**	**600**	**600**	**0**	
REQUIRED STOP TIME	**0**	**1800**	**1800**	**1800**	**1800**	**1800**	**0**	

MONTHS ON:

J	F	M	A	M	J	J	A	S	O	N	D
1	**1**	**1**	**1**	**1**	**1**	**1**	**1**	**1**	**1**	**1**	**1**

CONTROLS:

		PNEUMATIC		ELECTRIC		ELEC'NIC		DDC	COMMENTS
SETPOINTS				HW SUPPLY					
COMMENTS:									

E M C ENGINEERS, INC.

PROJECT: UMCS STUDY
CLIENT CONTRACT NO.: DACA01-94-D-0033
CLIENT PROJ. ENG: STEVE ROWLEY
LOCATION: FORT DRUM, NY BLDG: **1240**

EMC NO.: 1406-006
DATE: 15-NOV-94
PREPARED BY: **CSW**
CHECKED BY: BG
FILE: **1240B1** ~~1~~ 2

BOILER & CONVERTER SURVEY OBSERVATIONS

B1 & B2	BOILER/CONVERTER NO.	**BOILER RM**	LOCATION (RM)
	SOURCE OF HEATING (PLANT)		SERVES AREA

UNIT TYPE:

	STEAM		PSIG		HW		TEMP.	BOILER TYPE:
X	NO.2 OIL		NO.6 OIL		N.GAS		ELEC	FUELS:
	STM/HW		HTHW/HW		HTHW/STM		OTHER	CONVERTER TYPE:
	SPACE HEAT		DHW		OTHER			USE:
COMMENT:							**99%**	% HTG AREA SERVED
								BB RADIATION ONLY

NAMEPLATE:

WELL MCLAIN	MFG.	**771967**	MODEL	**2480**	CAPACITY OUTPUT (BTUH)
					CAPACITY INPUT (BTUH)
WELL MCLAIN	MFG.	**771967**	MODEL	**2480**	CAPACITY OUTPUT (BTUH)
					CAPACITY INPUT (BTUH)
2	HW PUMP 1 - HP		MFG.		MODEL
2	HW PUMP 2 - HP		MFG.		MODEL
	HW PUMP 3 - HP		MFG.		MODEL
COMMENT:					

OPERATION:

HOURS ON:	S	M	T	W	T	F	S	COMMENT
PRESENT START TIME	**0**	**600**	**600**	**600**	**600**	**600**	**0**	TIMECLOCK?
PRESENT STOP TIME	**0**	**1800**	**1800**	**1800**	**1800**	**1800**	**0**	**NO**
REQUIRED START TIME	**0**	**600**	**600**	**600**	**600**	**600**	**0**	
REQUIRED STOP TIME	**0**	**1800**	**1800**	**1800**	**1800**	**1800**	**0**	

MONTHS ON:

J	F	M	A	M	J	J	A	S	O	N	D
1	**1**	**1**	**1**	**0**	**0**	**0**	**0**	**0**	**1**	**1**	

CONTROLS:

		PNEUMATIC		ELECTRIC		ELEC'NIC		DDC	COMMENTS
SETPOINTS		PSIG		HW SUPPLY					
RESET CONTROL (oF):		HW HIGH		HW LOW		OA LOW		OA HIGH	
BURNER CONTROLS		O2 TRIM (Y/N)		OTHER					
COMMENTS:									

E M C ENGINEERS, INC.

PROJECT: UMCS STUDY
CLIENT CONTRACT NO.: DACA01-94-D-0033
CLIENT PROJ. ENG: STEVE ROWLEY
LOCATION: FORT DRUM, NY BLDG: **1240**

EMC NO.: 1406-006
DATE: 16-Nov-93
PREPA **CSW**
CHECKED BY: BG
FILE: **1240HV1**

AIR HANDLING UNIT SURVEY OBSERVATIONS

HV-1	AHU NO.	**MER**	LOCATION (RM)
	REF. SYS. SERVING AHU	**MEN/WOMEN/CORD**	SERVES AREA

UNIT TYPE:

X	SINGLE ZN		2-PIPE FC		4-PIPE FC		UNIT HTR	X	H&V
	MULTIZONE		DOUBLE DT		REHEAT		INDUCTION		VAV
	NUMBER OF ZONES				OTHER				
	COMMENT:								

NAMEPLATE:

CENTRALAIRE				MFG.				MODEL
1.0	SUPPLY FAN HP			MFG.				MODEL
	RET/EXH FAN HP			MFG.				MODEL
2800	CFM-HTG	**0**	CFM-CLG	**100%**	MIN %OA	**100%**	MAX %OA	**1.4%**	% HTG AREA SERVED
COMMENT:									

COILS:

X	NONE		STM		HW		ELEC		MOD VLV	PREHEAT
	NONE		STM	X	HW		ELEC		MOD VLV	HEATING
X	NONE		STM		HW		ELEC		MOD VLV	REHEAT
X	NONE		STM		HW		EVAP MEDIA		MOD VLV	HUMID.
X	NONE		DX		CW				MOD VLV	COOLING

OPERATION:

HOURS ON:	S	M	T	W	T	F	S	COMMENTS
PRESENT START TIME	**0**	**600**	**600**	**600**	**600**	**600**	**0**	TIMECLOCK?
PRESENT STOP TIME	**0**	**1800**	**1800**	**1800**	**1800**	**1800**	**0**	**YES**
REQUIRED START TIME	**0**	**600**	**600**	**600**	**600**	**600**	**0**	
REQUIRED STOP TIME	**0**	**1800**	**1800**	**1800**	**1800**	**1800**	**0**	

MONTHS ON:

J	F	M	A	M	J	J	A	S	O	N	D
1	**1**	**1**	**1**	**1**	**1**	**1**	**1**	**1**	**1**	**1**	**1**

CONTROLS:

	X	PNEUMATIC		ELECTRIC		ELEC'NIC		DDC	COMMENTS
THERMOSTAT TYPE:		SINGLE STPT		DUAL SETPNT		SETBACK			
SPACE SETPOINT (°F):		OCC HEAT		UNOCC HEAT		OCC COOL		UNOCC COOL	
OTHER SETPOINTS (°F):		HOT DECK		COLD DECK		MIXED AIR		OTHER	
DAMPER CONTROL:	**N**	MIN OA (Y/N)	**Y**	MAX OA (Y/N)	**N**	RA (Y/N)	**N**	EA (Y/N)	
		MA CONTROL		ECONO-DB		ECONO-ENT		OTHER	
DEMAND LIMIT:		(Y = YES ; N = NO)							
COMMENTS:									

E M C ENGINEERS, INC.

PROJECT: UMCS FEASIBILITY STUDY
CLIENT CONTRACT NO.: DACA01-94-D-0033 D.O. 6
CLIENT PROJECT ENGINEER: STEVE ROWLEY
LOCATION: FT. DRUM **BLDG: 1240**
Building Sq.Ft.: 40,491

System Type	**10**
System Name:	**HOT WATER BOILER AND PUMPS**
System Number:	**B1**

Typical Building Information

Category	Construction	Use	Occ.	Day
2	BRICK	MOTOR REPAIR SHOP	0600-1730	MON-FRI

Enter Weeks of Summer:	20
Enter Weeks of Winter:	32

Required Operation	S	M	T	W	TH	F	S
Start Time	0	600	600	600	600	600	0
Stop Time	0	1800	1800	1800	1800	1800	0

Present Operations	S	M	T	W	TH	F	S
Start Time	0	600	600	600	600	600	0
Stop Time	0	1800	1800	1800	1800	1800	0

INPUTS		INPUT
Motor HP		2
Load Factor		0.8
CFM - HTG		0
CFM - CLG		0
% OA		0.00%
% Area		3.75%
TON CAPC.		0
MBTU CAPC.		0.00246
kW/Ton		0
MOSON		6
EFF		0.82
LOOK-UP VALUE		
EFFHP	78.00%	78.00%

HOURS CALCULATIONS	REQUIRED HR/YR	PRESENT HR/YR
Cooling HRSON	1,400	1,200
Heating HRSON	2,240	1,920
C/H HRSON	3,650	3,129
Cooling HRSAV	0	
Heating HRSAV	0	
C/H HRSAV	0	

CONSTANT	LOOK-UP	INPUT
HOAUH	0.00	0.00
HOAUHC	0.00	0.00
COAUC	0.00E+00	0.00E+00
COAUHC	0.00E+00	0.00E+00
HOAOH	198.24	198.24
HOAOHC	121.66	121.66
COAOC	0.00E+00	0.00E+00
COAOHC	0.00E+00	0.00E+00
DC DUTY	0.00	0.00
DC DEMAN	0.17	0.17
ECC	0.00E+00	0.00E+00
ECHC	0.00E+00	0.00E+00
NSUCC	0.00E+00	0.00E+00
NSUCHC	0.00E+00	0.00E+00
DDCCHC	0.00E+00	0.00E+00
DDCCC	0.00E+00	0.00E+00
DSC	2.04E+03	2.04E+03
NSC	5.85E+04	5.85E+04
FV	0	0
CHWR	9.57	9.57
OAR	7.40	7.40
OPT	188.00	188.00

E M C ENGINEERS, INC.

PROJECT: UMCS FEASIBILITY STUDY
CLIENT CONTRACT NO.: DACA01-94-D-0033 D.O. 6
CLIENT PROJECT ENGINEER: STEVE ROWLEY
LOCATION: FT. DRUM

Date: 30-Mar-95

Bldg Number: 1240
System Type 10
System Name: HOT WATER BOILER AND PUMPS
System Number: B1

HEATING ONLY SYSTEMS	kW/yr	kWh/yr	MBtu/yr	MH/yr
Schedule ST/SP	0.0	0.0	0.0	
Optimum ST/SP	0.0	287.5	0.0	
Duty Cycle	0.0	0.0	0.0	
Demand Limit	0.0	0.0	0.0	
Night Setback	0.0	0.0	88.8	
Sub Total	**0.0**	**287.5**	**88.8**	
Economizer	0.0	0.0	0.0	
Ventilation/Recirculation	0.0	0.0	0.0	
DDC Control	0.0	0.0	3.1	
HW OA Reset	0.0	0.0	0.0	
Chilled Water Reset	0.0	0.0	0.0	
Condenser Water Reset	0.0	0.0	0.0	
Chiller Demand Limit	0.0	0.0	0.0	
Remote Monitoring, Maintenance, Run Time, and Safety Alarms				3
TOTAL	**0.0**	**287.5**	**91.9**	**3**

E M C ENGINEERS, INC.

PROJECT: UMCS FEASIBILITY STUDY
CLIENT CONTRACT NO.: DACA01-94-D-0033 D.O. 6
CLIENT PROJECT ENGINEER: STEVE ROWLEY
LOCATION: FT. DRUM **BLDG: 1240**
Building Sq.Ft.: 40,491

EMC NO.: 1406-006
DATE: 30-Mar-95
PREPARED BY: CSW/BMG
CHECKED BY: KC/WLC

System Type	**10**
System Name:	**HOT WATER BOILER AND PUMPS**
System Number:	**B2**

Typical Building Information

Category	Construction	Use	Occ.	Day
2	BRICK	MOTOR REPAIR SHOP	0600-1730	MON-FRI

Enter Weeks of Summer:	20
Enter Weeks of Winter:	32

Required Operation	S	M	T	W	TH	F	S
Start Time	0	600	600	600	600	600	0
Stop Time	0	1800	1800	1800	1800	1800	0

Present Operations	S	M	T	W	TH	F	S
Start Time	0	600	600	600	600	600	0
Stop Time	0	1800	1800	1800	1800	1800	0

INPUTS		INPUT
Motor HP		2
Load Factor		0.8
CFM - HTG		0
CFM - CLG		0
% OA		0.00%
% Area		3.75%
TON CAPC.		0
MBTU CAPC.		0.00246
kW/Ton		0
MOSON		6
EFF		0.82
LOOK-UP VALUE		
EFFHP	78.00%	78.00%

HOURS CALCULATIONS	REQUIRED HR/YR	PRESENT HR/YR
Cooling HRSON	1,400	1,200
Heating HRSON	2,240	1,920
C/H HRSON	3,650	3,129
Cooling HRSAV	0	
Heating HRSAV	0	
C/H HRSAV	0	

CONSTANT	LOOK-UP	INPUT
HOAUH	0.00	0.00
HOAUHC	0.00	0.00
COAUC	0.00E+00	0.00E+00
COAUHC	0.00E+00	0.00E+00
HOAOH	198.24	198.24
HOAOHC	121.66	121.66
COAOC	0.00E+00	0.00E+00
COAOHC	0.00E+00	0.00E+00
DC DUTY	0.00	0.00
DC DEMAN	0.17	0.17
ECC	0.00E+00	0.00E+00
ECHC	0.00E+00	0.00E+00
NSUCC	0.00E+00	0.00E+00
NSUCHC	0.00E+00	0.00E+00
DDCCHC	0.00E+00	0.00E+00
DDCCC	0.00E+00	0.00E+00
DSC	2.04E+03	2.04E+03
NSC	5.85E+04	5.85E+04
FV	0	0
CHWR	9.57	9.57
OAR	7.40	7.40
OPT	188.00	188.00

E M C ENGINEERS, INC.

PROJECT: UMCS FEASIBILITY STUDY
CLIENT CONTRACT NO.: DACA01-94-D-0033 D.O. 6
CLIENT PROJECT ENGINEER: STEVE ROWLEY
LOCATION: FT. DRUM

Date: 30-Mar-95

Bldg Number: 1240
System Type 10
System Name: HOT WATER BOILER AND PUMPS
System Number: B2

HEATING ONLY SYSTEMS	kW/yr	kWh/yr	MBtu/yr	MH/yr
Schedule ST/SP	0.0	0.0	0.0	
Optimum ST/SP	0.0	287.5	0.0	
Duty Cycle	0.0	0.0	0.0	
Demand Limit	0.0	0.0	0.0	
Night Setback	0.0	0.0	88.8	
Sub Total	**0.0**	**287.5**	**88.8**	
Economizer	0.0	0.0	0.0	
Ventilation/Recirculation	0.0	0.0	0.0	
DDC Control	0.0	0.0	3.1	
HW OA Reset	0.0	0.0	0.0	
Chilled Water Reset	0.0	0.0	0.0	
Condenser Water Reset	0.0	0.0	0.0	
Chiller Demand Limit	0.0	0.0	0.0	
Remote Monitoring, Maintenance, Run Time, and Safety Alarms				3
TOTAL	**0.0**	**287.5**	**91.9**	**3**

E M C ENGINEERS, INC.

PROJECT: UMCS FEASIBILITY STUDY
CLIENT CONTRACT NO.: DACA01-94-D-0033 D.O. 6
CLIENT PROJECT ENGINEER: STEVE ROWLEY
LOCATION: FT. DRUM **BLDG: 1240**
Building Sq.Ft.: 40,491

EMC NO.: 1406-006
DATE: 30-Mar-95
PREPARED BY: CSW/BMG
CHECKED BY: KC/WLC

System Type	**1**
System Name:	**H&V UNIT WITHOUT RETURN FAN**
System Number:	**HV-1**

Typical Building Information

Category	Construction	Use	Occ.	Day
2	BRICK	MOTOR REPAIR SHOP	0600-1730	MON-FRI

Enter Weeks of Summer:	20
Enter Weeks of Winter:	32

Required Operation	S	M	T	W	TH	F	S
Start Time	0	600	600	600	600	600	0
Stop Time	0	1800	1800	1800	1800	1800	0

Present Operations	S	M	T	W	TH	F	S
Start Time	0	600	600	600	600	600	0
Stop Time	0	1800	1800	1800	1800	1800	0

INPUTS		INPUT
Motor HP		1
Load Factor		0.8
CFM - HTG		2800
CFM - CLG		0
% OA		100.00%
% Area		92.50%
TON CAPC.		0
MBTU CAPC.		0
kW/Ton		0
MOSON		12
EFF		0.82
LOOK-UP VALUE		
EFFHP	69.20%	69.20%

HOURS CALCULATIONS	REQUIRED HR/YR	PRESENT HR/YR
Cooling HRSON	1,400	1,200
Heating HRSON	2,240	1,920
C/H HRSON	3,650	3,129
Cooling HRSAV	0	
Heating HRSAV	0	
C/H HRSAV	0	

CONSTANT	LOOK-UP	INPUT
HOAUH	0.00	0.00
HOAUHC	0.00	0.00
COAUC	0.00E+00	0.00E+00
COAUHC	0.00E+00	0.00E+00
HOAOH	198.24	198.24
HOAOHC	121.66	121.66
COAOC	0.00E+00	0.00E+00
COAOHC	0.00E+00	0.00E+00
DC DUTY	0.00	0.00
DC DEMAN	0.17	0.17
ECC	0.00E+00	0.00E+00
ECHC	0.00E+00	0.00E+00
NSUCC	0.00E+00	0.00E+00
NSUCHC	0.00E+00	0.00E+00
DDCCHC	0.00E+00	0.00E+00
DDCCC	0.00E+00	0.00E+00
DSC	2.04E+03	2.04E+03
NSC	5.85E+04	5.85E+04
FV	0	0
CHWR	9.57	9.57
OAR	7.40	7.40
OPT	188.00	188.00

E M C ENGINEERS, INC.

PROJECT: UMCS FEASIBILITY STUDY
CLIENT CONTRACT NO.: DACA01-94-D-0033 D.O. 6
CLIENT PROJECT ENGINEER: STEVE ROWLEY
LOCATION: FT. DRUM

Date: 30-Mar-95

Bldg Number: 1240
System Type 1
System Name: H&V UNIT WITHOUT RETURN FAN
System Number: HV-1

HEATING AND VENTILATING SYSTEMS	kW/yr	kWh/yr	MBtu/yr	MH/yr
Schedule ST/SP	0.0	0.0	0.0	
Optimum ST/SP	0.0	162.0	0.0	
Duty Cycle	0.0	0.0	0.0	
Demand Limit	0.0	0.0	0.0	
Night Setback	0.0	0.0	2,190.4	
Sub Total	**0.0**	**162.0**	**2,190.4**	
Economizer	0.0	0.0	0.0	
Ventilation/Recirculation	0.0	0.0	0.0	
DDC Control	0.0	0.0	76.4	
HW OA Reset	0.0	0.0	0.0	
Chilled Water Reset	0.0	0.0	0.0	
Condenser Water Reset	0.0	0.0	0.0	
Chiller Demand Limit	0.0	0.0	0.0	
Remote Monitoring, Maintenance, Run Time, and Safety Alarms				3
TOTAL	**0.0**	**162.0**	**2,266.8**	**3**

FIELD SURVEY NOTES

BUILDING 1750

TYPICAL: 1240

E M C ENGINEERS, INC.

PROJECT: UMCS STUDY
CLIENT CONTRACT NO.: DACA01-94-D-0033
CLIENT PROJ. ENG: STEVE ROWLEY
LOCATION: FORT DRUM, NY BLDG: 1750

EMC NO.: 1406-006
DATE: 16-NOV-94
PREPARED BY: CSW
CHECKED BY: BG
FILE: 1750BDS

VI. BUILDING DATA SURVEY OBSERVATIONS

BLDG NO: 1750 BLDG NAME: MOTOR REPAIR SHOP

ZONE NO.	1	FUNCTION: SHOP B, MAINTENANCE ROOM (RM7)							
OCCUPANCY HOURS:	M-F	600	TO	1730	SAT	0	TO	0	
	SUN	0	TO	0					
PRESENT TEMP	WINTER OCC	70.0 øF		UNOCC	65.0 øF				
	SUMMER OCC	øF		UNOCC	øF				

ZONE NO.	2	FUNCTION: PART SUPPLY							
OCCUPANCY HOURS:	M-F	600	TO	1730	SAT	0	TO	0	
	SUN	0	TO	0					
PRESENT TEMP		øF		UNOCC	øF				
	SUMMER OCC	øF		UNOCC	øF				

ZONE NO.	3	FUNCTION: SHOP A, MIRROR OF SHOP B							
OCCUPANCY HOURS:	M-F	600	TO	1730	SAT	0	TO	0	
	SUN	0	TO	0					
PRESENT TEMP	WINTER OCC	75.0 øF		UNOCC	65.0 øF				
	SUMMER OCC	øF		UNOCC	øF				

REMARKS:

E M C ENGINEERS, INC.

PROJECT: UMCS STUDY
CLIENT CONTRACT NO.: DACA01-94-D-0033
CLIENT PROJ. ENG: STEVE ROWLEY
LOCATION: FORT DRUM, NY BLDG: 1750

EMC NO.: 1406-006
DATE: 16-NOV-94
PREPARED BY: CSW
CHECKED BY: BG
FILE: 1750BDS2

VI. BUILDING DATA SURVEY OBSERVATIONS

BLDG NO: 1750 BLDG NAME: MOTOR REPAIR SHOP

ZONE NO.	4	FUNCTION: ADMIN							
OCCUPANCY HOURS:	M-F	600	TO	1730	SAT	0	TO	0	
	SUN	0	TO	0					
PRESENT TEMP	WINTER OCC	73.0 øF		UNOCC	øF				
	SUMMER OCC	øF		UNOCC	øF				

ZONE NO.	5	FUNCTION:		STORAGE					
OCCUPANCY HOURS:	M-F	600	TO	1730	SAT	0	TO	0	
	SUN	0	TO	0					
PRESENT TEMP	WINTER OCC	øF		UNOCC	øF				
	SUMMER OCC	øF		UNOCC	øF				

ZONE NO.	6	FUNCTION:		INSPECTION BAY					
OCCUPANCY HOURS:	M-F	600	TO	1730	SAT	0	TO	0	
	SUN	0	TO	0					
PRESENT TEMP	WINTER OCC	øF		UNOCC	øF				
	SUMMER OCC	øF		UNOCC	øF				

REMARKS: ADMIN: OPEN WEEKENDS ON REQUEST
STORAGE (ZONE 5): HEATED WITH 21 SPACE HEATERS
INSPECTION BAY: ROOF EXHAUST FAN IS RUN IN WINTER WHENEVER BLDG IS OCCUPIED

E M C ENGINEERS, INC.

PROJECT: UMCS STUDY
CLIENT CONTRACT NO.: DACA01-94-D-0033
CLIENT PROJ. ENG: STEVE ROWLEY
LOCATION: FORT DRUM, NY BLDG: **1750**

EMC NO.: 1406-006
DATE: 16-NOV-94
PREPARED BY: **CSW**
CHECKED BY: BG
FILE: **1750B1&2**

BOILER & CONVERTER SURVEY OBSERVATIONS

B1&2	BOILER/CONVERTER NO.		LOCATION (RM)
	SOURCE OF HEATING (PLANT)	WHOLE BLDG	SERVES AREA

UNIT TYPE:

	STEAM		PSIG	X	HW		TEMP.		BOILER TYPE:
X	NO.2 OIL		NO.6 OIL		N.GAS		ELEC		FUELS:
	STM/HW		HTHW/HW		HTHW/STM		OTHER		CONVERTER TYPE:
	SPACE HEAT		DHW		OTHER				USE:
COMMENT:							**61%**	% HTG AREA SERVED	
								BB RADIATION ONLY	

NAMEPLATE:

HB SMIT	MFG.	**2-8 C3-0**	MODEL	**693900**	CAPACITY OUTPUT (BTUH)
					CAPACITY INPUT (BTUH)
HB SMITH	MFG.	**2-8 C-30**	MODEL	**693900**	CAPACITY OUTPUT (BTUH)
					CAPACITY INPUT (BTUH)
7.5	HW PUMP 1 - HP	**MARATHON**	MFG.	**UVM 213TTDB702GGP**	MODEL
	HW PUMP 2 - HP		MFG.		MODEL
	HW PUMP 3 - HP		MFG.		MODEL
COMMENT:					

OPERATION:

HOURS ON:	S	M	T	W	T	F	S	COMMENT
PRESENT START TIME	**700**	**700**	**700**	**700**	**700**	**700**	**700**	TIMECLOCK?
PRESENT STOP TIME	**1500**	**1500**	**1500**	**1500**	**1500**	**1500**	**1500**	YES
REQUIRED START TIME	**700**	**700**	**700**	**700**	**700**	**700**	**700**	
REQUIRED STOP TIME	**1500**	**1500**	**1500**	**1500**	**1500**	**1500**	**1500**	

MONTHS ON:

J	F	M	A	M	J	J	A	S	O	N	D
1	**1**	**1**	**1**	**1**	**1**	**1**	**1**	**1**	**1**	**1**	**1**

CONTROLS:

		PNEUMATIC		ELECTRIC		ELEC'NIC		DDC	COMMENTS
SETPOINTS		PSIG		HW SUPPLY					
RESET CONTROL (oF):		HW HIGH		HW LOW		OA LOW		OA HIGH	
BURNER CONTROLS		O2 TRIM (Y/N)		OTHER					
COMMENTS:									

PROJECT: UMCS STUDY
CLIENT CONTRACT NO.: DACA01-94-D-0033
CLIENT PROJ. ENG: STEVE ROWLEY
LOCATION: FORT DRUM, NY BLDG: **1750**

EMC NO.: 1406-006
DATE: 16-NOV-94
PREPARED BY: **CSW**
CHECKED BY: BG
FILE: **1750DHW**

DOMESTIC HW SURVEY OBSERVATIONS

DHW	BOILER/CONVERTER NO.	MER	LOCATION (RM)
	SOURCE OF HEATING (PLANT)		SERVES AREA

UNIT TYPE:

X	NO.2 OIL		NO.6 OIL		N.GAS		ELEC		FUELS:
	STM/HW		HTHW/HW		HTHW/STM		OTHER		CONVERTER TYPE:
COMMENT:									

NAMEPLATE:

AO SMITH	MFG.	**COF 315A 824**	MODEL	**315000**	CAPACITY OUTPUT (BTUH,KW)
	MFG.		MODEL		CAPACITY OUTPUT (BTUH,KW)
DOMESTIC HW CIRCULATION PUMP:					
	HW PUMP 1 - HP		MFG.		MODEL
	HW PUMP 2 - HP		MFG.		MODEL
	HW PUMP 3 - HP		MFG.		MODEL
COMMENT:					

DIMENSION:	DIAMETER (INCHS)		HEIGHT OR LENGTH (INCHES)	GALLON

OPERATION:

HOURS ON:	S	M	T	W	T	F	S	COMMENT
PRESENT START TIME	**0**	**0**	**0**	**0**	**0**	**0**	**0**	TIMECLOCK?
PRESENT STOP TIME	**2400**	**2400**	**2400**	**2400**	**2400**	**2400**	**2400**	**NO**
REQUIRED START TIME	**0**	**600**	**600**	**600**	**600**	**600**	**0**	
REQUIRED STOP TIME	**0**	**1730**	**1730**	**1730**	**1730**	**1730**	**0**	

MONTHS ON:

J	F	M	A	M	J	J	A	S	O	N	D
1	**1**	**1**	**1**	**1**	**1**	**1**	**1**	**1**	**1**	**1**	**1**

CONTROLS:

		PNEUMATIC		ELECTRIC		ELEC'NIC		DDC	COMMENTS
SETPOINTS				HW SUPPLY					
COMMENTS:									

E M C ENGINEERS, INC.

PROJECT: UMCS STUDY
CLIENT CONTRACT NO.: DACA01-94-D-0033
CLIENT PROJ. ENG: STEVE ROWLEY
LOCATION: FORT DRUM, NY BLDG: **1750**

EMC NO.: 1406-006
DATE: 16-NOV-94
PREPARED BY: **CSW**
CHECKED BY: BG
FILE: **1750HV1**

AIR HANDLING UNIT SURVEY OBSERVATIONS

HV1	AHU NO.	**MER**	LOCATION (RM)
	REF. SYS. SERVING AHU	**ADMIN. SOUTH SIDE**	SERVES AREA

X	SINGLE ZN		2-PIPE FC		4-PIPE FC		UNIT HTR	**X**	H&V
	MULTIZONE		DOUBLE DT		REHEAT		INDUCTION		VAV
	NUMBER OF ZONES				OTHER				
	COMMENT:								

NAMEPLATE:

	TRANE				MFG.				MODEL
7.5	SUPPLY FAN HP		**CENTURY**		MFG.				MODEL
	RET/EXH FAN HP				MFG.				MODEL
3290	CFM-HTG	**0**	CFM-CLG	**10%**	MIN %OA	**10%**	MAX %OA	**16.8%**	% HTG AREA SERVED
COMME	2-SPEED FAN WITH 6580 CFM IN SUMMER (10% O.A.)								

COILS:

X	NONE		STM		HW		ELEC		MOD VLV	PREHEAT
	NONE		STM	**X**	HW		ELEC		MOD VLV	HEATING
X	NONE		STM		HW		ELEC		MOD VLV	REHEAT
X	NONE		STM		HW		EVAP MEDIA		MOD VLV	HUMID.
X	NONE		DX		CW				MOD VLV	COOLING

OPERATION:

HOURS ON:	S	M	T	W	T	F	S	COMMENTS
PRESENT START TIME	**700**	**700**	**700**	**700**	**700**	**700**	**700**	TIMECLOCK?
PRESENT STOP TIME	**1500**	**1500**	**1500**	**1500**	**1500**	**1500**	**1500**	**ON-OFF AUTOMATIC**
REQUIRED START TIME	**700**	**700**	**700**	**700**	**700**	**700**	**700**	**SWITCH**
REQUIRED STOP TIME	**1500**	**1500**	**1500**	**1500**	**1500**	**1500**	**1500**	

MONTHS ON:

J	F	M	A	M	J	J	A	S	O	N	D
1	**1**	**1**	**1**	**0**	**0**	**0**	**0**	**0**	**1**	**1**	**1**

CONTROLS:

		PNEUMATIC		ELECTRIC		ELEC'NIC		DDC	COMMENTS
THERMOSTAT TYPE:		SINGLE STPT		DUAL SETPNT		SETBACK			
SPACE SETPOINT (°F):		OCC HEAT		UNOCC HEAT		OCC COOL		UNOCC COOL	
OTHER SETPOINTS (°F):		HOT DECK		COLD DECK		MIXED AIR		OTHER	
DAMPER CONTROL:	**Y**	MIN OA (Y/N)	**Y**	MAX OA (Y/N)	**Y**	RA (Y/N)	**N**	EA (Y/N)	
		MA CONTROL		ECONO-DB		ECONO-ENT		OTHER	
DEMAND LIMIT:		(Y = YES ; N = NO)							
COMMENTS:									

E M C ENGINEERS, INC.

PROJECT: UMCS STUDY
CLIENT CONTRACT NO.: DACA01-94-D-0033
CLIENT PROJ. ENG: STEVE ROWLEY
LOCATION: FORT DRUM, NY BLDG: **1750**

EMC NO.: 1406-006
DATE: 16-NOV-94
PREPARED BY: **CSW**
CHECKED BY: BG
1750HV2

AIR HANDLING UNIT SURVEY OBSERVATIONS

HV2	AHU NO.	**ABOVE SUPPLY RM**	LOCATION (RM)
	REF. SYS. SERVING AHU	**ADMIN. NORTH SIDE**	SERVES AREA

X	SINGLE ZN		2-PIPE FC		4-PIPE FC		UNIT HTR	**X**	H&V
	MULTIZONE		DOUBLE DT		REHEAT		INDUCTION		VAV
	NUMBER OF ZONES				OTHER				
	COMMENT:								

NAMEPLATE:

					MFG.				MODEL
2.0	SUPPLY FAN HP				MFG.				MODEL
	RET/EXH FAN HP				MFG.				MODEL
1230	CFM-HTG	**0**	CFM-CLG	**10%**	MIN %OA	**10%**	MAX %OA	**10.9%**	% HTG AREA SERVED
COMME	2-SPEED FAN WITH 6580 CFM IN SUMMER (10% O.A.)								

COILS:

X	NONE		STM		HW		ELEC		MOD VLV	PREHEAT
	NONE		STM	**X**	HW		ELEC		MOD VLV	HEATING
X	NONE		STM		HW		ELEC		MOD VLV	REHEAT
X	NONE		STM		HW		EVAP MEDIA		MOD VLV	HUMID.
X	NONE		DX		CW				MOD VLV	COOLING

OPERATION:

HOURS ON:	S	M	T	W	T	F	S	COMMENTS
PRESENT START TIME	**700**	**700**	**700**	**700**	**700**	**700**	**700**	TIMECLOCK?
PRESENT STOP TIME	**1500**	**1500**	**1500**	**1500**	**1500**	**1500**	**1500**	**ON-OFF AUTOMATIC**
REQUIRED START TIME	**700**	**700**	**700**	**700**	**700**	**700**	**700**	**SWITCH**
REQUIRED STOP TIME	**1500**	**1500**	**1500**	**1500**	**1500**	**1500**	**1500**	

MONTHS ON:

J	F	M	A	M	J	J	A	S	O	N	D
1	**1**	**1**	**1**	**0**	**0**	**0**	**0**	**0**	**1**	**1**	**1**

CONTROLS:

		PNEUMATIC		ELECTRIC		ELEC'NIC		DDC	COMMENTS
THERMOSTAT TYPE:		SINGLE STPT		DUAL SETPNT		SETBACK			
SPACE SETPOINT (°F):		OCC HEAT		UNOCC HEAT		OCC COOL		UNOCC COOL	
OTHER SETPOINTS (°F):		HOT DECK		COLD DECK		MIXED AIR		OTHER	
DAMPER CONTROL:	**Y**	MIN OA (Y/N)	**Y**	MAX OA (Y/N)	**Y**	RA (Y/N)	**N**	EA (Y/N)	
		MA CONTROL		ECONO-DB		ECONO-ENT		OTHER	
DEMAND LIMIT:		(Y = YES ; N = NO)							

COMMENTS:

E M C ENGINEERS, INC.

PROJECT: UMCS STUDY
CLIENT CONTRACT NO.: DACA01-94-D-0033
CLIENT PROJ. ENG: STEVE ROWLEY
LOCATION: FORT DRUM, NY BLDG: **1750**

EMC NO.: 1406-006
DATE: 16-NOV-94
PREPARED BY: **CSW**
CHECKED BY: BG
FILE N **1750HV3**

AIR HANDLING UNIT SURVEY OBSERVATIONS

HV3	AHU NO.	**AUTO REPAIR**	LOCATION (RM)
	REF. SYS. SERVING AHU	**WORKSHOP**	SERVES AREA

X	SINGLE ZN		2-PIPE FC		4-PIPE FC		UNIT HTR	**X**	H&V
	MULTIZONE		DOUBLE DT		REHEAT		INDUCTION		VAV
	NUMBER OF ZONES				OTHER				
	COMMENT:								

NAMEPLATE:

					MFG.				MODEL
1.5	SUPPLY FAN HP				MFG.				MODEL
	RET/EXH FAN HP				MFG.				MODEL
4850	CFM-HTG	**0**	CFM-CLG	**100%**	MIN %OA	**100%**	MAX %OA	**39.4%**	% HTG AREA SERVED
COMMENT:									

COILS:

X	NONE		STM		HW		ELEC		MOD VLV	PREHEAT
	NONE		STM	**X**	HW		ELEC		MOD VLV	HEATING
X	NONE		STM		HW		ELEC		MOD VLV	REHEAT
X	NONE		STM		HW		EVAP MEDIA		MOD VLV	HUMID.
X	NONE		DX		CW				MOD VLV	COOLING

OPERATION:

HOURS ON:	S	M	T	W	T	F	S	COMMENTS
PRESENT START TIME	**700**	**700**	**700**	**700**	**700**	**700**	**700**	TIMECLOCK?
PRESENT STOP TIME	**1500**	**1500**	**1500**	**1500**	**1500**	**1500**	**1500**	**ON-OFF AUTOMATIC**
REQUIRED START TIME	**700**	**700**	**700**	**700**	**700**	**700**	**700**	**SWITCH**
REQUIRED STOP TIME	**1500**	**1500**	**1500**	**1500**	**1500**	**1500**	**1500**	

MONTHS ON:

J	F	M	A	M	J	J	A	S	O	N	D
1	**1**	**1**	**1**	**0**	**0**	**0**	**0**	**0**	**1**	**1**	**1**

CONTROLS:

		PNEUMATIC		ELECTRIC		ELEC'NIC		DDC	COMMENTS
THERMOSTAT TYPE:		SINGLE STPT		DUAL SETPNT		SETBACK			
SPACE SETPOINT (°F):		OCC HEAT		UNOCC HEAT		OCC COOL		UNOCC COOL	
OTHER SETPOINTS (°F):		HOT DECK		COLD DECK		MIXED AIR		OTHER	
DAMPER CONTROL:	**Y**	MIN OA (Y/N)	**Y**	MAX OA (Y/N)	**Y**	RA (Y/N)	**N**	EA (Y/N)	
		MA CONTROL		ECONO-DB		ECONO-ENT		OTHER	
DEMAND LIMIT:		(Y = YES ; N = NO)							
COMMENTS:									

E M C ENGINEERS, INC.

PROJECT: UMCS STUDY
CLIENT CONTRACT NO.: DACA01-94-D-0033
CLIENT PROJ. ENG: STEVE ROWLEY
LOCATION: FORT DRUM, NY BLDG: **1750**

EMC NO.: 1406-006
DATE: 16-NOV-94
PREPARED BY: **CSW**
CHECKED BY: BG
FILE N **1750HV4**

AIR HANDLING UNIT SURVEY OBSERVATIONS

HV4	AHU NO.	**INSPECTION BAYS**	LOCATION (RM)
	REF. SYS. SERVING AHU	**INSPECTION**	SERVES AREA

X	SINGLE ZN		2-PIPE FC		4-PIPE FC		UNIT HTR	**X**	H&V
	MULTIZONE		DOUBLE DT		REHEAT		INDUCTION		VAV
	NUMBER OF ZONES				OTHER				
	COMMENT:								

NAMEPLATE:

					MFG.				MODEL
1.5	SUPPLY FAN HP				MFG.				MODEL
	RET/EXH FAN HP				MFG.				MODEL
4000	CFM-HTG	**0**	CFM-CLG	**100%**	MIN %OA	**100%**	MAX %OA	**6.3%**	% HTG AREA SERVED
COMMENT:									

COILS:

X	NONE		STM		HW		ELEC		MOD VLV	PREHEAT
	NONE		STM	**X**	HW		ELEC		MOD VLV	HEATING
X	NONE		STM		HW		ELEC		MOD VLV	REHEAT
X	NONE		STM		HW		EVAP MEDIA		MOD VLV	HUMID.
X	NONE		DX		CW				MOD VLV	COOLING

OPERATION:

HOURS ON:	S	M	T	W	T	F	S	COMMENTS
PRESENT START TIME	**700**	**700**	**700**	**700**	**700**	**700**	**700**	TIMECLOCK?
PRESENT STOP TIME	**1500**	**1500**	**1500**	**1500**	**1500**	**1500**	**1500**	**ON-OFF AUTOMATIC**
REQUIRED START TIME	**700**	**700**	**700**	**700**	**700**	**700**	**700**	**SWITCH**
REQUIRED STOP TIME	**1500**	**1500**	**1500**	**1500**	**1500**	**1500**	**1500**	

MONTHS ON:

J	F	M	A	M	J	J	A	S	O	N	D
1	**1**	**1**	**1**	**0**	**0**	**0**	**0**	**0**	**1**	**1**	**1**

CONTROLS:

		PNEUMATIC		ELECTRIC		ELEC'NIC		DDC	COMMENTS
THERMOSTAT TYPE:		SINGLE STPT		DUAL SETPNT		SETBACK			
SPACE SETPOINT (°F):		OCC HEAT		UNOCC HEAT		OCC COOL		UNOCC COOL	
OTHER SETPOINTS (°F):		HOT DECK		COLD DECK		MIXED AIR		OTHER	
DAMPER CONTROL:	**Y**	MIN OA (Y/N)	**Y**	MAX OA (Y/N)	**Y**	RA (Y/N)	**N**	EA (Y/N)	
		MA CONTROL		ECONO-DB		ECONO-ENT		OTHER	
DEMAND LIMIT:		(Y = YES ; N = NO)							
COMMENTS:									

E M C ENGINEERS, INC.

PROJECT: UMCS STUDY
CLIENT CONTRACT NO.: DACA01-94-D-0033
CLIENT PROJ. ENG: STEVE ROWLEY
LOCATION: FORT DRUM, NY BLDG: **1750**

EMC NO.: 1406-006
DATE: 16-NOV-94
PREPARED BY: **CSW**
CHECKED BY: BG
FILE: **1750RAD**

PERIMETER RADIATION SURVEY OBSERVATIONS

FT1-8	PER RAD NO.		LOCATION (RM)
BOILER	SOURCE OF HEATING	PART OF ADMIN	SERVES AREA

UNIT TYPE:

	STEAM	**X**	HW		ELECTRIC				
	OTHER								
	COMMENT:								

NAMEPLATE:

	HW PUMP 1 - HP		MFG.		MODEL
	HW PUMP 2 - HP		MFG.		MODEL
	HW PUMP 3 - HP		MFG.		MODEL
	HW PUMP 4 - HP		MFG.		MODEL
COMMENT:				**27.7%**	% AREA HEATING

OPERATION:

HOURS ON:	S	M	T	W	T	F	S	COMMENT
PRESENT START TIME	**700**	**700**	**700**	**700**	**700**	**700**	**700**	TIMECLOCK?
PRESENT STOP TIME	**1500**	**1500**	**1500**	**1500**	**1500**	**1500**	**1500**	
REQUIRED START TIME	**700**	**700**	**700**	**700**	**700**	**700**	**700**	
REQUIRED STOP TIME	**1500**	**1500**	**1500**	**1500**	**1500**	**1500**	**1500**	

MONTHS ON:

J	F	M	A	M	J	J	A	S	O	N	D
1	**1**	**1**	**1**	**1**	**1**	**1**	**1**	**1**	**1**	**1**	**1**

CONTROLS:

		PNEUMATIC		ELECTRIC		ELEC'NIC		DDC	COMMENTS
RADIATION CONTROL:		NONE		2-WAY VLV		3-WAY VLV		OTHER	
SPACE SETPOINT (øF):		OCC HEAT		UNOCC HEAT		OCC COOL		UNOCC COOL	
RESET CONTROL (øF):		HW HIGH		HW LOW		OA LOW		OA HIGH	
COMMENTS:									

FIELD SURVEY NOTES

BUILDING 2060

TYPICAL: 2050, 2070, 2072, 2074

E M C ENGINEERS, INC.

PROJECT: UMCS STUDY
CLIENT CONTRACT NO.: DACA01-94-D-0033
CLIENT PROJ. ENG: STEVE ROWLEY
LOCATION: FORT DRUM, NY BLDG: MNT HANGER AVUM

EMC NO.: 1406-006
DATE: 14-NOV-94
PREPARED BY: CSW
CHECKED BY: BG
FILE: 2060BDS

VI. BUILDING DATA SURVEY OBSERVATIONS

BLDG NO: 2060 BLDG NAME: MNT HANGER AVUM - C.A.C. HANGER

ZONE NO.	1	FUNCTION:		HANGER BAY NORTH					
OCCUPANCY HOURS:	M-F	600	TO	*	SAT	*	TO	*	
	SUN	*	TO	*					
PRESENT TEMP	WINTER OCC	70.0 øF		UNOCC	60.0 øF				
	SUMMER OCC	75.0 øF		UNOCC	75.0 øF				

ZONE NO.	2	FUNCTION:		HANGER BAY SOUTH					
OCCUPANCY HOURS:	M-F	600	TO	*	SAT	*	TO	*	
	SUN	*	TO	*					
PRESENT TEMP	WINTER OCC	70.0 øF		UNOCC	60.0 øF				
	SUMMER OCC	75.0 øF		UNOCC	75.0 øF				

ZONE NO.	3	FUNCTION:		OPERATIONS					
OCCUPANCY HOURS:	M-F	0	TO	2400	SAT	0	TO	2400	
	SUN	0	TO	2400					
PRESENT TEMP	WINTER OCC	72.0 øF		UNOCC	75.0 øF	CONTINUOUS OPERATION			
	SUMMER OCC	72.0 øF		UNOCC	75.0 øF	7 DAYS PER WEEK			

REMARKS: * HANGER BAY IS OCCUPIED M-TH 0600-2200 DURING THE WINTER AND
M-F 0600-0200 (FRIDAY 2 AM) DURING THE SUMMER
FRIDAY 0600-1800 BOTH WINTER AND SUMMER
OPEN OCCASIONALLY ON SATURDAY
OPEN SUNDAY ON DEPLOYMENT

UNIT HEATER AND CABINET HEATER SCHEDULES

NO.	ZONE	LOAD (BTU/HR)	NO.	ZON	LOAD (BTU/HR)
UH1	3	1300	RUH1	1&2	79915
UH2	3	1300	RUH2	1&2	79915
UH3	3	2300	RUH3	1&2	79915
UH4	3	1400	RUH4	1&2	79915
UH5	3	3100	RUH5	1&2	79915
UH6	3	3100	RUH6	1&2	79915
UH7	3	2300	CH1	1&2	11016
UH8	3	1300	CH2	1&2	11016
UH9	3	1300	CH3	1&2	11016

HANGER HAS 12 DOOR UNIT HTRS HEATING COIL LOA OF EACH IS 561,600 BTU/HR. MOTOR POWER IS 3 HP. CFM OF EACH IS 16500 CFM.

TOTAL EXHAUST FAN POWER: 14.5 HP

E M C ENGINEERS, INC.

PROJECT: UMCS STUDY
CLIENT CONTRACT NO.: DACA01-94-D-0033
CLIENT PROJ. ENG: STEVE ROWLEY
LOCATION: FORT DRUM, NY BLDG: **MNT HANGER AVUM**

EMC NO.: 1406-006
DATE: 14-NOV-94
PREPARED BY: **CSW**
CHECKED BY: BG
FILE: **2060AC3**

AIR HANDLING UNIT SURVEY OBSERVATIONS

AC3	AHU NO.	**RM 123, ADMIN**	LOCATION (RM)
NONE	REF. SYS. SERVING AHU	**1ST FLOOR ADMIN SOUTH**	SERVES AREA

UNIT TYPE:

X	SINGLE ZN		2-PIPE FC		4-PIPE FC		UNIT HTR		H&V
	MULTIZONE		DOUBLE DT		REHEAT		INDUCTION		VAV
	NUMBER OF ZONES				OTHER				
	COMMENT:								

NAMEPLATE:

					MFG.				MODEL
0.8	SUPPLY FAN HP				MFG.				MODEL
	RET/EXH FAN HP				MFG.				MODEL
0	CFM-HTG	800	CFM-CLG	100%	MIN %OA	100%	MAX %OA		% HTG AREA SERVED
COMME									

COILS:

X	NONE		STM		HW		ELEC		MOD VLV	PREHEAT
X	NONE		STM		HW		ELEC		MOD VLV	HEATING
	NONE		STM		HW	X	ELEC		MOD VLV	REHEAT
X	NONE		STM		HW		EVAP MEDIA		MOD VLV	HUMID.
	NONE	X	DX		CW				MOD VLV	COOLING

OPERATION:

HOURS ON:	S	M	T	W	T	F	S	COMMENTS
PRESENT START TIME								TIMECLOCK?
PRESENT STOP TIME								
REQUIRED START TIME	1200	1200	1200	1200	1200	1200	1200	
REQUIRED STOP TIME	1900	1900	1900	1900	1900	1900	1900	

MONTHS ON:

J	F	M	A	M	J	J	A	S	O	N	D
0	0	0	0	1	1	1	1	1	0	0	0

CONTROLS:

		PNEUMATIC	X	ELECTRIC		ELEC'NIC		DDC	COMMENTS
THERMOSTAT TYPE:		SINGLE STPT		DUAL SETPNT		SETBACK			
SPACE SETPOINT (°F):		OCC HEAT		UNOCC HEAT	70	OCC COOL	70	UNOCC COOL	
OTHER SETPOINTS (°F):		HOT DECK		COLD DECK		MIXED AIR		OTHER	
DAMPER CONTROL:	N	MIN OA (Y/N)	Y	MAX OA (Y/N)	N	RA (Y/N)	Y	EA (Y/N)	
		MA CONTROL		ECONO-DB		ECONO-ENT		OTHER	
DEMAND LIMIT:	N	(Y = YES ; N = NO)							
COMMENTS:									

E M C ENGINEERS, INC.

PROJECT: UMCS STUDY
CLIENT CONTRACT NO.: DACA01-94-D-0033
CLIENT PROJ. ENG: STEVE ROWLEY
LOCATION: FORT DRUM, NY BLDG: **MNT HANGER AVUM**

EMC NO.: 1406-006
DATE: 14-NOV-94
PREPARED BY: **CSW**
CHECKED BY: BG
FILE: **2060AC4**

AIR HANDLING UNIT SURVEY OBSERVATIONS

AC4	AHU NO.	**RM 123, ADMIN**	LOCATION (RM)
NONE	REF. SYS. SERVING AHU	**1ST FLOOR ADMIN NORTH**	SERVES AREA

UNIT TYPE:

X	SINGLE ZN		2-PIPE FC		4-PIPE FC		UNIT HTR		H&V
	MULTIZONE		DOUBLE DT		REHEAT		INDUCTION		VAV
	NUMBER OF ZONES				OTHER				
	COMMENT:								

NAMEPLATE:

					MFG.				MODEL
0.8	SUPPLY FAN HP				MFG.				MODEL
0.0	RET/EXH FAN HP				MFG.				MODEL
0	CFM-HTG	**800**	CFM-CLG	**100%**	MIN %OA	**100%**	MAX %OA		% HTG AREA SERVED
COMME									

COILS:

X	NONE		STM		HW		ELEC		MOD VLV	PREHEAT
X	NONE		STM		HW		ELEC		MOD VLV	HEATING
	NONE		STM		HW	X	ELEC		MOD VLV	REHEAT
X	NONE		STM		HW		EVAP MEDIA		MOD VLV	HUMID.
	NONE	X	DX		CW				MOD VLV	COOLING

OPERATION:

HOURS ON:	S	M	T	W	T	F	S	COMMENTS
PRESENT START TIME								TIMECLOCK?
PRESENT STOP TIME								
REQUIRED START TIME	**1200**	**1200**	**1200**	**1200**	**1200**	**1200**	**1200**	
REQUIRED STOP TIME	**1900**	**1900**	**1900**	**1900**	**1900**	**1900**	**1900**	

MONTHS ON:

J	F	M	A	M	J	J	A	S	O	N	D
0	**0**	**0**	**0**	**1**	**1**	**1**	**1**	**1**	**0**	**0**	**0**

CONTROLS:

		PNEUMATIC	X	ELECTRIC		ELEC'NIC		DDC	COMMENTS
THERMOSTAT TYPE:		SINGLE STPT		DUAL SETPNT		SETBACK			
SPACE SETPOINT (°F):		OCC HEAT		UNOCC HEAT	**70**	OCC COOL	**70**	UNOCC COOL	
OTHER SETPOINTS (°F):		HOT DECK		COLD DECK		MIXED AIR		OTHER	
DAMPER CONTROL:	**N**	MIN OA (Y/N)	**Y**	MAX OA (Y/N)	**N**	RA (Y/N)	**Y**	EA (Y/N)	
		MA CONTROL		ECONO-DB		ECONO-ENT		OTHER	
DEMAND LIMIT:	**N**	(Y = YES ; N = NO)							
COMMENTS:									

E M C ENGINEERS, INC.

PROJECT: UMCS STUDY
CLIENT CONTRACT NO.: DACA01-94-D-0033
CLIENT PROJ. ENG: STEVE ROWLEY
LOCATION: FORT DRUM, NY BLDG: **MNT HANGER AVUM**

EMC NO.: 1406-006
DATE: 14-NOV-94
PREPARED BY: **CSW**
CHECKED BY: BG
FILE: **2060AC5**

AIR HANDLING UNIT SURVEY OBSERVATIONS

AC5	AHU NO.	**RM 211, ADMIN**	LOCATION (RM)
ACC5	REF. SYS. SERVING AHU	**2ND FLOOR ADMIN SOUTH**	SERVES AREA

UNIT TYPE:

X	SINGLE ZN		2-PIPE FC		4-PIPE FC		UNIT HTR		H&V
	MULTIZONE		DOUBLE DT		REHEAT		INDUCTION		VAV
	NUMBER OF ZONES				OTHER				
	COMMENT:								

NAMEPLATE:

					MFG.				MODEL
2.0	SUPPLY FAN HP				MFG.				MODEL
0.0	RET/EXH FAN HP				MFG.				MODEL
0	CFM-HTG	**4000**	CFM-CLG	**100%**	MIN %OA	**100%**	MAX %OA		% HTG AREA SERVED
COMME									

COILS:

X	NONE		STM		HW		ELEC		MOD VLV	PREHEAT
X	NONE		STM		HW		ELEC		MOD VLV	HEATING
	NONE		STM		HW	X	ELEC		MOD VLV	REHEAT
	NONE	X	STM		HW		EVAP MEDI	X	MOD VLV	HUMID.
	NONE	X	DX		CW				MOD VLV	COOLING

OPERATION:

HOURS ON:	S	M	T	W	T	F	S	COMMENTS
PRESENT START TIME								TIMECLOCK?
PRESENT STOP TIME								
REQUIRED START TIME	**1200**	**1200**	**1200**	**1200**	**1200**	**1200**	**1200**	
REQUIRED STOP TIME	**1900**	**1900**	**1900**	**1900**	**1900**	**1900**	**1900**	

MONTHS ON:

J	F	M	A	M	J	J	A	S	O	N	D
0	**0**	**0**	**0**	**1**	**1**	**1**	**1**	**1**	**0**	**0**	**0**

CONTROLS:

		PNEUMATIC	X	ELECTRIC		ELEC'NIC		DDC	COMMENTS
THERMOSTAT TYPE:		SINGLE STPT	X	DUAL SETPNT		SETBACK			
SPACE SETPOINT (°F):		OCC HEAT		UNOCC HEAT	**70**	OCC COOL	**70**	UNOCC COOL	
OTHER SETPOINTS (°F):		HOT DECK		COLD DECK		MIXED AIR		OTHER	
DAMPER CONTROL:	**N**	MIN OA (Y/N)	**Y**	MAX OA (Y/N)	**N**	RA (Y/N)	**Y**	EA (Y/N)	
		MA CONTROL		ECONO-DB		ECONO-ENT		OTHER	
DEMAND LIMIT:	**N**	(Y = YES ; N = NO)							

COMMENTS: **10 KW REHEAT (34,130 BTU)**

E M C ENGINEERS, INC.

PROJECT: UMCS STUDY
CLIENT CONTRACT NO.: DACA01-94-D-0033
CLIENT PROJ. ENG: STEVE ROWLEY
LOCATION: FORT DRUM, NY BLDG: **MNT HANGER AVUM**

EMC NO.: 1406-006
DATE: 14-NOV-94
PREPARED BY: **CSW**
CHECKED BY: BG
FILE: **2060AC6**

AIR HANDLING UNIT SURVEY OBSERVATIONS

AC6	AHU NO.	**RM 211, ADMIN**	LOCATION (RM)
ACC6	REF. SYS. SERVING AHU	**2ND FLOOR ADMIN NORTH**	SERVES AREA

UNIT TYPE:

X	SINGLE ZN		2-PIPE FC		4-PIPE FC		UNIT HTR		H&V
	MULTIZONE		DOUBLE DT		REHEAT		INDUCTION		VAV
	NUMBER OF ZONES				OTHER				
	COMMENT:								

NAMEPLATE:

					MFG.				MODEL
2.0	SUPPLY FAN HP				MFG.				MODEL
0.0	RET/EXH FAN HP				MFG.				MODEL
0	CFM-HTG	**4000**	CFM-CLG	**100%**	MIN %OA	**100%**	MAX %OA		% HTG AREA SERVED
COMME									

COILS:

X	NONE		STM		HW		ELEC		MOD VLV	PREHEAT
X	NONE		STM		HW		ELEC		MOD VLV	HEATING
	NONE		STM		HW	X	ELEC		MOD VLV	REHEAT
	NONE	X	STM		HW		EVAP MEDI	X	MOD VLV	HUMID.
	NONE	X	DX		CW				MOD VLV	COOLING

OPERATION:

HOURS ON:	S	M	T	W	T	F	S	COMMENTS
PRESENT START TIME								TIMECLOCK?
PRESENT STOP TIME								
REQUIRED START TIME	**1200**	**1200**	**1200**	**1200**	**1200**	**1200**	**1200**	
REQUIRED STOP TIME	**1900**	**1900**	**1900**	**1900**	**1900**	**1900**	**1900**	

MONTHS ON:

J	F	M	A	M	J	J	A	S	O	N	D
0	**0**	**0**	**0**	**1**	**1**	**1**	**1**	**1**	**0**	**0**	**0**

CONTROLS:

		PNEUMATIC	X	ELECTRIC		ELEC'NIC		DDC	COMMENTS
THERMOSTAT TYPE:		SINGLE STPT	X	DUAL SETPNT		SETBACK			
SPACE SETPOINT (°F):		OCC HEAT		UNOCC HEAT	**70**	OCC COOL	**70**	UNOCC COOL	
OTHER SETPOINTS (°F):		HOT DECK		COLD DECK		MIXED AIR		OTHER	
DAMPER CONTROL:	**N**	MIN OA (Y/N)	**Y**	MAX OA (Y/N)	**N**	RA (Y/N)	**Y**	EA (Y/N)	
		MA CONTROL		ECONO-DB		ECONO-ENT		OTHER	
DEMAND LIMIT:	**N**	(Y = YES ; N = NO)							

COMMENTS: **10 KW REHEAT (34,130 BTU)**

E M C ENGINEERS, INC.

PROJECT: UMCS STUDY
CLIENT CONTRACT NO.: DACA01-94-D-0033
CLIENT PROJ. ENG: STEVE ROWLEY
LOCATION: FORT DRUM, NY BLDG: **MNT HANGAR AVUM**

EMC NO.: 1406-006
DATE: Dec-94
PREPARED BY: **CSW**
CHECKED BY: BG
FILE: **2060ACC5**

REFRIGERATION EQUIPMENT SURVEY OBSERVATIONS

ACC5	CHILLER/COMPRESSOR NO.	RM 211, ADMIN	LOCATION (RM)

UNIT TYPE:

	CENTRIFUGAL WITH WATER SIDE COOLING TOWER		OTHER
	RECIPROCATING WITH WATER SIDE COOLING TOWER		AHU'S SERVED
X	RECIPROCATING WITH AIR COOLED CONDENSING UNIT		AC5
	ABSORBTION WITH WATER SIDE COOLING TOWER		
	AIR COOLED CONDENSING UNIT		

	CHW	X	DX		OTHER	

NAMEPLATE:

CHILLER		MFG.				MODEL				SERIAL NO.
	VOLTS		AMPS		PH		HZ		CAPACITY (TONS)	
TOWER		MFG.				MODEL				# OF FANS
	VOLTS		AMPS		PH		HZ		HP each	
CW PUMP		MFG.				MODEL				SERIAL NO.
	VOLTS		AMPS		PH		HZ		HP	
CNW PUMP		MFG.				MODEL				SERIAL NO.
	VOLTS		AMPS		PH		HZ	1	HP	
COMMENTS:										

OPERATION:

HOURS ON:	S	M	T	W	T	F	S	COMMENT
PRESENT START TIME								TIMECLOCK?
PRESENT STOP TIME								
REQUIRED START TIME	1200	1200	1200	1200	1200	1200	1200	
REQUIRED STOP TIME	1900	1900	1900	1900	1900	1900	1900	

MONTHS ON:

J	F	M	A	M	J	J	A	S	O	N	D
0	0	0	0	1	1	1	1	1	0	0	0

CONTROLS:

	X	PNEUMATIC		ELECTRIC		ELEC'NIC		DDC	COMMENTS
SETPOINTS		CWS (oF)		CWR (oF)		CNWS (oF)		CNWR (oF)	
PANEL INDICATORS									
- PRESSURE		LITE-HI		LITE-LOW		GAUGES			
- TEMPERATURE		LITE-HI		LITE-LOW		GAUGES			
- OTHER									

COMMENTS:

E M C ENGINEERS, INC.

PROJECT: UMCS STUDY
CLIENT CONTRACT NO.: DACA01-94-D-0033
CLIENT PROJ. ENG: STEVE ROWLEY
LOCATION: FORT DRUM, NY BLDG: **MNT HANGAR AVUM**

EMC NO.: 1406-006
DATE: Dec-94
PREPARED BY: **CSW**
CHECKED BY: BG
FILE: **2060ACC6**

REFRIGERATION EQUIPMENT SURVEY OBSERVATIONS

ACC6	CHILLER/COMPRESSOR NO.	**RM 213, ADMIN**	LOCATION (RM)

UNIT TYPE:

	CENTRIFUGAL WITH WATER SIDE COOLING TOWER		OTHER
	RECIPROCATING WITH WATER SIDE COOLING TOWER		AHU'S SERVED
X	RECIPROCATING WITH AIR COOLED CONDENSING UNIT		AC5
	ABSORBTION WITH WATER SIDE COOLING TOWER		
	AIR COOLED CONDENSING UNIT		

	CHW	X	DX		OTHER		

NAMEPLATE:

CHILLER		MFG.			MODEL				SERIAL NO.
	VOLTS		AMPS		PH		HZ		CAPACITY (TONS)
TOWER		MFG.			MODEL				# OF FANS
	VOLTS		AMPS		PH		HZ		HP each
CW PUMP		MFG.			MODEL				SERIAL NO.
	VOLTS		AMPS		PH		HZ		HP
CNW PUMP		MFG.			MODEL				SERIAL NO.
	VOLTS		AMPS		PH		HZ	1	HP

COMMENTS:

OPERATION:

HOURS ON:	S	M	T	W	T	F	S	COMMENT
PRESENT START TIME								TIMECLOCK?
PRESENT STOP TIME								
REQUIRED START TIME	1200	1200	1200	1200	1200	1200	1200	
REQUIRED STOP TIME	1900	1900	1900	1900	1900	1900	1900	

MONTHS ON:

J	F	M	A	M	J	J	A	S	O	N	D
0	0	0	0	1	1	1	1	1	0	0	0

CONTROLS:

	X	PNEUMATIC		ELECTRIC		ELEC'NIC		DDC	COMMENTS
SETPOINTS		CWS (oF)		CWR (oF)		CNWS (oF)		CNWR (oF)	
PANEL INDICATORS									
- PRESSURE		LITE-HI		LITE-LOW		GAUGES			
- TEMPERATURE		LITE-HI		LITE-LOW		GAUGES			
- OTHER									

COMMENTS:

E M C ENGINEERS, INC.

PROJECT: UMCS STUDY
CLIENT CONTRACT NO.: DACA01-94-D-0033
CLIENT PROJ. ENG: STEVE ROWLEY
LOCATION: FORT DRUM, NY BLDG: **MNT HANGER AVUM**

EMC NO.: 1406-006
DATE: 14-NOV-94
PREPARED BY: **CSW**
CHECKED BY: BG
FILE: **2060B1&2**

BOILER & CONVERTER SURVEY OBSERVATIONS

B1&2	BOILER/CONVERTER NO.	**MECH ROOM**	LOCATION (RM)
NONE	SOURCE OF HEATING (PLANT)	**WHOLE BLDG**	SERVES AREA

UNIT TYPE:

	STEAM		PSIG	X	HW		TEMP.		BOILER TYPE:
X	NO.2 OIL		NO.6 OIL		N.GAS		ELEC		FUELS:
	STM/HW		HTHW/HW		HTHW/STM		OTHER		CONVERTER TYPE:
	SPACE HEAT		DHW		OTHER				USE:
COMMENT:							**0%**	% HTG AREA SERVED	
								BB RADIATION ONLY	

NAMEPLATE:

CLEAVER-BR	MFG.	**M4W-6000**	MODEL	**4800000**	CAPACITY OUTPUT (BTUH)
				6000000	CAPACITY INPUT (BTUH)
CLEAVER-BR	MFG.	**M4W-6000**	MODEL	**4800000**	CAPACITY OUTPUT (BTUH)
				6000000	CAPACITY INPUT (BTUH)
15	HW PUMP 1 - HP	**TACO/US MOTOR**	MFG.		MODEL
15	HW PUMP 2 - HP	**TACO/US MOTOR**	MFG.		MODEL
	HW PUMP 3 - HP		MFG.		MODEL
COMMENT:	**42. 8 GPH**				

OPERATION:

HOURS ON:	S	M	T	W	T	F	S	COMMENT
PRESENT START TIME	**0**	**0**	**0**	**0**	**0**	**0**	**0**	TIMECLOCK?
PRESENT STOP TIME	**2400**	**2400**	**2400**	**2400**	**2400**	**2400**	**2400**	
REQUIRED START TIME								
REQUIRED STOP TIME								

MONTHS ON:

J	F	M	A	M	J	J	A	S	O	N	D
1	**1**	**1**	**1**	**0**	**0**	**0**	**0**	**0**	**1**	**1**	**1**

CONTROLS:

	X	PNEUMATIC		ELECTRIC		ELEC'NIC		DDC	COMMENTS
SETPOINTS		PSIG		HW SUPPLY					
RESET CONTROL (oF):		HW HIGH		HW LOW		OA LOW		OA HIGH	
BURNER CONTROLS		O2 TRIM (Y/N)		OTHER					
COMMENTS:									

E M C ENGINEERS, INC.

PROJECT: UMCS STUDY
CLIENT CONTRACT NO.: DACA01-94-D-0033
CLIENT PROJ. ENG: STEVE ROWLEY
LOCATION: FORT DRUM, NY BLDG: **MNT HANGER AVUM**

EMC NO.: 1406-006
DATE: 14-NOV-94
PREPARED BY: **CSW**
CHECKED BY: BG
FILE: **2060HX1**

BOILER & CONVERTER SURVEY OBSERVATIONS

HX1	BOILER/CONVERTER NO.	**BOILER ROOM**	LOCATION (RM)
B1&B2	SOURCE OF HEATING (PLANT)	AHU'S AND UNIT HTRS	SERVES AREA

UNIT TYPE:

	STEAM		PSIG		HW		TEMP.		BOILER TYPE:
	NO.2 OIL		NO.6 OIL		N.GAS		ELEC		FUELS:
	STM/HW		HTHW/HW		HTHW/STM	X	OTHER		CONVERTER TYPE:
	SPACE HEAT		DHW		OTHER				USE:
COMMENT:			HW-40%GLYCOL SOLUTION						% HTG AREA SERVED
									BB RADIATION ONLY

NAMEPLATE:

	MFG.		MODEL	**1552860**	CAPACITY OUTPUT (BTUH)
					CAPACITY INPUT (BTUH)
	MFG.		MODEL		CAPACITY OUTPUT (BTUH)
					CAPACITY INPUT (BTUH)
1.5	HW PUMP 1 - HP	**US ELECTRIC**	MFG.	**F131**	MODEL
	HW PUMP 2 - HP		MFG.		MODEL
	HW PUMP 3 - HP		MFG.		MODEL
COMMENT:					

OPERATION:

HOURS ON:	S	M	T	W	T	F	S	COMMENT
PRESENT START TIME								TIMECLOCK?
PRESENT STOP TIME								
REQUIRED START TIME	**0**	**0**	**0**	**0**	**0**	**0**	**0**	
REQUIRED STOP TIME	**2400**	**2400**	**2400**	**2400**	**2400**	**2400**	**2400**	

MONTHS ON:

J	F	M	A	M	J	J	A	S	O	N	D
1	**1**	**1**	**1**	**0**	**0**	**0**	**0**	**0**	**1**	**1**	**1**

CONTROLS:

	X	PNEUMATIC		ELECTRIC		ELEC'NIC		DDC	COMMENTS
SETPOINTS		PSIG		HW SUPPLY					
RESET CONTROL (oF):		HW HIGH		HW LOW		OA LOW		OA HIGH	
BURNER CONTROLS		O2 TRIM (Y/N)		OTHER					
COMMENTS:									

E M C ENGINEERS, INC.

PROJECT: UMCS STUDY
CLIENT CONTRACT NO.: DACA01-94-D-0033
CLIENT PROJ. ENG: STEVE ROWLEY
LOCATION: FORT DRUM, NY BLDG: **MNT HANGER AVUM**

EMC NO.: 1406-006
DATE: 14-NOV-94
PREPARED BY: **BG**
CHECKED BY:
FILE: **2060HV1**

AIR HANDLING UNIT SURVEY OBSERVATIONS

HV1	AHU NO.	**HANGAR SOUTH**	LOCATION (RM)
NONE	REF. SYS. SERVING AHU	**BOTH FLOORS OF ADMIN**	SERVES AREA

UNIT TYPE:

X	SINGLE ZN		2-PIPE FC		4-PIPE FC		UNIT HTR	X	H&V
	MULTIZONE		DOUBLE DT		REHEAT		INDUCTION		VAV
	NUMBER OF ZONES				OTHER				
	COMMENT:								

NAMEPLATE:

					MFG.				MODEL
11.0	SUPPLY FAN HP		**CENTURY**		MFG.		**6-331185-03**		MODEL
0.0	RET/EXH FAN HP				MFG.				MODEL
19600	CFM-HTG		CFM-CLG	**15%**	MIN %OA	**100%**	MAX %OA	**33.0%**	% HTG AREA SERVED
COMME	2 SPEED MOTOR 25/11HP		32665(SUMMER)/19600(WINTER)						

COILS:

X	NONE		STM		HW		ELEC		MOD VLV	PREHEAT
	NONE		STM	X	HW		ELEC	X	MOD VLV	HEATING
X	NONE		STM		HW		ELEC		MOD VLV	REHEAT
X	NONE		STM		HW		EVAP MEDIA		MOD VLV	HUMID.
X	NONE		DX		CW				MOD VLV	COOLING

OPERATION:

HOURS ON:	S	M	T	W	T	F	S	COMMENTS
PRESENT START TIME	**0**	**0**	**0**	**0**	**0**	**0**	**0**	TIMECLOCK?
PRESENT STOP TIME	**2400**	**2400**	**2400**	**2400**	**2400**	**2400**	**2400**	**NO**
REQUIRED START TIME	**0**	**0**	**0**	**0**	**0**	**0**	**0**	
REQUIRED STOP TIME	**2400**	**2400**	**2400**	**2400**	**2400**	**2400**	**2400**	

MONTHS ON:

J	F	M	A	M	J	J	A	S	O	N	D
1	**1**	**1**	**1**	**1**	**1**	**1**	**1**	**1**	**1**	**1**	**1**

CONTROLS:

	X	PNEUMATIC		ELECTRIC		ELEC'NIC		DDC	COMMENTS
THERMOSTAT TYPE:	X	SINGLE STPT		DUAL SETPNT		SETBACK			
SPACE SETPOINT (°F):	**72**	OCC HEAT	**72**	UNOCC HEAT		OCC COOL		UNOCC COOL	
OTHER SETPOINTS (°F):		HOT DECK		COLD DECK		MIXED AIR		OTHER	
DAMPER CONTROL:	Y	MIN OA (Y/N)	Y	MAX OA (Y/N)	Y	RA (Y/N)	N	EA (Y/N)	
		MA CONTROL		ECONO-DB		ECONO-ENT		OTHER	
DEMAND LIMIT:	N	(Y = YES ; N = NO)							

COMMENTS: **243.4 MBH**

E M C ENGINEERS, INC.

PROJECT: UMCS STUDY
CLIENT CONTRACT NO.: DACA01-94-D-0033
CLIENT PROJ. ENG: STEVE ROWLEY
LOCATION: FORT DRUM, NY BLDG: **MNT HANGER AVUM**

EMC NO.: 1406-006
DATE: 14-NOV-94
PREPARED BY: **BG**
CHECKED BY:
FILE: **2060MAU1**

AIR HANDLING UNIT SURVEY OBSERVATIONS

MAU1	AHU NO.	**HANGAR NORTH**	LOCATION (RM)
NONE	REF. SYS. SERVING AHU	**BOTH FLOORS OF ADMIN**	SERVES AREA

UNIT TYPE:

X	SINGLE ZN		2-PIPE FC		4-PIPE FC		UNIT HTR		H&V
	MULTIZONE		DOUBLE DT		REHEAT		INDUCTION		VAV
	NUMBER OF ZONES				OTHER	MAKE-UP AIR UNIT			
	COMMENT:	**#CCMB12FORGOSC**							

NAMEPLATE:

	TRANE			MFG.	**C4654 3A A 0010050**			MODEL
3.0	SUPPLY FAN HP			MFG.				MODEL
5.0	RET/EXH FAN HP			MFG.				MODEL
	CFM-HTG		CFM-CLG	MIN %OA		MAX %OA		% HTG AREA SERVED
COMME	5 HP MOTOR IS CONNECTED TO HEAT RECOVERY UNIT 7 (HRU7). OUTSIDE AIR PASSES THROUGH THE PREHEAT							
	COIL FIRST, THEN THE HEATING COIL. -7F O.A. --> PHC ---> 15 F ---> HC ---> 57 F TO SPACE							

COILS:

	NONE		STM	X	HW		ELEC		MOD VLV	PREHEAT
	NONE		STM	X	HW		ELEC	X	MOD VLV	HEATING
X	NONE		STM		HW		ELEC		MOD VLV	REHEAT
X	NONE		STM		HW		EVAP MEDIA		MOD VLV	HUMID.
X	NONE		DX		CW				MOD VLV	COOLING

OPERATION:

HOURS ON:	S	M	T	W	T	F	S	COMMENTS
PRESENT START TIME	**0**	**0**	**0**	**0**	**0**	**0**	**0**	TIMECLOCK?
PRESENT STOP TIME	**2400**	**2400**	**2400**	**2400**	**2400**	**2400**	**2400**	
REQUIRED START TIME	**0**	**0**	**0**	**0**	**0**	**0**	**0**	
REQUIRED STOP TIME	**2400**	**2400**	**2400**	**2400**	**2400**	**2400**	**2400**	

MONTHS ON:

J	F	M	A	M	J	J	A	S	O	N	D
1	**1**	**1**	**1**	**1**	**1**	**1**	**1**	**1**	**1**	**1**	**1**

CONTROLS:

	X	PNEUMATIC		ELECTRIC		ELEC'NIC		DDC	COMMENTS
THERMOSTAT TYPE:		SINGLE STPT		DUAL SETPNT		SETBACK			
SPACE SETPOINT (°F):		OCC HEAT		UNOCC HEAT		OCC COOL		UNOCC COOL	
OTHER SETPOINTS (°F):		HOT DECK		COLD DECK		MIXED AIR		OTHER	
DAMPER CONTROL:	**N**	MIN OA (Y/N)	**Y**	MAX OA (Y/N)	**N**	RA (Y/N)	**Y**	EA (Y/N)	
		MA CONTROL		ECONO-DB		ECONO-ENT		OTHER	
DEMAND LIMIT:		(Y = YES ; N = NO)							

COMMENTS: **234.0 MBH HEATING COIL**

AIR ENTERING THIS UNIT AT -7F IS PREHEATED TO 15F BY PASSING THROUGH A EXHAUST HEAT RECOVERY COIL (HRU

E M C ENGINEERS, INC.

PROJECT: UMCS STUDY
CLIENT CONTRACT NO.: DACA01-94-D-0033
CLIENT PROJ. ENG: STEVE ROWLEY
LOCATION: FORT DRUM, NY BLDG: **MNT HANGAR AVUM**

EMC NO.: 1406-006
DATE: DEC-94
PREPARED BY: **CSW**
CHECKED BY: BG
FILE: **2060RAD**

PERIMETER RADIATION SURVEY OBSERVATIONS

RAD	PER RAD NO.	**MECH ROOM**	LOCATION (RM)
B1&B2	SOURCE OF HEATING	ADMIN	SERVES AREA

UNIT TYPE:

	STEAM	X	HW		ELECTRIC				
	OTHER								
	COMMENT:								

NAMEPLATE:

1	HW PUMP 1 - HP		MFG.		MODEL
1	HW PUMP 2 - HP		MFG.		MODEL
	HW PUMP 3 - HP		MFG.		MODEL
	HW PUMP 4 - HP		MFG.		MODEL
COMMENT:	21000 BTUH CAP				% AREA HEATING

OPERATION:

HOURS ON:	S	M	T	W	T	F	S	COMMENT
PRESENT START TIME								TIMECLOCK?
PRESENT STOP TIME								
REQUIRED START TIME	0	700	700	700	700	700	0	
REQUIRED STOP TIME	0	1800	1800	1800	1800	1800	0	

MONTHS ON:

J	F	M	A	M	J	J	A	S	O	N	D
1	1	1	1	0	0	0	0	0	1	1	1

CONTROLS:

	X	PNEUMATIC		ELECTRIC		ELEC'NIC		DDC	COMMENTS
RADIATION CONTROL:		NONE		2-WAY VLV		3-WAY VLV		OTHER	
SPACE SETPOINT (øF):		OCC HEAT		UNOCC HEAT		OCC COOL		UNOCC COOL	
RESET CONTROL (øF):		HW HIGH		HW LOW		OA LOW		OA HIGH	
COMMENTS:									

E M C ENGINEERS, INC.

PROJECT: UMCS STUDY
CLIENT CONTRACT NO.: DACA01-94-D-0033
CLIENT PROJ. ENG: STEVE ROWLEY
LOCATION: FORT DRUM, NY BLDG: **MNT HANGER AVUM**

EMC NO.: 1406-006
DATE: 14-NOV-94
PREPARED BY: **BG**
CHECKED BY:
FILE: **2060RMAU1**

AIR HANDLING UNIT SURVEY OBSERVATIONS

RMAU1	AHU NO.	**HANGAR SOUTH**	LOCATION (RM)
NONE	REF. SYS. SERVING AHU	**HANGAR SOUTH**	SERVES AREA

UNIT TYPE:

X	SINGLE ZN		2-PIPE FC		4-PIPE FC		UNIT HTR		H&V
	MULTIZONE		DOUBLE DT		REHEAT		INDUCTION		VAV
	NUMBER OF ZONES				OTHER	MAKE- UP AIR UNIT			
	COMMENT:								

NAMEPLATE:

					MFG.				MODEL
10.0	SUPPLY FAN HP				MFG.				MODEL
5	RET/EXH FAN HP				MFG.				MODEL
9320	CFM-HTG	**0**	CFM-CLG	**100%**	MIN %OA	**100%**	MAX %OA	**11.1%**	% HTG AREA SERVED

COMME 5 HP MOTOR IS CONNECTED TO HEAT RECOVERY UNIT 7 (HRU7). OUTSIDE AIR PASSES THROUGH THE PREHEAT COIL FIRST, THEN THE HEATING COIL. -7F O.A. --> PHC ---> 15 F ---> HC ---> 57 F TO SPACE

COILS:

	NONE		STM	**X**	HW		ELEC		MOD VLV	PREHEAT
	NONE		STM	**X**	HW		ELEC	**X**	MOD VLV	HEATING
X	NONE		STM		HW		ELEC		MOD VLV	REHEAT
X	NONE		STM		HW		EVAP MEDIA		MOD VLV	HUMID.
X	NONE		DX		CW				MOD VLV	COOLING

OPERATION:

HOURS ON:	S	M	T	W	T	F	S	COMMENTS
PRESENT START TIME								TIMECLOCK?
PRESENT STOP TIME								
REQUIRED START TIME	**0**	**600**	**600**	**600**	**600**	**600**	**0**	**SEE SCHED.**
REQUIRED STOP TIME	**0**	**2200**	**2200**	**2200**	**2200**	**1800**	**0**	

MONTHS ON:

J	F	M	A	M	J	J	A	S	O	N	D
1	**1**	**1**	**1**	**1**	**1**	**1**	**1**	**1**	**1**	**1**	**1**

CONTROLS:

	X	PNEUMATIC		ELECTRIC		ELEC'NIC		DDC	COMMENTS
THERMOSTAT TYPE:		SINGLE STPT		DUAL SETPNT		SETBACK			
SPACE SETPOINT (°F):	**70**	OCC HEAT	**65**	UNOCC HEAT		OCC COOL		UNOCC COOL	
OTHER SETPOINTS (°F):		HOT DECK		COLD DECK		MIXED AIR		OTHER	
DAMPER CONTROL:	**N**	MIN OA (Y/N)	**Y**	MAX OA (Y/N)	**N**	RA (Y/N)	**Y**	EA (Y/N)	
		MA CONTROL		ECONO-DB		ECONO-ENT		OTHER	
DEMAND LIMIT:	**N**	(Y = YES ; N = NO)							

COMMENTS: **234.0 MBH HEATING COIL**

AIR ENTERING THIS UNIT AT -7F IS PREHEATED TO 15F BY PASSING THROUGH A EXHAUST HEAT RECOVERY COIL (HRU

E M C ENGINEERS, INC.

PROJECT: UMCS STUDY
CLIENT CONTRACT NO.: DACA01-94-D-0033
CLIENT PROJ. ENG: STEVE ROWLEY
LOCATION: FORT DRUM, NY BLDG: **MNT HANGER AVUM**

EMC NO.: 1406-006
DATE: 14-NOV-94
PREPARED BY: **BG**
CHECKED BY:
FILE: **2060RMAU2**

AIR HANDLING UNIT SURVEY OBSERVATIONS

RMAU2	AHU NO.	**HANGAR SOUTH**	LOCATION (RM)
NONE	REF. SYS. SERVING AHU	**HANGAR SOUTH**	SERVES AREA

UNIT TYPE:

X	SINGLE ZN		2-PIPE FC		4-PIPE FC		UNIT HTR		H&V
	MULTIZONE		DOUBLE DT		REHEAT		INDUCTION		VAV
	NUMBER OF ZONES				OTHER	MAKE- UP AIR UNIT			
	COMMENT:								

NAMEPLATE:

					MFG.				MODEL
10.0	SUPPLY FAN HP				MFG.				MODEL
5	RET/EXH FAN HP				MFG.				MODEL
9320	CFM-HTG	**0**	CFM-CLG	**100%**	MIN %OA	**100%**	MAX %OA	**11.1%**	% HTG AREA SERVED

COMME 5 HP MOTOR IS CONNECTED TO HEAT RECOVERY UNIT 7 (HRU7). OUTSIDE AIR PASSES THROUGH THE PREHEAT COIL FIRST, THEN THE HEATING COIL. -7F O.A. --> PHC ---> 15 F ---> HC ---> 57 F TO SPACE

COILS:

	NONE		STM	X	HW		ELEC		MOD VLV	PREHEAT
	NONE		STM	X	HW		ELEC	X	MOD VLV	HEATING
X	NONE		STM		HW		ELEC		MOD VLV	REHEAT
X	NONE		STM		HW		EVAP MEDIA		MOD VLV	HUMID.
X	NONE		DX		CW				MOD VLV	COOLING

OPERATION:

HOURS ON:	S	M	T	W	T	F	S	COMMENTS
PRESENT START TIME								TIMECLOCK?
PRESENT STOP TIME								
REQUIRED START TIME	**0**	**600**	**600**	**600**	**600**	**600**	**0**	**SEE SCHED.**
REQUIRED STOP TIME	**0**	**2200**	**2200**	**2200**	**2200**	**1800**	**0**	

MONTHS ON:

J	F	M	A	M	J	J	A	S	O	N	D
1	**1**	**1**	**1**	**1**	**1**	**1**	**1**	**1**	**1**	**1**	**1**

CONTROLS:

	X	PNEUMATIC		ELECTRIC		ELEC'NIC		DDC	COMMENTS
THERMOSTAT TYPE:		SINGLE STPT		DUAL SETPNT		SETBACK			
SPACE SETPOINT (°F):	**70**	OCC HEAT	**65**	UNOCC HEAT		OCC COOL		UNOCC COOL	
OTHER SETPOINTS (°F):		HOT DECK		COLD DECK		MIXED AIR		OTHER	
DAMPER CONTROL:	**N**	MIN OA (Y/N)	**Y**	MAX OA (Y/N)	**N**	RA (Y/N)	**Y**	EA (Y/N)	
		MA CONTROL		ECONO-DB		ECONO-ENT		OTHER	
DEMAND LIMIT:	**N**	(Y = YES ; N = NO)							

COMMENTS: **234.0 MBH HEATING COIL**
AIR ENTERING THIS UNIT AT -7F IS PREHEATED TO 15F BY PASSING THROUGH A EXHAUST HEAT RECOVERY COIL (HRU

E M C ENGINEERS, INC.

PROJECT: UMCS STUDY
CLIENT CONTRACT NO.: DACA01-94-D-0033
CLIENT PROJ. ENG: STEVE ROWLEY
LOCATION: FORT DRUM, NY BLDG: **MNT HANGER AVUM**

EMC NO.: 1406-006
DATE: 14-NOV-94
PREPARED BY: **BG**
CHECKED BY:
FILE: **2060RMAU3**

AIR HANDLING UNIT SURVEY OBSERVATIONS

RMAU3	AHU NO.	**HANGAR SOUTH**	LOCATION (RM)
NONE	REF. SYS. SERVING AHU	**HANGAR SOUTH**	SERVES AREA

UNIT TYPE:

X	SINGLE ZN		2-PIPE FC		4-PIPE FC		UNIT HTR		H&V
	MULTIZONE		DOUBLE DT		REHEAT		INDUCTION		VAV
	NUMBER OF ZONES				OTHER	MAKE- UP AIR UNIT			
	COMMENT:								

NAMEPLATE:

					MFG.				MODEL
10.0	SUPPLY FAN HP				MFG.				MODEL
5	RET/EXH FAN HP				MFG.				MODEL
9320	CFM-HTG	**0**	CFM-CLG	**100%**	MIN %OA	**100%**	MAX %OA	**11.1%**	% HTG AREA SERVED

COMME 5 HP MOTOR IS CONNECTED TO HEAT RECOVERY UNIT 7 (HRU7). OUTSIDE AIR PASSES THROUGH THE PREHEAT COIL FIRST, THEN THE HEATING COIL. -7F O.A. --> PHC ---> 15 F ---> HC ---> 57 F TO SPACE

COILS:

	NONE		STM	X	HW		ELEC		MOD VLV	PREHEAT
	NONE		STM	X	HW		ELEC	X	MOD VLV	HEATING
X	NONE		STM		HW		ELEC		MOD VLV	REHEAT
X	NONE		STM		HW		EVAP MEDIA		MOD VLV	HUMID.
X	NONE		DX		CW				MOD VLV	COOLING

OPERATION:

HOURS ON:	S	M	T	W	T	F	S	COMMENTS
PRESENT START TIME								TIMECLOCK?
PRESENT STOP TIME								
REQUIRED START TIME	**0**	**600**	**600**	**600**	**600**	**600**	**0**	**SEE SCHED.**
REQUIRED STOP TIME	**0**	**2200**	**2200**	**2200**	**2200**	**1800**	**0**	

MONTHS ON:

J	F	M	A	M	J	J	A	S	O	N	D
1	**1**	**1**	**1**	**1**	**1**	**1**	**1**	**1**	**1**	**1**	**1**

CONTROLS:

	X	PNEUMATIC		ELECTRIC		ELEC'NIC		DDC	COMMENTS
THERMOSTAT TYPE:		SINGLE STPT		DUAL SETPNT		SETBACK			
SPACE SETPOINT (°F):	**70**	OCC HEAT	**65**	UNOCC HEAT		OCC COOL		UNOCC COOL	
OTHER SETPOINTS (°F):		HOT DECK		COLD DECK		MIXED AIR		OTHER	
DAMPER CONTROL:	**N**	MIN OA (Y/N)	**Y**	MAX OA (Y/N)	**N**	RA (Y/N)	**Y**	EA (Y/N)	
		MA CONTROL		ECONO-DB		ECONO-ENT		OTHER	
DEMAND LIMIT:	**N**	(Y = YES ; N = NO)							

COMMENTS: **234.0 MBH HEATING COIL**

AIR ENTERING THIS UNIT AT -7F IS PREHEATED TO 15F BY PASSING THROUGH A EXHAUST HEAT RECOVERY COIL (HRU

E M C ENGINEERS, INC.

PROJECT: UMCS STUDY
CLIENT CONTRACT NO.: DACA01-94-D-0033
CLIENT PROJ. ENG: STEVE ROWLEY
LOCATION: FORT DRUM, NY BLDG: **MNT HANGER AVUM**

EMC NO.: 1406-006
DATE: 14-NOV-94
PREPARED BY: **BG**
CHECKED BY:
FILE: **2060RMAU5**

AIR HANDLING UNIT SURVEY OBSERVATIONS

RMAU5	AHU NO.	**HANGAR NORTH**	LOCATION (RM)
NONE	REF. SYS. SERVING AHU	**HANGAR NORTH**	SERVES AREA

UNIT TYPE:

X	SINGLE ZN		2-PIPE FC		4-PIPE FC		UNIT HTR		H&V
	MULTIZONE		DOUBLE DT		REHEAT		INDUCTION		VAV
	NUMBER OF ZONES				OTHER	MAKE- UP AIR UNIT			
	COMMENT:								

NAMEPLATE:

					MFG.				MODEL
10.0	SUPPLY FAN HP				MFG.				MODEL
5	RET/EXH FAN HP				MFG.				MODEL
9320	CFM-HTG	**0**	CFM-CLG	**100%**	MIN %OA	**100%**	MAX %OA	**11.1%**	% HTG AREA SERVED

COMME 5 HP MOTOR IS CONNECTED TO HEAT RECOVERY UNIT 7 (HRU7). OUTSIDE AIR PASSES THROUGH THE PREHEAT COIL FIRST, THEN THE HEATING COIL. -7F O.A. --> PHC ---> 15 F ---> HC ---> 57 F TO SPACE

COILS:

	NONE		STM	X	HW		ELEC		MOD VLV	PREHEAT
	NONE		STM	X	HW		ELEC	X	MOD VLV	HEATING
X	NONE		STM		HW		ELEC		MOD VLV	REHEAT
X	NONE		STM		HW		EVAP MEDIA		MOD VLV	HUMID.
X	NONE		DX		CW				MOD VLV	COOLING

OPERATION:

HOURS ON:	S	M	T	W	T	F	S	COMMENTS
PRESENT START TIME								TIMECLOCK?
PRESENT STOP TIME								
REQUIRED START TIME	**0**	**600**	**600**	**600**	**600**	**600**	**0**	**SEE SCHED.**
REQUIRED STOP TIME	**0**	**2200**	**2200**	**2200**	**2200**	**1800**	**0**	

MONTHS ON:

J	F	M	A	M	J	J	A	S	O	N	D
1	**1**	**1**	**1**	**1**	**1**	**1**	**1**	**1**	**1**	**1**	**1**

CONTROLS:

	X	PNEUMATIC		ELECTRIC		ELEC'NIC		DDC	COMMENTS
THERMOSTAT TYPE:		SINGLE STPT		DUAL SETPNT		SETBACK			
SPACE SETPOINT (°F):	**70**	OCC HEAT	**65**	UNOCC HEAT		OCC COOL		UNOCC COOL	
OTHER SETPOINTS (°F):		HOT DECK		COLD DECK		MIXED AIR		OTHER	
DAMPER CONTROL:	**N**	MIN OA (Y/N)	**Y**	MAX OA (Y/N)	**N**	RA (Y/N)	Y	EA (Y/N)	
		MA CONTROL		ECONO-DB		ECONO-ENT		OTHER	
DEMAND LIMIT:	**N**	(Y = YES ; N = NO)							

COMMENTS: **234.0 MBH HEATING COIL**

AIR ENTERING THIS UNIT AT -7F IS PREHEATED TO 15F BY PASSING THROUGH A EXHAUST HEAT RECOVERY COIL (HRU

E M C ENGINEERS, INC.

PROJECT: UMCS STUDY
CLIENT CONTRACT NO.: DACA01-94-D-0033
CLIENT PROJ. ENG: STEVE ROWLEY
LOCATION: FORT DRUM, NY BLDG: **MNT HANGER AVUM**

EMC NO.: 1406-006
DATE: 14-NOV-94
PREPARED BY: **BG**
CHECKED BY:
FILE: **2060RMAU6**

AIR HANDLING UNIT SURVEY OBSERVATIONS

RMAU6	AHU NO.	**HANGAR NORTH**	LOCATION (RM)
NONE	REF. SYS. SERVING AHU	**HANGAR NORTH**	SERVES AREA

UNIT TYPE:

X	SINGLE ZN		2-PIPE FC		4-PIPE FC		UNIT HTR		H&V
	MULTIZONE		DOUBLE DT		REHEAT		INDUCTION		VAV
	NUMBER OF ZONES				OTHER	MAKE- UP AIR UNIT			
	COMMENT:								

NAMEPLATE:

					MFG.				MODEL
10.0	SUPPLY FAN HP				MFG.				MODEL
5	RET/EXH FAN HP				MFG.				MODEL
9320	CFM-HTG	**0**	CFM-CLG	**100%**	MIN %OA	**100%**	MAX %OA	**11.1%**	% HTG AREA SERVED

COMME 5 HP MOTOR IS CONNECTED TO HEAT RECOVERY UNIT 7 (HRU7). OUTSIDE AIR PASSES THROUGH THE PREHEAT

COIL FIRST, THEN THE HEATING COIL. -7F O.A. --> PHC ---> 15 F ---> HC ---> 57 F TO SPACE

COILS:

	NONE		STM	X	HW		ELEC		MOD VLV	PREHEAT
	NONE		STM	X	HW		ELEC	X	MOD VLV	HEATING
X	NONE		STM		HW		ELEC		MOD VLV	REHEAT
X	NONE		STM		HW		EVAP MEDIA		MOD VLV	HUMID.
X	NONE		DX		CW				MOD VLV	COOLING

OPERATION:

HOURS ON:	S	M	T	W	T	F	S	COMMENTS
PRESENT START TIME								TIMECLOCK?
PRESENT STOP TIME								
REQUIRED START TIME	**0**	**600**	**600**	**600**	**600**	**600**	**0**	**SEE SCHED.**
REQUIRED STOP TIME	**0**	**2200**	**2200**	**2200**	**2200**	**1800**	**0**	

MONTHS ON:

J	F	M	A	M	J	J	A	S	O	N	D
1	**1**	**1**	**1**	**1**	**1**	**1**	**1**	**1**	**1**	**1**	**1**

CONTROLS:

	X	PNEUMATIC		ELECTRIC		ELEC'NIC		DDC	COMMENTS
THERMOSTAT TYPE:		SINGLE STPT		DUAL SETPNT		SETBACK			
SPACE SETPOINT (°F):	**70**	OCC HEAT	**65**	UNOCC HEAT		OCC COOL		UNOCC COOL	
OTHER SETPOINTS (°F):		HOT DECK		COLD DECK		MIXED AIR		OTHER	
DAMPER CONTROL:	**N**	MIN OA (Y/N)	**Y**	MAX OA (Y/N)	**N**	RA (Y/N)	**Y**	EA (Y/N)	
		MA CONTROL		ECONO-DB		ECONO-ENT		OTHER	
DEMAND LIMIT:	**N**	(Y = YES ; N = NO)							

COMMENTS: **234.0 MBH HEATING COIL**

AIR ENTERING THIS UNIT AT -7F IS PREHEATED TO 15F BY PASSING THROUGH A EXHAUST HEAT RECOVERY COIL (HRU

E M C ENGINEERS, INC.

PROJECT: UMCS STUDY
CLIENT CONTRACT NO.: DACA01-94-D-0033
CLIENT PROJ. ENG: STEVE ROWLEY
LOCATION: FORT DRUM, NY BLDG: **MNT HANGAR AVUM**

EMC NO.: 1406-006
DATE: Dec-94
PREPARED BY: **CSW**
CHECKED BY: BG
FILE: **2072ACC8**

REFRIGERATION EQUIPMENT SURVEY OBSERVATIONS

ACC8	CHILLER/COMPRESSOR NO.	RM 207, ADMIN	LOCATION (RM)

UNIT TYPE:

	CENTRIFUGAL WITH WATER SIDE COOLING TOWER		OTHER
	RECIPROCATING WITH WATER SIDE COOLING TOWER		AHU'S SERVED
X	RECIPROCATING WITH AIR COOLED CONDENSING UNIT		AC8
	ABSORBTION WITH WATER SIDE COOLING TOWER		
	AIR COOLED CONDENSING UNIT		

	CHW	X	DX		OTHER

NAMEPLATE:

CHILLER		MFG.			MODEL			SERIAL NO.
	VOLTS		AMPS	PH		HZ		CAPACITY (TONS)
TOWER		MFG.			MODEL			# OF FANS
	VOLTS		AMPS	PH		HZ	HP each	
CW PUMP		MFG.			MODEL			SERIAL NO.
	VOLTS		AMPS	PH		HZ	HP	
CNW PUMP		MFG.			MODEL			SERIAL NO.
	VOLTS		AMPS	PH		HZ	1 HP	

COMMENTS:

OPERATION:

HOURS ON:	S	M	T	W	T	F	S	COMMENT
PRESENT START TIME								TIMECLOCK?
PRESENT STOP TIME								
REQUIRED START TIME								
REQUIRED STOP TIME								

MONTHS ON:

J	F	M	A	M	J	J	A	S	O	N	D
0	0	0	0	1	1	1	1	1	0	0	0

CONTROLS:

	X	PNEUMATIC		ELECTRIC		ELEC'NIC		DDC	COMMENTS
SETPOINTS		CWS (oF)		CWR (oF)		CNWS (oF)		CNWR (oF)	
PANEL INDICATORS									
- PRESSURE		LITE-HI		LITE-LOW		GAUGES			
- TEMPERATURE		LITE-HI		LITE-LOW		GAUGES			
- OTHER									

COMMENTS:

E M C ENGINEERS, INC.

PROJECT: UMCS STUDY
CLIENT CONTRACT NO.: DACA01-94-D-0033
CLIENT PROJ. ENG: STEVE ROWLEY
LOCATION: FORT DRUM, NY BLDG: **MNT HANGER AVUM**

EMC NO.: 1406-006
DATE: 14-NOV-94
PREPARED BY: **BG**
CHECKED BY:
FILE: **2060RMAU4**

AIR HANDLING UNIT SURVEY OBSERVATIONS

RMAU4	AHU NO.	**HANGAR NORTH**	LOCATION (RM)
NONE	REF. SYS. SERVING AHU	**HANGAR NORTH**	SERVES AREA

UNIT TYPE:

X	SINGLE ZN		2-PIPE FC		4-PIPE FC		UNIT HTR		H&V
	MULTIZONE		DOUBLE DT		REHEAT		INDUCTION		VAV
	NUMBER OF ZONES				OTHER	MAKE- UP AIR UNIT			
	COMMENT:								

NAMEPLATE:

					MFG.				MODEL
10.0	SUPPLY FAN HP				MFG.				MODEL
5	RET/EXH FAN HP				MFG.				MODEL
9320	CFM-HTG	**0**	CFM-CLG	**100%**	MIN %OA	**100%**	MAX %OA	**11.1%**	% HTG AREA SERVED

COMME 5 HP MOTOR IS CONNECTED TO HEAT RECOVERY UNIT 7 (HRU7). OUTSIDE AIR PASSES THROUGH THE PREHEAT

COIL FIRST, THEN THE HEATING COIL. -7F O.A. --> PHC ---> 15 F ---> HC ---> 57 F TO SPACE

COILS:

	NONE		STM	X	HW		ELEC		MOD VLV	PREHEAT
	NONE		STM	X	HW		ELEC	X	MOD VLV	HEATING
X	NONE		STM		HW		ELEC		MOD VLV	REHEAT
X	NONE		STM		HW		EVAP MEDIA		MOD VLV	HUMID.
X	NONE		DX		CW				MOD VLV	COOLING

OPERATION:

HOURS ON:	S	M	T	W	T	F	S	COMMENTS
PRESENT START TIME								TIMECLOCK?
PRESENT STOP TIME								
REQUIRED START TIME	**0**	**600**	**600**	**600**	**600**	**600**	**0**	**SEE SCHED.**
REQUIRED STOP TIME	**0**	**2200**	**2200**	**2200**	**2200**	**1800**	**0**	

MONTHS ON:

J	F	M	A	M	J	J	A	S	O	N	D
1	**1**	**1**	**1**	**1**	**1**	**1**	**1**	**1**	**1**	**1**	**1**

CONTROLS:

	X	PNEUMATIC		ELECTRIC		ELEC'NIC		DDC	COMMENTS
THERMOSTAT TYPE:		SINGLE STPT		DUAL SETPNT		SETBACK			
SPACE SETPOINT (°F):	**70**	OCC HEAT	**65**	UNOCC HEAT		OCC COOL		UNOCC COOL	
OTHER SETPOINTS (°F):		HOT DECK		COLD DECK		MIXED AIR		OTHER	
DAMPER CONTROL:	**N**	MIN OA (Y/N)	**Y**	MAX OA (Y/N)	**N**	RA (Y/N)	**Y**	EA (Y/N)	
		MA CONTROL		ECONO-DB		ECONO-ENT		OTHER	
DEMAND LIMIT:	**N**	(Y = YES ; N = NO)							

COMMENTS: **234.0 MBH HEATING COIL**

AIR ENTERING THIS UNIT AT -7F IS PREHEATED TO 15F BY PASSING THROUGH A EXHAUST HEAT RECOVERY COIL (HRU

FIELD SURVEY NOTES

BUILDING 2065

E M C ENGINEERS, INC.

PROJECT: UMCS STUDY
CLIENT CONTRACT NO.: DACA01-94-D-0033
CLIENT PROJ. ENG: STEVE ROWLEY
LOCATION: FORT DRUM, NY BLDG: **AF OPS BLDG**

EMC NO.: 1406-006
DATE: Dec-94
PREPARED BY: **CSW**
CHECKED BY: BG
FILE: **2065AC1**

AIR HANDLING UNIT SURVEY OBSERVATIONS

AC1	AHU NO.	**SWITCH NODE**	LOCATION (RM)
ACC1	REF. SYS. SERVING AHU	**SWITCH NODE**	SERVES AREA

UNIT TYPE:

X	SINGLE ZN		2-PIPE FC		4-PIPE FC		UNIT HTR		H&V
	MULTIZONE		DOUBLE DT		REHEAT		INDUCTION		VAV
	NUMBER OF ZONES				OTHER				
	COMMENT:								

NAMEPLATE:

					MFG.				MODEL
1.0	SUPPLY FAN HP				MFG.				MODEL
0.0	RET/EXH FAN HP				MFG.				MODEL
	CFM-HTG	**1000**	CFM-CLG	**100%**	MIN % OA	**100%**	MAX %OA		% HTG AREA SERVED
COMMENT:		**21.6 MBH COOLING COIL CAPACITY**							
		17.44 MBH REHEATING COIL CAPACITY			**(5.0 KW)**				

COILS:

X	NONE		STM		HW		ELEC		MOD VLV	PREHEAT
X	NONE		STM		HW		ELEC		MOD VLV	HEATING
	NONE		STM		HW	X	ELEC		MOD VLV	REHEAT
	NONE		STM		HW	X	EVAP MEDIA		MOD VLV	HUMID.
	NONE	X	DX		CW			X	MOD VLV	COOLING

OPERATION:

HOURS ON:	S	M	T	W	T	F	S	COMMENTS
PRESENT START TIME								TIMECLOCK?
PRESENT STOP TIME								
REQUIRED START TIME								
REQUIRED STOP TIME								

MONTHS ON:

J	F	M	A	M	J	J	A	S	O	N	D
0	**0**	**0**	**0**	**1**	**1**	**1**	**1**	**1**	**0**	**0**	**0**

CONTROLS:

	X	PNEUMATIC		ELECTRIC		ELEC'NIC		DDC	COMMENTS
THERMOSTAT TYPE:	X	SINGLE STPT		DUAL SETPNT		SETBACK			
SPACE SETPOINT (°F):		OCC HEAT		UNOCC HEAT	**74**	OCC COOL	**N/A**	UNOCC COOL	
OTHER SETPOINTS (°F):		HOT DECK		COLD DECK		MIXED AIR		OTHER	
DAMPER CONTROL:	**N**	MIN OA (Y/N)	**Y**	MAX OA (Y/N)	**N**	RA (Y/N)	**Y**	EA (Y/N)	
		MA CONTROL		ECONO-DB		ECONO-ENT		OTHER	
DEMAND LIMIT:		(Y = YES ; N = NO)							
COMMENTS:									

E M C ENGINEERS, INC.

PROJECT: UMCS STUDY
CLIENT CONTRACT NO.: DACA01-94-D-0033
CLIENT PROJ. ENG: STEVE ROWLEY
LOCATION: FORT DRUM, NY BLDG: **AF OPS BLDG**

EMC NO.: 1406-006
DATE: Dec-94
PREPARED BY: **CSW**
CHECKED BY: BG
FILE: **2065AC1G**

AIR HANDLING UNIT SURVEY OBSERVATIONS

AC1G	AHU NO.	**GENERATOR BLDG**	LOCATION (RM)
NONE	REF. SYS. SERVING AHU	**GENERATOR BLDG/RADIO RO**	SERVES AREA

UNIT TYPE:

X	SINGLE ZN		2-PIPE FC		4-PIPE FC		UNIT HTR		H&V
	MULTIZONE		DOUBLE DT		REHEAT		INDUCTION		VAV
	NUMBER OF ZONES				OTHER				
	COMMENT:								

NAMEPLATE:

					MFG.				MODEL
1.0	SUPPLY FAN HP				MFG.				MODEL
0.0	RET/EXH FAN HP				MFG.				MODEL
	CFM-HTG	**880**	CFM-CLG	**100%**	MIN % OA	**100%**	MAX %OA		% HTG AREA SERVED
COMMENT:		**22.5 MBH COOLING COIL CAPACITY**							
		5KW REHEATING COIL CAPACITY							

COILS:

X	NONE		STM		HW		ELEC		MOD VLV	PREHEAT
X	NONE		STM		HW		ELEC		MOD VLV	HEATING
	NONE		STM		HW	X	ELEC		MOD VLV	REHEAT
	NONE		STM		HW	X	EVAP MEDIA		MOD VLV	HUMID.
	NONE	X	DX		CW			X	MOD VLV	COOLING

OPERATION:

HOURS ON:	S	M	T	W	T	F	S	COMMENTS
PRESENT START TIME								TIMECLOCK?
PRESENT STOP TIME								
REQUIRED START TIME								
REQUIRED STOP TIME								

MONTHS ON:

J	F	M	A	M	J	J	A	S	O	N	D
0	**0**	**0**	**0**	**1**	**1**	**1**	**1**	**1**	**0**	**0**	**0**

CONTROLS:

	X	PNEUMATIC		ELECTRIC		ELEC'NIC		DDC	COMMENTS
THERMOSTAT TYPE:	X	SINGLE STPT		DUAL SETPNT		SETBACK			
SPACE SETPOINT (°F):		OCC HEAT		UNOCC HEAT	**75**	OCC COOL	**N/A**	UNOCC COOL	
OTHER SETPOINTS (°F):		HOT DECK		COLD DECK		MIXED AIR		OTHER	
DAMPER CONTROL:	**N**	MIN OA (Y/N)	**Y**	MAX OA (Y/N)	**N**	RA (Y/N)	**Y**	EA (Y/N)	
		MA CONTROL		ECONO-DB		ECONO-ENT		OTHER	
DEMAND LIMIT:	**N**	(Y = YES ; N = NO)							
COMMENTS:									

E M C ENGINEERS, INC.

PROJECT: UMCS STUDY
CLIENT CONTRACT NO.: DACA01-94-D-0033
CLIENT PROJ. ENG: STEVE ROWLEY
LOCATION: FORT DRUM, NY BLDG: **AF OPS BLDG**

EMC NO.: 1406-006
DATE: Dec-94
PREPARED BY: **CSW**
CHECKED BY: BG
FILE: **2065AC2G**

AIR HANDLING UNIT SURVEY OBSERVATIONS

AC2G	AHU NO.	**GENERATOR BLDG**	LOCATION (RM)
NONE	REF. SYS. SERVING AHU	**GENERATOR BLDG/RADIO RO**	SERVES AREA

UNIT TYPE:

X	SINGLE ZN		2-PIPE FC		4-PIPE FC		UNIT HTR		H&V
	MULTIZONE		DOUBLE DT		REHEAT		INDUCTION		VAV
	NUMBER OF ZONES				OTHER				
	COMMENT:								

NAMEPLATE:

					MFG.				MODEL
1.0	SUPPLY FAN HP				MFG.				MODEL
0.0	RET/EXH FAN HP				MFG.				MODEL
	CFM-HTG	**880**	CFM-CLG	**100%**	MIN % OA	**100%**	MAX %OA		% HTG AREA SERVED
COMMENT:		**22.5 MBH COOLING COIL CAPACITY**							
		5KW REHEATING COIL CAPACITY							

COILS:

X	NONE		STM		HW		ELEC		MOD VLV	PREHEAT
X	NONE		STM		HW		ELEC		MOD VLV	HEATING
	NONE		STM		HW	X	ELEC		MOD VLV	REHEAT
	NONE		STM		HW	X	EVAP MEDIA		MOD VLV	HUMID.
	NONE	X	DX		CW			X	MOD VLV	COOLING

OPERATION:

HOURS ON:	S	M	T	W	T	F	S	COMMENTS
PRESENT START TIME								TIMECLOCK?
PRESENT STOP TIME								
REQUIRED START TIME								
REQUIRED STOP TIME								

MONTHS ON:

J	F	M	A	M	J	J	A	S	O	N	D
0	**0**	**0**	**0**	**1**	**1**	**1**	**1**	**1**	**0**	**0**	**0**

CONTROLS:

	X	PNEUMATIC		ELECTRIC		ELEC'NIC		DDC	COMMENTS
THERMOSTAT TYPE:	X	SINGLE STPT		DUAL SETPNT		SETBACK			
SPACE SETPOINT (°F):		OCC HEAT		UNOCC HEAT	**75**	OCC COOL	**N/A**	UNOCC COOL	
OTHER SETPOINTS (°F):		HOT DECK		COLD DECK		MIXED AIR		OTHER	
DAMPER CONTROL:	**N**	MIN OA (Y/N)	**Y**	MAX OA (Y/N)	**N**	RA (Y/N)	**Y**	EA (Y/N)	
		MA CONTROL		ECONO-DB		ECONO-ENT		OTHER	
DEMAND LIMIT:	**N**	(Y = YES ; N = NO)							
COMMENTS:									

E M C ENGINEERS, INC.

PROJECT: UMCS STUDY
CLIENT CONTRACT NO.: DACA01-94-D-0033
CLIENT PROJ. ENG: STEVE ROWLEY
LOCATION: FORT DRUM, NY BLDG: **AF OPS BLDG**

EMC NO.: 1406-006
DATE: Dec-94
PREPARED BY: **CSW**
CHECKED BY: BG
FILE: **2065AC2**

AIR HANDLING UNIT SURVEY OBSERVATIONS

AC2	AHU NO.	**SWITCH NODE**	LOCATION (RM)
ACC2	REF. SYS. SERVING AHU	**SWITCH NODE**	SERVES AREA

UNIT TYPE:

X	SINGLE ZN		2-PIPE FC		4-PIPE FC		UNIT HTR		H&V
	MULTIZONE		DOUBLE DT		REHEAT		INDUCTION		VAV
	NUMBER OF ZONES				OTHER				
	COMMENT:								

NAMEPLATE:

					MFG.				MODEL
1.0	SUPPLY FAN HP				MFG.				MODEL
0.0	RET/EXH FAN HP				MFG.				MODEL
	CFM-HTG	**1000**	CFM-CLG	**100%**	MIN % OA	**100%**	MAX %OA		% HTG AREA SERVED
COMMENT:		**21.6 MBH COOLING COIL CAPACITY**							
		17.44 MBH REHEATING COIL CAPACITY (5.0 KW)							

COILS:

X	NONE		STM		HW		ELEC		MOD VLV	PREHEAT
X	NONE		STM		HW		ELEC		MOD VLV	HEATING
	NONE		STM		HW	X	ELEC		MOD VLV	REHEAT
	NONE		STM		HW	X	EVAP MEDIA		MOD VLV	HUMID.
	NONE	X	DX		CW			X	MOD VLV	COOLING

OPERATION:

HOURS ON:	S	M	T	W	T	F	S	COMMENTS
PRESENT START TIME								TIMECLOCK?
PRESENT STOP TIME								
REQUIRED START TIME								
REQUIRED STOP TIME								

MONTHS ON:

J	F	M	A	M	J	J	A	S	O	N	D
0	**0**	**0**	**0**	**1**	**1**	**1**	**1**	**1**	**0**	**0**	**0**

CONTROLS:

	X	PNEUMATIC		ELECTRIC		ELEC'NIC		DDC	COMMENTS
THERMOSTAT TYPE:	X	SINGLE STPT		DUAL SETPNT		SETBACK			
SPACE SETPOINT (°F):		OCC HEAT		UNOCC HEAT	**74**	OCC COOL	**N/A**	UNOCC COOL	
OTHER SETPOINTS (°F):		HOT DECK		COLD DECK		MIXED AIR		OTHER	
DAMPER CONTROL:	**N**	MIN OA (Y/N)	**Y**	MAX OA (Y/N)	**N**	RA (Y/N)	**Y**	EA (Y/N)	
		MA CONTROL		ECONO-DB		ECONO-ENT		OTHER	
DEMAND LIMIT:		(Y = YES ; N = NO)							
COMMENTS:									

E M C ENGINEERS, INC.

PROJECT: UMCS STUDY
CLIENT CONTRACT NO.: DACA01-94-D-0033
CLIENT PROJ. ENG: STEVE ROWLEY
LOCATION: FORT DRUM, NY BLDG: **AF OPS BLDG**

EMC NO.: 1406-006
DATE: Dec-94
PREPARED BY: **CSW**
CHECKED BY: BG
FILE: **2065AC4**

AIR HANDLING UNIT SURVEY OBSERVATIONS

AC4	AHU NO.	**GCA RADAR, RM 126-**	LOCATION (RM)
ACC4	REF. SYS. SERVING AHU	**GCA RADAR, RM 126-**	SERVES AREA

UNIT TYPE:

X	SINGLE ZN		2-PIPE FC		4-PIPE FC		UNIT HTR		H&V
	MULTIZONE		DOUBLE DT		REHEAT		INDUCTION		VAV
	NUMBER OF ZONES				OTHER				
	COMMENT:								

NAMEPLATE:

					MFG.				MODEL
1.0	SUPPLY FAN HP				MFG.				MODEL
0.0	RET/EXH FAN HP				MFG.				MODEL
	CFM-HTG	**1000**	CFM-CLG	**100%**	MIN % OA	**100%**	MAX %OA		% HTG AREA SERVED
COMMENT:		**21.6 MBH COOLING COIL CAPACITY**							
		17.44 MBH REHEATING COIL CAPACITY (5.0 KW)							

COILS:

X	NONE		STM		HW		ELEC		MOD VLV	PREHEAT
X	NONE		STM		HW		ELEC		MOD VLV	HEATING
	NONE		STM		HW	X	ELEC		MOD VLV	REHEAT
	NONE		STM		HW	X	EVAP MEDIA		MOD VLV	HUMID.
	NONE	X	DX		CW			X	MOD VLV	COOLING

OPERATION:

HOURS ON:	S	M	T	W	T	F	S	COMMENTS
PRESENT START TIME								TIMECLOCK?
PRESENT STOP TIME								
REQUIRED START TIME								
REQUIRED STOP TIME								

MONTHS ON:

J	F	M	A	M	J	J	A	S	O	N	D
0	**0**	**0**	**0**	**1**	**1**	**1**	**1**	**1**	**0**	**0**	**0**

CONTROLS:

	X	PNEUMATIC		ELECTRIC		ELEC'NIC		DDC	COMMENTS
THERMOSTAT TYPE:	X	SINGLE STPT		DUAL SETPNT		SETBACK			
SPACE SETPOINT (°F):		OCC HEAT		UNOCC HEAT	**74**	OCC COOL	**N/A**	UNOCC COOL	
OTHER SETPOINTS (°F):		HOT DECK		COLD DECK		MIXED AIR		OTHER	
DAMPER CONTROL:	**N**	MIN OA (Y/N)	**Y**	MAX OA (Y/N)	**N**	RA (Y/N)	**Y**	EA (Y/N)	
		MA CONTROL		ECONO-DB		ECONO-ENT		OTHER	
DEMAND LIMIT:	**N**	(Y = YES ; N = NO)							
COMMENTS:									

E M C ENGINEERS, INC.

PROJECT: UMCS STUDY
CLIENT CONTRACT NO.: DACA01-94-D-0033
CLIENT PROJ. ENG: STEVE ROWLEY
LOCATION: FORT DRUM, NY BLDG: **AF OPS BLDG**

EMC NO.: 1406-006
DATE: Dec-94
PREPARED BY: **CSW**
CHECKED BY: BG
FILE: **2065AC4A**

AIR HANDLING UNIT SURVEY OBSERVATIONS

AC4A	AHU NO.	**GCA RADAR, RM 126-**	LOCATION (RM)
ACC4	REF. SYS. SERVING AHU	**GCA RADAR, RM 126-**	SERVES AREA

UNIT TYPE:

X	SINGLE ZN		2-PIPE FC		4-PIPE FC		UNIT HTR		H&V
	MULTIZONE		DOUBLE DT		REHEAT		INDUCTION		VAV
	NUMBER OF ZONES				OTHER				
	COMMENT:								

NAMEPLATE:

					MFG.				MODEL
1.0	SUPPLY FAN HP				MFG.				MODEL
0.0	RET/EXH FAN HP				MFG.				MODEL
	CFM-HTG	**1000**	CFM-CLG	**100%**	MIN % OA	**100%**	MAX %OA		% HTG AREA SERVED
COMMENT:		**21.6 MBH COOLING COIL CAPACITY**							
		17.44 MBH REHEATING COIL CAPACITY (5.0 KW)							

COILS:

X	NONE		STM		HW		ELEC		MOD VLV	PREHEAT
X	NONE		STM		HW		ELEC		MOD VLV	HEATING
	NONE		STM		HW	X	ELEC		MOD VLV	REHEAT
	NONE		STM		HW	X	EVAP MEDIA		MOD VLV	HUMID.
	NONE	X	DX		CW			X	MOD VLV	COOLING

OPERATION:

HOURS ON:	S	M	T	W	T	F	S	COMMENTS
PRESENT START TIME								TIMECLOCK?
PRESENT STOP TIME								
REQUIRED START TIME								
REQUIRED STOP TIME								

MONTHS ON:

J	F	M	A	M	J	J	A	S	O	N	D
0	**0**	**0**	**0**	**1**	**1**	**1**	**1**	**1**	**0**	**0**	**0**

CONTROLS:

	X	PNEUMATIC		ELECTRIC		ELEC'NIC		DDC	COMMENTS
THERMOSTAT TYPE:	X	SINGLE STPT		DUAL SETPNT		SETBACK			
SPACE SETPOINT (°F):		OCC HEAT		UNOCC HEAT	**74**	OCC COOL	**N/A**	UNOCC COOL	
OTHER SETPOINTS (°F):		HOT DECK		COLD DECK		MIXED AIR		OTHER	
DAMPER CONTROL:	**N**	MIN OA (Y/N)	**Y**	MAX OA (Y/N)	**N**	RA (Y/N)	**Y**	EA (Y/N)	
		MA CONTROL		ECONO-DB		ECONO-ENT		OTHER	
DEMAND LIMIT:	**N**	(Y = YES ; N = NO)							
COMMENTS:									

E M C ENGINEERS, INC.

PROJECT: UMCS STUDY
CLIENT CONTRACT NO.: DACA01-94-D-0033
CLIENT PROJ. ENG: STEVE ROWLEY
LOCATION: FORT DRUM, NY BLDG: **AF OPS BLDG**

EMC NO.: 1406-006
DATE: Dec-94
PREPARED BY: **CSW**
CHECKED BY: BG
FILE: **2065AC5**

AIR HANDLING UNIT SURVEY OBSERVATIONS

AC5	AHU NO.	**RADAR 141**	LOCATION (RM)
ACC5	REF. SYS. SERVING AHU	**RADAR 141**	SERVES AREA

UNIT TYPE:

X	SINGLE ZN		2-PIPE FC		4-PIPE FC		UNIT HTR		H&V
	MULTIZONE		DOUBLE DT		REHEAT		INDUCTION		VAV
	NUMBER OF ZONES				OTHER				
	COMMENT:								

NAMEPLATE:

					MFG.				MODEL
1.0	SUPPLY FAN HP				MFG.				MODEL
0.0	RET/EXH FAN HP				MFG.				MODEL
	CFM-HTG	**1000**	CFM-CLG	**100%**	MIN % OA	**100%**	MAX %OA		% HTG AREA SERVED
COMMENT:		**21.6 MBH COOLING COIL CAPACITY**							
		17.44 MBH REHEATING COIL CAPACITY (5.0 KW)							

COILS:

X	NONE		STM		HW		ELEC		MOD VLV	PREHEAT
X	NONE		STM		HW		ELEC		MOD VLV	HEATING
	NONE		STM		HW	X	ELEC		MOD VLV	REHEAT
	NONE		STM		HW	X	EVAP MEDIA		MOD VLV	HUMID.
	NONE	X	DX		CW			X	MOD VLV	COOLING

OPERATION:

HOURS ON:	S	M	T	W	T	F	S	COMMENTS
PRESENT START TIME								TIMECLOCK?
PRESENT STOP TIME								
REQUIRED START TIME								
REQUIRED STOP TIME								

MONTHS ON:

J	F	M	A	M	J	J	A	S	O	N	D
0	**0**	**0**	**0**	**1**	**1**	**1**	**1**	**1**	**0**	**0**	**0**

CONTROLS:

	X	PNEUMATIC		ELECTRIC		ELEC'NIC		DDC	COMMENTS
THERMOSTAT TYPE:	X	SINGLE STPT		DUAL SETPNT		SETBACK			
SPACE SETPOINT (°F):		OCC HEAT		UNOCC HEAT	**74**	OCC COOL	**N/A**	UNOCC COOL	
OTHER SETPOINTS (°F):		HOT DECK		COLD DECK		MIXED AIR		OTHER	
DAMPER CONTROL:	**N**	MIN OA (Y/N)	**Y**	MAX OA (Y/N)	**N**	RA (Y/N)	**Y**	EA (Y/N)	
		MA CONTROL		ECONO-DB		ECONO-ENT		OTHER	
DEMAND LIMIT:	**N**	(Y = YES ; N = NO)							
COMMENTS:									

E M C ENGINEERS, INC.

PROJECT: UMCS STUDY
CLIENT CONTRACT NO.: DACA01-94-D-0033
CLIENT PROJ. ENG: STEVE ROWLEY
LOCATION: FORT DRUM, NY BLDG: **AF OPS BLDG**

EMC NO.: 1406-006
DATE: Dec-94
PREPARED BY: **CSW**
CHECKED BY: BG
FILE: **2065AC6**

AIR HANDLING UNIT SURVEY OBSERVATIONS

AC6	AHU NO.	**WEATHER CTR. 143**	LOCATION (RM)
ACC6	REF. SYS. SERVING AHU	**WEATHER CTR. 143**	SERVES AREA

UNIT TYPE:

X	SINGLE ZN		2-PIPE FC		4-PIPE FC		UNIT HTR		H&V
	MULTIZONE		DOUBLE DT		REHEAT		INDUCTION		VAV
	NUMBER OF ZONES				OTHER				
	COMMENT:								

NAMEPLATE:

					MFG.				MODEL
1.5	SUPPLY FAN HP				MFG.				MODEL
0.0	RET/EXH FAN HP				MFG.				MODEL
	CFM-HTG	**1600**	CFM-CLG	**100%**	MIN % OA	**100%**	MAX %OA		% HTG AREA SERVED
COMMENT:		**35.0 MBH COOLING COIL CAPACITY**							
		32.625 MBH REHEATING COIL CAPACITY (9.0 KW)							

COILS:

X	NONE		STM		HW		ELEC		MOD VLV	PREHEAT
X	NONE		STM		HW		ELEC		MOD VLV	HEATING
	NONE		STM		HW	X	ELEC		MOD VLV	REHEAT
	NONE		STM		HW	X	EVAP MEDIA		MOD VLV	HUMID.
	NONE	X	DX		CW			X	MOD VLV	COOLING

OPERATION:

HOURS ON:	S	M	T	W	T	F	S	COMMENTS
PRESENT START TIME								TIMECLOCK?
PRESENT STOP TIME								
REQUIRED START TIME								
REQUIRED STOP TIME								

MONTHS ON:

J	F	M	A	M	J	J	A	S	O	N	D
0	**0**	**0**	**0**	**1**	**1**	**1**	**1**	**1**	**0**	**0**	**0**

CONTROLS:

	X	PNEUMATIC		ELECTRIC		ELEC'NIC		DDC	COMMENTS
THERMOSTAT TYPE:	X	SINGLE STPT		DUAL SETPNT		SETBACK			
SPACE SETPOINT (°F):		OCC HEAT		UNOCC HEAT	**74**	OCC COOL	**N/A**	UNOCC COOL	
OTHER SETPOINTS (°F):		HOT DECK		COLD DECK		MIXED AIR		OTHER	
DAMPER CONTROL:	**N**	MIN OA (Y/N)	**Y**	MAX OA (Y/N)	**N**	RA (Y/N)	**Y**	EA (Y/N)	
		MA CONTROL		ECONO-DB		ECONO-ENT		OTHER	
DEMAND LIMIT:	**N**	(Y = YES ; N = NO)							
COMMENTS:									

E M C ENGINEERS, INC.

PROJECT: UMCS STUDY
CLIENT CONTRACT NO.: DACA01-94-D-0033
CLIENT PROJ. ENG: STEVE ROWLEY
LOCATION: FORT DRUM, NY BLDG: **AF OPS BLDG**

EMC NO.: 1406-006
DATE: Dec-94
PREPARED BY: **CSW**
CHECKED BY: BG
FILE: **2065AC7**

AIR HANDLING UNIT SURVEY OBSERVATIONS

AC7	AHU NO.	**WEATHER CTR. 142**	LOCATION (RM)
ACC7	REF. SYS. SERVING AHU	**WEATHER CTR. 142**	SERVES AREA

UNIT TYPE:

X	SINGLE ZN		2-PIPE FC		4-PIPE FC		UNIT HTR		H&V
	MULTIZONE		DOUBLE DT		REHEAT		INDUCTION		VAV
	NUMBER OF ZONES				OTHER				
	COMMENT:								

NAMEPLATE:

					MFG.				MODEL
1.5	SUPPLY FAN HP				MFG.				MODEL
0.0	RET/EXH FAN HP				MFG.				MODEL
	CFM-HTG	**1600**	CFM-CLG	**100%**	MIN % OA	**100%**	MAX %OA		% HTG AREA SERVED
COMMENT:		**35.0 MBH COOLING COIL CAPACITY**							
		32.625 MBH REHEATING COIL CAPACITY (9.0 KW)							

COILS:

X	NONE		STM		HW		ELEC		MOD VLV	PREHEAT
X	NONE		STM		HW		ELEC		MOD VLV	HEATING
	NONE		STM		HW	**X**	ELEC		MOD VLV	REHEAT
	NONE		STM		HW	**X**	EVAP MEDIA		MOD VLV	HUMID.
	NONE	**X**	DX		CW			**X**	MOD VLV	COOLING

OPERATION:

HOURS ON:	S	M	T	W	T	F	S	COMMENTS
PRESENT START TIME								TIMECLOCK?
PRESENT STOP TIME								
REQUIRED START TIME								
REQUIRED STOP TIME								

MONTHS ON:

J	F	M	A	M	J	J	A	S	O	N	D
0	**0**	**0**	**0**	**1**	**1**	**1**	**1**	**1**	**0**	**0**	**0**

CONTROLS:

	X	PNEUMATIC		ELECTRIC		ELEC'NIC		DDC	COMMENTS
THERMOSTAT TYPE:	**X**	SINGLE STPT		DUAL SETPNT		SETBACK			
SPACE SETPOINT (°F):		OCC HEAT		UNOCC HEAT	**74**	OCC COOL	**N/A**	UNOCC COOL	
OTHER SETPOINTS (°F):		HOT DECK		COLD DECK		MIXED AIR		OTHER	
DAMPER CONTROL:	**N**	MIN OA (Y/N)	**Y**	MAX OA (Y/N)	**N**	RA (Y/N)	**Y**	EA (Y/N)	
		MA CONTROL		ECONO-DB		ECONO-ENT		OTHER	
DEMAND LIMIT:	**N**	(Y = YES ; N = NO)							
COMMENTS:									

E M C ENGINEERS, INC.

PROJECT: UMCS STUDY
CLIENT CONTRACT NO.: DACA01-94-D-0033
CLIENT PROJ. ENG: STEVE ROWLEY
LOCATION: FORT DRUM, NY BLDG: **AF OPS BLDG**

EMC NO.: 1406-006
DATE: Dec-94
PREPARED BY: **CSW**
CHECKED BY: BG
FILE: **2065AC8**

AIR HANDLING UNIT SURVEY OBSERVATIONS

AC8	AHU NO.	**RADIO EQUIP 201**	LOCATION (RM)
NONE	REF. SYS. SERVING AHU	**RADIO EQUIP 201**	SERVES AREA

UNIT TYPE:

X	SINGLE ZN		2-PIPE FC		4-PIPE FC		UNIT HTR		H&V
	MULTIZONE		DOUBLE DT		REHEAT		INDUCTION		VAV
	NUMBER OF ZONES				OTHER				
	COMMENT:								

NAMEPLATE:

					MFG.				MODEL
1.0	SUPPLY FAN HP				MFG.				MODEL
0.0	RET/EXH FAN HP				MFG.				MODEL
	CFM-HTG	**700**	CFM-CLG	**100%**	MIN % OA	**100%**	MAX %OA		% HTG AREA SERVED
COMMENT:		**15.25 MBH COOLING COIL CAPACITY**							
		15.74 MBH REHEATING COIL CAPACITY (4.43 KW)							

COILS:

X	NONE		STM		HW		ELEC		MOD VLV	PREHEAT
X	NONE		STM		HW		ELEC		MOD VLV	HEATING
	NONE		STM		HW	X	ELEC		MOD VLV	REHEAT
	NONE		STM		HW	X	EVAP MEDIA		MOD VLV	HUMID.
	NONE	X	DX		CW			X	MOD VLV	COOLING

OPERATION:

HOURS ON:	S	M	T	W	T	F	S	COMMENTS
PRESENT START TIME								TIMECLOCK?
PRESENT STOP TIME								
REQUIRED START TIME								
REQUIRED STOP TIME								

MONTHS ON:

J	F	M	A	M	J	J	A	S	O	N	D
0	**0**	**0**	**0**	**1**	**1**	**1**	**1**	**1**	**0**	**0**	**0**

CONTROLS:

	X	PNEUMATIC		ELECTRIC		ELEC'NIC		DDC	COMMENTS
THERMOSTAT TYPE:	X	SINGLE STPT		DUAL SETPNT		SETBACK			
SPACE SETPOINT (°F):		OCC HEAT		UNOCC HEAT	**74**	OCC COOL	**N/A**	UNOCC COOL	
OTHER SETPOINTS (°F):		HOT DECK		COLD DECK		MIXED AIR		OTHER	
DAMPER CONTROL:	**N**	MIN OA (Y/N)	**Y**	MAX OA (Y/N)	**N**	RA (Y/N)	**Y**	EA (Y/N)	
		MA CONTROL		ECONO-DB		ECONO-ENT		OTHER	
DEMAND LIMIT:	**N**	(Y = YES ; N = NO)							
COMMENTS:									

E M C ENGINEERS, INC.

PROJECT: UMCS STUDY
CLIENT CONTRACT NO.: DACA01-94-D-0033
CLIENT PROJ. ENG: STEVE ROWLEY
LOCATION: FORT DRUM, NY BLDG: **AF OPS BLDG**

EMC NO.: 1406-006
DATE: Dec-94
PREPARED BY: **CSW**
CHECKED BY: BG
FILE: **2065AC9**

AIR HANDLING UNIT SURVEY OBSERVATIONS

AC9	AHU NO.	**TOWER CAB 205**	LOCATION (RM)
NONE	REF. SYS. SERVING AHU	**TOWER CAB 205**	SERVES AREA

UNIT TYPE:

X	SINGLE ZN		2-PIPE FC		4-PIPE FC		UNIT HTR		H&V
	MULTIZONE		DOUBLE DT		REHEAT		INDUCTION		VAV
	NUMBER OF ZONES				OTHER				
	COMMENT:								

NAMEPLATE:

					MFG.				MODEL
2.0	SUPPLY FAN HP				MFG.				MODEL
0.0	RET/EXH FAN HP				MFG.				MODEL
	CFM-HTG	**2415**	CFM-CLG	**100%**	MIN % OA	**100%**	MAX %OA		% HTG AREA SERVED
COMMENT:		**64.3 MBH COOLING COIL CAPACITY**							
		89.63 MBH REHEATING COIL CAPACITY			**(HOT WATER REHEAT)**				

COILS:

X	NONE		STM		HW		ELEC		MOD VLV	PREHEAT
X	NONE		STM		HW		ELEC		MOD VLV	HEATING
	NONE		STM	X	HW		ELEC	X	MOD VLV	REHEAT
	NONE		STM		HW	X	EVAP MEDIA		MOD VLV	HUMID.
	NONE	X	DX		CW			X	MOD VLV	COOLING

OPERATION:

HOURS ON:	S	M	T	W	T	F	S	COMMENTS
PRESENT START TIME								TIMECLOCK?
PRESENT STOP TIME								
REQUIRED START TIME								
REQUIRED STOP TIME								

MONTHS ON:

J	F	M	A	M	J	J	A	S	O	N	D
0	**0**	**0**	**0**	**1**	**1**	**1**	**1**	**1**	**0**	**0**	**0**

CONTROLS:

	X	PNEUMATIC		ELECTRIC		ELEC'NIC		DDC	COMMENTS
THERMOSTAT TYPE:	X	SINGLE STPT		DUAL SETPNT		SETBACK			
SPACE SETPOINT (°F):		OCC HEAT		UNOCC HEAT	**78**	OCC COOL	**N/A**	UNOCC COOL	
OTHER SETPOINTS (°F):		HOT DECK		COLD DECK		MIXED AIR		OTHER	
DAMPER CONTROL:	**N**	MIN OA (Y/N)	**Y**	MAX OA (Y/N)	**N**	RA (Y/N)	**Y**	EA (Y/N)	
		MA CONTROL		ECONO-DB		ECONO-ENT		OTHER	
DEMAND LIMIT:	**N**	(Y = YES ; N = NO)							
COMMENTS:									

E M C ENGINEERS, INC.

PROJECT: UMCS STUDY
CLIENT CONTRACT NO.: DACA01-94-D-0033
CLIENT PROJ. ENG: STEVE ROWLEY
LOCATION: FORT DRUM, NY BLDG: **AF OPS BLDG**

EMC NO.: 1406-006
DATE: Dec-94
PREPARED BY: **CSW**
CHECKED BY: BG
FILE: **2065ACC1**

REFRIGERATION EQUIPMENT SURVEY OBSERVATIONS

ACC1	CHILLER/COMPRESSOR NO.	OUTSIDE MECH ROO	LOCATION (RM)

UNIT TYPE:

	CENTRIFUGAL WITH WATER SIDE COOLING TOWER		OTHER
	RECIPROCATING WITH WATER SIDE COOLING TOWER		AHU'S SERVED
	RECIPROCATING WITH AIR COOLED CONDENSING UNIT		AC1
	ABSORBTION WITH WATER SIDE COOLING TOWER		
X	AIR COOLED CONDENSING UNIT		

	CHW	X	DX		OTHER	

NAMEPLATE:

CHILLER		MFG.				MODEL				SERIAL NO.
	VOLTS		AMPS		PH		HZ		CAPACITY (TONS)	
TOWER		MFG.				MODEL				# OF FANS
	VOLTS		AMPS		PH		HZ		HP each	
CW PUMP		MFG.				MODEL				SERIAL NO.
	VOLTS		AMPS		PH		HZ		HP	
CNW PUMP		MFG.				MODEL				SERIAL NO.
	VOLTS		AMPS		PH		HZ	0.75	HP	

COMMENTS:

OPERATION:

HOURS ON:	S	M	T	W	T	F	S	COMMENT
PRESENT START TIME								TIMECLOCK?
PRESENT STOP TIME								
REQUIRED START TIME								
REQUIRED STOP TIME								

MONTHS ON:

J	F	M	A	M	J	J	A	S	O	N	D
0	0	0	0	1	1	1	1	1	0	0	0

CONTROLS:

	X	PNEUMATIC		ELECTRIC		ELEC'NIC		DDC	COMMENTS
SETPOINTS		CWS (oF)		CWR (oF)		CNWS (oF)		CNWR (oF)	
PANEL INDICATORS									
- PRESSURE		LITE-HI		LITE-LOW		GAUGES			
- TEMPERATURE		LITE-HI		LITE-LOW		GAUGES			
- OTHER									

COMMENTS: **21.6 MBH CAPACITY**

E M C ENGINEERS, INC.

PROJECT: UMCS STUDY
CLIENT CONTRACT NO.: DACA01-94-D-0033
CLIENT PROJ. ENG: STEVE ROWLEY
LOCATION: FORT DRUM, NY BLDG: **AF OPS BLDG**

EMC NO.: 1406-006
DATE: Dec-94
PREPARED BY: **CSW**
CHECKED BY: BG
FILE: **2065ACC2**

REFRIGERATION EQUIPMENT SURVEY OBSERVATIONS

ACC2	CHILLER/COMPRESSOR NO.	OUTSIDE MECH ROO	LOCATION (RM)

UNIT TYPE:

	CENTRIFUGAL WITH WATER SIDE COOLING TOWER						OTHER
	RECIPROCATING WITH WATER SIDE COOLING TOWER						AHU'S SERVED
	RECIPROCATING WITH AIR COOLED CONDENSING UNIT						AC2
	ABSORBTION WITH WATER SIDE COOLING TOWER						
X	AIR COOLED CONDENSING UNIT						
	CHW	X	DX		OTHER		

NAMEPLATE:

CHILLER		MFG.			MODEL				SERIAL NO.
	VOLTS		AMPS		PH		HZ		CAPACITY (TONS)
TOWER		MFG.			MODEL				# OF FANS
	VOLTS		AMPS		PH		HZ		HP each
CW PUMP		MFG.			MODEL				SERIAL NO.
	VOLTS		AMPS		PH		HZ		HP
CNW PUMP		MFG.			MODEL				SERIAL NO.
	VOLTS		AMPS		PH		HZ	0.75	HP
COMMENTS:									

OPERATION:

HOURS ON:	S	M	T	W	T	F	S	COMMENT
PRESENT START TIME								TIMECLOCK?
PRESENT STOP TIME								
REQUIRED START TIME								
REQUIRED STOP TIME								

MONTHS ON:

J	F	M	A	M	J	J	A	S	O	N	D
0	0	0	0	1	1	1	1	1	0	0	0

CONTROLS:

	X	PNEUMATIC		ELECTRIC		ELEC'NIC		DDC	COMMENTS
SETPOINTS		CWS (oF)		CWR (oF)		CNWS (oF)		CNWR (oF)	
PANEL INDICATORS									
- PRESSURE		LITE-HI		LITE-LOW		GAUGES			
- TEMPERATURE		LITE-HI		LITE-LOW		GAUGES			
- OTHER									
COMMENTS:	**21.6 MBH CAPACITY**								

E M C ENGINEERS, INC.

PROJECT: UMCS STUDY
CLIENT CONTRACT NO.: DACA01-94-D-0033
CLIENT PROJ. ENG: STEVE ROWLEY
LOCATION: FORT DRUM, NY BLDG: **AF OPS BLDG**

EMC NO.: 1406-006
DATE: Dec-94
PREPARED BY: **CSW**
CHECKED BY: BG
FILE: **2065ACC4**

REFRIGERATION EQUIPMENT SURVEY OBSERVATIONS

ACC4	CHILLER/COMPRESSOR NO.	OUTSIDE MECH ROO	LOCATION (RM)

UNIT TYPE:

	CENTRIFUGAL WITH WATER SIDE COOLING TOWER		OTHER
	RECIPROCATING WITH WATER SIDE COOLING TOWER		AHU'S SERVED
	RECIPROCATING WITH AIR COOLED CONDENSING UNIT		AC4
	ABSORBTION WITH WATER SIDE COOLING TOWER		
X	AIR COOLED CONDENSING UNIT		

	CHW	X	DX		OTHER	

NAMEPLATE:

CHILLER		MFG.				MODEL				SERIAL NO.
	VOLTS		AMPS		PH		HZ		CAPACITY (TONS)	
TOWER		MFG.				MODEL				# OF FANS
	VOLTS		AMPS		PH		HZ		HP each	
CW PUMP		MFG.				MODEL				SERIAL NO.
	VOLTS		AMPS		PH		HZ		HP	
CNW PUMP		MFG.				MODEL				SERIAL NO.
	VOLTS		AMPS		PH		HZ	0.75	HP	

COMMENTS:

OPERATION:

HOURS ON:	S	M	T	W	T	F	S	COMMENT
PRESENT START TIME								TIMECLOCK?
PRESENT STOP TIME								
REQUIRED START TIME								
REQUIRED STOP TIME								

MONTHS ON:

J	F	M	A	M	J	J	A	S	O	N	D
0	0	0	0	1	1	1	1	1	0	0	0

CONTROLS:

	X	PNEUMATIC		ELECTRIC		ELEC'NIC		DDC	COMMENTS
SETPOINTS		CWS (oF)		CWR (oF)		CNWS (oF)		CNWR (oF)	
PANEL INDICATORS									
- PRESSURE		LITE-HI		LITE-LOW		GAUGES			
- TEMPERATURE		LITE-HI		LITE-LOW		GAUGES			
- OTHER									

COMMENTS: **21.6 MBH CAPACITY**

E M C ENGINEERS, INC.

PROJECT: UMCS STUDY
CLIENT CONTRACT NO.: DACA01-94-D-0033
CLIENT PROJ. ENG: STEVE ROWLEY
LOCATION: FORT DRUM, NY BLDG: **AF OPS BLDG**

EMC NO.: 1406-006
DATE: Dec-94
PREPARED BY: **CSW**
CHECKED BY: BG
FILE: **2065ACC6**

REFRIGERATION EQUIPMENT SURVEY OBSERVATIONS

ACC6	CHILLER/COMPRESSOR NO.	OUTSIDE MECH ROO	LOCATION (RM)

UNIT TYPE:

	CENTRIFUGAL WITH WATER SIDE COOLING TOWER						OTHER
	RECIPROCATING WITH WATER SIDE COOLING TOWER						AHU'S SERVED
	RECIPROCATING WITH AIR COOLED CONDENSING UNIT						AC6
	ABSORBTION WITH WATER SIDE COOLING TOWER						
X	AIR COOLED CONDENSING UNIT						
	CHW	X	DX		OTHER		

NAMEPLATE:

CHILLER		MFG.				MODEL				SERIAL NO.
	VOLTS		AMPS		PH		HZ		CAPACITY (TONS)	
TOWER		MFG.				MODEL				# OF FANS
	VOLTS		AMPS		PH		HZ		HP each	
CW PUMP		MFG.				MODEL				SERIAL NO.
	VOLTS		AMPS		PH		HZ		HP	
CNW PUMP		MFG.				MODEL				SERIAL NO.
	VOLTS		AMPS		PH		HZ	0.75	HP	
COMMENTS:										

OPERATION:

HOURS ON:	S	M	T	W	T	F	S	COMMENT
PRESENT START TIME								TIMECLOCK?
PRESENT STOP TIME								
REQUIRED START TIME								
REQUIRED STOP TIME								

MONTHS ON:

J	F	M	A	M	J	J	A	S	O	N	D
0	0	0	0	1	1	1	1	1	0	0	0

CONTROLS:

	X	PNEUMATIC		ELECTRIC		ELEC'NIC		DDC	COMMENTS
SETPOINTS		CWS (oF)		CWR (oF)		CNWS (oF)		CNWR (oF)	
PANEL INDICATORS									
- PRESSURE		LITE-HI		LITE-LOW		GAUGES			
- TEMPERATURE		LITE-HI		LITE-LOW		GAUGES			
- OTHER									
COMMENTS:	**35 MBH CAPACITY**								

E M C ENGINEERS, INC.

PROJECT: UMCS STUDY
CLIENT CONTRACT NO.: DACA01-94-D-0033
CLIENT PROJ. ENG: STEVE ROWLEY
LOCATION: FORT DRUM, NY BLDG: **AF OPS BLDG**

EMC NO.: 1406-006
DATE: Dec-94
PREPARED BY: **CSW**
CHECKED BY: BG
FILE: **2065ACC7**

REFRIGERATION EQUIPMENT SURVEY OBSERVATIONS

ACC7	CHILLER/COMPRESSOR NO.	OUTSIDE MECH ROO	LOCATION (RM)

UNIT TYPE:

	CENTRIFUGAL WITH WATER SIDE COOLING TOWER						OTHER
	RECIPROCATING WITH WATER SIDE COOLING TOWER						AHU'S SERVED
	RECIPROCATING WITH AIR COOLED CONDENSING UNIT						AC7
	ABSORBTION WITH WATER SIDE COOLING TOWER						
X	AIR COOLED CONDENSING UNIT						
	CHW	X	DX		OTHER		

NAMEPLATE:

CHILLER		MFG.			MODEL				SERIAL NO.
	VOLTS		AMPS		PH		HZ	CAPACITY (TONS)	
TOWER		MFG.			MODEL				# OF FANS
	VOLTS		AMPS		PH		HZ	HP each	
CW PUMP		MFG.			MODEL				SERIAL NO.
	VOLTS		AMPS		PH		HZ	HP	
CNW PUMP		MFG.			MODEL				SERIAL NO.
	VOLTS		AMPS		PH		HZ 0.75	HP	
COMMENTS:									

OPERATION:

HOURS ON:	S	M	T	W	T	F	S	COMMENT
PRESENT START TIME								TIMECLOCK?
PRESENT STOP TIME								
REQUIRED START TIME								
REQUIRED STOP TIME								

MONTHS ON:

J	F	M	A	M	J	J	A	S	O	N	D
0	0	0	0	1	1	1	1	1	0	0	0

CONTROLS:

	X	PNEUMATIC		ELECTRIC		ELEC'NIC		DDC	COMMENTS
SETPOINTS		CWS (oF)		CWR (oF)		CNWS (oF)		CNWR (oF)	
PANEL INDICATORS									
- PRESSURE		LITE-HI		LITE-LOW		GAUGES			
- TEMPERATURE		LITE-HI		LITE-LOW		GAUGES			
- OTHER									
COMMENTS:	**35 MBH CAPACITY**								

E M C ENGINEERS, INC.

PROJECT: UMCS STUDY
CLIENT CONTRACT NO.: DACA01-94-D-0033
CLIENT PROJ. ENG: STEVE ROWLEY
LOCATION: FORT DRUM, NY BLDG: **AF OPS BLDG**

EMC NO.: 1406-006
DATE: Dec-94
PREPARED BY: **CSW**
CHECKED BY: BG
FILE: **2065ACC4A**

REFRIGERATION EQUIPMENT SURVEY OBSERVATIONS

ACC4A	CHILLER/COMPRESSOR NO.	OUTSIDE MECH ROO	LOCATION (RM)

UNIT TYPE:

	CENTRIFUGAL WITH WATER SIDE COOLING TOWER						OTHER
	RECIPROCATING WITH WATER SIDE COOLING TOWER						AHU'S SERVED
	RECIPROCATING WITH AIR COOLED CONDENSING UNIT						AC4A
	ABSORBTION WITH WATER SIDE COOLING TOWER						
X	AIR COOLED CONDENSING UNIT						
	CHW	X	DX		OTHER		

NAMEPLATE:

CHILLER		MFG.			MODEL				SERIAL NO.
	VOLTS		AMPS		PH		HZ		CAPACITY (TONS)
TOWER		MFG.			MODEL				# OF FANS
	VOLTS		AMPS		PH		HZ	HP each	
CW PUMP		MFG.			MODEL				SERIAL NO.
	VOLTS		AMPS		PH		HZ	HP	
CNW PUMP		MFG.			MODEL				SERIAL NO.
	VOLTS		AMPS		PH		HZ	0.75 HP	
COMMENTS:									

OPERATION:

HOURS ON:	S	M	T	W	T	F	S	COMMENT
PRESENT START TIME								TIMECLOCK?
PRESENT STOP TIME								
REQUIRED START TIME								
REQUIRED STOP TIME								

MONTHS ON:

J	F	M	A	M	J	J	A	S	O	N	D
0	0	0	0	1	1	1	1	1	0	0	0

CONTROLS:

	X	PNEUMATIC		ELECTRIC		ELEC'NIC		DDC	COMMENTS
SETPOINTS		CWS (oF)		CWR (oF)		CNWS (oF)		CNWR (oF)	
PANEL INDICATORS									
- PRESSURE		LITE-HI		LITE-LOW		GAUGES			
- TEMPERATURE		LITE-HI		LITE-LOW		GAUGES			
- OTHER									
COMMENTS:	**21.6 MBH CAPACITY**								

E M C ENGINEERS, INC.

PROJECT: UMCS STUDY
CLIENT CONTRACT NO.: DACA01-94-D-0033
CLIENT PROJ. ENG: STEVE ROWLEY
LOCATION: FORT DRUM, NY BLDG: **AF OPS BLDG**

EMC NO.: 1406-006
DATE: 14-NOV-94
PREPARED BY: **BG**
CHECKED BY:
FILE: **2065B1&2**

BOILER & CONVERTER SURVEY OBSERVATIONS

B1&B2	BOILER/CONVERTER NO.	**RM 123**	LOCATION (RM)
	SOURCE OF HEATING (PLANT)	**WHOLE BLDG**	SERVES AREA

UNIT TYPE:

	STEAM		PSIG	X	HW		TEMP.		BOILER TYPE:
X	NO.2 OIL		NO.6 OIL		N.GAS		ELEC		FUELS:
	STM/HW		HTHW/HW		HTHW/STM		OTHER		CONVERTER TYPE:
	SPACE HEAT		DHW		OTHER				USE:
COMMENT:									% HTG AREA SERVED
									BB RADIATION ONLY

NAMEPLATE:

CLEAVER BROOKS	MFG.	**M4W-1500**	MODEL	**1200000**	CAPACITY OUTPUT (BTUH)
					CAPACITY INPUT (BTUH)
CLEAVER BROKS	MFG.	**M4W-1500**	MODEL	**1200000**	CAPACITY OUTPUT (BTUH)
					CAPACITY INPUT (BTUH)

3	HW PUMP 1 - HP	**TACO**	MFG.	**BB2008 7.9 B5B2060**	MODEL
3	HW PUMP 2 - HP	**TACO**	MFG.	**BB2008 7.9 B5B2060**	MODEL
	HW PUMP 3 - HP		MFG.		MODEL
COMMENT:					

OPERATION:

HOURS ON:	S	M	T	W	T	F	S	COMMENT
PRESENT START TIME	**0**	**0**	**0**	**0**	**0**	**0**	**0**	TIMECLOCK?
PRESENT STOP TIME	**2400**	**2400**	**2400**	**2400**	**2400**	**2400**	**2400**	
REQUIRED START TIME	**0**	**0**	**0**	**0**	**0**	**0**	**0**	
REQUIRED STOP TIME	**2400**	**2400**	**2400**	**2400**	**2400**	**2400**	**2400**	

MONTHS ON:

J	F	M	A	M	J	J	A	S	O	N	D
1	**1**	**1**	**1**	**0**	**0**	**0**	**0**	**0**	**1**	**1**	**1**

CONTROLS:

	X	PNEUMATIC		ELECTRIC		ELEC'NIC		DDC	COMMENTS
SETPOINTS		PSIG		HW SUPPLY					
RESET CONTROL (oF):		HW HIGH		HW LOW		OA LOW		OA HIGH	
BURNER CONTROLS		O2 TRIM (Y/N)		OTHER					
COMMENTS:									

PROJECT: UMCS STUDY
CLIENT CONTRACT NO.: DACA01-94-D-0033
CLIENT PROJ. ENG: STEVE ROWLEY
LOCATION: FORT DRUM, NY BLDG: **AF OPS BLDG**

EMC NO.: 1406-006
DATE: 14-NOV-94
PREPARED BY: **CSW**
CHECKED BY: BG
FILE: **2065DHW**

DOMESTIC HW SURVEY OBSERVATIONS

DHW	BOILER/CONVERTER NO.	MECH ROOM	LOCATION (RM)
NONE	SOURCE OF HEATING (PLANT)	WHOLE BLDG	SERVES AREA

UNIT TYPE:

X	NO.2 OIL		NO.6 OIL		N.GAS		ELEC		FUELS:
	STM/HW		HTHW/HW		HTHW/STM		OTHER		CONVERTER TYPE:
COMMENT:									

NAMEPLATE:

AO SMITH	MFG.	**COF-200-800**	MODEL	**800000**	CAPACITY OUTPUT (BTUH,KW)
	MFG.		MODEL		CAPACITY OUTPUT (BTUH,KW)

DOMESTIC HW CIRCULATION PUMP:					
0.0833	HW PUMP 1 - HP	**B&G**	MFG.		MODEL
	HW PUMP 2 - HP		MFG.		MODEL
	HW PUMP 3 - HP		MFG.		MODEL
COMMENT:					

DIMENSION:	DIAMETER (INCHS)		HEIGHT OR LENGTH (INCHES)	GALLON

OPERATION:

HOURS ON:	S	M	T	W	T	F	S	COMMENT
PRESENT START TIME	**0**	**0**	**0**	**0**	**0**	**0**	**0**	TIMECLOCK?
PRESENT STOP TIME	**2400**	**2400**	**2400**	**2400**	**2400**	**2400**	**2400**	
REQUIRED START TIME	**0**	**0**	**0**	**0**	**0**	**0**	**0**	
REQUIRED STOP TIME	**2400**	**2400**	**2400**	**2400**	**2400**	**2400**	**2400**	

MONTHS ON:

J	F	M	A	M	J	J	A	S	O	N	D
1	**1**	**1**	**1**	**1**	**1**	**1**	**1**	**1**	**1**	**1**	**1**

CONTROLS:

	1	PNEUMATIC		ELECTRIC		ELEC'NIC		DDC	COMMENTS
SETPOINTS				HW SUPPLY					
COMMENTS:									

E M C ENGINEERS, INC.

PROJECT: UMCS STUDY
CLIENT CONTRACT NO.: DACA01-94-D-0033
CLIENT PROJ. ENG: STEVE ROWLEY
LOCATION: FORT DRUM, NY BLDG: **AF OPS BLDG**

EMC NO.: 1406-006
DATE: Dec-94
PREPARED BY: **CSW**
CHECKED BY: BG
FILE: **2065HV1**

AIR HANDLING UNIT SURVEY OBSERVATIONS

HV1	AHU NO.	**CO #138**	LOCATION (RM)
NONE	REF. SYS. SERVING AHU	**RMS 126-137**	SERVES AREA

UNIT TYPE:

X	SINGLE ZN		2-PIPE FC		4-PIPE FC		UNIT HTR	X	H&V
	MULTIZONE		DOUBLE DT		REHEAT		INDUCTION		VAV
	NUMBER OF ZONES				OTHER				
	COMMENT:								

NAMEPLATE:

					MFG.				MODEL
2.0	SUPPLY FAN HP				MFG.				MODEL
	RET/EXH FAN HP				MFG.				MODEL
2215	CFM-HTG		CFM-CLG	**13%**	MIN %OA	**100%**	MAX %OA	**12.5%**	% HTG AREA SERVED
COMMENT:		**24.4 MBH HEATING COIL LOAD**							
		3775 CFM SUMMER VENTILATION							

COILS:

X	NONE		STM		HW		ELEC	MOD VLV	PREHEAT
	NONE		STM	X	HW		ELEC	MOD VLV	HEATING
X	NONE		STM		HW		ELEC	MOD VLV	REHEAT
X	NONE		STM		HW		EVAP MEDIA	MOD VLV	HUMID.
X	NONE		DX		CW			MOD VLV	COOLING

OPERATION:

HOURS ON:	S	M	T	W	T	F	S	COMMENTS
PRESENT START TIME	**0**	**0**	**0**	**0**	**0**	**0**	**0**	TIMECLOCK?
PRESENT STOP TIME	**2400**	**2400**	**2400**	**2400**	**2400**	**2400**	**2400**	
REQUIRED START TIME	**0**	**0**	**0**	**0**	**0**	**0**	**0**	
REQUIRED STOP TIME	**2400**	**2400**	**2400**	**2400**	**2400**	**2400**	**2400**	

MONTHS ON:

J	F	M	A	M	J	J	A	S	O	N	D
1	**1**	**1**	**1**	**0**	**0**	**0**	**0**	**0**	**1**	**1**	**1**

CONTROLS:

	X	PNEUMATIC		ELECTRIC		ELEC'NIC		DDC	COMMENTS
THERMOSTAT TYPE:		SINGLE STPT		DUAL SETPNT		SETBACK			
SPACE SETPOINT (°F):	**72**	OCC HEAT	**N/A**	UNOCC HEAT		OCC COOL		UNOCC COOL	
OTHER SETPOINTS (°F):		HOT DECK		COLD DECK		MIXED AIR		OTHER	
DAMPER CONTROL:	**Y**	MIN OA (Y/N)	**Y**	MAX OA (Y/N)	**Y**	RA (Y/N)	**Y**	EA (Y/N)	
		MA CONTROL		ECONO-DB		ECONO-ENT		OTHER	
DEMAND LIMIT:	**N**	(Y = YES ; N = NO)							
COMMENTS:									

E M C ENGINEERS, INC.

PROJECT: UMCS STUDY
CLIENT CONTRACT NO.: DACA01-94-D-0033
CLIENT PROJ. ENG: STEVE ROWLEY
LOCATION: FORT DRUM, NY BLDG: **AF OPS BLDG**

EMC NO.: 1406-006
DATE: Dec-94
PREPARED BY: **CSW**
CHECKED BY: BG
FILE: **2065HV2**

AIR HANDLING UNIT SURVEY OBSERVATIONS

HV2	AHU NO.	**WEATHER STOR. #12**	LOCATION (RM)
NONE	REF. SYS. SERVING AHU	**RM111-115,125,138-147,174-179**	SERVES AREA

UNIT TYPE:

X	SINGLE ZN		2-PIPE FC		4-PIPE FC		UNIT HTR	X	H&V
	MULTIZONE		DOUBLE DT		REHEAT		INDUCTION		VAV
	NUMBER OF ZONES				OTHER				
	COMMENT:								

NAMEPLATE:

					MFG.				MODEL
7.5	SUPPLY FAN HP				MFG.				MODEL
	RET/EXH FAN HP				MFG.				MODEL
6545	CFM-HTG		CFM-CLG	66%	MIN %OA		MAX %OA		% HTG AREA SERVED
COMMENT:		**377 MBH HEATING COIL LOAD (HEAT FROM HX1)**							
		11405 CFM SUMMER VENTILATION							

COILS:

X	NONE		STM		HW		ELEC	MOD VLV	PREHEAT
	NONE		STM	X	HW		ELEC	MOD VLV	HEATING
X	NONE		STM		HW		ELEC	MOD VLV	REHEAT
X	NONE		STM		HW		EVAP MEDIA	MOD VLV	HUMID.
X	NONE		DX		CW			MOD VLV	COOLING

OPERATION:

HOURS ON:	S	M	T	W	T	F	S	COMMENTS
PRESENT START TIME	**0**	**0**	**0**	**0**	**0**	**0**	**0**	TIMECLOCK?
PRESENT STOP TIME	**2400**	**2400**	**2400**	**2400**	**2400**	**2400**	**2400**	
REQUIRED START TIME	**0**	**0**	**0**	**0**	**0**	**0**	**0**	
REQUIRED STOP TIME	**2400**	**2400**	**2400**	**2400**	**2400**	**2400**	**2400**	

MONTHS ON:

J	F	M	A	M	J	J	A	S	O	N	D
1	**1**	**1**	**1**	**0**	**0**	**0**	**0**	**0**	**1**	**1**	**1**

CONTROLS:

	X	PNEUMATIC		ELECTRIC		ELEC'NIC		DDC	COMMENTS
THERMOSTAT TYPE:	X	SINGLE STPT		DUAL SETPNT		SETBACK			
SPACE SETPOINT (°F):	**72**	OCC HEAT	**N/A**	UNOCC HEAT		OCC COOL		UNOCC COOL	
OTHER SETPOINTS (°F):		HOT DECK		COLD DECK		MIXED AIR		OTHER	
DAMPER CONTROL:	Y	MIN OA (Y/N)	Y	MAX OA (Y/N)	Y	RA (Y/N)	Y	EA (Y/N)	
		MA CONTROL		ECONO-DB		ECONO-ENT		OTHER	
DEMAND LIMIT:	N	(Y = YES ; N = NO)							
COMMENTS:									

E M C ENGINEERS, INC.

PROJECT: UMCS STUDY
CLIENT CONTRACT NO.: DACA01-94-D-0033
CLIENT PROJ. ENG: STEVE ROWLEY
LOCATION: FORT DRUM, NY BLDG: **AF OPS BLDG**

EMC NO.: 1406-006
DATE: Dec-94
PREPARED BY: **CSW**
CHECKED BY: BG
FILE: **2065HV3**

AIR HANDLING UNIT SURVEY OBSERVATIONS

HV3	AHU NO.	**MENS + WOMENS LATR. 172-1**	LOCATION (RM)
	REF. SYS. SERVING AHU	**ADMIN (RMS 149-168)**	SERVES AREA

UNIT TYPE:

X	SINGLE ZN		2-PIPE FC		4-PIPE FC		UNIT HTR	X	H&V
	MULTIZONE		DOUBLE DT		REHEAT		INDUCTION		VAV
	NUMBER OF ZONES				OTHER				
	COMMENT:								

NAMEPLATE:

					MFG.				MODEL
5.0	SUPPLY FAN HP				MFG.				MODEL
0.0	RET/EXH FAN HP				MFG.				MODEL
6545	CFM-HTG		CFM-CLG	**13%**	MIN %OA	**100%**	MAX %OA	**20.0%**	% HTG AREA SERVED
COMMENT:		**56.9 MBH HEATING COIL LOAD**							
		9020 CFM SUMMER VENTILATION							

COILS:

X	NONE		STM		HW		ELEC		MOD VLV	PREHEAT
	NONE		STM	X	HW		ELEC		MOD VLV	HEATING
X	NONE		STM		HW		ELEC		MOD VLV	REHEAT
X	NONE		STM		HW		EVAP MEDIA		MOD VLV	HUMID.
X	NONE		DX		CW				MOD VLV	COOLING

OPERATION:

HOURS ON:	S	M	T	W	T	F	S	COMMENTS
PRESENT START TIME	**0**	**0**	**0**	**0**	**0**	**0**	**0**	TIMECLOCK?
PRESENT STOP TIME	**2400**	**2400**	**2400**	**2400**	**2400**	**2400**	**2400**	
REQUIRED START TIME	**0**	**0**	**0**	**0**	**0**	**0**	**0**	
REQUIRED STOP TIME	**2400**	**2400**	**2400**	**2400**	**2400**	**2400**	**2400**	

MONTHS ON:

J	F	M	A	M	J	J	A	S	O	N	D
1	**1**	**1**	**1**	**0**	**0**	**0**	**0**	**0**	**1**	**1**	**1**

CONTROLS:

	X	PNEUMATIC		ELECTRIC		ELEC'NIC		DDC	COMMENTS
THERMOSTAT TYPE:		SINGLE STPT		DUAL SETPNT		SETBACK			
SPACE SETPOINT (°F):	**72**	OCC HEAT		UNOCC HEAT		OCC COOL		UNOCC COOL	
OTHER SETPOINTS (°F):		HOT DECK		COLD DECK		MIXED AIR		OTHER	
DAMPER CONTROL:	**Y**	MIN OA (Y/N)	**Y**	MAX OA (Y/N)	**Y**	RA (Y/N)	**Y**	EA (Y/N)	
		MA CONTROL		ECONO-DB		ECONO-ENT		OTHER	
DEMAND LIMIT:	**N**	(Y = YES ; N = NO)							
COMMENTS:									

E M C ENGINEERS, INC.

PROJECT: UMCS STUDY
CLIENT CONTRACT NO.: DACA01-94-D-0033
CLIENT PROJ. ENG: STEVE ROWLEY
LOCATION: FORT DRUM, NY BLDG: **AF OPS BLDG**

EMC NO.: 1406-006
DATE: Dec-94
PREPARED BY: **CSW**
CHECKED BY: BG
FILE: **2065HV4**

AIR HANDLING UNIT SURVEY OBSERVATIONS

HV4	AHU NO.	**APPARATUS BAY**	LOCATION (RM)
NONE	REF. SYS. SERVING AHU	**RMS 103-109**	SERVES AREA

UNIT TYPE:

X	SINGLE ZN		2-PIPE FC		4-PIPE FC		UNIT HTR	X	H&V
	MULTIZONE		DOUBLE DT		REHEAT		INDUCTION		VAV
	NUMBER OF ZONES				OTHER				
	COMMENT:								

NAMEPLATE:

					MFG.				MODEL
5.0	SUPPLY FAN HP				MFG.				MODEL
0.0	RET/EXH FAN HP				MFG.				MODEL
3000	CFM-HTG		CFM-CLG	**32%**	MIN %OA	**100%**	MAX %OA	**10.0%**	% HTG AREA SERVED
COMMENT:	**81.3 MBH HEATING COIL**								
	5290 CFM HEATING								

COILS:

X	NONE		STM		HW		ELEC		MOD VLV	PREHEAT
	NONE		STM	X	HW		ELEC		MOD VLV	HEATING
X	NONE		STM		HW		ELEC		MOD VLV	REHEAT
X	NONE		STM		HW		EVAP MEDIA		MOD VLV	HUMID.
X	NONE		DX		CW				MOD VLV	COOLING

OPERATION:

HOURS ON:	S	M	T	W	T	F	S	COMMENTS
PRESENT START TIME	**0**	**0**	**0**	**0**	**0**	**0**	**0**	TIMECLOCK?
PRESENT STOP TIME	**2400**	**2400**	**2400**	**2400**	**2400**	**2400**	**2400**	
REQUIRED START TIME	**0**	**0**	**0**	**0**	**0**	**0**	**0**	
REQUIRED STOP TIME	**2400**	**2400**	**2400**	**2400**	**2400**	**2400**	**2400**	

MONTHS ON:

J	F	M	A	M	J	J	A	S	O	N	D
1	**1**	**1**	**1**	**0**	**0**	**0**	**0**	**0**	**1**	**1**	**1**

CONTROLS:

	X	PNEUMATIC		ELECTRIC		ELEC'NIC		DDC	COMMENTS
THERMOSTAT TYPE:		SINGLE STPT	X	DUAL SETPNT		SETBACK			
SPACE SETPOINT (°F):	**72**	OCC HEAT	**N/A**	UNOCC HEAT		OCC COOL		UNOCC COOL	
OTHER SETPOINTS (°F):		HOT DECK		COLD DECK		MIXED AIR		OTHER	
DAMPER CONTROL:	Y	MIN OA (Y/N)	Y	MAX OA (Y/N)	Y	RA (Y/N)	Y	EA (Y/N)	
		MA CONTROL		ECONO-DB		ECONO-ENT		OTHER	
DEMAND LIMIT:	N	(Y = YES ; N = NO)							
COMMENTS:									

E M C ENGINEERS, INC.

PROJECT: UMCS STUDY
CLIENT CONTRACT NO.: DACA01-94-D-0033
CLIENT PROJ. ENG: STEVE ROWLEY
LOCATION: FORT DRUM, NY BLDG: **AF OPS BLDG**

EMC NO.: 1406-006
DATE: 14-NOV-94
PREPARED BY: **CSW**
CHECKED BY: BG
FILE: **2065HX1**

BOILER & CONVERTER SURVEY OBSERVATIONS

HX1	BOILER/CONVERTER NO.	**MECH ROOM**	LOCATION (RM)
B1&2	SOURCE OF HEATING (PLANT)	**WHOLE BLDG**	SERVES AREA

UNIT TYPE:

	STEAM		PSIG		HW		TEMP.		BOILER TYPE:
	NO.2 OIL		NO.6 OIL		N.GAS		ELEC		FUELS:
	STM/HW		HTHW/HW		HTHW/STM	X	OTHER		CONVERTER TYPE:
	SPACE HEAT		DHW		OTHER				USE:
COMMENT:	HW-40% GLYCOL SOLN								% HTG AREA SERVED
									BB RADIATION ONLY

NAMEPLATE:

	MFG.		MODEL	1098400	CAPACITY OUTPUT (BTUH)
					CAPACITY INPUT (BTUH)
	MFG.		MODEL		CAPACITY OUTPUT (BTUH)
					CAPACITY INPUT (BTUH)
5	HW PUMP 1 - HP	BALDOR	MFG.	M32187	MODEL
	HW PUMP 2 - HP		MFG.		MODEL
	HW PUMP 3 - HP		MFG.		MODEL
COMMENT:					

OPERATION:

HOURS ON:	S	M	T	W	T	F	S	COMMENT
PRESENT START TIME	0	0	0	0	0	0	0	TIMECLOCK?
PRESENT STOP TIME	2400	2400	2400	2400	2400	2400	2400	
REQUIRED START TIME	0	0	0	0	0	0	0	
REQUIRED STOP TIME	2400	2400	2400	2400	2400	2400	2400	

MONTHS ON:

J	F	M	A	M	J	J	A	S	O	N	D
1	1	1	1	0	0	0	0	0	1	1	1

CONTROLS:

	X	PNEUMATIC		ELECTRIC		ELEC'NIC		DDC	COMMENTS
SETPOINTS		PSIG		HW SUPPLY					
RESET CONTROL (oF):		HW HIGH		HW LOW		OA LOW		OA HIGH	
BURNER CONTROLS		O2 TRIM (Y/N)		OTHER					
COMMENTS:									

E M C ENGINEERS, INC.

PROJECT: UMCS STUDY
CLIENT CONTRACT NO.: DACA01-94-D-0033
CLIENT PROJ. ENG: STEVE ROWLEY
LOCATION: FORT DRUM, NY BLDG: **AF OPS BLDG**

EMC NO.: 1406-006
DATE: 14-NOV-94
PREPARED BY: **CSW**
CHECKED BY: BG
FILE: **2065HX1**

BOILER & CONVERTER SURVEY OBSERVATIONS

HX1	BOILER/CONVERTER NO.	**MECH ROOM**	LOCATION (RM)
B1&2	SOURCE OF HEATING (PLANT)	**WHOLE BLDG**	SERVES AREA

UNIT TYPE:

	STEAM		PSIG		HW		TEMP.		BOILER TYPE:
	NO.2 OIL		NO.6 OIL		N.GAS		ELEC		FUELS:
	STM/HW		HTHW/HW		HTHW/STM	X	OTHER		CONVERTER TYPE:
	SPACE HEAT		DHW		OTHER				USE:
COMMENT:	HW-40% GLYCOL SOLN								% HTG AREA SERVED
									BB RADIATION ONLY

NAMEPLATE:

	MFG.		MODEL	**1098400**	CAPACITY OUTPUT (BTUH)
					CAPACITY INPUT (BTUH)
	MFG.		MODEL		CAPACITY OUTPUT (BTUH)
					CAPACITY INPUT (BTUH)
5	HW PUMP 1 - HP	**BALDOR**	MFG.	**M32187**	MODEL
	HW PUMP 2 - HP		MFG.		MODEL
	HW PUMP 3 - HP		MFG.		MODEL
COMMENT:					

OPERATION:

HOURS ON:	S	M	T	W	T	F	S	COMMENT
PRESENT START TIME	**0**	**0**	**0**	**0**	**0**	**0**	**0**	TIMECLOCK?
PRESENT STOP TIME	**2400**	**2400**	**2400**	**2400**	**2400**	**2400**	**2400**	
REQUIRED START TIME	**0**	**0**	**0**	**0**	**0**	**0**	**0**	
REQUIRED STOP TIME	**2400**	**2400**	**2400**	**2400**	**2400**	**2400**	**2400**	

MONTHS ON:

J	F	M	A	M	J	J	A	S	O	N	D
1	**1**	**1**	**1**	**0**	**0**	**0**	**0**	**0**	**1**	**1**	**1**

CONTROLS:

	X	PNEUMATIC		ELECTRIC		ELEC'NIC		DDC	COMMENTS
SETPOINTS		PSIG		HW SUPPLY					
RESET CONTROL (oF):		HW HIGH		HW LOW		OA LOW		OA HIGH	
BURNER CONTROLS		O2 TRIM (Y/N)		OTHER					
COMMENTS:									

E M C ENGINEERS, INC.

PROJECT: UMCS STUDY
CLIENT CONTRACT NO.: DACA01-94-D-0033
CLIENT PROJ. ENG: STEVE ROWLEY
LOCATION: FORT DRUM, NY BLDG: **AF OPS BLDG**

EMC NO.: 1406-006
DATE: Dec-94
PREPARED BY: **CSW**
CHECKED BY: BG
FILE: **2065MU1**

AIR HANDLING UNIT SURVEY OBSERVATIONS

MU1	AHU NO.	**SWITCH NODE**	LOCATION (RM)
NONE	REF. SYS. SERVING AHU	**MECH ROOM**	SERVES AREA

UNIT TYPE:

X	SINGLE ZN		2-PIPE FC		4-PIPE FC		UNIT HTR		H&V
	MULTIZONE		DOUBLE DT		REHEAT		INDUCTION		VAV
	NUMBER OF ZONES				OTHER				
	COMMENT:		**MAKE-UP AIR UNIT**						

NAMEPLATE:

				MFG.				MODEL
0.5	SUPPLY FAN HP			MFG.				MODEL
0.0	RET/EXH FAN HP			MFG.				MODEL
900	CFM-HTG		CFM-CLG	**43%**	MIN %OA	**100%**	MAX %OA	**5.0%**	% HTG AREA SERVED
COMMENT:		**65.4 MBH HEATING COIL LOAD**							

COILS:

X	NONE		STM		HW		ELEC		MOD VLV	PREHEAT
	NONE		STM	X	HW		ELEC		MOD VLV	HEATING
X	NONE		STM		HW		ELEC		MOD VLV	REHEAT
X	NONE		STM		HW		EVAP MEDIA		MOD VLV	HUMID.
X	NONE		DX		CW				MOD VLV	COOLING

OPERATION:

HOURS ON:	S	M	T	W	T	F	S	COMMENTS
PRESENT START TIME	**0**	**0**	**0**	**0**	**0**	**0**	**0**	TIMECLOCK?
PRESENT STOP TIME	**2400**	**2400**	**2400**	**2400**	**2400**	**2400**	**2400**	
REQUIRED START TIME	**0**	**0**	**0**	**0**	**0**	**0**	**0**	
REQUIRED STOP TIME	**2400**	**2400**	**2400**	**2400**	**2400**	**2400**	**2400**	

MONTHS ON:

J	F	M	A	M	J	J	A	S	O	N	D
1	**1**	**1**	**1**	**1**	**1**	**1**	**1**	**1**	**1**	**1**	**1**

CONTROLS:

	X	PNEUMATIC		ELECTRIC		ELEC'NIC		DDC	COMMENTS
THERMOSTAT TYPE:	X	SINGLE STPT		DUAL SETPNT		SETBACK			
SPACE SETPOINT (°F):	**60**	OCC HEAT	**60**	UNOCC HEAT		OCC COOL		UNOCC COOL	
OTHER SETPOINTS (°F):		HOT DECK		COLD DECK		MIXED AIR		OTHER	
DAMPER CONTROL:	Y	MIN OA (Y/N)	Y	MAX OA (Y/N)	Y	RA (Y/N)	Y	EA (Y/N)	
		MA CONTROL		ECONO-DB		ECONO-ENT		OTHER	
DEMAND LIMIT:	N	(Y = YES ; N = NO)							

COMMENTS:

E M C ENGINEERS, INC.

PROJECT: UMCS STUDY
CLIENT CONTRACT NO.: DACA01-94-D-0033
CLIENT PROJ. ENG: STEVE ROWLEY
LOCATION: FORT DRUM, NY BLDG: **AF OPS BLDG**

EMC NO.: 1406-006
DATE: Dec-94
PREPARED BY: **CSW**
CHECKED BY: BG
FILE: **2065MU2**

AIR HANDLING UNIT SURVEY OBSERVATIONS

MU2	AHU NO.	**APPARATUS BYA**	LOCATION (RM)
	REF. SYS. SERVING AHU	**RM116 (GARAGE)**	SERVES AREA

UNIT TYPE:

X	SINGLE ZN		2-PIPE FC		4-PIPE FC		UNIT HTR		H&V
	MULTIZONE		DOUBLE DT		REHEAT		INDUCTION		VAV
	NUMBER OF ZONES				OTHER				
	COMMENT:		**MAKE-UP AIR HANDLING UNIT**						

NAMEPLATE:

					MFG.				MODEL
1.5	SUPPLY FAN HP				MFG.				MODEL
0.0	RET/EXH FAN HP				MFG.				MODEL
3840	CFM-HTG		CFM-CLG	**100%**	MIN %OA	**100%**	MAX %OA	**5.0%**	% HTG AREA SERVED
COMMENT:		**279 MBH HEATING COIL LOAD**							

COILS:

X	NONE		STM		HW		ELEC		MOD VLV	PREHEAT
	NONE		STM	X	HW		ELEC		MOD VLV	HEATING
X	NONE		STM		HW		ELEC		MOD VLV	REHEAT
X	NONE		STM		HW		EVAP MEDIA		MOD VLV	HUMID.
X	NONE		DX		CW				MOD VLV	COOLING

OPERATION:

HOURS ON:	S	M	T	W	T	F	S	COMMENTS
PRESENT START TIME	**0**	**0**	**0**	**0**	**0**	**0**	**0**	TIMECLOCK?
PRESENT STOP TIME	**2400**	**2400**	**2400**	**2400**	**2400**	**2400**	**2400**	
REQUIRED START TIME	**0**	**0**	**0**	**0**	**0**	**0**	**0**	
REQUIRED STOP TIME	**2400**	**2400**	**2400**	**2400**	**2400**	**2400**	**2400**	

MONTHS ON:

J	F	M	A	M	J	J	A	S	O	N	D
1	**1**	**1**	**1**	**1**	**1**	**1**	**1**	**1**	**1**	**1**	**1**

CONTROLS:

	X	PNEUMATIC		ELECTRIC		ELEC'NIC		DDC	COMMENTS
THERMOSTAT TYPE:	X	SINGLE STPT		DUAL SETPNT		SETBACK			
SPACE SETPOINT (°F):	**60**	OCC HEAT	**60**	UNOCC HEAT		OCC COOL		UNOCC COOL	
OTHER SETPOINTS (°F):		HOT DECK		COLD DECK		MIXED AIR		OTHER	
DAMPER CONTROL:	**N**	MIN OA (Y/N)	**Y**	MAX OA (Y/N)	**N**	RA (Y/N)	**Y**	EA (Y/N)	
		MA CONTROL		ECONO-DB		ECONO-ENT		OTHER	
DEMAND LIMIT:	**N**	(Y = YES ; N = NO)							
COMMENTS:									

E M C ENGINEERS, INC.

PROJECT: UMCS STUDY
CLIENT CONTRACT NO.: DACA01-94-D-0033
CLIENT PROJ. ENG: STEVE ROWLEY
LOCATION: FORT DRUM, NY BLDG: **AF OPS BLDG**

EMC NO.: 1406-006
DATE: Dec-94
PREPARED BY: **CSW**
CHECKED BY: BG
FILE: **2065RAD**

PERIMETER RADIATION SURVEY OBSERVATIONS

RAD	PER RAD NO.	**MECH ROOM**	LOCATION (RM)
	SOURCE OF HEATING	FINISHED AREAS	SERVES AREA

UNIT TYPE:

	STEAM	X	HW		ELECTRIC				
	OTHER								
	COMMENT:	623 BTUH/FT							

NAMEPLATE:

	HW PUMP 1 - HP		MFG.		MODEL
	HW PUMP 2 - HP		MFG.		MODEL
	HW PUMP 3 - HP		MFG.		MODEL
	HW PUMP 4 - HP		MFG.		MODEL
COMMENT:	7 GPM 200F EWT 180F LWT				% AREA HEATING

OPERATION:

HOURS ON:	S	M	T	W	T	F	S	COMMENT
PRESENT START TIME								TIMECLOCK?
PRESENT STOP TIME								
REQUIRED START TIME								
REQUIRED STOP TIME								

MONTHS ON:

J	F	M	A	M	J	J	A	S	O	N	D

CONTROLS:

	X	PNEUMATIC		ELECTRIC		ELEC'NIC		DDC	COMMENTS
RADIATION CONTROL:		NONE		2-WAY VLV		3-WAY VLV		OTHER	
SPACE SETPOINT (øF):		OCC HEAT		UNOCC HEAT		OCC COOL		UNOCC COOL	
RESET CONTROL (øF):		HW HIGH		HW LOW		OA LOW		OA HIGH	
COMMENTS:									

FIELD SURVEY NOTES

BUILDING 2070

E M C ENGINEERS, INC.

PROJECT: UMCS STUDY
CLIENT CONTRACT NO.: DACA01-94-D-0033
CLIENT PROJ. ENG: STEVE ROWLEY
LOCATION: FORT DRUM, NY BLDG: MNT HANGER AVUM

EMC NO.: 1406-006
DATE: 14-NOV-94
PREPARED BY: CSW
CHECKED BY: BG
FILE: 2070BDS

VI. BUILDING DATA SURVEY OBSERVATIONS

BLDG NO: 2070 BLDG NAME: MNT HANGAR AVUM, AVIM HANGAR (PN68)

ZONE NO.	1 - 3	FUNCTION: HANGAR							
OCCUPANCY HOURS:	M-F	700	TO	1800	SAT	0	TO	0	
	SUN	0	TO	0					
PRESENT TEMP	WINTER OCC	70.0 øF		UNOCC	65.0 øF				
	SUMMER OCC	øF		UNOCC	øF				

ZONE NO.	4 - 5	FUNCTION: OPERATIONS							
OCCUPANCY HOURS:	M-F	700	TO	1800	SAT	0	TO	0	
	SUN	0	TO	0					
PRESENT TEMP	WINTER OCC	72.0 øF		UNOCC	65.0 øF				
	SUMMER OCC	øF		UNOCC	øF				

ZONE NO.		FUNCTION:							
OCCUPANCY HOURS:	M-F		TO		SAT		TO		
	SUN		TO						
PRESENT TEMP	WINTER OCC	øF		UNOCC	øF				
	SUMMER OCC	øF		UNOCC	øF				

REMARKS:

REVOLVING UNIT HEATER SCHEDULE

NO.	HP	BTU/HR
RUH1	1/4	31542
RUH2	1/4	68150
RUH3	1/4	62551
RUH4	1/6	55965
RUH5	1/6	55965
RUH6	1/6	55965
RUH7	1/4	64450
RUH8	1/4	32082

CABINET HEATER SCHEDULE

CH1	1/60	11016
CH2	1/60	11016
CH3	1/60	11016
CH4	1/60	11016
CH5	1/60	11016

DOOR UNIT HEATER SCHEDULE

NO	HP	BTU/HR
DUH1-16	3	561,600
DUH17	1/25	10000
DUH18	1/25	10000

HW UNIT HEATERS IN HANGAR

TOTAL HP: 1.62
TOTAL BTU/HR: 303686

HW UNIT HEATER IN MECH RM:
1/20 HP, 8000 BTU/HR

TOTAL EXHAUST FAN POWER: 21 HP

HUMIDIFIER TOTAL POWER: 300 WATTS

E M C ENGINEERS, INC.

PROJECT: UMCS STUDY
CLIENT CONTRACT NO.: DACA01-94-D-0033
CLIENT PROJ. ENG: STEVE ROWLEY
LOCATION: FORT DRUM, NY BLDG: **MNT HANGAR AVUM**

EMC NO.: 1406-006
DATE: 14-NOV-94
PREPARED BY: **CSW**
CHECKED BY: BG
FILE: **2070AC1**

AIR HANDLING UNIT SURVEY OBSERVATIONS

AC1	AHU NO.	**AVIONCS**	LOCATION (RM)
ACC1	REF. SYS. SERVING AHU	**ADMIN SOUTH**	SERVES AREA

UNIT TYPE:

X	SINGLE ZN		2-PIPE FC		4-PIPE FC		UNIT HTR		H&V
	MULTIZONE		DOUBLE DT		REHEAT		INDUCTION		VAV
	NUMBER OF ZONES				OTHER				
	COMMENT:	**103 MBH CAPACITY COOLING COIL**			**51.17 MBH REHEAT**				

NAMEPLATE:

					MFG.				MODEL
3.0	SUPPLY FAN HP				MFG.				MODEL
0.0	RET/EXH FAN HP				MFG.				MODEL
0	CFM-HTG	**4120**	CFM-CLG		MIN %OA		MAX %OA		% HTG AREA SERVED
COMMENT:									

COILS:

X	NONE		STM		HW		ELEC		MOD VLV	PREHEAT
X	NONE		STM		HW		ELEC		MOD VLV	HEATING
	NONE		STM	X	HW		ELEC	X	MOD VLV	REHEAT
X	NONE		STM		HW		EVAP MEDIA		MOD VLV	HUMID.
	NONE	X	DX		CW			X	MOD VLV	COOLING

OPERATION:

HOURS ON:	S	M	T	W	T	F	S	COMMENTS
PRESENT START TIME								TIMECLOCK?
PRESENT STOP TIME								
REQUIRED START TIME	**0**	**700**	**700**	**700**	**700**	**700**	**0**	
REQUIRED STOP TIME	**0**	**1800**	**1800**	**1800**	**1800**	**1800**	**0**	

MONTHS ON:

J	F	M	A	M	J	J	A	S	O	N	D
0	**0**	**0**	**0**	**1**	**1**	**1**	**1**	**1**	**0**	**0**	**0**

CONTROLS:

	X	PNEUMATIC		ELECTRIC		ELEC'NIC		DDC	COMMENTS
THERMOSTAT TYPE:		SINGLE STPT	X	DUAL SETPNT		SETBACK			
SPACE SETPOINT (°F):		OCC HEAT		UNOCC HEAT	**74**	OCC COOL	**80**	UNOCC COOL	
OTHER SETPOINTS (°F):		HOT DECK		COLD DECK		MIXED AIR		OTHER	
DAMPER CONTROL:	**N**	MIN OA (Y/N)	**Y**	MAX OA (Y/N)	**N**	RA (Y/N)	**Y**	EA (Y/N)	
		MA CONTROL		ECONO-DB		ECONO-ENT		OTHER	
DEMAND LIMIT:	**N**	(Y = YES ; N = NO)							
COMMENTS:									

E M C ENGINEERS, INC.

PROJECT: UMCS STUDY
CLIENT CONTRACT NO.: DACA01-94-D-0033
CLIENT PROJ. ENG: STEVE ROWLEY
LOCATION: FORT DRUM, NY BLDG: **MNT HANGAR AVUM**

EMC NO.: 1406-006
DATE: 14-NOV-94
PREPARED BY: **CSW**
CHECKED BY: BG
FILE: **2070AC2**

AIR HANDLING UNIT SURVEY OBSERVATIONS

AC2	AHU NO.	**ALSE 134**	LOCATION (RM)
ACC2	REF. SYS. SERVING AHU	**ADMIN NORTH**	SERVES AREA

UNIT TYPE:

X	SINGLE ZN		2-PIPE FC		4-PIPE FC		UNIT HTR		H&V
	MULTIZONE		DOUBLE DT		REHEAT		INDUCTION		VAV
	NUMBER OF ZONES				OTHER				
	COMMENT:	**37.3 MBH CAPACITY COOLING COIL**			**18.26 MBH REHEAT**				

NAMEPLATE:

					MFG.				MODEL
1.0	SUPPLY FAN HP				MFG.				MODEL
0.0	RET/EXH FAN HP				MFG.				MODEL
0	CFM-HTG	**1470**	CFM-CLG	**100%**	MIN %OA	**100%**	MAX %OA		% HTG AREA SERVED
COMMENT:									

COILS:

X	NONE		STM		HW		ELEC		MOD VLV	PREHEAT
X	NONE		STM		HW		ELEC		MOD VLV	HEATING
	NONE		STM	X	HW		ELEC	X	MOD VLV	REHEAT
X	NONE		STM		HW		EVAP MEDIA		MOD VLV	HUMID.
	NONE	X	DX		CW			X	MOD VLV	COOLING

OPERATION:

HOURS ON:	S	M	T	W	T	F	S	COMMENTS
PRESENT START TIME								TIMECLOCK?
PRESENT STOP TIME								
REQUIRED START TIME	**0**	**700**	**700**	**700**	**700**	**700**	**0**	
REQUIRED STOP TIME	**0**	**1800**	**1800**	**1800**	**1800**	**1800**	**0**	

MONTHS ON:

J	F	M	A	M	J	J	A	S	O	N	D
0	**0**	**0**	**0**	**1**	**1**	**1**	**1**	**1**	**0**	**0**	**0**

CONTROLS:

	X	PNEUMATIC		ELECTRIC		ELEC'NIC		DDC	COMMENTS
THERMOSTAT TYPE:		SINGLE STPT	X	DUAL SETPNT		SETBACK			
SPACE SETPOINT (°F):		OCC HEAT		UNOCC HEAT	**74**	OCC COOL	**80**	UNOCC COOL	
OTHER SETPOINTS (°F):		HOT DECK		COLD DECK		MIXED AIR		OTHER	
DAMPER CONTROL:	**N**	MIN OA (Y/N)	**Y**	MAX OA (Y/N)	**N**	RA (Y/N)	**Y**	EA (Y/N)	
		MA CONTROL		ECONO-DB		ECONO-ENT		OTHER	
DEMAND LIMIT:	**N**	(Y = YES ; N = NO)							
COMMENTS:									

E M C ENGINEERS, INC.

PROJECT: UMCS STUDY
CLIENT CONTRACT NO.: DACA01-94-D-0033
CLIENT PROJ. ENG: STEVE ROWLEY
LOCATION: FORT DRUM, NY BLDG: **MNT HANGAR AVUM**

EMC NO.: 1406-006
DATE: 14-NOV-94
PREPARED BY: **CSW**
CHECKED BY: BG
FILE: **2070ACC1**

REFRIGERATION EQUIPMENT SURVEY OBSERVATIONS

ACC1	CHILLER/COMPRESSOR NO.	OUTSIDE SOUTH	LOCATION (RM)

UNIT TYPE:

	CENTRIFUGAL WITH WATER SIDE COOLING TOWER						OTHER
	RECIPROCATING WITH WATER SIDE COOLING TOWER						AHU'S SERVED
X	RECIPROCATING WITH AIR COOLED CONDENSING UNIT						AC1
	ABSORBTION WITH WATER SIDE COOLING TOWER						
	AIR COOLED CONDENSING UNIT						
	CHW	X	DX		OTHER		

NAMEPLATE:

CHILLER		MFG.			MODEL				SERIAL NO.
	VOLTS		AMPS		PH		HZ	CAPACITY (TONS)	
TOWER		MFG.			MODEL				# OF FANS
	VOLTS		AMPS		PH		HZ	HP each	
CW PUMP		MFG.			MODEL				SERIAL NO.
	VOLTS		AMPS		PH		HZ	HP	
CNW PUMP		MFG.			MODEL				SERIAL NO.
	VOLTS		AMPS		PH		HZ 1.5	HP	
COMMENTS:		**103 MBH CAPACITY**							

OPERATION:

HOURS ON:	S	M	T	W	T	F	S	COMMENT
PRESENT START TIME								TIMECLOCK?
PRESENT STOP TIME								
REQUIRED START TIME	0	700	700	700	700	700	0	
REQUIRED STOP TIME	0	1800	1800	1800	1800	1800	0	

MONTHS ON:

J	F	M	A	M	J	J	A	S	O	N	D
0	0	0	0	1	1	1	1	1	0	0	0

CONTROLS:

	X	PNEUMATIC		ELECTRIC		ELEC'NIC		DDC	COMMENTS
SETPOINTS		CWS (oF)		CWR (oF)		CNWS (oF)		CNWR (oF)	
PANEL INDICATORS									
- PRESSURE		LITE-HI		LITE-LOW		GAUGES			
- TEMPERATURE		LITE-HI		LITE-LOW		GAUGES			
- OTHER									

COMMENTS:

E M C ENGINEERS, INC.

PROJECT: UMCS STUDY
CLIENT CONTRACT NO.: DACA01-94-D-0033
CLIENT PROJ. ENG: STEVE ROWLEY
LOCATION: FORT DRUM, NY BLDG: **MNT HANGAR AVUM**

EMC NO.: 1406-006
DATE: 14-NOV-94
PREPARED BY: **CSW**
CHECKED BY: BG
FILE: **2070ACC2**

REFRIGERATION EQUIPMENT SURVEY OBSERVATIONS

ACC2	CHILLER/COMPRESSOR NO.	OUTSIDE NORTH	LOCATION (RM)

UNIT TYPE:

	CENTRIFUGAL WITH WATER SIDE COOLING TOWER		OTHER
	RECIPROCATING WITH WATER SIDE COOLING TOWER		AHU'S SERVED
X	RECIPROCATING WITH AIR COOLED CONDENSING UNIT		AC1
	ABSORBTION WITH WATER SIDE COOLING TOWER		
	AIR COOLED CONDENSING UNIT		

	CHW	X	DX		OTHER

NAMEPLATE:

CHILLER		MFG.				MODEL				SERIAL NO.
	VOLTS		AMPS		PH		HZ		CAPACITY (TONS)	
TOWER		MFG.				MODEL				# OF FANS
	VOLTS		AMPS		PH		HZ		HP each	
CW PUMP		MFG.				MODEL				SERIAL NO.
	VOLTS		AMPS		PH		HZ		HP	
CNW PUMP		MFG.				MODEL				SERIAL NO.
	VOLTS		AMPS		PH		HZ	1.5	HP	
COMMENTS:		37.3 MBH CAPACITY								

OPERATION:

HOURS ON:	S	M	T	W	T	F	S	COMMENT
PRESENT START TIME								TIMECLOCK?
PRESENT STOP TIME								
REQUIRED START TIME	0	700	700	700	700	700	0	
REQUIRED STOP TIME	0	1800	1800	1800	1800	1800	0	

MONTHS ON:

J	F	M	A	M	J	J	A	S	O	N	D
0	0	0	0	1	1	1	1	1	0	0	0

CONTROLS:

	X	PNEUMATIC		ELECTRIC		ELEC'NIC		DDC	COMMENTS
SETPOINTS		CWS (oF)		CWR (oF)		CNWS (oF)		CNWR (oF)	
PANEL INDICATORS									
- PRESSURE		LITE-HI		LITE-LOW		GAUGES			
- TEMPERATURE		LITE-HI		LITE-LOW		GAUGES			
- OTHER									

COMMENTS:

E M C ENGINEERS, INC.

PROJECT: UMCS STUDY
CLIENT CONTRACT NO.: DACA01-94-D-0033
CLIENT PROJ. ENG: STEVE ROWLEY
LOCATION: FORT DRUM, NY BLDG: **MNT HANGAR AVUM**

EMC NO.: 1406-006
DATE: 14-NOV-94
PREPARED BY: **BG**
CHECKED BY:
FILE: **2070B1&2**

BOILER & CONVERTER SURVEY OBSERVATIONS

B1&2	BOILER/CONVERTER NO.	**BOILER ROOM**	LOCATION (RM)
NONE	SOURCE OF HEATING (PLANT)	**WHOLE BLDG**	SERVES AREA

UNIT TYPE:

	STEAM		PSIG	X	HW		TEMP.		BOILER TYPE:
X	NO.2 OIL		NO.6 OIL		N.GAS		ELEC		FUELS:
	STM/HW		HTHW/HW		HTHW/STM		OTHER		CONVERTER TYPE:
	SPACE HEAT		DHW		OTHER				USE:
COMMENT:	60.00 GPH							**10%**	% HTG AREA SERVED
									BB RADIATION ONLY

NAMEPLATE:

HIGHLANDER AUTO	MFG.	**IC ME845**	MODEL		CAPACITY OUTPUT (BTUH)
				8400000	CAPACITY INPUT (BTUH)
	MFG.		MODEL		CAPACITY OUTPUT (BTUH)
				8400000	CAPACITY INPUT (BTUH)
15	HW PUMP 1 - HP	**TACO/MARATHON**	MFG.	**SD 060050-1A**	MODEL
15	HW PUMP 2 - HP		MFG.		MODEL
	HW PUMP 3 - HP		MFG.		MODEL
COMMENT:					

OPERATION:

HOURS ON:	S	M	T	W	T	F	S	COMMENT
PRESENT START TIME								TIMECLOCK?
PRESENT STOP TIME								
REQUIRED START TIME	**0**	**700**	**700**	**700**	**700**	**700**	**0**	
REQUIRED STOP TIME	**0**	**1800**	**1800**	**1800**	**1800**	**1800**	**0**	

MONTHS ON:

J	F	M	A	M	J	J	A	S	O	N	D
1	**1**	**1**	**1**	**0**	**0**	**0**	**0**	**1**	**1**	**1**	**1**

CONTROLS:

	X	PNEUMATIC		ELECTRIC		ELEC'NIC		DDC	COMMENTS
SETPOINTS		PSIG		HW SUPPLY					
RESET CONTROL (oF):		HW HIGH		HW LOW		OA LOW		OA HIGH	
BURNER CONTROLS		O2 TRIM (Y/N)		OTHER					
COMMENTS:									

PROJECT: UMCS STUDY
CLIENT CONTRACT NO.: DACA01-94-D-0033
CLIENT PROJ. ENG: STEVE ROWLEY
LOCATION: FORT DRUM, NY BLDG: **MNT HANGAR AVUM**

EMC NO.: 1406-006
DATE: 14-NOV-94
PREPARED BY: **CSW**
CHECKED BY: BG
FILE: **2070DHW**

DOMESTIC HW SURVEY OBSERVATIONS

DHW	BOILER/CONVERTER NO.	MECH ROOM 104	LOCATION (RM)
NONE	SOURCE OF HEATING (PLANT)	WHOLE BLDG	SERVES AREA

UNIT TYPE:

X	NO.2 OIL		NO.6 OIL		N.GAS		ELEC		FUELS:
	STM/HW		HTHW/HW		HTHW/STM		OTHER		CONVERTER TYPE:
COMMENT:									

NAMEPLATE:

AO SMITH	MFG.	COF-200-800	MODEL	**800000**	CAPACITY OUTPUT (BTUH,KW)
	MFG.		MODEL		CAPACITY OUTPUT (BTUH,KW)
DOMESTIC HW CIRCULATION PUMP:					
0.0833	HW PUMP 1 - HP	**B&G**	MFG.		MODEL
	HW PUMP 2 - HP		MFG.		MODEL
	HW PUMP 3 - HP		MFG.		MODEL
COMMENT:					

DIMENSION:	DIAMETER (INCHS)		HEIGHT OR LENGTH (INCHES)	GALLON

OPERATION:

HOURS ON:	S	M	T	W	T	F	S	COMMENT
PRESENT START TIME	**0**	**0**	**0**	**0**	**0**	**0**	**0**	TIMECLOCK?
PRESENT STOP TIME	**2400**	**2400**	**2400**	**2400**	**2400**	**2400**	**2400**	**N**
REQUIRED START TIME	**0**	**700**	**700**	**700**	**700**	**700**	**0**	
REQUIRED STOP TIME	**0**	**1800**	**1800**	**1800**	**1800**	**1800**	**0**	

MONTHS ON:

J	F	M	A	M	J	J	A	S	O	N	D
1	**1**	**1**	**1**	**1**	**1**	**1**	**1**	**1**	**1**	**1**	**1**

CONTROLS:

	X	PNEUMATIC		ELECTRIC		ELEC'NIC		DDC	COMMENTS
SETPOINTS				HW SUPPLY					
COMMENTS:									

E M C ENGINEERS, INC.

PROJECT: UMCS STUDY
CLIENT CONTRACT NO.: DACA01-94-D-0033
CLIENT PROJ. ENG: STEVE ROWLEY
LOCATION: FORT DRUM, NY BLDG: **MNT HANGAR AVUM**

EMC NO.: 1406-006
DATE: 14-NOV-94
PREPARED BY: **CSW**
CHECKED BY: BG
FILE: **2070HV1**

AIR HANDLING UNIT SURVEY OBSERVATIONS

HV1	AHU NO.	**HANGAR CEILING**	LOCATION (RM)
NONE	REF. SYS. SERVING AHU	**ZONE 4 (ADMIN NORTH)**	SERVES AREA

UNIT TYPE:

X	SINGLE ZN		2-PIPE FC		4-PIPE FC		UNIT HTR	X	H&V
	MULTIZONE		DOUBLE DT		REHEAT		INDUCTION		VAV
	NUMBER OF ZONES				OTHER				
	COMMENT:								

NAMEPLATE:

					MFG.				MODEL
15.0	SUPPLY FAN HP				MFG.				MODEL
0.0	RET/EXH FAN HP				MFG.				MODEL
10020	CFM-HTG	**0**	CFM-CLG	**15%**	MIN %OA	**100%**	MAX %OA	**20.0%**	% HTG AREA SERVED
COMMENT:		**124 MBH HEATING COIL**							
		16700 CFM SUMMER VENTILATION							

COILS:

X	NONE		STM		HW		ELEC		MOD VLV	PREHEAT
	NONE		STM	X	HW		ELEC		MOD VLV	HEATING
X	NONE		STM		HW		ELEC		MOD VLV	REHEAT
X	NONE		STM		HW		EVAP MEDI		MOD VLV	HUMID.
X	NONE		DX		CW				MOD VLV	COOLING

OPERATION:

HOURS ON:	S	M	T	W	T	F	S	COMMENTS
PRESENT START TIME								TIMECLOCK?
PRESENT STOP TIME								
REQUIRED START TIME	**0**	**700**	**700**	**700**	**700**	**700**	**0**	
REQUIRED STOP TIME	**0**	**1800**	**1800**	**1800**	**1800**	**1800**	**0**	

MONTHS ON:

J	F	M	A	M	J	J	A	S	O	N	D
1	**1**	**1**	**1**	**0**	**0**	**0**	**0**	**0**	**1**	**1**	**1**

CONTROLS:

	X	PNEUMATIC		ELECTRIC		ELEC'NIC		DDC	COMMENTS
THERMOSTAT TYPE:		SINGLE STPT	X	DUAL SETPNT		SETBACK			
SPACE SETPOINT (°F):	**72**	OCC HEAT	**65**	UNOCC HEAT		OCC COOL		UNOCC COOL	
OTHER SETPOINTS (°F):		HOT DECK		COLD DECK		MIXED AIR		OTHER	
DAMPER CONTROL:	Y	MIN OA (Y/N)	Y	MAX OA (Y/N)	Y	RA (Y/N)	Y	EA (Y/N)	
		MA CONTROL		ECONO-DB		ECONO-ENT		OTHER	
DEMAND LIMIT:	N	(Y = YES ; N = NO)							
COMMENTS:									

E M C ENGINEERS, INC.

PROJECT: UMCS STUDY
CLIENT CONTRACT NO.: DACA01-94-D-0033
CLIENT PROJ. ENG: STEVE ROWLEY
LOCATION: FORT DRUM, NY BLDG: **MNT HANGAR AVUM**

EMC NO.: 1406-006
DATE: 14-NOV-94
PREPARED BY: **CSW**
CHECKED BY: BG
FILE: **2070HV2**

AIR HANDLING UNIT SURVEY OBSERVATIONS

HV2	AHU NO.	**HANGAR CEILING**	LOCATION (RM)
NONE	REF. SYS. SERVING AHU	**ZONE 4 (ADMIN NORTH)**	SERVES AREA

UNIT TYPE:

X	SINGLE ZN		2-PIPE FC		4-PIPE FC		UNIT HTR	X	H&V
	MULTIZONE		DOUBLE DT		REHEAT		INDUCTION		VAV
	NUMBER OF ZONES				OTHER				
	COMMENT:								

NAMEPLATE:

					MFG.				MODEL
5.0	SUPPLY FAN HP				MFG.				MODEL
0.0	RET/EXH FAN HP				MFG.				MODEL
3900	CFM-HTG	**0**	CFM-CLG	**15%**	MIN %OA	**100%**	MAX %OA	**20.0%**	% HTG AREA SERVED
COMMENT:		**48 MBH HEATING COIL**							
		6500 CFM SUMMER VENTILATION							

COILS:

X	NONE		STM		HW		ELEC	MOD VLV	PREHEAT
	NONE		STM	X	HW		ELEC	MOD VLV	HEATING
X	NONE		STM		HW		ELEC	MOD VLV	REHEAT
X	NONE		STM		HW		EVAP MEDI	MOD VLV	HUMID.
X	NONE		DX		CW			MOD VLV	COOLING

OPERATION:

HOURS ON:	S	M	T	W	T	F	S	COMMENTS
PRESENT START TIME								TIMECLOCK?
PRESENT STOP TIME								
REQUIRED START TIME	**0**	**700**	**700**	**700**	**700**	**700**	**0**	
REQUIRED STOP TIME	**0**	**1800**	**1800**	**1800**	**1800**	**1800**	**0**	

MONTHS ON:

J	F	M	A	M	J	J	A	S	O	N	D
1	**1**	**1**	**1**	**0**	**0**	**0**	**0**	**0**	**1**	**1**	**1**

CONTROLS:

	X	PNEUMATIC		ELECTRIC		ELEC'NIC		DDC	COMMENTS
THERMOSTAT TYPE:		SINGLE STPT	X	DUAL SETPNT		SETBACK			
SPACE SETPOINT (°F):	**72**	OCC HEAT	**65**	UNOCC HEAT		OCC COOL		UNOCC COOL	
OTHER SETPOINTS (°F):		HOT DECK		COLD DECK		MIXED AIR		OTHER	
DAMPER CONTROL:	Y	MIN OA (Y/N)	Y	MAX OA (Y/N)	Y	RA (Y/N)	Y	EA (Y/N)	
		MA CONTROL		ECONO-DB		ECONO-ENT		OTHER	
DEMAND LIMIT:	N	(Y = YES ; N = NO)							
COMMENTS:									

E M C ENGINEERS, INC.

PROJECT: UMCS STUDY
CLIENT CONTRACT NO.: DACA01-94-D-0033
CLIENT PROJ. ENG: STEVE ROWLEY
LOCATION: FORT DRUM, NY BLDG: **MNT HANGAR AVUM**

EMC NO.: 1406-006
DATE: 14-NOV-94
PREPARED BY: **CSW**
CHECKED BY: BG
FILE: **2070HV3**

AIR HANDLING UNIT SURVEY OBSERVATIONS

HV3	AHU NO.	**ZONE 5 (AMIN SOUTH**	LOCATION (RM)
NONE	REF. SYS. SERVING AHU	**14x8' RAR (ZONE 5)**	SERVES AREA

UNIT TYPE:

X	SINGLE ZN		2-PIPE FC		4-PIPE FC		UNIT HTR	X	H&V
	MULTIZONE		DOUBLE DT		REHEAT		INDUCTION		VAV
	NUMBER OF ZONES				OTHER				
	COMMENT:								

NAMEPLATE:

				MFG.				MODEL
0.8	SUPPLY FAN HP			MFG.				MODEL
0.0	RET/EXH FAN HP			MFG.				MODEL
1020	CFM-HTG	**0**	CFM-CLG	**15%**	MIN %OA	**100%**	MAX %OA	**5.0%**	% HTG AREA SERVED
COMMENT:	**48 MBH HEATING COIL**								
	6500 CFM SUMMER VENTILATION								

COILS:

X	NONE		STM		HW		ELEC		MOD VLV	PREHEAT
	NONE		STM	X	HW		ELEC		MOD VLV	HEATING
X	NONE		STM		HW		ELEC		MOD VLV	REHEAT
X	NONE		STM		HW		EVAP MEDI		MOD VLV	HUMID.
X	NONE		DX		CW				MOD VLV	COOLING

OPERATION:

HOURS ON:	S	M	T	W	T	F	S	COMMENTS
PRESENT START TIME								TIMECLOCK?
PRESENT STOP TIME								
REQUIRED START TIME	**0**	**700**	**700**	**700**	**700**	**700**	**0**	
REQUIRED STOP TIME	**0**	**1800**	**1800**	**1800**	**1800**	**1800**	**0**	

MONTHS ON:

J	F	M	A	M	J	J	A	S	O	N	D
1	**1**	**1**	**1**	**0**	**0**	**0**	**0**	**0**	**1**	**1**	**1**

CONTROLS:

	X	PNEUMATIC		ELECTRIC		ELEC'NIC		DDC	COMMENTS
THERMOSTAT TYPE:	X	SINGLE STPT		DUAL SETPNT		SETBACK			
SPACE SETPOINT (°F):	**55**	OCC HEAT	**55**	UNOCC HEAT		OCC COOL		UNOCC COOL	
OTHER SETPOINTS (°F):		HOT DECK		COLD DECK		MIXED AIR		OTHER	
DAMPER CONTROL:	**Y**	MIN OA (Y/N)	**Y**	MAX OA (Y/N)	**Y**	RA (Y/N)	**Y**	EA (Y/N)	
		MA CONTROL		ECONO-DB		ECONO-ENT		OTHER	
DEMAND LIMIT:	**N**	(Y = YES ; N = NO)							
COMMENTS:									

E M C ENGINEERS, INC.

PROJECT: UMCS STUDY
CLIENT CONTRACT NO.: DACA01-94-D-0033
CLIENT PROJ. ENG: STEVE ROWLEY
LOCATION: FORT DRUM, NY BLDG: **MNT HANGAR AVUM**

EMC NO.: 1406-006
DATE: 14-NOV-94
PREPARED BY: **CSW**
CHECKED BY: BG
FILE: **2070HX1**

BOILER & CONVERTER SURVEY OBSERVATIONS

HX1	BOILER/CONVERTER NO.	**BOILER ROOM**	LOCATION (RM)
B1&2	SOURCE OF HEATING (PLANT)	**AHUS**	SERVES AREA

UNIT TYPE:

	STEAM		PSIG		HW		TEMP.		BOILER TYPE:
	NO.2 OIL		NO.6 OIL		N.GAS		ELEC		FUELS:
	STM/HW		HTHW/HW		HTHW/STM	X	OTHER		CONVERTER TYPE:
	SPACE HEAT		DHW		OTHER				USE:
COMMENT:			HW-40%GLYCOL SOLUTION						% HTG AREA SERVED
									BB RADIATION ONLY

NAMEPLATE:

	MFG.		MODEL	**1975886**	CAPACITY OUTPUT (BTUH)
					CAPACITY INPUT (BTUH)
	MFG.		MODEL		CAPACITY OUTPUT (BTUH)
					CAPACITY INPUT (BTUH)
7.5	HW PUMP 1 - HP		MFG.		MODEL
	HW PUMP 2 - HP		MFG.		MODEL
	HW PUMP 3 - HP		MFG.		MODEL
COMMENT:					

OPERATION:

HOURS ON:	S	M	T	W	T	F	S	COMMENT
PRESENT START TIME								TIMECLOCK?
PRESENT STOP TIME								
REQUIRED START TIME	**0**	**700**	**700**	**700**	**700**	**700**	**0**	
REQUIRED STOP TIME	**0**	**1800**	**1800**	**1800**	**1800**	**1800**	**0**	

MONTHS ON:

J	F	M	A	M	J	J	A	S	O	N	D
1	**1**	**1**	**1**	**0**	**0**	**0**	**0**	**0**	**1**	**1**	**1**

CONTROLS:

	X	PNEUMATIC		ELECTRIC		ELEC'NIC		DDC	COMMENTS
SETPOINTS		PSIG		HW SUPPLY					
RESET CONTROL (oF):		HW HIGH		HW LOW		OA LOW		OA HIGH	
BURNER CONTROLS		O2 TRIM (Y/N)		OTHER					
COMMENTS:									

E M C ENGINEERS, INC.

PROJECT: UMCS STUDY
CLIENT CONTRACT NO.: DACA01-94-D-0033
CLIENT PROJ. ENG: STEVE ROWLEY
LOCATION: FORT DRUM, NY BLDG: **MNT HANGAR AVUM**

EMC NO.: 1406-006
DATE: 14-NOV-94
PREPARED BY: **CSW**
CHECKED BY: BG
FILE: **2070MA1**

AIR HANDLING UNIT SURVEY OBSERVATIONS

MAU1	AHU NO.	**ZONE 4-ADMIN**	LOCATION (RM)
NONE	REF. SYS. SERVING AHU	**ZONE 4-ADMIN**	SERVES AREA

UNIT TYPE:

X	SINGLE ZN		2-PIPE FC		4-PIPE FC		UNIT HTR		H&V
	MULTIZONE		DOUBLE DT		REHEAT		INDUCTION		VAV
	NUMBER OF ZONES			X	OTHER				
	COMMENT:	**MAKE-UP AIR HANDLING UNIT**							

NAMEPLATE:

					MFG.				MODEL
7.5	SUPPLY FAN HP				MFG.				MODEL
5.0	RET/EXH FAN HP				MFG.				MODEL
14746	CFM-HTG	**0**	CFM-CLG	**100%**	MIN %OA	**100%**	MAX %OA	**10.0%**	% HTG AREA SERVED
COMMENT:									

COILS:

	NONE		STM	**X**	HW		ELEC		MOD VLV	PREHEAT
	NONE		STM	**X**	HW		ELEC	**X**	MOD VLV	HEATING
X	NONE		STM		HW		ELEC		MOD VLV	REHEAT
X	NONE		STM		HW		EVAP MEDIA		MOD VLV	HUMID.
X	NONE		DX		CW				MOD VLV	COOLING

OPERATION:

HOURS ON:	S	M	T	W	T	F	S	COMMENTS
PRESENT START TIME								TIMECLOCK?
PRESENT STOP TIME								
REQUIRED START TIME	**0**	**700**	**700**	**700**	**700**	**700**	**0**	
REQUIRED STOP TIME	**0**	**1800**	**1800**	**1800**	**1800**	**1800**	**0**	

MONTHS ON:

J	F	M	A	M	J	J	A	S	O	N	D
1	**1**	**1**	**1**	**1**	**1**	**1**	**1**	**1**	**1**	**1**	**1**

CONTROLS:

	X	PNEUMATIC		ELECTRIC		ELEC'NIC		DDC	COMMENTS
THERMOSTAT TYPE:		SINGLE STPT	**X**	DUAL SETPNT		SETBACK			
SPACE SETPOINT (°F):	**70**	OCC HEAT	**65**	UNOCC HEAT		OCC COOL		UNOCC COOL	
OTHER SETPOINTS (°F):		HOT DECK		COLD DECK		MIXED AIR		OTHER	
DAMPER CONTROL:	**Y**	MIN OA (Y/N)	**Y**	MAX OA (Y/N)	**N**	RA (Y/N)	**Y**	EA (Y/N)	
		MA CONTROL		ECONO-DB		ECONO-ENT		OTHER	
DEMAND LIMIT:	**N**	(Y = YES ; N = NO)							

COMMENTS: **OUTSIDE AIR ENTERING MAU1 IS PREHEATED WITH A EXHAUST HEAT RECOVERY COIL FROM HRU-9.**
-7F OA -->PHC-->15F -->HC-->57F TO SPACE
LOAD OF HEATING COIL: 669 MBH

E M C ENGINEERS, INC.

PROJECT: UMCS STUDY
CLIENT CONTRACT NO.: DACA01-94-D-0033
CLIENT PROJ. ENG: STEVE ROWLEY
LOCATION: FORT DRUM, NY BLDG: **MNT HANGAR AVUM**

EMC NO.: 1406-006
DATE: 14-NOV-94
PREPARED BY: **CSW**
CHECKED BY: BG
FILE: **2070MA2**

AIR HANDLING UNIT SURVEY OBSERVATIONS

MAU2	AHU NO.	**ZONE 5-ADMIN**	LOCATION (RM)
NONE	REF. SYS. SERVING AHU	**ZONE 5-ADMIN**	SERVES AREA

UNIT TYPE:

X	SINGLE ZN		2-PIPE FC		4-PIPE FC		UNIT HTR		H&V
	MULTIZONE		DOUBLE DT		REHEAT		INDUCTION		VAV
	NUMBER OF ZONES			X	OTHER				
	COMMENT:	**MAKE-UP AIR HANDLING UNIT**							

NAMEPLATE:

					MFG.				MODEL
10.0	SUPPLY FAN HP				MFG.				MODEL
5.0	RET/EXH FAN HP				MFG.				MODEL
13945	CFM-HTG	**0**	CFM-CLG	**100%**	MIN %OA	**100%**	MAX %OA	**10.0%**	% HTG AREA SERVED
COMMENT:									

COILS:

	NONE		STM	X	HW		ELEC		MOD VLV	PREHEAT
	NONE		STM	X	HW		ELEC	X	MOD VLV	HEATING
X	NONE		STM		HW		ELEC		MOD VLV	REHEAT
X	NONE		STM		HW		EVAP MEDIA		MOD VLV	HUMID.
X	NONE		DX		CW				MOD VLV	COOLING

OPERATION:

HOURS ON:	S	M	T	W	T	F	S	COMMENTS
PRESENT START TIME								TIMECLOCK?
PRESENT STOP TIME								
REQUIRED START TIME	**0**	**700**	**700**	**700**	**700**	**700**	**0**	
REQUIRED STOP TIME	**0**	**1800**	**1800**	**1800**	**1800**	**1800**	**0**	

MONTHS ON:

J	F	M	A	M	J	J	A	S	O	N	D
1	**1**	**1**	**1**	**1**	**1**	**1**	**1**	**1**	**1**	**1**	**1**

CONTROLS:

	X	PNEUMATIC		ELECTRIC		ELEC'NIC		DDC	COMMENTS
THERMOSTAT TYPE:		SINGLE STPT	X	DUAL SETPNT		SETBACK			
SPACE SETPOINT (°F):	**70**	OCC HEAT	**65**	UNOCC HEAT		OCC COOL		UNOCC COOL	
OTHER SETPOINTS (°F):		HOT DECK		COLD DECK		MIXED AIR		OTHER	
DAMPER CONTROL:	**Y**	MIN OA (Y/N)	**Y**	MAX OA (Y/N)	**N**	RA (Y/N)	**Y**	EA (Y/N)	
		MA CONTROL		ECONO-DB		ECONO-ENT		OTHER	
DEMAND LIMIT:	**N**	(Y = YES ; N = NO)							

COMMENTS: **OUTSIDE AIR ENTERING MAU1 IS PREHEATED WITH A EXHAUST HEAT RECOVERY COIL FROM HRU-9.**

-7F OA -->PHC-->15F -->HC-->57F TO SPACE

LOAD OF HEATING COIL: 633 MBH

E M C ENGINEERS, INC.

PROJECT: UMCS STUDY
CLIENT CONTRACT NO.: DACA01-94-D-0033
CLIENT PROJ. ENG: STEVE ROWLEY
LOCATION: FORT DRUM, NY BLDG: **MNT HANGAR AVUM**

EMC NO.: 1406-006
DATE: DEC-94
PREPARED BY: **CSW**
CHECKED BY: BG
FILE: **2070RAD**

PERIMETER RADIATION SURVEY OBSERVATIONS

RAD1	PER RAD NO.	**BOILER ROOM**	LOCATION (RM)
B1&2	SOURCE OF HEATING	WHOLE BLDG	SERVES AREA

UNIT TYPE:

	STEAM	X	HW		ELECTRIC				
	OTHER								
	COMMENT:								

NAMEPLATE:

0.75	HW PUMP 1 - HP		MFG.		MODEL
	HW PUMP 2 - HP		MFG.		MODEL
	HW PUMP 3 - HP		MFG.		MODEL
	HW PUMP 4 - HP		MFG.		MODEL
COMMENT:					% AREA HEATING

OPERATION:

HOURS ON:	S	M	T	W	T	F	S	COMMENT
PRESENT START TIME								TIMECLOCK?
PRESENT STOP TIME								
REQUIRED START TIME	**0**	**0**	**0**	**0**	**0**	**0**	**0**	
REQUIRED STOP TIME	**2400**	**2400**	**2400**	**2400**	**2400**	**2400**	**2400**	

MONTHS ON:

J	F	M	A	M	J	J	A	S	O	N	D
1	**1**	**1**	**1**	**0**	**0**	**0**	**0**	**0**	**1**	**1**	**1**

CONTROLS:

	X	PNEUMATIC		ELECTRIC		ELEC'NIC		DDC	COMMENTS
RADIATION CONTROL:		NONE		2-WAY VLV		3-WAY VLV		OTHER	
SPACE SETPOINT (øF):		OCC HEAT		UNOCC HEAT		OCC COOL		UNOCC COOL	
RESET CONTROL (øF):		HW HIGH		HW LOW		OA LOW		OA HIGH	
COMMENTS:	15 BTUH CAPACITY								

E M C ENGINEERS, INC.

PROJECT: UMCS STUDY
CLIENT CONTRACT NO.: DACA01-94-D-0033
CLIENT PROJ. ENG: STEVE ROWLEY
LOCATION: FORT DRUM, NY BLDG: **MNT HANGAR AVUM**

EMC NO.: 1406-006
DATE: 14-NOV-94
PREPARED BY: **CSW**
CHECKED BY: BG
FILE: **2070RMA1**

AIR HANDLING UNIT SURVEY OBSERVATIONS

RMAU1	AHU NO.	**HANGAR**	LOCATION (RM)
NONE	REF. SYS. SERVING AHU	**HANGAR**	SERVES AREA

UNIT TYPE:

X	SINGLE ZN		2-PIPE FC		4-PIPE FC		UNIT HTR		H&V
	MULTIZONE		DOUBLE DT		REHEAT		INDUCTION		VAV
	NUMBER OF ZONES			X	OTHER				
	COMMENT:	**MAKE-UP AIR HANDLING UNIT**							

NAMEPLATE:

					MFG.				MODEL
10.0	SUPPLY FAN HP				MFG.				MODEL
5.0	RET/EXH FAN HP				MFG.				MODEL
10395	CFM-HTG	**0**	CFM-CLG	**100%**	MIN %OA	**100%**	MAX %OA	**7.5%**	% HTG AREA SERVED
COMMENT:									

COILS:

	NONE		STM	X	HW		ELEC		MOD VLV	PREHEAT
	NONE		STM	X	HW		ELEC	X	MOD VLV	HEATING
X	NONE		STM		HW		ELEC		MOD VLV	REHEAT
X	NONE		STM		HW		EVAP MEDIA		MOD VLV	HUMID.
X	NONE		DX		CW				MOD VLV	COOLING

OPERATION:

HOURS ON:	S	M	T	W	T	F	S	COMMENTS
PRESENT START TIME								TIMECLOCK?
PRESENT STOP TIME								
REQUIRED START TIME	**0**	**700**	**700**	**700**	**700**	**700**	**0**	
REQUIRED STOP TIME	**0**	**1800**	**1800**	**1800**	**1800**	**1800**	**0**	

MONTHS ON:

J	F	M	A	M	J	J	A	S	O	N	D
1	**1**	**1**	**1**	**1**	**1**	**1**	**1**	**1**	**1**	**1**	**1**

CONTROLS:

	X	PNEUMATIC		ELECTRIC		ELEC'NIC		DDC	COMMENTS
THERMOSTAT TYPE:		SINGLE STPT	X	DUAL SETPNT		SETBACK			
SPACE SETPOINT (°F):	**70**	OCC HEAT	**65**	UNOCC HEAT		OCC COOL		UNOCC COOL	
OTHER SETPOINTS (°F):		HOT DECK		COLD DECK		MIXED AIR		OTHER	
DAMPER CONTROL:	**Y**	MIN OA (Y/N)	**Y**	MAX OA (Y/N)	**N**	RA (Y/N)	**Y**	EA (Y/N)	
		MA CONTROL		ECONO-DB		ECONO-ENT		OTHER	
DEMAND LIMIT:	**N**	(Y = YES ; N = NO)							

COMMENTS: **OUTSIDE AIR ENTERING MAU1 IS PREHEATED WITH A EXHAUST HEAT RECOVERY COIL FROM HRU-9.**

-7F OA -->PHC-->15F -->HC-->57F TO SPACE

LOAD OF HEATING COIL: 472 MBH

E M C ENGINEERS, INC.

PROJECT: UMCS STUDY
CLIENT CONTRACT NO.: DACA01-94-D-0033
CLIENT PROJ. ENG: STEVE ROWLEY
LOCATION: FORT DRUM, NY BLDG: **MNT HANGAR AVUM**

EMC NO.: 1406-006
DATE: 14-NOV-94
PREPARED BY: **CSW**
CHECKED BY: BG
FILE: **2070RMA2**

AIR HANDLING UNIT SURVEY OBSERVATIONS

RMAU2	AHU NO.	**HANGAR**	LOCATION (RM)
NONE	REF. SYS. SERVING AHU	**HANGAR**	SERVES AREA

UNIT TYPE:

X	SINGLE ZN		2-PIPE FC		4-PIPE FC		UNIT HTR		H&V
	MULTIZONE		DOUBLE DT		REHEAT		INDUCTION		VAV
	NUMBER OF ZONES			X	OTHER				
	COMMENT:	**MAKE-UP AIR HANDLING UNIT**							

NAMEPLATE:

				MFG.				MODEL
10.0	SUPPLY FAN HP			MFG.				MODEL
5.0	RET/EXH FAN HP			MFG.				MODEL
10080	CFM-HTG	**0**	CFM-CLG	**100%**	MIN %OA	**100%**	MAX %OA	**7.5%**	% HTG AREA SERVED
COMMENT:									

COILS:

	NONE		STM	**X**	HW		ELEC		MOD VLV	PREHEAT
	NONE		STM	**X**	HW		ELEC	**X**	MOD VLV	HEATING
X	NONE		STM		HW		ELEC		MOD VLV	REHEAT
X	NONE		STM		HW		EVAP MEDIA		MOD VLV	HUMID.
X	NONE		DX		CW				MOD VLV	COOLING

OPERATION:

HOURS ON:	S	M	T	W	T	F	S	COMMENTS
PRESENT START TIME								TIMECLOCK?
PRESENT STOP TIME								
REQUIRED START TIME	**0**	**700**	**700**	**700**	**700**	**700**	**0**	
REQUIRED STOP TIME	**0**	**1800**	**1800**	**1800**	**1800**	**1800**	**0**	

MONTHS ON:

J	F	M	A	M	J	J	A	S	O	N	D
1	**1**	**1**	**1**	**1**	**1**	**1**	**1**	**1**	**1**	**1**	**1**

CONTROLS:

	X	PNEUMATIC		ELECTRIC		ELEC'NIC		DDC	COMMENTS
THERMOSTAT TYPE:		SINGLE STPT	**X**	DUAL SETPNT		SETBACK			
SPACE SETPOINT (°F):	**70**	OCC HEAT	**65**	UNOCC HEAT		OCC COOL		UNOCC COOL	
OTHER SETPOINTS (°F):		HOT DECK		COLD DECK		MIXED AIR		OTHER	
DAMPER CONTROL:	**Y**	MIN OA (Y/N)	**Y**	MAX OA (Y/N)	**N**	RA (Y/N)	**Y**	EA (Y/N)	
		MA CONTROL		ECONO-DB		ECONO-ENT		OTHER	
DEMAND LIMIT:	**N**	(Y = YES ; N = NO)							

COMMENTS: **OUTSIDE AIR ENTERING MAU1 IS PREHEATED WITH A EXHAUST HEAT RECOVERY COIL FROM HRU-9.**

-7F OA -->PHC-->15F -->HC-->57F TO SPACE

LOAD OF HEATING COIL: 457 MBH

E M C ENGINEERS, INC.

PROJECT: UMCS STUDY
CLIENT CONTRACT NO.: DACA01-94-D-0033
CLIENT PROJ. ENG: STEVE ROWLEY
LOCATION: FORT DRUM, NY BLDG: **MNT HANGAR AVUM**

EMC NO.: 1406-006
DATE: 14-NOV-94
PREPARED BY: **CSW**
CHECKED BY: BG
FILE: **2070RMA3**

AIR HANDLING UNIT SURVEY OBSERVATIONS

RMAU3	AHU NO.	**HANGAR**	LOCATION (RM)
NONE	REF. SYS. SERVING AHU	**HANGAR**	SERVES AREA

UNIT TYPE:

X	SINGLE ZN		2-PIPE FC		4-PIPE FC		UNIT HTR		H&V
	MULTIZONE		DOUBLE DT		REHEAT		INDUCTION		VAV
	NUMBER OF ZONES			X	OTHER				
	COMMENT:	**MAKE-UP AIR HANDLING UNIT**							

NAMEPLATE:

					MFG.				MODEL
10.0	SUPPLY FAN HP				MFG.				MODEL
5.0	RET/EXH FAN HP				MFG.				MODEL
10080	CFM-HTG	**0**	CFM-CLG	**100%**	MIN %OA	**100%**	MAX %OA	**7.5%**	% HTG AREA SERVED
COMMENT:									

COILS:

	NONE		STM	X	HW		ELEC		MOD VLV	PREHEAT
	NONE		STM	X	HW		ELEC	X	MOD VLV	HEATING
X	NONE		STM		HW		ELEC		MOD VLV	REHEAT
X	NONE		STM		HW		EVAP MEDIA		MOD VLV	HUMID.
X	NONE		DX		CW				MOD VLV	COOLING

OPERATION:

HOURS ON:	S	M	T	W	T	F	S	COMMENTS
PRESENT START TIME								TIMECLOCK?
PRESENT STOP TIME								
REQUIRED START TIME	**0**	**700**	**700**	**700**	**700**	**700**	**0**	
REQUIRED STOP TIME	**0**	**1800**	**1800**	**1800**	**1800**	**1800**	**0**	

MONTHS ON:

J	F	M	A	M	J	J	A	S	O	N	D
1	**1**	**1**	**1**	**1**	**1**	**1**	**1**	**1**	**1**	**1**	**1**

CONTROLS:

	X	PNEUMATIC		ELECTRIC		ELEC'NIC		DDC	COMMENTS
THERMOSTAT TYPE:		SINGLE STPT	X	DUAL SETPNT		SETBACK			
SPACE SETPOINT (°F):	**70**	OCC HEAT	**65**	UNOCC HEAT		OCC COOL		UNOCC COOL	
OTHER SETPOINTS (°F):		HOT DECK		COLD DECK		MIXED AIR		OTHER	
DAMPER CONTROL:	Y	MIN OA (Y/N)	Y	MAX OA (Y/N)	N	RA (Y/N)	Y	EA (Y/N)	
		MA CONTROL		ECONO-DB		ECONO-ENT		OTHER	
DEMAND LIMIT:	N	(Y = YES ; N = NO)							

COMMENTS: **OUTSIDE AIR ENTERING MAU1 IS PREHEATED WITH A EXHAUST HEAT RECOVERY COIL FROM HRU-9.**

-7F OA -->PHC-->15F -->HC-->57F TO SPACE

LOAD OF HEATING COIL: 457 MBH

E M C ENGINEERS, INC.

PROJECT: UMCS STUDY
CLIENT CONTRACT NO.: DACA01-94-D-0033
CLIENT PROJ. ENG: STEVE ROWLEY
LOCATION: FORT DRUM, NY BLDG: **MNT HANGAR AVUM**

EMC NO.: 1406-006
DATE: 14-NOV-94
PREPARED BY: **CSW**
CHECKED BY: BG
FILE: **2070RMA4**

AIR HANDLING UNIT SURVEY OBSERVATIONS

RMAU4	AHU NO.	**HANGAR**	LOCATION (RM)
NONE	REF. SYS. SERVING AHU	**HANGAR**	SERVES AREA

UNIT TYPE:

X	SINGLE ZN		2-PIPE FC		4-PIPE FC		UNIT HTR		H&V
	MULTIZONE		DOUBLE DT		REHEAT		INDUCTION		VAV
	NUMBER OF ZONES			X	OTHER				
	COMMENT:	**MAKE-UP AIR HANDLING UNIT**							

NAMEPLATE:

					MFG.				MODEL
10.0	SUPPLY FAN HP				MFG.				MODEL
5.0	RET/EXH FAN HP				MFG.				MODEL
10080	CFM-HTG	**0**	CFM-CLG	**100%**	MIN %OA	**100%**	MAX %OA	**7.5%**	% HTG AREA SERVED
COMMENT:									

COILS:

	NONE		STM	X	HW		ELEC		MOD VLV	PREHEAT
	NONE		STM	X	HW		ELEC	X	MOD VLV	HEATING
X	NONE		STM		HW		ELEC		MOD VLV	REHEAT
X	NONE		STM		HW		EVAP MEDIA		MOD VLV	HUMID.
X	NONE		DX		CW				MOD VLV	COOLING

OPERATION:

HOURS ON:	S	M	T	W	T	F	S	COMMENTS
PRESENT START TIME								TIMECLOCK?
PRESENT STOP TIME								
REQUIRED START TIME	**0**	**700**	**700**	**700**	**700**	**700**	**0**	
REQUIRED STOP TIME	**0**	**1800**	**1800**	**1800**	**1800**	**1800**	**0**	

MONTHS ON:

J	F	M	A	M	J	J	A	S	O	N	D
1	**1**	**1**	**1**	**1**	**1**	**1**	**1**	**1**	**1**	**1**	**1**

CONTROLS:

	X	PNEUMATIC		ELECTRIC		ELEC'NIC		DDC	COMMENTS
THERMOSTAT TYPE:		SINGLE STPT	X	DUAL SETPNT		SETBACK			
SPACE SETPOINT (°F):	**70**	OCC HEAT	**65**	UNOCC HEAT		OCC COOL		UNOCC COOL	
OTHER SETPOINTS (°F):		HOT DECK		COLD DECK		MIXED AIR		OTHER	
DAMPER CONTROL:	Y	MIN OA (Y/N)	Y	MAX OA (Y/N)	N	RA (Y/N)	Y	EA (Y/N)	
		MA CONTROL		ECONO-DB		ECONO-ENT		OTHER	
DEMAND LIMIT:	N	(Y = YES ; N = NO)							

COMMENTS: **OUTSIDE AIR ENTERING MAU1 IS PREHEATED WITH A EXHAUST HEAT RECOVERY COIL FROM HRU-9.**
-7F OA -->PHC-->15F -->HC-->57F TO SPACE
LOAD OF HEATING COIL: 457 MBH

E M C ENGINEERS, INC.

PROJECT: UMCS STUDY
CLIENT CONTRACT NO.: DACA01-94-D-0033
CLIENT PROJ. ENG: STEVE ROWLEY
LOCATION: FORT DRUM, NY BLDG: **MNT HANGAR AVUM**

EMC NO.: 1406-006
DATE: 14-NOV-94
PREPARED BY: **CSW**
CHECKED BY: BG
FILE: **2070RMA5**

AIR HANDLING UNIT SURVEY OBSERVATIONS

RMAU5	AHU NO.	**HANGAR**	LOCATION (RM)
NONE	REF. SYS. SERVING AHU	**HANGAR**	SERVES AREA

UNIT TYPE:

X	SINGLE ZN		2-PIPE FC		4-PIPE FC		UNIT HTR		H&V
	MULTIZONE		DOUBLE DT		REHEAT		INDUCTION		VAV
	NUMBER OF ZONES			X	OTHER				
	COMMENT:	**MAKE-UP AIR HANDLING UNIT**							

NAMEPLATE:

					MFG.				MODEL
10.0	SUPPLY FAN HP				MFG.				MODEL
5.0	RET/EXH FAN HP				MFG.				MODEL
10080	CFM-HTG	**0**	CFM-CLG	**100%**	MIN %OA	**100%**	MAX %OA	**7.5%**	% HTG AREA SERVED
COMMENT:									

COILS:

	NONE		STM	**X**	HW		ELEC		MOD VLV	PREHEAT
	NONE		STM	**X**	HW		ELEC	**X**	MOD VLV	HEATING
X	NONE		STM		HW		ELEC		MOD VLV	REHEAT
X	NONE		STM		HW		EVAP MEDIA		MOD VLV	HUMID.
X	NONE		DX		CW				MOD VLV	COOLING

OPERATION:

HOURS ON:	S	M	T	W	T	F	S	COMMENTS
PRESENT START TIME								TIMECLOCK?
PRESENT STOP TIME								
REQUIRED START TIME	**0**	**700**	**700**	**700**	**700**	**700**	**0**	
REQUIRED STOP TIME	**0**	**1800**	**1800**	**1800**	**1800**	**1800**	**0**	

MONTHS ON:

J	F	M	A	M	J	J	A	S	O	N	D
1	**1**	**1**	**1**	**1**	**1**	**1**	**1**	**1**	**1**	**1**	**1**

CONTROLS:

	X	PNEUMATIC		ELECTRIC		ELEC'NIC		DDC	COMMENTS
THERMOSTAT TYPE:		SINGLE STPT	**X**	DUAL SETPNT		SETBACK			
SPACE SETPOINT (°F):	**70**	OCC HEAT	**65**	UNOCC HEAT		OCC COOL		UNOCC COOL	
OTHER SETPOINTS (°F):		HOT DECK		COLD DECK		MIXED AIR		OTHER	
DAMPER CONTROL:	**Y**	MIN OA (Y/N)	**Y**	MAX OA (Y/N)	**N**	RA (Y/N)	**Y**	EA (Y/N)	
		MA CONTROL		ECONO-DB		ECONO-ENT		OTHER	
DEMAND LIMIT:	**N**	(Y = YES ; N = NO)							

COMMENTS: **OUTSIDE AIR ENTERING MAU1 IS PREHEATED WITH A EXHAUST HEAT RECOVERY COIL FROM HRU-9.**
-7F OA -->PHC-->15F -->HC-->57F TO SPACE
LOAD OF HEATING COIL: 457 MBH

E M C ENGINEERS, INC.

PROJECT: UMCS STUDY
CLIENT CONTRACT NO.: DACA01-94-D-0033
CLIENT PROJ. ENG: STEVE ROWLEY
LOCATION: FORT DRUM, NY BLDG: **MNT HANGAR AVUM**

EMC NO.: 1406-006
DATE: 14-NOV-94
PREPARED BY: **CSW**
CHECKED BY: BG
FILE: **2070RMA6**

AIR HANDLING UNIT SURVEY OBSERVATIONS

RMAU6	AHU NO.	**HANGAR**	LOCATION (RM)
NONE	REF. SYS. SERVING AHU	**HANGAR**	SERVES AREA

UNIT TYPE:

X	SINGLE ZN		2-PIPE FC		4-PIPE FC		UNIT HTR		H&V
	MULTIZONE		DOUBLE DT		REHEAT		INDUCTION		VAV
	NUMBER OF ZONES			X	OTHER				
	COMMENT:	**MAKE-UP AIR HANDLING UNIT**							

NAMEPLATE:

					MFG.				MODEL
10.0	SUPPLY FAN HP				MFG.				MODEL
5.0	RET/EXH FAN HP				MFG.				MODEL
10080	CFM-HTG	**0**	CFM-CLG	**100%**	MIN %OA	**100%**	MAX %OA	**7.5%**	% HTG AREA SERVED
COMMENT:									

COILS:

	NONE		STM	X	HW		ELEC		MOD VLV	PREHEAT
	NONE		STM	X	HW		ELEC	X	MOD VLV	HEATING
X	NONE		STM		HW		ELEC		MOD VLV	REHEAT
X	NONE		STM		HW		EVAP MEDIA		MOD VLV	HUMID.
X	NONE		DX		CW				MOD VLV	COOLING

OPERATION:

HOURS ON:	S	M	T	W	T	F	S	COMMENTS
PRESENT START TIME								TIMECLOCK?
PRESENT STOP TIME								
REQUIRED START TIME	**0**	**700**	**700**	**700**	**700**	**700**	**0**	
REQUIRED STOP TIME	**0**	**1800**	**1800**	**1800**	**1800**	**1800**	**0**	

MONTHS ON:

J	F	M	A	M	J	J	A	S	O	N	D
1	**1**	**1**	**1**	**1**	**1**	**1**	**1**	**1**	**1**	**1**	**1**

CONTROLS:

	X	PNEUMATIC		ELECTRIC		ELEC'NIC		DDC	COMMENTS
THERMOSTAT TYPE:		SINGLE STPT	X	DUAL SETPNT		SETBACK			
SPACE SETPOINT (°F):	**70**	OCC HEAT	**65**	UNOCC HEAT		OCC COOL		UNOCC COOL	
OTHER SETPOINTS (°F):		HOT DECK		COLD DECK		MIXED AIR		OTHER	
DAMPER CONTROL:	Y	MIN OA (Y/N)	Y	MAX OA (Y/N)	N	RA (Y/N)	Y	EA (Y/N)	
		MA CONTROL		ECONO-DB		ECONO-ENT		OTHER	
DEMAND LIMIT:	N	(Y = YES ; N = NO)							

COMMENTS: **OUTSIDE AIR ENTERING MAU1 IS PREHEATED WITH A EXHAUST HEAT RECOVERY COIL FROM HRU-9.**

-7F OA -->PHC-->15F -->HC-->57F TO SPACE

LOAD OF HEATING COIL: 457 MBH

E M C ENGINEERS, INC.

PROJECT: UMCS STUDY
CLIENT CONTRACT NO.: DACA01-94-D-0033
CLIENT PROJ. ENG: STEVE ROWLEY
LOCATION: FORT DRUM, NY BLDG: **MNT HANGAR AVUM**

EMC NO.: 1406-006
DATE: 14-NOV-94
PREPARED BY: **CSW**
CHECKED BY: BG
FILE: **2070RMA7**

AIR HANDLING UNIT SURVEY OBSERVATIONS

RMAU7	AHU NO.	**HANGAR**	LOCATION (RM)
NONE	REF. SYS. SERVING AHU	**HANGAR**	SERVES AREA

UNIT TYPE:

X	SINGLE ZN		2-PIPE FC		4-PIPE FC		UNIT HTR		H&V
	MULTIZONE		DOUBLE DT		REHEAT		INDUCTION		VAV
	NUMBER OF ZONES			X	OTHER				
	COMMENT:	**MAKE-UP AIR HANDLING UNIT**							

NAMEPLATE:

					MFG.				MODEL
10.0	SUPPLY FAN HP				MFG.				MODEL
5.0	RET/EXH FAN HP				MFG.				MODEL
10080	CFM-HTG	**0**	CFM-CLG	**100%**	MIN %OA	**100%**	MAX %OA	**7.5%**	% HTG AREA SERVED
COMMENT:									

COILS:

	NONE		STM	**X**	HW		ELEC		MOD VLV	PREHEAT
	NONE		STM	**X**	HW		ELEC	**X**	MOD VLV	HEATING
X	NONE		STM		HW		ELEC		MOD VLV	REHEAT
X	NONE		STM		HW		EVAP MEDIA		MOD VLV	HUMID.
X	NONE		DX		CW				MOD VLV	COOLING

OPERATION:

HOURS ON:	S	M	T	W	T	F	S	COMMENTS
PRESENT START TIME								TIMECLOCK?
PRESENT STOP TIME								
REQUIRED START TIME	**0**	**700**	**700**	**700**	**700**	**700**	**0**	
REQUIRED STOP TIME	**0**	**1800**	**1800**	**1800**	**1800**	**1800**	**0**	

MONTHS ON:

J	F	M	A	M	J	J	A	S	O	N	D
1	**1**	**1**	**1**	**1**	**1**	**1**	**1**	**1**	**1**	**1**	**1**

CONTROLS:

	X	PNEUMATIC		ELECTRIC		ELEC'NIC		DDC	COMMENTS
THERMOSTAT TYPE:		SINGLE STPT	**X**	DUAL SETPNT		SETBACK			
SPACE SETPOINT (°F):	**70**	OCC HEAT	**65**	UNOCC HEAT		OCC COOL		UNOCC COOL	
OTHER SETPOINTS (°F):		HOT DECK		COLD DECK		MIXED AIR		OTHER	
DAMPER CONTROL:	**Y**	MIN OA (Y/N)	**Y**	MAX OA (Y/N)	**N**	RA (Y/N)	**Y**	EA (Y/N)	
		MA CONTROL		ECONO-DB		ECONO-ENT		OTHER	
DEMAND LIMIT:	**N**	(Y = YES ; N = NO)							
COMMENTS:	**OUTSIDE AIR ENTERING MAU1 IS PREHEATED WITH A EXHAUST HEAT RECOVERY COIL FROM HRU-9.**								
	-7F OA -->PHC-->15F -->HC-->57F TO SPACE								
	LOAD OF HEATING COIL: 457 MBH								

E M C ENGINEERS, INC.

PROJECT: UMCS STUDY
CLIENT CONTRACT NO.: DACA01-94-D-0033
CLIENT PROJ. ENG: STEVE ROWLEY
LOCATION: FORT DRUM, NY BLDG: **MNT HANGAR AVUM**

EMC NO.: 1406-006
DATE: 14-NOV-94
PREPARED BY: **CSW**
CHECKED BY: BG
FILE: **2070RMA8**

AIR HANDLING UNIT SURVEY OBSERVATIONS

RMAU8	AHU NO.	**HANGAR**	LOCATION (RM)
NONE	REF. SYS. SERVING AHU	**HANGAR**	SERVES AREA

UNIT TYPE:

X	SINGLE ZN		2-PIPE FC		4-PIPE FC		UNIT HTR		H&V
	MULTIZONE		DOUBLE DT		REHEAT		INDUCTION		VAV
	NUMBER OF ZONES			X	OTHER				
	COMMENT:	**MAKE-UP AIR HANDLING UNIT**							

NAMEPLATE:

					MFG.				MODEL
10.0	SUPPLY FAN HP				MFG.				MODEL
5.0	RET/EXH FAN HP				MFG.				MODEL
10080	CFM-HTG	**0**	CFM-CLG	**100%**	MIN %OA	**100%**	MAX %OA	**7.5%**	% HTG AREA SERVED
COMMENT:									

COILS:

	NONE		STM	X	HW		ELEC		MOD VLV	PREHEAT
	NONE		STM	X	HW		ELEC	X	MOD VLV	HEATING
X	NONE		STM		HW		ELEC		MOD VLV	REHEAT
X	NONE		STM		HW		EVAP MEDIA		MOD VLV	HUMID.
X	NONE		DX		CW				MOD VLV	COOLING

OPERATION:

HOURS ON:	S	M	T	W	T	F	S	COMMENTS
PRESENT START TIME								TIMECLOCK?
PRESENT STOP TIME								
REQUIRED START TIME	**0**	**700**	**700**	**700**	**700**	**700**	**0**	
REQUIRED STOP TIME	**0**	**1800**	**1800**	**1800**	**1800**	**1800**	**0**	

MONTHS ON:

J	F	M	A	M	J	J	A	S	O	N	D
1	**1**	**1**	**1**	**1**	**1**	**1**	**1**	**1**	**1**	**1**	**1**

CONTROLS:

	X	PNEUMATIC		ELECTRIC		ELEC'NIC		DDC	COMMENTS
THERMOSTAT TYPE:		SINGLE STPT	X	DUAL SETPNT		SETBACK			
SPACE SETPOINT (°F):	**70**	OCC HEAT	**65**	UNOCC HEAT		OCC COOL		UNOCC COOL	
OTHER SETPOINTS (°F):		HOT DECK		COLD DECK		MIXED AIR		OTHER	
DAMPER CONTROL:	**Y**	MIN OA (Y/N)	**Y**	MAX OA (Y/N)	**N**	RA (Y/N)	**Y**	EA (Y/N)	
		MA CONTROL		ECONO-DB		ECONO-ENT		OTHER	
DEMAND LIMIT:	**N**	(Y = YES ; N = NO)							

COMMENTS: **OUTSIDE AIR ENTERING MAU1 IS PREHEATED WITH A EXHAUST HEAT RECOVERY COIL FROM HRU-9.**

-7F OA -->PHC-->15F -->HC-->57F TO SPACE

LOAD OF HEATING COIL: 457 MBH

FIELD SURVEY NOTES

BUILDING 2792

E M C ENGINEERS, INC.

PROJECT: UMCS STUDY
CLIENT CONTRACT NO.: DACA01-94-D-0033
CLIENT PROJ. ENG: STEVE ROWLEY
LOCATION: FORT DRUM, NY BLDG: AMMO INSPECTION

EMC NO.: 1406-006
DATE: 14-NOV-94
PREPARED BY: CSW
CHECKED BY: BG
FILE: 2792BDS

VI. BUILDING DATA SURVEY OBSERVATIONS

BLDG NO: 2792 BLDG NAME: AMMO INSPECTION

ZONE NO.	1	FUNCTION:							
OCCUPANCY HOURS:	M-F	730	TO	1600	SAT	0	TO	0	
	SUN	0	TO	0					
PRESENT TEMP	WINTER OCC	70.0 øF		UNOCC	70.0 øF				
	SUMMER OCC	70.0 øF		UNOCC	70.0 øF				

ZONE NO.	2	FUNCTION: MECH ROOM							
OCCUPANCY HOURS:	M-F		TO		SAT		TO		
	SUN		TO						
PRESENT TEMP	WINTER OCC	50.0 øF		UNOCC	øF				
	SUMMER OCC	50.0 øF		UNOCC	øF				

ZONE NO.		FUNCTION:							
OCCUPANCY HOURS:	M-F		TO		SAT		TO		
	SUN		TO						
PRESENT TEMP	WINTER OCC	øF		UNOCC	øF				
	SUMMER OCC	øF		UNOCC	øF				

REMARKS: KEEP PNEUMATIC CONTROL AS IS.

UNIT HEATER SCHEDULE

NO.	LOCATION	WATER MBH	40% GLY. MBH	
UH1,2,3,4	INSPECT.BAYS	69.8	59.1	
UH5	VESTIBULE	27.4	23.2	
UH6	MECH. ROOM	27.4	23.2	
UH7	PUMP ROOM	-	-	5.0 KW ELECTRIC
UH8	RESTROOM	8.3	7	

EXHAUST FANS 3 HP TOTAL

E M C ENGINEERS, INC.

PROJECT: UMCS STUDY
CLIENT CONTRACT NO.: DACA01-94-D-0033
CLIENT PROJ. ENG: STEVE ROWLEY
LOCATION: FORT DRUM, NY BLDG: **AMMO INSPECTION**

EMC NO.: 1406-006
DATE: 14-NOV-94
PREPARED BY: **CSW**
CHECKED BY: BG
FILE: **2792AHU1**

AIR HANDLING UNIT SURVEY OBSERVATIONS

AHU1	AHU NO.	**MECH ROOM**	LOCATION (RM)
NONE	REF. SYS. SERVING AHU	**WHOLE BLDG**	SERVES AREA

UNIT TYPE:

X	SINGLE ZN		2-PIPE FC		4-PIPE FC		UNIT HTR		H&V
	MULTIZONE		DOUBLE DT		REHEAT		INDUCTION		VAV
	NUMBER OF ZONES				OTHER				
	COMMENT:								

NAMEPLATE:

					MFG.				MODEL
	SUPPLY FAN HP				MFG.				MODEL
	RET/EXH FAN HP				MFG.				MODEL
2500	CFM-HTG		CFM-CLG	**13%**	MIN %OA	**100%**	MAX %OA		% HTG AREA SERVED
COMMENT:		**239600 BTU/HR (40% GLYCOLHEATING COIL**							
		5000 CFM SUMMER VENT.							

COILS:

X	NONE		STM		HW		ELEC	MOD VLV	PREHEAT
	NONE		STM	X	HW		ELEC	MOD VLV	HEATING
X	NONE		STM		HW		ELEC	MOD VLV	REHEAT
X	NONE		STM		HW		EVAP MEDIA	MOD VLV	HUMID.
X	NONE		DX		CW			MOD VLV	COOLING

OPERATION:

HOURS ON:	S	M	T	W	T	F	S	COMMENTS
PRESENT START TIME	**600**	**600**	**600**	**600**	**600**	**600**	**600**	TIMECLOCK?
PRESENT STOP TIME	**1800**	**1800**	**1800**	**1800**	**1800**	**1800**	**1800**	
REQUIRED START TIME		**730**	**730**	**730**	**730**	**730**		
REQUIRED STOP TIME		**1600**	**1600**	**1600**	**1600**	**1600**		

MONTHS ON:

J	F	M	A	M	J	J	A	S	O	N	D
1	**1**	**1**	**1**	**1**	**1**	**1**	**1**	**1**	**1**	**1**	**1**

CONTROLS:

	X	PNEUMATIC		ELECTRIC		ELEC'NIC		DDC	COMMENTS
THERMOSTAT TYPE:	X	SINGLE STPT		DUAL SETPNT		SETBACK			
SPACE SETPOINT (°F):	**70**	OCC HEAT	**70**	UNOCC HEAT		OCC COOL		UNOCC COOL	
OTHER SETPOINTS (°F):		HOT DECK		COLD DECK		MIXED AIR		OTHER	
DAMPER CONTROL:	Y	MIN OA (Y/N)	Y	MAX OA (Y/N)	Y	RA (Y/N)	Y	EA (Y/N)	
		MA CONTROL		ECONO-DB		ECONO-ENT		OTHER	
DEMAND LIMIT:	N	(Y = YES ; N = NO)							
COMMENTS:									

E M C ENGINEERS, INC.

PROJECT: UMCS STUDY
CLIENT CONTRACT NO.: DACA01-94-D-0033
CLIENT PROJ. ENG: STEVE ROWLEY
LOCATION: FORT DRUM, NY BLDG: **AMMO INSPECTION**

EMC NO.: 1406-006
DATE: 14-NOV-94
PREPARED BY: **CSW**
CHECKED BY: BG
FILE: **2792BDS**

BOILER & CONVERTER SURVEY OBSERVATIONS

B1	BOILER/CONVERTER NO.	**MACHINE ROOM**	LOCATION (RM)
NONE	SOURCE OF HEATING (PLANT)	**WHOLE BUILDING**	SERVES AREA

UNIT TYPE:

	STEAM		PSIG	X	HW		TEMP.		BOILER TYPE:
X	NO.2 OIL		NO.6 OIL		N.GAS		ELEC		FUELS:
	STM/HW		HTHW/HW		HTHW/STM		OTHER		CONVERTER TYPE:
	SPACE HEAT		DHW		OTHER				USE:
COMMENT:									% HTG AREA SERVED
									BB RADIATION ONLY

NAMEPLATE:

WELL MCLAIN	MFG.	**BL976-W-5**	MODEL	**543000**	CAPACITY OUTPUT (BTUH)	
				794000	CAPACITY INPUT (BTUH)	
	MFG.		MODEL		CAPACITY OUTPUT (BTUH)	
					CAPACITY INPUT (BTUH)	
1	HW PUMP 1 - HP	**MARATHON ELEC.**	MFG.			MODEL
	HW PUMP 2 - HP		MFG.			MODEL
0.25	HW PUMP 3 - HP	**BALDOR COIL**	MFG.			MODEL
COMMENT:						

OPERATION:

HOURS ON:	S	M	T	W	T	F	S	COMMENT
PRESENT START TIME	**600**	**600**	**600**	**600**	**600**	**600**	**600**	TIMECLOCK?
PRESENT STOP TIME	**1800**	**1800**	**1800**	**1800**	**1800**	**1800**	**1800**	
REQUIRED START TIME		**430**	**430**	**430**	**430**	**430**		
REQUIRED STOP TIME		**1600**	**1600**	**1600**	**1600**	**1600**		

MONTHS ON:

J	F	M	A	M	J	J	A	S	O	N	D
1	**1**	**1**	**1**	**1**	**1**	**1**	**1**	**1**	**1**	**1**	**1**

CONTROLS:

	X	PNEUMATIC		ELECTRIC		ELEC'NIC		DDC	COMMENTS
SETPOINTS		PSIG		HW SUPPLY					
RESET CONTROL (oF):		HW HIGH		HW LOW		OA LOW		OA HIGH	
BURNER CONTROLS		O2 TRIM (Y/N)		OTHER					
COMMENTS:									

EMC NO.: 1406-006

PROJECT: UMCS STUDY
DATE: 14-NOV-94
CLIENT CONTRACT NO.: DACA01-94-D-0033
PREPARED BY: **CSW**
CLIENT PROJ. ENG: STEVE ROWLEY
CHECKED BY: BG
LOCATION: FORT DRUM, NY BLDG: **AMMO INSPECTION** FILE: **2792DHW**

DOMESTIC HW SURVEY OBSERVATIONS

DHW	BOILER/CONVERTER NO.	MECH ROOM	LOCATION (RM)
NONE	SOURCE OF HEATING (PLANT)	WHOLE BLDG	SERVES AREA

UNIT TYPE:

	NO.2 OIL		NO.6 OIL		N.GAS	X	ELEC		FUELS:
	STM/HW		HTHW/HW		HTHW/STM		OTHER		CONVERTER TYPE:
COMMENT:									

NAMEPLATE:

BRADFORD-WHITE	MFG.	**M-I-30R5SS-9**	MODEL	**3.8**	CAPACITY OUTPUT (BTUH,KW)
				KW	
	MFG.		MODEL		CAPACITY OUTPUT (BTUH,KW)

DOMESTIC HW CIRCULATION PUMP:				
	HW PUMP 1 - HP		MFG.	MODEL
	HW PUMP 2 - HP		MFG.	MODEL
	HW PUMP 3 - HP		MFG.	MODEL
COMMENT:				

DIMENSION:	DIAMETER (INCHS)		HEIGHT OR LENGTH (INCHES)	GALLON

OPERATION:

HOURS ON:	S	M	T	W	T	F	S	COMMENT
PRESENT START TIME	**0**	**0**	**0**	**0**	**0**	**0**	**0**	TIMECLOCK?
PRESENT STOP TIME	**2400**	**2400**	**2400**	**2400**	**2400**	**2400**	**2400**	
REQUIRED START TIME	**0**	**730**	**730**	**730**	**730**	**730**	**0**	
REQUIRED STOP TIME	**0**	**1600**	**1600**	**1600**	**1600**	**1600**	**0**	

MONTHS ON:

J	F	M	A	M	J	J	A	S	O	N	D
1	**1**	**1**	**1**	**1**	**1**	**1**	**1**	**1**	**1**	**1**	**1**

CONTROLS:

		PNEUMATIC		ELECTRIC		ELEC'NIC		DDC	COMMENTS
SETPOINTS				HW SUPPLY					
COMMENTS:									

FIELD SURVEY NOTES

BUILDING 4230

E M C ENGINEERS, INC.

PROJECT: UMCS STUDY
CLIENT CONTRACT NO.: DACA01-94-D-0033
CLIENT PROJ. ENG: STEVE ROWLEY
LOCATION: FORT DRUM, NY BLDG: 4230

EMC NO.: 1406-006
DATE: 11/17/94
PREPARED BY: BG
CHECKED BY:
FILE: FD4230

VI. BUILDING DATA SURVEY OBSERVATIONS

BLDG NO: 4230 BLDG NAME: MINI MALL

ZONE NO.	1	FUNCTION: RETAIL							
OCCUPANCY HOURS:	M-F	0	TO	2400	SAT	0	TO	2400	
	SUN	0	TO	2400					
PRESENT TEMP	WINTER OCC	72.0 øF		UNOCC	72.0 øF				
	SUMMER OCC	øF		UNOCC	øF				

ZONE NO.	2	FUNCTION:							
OCCUPANCY HOURS:	M-F	0	TO	2400	SAT	0	TO	2400	
	SUN	0	TO	2400					
PRESENT TEMP	WINTER OCC	72.0 øF		UNOCC	72.0 øF				
	SUMMER OCC	øF		UNOCC	øF				

ZONE NO.		FUNCTION:							
OCCUPANCY HOURS:	M-F		TO		SAT		TO		
	SUN		TO						
PRESENT TEMP	WINTER OCC	øF		UNOCC	øF				
	SUMMER OCC	øF		UNOCC	øF				

REMARKS: WALK IN REFRIGERATOR AND FREEZER. GAS CLOTHES DRYERS AND WASHERS.

ADDITIONAL LOADS

2.8 HP OF MISC. FANS

DDC CONTROLS

E M C ENGINEERS, INC.

PROJECT: UMCS STUDY
CLIENT CONTRACT NO.: DACA01-94-D-0033
CLIENT PROJ. ENG: STEVE ROWLEY
LOCATION: FORT DRUM, NY BLDG: **4230** MINI MALL

EMC NO.: 1406-006
DATE: 11/17/94
PREPARED BY: **BG**
CHECKED BY:
FILE: **4230BLR**

BOILER & CONVERTER SURVEY OBSERVATIONS

B-1,2	BOILER/CONVERTER NO.	**MECH ROOM**	LOCATION (RM)
	SOURCE OF HEATING (PLANT)	**RETAIL**	SERVES AREA

UNIT TYPE:

	STEAM		PSIG	X	HW		TEMP.		BOILER TYPE:
	NO.2 OIL		NO.6 OIL	X	N.GAS		ELEC		FUELS:
	STM/HW		HTHW/HW		HTHW/STM		OTHER		CONVERTER TYPE:
X	SPACE HEAT		DHW		OTHER				USE:
COMMENT:							**100%**	% HTG AREA SERVED	
							N/A	BB RADIATION ONLY	

NAMEPLATE:

WELL-MCLAIN	MFG.	**CP1461821**	MODEL	**300000**	CAPACITY OUTPUT (BTUH)
					CAPACITY INPUT (BTUH)
PNI INDUSTRIES	MFG.		MODEL	**640000**	CAPACITY OUTPUT (BTUH)
				800000	CAPACITY INPUT (BTUH)

0.75	HW PUMP 1 - HP	**BELL AND GOSSET**	MFG.	**SERIES 60 1.5A**	MODEL
0.75	HW PUMP 2 - HP	**BALDOR**	MFG.	**VL1306A**	MODEL
	HW PUMP 3 - HP		MFG.		MODEL

COMMENT:

OPERATION:

HOURS ON:	S	M	T	W	T	F	S	COMMENT
PRESENT START TIME	**0**	**0**	**0**	**0**	**0**	**0**	**0**	TIMECLOCK?
PRESENT STOP TIME	**2400**	**2400**	**2400**	**2400**	**2400**	**2400**	**2400**	
REQUIRED START TIME								
REQUIRED STOP TIME								

MONTHS ON:

J	F	M	A	M	J	J	A	S	O	N	D
1	**1**	**1**	**1**	**1**	**1**	**1**	**1**	**1**	**1**	**1**	**1**

CONTROLS:

		PNEUMATIC		ELECTRIC		ELEC'NIC	X	DDC	COMMENTS
SETPOINTS		PSIG		HW SUPPLY					
RESET CONTROL (oF):		HW HIGH		HW LOW		OA LOW		OA HIGH	
BURNER CONTROLS		O2 TRIM (Y/N)		OTHER					

COMMENTS:

E M C ENGINEERS, INC.

PROJECT: UMCS STUDY
CLIENT CONTRACT NO.: DACA01-94-D-0033
CLIENT PROJ. ENG: STEVE ROWLEY
LOCATION: FORT DRUM, NY BLDG: **4230** MINI MALL

EMC NO.: 1406-006
DATE: 10/17/94
PREPARED BY: **BG**
CHECKED BY:
FILE: **4230AH1**

MINI MALL AIR HANDLING UNIT SURVEY OBSERVATIONS

AH-1	AHU NO.	**RETAIL**	LOCATION (RM)
CU-1	REF. SYS. SERVING AHU	**RETAIL**	SERVES AREA

UNIT TYPE:

	SINGLE ZN		2-PIPE FC		4-PIPE FC		UNIT HTR		H&V
	MULTIZONE		DOUBLE DT	X	REHEAT		INDUCTION	X	VAV
	NUMBER OF ZONES				OTHER				
	COMMENT:	**231 MBH COOLING - 20 TONS**							

NAMEPLATE:

CARRIER				MFG.	**39E11**			MODEL
5.0	SUPPLY FAN HP			MFG.				MODEL
	RET/EXH FAN HP			MFG.				MODEL
5755	CFM-HTG	**5755**	CFM-CLG	**14%** MIN %OA	**100%**	MAX %OA	**75.0%**	% HTG AREA SERVED
COMMENT:								

COILS:

X	NONE		STM		HW		ELEC		MOD VLV	PREHEAT
X	NONE		STM		HW		ELEC		MOD VLV	HEATING
	NONE		STM	X	HW		ELEC	X	MOD VLV	REHEAT
X	NONE		STM		HW		EVAP MEDIA		MOD VLV	HUMID.
	NONE	X	DX		CW			X	MOD VLV	COOLING

OPERATION:

HOURS ON:	S	M	T	W	T	F	S	COMMENTS
PRESENT START TIME	**0**	**0**	**0**	**0**	**0**	**0**	**0**	TIMECLOCK?
PRESENT STOP TIME	**2400**	**2400**	**2400**	**2400**	**2400**	**2400**	**2400**	
REQUIRED START TIME								
REQUIRED STOP TIME								

MONTHS ON:

J	F	M	A	M	J	J	A	S	O	N	D
1	**1**	**1**	**1**	**1**	**1**	**1**	**1**	**1**	**1**	**1**	**1**

CONTROLS:

		PNEUMATIC		ELECTRIC		ELEC'NIC	X	DDC	COMMENTS
THERMOSTAT TYPE:		SINGLE STPT	X	DUAL SETPNT		SETBACK			
SPACE SETPOINT (°F):	**72**	OCC HEAT	**72**	UNOCC HEAT	**72**	OCC COOL	**72**	UNOCC COOL	
OTHER SETPOINTS (°F):		HOT DECK	**55**	COLD DECK	**55**	MIXED AIR		OTHER	
DAMPER CONTROL:	**Y**	MIN OA (Y/N)	**Y**	MAX OA (Y/N)	**Y**	RA (Y/N)	**Y**	EA (Y/N)	**RELIEF AIR**
		MA CONTROL	**Y**	ECONO-DB		ECONO-ENT		OTHER	**ACTUATOR**
DEMAND LIMIT:	**N**	(Y = YES ; N = NO)							
COMMENTS:									

E M C ENGINEERS, INC.

PROJECT: UMCS STUDY
CLIENT CONTRACT NO.: DACA01-94-D-0033
CLIENT PROJ. ENG: STEVE ROWLEY
LOCATION: FORT DRUM, NY BLDG: **4230** MINI MALL

EMC NO.: 1406-006
DATE: 10/17/94
PREPARED BY: **BG**
CHECKED BY:
FILE: **4230AH2**

AIR HANDLING UNIT SURVEY OBSERVATIONS

AH-2	AHU NO.	**LAUND**	LOCATION (RM)
CU-2	REF. SYS. SERVING AHU	**LAUND**	SERVES AREA

UNIT TYPE:

	SINGLE ZN		2-PIPE FC		4-PIPE FC		UNIT HTR		H&V
	MULTIZONE		DOUBLE DT	X	REHEAT		INDUCTION	X	VAV
	NUMBER OF ZONES				OTHER				
	COMMENT:	**144-MBH - 20 TONS COOLING 160 MBH HEATING**							

NAMEPLATE:

CARRIER				MFG.	**38BA009**			MODEL
5.0	SUPPLY FAN HP			MFG.				MODEL
1.5	RET/EXH FAN HP			MFG.				MODEL
3620	CFM-HTG	**3620**	CFM-CLG	**35%**	MIN %OA	**100%**	MAX %OA	**25.0%**	% HTG AREA SERVED
COMMENT:									

COILS:

X	NONE		STM		HW		ELEC		MOD VLV	PREHEAT
	NONE		STM	X	HW		ELEC	X	MOD VLV	HEATING
X	NONE		STM		HW		ELEC		MOD VLV	REHEAT
X	NONE		STM		HW		EVAP MEDIA		MOD VLV	HUMID.
	NONE	X	DX		CW			X	MOD VLV	COOLING

OPERATION:

HOURS ON:	S	M	T	W	T	F	S	COMMENTS
PRESENT START TIME	**0**	**0**	**0**	**0**	**0**	**0**	**0**	TIMECLOCK?
PRESENT STOP TIME	**2400**	**2400**	**2400**	**2400**	**2400**	**2400**	**2400**	
REQUIRED START TIME								
REQUIRED STOP TIME								

MONTHS ON:

J	F	M	A	M	J	J	A	S	O	N	D
1	**1**	**1**	**1**	**1**	**1**	**1**	**1**	**1**	**1**	**1**	**1**

CONTROLS:

		PNEUMATIC		ELECTRIC		ELEC'NIC	X	DDC	COMMENTS
THERMOSTAT TYPE:		SINGLE STPT		DUAL SETPNT		SETBACK			
SPACE SETPOINT (°F):	**72**	OCC HEAT	**72**	UNOCC HEAT	**72**	OCC COOL	**72**	UNOCC COOL	
OTHER SETPOINTS (°F):		HOT DECK	**55**	COLD DECK	**55**	MIXED AIR		OTHER	
DAMPER CONTROL:	**Y**	MIN OA (Y/N)	**Y**	MAX OA (Y/N)	**Y**	RA (Y/N)	**Y**	EA (Y/N)	**RELIEF AIR**
		MA CONTROL	**Y**	ECONO-DB		ECONO-ENT		OTHER	**ACTUATOR**
DEMAND LIMIT:	**N**	(Y = YES ; N = NO)							

COMMENTS:

E M C ENGINEERS, INC.								EMC NO.: 1406-006			
PROJECT: UMCS STUDY								DATE: 11/17/94			
CLIENT CONTRACT NO.: DACA01-94-D-0033								PREPARED BY: **BG**			
CLIENT PROJ. ENG: STEVE ROWLEY								CHECKED BY:			
LOCATION: FORT DRUM, NY			BLDG:	**4230**	MINI MALL			FILE: **4230AC1**			
REFRIGERATION EQUIPMENT SURVEY OBSERVATIONS											
ACCU-1		CHILLER/COMPRESSOR NO.				**OUTSIDE**		LOCATION (RM)			
UNIT TYPE:											
	CENTRIFUGAL WITH WATER SIDE COOLING TOWER					OTHER					
	RECIPROCATING WITH WATER SIDE COOLING TOWER					AHU'S SERVED					
	RECIPROCATING WITH AIR COOLED CONDENSING UNIT					AH-1					
	ABSORBTION WITH WATER SIDE COOLING TOWER										
X	AIR COOLED CONDENSING UNIT										
	CHW	X	DX		OTHER						
NAMEPLATE:											
CHILLER	**TRANE**	MFG.	**39E11**			MODEL				SERIAL NO.	
	VOLTS		AMPS		PH		HZ	**20**	CAPACITY (TONS)		
TOWER		MFG.				MODEL				# OF FANS	
	VOLTS		AMPS		PH		HZ		HP each		
CW PUMP		MFG.				MODEL				SERIAL NO.	
	VOLTS		AMPS		PH		HZ		HP		
CNW PUMP		MFG.				MODEL				SERIAL NO.	
	VOLTS		AMPS		PH		HZ		HP		
COMMENTS:											
OPERATION:											
HOURS ON:			S	M	T	W	T	F	S	COMMENT	
PRESENT START TIME			**0**	**0**	**0**	**0**	**0**	**0**	**0**	TIMECLOCK?	
PRESENT STOP TIME			**2400**	**2400**	**2400**	**2400**	**2400**	**2400**	**2400**		
REQUIRED START TIME											
REQUIRED STOP TIME											
MONTHS ON:											
J	F	M	A	M	J	J	A	S	O	N	D
1	**1**	**1**	**1**	**1**	**1**	**1**	**1**	**1**	**1**	**1**	**1**
CONTROLS:											
			PNEUMATIC		ELECTRIC		ELEC'NIC	X	DDC	COMMENTS	
SETPOINTS			CWS (oF)		CWR (oF)		CNWS (oF)		CNWR (oF)		
PANEL INDICATORS											
- PRESSURE			LITE-HI		LITE-LOW		GAUGES				
- TEMPERATURE			LITE-HI		LITE-LOW		GAUGES				
- OTHER											
COMMENTS:											

E M C ENGINEERS, INC.								EMC NO.: 1406-006			
PROJECT: UMCS STUDY								DATE: 11/17/94			
CLIENT CONTRACT NO.: DACA01-94-D-0033								PREPARED BY: **BG**			
CLIENT PROJ. ENG: STEVE ROWLEY								CHECKED BY:			
LOCATION: FORT DRUM, NY			BLDG:	**4230** MINI MALL				FILE: **4230AC2**			

REFRIGERATION EQUIPMENT SURVEY OBSERVATIONS

ACCU-2		CHILLER/COMPRESSOR NO.				**OUTSIDE**		LOCATION (RM)			

UNIT TYPE:

	CENTRIFUGAL WITH WATER SIDE COOLING TOWER					OTHER					
	RECIPROCATING WITH WATER SIDE COOLING TOWER					AHU'S SERVED					
	RECIPROCATING WITH AIR COOLED CONDENSING UNIT					**AH-2**					
	ABSORBTION WITH WATER SIDE COOLING TOWER										
X	AIR COOLED CONDENSING UNIT										
	CHW	X	DX		OTHER						

NAMEPLATE:

CHILLER	**TRANE**	MFG.	**39E08**			MODEL				SERIAL NO.	
	VOLTS		AMPS		PH		HZ	**10**	CAPACITY (TONS)		
TOWER		MFG.				MODEL				# OF FANS	
	VOLTS		AMPS		PH		HZ		HP each		
CW PUMP		MFG.				MODEL				SERIAL NO.	
	VOLTS		AMPS		PH		HZ		HP		
CNW PUMP		MFG.				MODEL				SERIAL NO.	
	VOLTS		AMPS		PH		HZ		HP		
COMMENTS:											

OPERATION:

HOURS ON:			S	M	T	W	T	F	S	COMMENT	
PRESENT START TIME			**0**	**0**	**0**	**0**	**0**	**0**	**0**	TIMECLOCK?	
PRESENT STOP TIME			**2400**	**2400**	**2400**	**2400**	**2400**	**2400**	**2400**		
REQUIRED START TIME											
REQUIRED STOP TIME											
MONTHS ON:											
J	F	M	A	M	J	J	A	S	O	N	D
1	**1**	**1**	**1**	**1**	**1**	**1**	**1**	**1**	**1**	**1**	**1**

CONTROLS:

			PNEUMATIC		ELECTRIC		ELEC'NIC	X	DDC	COMMENTS	
SETPOINTS			CWS (oF)		CWR (oF)		CNWS (oF)		CNWR (oF)		
PANEL INDICATORS											
- PRESSURE			LITE-HI		LITE-LOW		GAUGES				
- TEMPERATURE			LITE-HI		LITE-LOW		GAUGES				
- OTHER											
COMMENTS:											

FIELD SURVEY NOTES

BUILDING 4305

TYPICAL: 10050

E M C ENGINEERS, INC.

PROJECT: UMCS STUDY
CLIENT CONTRACT NO.: DACA01-94-D-0033
CLIENT PROJ. ENG: STEVE ROWLEY
LOCATION: FORT DRUM, NY BLDG: 4305

EMC NO.: 1406-006
DATE: 16-NOV-94
PREPARED BY: CSW
CHECKED BY: BG
FILE: 4305BDO

VI. BUILDING DATA SURVEY OBSERVATIONS

BLDG NO: 4305 BLDG NAME: FITNESS CENTER

ZONE NO.		FUNCTION:						
OCCUPANCY HOURS:	M-F	645	TO	2000	SAT	0	TO	0
	SUN	0	TO	0				
PRESENT TEMP	WINTER OCC	75.0 øF		UNOCC	65.0 øF			
	SUMMER OCC	øF		UNOCC	øF			

ZONE NO.		FUNCTION:						
OCCUPANCY HOURS:	M-F		TO		SAT		TO	
	SUN		TO					
PRESENT TEMP	WINTER OCC	øF		UNOCC	øF			
	SUMMER OCC	øF		UNOCC	øF			

ZONE NO.		FUNCTION:						
OCCUPANCY HOURS:	M-F		TO		SAT		TO	
	SUN		TO					
PRESENT TEMP	WINTER OCC	øF		UNOCC	øF			
	SUMMER OCC	øF		UNOCC	øF			

REMARKS: POOL: 81-82 F (WATER TEMPERATURE)

E M C ENGINEERS, INC.

PROJECT: UMCS STUDY
CLIENT CONTRACT NO.: DACA01-94-D-0033
CLIENT PROJ. ENG: STEVE ROWLEY
LOCATION: FORT DRUM, NY BLDG: **4305**

EMC NO.: 1406-006
DATE: 16-NOV-94
PREPARED BY: **CSW**
CHECKED BY: BG
FILE: **4305DW1&2**

DOMESTIC HW SURVEY OBSERVATIONS

DHW1&2	BOILER/CONVERTER NO.	MECH ROOM	LOCATION (RM)
	SOURCE OF HEATING (PLANT)		SERVES AREA

UNIT TYPE:

	NO.2 OIL		NO.6 OIL	X	N.GAS		ELEC		FUELS:
	STM/HW		HTHW/HW		HTHW/STM		OTHER		CONVERTER TYPE:
COMMENT:									

NAMEPLATE:

	MFG.	**S4G250A-PG SER#18657163**	MODEL	**540000**	CAPACITY OUTPUT (BTUH,KW)
	MFG.		MODEL	**540000**	CAPACITY OUTPUT (BTUH,KW)
DOMESTIC HW CIRCULATION PUMP:					
0.0833	HW PUMP 1 - HP	**B&G**	MFG.		MODEL
	HW PUMP 2 - HP		MFG.		MODEL
	HW PUMP 3 - HP		MFG.		MODEL
COMMENT:					

DIMENSION:	DIAMETER (INCHS)		HEIGHT OR LENGTH (INCHES)	GALLON

OPERATION:

HOURS ON:	S	M	T	W	T	F	S	COMMENT
PRESENT START TIME	**0**	**0**	**0**	**0**	**0**	**0**	**0**	TIMECLOCK?
PRESENT STOP TIME	**2400**	**2400**	**2400**	**2400**	**2400**	**2400**	**2400**	**NO**
REQUIRED START TIME								
REQUIRED STOP TIME								

MONTHS ON:

J	F	M	A	M	J	J	A	S	O	N	D
1	**1**	**1**	**1**	**1**	**1**	**1**	**1**	**1**	**1**	**1**	**1**

CONTROLS:

		PNEUMATIC		ELECTRIC		ELEC'NIC		DDC	COMMENTS
SETPOINTS				HW SUPPLY					
COMMENTS:									

E M C ENGINEERS, INC.

PROJECT: UMCS STUDY
CLIENT CONTRACT NO.: DACA01-94-D-0033
CLIENT PROJ. ENG: STEVE ROWLEY
LOCATION: FORT DRUM, NY BLDG: **4305**

EMC NO.: 1406-006
DATE: 16-NOV-94
PREPARED BY: **BG**
CHECKED BY:
FILE: **4305HV1**

AIR HANDLING UNIT SURVEY OBSERVATIONS

HV	AHU NO.	MER	LOCATION (RM)
	REF. SYS. SERVING AHU	**RAQ.,CORRIDOR,GYM**	SERVES AREA

UNIT TYPE:

X	SINGLE ZN		2-PIPE FC		4-PIPE FC		UNIT HTR	X	H&V
	MULTIZONE		DOUBLE DT	X	REHEAT		INDUCTION		VAV
	NUMBER OF ZONES				OTHER				
	COMMENT:								

NAMEPLATE:

	MCQUAY				MFG.	**CYF15ODH**			MODEL
30.0	SUPPLY FAN HP	**WESINGHOUSE**			MFG.				MODEL
30.0	RET/EXH FAN HP	**MCQUAY**			MFG.				MODEL
38230	CFM-HTG		CFM-CLG	**15%**	MIN %OA	**100%**	MAX %OA	**44.4%**	% HTG AREA SERVED
COMMENT:									

COILS:

X	NONE		STM		HW		ELEC		MOD VLV	PREHEAT
X	NONE		STM		HW		ELEC		MOD VLV	HEATING
	NONE		STM	X	HW		ELEC		MOD VLV	REHEAT
X	NONE		STM		HW		EVAP MEDIA		MOD VLV	HUMID.
X	NONE		DX		CW				MOD VLV	COOLING

OPERATION:

HOURS ON:	S	M	T	W	T	F	S	COMMENTS
PRESENT START TIME								TIMECLOCK?
PRESENT STOP TIME								
REQUIRED START TIME								
REQUIRED STOP TIME								

MONTHS ON:

J	F	M	A	M	J	J	A	S	O	N	D
1	**1**	**1**	**1**	**0**	**0**	**0**	**0**	**0**	**1**	**1**	**1**

CONTROLS:

		PNEUMATIC		ELECTRIC		ELEC'NIC		DDC	COMMENTS
THERMOSTAT TYPE:		SINGLE STPT		DUAL SETPNT		SETBACK			
SPACE SETPOINT (°F):		OCC HEAT		UNOCC HEAT		OCC COOL		UNOCC COOL	
OTHER SETPOINTS (°F):		HOT DECK		COLD DECK		MIXED AIR		OTHER	
DAMPER CONTROL:	Y	MIN OA (Y/N)	Y	MAX OA (Y/N)	Y	RA (Y/N)	Y	EA (Y/N)	
		MA CONTROL		ECONO-DB		ECONO-ENT		OTHER	
DEMAND LIMIT:		(Y = YES ; N = NO)							
COMMENTS:									

E M C ENGINEERS, INC.

PROJECT: UMCS STUDY
CLIENT CONTRACT NO.: DACA01-94-D-0033
CLIENT PROJ. ENG: STEVE ROWLEY
LOCATION: FORT DRUM, NY BLDG: **4305**

EMC NO.: 1406-006
DATE: 16-NOV-94
PREPARED BY: **CSW**
CHECKED BY: BG
FILE: **4305HV2A**

AIR HANDLING UNIT SURVEY OBSERVATIONS

HV2A	AHU NO.	**FAN ROOM**	LOCATION (RM)
	REF. SYS. SERVING AHU	**POOL AREA**	SERVES AREA

UNIT TYPE:

X	SINGLE ZN		2-PIPE FC		4-PIPE FC		UNIT HTR	**X**	H&V
	MULTIZONE		DOUBLE DT		REHEAT		INDUCTION		VAV
	NUMBER OF ZONES				OTHER				
	COMMENT:								

NAMEPLATE:

	MCQUAY			MFG.	**MOD L5L122DH**			MODEL
10.0	SUPPLY FAN HP			MFG.				MODEL
7.5	RET/EXH FAN HP			MFG.				MODEL
13780	CFM-HTG	**0**	CFM-CLG	**9%**	MIN %OA	**100%**	MAX %OA	**20.0%**	% HTG AREA SERVED
COMMENT:									

COILS:

	NONE		STM		HW		ELEC		MOD VLV	PREHEAT
	NONE		STM		HW		ELEC		MOD VLV	HEATING
	NONE		STM		HW		ELEC		MOD VLV	REHEAT
	NONE		STM		HW		EVAP MEDIA		MOD VLV	HUMID.
	NONE		DX		CW				MOD VLV	COOLING

OPERATION:

HOURS ON:	S	M	T	W	T	F	S	COMMENTS
PRESENT START TIME								TIMECLOCK?
PRESENT STOP TIME								
REQUIRED START TIME								
REQUIRED STOP TIME								

MONTHS ON:

J	F	M	A	M	J	J	A	S	O	N	D
1	**1**	**1**	**1**	**0**	**0**	**0**	**0**	**0**	**1**	**1**	**1**

CONTROLS:

	X	PNEUMATIC		ELECTRIC		ELEC'NIC		DDC	COMMENTS
THERMOSTAT TYPE:		SINGLE STPT		DUAL SETPNT		SETBACK			
SPACE SETPOINT (°F):		OCC HEAT		UNOCC HEAT		OCC COOL		UNOCC COOL	
OTHER SETPOINTS (°F):		HOT DECK		COLD DECK		MIXED AIR		OTHER	
DAMPER CONTROL:	**Y**	MIN OA (Y/N)	**Y**	MAX OA (Y/N)	**Y**	RA (Y/N)	**N**	EA (Y/N)	
	Y	MA CONTROL	**Y**	ECONO-DB		ECONO-ENT		OTHER	
DEMAND LIMIT:		(Y = YES ; N = NO)							

COMMENTS: **THERE IS A DEHUMIDIFICATION UNIT ASSOCIATED WITH THIS UNIT.**

E M C ENGINEERS, INC.

PROJECT: UMCS STUDY
CLIENT CONTRACT NO.: DACA01-94-D-0033
CLIENT PROJ. ENG: STEVE ROWLEY
LOCATION: FORT DRUM, NY BLDG: **4305**

EMC NO.: 1406-006
DATE: 22-NOV-94
PREPARED BY: **CSW**
CHECKED BY: BG
FILE: **4305HV2B**

AIR HANDLING UNIT SURVEY OBSERVATIONS

HV2B	AHU NO.	**FAN FOOM**	LOCATION (RM)
	REF. SYS. SERVING AHU	**POOL AREA-OVERHEAD AIR S**	SERVES AREA

UNIT TYPE:

X	SINGLE ZN		2-PIPE FC		4-PIPE FC		UNIT HTR	**X**	H&V
	MULTIZONE		DOUBLE DT		REHEAT		INDUCTION		VAV
	NUMBER OF ZONES				OTHER				
	COMMENT:								

NAMEPLATE:

				MFG.				MODEL
3.0	SUPPLY FAN HP			MFG.				MODEL
3.0	RET/EXH FAN HP			MFG.				MODEL
10840	CFM-HTG		CFM-CLG	**0%**	MIN %OA	**100%**	MAX %OA	**15.9%**	% HTG AREA SERVED
COMMENT:									

COILS:

X	NONE		STM		HW		ELEC		MOD VLV	PREHEAT
	NONE		STM		HW		ELEC	**X**	MOD VLV	HEATING
X	NONE		STM		HW		ELEC		MOD VLV	REHEAT
X	NONE		STM		HW		EVAP MEDIA		MOD VLV	HUMID.
X	NONE		DX		CW				MOD VLV	COOLING

OPERATION:

HOURS ON:	S	M	T	W	T	F	S	COMMENTS
PRESENT START TIME								TIMECLOCK?
PRESENT STOP TIME								
REQUIRED START TIME								
REQUIRED STOP TIME								

MONTHS ON:

J	F	M	A	M	J	J	A	S	O	N	D
1	**1**	**1**	**1**	**1**	**1**	**1**	**1**	**1**	**1**	**1**	**1**

CONTROLS:

		PNEUMATIC		ELECTRIC		ELEC'NIC		DDC	COMMENTS
THERMOSTAT TYPE:		SINGLE STPT		DUAL SETPNT		SETBACK			
SPACE SETPOINT (°F):		OCC HEAT		UNOCC HEAT		OCC COOL		UNOCC COOL	
OTHER SETPOINTS (°F):		HOT DECK		COLD DECK		MIXED AIR		OTHER	
DAMPER CONTROL:	**Y**	MIN OA (Y/N)	**Y**	MAX OA (Y/N)	**Y**	RA (Y/N)	**N**	EA (Y/N)	
		MA CONTROL		ECONO-DB		ECONO-ENT		OTHER	
DEMAND LIMIT:		(Y = YES ; N = NO)							
COMMENTS:									

E M C ENGINEERS, INC.

PROJECT: UMCS STUDY
CLIENT CONTRACT NO.: DACA01-94-D-0033
CLIENT PROJ. ENG: STEVE ROWLEY
LOCATION: FORT DRUM, NY BLDG: **4305**

EMC NO.: 1406-006
DATE: 22-NOV-94
PREPARED BY: **CSW**
CHECKED BY: BG
FILE: **4305HV3**

AIR HANDLING UNIT SURVEY OBSERVATIONS

HV3	AHU NO.	**FAN FOOM**	LOCATION (RM)
	REF. SYS. SERVING AHU	**LOB/VEND,DIR,ISSUE,TRAINE**	SERVES AREA

UNIT TYPE:

X	SINGLE ZN		2-PIPE FC		4-PIPE FC		UNIT HTR	X	H&V
	MULTIZONE		DOUBLE DT	X	REHEAT		INDUCTION		VAV
	NUMBER OF ZONES				OTHER				
	COMMENT:								

NAMEPLATE:

				MFG.				MODEL
5.0	SUPPLY FAN HP			MFG.				MODEL
1.5	RET/EXH FAN HP			MFG.				MODEL
5120	CFM-HTG		CFM-CLG	**26%**	MIN %OA	**100%**	MAX %OA	**7.5%**	% HTG AREA SERVED
COMMENT:									

COILS:

X	NONE		STM		HW		ELEC		MOD VLV	PREHEAT
X	NONE		STM		HW		ELEC		MOD VLV	HEATING
	NONE		STM	X	HW		ELEC		MOD VLV	REHEAT
X	NONE		STM		HW		EVAP MEDIA		MOD VLV	HUMID.
X	NONE		DX		CW				MOD VLV	COOLING

OPERATION:

HOURS ON:	S	M	T	W	T	F	S	COMMENTS
PRESENT START TIME								TIMECLOCK?
PRESENT STOP TIME								
REQUIRED START TIME								
REQUIRED STOP TIME								

MONTHS ON:

J	F	M	A	M	J	J	A	S	O	N	D
1	**1**	**1**	**1**	**1**	**1**	**1**	**1**	**1**	**1**	**1**	**1**

CONTROLS:

	X	PNEUMATIC		ELECTRIC		ELEC'NIC		DDC	COMMENTS
THERMOSTAT TYPE:		SINGLE STPT		DUAL SETPNT		SETBACK			
SPACE SETPOINT (°F):		OCC HEAT		UNOCC HEAT		OCC COOL		UNOCC COOL	
OTHER SETPOINTS (°F):		HOT DECK		COLD DECK		MIXED AIR		OTHER	
DAMPER CONTROL:	Y	MIN OA (Y/N)	Y	MAX OA (Y/N)	Y	RA (Y/N)	Y	EA (Y/N)	
		MA CONTROL		ECONO-DB		ECONO-ENT		OTHER	
DEMAND LIMIT:		(Y = YES ; N = NO)							
COMMENTS:									

E M C ENGINEERS, INC.

PROJECT: UMCS STUDY
CLIENT CONTRACT NO.: DACA01-94-D-0033
CLIENT PROJ. ENG: STEVE ROWLEY
LOCATION: FORT DRUM, NY BLDG: **4305**

EMC NO.: 1406-006
DATE: 16-NOV-94
PREPARED BY: **CSW**
CHECKED BY: BG
FILE: **4305RAD1**

PERIMETER RADIATION SURVEY OBSERVATIONS

RAD1	PER RAD NO.		LOCATION (RM)
	SOURCE OF HEATING	**WHOLE BLDG EXCEPT POOL**	SERVES AREA

UNIT TYPE:

	STEAM	**X**	HW		ELECTRIC				
	OTHER								
	COMMENT:								

NAMEPLATE:

2	HW PUMP 1 - HP		MFG.		MODEL
	HW PUMP 2 - HP		MFG.		MODEL
	HW PUMP 3 - HP		MFG.		MODEL
	HW PUMP 4 - HP		MFG.		MODEL
COMMENT:				**60.0%**	% AREA HEATING

OPERATION:

HOURS ON:	S	M	T	W	T	F	S	COMMENT
PRESENT START TIME								TIMECLOCK?
PRESENT STOP TIME								
REQUIRED START TIME								
REQUIRED STOP TIME								

MONTHS ON:

J	F	M	A	M	J	J	A	S	O	N	D
1	**1**	**1**	**0**	**0**	**0**	**0**	**0**	**0**	**1**	**1**	**1**

CONTROLS:

		PNEUMATIC		ELECTRIC		ELEC'NIC		DDC	COMMENTS
RADIATION CONTROL:		NONE		2-WAY VLV		3-WAY VLV		OTHER	
SPACE SETPOINT (øF):		OCC HEAT		UNOCC HEAT		OCC COOL		UNOCC COOL	
RESET CONTROL (øF):		HW HIGH		HW LOW		OA LOW		OA HIGH	
COMMENTS:									

E M C ENGINEERS, INC.

PROJECT: UMCS STUDY
CLIENT CONTRACT NO.: DACA01-94-D-0033
CLIENT PROJ. ENG: STEVE ROWLEY
LOCATION: FORT DRUM, NY BLDG: **4305**

EMC NO.: 1406-006
DATE: 16-NOV-94
PREPARED BY: **CSW**
CHECKED BY: BG
FILE: **4305RAD2**

PERIMETER RADIATION SURVEY OBSERVATIONS

RAD2	PER RAD NO.		LOCATION (RM)
	SOURCE OF HEATING	**POOL AREA**	SERVES AREA

UNIT TYPE:

	STEAM	**X**	HW		ELECTRIC				
	OTHER								
	COMMENT:								

NAMEPLATE:

2	HW PUMP 1 - HP		MFG.		MODEL
	HW PUMP 2 - HP		MFG.		MODEL
	HW PUMP 3 - HP		MFG.		MODEL
	HW PUMP 4 - HP		MFG.		MODEL
COMMENT:				**40.0%**	% AREA HEATING

OPERATION:

HOURS ON:	S	M	T	W	T	F	S	COMMENT
PRESENT START TIME								TIMECLOCK?
PRESENT STOP TIME								
REQUIRED START TIME								
REQUIRED STOP TIME								

MONTHS ON:

J	F	M	A	M	J	J	A	S	O	N	D
1	**1**	**1**	**0**	**0**	**0**	**0**	**0**	**0**	**1**	**1**	**1**

CONTROLS:

		PNEUMATIC		ELECTRIC		ELEC'NIC		DDC	COMMENTS
RADIATION CONTROL:		NONE		2-WAY VLV		3-WAY VLV		OTHER	
SPACE SETPOINT (øF):		OCC HEAT		UNOCC HEAT		OCC COOL		UNOCC COOL	
RESET CONTROL (øF):		HW HIGH		HW LOW		OA LOW		OA HIGH	
COMMENTS:									

E M C ENGINEERS, INC.

PROJECT: UMCS STUDY
CLIENT CONTRACT NO.: DACA01-94-D-0033
CLIENT PROJ. ENG: STEVE ROWLEY
LOCATION: FORT DRUM, NY BLDG: **4305**

EMC NO.: 1406-006
DATE: 16-NOV-94
PREPARED BY: **CSW**
CHECKED BY: BG
FILE: **4305B1&2**

BOILER & CONVERTER SURVEY OBSERVATIONS

B1&2	BOILER/CONVERTER NO.	**BOILER ROOM**	LOCATION (RM)
	SOURCE OF HEATING (PLANT)		SERVES AREA

UNIT TYPE:

	STEAM		PSIG	X	HW		TEMP.		BOILER TYPE:
X	NO.2 OIL		NO.6 OIL		N.GAS		ELEC		FUELS:
	STM/HW		HTHW/HW		HTHW/STM		OTHER		CONVERTER TYPE:
	SPACE HEAT		DHW		OTHER				USE:
COMMENT:							**60%**	% HTG AREA SERVED	
								BB RADIATION ONLY	

NAMEPLATE:

WELL-MCLAIN	MFG.		MODEL	**1632000**	CAPACITY OUTPUT (BTUH)
					CAPACITY INPUT (BTUH)
WELL-MCLAIN	MFG.		MODEL	**1632000**	CAPACITY OUTPUT (BTUH)
					CAPACITY INPUT (BTUH)
2	HW PUMP 1 - HP	**LINCOLN**	MFG.		MODEL
2	HW PUMP 2 - HP	**MARATHON**	MFG.		MODEL
4	HW PUMP 3 - HP	**MARATHON**	MFG.		MODEL
COMMENT:					

OPERATION:

HOURS ON:	S	M	T	W	T	F	S	COMMENT
PRESENT START TIME	**0**	**0**	**0**	**0**	**0**	**0**	**0**	TIMECLOCK?
PRESENT STOP TIME	**2400**	**2400**	**2400**	**2400**	**2400**	**2400**	**2400**	
REQUIRED START TIME								
REQUIRED STOP TIME								

MONTHS ON:

J	F	M	A	M	J	J	A	S	O	N	D
1	**1**	**1**	**1**	**0**	**0**	**0**	**0**	**0**	**1**	**1**	**1**

CONTROLS:

		PNEUMATIC		ELECTRIC		ELEC'NIC		DDC	COMMENTS
SETPOINTS		PSIG		HW SUPPLY					
RESET CONTROL (oF):		HW HIGH		HW LOW		OA LOW		OA HIGH	
BURNER CONTROLS		O2 TRIM (Y/N)		OTHER					
COMMENTS:									

FIELD SURVEY NOTES

BUILDING 4330

E M C ENGINEERS, INC.

PROJECT: UMCS STUDY
CLIENT CONTRACT NO.: DACA01-94-D-0033
CLIENT PROJ. ENG: STEVE ROWLEY
LOCATION: FORT DRUM, NY BLDG: 4330

EMC NO.: 1406-006
DATE: 17-NOV-94
PREPARED BY: CSW
CHECKED BY: BG
FILE: 4330BDS

VI. BUILDING DATA SURVEY OBSERVATIONS

BLDG NO: 4330 BLDG NAME: RECREATION CENTER

ZONE NO.		FUNCTION:							
OCCUPANCY HOURS:	M-F	700	TO	2100	SAT	700	TO	1700	
	SUN	700	TO	1700					
PRESENT TEMP	WINTER OCC	øF		UNOCC	øF				
	SUMMER OCC	øF		UNOCC	øF				

ZONE NO.		FUNCTION:							
OCCUPANCY HOURS:	M-F		TO		SAT		TO		
	SUN		TO						
PRESENT TEMP	WINTER OCC	øF		UNOCC	øF				
	SUMMER OCC	øF		UNOCC	øF				

ZONE NO.		FUNCTION:							
OCCUPANCY HOURS:	M-F		TO		SAT		TO		
	SUN		TO						
PRESENT TEMP	WINTER OCC	øF		UNOCC	øF				
	SUMMER OCC	øF		UNOCC	øF				

REMARKS:

E M C ENGINEERS, INC.

PROJECT: UMCS STUDY
CLIENT CONTRACT NO.: DACA01-94-D-0033
CLIENT PROJ. ENG: STEVE ROWLEY
LOCATION: FORT DRUM, NY BLDG: **4330**

EMC NO.: 1406-006
DATE: 17-NOV-94
PREPARED BY: **CSW**
CHECKED BY: BG
FILE: **4330B1**

BOILER & CONVERTER SURVEY OBSERVATIONS

B1	BOILER/CONVERTER NO.	**MER**	LOCATION (RM)
	SOURCE OF HEATING (PLANT)	**WHOLE BLDG**	SERVES AREA

UNIT TYPE:

	STEAM		PSIG	X	HW		TEMP.		BOILER TYPE:
X	NO.2 OIL		NO.6 OIL	X	N.GAS		ELEC		FUELS:
	STM/HW		HTHW/HW		HTHW/STM		OTHER		CONVERTER TYPE:
	SPACE HEAT		DHW		OTHER				USE:
COMME	OIL IS A BACKUP FOR NAT. GAS SYSTEM							~~100%~~	% HTG AREA SERVED
								18%	BB RADIATION ONLY

NAMEPLATE:

BURNHAM	MFG.	**PF506**	MODEL	**950000**	CAPACITY OUTPUT (BTUH)
					CAPACITY INPUT (BTUH)
	MFG.		MODEL		CAPACITY OUTPUT (BTUH)
					CAPACITY INPUT (BTUH)
2	HW PUMP 1 - HP	**EMERSON**	MFG.		MODEL
2	HW PUMP 2 - HP	**EMERSON**	MFG.	**P63CYZ-3339**	MODEL
	HW PUMP 3 - HP		MFG.		MODEL
COMMENT:					

OPERATION:

HOURS ON:	S	M	T	W	T	F	S	COMMENT
PRESENT START TIME								TIMECLOCK?
PRESENT STOP TIME								
REQUIRED START TIME	**700**	**700**	**700**	**700**	**700**	**700**	**700**	
REQUIRED STOP TIME	**1700**	**2100**	**2100**	**2100**	**2100**	**2100**	**1700**	

MONTHS ON:

J	F	M	A	M	J	J	A	S	O	N	D
1	**1**	**1**	**1**	**0**	**0**	**0**	**0**	**0**	**1**	**1**	**1**

CONTROLS:

		PNEUMATIC		ELECTRIC		ELEC'NIC		DDC	COMMENTS
SETPOINTS		PSIG		HW SUPPLY					
RESET CONTROL (oF):		HW HIGH		HW LOW		OA LOW		OA HIGH	
BURNER CONTROLS		O2 TRIM (Y/N)		OTHER					
COMMENTS:									

PROJECT: UMCS STUDY
CLIENT CONTRACT NO.: DACA01-94-D-0033
CLIENT PROJ. ENG: STEVE ROWLEY
LOCATION: FORT DRUM, NY BLDG: **4330**

EMC NO.: 1406-006
DATE: 17-NOV-94
PREPARED BY: **BG**
CHECKED BY:
FILE: **4330DHW1**

DOMESTIC HW SURVEY OBSERVATIONS

DHW-1	BOILER/CONVERTER NO.		LOCATION (RM)
	SOURCE OF HEATING (PLANT)		SERVES AREA

UNIT TYPE:

	NO.2 OIL		NO.6 OIL	X	N.GAS		ELEC		FUELS:
	STM/HW		HTHW/HW		HTHW/STM		OTHER		CONVERTER TYPE:
COMMENT:									

NAMEPLATE:

AO SMITH	MFG.	**EC65914**	MODEL		CAPACITY OUTPUT (BTUH,KW)
	MFG.		MODEL		CAPACITY OUTPUT (BTUH,KW)
DOMESTIC HW CIRCULATION PUMP:					
	HW PUMP 1 - HP		MFG.		MODEL
	HW PUMP 2 - HP		MFG.		MODEL
	HW PUMP 3 - HP		MFG.		MODEL
COMMENT:					

DIMENSION:	DIAMETER (INCHS)		HEIGHT OR LENGTH (INCHES)	GALLON

OPERATION:

HOURS ON:	S	M	T	W	T	F	S	COMMENT
PRESENT START TIME	**0**	**0**	**0**	**0**	**0**	**0**	**0**	TIMECLOCK?
PRESENT STOP TIME	**2400**	**2400**	**2400**	**2400**	**2400**	**2400**	**2400**	
REQUIRED START TIME								
REQUIRED STOP TIME								

MONTHS ON:

J	F	M	A	M	J	J	A	S	O	N	D
1	**1**	**1**	**1**	**1**	**1**	**1**	**1**	**1**	**1**	**1**	**1**

CONTROLS:

		PNEUMATIC		ELECTRIC		ELEC'NIC		DDC	COMMENTS
SETPOINTS				HW SUPPLY					
COMMENTS:									

E M C ENGINEERS, INC.

PROJECT: UMCS STUDY
CLIENT CONTRACT NO.: DACA01-94-D-0033
CLIENT PROJ. ENG: STEVE ROWLEY
LOCATION: FORT DRUM, NY BLDG: **4330**

EMC NO.: 1406-006
DATE: 17-NOV-94
PREPARED BY: **BG**
CHECKED BY:
FILE: **4330FCU1**

AIR HANDLING UNIT SURVEY OBSERVATIONS

FCU1	AHU NO.	**MER**	LOCATION (RM)
	REF. SYS. SERVING AHU	**BLDG VENTILATION**	SERVES AREA

UNIT TYPE:

X	SINGLE ZN		2-PIPE FC		4-PIPE FC		UNIT HTR	X	H&V
	MULTIZONE		DOUBLE DT		REHEAT		INDUCTION		VAV
	NUMBER OF ZONES				OTHER				
	COMMENT:	**FAN AND COIL UNIT**							

NAMEPLATE:

					MFG.				MODEL
20.0	SUPPLY FAN HP				MFG.				MODEL
10.0	RET/EXH FAN HP				MFG.				MODEL
19145	CFM-HTG		CFM-CLG	**0%**	MIN %OA	**100%**	MAX %OA	**100.0%**	% HTG AREA SERVED
COMMENT:									

COILS:

X	NONE		STM		HW		ELEC		MOD VLV	PREHEAT
	NONE		STM	X	HW		ELEC		MOD VLV	HEATING
X	NONE		STM		HW		ELEC		MOD VLV	REHEAT
X	NONE		STM		HW		EVAP MEDIA		MOD VLV	HUMID.
X	NONE		DX		CW				MOD VLV	COOLING

OPERATION:

HOURS ON:	S	M	T	W	T	F	S	COMMENTS
PRESENT START TIME								TIMECLOCK?
PRESENT STOP TIME								
REQUIRED START TIME								
REQUIRED STOP TIME								

MONTHS ON:

J	F	M	A	M	J	J	A	S	O	N	D
1	**1**	**1**	**1**	**0**	**0**	**0**	**0**	**0**	**1**	**1**	**1**

CONTROLS:

		PNEUMATIC		ELECTRIC		ELEC'NIC		DDC	COMMENTS
THERMOSTAT TYPE:		SINGLE STPT		DUAL SETPNT		SETBACK			
SPACE SETPOINT (°F):		OCC HEAT		UNOCC HEAT		OCC COOL		UNOCC COOL	
OTHER SETPOINTS (°F):		HOT DECK		COLD DECK		MIXED AIR		OTHER	
DAMPER CONTROL:	Y	MIN OA (Y/N)	Y	MAX OA (Y/N)	Y	RA (Y/N)	N	EA (Y/N)	
		MA CONTROL		ECONO-DB		ECONO-ENT		OTHER	
DEMAND LIMIT:		(Y = YES ; N = NO)							

COMMENTS:

E M C ENGINEERS, INC.

PROJECT: UMCS STUDY
CLIENT CONTRACT NO.: DACA01-94-D-0033
CLIENT PROJ. ENG: STEVE ROWLEY
LOCATION: FORT DRUM, NY BLDG: **4330**

EMC NO.: 1406-006
DATE: DEC-94
PREPARED BY: **CSW**
CHECKED BY: BG
FILE: **4330RAD**

PERIMETER RADIATION SURVEY OBSERVATIONS

FT-A&B	PER RAD NO.		LOCATION (RM)
	SOURCE OF HEATING	WHOLE BLDG	SERVES AREA

UNIT TYPE:

	STEAM	X	HW		ELECTRIC				
	OTHER								
	COMMENT:								

NAMEPLATE:

2	HW PUMP 1 - HP		MFG.		MODEL
2	HW PUMP 2 - HP		MFG.		MODEL
	HW PUMP 3 - HP		MFG.		MODEL
	HW PUMP 4 - HP		MFG.		MODEL
COMMENT:				**100.0%**	% AREA HEATING
				→ 2	29% 18

OPERATION:

HOURS ON:	S	M	T	W	T	F	S	COMMENT
PRESENT START TIME	**0**	**0**	**0**	**0**	**0**	**0**	**0**	TIMECLOCK?
PRESENT STOP TIME	**2400**	**2400**	**2400**	**2400**	**2400**	**2400**	**2400**	
REQUIRED START TIME								
REQUIRED STOP TIME								

MONTHS ON:

J	F	M	A	M	J	J	A	S	O	N	D
1	**1**	**1**	**1**	**0**	**0**	**0**	**0**	**0**	**1**	**1**	**1**

CONTROLS:

	X	PNEUMATIC		ELECTRIC		ELEC'NIC		DDC	COMMENTS
RADIATION CONTROL:		NONE		2-WAY VLV		3-WAY VLV		OTHER	
SPACE SETPOINT (øF):		OCC HEAT		UNOCC HEAT		OCC COOL		UNOCC COOL	
RESET CONTROL (øF):		HW HIGH		HW LOW		OA LOW		OA HIGH	
COMMENTS:									

FIELD SURVEY NOTES

BUILDING 4530

E M C ENGINEERS, INC.

PROJECT: UMCS STUDY
CLIENT CONTRACT NO.: DACA01-94-D-0033
CLIENT PROJ. ENG: STEVE ROWLEY
LOCATION: FORT DRUM, NY BLDG: 4530

EMC NO.: 1406-006
DATE: 15-NOV-94
PREPARED BY: CSW
CHECKED BY: BG
FILE: 4530BDS1

VI. BUILDING DATA SURVEY OBSERVATIONS

BLDG NO: 4530 BLDG NAME: SMA

ZONE NO.	A		FUNCTION:		ADMIN&MGT				
OCCUPANCY HOURS:		M-F	730	TO	1630	SAT	0	TO	0
		SUN	0	TO	0				
PRESENT TEMP	WINTER OCC		72.0 øF		UNOCC	65.0 øF			INCREASED OPERATION DURING
	SUMMER OCC		øF		UNOCC	øF			DEPLOYMENT

ZONE NO.	B		FUNCTION:		MAJOR COMPONENTS				
OCCUPANCY HOURS:		M-F	730	TO	1630	SAT	0	TO	0
		SUN	0	TO	0				
PRESENT TEMP	WINTER OCC		70.0 øF		UNOCC	65.0 øF			
	SUMMER OCC		øF		UNOCC	øF			

ZONE NO.	C		FUNCTION:		SHOP SUPPLY				
OCCUPANCY HOURS:		M-F	730	TO	1630	SAT	0	TO	0
		SUN	0	TO	0				
PRESENT TEMP	WINTER OCC		70.0 øF		UNOCC	65.0 øF			
	SUMMER OCC		øF		UNOCC	øF			

REMARKS: HOURS SUBJECT TO CHANGE DURING DEPLOYMENT. DURING SUMMER OPERATION IS 10 HOURS PER DAY, 5 DAYS PER WEEK.
15 HRS RUN TIME IN VEH EXH. RM.

E M C ENGINEERS, INC.

PROJECT: UMCS STUDY
CLIENT CONTRACT NO.: DACA01-94-D-0033
CLIENT PROJ. ENG: STEVE ROWLEY
LOCATION: FORT DRUM, NY BLDG: 4530

EMC NO.: 1406-006
DATE: 15-NOV-94
PREPARED BY: CSW
CHECKED BY: BG
FILE: 4530BDS2

VI. BUILDING DATA SURVEY OBSERVATIONS

BLDG NO: 4530 BLDG NAME: SMA

ZONE NO.	D		FUNCTION:		TOOL ROOM, Q.A. ADMIN, COMM./ELECTRONICS					
OCCUPANCY HOURS:	M-F	730	TO	1630	SAT	0	TO	0		
	SUN	0	TO	0						
PRESENT TEMP	WINTER OCC	65.0 øF		UNOCC	65.0 øF					
	SUMMER OCC	65.0 øF		UNOCC	65.0 øF					

TEMP MUST BE MAINTAINED AT 65 F +- 5 F OCCUPIED AND UNOCCUPIED TO PROTECT TEST EQUIPMENT.

ZONE NO.	E		FUNCTION:		CNAVAS, BATTERY MAINTENANCE AND CHARGING					
OCCUPANCY HOURS:	M-F	730	TO	1630	SAT	0	TO	0		
	SUN	0	TO	0						
PRESENT TEMP	WINTER OCC	70.0 øF		UNOCC	65.0 øF					
	SUMMER OCC	øF		UNOCC	øF					

ZONE NO.	F		FUNCTION:		FURNATURE, ARTILLERY, RADIATOR, MACHINE SHOP					
OCCUPANCY HOURS:	M-F	730	TO	1630	SAT	0	TO	0		
	SUN	0	TO	0						
PRESENT TEMP	WINTER OCC	70.0 øF		UNOCC	65.0 øF					
	SUMMER OCC	øF		UNOCC	øF					

REMARKS: 8 SPACE HEATERS.
BATTERY CHARGING ROOM: BATTERY CHARGERS RUN CONTINUOUSLY AS DO THE ASSOCIATED EXHAUST FANS.
SEPERATE AIR HANDLING SYSTEM FOR ROOM 171.
ROOM 163 HAS AC.

AREA 'D' ELECTRIC REHEAT COIL, SERVES AC 3, 25.0 MBH CAPACITY
AREA 'F',SMALL ARMS, DEHUMIDIFIER, 3/4 HP MOTOR
AREA 'F' MER II ERC 1 & 2 , SERVERS AC1&2, 51.0 MBH CAPACITY

E M C ENGINEERS, INC.

PROJECT: UMCS STUDY
CLIENT CONTRACT NO.: DACA01-94-D-0033
CLIENT PROJ. ENG: STEVE ROWLEY
LOCATION: FORT DRUM, NY BLDG: 4530

EMC NO.: 1406-006
DATE: 15-NOV-94
PREPARED BY: CSW
CHECKED BY: BG
FILE: 4530BDS2

VI. BUILDING DATA SURVEY OBSERVATIONS

BLDG NO: 4530 BLDG NAME: SMA

ZONE NO.	G		FUNCTION:		WHEELED VEHICLE, SPECIAL PURPOSE EQUIPMENT				
OCCUPANCY HOURS:	M-F	730	TO	1630	SAT	0	TO	0	
	SUN	0	TO	0					
PRESENT TEMP	WINTER OCC	70.0 øF		UNOCC	65.0 øF				
	SUMMER OCC	øF		UNOCC	øF				

ZONE NO.	H		FUNCTION:		WHEELED VEHICLE, SPECIAL PURP. EQUIP., PAINT BOOTH				
OCCUPANCY HOURS:	M-F	730	TO	1630	SAT	0	TO	0	
	SUN	0	TO	0					
PRESENT TEMP	WINTER OCC	70.0 øF		UNOCC	65.0 øF				
	SUMMER OCC	øF		UNOCC	øF				

ZONE NO.	I		FUNCTION:		WELDING/PAINT/BODY SPECIALTY BAY				
OCCUPANCY HOURS:	M-F	730	TO	1630	SAT	0	TO	0	
	SUN	0	TO	0					
PRESENT TEMP	WINTER OCC	70.0 øF		UNOCC	65.0 øF				
	SUMMER OCC	øF		UNOCC	øF				

REMARKS: 8 SPACE HEATERS.
BATTERY CHARGING ROOM: BATTERY CHARGERS RUN CONTINUOUSLY AS DO THE ASSOCIATED EXHAUST FANS.
SEPERATE AIR HANDLING SYSTEM FOR ROOM 171.
ROOM 163 HAS AC.

E M C ENGINEERS, INC.

PROJECT: UMCS STUDY
CLIENT CONTRACT NO.: DACA01-94-D-0033
CLIENT PROJ. ENG: STEVE ROWLEY
LOCATION: FORT DRUM, NY BLDG: **4530**

EMC NO.: 1406-006
DATE: 15-NOV-94
PREPARED BY: **CSW**
CHECKED BY: BG
FILE: **4530HTP1**

BOILER & CONVERTER SURVEY OBSERVATIONS

HTP1	BOILER/CONVERTER NO.	**UTILITY ROOM**	LOCATION (RM)
COGEN	SOURCE OF HEATING (PLANT)	**WHOLE BLDG**	SERVES AREA

UNIT TYPE:

	STEAM		PSIG		HW		TEMP.	BOILER TYPE:
	NO.2 OIL		NO.6 OIL		N.GAS		ELEC	FUELS:
	STM/HW		HTHW/HW		HTHW/STM	X	OTHER	CONVERTER TYPE:
	SPACE HEAT		DHW		OTHER			USE:
COMMENT:	HTHW-(40%GLYCOL SOLUTION)						@ 100%	% HTG AREA SERVED
								BB RADIATION ONLY

NAMEPLATE:

B&G	MFG.	**HTP2-1900**	MODEL	**22400000**	CAPACITY OUTPUT (BTUH)
					CAPACITY INPUT (BTUH)
	MFG.		MODEL		CAPACITY OUTPUT (BTUH)
					CAPACITY INPUT (BTUH)
75	HW PUMP 1 - HP	**B&G**	MFG.		MODEL
	HW PUMP 2 - HP		MFG.		MODEL
	HW PUMP 3 - HP		MFG.		MODEL
COMMENT:	**LARGEST B&G PACKAGE**				

OPERATION:

HOURS ON:	S	M	T	W	T	F	S	COMMENT
PRESENT START TIME	**0**	**0**	**0**	**0**	**0**	**0**	**0**	TIMECLOCK?
PRESENT STOP TIME	**2400**	**2400**	**2400**	**2400**	**2400**	**2400**	**2400**	
REQUIRED START TIME	**630**	**630**	**630**	**630**	**630**	**630**	**630**	
REQUIRED STOP TIME	**2100**	**2100**	**2100**	**2100**	**2100**	**2100**	**2100**	

MONTHS ON:

J	F	M	A	M	J	J	A	S	O	N	D
1	**1**	**1**	**1**	**0**	**0**	**0**	**0**	**0**	**1**	**1**	**1**

CONTROLS:

		PNEUMATIC		ELECTRIC		ELEC'NIC	DDC	COMMENTS
SETPOINTS		PSIG		HW SUPPLY				
RESET CONTROL (oF):		HW HIGH		HW LOW		OA LOW	OA HIGH	
BURNER CONTROLS		O2 TRIM (Y/N)		OTHER				
COMMENTS:								

E M C ENGINEERS, INC.

PROJECT: UMCS STUDY
CLIENT CONTRACT NO.: DACA01-94-D-0033
CLIENT PROJ. ENG: STEVE ROWLEY
LOCATION: FORT DRUM, NY BLDG: **4530**

EMC NO.: 1406-006
DATE: 15-N0V-94
PREPARED BY: **CSW**
CHECKED BY: BG
FILE: **4530HV1**

AIR HANDLING UNIT SURVEY OBSERVATIONS

HV1	AHU NO.	**MER-I**	LOCATION (RM)
	REF. SYS. SERVING AHU	**AREA 'A'**	SERVES AREA

UNIT TYPE:

X	SINGLE ZN		2-PIPE FC		4-PIPE FC		UNIT HTR	X	H&V
	MULTIZONE		DOUBLE DT		REHEAT		INDUCTION		VAV
	NUMBER OF ZONES				OTHER				
	COMMENT:								

NAMEPLATE:

	TRANE			MFG.	**SER#K88K31322**			MODEL
40.0	SUPPLY FAN HP	**CENTURY E-PLUS**		MFG.				MODEL
20.0	RET/EXH FAN HP			MFG.				MODEL
23765	CFM-HTG		CFM-CLG	**20%**	MIN %OA	**100%**	MAX %OA	**11.1%**	% HTG AREA SERVED
COMMENT:									

16
10%
10.1

COILS:

X	NONE		STM		HW		ELEC		MOD VLV	PREHEAT
	NONE		STM	X	HW		ELEC		MOD VLV	HEATING
X	NONE		STM		HW		ELEC		MOD VLV	REHEAT
X	NONE		STM		HW		EVAP MEDIA		MOD VLV	HUMID.
X	NONE		DX		CW				MOD VLV	COOLING

OPERATION:

HOURS ON:	S	M	T	W	T	F	S	COMMENTS
PRESENT START TIME	**0**	**0**	**0**	**0**	**0**	**0**	**0**	TIMECLOCK?
PRESENT STOP TIME	**2400**	**2400**	**2400**	**2400**	**2400**	**2400**	**2400**	
REQUIRED START TIME	**630**	**630**	**630**	**630**	**630**	**630**	**630**	
REQUIRED STOP TIME	**2100**	**2100**	**2100**	**2100**	**2100**	**2100**	**2100**	

MONTHS ON:

J	F	M	A	M	J	J	A	S	O	N	D
1	**1**	**1**	**1**	**0**	**0**	**0**	**0**	**0**	**1**	**1**	**1**

CONTROLS:

		PNEUMATIC		ELECTRIC		ELEC'NIC		DDC	COMMENTS
THERMOSTAT TYPE:		SINGLE STPT		DUAL SETPNT		SETBACK			
SPACE SETPOINT (°F):		OCC HEAT		UNOCC HEAT		OCC COOL		UNOCC COOL	
OTHER SETPOINTS (°F):		HOT DECK		COLD DECK		MIXED AIR		OTHER	
DAMPER CONTROL:	Y	MIN OA (Y/N)	Y	MAX OA (Y/N)	Y	RA (Y/N)	N	EA (Y/N)	
		MA CONTROL		ECONO-DB		ECONO-ENT		OTHER	
DEMAND LIMIT:		(Y = YES ; N = NO)							
COMMENTS:									

E M C ENGINEERS, INC.

PROJECT: UMCS STUDY
CLIENT CONTRACT NO.: DACA01-94-D-0033
CLIENT PROJ. ENG: STEVE ROWLEY
LOCATION: FORT DRUM, NY BLDG: **4530**

EMC NO.: 1406-006
DATE: 15-N0V-94
PREPARED BY: **CSW**
CHECKED BY: BG
FILE: **4530HV2**

AIR HANDLING UNIT SURVEY OBSERVATIONS

HV2	AHU NO.	**MER-I**	LOCATION (RM)
	REF. SYS. SERVING AHU	**AREA 'B'**	SERVES AREA

UNIT TYPE:

X	SINGLE ZN		2-PIPE FC		4-PIPE FC		UNIT HTR	**X**	H&V
	MULTIZONE		DOUBLE DT		REHEAT		INDUCTION		VAV
	NUMBER OF ZONES				OTHER				
	COMMENT:								

NAMEPLATE:

			MFG.					MODEL
75.0	SUPPLY FAN HP	**MAGNETEK**	MFG.					MODEL
15.0	RET/EXH FAN HP	**MAGNETEK**	MFG.					MODEL
30170	CFM-HTG	CFM-CLG **74%**	MIN %OA	**100%**	MAX %OA	**11.1%**	% HTG AREA SERVED	
COMMENT:								

COILS:

X	NONE		STM		HW		ELEC	MOD VLV	PREHEAT
	NONE		STM	**X**	HW		ELEC	MOD VLV	HEATING
X	NONE		STM		HW		ELEC	MOD VLV	REHEAT
X	NONE		STM		HW		EVAP MEDIA	MOD VLV	HUMID.
X	NONE		DX		CW			MOD VLV	COOLING

OPERATION:

HOURS ON:	S	M	T	W	T	F	S	COMMENTS
PRESENT START TIME	**0**	**0**	**0**	**0**	**0**	**0**	**0**	TIMECLOCK?
PRESENT STOP TIME	**2400**	**2400**	**2400**	**2400**	**2400**	**2400**	**2400**	
REQUIRED START TIME	**630**	**630**	**630**	**630**	**630**	**630**	**630**	
REQUIRED STOP TIME	**2100**	**2100**	**2100**	**2100**	**2100**	**2100**	**2100**	

MONTHS ON:

J	F	M	A	M	J	J	A	S	O	N	D
1	**1**	**1**	**1**	**0**	**0**	**0**	**0**	**0**	**1**	**1**	**1**

CONTROLS:

		PNEUMATIC		ELECTRIC		ELEC'NIC		DDC	COMMENTS
THERMOSTAT TYPE:		SINGLE STPT		DUAL SETPNT		SETBACK			
SPACE SETPOINT (°F):		OCC HEAT		UNOCC HEAT		OCC COOL		UNOCC COOL	
OTHER SETPOINTS (°F):		HOT DECK		COLD DECK		MIXED AIR		OTHER	
DAMPER CONTROL:	**Y**	MIN OA (Y/N)	**Y**	MAX OA (Y/N)	**Y**	RA (Y/N)	**N**	EA (Y/N)	
		MA CONTROL		ECONO-DB		ECONO-ENT		OTHER	
DEMAND LIMIT:		(Y = YES ; N = NO)							
COMMENTS:									

E M C ENGINEERS, INC.

PROJECT: UMCS STUDY
CLIENT CONTRACT NO.: DACA01-94-D-0033
CLIENT PROJ. ENG: STEVE ROWLEY
LOCATION: FORT DRUM, NY BLDG: **4530**

EMC NO.: 1406-006
DATE: 15-N0V-94
PREPARED BY: **CSW**
CHECKED BY: BG
FILE: **4530HV3**

AIR HANDLING UNIT SURVEY OBSERVATIONS

HV3	AHU NO.	**MER-I**	LOCATION (RM)
	REF. SYS. SERVING AHU	**AREA 'D'**	SERVES AREA

UNIT TYPE:

X	SINGLE ZN		2-PIPE FC		4-PIPE FC		UNIT HTR	**X**	H&V
	MULTIZONE		DOUBLE DT		REHEAT		INDUCTION		VAV
	NUMBER OF ZONES				OTHER				
	COMMENT:								

NAMEPLATE:

	TRANE			MFG.	**SER#K88K31552**			MODEL
70.0	SUPPLY FAN HP	**CENTURY E-PLUS**		MFG.		1460		MODEL
20.0	RET/EXH FAN HP			MFG.		1091		MODEL
24090	CFM-HTG		CFM-CLG	**33%**	MIN %OA	**100%**	MAX %OA	**11.1%**	% HTG AREA SERVED
COMMENT:								10.1	

COILS:

X	NONE		STM		HW		ELEC		MOD VLV	PREHEAT
	NONE		STM	**X**	HW		ELEC		MOD VLV	HEATING
X	NONE		STM		HW		ELEC		MOD VLV	REHEAT
X	NONE		STM		HW		EVAP MEDIA		MOD VLV	HUMID.
X	NONE		DX		CW				MOD VLV	COOLING

OPERATION:

HOURS ON:	S	M	T	W	T	F	S	COMMENTS
PRESENT START TIME	**0**	**0**	**0**	**0**	**0**	**0**	**0**	TIMECLOCK?
PRESENT STOP TIME	**2400**	**2400**	**2400**	**2400**	**2400**	**2400**	**2400**	
REQUIRED START TIME	**630**	**630**	**630**	**630**	**630**	**630**	**630**	
REQUIRED STOP TIME	**2100**	**2100**	**2100**	**2100**	**2100**	**2100**	**2100**	

MONTHS ON:

J	F	M	A	M	J	J	A	S	O	N	D
1	**1**	**1**	**1**	**0**	**0**	**0**	**0**	**0**	**1**	**1**	**1**

CONTROLS:

		PNEUMATIC		ELECTRIC		ELEC'NIC		DDC	COMMENTS
THERMOSTAT TYPE:		SINGLE STPT		DUAL SETPNT		SETBACK			
SPACE SETPOINT (°F):		OCC HEAT		UNOCC HEAT		OCC COOL		UNOCC COOL	
OTHER SETPOINTS (°F):		HOT DECK		COLD DECK		MIXED AIR		OTHER	
DAMPER CONTROL:	**Y**	MIN OA (Y/N)	**Y**	MAX OA (Y/N)	**Y**	RA (Y/N)	**N**	EA (Y/N)	
		MA CONTROL		ECONO-DB		ECONO-ENT		OTHER	
DEMAND LIMIT:		(Y = YES ; N = NO)							
COMMENTS:									

E M C ENGINEERS, INC.

PROJECT: UMCS STUDY
CLIENT CONTRACT NO.: DACA01-94-D-0033
CLIENT PROJ. ENG: STEVE ROWLEY
LOCATION: FORT DRUM, NY BLDG: **4530**

EMC NO.: 1406-006
DATE: 15-NOV-94
PREPARED BY: **CSW**
CHECKED BY: BG
FILE: **4530MAU1**

AIR HANDLING UNIT SURVEY OBSERVATIONS

MAU1	AHU NO.	**MER-I**	LOCATION (RM)
	REF. SYS. SERVING AHU	**AREA 'G' AND 'H'**	SERVES AREA

UNIT TYPE:

X	SINGLE ZN		2-PIPE FC		4-PIPE FC		UNIT HTR	X	H&V
	MULTIZONE		DOUBLE DT		REHEAT		INDUCTION		VAV
	NUMBER OF ZONES				OTHER				
	COMMENT:								

NAMEPLATE:

					MFG.				MODEL
30.0	SUPPLY FAN HP				MFG.				MODEL
	RET/EXH FAN HP				MFG.				MODEL
43380	CFM-HTG		CFM-CLG	**100%**	MIN %OA	**100%**	MAX %OA	**22.2%**	% HTG AREA SERVED
COMMENT:									

COILS:

X	NONE		STM		HW		ELEC		MOD VLV	PREHEAT
	NONE		STM	X	HW		ELEC		MOD VLV	HEATING
X	NONE		STM		HW		ELEC		MOD VLV	REHEAT
X	NONE		STM		HW		EVAP MEDIA		MOD VLV	HUMID.
X	NONE		DX		CW				MOD VLV	COOLING

OPERATION:

HOURS ON:	S	M	T	W	T	F	S	COMMENTS
PRESENT START TIME	**0**	**0**	**0**	**0**	**0**	**0**	**0**	TIMECLOCK?
PRESENT STOP TIME	**2400**	**2400**	**2400**	**2400**	**2400**	**2400**	**2400**	
REQUIRED START TIME	**630**	**630**	**630**	**630**	**630**	**630**	**630**	
REQUIRED STOP TIME	**2100**	**2100**	**2100**	**2100**	**2100**	**2100**	**2100**	

MONTHS ON:

J	F	M	A	M	J	J	A	S	O	N	D
1	**1**	**1**	**1**	**1**	**1**	**1**	**1**	**1**	**1**	**1**	**1**

CONTROLS:

	X	PNEUMATIC		ELECTRIC		ELEC'NIC		DDC	COMMENTS
THERMOSTAT TYPE:		SINGLE STPT		DUAL SETPNT		SETBACK			
SPACE SETPOINT (°F):		OCC HEAT		UNOCC HEAT		OCC COOL		UNOCC COOL	
OTHER SETPOINTS (°F):		HOT DECK		COLD DECK		MIXED AIR		OTHER	
DAMPER CONTROL:	**N**	MIN OA (Y/N)	**Y**	MAX OA (Y/N)	**N**	RA (Y/N)	**N**	EA (Y/N)	
		MA CONTROL		ECONO-DB		ECONO-ENT		OTHER	
DEMAND LIMIT:		(Y = YES ; N = NO)							
COMMENTS:									

E M C ENGINEERS, INC.

PROJECT: UMCS STUDY
CLIENT CONTRACT NO.: DACA01-94-D-0033
CLIENT PROJ. ENG: STEVE ROWLEY
LOCATION: FORT DRUM, NY BLDG: **SMA**

EMC NO.: 1406-006
DATE: 15-NOV-94
PREPARED BY: **CSW**
CHECKED BY:
FILE: **4530MAU2**

AIR HANDLING UNIT SURVEY OBSERVATIONS

MAU2	AHU NO.	**MER-I**	LOCATION (RM)
NONE	REF. SYS. SERVING AHU	**AREA 'G' AND 'H'**	SERVES AREA

UNIT TYPE:

X	SINGLE ZN		2-PIPE FC		4-PIPE FC		UNIT HTR	**X**	H&V
	MULTIZONE		DOUBLE DT		REHEAT		INDUCTION		VAV
	NUMBER OF ZONES				OTHER				
	COMMENT:								

NAMEPLATE:

				MFG.				MODEL
30.0	SUPPLY FAN HP			MFG.				MODEL
	RET/EXH FAN HP			MFG.				MODEL
43380	CFM-HTG		CFM-CLG	**100%**	MIN %OA	**100%**	MAX %OA	**22.2%**	% HTG AREA SERVED
COMMENT:									

COILS:

X	NONE		STM		HW		ELEC		MOD VLV	PREHEAT
	NONE		STM	**X**	HW		ELEC	**X**	MOD VLV	HEATING
X	NONE		STM		HW		ELEC		MOD VLV	REHEAT
X	NONE		STM		HW		EVAP MEDIA		MOD VLV	HUMID.
X	NONE		DX		CW				MOD VLV	COOLING

OPERATION:

HOURS ON:	S	M	T	W	T	F	S	COMMENTS
PRESENT START TIME	**0**	**0**	**0**	**0**	**0**	**0**	**0**	TIMECLOCK?
PRESENT STOP TIME	**2400**	**2400**	**2400**	**2400**	**2400**	**2400**	**2400**	
REQUIRED START TIME	**630**	**630**	**630**	**630**	**630**	**630**	**630**	
REQUIRED STOP TIME	**2100**	**2100**	**2100**	**2100**	**2100**	**2100**	**2100**	

MONTHS ON:

J	F	M	A	M	J	J	A	S	O	N	D
1	**1**	**1**	**1**	**1**	**1**	**1**	**1**	**1**	**1**	**1**	**1**

CONTROLS:

	X	PNEUMATIC		ELECTRIC		ELEC'NIC		DDC	COMMENTS
THERMOSTAT TYPE:		SINGLE STPT	**X**	DUAL SETPNT		SETBACK			
SPACE SETPOINT (°F):	**70**	OCC HEAT	**65**	UNOCC HEAT		OCC COOL		UNOCC COOL	
OTHER SETPOINTS (°F):		HOT DECK		COLD DECK		MIXED AIR		OTHER	
DAMPER CONTROL:	**N**	MIN OA (Y/N)	**Y**	MAX OA (Y/N)	**N**	RA (Y/N)	**N**	EA (Y/N)	
		MA CONTROL		ECONO-DB		ECONO-ENT		OTHER	
DEMAND LIMIT:	**N**	(Y = YES ; N = NO)							
COMMENTS:									

E M C ENGINEERS, INC.

PROJECT: UMCS STUDY
CLIENT CONTRACT NO.: DACA01-94-D-0033
CLIENT PROJ. ENG: STEVE ROWLEY
LOCATION: FORT DRUM, NY BLDG: **4530**

EMC NO.: 1406-006
DATE: 15-NOV-94
PREPARED BY: **CSW**
CHECKED BY:
FILE: **4530MAU3**

AIR HANDLING UNIT SURVEY OBSERVATIONS

MAU3	AHU NO.	**MER-I11**	LOCATION (RM)
NONE	REF. SYS. SERVING AHU	**AREA 'I'**	SERVES AREA

UNIT TYPE:

X	SINGLE ZN		2-PIPE FC		4-PIPE FC		UNIT HTR	**X**	H&V
	MULTIZONE		DOUBLE DT		REHEAT		INDUCTION		VAV
	NUMBER OF ZONES				OTHER				
	COMMENT:								

NAMEPLATE:

				MFG.				MODEL
20.0	SUPPLY FAN HP			MFG.				MODEL
	RET/EXH FAN HP			MFG.				MODEL
30360	CFM-HTG		CFM-CLG	**100%**	MIN %OA	**100%**	MAX %OA	**11.1%**	% HTG AREA SERVED
COMMENT:									

COILS:

X	NONE		STM		HW		ELEC		MOD VLV	PREHEAT
	NONE		STM	**X**	HW		ELEC	**X**	MOD VLV	HEATING
X	NONE		STM		HW		ELEC		MOD VLV	REHEAT
X	NONE		STM		HW		EVAP MEDIA		MOD VLV	HUMID.
X	NONE		DX		CW				MOD VLV	COOLING

OPERATION:

HOURS ON:	S	M	T	W	T	F	S	COMMENTS
PRESENT START TIME	**0**	**0**	**0**	**0**	**0**	**0**	**0**	TIMECLOCK?
PRESENT STOP TIME	**2400**	**2400**	**2400**	**2400**	**2400**	**2400**	**2400**	
REQUIRED START TIME	**630**	**630**	**630**	**630**	**630**	**630**	**630**	
REQUIRED STOP TIME	**2100**	**2100**	**2100**	**2100**	**2100**	**2100**	**2100**	

MONTHS ON:

J	F	M	A	M	J	J	A	S	O	N	D
1	**1**	**1**	**1**	**1**	**1**	**1**	**1**	**1**	**1**	**1**	**1**

CONTROLS:

	X	PNEUMATIC		ELECTRIC		ELEC'NIC		DDC	COMMENTS
THERMOSTAT TYPE:		SINGLE STPT	**X**	DUAL SETPNT		SETBACK			
SPACE SETPOINT (°F):	**70**	OCC HEAT	**65**	UNOCC HEAT		OCC COOL		UNOCC COOL	
OTHER SETPOINTS (°F):		HOT DECK		COLD DECK		MIXED AIR		OTHER	
DAMPER CONTROL:	**N**	MIN OA (Y/N)	**Y**	MAX OA (Y/N)	**N**	RA (Y/N)	**N**	EA (Y/N)	
		MA CONTROL		ECONO-DB		ECONO-ENT		OTHER	
DEMAND LIMIT:	**N**	(Y = YES ; N = NO)							
COMMENTS:									

E M C ENGINEERS, INC.

PROJECT: UMCS STUDY
CLIENT CONTRACT NO.: DACA01-94-D-0033
CLIENT PROJ. ENG: STEVE ROWLEY
LOCATION: FORT DRUM, NY BLDG: **SMA**

EMC NO.: 1406-006
DATE: 15-NOV-94
PREPARED BY: **CSW**
CHECKED BY:
FILE: **4530MAU4**

AIR HANDLING UNIT SURVEY OBSERVATIONS

MAU4	AHU NO.	**AREA 'B'**	LOCATION (RM)
NONE	REF. SYS. SERVING AHU	**PAINT BOOTH (PART OF 'H')**	SERVES AREA

UNIT TYPE:

X	SINGLE ZN		2-PIPE FC		4-PIPE FC		UNIT HTR	X	H&V
	MULTIZONE		DOUBLE DT		REHEAT		INDUCTION		VAV
	NUMBER OF ZONES				OTHER				
	COMMENT:								

NAMEPLATE:

					MFG.				MODEL
10.0	SUPPLY FAN HP				MFG.				MODEL
	RET/EXH FAN HP				MFG.				MODEL
14700	CFM-HTG		CFM-CLG	**100%**	MIN %OA	**100%**	MAX %OA	**3.7%**	% HTG AREA SERVED
COMMENT:									

COILS:

X	NONE		STM		HW		ELEC		MOD VLV	PREHEAT
	NONE		STM	X	HW		ELEC		MOD VLV	HEATING
X	NONE		STM		HW		ELEC		MOD VLV	REHEAT
X	NONE		STM		HW		EVAP MEDIA		MOD VLV	HUMID.
X	NONE		DX		CW				MOD VLV	COOLING

OPERATION:

HOURS ON:	S	M	T	W	T	F	S	COMMENTS
PRESENT START TIME	**0**	**0**	**0**	**0**	**0**	**0**	**0**	TIMECLOCK?
PRESENT STOP TIME	**2400**	**2400**	**2400**	**2400**	**2400**	**2400**	**2400**	
REQUIRED START TIME	**630**	**630**	**630**	**630**	**630**	**630**	**630**	
REQUIRED STOP TIME	**2100**	**2100**	**2100**	**2100**	**2100**	**2100**	**2100**	

MONTHS ON:

J	F	M	A	M	J	J	A	S	O	N	D
1	**1**	**1**	**1**	**1**	**1**	**1**	**1**	**1**	**1**	**1**	**1**

CONTROLS:

	X	PNEUMATIC		ELECTRIC		ELEC'NIC		DDC	COMMENTS
THERMOSTAT TYPE:		SINGLE STPT	X	DUAL SETPNT		SETBACK			
SPACE SETPOINT (°F):	**70**	OCC HEAT	**65**	UNOCC HEAT		OCC COOL		UNOCC COOL	
OTHER SETPOINTS (°F):		HOT DECK		COLD DECK		MIXED AIR		OTHER	
DAMPER CONTROL:	**N**	MIN OA (Y/N)	**Y**	MAX OA (Y/N)	**N**	RA (Y/N)	**N**	EA (Y/N)	
		MA CONTROL		ECONO-DB		ECONO-ENT		OTHER	
DEMAND LIMIT:	**N**	(Y = YES ; N = NO)							
COMMENTS:									

E M C ENGINEERS, INC.

PROJECT: UMCS STUDY
CLIENT CONTRACT NO.: DACA01-94-D-0033
CLIENT PROJ. ENG: STEVE ROWLEY
LOCATION: FORT DRUM, NY BLDG: **SMA**

EMC NO.: 1406-006
DATE: 15-NOV-94
PREPARED BY: **CSW**
CHECKED BY:
FILE: **4530MAU5**

AIR HANDLING UNIT SURVEY OBSERVATIONS

MAU5	AHU NO.	**AREA 'B'**	LOCATION (RM)
NONE	REF. SYS. SERVING AHU	**DYNAMOMETER (PART OF 'H')**	SERVES AREA

UNIT TYPE:

X	SINGLE ZN		2-PIPE FC		4-PIPE FC		UNIT HTR	**X**	H&V
	MULTIZONE		DOUBLE DT		REHEAT		INDUCTION		VAV
	NUMBER OF ZONES				OTHER				
	COMMENT:								

NAMEPLATE:

				MFG.				MODEL
5.0	SUPPLY FAN HP			MFG.				MODEL
	RET/EXH FAN HP			MFG.				MODEL
5400	CFM-HTG		CFM-CLG	**100%**	MIN %OA	**100%**	MAX %OA	**3.7%**	% HTG AREA SERVED
COMMENT:									

COILS:

X	NONE		STM		HW		ELEC		MOD VLV	PREHEAT
	NONE		STM	**X**	HW		ELEC	**X**	MOD VLV	HEATING
X	NONE		STM		HW		ELEC		MOD VLV	REHEAT
X	NONE		STM		HW		EVAP MEDIA		MOD VLV	HUMID.
X	NONE		DX		CW				MOD VLV	COOLING

OPERATION:

HOURS ON:	S	M	T	W	T	F	S	COMMENTS
PRESENT START TIME	**0**	**0**	**0**	**0**	**0**	**0**	**0**	TIMECLOCK?
PRESENT STOP TIME	**2400**	**2400**	**2400**	**2400**	**2400**	**2400**	**2400**	
REQUIRED START TIME	**630**	**630**	**630**	**630**	**630**	**630**	**630**	
REQUIRED STOP TIME	**2100**	**2100**	**2100**	**2100**	**2100**	**2100**	**2100**	

MONTHS ON:

J	F	M	A	M	J	J	A	S	O	N	D
1	**1**	**1**	**1**	**1**	**1**	**1**	**1**	**1**	**1**	**1**	**1**

CONTROLS:

	X	PNEUMATIC		ELECTRIC		ELEC'NIC		DDC	COMMENTS
THERMOSTAT TYPE:		SINGLE STPT	**X**	DUAL SETPNT		SETBACK			
SPACE SETPOINT (°F):	**70**	OCC HEAT	**65**	UNOCC HEAT		OCC COOL		UNOCC COOL	
OTHER SETPOINTS (°F):		HOT DECK		COLD DECK		MIXED AIR		OTHER	
DAMPER CONTROL:	**N**	MIN OA (Y/N)	**Y**	MAX OA (Y/N)	**N**	RA (Y/N)	**N**	EA (Y/N)	
		MA CONTROL		ECONO-DB		ECONO-ENT		OTHER	
DEMAND LIMIT:	**N**	(Y = YES ; N = NO)							
COMMENTS:									

E M C ENGINEERS, INC.

PROJECT: UMCS STUDY
CLIENT CONTRACT NO.: DACA01-94-D-0033
CLIENT PROJ. ENG: STEVE ROWLEY
LOCATION: FORT DRUM, NY BLDG: **SMA**

EMC NO.: 1406-006
DATE: 15-NOV-94
PREPARED BY: **CSW**
CHECKED BY:
FILE: **4530MAU6**

AIR HANDLING UNIT SURVEY OBSERVATIONS

MAU6	AHU NO.	**AREA 'E'**	LOCATION (RM)
NONE	REF. SYS. SERVING AHU	**LEAD ACID BATTERY RM, 'E'**	SERVES AREA

UNIT TYPE:

X	SINGLE ZN		2-PIPE FC		4-PIPE FC		UNIT HTR	X	H&V
	MULTIZONE		DOUBLE DT		REHEAT		INDUCTION		VAV
	NUMBER OF ZONES				OTHER				
	COMMENT:								

NAMEPLATE:

					MFG.				MODEL
30.0	SUPPLY FAN HP				MFG.				MODEL
	RET/EXH FAN HP				MFG.				MODEL
40680	CFM-HTG		CFM-CLG	**100%**	MIN %OA	**100%**	MAX %OA	**3.7%**	% HTG AREA SERVED
COMMENT:									

COILS:

X	NONE		STM		HW		ELEC		MOD VLV	PREHEAT
	NONE		STM	X	HW		ELEC	X	MOD VLV	HEATING
X	NONE		STM		HW		ELEC		MOD VLV	REHEAT
X	NONE		STM		HW		EVAP MEDIA		MOD VLV	HUMID.
X	NONE		DX		CW				MOD VLV	COOLING

OPERATION:

HOURS ON:	S	M	T	W	T	F	S	COMMENTS
PRESENT START TIME	**0**	**0**	**0**	**0**	**0**	**0**	**0**	TIMECLOCK?
PRESENT STOP TIME	**2400**	**2400**	**2400**	**2400**	**2400**	**2400**	**2400**	
REQUIRED START TIME	**630**	**630**	**630**	**630**	**630**	**630**	**630**	
REQUIRED STOP TIME	**2100**	**2100**	**2100**	**2100**	**2100**	**2100**	**2100**	

MONTHS ON:

J	F	M	A	M	J	J	A	S	O	N	D
1	**1**	**1**	**1**	**1**	**1**	**1**	**1**	**1**	**1**	**1**	**1**

CONTROLS:

	X	PNEUMATIC		ELECTRIC		ELEC'NIC		DDC	COMMENTS
THERMOSTAT TYPE:		SINGLE STPT	X	DUAL SETPNT		SETBACK			
SPACE SETPOINT (°F):	**70**	OCC HEAT	**65**	UNOCC HEAT		OCC COOL		UNOCC COOL	
OTHER SETPOINTS (°F):		HOT DECK		COLD DECK		MIXED AIR		OTHER	
DAMPER CONTROL:	**N**	MIN OA (Y/N)	**Y**	MAX OA (Y/N)	**N**	RA (Y/N)	**N**	EA (Y/N)	
		MA CONTROL		ECONO-DB		ECONO-ENT		OTHER	
DEMAND LIMIT:	**N**	(Y = YES ; N = NO)							
COMMENTS:									

E M C ENGINEERS, INC.

PROJECT: UMCS STUDY
CLIENT CONTRACT NO.: DACA01-94-D-0033
CLIENT PROJ. ENG: STEVE ROWLEY
LOCATION: FORT DRUM, NY BLDG: **SMA**

EMC NO.: 1406-006
DATE: 15-NOV-94
PREPARED BY: **CSW**
CHECKED BY:
FILE: **4530MAU7**

AIR HANDLING UNIT SURVEY OBSERVATIONS

MAU7	AHU NO.	**AREA 'E'**	LOCATION (RM)
	REF. SYS. SERVING AHU	**NI. CAD BATTERY RM, 'E'**	SERVES AREA

UNIT TYPE:

X	SINGLE ZN		2-PIPE FC		4-PIPE FC		UNIT HTR	X	H&V
	MULTIZONE		DOUBLE DT		REHEAT		INDUCTION		VAV
	NUMBER OF ZONES				OTHER				
	COMMENT:								

NAMEPLATE:

				MFG.				MODEL
2.0	SUPPLY FAN HP			MFG.				MODEL
	RET/EXH FAN HP			MFG.				MODEL
1540	CFM-HTG		CFM-CLG	100%	MIN %OA	100%	MAX %OA	3.7%	% HTG AREA SERVED
COMMENT:									

COILS:

X	NONE		STM		HW		ELEC		MOD VLV	PREHEAT
	NONE		STM	X	HW		ELEC	X	MOD VLV	HEATING
X	NONE		STM		HW		ELEC		MOD VLV	REHEAT
X	NONE		STM		HW		EVAP MEDIA		MOD VLV	HUMID.
X	NONE		DX		CW				MOD VLV	COOLING

OPERATION:

HOURS ON:	S	M	T	W	T	F	S	COMMENTS
PRESENT START TIME	0	0	0	0	0	0	0	TIMECLOCK?
PRESENT STOP TIME	2400	2400	2400	2400	2400	2400	2400	
REQUIRED START TIME	630	630	630	630	630	630	630	
REQUIRED STOP TIME	2100	2100	2100	2100	2100	2100	2100	

MONTHS ON:

J	F	M	A	M	J	J	A	S	O	N	D
1	1	1	1	1	1	1	1	1	1	1	1

CONTROLS:

	X	PNEUMATIC		ELECTRIC		ELEC'NIC		DDC	COMMENTS
THERMOSTAT TYPE:		SINGLE STPT	X	DUAL SETPNT		SETBACK			
SPACE SETPOINT (°F):	70	OCC HEAT	65	UNOCC HEAT		OCC COOL		UNOCC COOL	
OTHER SETPOINTS (°F):		HOT DECK		COLD DECK		MIXED AIR		OTHER	
DAMPER CONTROL:	N	MIN OA (Y/N)	Y	MAX OA (Y/N)	N	RA (Y/N)	N	EA (Y/N)	
		MA CONTROL		ECONO-DB		ECONO-ENT		OTHER	
DEMAND LIMIT:	N	(Y = YES ; N = NO)							
COMMENTS:									

E M C ENGINEERS, INC.

PROJECT: UMCS STUDY
CLIENT CONTRACT NO.: DACA01-94-D-0033
CLIENT PROJ. ENG: STEVE ROWLEY
LOCATION: FORT DRUM, NY BLDG: **SMA**

EMC NO.: 1406-006
DATE: 15-NOV-94
PREPARED BY: **CSW**
CHECKED BY:
FILE: **4530MAU8**

AIR HANDLING UNIT SURVEY OBSERVATIONS

MAU8	AHU NO.	**AREA 'H'**	LOCATION (RM)
NONE	REF. SYS. SERVING AHU	**PAINT BOOTH (H)**	SERVES AREA

UNIT TYPE:

X	SINGLE ZN		2-PIPE FC		4-PIPE FC		UNIT HTR	**X**	H&V
	MULTIZONE		DOUBLE DT		REHEAT		INDUCTION		VAV
	NUMBER OF ZONES				OTHER				
	COMMENT:								

NAMEPLATE:

					MFG.				MODEL
20.0	SUPPLY FAN HP				MFG.				MODEL
	RET/EXH FAN HP				MFG.				MODEL
2800	CFM-HTG		CFM-CLG	**100%**	MIN %OA	**100%**	MAX %OA	**3.7%**	% HTG AREA SERVED
COMMENT:									

COILS:

X	NONE		STM		HW		ELEC		MOD VLV	PREHEAT
	NONE		STM	**X**	HW		ELEC	**X**	MOD VLV	HEATING
X	NONE		STM		HW		ELEC		MOD VLV	REHEAT
X	NONE		STM		HW		EVAP MEDIA		MOD VLV	HUMID.
X	NONE		DX		CW				MOD VLV	COOLING

OPERATION:

HOURS ON:	S	M	T	W	T	F	S	COMMENTS
PRESENT START TIME	**0**	**0**	**0**	**0**	**0**	**0**	**0**	TIMECLOCK?
PRESENT STOP TIME	**2400**	**2400**	**2400**	**2400**	**2400**	**2400**	**2400**	
REQUIRED START TIME	**630**	**630**	**630**	**630**	**630**	**630**	**630**	
REQUIRED STOP TIME	**2100**	**2100**	**2100**	**2100**	**2100**	**2100**	**2100**	

MONTHS ON:

J	F	M	A	M	J	J	A	S	O	N	D
1	**1**	**1**	**1**	**1**	**1**	**1**	**1**	**1**	**1**	**1**	**1**

CONTROLS:

	X	PNEUMATIC		ELECTRIC		ELEC'NIC		DDC	COMMENTS
THERMOSTAT TYPE:		SINGLE STPT	**X**	DUAL SETPNT		SETBACK			
SPACE SETPOINT (°F):	**70**	OCC HEAT	**65**	UNOCC HEAT		OCC COOL		UNOCC COOL	
OTHER SETPOINTS (°F):		HOT DECK		COLD DECK		MIXED AIR		OTHER	
DAMPER CONTROL:	**N**	MIN OA (Y/N)	**Y**	MAX OA (Y/N)	**N**	RA (Y/N)	**N**	EA (Y/N)	
		MA CONTROL		ECONO-DB		ECONO-ENT		OTHER	
DEMAND LIMIT:	**N**	(Y = YES ; N = NO)							
COMMENTS:									

E M C ENGINEERS, INC.

PROJECT: UMCS STUDY
CLIENT CONTRACT NO.: DACA01-94-D-0033
CLIENT PROJ. ENG: STEVE ROWLEY
LOCATION: FORT DRUM, NY BLDG: **SMA**

EMC NO.: 1406-006
DATE: 15-NOV-94
PREPARED BY: **CSW**
CHECKED BY:
FILE: **4530MAU9**

AIR HANDLING UNIT SURVEY OBSERVATIONS

MAU9	AHU NO.	**AREA 'H'**	LOCATION (RM)
NONE	REF. SYS. SERVING AHU	**PAINT CURING (H)**	SERVES AREA

UNIT TYPE:

X	SINGLE ZN		2-PIPE FC		4-PIPE FC		UNIT HTR	**X**	H&V
	MULTIZONE		DOUBLE DT		REHEAT		INDUCTION		VAV
	NUMBER OF ZONES				OTHER				
	COMMENT:								

NAMEPLATE:

				MFG.				MODEL
5.0	SUPPLY FAN HP			MFG.				MODEL
	RET/EXH FAN HP			MFG.				MODEL
7000	CFM-HTG		CFM-CLG	**100%**	MIN %OA	**100%**	MAX %OA	**3.7%**	% HTG AREA SERVED
COMMENT:									

COILS:

X	NONE		STM		HW		ELEC		MOD VLV	PREHEAT
	NONE		STM	**X**	HW		ELEC	**X**	MOD VLV	HEATING
X	NONE		STM		HW		ELEC		MOD VLV	REHEAT
X	NONE		STM		HW		EVAP MEDIA		MOD VLV	HUMID.
X	NONE		DX		CW				MOD VLV	COOLING

OPERATION:

HOURS ON:	S	M	T	W	T	F	S	COMMENTS
PRESENT START TIME	**0**	**0**	**0**	**0**	**0**	**0**	**0**	TIMECLOCK?
PRESENT STOP TIME	**2400**	**2400**	**2400**	**2400**	**2400**	**2400**	**2400**	
REQUIRED START TIME	**630**	**630**	**630**	**630**	**630**	**630**	**630**	
REQUIRED STOP TIME	**2100**	**2100**	**2100**	**2100**	**2100**	**2100**	**2100**	

MONTHS ON:

J	F	M	A	M	J	J	A	S	O	N	D
1	**1**	**1**	**1**	**1**	**1**	**1**	**1**	**1**	**1**	**1**	**1**

CONTROLS:

	X	PNEUMATIC		ELECTRIC		ELEC'NIC		DDC	COMMENTS
THERMOSTAT TYPE:		SINGLE STPT	**X**	DUAL SETPNT		SETBACK			
SPACE SETPOINT (°F):	**70**	OCC HEAT	**65**	UNOCC HEAT		OCC COOL		UNOCC COOL	
OTHER SETPOINTS (°F):		HOT DECK		COLD DECK		MIXED AIR		OTHER	
DAMPER CONTROL:	**N**	MIN OA (Y/N)	**Y**	MAX OA (Y/N)	**N**	RA (Y/N)	**N**	EA (Y/N)	
		MA CONTROL		ECONO-DB		ECONO-ENT		OTHER	
DEMAND LIMIT:	**N**	(Y = YES ; N = NO)							
COMMENTS:									

E M C ENGINEERS, INC.

PROJECT: UMCS STUDY
CLIENT CONTRACT NO.: DACA01-94-D-0033
CLIENT PROJ. ENG: STEVE ROWLEY
LOCATION: FORT DRUM, NY BLDG: **SMA**

EMC NO.: 1406-006
DATE: 15-NOV-94
PREPARED BY: **CSW**
CHECKED BY:
FILE: **4530RAD1**

PERIMETER RADIATION SURVEY OBSERVATIONS

RAD1	PER RAD NO.	**MECH RM**	LOCATION (RM)
	SOURCE OF HEATING	AREA 'A'	SERVES AREA

UNIT TYPE:

	STEAM	**X**	HW		ELECTRIC				
	OTHER								
	COMMENT:								

NAMEPLATE:

0.0833	HW PUMP 1 - HP		MFG.		MODEL
	HW PUMP 2 - HP		MFG.		MODEL
	HW PUMP 3 - HP		MFG.		MODEL
	HW PUMP 4 - HP		MFG.		MODEL
COMMENT:				**11.1%**	% AREA HEATING

OPERATION:

HOURS ON:	S	M	T	W	T	F	S	COMMENT
PRESENT START TIME	**0**	**0**	**0**	**0**	**0**	**0**	**0**	TIMECLOCK?
PRESENT STOP TIME	**2400**	**2400**	**2400**	**2400**	**2400**	**2400**	**2400**	**N**
REQUIRED START TIME	**630**	**630**	**630**	**630**	**630**	**630**	**630**	
REQUIRED STOP TIME	**2100**	**2100**	**2100**	**2100**	**2100**	**2100**	**2100**	

MONTHS ON:

J	F	M	A	M	J	J	A	S	O	N	D
1	**1**	**1**	**1**	**0**	**0**	**0**	**0**	**0**	**1**	**1**	**1**

CONTROLS:

	X	PNEUMATIC		ELECTRIC		ELEC'NIC		DDC	COMMENTS
RADIATION CONTROL:		NONE		2-WAY VLV		3-WAY VLV		OTHER	
SPACE SETPOINT (øF):		OCC HEAT		UNOCC HEAT		OCC COOL		UNOCC COOL	
RESET CONTROL (øF):		HW HIGH		HW LOW		OA LOW		OA HIGH	
COMMENTS:									

PROJECT: UMCS STUDY
CLIENT CONTRACT NO.: DACA01-94-D-0033
CLIENT PROJ. ENG: STEVE ROWLEY
LOCATION: FORT DRUM, NY BLDG: **4530**

EMC NO.: 1406-006
DATE: 15-NOV-94
PREPARED BY: **CSW**
CHECKED BY: BG
FILE: **4530DHW1**

DOMESTIC HW SURVEY OBSERVATIONS

DHW1	BOILER/CONVERTER NO.	MER 138	LOCATION (RM)
	SOURCE OF HEATING (PLANT)		SERVES AREA

UNIT TYPE:

	NO.2 OIL		NO.6 OIL		N.GAS	X	ELEC		FUELS:
	STM/HW		HTHW/HW		HTHW/STM		OTHER		CONVERTER TYPE:

COMMENT: **USED IN CONNECTION WITH HX-2. DHW1 IS NOT CURRENTLY IN USE.**

NAMEPLATE:

A O SMITH	MFG.		MODEL		CAPACITY OUTPUT (BTUH,KW)
	MFG.		MODEL		CAPACITY OUTPUT (BTUH,KW)

DOMESTIC HW CIRCULATION PUMP:

	HW PUMP 1 - HP		MFG.	MODEL
	HW PUMP 2 - HP		MFG.	MODEL
	HW PUMP 3 - HP		MFG.	MODEL

COMMENT:

DIMENSION:	DIAMETER (INCHS)		HEIGHT OR LENGTH (INCHES)	GALLON

OPERATION:

HOURS ON:	S	M	T	W	T	F	S	COMMENT
PRESENT START TIME								TIMECLOCK?
PRESENT STOP TIME								
REQUIRED START TIME								
REQUIRED STOP TIME								

MONTHS ON:

J	F	M	A	M	J	J	A	S	O	N	D

CONTROLS:

		PNEUMATIC		ELECTRIC		ELEC'NIC		DDC	COMMENTS
SETPOINTS				HW SUPPLY					

COMMENTS:

E M C ENGINEERS, INC.

PROJECT: UMCS STUDY
CLIENT CONTRACT NO.: DACA01-94-D-0033
CLIENT PROJ. ENG: STEVE ROWLEY
LOCATION: FORT DRUM, NY BLDG: **4530**

EMC NO.: 1406-006
DATE: 15-NOV-94
PREPARED BY: **CSW**
CHECKED BY: BG
FILE: **4530AC1**

AIR HANDLING UNIT SURVEY OBSERVATIONS

AC1	AHU NO.	**MER-II**	LOCATION (RM)
	REF. SYS. SERVING AHU	**AOAP LAB IN AREA 'A'**	SERVES AREA

UNIT TYPE:

X	SINGLE ZN		2-PIPE FC		4-PIPE FC		UNIT HTR		H&V
	MULTIZONE		DOUBLE DT	X	REHEAT		INDUCTION		VAV
	NUMBER OF ZONES				OTHER				
	COMMENT:								

NAMEPLATE:

					MFG.				MODEL
5.0	SUPPLY FAN HP				MFG.				MODEL
5.0	RET/EXH FAN HP				MFG.				MODEL
6000	CFM-HTG	**6000**	CFM-CLG	**15%**	MIN %OA	**100%**	MAX %OA	**5.6%**	% HTG AREA SERVED
COMMENT:									

COILS:

X	NONE		STM		HW		ELEC		MOD VLV	PREHEAT
	NONE		STM	X	HW		ELEC		MOD VLV	HEATING
	NONE		STM		HW	X	ELEC		MOD VLV	REHEAT
	NONE		STM	X	HW		EVAP MEDIA		MOD VLV	HUMID.
	NONE	X	DX		CW				MOD VLV	COOLING

OPERATION:

HOURS ON:	S	M	T	W	T	F	S	COMMENTS
PRESENT START TIME	**0**	**0**	**0**	**0**	**0**	**0**	**0**	TIMECLOCK?
PRESENT STOP TIME	**2400**	**2400**	**2400**	**2400**	**2400**	**2400**	**2400**	
REQUIRED START TIME	**630**	**630**	**630**	**630**	**630**	**630**	**630**	
REQUIRED STOP TIME	**2100**	**2100**	**2100**	**2100**	**2100**	**2100**	**2100**	

MONTHS ON:

J	F	M	A	M	J	J	A	S	O	N	D
1	**1**	**1**	**1**	**1**	**1**	**1**	**1**	**1**	**1**	**1**	**1**

CONTROLS:

		PNEUMATIC		ELECTRIC		ELEC'NIC		DDC	COMMENTS
THERMOSTAT TYPE:		SINGLE STPT		DUAL SETPNT		SETBACK			
SPACE SETPOINT (°F):		OCC HEAT		UNOCC HEAT		OCC COOL		UNOCC COOL	
OTHER SETPOINTS (°F):		HOT DECK		COLD DECK		MIXED AIR		OTHER	
DAMPER CONTROL:	Y	MIN OA (Y/N)	Y	MAX OA (Y/N)	Y	RA (Y/N)	Y	EA (Y/N)	
		MA CONTROL		ECONO-DB		ECONO-ENT		OTHER	
DEMAND LIMIT:		(Y = YES ; N = NO)							
COMMENTS:									

E M C ENGINEERS, INC.

PROJECT: UMCS STUDY
CLIENT CONTRACT NO.: DACA01-94-D-0033
CLIENT PROJ. ENG: STEVE ROWLEY
LOCATION: FORT DRUM, NY BLDG: **4530**

EMC NO.: 1406-006
DATE: 15-NOV-94
PREPARED BY: **CSW**
CHECKED BY: BG
FILE: **4530AC2**

AIR HANDLING UNIT SURVEY OBSERVATIONS

AC2	AHU NO.	**MER-II**	LOCATION (RM)
	REF. SYS. SERVING AHU	**TMDE LAB IN AREA 'A'**	SERVES AREA

UNIT TYPE:

X	SINGLE ZN		2-PIPE FC		4-PIPE FC		UNIT HTR		H&V
	MULTIZONE		DOUBLE DT	X	REHEAT		INDUCTION		VAV
	NUMBER OF ZONES				OTHER				
	COMMENT:								

NAMEPLATE:

					MFG.				MODEL
5.0	SUPPLY FAN HP				MFG.				MODEL
5.0	RET/EXH FAN HP				MFG.				MODEL
6000	CFM-HTG	**6000**	CFM-CLG	**100%**	MIN %OA	**100%**	MAX %OA	**5.6%**	% HTG AREA SERVED
COMMENT:									

COILS:

X	NONE		STM		HW		ELEC		MOD VLV	PREHEAT
	NONE		STM	X	HW		ELEC		MOD VLV	HEATING
	NONE		STM		HW	X	ELEC		MOD VLV	REHEAT
	NONE		STM	X	HW		EVAP MEDIA		MOD VLV	HUMID.
	NONE	X	DX		CW				MOD VLV	COOLING

OPERATION:

HOURS ON:	S	M	T	W	T	F	S	COMMENTS
PRESENT START TIME	**0**	**0**	**0**	**0**	**0**	**0**	**0**	TIMECLOCK?
PRESENT STOP TIME	**2400**	**2400**	**2400**	**2400**	**2400**	**2400**	**2400**	
REQUIRED START TIME	**630**	**630**	**630**	**630**	**630**	**630**	**630**	
REQUIRED STOP TIME	**2100**	**2100**	**2100**	**2100**	**2100**	**2100**	**2100**	

MONTHS ON:

J	F	M	A	M	J	J	A	S	O	N	D
1	**1**	**1**	**1**	**1**	**1**	**1**	**1**	**1**	**1**	**1**	**1**

CONTROLS:

		PNEUMATIC		ELECTRIC		ELEC'NIC		DDC	COMMENTS
THERMOSTAT TYPE:		SINGLE STPT		DUAL SETPNT		SETBACK			
SPACE SETPOINT (°F):		OCC HEAT		UNOCC HEAT		OCC COOL		UNOCC COOL	
OTHER SETPOINTS (°F):		HOT DECK		COLD DECK		MIXED AIR		OTHER	
DAMPER CONTROL:	Y	MIN OA (Y/N)	Y	MAX OA (Y/N)	Y	RA (Y/N)	Y	EA (Y/N)	
		MA CONTROL		ECONO-DB		ECONO-ENT		OTHER	
DEMAND LIMIT:		(Y = YES ; N = NO)							
COMMENTS:									

E M C ENGINEERS, INC.

PROJECT: UMCS STUDY
CLIENT CONTRACT NO.: DACA01-94-D-0033
CLIENT PROJ. ENG: STEVE ROWLEY
LOCATION: FORT DRUM, NY BLDG: **4530**

EMC NO.: 1406-006
DATE: 15-NOV-94
PREPARED BY: **CSW**
CHECKED BY: BG
FILE: **4530AC3**

AIR HANDLING UNIT SURVEY OBSERVATIONS

AC3	AHU NO.	**AREA 'D'**	LOCATION (RM)
	REF. SYS. SERVING AHU	**COMMUNIC/ELEC & OFFICES**	SERVES AREA

UNIT TYPE:

X	SINGLE ZN		2-PIPE FC		4-PIPE FC		UNIT HTR		H&V
	MULTIZONE		DOUBLE DT	X	REHEAT		INDUCTION		VAV
	NUMBER OF ZONES				OTHER				
	COMMENT:								

NAMEPLATE:

					MFG.				MODEL
5.0	SUPPLY FAN HP				MFG.				MODEL
5.0	RET/EXH FAN HP				MFG.				MODEL
2500	CFM-HTG	**2500**	CFM-CLG	**36%**	MIN %OA	**100%**	MAX %OA	**5.6%**	% HTG AREA SERVED
COMMENT:									

COILS:

X	NONE		STM		HW		ELEC		MOD VLV	PREHEAT
	NONE		STM	X	HW		ELEC		MOD VLV	HEATING
	NONE		STM		HW	X	ELEC		MOD VLV	REHEAT
	NONE		STM	X	HW		EVAP MEDIA		MOD VLV	HUMID.
	NONE	X	DX		CW				MOD VLV	COOLING

OPERATION:

HOURS ON:	S	M	T	W	T	F	S	COMMENTS
PRESENT START TIME	**0**	**0**	**0**	**0**	**0**	**0**	**0**	TIMECLOCK?
PRESENT STOP TIME	**2400**	**2400**	**2400**	**2400**	**2400**	**2400**	**2400**	
REQUIRED START TIME	**630**	**630**	**630**	**630**	**630**	**630**	**630**	
REQUIRED STOP TIME	**2100**	**2100**	**2100**	**2100**	**2100**	**2100**	**2100**	

MONTHS ON:

J	F	M	A	M	J	J	A	S	O	N	D
1	**1**	**1**	**1**	**1**	**1**	**1**	**1**	**1**	**1**	**1**	**1**

CONTROLS:

		PNEUMATIC		ELECTRIC		ELEC'NIC		DDC	COMMENTS
THERMOSTAT TYPE:		SINGLE STPT		DUAL SETPNT		SETBACK			
SPACE SETPOINT (°F):		OCC HEAT		UNOCC HEAT		OCC COOL		UNOCC COOL	
OTHER SETPOINTS (°F):		HOT DECK		COLD DECK		MIXED AIR		OTHER	
DAMPER CONTROL:	Y	MIN OA (Y/N)	Y	MAX OA (Y/N)	Y	RA (Y/N)	Y	EA (Y/N)	
		MA CONTROL		ECONO-DB		ECONO-ENT		OTHER	
DEMAND LIMIT:		(Y = YES ; N = NO)							
COMMENTS:									

E M C ENGINEERS, INC.

PROJECT: UMCS STUDY
CLIENT CONTRACT NO.: DACA01-94-D-0033
CLIENT PROJ. ENG: STEVE ROWLEY
LOCATION: FORT DRUM, NY BLDG: **4530**

EMC NO.: 1406-006
DATE: 15-NOV-94
PREPARED BY: **CSW**
CHECKED BY: BG
FILE: **4530ACC1**

REFRIGERATION EQUIPMENT SURVEY OBSERVATIONS

ACC1	CHILLER/COMPRESSOR NO.		LOCATION (RM)

UNIT TYPE:

	CENTRIFUGAL WITH WATER SIDE COOLING TOWER						OTHER
	RECIPROCATING WITH WATER SIDE COOLING TOWER						AHU'S SERVED
	RECIPROCATING WITH AIR COOLED CONDENSING UNIT						AC1
	ABSORBTION WITH WATER SIDE COOLING TOWER						
X	AIR COOLED CONDENSING UNIT						
	CHW	X	DX		OTHER		

NAMEPLATE:

CHILLER		MFG.			MODEL				SERIAL NO.
	VOLTS		AMPS		PH		HZ	**15**	CAPACITY (TONS)
TOWER		MFG.			MODEL				# OF FANS
	VOLTS		AMPS		PH		HZ		HP each
CW PUMP		MFG.			MODEL				SERIAL NO.
	VOLTS		AMPS		PH		HZ		HP
CNW PUMP		MFG.			MODEL				SERIAL NO.
	VOLTS		AMPS		PH		HZ		HP
COMMENTS:									

OPERATION:

HOURS ON:	S	M	T	W	T	F	S	COMMENT
PRESENT START TIME	**0**	**0**	**0**	**0**	**0**	**0**	**0**	TIMECLOCK?
PRESENT STOP TIME	**2400**	**2400**	**2400**	**2400**	**2400**	**2400**	**2400**	
REQUIRED START TIME	**630**	**630**	**630**	**630**	**630**	**630**	**630**	
REQUIRED STOP TIME	**2100**	**2100**	**2100**	**2100**	**2100**	**2100**	**2100**	

MONTHS ON:

J	F	M	A	M	J	J	A	S	O	N	D
0	**0**	**0**	**0**	**1**	**1**	**1**	**1**	**1**	**0**	**0**	**0**

CONTROLS:

		PNEUMATIC		ELECTRIC		ELEC'NIC		DDC	COMMENTS
SETPOINTS		CWS (oF)		CWR (oF)		CNWS (oF)		CNWR (oF)	
PANEL INDICATORS									
- PRESSURE		LITE-HI		LITE-LOW		GAUGES			
- TEMPERATURE		LITE-HI		LITE-LOW		GAUGES			
- OTHER									
COMMENTS:									

E M C ENGINEERS, INC.

PROJECT: UMCS STUDY
CLIENT CONTRACT NO.: DACA01-94-D-0033
CLIENT PROJ. ENG: STEVE ROWLEY
LOCATION: FORT DRUM, NY BLDG: **4530**

EMC NO.: 1406-006
DATE: 15-NOV-94
PREPARED BY: **CSW**
CHECKED BY: BG
FILE: **4530ACC2**

REFRIGERATION EQUIPMENT SURVEY OBSERVATIONS

ACC2	CHILLER/COMPRESSOR NO.		LOCATION (RM)

UNIT TYPE:

	CENTRIFUGAL WITH WATER SIDE COOLING TOWER						OTHER
	RECIPROCATING WITH WATER SIDE COOLING TOWER						AHU'S SERVED
	RECIPROCATING WITH AIR COOLED CONDENSING UNIT						AC2
	ABSORBTION WITH WATER SIDE COOLING TOWER						
X	AIR COOLED CONDENSING UNIT						
	CHW	X	DX		OTHER		

NAMEPLATE:

CHILLER		MFG.			MODEL				SERIAL NO.
	VOLTS		AMPS		PH		HZ	**27.083**	CAPACITY (TONS)
TOWER		MFG.			MODEL				# OF FANS
	VOLTS		AMPS		PH		HZ		HP each
CW PUMP		MFG.			MODEL				SERIAL NO.
	VOLTS		AMPS		PH		HZ		HP
CNW PUMP		MFG.			MODEL				SERIAL NO.
	VOLTS		AMPS		PH		HZ		HP
COMMENTS:									

OPERATION:

HOURS ON:	S	M	T	W	T	F	S	COMMENT
PRESENT START TIME	**0**	**0**	**0**	**0**	**0**	**0**	**0**	TIMECLOCK?
PRESENT STOP TIME	**2400**	**2400**	**2400**	**2400**	**2400**	**2400**	**2400**	
REQUIRED START TIME	**630**	**630**	**630**	**630**	**630**	**630**	**630**	
REQUIRED STOP TIME	**2100**	**2100**	**2100**	**2100**	**2100**	**2100**	**2100**	

MONTHS ON:

J	F	M	A	M	J	J	A	S	O	N	D
0	**0**	**0**	**0**	**1**	**1**	**1**	**1**	**1**	**0**	**0**	**0**

CONTROLS:

		PNEUMATIC		ELECTRIC		ELEC'NIC		DDC	COMMENTS
SETPOINTS		CWS (oF)		CWR (oF)		CNWS (oF)		CNWR (oF)	
PANEL INDICATORS									
- PRESSURE		LITE-HI		LITE-LOW		GAUGES			
- TEMPERATURE		LITE-HI		LITE-LOW		GAUGES			
- OTHER									
COMMENTS:									

E M C ENGINEERS, INC.

PROJECT: UMCS STUDY
CLIENT CONTRACT NO.: DACA01-94-D-0033
CLIENT PROJ. ENG: STEVE ROWLEY
LOCATION: FORT DRUM, NY BLDG: **4530**

EMC NO.: 1406-006
DATE: 15-NOV-94
PREPARED BY: **CSW**
CHECKED BY: BG
FILE: **4530ACC3**

REFRIGERATION EQUIPMENT SURVEY OBSERVATIONS

ACC3	CHILLER/COMPRESSOR NO.		LOCATION (RM)

UNIT TYPE:

	CENTRIFUGAL WITH WATER SIDE COOLING TOWER						OTHER
	RECIPROCATING WITH WATER SIDE COOLING TOWER						AHU'S SERVED
	RECIPROCATING WITH AIR COOLED CONDENSING UNIT						AC3
	ABSORBTION WITH WATER SIDE COOLING TOWER						
X	AIR COOLED CONDENSING UNIT						
	CHW	X	DX		OTHER		

NAMEPLATE:

CHILLER		MFG.				MODEL			SERIAL NO.
	VOLTS		AMPS		PH		HZ	6.6667	CAPACITY (TONS)
TOWER		MFG.				MODEL			# OF FANS
	VOLTS		AMPS		PH		HZ		HP each
CW PUMP		MFG.				MODEL			SERIAL NO.
	VOLTS		AMPS		PH		HZ		HP
CNW PUMP		MFG.				MODEL			SERIAL NO.
	VOLTS		AMPS		PH		HZ		HP
COMMENTS:									

OPERATION:

HOURS ON:	S	M	T	W	T	F	S	COMMENT
PRESENT START TIME	0	0	0	0	0	0	0	TIMECLOCK?
PRESENT STOP TIME	2400	2400	2400	2400	2400	2400	2400	
REQUIRED START TIME	630	630	630	630	630	630	630	
REQUIRED STOP TIME	2100	2100	2100	2100	2100	2100	2100	

MONTHS ON:

J	F	M	A	M	J	J	A	S	O	N	D
0	0	0	0	1	1	1	1	1	0	0	0

CONTROLS:

		PNEUMATIC		ELECTRIC		ELEC'NIC		DDC	COMMENTS
SETPOINTS		CWS (oF)		CWR (oF)		CNWS (oF)		CNWR (oF)	
PANEL INDICATORS									
- PRESSURE		LITE-HI		LITE-LOW		GAUGES			
- TEMPERATURE		LITE-HI		LITE-LOW		GAUGES			
- OTHER									
COMMENTS:									

E M C ENGINEERS, INC.

PROJECT: UMCS STUDY
CLIENT CONTRACT NO.: DACA01-94-D-0033
CLIENT PROJ. ENG: STEVE ROWLEY
LOCATION: FORT DRUM, NY BLDG: **4530**

EMC NO.: 1406-006
DATE: 15-NOV-94
PREPARED BY: **CSW**
CHECKED BY: BG
FILE: **4530HX2**

BOILER & CONVERTER SURVEY OBSERVATIONS

HX2	BOILER/CONVERTER NO.	**MER 138**	LOCATION (RM)
	SOURCE OF HEATING (PLANT)		SERVES AREA

UNIT TYPE:

	STEAM		PSIG		HW		TEMP.	BOILER TYPE:
	NO.2 OIL		NO.6 OIL		N.GAS		ELEC	FUELS:
	STM/HW		HTHW/HW		HTHW/STM	X	OTHER	CONVERTER TYPE:
	SPACE HEAT		DHW		OTHER			USE:
COMMENT:			DHW-DCW					% HTG AREA SERVED
	HWS:152 F		HWR 207 F					BB RADIATION ONLY

NAMEPLATE:

RECO	MFG.	**SER# s-13736.20**	MODEL		CAPACITY OUTPUT (BTUH)
					CAPACITY INPUT (BTUH)
	MFG.		MODEL		CAPACITY OUTPUT (BTUH)
					CAPACITY INPUT (BTUH)
0.0833	HW PUMP 1 - HP	**B&G**	MFG.	**SLC-25B 103202**	MODEL
	HW PUMP 2 - HP		MFG.		MODEL
	HW PUMP 3 - HP		MFG.		MODEL
COMMENT:	**MAX ALLOW. PR 150 PSI AT 250 f**				

OPERATION:

HOURS ON:	S	M	T	W	T	F	S	COMMENT
PRESENT START TIME	**0**	**0**	**0**	**0**	**0**	**0**	**0**	TIMECLOCK?
PRESENT STOP TIME	**2400**	**2400**	**2400**	**2400**	**2400**	**2400**	**2400**	
REQUIRED START TIME	**630**	**630**	**630**	**630**	**630**	**630**	**630**	
REQUIRED STOP TIME	**2100**	**2100**	**2100**	**2100**	**2100**	**2100**	**2100**	

MONTHS ON:

J	F	M	A	M	J	J	A	S	O	N	D
1	**1**	**1**	**1**	**0**	**0**	**0**	**0**	**0**	**1**	**1**	**1**

CONTROLS:

		PNEUMATIC		ELECTRIC		ELEC'NIC		DDC	COMMENTS
SETPOINTS		PSIG		HW SUPPLY					
RESET CONTROL (oF):		HW HIGH		HW LOW		OA LOW		OA HIGH	
BURNER CONTROLS		O2 TRIM (Y/N)		OTHER					
COMMENTS:									

FIELD SURVEY NOTES

BUILDING 10000

E M C ENGINEERS, INC.

PROJECT: UMCS STUDY
CLIENT CONTRACT NO.: DACA01-94-D-0033
CLIENT PROJ. ENG: STEVE ROWLEY
LOCATION: FORT DRUM, NY BLDG: 10000

EMC NO.: 1406-006
DATE: Mar-94
PREPARED BY: CSW
CHECKED BY:
FILE: 10000

VI. BUILDING DATA SURVEY OBSERVATIONS

BLDG NO: 10000 BLDG NAME: DIV CMD/CTL BUILDING

ZONE NO.		FUNCTION:							
OCCUPANCY HOURS:	M-F	600	TO	1800	SAT	0	TO	0	
	SUN	0	TO	0					
PRESENT TEMP	WINTER OCC	øF		UNOCC	øF				
	SUMMER OCC	øF		UNOCC	øF				

ZONE NO.		FUNCTION:							
OCCUPANCY HOURS:	M-F		TO		SAT		TO		
	SUN		TO						
PRESENT TEMP	WINTER OCC	øF		UNOCC	øF				
	SUMMER OCC	øF		UNOCC	øF				

ZONE NO.		FUNCTION:							
OCCUPANCY HOURS:	M-F		TO		SAT		TO		
	SUN		TO						
PRESENT TEMP	WINTER OCC	øF		UNOCC	øF				
	SUMMER OCC	øF		UNOCC	øF				

REMARKS:
SF-1 3950/1975 CFM, SUMMER VENTILATON
SF-2 3805/1903 CFM, SUMMER VENTILATION
SF-3 4255/2128 CFM, SUMMER VENTILATION
SF-4 6560/3280 CFM, SUMMER VENTILATION
SF-31 5906/2953 CFM, SUMMER VENTILATION

E M C ENGINEERS, INC.

PROJECT: UMCS STUDY
CLIENT CONTRACT NO.: DACA01-94-D-0033
CLIENT PROJ. ENG: STEVE ROWLEY
LOCATION: FORT DRUM, NY BLDG: **10000**

EMC NO.: 1406-006
DATE: Mar-94
PREPARED BY: **CSW**
CHECKED BY:
FILE: **10000HE1**

BOILER & CONVERTER SURVEY OBSERVATIONS

HE-1	BOILER/CONVERTER NO.	**MECH ROOM**	LOCATION (RM)
	SOURCE OF HEATING (PLANT)	**WHOLE BUILDING**	SERVES AREA

UNIT TYPE:

	STEAM		PSIG		HW		TEMP.		BOILER TYPE:
	NO.2 OIL		NO.6 OIL		N.GAS		ELEC		FUELS:
	STM/HW	X	HTHW/HW		HTHW/STM		OTHER		CONVERTER TYPE:
	SPACE HEAT		DHW		OTHER				USE:
COMMENT:									% HTG AREA SERVED
									BB RADIATION ONLY

NAMEPLATE:

	MFG.		MODEL	**1372000**	CAPACITY OUTPUT (BTUH)
					CAPACITY INPUT (BTUH)
	MFG.		MODEL		CAPACITY OUTPUT (BTUH)
					CAPACITY INPUT (BTUH)
	HW PUMP 1 - HP		MFG.		MODEL
	HW PUMP 2 - HP		MFG.		MODEL
	HW PUMP 3 - HP		MFG.		MODEL
COMMENT:					

OPERATION:

HOURS ON:	S	M	T	W	T	F	S	COMMENT
PRESENT START TIME	**0**	**0**	**0**	**0**	**0**	**0**	**0**	TIMECLOCK?
PRESENT STOP TIME	**2400**	**2400**	**2400**	**2400**	**2400**	**2400**	**2400**	
REQUIRED START TIME	**0**	**0**	**0**	**0**	**0**	**0**	**0**	
REQUIRED STOP TIME	**2400**	**2400**	**2400**	**2400**	**2400**	**2400**	**2400**	

MONTHS ON:

J	F	M	A	M	J	J	A	S	O	N	D
1	**1**	**1**	**1**	**0**	**0**	**0**	**0**	**0**	**1**	**1**	**1**

CONTROLS:

	X	PNEUMATIC		ELECTRIC		ELEC'NIC		DDC	COMMENTS
SETPOINTS		PSIG		HW SUPPLY					
RESET CONTROL (oF)		HW HIGH		HW LOW		OA LOW		OA HIGH	
BURNER CONTROLS		O2 TRIM (Y/N)		OTHER					
COMMENTS:									

E M C ENGINEERS, INC.

PROJECT: UMCS STUDY
CLIENT CONTRACT NO.: DACA01-94-D-0033
CLIENT PROJ. ENG: STEVE ROWLEY
LOCATION: FORT DRUM, NY BLDG: **10000**

EMC NO.: 1406-006
DATE: Mar-94
PREPARED BY: **CSW**
CHECKED BY:
FILE: **10000HE2**

BOILER & CONVERTER SURVEY OBSERVATIONS

HE-2	BOILER/CONVERTER NO.	**MECH ROOM**	LOCATION (RM)
	SOURCE OF HEATING (PLANT)	**WHOLE BUILDING**	SERVES AREA

UNIT TYPE:

	STEAM		PSIG		HW		TEMP.		BOILER TYPE:
	NO.2 OIL		NO.6 OIL		N.GAS		ELEC		FUELS:
	STM/HW	X	HTHW/HW		HTHW/STM		OTHER		CONVERTER TYPE:
	SPACE HEAT		DHW		OTHER				USE:
COMMENT:									% HTG AREA SERVED
									BB RADIATION ONLY

NAMEPLATE:

	MFG.		MODEL	**1108000**	CAPACITY OUTPUT (BTUH)
					CAPACITY INPUT (BTUH)
	MFG.		MODEL		CAPACITY OUTPUT (BTUH)
					CAPACITY INPUT (BTUH)
	HW PUMP 1 - HP		MFG.		MODEL
	HW PUMP 2 - HP		MFG.		MODEL
	HW PUMP 3 - HP		MFG.		MODEL
COMMENT:					

OPERATION:

HOURS ON:	S	M	T	W	T	F	S	COMMENT
PRESENT START TIME	**0**	**0**	**0**	**0**	**0**	**0**	**0**	TIMECLOCK?
PRESENT STOP TIME	**2400**	**2400**	**2400**	**2400**	**2400**	**2400**	**2400**	
REQUIRED START TIME	**0**	**0**	**0**	**0**	**0**	**0**	**0**	
REQUIRED STOP TIME	**2400**	**2400**	**2400**	**2400**	**2400**	**2400**	**2400**	

MONTHS ON:

J	F	M	A	M	J	J	A	S	O	N	D
1	**1**	**1**	**1**	**0**	**0**	**0**	**0**	**0**	**1**	**1**	**1**

CONTROLS:

	X	PNEUMATIC		ELECTRIC		ELEC'NIC		DDC	COMMENTS
SETPOINTS		PSIG		HW SUPPLY					
RESET CONTROL (oF)		HW HIGH		HW LOW		OA LOW		OA HIGH	
BURNER CONTROLS		O2 TRIM (Y/N)		OTHER					
COMMENTS:									

E M C ENGINEERS, INC.

PROJECT: UMCS STUDY
CLIENT CONTRACT NO.: DACA01-94-D-0033
CLIENT PROJ. ENG: STEVE ROWLEY
LOCATION: FORT DRUM, NY BLDG: **10000**

EMC NO.: 1406-006
DATE: 23-Feb
PREPARED BY:
CHECKED BY:
FILE: **10000AH1**

AIR HANDLING UNIT SURVEY OBSERVATIONS

AHU-1	AHU NO.		LOCATION (RM)
	REF. SYS. SERVING AHU		SERVES AREA

UNIT TYPE:

X	SINGLE ZN		2-PIPE FC		4-PIPE FC		UNIT HTR		H&V
	MULTIZONE		DOUBLE DT		REHEAT		INDUCTION		VAV
	NUMBER OF ZONES				OTHER				
	COMMENT:		**PART TRACER**						

NAMEPLATE:

					MFG.				MODEL
1.0	SUPPLY FAN HP				MFG.				MODEL
	RET/EXH FAN HP				MFG.				MODEL
1125	CFM-HTG	**1125**	CFM-CLG	**33%**	MIN %OA	**100%**	MAX %OA	**2.0%**	% HTG AREA SERVED
COMMENT:									

COILS:

X	NONE		STM		HW		ELEC		MOD VLV	PREHEAT
	NONE		STM	X	HW		ELEC		MOD VLV	HEATING
X	NONE		STM		HW		ELEC		MOD VLV	REHEAT
X	NONE		STM		HW		EVAP MEDIA		MOD VLV	HUMID.
	NONE	X	DX		CW				MOD VLV	COOLING

OPERATION:

HOURS ON:	S	M	T	W	T	F	S	COMMENTS
PRESENT START TIME	**0**	**0**	**0**	**0**	**0**	**0**	**0**	TIMECLOC **TRACER**
PRESENT STOP TIME	**2400**	**2400**	**2400**	**2400**	**2400**	**2400**	**2400**	
REQUIRED START TIME								
REQUIRED STOP TIME								

MONTHS ON:

J	F	M	A	M	J	J	A	S	O	N	D
X	X	X	X	X	X	X	X	X	X	X	X

CONTROLS:

		PNEUMATIC		ELECTRIC		ELEC'NIC	X	DDC	COMMENTS
THERMOSTAT TYPE:		SINGLE STPT		DUAL SETPNT		SETBACK			
SPACE SETPOINT (°F):	**68**	OCC HEAT	**50**	UNOCC HEAT	**68**	OCC COOL	**50**	UNOCC COOL	
OTHER SETPOINTS (°F):		HOT DECK		COLD DECK		MIXED AIR		OTHER	
DAMPER CONTROL:	**N**	MIN OA (Y/N)	**Y**	MAX OA (Y/N)	**Y**	RA (Y/N)	**Y**	EA (Y/N)	
		MA CONTROL		ECONO-DB		ECONO-ENT		OTHER	
DEMAND LIMIT:		(Y = YES ; N = NO)							

COMMENTS:

ON TRACER

E M C ENGINEERS, INC.

PROJECT: UMCS STUDY
CLIENT CONTRACT NO.: DACA01-94-D-0033
CLIENT PROJ. ENG: STEVE ROWLEY
LOCATION: FORT DRUM, NY BLDG: **100000**

EMC NO.: 1406-006
DATE: 23-Feb
PREPARED BY:
CHECKED BY:
FILE: **10000AH2**

AIR HANDLING UNIT SURVEY OBSERVATIONS

AHU-2	AHU NO.		LOCATION (RM)
	REF. SYS. SERVING AHU		SERVES AREA

UNIT TYPE:

X	SINGLE ZN		2-PIPE FC		4-PIPE FC		UNIT HTR		H&V
	MULTIZONE		DOUBLE DT		REHEAT		INDUCTION		VAV
	NUMBER OF ZONES				OTHER				
	COMMENT:	**PART TRACER**							

NAMEPLATE:

					MFG.				MODEL
2.0	SUPPLY FAN HP				MFG.				MODEL
	RET/EXH FAN HP				MFG.				MODEL
1340	CFM-HTG	**1340**	CFM-CLG	**33%**	MIN %OA	**100%**	MAX %OA	**3.0%**	% HTG AREA SERVED
COMMENT:									

COILS:

X	NONE		STM		HW		ELEC		MOD VLV	PREHEAT
	NONE		STM	X	HW		ELEC		MOD VLV	HEATING
X	NONE		STM		HW		ELEC		MOD VLV	REHEAT
X	NONE		STM		HW		EVAP MEDIA		MOD VLV	HUMID.
	NONE	X	DX		CW				MOD VLV	COOLING

OPERATION:

HOURS ON:	S	M	T	W	T	F	S	COMMENTS
PRESENT START TIME	**0**	**0**	**0**	**0**	**0**	**0**	**0**	TIMECLOC **TRACER**
PRESENT STOP TIME	**2400**	**2400**	**2400**	**2400**	**2400**	**2400**	**2400**	
REQUIRED START TIME								
REQUIRED STOP TIME								

MONTHS ON:

J	F	M	A	M	J	J	A	S	O	N	D
X	X	X	X	X	X	X	X	X	X	X	X

CONTROLS:

		PNEUMATIC		ELECTRIC		ELEC'NIC	X	DDC	COMMENTS
THERMOSTAT TYPE:		SINGLE STPT		DUAL SETPNT		SETBACK			
SPACE SETPOINT (°F):	**68**	OCC HEAT	**50**	UNOCC HEAT	**68**	OCC COOL	**50**	UNOCC COOL	
OTHER SETPOINTS (°F):		HOT DECK		COLD DECK		MIXED AIR		OTHER	
DAMPER CONTROL:	**N**	MIN OA (Y/N)	**Y**	MAX OA (Y/N)	**Y**	RA (Y/N)	**Y**	EA (Y/N)	
		MA CONTROL		ECONO-DB		ECONO-ENT		OTHER	
DEMAND LIMIT:		(Y = YES ; N = NO)							

COMMENTS:

ON TRACER

E M C ENGINEERS, INC.

PROJECT: UMCS STUDY
CLIENT CONTRACT NO.: DACA01-94-D-0033
CLIENT PROJ. ENG: STEVE ROWLEY
LOCATION: FORT DRUM, NY BLDG: **100000**

EMC NO.: 1406-006
DATE: 23-Feb
PREPARED BY: **BG**
CHECKED BY:
FILE: **10000AH3**

AIR HANDLING UNIT SURVEY OBSERVATIONS

AHU-3	AHU NO.		LOCATION (RM)
	REF. SYS. SERVING AHU		SERVES AREA

UNIT TYPE:

X	SINGLE ZN		2-PIPE FC		4-PIPE FC		UNIT HTR		H&V
	MULTIZONE		DOUBLE DT		REHEAT		INDUCTION		VAV
	NUMBER OF ZONES				OTHER				
	COMMENT:		**PART TRACER**						

NAMEPLATE:

					MFG.				MODEL
2.0	SUPPLY FAN HP				MFG.				MODEL
	RET/EXH FAN HP				MFG.				MODEL
2910	CFM-HTG	**2910**	CFM-CLG	**33%**	MIN %OA	**100%**	MAX %OA	**8.0%**	% HTG AREA SERVED
COMMENT:									

COILS:

X	NONE		STM		HW		ELEC	MOD VLV	PREHEAT
	NONE		STM	X	HW		ELEC	MOD VLV	HEATING
X	NONE		STM		HW		ELEC	MOD VLV	REHEAT
X	NONE		STM		HW		EVAP MEDIA	MOD VLV	HUMID.
	NONE	X	DX		CW			MOD VLV	COOLING

OPERATION:

HOURS ON:	S	M	T	W	T	F	S	COMMENTS
PRESENT START TIME	**0**	**0**	**0**	**0**	**0**	**0**	**0**	TIMECLOC **TRACER**
PRESENT STOP TIME	**2400**	**2400**	**2400**	**2400**	**2400**	**2400**	**2400**	
REQUIRED START TIME								
REQUIRED STOP TIME								

MONTHS ON:

J	F	M	A	M	J	J	A	S	O	N	D
X	X	X	X	X	X	X	X	X	X	X	X

CONTROLS:

		PNEUMATIC		ELECTRIC		ELEC'NIC	X	DDC	COMMENTS
THERMOSTAT TYPE:		SINGLE STPT		DUAL SETPNT		SETBACK			
SPACE SETPOINT (°F):	**68**	OCC HEAT	**50**	UNOCC HEAT	**68**	OCC COOL	**50**	UNOCC COOL	
OTHER SETPOINTS (°F):		HOT DECK		COLD DECK		MIXED AIR		OTHER	
DAMPER CONTROL:	**N**	MIN OA (Y/N)	**Y**	MAX OA (Y/N)	**Y**	RA (Y/N)	**Y**	EA (Y/N)	
		MA CONTROL		ECONO-DB		ECONO-ENT		OTHER	
DEMAND LIMIT:		(Y = YES ; N = NO)							
COMMENTS:									
	ON TRACER								

E M C ENGINEERS, INC.

PROJECT: UMCS STUDY
CLIENT CONTRACT NO.: DACA01-94-D-0033
CLIENT PROJ. ENG: STEVE ROWLEY
LOCATION: FORT DRUM, NY BLDG: **100000**

EMC NO.: 1406-006
DATE: 23-Feb
PREPARED BY:
CHECKED BY:
FILE: **10000AH5**

AIR HANDLING UNIT SURVEY OBSERVATIONS

AHU-5	AHU NO.		LOCATION (RM)
	REF. SYS. SERVING AHU		SERVES AREA

UNIT TYPE:

X	SINGLE ZN		2-PIPE FC		4-PIPE FC		UNIT HTR		H&V
	MULTIZONE		DOUBLE DT		REHEAT		INDUCTION		VAV
	NUMBER OF ZONES				OTHER				
	COMMENT:		**PART TRACER**						

NAMEPLATE:

					MFG.				MODEL
0.1	SUPPLY FAN HP				MFG.				MODEL
	RET/EXH FAN HP				MFG.				MODEL
565	CFM-HTG	**565**	CFM-CLG	**100%**	MIN %OA	**100%**	MAX %OA	**1.0%**	% HTG AREA SERVED
COMMENT:									

COILS:

X	NONE		STM		HW		ELEC		MOD VLV	PREHEAT
	NONE		STM	X	HW		ELEC		MOD VLV	HEATING
X	NONE		STM		HW		ELEC		MOD VLV	REHEAT
X	NONE		STM		HW		EVAP MEDIA		MOD VLV	HUMID.
	NONE	X	DX		CW				MOD VLV	COOLING

OPERATION:

HOURS ON:	S	M	T	W	T	F	S	COMMENTS
PRESENT START TIME	**0**	**0**	**0**	**0**	**0**	**0**	**0**	TIMECLOC **TRACER**
PRESENT STOP TIME	**2400**	**2400**	**2400**	**2400**	**2400**	**2400**	**2400**	
REQUIRED START TIME								
REQUIRED STOP TIME								

MONTHS ON:

J	F	M	A	M	J	J	A	S	O	N	D
X	X	X	X	X	X	X	X	X	X	X	X

CONTROLS:

		PNEUMATIC		ELECTRIC		ELEC'NIC	X	DDC	COMMENTS
THERMOSTAT TYPE:		SINGLE STPT		DUAL SETPNT		SETBACK			
SPACE SETPOINT (°F):	**68**	OCC HEAT	**50**	UNOCC HEAT	**68**	OCC COOL	**50**	UNOCC COOL	
OTHER SETPOINTS (°F):		HOT DECK		COLD DECK		MIXED AIR		OTHER	
DAMPER CONTROL:	**N**	MIN OA (Y/N)	**Y**	MAX OA (Y/N)	**Y**	RA (Y/N)	**Y**	EA (Y/N)	
		MA CONTROL		ECONO-DB		ECONO-ENT		OTHER	
DEMAND LIMIT:		(Y = YES ; N = NO)							

COMMENTS:

ON TRACER

E M C ENGINEERS, INC.

PROJECT: UMCS STUDY
CLIENT CONTRACT NO.: DACA01-94-D-0033
CLIENT PROJ. ENG: STEVE ROWLEY
LOCATION: FORT DRUM, NY BLDG: **100000**

EMC NO.: 1406-006
DATE: 23-Feb
PREPARED BY:
CHECKED BY:
FILE: **10000AH4**

AIR HANDLING UNIT SURVEY OBSERVATIONS

AHU-4	AHU NO.		LOCATION (RM)
	REF. SYS. SERVING AHU		SERVES AREA

UNIT TYPE:

X	SINGLE ZN		2-PIPE FC		4-PIPE FC		UNIT HTR		H&V
	MULTIZONE		DOUBLE DT		REHEAT		INDUCTION		VAV
	NUMBER OF ZONES				OTHER				
	COMMENT:		**PART TRACER**						

NAMEPLATE:

					MFG.				MODEL
3.0	SUPPLY FAN HP				MFG.				MODEL
	RET/EXH FAN HP				MFG.				MODEL
2575	CFM-HTG	**2575**	CFM-CLG	**100%**	MIN %OA	**100%**	MAX %OA	**1.0%**	% HTG AREA SERVED
COMMENT:									

COILS:

X	NONE		STM		HW		ELEC		MOD VLV	PREHEAT
	NONE		STM	X	HW		ELEC		MOD VLV	HEATING
X	NONE		STM		HW		ELEC		MOD VLV	REHEAT
X	NONE		STM		HW		EVAP MEDIA		MOD VLV	HUMID.
	NONE	X	DX		CW				MOD VLV	COOLING

OPERATION:

HOURS ON:	S	M	T	W	T	F	S	COMMENTS
PRESENT START TIME	**0**	**0**	**0**	**0**	**0**	**0**	**0**	TIMECLOC **TRACER**
PRESENT STOP TIME	**2400**	**2400**	**2400**	**2400**	**2400**	**2400**	**2400**	
REQUIRED START TIME	**0**	**600**	**600**	**600**	**600**	**600**	**0**	
REQUIRED STOP TIME	**0**	**1800**	**1800**	**1800**	**1800**	**1800**	**0**	

MONTHS ON:

J	F	M	A	M	J	J	A	S	O	N	D
1	**1**	**1**	**1**	**1**	**1**	**1**	**1**	**1**	**1**	**1**	**1**

CONTROLS:

		PNEUMATIC		ELECTRIC		ELEC'NIC	X	DDC	COMMENTS
THERMOSTAT TYPE:		SINGLE STPT		DUAL SETPNT		SETBACK			
SPACE SETPOINT (°F):	**68**	OCC HEAT	**50**	UNOCC HEAT	**68**	OCC COOL	**50**	UNOCC COOL	
OTHER SETPOINTS (°F):		HOT DECK		COLD DECK		MIXED AIR		OTHER	
DAMPER CONTROL:	**N**	MIN OA (Y/N)	**Y**	MAX OA (Y/N)	**Y**	RA (Y/N)	**Y**	EA (Y/N)	
		MA CONTROL		ECONO-DB		ECONO-ENT		OTHER	
DEMAND LIMIT:		(Y = YES ; N = NO)							

COMMENTS:

ON TRACER

E M C ENGINEERS, INC.

PROJECT: UMCS STUDY
CLIENT CONTRACT NO.: DACA01-94-D-0033
CLIENT PROJ. ENG: STEVE ROWLEY
LOCATION: FORT DRUM, NY BLDG: **100000**

EMC NO.: 1406-006
DATE: 23-Feb
PREPARED BY:
CHECKED BY:
FILE: **10000AH6**

AIR HANDLING UNIT SURVEY OBSERVATIONS

AHU-6	AHU NO.		LOCATION (RM)
	REF. SYS. SERVING AHU		SERVES AREA

UNIT TYPE:

X	SINGLE ZN		2-PIPE FC		4-PIPE FC		UNIT HTR		H&V
	MULTIZONE		DOUBLE DT		REHEAT		INDUCTION		VAV
	NUMBER OF ZONES				OTHER				
	COMMENT:		**PART TRACER**						

NAMEPLATE:

					MFG.				MODEL
0.1	SUPPLY FAN HP				MFG.				MODEL
	RET/EXH FAN HP				MFG.				MODEL
410	CFM-HTG	**410**	CFM-CLG	**100%**	MIN %OA	**100%**	MAX %OA	**1.0%**	% HTG AREA SERVED
COMMENT:									

COILS:

X	NONE		STM		HW		ELEC		MOD VLV	PREHEAT
	NONE		STM	X	HW		ELEC		MOD VLV	HEATING
X	NONE		STM		HW		ELEC		MOD VLV	REHEAT
X	NONE		STM		HW		EVAP MEDIA		MOD VLV	HUMID.
	NONE	X	DX		CW				MOD VLV	COOLING

OPERATION:

HOURS ON:	S	M	T	W	T	F	S	COMMENTS
PRESENT START TIME	**0**	**0**	**0**	**0**	**0**	**0**	**0**	TIMECLOC **TRACER**
PRESENT STOP TIME	**2400**	**2400**	**2400**	**2400**	**2400**	**2400**	**2400**	
REQUIRED START TIME								
REQUIRED STOP TIME								

MONTHS ON:

J	F	M	A	M	J	J	A	S	O	N	D
X	X	X	X	X	X	X	X	X	X	X	X

CONTROLS:

		PNEUMATIC		ELECTRIC		ELEC'NIC	X	DDC	COMMENTS
THERMOSTAT TYPE:		SINGLE STPT		DUAL SETPNT		SETBACK			
SPACE SETPOINT (°F):	**68**	OCC HEAT	**50**	UNOCC HEAT	**68**	OCC COOL	**50**	UNOCC COOL	
OTHER SETPOINTS (°F):		HOT DECK		COLD DECK		MIXED AIR		OTHER	
DAMPER CONTROL:	**N**	MIN OA (Y/N)	**Y**	MAX OA (Y/N)	**Y**	RA (Y/N)	**Y**	EA (Y/N)	
		MA CONTROL		ECONO-DB		ECONO-ENT		OTHER	
DEMAND LIMIT:		(Y = YES ; N = NO)							
COMMENTS:									
ON TRACER									

E M C ENGINEERS, INC.

PROJECT: UMCS STUDY
CLIENT CONTRACT NO.: DACA01-94-D-0033
CLIENT PROJ. ENG: STEVE ROWLEY
LOCATION: FORT DRUM, NY BLDG: **100000**

EMC NO.: 1406-006
DATE: 23-Feb
PREPARED BY:
CHECKED BY:
FILE: **10000AH7**

AIR HANDLING UNIT SURVEY OBSERVATIONS

AHU-7	AHU NO.		LOCATION (RM)
	REF. SYS. SERVING AHU		SERVES AREA

UNIT TYPE:

X	SINGLE ZN		2-PIPE FC		4-PIPE FC		UNIT HTR		H&V
	MULTIZONE		DOUBLE DT		REHEAT		INDUCTION		VAV
	NUMBER OF ZONES				OTHER				
	COMMENT:		**PART TRACER**						

NAMEPLATE:

					MFG.				MODEL
0.8	SUPPLY FAN HP				MFG.				MODEL
	RET/EXH FAN HP				MFG.				MODEL
1800	CFM-HTG	**1800**	CFM-CLG	**33%**	MIN %OA	**100%**	MAX %OA	**4.0%**	% HTG AREA SERVED
COMMENT:									

COILS:

X	NONE		STM		HW		ELEC		MOD VLV	PREHEAT
	NONE		STM	X	HW		ELEC		MOD VLV	HEATING
X	NONE		STM		HW		ELEC		MOD VLV	REHEAT
X	NONE		STM		HW		EVAP MEDIA		MOD VLV	HUMID.
	NONE	X	DX		CW				MOD VLV	COOLING

OPERATION:

HOURS ON:	S	M	T	W	T	F	S	COMMENTS
PRESENT START TIME	**0**	**0**	**0**	**0**	**0**	**0**	**0**	TIMECLOC **TRACER**
PRESENT STOP TIME	**2400**	**2400**	**2400**	**2400**	**2400**	**2400**	**2400**	
REQUIRED START TIME								
REQUIRED STOP TIME								

MONTHS ON:

J	F	M	A	M	J	J	A	S	O	N	D
X	X	X	X	X	X	X	X	X	X	X	X

CONTROLS:

		PNEUMATIC		ELECTRIC		ELEC'NIC	X	DDC	COMMENTS
THERMOSTAT TYPE:		SINGLE STPT		DUAL SETPNT		SETBACK			
SPACE SETPOINT (°F):	**68**	OCC HEAT	**50**	UNOCC HEAT	**68**	OCC COOL	**50**	UNOCC COOL	
OTHER SETPOINTS (°F):		HOT DECK		COLD DECK		MIXED AIR		OTHER	
DAMPER CONTROL:	**N**	MIN OA (Y/N)	**Y**	MAX OA (Y/N)	**Y**	RA (Y/N)	**Y**	EA (Y/N)	
		MA CONTROL		ECONO-DB		ECONO-ENT		OTHER	
DEMAND LIMIT:		(Y = YES ; N = NO)							

COMMENTS:

ON TRACER

E M C ENGINEERS, INC.

PROJECT: UMCS STUDY
CLIENT CONTRACT NO.: DACA01-94-D-0033
CLIENT PROJ. ENG: STEVE ROWLEY
LOCATION: FORT DRUM, NY BLDG: **100000**

EMC NO.: 1406-006
DATE: 23-Feb
PREPARED BY:
CHECKED BY:
FILE: **10000AH8**

AIR HANDLING UNIT SURVEY OBSERVATIONS

AHU-8	AHU NO.		LOCATION (RM)
	REF. SYS. SERVING AHU		SERVES AREA

UNIT TYPE:

X	SINGLE ZN		2-PIPE FC		4-PIPE FC		UNIT HTR		H&V
	MULTIZONE		DOUBLE DT		REHEAT		INDUCTION		VAV
	NUMBER OF ZONES				OTHER				
	COMMENT:		**PART TRACER**						

NAMEPLATE:

					MFG.				MODEL
0.3	SUPPLY FAN HP				MFG.				MODEL
	RET/EXH FAN HP				MFG.				MODEL
860	CFM-HTG	**690**	CFM-CLG	**33%**	MIN %OA	**100%**	MAX %OA	**1.0%**	% HTG AREA SERVED
COMMENT:									

COILS:

X	NONE		STM		HW		ELEC		MOD VLV	PREHEAT
	NONE		STM	X	HW		ELEC		MOD VLV	HEATING
X	NONE		STM		HW		ELEC		MOD VLV	REHEAT
X	NONE		STM		HW		EVAP MEDIA		MOD VLV	HUMID.
	NONE	X	DX		CW				MOD VLV	COOLING

OPERATION:

HOURS ON:	S	M	T	W	T	F	S	COMMENTS
PRESENT START TIME	**0**	**0**	**0**	**0**	**0**	**0**	**0**	TIMECLOC **TRACER**
PRESENT STOP TIME	**2400**	**2400**	**2400**	**2400**	**2400**	**2400**	**2400**	
REQUIRED START TIME								
REQUIRED STOP TIME								

MONTHS ON:

J	F	M	A	M	J	J	A	S	O	N	D
X	**X**	**X**	**X**	**X**	**X**	**X**	**X**	**X**	**X**	**X**	**X**

CONTROLS:

		PNEUMATIC		ELECTRIC		ELEC'NIC	X	DDC	COMMENTS
THERMOSTAT TYPE:		SINGLE STPT		DUAL SETPNT		SETBACK			
SPACE SETPOINT (°F):	**68**	OCC HEAT	**50**	UNOCC HEAT	**68**	OCC COOL	**50**	UNOCC COOL	
OTHER SETPOINTS (°F):		HOT DECK		COLD DECK		MIXED AIR		OTHER	
DAMPER CONTROL:	**N**	MIN OA (Y/N)	**Y**	MAX OA (Y/N)	**Y**	RA (Y/N)	**Y**	EA (Y/N)	
		MA CONTROL		ECONO-DB		ECONO-ENT		OTHER	
DEMAND LIMIT:		(Y = YES ; N = NO)							

COMMENTS:

ON TRACER

E M C ENGINEERS, INC.

PROJECT: UMCS STUDY
CLIENT CONTRACT NO.: DACA01-94-D-0033
CLIENT PROJ. ENG: STEVE ROWLEY
LOCATION: FORT DRUM, NY BLDG: **100000**

EMC NO.: 1406-006
DATE: 23-Feb
PREPARED BY:
CHECKED BY:
FILE: **10000AH9**

AIR HANDLING UNIT SURVEY OBSERVATIONS

AHU-9	AHU NO.		LOCATION (RM)
	REF. SYS. SERVING AHU		SERVES AREA

UNIT TYPE:

X	SINGLE ZN		2-PIPE FC		4-PIPE FC		UNIT HTR		H&V
	MULTIZONE		DOUBLE DT		REHEAT		INDUCTION		VAV
	NUMBER OF ZONES				OTHER				
	COMMENT:	**PART TRACER**							

NAMEPLATE:

					MFG.				MODEL
0.3	SUPPLY FAN HP				MFG.				MODEL
	RET/EXH FAN HP				MFG.				MODEL
690	CFM-HTG	**690**	CFM-CLG	**33%**	MIN %OA	**100%**	MAX %OA	**1.0%**	% HTG AREA SERVED
COMMENT:									

COILS:

X	NONE		STM		HW		ELEC		MOD VLV	PREHEAT
	NONE		STM	X	HW		ELEC		MOD VLV	HEATING
X	NONE		STM		HW		ELEC		MOD VLV	REHEAT
X	NONE		STM		HW		EVAP MEDIA		MOD VLV	HUMID.
	NONE	X	DX		CW				MOD VLV	COOLING

OPERATION:

HOURS ON:	S	M	T	W	T	F	S	COMMENTS
PRESENT START TIME	**0**	**0**	**0**	**0**	**0**	**0**	**0**	TIMECLOC **TRACER**
PRESENT STOP TIME	**2400**	**2400**	**2400**	**2400**	**2400**	**2400**	**2400**	
REQUIRED START TIME								
REQUIRED STOP TIME								

MONTHS ON:

J	F	M	A	M	J	J	A	S	O	N	D
X	X	X	X	X	X	X	X	X	X	X	X

CONTROLS:

		PNEUMATIC		ELECTRIC		ELEC'NIC	X	DDC	COMMENTS
THERMOSTAT TYPE:		SINGLE STPT		DUAL SETPNT		SETBACK			
SPACE SETPOINT (°F):	**68**	OCC HEAT	**50**	UNOCC HEAT	**68**	OCC COOL	**50**	UNOCC COOL	
OTHER SETPOINTS (°F):		HOT DECK		COLD DECK		MIXED AIR		OTHER	
DAMPER CONTROL:	**N**	MIN OA (Y/N)	**Y**	MAX OA (Y/N)	**Y**	RA (Y/N)	**Y**	EA (Y/N)	
		MA CONTROL		ECONO-DB		ECONO-ENT		OTHER	
DEMAND LIMIT:		(Y = YES ; N = NO)							
COMMENTS:									
ON TRACER									

E M C ENGINEERS, INC.

PROJECT: UMCS STUDY
CLIENT CONTRACT NO.: DACA01-94-D-0033
CLIENT PROJ. ENG: STEVE ROWLEY
LOCATION: FORT DRUM, NY BLDG: **100000**

EMC NO.: 1406-006
DATE: 23-Feb
PREPARED BY:
CHECKED BY:
FILE: **10000A10**

AIR HANDLING UNIT SURVEY OBSERVATIONS

AHU-10	AHU NO.		LOCATION (RM)
	REF. SYS. SERVING AHU		SERVES AREA

UNIT TYPE:

X	SINGLE ZN		2-PIPE FC		4-PIPE FC		UNIT HTR		H&V
	MULTIZONE		DOUBLE DT		REHEAT		INDUCTION		VAV
	NUMBER OF ZONES				OTHER				
	COMMENT:		**PART TRACER**						

NAMEPLATE:

					MFG.				MODEL
0.5	SUPPLY FAN HP				MFG.				MODEL
	RET/EXH FAN HP				MFG.				MODEL
925	CFM-HTG	**925**	CFM-CLG	**33%**	MIN %OA	**100%**	MAX %OA	**1.0%**	% HTG AREA SERVED
COMMENT:									

COILS:

X	NONE		STM		HW		ELEC		MOD VLV	PREHEAT
	NONE		STM	X	HW		ELEC		MOD VLV	HEATING
X	NONE		STM		HW		ELEC		MOD VLV	REHEAT
X	NONE		STM		HW		EVAP MEDIA		MOD VLV	HUMID.
	NONE	X	DX		CW				MOD VLV	COOLING

OPERATION:

HOURS ON:	S	M	T	W	T	F	S	COMMENTS
PRESENT START TIME	**0**	**0**	**0**	**0**	**0**	**0**	**0**	TIMECLOC **TRACER**
PRESENT STOP TIME	**2400**	**2400**	**2400**	**2400**	**2400**	**2400**	**2400**	
REQUIRED START TIME								
REQUIRED STOP TIME								

MONTHS ON:

J	F	M	A	M	J	J	A	S	O	N	D
X	X	X	X	X	X	X	X	X	X	X	X

CONTROLS:

		PNEUMATIC		ELECTRIC		ELEC'NIC	X	DDC	COMMENTS
THERMOSTAT TYPE:		SINGLE STPT		DUAL SETPNT		SETBACK			
SPACE SETPOINT (°F):	**68**	OCC HEAT	**50**	UNOCC HEAT	**68**	OCC COOL	**50**	UNOCC COOL	
OTHER SETPOINTS (°F):		HOT DECK		COLD DECK		MIXED AIR		OTHER	
DAMPER CONTROL:	**N**	MIN OA (Y/N)	**Y**	MAX OA (Y/N)	**Y**	RA (Y/N)	**Y**	EA (Y/N)	
		MA CONTROL		ECONO-DB		ECONO-ENT		OTHER	
DEMAND LIMIT:		(Y = YES ; N = NO)							
COMMENTS:									
	ON TRACER								

E M C ENGINEERS, INC.

PROJECT: UMCS STUDY
CLIENT CONTRACT NO.: DACA01-94-D-0033
CLIENT PROJ. ENG: STEVE ROWLEY
LOCATION: FORT DRUM, NY BLDG: **100000**

EMC NO.: 1406-006
DATE: 23-Feb
PREPARED BY:
CHECKED BY:
FILE: **10000A11**

AIR HANDLING UNIT SURVEY OBSERVATIONS

AHU-11	AHU NO.		LOCATION (RM)
	REF. SYS. SERVING AHU		SERVES AREA

UNIT TYPE:

X	SINGLE ZN		2-PIPE FC		4-PIPE FC		UNIT HTR		H&V
	MULTIZONE		DOUBLE DT		REHEAT		INDUCTION		VAV
	NUMBER OF ZONES				OTHER				
	COMMENT:		**PART TRACER**						

NAMEPLATE:

					MFG.				MODEL
0.1	SUPPLY FAN HP				MFG.				MODEL
	RET/EXH FAN HP				MFG.				MODEL
500	CFM-HTG	**500**	CFM-CLG	**33%**	MIN %OA	**100%**	MAX %OA	**1.0%**	% HTG AREA SERVED
COMMENT:									

COILS:

X	NONE		STM		HW		ELEC		MOD VLV	PREHEAT
	NONE		STM	X	HW		ELEC		MOD VLV	HEATING
X	NONE		STM		HW		ELEC		MOD VLV	REHEAT
X	NONE		STM		HW		EVAP MEDIA		MOD VLV	HUMID.
	NONE	X	DX		CW				MOD VLV	COOLING

OPERATION:

HOURS ON:	S	M	T	W	T	F	S	COMMENTS
PRESENT START TIME	**0**	**0**	**0**	**0**	**0**	**0**	**0**	TIMECLOC **TRACER**
PRESENT STOP TIME	**2400**	**2400**	**2400**	**2400**	**2400**	**2400**	**2400**	
REQUIRED START TIME								
REQUIRED STOP TIME								

MONTHS ON:

J	F	M	A	M	J	J	A	S	O	N	D
X	X	X	X	X	X	X	X	X	X	X	X

CONTROLS:

		PNEUMATIC		ELECTRIC		ELEC'NIC	X	DDC	COMMENTS
THERMOSTAT TYPE:		SINGLE STPT		DUAL SETPNT		SETBACK			
SPACE SETPOINT (°F):	**68**	OCC HEAT	**50**	UNOCC HEAT	**68**	OCC COOL	**50**	UNOCC COOL	
OTHER SETPOINTS (°F):		HOT DECK		COLD DECK		MIXED AIR		OTHER	
DAMPER CONTROL:	**N**	MIN OA (Y/N)	**Y**	MAX OA (Y/N)	**Y**	RA (Y/N)	**Y**	EA (Y/N)	
		MA CONTROL		ECONO-DB		ECONO-ENT		OTHER	
DEMAND LIMIT:		(Y = YES ; N = NO)							

COMMENTS:

ON TRACER

E M C ENGINEERS, INC.

PROJECT: UMCS STUDY
CLIENT CONTRACT NO.: DACA01-94-D-0033
CLIENT PROJ. ENG: STEVE ROWLEY
LOCATION: FORT DRUM, NY BLDG: **100000**

EMC NO.: 1406-006
DATE: 23-Feb
PREPARED BY:
CHECKED BY:
FILE: **10000A12**

AIR HANDLING UNIT SURVEY OBSERVATIONS

AHU-12	AHU NO.		LOCATION (RM)
	REF. SYS. SERVING AHU		SERVES AREA

UNIT TYPE:

X	SINGLE ZN		2-PIPE FC		4-PIPE FC		UNIT HTR		H&V
	MULTIZONE		DOUBLE DT		REHEAT		INDUCTION		VAV
	NUMBER OF ZONES				OTHER				
	COMMENT:		**PART TRACER**						

NAMEPLATE:

					MFG.				MODEL
0.5	SUPPLY FAN HP				MFG.				MODEL
	RET/EXH FAN HP				MFG.				MODEL
1150	CFM-HTG	**1150**	CFM-CLG	**33%**	MIN %OA	**100%**	MAX %OA	**2.0%**	% HTG AREA SERVED
COMMENT:									

COILS:

X	NONE		STM		HW		ELEC		MOD VLV	PREHEAT
	NONE		STM	X	HW		ELEC		MOD VLV	HEATING
X	NONE		STM		HW		ELEC		MOD VLV	REHEAT
X	NONE		STM		HW		EVAP MEDIA		MOD VLV	HUMID.
	NONE	X	DX		CW				MOD VLV	COOLING

OPERATION:

HOURS ON:	S	M	T	W	T	F	S	COMMENTS
PRESENT START TIME	**0**	**0**	**0**	**0**	**0**	**0**	**0**	TIMECLOC **TRACER**
PRESENT STOP TIME	**2400**	**2400**	**2400**	**2400**	**2400**	**2400**	**2400**	
REQUIRED START TIME								
REQUIRED STOP TIME								

MONTHS ON:

J	F	M	A	M	J	J	A	S	O	N	D
X	X	X	X	X	X	X	X	X	X	X	X

CONTROLS:

		PNEUMATIC		ELECTRIC		ELEC'NIC	X	DDC	COMMENTS
THERMOSTAT TYPE:		SINGLE STPT		DUAL SETPNT		SETBACK			
SPACE SETPOINT (°F):	**68**	OCC HEAT	**50**	UNOCC HEAT	**68**	OCC COOL	**50**	UNOCC COOL	
OTHER SETPOINTS (°F):		HOT DECK		COLD DECK		MIXED AIR		OTHER	
DAMPER CONTROL:	**N**	MIN OA (Y/N)	**Y**	MAX OA (Y/N)	**Y**	RA (Y/N)	**Y**	EA (Y/N)	
		MA CONTROL		ECONO-DB		ECONO-ENT		OTHER	
DEMAND LIMIT:		(Y = YES ; N = NO)							
COMMENTS:									
ON TRACER									

E M C ENGINEERS, INC.

PROJECT: UMCS STUDY
CLIENT CONTRACT NO.: DACA01-94-D-0033
CLIENT PROJ. ENG: STEVE ROWLEY
LOCATION: FORT DRUM, NY BLDG: **100000**

EMC NO.: 1406-006
DATE: 23-Feb
PREPARED BY:
CHECKED BY:
FILE: **10000A13**

AIR HANDLING UNIT SURVEY OBSERVATIONS

AHU-13	AHU NO.		LOCATION (RM)
	REF. SYS. SERVING AHU		SERVES AREA

UNIT TYPE:

X	SINGLE ZN		2-PIPE FC		4-PIPE FC		UNIT HTR		H&V
	MULTIZONE		DOUBLE DT		REHEAT		INDUCTION		VAV
	NUMBER OF ZONES				OTHER				
	COMMENT:		**PART TRACER**						

NAMEPLATE:

					MFG.				MODEL
0.5	SUPPLY FAN HP				MFG.				MODEL
	RET/EXH FAN HP				MFG.				MODEL
1150	CFM-HTG	**1150**	CFM-CLG	**33%**	MIN %OA	**100%**	MAX %OA	**2.0%**	% HTG AREA SERVED
COMMENT:									

COILS:

X	NONE		STM		HW		ELEC		MOD VLV	PREHEAT
	NONE		STM	X	HW		ELEC		MOD VLV	HEATING
X	NONE		STM		HW		ELEC		MOD VLV	REHEAT
X	NONE		STM		HW		EVAP MEDIA		MOD VLV	HUMID.
	NONE	X	DX		CW				MOD VLV	COOLING

OPERATION:

HOURS ON:	S	M	T	W	T	F	S	COMMENTS
PRESENT START TIME	**0**	**0**	**0**	**0**	**0**	**0**	**0**	TIMECLOC **TRACER**
PRESENT STOP TIME	**2400**	**2400**	**2400**	**2400**	**2400**	**2400**	**2400**	
REQUIRED START TIME								
REQUIRED STOP TIME								

MONTHS ON:

J	F	M	A	M	J	J	A	S	O	N	D
X	X	X	X	X	X	X	X	X	X	X	X

CONTROLS:

		PNEUMATIC		ELECTRIC		ELEC'NIC	X	DDC	COMMENTS
THERMOSTAT TYPE:		SINGLE STPT		DUAL SETPNT		SETBACK			
SPACE SETPOINT (°F):	**68**	OCC HEAT	**50**	UNOCC HEAT	**68**	OCC COOL	**50**	UNOCC COOL	
OTHER SETPOINTS (°F):		HOT DECK		COLD DECK		MIXED AIR		OTHER	
DAMPER CONTROL:	**N**	MIN OA (Y/N)	**Y**	MAX OA (Y/N)	**Y**	RA (Y/N)	**Y**	EA (Y/N)	
		MA CONTROL		ECONO-DB		ECONO-ENT		OTHER	
DEMAND LIMIT:		(Y = YES ; N = NO)							

COMMENTS:

ON TRACER

E M C ENGINEERS, INC.

PROJECT: UMCS STUDY
CLIENT CONTRACT NO.: DACA01-94-D-0033
CLIENT PROJ. ENG: STEVE ROWLEY
LOCATION: FORT DRUM, NY BLDG: **100000**

EMC NO.: 1406-006
DATE: 23-Feb
PREPARED BY:
CHECKED BY:
FILE: **10000A14**

AIR HANDLING UNIT SURVEY OBSERVATIONS

AHU-14	AHU NO.		LOCATION (RM)
	REF. SYS. SERVING AHU		SERVES AREA

UNIT TYPE:

X	SINGLE ZN		2-PIPE FC		4-PIPE FC		UNIT HTR	X	H&V
	MULTIZONE		DOUBLE DT		REHEAT		INDUCTION		VAV
	NUMBER OF ZONES				OTHER				
	COMMENT:		**PART TRACER**						

NAMEPLATE:

					MFG.				MODEL
10.0	SUPPLY FAN HP				MFG.				MODEL
	RET/EXH FAN HP				MFG.				MODEL
4000	CFM-HTG		CFM-CLG	**33%**	MIN %OA	**100%**	MAX %OA	**12.0%**	% HTG AREA SERVED
COMMENT:									

COILS:

X	NONE		STM		HW		ELEC		MOD VLV	PREHEAT
	NONE		STM	X	HW		ELEC		MOD VLV	HEATING
X	NONE		STM		HW		ELEC		MOD VLV	REHEAT
X	NONE		STM		HW		EVAP MEDIA		MOD VLV	HUMID.
X	NONE		DX		CW				MOD VLV	COOLING

OPERATION:

HOURS ON:	S	M	T	W	T	F	S	COMMENTS
PRESENT START TIME	**0**	**0**	**0**	**0**	**0**	**0**	**0**	TIMECLOC **TRACER**
PRESENT STOP TIME	**2400**	**2400**	**2400**	**2400**	**2400**	**2400**	**2400**	
REQUIRED START TIME								
REQUIRED STOP TIME								

MONTHS ON:

J	F	M	A	M	J	J	A	S	O	N	D
X	X	X	X	X	X	X	X	X	X	X	X

CONTROLS:

		PNEUMATIC		ELECTRIC		ELEC'NIC	X	DDC	COMMENTS
THERMOSTAT TYPE:		SINGLE STPT		DUAL SETPNT		SETBACK			
SPACE SETPOINT (°F):	**68**	OCC HEAT	**50**	UNOCC HEAT	**68**	OCC COOL	**50**	UNOCC COOL	
OTHER SETPOINTS (°F):		HOT DECK		COLD DECK		MIXED AIR		OTHER	
DAMPER CONTROL:	**N**	MIN OA (Y/N)	**Y**	MAX OA (Y/N)	**Y**	RA (Y/N)	**Y**	EA (Y/N)	
		MA CONTROL		ECONO-DB		ECONO-ENT		OTHER	
DEMAND LIMIT:		(Y = YES ; N = NO)							

COMMENTS:

ON TRACER

E M C ENGINEERS, INC.

PROJECT: UMCS STUDY
CLIENT CONTRACT NO.: DACA01-94-D-0033
CLIENT PROJ. ENG: STEVE ROWLEY
LOCATION: FORT DRUM, NY BLDG: **100000**

EMC NO.: 1406-006
DATE: 23-Feb
PREPARED BY:
CHECKED BY:
FILE: **10000A15**

AIR HANDLING UNIT SURVEY OBSERVATIONS

AHU-15	AHU NO.		LOCATION (RM)
	REF. SYS. SERVING AHU		SERVES AREA

UNIT TYPE:

X	SINGLE ZN		2-PIPE FC		4-PIPE FC		UNIT HTR	X	H&V
	MULTIZONE		DOUBLE DT		REHEAT		INDUCTION		VAV
	NUMBER OF ZONES				OTHER				
	COMMENT:		**PART TRACER**						

NAMEPLATE:

					MFG.				MODEL
5.0	SUPPLY FAN HP				MFG.				MODEL
	RET/EXH FAN HP				MFG.				MODEL
2550	CFM-HTG		CFM-CLG	**33%**	MIN %OA	**100%**	MAX %OA	**7.0%**	% HTG AREA SERVED
COMMENT:									

COILS:

X	NONE		STM		HW		ELEC		MOD VLV	PREHEAT
	NONE		STM	X	HW		ELEC		MOD VLV	HEATING
X	NONE		STM		HW		ELEC		MOD VLV	REHEAT
X	NONE		STM		HW		EVAP MEDIA		MOD VLV	HUMID.
X	NONE		DX		CW				MOD VLV	COOLING

OPERATION:

HOURS ON:	S	M	T	W	T	F	S	COMMENTS
PRESENT START TIME	**0**	**0**	**0**	**0**	**0**	**0**	**0**	TIMECLOC **TRACER**
PRESENT STOP TIME	**2400**	**2400**	**2400**	**2400**	**2400**	**2400**	**2400**	
REQUIRED START TIME								
REQUIRED STOP TIME								

MONTHS ON:

J	F	M	A	M	J	J	A	S	O	N	D
X	X	X	X	X	X	X	X	X	X	X	X

CONTROLS:

		PNEUMATIC		ELECTRIC		ELEC'NIC	X	DDC	COMMENTS
THERMOSTAT TYPE:		SINGLE STPT		DUAL SETPNT		SETBACK			
SPACE SETPOINT (°F):	**68**	OCC HEAT	**50**	UNOCC HEAT	**68**	OCC COOL	**50**	UNOCC COOL	
OTHER SETPOINTS (°F):		HOT DECK		COLD DECK		MIXED AIR		OTHER	
DAMPER CONTROL:	**N**	MIN OA (Y/N)	**Y**	MAX OA (Y/N)	**Y**	RA (Y/N)	**Y**	EA (Y/N)	
		MA CONTROL		ECONO-DB		ECONO-ENT		OTHER	
DEMAND LIMIT:		(Y = YES ; N = NO)							

COMMENTS:

ON TRACER

E M C ENGINEERS, INC.

PROJECT: UMCS STUDY
CLIENT CONTRACT NO.: DACA01-94-D-0033
CLIENT PROJ. ENG: STEVE ROWLEY
LOCATION: FORT DRUM, NY BLDG: **10000**

EMC NO.: 1406-006
DATE: 23-Feb
PREPARED BY: **BG**
CHECKED BY:
FILE: **10000AH16**

AIR HANDLING UNIT SURVEY OBSERVATIONS

AHU-16	AHU NO.		LOCATION (RM)
	REF. SYS. SERVING AHU		SERVES AREA

UNIT TYPE:

X	SINGLE ZN		2-PIPE FC		4-PIPE FC		UNIT HTR		H&V
	MULTIZONE		DOUBLE DT		REHEAT		INDUCTION		VAV
	NUMBER OF ZONES				OTHER				
	COMMENT:		**PART TRACER**						

NAMEPLATE:

					MFG.				MODEL
1.5	SUPPLY FAN HP				MFG.				MODEL
	RET/EXH FAN HP				MFG.				MODEL
1610	CFM-HTG	**0**	CFM-CLG		MIN %OA	**100%**	MAX %OA	**6.0%**	% HTG AREA SERVED
COMMENT:									

COILS:

X	NONE		STM		HW		ELEC		MOD VLV	PREHEAT
	NONE		STM	X	HW		ELEC	X	MOD VLV	HEATING
X	NONE		STM		HW		ELEC		MOD VLV	REHEAT
X	NONE		STM		HW		EVAP MEDIA		MOD VLV	HUMID.
X	NONE		DX		CW				MOD VLV	COOLING

OPERATION:

HOURS ON:	S	M	T	W	T	F	S	COMMENTS
PRESENT START TIME	**0**	**0**	**0**	**0**	**0**	**0**	**0**	TIMECLO **Y**
PRESENT STOP TIME	**2400**	**2400**	**2400**	**2400**	**2400**	**2400**	**2400**	
REQUIRED START TIME								
REQUIRED STOP TIME								

MONTHS ON:

J	F	M	A	M	J	J	A	S	O	N	D
X	X	X	X	X	X	X	X	X	X	X	X

CONTROLS:

	X	PNEUMATIC		ELECTRIC		ELEC'NIC		DDC	COMMENTS
THERMOSTAT TYPE:		SINGLE STPT		DUAL SETPNT		SETBACK			
SPACE SETPOINT (°F):	**68**	OCC HEAT	**50**	UNOCC HEAT	**68**	OCC COOL	**50**	UNOCC COOL	
OTHER SETPOINTS (°F):		HOT DECK		COLD DECK		MIXED AIR		OTHER	
DAMPER CONTROL:	**N**	MIN OA (Y/N)	**Y**	MAX OA (Y/N)	**Y**	RA (Y/N)	**Y**	EA (Y/N)	
		MA CONTROL		ECONO-DB		ECONO-ENT		OTHER	
DEMAND LIMIT:		(Y = YES ; N = NO)							
COMMENTS:									

E M C ENGINEERS, INC.

PROJECT: UMCS STUDY
CLIENT CONTRACT NO.: DACA01-94-D-0033
CLIENT PROJ. ENG: STEVE ROWLEY
LOCATION: FORT DRUM, NY BLDG: **10000**

EMC NO.: 1406-006
DATE: 23-Feb
PREPARED BY: **BG**
CHECKED BY:
FILE: **10000AH18**

AIR HANDLING UNIT SURVEY OBSERVATIONS

AHU-18	AHU NO.		LOCATION (RM)
	REF. SYS. SERVING AHU		SERVES AREA

UNIT TYPE:

X	SINGLE ZN		2-PIPE FC		4-PIPE FC		UNIT HTR		H&V
	MULTIZONE		DOUBLE DT		REHEAT		INDUCTION		VAV
	NUMBER OF ZONES				OTHER				
	COMMENT:		**PART TRACER**						

NAMEPLATE:

					MFG.				MODEL
1.5	SUPPLY FAN HP				MFG.				MODEL
	RET/EXH FAN HP				MFG.				MODEL
2265	CFM-HTG	**0**	CFM-CLG		MIN %OA	**100%**	MAX %OA	**8.0%**	% HTG AREA SERVED
COMMENT:									

COILS:

X	NONE		STM		HW		ELEC		MOD VLV	PREHEAT
	NONE		STM	X	HW		ELEC		MOD VLV	HEATING
X	NONE		STM		HW		ELEC		MOD VLV	REHEAT
X	NONE		STM		HW		EVAP MEDIA		MOD VLV	HUMID.
X	NONE		DX		CW				MOD VLV	COOLING

OPERATION:

HOURS ON:	S	M	T	W	T	F	S	COMMENTS
PRESENT START TIME	**0**	**0**	**0**	**0**	**0**	**0**	**0**	TIMECLO **Y**
PRESENT STOP TIME	**2400**	**2400**	**2400**	**2400**	**2400**	**2400**	**2400**	
REQUIRED START TIME								
REQUIRED STOP TIME								

MONTHS ON:

J	F	M	A	M	J	J	A	S	O	N	D
X	**X**	**X**	**X**	**X**	**X**	**X**	**X**	**X**	**X**	**X**	**X**

CONTROLS:

	X	PNEUMATIC		ELECTRIC		ELEC'NIC		DDC	COMMENTS
THERMOSTAT TYPE:		SINGLE STPT		DUAL SETPNT		SETBACK			
SPACE SETPOINT (°F):	**68**	OCC HEAT	**50**	UNOCC HEAT	**68**	OCC COOL	**50**	UNOCC COOL	
OTHER SETPOINTS (°F):		HOT DECK		COLD DECK		MIXED AIR		OTHER	
DAMPER CONTROL:	**N**	MIN OA (Y/N)	**Y**	MAX OA (Y/N)	**Y**	RA (Y/N)	**Y**	EA (Y/N)	
		MA CONTROL		ECONO-DB		ECONO-ENT		OTHER	
DEMAND LIMIT:		(Y = YES ; N = NO)							
COMMENTS:									

E M C ENGINEERS, INC.

PROJECT: UMCS STUDY
CLIENT CONTRACT NO.: DACA01-94-D-0033
CLIENT PROJ. ENG: STEVE ROWLEY
LOCATION: FORT DRUM, NY BLDG: **10000**

EMC NO.: 1406-006
DATE: 23-Feb
PREPARED BY: **BG**
CHECKED BY:
FILE: **10000AH17**

AIR HANDLING UNIT SURVEY OBSERVATIONS

AHU-17	AHU NO.		LOCATION (RM)
	REF. SYS. SERVING AHU		SERVES AREA

UNIT TYPE:

X	SINGLE ZN		2-PIPE FC		4-PIPE FC		UNIT HTR		H&V
	MULTIZONE		DOUBLE DT		REHEAT		INDUCTION		VAV
	NUMBER OF ZONES				OTHER				
	COMMENT:		**PART TRACER**						

NAMEPLATE:

			MFG.					MODEL
1.5	SUPPLY FAN HP		MFG.					MODEL
	RET/EXH FAN HP		MFG.					MODEL
2220	CFM-HTG	**0**	CFM-CLG		MIN %OA	**100%**	MAX %OA	**8.0%**	% HTG AREA SERVED
COMMENT:									

COILS:

X	NONE		STM		HW		ELEC		MOD VLV	PREHEAT
	NONE		STM	X	HW		ELEC		MOD VLV	HEATING
X	NONE		STM		HW		ELEC		MOD VLV	REHEAT
X	NONE		STM		HW		EVAP MEDIA		MOD VLV	HUMID.
X	NONE		DX		CW				MOD VLV	COOLING

OPERATION:

HOURS ON:	S	M	T	W	T	F	S	COMMENTS
PRESENT START TIME	**0**	**0**	**0**	**0**	**0**	**0**	**0**	TIMECLO **Y**
PRESENT STOP TIME	**2400**	**2400**	**2400**	**2400**	**2400**	**2400**	**2400**	
REQUIRED START TIME								
REQUIRED STOP TIME								

MONTHS ON:

J	F	M	A	M	J	J	A	S	O	N	D
X	X	X	X	X	X	X	X	X	X	X	X

CONTROLS:

	X	PNEUMATIC		ELECTRIC		ELEC'NIC		DDC	COMMENTS
THERMOSTAT TYPE:		SINGLE STPT		DUAL SETPNT		SETBACK			
SPACE SETPOINT (°F):	**68**	OCC HEAT	**50**	UNOCC HEAT	**68**	OCC COOL	**50**	UNOCC COOL	
OTHER SETPOINTS (°F):		HOT DECK		COLD DECK		MIXED AIR		OTHER	
DAMPER CONTROL:	**N**	MIN OA (Y/N)	**Y**	MAX OA (Y/N)	**Y**	RA (Y/N)	Y	EA (Y/N)	
		MA CONTROL		ECONO-DB		ECONO-ENT		OTHER	
DEMAND LIMIT:		(Y = YES ; N = NO)							
COMMENTS:									

FIELD SURVEY NOTES

BUILDING 10030

E M C ENGINEERS, INC.

PROJECT: UMCS STUDY
CLIENT CONTRACT NO.: DACA01-94-D-0033
CLIENT PROJ. ENG: STEVE ROWLEY
LOCATION: FORT DRUM, NY BLDG: 10030

EMC NO.: 1406-006
DATE: 14-NOV-94
PREPARED BY: BG
CHECKED BY:
FILE: 10030BDS.WK1

VI. BUILDING DATA SURVEY OBSERVATIONS

BLDG NO: 10030 BLDG NAME: UNIT CHAPEL 2

ZONE NO.	1	FUNCTION:							
OCCUPANCY HOURS:	M-F	SEE	TO	BELOW	SAT	0	TO	0	
	SUN		TO						
PRESENT TEMP	WINTER OCC	65.0 øF		UNOCC	øF				
	SUMMER OCC	øF		UNOCC	øF				

ZONE NO.		FUNCTION:							
OCCUPANCY HOURS:	M-F		TO		SAT		TO		
	SUN		TO						
PRESENT TEMP	WINTER OCC	øF		UNOCC	øF				
	SUMMER OCC	øF		UNOCC	øF				

ZONE NO.		FUNCTION:							
OCCUPANCY HOURS:	M-F		TO		SAT		TO		
	SUN		TO						
PRESENT TEMP	WINTER OCC	øF		UNOCC	øF				
	SUMMER OCC	øF		UNOCC	øF				

REMARKS: SAME LAYOUT AS UNIT CHAPEL 1

M & W 1830 - 2000
SAT 1700 - 1800

E M C ENGINEERS, INC.

PROJECT: UMCS STUDY
CLIENT CONTRACT NO.: DACA01-94-D-0033
CLIENT PROJ. ENG: STEVE ROWLEY
LOCATION: FORT DRUM, NY BLDG: **10030**

EMC NO.: 1406-006
DATE: 14-NOV-84
PREPARED BY: **CSW**
CHECKED BY: BG
FILE: **10030HX1**

BOILER & CONVERTER SURVEY OBSERVATIONS

HX1	BOILER/CONVERTER NO.	**MECH. ROOM**	LOCATION (RM)
	SOURCE OF HEATING (PLANT)	**ENTIRE BLDG**	SERVES AREA

UNIT TYPE:

	STEAM		PSIG		HW		TEMP.		BOILER TYPE:
	NO.2 OIL		NO.6 OIL		N.GAS		ELEC		FUELS:
	STM/HW	X	HTHW/HW		HTHW/STM		OTHER		CONVERTER TYPE:
X	SPACE HEAT		DHW		OTHER				USE:
COMMENT:							**100%**	% HTG AREA SERVED	
	TYPICAL							BB RADIATION ONLY	

NAMEPLATE:

B&G	MFG.		MODEL		CAPACITY OUTPUT (BTUH)
					CAPACITY INPUT (BTUH)
	MFG.		MODEL		CAPACITY OUTPUT (BTUH)
					CAPACITY INPUT (BTUH)
	HW PUMP 1 - HP		MFG.		MODEL
	HW PUMP 2 - HP		MFG.		MODEL
	HW PUMP 3 - HP		MFG.		MODEL
COMMENT:					

OPERATION:

HOURS ON:	S	M	T	W	T	F	S	COMMENT
PRESENT START TIME	**0**	**0**	**0**	**0**	**0**	**0**	**0**	TIMECLOCK?
PRESENT STOP TIME	**2400**	**2400**	**2400**	**2400**	**2400**	**2400**	**2400**	
REQUIRED START TIME								
REQUIRED STOP TIME								

MONTHS ON:

J	F	M	A	M	J	J	A	S	O	N	D
X	X	X	X	X	X	X	X	X	X	X	X

CONTROLS:

	Y	PNEUMATIC		ELECTRIC		ELEC'NIC		DDC	COMMENTS
SETPOINTS		PSIG		HW SUPPLY					
RESET CONTROL (oF):		HW HIGH		HW LOW		OA LOW		OA HIGH	
BURNER CONTROLS		O2 TRIM (Y/N)		OTHER					
COMMENTS:									

E M C ENGINEERS, INC.

PROJECT: UMCS STUDY
CLIENT CONTRACT NO.: DACA01-94-D-0033
CLIENT PROJ. ENG: STEVE ROWLEY
LOCATION: FORT DRUM, NY BLDG: 4405

EMC NO.: 1406-006
DATE: 14-NOV-94
PREPARED BY: CSW
CHECKED BY: BG
FILE:

VI. BUILDING DATA SURVEY OBSERVATIONS

BLDG NO: 4405 BLDG NAME: UNIT CHAPEL 1

ZONE NO.	1	FUNCTION:							
OCCUPANCY HOURS:	M-F	SEE	TO	BELOW	SAT	0	TO	0	
	SUN	700	TO	1500					
PRESENT TEMP	WINTER OCC	65.0 øF		UNOCC	øF				
	SUMMER OCC	øF		UNOCC	øF				

ZONE NO.		FUNCTION:							
OCCUPANCY HOURS:	M-F		TO		SAT		TO		
	SUN		TO						
PRESENT TEMP	WINTER OCC	øF		UNOCC	øF				
	SUMMER OCC	øF		UNOCC	øF				

ZONE NO.		FUNCTION:							
OCCUPANCY HOURS:	M-F		TO		SAT		TO		
	SUN		TO						
PRESENT TEMP	WINTER OCC	øF		UNOCC	øF				
	SUMMER OCC	øF		UNOCC	øF				

REMARKS: SAME LAYOUT AS UNIT CHAPEL 2

MTHF 0900 - 1800
T&W 0900 - 2100
SAT 0700 - 1500
TH 2 TIMES A MONTH 0900-2100

FIELD SURVEY NOTES

BUILDING 10050

E M C ENGINEERS, INC.

PROJECT: UMCS STUDY
CLIENT CONTRACT NO.: DACA01-94-D-0033
CLIENT PROJ. ENG: STEVE ROWLEY
LOCATION: FORT DRUM, NY BLDG: 10050

EMC NO.: 1406-006
DATE: 15-Nov-94
PREPARED BY: CSW
CHECKED BY: BG
FILE: 10050BDS

VI. BUILDING DATA SURVEY OBSERVATIONS

BLDG NO: 10050 BLDG NAME: PHYSICAL FITNESS CENTER

ZONE NO.	1	FUNCTION: MAIN GYM							
OCCUPANCY HOURS:	M-F	645	TO	2200	SAT	900	TO	2100	
	SUN	900	TO	2100					
PRESENT TEMP	WINTER OCC	70.0 øF		UNOCC	65.0 øF				
	SUMMER OCC	øF		UNOCC	øF				

ZONE NO.	2	FUNCTION: NATATORIUM							
OCCUPANCY HOURS:	M-F		TO		SAT		TO		
	SUN		TO						
PRESENT TEMP	WINTER OCC	77.0 øF		UNOCC	øF				
	SUMMER OCC	øF		UNOCC	øF				

ZONE NO.		FUNCTION:							
OCCUPANCY HOURS:	M-F		TO		SAT		TO		
	SUN		TO						
PRESENT TEMP	WINTER OCC	øF		UNOCC	øF				
	SUMMER OCC	øF		UNOCC	øF				

REMARKS: 81 F POOL WATER TEMPERATURE
POOL HOURS OF OPERATION:
MWF 1530-2000
TU-TH 1630-2000
SA-SU 1030-2000
LAP POOL 1130-1330

IN GYM:
4 H&V UNITS
6 WALL EXHAUST
8 WALL LOUVERS
4 OUTDOOR AIR DOORS (GARAGE DOOR SIZE)

NOTE: 4 IDENTICAL ELECTRIC HEATERS ARE LOCATED IN OBSERVATION BLDG.
ELECTRIC HEATER 17075 BTU/HR (EACH)

E M C ENGINEERS, INC.

PROJECT: UMCS STUDY
CLIENT CONTRACT NO.: DACA01-94-D-0033
CLIENT PROJ. ENG: STEVE ROWLEY
LOCATION: FORT DRUM, NY BLDG: **10050** FIT CENTER

EMC NO.: 1406-006
DATE: 15-NOV-94
PREPARED BY: **BG**
CHECKED BY:
FILE: **10050A10**

AIR HANDLING UNIT SURVEY OBSERVATIONS

AHU10	AHU NO.	**MECH ROOM**	LOCATION (RM)
	REF. SYS. SERVING AHU	**RACQUETBALL**	SERVES AREA

UNIT TYPE:

X	SINGLE ZN		2-PIPE FC		4-PIPE FC		UNIT HTR	X	H&V
	MULTIZONE		DOUBLE DT		REHEAT		INDUCTION		VAV
	NUMBER OF ZONES				OTHER				
	COMMENT:								

NAMEPLATE:

					MFG.				MODEL
10.0	SUPPLY FAN HP				MFG.				MODEL
	RET/EXH FAN HP				MFG.				MODEL
12000	CFM-HTG	**0**	CFM-CLG	**100%**	MIN %OA	**100%**	MAX %OA	**5.0%**	% HTG AREA SERVED
COMMENT:			**1,049,800**	**BTUH**				5%	

COILS:

X	NONE		STM		HW		ELEC		MOD VLV	PREHEAT
	NONE		STM	X	HW		ELEC	X	MOD VLV	HEATING
X	NONE		STM		HW		ELEC		MOD VLV	REHEAT
X	NONE		STM		HW		EVAP MEDIA		MOD VLV	HUMID.
X	NONE		DX		CW				MOD VLV	COOLING

OPERATION:

HOURS ON:	S	M	T	W	T	F	S	COMMENTS
PRESENT START TIME	**0**	**0**	**0**	**0**	**0**	**0**	**0**	TIMECLOCK?
PRESENT STOP TIME	**2400**	**2400**	**2400**	**2400**	**2400**	**2400**	**2400**	
REQUIRED START TIME	**800**	**545**	**545**	**545**	**545**	**545**	**800**	
REQUIRED STOP TIME	**2000**	**2100**	**2100**	**2100**	**2100**	**2100**	**2000**	

MONTHS ON:

J	F	M	A	M	J	J	A	S	O	N	D
1	**1**	**1**	**1**	**0**	**0**	**0**	**0**	**0**	**1**	**1**	**1**

CONTROLS:

	X	PNEUMATIC		ELECTRIC		ELEC'NIC		DDC	COMMENTS
THERMOSTAT TYPE:		SINGLE STPT		DUAL SETPNT		SETBACK			
SPACE SETPOINT (°F):	**72**	OCC HEAT	**70**	UNOCC HEAT		OCC COOL		UNOCC COOL	
OTHER SETPOINTS (°F):		HOT DECK	**55**	COLD DECK	**55**	MIXED AIR		OTHER	
DAMPER CONTROL:	**N**	MIN OA (Y/N)	**Y**	MAX OA (Y/N)	**N**	RA (Y/N)	**N**	EA (Y/N)	
		MA CONTROL		ECONO-DB		ECONO-ENT		OTHER	
DEMAND LIMIT:	**N**	(Y = YES ; N = NO)							
COMMENTS:									

E M C ENGINEERS, INC.

PROJECT: UMCS STUDY
CLIENT CONTRACT NO.: DACA01-94-D-0033
CLIENT PROJ. ENG: STEVE ROWLEY
LOCATION: FORT DRUM, NY BLDG: **10050** FIT CENTER

EMC NO.: 1406-006
DATE: 15-NOV-94
PREPARED BY: **BG**
CHECKED BY:
FILE: **10050A11**

AIR HANDLING UNIT SURVEY OBSERVATIONS

AHU11	AHU NO.	**MECH ROOM**	LOCATION (RM)
	REF. SYS. SERVING AHU	**WEIGHTLIFTING/WRESTLING**	SERVES AREA

UNIT TYPE:

X	SINGLE ZN		2-PIPE FC		4-PIPE FC		UNIT HTR	X	H&V
	MULTIZONE		DOUBLE DT		REHEAT		INDUCTION		VAV
	NUMBER OF ZONES				OTHER				
	COMMENT:								

NAMEPLATE:

					MFG.				MODEL
10.0	SUPPLY FAN HP				MFG.				MODEL
	RET/EXH FAN HP				MFG.			9%	MODEL
14200	CFM-HTG	**0**	CFM-CLG	**100%**	MIN %OA	**100%**	MAX %OA	**5.0%**	% HTG AREA SERVED
COMMENT:			**1,226,900**	**BTUH**					

COILS:

X	NONE		STM		HW		ELEC		MOD VLV	PREHEAT
	NONE		STM	X	HW		ELEC	X	MOD VLV	HEATING
X	NONE		STM		HW		ELEC		MOD VLV	REHEAT
X	NONE		STM		HW		EVAP MEDIA		MOD VLV	HUMID.
X	NONE		DX		CW				MOD VLV	COOLING

OPERATION:

HOURS ON:	S	M	T	W	T	F	S	COMMENTS
PRESENT START TIME	**0**	**0**	**0**	**0**	**0**	**0**	**0**	TIMECLOCK?
PRESENT STOP TIME	**2400**	**2400**	**2400**	**2400**	**2400**	**2400**	**2400**	
REQUIRED START TIME	**800**	**545**	**545**	**545**	**545**	**545**	**800**	
REQUIRED STOP TIME	**2000**	**2100**	**2100**	**2100**	**2100**	**2100**	**2000**	

MONTHS ON:

J	F	M	A	M	J	J	A	S	O	N	D
1	**1**	**1**	**1**	**0**	**0**	**0**	**0**	**0**	**1**	**1**	**1**

CONTROLS:

	X	PNEUMATIC		ELECTRIC		ELEC'NIC		DDC	COMMENTS
THERMOSTAT TYPE:		SINGLE STPT		DUAL SETPNT		SETBACK			
SPACE SETPOINT (°F):	**72**	OCC HEAT	**72**	UNOCC HEAT		OCC COOL		UNOCC COOL	
OTHER SETPOINTS (°F):		HOT DECK	**55**	COLD DECK	**55**	MIXED AIR		OTHER	
DAMPER CONTROL:	**N**	MIN OA (Y/N)	**Y**	MAX OA (Y/N)	**N**	RA (Y/N)	**N**	EA (Y/N)	
		MA CONTROL		ECONO-DB		ECONO-ENT		OTHER	
DEMAND LIMIT:	**N**	(Y = YES ; N = NO)							
COMMENTS:									

E M C ENGINEERS, INC.

PROJECT: UMCS STUDY
CLIENT CONTRACT NO.: DACA01-94-D-0033
CLIENT PROJ. ENG: STEVE ROWLEY
LOCATION: FORT DRUM, NY BLDG: **10050** FIT CENTER

EMC NO.: 1406-006
DATE: 15-NOV-94
PREPARED BY: **BG**
CHECKED BY:
FILE: **10050A12**

AIR HANDLING UNIT SURVEY OBSERVATIONS

AHU12	AHU NO.	**MECH ROOM**	LOCATION (RM)
	REF. SYS. SERVING AHU	**WEIGHTLIFTING/WRESTLING**	SERVES AREA

UNIT TYPE:

X	SINGLE ZN		2-PIPE FC		4-PIPE FC		UNIT HTR	**X**	H&V
	MULTIZONE		DOUBLE DT		REHEAT		INDUCTION		VAV
	NUMBER OF ZONES				OTHER				
	COMMENT:								

NAMEPLATE:

					MFG.				MODEL
7.5	SUPPLY FAN HP				MFG.				MODEL
	RET/EXH FAN HP				MFG.				MODEL
10500	CFM-HTG	**0**	CFM-CLG	**100%**	MIN %OA	**100%**	MAX %OA	**5.0%**	% HTG AREA SERVED

COMMENT: **930,000** **BTUH**

COILS:

X	NONE		STM		HW		ELEC		MOD VLV	PREHEAT
	NONE		STM	**X**	HW		ELEC	**X**	MOD VLV	HEATING
X	NONE		STM		HW		ELEC		MOD VLV	REHEAT
X	NONE		STM		HW		EVAP MEDIA		MOD VLV	HUMID.
X	NONE		DX		CW				MOD VLV	COOLING

OPERATION:

HOURS ON:	S	M	T	W	T	F	S	COMMENTS
PRESENT START TIME	**0**	**0**	**0**	**0**	**0**	**0**	**0**	TIMECLOCK?
PRESENT STOP TIME	**2400**	**2400**	**2400**	**2400**	**2400**	**2400**	**2400**	
REQUIRED START TIME	**800**	**545**	**545**	**545**	**545**	**545**	**800**	
REQUIRED STOP TIME	**2000**	**2100**	**2100**	**2100**	**2100**	**2100**	**2000**	

MONTHS ON:

J	F	M	A	M	J	J	A	S	O	N	D
1	**1**	**1**	**1**	**0**	**0**	**0**	**0**	**0**	**1**	**1**	**1**

CONTROLS:

	X	PNEUMATIC		ELECTRIC		ELEC'NIC		DDC	COMMENTS
THERMOSTAT TYPE:		SINGLE STPT		DUAL SETPNT		SETBACK			
SPACE SETPOINT (°F):	**72**	OCC HEAT	**72**	UNOCC HEAT		OCC COOL		UNOCC COOL	
OTHER SETPOINTS (°F):		HOT DECK	**55**	COLD DECK	**55**	MIXED AIR		OTHER	
DAMPER CONTROL:	**N**	MIN OA (Y/N)	**Y**	MAX OA (Y/N)	**N**	RA (Y/N)	**N**	EA (Y/N)	
		MA CONTROL		ECONO-DB		ECONO-ENT		OTHER	
DEMAND LIMIT:	**N**	(Y = YES ; N = NO)							

COMMENTS:

E M C ENGINEERS, INC.

PROJECT: UMCS STUDY
CLIENT CONTRACT NO.: DACA01-94-D-0033
CLIENT PROJ. ENG: STEVE ROWLEY
LOCATION: FORT DRUM, NY BLDG: **10050** FIT CENTER

EMC NO.: 1406-006
DATE: 15-NOV-94
PREPARED BY: **BG**
CHECKED BY:
FILE: **10050AH1**

AIR HANDLING UNIT SURVEY OBSERVATIONS

AHU1	AHU NO.	**GYM CEILING**	LOCATION (RM)
	REF. SYS. SERVING AHU	**GYM**	SERVES AREA

UNIT TYPE:

X	SINGLE ZN		2-PIPE FC		4-PIPE FC		UNIT HTR	X	H&V
	MULTIZONE		DOUBLE DT		REHEAT		INDUCTION	X	VAV
	NUMBER OF ZONES				OTHER				
	COMMENT:								

NAMEPLATE:

					MFG.				MODEL
15.0	SUPPLY FAN HP				MFG.	Y			MODEL
	RET/EXH FAN HP				MFG.				MODEL
20875	CFM-HTG	**0**	CFM-CLG	**20%**	MIN %OA	**100%**	MAX %OA	**~~10.0%~~ 14**	% HTG AREA SERVED
COMMENT:									

COILS:

X	NONE		STM		HW		ELEC		MOD VLV	PREHEAT
	NONE		STM	X	HW		ELEC	X	MOD VLV	HEATING
X	NONE		STM		HW		ELEC		MOD VLV	REHEAT
X	NONE		STM		HW		EVAP MEDIA		MOD VLV	HUMID.
X	NONE		DX		CW				MOD VLV	COOLING

OPERATION:

HOURS ON:	S	M	T	W	T	F	S	COMMENTS
PRESENT START TIME	**0**	**0**	**0**	**0**	**0**	**0**	**0**	TIMECLOCK?
PRESENT STOP TIME	**2400**	**2400**	**2400**	**2400**	**2400**	**2400**	**2400**	
REQUIRED START TIME	**800**	**545**	**545**	**545**	**545**	**545**	**800**	
REQUIRED STOP TIME	**2000**	**2100**	**2100**	**2100**	**2100**	**2100**	**2000**	

MONTHS ON:

J	F	M	A	M	J	J	A	S	O	N	D
1	**1**	**1**	**1**	**1**	**1**	**1**	**1**	**1**	**1**	**1**	**1**

CONTROLS:

	X	PNEUMATIC		ELECTRIC		ELEC'NIC		DDC	COMMENTS
THERMOSTAT TYPE:		SINGLE STPT		DUAL SETPNT		SETBACK			
SPACE SETPOINT (°F):	**72**	OCC HEAT	**72**	UNOCC HEAT		OCC COOL		UNOCC COOL	
OTHER SETPOINTS (°F):		HOT DECK	**55**	COLD DECK	**55**	MIXED AIR		OTHER	
DAMPER CONTROL:	**Y**	MIN OA (Y/N)	**Y**	MAX OA (Y/N)	**Y**	RA (Y/N)	**N**	EA (Y/N)	
		MA CONTROL	**X**	ECONO-DB		ECONO-ENT		OTHER	
DEMAND LIMIT:	**N**	(Y = YES ; N = NO)							
COMMENTS:	**40% GLYCOL**								

E M C ENGINEERS, INC.

PROJECT: UMCS STUDY
CLIENT CONTRACT NO.: DACA01-94-D-0033
CLIENT PROJ. ENG: STEVE ROWLEY
LOCATION: FORT DRUM, NY BLDG: **10050** FIT CENTER

EMC NO.: 1406-006
DATE: 15-NOV-94
PREPARED BY: **BG**
CHECKED BY:
FILE: **10050AH2**

AIR HANDLING UNIT SURVEY OBSERVATIONS

AHU2	AHU NO.	**GYM CEILING**	LOCATION (RM)
	REF. SYS. SERVING AHU	**GYM**	SERVES AREA

UNIT TYPE:

	SINGLE ZN		2-PIPE FC		4-PIPE FC		UNIT HTR	X	H&V
	MULTIZONE		DOUBLE DT		REHEAT		INDUCTION	X	VAV
	NUMBER OF ZONES				OTHER				
	COMMENT:								

NAMEPLATE:

					MFG.				MODEL
15.0	SUPPLY FAN HP				MFG.	Y			MODEL
	RET/EXH FAN HP				MFG.				MODEL
20875	CFM-HTG	**0**	CFM-CLG	**20%**	MIN %OA	**100%**	MAX %OA	**10.0%**	% HTG AREA SERVED
COMMENT:									

COILS:

X	NONE		STM		HW		ELEC		MOD VLV	PREHEAT
	NONE		STM	X	HW		ELEC	X	MOD VLV	HEATING
X	NONE		STM		HW		ELEC		MOD VLV	REHEAT
X	NONE		STM		HW		EVAP MEDIA		MOD VLV	HUMID.
X	NONE		DX		CW				MOD VLV	COOLING

OPERATION:

HOURS ON:	S	M	T	W	T	F	S	COMMENTS
PRESENT START TIME	**0**	**0**	**0**	**0**	**0**	**0**	**0**	TIMECLOCK?
PRESENT STOP TIME	**2400**	**2400**	**2400**	**2400**	**2400**	**2400**	**2400**	**N**
REQUIRED START TIME	**800**	**545**	**545**	**545**	**545**	**545**	**800**	
REQUIRED STOP TIME	**2000**	**2100**	**2100**	**2100**	**2100**	**2100**	**2000**	

MONTHS ON:

J	F	M	A	M	J	J	A	S	O	N	D
1	**1**	**1**	**1**	**0**	**0**	**0**	**0**	**0**	**1**	**1**	**1**

CONTROLS:

	X	PNEUMATIC		ELECTRIC		ELEC'NIC		DDC	COMMENTS
THERMOSTAT TYPE:		SINGLE STPT		DUAL SETPNT		SETBACK			
SPACE SETPOINT (°F):	**72**	OCC HEAT	**72**	UNOCC HEAT		OCC COOL		UNOCC COOL	
OTHER SETPOINTS (°F):		HOT DECK	**55**	COLD DECK	**55**	MIXED AIR		OTHER	
DAMPER CONTROL:	**Y**	MIN OA (Y/N)	**Y**	MAX OA (Y/N)	**Y**	RA (Y/N)	**N**	EA (Y/N)	
		MA CONTROL	**X**	ECONO-DB		ECONO-ENT		OTHER	
DEMAND LIMIT:	**N**	(Y = YES ; N = NO)							

COMMENTS: **40% GLYCOL**

E M C ENGINEERS, INC.

PROJECT: UMCS STUDY
CLIENT CONTRACT NO.: DACA01-94-D-0033
CLIENT PROJ. ENG: STEVE ROWLEY
LOCATION: FORT DRUM, NY BLDG: **10050** FIT CENTER

EMC NO.: 1406-006
DATE: 15-NOV-94
PREPARED BY: **BG**
CHECKED BY:
FILE: **10050AH3**

AIR HANDLING UNIT SURVEY OBSERVATIONS

AHU3	AHU NO.	**GYM CEILING**	LOCATION (RM)
	REF. SYS. SERVING AHU	**GYM**	SERVES AREA

UNIT TYPE:

	SINGLE ZN		2-PIPE FC		4-PIPE FC		UNIT HTR	X	H&V
	MULTIZONE		DOUBLE DT		REHEAT		INDUCTION	X	VAV
	NUMBER OF ZONES				OTHER				
	COMMENT:								

NAMEPLATE:

					MFG.				MODEL
15.0	SUPPLY FAN HP				MFG.	Y			MODEL
	RET/EXH FAN HP				MFG.				MODEL
20875	CFM-HTG	**0**	CFM-CLG	**20%**	MIN %OA	**100%**	MAX %OA	14% ~~10.0%~~	% HTG AREA SERVED
COMMENT:									

COILS:

X	NONE		STM		HW		ELEC		MOD VLV	PREHEAT
	NONE		STM	X	HW		ELEC	X	MOD VLV	HEATING
X	NONE		STM		HW		ELEC		MOD VLV	REHEAT
X	NONE		STM		HW		EVAP MEDIA		MOD VLV	HUMID.
X	NONE		DX		CW				MOD VLV	COOLING

OPERATION:

HOURS ON:	S	M	T	W	T	F	S	COMMENTS
PRESENT START TIME	**0**	**0**	**0**	**0**	**0**	**0**	**0**	TIMECLOCK?
PRESENT STOP TIME	**2400**	**2400**	**2400**	**2400**	**2400**	**2400**	**2400**	**NO**
REQUIRED START TIME	**800**	**545**	**545**	**545**	**545**	**545**	**800**	
REQUIRED STOP TIME	**2000**	**2100**	**2100**	**2100**	**2100**	**2100**	**2000**	

MONTHS ON:

J	F	M	A	M	J	J	A	S	O	N	D
1	**1**	**1**	**1**	**0**	**0**	**0**	**0**	**0**	**1**	**1**	**1**

CONTROLS:

	X	PNEUMATIC		ELECTRIC		ELEC'NIC		DDC	COMMENTS
THERMOSTAT TYPE:		SINGLE STPT		DUAL SETPNT		SETBACK			
SPACE SETPOINT (°F):	**72**	OCC HEAT	**72**	UNOCC HEAT		OCC COOL		UNOCC COOL	
OTHER SETPOINTS (°F):		HOT DECK	**55**	COLD DECK	**55**	MIXED AIR		OTHER	
DAMPER CONTROL:	Y	MIN OA (Y/N)	Y	MAX OA (Y/N)	Y	RA (Y/N)	N	EA (Y/N)	
		MA CONTROL	X	ECONO-DB		ECONO-ENT		OTHER	
DEMAND LIMIT:	Y	(Y = YES ; N = NO)							
COMMENTS:	**40% GLYCOL**								

E M C ENGINEERS, INC.

PROJECT: UMCS STUDY
CLIENT CONTRACT NO.: DACA01-94-D-0033
CLIENT PROJ. ENG: STEVE ROWLEY
LOCATION: FORT DRUM, NY BLDG: **10050** FIT CENTER

EMC NO.: 1406-006
DATE: 15-NOV-94
PREPARED BY: **BG**
CHECKED BY:
FILE: **10050AH4**

AIR HANDLING UNIT SURVEY OBSERVATIONS

AHU4	AHU NO.	**GYM CEILING**	LOCATION (RM)
	REF. SYS. SERVING AHU	**GYM**	SERVES AREA

UNIT TYPE:

	SINGLE ZN		2-PIPE FC		4-PIPE FC		UNIT HTR	X	H&V
	MULTIZONE		DOUBLE DT		REHEAT		INDUCTION	X	VAV
	NUMBER OF ZONES				OTHER				
	COMMENT:								

NAMEPLATE:

					MFG.				MODEL
15.0	SUPPLY FAN HP				MFG.	Y			MODEL
	RET/EXH FAN HP				MFG.		14%		MODEL
20875	CFM-HTG	**0**	CFM-CLG	**20%**	MIN %OA	**100%**	MAX %OA	**10.0%**	% HTG AREA SERVED
COMMEN	456,000 BTUH								

COILS:

X	NONE		STM		HW		ELEC		MOD VLV	PREHEAT
	NONE		STM	X	HW		ELEC	X	MOD VLV	HEATING
X	NONE		STM		HW		ELEC		MOD VLV	REHEAT
X	NONE		STM		HW		EVAP MEDIA		MOD VLV	HUMID.
X	NONE		DX		CW				MOD VLV	COOLING

OPERATION:

HOURS ON:	S	M	T	W	T	F	S	COMMENTS
PRESENT START TIME	**0**	**0**	**0**	**0**	**0**	**0**	**0**	TIMECLOCK?
PRESENT STOP TIME	**2400**	**2400**	**2400**	**2400**	**2400**	**2400**	**2400**	**NO**
REQUIRED START TIME	**800**	**545**	**545**	**545**	**545**	**545**	**800**	
REQUIRED STOP TIME	**2000**	**2100**	**2100**	**2100**	**2100**	**2100**	**2000**	

MONTHS ON:

J	F	M	A	M	J	J	A	S	O	N	D
1	**1**	**1**	**1**	**0**	**0**	**0**	**0**	**0**	**1**	**1**	**1**

CONTROLS:

	X	PNEUMATIC		ELECTRIC		ELEC'NIC		DDC	COMMENTS
THERMOSTAT TYPE:		SINGLE STPT		DUAL SETPNT		SETBACK			
SPACE SETPOINT (°F):	**72**	OCC HEAT	**72**	UNOCC HEAT		OCC COOL		UNOCC COOL	
OTHER SETPOINTS (°F):		HOT DECK	**55**	COLD DECK	**55**	MIXED AIR		OTHER	
DAMPER CONTROL:	**Y**	MIN OA (Y/N)	**Y**	MAX OA (Y/N)	**Y**	RA (Y/N)	**N**	EA (Y/N)	
		MA CONTROL	X	ECONO-DB		ECONO-ENT		OTHER	
DEMAND LIMIT:	**N**	(Y = YES ; N = NO)							

COMMENTS: **40% GLYCOL**

E M C ENGINEERS, INC.

PROJECT: UMCS STUDY
CLIENT CONTRACT NO.: DACA01-94-D-0033
CLIENT PROJ. ENG: STEVE ROWLEY
LOCATION: FORT DRUM, NY BLDG: **10050** FIT CENTER

EMC NO.: 1406-006
DATE: 15-NOV-94
PREPARED BY: **BG**
CHECKED BY:
FILE: **10050AH5**

AIR HANDLING UNIT SURVEY OBSERVATIONS

AHU5	AHU NO.	**POOL MECH ROOM**	LOCATION (RM)
	REF. SYS. SERVING AHU	**POOL AREA**	SERVES AREA

UNIT TYPE:

	SINGLE ZN		2-PIPE FC		4-PIPE FC		UNIT HTR	X	H&V
	MULTIZONE		DOUBLE DT		REHEAT		INDUCTION	X	VAV
	NUMBER OF ZONES				OTHER				
	COMMENT:		**14040 BTU/HR HEATING COIL**						

NAMEPLATE:

					MFG.				MODEL
5.0	SUPPLY FAN HP				MFG.				MODEL
	RET/EXH FAN HP				MFG.				MODEL
6500	CFM-HTG	**0**	CFM-CLG	**0%**	MIN %OA	**100%**	MAX %OA	~~10.0%~~ 4%	% HTG AREA SERVED
COMMEN	140,400 BTUH								

COILS:

X	NONE		STM		HW		ELEC		MOD VLV	PREHEAT
	NONE		STM	X	HW		ELEC	X	MOD VLV	HEATING
X	NONE		STM		HW		ELEC		MOD VLV	REHEAT
X	NONE		STM		HW		EVAP MEDIA		MOD VLV	HUMID.
X	NONE		DX		CW				MOD VLV	COOLING

OPERATION:

HOURS ON:	S	M	T	W	T	F	S	COMMENTS
PRESENT START TIME	**0**	**0**	**0**	**0**	**0**	**0**	**0**	TIMECLOCK?
PRESENT STOP TIME	**2400**	**2400**	**2400**	**2400**	**2400**	**2400**	**2400**	**NO**
REQUIRED START TIME	**1030**	**1530**	**1630**	**1530**	**1630**	**1530**	**1030**	
REQUIRED STOP TIME	**2000**	**2000**	**2000**	**2000**	**2000**	**2000**	**2000**	

MONTHS ON:

J	F	M	A	M	J	J	A	S	O	N	D
1	**1**	**1**	**1**	**1**	**1**	**1**	**1**	**1**	**1**	**1**	**1**

CONTROLS:

	X	PNEUMATIC		ELECTRIC		ELEC'NIC		DDC	COMMENTS
THERMOSTAT TYPE:		SINGLE STPT		DUAL SETPNT		SETBACK			
SPACE SETPOINT (°F):	**70**	OCC HEAT	**70**	UNOCC HEAT		OCC COOL		UNOCC COOL	
OTHER SETPOINTS (°F):		HOT DECK	**55**	COLD DECK	**55**	MIXED AIR		OTHER	
DAMPER CONTROL:	**N**	MIN OA (Y/N)	**N**	MAX OA (Y/N)	**Y**	RA (Y/N)	**N**	EA (Y/N)	
		MA CONTROL		ECONO-DB		ECONO-ENT		OTHER	
DEMAND LIMIT:	**N**	(Y = YES ; N = NO)							

COMMENTS:

E M C ENGINEERS, INC.

PROJECT: UMCS STUDY
CLIENT CONTRACT NO.: DACA01-94-D-0033
CLIENT PROJ. ENG: STEVE ROWLEY
LOCATION: FORT DRUM, NY BLDG: **10050** FIT CENTER

EMC NO.: 1406-006
DATE: 15-NOV-94
PREPARED BY: **BG**
CHECKED BY:
FILE: **10050AH6**

AIR HANDLING UNIT SURVEY OBSERVATIONS

AHU6	AHU NO.	**POOL MECH ROOM**	LOCATION (RM)
	REF. SYS. SERVING AHU	**POOL AREA**	SERVES AREA

UNIT TYPE:

	SINGLE ZN		2-PIPE FC		4-PIPE FC		UNIT HTR	X	H&V
	MULTIZONE		DOUBLE DT		REHEAT		INDUCTION	X	VAV
	NUMBER OF ZONES				OTHER				
	COMMENT:	**14040 BTU/HR HEATING COIL**							

NAMEPLATE:

				MFG.				MODEL
5.0	SUPPLY FAN HP			MFG.				MODEL
	RET/EXH FAN HP			MFG.		40%		MODEL
6500	CFM-HTG	**0**	CFM-CLG	**0%**	MIN %OA	**100%**	MAX %OA	~~10.0%~~ % HTG AREA SERVED
COMMEN	140400 BTUH							

COILS:

X	NONE		STM		HW		ELEC		MOD VLV	PREHEAT
	NONE		STM	X	HW		ELEC	X	MOD VLV	HEATING
X	NONE		STM		HW		ELEC		MOD VLV	REHEAT
X	NONE		STM		HW		EVAP MEDIA		MOD VLV	HUMID.
X	NONE		DX		CW			X	MOD VLV	COOLING

OPERATION:

HOURS ON:	S	M	T	W	T	F	S	COMMENTS
PRESENT START TIME	**0**	**0**	**0**	**0**	**0**	**0**	**0**	TIMECLOCK?
PRESENT STOP TIME	**2400**	**2400**	**2400**	**2400**	**2400**	**2400**	**2400**	**NO**
REQUIRED START TIME	**1030**	**1530**	**1630**	**1530**	**1630**	**1530**	**1030**	
REQUIRED STOP TIME	**2000**	**2000**	**2000**	**2000**	**2000**	**2000**	**2000**	

MONTHS ON:

J	F	M	A	M	J	J	A	S	O	N	D
1	**1**	**1**	**1**	**1**	**1**	**1**	**1**	**1**	**1**	**1**	**1**

CONTROLS:

		PNEUMATIC		ELECTRIC		ELEC'NIC		DDC	COMMENTS
THERMOSTAT TYPE:		SINGLE STPT		DUAL SETPNT		SETBACK			
SPACE SETPOINT (°F):		OCC HEAT		UNOCC HEAT		OCC COOL		UNOCC COOL	
OTHER SETPOINTS (°F):		HOT DECK	**55**	COLD DECK	**55**	MIXED AIR		OTHER	
DAMPER CONTROL:	**N**	MIN OA (Y/N)	**N**	MAX OA (Y/N)	**Y**	RA (Y/N)	**N**	EA (Y/N)	
		MA CONTROL		ECONO-DB		ECONO-ENT		OTHER	
DEMAND LIMIT:	**N**	(Y = YES ; N = NO)							

COMMENTS:

E M C ENGINEERS, INC.

PROJECT: UMCS STUDY
CLIENT CONTRACT NO.: DACA01-94-D-0033
CLIENT PROJ. ENG: STEVE ROWLEY
LOCATION: FORT DRUM, NY BLDG: **10050** FIT CENTER

EMC NO.: 1406-006
DATE: 15-NOV-94
PREPARED BY: **BG**
CHECKED BY:
FILE: **10050AH7**

AIR HANDLING UNIT SURVEY OBSERVATIONS

AHU7	AHU NO.	**POOL MECH ROOM**	LOCATION (RM)
	REF. SYS. SERVING AHU	**POOL AREA**	SERVES AREA

UNIT TYPE:

	SINGLE ZN		2-PIPE FC		4-PIPE FC		UNIT HTR	X	H&V
	MULTIZONE		DOUBLE DT		REHEAT		INDUCTION	X	VAV
	NUMBER OF ZONES				OTHER				
	COMMENT:								

NAMEPLATE:

					MFG.				MODEL
2.0	SUPPLY FAN HP				MFG.				MODEL
	RET/EXH FAN HP				MFG.		1.6		MODEL
2500	CFM-HTG	**0**	CFM-CLG	**100%**	MIN %OA	**100%**	MAX %OA	**10.0%**	% HTG AREA SERVED
COMMEN	248400 BTU/HR				**40%GLYCOL**				

COILS:

X	NONE		STM		HW		ELEC		MOD VLV	PREHEAT
	NONE		STM	X	HW		ELEC	X	MOD VLV	HEATING
X	NONE		STM		HW		ELEC		MOD VLV	REHEAT
X	NONE		STM		HW		EVAP MEDIA		MOD VLV	HUMID.
X	NONE		DX		CW				MOD VLV	COOLING

OPERATION:

HOURS ON:	S	M	T	W	T	F	S	COMMENTS
PRESENT START TIME	**0**	**0**	**0**	**0**	**0**	**0**	**0**	TIMECLOCK?
PRESENT STOP TIME	**2400**	**2400**	**2400**	**2400**	**2400**	**2400**	**2400**	**NO**
REQUIRED START TIME	**1030**	**1530**	**1630**	**1530**	**1630**	**1530**	**1030**	
REQUIRED STOP TIME	**2000**	**2000**	**2000**	**2000**	**2000**	**2000**	**2000**	

MONTHS ON:

J	F	M	A	M	J	J	A	S	O	N	D
1	**1**	**1**	**1**	**0**	**0**	**0**	**0**	**0**	**1**	**1**	**1**

CONTROLS:

	X	PNEUMATIC		ELECTRIC		ELEC'NIC		DDC	COMMENTS
THERMOSTAT TYPE:		SINGLE STPT		DUAL SETPNT		SETBACK			
SPACE SETPOINT (°F):	**72**	OCC HEAT	**72**	UNOCC HEAT		OCC COOL		UNOCC COOL	
OTHER SETPOINTS (°F):		HOT DECK	**55**	COLD DECK	**55**	MIXED AIR		OTHER	
DAMPER CONTROL:	**N**	MIN OA (Y/N)	**Y**	MAX OA (Y/N)	**N**	RA (Y/N)	**N**	EA (Y/N)	
		MA CONTROL		ECONO-DB		ECONO-ENT		OTHER	
DEMAND LIMIT:	**N**	(Y = YES ; N = NO)							
COMMENTS:									

E M C ENGINEERS, INC.

PROJECT: UMCS STUDY
CLIENT CONTRACT NO.: DACA01-94-D-0033
CLIENT PROJ. ENG: STEVE ROWLEY
LOCATION: FORT DRUM, NY BLDG: **10050** FIT CENTER

EMC NO.: 1406-006
DATE: 15-NOV-94
PREPARED BY: **BG**
CHECKED BY:
FILE: **10050AH8**

AIR HANDLING UNIT SURVEY OBSERVATIONS

AHU8	AHU NO.	**MECH ROOM**	LOCATION (RM)
	REF. SYS. SERVING AHU	**MEZZ. & MEN'S LOCKERS**	SERVES AREA

UNIT TYPE:

X	SINGLE ZN		2-PIPE FC		4-PIPE FC		UNIT HTR	X	H&V
	MULTIZONE		DOUBLE DT		REHEAT		INDUCTION		VAV
	NUMBER OF ZONES				OTHER				
	COMMENT:								

NAMEPLATE:

					MFG.				MODEL
7.5	SUPPLY FAN HP				MFG.	Y			MODEL
	RET/EXH FAN HP				MFG.			5%	MODEL
9364	CFM-HTG	0	CFM-CLG	100%	MIN %OA	100%	MAX %OA	5.0%	% HTG AREA SERVED
COMMEN	859,700	**BTUH**							

COILS:

X	NONE		STM		HW		ELEC		MOD VLV	PREHEAT
	NONE		STM	X	HW		ELEC	X	MOD VLV	HEATING
X	NONE		STM		HW		ELEC		MOD VLV	REHEAT
X	NONE		STM		HW		EVAP MEDIA		MOD VLV	HUMID.
X	NONE		DX		CW				MOD VLV	COOLING

OPERATION:

HOURS ON:	S	M	T	W	T	F	S	COMMENTS
PRESENT START TIME	**0**	**0**	**0**	**0**	**0**	**0**	**0**	TIMECLOCK?
PRESENT STOP TIME	**2400**	**2400**	**2400**	**2400**	**2400**	**2400**	**2400**	**NO**
REQUIRED START TIME	**800**	**545**	**545**	**545**	**545**	**545**	**800**	
REQUIRED STOP TIME	**2000**	**2100**	**2100**	**2100**	**2100**	**2100**	**2000**	

MONTHS ON:

J	F	M	A	M	J	J	A	S	O	N	D
1	**1**	**1**	**1**	**0**	**0**	**0**	**0**	**0**	**1**	**1**	**1**

CONTROLS:

	X	PNEUMATIC		ELECTRIC		ELEC'NIC		DDC	COMMENTS
THERMOSTAT TYPE:		SINGLE STPT		DUAL SETPNT		SETBACK			
SPACE SETPOINT (°F):	**72**	OCC HEAT	**72**	UNOCC HEAT		OCC COOL		UNOCC COOL	
OTHER SETPOINTS (°F):		HOT DECK	**55**	COLD DECK	**55**	MIXED AIR		OTHER	
DAMPER CONTROL:	**N**	MIN OA (Y/N)	**Y**	MAX OA (Y/N)	**N**	RA (Y/N)	**N**	EA (Y/N)	
		MA CONTROL	**X**	ECONO-DB		ECONO-ENT		OTHER	
DEMAND LIMIT:	**N**	(Y = YES ; N = NO)							
COMMENTS:									

E M C ENGINEERS, INC.

PROJECT: UMCS STUDY
CLIENT CONTRACT NO.: DACA01-94-D-0033
CLIENT PROJ. ENG: STEVE ROWLEY
LOCATION: FORT DRUM, NY BLDG: **10050** FIT CENTER

EMC NO.: 1406-006
DATE: 15-NOV-94
PREPARED BY: **BG**
CHECKED BY:
FILE: **10050AH9**

AIR HANDLING UNIT SURVEY OBSERVATIONS

AHU9	AHU NO.	**MECH ROOM**	LOCATION (RM)
	REF. SYS. SERVING AHU	**WOMEN'S LOCKERS**	SERVES AREA

UNIT TYPE:

X	SINGLE ZN		2-PIPE FC		4-PIPE FC		UNIT HTR	X	H&V
	MULTIZONE		DOUBLE DT		REHEAT		INDUCTION		VAV
	NUMBER OF ZONES				OTHER				
	COMMENT:								

NAMEPLATE:

				MFG.				MODEL
3.0	SUPPLY FAN HP			MFG.				MODEL
	RET/EXH FAN HP			MFG.		2.8%		MODEL
4170	CFM-HTG	**0**	CFM-CLG	**100%**	MIN %OA	**100%**	MAX %OA	~~5.0%~~ % HTG AREA SERVED
COMMENT:								

COILS:

X	NONE		STM		HW		ELEC		MOD VLV	PREHEAT
	NONE		STM	X	HW		ELEC	X	MOD VLV	HEATING
X	NONE		STM		HW		ELEC		MOD VLV	REHEAT
X	NONE		STM		HW		EVAP MEDIA		MOD VLV	HUMID.
X	NONE		DX		CW				MOD VLV	COOLING

OPERATION:

HOURS ON:	S	M	T	W	T	F	S	COMMENTS
PRESENT START TIME	**0**	**0**	**0**	**0**	**0**	**0**	**0**	TIMECLOCK?
PRESENT STOP TIME	**2400**	**2400**	**2400**	**2400**	**2400**	**2400**	**2400**	**NO**
REQUIRED START TIME	**800**	**545**	**545**	**545**	**545**	**545**	**800**	
REQUIRED STOP TIME	**2000**	**2100**	**2100**	**2100**	**2100**	**2100**	**2000**	

MONTHS ON:

J	F	M	A	M	J	J	A	S	O	N	D
1	**1**	**1**	**1**	**0**	**0**	**0**	**0**	**0**	**1**	**1**	**1**

CONTROLS:

	X	PNEUMATIC		ELECTRIC		ELEC'NIC		DDC	COMMENTS
THERMOSTAT TYPE:		SINGLE STPT		DUAL SETPNT		SETBACK			
SPACE SETPOINT (°F):	**72**	OCC HEAT	**72**	UNOCC HEAT		OCC COOL		UNOCC COOL	
OTHER SETPOINTS (°F):		HOT DECK	**55**	COLD DECK	**55**	MIXED AIR		OTHER	
DAMPER CONTROL:	**N**	MIN OA (Y/N)	**Y**	MAX OA (Y/N)	**N**	RA (Y/N)	**N**	EA (Y/N)	
		MA CONTROL	**X**	ECONO-DB		ECONO-ENT		OTHER	
DEMAND LIMIT:	**N**	(Y = YES ; N = NO)							
COMMENTS:									

E M C ENGINEERS, INC.

PROJECT: UMCS STUDY
CLIENT CONTRACT NO.: DACA01-94-D-0033
CLIENT PROJ. ENG: STEVE ROWLEY
LOCATION: FORT DRUM, NY BLDG: **10050** FIT CENTER

EMC NO.: 1406-006
DATE: **********
PREPARED BY: **BG**
CHECKED BY:
FILE: **10050HE1**

BOILER & CONVERTER SURVEY OBSERVATIONS

HE1	BOILER/CONVERTER NO.	**NECH ROOM**	LOCATION (RM)
COGEN	SOURCE OF HEATING (PLANT)	**WHOLE BLDG**	SERVES AREA

UNIT TYPE:

	STEAM		PSIG		HW		TEMP.		BOILER TYPE:
	NO.2 OIL		NO.6 OIL		N.GAS		ELEC		FUELS:
	STM/HW	X	HTHW/HW		HTHW/STM		OTHER		CONVERTER TYPE:
X	SPACE HEAT		DHW		OTHER				USE:
COMMENT:							20%		% HTG AREA SERVED
							1.6%		BB RADIATION ONLY

NAMEPLATE:

B&G	MFG.	**MOD#HTWU-83-63**	MODEL	**563000**	CAPACITY OUTPUT (BTUH)	
					CAPACITY INPUT (BTUH)	
	MFG.		MODEL		CAPACITY OUTPUT (BTUH)	
					CAPACITY INPUT (BTUH)	
5	HW PUMP 1 - HP	**U.S. ELECTRIC**	MFG.			MODEL
	HW PUMP 2 - HP		MFG.			MODEL
	HW PUMP 3 - HP		MFG.			MODEL
COMMENT:						

OPERATION:

HOURS ON:	S	M	T	W	T	F	S	COMMENT
PRESENT START TIME	**0**	**0**	**0**	**0**	**0**	**0**	**0**	TIMECLOCK?
PRESENT STOP TIME	**2400**	**2400**	**2400**	**2400**	**2400**	**2400**	**2400**	
REQUIRED START TIME								
REQUIRED STOP TIME								

MONTHS ON:

J	F	M	A	M	J	J	A	S	O	N	D
1	**1**	**1**	**1**	**0**	**0**	**0**	**0**	**0**	**1**	**1**	**1**

CONTROLS:

	X	PNEUMATIC		ELECTRIC		ELEC'NIC		DDC	COMMENTS
SETPOINTS		PSIG		HW SUPPLY					
RESET CONTROL (oF):		HW HIGH		HW LOW		OA LOW		OA HIGH	
BURNER CONTROLS		O2 TRIM (Y/N)		OTHER					
COMMENTS:									

E M C ENGINEERS, INC.

PROJECT: UMCS STUDY
CLIENT CONTRACT NO.: DACA01-94-D-0033
CLIENT PROJ. ENG: STEVE ROWLEY
LOCATION: FORT DRUM, NY BLDG: **10050** FIT CENTER

EMC NO.: 1406-006
DATE: 15-Nov-94
PREPARED BY: **BG**
CHECKED BY:
FILE: **10050HE2**

BOILER & CONVERTER SURVEY OBSERVATIONS

HE2	BOILER/CONVERTER NO.	**MECH ROOM**	LOCATION (RM)
COGEN	SOURCE OF HEATING (PLANT)	**AHU'S**	SERVES AREA

UNIT TYPE:

	STEAM		PSIG		HW		TEMP.		BOILER TYPE:
	NO.2 OIL		NO.6 OIL		N.GAS		ELEC		FUELS:
	STM/HW	X	HTHW/HW		HTHW/STM	X	OTHER		CONVERTER TYPE:
X	SPACE HEAT		DHW	X	OTHER				USE:
COMMENT:			HTHW-GLYCOL				80% / 98.4		% HTG AREA SERVED
									BB RADIATION ONLY

NAMEPLATE:

B&G	MFG.		MODEL	**6512000**	CAPACITY OUTPUT (BTUH)
					CAPACITY INPUT (BTUH)
	MFG.		MODEL		CAPACITY OUTPUT (BTUH)
					CAPACITY INPUT (BTUH)
15 HW PUMP 1 - HP		**US MOTORS**	MFG.	**E820A**	MODEL
HW PUMP 2 - HP			MFG.		MODEL
HW PUMP 3 - HP			MFG.		MODEL
COMMENT:					

OPERATION:

HOURS ON:	S	M	T	W	T	F	S	COMMENT
PRESENT START TIME	**0**	**0**	**0**	**0**	**0**	**0**	**0**	TIMECLOCK?
PRESENT STOP TIME	**2400**	**2400**	**2400**	**2400**	**2400**	**2400**	**2400**	
REQUIRED START TIME								
REQUIRED STOP TIME								

MONTHS ON:

J	F	M	A	M	J	J	A	S	O	N	D
1	**1**	**1**	**1**	**0**	**0**	**0**	**0**	**0**	**1**	**1**	**1**

CONTROLS:

	X	PNEUMATIC		ELECTRIC		ELEC'NIC		DDC	COMMENTS
SETPOINTS		PSIG		HW SUPPLY					
RESET CONTROL (oF):		HW HIGH		HW LOW		OA LOW		OA HIGH	
BURNER CONTROLS		O2 TRIM (Y/N)		OTHER					
COMMENTS:									

E M C ENGINEERS, INC.

PROJECT: UMCS STUDY
CLIENT CONTRACT NO.: DACA01-94-D-0033
CLIENT PROJ. ENG: STEVE ROWLEY
LOCATION: FORT DRUM, NY BLDG: **10050** FIT CENTER

EMC NO.: 1406-006
DATE: **********
PREPARED BY: **BG**
CHECKED BY:
FILE: **10050HE3**

BOILER & CONVERTER SURVEY OBSERVATIONS

HE3	BOILER/CONVERTER NO.	**POOL MER**	LOCATION (RM)
COGEN	SOURCE OF HEATING (PLANT)	POOL WATER HEAT EXCHANG	SERVES AREA

UNIT TYPE:

	STEAM		PSIG		HW		TEMP.		BOILER TYPE:
	NO.2 OIL		NO.6 OIL		N.GAS		ELEC		FUELS:
	STM/HW	X	HTHW/HW		HTHW/STM	X	OTHER		CONVERTER TYPE:
	SPACE HEAT		DHW	X	OTHER				USE:
COMMENT:	HTHW-POOL WATER								% HTG AREA SERVED
	EWT: 75 F LWT: 120 F								BB RADIATION ONLY

NAMEPLATE:

	MFG.		MODEL	**1065000**	CAPACITY OUTPUT (BTUH)
					CAPACITY INPUT (BTUH)
	MFG.		MODEL		CAPACITY OUTPUT (BTUH)
					CAPACITY INPUT (BTUH)
10	HW PUMP 1 - HP		MFG.		MODEL
	HW PUMP 2 - HP		MFG.		MODEL
	HW PUMP 3 - HP		MFG.		MODEL
COMMENT:					

OPERATION:

HOURS ON:	S	M	T	W	T	F	S	COMMENT
PRESENT START TIME								TIMECLOCK?
PRESENT STOP TIME								
REQUIRED START TIME	**830**	**1330**	**1430**	**1330**	**1430**	**1330**	**830**	
REQUIRED STOP TIME	**1900**	**1900**	**1900**	**1900**	**1900**	**1900**	**1900**	

MONTHS ON:

J	F	M	A	M	J	J	A	S	O	N	D
1	**1**	**1**	**1**	**1**	**1**	**1**	**1**	**1**	**1**	**1**	**1**

CONTROLS:

	X	PNEUMATIC		ELECTRIC		ELEC'NIC		DDC	COMMENTS
SETPOINTS		PSIG		HW SUPPLY					
RESET CONTROL (oF):		HW HIGH		HW LOW		OA LOW		OA HIGH	
BURNER CONTROLS		O2 TRIM (Y/N)		OTHER					
COMMENTS:									

E M C ENGINEERS, INC.

PROJECT: UMCS STUDY
CLIENT CONTRACT NO.: DACA01-94-D-0033
CLIENT PROJ. ENG: STEVE ROWLEY
LOCATION: FORT DRUM, NY BLDG: **10050** FIT CENTER

EMC NO.: 1406-006
DATE: **********
PREPARED BY: **BG**
CHECKED BY:
FILE: **10050RAD**

PERIMETER RADIATION SURVEY OBSERVATIONS

RAD1	PER RAD NO.	BLDG. PEREMETER	LOCATION (RM)
	SOURCE OF HEATING	BLDG. PEREMETER	SERVES AREA

UNIT TYPE:

	STEAM	X	HW		ELECTRIC				
	OTHER								
	COMMENT:	GLYCOL/WATER SYSTEM							

NAMEPLATE:

	HW PUMP 1 - HP		MFG.		MODEL
	HW PUMP 2 - HP		MFG.		MODEL
	HW PUMP 3 - HP		MFG.		MODEL
	HW PUMP 4 - HP		MFG.		MODEL
COMMENT:					% AREA HEATING

OPERATION:

HOURS ON:	S	M	T	W	T	F	S	COMMENT
PRESENT START TIME	**0**	**0**	**0**	**0**	**0**	**0**	**0**	TIMECLOCK?
PRESENT STOP TIME	**2400**	**2400**	**2400**	**2400**	**2400**	**2400**	**2400**	
REQUIRED START TIME	**800**	**545**	**545**	**545**	**545**	**545**	**800**	
REQUIRED STOP TIME	**2000**	**2100**	**2100**	**2100**	**2100**	**2100**	**2000**	

MONTHS ON:

J	F	M	A	M	J	J	A	S	O	N	D
1	**1**	**1**	**1**	**0**	**0**	**0**	**0**	**0**	**1**	**1**	**1**

CONTROLS:

	X	PNEUMATIC		ELECTRIC		ELEC'NIC		DDC	COMMENTS
RADIATION CONTROL:		NONE		2-WAY VLV		3-WAY VLV		OTHER	
SPACE SETPOINT (øF):		OCC HEAT		UNOCC HEAT		OCC COOL		UNOCC COOL	
RESET CONTROL (øF):		HW HIGH		HW LOW		OA LOW		OA HIGH	
COMMENTS:									

FIELD SURVEY NOTES

BUILDING 10200

E M C ENGINEERS, INC.

PROJECT: UMCS STUDY
CLIENT CONTRACT NO.: DACA01-94-D-0033
CLIENT PROJ. ENG: STEVE ROWLEY
LOCATION: FORT DRUM, NY BLDG: **10200** BDE. HQ.

EMC NO.: 1406-006
DATE: Dec-94
PREPARED BY: **CSW/BG**
CHECKED BY: BG
FILE: **10200AHU1**

AIR HANDLING UNIT SURVEY OBSERVATIONS

AHU1	AHU NO.	**ATTIC**	LOCATION (RM)
	REF. SYS. SERVING AHU	**WHOLE BLDG EXCPT ELEC. R**	SERVES AREA

UNIT TYPE:

X	SINGLE ZN		2-PIPE FC		4-PIPE FC		UNIT HTR	**X**	H&V
	MULTIZONE		DOUBLE DT		REHEAT		INDUCTION		VAV
	NUMBER OF ZONES				OTHER				
	COMMENT:	**USED FOR WINTER VENTILATION**							

NAMEPLATE:

					MFG.				MODEL
	SUPPLY FAN HP				MFG.				MODEL
	RET/EXH FAN HP				MFG.				MODEL
1346	CFM-HTG	**0**	CFM-CLG	**100%**	MIN %OA	**100%**	MAX %OA	**95.0%**	% HTG AREA SERVED
COMMENT:	**EAT OF 68 F MAINTAINED IN WINTER**								

COILS:

X	NONE		STM		HW		ELEC		MOD VLV	PREHEAT
	NONE		STM	**X**	HW		ELEC		MOD VLV	HEATING
X	NONE		STM		HW		ELEC		MOD VLV	REHEAT
X	NONE		STM		HW		EVAP MEDIA		MOD VLV	HUMID.
X	NONE		DX		CW				MOD VLV	COOLING

OPERATION:

HOURS ON:	S	M	T	W	T	F	S	COMMENTS
PRESENT START TIME	**0**	**0**	**0**	**0**	**0**	**0**	**0**	TIMECLOCK?
PRESENT STOP TIME	**2400**	**2400**	**2400**	**2400**	**2400**	**2400**	**2400**	**YES**
REQUIRED START TIME								
REQUIRED STOP TIME								

MONTHS ON:

J	F	M	A	M	J	J	A	S	O	N	D
1	**1**	**1**	**1**	**0**	**0**	**0**	**0**	**0**	**1**	**1**	**1**

CONTROLS:

	X	PNEUMATIC		ELECTRIC		ELEC'NIC		DDC	COMMENTS
THERMOSTAT TYPE:		SINGLE STPT		DUAL SETPNT		SETBACK			
SPACE SETPOINT (°F):	**68**	OCC HEAT	**68**	UNOCC HEAT		OCC COOL		UNOCC COOL	
OTHER SETPOINTS (°F):		HOT DECK	**55**	COLD DECK	**55**	MIXED AIR		OTHER	
DAMPER CONTROL:	**N**	MIN OA (Y/N)	**Y**	MAX OA (Y/N)	**N**	RA (Y/N)	**N**	EA (Y/N)	
		MA CONTROL	Y	ECONO-DB		ECONO-ENT		OTHER	
DEMAND LIMIT:		(Y = YES ; N = NO)							

COMMENTS: THE BUILDING ALSO HAS 3 SUPPLY FANS WHICH ARE NOT CONNECTED TO AHU1 OR AHU2. THEY PROVIDE UNHEATED AND UNCOOLED 100% O.A. VENTILATION. THESE ARE SF-1 CFM=10400/5200 (2 SPEED)
SF-2 CFM =1100/550
SF-3 CFM=700/350

E M C ENGINEERS, INC.

PROJECT: UMCS STUDY
CLIENT CONTRACT NO.: DACA01-94-D-0033
CLIENT PROJ. ENG: STEVE ROWLEY
LOCATION: FORT DRUM, NY BLDG: **10200** BDE. HQ.

EMC NO.: 1406-006
DATE: Dec-94
PREPARED BY: **CSW/BG**
CHECKED BY: BG
FILE: **10200AHU2**

AIR HANDLING UNIT SURVEY OBSERVATIONS

AHU2	AHU NO.	**ATTIC**	LOCATION (RM)
	REF. SYS. SERVING AHU	**ELEC. RM.**	SERVES AREA

UNIT TYPE:

X	SINGLE ZN		2-PIPE FC		4-PIPE FC		UNIT HTR	**X**	H&V
	MULTIZONE		DOUBLE DT		REHEAT		INDUCTION		VAV
	NUMBER OF ZONES				OTHER				
	COMMENT:								

NAMEPLATE:

				MFG.				MODEL
	SUPPLY FAN HP			MFG.				MODEL
	RET/EXH FAN HP			MFG.				MODEL
300	CFM-HTG	**0**	CFM-CLG	**10%**	MIN %OA	**100%**	MAX %OA	**5.0%**	% HTG AREA SERVED
COMMENT:		**100% O.A IN SUMMER, MINIMUM O.A IN WINTER**							

COILS:

X	NONE		STM		HW		ELEC		MOD VLV	PREHEAT
	NONE		STM	**X**	HW		ELEC	**X**	MOD VLV	HEATING
X	NONE		STM		HW		ELEC		MOD VLV	REHEAT
X	NONE		STM		HW		EVAP MEDIA		MOD VLV	HUMID.
X	NONE		DX		CW				MOD VLV	COOLING

OPERATION:

HOURS ON:	S	M	T	W	T	F	S	COMMENTS
PRESENT START TIME	**0**	**0**	**0**	**0**	**0**	**0**	**0**	TIMECLOCK?
PRESENT STOP TIME	**2400**	**2400**	**2400**	**2400**	**2400**	**2400**	**2400**	**YES**
REQUIRED START TIME								
REQUIRED STOP TIME								

MONTHS ON:

J	F	M	A	M	J	J	A	S	O	N	D
1	**1**	**1**	**1**	**1**	**1**	**1**	**1**	**1**	**1**	**1**	**1**

CONTROLS:

	X	PNEUMATIC		ELECTRIC		ELEC'NIC		DDC	COMMENTS
THERMOSTAT TYPE:		SINGLE STPT		DUAL SETPNT		SETBACK			
SPACE SETPOINT (°F):		OCC HEAT		UNOCC HEAT		OCC COOL		UNOCC COOL	
OTHER SETPOINTS (°F):	**135**	HOT DECK	**55**	COLD DECK	**55**	MIXED AIR		OTHER	
DAMPER CONTROL:	**Y**	MIN OA (Y/N)	**Y**	MAX OA (Y/N)	**Y**	RA (Y/N)	**Y**	EA (Y/N)	
		MA CONTROL	Y	ECONO-DB		ECONO-ENT		OTHER	
DEMAND LIMIT:		(Y = YES ; N = NO)							
COMMENTS:									

E M C ENGINEERS, INC.

PROJECT: UMCS STUDY
CLIENT CONTRACT NO.: DACA01-94-D-0033
CLIENT PROJ. ENG: STEVE ROWLEY
LOCATION: FORT DRUM, BLDG: **10200** BDE. HQ.

EMC NO.: 1406-006
DATE: Dec-94
PREPARED BY: **CSW/BG**
CHECKED BY: BG
FILE: **10200HE1**

BOILER & CONVERTER SURVEY OBSERVATIONS

HE1	BOILER/CONVERTER NO.	**MECH. ROOM**	LOCATION (RM)
	SOURCE OF HEATING (PLANT)		SERVES AREA

UNIT TYPE:

	STEAM				HW		TEMP.		BOILER TYPE:
	NO.2 OIL		NO.6 OIL		N.GAS		ELEC		FUELS:
	STM/HW	X	HTHW/HW		HTHW/STM		OTHER		CONVERTER TYPE:
X	SPACE HEAT		DHW		OTHER				USE:
COMMENT:							**20%**	% HTG AREA SERVED	
								BB RADIATION ONLY	

NAMEPLATE:

	MFG.		MODEL	**209400**	CAPACITY OUTPUT (BTUH)
					CAPACITY INPUT (BTUH)
	MFG.		MODEL		CAPACITY OUTPUT (BTUH)
					CAPACITY INPUT (BTUH)
	HW PUMP 1 - HP		MFG.		MODEL
	HW PUMP 2 - HP		MFG.		MODEL
	HW PUMP 3 - HP		MFG.		MODEL
COMMENT:					

OPERATION:

HOURS ON:	S	M	T	W	T	F	S	COMMENT
PRESENT START TIME	**0**	**0**	**0**	**0**	**0**	**0**	**0**	TIMECLOCK?
PRESENT STOP TIME	**2400**	**2400**	**2400**	**2400**	**2400**	**2400**	**2400**	
REQUIRED START TIME								
REQUIRED STOP TIME								

MONTHS ON:

J	F	M	A	M	J	J	A	S	O	N	D
1	**1**	**1**	**1**	**0**	**0**	**0**	**0**	**0**	**1**	**1**	**1**

CONTROLS:

		PNEUMATIC		ELECTRIC		ELEC'NIC		DDC	COMMENTS
SETPOINTS		PSIG		HW SUPPLY					
RESET CONTROL (oF):		HW HIGH		HW LOW		OA LOW		OA HIGH	
BURNER CONTROLS		O2 TRIM (Y/N)		OTHER					
COMMENTS:									

E M C ENGINEERS, INC.

PROJECT: UMCS STUDY
CLIENT CONTRACT NO.: DACA01-94-D-0033
CLIENT PROJ. ENG: STEVE ROWLEY
LOCATION: FORT DRUM, BLDG: **10200** BDE. HQ.

EMC NO.: 1406-006
DATE: Dec-94
PREPARED BY: **CSW/BG**
CHECKED BY: BG
FILE: **10200HE1**

BOILER & CONVERTER SURVEY OBSERVATIONS

HE2	BOILER/CONVERTER NO.	**MECH ROOM**	LOCATION (RM)
COGEN.	SOURCE OF HEATING (PLANT)	**AHU'S**	SERVES AREA

UNIT TYPE:

	STEAM				HW		TEMP.		BOILER TYPE:
	NO.2 OIL		NO.6 OIL		N.GAS		ELEC		FUELS:
	STM/HW	X	HTHW/HW		HTHW/STM		OTHER		CONVERTER TYPE:
	SPACE HEAT		DHW	X	OTHER				USE:
COMME SERVES AHU-1 & AHU-2							**80%**		% HTG AREA SERVED
									BB RADIATION ONLY

NAMEPLATE:

	MFG.		MODEL	**118900**	CAPACITY OUTPUT (BTUH)
					CAPACITY INPUT (BTUH)
	MFG.		MODEL		CAPACITY OUTPUT (BTUH)
					CAPACITY INPUT (BTUH)
	HW PUMP 1 - HP		MFG.		MODEL
	HW PUMP 2 - HP		MFG.		MODEL
	HW PUMP 3 - HP		MFG.		MODEL
COMMENT:					

OPERATION:

HOURS ON:	S	M	T	W	T	F	S	COMMENT
PRESENT START TIME	**0**	**0**	**0**	**0**	**0**	**0**	**0**	TIMECLOCK?
PRESENT STOP TIME	**2400**	**2400**	**2400**	**2400**	**2400**	**2400**	**2400**	
REQUIRED START TIME								
REQUIRED STOP TIME								

MONTHS ON:

J	F	M	A	M	J	J	A	S	O	N	D
1	**1**	**1**	**1**	**0**	**0**	**0**	**0**	**0**	**1**	**1**	**1**

CONTROLS:

	X	PNEUMATIC		ELECTRIC		ELEC'NIC		DDC	COMMENTS
SETPOINTS		PSIG	**200**	HW SUPPLY					
RESET CONTROL (oF):		HW HIGH		HW LOW		OA LOW		OA HIGH	
BURNER CONTROLS		O2 TRIM (Y/N)		OTHER					
COMMENTS:									

E M C ENGINEERS, INC.

PROJECT: UMCS STUDY
CLIENT CONTRACT NO.: DACA01-94-D-0033
CLIENT PROJ. ENG: STEVE ROWLEY
LOCATION: FORT DRUM, NY BLDG: BDE. HQ.

EMC NO.: 1406-006
DATE: Dec-94
PREPARED BY: **CSW/BG**
CHECKED BY: BG
FILE: **10200RAD**

PERIMETER RADIATION SURVEY OBSERVATIONS

RAD1	PER RAD NO.		LOCATION (RM)
HE-1	SOURCE OF HEATING	WHOLE BLDG	SERVES AREA

UNIT TYPE:

	STEAM	X	HW		ELECTRIC				
	OTHER								
	COMMENT:								

NAMEPLATE:

	HW PUMP 1 - HP		MFG.		MODEL
	HW PUMP 2 - HP		MFG.		MODEL
	HW PUMP 3 - HP		MFG.		MODEL
	HW PUMP 4 - HP		MFG.		MODEL
COMMENT:				**20.0%**	% AREA HEATING

OPERATION:

HOURS ON:	S	M	T	W	T	F	S	COMMENT
PRESENT START TIME	**0**	**0**	**0**	**0**	**0**	**0**	**0**	TIMECLOCK?
PRESENT STOP TIME	**2400**	**2400**	**2400**	**2400**	**2400**	**2400**	**2400**	
REQUIRED START TIME								
REQUIRED STOP TIME								

MONTHS ON:

J	F	M	A	M	J	J	A	S	O	N	D
1	**1**	**1**	**1**	**0**	**0**	**0**	**0**	**0**	**1**	**1**	**1**

CONTROLS:

		PNEUMATIC		ELECTRIC		ELEC'NIC		DDC	COMMENTS
RADIATION CONTROL:		NONE		2-WAY VLV		3-WAY VLV		OTHER	
SPACE SETPOINT (øF):		OCC HEAT		UNOCC HEAT		OCC COOL		UNOCC COOL	
RESET CONTROL (øF):		HW HIGH		HW LOW		OA LOW		OA HIGH	
COMMENTS:									

FIELD SURVEY NOTES

BUILDING 10205

E M C ENGINEERS, INC.

PROJECT: UMCS STUDY
CLIENT CONTRACT NO.: DACA01-94-D-0033
CLIENT PROJ. ENG: STEVE ROWLEY
LOCATION: FORT DRUM, NY BLDG: 10205

EMC NO.: 1406-006
DATE: 10-NOV-94
PREPARED BY: BG
CHECKED BY:
FILE: 10205

VI. BUILDING DATA SURVEY OBSERVATIONS

BLDG NO: 10205 BLDG NAME: DENTAL CLINIC

ZONE NO.		FUNCTION:						
OCCUPANCY HOURS:	M-F	600	TO	1800	SAT	0	TO	0
	SUN	0	TO	0				
PRESENT TEMP	WINTER OCC	72.0 øF		UNOCC	øF			
	SUMMER OCC	øF		UNOCC	øF			

ZONE NO.		FUNCTION:						
OCCUPANCY HOURS:	M-F		TO		SAT		TO	
	SUN		TO					
PRESENT TEMP	WINTER OCC	øF		UNOCC	øF			
	SUMMER OCC	øF		UNOCC	øF			

ZONE NO.		FUNCTION:						
OCCUPANCY HOURS:	M-F		TO		SAT		TO	
	SUN		TO					
PRESENT TEMP	WINTER OCC	øF		UNOCC	øF			
	SUMMER OCC	øF		UNOCC	øF			

REMARKS: 4 LARGE SKYLIGHTS
2 HOFFMAN EXHAUSTERS

	CAPACITY (MBH)
RHC-1	14
RHC-2	27.5
RHC-3	39.6
VAV 15,16,17	7.4
VAV 5,2,14	8.7
VAV 12	14.4
VAV 1	15.5
VAV 3,4,7,11,9,13	21.4
VAV 6,8,10	37.7

E M C ENGINEERS, INC.

PROJECT: UMCS STUDY
CLIENT CONTRACT NO.: DACA01-94-D-0033
CLIENT PROJ. ENG: STEVE ROWLEY
LOCATION: FORT DRUM, NY BLDG: **10205**

EMC NO.: 1406-006
DATE: 10-NOV-94
PREPARED BY: **BG**
CHECKED BY:
FILE: **10205ACC**

REFRIGERATION EQUIPMENT SURVEY OBSERVATIONS

ACC1	CHILLER/COMPRESSOR NO.	COURTYARD	LOCATION (RM)

UNIT TYPE:

	CENTRIFUGAL WITH WATER SIDE COOLING TOWER						OTHER
	RECIPROCATING WITH WATER SIDE COOLING TOWER						AHU'S SERVED
	RECIPROCATING WITH AIR COOLED CONDENSING UNIT						AHU-1
	ABSORBTION WITH WATER SIDE COOLING TOWER						
X	AIR COOLED CONDENSING UNIT						
	CHW	X	DX		OTHER		

NAMEPLATE:

CHILLER		MFG.				MODEL			SERIAL NO.
	VOLTS		AMPS		PH		HZ	50	CAPACITY (TONS)
TOWER		MFG.				MODEL		6	# OF FANS
	VOLTS		AMPS		PH		HZ	5	HP each
CW PUMP		MFG.				MODEL			SERIAL NO.
	VOLTS		AMPS		PH		HZ		HP
CNW PUMP		MFG.				MODEL			SERIAL NO.
	VOLTS		AMPS		PH		HZ		HP
COMMENTS:		54.6 KW							

OPERATION:

HOURS ON:	S	M	T	W	T	F	S	COMMENT
PRESENT START TIME								TIMECLOCK?
PRESENT STOP TIME								
REQUIRED START TIME	0	600	600	600	600	600	0	
REQUIRED STOP TIME	0	1800	1800	1800	1800	1800	0	

MONTHS ON:

J	F	M	A	M	J	J	A	S	O	N	D
0	0	0	0	1	1	1	1	1	0	0	0

CONTROLS:

		PNEUMATIC		ELECTRIC		ELEC'NIC		DDC	COMMENTS
SETPOINTS		CWS (oF)		CWR (oF)		CNWS (oF)		CNWR (oF)	
PANEL INDICATORS									
- PRESSURE		LITE-HI		LITE-LOW		GAUGES			
- TEMPERATURE		LITE-HI		LITE-LOW		GAUGES			
- OTHER									
COMMENTS:									

E M C ENGINEERS, INC.

PROJECT: UMCS STUDY
CLIENT CONTRACT NO.: DACA01-94-D-0033
CLIENT PROJ. ENG: STEVE ROWLEY
LOCATION: FORT DRUM, NY BLDG: **10205**

EMC NO.: 1406-006
DATE: 10-NOV-94
PREPARED BY: **BG**
CHECKED BY:
FILE: **10205AH1**

AIR HANDLING UNIT SURVEY OBSERVATIONS

AHU1	AHU NO.	**MER**	LOCATION (RM)
ACCU1	REF. SYS. SERVING AHU	**WHOLE BLDG**	SERVES AREA

UNIT TYPE:

X	SINGLE ZN		2-PIPE FC		4-PIPE FC		UNIT HTR		H&V
	MULTIZONE		DOUBLE DT	X	REHEAT		INDUCTION	X	VAV
	NUMBER OF ZONES				OTHER				
	COMMENT:								

NAMEPLATE:

	TRANE			MFG.	**CCD835S811**			MODEL
20.0	SUPPLY FAN HP		**CENTURY**	MFG.				MODEL
0.8	RET/EXH FAN HP		**MARATHON**	MFG.				MODEL
10430	CFM-HTG	**17500**	CFM-CLG	**30%**	MIN %OA	**100%**	MAX %OA	15% ~~100.0%~~ 113 % HTG AREA SERVED
COMMENT:								

COILS:

X	NONE		STM		HW		ELEC	MOD VLV	PREHEAT
	NONE		STM	X	HW		ELEC	MOD VLV	HEATING
	NONE		STM	X	HW		ELEC	MOD VLV	REHEAT
X	NONE		STM		HW		EVAP MEDIA	MOD VLV	HUMID.
	NONE	X	DX		CW			MOD VLV	COOLING

OPERATION:

HOURS ON:	S	M	T	W	T	F	S	COMMENTS
PRESENT START TIME								TIMECLOCK?
PRESENT STOP TIME								
REQUIRED START TIME	**0**	**600**	**600**	**600**	**600**	**600**	**0**	
REQUIRED STOP TIME	**0**	**1800**	**1800**	**1800**	**1800**	**1800**	**0**	

MONTHS ON:

J	F	M	A	M	J	J	A	S	O	N	D
0	**0**	**0**	**0**	**1**	**1**	**1**	**1**	**1**	**0**	**0**	**0**

CONTROLS:

	X	PNEUMATIC		ELECTRIC		ELEC'NIC		DDC	COMMENTS
THERMOSTAT TYPE:		SINGLE STPT		DUAL SETPNT		SETBACK			
SPACE SETPOINT (°F):		OCC HEAT		UNOCC HEAT		OCC COOL		UNOCC COOL	
OTHER SETPOINTS (°F):		HOT DECK		COLD DECK		MIXED AIR		OTHER	
DAMPER CONTROL:	Y	MIN OA (Y/N)	Y	MAX OA (Y/N)	Y	RA (Y/N)	Y	EA (Y/N)	
		MA CONTROL		ECONO-DB		ECONO-ENT		OTHER	
DEMAND LIMIT:		(Y = YES ; N = NO)							
COMMENTS:									

PROJECT: UMCS STUDY
CLIENT CONTRACT NO.: DACA01-94-D-0033
CLIENT PROJ. ENG: STEVE ROWLEY
LOCATION: FORT DRUM, NY BLDG: **10205**

EMC NO.: 1406-006
DATE: 09-NOV-94
PREPARED BY: **BG**
CHECKED BY:
FILE:

DOMESTIC HW SURVEY OBSERVATIONS

DHW	BOILER/CONVERTER NO.	MER	LOCATION (RM)
	SOURCE OF HEATING (PLANT)		SERVES AREA

UNIT TYPE:

	NO.2 OIL		NO.6 OIL		N.GAS	X	ELEC		FUELS:
	STM/HW		HTHW/HW		HTHW/STM		OTHER		CONVERTER TYPE:
COMME 82 GALLON									

NAMEPLATE:

LOCHINVAR	MFG.	**HCK27-082**	MODEL	**46076**	CAPACITY OUTPUT (BTUH,KW)
	MFG.		MODEL		CAPACITY OUTPUT (BTUH,KW)

DOMESTIC HW CIRCULATION PUMP:				
HW PUMP 1 - HP		MFG.		MODEL
HW PUMP 2 - HP		MFG.		MODEL
HW PUMP 3 - HP		MFG.		MODEL
COMMENT: **13.5 KW**				

DIMENSION:	DIAMETER (INCHS)		HEIGHT OR LENGTH (INCHES)	GALLON

OPERATION:

HOURS ON:	S	M	T	W	T	F	S	COMMENT
PRESENT START TIME	**0**	**0**	**0**	**0**	**0**	**0**	**0**	TIMECLOCK?
PRESENT STOP TIME	**2400**	**2400**	**2400**	**2400**	**2400**	**2400**	**2400**	
REQUIRED START TIME	**0**	**600**	**600**	**600**	**600**	**600**	**0**	
REQUIRED STOP TIME	**0**	**1800**	**1800**	**1800**	**1800**	**1800**	**0**	

MONTHS ON:

J	F	M	A	M	J	J	A	S	O	N	D
1	**1**	**1**	**1**	**0**	**0**	**0**	**0**	**0**	**1**	**1**	**1**

CONTROLS:

		PNEUMATIC		ELECTRIC		ELEC'NIC		DDC	COMMENTS
SETPOINTS				HW SUPPLY					
COMMENTS:									

E M C ENGINEERS, INC.

PROJECT: UMCS STUDY
CLIENT CONTRACT NO.: DACA01-94-D-0033
CLIENT PROJ. ENG: STEVE ROWLEY
LOCATION: FORT DRUM, NY BLDG: **10205**

EMC NO.: 1406-006
DATE: 09-NOV-94
PREPARED BY: **CSW**
CHECKED BY: BG
FILE: **10205HX1**

BOILER & CONVERTER SURVEY OBSERVATIONS

HX1	BOILER/CONVERTER NO.	**MER**	LOCATION (RM)
	SOURCE OF HEATING (PLANT)	**WHOLE BLDG**	SERVES AREA

UNIT TYPE:

	STEAM		PSIG		HW		TEMP.		BOILER TYPE:
	NO.2 OIL		NO.6 OIL		N.GAS		ELEC		FUELS:
	STM/HW	X	HTHW/HW		HTHW/STM		OTHER		CONVERTER TYPE:
	SPACE HEAT		DHW		OTHER				USE:

COMMENT: Perimeter Rad. ~~20%~~ % HTG AREA SERVED
.87 BB RADIATION ONLY

NAMEPLATE:

	MFG.		MODEL	942830	CAPACITY OUTPUT (BTUH)
					CAPACITY INPUT (BTUH)
	MFG.		MODEL		CAPACITY OUTPUT (BTUH)
					CAPACITY INPUT (BTUH)
1	HW PUMP 1 - HP		MFG.		MODEL
	HW PUMP 2 - HP		MFG.		MODEL
	HW PUMP 3 - HP		MFG.		MODEL

COMMENT:

OPERATION:

HOURS ON:	S	M	T	W	T	F	S	COMMENT
PRESENT START TIME	0	0	0	0	0	0	0	TIMECLOCK?
PRESENT STOP TIME	2400	2400	2400	2400	2400	2400	2400	
REQUIRED START TIME	0	600	600	600	600	600	0	
REQUIRED STOP TIME	0	1800	1800	1800	1800	1800	0	

MONTHS ON:

J	F	M	A	M	J	J	A	S	O	N	D
1	1	1	1	0	0	0	0	0	1	1	1

CONTROLS:

		PNEUMATIC		ELECTRIC		ELEC'NIC		DDC	COMMENTS
SETPOINTS		PSIG		HW SUPPLY					
RESET CONTROL (oF):		HW HIGH		HW LOW		OA LOW		OA HIGH	
BURNER CONTROLS		O2 TRIM (Y/N)		OTHER					

COMMENTS:

E M C ENGINEERS, INC.

PROJECT: UMCS STUDY
CLIENT CONTRACT NO.: DACA01-94-D-0033
CLIENT PROJ. ENG: STEVE ROWLEY
LOCATION: FORT DRUM, NY BLDG: **10205**

EMC NO.: 1406-006
DATE: 09-NOV-94
PREPARED BY: **BG**
CHECKED BY:
FILE: **10205HX2**

BOILER & CONVERTER SURVEY OBSERVATIONS

HX2	BOILER/CONVERTER NO.	**MER**	LOCATION (RM)
	SOURCE OF HEATING (PLANT)	**GLYCOL SYSTEM**	SERVES AREA

UNIT TYPE:

	STEAM		PSIG		HW		TEMP.	BOILER TYPE:
	NO.2 OIL		NO.6 OIL		N.GAS		ELEC	FUELS:
	STM/HW		HTHW/HW		HTHW/STM	X	OTHER	CONVERTER TYPE:
	SPACE HEAT		DHW		OTHER			USE:
COMMENT:			HW-GLYCOL				**80%**	% HTG AREA SERVED
								BB RADIATION ONLY

NAMEPLATE:

	MFG.		MODEL	**306400**	CAPACITY OUTPUT (BTUH)
					CAPACITY INPUT (BTUH)
	MFG.		MODEL		CAPACITY OUTPUT (BTUH)
					CAPACITY INPUT (BTUH)
0.3333	HW PUMP 1 - HP	**B&G**	MFG.		MODEL
	HW PUMP 2 - HP		MFG.		MODEL
	HW PUMP 3 - HP		MFG.		MODEL
COMMENT:					

OPERATION:

HOURS ON:	S	M	T	W	T	F	S	COMMENT
PRESENT START TIME	**0**	**0**	**0**	**0**	**0**	**0**	**0**	TIMECLOCK?
PRESENT STOP TIME	**2400**	**2400**	**2400**	**2400**	**2400**	**2400**	**2400**	
REQUIRED START TIME	**0**	**600**	**600**	**600**	**600**	**600**	**0**	
REQUIRED STOP TIME	**0**	**1800**	**1800**	**1800**	**1800**	**1800**	**0**	

MONTHS ON:

J	F	M	A	M	J	J	A	S	O	N	D
1	**1**	**1**	**1**	**0**	**0**	**0**	**0**	**0**	**1**	**1**	**1**

CONTROLS:

		PNEUMATIC		ELECTRIC		ELEC'NIC		DDC	COMMENTS
SETPOINTS		PSIG		HW SUPPLY					
RESET CONTROL (oF):		HW HIGH		HW LOW		OA LOW		OA HIGH	
BURNER CONTROLS		O2 TRIM (Y/N)		OTHER					
COMMENTS:									

E M C ENGINEERS, INC.

PROJECT: UMCS STUDY
CLIENT CONTRACT NO.: DACA01-94-D-0033
CLIENT PROJ. ENG: STEVE ROWLEY
LOCATION: FORT DRUM, NY BLDG: **10205**

EMC NO.: 1406-006
DATE: 10-NOV-94
PREPARED BY: **BG**
CHECKED BY:
FILE: **10205RAD**

PERIMETER RADIATION SURVEY OBSERVATIONS

RAD	PER RAD NO.	**WHOLE BLDG**	LOCATION (RM)
	SOURCE OF HEATING		SERVES AREA

UNIT TYPE:

	STEAM	**X**	HW		ELECTRIC				
	OTHER								
	COMMENT:								

NAMEPLATE:

	HW PUMP 1 - HP		MFG.		MODEL
	HW PUMP 2 - HP		MFG.		MODEL
	HW PUMP 3 - HP		MFG.		MODEL
	HW PUMP 4 - HP		MFG.		MODEL
COMMENT:				**20.0%**	% AREA HEATING

OPERATION:

HOURS ON:	S	M	T	W	T	F	S	COMMENT
PRESENT START TIME	**0**	**0**	**0**	**0**	**0**	**0**	**0**	TIMECLOCK?
PRESENT STOP TIME	**2400**	**2400**	**2400**	**2400**	**2400**	**2400**	**2400**	
REQUIRED START TIME	**0**	**600**	**600**	**600**	**600**	**600**	**0**	
REQUIRED STOP TIME	**0**	**1800**	**1800**	**1800**	**1800**	**1800**	**0**	

MONTHS ON:

J	F	M	A	M	J	J	A	S	O	N	D
1	**1**	**1**	**1**	**0**	**0**	**0**	**0**	**0**	**1**	**1**	**1**

CONTROLS:

		PNEUMATIC		ELECTRIC		ELEC'NIC		DDC	COMMENTS
RADIATION CONTROL:		NONE		2-WAY VLV		3-WAY VLV		OTHER	
SPACE SETPOINT (øF):		OCC HEAT		UNOCC HEAT		OCC COOL		UNOCC COOL	
RESET CONTROL (øF):		HW HIGH		HW LOW		OA LOW		OA HIGH	
COMMENTS:									

FIELD SURVEY NOTES

BUILDING 10207

TYPICAL: 10502

E M C ENGINEERS, INC.

PROJECT: UMCS STUDY
CLIENT CONTRACT NO.: DACA01-94-D-0033
CLIENT PROJ. ENG: STEVE ROWLEY
LOCATION: FORT DRUM, NY BLDG: EXCHANGE/CLUB

EMC NO.: 1406-006
DATE: Dec-94
PREPARED BY: CSW
CHECKED BY:
FILE: 10207BDS

VI. BUILDING DATA SURVEY OBSERVATIONS

BLDG NO: 10207 BLDG NAME: EXCHANGE/CLUB

ZONE NO.		FUNCTION:						
OCCUPANCY HOURS:	M-F		TO		SAT		TO	
	SUN		TO					
PRESENT TEMP	WINTER OCC	øF		UNOCC	øF			
	SUMMER OCC	øF		UNOCC	øF			

ZONE NO.		FUNCTION:						
OCCUPANCY HOURS:	M-F		TO		SAT		TO	
	SUN		TO					
PRESENT TEMP	WINTER OCC	øF		UNOCC	øF			
	SUMMER OCC	øF		UNOCC	øF			

ZONE NO.		FUNCTION:						
OCCUPANCY HOURS:	M-F		TO		SAT		TO	
	SUN		TO					
PRESENT TEMP	WINTER OCC	øF		UNOCC	øF			
	SUMMER OCC	øF		UNOCC	øF			

REMARKS:

EXHAUST FANS	HP	CONTROL	CFM	UNIT HTR	BTUH
E1	0.0833333	AHU1 INTERLOCK	225	UH-1	19300
E2	3.3 AMP	SCR. CONT	410	UH-2	37365
E3	2.3 AMP	AHU2 INTERLOCK	300	UH-3	15768
E4	0.7 AMP		107		
E5	5	THERMOSTAT	12500		CFM
E6	0.5	MANUAL SWITCH	400	UH-1	400
E7	0.75	TIMER SW	2500	UH-2	900
E8	3.3 AMP	TIME CLOCK	410	UH-3	500

VAV UNIT SCHEDULE	BTU/HR	ROOF VENT SCHEDULE	CFM
V1	1200	RVI1	2500
V2	5400	RVI2	4500
V3	4500	RVI3	6100
V4	7200	RVI4	4000
V5	24000	RVI5	2500
V6	22000	RVE1	2500
		RVE2	4500
NOTE: SEE KITCHEN EQUIPMENT SCHEDULE		RVE3	6100
		RVE4	4000

E M C ENGINEERS, INC.

PROJECT: UMCS STUDY
CLIENT CONTRACT NO.: DACA01-94-D-0033
CLIENT PROJ. ENG: STEVE ROWLEY
LOCATION: FORT DRUM, NY BLDG: **EXCHANGE/CLUB**

EMC NO.: 1406-006
DATE: 17-NOV-94
PREPARED BY: **CSW**
CHECKED BY:
FILE: **10207AH1**

AIR HANDLING UNIT SURVEY OBSERVATIONS

AHU1	AHU NO.	**MEZZANINE**	LOCATION (RM)
WC1	REF. SYS. SERVING AHU	**RETAIL SALES**	SERVES AREA

UNIT TYPE:

X	SINGLE ZN		2-PIPE FC		4-PIPE FC		UNIT HTR		H&V
	MULTIZONE		DOUBLE DT		REHEAT		INDUCTION		VAV
	NUMBER OF ZONES				OTHER				
	COMMENT:								

NAMEPLATE:

	CARRIER				MFG.	**39BB060**			MODEL
3.0	SUPPLY FAN HP				MFG.				MODEL
0.1	RET/EXH FAN HP				MFG.				MODEL
2500	CFM-HTG	**2500**	CFM-CLG	**35%**	MIN %OA	**100%**	MAX %OA	**15.0%**	% HTG AREA SERVED
COMMENT:									

COILS:

X	NONE		STM		HW		ELEC		MOD VLV	PREHEAT
	NONE		STM	X	HW		ELEC	X	MOD VLV	HEATING
X	NONE		STM		HW		ELEC		MOD VLV	REHEAT
X	NONE		STM		HW		EVAP MEDIA		MOD VLV	HUMID.
	NONE		DX	X	CW			X	MOD VLV	COOLING

OPERATION:

HOURS ON:	S	M	T	W	T	F	S	COMMENTS
PRESENT START TIME	**600**	**600**	**600**	**600**	**600**	**600**	**600**	TIMECLOCK?
PRESENT STOP TIME	**2100**	**2100**	**2100**	**2100**	**2100**	**2100**	**2100**	
REQUIRED START TIME								
REQUIRED STOP TIME								

MONTHS ON:

J	F	M	A	M	J	J	A	S	O	N	D
1	**1**	**1**	**1**	**1**	**1**	**1**	**1**	**1**	**1**	**1**	**1**

CONTROLS:

	X	PNEUMATIC		ELECTRIC		ELEC'NIC		DDC	COMMENTS
THERMOSTAT TYPE:		SINGLE STPT	Y	DUAL SETPNT		SETBACK			
SPACE SETPOINT (°F):	**72**	OCC HEAT	**65**	UNOCC HEAT	**78**	OCC COOL	**78**	UNOCC COOL	
OTHER SETPOINTS (°F):		HOT DECK		COLD DECK		MIXED AIR		OTHER	
DAMPER CONTROL:	Y	MIN OA (Y/N)	Y	MAX OA (Y/N)	Y	RA (Y/N)	Y	EA (Y/N)	
		MA CONTROL	X	ECONO-DB		ECONO-ENT		OTHER	
DEMAND LIMIT:		(Y = YES ; N = NO)							
COMMENTS:									

E M C ENGINEERS, INC.

PROJECT: UMCS STUDY
CLIENT CONTRACT NO.: DACA01-94-D-0033
CLIENT PROJ. ENG: STEVE ROWLEY
LOCATION: FORT DRUM, NY BLDG: **EXCHANGE/CLUB**

EMC NO.: 1406-006
DATE: 17-NOV-94
PREPARED BY: **CSW**
CHECKED BY:
FILE: **10207AH2**

AIR HANDLING UNIT SURVEY OBSERVATIONS

AHU2	AHU NO.	**MEZZANINE**	LOCATION (RM)
WC-1	REF. SYS. SERVING AHU	**LOBBY/POOL RM/GA**	SERVES AREA

UNIT TYPE:

X	SINGLE ZN		2-PIPE FC		4-PIPE FC		UNIT HTR		H&V
	MULTIZONE		DOUBLE DT		REHEAT		INDUCTION		VAV
	NUMBER OF ZONES				OTHER				
	COMMENT:								

NAMEPLATE:

	CARRIER				MFG.	**39LA1101GA1031-L**			MODEL
7.5	SUPPLY FAN HP				MFG.				MODEL
	RET/EXH FAN HP				MFG.				MODEL
4500	CFM-HTG	**4500**	CFM-CLG	**35%**	MIN %OA	**100%**	MAX %OA	**26.0%**	% HTG AREA SERVED
COMMENT:									

COILS:

X	NONE		STM		HW		ELEC		MOD VLV	PREHEAT
	NONE		STM	X	HW		ELEC	X	MOD VLV	HEATING
X	NONE		STM		HW		ELEC		MOD VLV	REHEAT
X	NONE		STM		HW		EVAP MEDIA		MOD VLV	HUMID.
	NONE		DX	X	CW			X	MOD VLV	COOLING

OPERATION:

HOURS ON:	S	M	T	W	T	F	S	COMMENTS
PRESENT START TIME	**600**	**600**	**600**	**600**	**600**	**600**	**600**	TIMECLOCK?
PRESENT STOP TIME	**1500**	**1500**	**1500**	**1500**	**1500**	**1500**	**1500**	**YES**
REQUIRED START TIME								
REQUIRED STOP TIME								

MONTHS ON:

J	F	M	A	M	J	J	A	S	O	N	D
1	**1**	**1**	**1**	**1**	**1**	**1**	**1**	**1**	**1**	**1**	**1**

CONTROLS:

	X	PNEUMATIC		ELECTRIC		ELEC'NIC		DDC	COMMENTS
THERMOSTAT TYPE:		SINGLE STPT	X	DUAL SETPNT		SETBACK			
SPACE SETPOINT (°F):	**72**	OCC HEAT	**65**	UNOCC HEAT	**78**	OCC COOL	**78**	UNOCC COOL	
OTHER SETPOINTS (°F):		HOT DECK		COLD DECK		MIXED AIR		OTHER	
DAMPER CONTROL:	Y	MIN OA (Y/N)	Y	MAX OA (Y/N)	Y	RA (Y/N)	Y	EA (Y/N)	
		MA CONTROL	X	ECONO-DB		ECONO-ENT		OTHER	
DEMAND LIMIT:		(Y = YES ; N = NO)							
COMMENTS:									

E M C ENGINEERS, INC.

PROJECT: UMCS STUDY
CLIENT CONTRACT NO.: DACA01-94-D-0033
CLIENT PROJ. ENG: STEVE ROWLEY
LOCATION: FORT DRUM, NY BLDG: **EXCHANGE/CLUB**

EMC NO.: 1406-006
DATE: 17-NOV-94
PREPARED BY: **CSW**
CHECKED BY:
FILE: **10207AH3**

AIR HANDLING UNIT SURVEY OBSERVATIONS

AHU3	AHU NO.	**MEZZANINE**	LOCATION (RM)
	REF. SYS. SERVING AHU	**DINING & FOOD SERV**	SERVES AREA

UNIT TYPE:

X	SINGLE ZN		2-PIPE FC		4-PIPE FC		UNIT HTR		H&V
	MULTIZONE		DOUBLE DT		REHEAT		INDUCTION		VAV
	NUMBER OF ZONES				OTHER				
	COMMENT:								

NAMEPLATE:

	CARRIER				MFG.	**39LA115/GA1031-R**			MODEL
7.5	SUPPLY FAN HP				MFG.				MODEL
0.0	RET/EXH FAN HP				MFG.				MODEL
6100	CFM-HTG	**6100**	CFM-CLG	**35%**	MIN %OA	**100%**	MAX %OA	**36.0%**	% HTG AREA SERVED
COMMENT:									

COILS:

X	NONE		STM		HW		ELEC		MOD VLV	PREHEAT
	NONE		STM	X	HW		ELEC	X	MOD VLV	HEATING
X	NONE		STM		HW		ELEC		MOD VLV	REHEAT
X	NONE		STM		HW		EVAP MEDIA		MOD VLV	HUMID.
	NONE		DX	X	CW			X	MOD VLV	COOLING

OPERATION:

HOURS ON:	S	M	T	W	T	F	S	COMMENTS
PRESENT START TIME	**600**	**600**	**600**	**600**	**600**	**600**	**600**	TIMECLOCK?
PRESENT STOP TIME	**2100**	**2100**	**2100**	**2100**	**2100**	**2100**	**2100**	
REQUIRED START TIME								
REQUIRED STOP TIME								

MONTHS ON:

J	F	M	A	M	J	J	A	S	O	N	D
1	**1**	**1**	**1**	**1**	**1**	**1**	**1**	**1**	**1**	**1**	**1**

CONTROLS:

	X	PNEUMATIC		ELECTRIC		ELEC'NIC		DDC	COMMENTS
THERMOSTAT TYPE:		SINGLE STPT	X	DUAL SETPNT		SETBACK			
SPACE SETPOINT (°F):	**72**	OCC HEAT	**65**	UNOCC HEAT	**78**	OCC COOL	**78**	UNOCC COOL	
OTHER SETPOINTS (°F):		HOT DECK		COLD DECK		MIXED AIR		OTHER	
DAMPER CONTROL:	Y	MIN OA (Y/N)	Y	MAX OA (Y/N)	Y	RA (Y/N)	Y	EA (Y/N)	
		MA CONTROL	X	ECONO-DB		ECONO-ENT		OTHER	
DEMAND LIMIT:		(Y = YES ; N = NO)							
COMMENTS:									

E M C ENGINEERS, INC.

PROJECT: UMCS STUDY
CLIENT CONTRACT NO.: DACA01-94-D-0033
CLIENT PROJ. ENG: STEVE ROWLEY
LOCATION: FORT DRUM, NY BLDG: **EXCHANGE/CLUB**

EMC NO.: 1406-006
DATE: 17-NOV-94
PREPARED BY: **CSW**
CHECKED BY:
FILE: **10207AH4**

AIR HANDLING UNIT SURVEY OBSERVATIONS

AHU4	AHU NO.	**MEZZANINE**	LOCATION (RM)
WC-1	REF. SYS. SERVING AHU	**EM CLUB**	SERVES AREA

UNIT TYPE:

X	SINGLE ZN		2-PIPE FC		4-PIPE FC		UNIT HTR		H&V
	MULTIZONE		DOUBLE DT		REHEAT		INDUCTION		VAV
	NUMBER OF ZONES				OTHER				
	COMMENT:								

NAMEPLATE:

	CARRIER				MFG.				MODEL
7.5	SUPPLY FAN HP				MFG.				MODEL
0.0	RET/EXH FAN HP				MFG.				MODEL
4000	CFM-HTG	**4000**	CFM-CLG	**35%**	MIN %OA	**100%**	MAX %OA	**23.0%**	% HTG AREA SERVED
COMMENT:									

COILS:

X	NONE		STM		HW		ELEC		MOD VLV	PREHEAT
	NONE		STM	X	HW		ELEC	X	MOD VLV	HEATING
X	NONE		STM		HW		ELEC		MOD VLV	REHEAT
X	NONE		STM		HW		EVAP MEDIA		MOD VLV	HUMID.
	NONE		DX	X	CW			X	MOD VLV	COOLING

OPERATION:

HOURS ON:	S	M	T	W	T	F	S	COMMENTS
PRESENT START TIME	**600**	**600**	**600**	**600**	**600**	**600**	**600**	TIMECLOCK?
PRESENT STOP TIME	**2100**	**2100**	**2100**	**2100**	**2100**	**2100**	**2100**	
REQUIRED START TIME								
REQUIRED STOP TIME								

MONTHS ON:

J	F	M	A	M	J	J	A	S	O	N	D
1	**1**	**1**	**1**	**1**	**1**	**1**	**1**	**1**	**1**	**1**	**1**

CONTROLS:

	X	PNEUMATIC		ELECTRIC		ELEC'NIC		DDC	COMMENTS
THERMOSTAT TYPE:		SINGLE STPT	X	DUAL SETPNT		SETBACK			
SPACE SETPOINT (°F):	**72**	OCC HEAT	**65**	UNOCC HEAT	**78**	OCC COOL	**78**	UNOCC COOL	
OTHER SETPOINTS (°F):		HOT DECK		COLD DECK		MIXED AIR		OTHER	
DAMPER CONTROL:	Y	MIN OA (Y/N)	Y	MAX OA (Y/N)	Y	RA (Y/N)	Y	EA (Y/N)	
		MA CONTROL	X	ECONO-DB		ECONO-ENT		OTHER	
DEMAND LIMIT:		(Y = YES ; N = NO)							
COMMENTS:									

E M C ENGINEERS, INC.

PROJECT: UMCS STUDY
CLIENT CONTRACT NO.: DACA01-94-D-0033
CLIENT PROJ. ENG: STEVE ROWLEY
LOCATION: FORT DRUM, NY BLDG: **EXCHANGE/CLUB**

EMC NO.: 1406-006
DATE: 17-NOV-94
PREPARED BY: **CSW**
CHECKED BY:
FILE: **10207BS**

BOILER & CONVERTER SURVEY OBSERVATIONS

B1,2,3	BOILER/CONVERTER NO.	**MER**	LOCATION (RM)
	SOURCE OF HEATING (PLANT)	**WHOLE BLDG**	SERVES AREA

UNIT TYPE:

	STEAM		PSIG		HW		TEMP.		BOILER TYPE:
	NO.2 OIL		NO.6 OIL	X	N.GAS		ELEC		FUELS:
	STM/HW		HTHW/HW		HTHW/STM		OTHER		CONVERTER TYPE:
	SPACE HEAT		DHW		OTHER				USE:
COMMENT:									% HTG AREA SERVED
									BB RADIATION ONLY

NAMEPLATE:

WELL-MCLAIN	MFG.	**M-3PFG-PID-1040**	MODEL	**821,600**	CAPACITY OUTPUT (BTUH)
				1040000	CAPACITY INPUT (BTUH)
	MFG.		MODEL		CAPACITY OUTPUT (BTUH)
					CAPACITY INPUT (BTUH)
2	HW PUMP 1 - HP		MFG.		MODEL
	HW PUMP 2 - HP		MFG.		MODEL
	HW PUMP 3 - HP		MFG.		MODEL
COMMENT:					

OPERATION:

HOURS ON:	S	M	T	W	T	F	S	COMMENT
PRESENT START TIME	**0**	**0**	**0**	**0**	**0**	**0**	**0**	TIMECLOCK?
PRESENT STOP TIME	**2400**	**2400**	**2400**	**2400**	**2400**	**2400**	**2400**	
REQUIRED START TIME								
REQUIRED STOP TIME								

MONTHS ON:

J	F	M	A	M	J	J	A	S	O	N	D
1	**1**	**1**	**1**	**0**	**0**	**0**	**0**	**0**	**1**	**1**	**1**

CONTROLS:

	X	PNEUMATIC		ELECTRIC		ELEC'NIC		DDC	COMMENTS
SETPOINTS		PSIG		HW SUPPLY					
RESET CONTROL (oF):		HW HIGH		HW LOW		OA LOW		OA HIGH	
BURNER CONTROLS		O2 TRIM (Y/N)		OTHER					
COMMENTS:									

E M C ENGINEERS, INC.

PROJECT: UMCS STUDY
CLIENT CONTRACT NO.: DACA01-94-D-0033
CLIENT PROJ. ENG: STEVE ROWLEY
LOCATION: FORT DRUM, NY BLDG: **EXCHANGE/CLUB**

EMC NO.: 1406-006
DATE: 17-NOV-94
PREPARED BY: **CSW**
CHECKED BY:
FILE: **10207DHW**

DOMESTIC HW SURVEY OBSERVATIONS

DHW1	BOILER/CONVERTER NO.	MER	LOCATION (RM)
	SOURCE OF HEATING (PLANT)	WHOLE BLDG	SERVES AREA

UNIT TYPE:

	NO.2 OIL		NO.6 OIL	X	N.GAS		ELEC		FUELS:
	STM/HW		HTHW/HW		HTHW/STM		OTHER		CONVERTER TYPE:
COMMENT:									

NAMEPLATE:

STATE INDUSTRIES	MFG.	**SBT 30 199 NE9 F**	MODEL	**199990**	CAPACITY OUTPUT (BTUH,KW)
	MFG.		MODEL		CAPACITY OUTPUT (BTUH,KW)
DOMESTIC HW CIRCULATION PUMP:					
0	HW PUMP 1 - HP		MFG.		MODEL
	HW PUMP 2 - HP		MFG.		MODEL
	HW PUMP 3 - HP		MFG.		MODEL
COMMENT:					

DIMENSION:	DIAMETER (INCHS)		HEIGHT OR LENGTH (INCHES)	GALLON

OPERATION:

HOURS ON:	S	M	T	W	T	F	S	COMMENT
PRESENT START TIME	**0**	**0**	**0**	**0**	**0**	**0**	**0**	TIMECLOCK?
PRESENT STOP TIME	**2400**	**2400**	**2400**	**2400**	**2400**	**2400**	**2400**	
REQUIRED START TIME								
REQUIRED STOP TIME								

MONTHS ON:

J	F	M	A	M	J	J	A	S	O	N	D
1	**1**	**1**	**1**	**1**	**1**	**1**	**1**	**1**	**1**	**1**	**1**

CONTROLS:

	X	PNEUMATIC		ELECTRIC		ELEC'NIC		DDC	COMMENTS
SETPOINTS				HW SUPPLY					
COMMENTS:									

E M C ENGINEERS, INC.

PROJECT: UMCS STUDY
CLIENT CONTRACT NO.: DACA01-94-D-0033
CLIENT PROJ. ENG: STEVE ROWLEY
LOCATION: FORT DRUM, NY BLDG: **EXCHANGE/CLUB**

EMC NO.: 1406-006
DATE: 17-NOV-94
PREPARED BY: **CSW**
CHECKED BY:
FILE: **10207WC1**

REFRIGERATION EQUIPMENT SURVEY OBSERVATIONS

WC1	CHILLER/COMPRESSOR NO.	**EAST SIDE OF BLDG**	LOCATION (RM)

UNIT TYPE:

	CENTRIFUGAL WITH WATER SIDE COOLING TOWER		OTHER
	RECIPROCATING WITH WATER SIDE COOLING TOWER		AHU'S SERVED
X	RECIPROCATING WITH AIR COOLED CONDENSING UNIT		AHU1,2,3,4
	ABSORBTION WITH WATER SIDE COOLING TOWER		
	AIR COOLED CONDENSING UNIT		

X	CHW		DX		OTHER	

NAMEPLATE:

CHILLER		MFG.	**CARRIER**			MODEL	**30 GB-070**			SERIAL NO.
208	VOLTS		AMPS	**3**	PH	**60**	HZ	**73**	CAPACITY (TONS)	
TOWER		MFG.				MODEL				# OF FANS
	VOLTS		AMPS		PH		HZ		HP each	
CW PUMP		MFG.				MODEL				SERIAL NO.
	VOLTS		AMPS		PH		HZ	**7.5**	HP	
CNW PUMP		MFG.				MODEL				SERIAL NO.
	VOLTS		AMPS		PH		HZ		HP	
COMMENTS:										

OPERATION:

HOURS ON:	S	M	T	W	T	F	S	COMMENT
PRESENT START TIME	**0**	**0**	**0**	**0**	**0**	**0**	**0**	TIMECLOCK?
PRESENT STOP TIME	**2400**	**2400**	**2400**	**2400**	**2400**	**2400**	**2400**	
REQUIRED START TIME								
REQUIRED STOP TIME								

MONTHS ON:

J	F	M	A	M	J	J	A	S	O	N	D
0	**0**	**0**	**0**	**1**	**1**	**1**	**1**	**1**	**0**	**0**	**0**

CONTROLS:

	X	PNEUMATIC		ELECTRIC		ELEC'NIC		DDC	COMMENTS
SETPOINTS		CWS (oF)		CWR (oF)		CNWS (oF)		CNWR (oF)	
PANEL INDICATORS									
- PRESSURE		LITE-HI		LITE-LOW		GAUGES			
- TEMPERATURE		LITE-HI		LITE-LOW		GAUGES			
- OTHER									
COMMENTS:									

FIELD SURVEY NOTES

BUILDING 10502

E M C ENGINEERS, INC.

PROJECT: UMCS STUDY
CLIENT CONTRACT NO.: DACA01-94-D-0033
CLIENT PROJ. ENG: STEVE ROWLEY
LOCATION: FORT DRUM, NY BLDG: **10502**

EMC NO.: 1406-006
DATE: 17-NOV-94
PREPARED BY: **BG**
CHECKED BY:
FILE: **10502BS**

BOILER & CONVERTER SURVEY OBSERVATIONS

B1,2,3	BOILER/CONVERTER NO.	**MER**	LOCATION (RM)
	SOURCE OF HEATING (PLANT)	**WHOLE BLDG**	SERVES AREA

UNIT TYPE:

	STEAM		PSIG		HW		TEMP.	BOILER TYPE:
	NO.2 OIL		NO.6 OIL	X	N.GAS		ELEC	FUELS:
	STM/HW		HTHW/HW		HTHW/STM		OTHER	CONVERTER TYPE:
	SPACE HEAT		DHW		OTHER			USE:
COMMENT:								% HTG AREA SERVED
								BB RADIATION ONLY

NAMEPLATE:

WELL-MCLAIN	MFG.	**M-3PFG-PID-1040**	MODEL	**821,600**	CAPACITY OUTPUT (BTUH)
				1040000	CAPACITY INPUT (BTUH)
	MFG.		MODEL		CAPACITY OUTPUT (BTUH)
					CAPACITY INPUT (BTUH)
2	HW PUMP 1 - HP		MFG.		MODEL
	HW PUMP 2 - HP		MFG.		MODEL
	HW PUMP 3 - HP		MFG.		MODEL
COMMENT:					

OPERATION:

HOURS ON:	S	M	T	W	T	F	S	COMMENT
PRESENT START TIME	**0**	**0**	**0**	**0**	**0**	**0**	**0**	TIMECLOCK?
PRESENT STOP TIME	**2400**	**2400**	**2400**	**2400**	**2400**	**2400**	**2400**	
REQUIRED START TIME								
REQUIRED STOP TIME								

MONTHS ON:

J	F	M	A	M	J	J	A	S	O	N	D
1	**1**	**1**	**1**	**0**	**0**	**0**	**0**	**0**	**1**	**1**	**1**

CONTROLS:

		PNEUMATIC		ELECTRIC		ELEC'NIC	DDC	COMMENTS
SETPOINTS		PSIG		HW SUPPLY				
RESET CONTROL (oF):		HW HIGH		HW LOW		OA LOW	OA HIGH	
BURNER CONTROLS		O2 TRIM (Y/N)		OTHER				
COMMENTS:								

PROJECT: UMCS STUDY
CLIENT CONTRACT NO.: DACA01-94-D-0033
CLIENT PROJ. ENG: STEVE ROWLEY
LOCATION: FORT DRUM, NY BLDG: **10502**

EMC NO.: 1406-006
DATE: 17-NOV-94
PREPARED BY: **BG**
CHECKED BY:
FILE: **10502DHW**

DOMESTIC HW SURVEY OBSERVATIONS

DHW1	BOILER/CONVERTER NO.	MER	LOCATION (RM)
	SOURCE OF HEATING (PLANT)	WHOLE BLDG	SERVES AREA

UNIT TYPE:

	NO.2 OIL		NO.6 OIL	X	N.GAS		ELEC		FUELS:
	STM/HW		HTHW/HW		HTHW/STM		OTHER		CONVERTER TYPE:
COMMENT:									

NAMEPLATE:

STATE INDUSTRIES	MFG.	**SBT 30 199 NE9 F**	MODEL	**199990**	CAPACITY OUTPUT (BTUH,KW)
	MFG.		MODEL		CAPACITY OUTPUT (BTUH,KW)

DOMESTIC HW CIRCULATION PUMP:				
	HW PUMP 1 - HP		MFG.	MODEL
	HW PUMP 2 - HP		MFG.	MODEL
	HW PUMP 3 - HP		MFG.	MODEL
COMMENT:				

DIMENSION:	DIAMETER (INCHS)		HEIGHT OR LENGTH (INCHES)	GALLON

OPERATION:

HOURS ON:	S	M	T	W	T	F	S	COMMENT
PRESENT START TIME	**0**	**0**	**0**	**0**	**0**	**0**	**0**	TIMECLOCK?
PRESENT STOP TIME	**2400**	**2400**	**2400**	**2400**	**2400**	**2400**	**2400**	
REQUIRED START TIME								
REQUIRED STOP TIME								

MONTHS ON:

J	F	M	A	M	J	J	A	S	O	N	D
1	**1**	**1**	**1**	**1**	**1**	**1**	**1**	**1**	**1**	**1**	**1**

CONTROLS:

		PNEUMATIC		ELECTRIC		ELEC'NIC		DDC	COMMENTS
SETPOINTS				HW SUPPLY					
COMMENTS:									

E M C ENGINEERS, INC.

PROJECT: UMCS STUDY
CLIENT CONTRACT NO.: DACA01-94-D-0033
CLIENT PROJ. ENG: STEVE ROWLEY
LOCATION: FORT DRUM, NY BLDG: **10502**

EMC NO.: 1406-006
DATE: 17-NOV-94
PREPARED BY: **BG**
CHECKED BY:
FILE: **10502WC1**

REFRIGERATION EQUIPMENT SURVEY OBSERVATIONS

WC1	CHILLER/COMPRESSOR NO.	EAST SIDE OF BLDG	LOCATION (RM)

UNIT TYPE:

	CENTRIFUGAL WITH WATER SIDE COOLING TOWER		OTHER
	RECIPROCATING WITH WATER SIDE COOLING TOWER		AHU'S SERVED
X	RECIPROCATING WITH AIR COOLED CONDENSING UNIT		AHU1,2,3,4
	ABSORBTION WITH WATER SIDE COOLING TOWER		
	AIR COOLED CONDENSING UNIT		

X	CHW		DX		OTHER	

NAMEPLATE:

CHILLER		MFG.	**CARRIER**			MODEL	**30 GB-070**			SERIAL NO.
208	VOLTS		AMPS	**3**	PH	**60**	HZ	**73**	CAPACITY (TONS)	
TOWER		MFG.				MODEL				# OF FANS
	VOLTS		AMPS		PH		HZ		HP each	
CW PUMP		MFG.				MODEL				SERIAL NO.
	VOLTS		AMPS		PH		HZ	**7.5**	HP	
CNW PUMP		MFG.				MODEL				SERIAL NO.
	VOLTS		AMPS		PH		HZ		HP	

COMMENTS:

OPERATION:

HOURS ON:	S	M	T	W	T	F	S	COMMENT
PRESENT START TIME	**0**	**0**	**0**	**0**	**0**	**0**	**0**	TIMECLOCK?
PRESENT STOP TIME	**2400**	**2400**	**2400**	**2400**	**2400**	**2400**	**2400**	
REQUIRED START TIME								
REQUIRED STOP TIME								

MONTHS ON:

J	F	M	A	M	J	J	A	S	O	N	D
				1	**1**	**1**	**1**	**1**			

CONTROLS:

		PNEUMATIC		ELECTRIC		ELEC'NIC		DDC	COMMENTS
SETPOINTS		CWS (oF)		CWR (oF)		CNWS (oF)		CNWR (oF)	
PANEL INDICATORS									
- PRESSURE		LITE-HI		LITE-LOW		GAUGES			
- TEMPERATURE		LITE-HI		LITE-LOW		GAUGES			
- OTHER									

COMMENTS:

E M C ENGINEERS, INC.

PROJECT: UMCS STUDY
CLIENT CONTRACT NO.: DACA01-94-D-0033
CLIENT PROJ. ENG: STEVE ROWLEY
LOCATION: FORT DRUM, NY BLDG: **10502**

EMC NO.: 1406-006
DATE: 17-NOV-94
PREPARED BY: **BG**
CHECKED BY:
FILE: **10502AH1**

AIR HANDLING UNIT SURVEY OBSERVATIONS

AHU1	AHU NO.	**MEZZANINE**	LOCATION (RM)
	REF. SYS. SERVING AHU	**RETAIL SALES**	SERVES AREA

UNIT TYPE:

X	SINGLE ZN		2-PIPE FC		4-PIPE FC		UNIT HTR		H&V
	MULTIZONE		DOUBLE DT		REHEAT		INDUCTION		VAV
	NUMBER OF ZONES				OTHER				
	COMMENT:								

NAMEPLATE:

CARRIER				MFG.	**39BB060**			MODEL
3.0	SUPPLY FAN HP			MFG.				MODEL
0.1	RET/EXH FAN HP			MFG.				MODEL
2500	CFM-HTG	**2500**	CFM-CLG	**35%** MIN %OA	**100%**	MAX %OA	**15.0%**	% HTG AREA SERVED
COMMENT:								

COILS:

X	NONE		STM		HW		ELEC		MOD VLV	PREHEAT
	NONE		STM	X	HW		ELEC	X	MOD VLV	HEATING
X	NONE		STM		HW		ELEC		MOD VLV	REHEAT
X	NONE		STM		HW		EVAP MEDIA		MOD VLV	HUMID.
	NONE		DX	X	CW			X	MOD VLV	COOLING

OPERATION:

HOURS ON:	S	M	T	W	T	F	S	COMMENTS
PRESENT START TIME	**600**	**600**	**600**	**600**	**600**	**600**	**600**	TIMECLOCK?
PRESENT STOP TIME	**2100**	**2100**	**2100**	**2100**	**2100**	**2100**	**2100**	
REQUIRED START TIME								
REQUIRED STOP TIME								

MONTHS ON:

J	F	M	A	M	J	J	A	S	O	N	D
1	**1**	**1**	**1**	**1**	**1**	**1**	**1**	**1**	**1**	**1**	**1**

CONTROLS:

		PNEUMATIC		ELECTRIC		ELEC'NIC		DDC	COMMENTS
THERMOSTAT TYPE:		SINGLE STPT		DUAL SETPNT		SETBACK			
SPACE SETPOINT (°F):		OCC HEAT		UNOCC HEAT		OCC COOL		UNOCC COOL	
OTHER SETPOINTS (°F):		HOT DECK		COLD DECK		MIXED AIR		OTHER	
DAMPER CONTROL:	Y	MIN OA (Y/N)	Y	MAX OA (Y/N)	Y	RA (Y/N)	Y	EA (Y/N)	
		MA CONTROL		ECONO-DB		ECONO-ENT		OTHER	
DEMAND LIMIT:		(Y = YES ; N = NO)							
COMMENTS:									

E M C ENGINEERS, INC.

PROJECT: UMCS STUDY
CLIENT CONTRACT NO.: DACA01-94-D-0033
CLIENT PROJ. ENG: STEVE ROWLEY
LOCATION: FORT DRUM, NY BLDG: **10502**

EMC NO.: 1406-006
DATE: 17-NOV-94
PREPARED BY: **BG**
CHECKED BY:
FILE: **10502AH2**

AIR HANDLING UNIT SURVEY OBSERVATIONS

AHU2	AHU NO.	**MEZZANINE**	LOCATION (RM)
	REF. SYS. SERVING AHU	**LOBBY/POOL RM/GA**	SERVES AREA

UNIT TYPE:

X	SINGLE ZN		2-PIPE FC		4-PIPE FC		UNIT HTR		H&V
	MULTIZONE		DOUBLE DT		REHEAT		INDUCTION		VAV
	NUMBER OF ZONES				OTHER				
	COMMENT:								

NAMEPLATE:

	CARRIER				MFG.		**39LA1101GA1031-L**		MODEL
7.5	SUPPLY FAN HP				MFG.				MODEL
	RET/EXH FAN HP				MFG.				MODEL
4500	CFM-HTG	**4500**	CFM-CLG	**35%**	MIN %OA	**100%**	MAX %OA	**26.0%**	% HTG AREA SERVED
COMMENT:									

COILS:

X	NONE		STM		HW		ELEC		MOD VLV	PREHEAT
	NONE		STM	X	HW		ELEC	X	MOD VLV	HEATING
X	NONE		STM		HW		ELEC		MOD VLV	REHEAT
X	NONE		STM		HW		EVAP MEDIA		MOD VLV	HUMID.
	NONE		DX	X	CW			X	MOD VLV	COOLING

OPERATION:

HOURS ON:	S	M	T	W	T	F	S	COMMENTS
PRESENT START TIME	**600**	**600**	**600**	**600**	**600**	**600**	**600**	TIMECLOCK?
PRESENT STOP TIME	**1500**	**1500**	**1500**	**1500**	**1500**	**1500**	**1500**	**YES**
REQUIRED START TIME								
REQUIRED STOP TIME								

MONTHS ON:

J	F	M	A	M	J	J	A	S	O	N	D
1	**1**	**1**	**1**	**1**	**1**	**1**	**1**	**1**	**1**	**1**	**1**

CONTROLS:

		PNEUMATIC		ELECTRIC		ELEC'NIC		DDC	COMMENTS
THERMOSTAT TYPE:		SINGLE STPT		DUAL SETPNT		SETBACK			
SPACE SETPOINT (°F):		OCC HEAT		UNOCC HEAT		OCC COOL		UNOCC COOL	
OTHER SETPOINTS (°F):		HOT DECK		COLD DECK		MIXED AIR		OTHER	
DAMPER CONTROL:	Y	MIN OA (Y/N)	Y	MAX OA (Y/N)	Y	RA (Y/N)	Y	EA (Y/N)	
		MA CONTROL		ECONO-DB		ECONO-ENT		OTHER	
DEMAND LIMIT:		(Y = YES ; N = NO)							
COMMENTS:									

E M C ENGINEERS, INC.

PROJECT: UMCS STUDY
CLIENT CONTRACT NO.: DACA01-94-D-0033
CLIENT PROJ. ENG: STEVE ROWLEY
LOCATION: FORT DRUM, NY BLDG: **10502**

EMC NO.: 1406-006
DATE: 17-NOV-94
PREPARED BY: **BG**
CHECKED BY:
FILE: **10502AH3**

AIR HANDLING UNIT SURVEY OBSERVATIONS

AHU3	AHU NO.	**MEZZANINE**	LOCATION (RM)
	REF. SYS. SERVING AHU	**DINING & FOOD SER**	SERVES AREA

UNIT TYPE:

X	SINGLE ZN		2-PIPE FC		4-PIPE FC		UNIT HTR		H&V
	MULTIZONE		DOUBLE DT		REHEAT		INDUCTION		VAV
	NUMBER OF ZONES				OTHER				
	COMMENT:								

NAMEPLATE:

	CARRIER				MFG.	**39LA115/GA1031-R**			MODEL
7.5	SUPPLY FAN HP				MFG.				MODEL
	RET/EXH FAN HP				MFG.				MODEL
6100	CFM-HTG	**6100**	CFM-CLG	**35%**	MIN %OA	**100%**	MAX %OA	**36.0%**	% HTG AREA SERVED
COMMENT:									

COILS:

X	NONE		STM		HW		ELEC		MOD VLV	PREHEAT
	NONE		STM	X	HW		ELEC	X	MOD VLV	HEATING
X	NONE		STM		HW		ELEC		MOD VLV	REHEAT
X	NONE		STM		HW		EVAP MEDIA		MOD VLV	HUMID.
	NONE		DX	X	CW			X	MOD VLV	COOLING

OPERATION:

HOURS ON:	S	M	T	W	T	F	S	COMMENTS
PRESENT START TIME	**600**	**600**	**600**	**600**	**600**	**600**	**600**	TIMECLOCK?
PRESENT STOP TIME	**2100**	**2100**	**2100**	**2100**	**2100**	**2100**	**2100**	
REQUIRED START TIME								
REQUIRED STOP TIME								

MONTHS ON:

J	F	M	A	M	J	J	A	S	O	N	D
1	**1**	**1**	**1**	**1**	**1**	**1**	**1**	**1**	**1**	**1**	**1**

CONTROLS:

		PNEUMATIC		ELECTRIC		ELEC'NIC		DDC	COMMENTS
THERMOSTAT TYPE:		SINGLE STPT		DUAL SETPNT		SETBACK			
SPACE SETPOINT (°F):		OCC HEAT		UNOCC HEAT		OCC COOL		UNOCC COOL	
OTHER SETPOINTS (°F):		HOT DECK		COLD DECK		MIXED AIR		OTHER	
DAMPER CONTROL:	Y	MIN OA (Y/N)	Y	MAX OA (Y/N)	Y	RA (Y/N)	Y	EA (Y/N)	
		MA CONTROL		ECONO-DB		ECONO-ENT		OTHER	
DEMAND LIMIT:		(Y = YES ; N = NO)							
COMMENTS:									

E M C ENGINEERS, INC.

PROJECT: UMCS STUDY
CLIENT CONTRACT NO.: DACA01-94-D-0033
CLIENT PROJ. ENG: STEVE ROWLEY
LOCATION: FORT DRUM, NY BLDG: **10502**

EMC NO.: 1406-006
DATE: 17-NOV-94
PREPARED BY: **BG**
CHECKED BY:
FILE: **10502AH4**

AIR HANDLING UNIT SURVEY OBSERVATIONS

AHU4	AHU NO.	**MEZZANINE**	LOCATION (RM)
	REF. SYS. SERVING AHU	**EM CLUB**	SERVES AREA

UNIT TYPE:

X	SINGLE ZN		2-PIPE FC		4-PIPE FC		UNIT HTR		H&V
	MULTIZONE		DOUBLE DT		REHEAT		INDUCTION		VAV
	NUMBER OF ZONES				OTHER				
	COMMENT:								

NAMEPLATE:

	CARRIER				MFG.				MODEL
7.5	SUPPLY FAN HP				MFG.				MODEL
	RET/EXH FAN HP				MFG.				MODEL
4000	CFM-HTG	**4000**	CFM-CLG	**35%**	MIN %OA	**100%**	MAX %OA	**23.0%**	% HTG AREA SERVED
COMMENT:									

COILS:

X	NONE		STM		HW		ELEC		MOD VLV	PREHEAT
	NONE		STM	**X**	HW		ELEC	**X**	MOD VLV	HEATING
X	NONE		STM		HW		ELEC		MOD VLV	REHEAT
X	NONE		STM		HW		EVAP MEDIA		MOD VLV	HUMID.
	NONE		DX	**X**	CW			**X**	MOD VLV	COOLING

OPERATION:

HOURS ON:	S	M	T	W	T	F	S	COMMENTS
PRESENT START TIME	**600**	**600**	**600**	**600**	**600**	**600**	**600**	TIMECLOCK?
PRESENT STOP TIME	**2100**	**2100**	**2100**	**2100**	**2100**	**2100**	**2100**	
REQUIRED START TIME								
REQUIRED STOP TIME								

MONTHS ON:

J	F	M	A	M	J	J	A	S	O	N	D
1	**1**	**1**	**1**	**1**	**1**	**1**	**1**	**1**	**1**	**1**	**1**

CONTROLS:

		PNEUMATIC		ELECTRIC		ELEC'NIC		DDC	COMMENTS
THERMOSTAT TYPE:		SINGLE STPT		DUAL SETPNT		SETBACK			
SPACE SETPOINT (°F):		OCC HEAT		UNOCC HEAT		OCC COOL		UNOCC COOL	
OTHER SETPOINTS (°F):		HOT DECK		COLD DECK		MIXED AIR		OTHER	
DAMPER CONTROL:	**Y**	MIN OA (Y/N)	**Y**	MAX OA (Y/N)	**Y**	RA (Y/N)	**Y**	EA (Y/N)	
		MA CONTROL		ECONO-DB		ECONO-ENT		OTHER	
DEMAND LIMIT:		(Y = YES ; N = NO)							
COMMENTS:									

FIELD SURVEY NOTES

BUILDING 10506

E M C ENGINEERS, INC.

PROJECT: UMCS STUDY
CLIENT CONTRACT NO.: DACA01-94-D-0033
CLIENT PROJ. ENG: STEVE ROWLEY
LOCATION: FORT DRUM, NY BLDG: 10506

EMC NO.: 1406-006
DATE: 9-N0V-94
PREPARED BY: CSW
CHECKED BY: BG
FILE: 10506BDS

VI. BUILDING DATA SURVEY OBSERVATIONS

BLDG NO: 10506 BLDG NAME: CONNOR MEMORIAL

ZONE NO.		FUNCTION:							
OCCUPANCY HOURS:	M-F	700	TO	1600	SAT	700	TO	1600	
	SUN		TO						
PRESENT TEMP	WINTER OCC	øF		UNOCC	øF				
	SUMMER OCC	øF		UNOCC	øF				

ZONE NO.		FUNCTION:							
OCCUPANCY HOURS:	M-F		TO		SAT		TO		
	SUN		TO						
PRESENT TEMP	WINTER OCC	øF		UNOCC	øF				
	SUMMER OCC	øF		UNOCC	øF				

ZONE NO.		FUNCTION:							
OCCUPANCY HOURS:	M-F		TO		SAT		TO		
	SUN		TO						
PRESENT TEMP	WINTER OCC	øF		UNOCC	øF				
	SUMMER OCC	øF		UNOCC	øF				

REMARKS: PRESENTLY OPEN 2 SATURDAYS A MONTH

E M C ENGINEERS, INC.

PROJECT: UMCS STUDY
CLIENT CONTRACT NO.: DACA01-94-D-0033
CLIENT PROJ. ENG: STEVE ROWLEY
LOCATION: FORT DRUM, NY BLDG: **10506**

EMC NO.: 1406-006
DATE: 9-NOV-94
PREPARED BY: **CSW**
CHECKED BY: BG
FILE: **10506AC1**

REFRIGERATION EQUIPMENT SURVEY OBSERVATIONS

ACCU1	CHILLER/COMPRESSOR NO.	COURTYARD	LOCATION (RM)

UNIT TYPE:

	CENTRIFUGAL WITH WATER SIDE COOLING TOWER		OTHER
	RECIPROCATING WITH WATER SIDE COOLING TOWER		AHU'S SERVED
	RECIPROCATING WITH AIR COOLED CONDENSING UNIT		AHU-1
	ABSORBTION WITH WATER SIDE COOLING TOWER		
	AIR COOLED CONDENSING UNIT		

	CHW	X	DX		OTHER

NAMEPLATE:

CHILLER	MFG.		MODEL		SERIAL NO.
VOLTS		AMPS	PH	HZ	37.5 CAPACITY (TONS)
TOWER	MFG.		MODEL		# OF FANS
VOLTS		AMPS	PH	HZ	HP each
CW PUMP	MFG.		MODEL		SERIAL NO.
VOLTS		AMPS	PH	HZ	HP
CNW PUMP	MFG.		MODEL		SERIAL NO.
VOLTS		AMPS	PH	HZ	HP

COMMENTS:

OPERATION:

HOURS ON:	S	M	T	W	T	F	S	COMMENT
PRESENT START TIME	0	0	0	0	0	0	0	TIMECLOCK?
PRESENT STOP TIME	2400	2400	2400	2400	2400	2400	2400	
REQUIRED START TIME	0	700	700	700	700	700	700	
REQUIRED STOP TIME	0	1600	1600	1600	1600	1600	1600	

MONTHS ON:

J	F	M	A	M	J	J	A	S	O	N	D
0	0	0	0	1	1	1	1	1	0	0	0

CONTROLS:

		PNEUMATIC		ELECTRIC		ELEC'NIC		DDC	COMMENTS
SETPOINTS		CWS (oF)		CWR (oF)		CNWS (oF)		CNWR (oF)	
PANEL INDICATORS									
- PRESSURE		LITE-HI		LITE-LOW		GAUGES			
- TEMPERATURE		LITE-HI		LITE-LOW		GAUGES			
- OTHER									

COMMENTS:

E M C ENGINEERS, INC.

PROJECT: UMCS STUDY
CLIENT CONTRACT NO.: DACA01-94-D-0033
CLIENT PROJ. ENG: STEVE ROWLEY
LOCATION: FORT DRUM, NY BLDG: **10506**

EMC NO.: 1406-006
DATE: 9-NOV-94
PREPARED BY: **CSW**
CHECKED BY: BG
FILE: **10506AHU1**

AIR HANDLING UNIT SURVEY OBSERVATIONS

AHU1	AHU NO.	**MER**	LOCATION (RM)
	REF. SYS. SERVING AHU	**WHOLE BLDG**	SERVES AREA

UNIT TYPE:

X	SINGLE ZN		2-PIPE FC		4-PIPE FC		UNIT HTR		H&V
	MULTIZONE		DOUBLE DT		REHEAT		INDUCTION		VAV
	NUMBER OF ZONES				OTHER				
	COMMENT:								

NAMEPLATE:

					MFG.				MODEL
7.5	SUPPLY FAN HP				MFG.				MODEL
	RET/EXH FAN HP				MFG.				MODEL
9300	CFM-HTG	**11500**	CFM-CLG	21 ~~8~~%	MIN %OA	~~21%~~ 100	MAX %OA	~~100.0%~~ 15%	% HTG AREA SERVED
COMMENT:									

COILS:

X	NONE		STM		HW		ELEC		MOD VLV	PREHEAT
	NONE		STM	X	HW		ELEC		MOD VLV	HEATING
X	NONE		STM		HW		ELEC		MOD VLV	REHEAT
X	NONE		STM		HW		EVAP MEDIA		MOD VLV	HUMID.
	NONE	X	DX		CW				MOD VLV	COOLING

OPERATION:

HOURS ON:	S	M	T	W	T	F	S	COMMENTS
PRESENT START TIME	**0**	**0**	**0**	**0**	**0**	**0**	**0**	TIMECLOCK?
PRESENT STOP TIME	**2400**	**2400**	**2400**	**2400**	**2400**	**2400**	**2400**	
REQUIRED START TIME	**0**	**700**	**700**	**700**	**700**	**700**	**700**	
REQUIRED STOP TIME	**0**	**1600**	**1600**	**1600**	**1600**	**1600**	**1600**	

MONTHS ON:

J	F	M	A	M	J	J	A	S	O	N	D
1	**1**	**1**	**1**	**1**	**1**	**1**	**1**	**1**	**1**	**1**	**1**

CONTROLS:

		PNEUMATIC		ELECTRIC		ELEC'NIC		DDC	COMMENTS
THERMOSTAT TYPE:		SINGLE STPT		DUAL SETPNT		SETBACK			
SPACE SETPOINT (°F):		OCC HEAT		UNOCC HEAT		OCC COOL		UNOCC COOL	
OTHER SETPOINTS (°F):		HOT DECK		COLD DECK		MIXED AIR		OTHER	
DAMPER CONTROL:		MIN OA (Y/N)		MAX OA (Y/N)		RA (Y/N)		EA (Y/N)	
		MA CONTROL		ECONO-DB		ECONO-ENT		OTHER	
DEMAND LIMIT:		(Y = YES ; N = NO)							
COMMENTS:									

PROJECT: UMCS STUDY
CLIENT CONTRACT NO.: DACA01-94-D-0033
CLIENT PROJ. ENG: STEVE ROWLEY
LOCATION: FORT DRUM, NY BLDG: **10506**

EMC NO.: 1406-006
DATE: 10-NOV-94
PREPARED BY: **CSW**
CHECKED BY: BG
FILE: **10506DHW1**

DOMESTIC HW SURVEY OBSERVATIONS

DHW1	BOILER/CONVERTER NO.	MER	LOCATION (RM)
	SOURCE OF HEATING (PLANT)		SERVES AREA

UNIT TYPE:

	NO.2 OIL		NO.6 OIL		N.GAS	X	ELEC		FUELS:
	STM/HW		HTHW/HW		HTHW/STM		OTHER		CONVERTER TYPE:
COMMENT:									

NAMEPLATE:

LOCHINVAR	MFG.	HCK27-082	MODEL	**46012**	CAPACITY OUTPUT (BTUH,KW)
	MFG.		MODEL		CAPACITY OUTPUT (BTUH,KW)
DOMESTIC HW CIRCULATION PUMP:					
	HW PUMP 1 - HP		MFG.		MODEL
	HW PUMP 2 - HP		MFG.		MODEL
	HW PUMP 3 - HP		MFG.		MODEL
COMMENT:					

DIMENSION:	DIAMETER (INCHS)		HEIGHT OR LENGTH (INCHES)	GALLON

OPERATION:

HOURS ON:	S	M	T	W	T	F	S	COMMENT
PRESENT START TIME	**0**	**0**	**0**	**0**	**0**	**0**	**0**	TIMECLOCK?
PRESENT STOP TIME	**2400**	**2400**	**2400**	**2400**	**2400**	**2400**	**2400**	
REQUIRED START TIME	**0**	**700**	**700**	**700**	**700**	**700**	**700**	
REQUIRED STOP TIME	**0**	**1600**	**1600**	**1600**	**1600**	**1600**	**1600**	

MONTHS ON:

J	F	M	A	M	J	J	A	S	O	N	D
1	**1**	**1**	**1**	**1**	**1**	**1**	**1**	**1**	**1**	**1**	**1**

CONTROLS:

		PNEUMATIC		ELECTRIC		ELEC'NIC		DDC	COMMENTS
SETPOINTS				HW SUPPLY					
COMMENTS:									

E M C ENGINEERS, INC.

PROJECT: UMCS STUDY
CLIENT CONTRACT NO.: DACA01-94-D-0033
CLIENT PROJ. ENG: STEVE ROWLEY
LOCATION: FORT DRUM, NY BLDG: **10506**

EMC NO.: 1406-006
DATE: 09-Nov-94
PREPARED BY: **CSW**
CHECKED BY: BG
FILE: **10506HE1**

BOILER & CONVERTER SURVEY OBSERVATIONS

HE1	BOILER/CONVERTER NO.	**MER**	LOCATION (RM)
	SOURCE OF HEATING (PLANT)	**WHOLE BLDG**	SERVES AREA

UNIT TYPE:

	STEAM		PSIG		HW		TEMP.	BOILER TYPE:
	NO.2 OIL		NO.6 OIL		N.GAS		ELEC	FUELS:
	STM/HW	X	HTHW/HW		HTHW/STM		OTHER	CONVERTER TYPE:
X	SPACE HEAT		DHW		OTHER			USE:
COMMENT:							95 ~~100%~~	% HTG AREA SERVED
								BB RADIATION ONLY

NAMEPLATE:

B&G	MFG.		MODEL	**460000**	CAPACITY OUTPUT (BTUH)
					CAPACITY INPUT (BTUH)
	MFG.		MODEL		CAPACITY OUTPUT (BTUH)
					CAPACITY INPUT (BTUH)
0.75	HW PUMP 1 - HP	**US MOTORS**	MFG.	**A500P0R**	MODEL
	HW PUMP 2 - HP		MFG.		MODEL
	HW PUMP 3 - HP		MFG.		MODEL
COMMENT:					

OPERATION:

HOURS ON:	S	M	T	W	T	F	S	COMMENT
PRESENT START TIME	**0**	**0**	**0**	**0**	**0**	**0**	**0**	
PRESENT STOP TIME	**2400**	**2400**	**2400**	**2400**	**2400**	**2400**	**2400**	
REQUIRED START TIME	**0**	**700**	**700**	**700**	**700**	**700**	**700**	
REQUIRED STOP TIME	**0**	**1600**	**1600**	**1600**	**1600**	**1600**	**1600**	

MONTHS ON:

J	F	M	A	M	J	J	A	S	O	N	D
1	**1**	**1**	**1**	**0**	**0**	**0**	**0**	**0**	**1**	**1**	**1**

CONTROLS:

		PNEUMATIC		ELECTRIC		ELEC'NIC		DDC	COMMENTS
SETPOINTS		PSIG		HW SUPPLY					
RESET CONTROL (oF):		HW HIGH		HW LOW		OA LOW		OA HIGH	
BURNER CONTROLS		O2 TRIM (Y/N)		OTHER					
COMMENTS:									

E M C ENGINEERS, INC.

PROJECT: UMCS STUDY
CLIENT CONTRACT NO.: DACA01-94-D-0033
CLIENT PROJ. ENG: STEVE ROWLEY
LOCATION: FORT DRUM, NY BLDG: **10506**

EMC NO.: 1406-006
DATE: 09-Nov-94
PREPARED BY: **CSW**
CHECKED BY: BG
FILE: **10506HE2**

BOILER & CONVERTER SURVEY OBSERVATIONS

HE2	BOILER/CONVERTER NO.	**MER**	LOCATION (RM)
	SOURCE OF HEATING (PLANT)	**GLYCOL SYSTEM**	SERVES AREA

UNIT TYPE:

	STEAM		PSIG		HW		TEMP.		BOILER TYPE:
	NO.2 OIL		NO.6 OIL		N.GAS		ELEC		FUELS:
	STM/HW		HTHW/HW		HTHW/STM	X	OTHER		CONVERTER TYPE:
X	SPACE HEAT		DHW		OTHER				USE:
COMMENT:	40%GLYCOL(60%WATER)-HW						0		% HTG AREA SERVED
									BB RADIATION ONLY

NAMEPLATE:

	MFG.		MODEL	**183600**	CAPACITY OUTPUT (BTUH)
					CAPACITY INPUT (BTUH)
	MFG.		MODEL		CAPACITY OUTPUT (BTUH)
					CAPACITY INPUT (BTUH)
0.0833	HW PUMP 1 - HP		MFG.		MODEL
	HW PUMP 2 - HP		MFG.		MODEL
	HW PUMP 3 - HP		MFG.		MODEL
COMMENT:					

OPERATION:

HOURS ON:	S	M	T	W	T	F	S	COMMENT
PRESENT START TIME	**0**	**0**	**0**	**0**	**0**	**0**	**0**	
PRESENT STOP TIME	**2400**	**2400**	**2400**	**2400**	**2400**	**2400**	**2400**	
REQUIRED START TIME	**0**	**700**	**700**	**700**	**700**	**700**	**700**	
REQUIRED STOP TIME	**0**	**1600**	**1600**	**1600**	**1600**	**1600**	**1600**	

MONTHS ON:

J	F	M	A	M	J	J	A	S	O	N	D
1	**1**	**1**	**1**	**0**	**0**	**0**	**0**	**0**	**1**	**1**	**1**

CONTROLS:

		PNEUMATIC		ELECTRIC		ELEC'NIC		DDC	COMMENTS
SETPOINTS		PSIG		HW SUPPLY					
RESET CONTROL (oF):		HW HIGH		HW LOW		OA LOW		OA HIGH	
BURNER CONTROLS		O2 TRIM (Y/N)		OTHER					
COMMENTS:									

E M C ENGINEERS, INC.

PROJECT: UMCS STUDY
CLIENT CONTRACT NO.: DACA01-94-D-0033
CLIENT PROJ. ENG: STEVE ROWLEY
LOCATION: FORT DRUM, NY BLDG: **10506**

EMC NO.: 1406-006
DATE: 9-NOV-94
PREPARED BY: **CSW**
CHECKED BY: BG
FILE: **10506RD1**

PERIMETER RADIATION SURVEY OBSERVATIONS

RAD1	PER RAD NO.		LOCATION (RM)
	SOURCE OF HEATING	WHOLE BLDG	SERVES AREA

UNIT TYPE:

	STEAM	X	HW		ELECTRIC				
	OTHER								
	COMMENT:								

NAMEPLATE:

	HW PUMP 1 - HP		MFG.		MODEL
	HW PUMP 2 - HP		MFG.		MODEL
	HW PUMP 3 - HP		MFG.		MODEL
	HW PUMP 4 - HP		MFG.		MODEL
COMMENT:				**100.0%**	% AREA HEATING

OPERATION:

HOURS ON:	S	M	T	W	T	F	S	COMMENT
PRESENT START TIME	**0**	**0**	**0**	**0**	**0**	**0**	**0**	TIMECLOCK?
PRESENT STOP TIME	**2400**	**2400**	**2400**	**2400**	**2400**	**2400**	**2400**	
REQUIRED START TIME	**0**	**700**	**700**	**700**	**700**	**700**	**700**	
REQUIRED STOP TIME	**0**	**1600**	**1600**	**1600**	**1600**	**1600**	**1600**	

MONTHS ON:

J	F	M	A	M	J	J	A	S	O	N	D
1	**1**	**1**	**1**	**0**	**0**	**0**	**0**	**0**	**1**	**1**	**1**

CONTROLS:

		PNEUMATIC		ELECTRIC		ELEC'NIC		DDC	COMMENTS
RADIATION CONTROL:		NONE		2-WAY VLV		3-WAY VLV		OTHER	
SPACE SETPOINT (øF):		OCC HEAT		UNOCC HEAT		OCC COOL		UNOCC COOL	
RESET CONTROL (øF):		HW HIGH		HW LOW		OA LOW		OA HIGH	
COMMENTS:									

E M C ENGINEERS, INC.

PROJECT: UMCS FEASIBILITY STUDY
CLIENT CONTRACT NO.: DACA01-94-D-0033 D.O. 6
CLIENT PROJECT ENGINEER: STEVE ROWLEY
LOCATION: FT. DRUM **BLDG: 10506**
Building Sq.Ft.: 18,386

EMC NO.: 1406-006
DATE: 30-Mar-95
PREPARED BY: CSW/BMG
CHECKED BY: KC/WLC

System Type	**11**
System Name:	**CONDENSING UNIT**
System Number:	**ACCU1**

Typical Building Information

Category	Construction	Use	Occ.	Day
13	BRICK	CLINIC W/O BEDS	0700-1600	MON-SAT

Enter Weeks of Summer:	20
Enter Weeks of Winter:	32

Required Operation	S	M	T	W	TH	F	S
Start Time	0	700	700	700	700	700	700
Stop Time	0	1600	1600	1600	1600	1600	1600

Present Operations	S	M	T	W	TH	F	S
Start Time	0	0	0	0	0	0	0
Stop Time	2400	2400	2400	2400	2400	2400	2400

INPUTS		INPUT
Motor HP		3
Load Factor		0.8
CFM - HTG		0
CFM - CLG		0
% OA		0.00%
% Area		0.00%
TON CAPC.		37.5
MBTU CAPC.		0
kW/Ton		0
MOSON		5
EFF		1
LOOK-UP VALUE		
EFFHP	79.00%	79.00%

HOURS CALCULATIONS	REQUIRED HR/YR	PRESENT HR/YR
Cooling HRSON	1,320	3,360
Heating HRSON	2,112	5,376
C/H HRSON	3,441	8,760
Cooling HRSAV	2,040	
Heating HRSAV	3,264	
C/H HRSAV	5,319	

CONSTANT	LOOK-UP	INPUT
HOAUH	0.00	0.00
HOAUHC	0.00	0.00
COAUC	2.11E-03	2.11E-03
COAUHC	8.08E-04	8.08E-04
HOAOH	227.68	227.68
HOAOHC	139.72	139.72
COAOC	3.35E-03	3.35E-03
COAOHC	1.29E-03	1.29E-03
DC DUTY	0.00	0.00
DC DEMAN	0.17	0.17
ECC	0.00E+00	0.00E+00
ECHC	0.00E+00	0.00E+00
NSUCC	2.77E-04	2.77E-04
NSUCHC	1.70E-04	1.70E-04
DDCCHC	1.32E-04	1.32E-04
DDCCC	3.44E-04	3.44E-04
DSC	3.81E+03	3.81E+03
NSC	2.59E+04	2.59E+04
FV	0	0
CHWR	9.57	9.57
OAR	7.40	7.40
OPT	188.00	188.00

E M C ENGINEERS, INC.

PROJECT: UMCS FEASIBILITY STUDY
CLIENT CONTRACT NO.: DACA01-94-D-0033 D.O. 6
CLIENT PROJECT ENGINEER: STEVE ROWLEY
LOCATION: FT. DRUM

Date: 30-Mar-95

Bldg Number: **10506**
System Type **11**
System Name: **CONDENSING UNIT**
System Number: **ACCU1**

COOLING ONLY SYSTEMS	kW/yr	kWh/yr	MBtu/yr	MH/yr
Schedule ST/SP	0.0	4,620.8	0.0	
Optimum ST/SP	0.0	425.8	0.0	
Duty Cycle	0.0	0.0	0.0	
Demand Limit	4.5	0.0	0.0	
Night Setback	0.0	0.0	0.0	
Sub Total	**4.5**	**5,046.7**	**0.0**	
Economizer	0.0	0.0	0.0	
Ventilation/Recirculation	0.0	0.0	0.0	
DDC Control	0.0	0.0	0.0	
HW OA Reset	0.0	0.0	0.0	
Chilled Water Reset	0.0	358.9	0.0	
Condenser Water Reset	0.0	0.0	0.0	
Chiller Demand Limit	0.0	0.0	0.0	
Remote Monitoring, Maintenance, Run Time, and Safety Alarms				3
TOTAL	**4.5**	**5,405.5**	**0.0**	**3**

FIELD SURVEY NOTES

BUILDING 10550

TYPICAL: 30, 175, 4450, 10150, 10250, 10450, 10650

E M C ENGINEERS, INC.

PROJECT: UMCS STUDY
CLIENT CONTRACT NO.: DACA01-94-D-0033
CLIENT PROJ. ENG: STEVE ROWLEY
LOCATION: FORT DRUM, NY BLDG: MESS HALL

EMC NO.: 1406-006
DATE: Feb-95
PREPARED BY: CSW/BG
CHECKED BY: BG
FILE: 10550BDS

VI. BUILDING DATA SURVEY OBSERVATIONS

BLDG NO: 10550 BLDG NAME: MESS HALL

ZONE NO.	1	FUNCTION:							
OCCUPANCY HOURS:	M-F	400	TO	0	SAT	400	TO	0	
	SUN	0	TO	2400					
PRESENT TEMP	WINTER OCC	68.0 øF		UNOCC	50.0 øF				
	SUMMER OCC	68.0 øF		UNOCC	50.0 øF				

ZONE NO.		FUNCTION:							
OCCUPANCY HOURS:	M-F		TO		SAT		TO		
	SUN		TO						
PRESENT TEMP	WINTER OCC	øF		UNOCC	øF				
	SUMMER OCC	øF		UNOCC	øF				

ZONE NO.		FUNCTION:	UPPER FLOOR						
OCCUPANCY HOURS:	M-F		TO		SAT		TO		
	SUN		TO						
PRESENT TEMP	WINTER OCC	øF		UNOCC	øF				
	SUMMER OCC	øF		UNOCC	øF				

REMARKS:

WEEKDAYS BRK 0730 TO 900
LUNCH 1130 TO 1300
DINNER 1630 TO 1800

WEEKENDS BRK 800 TO 900
LUNCH 1200 TO 1300
DINNER 1600 TO 1700

E M C ENGINEERS, INC.

PROJECT: UMCS STUDY
CLIENT CONTRACT NO.: DACA01-94-D-0033
CLIENT PROJ. ENG: STEVE ROWLEY
LOCATION: FORT DRUM, NY BLDG: 10550

EMC NO.: 1406-006
DATE: Nov-94
PREPARED BY: BG
CHECKED BY:
FILE: 10550BDS

VI. BUILDING DATA SURVEY OBSERVATIONS

BLDG NO: 10550 BLDG NAME: ENL PER DINING

ZONE NO.		FUNCTION:							
OCCUPANCY HOURS:	M-F	400	TO	1930	SAT	400	TO	1930	
	SUN	400	TO	1930					
PRESENT TEMP	WINTER OCC	øF		UNOCC	øF				
	SUMMER OCC	øF		UNOCC	øF				

ZONE NO.		FUNCTION:							
OCCUPANCY HOURS:	M-F		TO		SAT		TO		
	SUN		TO						
PRESENT TEMP	WINTER OCC	øF		UNOCC	øF				
	SUMMER OCC	øF		UNOCC	øF				

ZONE NO.		FUNCTION:							
OCCUPANCY HOURS:	M-F		TO		SAT		TO		
	SUN		TO						
PRESENT TEMP	WINTER OCC	øF		UNOCC	øF				
	SUMMER OCC	øF		UNOCC	øF				

REMARKS: CHECK OUT TIEING IN EXHAUST HOODS TO EMCS
(2) WALL TYPE REFRIGERATORS
(3) WALK IN (1) FREEZER 0 F
(1) DAIRY 42 F
(1) PRODUCE 35 F
(2)BREAD/PASTRY OVENS ELECT
NATURAL GAS GRILLS
FRYER
(2) LOCHINVAR HW HEATERS ELECT
GS&R 2(5) HP MOTORS HWP 1&2
TIMECLOCKS-ALL GREEN PEGS

UH-1,2&3 IN CRAWL SPACES UH-1 : 4654 BTUH UH-2,3:15650 BTUH

E M C ENGINEERS, INC.

PROJECT: UMCS STUDY
CLIENT CONTRACT NO.: DACA01-94-D-0033
CLIENT PROJ. ENG: STEVE ROWLEY
LOCATION: FORT DRUM, NY BLDG: **10550**

EMC NO.: 1406-006
DATE: Dec-94
PREPARED BY: **CSW**
CHECKED BY: BG
FILE: **10550AH1**

AIR HANDLING UNIT SURVEY OBSERVATIONS

AHU1	AHU NO.	**ATTIC**	LOCATION (RM)
	REF. SYS. SERVING AHU	**STAGING,STOR,FOOD PREP**	SERVES AREA

UNIT TYPE:

X	SINGLE ZN		2-PIPE FC		4-PIPE FC		UNIT HTR	**X**	H&V
	MULTIZONE		DOUBLE DT	**X**	REHEAT		INDUCTION		VAV
	NUMBER OF ZONES				OTHER				
	COMMENT:	**1600CFM OF 8000CFM TOTAL IS REHEATED WITH HWC-1 (48384 BTUH)**							

NAMEPLATE:

					MFG.				MODEL
7.5	SUPPLY FAN HP				MFG.				MODEL
	RET/EXH FAN HP				MFG.				MODEL
8000	CFM-HTG		CFM-CLG	**100%**	MIN %OA	**100%**	MAX %OA		% HTG AREA SERVED
COMMENT:									.25

COILS:

X	NONE		STM		HW		ELEC		MOD VLV	PREHEAT
	NONE		STM	**X**	HW		ELEC		MOD VLV	HEATING
X	NONE		STM		HW		ELEC		MOD VLV	REHEAT
X	NONE		STM		HW		EVAP MEDIA		MOD VLV	HUMID.
X	NONE		DX		CW				MOD VLV	COOLING

OPERATION:

HOURS ON:	S	M	T	W	T	F	S	COMMENTS
PRESENT START TIME	**0**	**0**	**0**	**0**	**0**	**0**	**0**	TIMECLOCK?
PRESENT STOP TIME	**2400**	**2400**	**2400**	**2400**	**2400**	**2400**	**2400**	
REQUIRED START TIME	**400**	**400**	**400**	**400**	**400**	**400**	**400**	
REQUIRED STOP TIME	**1930**	**1930**	**1930**	**1930**	**1930**	**1930**	**1930**	

MONTHS ON:

J	F	M	A	M	J	J	A	S	O	N	D
1	**1**	**1**	**1**	**1**	**1**	**1**	**1**	**1**	**1**	**1**	**1**

CONTROLS:

		PNEUMATIC		ELECTRIC		ELEC'NIC		DDC	COMMENTS
THERMOSTAT TYPE:		SINGLE STPT		DUAL SETPNT		SETBACK			
SPACE SETPOINT (°F):		OCC HEAT		UNOCC HEAT		OCC COOL		UNOCC COOL	
OTHER SETPOINTS (°F):		HOT DECK		COLD DECK		MIXED AIR		OTHER	
DAMPER CONTROL:	**N**	MIN OA (Y/N)	**Y**	MAX OA (Y/N)	**N**	RA (Y/N)	**Y**	EA (Y/N)	
		MA CONTROL		ECONO-DB		ECONO-ENT		OTHER	
DEMAND LIMIT:		(Y = YES ; N = NO)							

COMMENTS:

E M C ENGINEERS, INC.

PROJECT: UMCS STUDY
CLIENT CONTRACT NO.: DACA01-94-D-0033
CLIENT PROJ. ENG: STEVE ROWLEY
LOCATION: FORT DRUM, NY BLDG: **10550**

EMC NO.: 1406-006
DATE: Dec-94
PREPARED BY: **CSW**
CHECKED BY: BG
FILE: **10550AH5**

AIR HANDLING UNIT SURVEY OBSERVATIONS

AHU5	AHU NO.	**ATTIC**	LOCATION (RM)
	REF. SYS. SERVING AHU	**WARE WASH**	SERVES AREA

UNIT TYPE:

X	SINGLE ZN		2-PIPE FC		4-PIPE FC		UNIT HTR	X	H&V
	MULTIZONE		DOUBLE DT		REHEAT		INDUCTION		VAV
	NUMBER OF ZONES				OTHER				
	COMMENT:								

NAMEPLATE:

					MFG.				MODEL
3.0	SUPPLY FAN HP				MFG.				MODEL
3.0	RET/EXH FAN HP				MFG.				MODEL
3145	CFM-HTG		CFM-CLG	**100%**	MIN %OA	**100%**	MAX %OA		% HTG AREA SERVED
COMMENT:									

COILS:

X	NONE		STM		HW		ELEC		MOD VLV	PREHEAT
	NONE		STM	X	HW		ELEC		MOD VLV	HEATING
X	NONE		STM		HW		ELEC		MOD VLV	REHEAT
X	NONE		STM		HW		EVAP MEDIA		MOD VLV	HUMID.
X	NONE		DX		CW				MOD VLV	COOLING

OPERATION:

HOURS ON:	S	M	T	W	T	F	S	COMMENTS
PRESENT START TIME	**0**	**0**	**0**	**0**	**0**	**0**	**0**	TIMECLOCK?
PRESENT STOP TIME	**2400**	**2400**	**2400**	**2400**	**2400**	**2400**	**2400**	
REQUIRED START TIME	**400**	**400**	**400**	**400**	**400**	**400**	**400**	
REQUIRED STOP TIME	**1930**	**1930**	**1930**	**1930**	**1930**	**1930**	**1930**	

MONTHS ON:

J	F	M	A	M	J	J	A	S	O	N	D
1	**1**	**1**	**1**	**1**	**1**	**1**	**1**	**1**	**1**	**1**	**1**

CONTROLS:

		PNEUMATIC		ELECTRIC		ELEC'NIC		DDC	COMMENTS
THERMOSTAT TYPE:		SINGLE STPT		DUAL SETPNT		SETBACK			
SPACE SETPOINT (°F):		OCC HEAT		UNOCC HEAT		OCC COOL		UNOCC COOL	
OTHER SETPOINTS (°F):		HOT DECK		COLD DECK		MIXED AIR		OTHER	
DAMPER CONTROL:	Y	MIN OA (Y/N)	Y	MAX OA (Y/N)	Y	RA (Y/N)	N	EA (Y/N)	
		MA CONTROL		ECONO-DB		ECONO-ENT		OTHER	
DEMAND LIMIT:		(Y = YES ; N = NO)							
COMMENTS:									

E M C ENGINEERS, INC.

PROJECT: UMCS STUDY
CLIENT CONTRACT NO.: DACA01-94-D-0033
CLIENT PROJ. ENG: STEVE ROWLEY
LOCATION: FORT DRUM, NY BLDG: **10550**

EMC NO.: 1406-006
DATE: Dec-94
PREPARED BY: **CSW**
CHECKED BY: BG
FILE: **10550AH2**

AIR HANDLING UNIT SURVEY OBSERVATIONS

AHU2	AHU NO.	**ATTIC**	LOCATION (RM)
	REF. SYS. SERVING AHU	**ADMIN,CORR.,FD PREP,DRY S**	SERVES AREA

UNIT TYPE:

X	SINGLE ZN		2-PIPE FC		4-PIPE FC		UNIT HTR	X	H&V
	MULTIZONE		DOUBLE DT		REHEAT		INDUCTION		VAV
	NUMBER OF ZONES				OTHER				
	COMMENT:								

NAMEPLATE:

					MFG.				MODEL
5.0	SUPPLY FAN HP				MFG.				MODEL
3.0	RET/EXH FAN HP				MFG.				MODEL
5265	CFM-HTG		CFM-CLG	**25%**	MIN %OA	**100%**	MAX %OA		% HTG AREA SERVED
COMMENT:									.17

COILS:

X	NONE		STM		HW		ELEC		MOD VLV	PREHEAT
	NONE		STM	X	HW		ELEC		MOD VLV	HEATING
X	NONE		STM		HW		ELEC		MOD VLV	REHEAT
X	NONE		STM		HW		EVAP MEDIA		MOD VLV	HUMID.
X	NONE		DX		CW				MOD VLV	COOLING

OPERATION:

HOURS ON:	S	M	T	W	T	F	S	COMMENTS
PRESENT START TIME	**0**	**0**	**0**	**0**	**0**	**0**	**0**	TIMECLOCK?
PRESENT STOP TIME	**2400**	**2400**	**2400**	**2400**	**2400**	**2400**	**2400**	
REQUIRED START TIME	**400**	**400**	**400**	**400**	**400**	**400**	**400**	
REQUIRED STOP TIME	**1930**	**1930**	**1930**	**1930**	**1930**	**1930**	**1930**	

MONTHS ON:

J	F	M	A	M	J	J	A	S	O	N	D
1	**1**	**1**	**1**	**1**	**1**	**1**	**1**	**1**	**1**	**1**	**1**

CONTROLS:

		PNEUMATIC		ELECTRIC		ELEC'NIC		DDC	COMMENTS
THERMOSTAT TYPE:		SINGLE STPT		DUAL SETPNT		SETBACK			
SPACE SETPOINT (°F):		OCC HEAT		UNOCC HEAT		OCC COOL		UNOCC COOL	
OTHER SETPOINTS (°F):		HOT DECK		COLD DECK		MIXED AIR		OTHER	
DAMPER CONTROL:	Y	MIN OA (Y/N)	Y	MAX OA (Y/N)	Y	RA (Y/N)	N	EA (Y/N)	
		MA CONTROL		ECONO-DB		ECONO-ENT		OTHER	
DEMAND LIMIT:		(Y = YES ; N = NO)							
COMMENTS:									

E M C ENGINEERS, INC.

PROJECT: UMCS STUDY
CLIENT CONTRACT NO.: DACA01-94-D-0033
CLIENT PROJ. ENG: STEVE ROWLEY
LOCATION: FORT DRUM, NY BLDG: **10550**

EMC NO.: 1406-006
DATE: Dec-94
PREPARED BY: **CSW**
CHECKED BY: BG
FILE: **10550AH3**

AIR HANDLING UNIT SURVEY OBSERVATIONS

AHU3	AHU NO.	**ATTIC**	LOCATION (RM)
	REF. SYS. SERVING AHU	**FULL SERV,SHORT ORDER,CO**	SERVES AREA

UNIT TYPE:

X	SINGLE ZN		2-PIPE FC		4-PIPE FC		UNIT HTR	**X**	H&V
	MULTIZONE		DOUBLE DT		REHEAT		INDUCTION		VAV
	NUMBER OF ZONES				OTHER				
	COMMENT:								

NAMEPLATE:

					MFG.				MODEL
5.0	SUPPLY FAN HP				MFG.				MODEL
5.0	RET/EXH FAN HP				MFG.				MODEL
4670	CFM-HTG		CFM-CLG	**100%**	MIN %OA	**100%**	MAX %OA		% HTG AREA SERVED
COMME	IN WINTER 4670 CFM WITH EXHAUST HOODS ON, 2335 CFM WITH EXHAUST HOODS OFF								

COILS:

X	NONE		STM		HW		ELEC		MOD VLV	PREHEAT
	NONE		STM	**X**	HW		ELEC		MOD VLV	HEATING
X	NONE		STM		HW		ELEC		MOD VLV	REHEAT
X	NONE		STM		HW		EVAP MEDIA		MOD VLV	HUMID.
X	NONE		DX		CW				MOD VLV	COOLING

OPERATION:

HOURS ON:	S	M	T	W	T	F	S	COMMENTS
PRESENT START TIME	**0**	**0**	**0**	**0**	**0**	**0**	**0**	TIMECLOCK?
PRESENT STOP TIME	**2400**	**2400**	**2400**	**2400**	**2400**	**2400**	**2400**	
REQUIRED START TIME	**400**	**400**	**400**	**400**	**400**	**400**	**400**	
REQUIRED STOP TIME	**1930**	**1930**	**1930**	**1930**	**1930**	**1930**	**1930**	

MONTHS ON:

J	F	M	A	M	J	J	A	S	O	N	D
1	**1**	**1**	**1**	**1**	**1**	**1**	**1**	**1**	**1**	**1**	**1**

CONTROLS:

		PNEUMATIC		ELECTRIC		ELEC'NIC		DDC	COMMENTS
THERMOSTAT TYPE:		SINGLE STPT		DUAL SETPNT		SETBACK			
SPACE SETPOINT (°F):		OCC HEAT		UNOCC HEAT		OCC COOL		UNOCC COOL	
OTHER SETPOINTS (°F):		HOT DECK		COLD DECK		MIXED AIR		OTHER	
DAMPER CONTROL:	**N**	MIN OA (Y/N)	**Y**	MAX OA (Y/N)	**N**	RA (Y/N)	**Y**	EA (Y/N)	
		MA CONTROL		ECONO-DB		ECONO-ENT		OTHER	
DEMAND LIMIT:		(Y = YES ; N = NO)							
COMMENTS:									

E M C ENGINEERS, INC.

PROJECT: UMCS STUDY
CLIENT CONTRACT NO.: DACA01-94-D-0033
CLIENT PROJ. ENG: STEVE ROWLEY
LOCATION: FORT DRUM, NY BLDG: **10550**

EMC NO.: 1406-006
DATE: Dec-94
PREPARED BY: **CSW**
CHECKED BY: BG
FILE: **10550AH4**

AIR HANDLING UNIT SURVEY OBSERVATIONS

AHU4	AHU NO.	**ATTIC**	LOCATION (RM)
	REF. SYS. SERVING AHU	**DINING AREA AND SELF SERV**	SERVES AREA

UNIT TYPE:

X	SINGLE ZN		2-PIPE FC		4-PIPE FC		UNIT HTR	X	H&V
	MULTIZONE		DOUBLE DT		REHEAT		INDUCTION		VAV
	NUMBER OF ZONES				OTHER				
	COMMENT:								

NAMEPLATE:

					MFG.				MODEL
7.5	SUPPLY FAN HP				MFG.				MODEL
7.5	RET/EXH FAN HP				MFG.				MODEL
7430	CFM-HTG		CFM-CLG	5%	MIN %OA	100%	MAX %OA	20%	% HTG AREA SERVED
COMMENT:									.24

COILS:

X	NONE		STM		HW		ELEC		MOD VLV	PREHEAT
	NONE		STM	X	HW		ELEC		MOD VLV	HEATING
X	NONE		STM		HW		ELEC		MOD VLV	REHEAT
X	NONE		STM		HW		EVAP MEDIA		MOD VLV	HUMID.
X	NONE		DX		CW				MOD VLV	COOLING

OPERATION:

HOURS ON:	S	M	T	W	T	F	S	COMMENTS
PRESENT START TIME	0	0	0	0	0	0	0	TIMECLOCK?
PRESENT STOP TIME	2400	2400	2400	2400	2400	2400	2400	
REQUIRED START TIME	400	400	400	400	400	400	400	
REQUIRED STOP TIME	1930	1930	1930	1930	1930	1930	1930	

MONTHS ON:

J	F	M	A	M	J	J	A	S	O	N	D
1	1	1	1	1	1	1	1	1	1	1	1

CONTROLS:

		PNEUMATIC		ELECTRIC		ELEC'NIC		DDC	COMMENTS
THERMOSTAT TYPE:		SINGLE STPT		DUAL SETPNT		SETBACK			
SPACE SETPOINT (°F):		OCC HEAT		UNOCC HEAT		OCC COOL		UNOCC COOL	
OTHER SETPOINTS (°F):		HOT DECK		COLD DECK		MIXED AIR		OTHER	
DAMPER CONTROL:	Y	MIN OA (Y/N)	Y	MAX OA (Y/N)	Y	RA (Y/N)	N	EA (Y/N)	
		MA CONTROL		ECONO-DB		ECONO-ENT		OTHER	
DEMAND LIMIT:		(Y = YES ; N = NO)							
COMMENTS:									

E M C ENGINEERS, INC.

PROJECT: UMCS STUDY
CLIENT CONTRACT NO.: DACA01-94-D-0033
CLIENT PROJ. ENG: STEVE ROWLEY
LOCATION: FORT DRUM, NY BLDG: **10550**

EMC NO.: 1406-006
DATE: Dec-94
PREPARED BY: **CSW**
CHECKED BY: BG
FILE: **10550AH6**

AIR HANDLING UNIT SURVEY OBSERVATIONS

AHU6	AHU NO.	**MER**	LOCATION (RM)
	REF. SYS. SERVING AHU	**MER AND ELECT RM**	SERVES AREA

UNIT TYPE:

X	SINGLE ZN		2-PIPE FC		4-PIPE FC		UNIT HTR	X	H&V
	MULTIZONE		DOUBLE DT		REHEAT		INDUCTION		VAV
	NUMBER OF ZONES				OTHER				
	COMMENT:								

NAMEPLATE:

				MFG.				MODEL
1.0	SUPPLY FAN HP			MFG.				MODEL
3.0	RET/EXH FAN HP			MFG.				MODEL
600	CFM-HTG		CFM-CLG	**0%** MIN %OA	**0%**	MAX %OA		% HTG AREA SERVED

COMMENT: **1 AIR INTAKE FAN FOR MECH ROOM 3000 CFM 100% O.A.** 1.6

1 AIR EXHAUST FAN FOR MERCH ROOM 3000 CFM IN. AND EX. FANS NOT CONNECTED TO AHU-6

COILS:

X	NONE		STM		HW		ELEC		MOD VLV	PREHEAT
	NONE		STM	X	HW		ELEC		MOD VLV	HEATING
X	NONE		STM		HW		ELEC		MOD VLV	REHEAT
X	NONE		STM		HW		EVAP MEDIA		MOD VLV	HUMID.
X	NONE		DX		CW				MOD VLV	COOLING

OPERATION:

HOURS ON:	S	M	T	W	T	F	S	COMMENTS
PRESENT START TIME	**0**	**0**	**0**	**0**	**0**	**0**	**0**	TIMECLOCK?
PRESENT STOP TIME	**2400**	**2400**	**2400**	**2400**	**2400**	**2400**	**2400**	
REQUIRED START TIME	**400**	**400**	**400**	**400**	**400**	**400**	**400**	
REQUIRED STOP TIME	**1930**	**1930**	**1930**	**1930**	**1930**	**1930**	**1930**	

MONTHS ON:

J	F	M	A	M	J	J	A	S	O	N	D
1	**1**	**1**	**1**	**1**	**1**	**1**	**1**	**1**	**1**	**1**	**1**

CONTROLS:

		PNEUMATIC		ELECTRIC		ELEC'NIC		DDC	COMMENTS
THERMOSTAT TYPE:		SINGLE STPT		DUAL SETPNT		SETBACK			
SPACE SETPOINT (°F):		OCC HEAT		UNOCC HEAT		OCC COOL		UNOCC COOL	
OTHER SETPOINTS (°F):		HOT DECK		COLD DECK		MIXED AIR		OTHER	
DAMPER CONTROL:	**N**	MIN OA (Y/N)	**N**	MAX OA (Y/N)	**Y**	RA (Y/N)	**N**	EA (Y/N)	
		MA CONTROL		ECONO-DB		ECONO-ENT		OTHER	
DEMAND LIMIT:		(Y = YES ; N = NO)							

COMMENTS: 100% RETURN AIR

E M C ENGINEERS, INC.

PROJECT: UMCS STUDY
CLIENT CONTRACT NO.: DACA01-94-D-0033
CLIENT PROJ. ENG: STEVE ROWLEY
LOCATION: FORT DRUM, NY BLDG: **10550**

EMC NO.: 1406-006
DATE: DEC-94
PREPARED BY: **CSW**
CHECKED BY: BG
FILE: **10550HE1**

BOILER & CONVERTER SURVEY OBSERVATIONS

HE1	BOILER/CONVERTER NO.	**MER**	LOCATION (RM)
	SOURCE OF HEATING (PLANT)	**WHOLE BLDG**	SERVES AREA

UNIT TYPE:

	STEAM		PSIG		HW		TEMP.		BOILER TYPE:
	NO.2 OIL		NO.6 OIL		N.GAS		ELEC		FUELS:
	STM/HW		HTHW/HW		HTHW/STM	X	OTHER		CONVERTER TYPE:
X	SPACE HEAT		DHW		OTHER		1.5		USE:
COMMENT:			HTHW-40%GLYCOL SOLN						% HTG AREA SERVED
									BB RADIATION ONLY

NAMEPLATE:

	MFG.		MODEL	**1506400**	CAPACITY OUTPUT (BTUH)
					CAPACITY INPUT (BTUH)
	MFG.		MODEL		CAPACITY OUTPUT (BTUH)
					CAPACITY INPUT (BTUH)
2	HW PUMP 1 - HP	**GE 230 208/3/60**	MFG.	**1725 RPM HE-1**	MODEL
	HW PUMP 2 - HP		MFG.		MODEL
	HW PUMP 3 - HP		MFG.		MODEL
COMMENT:					

OPERATION:

HOURS ON:	S	M	T	W	T	F	S	COMMENT
PRESENT START TIME	**0**	**0**	**0**	**0**	**0**	**0**	**0**	TIMECLOCK?
PRESENT STOP TIME	**2400**	**2400**	**2400**	**2400**	**2400**	**2400**	**2400**	
REQUIRED START TIME	**400**	**400**	**400**	**400**	**400**	**400**	**400**	
REQUIRED STOP TIME	**1930**	**1930**	**1930**	**1930**	**1930**	**1930**	**1930**	

MONTHS ON:

J	F	M	A	M	J	J	A	S	O	N	D
1	**1**	**1**	**1**	**0**	**0**	**0**	**0**	**0**	**1**	**1**	**1**

CONTROLS:

		PNEUMATIC		ELECTRIC		ELEC'NIC		DDC	COMMENTS
SETPOINTS		PSIG		HW SUPPLY					
RESET CONTROL (oF):		HW HIGH		HW LOW		OA LOW		OA HIGH	
BURNER CONTROLS		O2 TRIM (Y/N)		OTHER					
COMMENTS:									

E M C ENGINEERS, INC.

PROJECT: UMCS STUDY
CLIENT CONTRACT NO.: DACA01-94-D-0033
CLIENT PROJ. ENG: STEVE ROWLEY
LOCATION: FORT DRUM, NY BLDG: **10550**

EMC NO.: 1406-006
DATE: Dec-94
PREPARED BY: **CSW**
CHECKED BY: BG
FILE: **10550RAD**

PERIMETER RADIATION SURVEY OBSERVATIONS

RAD-1	PER RAD NO.		LOCATION (RM)
	SOURCE OF HEATING	WHOLE BLDG	SERVES AREA

UNIT TYPE:

	STEAM	X	HW		ELECTRIC				
	OTHER								
	COMMENT:								

NAMEPLATE:

2	HW PUMP 1 - HP		MFG.		MODEL
	HW PUMP 2 - HP		MFG.		MODEL
	HW PUMP 3 - HP		MFG.		MODEL
	HW PUMP 4 - HP		MFG.		MODEL
COMMENT:				**100.0%**	% AREA HEATING

OPERATION:

HOURS ON:	S	M	T	W	T	F	S	COMMENT
PRESENT START TIME	**0**	**0**	**0**	**0**	**0**	**0**	**0**	TIMECLOCK?
PRESENT STOP TIME	**2400**	**2400**	**2400**	**2400**	**2400**	**2400**	**2400**	
REQUIRED START TIME	**400**	**400**	**400**	**400**	**400**	**400**	**400**	
REQUIRED STOP TIME	**1930**	**1930**	**1930**	**1930**	**1930**	**1930**	**1930**	

MONTHS ON:

J	F	M	A	M	J	J	A	S	O	N	D
1	**1**	**1**	**1**	**0**	**0**	**0**	**0**	**1**	**1**	**1**	**1**

CONTROLS:

		PNEUMATIC		ELECTRIC		ELEC'NIC	DDC	COMMENTS
RADIATION CONTROL:		NONE		2-WAY VLV		3-WAY VLV	OTHER	
SPACE SETPOINT (øF):		OCC HEAT		UNOCC HEAT		OCC COOL	UNOCC COOL	
RESET CONTROL (øF):		HW HIGH		HW LOW		OA LOW	OA HIGH	
COMMENTS:								

FIELD SURVEY NOTES

BUILDING 10630

TYPICAL: 119, 174, 4410, 4420, 4430, 4400, 10100, 10110,
10120, 10130, 10200, 10210, 10220, 10230,
10400, 10410, 10420, 10500, 10520,
10510, 10610, 10620, 10640

E M C ENGINEERS, INC.

PROJECT: UMCS STUDY
CLIENT CONTRACT NO.: DACA01-94-D-0033
CLIENT PROJ. ENG: STEVE ROWLEY
LOCATION: FORT DRUM, NY BLDG: 10630

EMC NO.: 1406-006
DATE: 09-NOV-94
PREPARED BY: CSW/BG
CHECKED BY: BG
FILE: 10630BDS

VI. BUILDING DATA SURVEY OBSERVATIONS

BLDG NO: 10630 BLDG NAME: BN HQ BUILDING

ZONE NO.	1	FUNCTION:	ENTIRE BUILDING						
OCCUPANCY HOURS:	M-F	600	TO	1700	SAT	0	TO	0	
	SUN	0	TO	0					
PRESENT TEMP	WINTER OCC	øF	UNOCC	øF	1 PERSON IN BUILDING				
	SUMMER OCC	øF	UNOCC	øF	ON WEEKENDS				

ZONE NO.		FUNCTION:							
OCCUPANCY HOURS:	M-F		TO		SAT		TO		
	SUN		TO						
PRESENT TEMP	WINTER OCC	øF	UNOCC	øF					
	SUMMER OCC	øF	UNOCC	øF					

ZONE NO.		FUNCTION:							
OCCUPANCY HOURS:	M-F		TO		SAT		TO		
	SUN		TO						
PRESENT TEMP	WINTER OCC	øF	UNOCC	øF					
	SUMMER OCC	øF	UNOCC	øF					

REMARKS: ADDITIONAL EXHAUST FAN LOAD OF APPROX. 3 TOTAL HP.

E M C ENGINEERS, INC.

PROJECT: UMCS STUDY
CLIENT CONTRACT NO.: DACA01-94-D-0033
CLIENT PROJ. ENG: STEVE ROWLEY
LOCATION: FORT DRUM, NY BLDG: **10630** BN HQ

EMC NO.: 1406-006
DATE: 09-NOV-94
PREPARED BY: **CSW/BG**
CHECKED BY: BG
FILE: **10630AH1**

AIR HANDLING UNIT SURVEY OBSERVATIONS

AHU1	AHU NO.	**MECH. ROOM**	LOCATION (RM)
	REF. SYS. SERVING AHU	**WHOLEBLDG**	SERVES AREA

UNIT TYPE:

X	SINGLE ZN		2-PIPE FC		4-PIPE FC		UNIT HTR	**X**	H&V
	MULTIZONE		DOUBLE DT		REHEAT		INDUCTION		VAV
	NUMBER OF ZONES				OTHER				
	COMMENT:								

NAMEPLATE:

	TRANE			MFG.	**CCDB03AL04**			MODEL
2.0	SUPPLY FAN HP	**MAGNETEK**		MFG.				MODEL
	RET/EXH FAN HP			MFG.				MODEL
1230	CFM-HTG		CFM-CLG	**100%**	MIN %OA	**100%**	MAX %OA	**85.7%**	% HTG AREA SERVED
COMMENT:									

COILS:

X	NONE		STM		HW		ELEC		MOD VLV	PREHEAT
	NONE		STM	**X**	HW		ELEC		MOD VLV	HEATING
X	NONE		STM		HW		ELEC		MOD VLV	REHEAT
X	NONE		STM		HW		EVAP MEDIA		MOD VLV	HUMID.
X	NONE		DX		CW				MOD VLV	COOLING

OPERATION:

HOURS ON:	S	M	T	W	T	F	S	COMMENT
PRESENT START TIME	**0**	**0**	**0**	**0**	**0**	**0**	**0**	TIMECLOCK?
PRESENT STOP TIME	**2400**	**2400**	**2400**	**2400**	**2400**	**2400**	**2400**	
REQUIRED START TIME	**0**	**600**	**600**	**600**	**600**	**600**	**0**	
REQUIRED STOP TIME	**0**	**1700**	**1700**	**1700**	**1700**	**1700**	**0**	

MONTHS ON:

J	F	M	A	M	J	J	A	S	O	N	D
1	**1**	**1**	**1**	**0**	**0**	**0**	**0**	**0**	**1**	**1**	**1**

CONTROLS:

	X	PNEUMATIC		ELECTRIC		ELEC'NIC		DDC	COMMENTS
THERMOSTAT TYPE:		SINGLE STPT		DUAL SETPNT		SETBACK			
SPACE SETPOINT (°F):	**72**	OCC HEAT	**72**	UNOCC HEAT		OCC COOL		UNOCC COOL	
OTHER SETPOINTS (°F):		HOT DECK	**55**	COLD DECK	**55**	MIXED AIR		OTHER	
DAMPER CONTROL:	**N**	MIN OA (Y/N)	**Y**	MAX OA (Y/N)	**N**	RA (Y/N)	**Y**	EA (Y/N)	
		MA CONTROL		ECONO-DB		ECONO-ENT		OTHER	
DEMAND LIMIT:		(Y = YES ; N = NO)							

COMMENTS: **40% GLYCOL**

E M C ENGINEERS, INC.

PROJECT: UMCS STUDY
CLIENT CONTRACT NO.: DACA01-94-D-0033
CLIENT PROJ. ENG: STEVE ROWLEY
LOCATION: FORT DRUM, NY BLDG: **10630** BN. HQ.

EMC NO.: 1406-006
DATE: 09-NOV-94
PREPARED BY: **CSW**
CHECKED BY: BG
FILE: **10630AH2**

AIR HANDLING UNIT SURVEY OBSERVATIONS

AHU2	AHU NO.	**MECH. ROOM**	LOCATION (RM)
	REF. SYS. SERVING AHU	**WHOLEBLDG**	SERVES AREA

UNIT TYPE:

X	SINGLE ZN		2-PIPE FC		4-PIPE FC		UNIT HTR	X	H&V
	MULTIZONE		DOUBLE DT		REHEAT		INDUCTION		VAV
	NUMBER OF ZONES				OTHER				
	COMMENT:								

NAMEPLATE:

	TRANE				MFG.	**CCDB03ALOH**			MODEL
1.0	SUPPLY FAN HP		**MAGNETEK**		MFG.				MODEL
	RET/EXH FAN HP				MFG.				MODEL
210	CFM-HTG		CFM-CLG	**100%**	MIN %OA	**100%**	MAX %OA	**14.3%**	% HTG AREA SERVED
COMMENT:									

COILS:

X	NONE		STM		HW		ELEC		MOD VLV	PREHEAT
	NONE		STM	X	HW		ELEC		MOD VLV	HEATING
X	NONE		STM		HW		ELEC		MOD VLV	REHEAT
X	NONE		STM		HW		EVAP MEDIA		MOD VLV	HUMID.
X	NONE		DX		CW				MOD VLV	COOLING

OPERATION:

HOURS ON:	S	M	T	W	T	F	S	COMMENT
PRESENT START TIME	**0**	**0**	**0**	**0**	**0**	**0**	**0**	TIMECLOCK?
PRESENT STOP TIME	**2400**	**2400**	**2400**	**2400**	**2400**	**2400**	**2400**	
REQUIRED START TIME	**0**	**600**	**600**	**600**	**600**	**600**	**0**	
REQUIRED STOP TIME	**0**	**1700**	**1700**	**1700**	**1700**	**1700**	**0**	

MONTHS ON:

J	F	M	A	M	J	J	A	S	O	N	D
1	**1**	**1**	**1**	**0**	**0**	**0**	**0**	**0**	**1**	**1**	**1**

CONTROLS:

	X	PNEUMATIC		ELECTRIC		ELEC'NIC		DDC	COMMENTS
THERMOSTAT TYPE:		SINGLE STPT		DUAL SETPNT		SETBACK			
SPACE SETPOINT (°F):	**72**	OCC HEAT	**72**	UNOCC HEAT		OCC COOL		UNOCC COOL	
OTHER SETPOINTS (°F):		HOT DECK	**55**	COLD DECK	**55**	MIXED AIR		OTHER	
DAMPER CONTROL:	**N**	MIN OA (Y/N)	**Y**	MAX OA (Y/N)	**N**	RA (Y/N)	**Y**	EA (Y/N)	
		MA CONTROL		ECONO-DB		ECONO-ENT		OTHER	
DEMAND LIMIT:		(Y = YES ; N = NO)							
COMMENTS:	**40% GLYCOL**								

E M C ENGINEERS, INC.

PROJECT: UMCS STUDY
CLIENT CONTRACT NO.: DACA01-94-D-0033
CLIENT PROJ. ENG: STEVE ROWLEY
LOCATION: FORT DRUM, NY BLDG: **10630** BN. HQ.

EMC NO.: 1406-006
DATE: 09-NOV-94
PREPARED BY: **CSW/BG**
CHECKED BY: BG
FILE: **10630HE1**

BOILER & CONVERTER SURVEY OBSERVATIONS

HE1	BOILER/CONVERTER NO.	**MECH. ROOM.**	LOCATION (RM)
	SOURCE OF HEATING (PLANT)	**WHOLE BLDG**	SERVES AREA

UNIT TYPE:

	STEAM		PSIG		HW		TEMP.		BOILER TYPE:
	NO.2 OIL		NO.6 OIL		N.GAS		ELEC		FUELS:
	STM/HW	X	HTHW/HW		HTHW/STM		OTHER		CONVERTER TYPE:
X	SPACE HEAT		DHW		OTHER				USE:
COMMENT:							**20%**	% HTG AREA SERVED	
								BB RADIATION ONLY	

NAMEPLATE:

B&G	MFG.	**HTP2-60/088170**	MODEL	**260200**	CAPACITY OUTPUT (BTUH)
					CAPACITY INPUT (BTUH)
	MFG.		MODEL		CAPACITY OUTPUT (BTUH)
					CAPACITY INPUT (BTUH)
2	HW PUMP 1 - HP		MFG.		MODEL
	HW PUMP 2 - HP		MFG.		MODEL
	HW PUMP 3 - HP		MFG.		MODEL
COMMENT:					

OPERATION:

HOURS ON:	S	M	T	W	T	F	S	COMMENT
PRESENT START TIME	**0**	**0**	**0**	**0**	**0**	**0**	**0**	TIMECLOCK?
PRESENT STOP TIME	**2400**	**2400**	**2400**	**2400**	**2400**	**2400**	**2400**	
REQUIRED START TIME	**0**	**600**	**600**	**600**	**600**	**600**	**0**	
REQUIRED STOP TIME	**0**	**1700**	**1700**	**1700**	**1700**	**1700**	**0**	

MONTHS ON:

J	F	M	A	M	J	J	A	S	O	N	D
1	**1**	**1**	**1**						**1**	**1**	**1**

CONTROLS:

	X	PNEUMATIC		ELECTRIC		ELEC'NIC		DDC	COMMENTS
SETPOINTS		PSIG		HW SUPPLY					
RESET CONTROL (oF):		HW HIGH		HW LOW		OA LOW		OA HIGH	
BURNER CONTROLS		O2 TRIM (Y/N)		OTHER					
COMMENTS:									

E M C ENGINEERS, INC.

PROJECT: UMCS STUDY
CLIENT CONTRACT NO.: DACA01-94-D-0033
CLIENT PROJ. ENG: STEVE ROWLEY
LOCATION: FORT DRUM, NY BLDG: **10630** BN. HQ.

EMC NO.: 1406-006
DATE: 09-NOV-94
PREPARED BY: **CSW/BG**
CHECKED BY: BG
FILE: **10630HE2**

BOILER & CONVERTER SURVEY OBSERVATIONS

HE2	BOILER/CONVERTER NO.	**MER**	LOCATION (RM)
COGEN	SOURCE OF HEATING (PLANT)	**AHUS**	SERVES AREA

UNIT TYPE:

	STEAM		PSIG		HW		TEMP.		BOILER TYPE:
	NO.2 OIL		NO.6 OIL		N.GAS		ELEC		FUELS:
	STM/HW	X	HTHW/HW		HTHW/STM		OTHER		CONVERTER TYPE:
X	SPACE HEAT		DHW		OTHER				USE:
COMME	AHUS						**80%**	% HTG AREA SERVED	
								BB RADIATION ONLY	

NAMEPLATE:

	B&G	MFG.	**HTP2-29/Q88171**	MODEL	**111700**	CAPACITY OUTPUT (BTUH)
						CAPACITY INPUT (BTUH)
		MFG.		MODEL		CAPACITY OUTPUT (BTUH)
						CAPACITY INPUT (BTUH)
0.75	HW PUMP 1 - HP			MFG.		MODEL
	HW PUMP 2 - HP			MFG.		MODEL
	HW PUMP 3 - HP			MFG.		MODEL
COMMENT:						

OPERATION:

HOURS ON:	S	M	T	W	T	F	S	COMMENT
PRESENT START TIME	**0**	**0**	**0**	**0**	**0**	**0**	**0**	TIMECLOCK?
PRESENT STOP TIME	**2400**	**2400**	**2400**	**2400**	**2400**	**2400**	**2400**	
REQUIRED START TIME	**0**	**600**	**600**	**600**	**600**	**600**	**0**	
REQUIRED STOP TIME	**0**	**1700**	**1700**	**1700**	**1700**	**1700**	**0**	

MONTHS ON:

J	F	M	A	M	J	J	A	S	O	N	D
1	**1**	**1**	**1**	**0**	**0**	**0**	**0**	**0**	**1**	**1**	**1**

CONTROLS:

	X	PNEUMATIC		ELECTRIC		ELEC'NIC		DDC	COMMENTS
SETPOINTS		PSIG		HW SUPPLY					
RESET CONTROL (oF):		HW HIGH		HW LOW		OA LOW		OA HIGH	
BURNER CONTROLS		O2 TRIM (Y/N)		OTHER					
COMMENTS:									

FIELD SURVEY NOTES

BUILDING 10632

TYPICAL: 30, 173, 175, 4412, 4414, 4422, 4432, 10112, 10114, 10122, 10124, 10132, 10134, 10212, 10214, 10222, 10224, 10232, 10234, 10412, 10414, 10422, 10512, 10514, 10522, 10524, 10612, 10614, 10622, 10632, 10642, 10644,

E M C ENGINEERS, INC.

PROJECT: UMCS STUDY
CLIENT CONTRACT NO.: DACA01-94-D-0033
CLIENT PROJ. ENG: STEVE ROWLEY
LOCATION: FORT DRUM, NY BLDG: 10632 BARRACKS

EMC NO.: 1406-006
DATE: 09-NOV-94
PREPARED BY: CSW/BG
CHECKED BY: BG
FILE: 10632BDS

VI. BUILDING DATA SURVEY OBSERVATIONS

BLDG NO: 10632 BLDG NAME: ENL. PERS. BRKS.

ZONE NO.	1	FUNCTION: CA&S							
OCCUPANCY HOURS:	M-F	500	TO	1800	SAT	0	TO	0	
	SUN	0	TO	0					
PRESENT TEMP	WINTER OCC	øF		UNOCC	øF				
	SUMMER OCC	øF		UNOCC	øF				

ZONE NO.	2	FUNCTION: ENL. PERS. BARKS.							
OCCUPANCY HOURS:	M-F	0	TO	2400	SAT	0	TO	2400	
	SUN	0	TO	2400					
PRESENT TEMP	WINTER OCC	øF		UNOCC	øF				
	SUMMER OCC	øF		UNOCC	øF				

ZONE NO.		FUNCTION:							
OCCUPANCY HOURS:	M-F		TO		SAT		TO		
	SUN		TO						
PRESENT TEMP	WINTER OCC	øF		UNOCC	øF				
	SUMMER OCC	øF		UNOCC	øF				

REMARKS: TYPICAL QUARTERS:
3 SETS OF FLOR. LIGH (6 BULB TOTAL)
TV
VCR
SMALL REFRIG
IRON
ROOM FAN

LAUNDRY ROOM ON EACH FLOOR
4 DRYERS
4 WASHERS

52 HP TOTAL FAN LOAD (NOT INCLUDING SUPPLY FANS FOR AHU'S).

E M C ENGINEERS, INC.

PROJECT: UMCS STUDY
CLIENT CONTRACT NO.: DACA01-94-D-0033
CLIENT PROJ. ENG: STEVE ROWLEY
LOCATION: FORT DRUM, NY BLDG: **10632** BARRACKS

EMC NO.: 1406-006
DATE: 09-NOV-94
PREPARED BY: **CSW/BG**
CHECKED BY: BG
FILE: **10632A10**

AIR HANDLING UNIT SURVEY OBSERVATIONS

AHU10	AHU NO.	**MECH. ROOM.**	LOCATION (RM)
	REF. SYS. SERVING AHU	**ENL. PER. BRKS.**	SERVES AREA

UNIT TYPE:

X	SINGLE ZN		2-PIPE FC		4-PIPE FC		UNIT HTR	X	H&V
	MULTIZONE		DOUBLE DT		REHEAT		INDUCTION		VAV
	NUMBER OF ZONES				OTHER				
	COMMENT:								

NAMEPLATE:

				MFG.				MODEL
2.0	SUPPLY FAN HP			MFG.				MODEL
	RET/EXH FAN HP			MFG.				MODEL
1860	CFM-HTG		CFM-CLG	**100%**	MIN %OA	**100%**	MAX %OA	**50.0%**	% HTG AREA SERVED
COMMENT:			**40% GLYCOL SOLN**						

COILS:

X	NONE		STM		HW		ELEC		MOD VLV	PREHEAT
	NONE		STM	X	HW		ELEC	X	MOD VLV	HEATING
X	NONE		STM		HW		ELEC		MOD VLV	REHEAT
X	NONE		STM		HW		EVAP MEDIA		MOD VLV	HUMID.
X	NONE		DX		CW				MOD VLV	COOLING

OPERATION:

HOURS ON:	S	M	T	W	T	F	S	COMMENTS
PRESENT START TIME	**0**	**0**	**0**	**0**	**0**	**0**	**0**	TIMECLOCK?
PRESENT STOP TIME	**2400**	**2400**	**2400**	**2400**	**2400**	**2400**	**2400**	
REQUIRED START TIME	**0**	**0**	**0**	**0**	**0**	**0**	**0**	
REQUIRED STOP TIME	**2400**	**2400**	**2400**	**2400**	**2400**	**2400**	**2400**	

MONTHS ON:

J	F	M	A	M	J	J	A	S	O	N	D
1	**1**	**1**	**1**	**0**	**0**	**0**	**0**	**0**	**1**	**1**	**1**

CONTROLS:

	X	PNEUMATIC		ELECTRIC		ELEC'NIC		DDC	COMMENTS
THERMOSTAT TYPE:		SINGLE STPT		DUAL SETPNT		SETBACK			
SPACE SETPOINT (°F):		OCC HEAT		UNOCC HEAT		OCC COOL		UNOCC COOL	
OTHER SETPOINTS (°F):		HOT DECK		COLD DECK		MIXED AIR		OTHER	
DAMPER CONTROL:	**N**	MIN OA (Y/N)	**Y**	MAX OA (Y/N)	**N**	RA (Y/N)	**Y**	EA (Y/N)	
		MA CONTROL	**X**	ECONO-DB		ECONO-ENT		OTHER	
DEMAND LIMIT:	**N**	(Y = YES ; N = NO)							
COMMENTS:									

E M C ENGINEERS, INC.

PROJECT: UMCS STUDY
CLIENT CONTRACT NO.: DACA01-94-D-0033
CLIENT PROJ. ENG: STEVE ROWLEY
LOCATION: FORT DRUM, NY BLDG: **10632** BARRACKS

EMC NO.: 1406-006
DATE: 09-NOV-94
PREPARED BY: **CSW/BG**
CHECKED BY: BG
FILE: **10632A11**

AIR HANDLING UNIT SURVEY OBSERVATIONS

AHU11	AHU NO.	**MECH. ROOM**	LOCATION (RM)
	REF. SYS. SERVING AHU	**ENL. PER. BRKS.**	SERVES AREA

UNIT TYPE:

X	SINGLE ZN		2-PIPE FC		4-PIPE FC		UNIT HTR	X	H&V
	MULTIZONE		DOUBLE DT		REHEAT		INDUCTION		VAV
	NUMBER OF ZONES				OTHER				
	COMMENT:								

NAMEPLATE:

					MFG.				MODEL
1.0	SUPPLY FAN HP				MFG.				MODEL
	RET/EXH FAN HP				MFG.				MODEL
1350	CFM-HTG		CFM-CLG	**100%**	MIN %OA	**100%**	MAX %OA	**50.0%**	% HTG AREA SERVED
COMMENT:			**40% GLYCOL SOLN**						

COILS:

X	NONE		STM		HW		ELEC		MOD VLV	PREHEAT
	NONE		STM	X	HW		ELEC		MOD VLV	HEATING
X	NONE		STM		HW		ELEC		MOD VLV	REHEAT
X	NONE		STM		HW		EVAP MEDIA		MOD VLV	HUMID.
X	NONE		DX		CW				MOD VLV	COOLING

OPERATION:

HOURS ON:	S	M	T	W	T	F	S	COMMENTS
PRESENT START TIME	**0**	**0**	**0**	**0**	**0**	**0**	**0**	TIMECLOCK?
PRESENT STOP TIME	**2400**	**2400**	**2400**	**2400**	**2400**	**2400**	**2400**	
REQUIRED START TIME	**0**	**0**	**0**	**0**	**0**	**0**	**0**	
REQUIRED STOP TIME	**2400**	**2400**	**2400**	**2400**	**2400**	**2400**	**2400**	

MONTHS ON:

J	F	M	A	M	J	J	A	S	O	N	D
1	**1**	**1**	**1**	**0**	**0**	**0**	**0**	**0**	**1**	**1**	**1**

CONTROLS:

		PNEUMATIC		ELECTRIC		ELEC'NIC		DDC	COMMENTS
THERMOSTAT TYPE:		SINGLE STPT		DUAL SETPNT		SETBACK			
SPACE SETPOINT (°F):		OCC HEAT		UNOCC HEAT		OCC COOL		UNOCC COOL	
OTHER SETPOINTS (°F):		HOT DECK		COLD DECK		MIXED AIR		OTHER	
DAMPER CONTROL:	**N**	MIN OA (Y/N)	**Y**	MAX OA (Y/N)	**N**	RA (Y/N)	**Y**	EA (Y/N)	
		MA CONTROL	**X**	ECONO-DB		ECONO-ENT		OTHER	
DEMAND LIMIT:	**N**	(Y = YES ; N = NO)							
COMMENTS:									

E M C ENGINEERS, INC.

PROJECT: UMCS STUDY
CLIENT CONTRACT NO.: DACA01-94-D-0033
CLIENT PROJ. ENG: STEVE ROWLEY
LOCATION: FORT DRUM, NY BLDG: **10632** BARRACKS

EMC NO.: 1406-006
DATE: 09-NOV-94
PREPARED BY: **BG/CW**
CHECKED BY: BG
FILE: **10632AH1-4**

AIR HANDLING UNIT SURVEY OBSERVATIONS

AH1-4	AHU NO.	**MECH ROOM**	LOCATION (RM)
	REF. SYS. SERVING AHU	**CA & S**	SERVES AREA

UNIT TYPE:

X	SINGLE ZN		2-PIPE FC		4-PIPE FC		UNIT HTR		H&V
	MULTIZONE		DOUBLE DT		REHEAT		INDUCTION		VAV
	NUMBER OF ZONES			**X**	OTHER				
	COMMENT:	**VENTILATION ONLY (ONLY USED IN SUMMER)**							

NAMEPLATE:

					MFG.				MODEL
5.0	SUPPLY FAN HP				MFG.				MODEL
	RET/EXH FAN HP				MFG.				MODEL
	CFM-HTG		CFM-CLG	**100%**	MIN %OA	**100%**	MAX %OA		% HTG AREA SERVED
COMMENT:									

COILS:

X	NONE		STM		HW		ELEC		MOD VLV	PREHEAT
X	NONE		STM		HW		ELEC		MOD VLV	HEATING
X	NONE		STM		HW		ELEC		MOD VLV	REHEAT
X	NONE		STM		HW		EVAP MEDIA		MOD VLV	HUMID.
X	NONE		DX		CW				MOD VLV	COOLING

OPERATION:

HOURS ON:	S	M	T	W	T	F	S	COMMENTS
PRESENT START TIME	**0**	**0**	**0**	**0**	**0**	**0**	**0**	TIMECLOCK?
PRESENT STOP TIME	**2400**	**2400**	**2400**	**2400**	**2400**	**2400**	**2400**	
REQUIRED START TIME								
REQUIRED STOP TIME								

MONTHS ON:

J	F	M	A	M	J	J	A	S	O	N	D
			1	**1**	**1**	**1**	**1**	**1**			

CONTROLS:

	X	PNEUMATIC		ELECTRIC		ELEC'NIC		DDC	COMMENTS
THERMOSTAT TYPE:		SINGLE STPT		DUAL SETPNT		SETBACK			
SPACE SETPOINT (°F):		OCC HEAT		UNOCC HEAT		OCC COOL		UNOCC COOL	
OTHER SETPOINTS (°F):		HOT DECK		COLD DECK		MIXED AIR		OTHER	
DAMPER CONTROL:	**Y**	MIN OA (Y/N)	**Y**	MAX OA (Y/N)		RA (Y/N)		EA (Y/N)	
		MA CONTROL	**X**	ECONO-DB		ECONO-ENT		OTHER	
DEMAND LIMIT:	**N**	(Y = YES ; N = NO)							
COMMENTS:									

E M C ENGINEERS, INC.

PROJECT: UMCS STUDY
CLIENT CONTRACT NO.: DACA01-94-D-0033
CLIENT PROJ. ENG: STEVE ROWLEY
LOCATION: FORT DRUM, NY BLDG: **10632** BARRACKS

EMC NO.: 1406-006
DATE: 09-NOV-94
PREPARED BY: **CSW/BG**
CHECKED BY: BG
FILE: **10632A5**

AIR HANDLING UNIT SURVEY OBSERVATIONS

AHU5	AHU NO.	**MECH. ROOM**	LOCATION (RM)
	REF. SYS. SERVING AHU	**ENL. PER BRKS.**	SERVES AREA

UNIT TYPE:

X	SINGLE ZN		2-PIPE FC		4-PIPE FC		UNIT HTR	X	H&V
	MULTIZONE		DOUBLE DT		REHEAT		INDUCTION		VAV
	NUMBER OF ZONES				OTHER				
	COMMENT:								

NAMEPLATE:

					MFG.				MODEL
1.0	SUPPLY FAN HP				MFG.				MODEL
	RET/EXH FAN HP				MFG.				MODEL
1230	CFM-HTG		CFM-CLG	33%	MIN %OA	100%	MAX %OA	10.0%	% HTG AREA SERVED
COMMENT:									

COILS:

X	NONE		STM		HW		ELEC		MOD VLV	PREHEAT
	NONE		STM	X	HW		ELEC	X	MOD VLV	HEATING
X	NONE		STM		HW		ELEC		MOD VLV	REHEAT
X	NONE		STM		HW		EVAP MEDIA		MOD VLV	HUMID.
X	NONE		DX		CW				MOD VLV	COOLING

OPERATION:

HOURS ON:	S	M	T	W	T	F	S	COMMENTS
PRESENT START TIME	0	0	0	0	0	0	0	TIMECLOCK?
PRESENT STOP TIME	2400	2400	2400	2400	2400	2400	2400	
REQUIRED START TIME								
REQUIRED STOP TIME								

MONTHS ON:

J	F	M	A	M	J	J	A	S	O	N	D
1	1	1	1	0	0	0	0	0	1	1	1

CONTROLS:

	X	PNEUMATIC		ELECTRIC		ELEC'NIC		DDC	COMMENTS
THERMOSTAT TYPE:		SINGLE STPT		DUAL SETPNT		SETBACK			
SPACE SETPOINT (°F):		OCC HEAT		UNOCC HEAT		OCC COOL		UNOCC COOL	
OTHER SETPOINTS (°F):		HOT DECK		COLD DECK		MIXED AIR		OTHER	
DAMPER CONTROL:	Y	MIN OA (Y/N)	Y	MAX OA (Y/N)	Y	RA (Y/N)	N	EA (Y/N)	
		MA CONTROL	X	ECONO-DB		ECONO-ENT		OTHER	
DEMAND LIMIT:	N	(Y = YES ; N = NO)							
COMMENTS:									

E M C ENGINEERS, INC.

PROJECT: UMCS STUDY
CLIENT CONTRACT NO.: DACA01-94-D-0033
CLIENT PROJ. ENG: STEVE ROWLEY
LOCATION: FORT DRUM, NY BLDG: **10632** BARRACKS

EMC NO.: 1406-006
DATE: 09-NOV-94
PREPARED BY: **CSW/BG**
CHECKED BY: BG
FILE: **10632A6**

AIR HANDLING UNIT SURVEY OBSERVATIONS

AHU6	AHU NO.	**MECH ROOM**	LOCATION (RM)
	REF. SYS. SERVING AHU	**CA & S**	SERVES AREA

UNIT TYPE:

X	SINGLE ZN		2-PIPE FC		4-PIPE FC		UNIT HTR	**X**	H&V
	MULTIZONE		DOUBLE DT		REHEAT		INDUCTION		VAV
	NUMBER OF ZONES				OTHER				
	COMMENT:								

NAMEPLATE:

				MFG.				MODEL
5.0	SUPPLY FAN HP			MFG.				MODEL
	RET/EXH FAN HP			MFG.				MODEL
750	CFM-HTG		CFM-CLG	**100%** MIN %OA	**100%**	MAX %OA	**10.0%**	% HTG AREA SERVED
COMMENT:								

COILS:

X	NONE		STM		HW		ELEC		MOD VLV	PREHEAT
	NONE		STM	**X**	HW		ELEC	**X**	MOD VLV	HEATING
X	NONE		STM		HW		ELEC		MOD VLV	REHEAT
X	NONE		STM		HW		EVAP MEDIA		MOD VLV	HUMID.
X	NONE		DX		CW				MOD VLV	COOLING

OPERATION:

HOURS ON:	S	M	T	W	T	F	S	COMMENTS
PRESENT START TIME	**0**	**0**	**0**	**0**	**0**	**0**	**0**	TIMECLOCK?
PRESENT STOP TIME	**2400**	**2400**	**2400**	**2400**	**2400**	**2400**	**2400**	
REQUIRED START TIME								
REQUIRED STOP TIME								

MONTHS ON:

J	F	M	A	M	J	J	A	S	O	N	D
1	**1**	**1**	**1**	**0**	**0**	**0**	**0**	**0**	**1**	**1**	**1**

CONTROLS:

	X	PNEUMATIC		ELECTRIC		ELEC'NIC		DDC	COMMENTS
THERMOSTAT TYPE:		SINGLE STPT		DUAL SETPNT		SETBACK			
SPACE SETPOINT (°F):		OCC HEAT		UNOCC HEAT		OCC COOL		UNOCC COOL	
OTHER SETPOINTS (°F):		HOT DECK		COLD DECK		MIXED AIR		OTHER	
DAMPER CONTROL:	**N**	MIN OA (Y/N)	**Y**	MAX OA (Y/N)	**N**	RA (Y/N)	**Y**	EA (Y/N)	
		MA CONTROL	**X**	ECONO-DB		ECONO-ENT		OTHER	
DEMAND LIMIT:	**N**	(Y = YES ; N = NO)							
COMMENTS:									

E M C ENGINEERS, INC.

PROJECT: UMCS STUDY
CLIENT CONTRACT NO.: DACA01-94-D-0033
CLIENT PROJ. ENG: STEVE ROWLEY
LOCATION: FORT DRUM, NY BLDG: **10632** BARRACKS

EMC NO.: 1406-006
DATE: 09-NOV-94
PREPARED BY: **CSW/BG**
CHECKED BY: BG
FILE: **10632A7**

AIR HANDLING UNIT SURVEY OBSERVATIONS

AHU7	AHU NO.	**MECH ROOM**	LOCATION (RM)
	REF. SYS. SERVING AHU	**CA & S**	SERVES AREA

UNIT TYPE:

X	SINGLE ZN		2-PIPE FC		4-PIPE FC		UNIT HTR	**X**	H&V
	MULTIZONE		DOUBLE DT		REHEAT		INDUCTION		VAV
	NUMBER OF ZONES				OTHER				
	COMMENT:								

NAMEPLATE:

					MFG.				MODEL
5.0	SUPPLY FAN HP				MFG.				MODEL
	RET/EXH FAN HP				MFG.				MODEL
750	CFM-HTG		CFM-CLG	**100%**	MIN %OA	**100%**	MAX %OA	**10.0%**	% HTG AREA SERVED
COMMENT:									

COILS:

X	NONE		STM		HW		ELEC		MOD VLV	PREHEAT
	NONE		STM	**X**	HW		ELEC	**X**	MOD VLV	HEATING
X	NONE		STM		HW		ELEC		MOD VLV	REHEAT
X	NONE		STM		HW		EVAP MEDIA		MOD VLV	HUMID.
X	NONE		DX		CW				MOD VLV	COOLING

OPERATION:

HOURS ON:	S	M	T	W	T	F	S	COMMENTS
PRESENT START TIME	**0**	**0**	**0**	**0**	**0**	**0**	**0**	TIMECLOCK?
PRESENT STOP TIME	**2400**	**2400**	**2400**	**2400**	**2400**	**2400**	**2400**	
REQUIRED START TIME								
REQUIRED STOP TIME								

MONTHS ON:

J	F	M	A	M	J	J	A	S	O	N	D
1	**1**	**1**	**1**	**0**	**0**	**0**	**0**	**0**	**1**	**1**	**1**

CONTROLS:

	X	PNEUMATIC		ELECTRIC		ELEC'NIC		DDC	COMMENTS
THERMOSTAT TYPE:		SINGLE STPT		DUAL SETPNT		SETBACK			
SPACE SETPOINT (°F):		OCC HEAT		UNOCC HEAT		OCC COOL		UNOCC COOL	
OTHER SETPOINTS (°F):		HOT DECK		COLD DECK		MIXED AIR		OTHER	
DAMPER CONTROL:	**N**	MIN OA (Y/N)	**Y**	MAX OA (Y/N)	**N**	RA (Y/N)	**Y**	EA (Y/N)	
		MA CONTROL	**X**	ECONO-DB		ECONO-ENT		OTHER	
DEMAND LIMIT:	**N**	(Y = YES ; N = NO)							
COMMENTS:									

E M C ENGINEERS, INC.

PROJECT: UMCS STUDY
CLIENT CONTRACT NO.: DACA01-94-D-0033
CLIENT PROJ. ENG: STEVE ROWLEY
LOCATION: FORT DRUM, NY BLDG: **10632** BARRACKS

EMC NO.: 1406-006
DATE: 09-NOV-94
PREPARED BY: **CSW/BG**
CHECKED BY: BG
FILE: **10632A8**

AIR HANDLING UNIT SURVEY OBSERVATIONS

AHU8	AHU NO.	**MECH. ROOM**	LOCATION (RM)
	REF. SYS. SERVING AHU	**CA & S**	SERVES AREA

UNIT TYPE:

X	SINGLE ZN		2-PIPE FC		4-PIPE FC		UNIT HTR	X	H&V
	MULTIZONE		DOUBLE DT		REHEAT		INDUCTION		VAV
	NUMBER OF ZONES				OTHER				
	COMMENT:								

NAMEPLATE:

					MFG.				MODEL
5.0	SUPPLY FAN HP				MFG.				MODEL
	RET/EXH FAN HP				MFG.				MODEL
750	CFM-HTG		CFM-CLG	**100%**	MIN %OA	**100%**	MAX %OA	**10.0%**	% HTG AREA SERVED
COMMENT:									

COILS:

X	NONE		STM		HW		ELEC		MOD VLV	PREHEAT
	NONE		STM	X	HW		ELEC	X	MOD VLV	HEATING
X	NONE		STM		HW		ELEC		MOD VLV	REHEAT
X	NONE		STM		HW		EVAP MEDIA		MOD VLV	HUMID.
X	NONE		DX		CW				MOD VLV	COOLING

OPERATION:

HOURS ON:	S	M	T	W	T	F	S	COMMENTS
PRESENT START TIME	**0**	**0**	**0**	**0**	**0**	**0**	**0**	TIMECLOCK?
PRESENT STOP TIME	**2400**	**2400**	**2400**	**2400**	**2400**	**2400**	**2400**	
REQUIRED START TIME								
REQUIRED STOP TIME								

MONTHS ON:

J	F	M	A	M	J	J	A	S	O	N	D
1	**1**	**1**	**1**	**0**	**0**	**0**	**0**	**0**	**1**	**1**	**1**

CONTROLS:

	X	PNEUMATIC		ELECTRIC		ELEC'NIC		DDC	COMMENTS
THERMOSTAT TYPE:		SINGLE STPT		DUAL SETPNT		SETBACK			
SPACE SETPOINT (°F):		OCC HEAT		UNOCC HEAT		OCC COOL		UNOCC COOL	
OTHER SETPOINTS (°F):		HOT DECK		COLD DECK		MIXED AIR		OTHER	
DAMPER CONTROL:	**N**	MIN OA (Y/N)	**Y**	MAX OA (Y/N)	**N**	RA (Y/N)	**Y**	EA (Y/N)	
		MA CONTROL	**X**	ECONO-DB		ECONO-ENT		OTHER	
DEMAND LIMIT:	**N**	(Y = YES ; N = NO)							
COMMENTS:									

E M C ENGINEERS, INC.

PROJECT: UMCS STUDY
CLIENT CONTRACT NO.: DACA01-94-D-0033
CLIENT PROJ. ENG: STEVE ROWLEY
LOCATION: FORT DRUM, NY BLDG: **10632** BARRACKS

EMC NO.: 1406-006
DATE: 09-NOV-94
PREPARED BY: **CSW/BG**
CHECKED BY: BG
FILE: **10632A9**

AIR HANDLING UNIT SURVEY OBSERVATIONS

AHU9	AHU NO.	**MECH. ROOM**	LOCATION (RM)
	REF. SYS. SERVING AHU	**CA & S**	SERVES AREA

UNIT TYPE:

X	SINGLE ZN		2-PIPE FC		4-PIPE FC		UNIT HTR	**X**	H&V
	MULTIZONE		DOUBLE DT		REHEAT		INDUCTION		VAV
	NUMBER OF ZONES				OTHER				
	COMMENT:								

NAMEPLATE:

					MFG.				MODEL
5.0	SUPPLY FAN HP				MFG.				MODEL
	RET/EXH FAN HP				MFG.				MODEL
750	CFM-HTG		CFM-CLG	**100%**	MIN %OA	**100%**	MAX %OA	**10.0%**	% HTG AREA SERVED
COMMENT:									

COILS:

X	NONE		STM		HW		ELEC		MOD VLV	PREHEAT
	NONE		STM	**X**	HW		ELEC	**X**	MOD VLV	HEATING
X	NONE		STM		HW		ELEC		MOD VLV	REHEAT
X	NONE		STM		HW		EVAP MEDIA		MOD VLV	HUMID.
X	NONE		DX		CW				MOD VLV	COOLING

OPERATION:

HOURS ON:	S	M	T	W	T	F	S	COMMENTS
PRESENT START TIME	**0**	**0**	**0**	**0**	**0**	**0**	**0**	TIMECLOCK?
PRESENT STOP TIME	**2400**	**2400**	**2400**	**2400**	**2400**	**2400**	**2400**	
REQUIRED START TIME								
REQUIRED STOP TIME								

MONTHS ON:

J	F	M	A	M	J	J	A	S	O	N	D
1	**1**	**1**	**1**	**0**	**0**	**0**	**0**	**0**	**1**	**1**	**1**

CONTROLS:

	X	PNEUMATIC		ELECTRIC		ELEC'NIC		DDC	COMMENTS
THERMOSTAT TYPE:		SINGLE STPT		DUAL SETPNT		SETBACK			
SPACE SETPOINT (°F):		OCC HEAT		UNOCC HEAT		OCC COOL		UNOCC COOL	
OTHER SETPOINTS (°F):		HOT DECK		COLD DECK		MIXED AIR		OTHER	
DAMPER CONTROL:	**N**	MIN OA (Y/N)	**Y**	MAX OA (Y/N)	**N**	RA (Y/N)	**Y**	EA (Y/N)	
		MA CONTROL	**X**	ECONO-DB		ECONO-ENT		OTHER	
DEMAND LIMIT:	**N**	(Y = YES ; N = NO)							
COMMENTS:									

PROJECT: UMCS STUDY
CLIENT CONTRACT NO.: DACA01-94-D-0033
CLIENT PROJ. ENG: STEVE ROWLEY
LOCATION: FORT DRUM, NY BLDG: **10632** BARRACKS

EMC NO.: 1406-006
DATE: 09-NOV-94
PREPARED BY: **CSW/BG**
CHECKED BY: BG
FILE: **10632DW1**

DOMESTIC HW SURVEY OBSERVATIONS

DHW1&2	BOILER/CONVERTER NO.	MECH. ROOM	LOCATION (RM)
	SOURCE OF HEATING (PLANT)		SERVES AREA

UNIT TYPE:

	NO.2 OIL		NO.6 OIL		N.GAS	X	ELEC		FUELS:
	STM/HW		HTHW/HW		HTHW/STM		OTHER		CONVERTER TYPE:
COMMENT:									

NAMEPLATE:

LOCHINVAR	MFG.	**HGX15-052**	MODEL	**102450**	CAPACITY OUTPUT (BTUH,KW)
				30 KW TOTA	
	MFG.		MODEL		CAPACITY OUTPUT (BTUH,KW)
DOMESTIC HW CIRCULATION PUMP:					
	HW PUMP 1 - HP		MFG.		MODEL
	HW PUMP 2 - HP		MFG.		MODEL
	HW PUMP 3 - HP		MFG.		MODEL
COMMENT:					

DIMENSION:	DIAMETER (INCHS)		HEIGHT OR LENGTH (INCHES)	GALLON

OPERATION:

HOURS ON:	S	M	T	W	T	F	S	COMMENT
PRESENT START TIME	**0**	**0**	**0**	**0**	**0**	**0**	**0**	TIMECLOCK?
PRESENT STOP TIME	**2400**	**2400**	**2400**	**2400**	**2400**	**2400**	**2400**	
REQUIRED START TIME	**0**	**0**	**0**	**0**	**0**	**0**	**0**	
REQUIRED STOP TIME	**2400**	**2400**	**2400**	**2400**	**2400**	**2400**	**2400**	

MONTHS ON:

J	F	M	A	M	J	J	A	S	O	N	D
1	**1**	**1**	**1**	**1**	**1**	**1**	**1**	**1**	**1**	**1**	**1**

CONTROLS:

	X	PNEUMATIC		ELECTRIC		ELEC'NIC		DDC	COMMENTS
SETPOINTS				HW SUPPLY					
COMMENTS:									

PROJECT: UMCS STUDY
CLIENT CONTRACT NO.: DACA01-94-D-0033
CLIENT PROJ. ENG: STEVE ROWLEY
LOCATION: FORT DRUM, NY BLDG: **10632** BARRACKS

EMC NO.: 1406-006
DATE: 09-NOV-94
PREPARED BY: **CSW/BG**
CHECKED BY: BG
FILE: **10632DW3**

DOMESTIC HW SURVEY OBSERVATIONS

DHW3	BOILER/CONVERTER NO.	MECH. ROOM.	LOCATION (RM)
	SOURCE OF HEATING (PLANT)		SERVES AREA

UNIT TYPE:

	NO.2 OIL		NO.6 OIL		N.GAS		ELEC	FUELS:
	STM/HW		HTHW/HW		HTHW/STM		OTHER	CONVERTER TYPE:
COMMENT:								

NAMEPLATE:

	MFG.	**S-12991.20TK1**	MODEL		CAPACITY OUTPUT (BTUH,KW)
	NAT. BOARD SER# 13043				
	MFG.		MODEL		CAPACITY OUTPUT (BTUH,KW)
	MAX ALLOW. WORK. PRESS 150 PSI AT 250F				
DOMESTIC HW CIRCULATION PUMP:					
	HW PUMP 1 - HP		MFG.		MODEL
	HW PUMP 2 - HP		MFG.		MODEL
	HW PUMP 3 - HP		MFG.		MODEL
COMMENT:	**110F WR**				
	130F WS				

DIMENSION:	DIAMETER (INCHS)		HEIGHT OR LENGTH (INCHES)	GALLON

OPERATION:

HOURS ON:	S	M	T	W	T	F	S	COMMENT
PRESENT START TIME	**0**	**0**	**0**	**0**	**0**	**0**	**0**	TIMECLOCK?
PRESENT STOP TIME	**2400**	**2400**	**2400**	**2400**	**2400**	**2400**	**2400**	
REQUIRED START TIME								
REQUIRED STOP TIME								

MONTHS ON:

J	F	M	A	M	J	J	A	S	O	N	D
1	**1**	**1**	**1**	**1**	**1**	**1**	**1**	**1**	**1**	**1**	**1**

CONTROLS:

		PNEUMATIC	X	ELECTRIC		ELEC'NIC		DDC	COMMENTS
SETPOINTS				HW SUPPLY					
COMMENTS:									

E M C ENGINEERS, INC.

PROJECT: UMCS STUDY
CLIENT CONTRACT NO.: DACA01-94-D-0033
CLIENT PROJ. ENG: STEVE ROWLEY
LOCATION: FORT DRUM, NY BLDG: **10632** BARRACKS

EMC NO.: 1406-006
DATE: 09-NOV-94
PREPARED BY: **CSW/BG**
CHECKED BY: BG
FILE: **10632HE1**

BOILER & CONVERTER SURVEY OBSERVATIONS

HE1	BOILER/CONVERTER NO.	MECH. ROOM	LOCATION (RM)
	SOURCE OF HEATING (PLANT)	HOT WATER TO BLDG HEAT	SERVES AREA

UNIT TYPE:

	STEAM		PSIG		HW		TEMP.	BOILER TYPE:
	NO.2 OIL		NO.6 OIL		N.GAS		ELEC	FUELS:
	STM/HW	X	HTHW/HW		HTHW/STM		OTHER	CONVERTER TYPE:
X	SPACE HEAT		DHW		OTHER			USE:
COMMENT:							100%	% HTG AREA SERVED
								BB RADIATION ONLY

NAMEPLATE:

B & G	MFG.		MODEL	512300	CAPACITY OUTPUT (BTUH)
					CAPACITY INPUT (BTUH)
	MFG.		MODEL		CAPACITY OUTPUT (BTUH)
					CAPACITY INPUT (BTUH)
2	HW PUMP 1 - HP	MARATHON	MFG.	UVE145TT	MODEL
	HW PUMP 2 - HP		MFG.		MODEL
	HW PUMP 3 - HP		MFG.		MODEL
COMMENT:					

OPERATION:

HOURS ON:	S	M	T	W	T	F	S	COMMENT
PRESENT START TIME	0	0	0	0	0	0	0	TIMECLOCK?
PRESENT STOP TIME	2400	2400	2400	2400	2400	2400	2400	
REQUIRED START TIME								
REQUIRED STOP TIME								

MONTHS ON:

J	F	M	A	M	J	J	A	S	O	N	D
1	1	1	1	0	0	0	0	0	1	1	1

CONTROLS:

	X	PNEUMATIC		ELECTRIC		ELEC'NIC		DDC	COMMENTS
SETPOINTS		PSIG		HW SUPPLY					
RESET CONTROL (oF):		HW HIGH		HW LOW		OA LOW		OA HIGH	
BURNER CONTROLS		O2 TRIM (Y/N)		OTHER					
COMMENTS:									

E M C ENGINEERS, INC.

PROJECT: UMCS STUDY
CLIENT CONTRACT NO.: DACA01-94-D-0033
CLIENT PROJ. ENG: STEVE ROWLEY
LOCATION: FORT DRUM, NY BLDG: **10632** BARRACKS

EMC NO.: 1406-006
DATE: 09-NOV-94
PREPARED BY: **CSW/BG**
CHECKED BY: BG
FILE: **10632HE2**

BOILER & CONVERTER SURVEY OBSERVATIONS

HE2	BOILER/CONVERTER NO.	**MECH. ROOM**	LOCATION (RM)
	SOURCE OF HEATING (PLANT)	HOT WATER/GLYCOL TO AHU	SERVES AREA

UNIT TYPE:

	STEAM		PSIG		HW		TEMP.		BOILER TYPE:
	NO.2 OIL		NO.6 OIL		N.GAS		ELEC		FUELS:
	STM/HW		HTHW/HW		HTHW/STM	X	OTHER		CONVERTER TYPE:
	SPACE HEAT		DHW	X	OTHER				USE:
COMMENT	HTHW-40%GLYCOL SOLUTION		SUPPLIED TO AHUS					100%	% HTG AREA SERVED
									BB RADIATION ONLY

NAMEPLATE:

B & G	MFG.		MODEL	**512300**	CAPACITY OUTPUT (BTUH)
					CAPACITY INPUT (BTUH)
	MFG.		MODEL		CAPACITY OUTPUT (BTUH)
					CAPACITY INPUT (BTUH)
0.75	HW PUMP 1 - HP		MFG.		MODEL
	HW PUMP 2 - HP		MFG.		MODEL
	HW PUMP 3 - HP		MFG.		MODEL
COMMENT:					

OPERATION:

HOURS ON:	S	M	T	W	T	F	S	COMMENT
PRESENT START TIME	**0**	**0**	**0**	**0**	**0**	**0**	**0**	TIMECLOCK
PRESENT STOP TIME	**2400**	**2400**	**2400**	**2400**	**2400**	**2400**	**2400**	
REQUIRED START TIME								
REQUIRED STOP TIME								

MONTHS ON:

J	F	M	A	M	J	J	A	S	O	N
1	**1**	**1**	**1**	**0**	**0**	**0**	**0**	**0**	**1**	**1**

CONTROLS:

	X	PNEUMATIC		ELECTRIC		ELEC'NIC		DDC	COMMENTS
SETPOINTS		PSIG		HW SUPPLY					
RESET CONTROL (oF):		HW HIGH		HW LOW		OA LOW		OA HIGH	
BURNER CONTROLS		O2 TRIM (Y/N)		OTHER					
COMMENTS:									

FIELD SURVEY NOTES

BUILDING 10670

TYPICAL: 10170, 10270, 10470, 10480, 10570, 10580,
10660, 10680, 4475, 4485, 4486

E M C ENGINEERS, INC.

PROJECT: UMCS STUDY
CLIENT CONTRACT NO.: DACA01-94-D-0033
CLIENT PROJ. ENG: STEVE ROWLEY
LOCATION: FORT DRUM, NY BLDG: 10670 VEH MAINT

EMC NO.: 1406-006
DATE: 11/17/94
PREPARED BY: BG
CHECKED BY:
FILE: FD10670A

VI. BUILDING DATA SURVEY OBSERVATIONS

BLDG NO: 10670 BLDG NAME: VEHICLE MAINTENANCE

ZONE NO.	A	FUNCTION: VEHICLE MAINTENANCE WING								
OCCUPANCY HOURS:	M-F	700	TO	1900	SAT	700	TO	1900		
	SUN	700	TO	1900						
PRESENT TEMP	WINTER OCC	65.0 øF		UNOCC	65.0 øF					
	SUMMER OCC	øF		UNOCC	øF					

ZONE NO.	B	FUNCTION: ADMIN/OFFICES								
OCCUPANCY HOURS:	M-F	700	TO	1900	SAT	700	TO	1900		
	SUN	700	TO	1900						
PRESENT TEMP	WINTER OCC	70.0 øF		UNOCC	70.0 øF					
	SUMMER OCC	øF		UNOCC	øF					

ZONE NO.	C	FUNCTION: VEHICLE MAINTENANCE WING								
OCCUPANCY HOURS:	M-F	700	TO	1900	SAT	700	TO	1900		
	SUN	700	TO	1900						
PRESENT TEMP	WINTER OCC	65.0 øF		UNOCC	65.0 øF					
	SUMMER OCC	øF		UNOCC	øF					

REMARKS: TIME CLOCK NOT FUNCTIONAL / ALL GREEN PEGS - 24 HOUR OPERATION

IN MECH ROOM: INGERSOLL- RAND COMPRESSOR MODEL NUMBER 2-30 TA30
2X30 HP MOTORS - MARATHON ELECTRIC
WEATHERFORD WATER JETTING SYSTEM - 10 HP

TOTAL FAN LOAD NOT INCLUDING THE HEATING AND VENTILATION INTERLOCKS IS APPROX. 140 HP.

E M C ENGINEERS, INC.

PROJECT: UMCS STUDY
CLIENT CONTRACT NO.: DACA01-94-D-0033
CLIENT PROJ. ENG: STEVE ROWLEY
LOCATION: FORT DRUM, NY BLDG: 10670 VEH MAINT

EMC NO.: 1406-006
DATE: 11/17/94
PREPARED BY: BG
CHECKED BY:
FILE: FD10670A

VI. BUILDING DATA SURVEY OBSERVATIONS

BLDG NO: 10670 BLDG NAME: VEHICLE MAINTENANCE

ZONE NO.	D	FUNCTION: OFFICES / ADMINISTRATION							
OCCUPANCY HOURS:	M-F	700	TO	1900	SAT	700	TO	1900	
	SUN	700	TO	1900					
PRESENT TEMP	WINTER OCC	72.0 øF		UNOCC	72.0 øF				
	SUMMER OCC	øF		UNOCC	øF				

ZONE NO.		FUNCTION:							
OCCUPANCY HOURS:	M-F		TO		SAT		TO		
	SUN		TO						
PRESENT TEMP	WINTER OCC	øF		UNOCC	øF				
	SUMMER OCC	øF		UNOCC	øF				

ZONE NO.		FUNCTION:							
OCCUPANCY HOURS:	M-F		TO		SAT		TO		
	SUN		TO						
PRESENT TEMP	WINTER OCC	øF		UNOCC	øF				
	SUMMER OCC	øF		UNOCC	øF				

REMARKS: TIME CLOCK NOT FUNCTIONAL / ALL GREEN PEGS - 24 HOUR OPERATION

IN MECH ROOM: INGERSOLL- RAND COMPRESSOR MODEL NUMBER 2-30 TA30
2X30 HP MOTORS - MARATHON ELECTRIC
WEATHERFORD WATER JETTING SYSTEM - 10 HP

E M C ENGINEERS, INC.

PROJECT: UMCS STUDY
CLIENT CONTRACT NO.: DACA01-94-D-0033
CLIENT PROJ. ENG: STEVE ROWLEY
LOCATION: FORT DRUM, NY BLDG: **10670** VEH. MAINT.

EMC NO.: 1406-006
DATE: 11/09/94
PREPARED BY: **BG**
CHECKED BY:
FILE: **10670HS1**

BOILER & CONVERTER SURVEY OBSERVATIONS

HWH-1	BOILER/CONVERTER NO.	**SIGNAL BN**	LOCATION (RM)
COGEN	SOURCE OF HEATING (PLANT)		SERVES AREA

UNIT TYPE:

	STEAM		PSIG		HW		TEMP.		BOILER TYPE:
	NO.2 OIL		NO.6 OIL		N.GAS		ELEC		FUELS:
	STM/HW	X	HTHW/HW		HTHW/STM		OTHER		CONVERTER TYPE:
	SPACE HEA		DHW	X	OTHER				USE:
COMMENT:	**HOT WATER STORAGE HEATER**								% HTG AREA SERVED
	TEMP IN - 35, TEMP OUT-110								BB RADIATION ONLY

NAMEPLATE:

B&G	MFG.		MODEL		CAPACITY OUTPUT (BTUH)
					CAPACITY INPUT (BTUH)
	MFG.		MODEL		CAPACITY OUTPUT (BTUH)
					CAPACITY INPUT (BTUH)
0.0833	HW PUMP 1 - HP		MFG.		MODEL
	HW PUMP 2 - HP		MFG.		MODEL
	HW PUMP 3 - HP		MFG.		MODEL
COMMENT:					

OPERATION:

HOURS ON:	S	M	T	W	T	F	S	COMMENT
PRESENT START TIME	**0**	**0**	**0**	**0**	**0**	**0**	**0**	TIMECLOCK?
PRESENT STOP TIME	**2400**	**2400**	**2400**	**2400**	**2400**	**2400**	**2400**	
REQUIRED START TIME								
REQUIRED STOP TIME								

MONTHS ON:

J	F	M	A	M	J	J	A	S	O	N	D
1	**1**	**1**	**1**	**1**	**1**	**1**	**1**	**1**	**1**	**1**	**1**

CONTROLS:

	X	PNEUMATIC		ELECTRIC		ELEC'NIC		DDC	COMMENTS
SETPOINTS		PSIG	**110**	HW SUPPLY					
RESET CONTROL (oF):		HW HIGH		HW LOW		OA LOW		OA HIGH	
BURNER CONTROLS		O2 TRIM (Y/N)		OTHER					
COMMENTS:									

E M C ENGINEERS, INC.

PROJECT: UMCS STUDY
CLIENT CONTRACT NO.: DACA01-94-D-0033
CLIENT PROJ. ENG: STEVE ROWLEY
LOCATION: FORT DRUM, NY BLDG: **10670** VEH. MAINT.

EMC NO.: 1406-006
DATE: 11/09/94
PREPARED BY: **BG**
CHECKED BY:
FILE: **10670HS2**

BOILER & CONVERTER SURVEY OBSERVATIONS

HWH-2	BOILER/CONVERTER NO.	**MI/ENG. BN**	LOCATION (RM)
COGEN	SOURCE OF HEATING (PLANT)		SERVES AREA

UNIT TYPE:

	STEAM		PSIG		HW		TEMP.		BOILER TYPE:
	NO.2 OIL		NO.6 OIL		N.GAS		ELEC		FUELS:
	STM/HW	X	HTHW/HW		HTHW/STM		OTHER		CONVERTER TYPE:
	SPACE HEA		DHW	X	OTHER				USE:
COMMENT:	**HOT WATER STORAGE HEATER**								% HTG AREA SERVED
	TEMP IN - 35, TEMP OUT-110								BB RADIATION ONLY

NAMEPLATE:

B&G	MFG.		MODEL		CAPACITY OUTPUT (BTUH)
					CAPACITY INPUT (BTUH)
	MFG.		MODEL		CAPACITY OUTPUT (BTUH)
					CAPACITY INPUT (BTUH)
0.0833	HW PUMP 1 - HP		MFG.		MODEL
	HW PUMP 2 - HP		MFG.		MODEL
	HW PUMP 3 - HP		MFG.		MODEL
COMMENT:					

OPERATION:

HOURS ON:	S	M	T	W	T	F	S	COMMENT
PRESENT START TIME	**0**	**0**	**0**	**0**	**0**	**0**	**0**	TIMECLOCK?
PRESENT STOP TIME	**2400**	**2400**	**2400**	**2400**	**2400**	**2400**	**2400**	
REQUIRED START TIME								
REQUIRED STOP TIME								

MONTHS ON:

J	F	M	A	M	J	J	A	S	O	N	D
1	**1**	**1**	**1**	**1**	**1**	**1**	**1**	**1**	**1**	**1**	**1**

CONTROLS:

	X	PNEUMATIC		ELECTRIC		ELEC'NIC		DDC	COMMENTS
SETPOINTS		PSIG	**110**	HW SUPPLY					
RESET CONTROL (oF):		HW HIGH		HW LOW		OA LOW		OA HIGH	
BURNER CONTROLS		O2 TRIM (Y/N)		OTHER					
COMMENTS:									

E M C ENGINEERS, INC.

PROJECT: UMCS STUDY
CLIENT CONTRACT NO.: DACA01-94-D-0033
CLIENT PROJ. ENG: STEVE ROWLEY
LOCATION: FORT DRUM, NY BLDG: **10670** VEH. MAINT.

EMC NO.: 1406-006
DATE: 11/09/94
PREPARED BY: **BG**
CHECKED BY:
FILE: **10670HS3**

BOILER & CONVERTER SURVEY OBSERVATIONS

HWH3	BOILER/CONVERTER NO.	**ADA BN**	LOCATION (RM)
COGEN	SOURCE OF HEATING (PLANT)		SERVES AREA

UNIT TYPE:

	STEAM		PSIG		HW		TEMP.		BOILER TYPE:
	NO.2 OIL		NO.6 OIL		N.GAS		ELEC		FUELS:
	STM/HW	X	HTHW/HW		HTHW/STM		OTHER		CONVERTER TYPE:
	SPACE HEA		DHW	X	OTHER				USE:
COMMENT:	**HOT WATER STORAGE HEATER**								% HTG AREA SERVED
	TEMP IN - 35, TEMP OUT-110								BB RADIATION ONLY

NAMEPLATE:

B&G	MFG.		MODEL		CAPACITY OUTPUT (BTUH)
					CAPACITY INPUT (BTUH)
	MFG.		MODEL		CAPACITY OUTPUT (BTUH)
					CAPACITY INPUT (BTUH)
0.0833	HW PUMP 1 - HP		MFG.		MODEL
	HW PUMP 2 - HP		MFG.		MODEL
	HW PUMP 3 - HP		MFG.		MODEL
COMMENT:					

OPERATION:

HOURS ON:	S	M	T	W	T	F	S	COMMENT
PRESENT START TIME	**0**	**0**	**0**	**0**	**0**	**0**	**0**	TIMECLOCK?
PRESENT STOP TIME	**2400**	**2400**	**2400**	**2400**	**2400**	**2400**	**2400**	
REQUIRED START TIME								
REQUIRED STOP TIME								

MONTHS ON:

J	F	M	A	M	J	J	A	S	O	N	D
1	**1**	**1**	**1**	**1**	**1**	**1**	**1**	**1**	**1**	**1**	**1**

CONTROLS:

	X	PNEUMATIC		ELECTRIC		ELEC'NIC		DDC	COMMENTS
SETPOINTS		PSIG	**110**	HW SUPPLY					
RESET CONTROL (oF):		HW HIGH		HW LOW		OA LOW		OA HIGH	
BURNER CONTROLS		O2 TRIM (Y/N)		OTHER					
COMMENTS:									

E M C ENGINEERS, INC.

PROJECT: UMCS STUDY
CLIENT CONTRACT NO.: DACA01-94-D-0033
CLIENT PROJ. ENG: STEVE ROWLEY
LOCATION: FORT DRUM, NY BLDG: **10670** VEH. MAINT.

EMC NO.: 1406-006
DATE: 10/17/94
PREPARED BY: **BG**
CHECKED BY:
FILE: **10670HV1**

AIR HANDLING UNIT SURVEY OBSERVATIONS

HV1	AHU NO.	**SIGNAL BN**	LOCATION (RM)
	REF. SYS. SERVING AHU	**CORE AREA**	SERVES AREA

UNIT TYPE:

X	SINGLE ZN		2-PIPE FC		4-PIPE FC		UNIT HTR	**X**	H&V
	MULTIZONE		DOUBLE DT		REHEAT		INDUCTION		VAV
	NUMBER OF ZONES				OTHER				
	COMMENT:		**168.4**	**MBH**					

NAMEPLATE:

TRANE					MFG.				MODEL
15.0	SUPPLY FAN HP		**MAGNETEK**		MFG.				MODEL
7.5	RET/EXH FAN HP		**MAGNETEK**		MFG.				MODEL
11135	CFM-HTG		CFM-CLG	~~100%~~	MIN %OA	**100%**	MAX %OA	10%	% HTG AREA SERVED
COMMENT:									

COILS:

X	NONE		STM		HW		ELEC		MOD VLV	PREHEAT
	NONE		STM	**X**	HW		ELEC	**X**	MOD VLV	HEATING
X	NONE		STM		HW		ELEC		MOD VLV	REHEAT
X	NONE		STM		HW		EVAP MEDIA		MOD VLV	HUMID.
X	NONE		DX		CW				MOD VLV	COOLING

OPERATION:

HOURS ON:	S	M	T	W	T	F	S	COMMENTS
PRESENT START TIME	**0**	**0**	**0**	**0**	**0**	**0**	**0**	TIMECLOCK?
PRESENT STOP TIME	**2400**	**2400**	**2400**	**2400**	**2400**	**2400**	**2400**	**YES**
REQUIRED START TIME								
REQUIRED STOP TIME								

MONTHS ON:

J	F	M	A	M	J	J	A	S	O	N	D
1	**1**	**1**	**1**	**1**	**1**	**1**	**1**	**1**	**1**	**1**	**1**

CONTROLS:

	X	PNEUMATIC		ELECTRIC		ELEC'NIC		DDC	COMMENTS
THERMOSTAT TYPE:		SINGLE STPT		DUAL SETPNT		SETBACK			
SPACE SETPOINT (°F):		OCC HEAT		UNOCC HEAT		OCC COOL		UNOCC COOL	
OTHER SETPOINTS (°F):		HOT DECK		COLD DECK		MIXED AIR		OTHER	
DAMPER CONTROL:	**Y**	MIN OA (Y/N)	**Y**	MAX OA (Y/N)	**Y**	RA (Y/N)	**Y**	EA (Y/N)	
		MA CONTROL	**Y**	ECONO-DB		ECONO-ENT		OTHER	
DEMAND LIMIT:	**N**	(Y = YES ; N = NO)							

COMMENTS: **130 INLET TEMP, 90 OUTLET TEMP**

E M C ENGINEERS, INC.

PROJECT: UMCS STUDY
CLIENT CONTRACT NO.: DACA01-94-D-0033
CLIENT PROJ. ENG: STEVE ROWLEY
LOCATION: FORT DRUM, NY BLDG: **10670** VEH. MAINT.

EMC NO.: 1406-006
DATE: 10/17/94
PREPARED BY: **BG**
CHECKED BY:
FILE: **10670HV2**

AIR HANDLING UNIT SURVEY OBSERVATIONS

HV2	AHU NO.	**ENG & MI BN**	LOCATION (RM)
	REF. SYS. SERVING AHU	**CORE AREA**	SERVES AREA

UNIT TYPE:

X	SINGLE ZN		2-PIPE FC		4-PIPE FC		UNIT HTR	X	H&V
	MULTIZONE		DOUBLE DT		REHEAT		INDUCTION		VAV
	NUMBER OF ZONES				OTHER				
	COMMENT:		**197.2 MBH**						

NAMEPLATE:

TRANE					MFG.				MODEL
20.0	SUPPLY FAN HP		**MAGNETEK**		MFG.				MODEL
7.5	RET/EXH FAN HP		**MAGNETEK**		MFG.				MODEL
11410	CFM-HTG		CFM-CLG	**100%**	MIN %OA	**100%**	MAX %OA		% HTG AREA SERVED
COMMENT:				33				10%	

COILS:

X	NONE		STM		HW		ELEC		MOD VLV	PREHEAT
	NONE		STM	X	HW		ELEC	X	MOD VLV	HEATING
X	NONE		STM		HW		ELEC		MOD VLV	REHEAT
X	NONE		STM		HW		EVAP MEDIA		MOD VLV	HUMID.
X	NONE		DX		CW				MOD VLV	COOLING

OPERATION:

HOURS ON:	S	M	T	W	T	F	S	COMMENTS
PRESENT START TIME	**0**	**0**	**0**	**0**	**0**	**0**	**0**	TIMECLOCK?
PRESENT STOP TIME	**2400**	**2400**	**2400**	**2400**	**2400**	**2400**	**2400**	**YES**
REQUIRED START TIME								
REQUIRED STOP TIME								

MONTHS ON:

J	F	M	A	M	J	J	A	S	O	N	D
1	**1**	**1**	**1**	**1**	**1**	**1**	**1**	**1**	**1**	**1**	**1**

CONTROLS:

	X	PNEUMATIC		ELECTRIC		ELEC'NIC		DDC	COMMENTS
THERMOSTAT TYPE:		SINGLE STPT		DUAL SETPNT		SETBACK			
SPACE SETPOINT (°F):		OCC HEAT		UNOCC HEAT		OCC COOL		UNOCC COOL	
OTHER SETPOINTS (°F):		HOT DECK		COLD DECK		MIXED AIR		OTHER	
DAMPER CONTROL:	Y	MIN OA (Y/N)	Y	MAX OA (Y/N)	Y	RA (Y/N)	Y	EA (Y/N)	
		MA CONTROL	Y	ECONO-DB		ECONO-ENT		OTHER	
DEMAND LIMIT:	N	(Y = YES ; N = NO)							
COMMENTS:									

E M C ENGINEERS, INC.

PROJECT: UMCS STUDY
CLIENT CONTRACT NO.: DACA01-94-D-0033
CLIENT PROJ. ENG: STEVE ROWLEY
LOCATION: FORT DRUM, NY BLDG: **10670** VEH. MAINT.

EMC NO.: 1406-006
DATE: 10/17/94
PREPARED BY: **BG**
CHECKED BY:
FILE: **10670HV3**

AIR HANDLING UNIT SURVEY OBSERVATIONS

HV3	AHU NO.	**ADA BN**	LOCATION (RM)
	REF. SYS. SERVING AHU	**CORE AREA**	SERVES AREA

UNIT TYPE:

X	SINGLE ZN		2-PIPE FC		4-PIPE FC		UNIT HTR	X	H&V
	MULTIZONE		DOUBLE DT		REHEAT		INDUCTION		VAV
	NUMBER OF ZONES				OTHER				
	COMMENT:		**136.5**	**MBH**					

NAMEPLATE:

TRANE				MFG.				MODEL
15.0	SUPPLY FAN HP	**MAGNETEK**		MFG.				MODEL
7.5	RET/EXH FAN HP	**MAGNETEK**		MFG.				MODEL
6020	CFM-HTG		CFM-CLG	.33%	MIN %OA	**100%**	MAX %OA	10%	% HTG AREA SERVED
COMMENT:									

COILS:

X	NONE		STM		HW		ELEC		MOD VLV	PREHEAT
	NONE		STM	X	HW		ELEC	X	MOD VLV	HEATING
X	NONE		STM		HW		ELEC		MOD VLV	REHEAT
X	NONE		STM		HW		EVAP MEDIA		MOD VLV	HUMID.
X	NONE		DX		CW				MOD VLV	COOLING

OPERATION:

HOURS ON:	S	M	T	W	T	F	S	COMMENTS
PRESENT START TIME	**0**	**0**	**0**	**0**	**0**	**0**	**0**	TIMECLOCK?
PRESENT STOP TIME	**2400**	**2400**	**2400**	**2400**	**2400**	**2400**	**2400**	**YES**
REQUIRED START TIME								
REQUIRED STOP TIME								

MONTHS ON:

J	F	M	A	M	J	J	A	S	O	N	D
1	**1**	**1**	**1**	**1**	**1**	**1**	**1**	**1**	**1**	**1**	**1**

CONTROLS:

	X	PNEUMATIC		ELECTRIC		ELEC'NIC		DDC	COMMENTS
THERMOSTAT TYPE:		SINGLE STPT		DUAL SETPNT		SETBACK			
SPACE SETPOINT (°F):		OCC HEAT		UNOCC HEAT		OCC COOL		UNOCC COOL	
OTHER SETPOINTS (°F):		HOT DECK		COLD DECK		MIXED AIR		OTHER	
DAMPER CONTROL:	Y	MIN OA (Y/N)	Y	MAX OA (Y/N)	Y	RA (Y/N)	Y	EA (Y/N)	
		MA CONTROL	Y	ECONO-DB		ECONO-ENT		OTHER	
DEMAND LIMIT:	N	(Y = YES ; N = NO)							

COMMENTS:

E M C ENGINEERS, INC.

PROJECT: UMCS STUDY
CLIENT CONTRACT NO.: DACA01-94-D-0033
CLIENT PROJ. ENG: STEVE ROWLEY
LOCATION: FORT DRUM, NY BLDG: **10670** VEH. MAINT.

EMC NO.: 1406-006
DATE: 10/17/94
PREPARED BY: **BG**
CHECKED BY:
FILE: **10670HV4**

AIR HANDLING UNIT SURVEY OBSERVATIONS

HV4	AHU NO.	**MP BN & HHC BAND**	LOCATION (RM)
	REF. SYS. SERVING AHU	**CORE AREA**	SERVES AREA

UNIT TYPE:

X	SINGLE ZN		2-PIPE FC		4-PIPE FC		UNIT HTR	X	H&V
	MULTIZONE		DOUBLE DT		REHEAT		INDUCTION		VAV
	NUMBER OF ZONES				OTHER				
	COMMENT:		**136.9**	**MBH**					

NAMEPLATE:

TRANE				MFG.				MODEL
15.0	SUPPLY FAN HP	**MAGNETEK**		MFG.				MODEL
7.5	RET/EXH FAN HP			MFG.				MODEL
4090	CFM-HTG		CFM-CLG	.33 %	MIN %OA	**100%**	MAX %OA	6% % HTG AREA SERVED
COMMENT:								

COILS:

X	NONE		STM		HW		ELEC		MOD VLV	PREHEAT
	NONE		STM	X	HW		ELEC	X	MOD VLV	HEATING
X	NONE		STM		HW		ELEC		MOD VLV	REHEAT
X	NONE		STM		HW		EVAP MEDIA		MOD VLV	HUMID.
X	NONE		DX		CW				MOD VLV	COOLING

OPERATION:

HOURS ON:	S	M	T	W	T	F	S	COMMENTS
PRESENT START TIME	**0**	**0**	**0**	**0**	**0**	**0**	**0**	TIMECLOCK?
PRESENT STOP TIME	**2400**	**2400**	**2400**	**2400**	**2400**	**2400**	**2400**	**YES**
REQUIRED START TIME								
REQUIRED STOP TIME								

MONTHS ON:

J	F	M	A	M	J	J	A	S	O	N	D
1	**1**	**1**	**1**	**1**	**1**	**1**	**1**	**1**	**1**	**1**	**1**

CONTROLS:

	X	PNEUMATIC		ELECTRIC		ELEC'NIC		DDC	COMMENTS
THERMOSTAT TYPE:		SINGLE STPT		DUAL SETPNT		SETBACK			
SPACE SETPOINT (°F):		OCC HEAT		UNOCC HEAT		OCC COOL		UNOCC COOL	
OTHER SETPOINTS (°F):		HOT DECK		COLD DECK		MIXED AIR		OTHER	
DAMPER CONTROL:	**N**	MIN OA (Y/N)	**Y**	MAX OA (Y/N)	**Y**	RA (Y/N)	**Y**	EA (Y/N)	
		MA CONTROL	Y	ECONO-DB		ECONO-ENT		OTHER	
DEMAND LIMIT:	**N**	(Y = YES ; N = NO)							
COMMENTS:									

E M C ENGINEERS, INC.

PROJECT: UMCS STUDY
CLIENT CONTRACT NO.: DACA01-94-D-0033
CLIENT PROJ. ENG: STEVE ROWLEY
LOCATION: FORT DRUM, NY BLDG: **10670** VEH. MAINT.

EMC NO.: 1406-006
DATE: 11/09/94
PREPARED BY: **BG**
CHECKED BY:
FILE: **10670HW1**

BOILER & CONVERTER SURVEY OBSERVATIONS

HPW-1	BOILER/CONVERTER NO.	**SIGNAL BN**	LOCATION (RM)
COGEN	SOURCE OF HEATING (PLANT)		SERVES AREA

UNIT TYPE:

	STEAM		PSIG		HW		TEMP.		BOILER TYPE:
	NO.2 OIL		NO.6 OIL		N.GAS		ELEC		FUELS:
	STM/HW	X	HTHW/HW		HTHW/STM		OTHER		CONVERTER TYPE:
	SPACE HEAT		DHW	X	OTHER				USE:
COMMENT:	**HIGH PRESSURE HOT WATER WASHER (HPWW)**								% HTG AREA SERVED
									BB RADIATION ONLY

NAMEPLATE:

B&G	MFG.		MODEL	**499000**	CAPACITY OUTPUT (BTUH)
					CAPACITY INPUT (BTUH)
	MFG.		MODEL		CAPACITY OUTPUT (BTUH)
					CAPACITY INPUT (BTUH)
0.25	HW PUMP 1 - HP		MFG.		MODEL
	HW PUMP 2 - HP		MFG.		MODEL
	HW PUMP 3 - HP		MFG.		MODEL
COMMENT:					

OPERATION:

HOURS ON:	S	M	T	W	T	F	S	COMMENT
PRESENT START TIME	**0**	**0**	**0**	**0**	**0**	**0**	**0**	TIMECLOCK?
PRESENT STOP TIME	**2400**	**2400**	**2400**	**2400**	**2400**	**2400**	**2400**	
REQUIRED START TIME								
REQUIRED STOP TIME								

MONTHS ON:

J	F	M	A	M	J	J	A	S	O	N	D
1	**1**	**1**	**1**	**1**	**1**	**1**	**1**	**1**	**1**	**1**	**1**

CONTROLS:

	X	PNEUMATIC		ELECTRIC		ELEC'NIC		DDC	COMMENTS
SETPOINTS		PSIG	**130**	HW SUPPLY					
RESET CONTROL (oF):		HW HIGH		HW LOW		OA LOW		OA HIGH	
BURNER CONTROLS		O2 TRIM (Y/N)		OTHER					
COMMENTS:									

E M C ENGINEERS, INC.

PROJECT: UMCS STUDY
CLIENT CONTRACT NO.: DACA01-94-D-0033
CLIENT PROJ. ENG: STEVE ROWLEY
LOCATION: FORT DRUM, NY BLDG: **10670** VEH. MAINT.

EMC NO.: 1406-006
DATE: 11/09/94
PREPARED BY: **BG**
CHECKED BY:
FILE: **10670HW2**

BOILER & CONVERTER SURVEY OBSERVATIONS

HPW-2	BOILER/CONVERTER NO.	**ENG&MII BN**	LOCATION (RM)
COGEN	SOURCE OF HEATING (PLANT)		SERVES AREA

UNIT TYPE:

	STEAM		PSIG		HW		TEMP.		BOILER TYPE:
	NO.2 OIL		NO.6 OIL		N.GAS		ELEC		FUELS:
	STM/HW	X	HTHW/HW		HTHW/STM		OTHER		CONVERTER TYPE:
	SPACE HEAT		DHW	X	OTHER				USE:
COMMENT:	**HIGH PRESSURE HOT WATER WASHER (HPWW)**								% HTG AREA SERVED
									BB RADIATION ONLY

NAMEPLATE:

B&G	MFG.		MODEL	**831000**	CAPACITY OUTPUT (BTUH)
					CAPACITY INPUT (BTUH)
	MFG.		MODEL		CAPACITY OUTPUT (BTUH)
					CAPACITY INPUT (BTUH)
0.25	HW PUMP 1 - HP		MFG.		MODEL
	HW PUMP 2 - HP		MFG.		MODEL
	HW PUMP 3 - HP		MFG.		MODEL
COMMENT:					

OPERATION:

HOURS ON:	S	M	T	W	T	F	S	COMMENT
PRESENT START TIME	**0**	**0**	**0**	**0**	**0**	**0**	**0**	TIMECLOCK?
PRESENT STOP TIME	**2400**	**2400**	**2400**	**2400**	**2400**	**2400**	**2400**	
REQUIRED START TIME								
REQUIRED STOP TIME								

MONTHS ON:

J	F	M	A	M	J	J	A	S	O	N	D
1	**1**	**1**	**1**	**1**	**1**	**1**	**1**	**1**	**1**	**1**	**1**

CONTROLS:

	X	PNEUMATIC		ELECTRIC		ELEC'NIC		DDC	COMMENTS
SETPOINTS		PSIG	**130**	HW SUPPLY					
RESET CONTROL (oF):		HW HIGH		HW LOW		OA LOW		OA HIGH	
BURNER CONTROLS		O2 TRIM (Y/N)		OTHER					
COMMENTS:									

E M C ENGINEERS, INC.

PROJECT: UMCS STUDY
CLIENT CONTRACT NO.: DACA01-94-D-0033
CLIENT PROJ. ENG: STEVE ROWLEY
LOCATION: FORT DRUM, NY BLDG: **10670** VEH. MAINT.

EMC NO.: 1406-006
DATE: 11/09/94
PREPARED BY: **BG**
CHECKED BY:
FILE: **10670HW3**

BOILER & CONVERTER SURVEY OBSERVATIONS

HPW-3	BOILER/CONVERTER NO.	**ADA,MP, HHC BAND**	LOCATION (RM)
COGEN	SOURCE OF HEATING (PLANT)		SERVES AREA

UNIT TYPE:

	STEAM		PSIG		HW		TEMP.		BOILER TYPE:
	NO.2 OIL		NO.6 OIL		N.GAS		ELEC		FUELS:
	STM/HW	X	HTHW/HW		HTHW/STM		OTHER		CONVERTER TYPE:
	SPACE HEAT		DHW	X	OTHER				USE:
COMMENT:	**HIGH PRESSURE HOT WATER WASHER (HPWW)**								% HTG AREA SERVED
									BB RADIATION ONLY

NAMEPLATE:

B&G	MFG.		MODEL	**831000**	CAPACITY OUTPUT (BTUH)
					CAPACITY INPUT (BTUH)
	MFG.		MODEL		CAPACITY OUTPUT (BTUH)
					CAPACITY INPUT (BTUH)
0.25	HW PUMP 1 - HP		MFG.		MODEL
	HW PUMP 2 - HP		MFG.		MODEL
	HW PUMP 3 - HP		MFG.		MODEL
COMMENT:					

OPERATION:

HOURS ON:	S	M	T	W	T	F	S	COMMENT
PRESENT START TIME	**0**	**0**	**0**	**0**	**0**	**0**	**0**	TIMECLOCK?
PRESENT STOP TIME	**2400**	**2400**	**2400**	**2400**	**2400**	**2400**	**2400**	
REQUIRED START TIME								
REQUIRED STOP TIME								

MONTHS ON:

J	F	M	A	M	J	J	A	S	O	N	D
1	**1**	**1**	**1**	**1**	**1**	**1**	**1**	**1**	**1**	**1**	**1**

CONTROLS:

	X	PNEUMATIC		ELECTRIC		ELEC'NIC		DDC	COMMENTS
SETPOINTS		PSIG	**130**	HW SUPPLY					
RESET CONTROL (oF):		HW HIGH		HW LOW		OA LOW		OA HIGH	
BURNER CONTROLS		O2 TRIM (Y/N)		OTHER					
COMMENTS:									

E M C ENGINEERS, INC.

PROJECT: UMCS STUDY
CLIENT CONTRACT NO.: DACA01-94-D-0033
CLIENT PROJ. ENG: STEVE ROWLEY
LOCATION: FORT DRUM, NY BLDG: **10670** VEH MAINT

EMC NO.: 1406-006
DATE: 10/17/94
PREPARED BY: **BG**
CHECKED BY:
FILE: **10670MA1**

AIR HANDLING UNIT SURVEY OBSERVATIONS

MAU-1	AHU NO.	**MECH. ROOM**	LOCATION (RM)
	REF. SYS. SERVING AHU	**A-WING**	SERVES AREA

UNIT TYPE:

X	SINGLE ZN		2-PIPE FC		4-PIPE FC		UNIT HTR		H&V
	MULTIZONE		DOUBLE DT		REHEAT		INDUCTION		VAV
	NUMBER OF ZONES				OTHER				
	COMMENT:								

NAMEPLATE:

TRANE				MFG.				MODEL
15.0	SUPPLY FAN HP	**MAGNETEK**		MFG.				MODEL
	RET/EXH FAN HP			MFG.				MODEL
18150	CFM-HTG		CFM-CLG	**100%**	MIN %OA	**100%**	MAX %OA	6% % HTG AREA SERVED
COMMENT:		**1510.3 MBH**						

COILS:

X	NONE		STM		HW		ELEC		MOD VLV	PREHEAT
	NONE		STM	X	HW		ELEC	X	MOD VLV	HEATING
X	NONE		STM		HW		ELEC		MOD VLV	REHEAT
X	NONE		STM		HW		EVAP MEDIA		MOD VLV	HUMID.
X	NONE		DX		CW				MOD VLV	COOLING

OPERATION:

HOURS ON:	S	M	T	W	T	F	S	COMMENTS
PRESENT START TIME	**0**	**0**	**0**	**0**	**0**	**0**	**0**	TIMECLOCK?
PRESENT STOP TIME	**24**	**24**	**24**	**24**	**24**	**24**	**24**	**YES**
REQUIRED START TIME								
REQUIRED STOP TIME								

MONTHS ON:

J	F	M	A	M	J	J	A	S	O	N	D
1	**1**	**1**	**1**	**1**	**1**	**1**	**1**	**1**	**1**	**1**	**1**

CONTROLS:

	X	PNEUMATIC		ELECTRIC		ELEC'NIC		DDC	COMMENTS
THERMOSTAT TYPE:		SINGLE STPT		DUAL SETPNT		SETBACK			
SPACE SETPOINT (°F):		OCC HEAT		UNOCC HEAT		OCC COOL		UNOCC COOL	
OTHER SETPOINTS (°F):		HOT DECK		COLD DECK		MIXED AIR		OTHER	
DAMPER CONTROL:	**N**	MIN OA (Y/N)	**Y**	MAX OA (Y/N)	**Y**	RA (Y/N)	**Y**	EA (Y/N)	
		MA CONTROL	Y	ECONO-DB		ECONO-ENT		OTHER	
DEMAND LIMIT:	**N**	(Y = YES ; N = NO)							
COMMENTS:									

E M C ENGINEERS, INC.

PROJECT: UMCS STUDY
CLIENT CONTRACT NO.: DACA01-94-D-0033
CLIENT PROJ. ENG: STEVE ROWLEY
LOCATION: FORT DRUM, NY BLDG: **10670** VEH MAINT

EMC NO.: 1406-006
DATE: 10/17/94
PREPARED BY: **BG**
CHECKED BY:
FILE: **10670MA2**

AIR HANDLING UNIT SURVEY OBSERVATIONS

MAU-2	AHU NO.	**MECH. ROOM**	LOCATION (RM)
	REF. SYS. SERVING AHU	**C-WING**	SERVES AREA

UNIT TYPE:

X	SINGLE ZN		2-PIPE FC		4-PIPE FC		UNIT HTR		H&V
	MULTIZONE		DOUBLE DT		REHEAT		INDUCTION		VAV
	NUMBER OF ZONES				OTHER				
	COMMENT:		**766 MBH**						

NAMEPLATE:

TRANE				MFG.				MODEL	
15.0	SUPPLY FAN HP	**MAGNETEK**		MFG.				MODEL	
	RET/EXH FAN HP			MFG.				MODEL	
9200	CFM-HTG		CFM-CLG	**100%** MIN %OA	**100%**	MAX %OA	3%	% HTG AREA SERVED	
COMMENT:									

COILS:

X	NONE		STM		HW		ELEC		MOD VLV	PREHEAT
	NONE		STM	X	HW		ELEC	X	MOD VLV	HEATING
X	NONE		STM		HW		ELEC		MOD VLV	REHEAT
X	NONE		STM		HW		EVAP MEDIA		MOD VLV	HUMID.
X	NONE		DX		CW				MOD VLV	COOLING

OPERATION:

HOURS ON:	S	M	T	W	T	F	S	COMMENTS
PRESENT START TIME	**0**	**0**	**0**	**0**	**0**	**0**	**0**	TIMECLOCK?
PRESENT STOP TIME	**2400**	**2400**	**2400**	**2400**	**2400**	**2400**	**2400**	**YES**
REQUIRED START TIME								
REQUIRED STOP TIME								

MONTHS ON:

J	F	M	A	M	J	J	A	S	O	N	D
1	**1**	**1**	**1**	**1**	**1**	**1**	**1**	**1**	**1**	**1**	**1**

CONTROLS:

	X	PNEUMATIC		ELECTRIC		ELEC'NIC		DDC	COMMENTS
THERMOSTAT TYPE:		SINGLE STPT		DUAL SETPNT		SETBACK			
SPACE SETPOINT (°F):		OCC HEAT		UNOCC HEAT		OCC COOL		UNOCC COOL	
OTHER SETPOINTS (°F):		HOT DECK		COLD DECK		MIXED AIR		OTHER	
DAMPER CONTROL:	**N**	MIN OA (Y/N)	**Y**	MAX OA (Y/N)	**Y**	RA (Y/N)	**Y**	EA (Y/N)	
		MA CONTROL	Y	ECONO-DB		ECONO-ENT		OTHER	
DEMAND LIMIT:	**N**	(Y = YES ; N = NO)							
COMMENTS:									

E M C ENGINEERS, INC.

PROJECT: UMCS STUDY
CLIENT CONTRACT NO.: DACA01-94-D-0033
CLIENT PROJ. ENG: STEVE ROWLEY
LOCATION: FORT DRUM, NY BLDG: **10670** VEH MAINT

EMC NO.: 1406-006
DATE: 10/17/94
PREPARED BY: **BG**
CHECKED BY:
FILE: **10670MA3**

AIR HANDLING UNIT SURVEY OBSERVATIONS

MAU-3	AHU NO.	**MECH. ROOM**	LOCATION (RM)
	REF. SYS. SERVING AHU	**A-WING**	SERVES AREA

UNIT TYPE:

X	SINGLE ZN		2-PIPE FC		4-PIPE FC		UNIT HTR	H&V
	MULTIZONE		DOUBLE DT		REHEAT		INDUCTION	VAV
	NUMBER OF ZONES				OTHER			
	COMMENT:		**1408 MBH**					

NAMEPLATE:

TRANE				MFG.				MODEL
15.0	SUPPLY FAN HP	**MAGNETEK**		MFG.				MODEL
	RET/EXH FAN HP			MFG.				MODEL
16920	CFM-HTG		CFM-CLG	**100%** MIN %OA	**100%**	MAX %OA	6%	% HTG AREA SERVED
COMMENT:								

COILS:

X	NONE		STM		HW		ELEC	MOD VLV	PREHEAT
	NONE		STM	X	HW		ELEC	X MOD VLV	HEATING
X	NONE		STM		HW		ELEC	MOD VLV	REHEAT
X	NONE		STM		HW		EVAP MEDIA	MOD VLV	HUMID.
X	NONE		DX		CW			MOD VLV	COOLING

OPERATION:

HOURS ON:	S	M	T	W	T	F	S	COMMENTS
PRESENT START TIME	**0**	**0**	**0**	**0**	**0**	**0**	**0**	TIMECLOCK?
PRESENT STOP TIME	**2400**	**2400**	**2400**	**2400**	**2400**	**2400**	**2400**	**YES**
REQUIRED START TIME								
REQUIRED STOP TIME								

MONTHS ON:

J	F	M	A	M	J	J	A	S	O	N	D
1	**1**	**1**	**1**	**1**	**1**	**1**	**1**	**1**	**1**	**1**	**1**

CONTROLS:

	X	PNEUMATIC		ELECTRIC		ELEC'NIC		DDC	COMMENTS
THERMOSTAT TYPE:		SINGLE STPT		DUAL SETPNT		SETBACK			
SPACE SETPOINT (°F):		OCC HEAT		UNOCC HEAT		OCC COOL		UNOCC COOL	
OTHER SETPOINTS (°F):		HOT DECK		COLD DECK		MIXED AIR		OTHER	
DAMPER CONTROL:	**N**	MIN OA (Y/N)	**Y**	MAX OA (Y/N)	**Y**	RA (Y/N)	**Y**	EA (Y/N)	
		MA CONTROL	**Y**	ECONO-DB		ECONO-ENT		OTHER	
DEMAND LIMIT:		(Y = YES ; N = NO)							

COMMENTS: **122 INLET TEMP, 72 OUTLET TEMP**

E M C ENGINEERS, INC.

PROJECT: UMCS STUDY
CLIENT CONTRACT NO.: DACA01-94-D-0033
CLIENT PROJ. ENG: STEVE ROWLEY
LOCATION: FORT DRUM, NY BLDG: **10670** VEH. MAINT.

EMC NO.: 1406-006
DATE: 10/17/94
PREPARED BY: **BG**
CHECKED BY:
FILE: **10670MA4**

AIR HANDLING UNIT SURVEY OBSERVATIONS

MAU-4	AHU NO.	**MECH. ROOM**	LOCATION (RM)	
	REF. SYS. SERVING AHU		**C-WING**	SERVES AREA

UNIT TYPE:

X	SINGLE ZN		2-PIPE FC		4-PIPE FC		UNIT HTR		H&V
	MULTIZONE		DOUBLE DT		REHEAT		INDUCTION		VAV
	NUMBER OF ZONES				OTHER				
	COMMENT:	**1664.3 MBH**							

NAMEPLATE:

TRANE					MFG.	**CCDB3CBW0G**			MODEL
15.0	SUPPLY FAN HP	**MAGNETEK**			MFG.				MODEL
	RET/EXH FAN HP				MFG.				MODEL
20000	CFM-HTG		CFM-CLG	**100%**	MIN %OA	**100%**	MAX %OA	60 %	% HTG AREA SERVED
COMMENT:									

COILS:

X	NONE		STM		HW		ELEC		MOD VLV	PREHEAT
	NONE		STM	X	HW		ELEC	X	MOD VLV	HEATING
X	NONE		STM		HW		ELEC		MOD VLV	REHEAT
X	NONE		STM		HW		EVAP MEDIA		MOD VLV	HUMID.
X	NONE		DX		CW				MOD VLV	COOLING

OPERATION:

HOURS ON:	S	M	T	W	T	F	S	COMMENTS
PRESENT START TIME	**0**	**0**	**0**	**0**	**0**	**0**	**0**	TIMECLOCK?
PRESENT STOP TIME	**2400**	**2400**	**2400**	**2400**	**2400**	**2400**	**2400**	**YES**
REQUIRED START TIME								
REQUIRED STOP TIME								

MONTHS ON:

J	F	M	A	M	J	J	A	S	O	N	D
1	**1**	**1**	**1**	**1**	**1**	**1**	**1**	**1**	**1**	**1**	**1**

CONTROLS:

	X	PNEUMATIC		ELECTRIC		ELEC'NIC		DDC	COMMENTS
THERMOSTAT TYPE:		SINGLE STPT		DUAL SETPNT		SETBACK			
SPACE SETPOINT (°F):		OCC HEAT		UNOCC HEAT		OCC COOL		UNOCC COOL	
OTHER SETPOINTS (°F):		HOT DECK		COLD DECK		MIXED AIR		OTHER	
DAMPER CONTROL:	**N**	MIN OA (Y/N)	**Y**	MAX OA (Y/N)	**Y**	RA (Y/N)	**Y**	EA (Y/N)	
		MA CONTROL	Y	ECONO-DB		ECONO-ENT		OTHER	
DEMAND LIMIT:	**N**	(Y = YES ; N = NO)							

COMMENTS: **130 INLET TEMP, 90 OUTLET TEMP**

E M C ENGINEERS, INC.

PROJECT: UMCS STUDY
CLIENT CONTRACT NO.: DACA01-94-D-0033
CLIENT PROJ. ENG: STEVE ROWLEY
LOCATION: FORT DRUM, NY BLDG: **10670** VEH. MAINT.

EMC NO.: 1406-006
DATE: 10/17/94
PREPARED BY: **BG**
CHECKED BY:
FILE: **10670MA5**

AIR HANDLING UNIT SURVEY OBSERVATIONS

MAU-5	AHU NO.	**MECH. ROOM**	LOCATION (RM)
	REF. SYS. SERVING AHU	**C-WING**	SERVES AREA

UNIT TYPE:

X	SINGLE ZN		2-PIPE FC		4-PIPE FC		UNIT HTR		H&V
	MULTIZONE		DOUBLE DT		REHEAT		INDUCTION		VAV
	NUMBER OF ZONES				OTHER				
	COMMENT:		**832.1 MBH**						

NAMEPLATE:

TRANE					MFG.				MODEL
15.0	SUPPLY FAN HP		**MAGNETEK**		MFG.				MODEL
	RET/EXH FAN HP				MFG.				MODEL
10000	CFM-HTG		CFM-CLG	**100%**	MIN %OA	**100%**	MAX %OA	3%	% HTG AREA SERVED
COMMENT:									

COILS:

X	NONE		STM		HW		ELEC		MOD VLV	PREHEAT
	NONE		STM	X	HW		ELEC	X	MOD VLV	HEATING
X	NONE		STM		HW		ELEC		MOD VLV	REHEAT
X	NONE		STM		HW		EVAP MEDIA		MOD VLV	HUMID.
X	NONE		DX		CW				MOD VLV	COOLING

OPERATION:

HOURS ON:	S	M	T	W	T	F	S	COMMENTS
PRESENT START TIME	**0**	**0**	**0**	**0**	**0**	**0**	**0**	TIMECLOCK?
PRESENT STOP TIME	**2400**	**2400**	**2400**	**2400**	**2400**	**2400**	**2400**	**YES**
REQUIRED START TIME								
REQUIRED STOP TIME								

MONTHS ON:

J	F	M	A	M	J	J	A	S	O	N	D
1	**1**	**1**	**1**	**1**	**1**	**1**	**1**	**1**	**1**	**1**	**1**

CONTROLS:

	X	PNEUMATIC		ELECTRIC		ELEC'NIC		DDC	COMMENTS
THERMOSTAT TYPE:		SINGLE STPT		DUAL SETPNT		SETBACK			
SPACE SETPOINT (°F):		OCC HEAT		UNOCC HEAT		OCC COOL		UNOCC COOL	
OTHER SETPOINTS (°F):		HOT DECK		COLD DECK		MIXED AIR		OTHER	
DAMPER CONTROL:	N	MIN OA (Y/N)	Y	MAX OA (Y/N)	Y	RA (Y/N)	Y	EA (Y/N)	
		MA CONTROL	Y	ECONO-DB		ECONO-ENT		OTHER	
DEMAND LIMIT:	N	(Y = YES ; N = NO)							
COMMENTS:									

E M C ENGINEERS, INC.

PROJECT: UMCS STUDY
CLIENT CONTRACT NO.: DACA01-94-D-0033
CLIENT PROJ. ENG: STEVE ROWLEY
LOCATION: FORT DRUM, NY BLDG: **10670** VEH MAINT

EMC NO.: 1406-006
DATE: 10/17/94
PREPARED BY: **BG**
CHECKED BY:
FILE: **10670MA6**

AIR HANDLING UNIT SURVEY OBSERVATIONS

MAU-6	AHU NO.	**MECH. ROOM**	LOCATION (RM)
	REF. SYS. SERVING AHU	**REPAIR BAYS&SMF**	SERVES AREA

UNIT TYPE:

X	SINGLE ZN		2-PIPE FC		4-PIPE FC		UNIT HTR		H&V
	MULTIZONE		DOUBLE DT		REHEAT		INDUCTION		VAV
	NUMBER OF ZONES				OTHER				
	COMMENT:	**1339.8 MBH**							

NAMEPLATE:

TRANE					MFG.				MODEL
15.0	SUPPLY FAN HP		**MAGNETEK**		MFG.				MODEL
	RET/EXH FAN HP				MFG.				
16100	CFM-HTG		CFM-CLG	**100%**	MIN %OA	**100%**	MAX %OA	5%	% HTG AREA SERVED
COMMENT:									

COILS:

X	NONE		STM		HW		ELEC		MOD VLV	PREHEAT
	NONE		STM	X	HW		ELEC	X	MOD VLV	HEATING
X	NONE		STM		HW		ELEC		MOD VLV	REHEAT
X	NONE		STM		HW		EVAP MEDIA		MOD VLV	HUMID.
X	NONE		DX		CW				MOD VLV	COOLING

OPERATION:

HOURS ON:	S	M	T	W	T	F	S	COMMENTS
PRESENT START TIME	**0**	**0**	**0**	**0**	**0**	**0**	**0**	TIMECLOCK?
PRESENT STOP TIME	**2400**	**2400**	**2400**	**2400**	**2400**	**2400**	**2400**	**YES**
REQUIRED START TIME								
REQUIRED STOP TIME								

MONTHS ON:

J	F	M	A	M	J	J	A	S	O	N	D
1	**1**	**1**	**1**	**1**	**1**	**1**	**1**	**1**	**1**	**1**	**1**

CONTROLS:

	X	PNEUMATIC		ELECTRIC		ELEC'NIC		DDC	COMMENTS
THERMOSTAT TYPE:		SINGLE STPT		DUAL SETPNT		SETBACK			
SPACE SETPOINT (°F):		OCC HEAT		UNOCC HEAT		OCC COOL		UNOCC COOL	
OTHER SETPOINTS (°F):		HOT DECK		COLD DECK		MIXED AIR		OTHER	
DAMPER CONTROL:	**N**	MIN OA (Y/N)	**Y**	MAX OA (Y/N)	**Y**	RA (Y/N)	**Y**	EA (Y/N)	
		MA CONTROL	**Y**	ECONO-DB		ECONO-ENT		OTHER	
DEMAND LIMIT:		(Y = YES ; N = NO)							
COMMENTS:									

E M C ENGINEERS, INC.

PROJECT: UMCS STUDY
CLIENT CONTRACT NO.: DACA01-94-D-0033
CLIENT PROJ. ENG: STEVE ROWLEY
LOCATION: FORT DRUM, NY BLDG: **10670** VEH MAINT

EMC NO.: 1406-006
DATE: 11/17/94
PREPARED BY: **BG**
CHECKED BY:
FILE: **10670MA6 7**

AIR HANDLING UNIT SURVEY OBSERVATIONS

MAU-7	AHU NO.	**MECH. ROOM**	LOCATION (RM)
	REF. SYS. SERVING AHU	**REPAIR BAYS&SMF&HHC**	SERVES AREA

UNIT TYPE:

X	SINGLE ZN		2-PIPE FC		4-PIPE FC		UNIT HTR		H&V
	MULTIZONE		DOUBLE DT		REHEAT		INDUCTION		VAV
	NUMBER OF ZONES				OTHER				
	COMMENT:								

NAMEPLATE:

TRANE					MFG.				MODEL
7.5	SUPPLY FAN HP	**MAGNETEK**			MFG.				MODEL
	RET/EXH FAN HP				MFG.				
6840	CFM-HTG		CFM-CLG	**100%**	MIN %OA	**100%**	MAX %OA	29	% HTG AREA SERVED
COMMENT:	**569.2 MBH**								

COILS:

X	NONE		STM		HW		ELEC		MOD VLV	PREHEAT
	NONE		STM	X	HW		ELEC	X	MOD VLV	HEATING
X	NONE		STM		HW		ELEC		MOD VLV	REHEAT
X	NONE		STM		HW		EVAP MEDIA		MOD VLV	HUMID.
X	NONE		DX		CW				MOD VLV	COOLING

OPERATION:

HOURS ON:	S	M	T	W	T	F	S	COMMENTS
PRESENT START TIME	**0**	**0**	**0**	**0**	**0**	**0**	**0**	TIMECLOCK?
PRESENT STOP TIME	**2400**	**2400**	**2400**	**2400**	**2400**	**2400**	**2400**	**YES**
REQUIRED START TIME								
REQUIRED STOP TIME								

MONTHS ON:

J	F	M	A	M	J	J	A	S	O	N	D
1	**1**	**1**	**1**	**1**	**1**	**1**	**1**	**1**	**1**	**1**	**1**

CONTROLS:

	X	PNEUMATIC		ELECTRIC		ELEC'NIC	DDC	COMMENTS
THERMOSTAT TYPE:		SINGLE STPT		DUAL SETPNT		SETBACK		
SPACE SETPOINT (°F):		OCC HEAT		UNOCC HEAT		OCC COOL	UNOCC COOL	
OTHER SETPOINTS (°F):		HOT DECK		COLD DECK		MIXED AIR	OTHER	
DAMPER CONTROL:	**N**	MIN OA (Y/N)	**Y**	MAX OA (Y/N)	**Y**	RA (Y/N)	**Y**	EA (Y/N)
		MA CONTROL	Y	ECONO-DB		ECONO-ENT	OTHER	
DEMAND LIMIT:		(Y = YES ; N = NO)						
COMMENTS:								

E M C ENGINEERS, INC.

PROJECT: UMCS STUDY
CLIENT CONTRACT NO.: DACA01-94-D-0033
CLIENT PROJ. ENG: STEVE ROWLEY
LOCATION: FORT DRUM, NY BLDG: **10670**

EMC NO.: 1406-006
DATE: 11/09/94
PREPARED BY: **BG**
CHECKED BY:
FILE: **10670XP1**

BOILER & CONVERTER SURVEY OBSERVATIONS

HTP1	BOILER/CONVERTER NO.	**SIGNAL BN**	LOCATION (RM)
COGEN	SOURCE OF HEATING (PLANT)	**WHOLE BLDG**	SERVES AREA

UNIT TYPE:

	STEAM		PSIG		HW		TEMP.	BOILER TYPE:
	NO.2 OIL		NO.6 OIL		N.GAS		ELEC	FUELS:
	STM/HW	X	HTHW/HW		HTHW/STM		OTHER	CONVERTER TYPE:
X	SPACE HEAT		DHW		OTHER			USE:

COMMENT: MBH 3587 200 GPM 1750 RPM 40% GLYCOL — 24% % HTG AREA SERVED — BB RADIATION ONLY

NAMEPLATE:

B&G	MFG.		MODEL	**3587000**	CAPACITY OUTPUT (BTUH)
					CAPACITY INPUT (BTUH)
	MFG.		MODEL		CAPACITY OUTPUT (BTUH)
					CAPACITY INPUT (BTUH)
5	HW PUMP 1 - HP	**U.S. ELECTRIC**	MFG.		MODEL
	HW PUMP 2 - HP		MFG.		MODEL
	HW PUMP 3 - HP		MFG.		MODEL

COMMENT: ONE BACKUP

OPERATION:

HOURS ON:	S	M	T	W	T	F	S	COMMENT
PRESENT START TIME	**0**	**0**	**0**	**0**	**0**	**0**	**0**	TIMECLOCK?
PRESENT STOP TIME	**2400**	**2400**	**2400**	**2400**	**2400**	**2400**	**2400**	
REQUIRED START TIME								
REQUIRED STOP TIME								

MONTHS ON:

J	F	M	A	M	J	J	A	S	O	N	D
1	**1**	**1**	**1**	**0**	**0**	**0**	**0**	**0**	**1**	**1**	**1**

CONTROLS:

	X	PNEUMATIC		ELECTRIC		ELEC'NIC		DDC	COMMENTS
SETPOINTS		PSIG	**200**	HW SUPPLY					
RESET CONTROL (oF):		HW HIGH		HW LOW		OA LOW		OA HIGH	
BURNER CONTROLS		O2 TRIM (Y/N)		OTHER					

COMMENTS:

E M C ENGINEERS, INC.

PROJECT: UMCS STUDY
CLIENT CONTRACT NO.: DACA01-94-D-0033
CLIENT PROJ. ENG: STEVE ROWLEY
LOCATION: FORT DRUM, NY BLDG: **10670**

EMC NO.: 1406-006
DATE: 11/09/94
PREPARED BY: **BG**
CHECKED BY:
FILE: **10670XP2**

BOILER & CONVERTER SURVEY OBSERVATIONS

HTP2	BOILER/CONVERTER NO.	**ENG & MI BN**	LOCATION (RM)
COGEN	SOURCE OF HEATING (PLANT)	**WHOLE BLDG**	SERVES AREA

UNIT TYPE:

	STEAM		PSIG		HW		TEMP.	BOILER TYPE:
	NO.2 OIL		NO.6 OIL		N.GAS		ELEC	FUELS:
	STM/HW	X	HTHW/HW		HTHW/STM		OTHER	CONVERTER TYPE:
X	SPACE HEAT		DHW		OTHER			USE:

COMMENT:	4620 MBH	260 GPM 1750 RPM	**35%**	% HTG AREA SERVED
		40% GLYCOL		BB RADIATION ONLY

NAMEPLATE:

B&G	MFG.		MODEL	**4620000**	CAPACITY OUTPUT (BTUH)
					CAPACITY INPUT (BTUH)
	MFG.		MODEL		CAPACITY OUTPUT (BTUH)
					CAPACITY INPUT (BTUH)
5	HW PUMP 1 - HP	**U.S. ELECTRIC**	MFG.		MODEL
	HW PUMP 2 - HP		MFG.		MODEL
	HW PUMP 3 - HP		MFG.		MODEL
COMMENT:		ONE BACKUP			

OPERATION:

HOURS ON:	S	M	T	W	T	F	S	COMMENT
PRESENT START TIME	**0**	**0**	**0**	**0**	**0**	**0**	**0**	TIMECLOCK?
PRESENT STOP TIME	**2400**	**2400**	**2400**	**2400**	**2400**	**2400**	**2400**	
REQUIRED START TIME								
REQUIRED STOP TIME								

MONTHS ON:

J	F	M	A	M	J	J	A	S	O	N	D
1	**1**	**1**	**1**	**0**	**0**	**0**	**0**	**0**	**1**	**1**	**1**

CONTROLS:

	X	PNEUMATIC		ELECTRIC		ELEC'NIC		DDC	COMMENTS
SETPOINTS		PSIG	**200**	HW SUPPLY					
RESET CONTROL (oF):		HW HIGH		HW LOW		OA LOW		OA HIGH	
BURNER CONTROLS		O2 TRIM (Y/N)		OTHER					

COMMENTS:

E M C ENGINEERS, INC.

PROJECT: UMCS STUDY
CLIENT CONTRACT NO.: DACA01-94-D-0033
CLIENT PROJ. ENG: STEVE ROWLEY
LOCATION: FORT DRUM, NY BLDG: **10670**

EMC NO.: 1406-006
DATE: 11/09/94
PREPARED BY: **BG**
CHECKED BY:
FILE: **10670XP3**

BOILER & CONVERTER SURVEY OBSERVATIONS

HTP3	BOILER/CONVERTER NO.	ADA BN	LOCATION (RM)
COGEN	SOURCE OF HEATING (PLANT)	WHOLE BLDG	SERVES AREA

UNIT TYPE:

	STEAM		PSIG		HW		TEMP.	BOILER TYPE:
	NO.2 OIL		NO.6 OIL		N.GAS		ELEC	FUELS:
	STM/HW	X	HTHW/HW		HTHW/STM		OTHER	CONVERTER TYPE:
X	SPACE HEAT		DHW		OTHER			USE:
COMMENT:		4258 MBH		240 GPM	1750 RPM		35%	% HTG AREA SERVED
								BB RADIATION ONLY

NAMEPLATE:

B&G	MFG.		MODEL	4258000	CAPACITY OUTPUT (BTUH)
					CAPACITY INPUT (BTUH)
	MFG.		MODEL		CAPACITY OUTPUT (BTUH)
					CAPACITY INPUT (BTUH)
5	HW PUMP 1 - HP	U.S. ELECTRIC	MFG.		MODEL
	HW PUMP 2 - HP		MFG.		MODEL
	HW PUMP 3 - HP		MFG.		MODEL
COMMENT:		ONE BACKUP			

OPERATION:

HOURS ON:	S	M	T	W	T	F	S	COMMENT
PRESENT START TIME	0	0	0	0	0	0	0	TIMECLOCK?
PRESENT STOP TIME	2400	2400	2400	2400	2400	2400	2400	
REQUIRED START TIME								
REQUIRED STOP TIME								

MONTHS ON:

J	F	M	A	M	J	J	A	S	O	N	D
1	1	1	1	0	0	0	0	0	1	1	1

CONTROLS:

	X	PNEUMATIC		ELECTRIC		ELEC'NIC		DDC	COMMENTS
SETPOINTS		PSIG	200	HW SUPPLY					
RESET CONTROL (oF):		HW HIGH		HW LOW		OA LOW		OA HIGH	
BURNER CONTROLS		O2 TRIM (Y/N)		OTHER					
COMMENTS:									

FIELD SURVEY NOTES

BUILDING 10710

E M C ENGINEERS, INC.

PROJECT: UMCS STUDY
CLIENT CONTRACT NO.: DACA01-94-D-0033
CLIENT PROJ. ENG: STEVE ROWLEY
LOCATION: FORT DRUM, NY BLDG: 10710

EMC NO.: 1406-006
DATE: Dec-94
PREPARED BY: CSW
CHECKED BY: BG
FILE: 10710BDS

VI. BUILDING DATA SURVEY OBSERVATIONS

BLDG NO: 10710 BLDG NAME: FIRESTATION

ZONE NO.			FUNCTION:							
OCCUPANCY HOURS:	M-F	0	TO	2400	SAT	0	TO	2400		
	SUN	0	TO	2400						
PRESENT TEMP	WINTER OCC		øF	UNOCC		øF				
	SUMMER OCC		øF	UNOCC		øF				

ZONE NO.			FUNCTION:							
OCCUPANCY HOURS:	M-F		TO		SAT		TO			
	SUN		TO							
PRESENT TEMP	WINTER OCC		øF	UNOCC		øF				
	SUMMER OCC		øF	UNOCC		øF				

ZONE NO.			FUNCTION:							
OCCUPANCY HOURS:	M-F		TO		SAT		TO			
	SUN		TO							
PRESENT TEMP	WINTER OCC		øF	UNOCC		øF				
	SUMMER OCC		øF	UNOCC		øF				

REMARKS:

E M C ENGINEERS, INC.

PROJECT: UMCS STUDY
CLIENT CONTRACT NO.: DACA01-94-D-0033
CLIENT PROJ. ENG: STEVE ROWLEY
LOCATION: FORT DRUM, NY BLDG: **10710**

EMC NO.: 1406-006
DATE: Dec-94
PREPARED BY: **CSW**
CHECKED BY: BG
FILE: **10710C1**

BOILER & CONVERTER SURVEY OBSERVATIONS

C1	BOILER/CONVERTER NO.	**MER**	LOCATION (RM)
	SOURCE OF HEATING (PLANT)	**WHOLE BLDG**	SERVES AREA

UNIT TYPE:

	STEAM		PSIG		HW		TEMP.	BOILER TYPE:
	NO.2 OIL		NO.6 OIL		N.GAS		ELEC	FUELS:
	STM/HW	X	HTHW/HW		HTHW/STM		OTHER	CONVERTER TYPE:
1	SPACE HEAT		DHW		OTHER			USE:
COMMENT:							**100%**	% HTG AREA SERVED
								BB RADIATION ONLY

NAMEPLATE:

	MFG.		MODEL	**226000**	CAPACITY OUTPUT (BTUH)
					CAPACITY INPUT (BTUH)
	MFG.		MODEL		CAPACITY OUTPUT (BTUH)
					CAPACITY INPUT (BTUH)
0.5	HW PUMP 1 - HP		MFG.		MODEL
0.5	HW PUMP 2 - HP		MFG.		MODEL
	HW PUMP 3 - HP		MFG.		MODEL
COMMENT:					

OPERATION:

HOURS ON:	S	M	T	W	T	F	S	COMMENT
PRESENT START TIME	**0**	**0**	**0**	**0**	**0**	**0**	**0**	TIMECLOCK?
PRESENT STOP TIME	**2400**	**2400**	**2400**	**2400**	**2400**	**2400**	**2400**	
REQUIRED START TIME	**0**	**0**	**0**	**0**	**0**	**0**	**0**	
REQUIRED STOP TIME	**2400**	**2400**	**2400**	**2400**	**2400**	**2400**	**2400**	

MONTHS ON:

J	F	M	A	M	J	J	A	S	O	N	D
1	**1**	**1**	**1**	**0**	**0**	**0**	**0**	**0**	**1**	**1**	**1**

CONTROLS:

		PNEUMATIC		ELECTRIC		ELEC'NIC		DDC	COMMENTS
SETPOINTS		PSIG		HW SUPPLY					
RESET CONTROL (oF):		HW HIGH		HW LOW		OA LOW		OA HIGH	
BURNER CONTROLS		O2 TRIM (Y/N)		OTHER					
COMMENTS:									

E M C ENGINEERS, INC.

PROJECT: UMCS STUDY
CLIENT CONTRACT NO.: DACA01-94-D-0033
CLIENT PROJ. ENG: STEVE ROWLEY
LOCATION: FORT DRUM, NY BLDG: **10710**

EMC NO.: 1406-006
DATE: Nov-94
PREPARED BY: **BG**
CHECKED BY:
FILE: **10710HV1**

AIR HANDLING UNIT SURVEY OBSERVATIONS

HV1	AHU NO.	**MER**	LOCATION (RM)
	REF. SYS. SERVING AHU	**APPARATUS RM**	SERVES AREA

UNIT TYPE:

X	SINGLE ZN		2-PIPE FC		4-PIPE FC		UNIT HTR	X	H&V
	MULTIZONE		DOUBLE DT		REHEAT		INDUCTION		VAV
	NUMBER OF ZONES				OTHER				
	COMMENT:								

NAMEPLATE:

					MFG.				MODEL
0.8	SUPPLY FAN HP				MFG.				MODEL
	RET/EXH FAN HP				MFG.				MODEL
	CFM-HTG		CFM-CLG		MIN %OA		MAX %OA	25.0%	% HTG AREA SERVED
COMMENT:									

COILS:

X	NONE		STM		HW		ELEC		MOD VLV	PREHEAT
	NONE		STM	X	HW		ELEC		MOD VLV	HEATING
X	NONE		STM		HW		ELEC		MOD VLV	REHEAT
X	NONE		STM		HW		EVAP MEDIA		MOD VLV	HUMID.
X	NONE		DX		CW				MOD VLV	COOLING

OPERATION:

HOURS ON:	S	M	T	W	T	F	S	COMMENTS
PRESENT START TIME	0	0	0	0	0	0	0	TIMECLOCK?
PRESENT STOP TIME	2400	2400	2400	2400	2400	2400	2400	
REQUIRED START TIME	0	0	0	0	0	0	0	
REQUIRED STOP TIME	2400	2400	2400	2400	2400	2400	2400	

MONTHS ON:

J	F	M	A	M	J	J	A	S	O	N	D
1	1	1	1	0	0	0	0	0	1	1	1

CONTROLS:

		PNEUMATIC		ELECTRIC		ELEC'NIC		DDC	COMMENTS
THERMOSTAT TYPE:		SINGLE STPT		DUAL SETPNT		SETBACK			
SPACE SETPOINT (°F):		OCC HEAT		UNOCC HEAT		OCC COOL		UNOCC COOL	
OTHER SETPOINTS (°F):		HOT DECK		COLD DECK		MIXED AIR		OTHER	
DAMPER CONTROL:	N	MIN OA (Y/N)	Y	MAX OA (Y/N)	N	RA (Y/N)	Y	EA (Y/N)	
		MA CONTROL		ECONO-DB		ECONO-ENT		OTHER	
DEMAND LIMIT:		(Y = YES ; N = NO)							
COMMENTS:									

E M C ENGINEERS, INC.

PROJECT: UMCS STUDY
CLIENT CONTRACT NO.: DACA01-94-D-0033
CLIENT PROJ. ENG: STEVE ROWLEY
LOCATION: FORT DRUM, NY BLDG: **10170**

EMC NO.: 1406-006
DATE: Dec-94
PREPARED BY: **CSW**
CHECKED BY: BG
FILE: **10170RAD**

PERIMETER RADIATION SURVEY OBSERVATIONS

RAD	PER RAD NO.	**WHOLE BLDG**	LOCATION (RM)
	SOURCE OF HEATING		SERVES AREA

UNIT TYPE:

	STEAM	**X**	HW		ELECTRIC				
	OTHER								
	COMMENT:								

NAMEPLATE:

	HW PUMP 1 - HP		MFG.		MODEL
	HW PUMP 2 - HP		MFG.		MODEL
	HW PUMP 3 - HP		MFG.		MODEL
	HW PUMP 4 - HP		MFG.		MODEL
COMMENT:				**100.0%**	% AREA HEATING

OPERATION:

HOURS ON:	S	M	T	W	T	F	S	COMMENT
PRESENT START TIME	**0**	0	**0**	**0**	**0**	**0**	**0**	TIMECLOCK?
PRESENT STOP TIME	**2400**	2400	**2400**	**2400**	**2400**	**2400**	**2400**	
REQUIRED START TIME	**0**	0	**0**	**0**	**0**	**0**	**0**	
REQUIRED STOP TIME	**2400**	2400	**2400**	**2400**	**2400**	**2400**	**2400**	

MONTHS ON:

J	F	M	A	M	J	J	A	S	O	N	D
1	**1**	**1**	**1**	0	**0**	**0**	**0**	**0**	**1**	**1**	**1**

CONTROLS:

		PNEUMATIC		ELECTRIC		ELEC'NIC		DDC	COMMENTS
RADIATION CONTROL:		NONE		2-WAY VLV		3-WAY VLV		OTHER	
SPACE SETPOINT (øF):		OCC HEAT		UNOCC HEAT		OCC COOL		UNOCC COOL	
RESET CONTROL (øF):		HW HIGH		HW LOW		OA LOW		OA HIGH	
COMMENTS:									

FIELD SURVEY NOTES

BUILDING 10715

E M C ENGINEERS, INC.

PROJECT: UMCS STUDY
CLIENT CONTRACT NO.: DACA01-94-D-0033
CLIENT PROJ. ENG: STEVE ROWLEY
LOCATION: FORT DRUM, NY BLDG: 10715

EMC NO.: 1406-006
DATE: 17-NOV-94
PREPARED BY: CSW/BG
CHECKED BY: BG
FILE: 10715BDS

VI. BUILDING DATA SURVEY OBSERVATIONS

BLDG NO: 10715 BLDG NAME: LEA

ZONE NO.		FUNCTION:							
OCCUPANCY HOURS:	M-F	0	TO	2400	SAT	0	TO	2400	
	SUN	0	TO	2400					
PRESENT TEMP	WINTER OCC	68.0 øF		UNOCC	50.0 øF				
	SUMMER OCC	68.0 øF		UNOCC	50.0 øF				

ZONE NO.		FUNCTION:							
OCCUPANCY HOURS:	M-F	600	TO	1800	SAT	0	TO	0	
	SUN	0	TO	0					
PRESENT TEMP	WINTER OCC	68.0 øF		UNOCC	50.0 øF				
	SUMMER OCC	68.0 øF		UNOCC	50.0 øF				

ZONE NO.		FUNCTION:							
OCCUPANCY HOURS:	M-F	700	TO	1800	SAT	0	TO	0	
	SUN	0	TO	0					
PRESENT TEMP	WINTER OCC	68.0 øF		UNOCC	50.0 øF				
	SUMMER OCC	68.0 øF		UNOCC	50.0 øF				

REMARKS: TRACER BLDG

E M C ENGINEERS, INC.

PROJECT: UMCS STUDY
CLIENT CONTRACT NO.: DACA01-94-D-0033
CLIENT PROJ. ENG: STEVE ROWLEY
LOCATION: FORT DRUM, NY BLDG: **10715**

EMC NO.: 1406-006
DATE: 17-NOV-94
PREPARED BY: **CSW**
CHECKED BY: BG
FILE: **10715AC1**

REFRIGERATION EQUIPMENT SURVEY OBSERVATIONS

ACU-1	CHILLER/COMPRESSOR NO.	MER	LOCATION (RM)
		COMPUTER ROOM	

UNIT TYPE:

	CENTRIFUGAL WITH WATER SIDE COOLING TOWER		OTHER
	RECIPROCATING WITH WATER SIDE COOLING TOWER		AHU'S SERVED
	RECIPROCATING WITH AIR COOLED CONDENSING UNIT		DIPATCH / ALARM
	ABSORBTION WITH WATER SIDE COOLING TOWER		CFM 1250
X	AIR COOLED CONDENSING UNIT		

	CHW	X	DX		OTHER

NAMEPLATE:

CHILLER		MFG.			MODEL				SERIAL NO.
	VOLTS		AMPS	PH		HZ	1.84	CAPACITY (TONS)	
TOWER		MFG.			MODEL				# OF FANS
	VOLTS		AMPS	PH		HZ		HP each	
CW PUMP		MFG.			MODEL				SERIAL NO.
	VOLTS		AMPS	PH		HZ		HP	
CNW PUMP		MFG.			MODEL				SERIAL NO.
	VOLTS		AMPS	PH		HZ		HP	
COMMENTS:		PACKAGE 32.2 MBH COOLING, 22.1 MBH REHEAT							

OPERATION:

HOURS ON:	S	M	T	W	T	F	S	COMMENT
PRESENT START TIME								TIMECLOCK?
PRESENT STOP TIME								
REQUIRED START TIME								
REQUIRED STOP TIME								

MONTHS ON:

J	F	M	A	M	J	J	A	S	O	N	D
0	0	0	0	1	1	1	1	1	0	0	0

CONTROLS:

		PNEUMATIC		ELECTRIC		ELEC'NIC		DDC	COMMENTS
SETPOINTS		CWS (oF)		CWR (oF)		CNWS (oF)		CNWR (oF)	
PANEL INDICATORS									
- PRESSURE		LITE-HI		LITE-LOW		GAUGES			
- TEMPERATURE		LITE-HI		LITE-LOW		GAUGES			
- OTHER									

COMMENTS:	22.1 MBH REHEAT
	COOLING SECTION EAT 72 F
	LAT 55 F

E M C ENGINEERS, INC.

PROJECT: UMCS STUDY
CLIENT CONTRACT NO.: DACA01-94-D-0033
CLIENT PROJ. ENG: STEVE ROWLEY
LOCATION: FORT DRUM, NY BLDG: **10715**

EMC NO.: 1406-006
DATE: 17-NOV-94
PREPARED BY: **BG**
CHECKED BY:
FILE: **10715HV1**

AIR HANDLING UNIT SURVEY OBSERVATIONS

HVU-1	AHU NO.	**ATTIC**	LOCATION (RM)
	REF. SYS. SERVING AHU	**GROUND FLOOR**	SERVES AREA

UNIT TYPE:

X	SINGLE ZN		2-PIPE FC		4-PIPE FC		UNIT HTR	X	H&V
	MULTIZONE		DOUBLE DT		REHEAT		INDUCTION		VAV
	NUMBER OF ZONES				OTHER				
	COMMENT:								

NAMEPLATE:

				MFG.				MODEL
7.5	SUPPLY FAN HP			MFG.				MODEL
	RET/EXH FAN HP			MFG.				MODEL
7760	CFM-HTG		CFM-CLG	41%	MIN %OA	**100%**	MAX %OA	**26.7%**	% HTG AREA SERVED
COMMENT:									

COILS:

X	NONE		STM		HW		ELEC		MOD VLV	PREHEAT
	NONE		STM	X	HW		ELEC		MOD VLV	HEATING
X	NONE		STM		HW		ELEC		MOD VLV	REHEAT
X	NONE		STM		HW		EVAP MEDIA		MOD VLV	HUMID.
X	NONE		DX		CW				MOD VLV	COOLING

OPERATION:

HOURS ON:	S	M	T	W	T	F	S	COMMENTS
PRESENT START TIME	**0**	**0**	**0**	**0**	**0**	**0**	**0**	TIMECLOCK?
PRESENT STOP TIME	**2400**	**2400**	**2400**	**2400**	**2400**	**2400**	**2400**	
REQUIRED START TIME								
REQUIRED STOP TIME								

MONTHS ON:

J	F	M	A	M	J	J	A	S	O	N	D
1	**1**	**1**	**1**	**0**	**0**	**0**	**0**	**0**	**1**	**1**	**1**

CONTROLS:

		PNEUMATIC		ELECTRIC		ELEC'NIC		DDC	COMMENTS
THERMOSTAT TYPE:		SINGLE STPT		DUAL SETPNT		SETBACK			
SPACE SETPOINT (°F):		OCC HEAT		UNOCC HEAT		OCC COOL		UNOCC COOL	
OTHER SETPOINTS (°F):		HOT DECK		COLD DECK		MIXED AIR		OTHER	
DAMPER CONTROL:	Y	MIN OA (Y/N)	Y	MAX OA (Y/N)	Y	RA (Y/N)	Y	EA (Y/N)	
		MA CONTROL		ECONO-DB		ECONO-ENT		OTHER	
DEMAND LIMIT:		(Y = YES ; N = NO)							
COMMENTS:									

E M C ENGINEERS, INC.

PROJECT: UMCS STUDY
CLIENT CONTRACT NO.: DACA01-94-D-0033
CLIENT PROJ. ENG: STEVE ROWLEY
LOCATION: FORT DRUM, NY BLDG: **10715**

EMC NO.: 1406-006
DATE: 17-NOV-94
PREPARED BY: **BG**
CHECKED BY:
FILE: **10715HV2**

AIR HANDLING UNIT SURVEY OBSERVATIONS

HVU-1	AHU NO.	**ATTIC**	LOCATION (RM)
	REF. SYS. SERVING AHU	**GROUND FLOOR**	SERVES AREA

UNIT TYPE:

X	SINGLE ZN		2-PIPE FC		4-PIPE FC		UNIT HTR	X	H&V
	MULTIZONE		DOUBLE DT		REHEAT		INDUCTION		VAV
	NUMBER OF ZONES				OTHER				
	COMMENT:	**16575 CFM**							

NAMEPLATE:

					MFG.				MODEL
3.7	SUPPLY FAN HP				MFG.				MODEL
	RET/EXH FAN HP				MFG.				MODEL
8230	CFM-HTG		CFM-CLG	**16%**	MIN %OA	**100%**	MAX %OA	**33.3%**	% HTG AREA SERVED
COMMENT:									

COILS:

X	NONE		STM		HW		ELEC		MOD VLV	PREHEAT
	NONE		STM	X	HW		ELEC		MOD VLV	HEATING
X	NONE		STM		HW		ELEC		MOD VLV	REHEAT
X	NONE		STM		HW		EVAP MEDIA		MOD VLV	HUMID.
X	NONE		DX		CW				MOD VLV	COOLING

OPERATION:

HOURS ON:	S	M	T	W	T	F	S	COMMENTS
PRESENT START TIME	**0**	**0**	**0**	**0**	**0**	**0**	**0**	TIMECLOCK?
PRESENT STOP TIME	**2400**	**2400**	**2400**	**2400**	**2400**	**2400**	**2400**	
REQUIRED START TIME								
REQUIRED STOP TIME								

MONTHS ON:

J	F	M	A	M	J	J	A	S	O	N	D
1	**1**	**1**	**1**	**0**	**0**	**0**	**0**	**0**	**1**	**1**	**1**

CONTROLS:

		PNEUMATIC		ELECTRIC		ELEC'NIC		DDC	COMMENTS
THERMOSTAT TYPE:		SINGLE STPT		DUAL SETPNT		SETBACK			
SPACE SETPOINT (°F):		OCC HEAT		UNOCC HEAT		OCC COOL		UNOCC COOL	
OTHER SETPOINTS (°F):		HOT DECK		COLD DECK		MIXED AIR		OTHER	
DAMPER CONTROL:	Y	MIN OA (Y/N)	Y	MAX OA (Y/N)	**Y**	RA (Y/N)	**Y**	EA (Y/N)	
		MA CONTROL		ECONO-DB		ECONO-ENT		OTHER	
DEMAND LIMIT:		(Y = YES ; N = NO)							
COMMENTS:									

E M C ENGINEERS, INC.

PROJECT: UMCS STUDY
CLIENT CONTRACT NO.: DACA01-94-D-0033
CLIENT PROJ. ENG: STEVE ROWLEY
LOCATION: FORT DRUM, NY BLDG: **10715**

EMC NO.: 1406-006
DATE: 17-NOV-94
PREPARED BY: **BG**
CHECKED BY:
FILE: **10715HV3**

AIR HANDLING UNIT SURVEY OBSERVATIONS

HVU-3	AHU NO.	**ATTIC**	LOCATION (RM)
	REF. SYS. SERVING AHU	**SECOND FLOOR**	SERVES AREA

UNIT TYPE:

X	SINGLE ZN		2-PIPE FC		4-PIPE FC		UNIT HTR	**X**	H&V
	MULTIZONE		DOUBLE DT		REHEAT		INDUCTION		VAV
	NUMBER OF ZONES				OTHER				
	COMMENT:								

NAMEPLATE:

				MFG.				MODEL
20.0	SUPPLY FAN HP			MFG.				MODEL
	RET/EXH FAN HP			MFG.				MODEL
9040	CFM-HTG		CFM-CLG	11% MIN %OA	**100%**	MAX %OA	**50.0%**	% HTG AREA SERVED
COMMENT:								

COILS:

X	NONE		STM		HW		ELEC		MOD VLV	PREHEAT
	NONE		STM	X	HW		ELEC		MOD VLV	HEATING
X	NONE		STM		HW		ELEC		MOD VLV	REHEAT
X	NONE		STM		HW		EVAP MEDIA		MOD VLV	HUMID.
X	NONE		DX		CW				MOD VLV	COOLING

OPERATION:

HOURS ON:	S	M	T	W	T	F	S	COMMENTS
PRESENT START TIME	**0**	**0**	**0**	**0**	**0**	**0**	**0**	TIMECLOCK?
PRESENT STOP TIME	**2400**	**2400**	**2400**	**2400**	**2400**	**2400**	**2400**	
REQUIRED START TIME								
REQUIRED STOP TIME								

MONTHS ON:

J	F	M	A	M	J	J	A	S	O	N	D
1	**1**	**1**	**1**	**0**	**0**	**0**	**0**	**0**	**1**	**1**	**1**

CONTROLS:

		PNEUMATIC		ELECTRIC		ELEC'NIC		DDC	COMMENTS
THERMOSTAT TYPE:		SINGLE STPT		DUAL SETPNT		SETBACK			
SPACE SETPOINT (°F):		OCC HEAT		UNOCC HEAT		OCC COOL		UNOCC COOL	
OTHER SETPOINTS (°F):		HOT DECK		COLD DECK		MIXED AIR		OTHER	
DAMPER CONTROL:	Y	MIN OA (Y/N)	Y	MAX OA (Y/N)	**Y**	RA (Y/N)	**Y**	EA (Y/N)	
		MA CONTROL		ECONO-DB		ECONO-ENT		OTHER	
DEMAND LIMIT:		(Y = YES ; N = NO)							
COMMENTS:									

E M C ENGINEERS, INC.

PROJECT: UMCS STUDY
CLIENT CONTRACT NO.: DACA01-94-D-0033
CLIENT PROJ. ENG: STEVE ROWLEY
LOCATION: FORT DRUM, NY BLDG: **10715**

EMC NO.: 1406-006
DATE: 17-NOV-94
PREPARED BY: **CSW**
CHECKED BY: BG
FILE: **10715HX1**

BOILER & CONVERTER SURVEY OBSERVATIONS

HX1	BOILER/CONVERTER NO.	**MER**	LOCATION (RM)
COGEN	SOURCE OF HEATING (PLANT)	PERIM. HEATING FOR BLDG	SERVES AREA

UNIT TYPE:

	STEAM		PSIG		HW		TEMP.	BOILER TYPE:
	NO.2 OIL		NO.6 OIL		N.GAS		ELEC	FUELS:
	STM/HW	X	HTHW/HW		HTHW/STM		OTHER	CONVERTER TYPE:
	SPACE HEAT		DHW		OTHER			USE:
COMMENT:							**100%**	% HTG AREA SERVED
								BB RADIATION ONLY

NAMEPLATE:

	MFG.		MODEL	**960000**	CAPACITY OUTPUT (BTUH)
					CAPACITY INPUT (BTUH)
	MFG.		MODEL		CAPACITY OUTPUT (BTUH)
					CAPACITY INPUT (BTUH)
3	HW PUMP 1 - HP		MFG.		MODEL
3	HW PUMP 2 - HP		MFG.		MODEL
	HW PUMP 3 - HP		MFG.		MODEL
COMMENT:					

OPERATION:

HOURS ON:	S	M	T	W	T	F	S	COMMENT
PRESENT START TIME	**0**	**0**	**0**	**0**	**0**	**0**	**0**	TIMECLOCK?
PRESENT STOP TIME	**2400**	**2400**	**2400**	**2400**	**2400**	**2400**	**2400**	
REQUIRED START TIME								
REQUIRED STOP TIME								

MONTHS ON:

J	F	M	A	M	J	J	A	S	O	N	D
1	**1**	**1**	**1**	**0**	**0**	**0**	**0**	**0**	**1**	**1**	**1**

CONTROLS:

		PNEUMATIC		ELECTRIC		ELEC'NIC	DDC	COMMENTS
SETPOINTS		PSIG		HW SUPPLY				
RESET CONTROL (oF):		HW HIGH		HW LOW		OA LOW	OA HIGH	
BURNER CONTROLS		O2 TRIM (Y/N)		OTHER				
COMMENTS:								

E M C ENGINEERS, INC.

PROJECT: UMCS STUDY
CLIENT CONTRACT NO.: DACA01-94-D-0033
CLIENT PROJ. ENG: STEVE ROWLEY
LOCATION: FORT DRUM, NY BLDG: **10715**

EMC NO.: 1406-006
DATE: 17-NOV-94
PREPARED BY: **CSW**
CHECKED BY: BG
FILE: **10715HX2**

BOILER & CONVERTER SURVEY OBSERVATIONS

HX2	BOILER/CONVERTER NO.	**MER**	LOCATION (RM)
COGEN	SOURCE OF HEATING (PLANT)	VENTILATION	SERVES AREA

UNIT TYPE:

	STEAM		PSIG		HW		TEMP.	BOILER TYPE:
	NO.2 OIL		NO.6 OIL		N.GAS		ELEC	FUELS:
	STM/HW	X	HTHW/HW		HTHW/STM		OTHER	CONVERTER TYPE:
	SPACE HEAT		DHW		OTHER			USE:
COMMENT:								% HTG AREA SERVED
								BB RADIATION ONLY

NAMEPLATE:

	MFG.		MODEL	**841800**	CAPACITY OUTPUT (BTUH)
					CAPACITY INPUT (BTUH)
	MFG.		MODEL		CAPACITY OUTPUT (BTUH)
					CAPACITY INPUT (BTUH)
10	HW PUMP 1 - HP		MFG.		MODEL
10	HW PUMP 2 - HP		MFG.		MODEL
	HW PUMP 3 - HP		MFG.		MODEL
COMMENT:					

OPERATION:

HOURS ON:	S	M	T	W	T	F	S	COMMENT
PRESENT START TIME	**0**	**0**	**0**	**0**	**0**	**0**	**0**	TIMECLOCK?
PRESENT STOP TIME	**2400**	**2400**	**2400**	**2400**	**2400**	**2400**	**2400**	
REQUIRED START TIME								
REQUIRED STOP TIME								

MONTHS ON:

J	F	M	A	M	J	J	A	S	O	N	D
1	**1**	**1**	**1**	**0**	**0**	**0**	**0**	**0**	**1**	**1**	**1**

CONTROLS:

		PNEUMATIC		ELECTRIC		ELEC'NIC		DDC	COMMENTS
SETPOINTS		PSIG		HW SUPPLY					
RESET CONTROL (oF):		HW HIGH		HW LOW		OA LOW		OA HIGH	
BURNER CONTROLS		O2 TRIM (Y/N)		OTHER					
COMMENTS:									

E M C ENGINEERS, INC.

PROJECT: UMCS STUDY
CLIENT CONTRACT NO.: DACA01-94-D-0033
CLIENT PROJ. ENG: STEVE ROWLEY
LOCATION: FORT DRUM, NY BLDG: **10715**

EMC NO.: 1406-006
DATE: 17-NOV-94
PREPARED BY: **CSW**
CHECKED BY: BG
FILE: **10715HX3**

BOILER & CONVERTER SURVEY OBSERVATIONS

HX3	BOILER/CONVERTER NO.		MER	LOCATION (RM)
COGEN	SOURCE OF HEATING (PLANT)		DOMESTIC H.W.	SERVES AREA

UNIT TYPE:

	STEAM		PSIG		HW		TEMP.	BOILER TYPE:
	NO.2 OIL		NO.6 OIL		N GAS		ELEC	FUELS:
	STM/HW	X	HTHW/HW		HTHW/STM		OTHER	CONVERTER TYPE:
	SPACE HEA	X	DHW		OTHER			USE:
COMMENT:								% HTG AREA SERVED
								BB RADIATION ONLY

NAMEPLATE:

	MFG.		MODEL	101000	CAPACITY OUTPUT (BTUH)
					CAPACITY INPUT (BTUH)
	MFG.		MODEL		CAPACITY OUTPUT (BTUH)
					CAPACITY INPUT (BTUH)
	HW PUMP 1 - HP		MFG.		MODEL
	HW PUMP 2 - HP		MFG.		MODEL
	HW PUMP 3 - HP		MFG.		MODEL
COMMENT:					

OPERATION:

HOURS ON:	S	M	T	W	T	F	S	COMMENT
PRESENT START TIME	0	0	0	0	0	0	0	TIMECLOCK?
PRESENT STOP TIME	2400	2400	2400	2400	2400	2400	2400	
REQUIRED START TIME								
REQUIRED STOP TIME								

MONTHS ON:

J	F	M	A	M	J	J	A	S	O	N	D
1	1	1	1	1	1	1	1	1	1	1	1

CONTROLS:

		PNEUMATIC		ELECTRIC		ELEC'NIC	DDC	COMMENTS
SETPOINTS		PSIG		HW SUPPLY				
RESET CONTROL (oF):		HW HIGH		HW LOW		OA LOW	OA HIGH	
BURNER CONTROLS		O2 TRIM (Y/N)		OTHER				
COMMENTS:								

FIELD SURVEY NOTES

BUILDING 10730

E M C ENGINEERS, INC.

PROJECT: UMCS STUDY
CLIENT CONTRACT NO.: DACA01-94-D-0033
CLIENT PROJ. ENG: STEVE ROWLEY
LOCATION: FORT DRUM, NY BLDG: MAIN EXCHANGE

EMC NO.: 1406-006
DATE: Feb-95
PREPARED BY: CSW/BG
CHECKED BY: BG
FILE: 10730BDS

VI. BUILDING DATA SURVEY OBSERVATIONS

BLDG NO: 10730 BLDG NAME: MAIN EXCHANGE

ZONE NO.	1	FUNCTION: MAIN STORE						
OCCUPANCY HOURS:	M-F	1000	TO	2000	SAT	1000	TO	2000
	SUN	1100	TO	1800				
PRESENT TEMP	WINTER OCC	68.0 øF		UNOCC	50.0 øF			
	SUMMER OCC	68.0 øF		UNOCC	50.0 øF			

ZONE NO.	2	FUNCTION: CLOTHING STORE						
OCCUPANCY HOURS:	M-F	1000	TO	1800	SAT	1000	TO	1700
	SUN	1100	TO	1600				
PRESENT TEMP	WINTER OCC	68.0 øF		UNOCC	50.0 øF			
	SUMMER OCC	68.0 øF		UNOCC	50.0 øF			

ZONE NO.	3	FUNCTION: FOOD COURT						
OCCUPANCY HOURS:	M-F	1030	TO	1900	SAT	1100	TO	1800
	SUN	1100	TO	1800				
PRESENT TEMP	WINTER OCC	øF		UNOCC	øF			
	SUMMER OCC	øF		UNOCC	øF			

REMARKS:

E M C ENGINEERS, INC.

PROJECT: UMCS STUDY
CLIENT CONTRACT NO.: DACA01-94-D-0033
CLIENT PROJ. ENG: STEVE ROWLEY
LOCATION: FORT DRUM, NY BLDG: EXCH MAIN RETAIL

EMC NO.: 1406-006
DATE: Dec-94
PREPARED BY: CSW
CHECKED BY: BG
FILE: 10730BDS

VI. BUILDING DATA SURVEY OBSERVATIONS

BLDG NO: 10730 BLDG NAME: EXCHANGE MAIN RETAIL

ZONE NO.		FUNCTION:						
OCCUPANCY HOURS:	M-F		TO		SAT		TO	
	SUN		TO					
PRESENT TEMP	WINTER OCC	øF		UNOCC	øF			
	SUMMER OCC	øF		UNOCC	øF			

ZONE NO.		FUNCTION:						
OCCUPANCY HOURS:	M-F		TO		SAT		TO	
	SUN		TO					
PRESENT TEMP	WINTER OCC	øF		UNOCC	øF			
	SUMMER OCC	øF		UNOCC	øF			

ZONE NO.		FUNCTION:						
OCCUPANCY HOURS:	M-F		TO		SAT		TO	
	SUN		TO					
PRESENT TEMP	WINTER OCC	øF		UNOCC	øF			
	SUMMER OCC	øF		UNOCC	øF			

REMARKS:

RELIEF FAN TOTAL POWER: 5.75 HP
EXHASUT FAN TOTAL POWER: 2.4 HP
UNIT HEATER TOTAL CAPACITY: 528.2 MBH
VAV HEATING COIL TOTAL CAPACTIY: 279.7 MBH

SCHEDULE OR CONDESING UNITS FOR REFRIGERATED ROOMS

NO.	CAP. (BTUH)	POW, (W)
RCU1	6304	1840
RCU2	9261	3818
RCU3	8859	3818

SCHEDULE OF UNIT COOLERS

NO.	LOCATION	BTU/H	WATTS
UC1	ROOM 413	6304	196
UC2	ROOM 414	9201	2933
UC3	ROOM 415	8859	2933

REFRIGERANT TO WATER HEAT EXCHANGERS

NO	BTU/H	WATTS
RWH1	20000	1080
RWH2	20000	1080

E M C ENGINEERS, INC.

PROJECT: UMCS STUDY
CLIENT CONTRACT NO.: DACA01-94-D-0033
CLIENT PROJ. ENG: STEVE ROWLEY
LOCATION: FORT DRUM, NY BLDG: **EXCH MAIN RETAIL**

EMC NO.: 1406-006
DATE: Dec-94
PREPARED BY: **CSW**
CHECKED BY: BG
FILE: **10730AH8**

AIR HANDLING UNIT SURVEY OBSERVATIONS

AHU8	AHU NO.	**MECH ROOM**	LOCATION (RM)
CH1,2	REF. SYS. SERVING AHU	**MCSS SALES**	SERVES AREA

UNIT TYPE:

X	SINGLE ZN		2-PIPE FC		4-PIPE FC		UNIT HTR		H&V
	MULTIZONE		DOUBLE DT		REHEAT		INDUCTION		VAV
	NUMBER OF ZONES				OTHER				
	COMMENT:								

NAMEPLATE:

					MFG.				MODEL
7.5	SUPPLY FAN HP				MFG.				MODEL
	RET/EXH FAN HP				MFG.				MODEL
4600	CFM-HTG	**4600**	CFM-CLG	**12%**	MIN %OA	**70%**	MAX %OA	**10.0%**	% HTG AREA SERVED
COMME									

COILS:

X	NONE		STM		HW		ELEC		MOD VLV	PREHEAT
	NONE		STM	X	HW		ELEC	X	MOD VLV	HEATING
X	NONE		STM		HW		ELEC		MOD VLV	REHEAT
X	NONE		STM		HW		EVAP MEDIA		MOD VLV	HUMID.
	NONE		DX	X	CW			X	MOD VLV	COOLING

OPERATION:

HOURS ON:	S	M	T	W	T	F	S	COMMENTS
PRESENT START TIME								TIMECLOCK?
PRESENT STOP TIME								
REQUIRED START TIME								
REQUIRED STOP TIME								

MONTHS ON:

J	F	M	A	M	J	J	A	S	O	N	D
1	1	1	1	1	1	1	1	1	1	1	1

CONTROLS:

	X	PNEUMATIC		ELECTRIC		ELEC'NIC		DDC	COMMENTS
THERMOSTAT TYPE:		SINGLE STPT		DUAL SETPNT		SETBACK			
SPACE SETPOINT (°F):		OCC HEAT		UNOCC HEAT		OCC COOL		UNOCC COOL	
OTHER SETPOINTS (°F):		HOT DECK		COLD DECK		MIXED AIR		OTHER	
DAMPER CONTROL:	Y	MIN OA (Y/N)	Y	MAX OA (Y/N)	Y	RA (Y/N)	Y	EA (Y/N)	
		MA CONTROL		ECONO-DB		ECONO-ENT		OTHER	
DEMAND LIMIT:	N	(Y = YES ; N = NO)							
COMMENTS:	**HEATING COIL CAPACITY: 111.1 MBH**								
	COOLING COIL CAPACITY: 214 MBH								

E M C ENGINEERS, INC.

PROJECT: UMCS STUDY
CLIENT CONTRACT NO.: DACA01-94-D-0033
CLIENT PROJ. ENG: STEVE ROWLEY
LOCATION: FORT DRUM, NY BLDG: **EXCH MAIN RETAIL**

EMC NO.: 1406-006
DATE: Dec-94
PREPARED BY: **CSW**
CHECKED BY: BG
FILE: **10730AH1**

AIR HANDLING UNIT SURVEY OBSERVATIONS

AHU1	AHU NO.	**MECH ROOM**	LOCATION (RM)
CH1,2	REF. SYS. SERVING AHU	**SALES**	SERVES AREA

UNIT TYPE:

X	SINGLE ZN		2-PIPE FC		4-PIPE FC		UNIT HTR		H&V
	MULTIZONE		DOUBLE DT		REHEAT		INDUCTION		VAV
	NUMBER OF ZONES				OTHER				
	COMMENT:								

NAMEPLATE:

					MFG.				MODEL
30.0	SUPPLY FAN HP				MFG.				MODEL
	RET/EXH FAN HP				MFG.				MODEL
19350	CFM-HTG	**19350**	CFM-CLG	**17%**	MIN %OA	**100%**	MAX %OA		% HTG AREA SERVED
COMME	MIN CFM 3290								

COILS:

X	NONE		STM		HW		ELEC		MOD VLV	PREHEAT
	NONE		STM	X	HW		ELEC	X	MOD VLV	HEATING
X	NONE		STM		HW		ELEC		MOD VLV	REHEAT
X	NONE		STM		HW		EVAP MEDIA		MOD VLV	HUMID.
	NONE		DX	X	CW			X	MOD VLV	COOLING

OPERATION:

HOURS ON:	S	M	T	W	T	F	S	COMMENTS
PRESENT START TIME								TIMECLOCK?
PRESENT STOP TIME								
REQUIRED START TIME								
REQUIRED STOP TIME								

MONTHS ON:

J	F	M	A	M	J	J	A	S	O	N	D
1	1	1	1	1	1	1	1	1	1	1	1

CONTROLS:

	X	PNEUMATIC		ELECTRIC		ELEC'NIC		DDC	COMMENTS
THERMOSTAT TYPE:		SINGLE STPT		DUAL SETPNT		SETBACK			
SPACE SETPOINT (°F):		OCC HEAT		UNOCC HEAT		OCC COOL		UNOCC COOL	
OTHER SETPOINTS (°F):		HOT DECK		COLD DECK		MIXED AIR		OTHER	
DAMPER CONTROL:	Y	MIN OA (Y/N)	Y	MAX OA (Y/N)	Y	RA (Y/N)	Y	EA (Y/N)	
		MA CONTROL		ECONO-DB		ECONO-ENT		OTHER	
DEMAND LIMIT:	N	(Y = YES ; N = NO)							

COMMENTS: **HEATING COIL CAPACITY: 595 MBH**
COOLING COIL CAPACITY: 870 MBH

E M C ENGINEERS, INC.

PROJECT: UMCS STUDY
CLIENT CONTRACT NO.: DACA01-94-D-0033
CLIENT PROJ. ENG: STEVE ROWLEY
LOCATION: FORT DRUM, NY BLDG: **EXCH MAIN RETAIL**

EMC NO.: 1406-006
DATE: Dec-94
PREPARED BY: **CSW**
CHECKED BY: BG
FILE: **10730AH2**

AIR HANDLING UNIT SURVEY OBSERVATIONS

AHU2	AHU NO.	**MECH ROOM**	LOCATION (RM)
CH1,2	REF. SYS. SERVING AHU	**MPA**	SERVES AREA

UNIT TYPE:

X	SINGLE ZN		2-PIPE FC		4-PIPE FC		UNIT HTR		H&V
	MULTIZONE		DOUBLE DT		REHEAT		INDUCTION		VAV
	NUMBER OF ZONES				OTHER				
	COMMENT:								

NAMEPLATE:

					MFG.				MODEL
10.0	SUPPLY FAN HP				MFG.				MODEL
	RET/EXH FAN HP				MFG.				MODEL
7800	CFM-HTG	**7800**	CFM-CLG	**18%**	MIN %OA	**100%**	MAX %OA		% HTG AREA SERVED
COMME									

COILS:

X	NONE		STM		HW		ELEC		MOD VLV	PREHEAT
	NONE		STM	X	HW		ELEC	X	MOD VLV	HEATING
X	NONE		STM		HW		ELEC		MOD VLV	REHEAT
X	NONE		STM		HW		EVAP MEDIA		MOD VLV	HUMID.
	NONE		DX	X	CW			X	MOD VLV	COOLING

OPERATION:

HOURS ON:	S	M	T	W	T	F	S	COMMENTS
PRESENT START TIME								TIMECLOCK?
PRESENT STOP TIME								
REQUIRED START TIME								
REQUIRED STOP TIME								

MONTHS ON:

J	F	M	A	M	J	J	A	S	O	N	D
1	**1**	**1**	**1**	**1**	**1**	**1**	**1**	**1**	**1**	**1**	**1**

CONTROLS:

	X	PNEUMATIC		ELECTRIC		ELEC'NIC		DDC	COMMENTS
THERMOSTAT TYPE:		SINGLE STPT		DUAL SETPNT		SETBACK			
SPACE SETPOINT (°F):		OCC HEAT		UNOCC HEAT		OCC COOL		UNOCC COOL	
OTHER SETPOINTS (°F):		HOT DECK		COLD DECK		MIXED AIR		OTHER	
DAMPER CONTROL:	Y	MIN OA (Y/N)	Y	MAX OA (Y/N)	Y	RA (Y/N)	Y	EA (Y/N)	
		MA CONTROL		ECONO-DB		ECONO-ENT		OTHER	
DEMAND LIMIT:	N	(Y = YES ; N = NO)							
COMMENTS:	**HEATING COIL CAPACITY: 323.5 MBH**								
	COOLING COIL CAPACITY: 199.6 MBH								

E M C ENGINEERS, INC.

PROJECT: UMCS STUDY
CLIENT CONTRACT NO.: DACA01-94-D-0033
CLIENT PROJ. ENG: STEVE ROWLEY
LOCATION: FORT DRUM, NY BLDG: **EXCH MAIN RETAIL**

EMC NO.: 1406-006
DATE: Dec-94
PREPARED BY: **CSW**
CHECKED BY: BG
FILE: **10730AH3**

AIR HANDLING UNIT SURVEY OBSERVATIONS

AHU3	AHU NO.	**MECH ROOM**	LOCATION (RM)
CH1,2	REF. SYS. SERVING AHU	**ADMIN**	SERVES AREA

UNIT TYPE:

X	SINGLE ZN		2-PIPE FC		4-PIPE FC		UNIT HTR		H&V
	MULTIZONE		DOUBLE DT		REHEAT		INDUCTION		VAV
	NUMBER OF ZONES				OTHER				
	COMMENT:								

NAMEPLATE:

					MFG.				MODEL
5.0	SUPPLY FAN HP				MFG.				MODEL
	RET/EXH FAN HP				MFG.				MODEL
	CFM-HTG	**4000**	CFM-CLG	**12%**	MIN %OA	**100%**	MAX %OA		% HTG AREA SERVED
COMME									

COILS:

X	NONE		STM		HW		ELEC		MOD VLV	PREHEAT
X	NONE		STM		HW		ELEC		MOD VLV	HEATING
X	NONE		STM		HW		ELEC		MOD VLV	REHEAT
X	NONE		STM		HW		EVAP MEDIA		MOD VLV	HUMID.
	NONE		DX	X	CW			X	MOD VLV	COOLING

OPERATION:

HOURS ON:	S	M	T	W	T	F	S	COMMENTS
PRESENT START TIME								TIMECLOCK?
PRESENT STOP TIME								
REQUIRED START TIME								
REQUIRED STOP TIME								

MONTHS ON:

J	F	M	A	M	J	J	A	S	O	N	D
1	**1**	**1**	**1**	**1**	**1**	**1**	**1**	**1**	**1**	**1**	**1**

CONTROLS:

	X	PNEUMATIC		ELECTRIC		ELEC'NIC		DDC	COMMENTS
THERMOSTAT TYPE:		SINGLE STPT		DUAL SETPNT		SETBACK			
SPACE SETPOINT (°F):		OCC HEAT		UNOCC HEAT		OCC COOL		UNOCC COOL	
OTHER SETPOINTS (°F):		HOT DECK		COLD DECK		MIXED AIR		OTHER	
DAMPER CONTROL:	Y	MIN OA (Y/N)	Y	MAX OA (Y/N)	Y	RA (Y/N)	Y	EA (Y/N)	
		MA CONTROL		ECONO-DB		ECONO-ENT		OTHER	
DEMAND LIMIT:	N	(Y = YES ; N = NO)							

COMMENTS:

COOLING COIL CAPACITY: 120.5 MBH

E M C ENGINEERS, INC.

PROJECT: UMCS STUDY
CLIENT CONTRACT NO.: DACA01-94-D-0033
CLIENT PROJ. ENG: STEVE ROWLEY
LOCATION: FORT DRUM, NY BLDG: **EXCH MAIN RETAIL**

EMC NO.: 1406-006
DATE: Dec-94
PREPARED BY: **CSW**
CHECKED BY: BG
FILE: **10730AH4**

AIR HANDLING UNIT SURVEY OBSERVATIONS

AHU4	AHU NO.	**MECH ROOM**	LOCATION (RM)
CH1,2	REF. SYS. SERVING AHU	**FAST FOOD**	SERVES AREA

UNIT TYPE:

X	SINGLE ZN		2-PIPE FC		4-PIPE FC		UNIT HTR		H&V
	MULTIZONE		DOUBLE DT		REHEAT		INDUCTION		VAV
	NUMBER OF ZONES				OTHER				
	COMMENT:								

NAMEPLATE:

					MFG.				MODEL
10.0	SUPPLY FAN HP				MFG.				MODEL
	RET/EXH FAN HP				MFG.				MODEL
7480	CFM-HTG	**7480**	CFM-CLG	**6%**	MIN %OA	**97%**	MAX %OA		% HTG AREA SERVED
COMME									

COILS:

X	NONE		STM		HW		ELEC		MOD VLV	PREHEAT
	NONE		STM	X	HW		ELEC	X	MOD VLV	HEATING
X	NONE		STM		HW		ELEC		MOD VLV	REHEAT
X	NONE		STM		HW		EVAP MEDIA		MOD VLV	HUMID.
	NONE		DX	X	CW			X	MOD VLV	COOLING

OPERATION:

HOURS ON:	S	M	T	W	T	F	S	COMMENTS
PRESENT START TIME								TIMECLOCK?
PRESENT STOP TIME								
REQUIRED START TIME								
REQUIRED STOP TIME								

MONTHS ON:

J	F	M	A	M	J	J	A	S	O	N	D
1	**1**	**1**	**1**	**1**	**1**	**1**	**1**	**1**	**1**	**1**	**1**

CONTROLS:

	X	PNEUMATIC		ELECTRIC		ELEC'NIC		DDC	COMMENTS
THERMOSTAT TYPE:		SINGLE STPT		DUAL SETPNT		SETBACK			
SPACE SETPOINT (°F):		OCC HEAT		UNOCC HEAT		OCC COOL		UNOCC COOL	
OTHER SETPOINTS (°F):		HOT DECK		COLD DECK		MIXED AIR		OTHER	
DAMPER CONTROL:	Y	MIN OA (Y/N)	Y	MAX OA (Y/N)	Y	RA (Y/N)	Y	EA (Y/N)	
		MA CONTROL		ECONO-DB		ECONO-ENT		OTHER	
DEMAND LIMIT:	N	(Y = YES ; N = NO)							
COMMENTS:	**HEATING COIL CAPACITY: 189.4 MBH**								
	COOLING COIL CAPACITY: 120.5 MBH								

E M C ENGINEERS, INC.

PROJECT: UMCS STUDY
CLIENT CONTRACT NO.: DACA01-94-D-0033
CLIENT PROJ. ENG: STEVE ROWLEY
LOCATION: FORT DRUM, NY BLDG: **EXCH MAIN RETAIL**

EMC NO.: 1406-006
DATE: Dec-94
PREPARED BY: **CSW**
CHECKED BY: BG
FILE: **10730AH5**

AIR HANDLING UNIT SURVEY OBSERVATIONS

AHU5	AHU NO.	**MECH ROOM**	LOCATION (RM)
CH1,2	REF. SYS. SERVING AHU	**MALL**	SERVES AREA

UNIT TYPE:

X	SINGLE ZN		2-PIPE FC		4-PIPE FC		UNIT HTR		H&V
	MULTIZONE		DOUBLE DT		REHEAT		INDUCTION		VAV
	NUMBER OF ZONES				OTHER				
	COMMENT:								

NAMEPLATE:

					MFG.				MODEL
15.0	SUPPLY FAN HP				MFG.				MODEL
	RET/EXH FAN HP				MFG.				MODEL
0	CFM-HTG	**8500**	CFM-CLG	**10%**	MIN %OA	**97%**	MAX %OA		% HTG AREA SERVED
COMME									

COILS:

X	NONE		STM		HW		ELEC		MOD VLV	PREHEAT
X	NONE		STM		HW		ELEC		MOD VLV	HEATING
X	NONE		STM		HW		ELEC		MOD VLV	REHEAT
X	NONE		STM		HW		EVAP MEDIA		MOD VLV	HUMID.
	NONE		DX	X	CW			X	MOD VLV	COOLING

OPERATION:

HOURS ON:	S	M	T	W	T	F	S	COMMENTS
PRESENT START TIME								TIMECLOCK?
PRESENT STOP TIME								
REQUIRED START TIME								
REQUIRED STOP TIME								

MONTHS ON:

J	F	M	A	M	J	J	A	S	O	N	D
1	1	1	1	1	1	1	1	1	1	1	1

CONTROLS:

	X	PNEUMATIC		ELECTRIC		ELEC'NIC		DDC	COMMENTS
THERMOSTAT TYPE:		SINGLE STPT		DUAL SETPNT		SETBACK			
SPACE SETPOINT (°F):		OCC HEAT		UNOCC HEAT		OCC COOL		UNOCC COOL	
OTHER SETPOINTS (°F):		HOT DECK		COLD DECK		MIXED AIR		OTHER	
DAMPER CONTROL:	Y	MIN OA (Y/N)	Y	MAX OA (Y/N)	Y	RA (Y/N)	Y	EA (Y/N)	
		MA CONTROL		ECONO-DB		ECONO-ENT		OTHER	
DEMAND LIMIT:	N	(Y = YES ; N = NO)							

COMMENTS:

COOLING COIL CAPACITY: 307.1 MBH

E M C ENGINEERS, INC.

PROJECT: UMCS STUDY
CLIENT CONTRACT NO.: DACA01-94-D-0033
CLIENT PROJ. ENG: STEVE ROWLEY
LOCATION: FORT DRUM, NY BLDG: **EXCH MAIN RETAIL**

EMC NO.: 1406-006
DATE: Dec-94
PREPARED BY: **CSW**
CHECKED BY: BG
FILE: **10730AH6**

AIR HANDLING UNIT SURVEY OBSERVATIONS

AHU6	AHU NO.	**MECH ROOM**	LOCATION (RM)
CH1,2	REF. SYS. SERVING AHU	**BEAUTY**	SERVES AREA

UNIT TYPE:

X	SINGLE ZN		2-PIPE FC		4-PIPE FC		UNIT HTR		H&V
	MULTIZONE		DOUBLE DT		REHEAT		INDUCTION		VAV
	NUMBER OF ZONES				OTHER				
	COMMENT:								

NAMEPLATE:

					MFG.				MODEL
3.0	SUPPLY FAN HP				MFG.				MODEL
	RET/EXH FAN HP				MFG.				MODEL
1670	CFM-HTG	**1670**	CFM-CLG	**12%**	MIN %OA	**100%**	MAX %OA	**10.0%**	% HTG AREA SERVED
COMME									

COILS:

X	NONE		STM		HW		ELEC		MOD VLV	PREHEAT
	NONE		STM	X	HW		ELEC	X	MOD VLV	HEATING
X	NONE		STM		HW		ELEC		MOD VLV	REHEAT
X	NONE		STM		HW		EVAP MEDIA		MOD VLV	HUMID.
	NONE		DX	X	CW			X	MOD VLV	COOLING

OPERATION:

HOURS ON:	S	M	T	W	T	F	S	COMMENTS
PRESENT START TIME								TIMECLOCK?
PRESENT STOP TIME								
REQUIRED START TIME								
REQUIRED STOP TIME								

MONTHS ON:

J	F	M	A	M	J	J	A	S	O	N	D
1	1	1	1	1	1	1	1	1	1	1	1

CONTROLS:

	X	PNEUMATIC		ELECTRIC		ELEC'NIC		DDC	COMMENTS
THERMOSTAT TYPE:		SINGLE STPT		DUAL SETPNT		SETBACK			
SPACE SETPOINT (°F):		OCC HEAT		UNOCC HEAT		OCC COOL		UNOCC COOL	
OTHER SETPOINTS (°F):		HOT DECK		COLD DECK		MIXED AIR		OTHER	
DAMPER CONTROL:	Y	MIN OA (Y/N)	Y	MAX OA (Y/N)	Y	RA (Y/N)	Y	EA (Y/N)	
		MA CONTROL		ECONO-DB		ECONO-ENT		OTHER	
DEMAND LIMIT:	N	(Y = YES ; N = NO)							

COMMENTS: **HEATING COIL CAPACITY: 30.7 MBH**
COOLING COIL CAPACITY: 71 MBH

E M C ENGINEERS, INC.

PROJECT: UMCS STUDY
CLIENT CONTRACT NO.: DACA01-94-D-0033
CLIENT PROJ. ENG: STEVE ROWLEY
LOCATION: FORT DRUM, NY BLDG: **EXCH MAIN RETAIL**

EMC NO.: 1406-006
DATE: Dec-94
PREPARED BY: **CSW**
CHECKED BY: BG
FILE: **10730AH7**

AIR HANDLING UNIT SURVEY OBSERVATIONS

AHU7	AHU NO.	**MECH ROOM**	LOCATION (RM)
CH1,2	REF. SYS. SERVING AHU	**BARBER**	SERVES AREA

UNIT TYPE:

X	SINGLE ZN		2-PIPE FC		4-PIPE FC		UNIT HTR		H&V
	MULTIZONE		DOUBLE DT		REHEAT		INDUCTION		VAV
	NUMBER OF ZONES				OTHER				
	COMMENT:								

NAMEPLATE:

					MFG.				MODEL
2.0	SUPPLY FAN HP				MFG.				MODEL
	RET/EXH FAN HP				MFG.				MODEL
900	CFM-HTG	**1000**	CFM-CLG	**11%**	MIN %OA	**100%**	MAX %OA	**10.0%**	% HTG AREA SERVED
COMME									

COILS:

X	NONE		STM		HW		ELEC		MOD VLV	PREHEAT
	NONE		STM	X	HW		ELEC	X	MOD VLV	HEATING
X	NONE		STM		HW		ELEC		MOD VLV	REHEAT
X	NONE		STM		HW		EVAP MEDIA		MOD VLV	HUMID.
	NONE		DX	X	CW			X	MOD VLV	COOLING

OPERATION:

HOURS ON:	S	M	T	W	T	F	S	COMMENTS
PRESENT START TIME								TIMECLOCK?
PRESENT STOP TIME								
REQUIRED START TIME								
REQUIRED STOP TIME								

MONTHS ON:

J	F	M	A	M	J	J	A	S	O	N	D
1	**1**	**1**	**1**	**1**	**1**	**1**	**1**	**1**	**1**	**1**	**1**

CONTROLS:

	X	PNEUMATIC		ELECTRIC		ELEC'NIC		DDC	COMMENTS
THERMOSTAT TYPE:		SINGLE STPT		DUAL SETPNT		SETBACK			
SPACE SETPOINT (°F):		OCC HEAT		UNOCC HEAT		OCC COOL		UNOCC COOL	
OTHER SETPOINTS (°F):		HOT DECK		COLD DECK		MIXED AIR		OTHER	
DAMPER CONTROL:	Y	MIN OA (Y/N)	Y	MAX OA (Y/N)	Y	RA (Y/N)	Y	EA (Y/N)	
		MA CONTROL		ECONO-DB		ECONO-ENT		OTHER	
DEMAND LIMIT:	N	(Y = YES ; N = NO)							

COMMENTS: **HEATING COIL CAPACITY: 22.45 MBH**

COOLING COIL CAPACITY: 20.9 MBH

E M C ENGINEERS, INC.

PROJECT: UMCS STUDY
CLIENT CONTRACT NO.: DACA01-94-D-0033
CLIENT PROJ. ENG: STEVE ROWLEY
LOCATION: FORT DRUM, NY BLDG: **EXCH MAIN RETAIL**

EMC NO.: 1406-006
DATE: Dec-94
PREPARED BY: **CSW**
CHECKED BY: BG
FILE: **10730A10**

AIR HANDLING UNIT SURVEY OBSERVATIONS

AHU10	AHU NO.	**MECH ROOM**	LOCATION (RM)
CH1,2	REF. SYS. SERVING AHU	**GARDEN SALES**	SERVES AREA

UNIT TYPE:

X	SINGLE ZN		2-PIPE FC		4-PIPE FC		UNIT HTR		H&V
	MULTIZONE		DOUBLE DT		REHEAT		INDUCTION		VAV
	NUMBER OF ZONES				OTHER				
	COMMENT:								

NAMEPLATE:

					MFG.				MODEL
2.0	SUPPLY FAN HP				MFG.				MODEL
	RET/EXH FAN HP				MFG.				MODEL
1800	CFM-HTG	**1800**	CFM-CLG	**10%**	MIN %OA	**100%**	MAX %OA	**10.0%**	% HTG AREA SERVED
COMME									

COILS:

X	NONE		STM		HW		ELEC		MOD VLV	PREHEAT
	NONE		STM	X	HW		ELEC	X	MOD VLV	HEATING
X	NONE		STM		HW		ELEC		MOD VLV	REHEAT
X	NONE		STM		HW		EVAP MEDIA		MOD VLV	HUMID.
	NONE		DX	X	CW			X	MOD VLV	COOLING

OPERATION:

HOURS ON:	S	M	T	W	T	F	S	COMMENTS
PRESENT START TIME								TIMECLOCK?
PRESENT STOP TIME								
REQUIRED START TIME								
REQUIRED STOP TIME								

MONTHS ON:

J	F	M	A	M	J	J	A	S	O	N	D
1	**1**	**1**	**1**	**1**	**1**	**1**	**1**	**1**	**1**	**1**	**1**

CONTROLS:

	X	PNEUMATIC		ELECTRIC		ELEC'NIC		DDC	COMMENTS
THERMOSTAT TYPE:		SINGLE STPT		DUAL SETPNT		SETBACK			
SPACE SETPOINT (°F):		OCC HEAT		UNOCC HEAT		OCC COOL		UNOCC COOL	
OTHER SETPOINTS (°F):		HOT DECK		COLD DECK		MIXED AIR		OTHER	
DAMPER CONTROL:	Y	MIN OA (Y/N)	Y	MAX OA (Y/N)	Y	RA (Y/N)	Y	EA (Y/N)	
		MA CONTROL		ECONO-DB		ECONO-ENT		OTHER	
DEMAND LIMIT:	N	(Y = YES ; N = NO)							

COMMENTS: **HEATING COIL CAPACITY: 65.5 MBH**
COOLING COIL CAPACITY: 62.7 MBH

E M C ENGINEERS, INC.

PROJECT: UMCS STUDY
CLIENT CONTRACT NO.: DACA01-94-D-0033
CLIENT PROJ. ENG: STEVE ROWLEY
LOCATION: FORT DRUM, NY BLDG: **EXCH MAIN RETAIL**

EMC NO.: 1406-006
DATE: Dec-94
PREPARED BY: **CSW**
CHECKED BY: BG
FILE: **10730A12**

REFRIGERATION EQUIPMENT SURVEY OBSERVATIONS

A1,2	CHILLER/COMPRESSOR NO.	**OUTSIDE MECH ROO**	LOCATION (RM)

UNIT TYPE:

	CENTRIFUGAL WITH WATER SIDE COOLING TOWER		OTHER
	RECIPROCATING WITH WATER SIDE COOLING TOWER		AHU'S SERVED
	RECIPROCATING WITH AIR COOLED CONDENSING UNIT		AC1-10
	ABSORBTION WITH WATER SIDE COOLING TOWER		
X	AIR COOLED CONDENSING UNIT		
	CHW X DX OTHER		

NAMEPLATE:

CHILLER		MFG.				MODEL				SERIAL NO.
	VOLTS		AMPS		PH		HZ		CAPACITY (TONS)	
TOWER		MFG.				MODEL				# OF FANS
	VOLTS		AMPS		PH		HZ		HP each	
CW PUMP		MFG.				MODEL				SERIAL NO.
	VOLTS		AMPS		PH		HZ		HP	
CNW PUMP		MFG.				MODEL				SERIAL NO.
	VOLTS		AMPS		PH		HZ	22.5	HP	
COMMENTS:										

OPERATION:

HOURS ON:	S	M	T	W	T	F	S	COMMENT
PRESENT START TIME								TIMECLOCK?
PRESENT STOP TIME								
REQUIRED START TIME								
REQUIRED STOP TIME								

MONTHS ON:

J	F	M	A	M	J	J	A	S	O	N	D
0	0	0	0	1	1	1	1	1	0	0	0

CONTROLS:

	X	PNEUMATIC		ELECTRIC		ELEC'NIC		DDC	COMMENTS
SETPOINTS		CWS (oF)		CWR (oF)		CNWS (oF)		CNWR (oF)	
PANEL INDICATORS									
- PRESSURE		LITE-HI		LITE-LOW		GAUGES			
- TEMPERATURE		LITE-HI		LITE-LOW		GAUGES			
- OTHER									
COMMENTS:									

E M C ENGINEERS, INC.

PROJECT: UMCS STUDY
CLIENT CONTRACT NO.: DACA01-94-D-0033
CLIENT PROJ. ENG: STEVE ROWLEY
LOCATION: FORT DRUM, NY BLDG: **EXCH MAIN RETAIL**

EMC NO.: 1406-006
DATE: Dec-94
PREPARED BY: **CSW**
CHECKED BY: BG
FILE: **10730C12**

REFRIGERATION EQUIPMENT SURVEY OBSERVATIONS

CH1,2	CHILLER/COMPRESSOR NO.	MECH RM	LOCATION (RM)

UNIT TYPE:

	CENTRIFUGAL WITH WATER SIDE COOLING TOWER		OTHER
	RECIPROCATING WITH WATER SIDE COOLING TOWER		AHU'S SERVED
	RECIPROCATING WITH AIR COOLED CONDENSING UNIT		ACC1&2
	ABSORBTION WITH WATER SIDE COOLING TOWER		
	AIR COOLED CONDENSING UNIT		

X	CHW		DX		OTHER		

NAMEPLATE:

CHILLER		MFG.				MODEL			SERIAL NO.
	VOLTS		AMPS		PH		HZ	190	CAPACITY (TONS)
TOWER		MFG.				MODEL			# OF FANS
	VOLTS		AMPS		PH		HZ		HP each
CW PUMP		MFG.				MODEL			SERIAL NO.
	VOLTS		AMPS		PH		HZ		HP
CNW PUMP		MFG.				MODEL			SERIAL NO.
	VOLTS		AMPS		PH		HZ		HP
COMMENTS:									

OPERATION:

HOURS ON:	S	M	T	W	T	F	S	COMMENT
PRESENT START TIME								TIMECLOCK?
PRESENT STOP TIME								
REQUIRED START TIME								
REQUIRED STOP TIME								

MONTHS ON:

J	F	M	A	M	J	J	A	S	O	N	D
0	0	0	0	1	1	1	1	1	0	0	0

CONTROLS:

	X	PNEUMATIC		ELECTRIC		ELEC'NIC		DDC	COMMENTS
SETPOINTS		CWS (oF)		CWR (oF)		CNWS (oF)		CNWR (oF)	
PANEL INDICATORS									
- PRESSURE		LITE-HI		LITE-LOW		GAUGES			
- TEMPERATURE		LITE-HI		LITE-LOW		GAUGES			
- OTHER									
COMMENTS:	**ACC1&2 REJECT HEAT FROM CHILLERS**								

E M C ENGINEERS, INC.

PROJECT: UMCS STUDY
CLIENT CONTRACT NO.: DACA01-94-D-0033
CLIENT PROJ. ENG: STEVE ROWLEY
LOCATION: FORT DRUM, NY BLDG: **EXCH MAIN RETAIL**

EMC NO.: 1406-006
DATE: Dec-94
PREPARED BY: **CSW**
CHECKED BY: BG
FILE: **10730HE1**

BOILER & CONVERTER SURVEY OBSERVATIONS

HE1	BOILER/CONVERTER NO.	**MECH ROOM**	LOCATION (RM)
COGEN PLANT	SOURCE OF HEATING (PLANT)	**WHOLE BLDG**	SERVES AREA

UNIT TYPE:

	STEAM		PSIG		HW		TEMP.		BOILER TYPE:
	NO.2 OIL		NO.6 OIL		N.GAS		ELEC		FUELS:
	STM/HW	X	HTHW/HW		HTHW/STM		OTHER		CONVERTER TYPE:
	SPACE HEAT		DHW		OTHER				USE:
COMMENT:							**10%**	% HTG AREA SERVED	
								BB RADIATION ONLY	

NAMEPLATE:

	MFG.		MODEL	**2101000**	CAPACITY OUTPUT (BTUH)
					CAPACITY INPUT (BTUH)
	MFG.		MODEL		CAPACITY OUTPUT (BTUH)
					CAPACITY INPUT (BTUH)
10	HW PUMP 1 - HP		MFG.		MODEL
	HW PUMP 2 - HP		MFG.		MODEL
	HW PUMP 3 - HP		MFG.		MODEL
COMMENT:					

OPERATION:

HOURS ON:	S	M	T	W	T	F	S	COMMENT
PRESENT START TIME								TIMECLOCK?
PRESENT STOP TIME								
REQUIRED START TIME								
REQUIRED STOP TIME								

MONTHS ON:

J	F	M	A	M	J	J	A	S	O	N	D
1	**1**	**1**	**1**	**0**	**0**	**0**	**0**	**1**	**1**	**1**	**1**

CONTROLS:

	X	PNEUMATIC		ELECTRIC		ELEC'NIC		DDC	COMMENTS
SETPOINTS		PSIG		HW SUPPLY					
RESET CONTROL (oF):		HW HIGH		HW LOW		OA LOW		OA HIGH	
BURNER CONTROLS		O2 TRIM (Y/N)		OTHER					
COMMENTS:									

E M C ENGINEERS, INC.

PROJECT: UMCS STUDY
CLIENT CONTRACT NO.: DACA01-94-D-0033
CLIENT PROJ. ENG: STEVE ROWLEY
LOCATION: FORT DRUM, NY BLDG: **EXCH MAIN RETAIL**

EMC NO.: 1406-006
DATE: Dec-94
PREPARED BY: **CSW**
CHECKED BY: BG
FILE: **10730HE1**

BOILER & CONVERTER SURVEY OBSERVATIONS

HE1	BOILER/CONVERTER NO.	**MECH ROOM**	LOCATION (RM)
COGEN PLANT	SOURCE OF HEATING (PLANT)	**WHOLE BLDG**	SERVES AREA

UNIT TYPE:

	STEAM		PSIG		HW		TEMP.		BOILER TYPE:
	NO.2 OIL		NO.6 OIL		N.GAS		ELEC		FUELS:
	STM/HW	X	HTHW/HW		HTHW/STM		OTHER		CONVERTER TYPE:
	SPACE HEAT		DHW		OTHER				USE:

COMMENT:

10% % HTG AREA SERVED
BB RADIATION ONLY

NAMEPLATE:

	MFG.		MODEL	**2101000**	CAPACITY OUTPUT (BTUH)
					CAPACITY INPUT (BTUH)
	MFG.		MODEL		CAPACITY OUTPUT (BTUH)
					CAPACITY INPUT (BTUH)
10	HW PUMP 1 - HP		MFG.		MODEL
	HW PUMP 2 - HP		MFG.		MODEL
	HW PUMP 3 - HP		MFG.		MODEL

COMMENT:

OPERATION:

HOURS ON:	S	M	T	W	T	F	S	COMMENT
PRESENT START TIME								TIMECLOCK?
PRESENT STOP TIME								
REQUIRED START TIME								
REQUIRED STOP TIME								

MONTHS ON:

J	F	M	A	M	J	J	A	S	O	N	D
1	**1**	**1**	**1**	**0**	**0**	**0**	**0**	**1**	**1**	**1**	**1**

CONTROLS:

	X	PNEUMATIC		ELECTRIC		ELEC'NIC		DDC	COMMENTS
SETPOINTS		PSIG		HW SUPPLY					
RESET CONTROL (oF):		HW HIGH		HW LOW		OA LOW		OA HIGH	
BURNER CONTROLS		O2 TRIM (Y/N)		OTHER					

COMMENTS:

FIELD SURVEY NOTES

BUILDING 10745

E M C ENGINEERS, INC.

PROJECT: UMCS STUDY
CLIENT CONTRACT NO.: DACA01-94-D-0033
CLIENT PROJ. ENG: STEVE ROWLEY
LOCATION: FORT DRUM, NY BLDG: 10745

EMC NO.: 1406-006
DATE: Dec-94
PREPARED BY: CSW
CHECKED BY:
FILE: 10745BDS

VI. BUILDING DATA SURVEY OBSERVATIONS

BLDG NO: 10745 BLDG NAME: CHILD SUPPORT CENTER

ZONE NO.	1	FUNCTION: WHOLE BUILDING						
OCCUPANCY HOURS:	M-F	700	TO	1900	SAT	0	TO	0
	SUN	0	TO	0				
PRESENT TEMP	WINTER OCC	74.0 øF		UNOCC	74.0 øF			
	SUMMER OCC	78.0 øF		UNOCC	85.0 øF			

ZONE NO.		FUNCTION:						
OCCUPANCY HOURS:	M-F		TO		SAT		TO	
	SUN		TO					
PRESENT TEMP	WINTER OCC	øF		UNOCC	øF			
	SUMMER OCC	øF		UNOCC	øF			

ZONE NO.		FUNCTION:						
OCCUPANCY HOURS:	M-F		TO		SAT		TO	
	SUN		TO					
PRESENT TEMP	WINTER OCC	øF		UNOCC	øF			
	SUMMER OCC	øF		UNOCC	øF			

REMARKS:

E M C ENGINEERS, INC.

PROJECT: UMCS STUDY
CLIENT CONTRACT NO.: DACA01-94-D-0033
CLIENT PROJ. ENG: STEVE ROWLEY
LOCATION: FORT DRUM, NY BLDG: **10745**

EMC NO.: 1406-006
DATE: Dec-94
PREPARED BY: **CSW**
CHECKED BY:
FILE: **10745HX1**

BOILER & CONVERTER SURVEY OBSERVATIONS

HX-1	BOILER/CONVERTER NO.	**MECH ROOM**	LOCATION (RM)
COGEN PLANT	SOURCE OF HEATING (PLANT)	**WHOLE BLDG**	SERVES AREA

UNIT TYPE:

	STEAM		PSIG		HW		TEMP.	BOILER TYPE:
	NO.2 OIL		NO.6 OIL		N.GAS		ELEC	FUELS:
	STM/HW	X	HTHW/HW		HTHW/STM		OTHER	CONVERTER TYPE:
X	SPACE HEA	X	DHW		OTHER			USE:
COMMENT:							**26%**	% HTG AREA SERVED
								BB RADIATION ONLY

NAMEPLATE:

	MFG.		MODEL	**2155000**	CAPACITY OUTPUT (BTUH)
					CAPACITY INPUT (BTUH)
	MFG.		MODEL		CAPACITY OUTPUT (BTUH)
					CAPACITY INPUT (BTUH)
1	HW PUMP 1 - HP		MFG.		MODEL
1	HW PUMP 2 - HP		MFG.		MODEL
	HW PUMP 3 - HP		MFG.		MODEL
COMMENT:					

OPERATION:

HOURS ON:	S	M	T	W	T	F	S	COMMENT
PRESENT START TIME	**0**	**0**	**0**	**0**	**0**	**0**	**0**	TIMECLOCK?
PRESENT STOP TIME	**2400**	**2400**	**2400**	**2400**	**2400**	**2400**	**2400**	
REQUIRED START TIME	**0**	**0**	**0**	**0**	**0**	**0**	**0**	
REQUIRED STOP TIME	**2400**	**2400**	**2400**	**2400**	**2400**	**2400**	**2400**	

MONTHS ON:

J	F	M	A	M	J	J	A	S	O	N	D
1	**1**	**1**	**1**	**0**	**0**	**0**	**0**	**0**	**1**	**1**	**1**

CONTROLS:

	X	PNEUMATIC		ELECTRIC		ELEC'NIC		DDC	COMMENTS
SETPOINTS		PSIG		HW SUPPLY					
RESET CONTROL (oF):		HW HIGH		HW LOW		OA LOW		OA HIGH	
BURNER CONTROLS		O2 TRIM (Y/N)		OTHER					
COMMENTS:									

E M C ENGINEERS, INC.

PROJECT: UMCS STUDY
CLIENT CONTRACT NO.: DACA01-94-D-0033
CLIENT PROJ. ENG: STEVE ROWLEY
LOCATION: FORT DRUM, NY BLDG: **10745**

EMC NO.: 1406-006
DATE: Dec-94
PREPARED BY: **CSW**
CHECKED BY:
FILE: **10745HV1**

AIR HANDLING UNIT SURVEY OBSERVATIONS

HV-1	AHU NO.	**MECH ROOM**	LOCATION (RM)
	REF. SYS. SERVING AHU		SERVES AREA

UNIT TYPE:

	SINGLE ZN		2-PIPE FC		4-PIPE FC		UNIT HTR	X	H&V
	MULTIZONE		DOUBLE DT		REHEAT		INDUCTION		VAV
	NUMBER OF ZONES				OTHER				
	COMMENT:								

NAMEPLATE:

					MFG.				MODEL
2.0	SUPPLY FAN HP				MFG.				MODEL
	RET/EXH FAN HP				MFG.				MODEL
3445	CFM-HTG		CFM-CLG		MIN %OA		MAX %OA		% HTG AREA SERVED
COMMENT:									

COILS:

	NONE		STM		HW		ELEC		MOD VLV	PREHEAT
	NONE		STM	X	HW		ELEC		MOD VLV	HEATING
	NONE		STM		HW		ELEC		MOD VLV	REHEAT
	NONE		STM		HW		EVAP MEDIA		MOD VLV	HUMID.
	NONE		DX		CW				MOD VLV	COOLING

OPERATION:

HOURS ON:	S	M	T	W	T	F	S	COMMENTS
PRESENT START TIME	**0**	**0**	**0**	**0**	**0**	**0**	**0**	TIMECLOCK?
PRESENT STOP TIME	**2400**	**2400**	**2400**	**2400**	**2400**	**2400**	**2400**	
REQUIRED START TIME	**0**	**700**	**700**	**700**	**700**	**700**	**0**	
REQUIRED STOP TIME	**0**	**1900**	**1900**	**1900**	**1900**	**1900**	**0**	

MONTHS ON:

J	F	M	A	M	J	J	A	S	O	N	D
1	**1**	**1**	**1**	**1**	**1**	**1**	**1**	**1**	**1**	**1**	**1**

CONTROLS:

	X	PNEUMATIC		ELECTRIC		ELEC'NIC		DDC	COMMENTS
THERMOSTAT TYPE:		SINGLE STPT		DUAL SETPNT		SETBACK			
SPACE SETPOINT (°F):		OCC HEAT		UNOCC HEAT		OCC COOL		UNOCC COOL	
OTHER SETPOINTS (°F):		HOT DECK		COLD DECK		MIXED AIR		OTHER	
DAMPER CONTROL:	**Y**	MIN OA (Y/N)	**Y**	MAX OA (Y/N)	**Y**	RA (Y/N)	**N**	EA (Y/N)	
		MA CONTROL		ECONO-DB		ECONO-ENT		OTHER	
DEMAND LIMIT:		(Y = YES ; N = NO)							
COMMENTS:									

E M C ENGINEERS, INC.

PROJECT: UMCS STUDY
CLIENT CONTRACT NO.: DACA01-94-D-0033
CLIENT PROJ. ENG: STEVE ROWLEY
LOCATION: FORT DRUM, NY BLDG: **10745**

EMC NO.: 1406-006
DATE: Dec-94
PREPARED BY: **CSW**
CHECKED BY:
FILE: **10745HV2**

AIR HANDLING UNIT SURVEY OBSERVATIONS

HV-2	AHU NO.	**MECH ROOM**	LOCATION (RM)
	REF. SYS. SERVING AHU		SERVES AREA

UNIT TYPE:

	SINGLE ZN		2-PIPE FC		4-PIPE FC		UNIT HTR	X	H&V
	MULTIZONE		DOUBLE DT		REHEAT		INDUCTION		VAV
	NUMBER OF ZONES				OTHER				
	COMMENT:								

NAMEPLATE:

					MFG.				MODEL
1.5	SUPPLY FAN HP				MFG.				MODEL
	RET/EXH FAN HP				MFG.				MODEL
2400	CFM-HTG		CFM-CLG		MIN %OA		MAX %OA		% HTG AREA SERVED
COMMENT:									

COILS:

	NONE		STM		HW		ELEC		MOD VLV	PREHEAT
	NONE		STM	X	HW		ELEC		MOD VLV	HEATING
	NONE		STM		HW		ELEC		MOD VLV	REHEAT
	NONE		STM		HW		EVAP MEDIA		MOD VLV	HUMID.
	NONE		DX		CW				MOD VLV	COOLING

OPERATION:

HOURS ON:	S	M	T	W	T	F	S	COMMENTS
PRESENT START TIME	**0**	**0**	**0**	**0**	**0**	**0**	**0**	TIMECLOCK?
PRESENT STOP TIME	**2400**	**2400**	**2400**	**2400**	**2400**	**2400**	**2400**	
REQUIRED START TIME	**0**	**700**	**700**	**700**	**700**	**700**	**0**	
REQUIRED STOP TIME	**0**	**1900**	**1900**	**1900**	**1900**	**1900**	**0**	

MONTHS ON:

J	F	M	A	M	J	J	A	S	O	N	D
1	**1**	**1**	**1**	**1**	**1**	**1**	**1**	**1**	**1**	**1**	**1**

CONTROLS:

	X	PNEUMATIC		ELECTRIC		ELEC'NIC		DDC	COMMENTS
THERMOSTAT TYPE:		SINGLE STPT		DUAL SETPNT		SETBACK			
SPACE SETPOINT (°F):		OCC HEAT		UNOCC HEAT		OCC COOL		UNOCC COOL	
OTHER SETPOINTS (°F):		HOT DECK		COLD DECK		MIXED AIR		OTHER	
DAMPER CONTROL:	**N**	MIN OA (Y/N)	**Y**	MAX OA (Y/N)	**N**	RA (Y/N)	**N**	EA (Y/N)	
		MA CONTROL		ECONO-DB		ECONO-ENT		OTHER	
DEMAND LIMIT:		(Y = YES ; N = NO)							
COMMENTS:									

E M C ENGINEERS, INC.

PROJECT: UMCS STUDY
CLIENT CONTRACT NO.: DACA01-94-D-0033
CLIENT PROJ. ENG: STEVE ROWLEY
LOCATION: FORT DRUM, NY BLDG: **10745**

EMC NO.: 1406-006
DATE: Dec-94
PREPARED BY: **CSW**
CHECKED BY:
FILE: **10745HV3**

AIR HANDLING UNIT SURVEY OBSERVATIONS

HV-3	AHU NO.	**MECH ROOM**	LOCATION (RM)
	REF. SYS. SERVING AHU		SERVES AREA

UNIT TYPE:

	SINGLE ZN		2-PIPE FC		4-PIPE FC		UNIT HTR	X	H&V
	MULTIZONE		DOUBLE DT		REHEAT		INDUCTION		VAV
	NUMBER OF ZONES				OTHER				
	COMMENT:								

NAMEPLATE:

					MFG.				MODEL
1.5	SUPPLY FAN HP				MFG.				MODEL
	RET/EXH FAN HP				MFG.				MODEL
2359	CFM-HTG		CFM-CLG		MIN %OA		MAX %OA		% HTG AREA SERVED
COMMENT:									

COILS:

	NONE		STM		HW		ELEC		MOD VLV	PREHEAT
	NONE		STM	X	HW		ELEC		MOD VLV	HEATING
	NONE		STM		HW		ELEC		MOD VLV	REHEAT
	NONE		STM		HW		EVAP MEDIA		MOD VLV	HUMID.
	NONE		DX		CW				MOD VLV	COOLING

OPERATION:

HOURS ON:	S	M	T	W	T	F	S	COMMENTS
PRESENT START TIME	**0**	**0**	**0**	**0**	**0**	**0**	**0**	TIMECLOCK?
PRESENT STOP TIME	**2400**	**2400**	**2400**	**2400**	**2400**	**2400**	**2400**	
REQUIRED START TIME	**0**	**700**	**700**	**700**	**700**	**700**	**0**	
REQUIRED STOP TIME	**0**	**1900**	**1900**	**1900**	**1900**	**1900**	**0**	

MONTHS ON:

J	F	M	A	M	J	J	A	S	O	N	D
1	**1**	**1**	**1**	**1**	**1**	**1**	**1**	**1**	**1**	**1**	**1**

CONTROLS:

	X	PNEUMATIC		ELECTRIC		ELEC'NIC		DDC	COMMENTS
THERMOSTAT TYPE:		SINGLE STPT		DUAL SETPNT		SETBACK			
SPACE SETPOINT (°F):		OCC HEAT		UNOCC HEAT		OCC COOL		UNOCC COOL	
OTHER SETPOINTS (°F):		HOT DECK		COLD DECK		MIXED AIR		OTHER	
DAMPER CONTROL:	Y	MIN OA (Y/N)	Y	MAX OA (Y/N)	Y	RA (Y/N)	N	EA (Y/N)	
		MA CONTROL		ECONO-DB		ECONO-ENT		OTHER	
DEMAND LIMIT:		(Y = YES ; N = NO)							
COMMENTS:									

E M C ENGINEERS, INC.

PROJECT: UMCS STUDY
CLIENT CONTRACT NO.: DACA01-94-D-0033
CLIENT PROJ. ENG: STEVE ROWLEY
LOCATION: FORT DRUM, NY BLDG: **10745**

EMC NO.: 1406-006
DATE: Dec-94
PREPARED BY: **CSW**
CHECKED BY:
FILE: **10745HV4**

AIR HANDLING UNIT SURVEY OBSERVATIONS

HV-4	AHU NO.	**MECH ROOM**	LOCATION (RM)
	REF. SYS. SERVING AHU		SERVES AREA

UNIT TYPE:

	SINGLE ZN		2-PIPE FC		4-PIPE FC		UNIT HTR	X	H&V
	MULTIZONE		DOUBLE DT		REHEAT		INDUCTION		VAV
	NUMBER OF ZONES				OTHER				
	COMMENT:								

NAMEPLATE:

				MFG.				MODEL	
1.5	SUPPLY FAN HP			MFG.				MODEL	
	RET/EXH FAN HP			MFG.				MODEL	
2359	CFM-HTG		CFM-CLG		MIN %OA		MAX %OA	% HTG AREA SERVED	
COMMENT:									

COILS:

	NONE		STM		HW		ELEC		MOD VLV	PREHEAT
	NONE		STM	X	HW		ELEC		MOD VLV	HEATING
	NONE		STM		HW		ELEC		MOD VLV	REHEAT
	NONE		STM		HW		EVAP MEDIA		MOD VLV	HUMID.
	NONE		DX		CW				MOD VLV	COOLING

OPERATION:

HOURS ON:	S	M	T	W	T	F	S	COMMENTS
PRESENT START TIME	**0**	**0**	**0**	**0**	**0**	**0**	**0**	TIMECLOCK?
PRESENT STOP TIME	**2400**	**2400**	**2400**	**2400**	**2400**	**2400**	**2400**	
REQUIRED START TIME	**0**	**700**	**700**	**700**	**700**	**700**	**0**	
REQUIRED STOP TIME	**0**	**1900**	**1900**	**1900**	**1900**	**1900**	**0**	

MONTHS ON:

J	F	M	A	M	J	J	A	S	O	N	D
1	**1**	**1**	**1**	**1**	**1**	**1**	**1**	**1**	**1**	**1**	**1**

CONTROLS:

	X	PNEUMATIC		ELECTRIC		ELEC'NIC		DDC	COMMENTS
THERMOSTAT TYPE:		SINGLE STPT		DUAL SETPNT		SETBACK			
SPACE SETPOINT (°F):		OCC HEAT		UNOCC HEAT		OCC COOL		UNOCC COOL	
OTHER SETPOINTS (°F):		HOT DECK		COLD DECK		MIXED AIR		OTHER	
DAMPER CONTROL:	Y	MIN OA (Y/N)	Y	MAX OA (Y/N)	Y	RA (Y/N)	N	EA (Y/N)	
		MA CONTROL		ECONO-DB		ECONO-ENT		OTHER	
DEMAND LIMIT:		(Y = YES ; N = NO)							
COMMENTS:									

FIELD SURVEY NOTES

BUILDING 10785

TYPICAL: 4405, 10030

E M C ENGINEERS, INC.

PROJECT: UMCS STUDY
CLIENT CONTRACT NO.: DACA01-94-D-0033
CLIENT PROJ. ENG: STEVE ROWLEY
LOCATION: FORT DRUM, NY BLDG: 10785

EMC NO.: 1406-006
DATE: 15-NOV-94
PREPARED BY: BG
CHECKED BY:
FILE: 10785

VI. BUILDING DATA SURVEY OBSERVATIONS

BLDG NO: 10785 BLDG NAME: CHAPEL/CHILD DEVELOP/RELIGIOUS EDUC

ZONE NO.	1	FUNCTION: CHAPEL						
OCCUPANCY HOURS:	M-F	0	TO	0	SAT	0	TO	0
	SUN	830	TO	1300				
PRESENT TEMP	WINTER OCC	70.0 øF		UNOCC	60.0 øF	SEE SCHED BELOW		
	SUMMER OCC	øF		UNOCC	øF			

ZONE NO.	2	FUNCTION: RELIGIOUS EDUCATION						
OCCUPANCY HOURS:	M-F	600	TO	1800	SAT	0	TO	0
	SUN	0	TO	0				
PRESENT TEMP	WINTER OCC	øF		UNOCC	øF			
	SUMMER OCC	øF		UNOCC	øF			

ZONE NO.	3	FUNCTION:						
OCCUPANCY HOURS:	M-F		TO		SAT		TO	
	SUN		TO					
PRESENT TEMP	WINTER OCC	øF		UNOCC	øF			
	SUMMER OCC	øF		UNOCC	øF			

REMARKS: CHAPEL OPEN ON OCCASION FOR MEMORIALS AND WEDDINGS.
CHAPEL CHILD CARE IS OPEN TUS & THUS MORNING 0900-1200 AND SUNDAY 0830-1300

PROJECT: UMCS STUDY
CLIENT CONTRACT NO.: DACA01-94-D-0033
CLIENT PROJ. ENG: STEVE ROWLEY
LOCATION: FORT DRUM, NY BLDG: **10785**

EMC NO.: 1406-006
DATE: 15-NOV-94
PREPARED BY: **BG**
CHECKED BY:
FILE: **10785DHW**

DOMESTIC HW SURVEY OBSERVATIONS

DHW1	BOILER/CONVERTER NO.	CHAPEL PENTHOUSE	LOCATION (RM)
	SOURCE OF HEATING (PLANT)	CHAPEL	SERVES AREA

UNIT TYPE:

	NO.2 OIL		NO.6 OIL		N.GAS	X	ELEC		FUELS:
	STM/HW		HTHW/HW		HTHW/STM		OTHER		CONVERTER TYPE:
COMMENT:									

NAMEPLATE:

AO SMITH	MFG.	ELJ20913	MODEL	**8533**	CAPACITY OUTPUT (BTUH,KW)
	MFG.		MODEL		CAPACITY OUTPUT (BTUH,KW)
DOMESTIC HW CIRCULATION PUMP:					
	HW PUMP 1 - HP		MFG.		MODEL
	HW PUMP 2 - HP		MFG.		MODEL
	HW PUMP 3 - HP		MFG.		MODEL
COMMENT:					

DIMENSION:	DIAMETER (INCHS)		HEIGHT OR LENGTH (INCHES)	GALLON

OPERATION:

HOURS ON:	S	M	T	W	T	F	S	COMMENT
PRESENT START TIME	**0**	**0**	**0**	**0**	**0**	**0**	**0**	TIMECLOCK?
PRESENT STOP TIME	**2400**	**2400**	**2400**	**2400**	**2400**	**2400**	**2400**	
REQUIRED START TIME	**830**	**0**	**900**	**0**	**900**	**0**	**0**	
REQUIRED STOP TIME	**1300**	**0**	**1200**	**0**	**1200**	**0**	**0**	

MONTHS ON:

J	F	M	A	M	J	J	A	S	O	N	D
1	**1**	**1**	**1**	**1**	**1**	**1**	**1**	**1**	**1**	**1**	**1**

CONTROLS:

		PNEUMATIC		ELECTRIC		ELEC'NIC		DDC	COMMENTS
SETPOINTS				HW SUPPLY					
COMMENTS:									

E M C ENGINEERS, INC.

PROJECT: UMCS STUDY
CLIENT CONTRACT NO.: DACA01-94-D-0033
CLIENT PROJ. ENG: STEVE ROWLEY
LOCATION: FORT DRUM, NY BLDG: **10785**

EMC NO.: 1406-006
DATE: 15-NOV-94
PREPARED BY: **BG**
CHECKED BY:
FILE: **10785HE1**

BOILER & CONVERTER SURVEY OBSERVATIONS

HE1	BOILER/CONVERTER NO.	**MER**	LOCATION (RM)
	SOURCE OF HEATING (PLANT)	**WHOLE BLDG**	SERVES AREA

UNIT TYPE:

	STEAM		PSIG		HW		TEMP.		BOILER TYPE:
	NO.2 OIL		NO.6 OIL		N.GAS		ELEC		FUELS:
	STM/HW	X	HTHW/HW		HTHW/STM		OTHER		CONVERTER TYPE:
X	SPACE HEAT		DHW		OTHER				USE:
COMMENT:							**100%**	% HTG AREA SERVED	
								BB RADIATION ONLY	

NAMEPLATE:

	MFG.		MODEL	**2001000**	CAPACITY OUTPUT (BTUH)
					CAPACITY INPUT (BTUH)
	MFG.		MODEL		CAPACITY OUTPUT (BTUH)
					CAPACITY INPUT (BTUH)
	HW PUMP 1 - HP		MFG.		MODEL
	HW PUMP 2 - HP		MFG.		MODEL
	HW PUMP 3 - HP		MFG.		MODEL
COMMENT:					

OPERATION:

HOURS ON:	S	M	T	W	T	F	S	COMMENT
PRESENT START TIME	**0**	**0**	**0**	**0**	**0**	**0**	**0**	TIMECLOCK?
PRESENT STOP TIME	**2400**	**2400**	**2400**	**2400**	**2400**	**2400**	**2400**	
REQUIRED START TIME	**830**	**600**	**600**	**600**	**600**	**600**	**0**	
REQUIRED STOP TIME	**1300**	**1800**	**1800**	**1800**	**1800**	**1800**	**0**	

MONTHS ON:

J	F	M	A	M	J	J	A	S	O	N	D
1	**1**	**1**	**1**	**0**	**0**	**0**	**0**	**0**	**1**	**1**	**1**

CONTROLS:

		PNEUMATIC		ELECTRIC		ELEC'NIC		DDC	COMMENTS
SETPOINTS		PSIG		HW SUPPLY					
RESET CONTROL (oF):		HW HIGH		HW LOW		OA LOW		OA HIGH	
BURNER CONTROLS		O2 TRIM (Y/N)		OTHER					
COMMENTS:									

E M C ENGINEERS, INC.

PROJECT: UMCS STUDY
CLIENT CONTRACT NO.: DACA01-94-D-0033
CLIENT PROJ. ENG: STEVE ROWLEY
LOCATION: FORT DRUM, NY BLDG: **10785**

EMC NO.: 1406-006
DATE: 15-NOV-94
PREPARED BY: **BG**
CHECKED BY:
FILE: **10785RAD**

PERIMETER RADIATION SURVEY OBSERVATIONS

RAD	PER RAD NO.		LOCATION (RM)
	SOURCE OF HEATING	WHOLE BLDG	SERVES AREA

UNIT TYPE:

	STEAM	**X**	HW		ELECTRIC				
	OTHER								
	COMMENT:								

NAMEPLATE:

	HW PUMP 1 - HP		MFG.		MODEL
	HW PUMP 2 - HP		MFG.		MODEL
	HW PUMP 3 - HP		MFG.		MODEL
	HW PUMP 4 - HP		MFG.		MODEL
COMMENT:				**100.0%**	% AREA HEATING

OPERATION:

HOURS ON:	S	M	T	W	T	F	S	COMMENT
PRESENT START TIME	**0**	**0**	**0**	**0**	**0**	**0**	**0**	TIMECLOCK?
PRESENT STOP TIME	**2400**	**2400**	**2400**	**2400**	**2400**	**2400**	**2400**	
REQUIRED START TIME	**830**	**600**	**600**	**600**	**600**	**600**	**0**	
REQUIRED STOP TIME	**1300**	**1800**	**1800**	**1800**	**1800**	**1800**	**0**	

MONTHS ON:

J	F	M	A	M	J	J	A	S	O	N	D
1	**1**	**1**	**1**	**0**	**0**	**0**	**0**	**0**	**1**	**1**	**1**

CONTROLS:

		PNEUMATIC		ELECTRIC		ELEC'NIC		DDC	COMMENTS
RADIATION CONTROL:		NONE		2-WAY VLV		3-WAY VLV		OTHER	
SPACE SETPOINT (øF):		OCC HEAT		UNOCC HEAT		OCC COOL		UNOCC COOL	
RESET CONTROL (øF):		HW HIGH		HW LOW		OA LOW		OA HIGH	
COMMENTS:	14 UNIT HEATERS, 10 CONVECTIVE HEATERS								

E M C ENGINEERS, INC.

PROJECT: UMCS STUDY
CLIENT CONTRACT NO.: DACA01-94-D-0033
CLIENT PROJ. ENG: STEVE ROWLEY
LOCATION: FORT DRUM, NY BLDG: **10785**

EMC NO.: 1406-006
DATE: 15-NOV-94
PREPARED BY: **BG**
CHECKED BY:
FILE: **10785AH1**

AIR HANDLING UNIT SURVEY OBSERVATIONS

AHU1	AHU NO.	**CHAPEL PENTHOUSE**	LOCATION (RM)
	REF. SYS. SERVING AHU	**CHAPEL**	SERVES AREA

UNIT TYPE:

X	SINGLE ZN		2-PIPE FC		4-PIPE FC		UNIT HTR	X	H&V
	MULTIZONE		DOUBLE DT		REHEAT		INDUCTION		VAV
	NUMBER OF ZONES				OTHER				
	COMMENT:								

NAMEPLATE:

				MFG.				MODEL
15.0	SUPPLY FAN HP			MFG.				MODEL
7.5	RET/EXH FAN HP			MFG.				MODEL
4100	CFM-HTG		CFM-CLG	**49%**	MIN %OA	**100%**	MAX %OA	**12.5%**	% HTG AREA SERVED
COMMENT:									

COILS:

X	NONE		STM		HW		ELEC		MOD VLV	PREHEAT
	NONE		STM	X	HW		ELEC		MOD VLV	HEATING
X	NONE		STM		HW		ELEC		MOD VLV	REHEAT
X	NONE		STM		HW		EVAP MEDIA		MOD VLV	HUMID.
X	NONE		DX		CW				MOD VLV	COOLING

OPERATION:

HOURS ON:	S	M	T	W	T	F	S	COMMENTS
PRESENT START TIME	**0**	**0**	**0**	**0**	**0**	**0**	**0**	TIMECLOCK?
PRESENT STOP TIME	**2400**	**2400**	**2400**	**2400**	**2400**	**2400**	**2400**	
REQUIRED START TIME	**830**	**0**	**900**	**0**	**900**	**0**	**0**	
REQUIRED STOP TIME	**1300**	**0**	**1200**	**0**	**1200**	**0**	**0**	

MONTHS ON:

J	F	M	A	M	J	J	A	S	O	N	D
1	**1**	**1**	**1**	**0**	**0**	**0**	**0**	**0**	**1**	**1**	**1**

CONTROLS:

		PNEUMATIC		ELECTRIC		ELEC'NIC		DDC	COMMENTS
THERMOSTAT TYPE:		SINGLE STPT		DUAL SETPNT		SETBACK			
SPACE SETPOINT (°F):		OCC HEAT		UNOCC HEAT		OCC COOL		UNOCC COOL	
OTHER SETPOINTS (°F):		HOT DECK		COLD DECK		MIXED AIR		OTHER	
DAMPER CONTROL:	Y	MIN OA (Y/N)	Y	MAX OA (Y/N)	Y	RA (Y/N)	Y	EA (Y/N)	
		MA CONTROL		ECONO-DB		ECONO-ENT		OTHER	
DEMAND LIMIT:		(Y = YES ; N = NO)							
COMMENTS:									

E M C ENGINEERS, INC.

PROJECT: UMCS STUDY
CLIENT CONTRACT NO.: DACA01-94-D-0033
CLIENT PROJ. ENG: STEVE ROWLEY
LOCATION: FORT DRUM, NY BLDG: **10785**

EMC NO.: 1406-006
DATE: 15-NOV-94
PREPARED BY: **BG**
CHECKED BY:
FILE: **10785AH2**

AIR HANDLING UNIT SURVEY OBSERVATIONS

AHU2	AHU NO.	**CHAPEL PENTHOUSE**	LOCATION (RM)
	REF. SYS. SERVING AHU	**OFFICES**	SERVES AREA

UNIT TYPE:

X	SINGLE ZN		2-PIPE FC		4-PIPE FC		UNIT HTR	**X**	H&V
	MULTIZONE		DOUBLE DT		REHEAT		INDUCTION		VAV
	NUMBER OF ZONES				OTHER				
	COMMENT:								

NAMEPLATE:

					MFG.				MODEL
10.0	SUPPLY FAN HP				MFG.				MODEL
5.0	RET/EXH FAN HP				MFG.				MODEL
2900	CFM-HTG		CFM-CLG	**31%**	MIN %OA	**100%**	MAX %OA	**12.5%**	% HTG AREA SERVED
COMMENT:									

COILS:

X	NONE		STM		HW		ELEC		MOD VLV	PREHEAT
	NONE		STM	**X**	HW		ELEC		MOD VLV	HEATING
X	NONE		STM		HW		ELEC		MOD VLV	REHEAT
X	NONE		STM		HW		EVAP MEDIA		MOD VLV	HUMID.
X	NONE		DX		CW				MOD VLV	COOLING

OPERATION:

HOURS ON:	S	M	T	W	T	F	S	COMMENTS
PRESENT START TIME	**0**	**0**	**0**	**0**	**0**	**0**	**0**	TIMECLOCK?
PRESENT STOP TIME	**2400**	**2400**	**2400**	**2400**	**2400**	**2400**	**2400**	
REQUIRED START TIME	**830**	**0**	**900**	**0**	**900**	**0**	**0**	
REQUIRED STOP TIME	**1300**	**0**	**1200**	**0**	**1200**	**0**	**0**	

MONTHS ON:

J	F	M	A	M	J	J	A	S	O	N	D
1	**1**	**1**	**1**	**0**	**0**	**0**	**0**	**0**	**1**	**1**	**1**

CONTROLS:

		PNEUMATIC		ELECTRIC		ELEC'NIC		DDC	COMMENTS
THERMOSTAT TYPE:		SINGLE STPT		DUAL SETPNT		SETBACK			
SPACE SETPOINT (°F):		OCC HEAT		UNOCC HEAT		OCC COOL		UNOCC COOL	
OTHER SETPOINTS (°F):		HOT DECK		COLD DECK		MIXED AIR		OTHER	
DAMPER CONTROL:	Y	MIN OA (Y/N)	Y	MAX OA (Y/N)	Y	RA (Y/N)	Y	EA (Y/N)	
		MA CONTROL		ECONO-DB		ECONO-ENT		OTHER	
DEMAND LIMIT:		(Y = YES ; N = NO)							
COMMENTS:									

E M C ENGINEERS, INC.

PROJECT: UMCS STUDY
CLIENT CONTRACT NO.: DACA01-94-D-0033
CLIENT PROJ. ENG: STEVE ROWLEY
LOCATION: FORT DRUM, NY BLDG: **10785**

EMC NO.: 1406-006
DATE: 15-NOV-94
PREPARED BY: **BG**
CHECKED BY:
FILE: **10785AH3**

AIR HANDLING UNIT SURVEY OBSERVATIONS

AHU3	AHU NO.	**MER**	LOCATION (RM)
	REF. SYS. SERVING AHU	**RELIGIOUS EDUCATI**	SERVES AREA

UNIT TYPE:

X	SINGLE ZN		2-PIPE FC		4-PIPE FC		UNIT HTR	X	H&V
	MULTIZONE		DOUBLE DT		REHEAT		INDUCTION		VAV
	NUMBER OF ZONES				OTHER				
	COMMENT:								

NAMEPLATE:

	CENTRALAIRE			MFG.	**L1715**			MODEL
10.0	SUPPLY FAN HP	**MARATHON**		MFG.				MODEL
7.5	RET/EXH FAN HP	**MARATHON**		MFG.				MODEL
3500	CFM-HTG		CFM-CLG	**19%**	MIN %OA	**100%**	MAX %OA	**8.3%**	% HTG AREA SERVED
COMMENT:									

COILS:

X	NONE		STM		HW		ELEC		MOD VLV	PREHEAT
	NONE		STM	X	HW		ELEC		MOD VLV	HEATING
X	NONE		STM		HW		ELEC		MOD VLV	REHEAT
X	NONE		STM		HW		EVAP MEDIA		MOD VLV	HUMID.
X	NONE		DX		CW				MOD VLV	COOLING

OPERATION:

HOURS ON:	S	M	T	W	T	F	S	COMMENTS
PRESENT START TIME	**0**	**0**	**0**	**0**	**0**	**0**	**0**	TIMECLOCK?
PRESENT STOP TIME	**2400**	**2400**	**2400**	**2400**	**2400**	**2400**	**2400**	
REQUIRED START TIME	**0**	**600**	**600**	**600**	**600**	**600**	**0**	
REQUIRED STOP TIME	**0**	**1800**	**1800**	**1800**	**1800**	**1800**	**0**	

MONTHS ON:

J	F	M	A	M	J	J	A	S	O	N	D
1	**1**	**1**	**1**	**0**	**0**	**0**	**0**	**0**	**1**	**1**	**1**

CONTROLS:

		PNEUMATIC		ELECTRIC		ELEC'NIC		DDC	COMMENTS
THERMOSTAT TYPE:		SINGLE STPT		DUAL SETPNT		SETBACK			
SPACE SETPOINT (°F):		OCC HEAT		UNOCC HEAT		OCC COOL		UNOCC COOL	
OTHER SETPOINTS (°F):		HOT DECK		COLD DECK		MIXED AIR		OTHER	
DAMPER CONTROL:	Y	MIN OA (Y/N)	Y	MAX OA (Y/N)	Y	RA (Y/N)	Y	EA (Y/N)	
		MA CONTROL		ECONO-DB		ECONO-ENT		OTHER	
DEMAND LIMIT:		(Y = YES ; N = NO)							
COMMENTS:									

E M C ENGINEERS, INC.

PROJECT: UMCS STUDY
CLIENT CONTRACT NO.: DACA01-94-D-0033
CLIENT PROJ. ENG: STEVE ROWLEY
LOCATION: FORT DRUM, NY BLDG: **10785**

EMC NO.: 1406-006
DATE: 15-NOV-94
PREPARED BY: **BG**
CHECKED BY:
FILE: **10785AH4**

AIR HANDLING UNIT SURVEY OBSERVATIONS

AHU4	AHU NO.	**MER**	LOCATION (RM)
	REF. SYS. SERVING AHU	**RELIGIOUS EDUCATI**	SERVES AREA

UNIT TYPE:

X	SINGLE ZN		2-PIPE FC		4-PIPE FC		UNIT HTR	X	H&V
	MULTIZONE		DOUBLE DT		REHEAT		INDUCTION		VAV
	NUMBER OF ZONES				OTHER				
	COMMENT:								

NAMEPLATE:

				MFG.				MODEL
5.0	SUPPLY FAN HP			MFG.				MODEL
3.0	RET/EXH FAN HP			MFG.				MODEL
1775	CFM-HTG		CFM-CLG	**34%** MIN %OA	**100%**	MAX %OA	**8.3%**	% HTG AREA SERVED
COMMENT:								

COILS:

X	NONE		STM		HW		ELEC	MOD VLV	PREHEAT
	NONE		STM	X	HW		ELEC	MOD VLV	HEATING
X	NONE		STM		HW		ELEC	MOD VLV	REHEAT
X	NONE		STM		HW		EVAP MEDIA	MOD VLV	HUMID.
X	NONE		DX		CW			MOD VLV	COOLING

OPERATION:

HOURS ON:	S	M	T	W	T	F	S	COMMENTS
PRESENT START TIME	**0**	**0**	**0**	**0**	**0**	**0**	**0**	TIMECLOCK?
PRESENT STOP TIME	**2400**	**2400**	**2400**	**2400**	**2400**	**2400**	**2400**	
REQUIRED START TIME	**0**	**600**	**600**	**600**	**600**	**600**	**0**	
REQUIRED STOP TIME	**0**	**1800**	**1800**	**1800**	**1800**	**1800**	**0**	

MONTHS ON:

J	F	M	A	M	J	J	A	S	O	N	D
1	**1**	**1**	**1**	**0**	**0**	**0**	**0**	**0**	**1**	**1**	**1**

CONTROLS:

		PNEUMATIC		ELECTRIC		ELEC'NIC		DDC	COMMENTS
THERMOSTAT TYPE:		SINGLE STPT		DUAL SETPNT		SETBACK			
SPACE SETPOINT (°F):		OCC HEAT		UNOCC HEAT		OCC COOL		UNOCC COOL	
OTHER SETPOINTS (°F):		HOT DECK		COLD DECK		MIXED AIR		OTHER	
DAMPER CONTROL:	Y	MIN OA (Y/N)	Y	MAX OA (Y/N)	Y	RA (Y/N)	Y	EA (Y/N)	
		MA CONTROL		ECONO-DB		ECONO-ENT		OTHER	
DEMAND LIMIT:		(Y = YES ; N = NO)							
COMMENTS:									

E M C ENGINEERS, INC.

PROJECT: UMCS STUDY
CLIENT CONTRACT NO.: DACA01-94-D-0033
CLIENT PROJ. ENG: STEVE ROWLEY
LOCATION: FORT DRUM, NY BLDG: **10785**

EMC NO.: 1406-006
DATE: 15-NOV-94
PREPARED BY: **BG**
CHECKED BY:
FILE: **10785AH5**

AIR HANDLING UNIT SURVEY OBSERVATIONS

AHU5	AHU NO.	**MER**	LOCATION (RM)
	REF. SYS. SERVING AHU	**RELIGIOUS EDUCATI**	SERVES AREA

UNIT TYPE:

X	SINGLE ZN		2-PIPE FC		4-PIPE FC		UNIT HTR	X	H&V
	MULTIZONE		DOUBLE DT		REHEAT		INDUCTION		VAV
	NUMBER OF ZONES				OTHER				
	COMMENT:								

NAMEPLATE:

				MFG.				MODEL
7.5	SUPPLY FAN HP			MFG.				MODEL
5.0	RET/EXH FAN HP			MFG.				MODEL
2800	CFM-HTG		CFM-CLG	**25%** MIN %OA	**100%**	MAX %OA	**8.3%**	% HTG AREA SERVED
COMMENT:								

COILS:

X	NONE		STM		HW		ELEC		MOD VLV	PREHEAT
	NONE		STM	X	HW		ELEC		MOD VLV	HEATING
X	NONE		STM		HW		ELEC		MOD VLV	REHEAT
X	NONE		STM		HW		EVAP MEDIA		MOD VLV	HUMID.
X	NONE		DX		CW				MOD VLV	COOLING

OPERATION:

HOURS ON:	S	M	T	W	T	F	S	COMMENTS
PRESENT START TIME	**0**	**0**	**0**	**0**	**0**	**0**	**0**	TIMECLOCK?
PRESENT STOP TIME	**2400**	**2400**	**2400**	**2400**	**2400**	**2400**	**2400**	
REQUIRED START TIME	**0**	**600**	**600**	**600**	**600**	**600**	**0**	
REQUIRED STOP TIME	**0**	**1800**	**1800**	**1800**	**1800**	**1800**	**0**	

MONTHS ON:

J	F	M	A	M	J	J	A	S	O	N	D
1	**1**	**1**	**1**	**0**	**0**	**0**	**0**	**0**	**1**	**1**	**1**

CONTROLS:

		PNEUMATIC		ELECTRIC		ELEC'NIC		DDC	COMMENTS
THERMOSTAT TYPE:		SINGLE STPT		DUAL SETPNT		SETBACK			
SPACE SETPOINT (°F):		OCC HEAT		UNOCC HEAT		OCC COOL		UNOCC COOL	
OTHER SETPOINTS (°F):		HOT DECK		COLD DECK		MIXED AIR		OTHER	
DAMPER CONTROL:	Y	MIN OA (Y/N)	Y	MAX OA (Y/N)	Y	RA (Y/N)	Y	EA (Y/N)	
		MA CONTROL		ECONO-DB		ECONO-ENT		OTHER	
DEMAND LIMIT:		(Y = YES ; N = NO)							
COMMENTS:									

E M C ENGINEERS, INC.

PROJECT: UMCS STUDY
CLIENT CONTRACT NO.: DACA01-94-D-0033
CLIENT PROJ. ENG: STEVE ROWLEY
LOCATION: FORT DRUM, NY BLDG: **10785**

EMC NO.: 1406-006
DATE: 15-NOV-94
PREPARED BY: **BG**
CHECKED BY:
FILE: **10785AH6**

AIR HANDLING UNIT SURVEY OBSERVATIONS

AHU6	AHU NO.	**MER**	LOCATION (RM)
	REF. SYS. SERVING AHU	**CHILD DEVELOPMENT SOUTH**	SERVES AREA

UNIT TYPE:

X	SINGLE ZN		2-PIPE FC		4-PIPE FC		UNIT HTR	X	H&V
	MULTIZONE		DOUBLE DT		REHEAT		INDUCTION		VAV
	NUMBER OF ZONES				OTHER				
	COMMENT:								

NAMEPLATE:

				MFG.				MODEL
15.0	SUPPLY FAN HP			MFG.				MODEL
7.5	RET/EXH FAN HP			MFG.				MODEL
4850	CFM-HTG		CFM-CLG	**21%**	MIN %OA	**100%**	MAX %OA	**12.5%**	% HTG AREA SERVED
COMMENT:									

COILS:

X	NONE		STM		HW		ELEC		MOD VLV	PREHEAT
	NONE		STM	X	HW		ELEC		MOD VLV	HEATING
X	NONE		STM		HW		ELEC		MOD VLV	REHEAT
X	NONE		STM		HW		EVAP MEDIA		MOD VLV	HUMID.
X	NONE		DX		CW				MOD VLV	COOLING

OPERATION:

HOURS ON:	S	M	T	W	T	F	S	COMMENTS
PRESENT START TIME	**0**	**0**	**0**	**0**	**0**	**0**	**0**	TIMECLOCK?
PRESENT STOP TIME	**2400**	**2400**	**2400**	**2400**	**2400**	**2400**	**2400**	
REQUIRED START TIME	**0**	**600**	**600**	**600**	**600**	**600**	**0**	
REQUIRED STOP TIME	**0**	**1800**	**1800**	**1800**	**1800**	**1800**	**0**	

MONTHS ON:

J	F	M	A	M	J	J	A	S	O	N	D
1	**1**	**1**	**1**	**0**	**0**	**0**	**0**	**0**	**1**	**1**	**1**

CONTROLS:

		PNEUMATIC		ELECTRIC		ELEC'NIC		DDC	COMMENTS
THERMOSTAT TYPE:		SINGLE STPT		DUAL SETPNT		SETBACK			
SPACE SETPOINT (°F):		OCC HEAT		UNOCC HEAT		OCC COOL		UNOCC COOL	
OTHER SETPOINTS (°F):		HOT DECK		COLD DECK		MIXED AIR		OTHER	
DAMPER CONTROL:	Y	MIN OA (Y/N)	Y	MAX OA (Y/N)	Y	RA (Y/N)	Y	EA (Y/N)	
		MA CONTROL		ECONO-DB		ECONO-ENT		OTHER	
DEMAND LIMIT:		(Y = YES ; N = NO)							
COMMENTS:									

E M C ENGINEERS, INC.

PROJECT: UMCS STUDY
CLIENT CONTRACT NO.: DACA01-94-D-0033
CLIENT PROJ. ENG: STEVE ROWLEY
LOCATION: FORT DRUM, NY BLDG: **10785**

EMC NO.: 1406-006
DATE: 15-NOV-94
PREPARED BY: **BG**
CHECKED BY:
FILE: **10785AH7**

AIR HANDLING UNIT SURVEY OBSERVATIONS

AHU7	AHU NO.	**MER**	LOCATION (RM)
	REF. SYS. SERVING AHU	**CHILD DEVELOPMENT SOUTH**	SERVES AREA

UNIT TYPE:

X	SINGLE ZN		2-PIPE FC		4-PIPE FC		UNIT HTR	X	H&V
	MULTIZONE		DOUBLE DT		REHEAT		INDUCTION		VAV
	NUMBER OF ZONES				OTHER				
	COMMENT:								

NAMEPLATE:

				MFG.				MODEL
15.0	SUPPLY FAN HP			MFG.				MODEL
7.5	RET/EXH FAN HP			MFG.				MODEL
1975	CFM-HTG		CFM-CLG	**30%** MIN %OA	**100%**	MAX %OA	**12.5%**	% HTG AREA SERVED
COMMENT:								

COILS:

X	NONE		STM		HW		ELEC		MOD VLV	PREHEAT
	NONE		STM	X	HW		ELEC		MOD VLV	HEATING
X	NONE		STM		HW		ELEC		MOD VLV	REHEAT
X	NONE		STM		HW		EVAP MEDIA		MOD VLV	HUMID.
X	NONE		DX		CW				MOD VLV	COOLING

OPERATION:

HOURS ON:	S	M	T	W	T	F	S	COMMENTS
PRESENT START TIME	**0**	**0**	**0**	**0**	**0**	**0**	**0**	TIMECLOCK?
PRESENT STOP TIME	**2400**	**2400**	**2400**	**2400**	**2400**	**2400**	**2400**	
REQUIRED START TIME	**0**	**600**	**600**	**600**	**600**	**600**	**0**	
REQUIRED STOP TIME	**0**	**1800**	**1800**	**1800**	**1800**	**1800**	**0**	

MONTHS ON:

J	F	M	A	M	J	J	A	S	O	N	D
1	**1**	**1**	**1**	**0**	**0**	**0**	**0**	**0**	**1**	**1**	**1**

CONTROLS:

		PNEUMATIC		ELECTRIC		ELEC'NIC		DDC	COMMENTS
THERMOSTAT TYPE:		SINGLE STPT		DUAL SETPNT		SETBACK			
SPACE SETPOINT (°F):		OCC HEAT		UNOCC HEAT		OCC COOL		UNOCC COOL	
OTHER SETPOINTS (°F):		HOT DECK		COLD DECK		MIXED AIR		OTHER	
DAMPER CONTROL:	Y	MIN OA (Y/N)	Y	MAX OA (Y/N)	Y	RA (Y/N)	Y	EA (Y/N)	
		MA CONTROL		ECONO-DB		ECONO-ENT		OTHER	
DEMAND LIMIT:		(Y = YES ; N = NO)							
COMMENTS:									

E M C ENGINEERS, INC.

PROJECT: UMCS STUDY
CLIENT CONTRACT NO.: DACA01-94-D-0033
CLIENT PROJ. ENG: STEVE ROWLEY
LOCATION: FORT DRUM, NY BLDG: **10785**

EMC NO.: 1406-006
DATE: 15-NOV-94
PREPARED BY: **BG**
CHECKED BY:
FILE: **10785AH8**

AIR HANDLING UNIT SURVEY OBSERVATIONS

AHU8	AHU NO.	**MER**	LOCATION (RM)
	REF. SYS. SERVING AHU	**CHILD DEVELOPMENTNORTH**	SERVES AREA

UNIT TYPE:

X	SINGLE ZN		2-PIPE FC		4-PIPE FC		UNIT HTR	X	H&V
	MULTIZONE		DOUBLE DT		REHEAT		INDUCTION		VAV
	NUMBER OF ZONES				OTHER				
	COMMENT:								

NAMEPLATE:

				MFG.				MODEL
7.5	SUPPLY FAN HP			MFG.				MODEL
5.0	RET/EXH FAN HP			MFG.				MODEL
2850	CFM-HTG		CFM-CLG	**21%**	MIN %OA	**100%**	MAX %OA	**8.3%**	% HTG AREA SERVED
COMMENT:									

COILS:

X	NONE		STM		HW		ELEC		MOD VLV	PREHEAT
	NONE		STM	X	HW		ELEC		MOD VLV	HEATING
X	NONE		STM		HW		ELEC		MOD VLV	REHEAT
X	NONE		STM		HW		EVAP MEDIA		MOD VLV	HUMID.
X	NONE		DX		CW				MOD VLV	COOLING

OPERATION:

HOURS ON:	S	M	T	W	T	F	S	COMMENTS
PRESENT START TIME	**0**	**0**	**0**	**0**	**0**	**0**	**0**	TIMECLOCK?
PRESENT STOP TIME	**2400**	**2400**	**2400**	**2400**	**2400**	**2400**	**2400**	
REQUIRED START TIME	**0**	**600**	**600**	**600**	**600**	**600**	**0**	
REQUIRED STOP TIME	**0**	**1800**	**1800**	**1800**	**1800**	**1800**	**0**	

MONTHS ON:

J	F	M	A	M	J	J	A	S	O	N	D
1	**1**	**1**	**1**	**0**	**0**	**0**	**0**	**0**	**1**	**1**	**1**

CONTROLS:

		PNEUMATIC		ELECTRIC		ELEC'NIC		DDC	COMMENTS
THERMOSTAT TYPE:		SINGLE STPT		DUAL SETPNT		SETBACK			
SPACE SETPOINT (°F):		OCC HEAT		UNOCC HEAT		OCC COOL		UNOCC COOL	
OTHER SETPOINTS (°F):		HOT DECK		COLD DECK		MIXED AIR		OTHER	
DAMPER CONTROL:	Y	MIN OA (Y/N)	Y	MAX OA (Y/N)	Y	RA (Y/N)	Y	EA (Y/N)	
		MA CONTROL		ECONO-DB		ECONO-ENT		OTHER	
DEMAND LIMIT:		(Y = YES ; N = NO)							
COMMENTS:									

E M C ENGINEERS, INC.

PROJECT: UMCS STUDY
CLIENT CONTRACT NO.: DACA01-94-D-0033
CLIENT PROJ. ENG: STEVE ROWLEY
LOCATION: FORT DRUM, NY BLDG: **10785**

EMC NO.: 1406-006
DATE: 15-NOV-94
PREPARED BY: **BG**
CHECKED BY:
FILE: **10785AH9**

AIR HANDLING UNIT SURVEY OBSERVATIONS

AHU9	AHU NO.	**MER**	LOCATION (RM)
	REF. SYS. SERVING AHU	**CHILD DEVELOPMENTNORTH**	SERVES AREA

UNIT TYPE:

X	SINGLE ZN		2-PIPE FC		4-PIPE FC		UNIT HTR	**X**	H&V
	MULTIZONE		DOUBLE DT		REHEAT		INDUCTION		VAV
	NUMBER OF ZONES				OTHER				
	COMMENT:								

NAMEPLATE:

				MFG.				MODEL
10.0	SUPPLY FAN HP			MFG.				MODEL
5.0	RET/EXH FAN HP			MFG.				MODEL
3475	CFM-HTG		CFM-CLG	**26%**	MIN %OA	**100%**	MAX %OA	**8.3%**	% HTG AREA SERVED
COMMENT:									

COILS:

X	NONE		STM		HW		ELEC		MOD VLV	PREHEAT
	NONE		STM	**X**	HW		ELEC		MOD VLV	HEATING
X	NONE		STM		HW		ELEC		MOD VLV	REHEAT
X	NONE		STM		HW		EVAP MEDIA		MOD VLV	HUMID.
X	NONE		DX		CW				MOD VLV	COOLING

OPERATION:

HOURS ON:	S	M	T	W	T	F	S	COMMENTS
PRESENT START TIME	**0**	**0**	**0**	**0**	**0**	**0**	**0**	TIMECLOCK?
PRESENT STOP TIME	**2400**	**2400**	**2400**	**2400**	**2400**	**2400**	**2400**	
REQUIRED START TIME	**0**	**600**	**600**	**600**	**600**	**600**	**0**	
REQUIRED STOP TIME	**0**	**1800**	**1800**	**1800**	**1800**	**1800**	**0**	

MONTHS ON:

J	F	M	A	M	J	J	A	S	O	N	D
1	**1**	**1**	**1**	**0**	**0**	**0**	**0**	**0**	**1**	**1**	**1**

CONTROLS:

		PNEUMATIC		ELECTRIC		ELEC'NIC		DDC	COMMENTS
THERMOSTAT TYPE:		SINGLE STPT		DUAL SETPNT		SETBACK			
SPACE SETPOINT (°F):		OCC HEAT		UNOCC HEAT		OCC COOL		UNOCC COOL	
OTHER SETPOINTS (°F):		HOT DECK		COLD DECK		MIXED AIR		OTHER	
DAMPER CONTROL:	**Y**	MIN OA (Y/N)	**Y**	MAX OA (Y/N)	**Y**	RA (Y/N)	**Y**	EA (Y/N)	
		MA CONTROL		ECONO-DB		ECONO-ENT		OTHER	
DEMAND LIMIT:		(Y = YES ; N = NO)							
COMMENTS:									

E M C ENGINEERS, INC.

PROJECT: UMCS STUDY
CLIENT CONTRACT NO.: DACA01-94-D-0033
CLIENT PROJ. ENG: STEVE ROWLEY
LOCATION: FORT DRUM, NY BLDG: **10785**

EMC NO.: 1406-006
DATE: 15-NOV-94
PREPARED BY: **BG**
CHECKED BY:
FILE: **10785AH10**

AIR HANDLING UNIT SURVEY OBSERVATIONS

AHU10	AHU NO.	**MER**	LOCATION (RM)
	REF. SYS. SERVING AHU	**KITCHEN**	SERVES AREA

UNIT TYPE:

X	SINGLE ZN		2-PIPE FC		4-PIPE FC		UNIT HTR	X	H&V
	MULTIZONE		DOUBLE DT		REHEAT		INDUCTION		VAV
	NUMBER OF ZONES				OTHER				
	COMMENT:								

NAMEPLATE:

					MFG.				MODEL
5.0	SUPPLY FAN HP				MFG.				MODEL
	RET/EXH FAN HP				MFG.				MODEL
1800	CFM-HTG		CFM-CLG	**100%**	MIN %OA	**100%**	MAX %OA	**8.3%**	% HTG AREA SERVED
COMME	THIS UNIT HAS A 56.0 MBH PREHEAT COIL (56.0 MBH FROM EXHAUST HEAT RECOVERY)								

COILS:

	NONE		STM	X	HW		ELEC		MOD VLV	PREHEAT
	NONE		STM	X	HW		ELEC		MOD VLV	HEATING
X	NONE		STM		HW		ELEC		MOD VLV	REHEAT
X	NONE		STM		HW		EVAP MEDIA		MOD VLV	HUMID.
X	NONE		DX		CW				MOD VLV	COOLING

OPERATION:

HOURS ON:	S	M	T	W	T	F	S	COMMENTS
PRESENT START TIME	**0**	**0**	**0**	**0**	**0**	**0**	**0**	TIMECLOCK?
PRESENT STOP TIME	**2400**	**2400**	**2400**	**2400**	**2400**	**2400**	**2400**	
REQUIRED START TIME	**0**	**600**	**600**	**600**	**600**	**600**	**0**	
REQUIRED STOP TIME	**0**	**1800**	**1800**	**1800**	**1800**	**1800**	**0**	

MONTHS ON:

J	F	M	A	M	J	J	A	S	O	N	D
1	**1**	**1**	**1**	**0**	**0**	**0**	**0**	**0**	**1**	**1**	**1**

CONTROLS:

		PNEUMATIC		ELECTRIC		ELEC'NIC		DDC	COMMENTS
THERMOSTAT TYPE:		SINGLE STPT		DUAL SETPNT		SETBACK			
SPACE SETPOINT (°F):		OCC HEAT		UNOCC HEAT		OCC COOL		UNOCC COOL	
OTHER SETPOINTS (°F):		HOT DECK		COLD DECK		MIXED AIR		OTHER	
DAMPER CONTROL:	Y	MIN OA (Y/N)	Y	MAX OA (Y/N)	Y	RA (Y/N)	Y	EA (Y/N)	
		MA CONTROL		ECONO-DB		ECONO-ENT		OTHER	
DEMAND LIMIT:		(Y = YES ; N = NO)							
COMMENTS:									

FIELD SURVEY NOTES

BUILDING 11050

E M C ENGINEERS, INC.

PROJECT: UMCS STUDY
CLIENT CONTRACT NO.: DACA01-94-D-0033
CLIENT PROJ. ENG: STEVE ROWLEY
LOCATION: FORT DRUM, NY BLDG: 11050

EMC NO.: 1406-006
DATE: 11/09/94
PREPARED BY: BG
CHECKED BY:
FILE: FD11050A

VI. BUILDING DATA SURVEY OBSERVATIONS

BLDG NO: 11050 BLDG NAME: GUTHRIE CLINIC

ZONE NO.	A	FUNCTION: PATIENT BEDS						
OCCUPANCY HOURS:	M-F	700	TO	1900	SAT	700	TO	1900
	SUN	700	TO	1900				
PRESENT TEMP	WINTER OCC	69.0 øF		UNOCC	69.0 øF			
	SUMMER OCC	øF		UNOCC	øF			

ZONE NO.	B	FUNCTION: EMERGENCY						
OCCUPANCY HOURS:	M-F	700	TO	1900	SAT	700	TO	1900
	SUN	0	TO	2400				
PRESENT TEMP	WINTER OCC	69.0 øF		UNOCC	69.0 øF			
	SUMMER OCC	øF		UNOCC	øF			

ZONE NO.	C	FUNCTION: OPERATING ROOMS						
OCCUPANCY HOURS:	M-F	700	TO	1900	SAT	700	TO	1900
	SUN	700	TO	1900				
PRESENT TEMP	WINTER OCC	69.0 øF		UNOCC	69.0 øF			
	SUMMER OCC	øF		UNOCC	øF			

REMARKS: TIME CLOCK NOT FUNCTIONAL / ALL GREEN PEGS - 24 HOUR OPERATION

COMP. HP	CND RETURN HP	GLYCOL HP	SYS PMP HP
5	0.333	1.2	2
0.333	0.333	0.25	2
5	0.25	1	2
20	3		
1.5	5		
7.5			

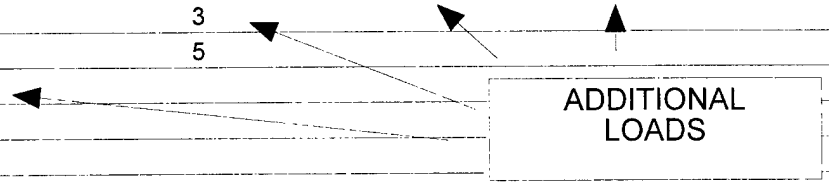

E M C ENGINEERS, INC.

PROJECT: UMCS STUDY
CLIENT CONTRACT NO.: DACA01-94-D-0033
CLIENT PROJ. ENG: STEVE ROWLEY
LOCATION: FORT DRUM, NY BLDG: 11050

EMC NO.: 1406-006
DATE: 11/09/94
PREPARED BY: BG
CHECKED BY:
FILE: FD11050B

VI. BUILDING DATA SURVEY OBSERVATIONS

BLDG NO: 11050 BLDG NAME: GUTHRIE CLINIC

ZONE NO.	D	FUNCTION: SURGICAL SUITES							
OCCUPANCY HOURS:	M-F	700	TO	1900	SAT	700	TO	1900	
	SUN	700	TO	1900					
PRESENT TEMP	WINTER OCC	69.0 øF		UNOCC	69.0 øF				
	SUMMER OCC	øF		UNOCC	øF				

ZONE NO.	E	FUNCTION: CLINIC NORTH							
OCCUPANCY HOURS:	M-F	700	TO	1900	SAT	700	TO	1900	
	SUN	0	TO	2400					
PRESENT TEMP	WINTER OCC	69.0 øF		UNOCC	69.0 øF				
	SUMMER OCC	øF		UNOCC	øF				

ZONE NO.	F	FUNCTION: CLINIC SOUTH							
OCCUPANCY HOURS:	M-F	700	TO	1900	SAT	700	TO	1900	
	SUN	700	TO	1900					
PRESENT TEMP	WINTER OCC	69.0 øF		UNOCC	69.0 øF				
	SUMMER OCC	øF		UNOCC	øF				

REMARKS: TIME CLOCK NOT FUNCTIONAL / ALL GREEN PEGS - 24 HOUR OPERATION

E M C ENGINEERS, INC.

PROJECT: UMCS STUDY
CLIENT CONTRACT NO.: DACA01-94-D-0033
CLIENT PROJ. ENG: STEVE ROWLEY
LOCATION: FORT DRUM, NY BLDG: 11050

EMC NO.: 1406-006
DATE: 11/09/94
PREPARED BY: BG
CHECKED BY:
FILE: FD11050C

VI. BUILDING DATA SURVEY OBSERVATIONS

BLDG NO: 11050 BLDG NAME: GUTHRIE CLINIC

ZONE NO.	G	FUNCTION: ADDITION - OFFICES AND STORAGE							
OCCUPANCY HOURS:	M-F	700	TO	1900	SAT	700	TO	1900	
	SUN	700	TO	1900					
PRESENT TEMP	WINTER OCC	69.0 øF		UNOCC	69.0 øF				
	SUMMER OCC	øF		UNOCC	øF				

ZONE NO.		FUNCTION:							
OCCUPANCY HOURS:	M-F		TO		SAT		TO		
	SUN		TO						
PRESENT TEMP	WINTER OCC	øF		UNOCC	øF				
	SUMMER OCC	øF		UNOCC	øF				

ZONE NO.		FUNCTION:							
OCCUPANCY HOURS:	M-F		TO		SAT		TO		
	SUN		TO						
PRESENT TEMP	WINTER OCC	øF		UNOCC	øF				
	SUMMER OCC	øF		UNOCC	øF				

REMARKS: TIME CLOCK NOT FUNCTIONAL / ALL GREEN PEGS - 24 HOUR OPERATION

E M C ENGINEERS, INC.

PROJECT: UMCS STUDY
CLIENT CONTRACT NO.: DACA01-94-D-0033
CLIENT PROJ. ENG: STEVE ROWLEY
LOCATION: FORT DRUM, NY BLDG: **11050**

EMC NO.: 1406-006
DATE: 11/09/94
PREPARED BY: **BG**
CHECKED BY:
FILE: **11050HX1**

BOILER & CONVERTER SURVEY OBSERVATIONS

HX-1	BOILER/CONVERTER NO.	**RM 102**	LOCATION (RM)
COGEN	SOURCE OF HEATING (PLANT)	**BLDG UH/AHU**	SERVES AREA

UNIT TYPE:

	STEAM		PSIG		HW		TEMP.		BOILER TYPE:
	NO.2 OIL		NO.6 OIL		N.GAS		ELEC		FUELS:
	STM/HW	X	HTHW/HW		HTHW/STM		OTHER		CONVERTER TYPE:
X	SPACE HEA		DHW		OTHER				USE:

COMMENT:	170 EWT, 200LWT	**20%** % HTG AREA SERVED
	GLYCOL HOT WATER FOR ADDITION	BB RADIATION ONLY

NAMEPLATE:

	MFG.		MODEL		CAPACITY OUTPUT (BTUH)
					CAPACITY INPUT (BTUH)
	MFG.		MODEL		CAPACITY OUTPUT (BTUH)
					CAPACITY INPUT (BTUH)
0.75	HW PUMP 1 - HP		MFG.		MODEL
	HW PUMP 2 - HP		MFG.		MODEL
	HW PUMP 3 - HP		MFG.		MODEL

COMMENT:	**SECOND1 HP PUMP AS BACKUP**
	PACKAGE CONVERTOR

OPERATION:

HOURS ON:	S	M	T	W	T	F	S	COMMENT
PRESENT START TIME	**0**	**0**	**0**	**0**	**0**	**0**	**0**	TIMECLOCK?
PRESENT STOP TIME	**2400**	**2400**	**2400**	**2400**	**2400**	**2400**	**2400**	
REQUIRED START TIME								
REQUIRED STOP TIME								

MONTHS ON:

J	F	M	A	M	J	J	A	S	O	N	D
1	**1**	**1**	**1**	**1**	**1**	**1**	**1**	**1**	**1**	**1**	**1**

CONTROLS:

	X	PNEUMATIC		ELECTRIC		ELEC'NIC		DDC	COMMENTS
SETPOINTS		PSIG	**200**	HW SUPPLY					
RESET CONTROL (oF):		HW HIGH		HW LOW		OA LOW		OA HIGH	
BURNER CONTROLS		O2 TRIM (Y/N)		OTHER					

COMMENTS:

E M C ENGINEERS, INC.

PROJECT: UMCS STUDY
CLIENT CONTRACT NO.: DACA01-94-D-0033
CLIENT PROJ. ENG: STEVE ROWLEY
LOCATION: FORT DRUM, NY BLDG: **11050**

EMC NO.: 1406-006
DATE: 11/09/94
PREPARED BY: **BG**
CHECKED BY:
FILE: **11050HX2**

BOILER & CONVERTER SURVEY OBSERVATIONS

HX-2	BOILER/CONVERTER NO.	**MER #4**	LOCATION (RM)
COGEN	SOURCE OF HEATING (PLANT)	**PHC**	SERVES AREA

UNIT TYPE:

	STEAM		PSIG		HW		TEMP.		BOILER TYPE:
	NO.2 OIL		NO.6 OIL		N.GAS		ELEC		FUELS:
	STM/HW	X	HTHW/HW		HTHW/STM		OTHER		CONVERTER TYPE:
X	SPACE HEA		DHW		OTHER				USE:
COMMENT:	118 EWT, 150 LWT						**20%**	% HTG AREA SERVED	
								BB RADIATION ONLY	

NAMEPLATE:

	MFG.		MODEL		CAPACITY OUTPUT (BTUH)
					CAPACITY INPUT (BTUH)
	MFG.		MODEL		CAPACITY OUTPUT (BTUH)
					CAPACITY INPUT (BTUH)
1	HW PUMP 1 - HP		MFG.		MODEL
	HW PUMP 2 - HP		MFG.		MODEL
	HW PUMP 3 - HP		MFG.		MODEL
COMMENT:	**SECOND1 HP PUMP AS BACKUP**				
	PACKAGE CONVERTOR				

OPERATION:

HOURS ON:	S	M	T	W	T	F	S	COMMENT
PRESENT START TIME	**0**	**0**	**0**	**0**	**0**	**0**	**0**	TIMECLOCK?
PRESENT STOP TIME	**2400**	**2400**	**2400**	**2400**	**2400**	**2400**	**2400**	
REQUIRED START TIME								
REQUIRED STOP TIME								

MONTHS ON:

J	F	M	A	M	J	J	A	S	O	N	D
1	**1**	**1**	**1**	**1**	**1**	**1**	**1**	**1**	**1**	**1**	**1**

CONTROLS:

	X	PNEUMATIC		ELECTRIC		ELEC'NIC		DDC	COMMENTS
SETPOINTS		PSIG	**200**	HW SUPPLY					
RESET CONTROL (oF):		HW HIGH		HW LOW		OA LOW		OA HIGH	
BURNER CONTROLS		O2 TRIM (Y/N)		OTHER					
COMMENTS:									

E M C ENGINEERS, INC.

PROJECT: UMCS STUDY
CLIENT CONTRACT NO.: DACA01-94-D-0033
CLIENT PROJ. ENG: STEVE ROWLEY
LOCATION: FORT DRUM, NY BLDG: **11050** CLINIC

EMC NO.: 1406-006
DATE: 11/09/94
PREPARED BY: **BG**
CHECKED BY:
FILE: **11050HV1**

AIR HANDLING UNIT SURVEY OBSERVATIONS

AHU-1	AHU NO.	**ROOM** **102**	LOCATION (RM)
	REF. SYS. SERVING AHU	**STORAGE**	SERVES AREA

UNIT TYPE:

X	SINGLE ZN		2-PIPE FC		4-PIPE FC		UNIT HTR	X	H&V
	MULTIZONE		DOUBLE DT		REHEAT		INDUCTION		VAV
	NUMBER OF ZONES				OTHER				
	COMMENT:	**ADDITION**							

NAMEPLATE:

TRANE					MFG.				MODEL
4.0	SUPPLY FAN HP	**MARATHON**			MFG.				MODEL
	RET/EXH FAN HP				MFG.				MODEL
5000	CFM-HTG		CFM-CLG	**25%**	MIN %OA	**100%**	MAX %OA	**5.0%**	% HTG AREA SERVED
COMMENT:									

COILS:

X	NONE		STM		HW		ELEC		MOD VLV	PREHEAT
	NONE		STM	X	HW		ELEC	X	MOD VLV	HEATING
X	NONE		STM		HW		ELEC		MOD VLV	REHEAT
X	NONE		STM		HW		EVAP MEDIA		MOD VLV	HUMID.
X	NONE		DX		CW				MOD VLV	COOLING

OPERATION:

HOURS ON:	S	M	T	W	T	F	S	COMMENTS
PRESENT START TIME	**0**	**0**	**0**	**0**	**0**	**0**	**0**	TIMECLOCK?
PRESENT STOP TIME	**2400**	**2400**	**2400**	**2400**	**2400**	**2400**	**2400**	**YES**
REQUIRED START TIME								
REQUIRED STOP TIME								

MONTHS ON:

J	F	M	A	M	J	J	A	S	O	N	D
1	**1**	**1**	**1**	**1**	**1**	**1**	**1**	**1**	**1**	**1**	**1**

CONTROLS:

	X	PNEUMATIC		ELECTRIC		ELEC'NIC		DDC	COMMENTS
THERMOSTAT TYPE:	**N**	SINGLE STPT	**Y**	DUAL SETPNT		SETBACK			
SPACE SETPOINT (°F):	**72**	OCC HEAT	**72**	UNOCC HEAT	**72**	OCC COOL	**72**	UNOCC COOL	
OTHER SETPOINTS (°F):		HOT DECK	**55**	COLD DECK	**55**	MIXED AIR		OTHER	
DAMPER CONTROL:	**Y**	MIN OA (Y/N)	**Y**	MAX OA (Y/N)	**Y**	RA (Y/N)	**Y**	EA (Y/N)	
		MA CONTROL		ECONO-DB		ECONO-ENT		OTHER	
DEMAND LIMIT:	**N**	(Y = YES ; N = NO)							
COMMENTS:									

E M C ENGINEERS, INC.

PROJECT: UMCS STUDY
CLIENT CONTRACT NO.: DACA01-94-D-0033
CLIENT PROJ. ENG: STEVE ROWLEY
LOCATION: FORT DRUM, NY BLDG: **11050** CLINIC

EMC NO.: 1406-006
DATE: 11/09/94
PREPARED BY: **BG**
CHECKED BY:
FILE: **11050HV2**

AIR HANDLING UNIT SURVEY OBSERVATIONS

AHU-2	AHU NO.	**ROOM 102**	LOCATION (RM)
	REF. SYS. SERVING AHU	**OFFICES**	SERVES AREA

UNIT TYPE:

X	SINGLE ZN		2-PIPE FC		4-PIPE FC		UNIT HTR	**X**	H&V
	MULTIZONE		DOUBLE DT		REHEAT		INDUCTION		VAV
	NUMBER OF ZONES				OTHER				
	COMMENT: **ADDITION**								

NAMEPLATE:

TRANE				MFG.				MODEL
7.5	SUPPLY FAN HP	**MARATHON**		MFG.				MODEL
	RET/EXH FAN HP			MFG.				MODEL
9000	CFM-HTG		CFM-CLG	**25%**	MIN %OA	**100%**	MAX %OA	**9.0%**	% HTG AREA SERVED
COMMENT:									

COILS:

X	NONE		STM		HW		ELEC		MOD VLV	PREHEAT
	NONE		STM	**X**	HW		ELEC	**X**	MOD VLV	HEATING
X	NONE		STM		HW		ELEC		MOD VLV	REHEAT
X	NONE		STM		HW		EVAP MEDIA		MOD VLV	HUMID.
X	NONE		DX		CW				MOD VLV	COOLING

OPERATION:

HOURS ON:	S	M	T	W	T	F	S	COMMENTS
PRESENT START TIME	**0**	**0**	**0**	**0**	**0**	**0**	**0**	TIMECLOCK?
PRESENT STOP TIME	**2400**	**2400**	**2400**	**2400**	**2400**	**2400**	**2400**	**YES**
REQUIRED START TIME								
REQUIRED STOP TIME								

MONTHS ON:

J	F	M	A	M	J	J	A	S	O	N	D
1	**1**	**1**	**1**	**1**	**1**	**1**	**1**	**1**	**1**	**1**	**1**

CONTROLS:

	X	PNEUMATIC		ELECTRIC		ELEC'NIC		DDC	COMMENTS
THERMOSTAT TYPE:	**N**	SINGLE STPT	**Y**	DUAL SETPNT		SETBACK			
SPACE SETPOINT (°F):	**72**	OCC HEAT	**72**	UNOCC HEAT		OCC COOL		UNOCC COOL	
OTHER SETPOINTS (°F):		HOT DECK	**55**	COLD DECK	**55**	MIXED AIR		OTHER	
DAMPER CONTROL:	**Y**	MIN OA (Y/N)	**Y**	MAX OA (Y/N)	**Y**	RA (Y/N)	**Y**	EA (Y/N)	
		MA CONTROL		ECONO-DB		ECONO-ENT		OTHER	
DEMAND LIMIT:	**N**	(Y = YES ; N = NO)							
COMMENTS:									

E M C ENGINEERS, INC.

PROJECT: UMCS STUDY
CLIENT CONTRACT NO.: DACA01-94-D-0033
CLIENT PROJ. ENG: STEVE ROWLEY
LOCATION: FORT DRUM, NY BLDG: **11050** CLINIC

EMC NO.: 1406-006
DATE: 11/09/94
PREPARED BY: **BG**
CHECKED BY:
FILE: **11050AA1**

AIR HANDLING UNIT SURVEY OBSERVATIONS

AHU-1	AHU NO.	**RM 102**	LOCATION (RM)
	REF. SYS. SERVING AHU	**STORAGE**	SERVES AREA

UNIT TYPE:

X	SINGLE ZN		2-PIPE FC		4-PIPE FC		UNIT HTR	**X**	H&V
	MULTIZONE		DOUBLE DT		REHEAT		INDUCTION		VAV
	NUMBER OF ZONES				OTHER				
	COMMENT:	**ADDITION STORAGE HEATER TO RUN CONTINUOUSLY**							

NAMEPLATE:

TRANE				MFG.				MODEL
4.0	SUPPLY FAN HP	**MARATHON**		MFG.				MODEL
	RET/EXH FAN HP			MFG.				MODEL
5000	CFM-HTG		CFM-CLG	**100%**	MIN %OA	**100%**	MAX %OA	**7.0%**	% HTG AREA SERVED
COMMENT:									

COILS:

X	NONE		STM		HW		ELEC		MOD VLV	PREHEAT
	NONE		STM	**X**	HW		ELEC	**X**	MOD VLV	HEATING
X	NONE		STM		HW		ELEC		MOD VLV	REHEAT
X	NONE		STM		HW		EVAP MEDIA		MOD VLV	HUMID.
X	NONE		DX		CW				MOD VLV	COOLING

OPERATION:

HOURS ON:	S	M	T	W	T	F	S	COMMENTS
PRESENT START TIME	**0**	**0**	**0**	**0**	**0**	**0**	**0**	TIMECLOCK?
PRESENT STOP TIME	**2400**	**2400**	**2400**	**2400**	**2400**	**2400**	**2400**	**YES**
REQUIRED START TIME								
REQUIRED STOP TIME								

MONTHS ON:

J	F	M	A	M	J	J	A	S	O	N	D
1	**1**	**1**	**1**	**1**	**1**	**1**	**1**	**1**	**1**	**1**	**1**

CONTROLS:

	X	PNEUMATIC		ELECTRIC		ELEC'NIC		DDC	COMMENTS
THERMOSTAT TYPE:	**N**	SINGLE STPT	**Y**	DUAL SETPNT		SETBACK			
SPACE SETPOINT (°F):	**60**	OCC HEAT	**60**	UNOCC HEAT		OCC COOL		UNOCC COOL	
OTHER SETPOINTS (°F):		HOT DECK	**55**	COLD DECK	**55**	MIXED AIR		OTHER	
DAMPER CONTROL:	**Y**	MIN OA (Y/N)	**Y**	MAX OA (Y/N)	**Y**	RA (Y/N)	**Y**	EA (Y/N)	
		MA CONTROL	**Y**	ECONO-DB		ECONO-ENT		OTHER	
DEMAND LIMIT:	**N**	(Y = YES ; N = NO)							
COMMENTS:									

E M C ENGINEERS, INC.

PROJECT: UMCS STUDY
CLIENT CONTRACT NO.: DACA01-94-D-0033
CLIENT PROJ. ENG: STEVE ROWLEY
LOCATION: FORT DRUM, NY BLDG: **11050** CLINIC

EMC NO.: 1406-006
DATE: 11/09/94
PREPARED BY: **BG**
CHECKED BY:
FILE: **11050AA2**

AIR HANDLING UNIT SURVEY OBSERVATIONS

AHU-2	AHU NO.	**RM 102**	LOCATION (RM)
	REF. SYS. SERVING AHU	**OFFICES**	SERVES AREA

UNIT TYPE:

X	SINGLE ZN		2-PIPE FC		4-PIPE FC		UNIT HTR	**X**	H&V
	MULTIZONE		DOUBLE DT		REHEAT		INDUCTION		VAV
	NUMBER OF ZONES				OTHER				
	COMMENT:		**ADDITION**						

NAMEPLATE:

TRANE					MFG.				MODEL
7.5	SUPPLY FAN HP	**MARATHON**			MFG.				MODEL
	RET/EXH FAN HP				MFG.				MODEL
9000	CFM-HTG		CFM-CLG	**100%**	MIN %OA	**100%**	MAX %OA	**13.0%**	% HTG AREA SERVED
COMMENT:									

COILS:

X	NONE		STM		HW		ELEC		MOD VLV	PREHEAT
	NONE		STM	**X**	HW		ELEC	**X**	MOD VLV	HEATING
X	NONE		STM		HW		ELEC		MOD VLV	REHEAT
X	NONE		STM		HW		EVAP MEDIA		MOD VLV	HUMID.
X	NONE		DX		CW				MOD VLV	COOLING

OPERATION:

HOURS ON:	S	M	T	W	T	F	S	COMMENTS
PRESENT START TIME	**0**	**0**	**0**	**0**	**0**	**0**	**0**	TIMECLOCK?
PRESENT STOP TIME	**2400**	**2400**	**2400**	**2400**	**2400**	**2400**	**2400**	**YES**
REQUIRED START TIME								
REQUIRED STOP TIME								

MONTHS ON:

J	F	M	A	M	J	J	A	S	O	N	D
1	**1**	**1**	**1**	**1**	**1**	**1**	**1**	**1**	**1**	**1**	**1**

CONTROLS:

	X	PNEUMATIC		ELECTRIC		ELEC'NIC		DDC	COMMENTS
THERMOSTAT TYPE:	**N**	SINGLE STPT	**Y**	DUAL SETPNT		SETBACK			
SPACE SETPOINT (°F):	**72**	OCC HEAT	**72**	UNOCC HEAT		OCC COOL		UNOCC COOL	
OTHER SETPOINTS (°F):		HOT DECK	**55**	COLD DECK	**55**	MIXED AIR		OTHER	
DAMPER CONTROL:	**Y**	MIN OA (Y/N)	**Y**	MAX OA (Y/N)	**Y**	RA (Y/N)	**Y**	EA (Y/N)	
		MA CONTROL	**Y**	ECONO-DB		ECONO-ENT		OTHER	
DEMAND LIMIT:	**N**	(Y = YES ; N = NO)							
COMMENTS:									

E M C ENGINEERS, INC.

PROJECT: UMCS STUDY
CLIENT CONTRACT NO.: DACA01-94-D-0033
CLIENT PROJ. ENG: STEVE ROWLEY
LOCATION: FORT DRUM, NY BLDG: **11050** CLINIC

EMC NO.: 1406-006
DATE: 11/09/94
PREPARED BY: **BG**
CHECKED BY:
FILE: **11050AH1**

AIR HANDLING UNIT SURVEY OBSERVATIONS

AHU-1	AHU NO.	**MECH. ROOM #3**	LOCATION (RM)
CHR1A,B,C	REF. SYS. SERVING AHU	**PATIENT BEDS**	SERVES AREA

UNIT TYPE:

	SINGLE ZN		2-PIPE FC		4-PIPE FC		UNIT HTR		H&V
	MULTIZONE		DOUBLE DT	X	REHEAT		INDUCTION	X	VAV
	NUMBER OF ZONES				OTHER				
	COMMENT:								

NAMEPLATE:

TRANE				MFG.				MODEL
15.0	SUPPLY FAN HP	**MARATHON**		MFG.				MODEL
	RET/EXH FAN HP			MFG.				MODEL
7645	CFM-HTG	**10130**	CFM-CLG	**46%**	MIN %OA	**100%**	MAX %OA	**18.5%**	% HTG AREA SERVED
COMMENT:									

COILS:

X	NONE		STM		HW		ELEC		MOD VLV	PREHEAT
	NONE		STM	X	HW		ELEC	X	MOD VLV	HEATING
X	NONE		STM		HW		ELEC		MOD VLV	REHEAT
X	NONE		STM		HW		EVAP MEDIA		MOD VLV	HUMID.
	NONE		DX	X	CW			X	MOD VLV	COOLING

OPERATION:

HOURS ON:	S	M	T	W	T	F	S	COMMENTS
PRESENT START TIME	**0**	**0**	**0**	**0**	**0**	**0**	**0**	TIMECLOCK?
PRESENT STOP TIME	**2400**	**2400**	**2400**	**2400**	**2400**	**2400**	**2400**	**YES**
REQUIRED START TIME								
REQUIRED STOP TIME								

MONTHS ON:

J	F	M	A	M	J	J	A	S	O	N	D
1	**1**	**1**	**1**	**1**	**1**	**1**	**1**	**1**	**1**	**1**	**1**

CONTROLS:

	X	PNEUMATIC		ELECTRIC		ELEC'NIC		DDC	COMMENTS
THERMOSTAT TYPE:	**N**	SINGLE STPT	**Y**	DUAL SETPNT		SETBACK			
SPACE SETPOINT (°F):	**72**	OCC HEAT	**72**	UNOCC HEAT	**72**	OCC COOL	**72**	UNOCC COOL	
OTHER SETPOINTS (°F):		HOT DECK	**55**	COLD DECK	**55**	MIXED AIR		OTHER	
DAMPER CONTROL:	**Y**	MIN OA (Y/N)	**Y**	MAX OA (Y/N)	**Y**	RA (Y/N)	**Y**	EA (Y/N)	
		MA CONTROL	**Y**	ECONO-DB		ECONO-ENT		OTHER	
DEMAND LIMIT:	**N**	(Y = YES ; N = NO)							
COMMENTS:									

E M C ENGINEERS, INC.

PROJECT: UMCS STUDY
CLIENT CONTRACT NO.: DACA01-94-D-0033
CLIENT PROJ. ENG: STEVE ROWLEY
LOCATION: FORT DRUM, NY BLDG: **11050** CLINIC

EMC NO.: 1406-006
DATE: 11/09/94
PREPARED BY: **BG**
CHECKED BY:
FILE: **11050AH2**

AIR HANDLING UNIT SURVEY OBSERVATIONS

AHU-2	AHU NO.	**MECH ROOM #4**	LOCATION (RM)
CHR1A,B,C	REF. SYS. SERVING AHU	**EMERGENCY**	SERVES AREA

UNIT TYPE:

	SINGLE ZN		2-PIPE FC		4-PIPE FC		UNIT HTR		H&V
	MULTIZONE		DOUBLE DT	X	REHEAT		INDUCTION	X	VAV
	NUMBER OF ZONES				OTHER				
	COMMENT:								

NAMEPLATE:

TRANE				MFG.				MODEL
4.0	SUPPLY FAN HP	**MARATHON**		MFG.				MODEL
	RET/EXH FAN HP			MFG.				MODEL
2470	CFM-HTG	**3190**	CFM-CLG	**26%**	MIN %OA	**100%**	MAX %OA	**8.5%**	% HTG AREA SERVED
COMMENT:									

COILS:

X	NONE		STM		HW		ELEC		MOD VLV	PREHEAT
	NONE		STM	X	HW		ELEC	X	MOD VLV	HEATING
X	NONE		STM		HW		ELEC		MOD VLV	REHEAT
X	NONE		STM		HW		EVAP MEDIA		MOD VLV	HUMID.
	NONE		DX	X	CW			X	MOD VLV	COOLING

OPERATION:

HOURS ON:	S	M	T	W	T	F	S	COMMENTS
PRESENT START TIME	**0**	**0**	**0**	**0**	**0**	**0**	**0**	TIMECLOCK?
PRESENT STOP TIME	**2400**	**2400**	**2400**	**2400**	**2400**	**2400**	**2400**	**YES**
REQUIRED START TIME								
REQUIRED STOP TIME								

MONTHS ON:

J	F	M	A	M	J	J	A	S	O	N	D
1	**1**	**1**	**1**	**1**	**1**	**1**	**1**	**1**	**1**	**1**	**1**

CONTROLS:

	X	PNEUMATIC		ELECTRIC		ELEC'NIC		DDC	COMMENTS
THERMOSTAT TYPE:	N	SINGLE STPT	Y	DUAL SETPNT		SETBACK			
SPACE SETPOINT (°F):	**72**	OCC HEAT	**72**	UNOCC HEAT	**72**	OCC COOL	**72**	UNOCC COOL	
OTHER SETPOINTS (°F):		HOT DECK	**55**	COLD DECK	**55**	MIXED AIR		OTHER	
DAMPER CONTROL:	Y	MIN OA (Y/N)	Y	MAX OA (Y/N)	Y	RA (Y/N)	Y	EA (Y/N)	
		MA CONTROL	Y	ECONO-DB		ECONO-ENT		OTHER	
DEMAND LIMIT:	N	(Y = YES ; N = NO)							
COMMENTS:									

E M C ENGINEERS, INC.

PROJECT: UMCS STUDY
CLIENT CONTRACT NO.: DACA01-94-D-0033
CLIENT PROJ. ENG: STEVE ROWLEY
LOCATION: FORT DRUM, NY BLDG: **11050** CLINIC

EMC NO.: 1406-006
DATE: 11/09/94
PREPARED BY: **BG**
CHECKED BY:
FILE: **11050AH3**

AIR HANDLING UNIT SURVEY OBSERVATIONS

AHU-3	AHU NO.	**MECH. ROOM # 4**	LOCATION (RM)
CHR1A,B,C	REF. SYS. SERVING AHU	**OR'S**	SERVES AREA

UNIT TYPE:

	SINGLE ZN		2-PIPE FC		4-PIPE FC		UNIT HTR		H&V
	MULTIZONE		DOUBLE DT	X	REHEAT		INDUCTION	X	VAV
	NUMBER OF ZONES				OTHER				
	COMMENT:	**HEAT RECOVERY COIL**			**HRC PUMP .2 HP**				

NAMEPLATE:

TRANE					MFG.				MODEL
3.0	SUPPLY FAN HP	**MARATHON**			MFG.				MODEL
	RET/EXH FAN HP				MFG.				MODEL
2100	CFM-HTG	**2100**	CFM-CLG	**100%**	MIN %OA	**100%**	MAX %OA	**6.0%**	% HTG AREA SERVED
COMMENT:									

COILS:

	NONE		STM	X	HW		ELEC	X	MOD VLV	PREHEAT
	NONE		STM	X	HW		ELEC	X	MOD VLV	HEATING
X	NONE		STM		HW		ELEC		MOD VLV	REHEAT
X	NONE		STM		HW		EVAP MEDIA		MOD VLV	HUMID.
	NONE		DX	X	CW			X	MOD VLV	COOLING

OPERATION:

HOURS ON:	S	M	T	W	T	F	S	COMMENTS
PRESENT START TIME	**0**	**0**	**0**	**0**	**0**	**0**	**0**	TIMECLOCK?
PRESENT STOP TIME	**2400**	**2400**	**2400**	**2400**	**2400**	**2400**	**2400**	**YES**
REQUIRED START TIME								
REQUIRED STOP TIME								

MONTHS ON:

J	F	M	A	M	J	J	A	S	O	N	D
1	**1**	**1**	**1**	**1**	**1**	**1**	**1**	**1**	**1**	**1**	**1**

CONTROLS:

	X	PNEUMATIC		ELECTRIC		ELEC'NIC		DDC	COMMENTS
THERMOSTAT TYPE:	N	SINGLE STPT	Y	DUAL SETPNT		SETBACK			
SPACE SETPOINT (°F):	**72**	OCC HEAT	**72**	UNOCC HEAT	**72**	OCC COOL	**72**	UNOCC COOL	
OTHER SETPOINTS (°F):		HOT DECK	**55**	COLD DECK	**55**	MIXED AIR		OTHER	
DAMPER CONTROL:	Y	MIN OA (Y/N)	Y	MAX OA (Y/N)	Y	RA (Y/N)	Y	EA (Y/N)	
		MA CONTROL	Y	ECONO-DB		ECONO-ENT		OTHER	
DEMAND LIMIT:	N	(Y = YES ; N = NO)							

COMMENTS: EAT -13 LAT 22 - FOR HEAT RECOVERY COIL.

E M C ENGINEERS, INC.

PROJECT: UMCS STUDY
CLIENT CONTRACT NO.: DACA01-94-D-0033
CLIENT PROJ. ENG: STEVE ROWLEY
LOCATION: FORT DRUM, NY BLDG: **11050** CLINIC

EMC NO.: 1406-006
DATE: 11/09/94
PREPARED BY: **BG**
CHECKED BY:
FILE: **11050AH4**

AIR HANDLING UNIT SURVEY OBSERVATIONS

AHU-4	AHU NO.	**MECH. ROOM #4**	LOCATION (RM)
CHR1A,B,C	REF. SYS. SERVING AHU	**SURGICAL SUITE**	SERVES AREA

UNIT TYPE:

	SINGLE ZN		2-PIPE FC		4-PIPE FC		UNIT HTR		H&V
	MULTIZONE		DOUBLE DT	X	REHEAT		INDUCTION	X	VAV
	NUMBER OF ZONES				OTHER				
	COMMENT:								

NAMEPLATE:

TRANE					MFG.				MODEL
5.0	SUPPLY FAN HP	**MARATHON**			MFG.				MODEL
	RET/EXH FAN HP				MFG.				MODEL
3475	CFM-HTG	**4005**	CFM-CLG	**35%**	MIN %OA	**100%**	MAX %OA	**11.0%**	% HTG AREA SERVED
COMMENT:									

COILS:

X	NONE		STM		HW		ELEC		MOD VLV	PREHEAT
	NONE		STM	X	HW		ELEC	X	MOD VLV	HEATING
X	NONE		STM		HW		ELEC		MOD VLV	REHEAT
X	NONE		STM		HW		EVAP MEDIA		MOD VLV	HUMID.
	NONE		DX	X	CW			X	MOD VLV	COOLING

OPERATION:

HOURS ON:	S	M	T	W	T	F	S	COMMENTS
PRESENT START TIME	**0**	**0**	**0**	**0**	**0**	**0**	**0**	TIMECLOCK?
PRESENT STOP TIME	**2400**	**2400**	**2400**	**2400**	**2400**	**2400**	**2400**	**YES**
REQUIRED START TIME								
REQUIRED STOP TIME								

MONTHS ON:

J	F	M	A	M	J	J	A	S	O	N	D
1	**1**	**1**	**1**	**1**	**1**	**1**	**1**	**1**	**1**	**1**	**1**

CONTROLS:

	X	PNEUMATIC		ELECTRIC		ELEC'NIC		DDC	COMMENTS
THERMOSTAT TYPE:	N	SINGLE STPT	Y	DUAL SETPNT		SETBACK			
SPACE SETPOINT (°F):	**72**	OCC HEAT	**72**	UNOCC HEAT	**72**	OCC COOL	**72**	UNOCC COOL	
OTHER SETPOINTS (°F):		HOT DECK	**55**	COLD DECK	**55**	MIXED AIR		OTHER	
DAMPER CONTROL:	Y	MIN OA (Y/N)	Y	MAX OA (Y/N)	Y	RA (Y/N)	Y	EA (Y/N)	
		MA CONTROL	Y	ECONO-DB		ECONO-ENT		OTHER	
DEMAND LIMIT:	N	(Y = YES ; N = NO)							
COMMENTS:									

E M C ENGINEERS, INC.

PROJECT: UMCS STUDY
CLIENT CONTRACT NO.: DACA01-94-D-0033
CLIENT PROJ. ENG: STEVE ROWLEY
LOCATION: FORT DRUM, NY BLDG: **11050** CLINIC

EMC NO.: 1406-006
DATE: 11/09/94
PREPARED BY: **BG**
CHECKED BY:
FILE: **11050AH5**

AIR HANDLING UNIT SURVEY OBSERVATIONS

AHU-5	AHU NO.	**MECH. ROOM #1**	LOCATION (RM)
CHR1A,B,C	REF. SYS. SERVING AHU	**CLINIC NORTH**	SERVES AREA

UNIT TYPE:

	SINGLE ZN		2-PIPE FC		4-PIPE FC		UNIT HTR		H&V
	MULTIZONE		DOUBLE DT	X	REHEAT		INDUCTION	X	VAV
	NUMBER OF ZONES				OTHER				
	COMMENT:								

NAMEPLATE:

TRANE				MFG.				MODEL
5.0	SUPPLY FAN HP	**MARATHON**		MFG.				MODEL
	RET/EXH FAN HP			MFG.				MODEL
3720	CFM-HTG	**9915**	CFM-CLG	**25%**	MIN %OA	**100%**	MAX %OA	**16.5%**	% HTG AREA SERVED
COMMENT:									

COILS:

X	NONE		STM		HW		ELEC		MOD VLV	PREHEAT
	NONE		STM	X	HW		ELEC	X	MOD VLV	HEATING
X	NONE		STM		HW		ELEC		MOD VLV	REHEAT
X	NONE		STM		HW		EVAP MEDIA		MOD VLV	HUMID.
	NONE		DX	X	CW			X	MOD VLV	COOLING

OPERATION:

HOURS ON:	S	M	T	W	T	F	S	COMMENTS
PRESENT START TIME	**0**	**0**	**0**	**0**	**0**	**0**	**0**	TIMECLOCK?
PRESENT STOP TIME	**2400**	**2400**	**2400**	**2400**	**2400**	**2400**	**2400**	**YES**
REQUIRED START TIME								
REQUIRED STOP TIME								

MONTHS ON:

J	F	M	A	M	J	J	A	S	O	N	D
1	**1**	**1**	**1**	**1**	**1**	**1**	**1**	**1**	**1**	**1**	**1**

CONTROLS:

	X	PNEUMATIC		ELECTRIC		ELEC'NIC		DDC	COMMENTS
THERMOSTAT TYPE:	N	SINGLE STPT	Y	DUAL SETPNT		SETBACK			
SPACE SETPOINT (°F):	**72**	OCC HEAT	**72**	UNOCC HEAT	**72**	OCC COOL	**72**	UNOCC COOL	
OTHER SETPOINTS (°F):		HOT DECK	**55**	COLD DECK	**55**	MIXED AIR		OTHER	
DAMPER CONTROL:	Y	MIN OA (Y/N)	Y	MAX OA (Y/N)	Y	RA (Y/N)	Y	EA (Y/N)	
		MA CONTROL	Y	ECONO-DB		ECONO-ENT		OTHER	
DEMAND LIMIT:	N	(Y = YES ; N = NO)							
COMMENTS:									

E M C ENGINEERS, INC.

PROJECT: UMCS STUDY
CLIENT CONTRACT NO.: DACA01-94-D-0033
CLIENT PROJ. ENG: STEVE ROWLEY
LOCATION: FORT DRUM, NY BLDG: **11050** CLINIC

EMC NO.: 1406-006
DATE: 11/09/94
PREPARED BY: **BG**
CHECKED BY:
FILE: **11050AH6**

AIR HANDLING UNIT SURVEY OBSERVATIONS

AHU-6	AHU NO.	**MECH. ROOM #1**	LOCATION (RM)
CHR1A,B,C	REF. SYS. SERVING AHU	**CLINIC SOUTH**	SERVES AREA

UNIT TYPE:

	SINGLE ZN		2-PIPE FC		4-PIPE FC		UNIT HTR		H&V
	MULTIZONE		DOUBLE DT	X	REHEAT		INDUCTION	X	VAV
	NUMBER OF ZONES				OTHER				
	COMMENT:								

NAMEPLATE:

TRANE					MFG.				MODEL
5.0	SUPPLY FAN HP	**MARATHON**			MFG.				MODEL
	RET/EXH FAN HP				MFG.				MODEL
11035	CFM-HTG	**13685**	CFM-CLG	**25%**	MIN %OA	**100%**	MAX %OA	**25.5%**	% HTG AREA SERVED
COMMENT:									

COILS:

X	NONE		STM		HW		ELEC		MOD VLV	PREHEAT
	NONE		STM	X	HW		ELEC	X	MOD VLV	HEATING
X	NONE		STM		HW		ELEC		MOD VLV	REHEAT
X	NONE		STM		HW		EVAP MEDIA		MOD VLV	HUMID.
	NONE		DX	X	CW			X	MOD VLV	COOLING

OPERATION:

HOURS ON:	S	M	T	W	T	F	S	COMMENTS
PRESENT START TIME	**0**	**0**	**0**	**0**	**0**	**0**	**0**	TIMECLOCK?
PRESENT STOP TIME	**2400**	**2400**	**2400**	**2400**	**2400**	**2400**	**2400**	**YES**
REQUIRED START TIME								
REQUIRED STOP TIME								

MONTHS ON:

J	F	M	A	M	J	J	A	S	O	N	D
1	**1**	**1**	**1**	**1**	**1**	**1**	**1**	**1**	**1**	**1**	**1**

CONTROLS:

	X	PNEUMATIC		ELECTRIC		ELEC'NIC		DDC	COMMENTS
THERMOSTAT TYPE:	**N**	SINGLE STPT	**Y**	DUAL SETPNT		SETBACK			
SPACE SETPOINT (°F):	**72**	OCC HEAT	**72**	UNOCC HEAT	**72**	OCC COOL	**72**	UNOCC COOL	
OTHER SETPOINTS (°F):		HOT DECK	**55**	COLD DECK	**55**	MIXED AIR		OTHER	
DAMPER CONTROL:	**Y**	MIN OA (Y/N)	**Y**	MAX OA (Y/N)	**Y**	RA (Y/N)	**Y**	EA (Y/N)	
		MA CONTROL	**Y**	ECONO-DB		ECONO-ENT		OTHER	
DEMAND LIMIT:	**N**	(Y = YES ; N = NO)							
COMMENTS:									

E M C ENGINEERS, INC.								EMC NO.: 1406-006			
PROJECT: UMCS STUDY								DATE: 11/09/94			
CLIENT CONTRACT NO.: DACA01-94-D-0033								PREPARED BY: **BG**			
CLIENT PROJ. ENG: STEVE ROWLEY								CHECKED BY:			
LOCATION: FORT DRUM, NY				BLDG: **11050A**				FILE: **11050CH**			
	REFRIGERATION EQUIPMENT SURVEY OBSERVATIONS										
CHR-1A,B,C		CHILLER/COMPRESSOR NO.				**MER#1**		LOCATION (RM)			
					UNIT TYPE:						
	CENTRIFUGAL WITH WATER SIDE COOLING TOWER					OTHER					
	RECIPROCATING WITH WATER SIDE COOLING TOWER					AHU'S SERVED					
X	RECIPROCATING WITH AIR COOLED CONDENSING UNIT					AHU 1 THRU 6					
	ABSORBTION WITH WATER SIDE COOLING TOWER										
	AIR COOLED CONDENSING UNIT										
X	CHW		DX		OTHER						
					NAMEPLATE:						
CHILLER	**TRANE**	MFG.	**CCACC604NDNGR60**			MODEL				SERIAL NO.	
460	VOLTS	**150**	AMPS	**3**	PH	**60**	HZ	**54.4**	CAPACITY (TONS)		
TOWER		MFG.				MODEL				# OF FANS	
	VOLTS		AMPS		PH		HZ		HP each		
CW PUMP		MFG.				MODEL				SERIAL NO.	
	VOLTS		AMPS		PH		HZ	**2**	HP		
CNW PUMP		MFG.				MODEL				SERIAL NO.	
	VOLTS		AMPS		PH		HZ		HP		
COMMENTS:		**BELOW 55 DEGREES ECONIMIZE**									
					OPERATION:						
HOURS ON:			S	M	T	W	T	F	S	COMMENT	
PRESENT START TIME			**0**	**0**	**0**	**0**	**0**	**0**	**0**	TIMECLOCK?	
PRESENT STOP TIME			**2400**	**2400**	**2400**	**2400**	**2400**	**2400**	**2400**		
REQUIRED START TIME											
REQUIRED STOP TIME											
MONTHS ON:											
J	F	M	A	M	J	J	A	S	O	N	D
1	**1**	**1**	**1**	**1**	**1**	**1**	**1**	**1**	**1**	**1**	**1**
					CONTROLS:						
		X	PNEUMATIC		ELECTRIC		ELEC'NIC		DDC	COMMENTS	
SETPOINTS		**44**	CWS (oF)	**60**	CWR (oF)		CNWS (oF)		CNWR (oF)		
PANEL INDICATORS											
- PRESSURE			LITE-HI		LITE-LOW		GAUGES				
- TEMPERATURE			LITE-HI		LITE-LOW		GAUGES				
- OTHER											
COMMENTS:											

E M C ENGINEERS, INC.								EMC NO.: 1406-006			
PROJECT: UMCS STUDY								DATE: 11/09/94			
CLIENT CONTRACT NO.: DACA01-94-D-0033								PREPARED BY: **BG**			
CLIENT PROJ. ENG: STEVE ROWLEY								CHECKED BY:			
LOCATION: FORT DRUM, NY			BLDG: **11050A**					FILE: **11050CND**			
REFRIGERATION EQUIPMENT SURVEY OBSERVATIONS											
ACCU - 1A THRU 3B		CHILLER/COMPRESSOR NO.				**MER#1**		LOCATION (RM)			
				UNIT TYPE:							
	CENTRIFUGAL WITH WATER SIDE COOLING TOWER					OTHER					
	RECIPROCATING WITH WATER SIDE COOLING TOWER					AHU'S SERVED					
	RECIPROCATING WITH AIR COOLED CONDENSING UNIT					AHU 1 THRU 6					
	ABSORBTION WITH WATER SIDE COOLING TOWER										
X	AIR COOLED CONDENSING UNIT					SERVES CHILLERS					
X	CHW		DX		OTHER						
				NAMEPLATE:							
CHILLER	**TRANE**	MFG.	**CAUBC404A10**			MODEL				SERIAL NO.	
	VOLTS		AMPS		PH		HZ	**42.8**	CAPACITY (TONS)		
TOWER		MFG.				MODEL				# OF FANS	
	VOLTS		AMPS		PH		HZ		HP each		
CW PUMP		MFG.				MODEL				SERIAL NO.	
	VOLTS		AMPS		PH		HZ		HP		
CNW PUMP		MFG.				MODEL				SERIAL NO.	
	VOLTS		AMPS		PH		HZ		HP		
COMMENTS:		**8 UNITS TOTAL**									
				OPERATION:							
HOURS ON:			S	M	T	W	T	F	S	COMMENT	
PRESENT START TIME			**0**	**0**	**0**	**0**	**0**	**0**	**0**	TIMECLOCK?	
PRESENT STOP TIME			**2400**	**2400**	**2400**	**2400**	**2400**	**2400**	**2400**		
REQUIRED START TIME											
REQUIRED STOP TIME											
MONTHS ON:											
J	F	M	A	M	J	J	A	S	O	N	D
1	**1**	**1**	**1**	**1**	**1**	**1**	**1**	**1**	**1**	**1**	**1**
				CONTROLS:							
		X	PNEUMATIC		ELECTRIC		ELEC'NIC		DDC	COMMENTS	
SETPOINTS			CWS (oF)		CWR (oF)		CNWS (oF)		CNWR (oF)		
PANEL INDICATORS											
- PRESSURE			LITE-HI		LITE-LOW		GAUGES				
- TEMPERATURE			LITE-HI		LITE-LOW		GAUGES				
- OTHER											
COMMENTS:											

FIELD SURVEY NOTES

BUILDING 21510

E M C ENGINEERS, INC.

PROJECT: UMCS STUDY
CLIENT CONTRACT NO.: DACA01-94-D-0033
CLIENT PROJ. ENG: STEVE ROWLEY
LOCATION: FORT DRUM, NY BLDG: 21510 VEH WASH

EMC NO.: 1406-006
DATE: 11/14/94
PREPARED BY: BG
CHECKED BY:
FILE: FD21510

VI. BUILDING DATA SURVEY OBSERVATIONS

BLDG NO: 21510 BLDG NAME: VEHICLE WASH

ZONE NO.	A		FUNCTION: CONTROL ROOM						
OCCUPANCY HOURS:	M-F	700	TO	1900	SAT	700	TO	1900	
	SUN	700	TO	1900					
PRESENT TEMP	WINTER OCC	68.0 øF		UNOCC	68.0 øF				
	SUMMER OCC	øF		UNOCC	øF				

ZONE NO.	B		FUNCTION: WINTER WASH						
OCCUPANCY HOURS:	M-F	700	TO	1900	SAT	700	TO	1900	
	SUN	700	TO	1900					
PRESENT TEMP	WINTER OCC	65.0 øF		UNOCC	65.0 øF				
	SUMMER OCC	øF		UNOCC	øF				

ZONE NO.			FUNCTION:						
OCCUPANCY HOURS:	M-F		TO		SAT		TO		
	SUN		TO						
PRESENT TEMP	WINTER OCC	øF		UNOCC	øF				
	SUMMER OCC	øF		UNOCC	øF				

REMARKS: TRACER BUILDING
STILL UNDER CONSTRUCTION

ADDITIONAL LOADS:

PACKAGED PRESSURE BOOSTER PUMPS: 22.5 HORSE POWER

AIR CURTAIN FANS: 48 HORSE POWER

PUMP STATION UNIT HEATERS: 80 TOTAL MBH OUTPUT AND 1/20 HP

VENTILATION FANS: TOTAL OF 20.2 HORSE POWER

DUPLEX AIR COMPRESSORS: 15 TOTAL HORSE POWER (7.5 EACH)

EXTRA HW PUMPS: 12 TOTAL HORSE POWER

3 HOT WATER UNIT HEATERS FOR MECH. ROOM: 63 TOTAL MBH OUTPUT AT3/20 HP.

E M C ENGINEERS, INC.

PROJECT: UMCS STUDY
CLIENT CONTRACT NO.: DACA01-94-D-0033
CLIENT PROJ. ENG: STEVE ROWLEY
LOCATION: FORT DRUM, NY BLDG: **21510 VEH. WASH**

EMC NO.: 1406-006
DATE: 11/14/94
PREPARED BY: **BG**
CHECKED BY:
FILE: **10670BBRS**

BOILER & CONVERTER SURVEY OBSERVATIONS

B-1,2	BOILER/CONVERTER NO.	**MECH. ROOM**	LOCATION (RM)
	SOURCE OF HEATING (PLANT)	**WHOLE BLDG.**	SERVES AREA

UNIT TYPE:

	STEAM		PSIG	X	HW		TEMP.		BOILER TYPE:
	NO.2 OIL		NO.6 OIL		N.GAS		ELEC		FUELS:
	STM/HW		HTHW/HW		HTHW/STM		OTHER		CONVERTER TYPE:
	SPACE HEAT		DHW		OTHER				USE:
COMMENT:	**LP GAS**								% HTG AREA SERVED
									BB RADIATION ONLY

NAMEPLATE:

CLEAVER BROOKS	MFG.	**CB 700-200**	MODEL	**6695000**	CAPACITY OUTPUT (BTUH)
				8369000	CAPACITY INPUT (BTUH)
CLEAVER BROOKS	MFG.	**CB 700-200**	MODEL	**6695000**	CAPACITY OUTPUT (BTUH)
				8369000	CAPACITY INPUT (BTUH)

5	HW PUMP 1 - HP	**US MOTORS**	MFG.	MODEL
	HW PUMP 2 - HP		MFG.	MODEL
	HW PUMP 3 - HP		MFG.	MODEL

COMMENT: ONE BACKUP PUMP

OPERATION:

HOURS ON:	S	M	T	W	T	F	S	COMMENT
PRESENT START TIME	**0**	**0**	**0**	**0**	**0**	**0**	**0**	TIMECLOCK?
PRESENT STOP TIME	**2400**	**2400**	**2400**	**2400**	**2400**	**2400**	**2400**	
REQUIRED START TIME								
REQUIRED STOP TIME								

MONTHS ON:

J	F	M	A	M	J	J	A	S	O	N	D
1	**1**	**1**	**1**	**1**	**1**	**1**	**1**	**1**	**1**	**1**	**1**

CONTROLS:

	X	PNEUMATIC		ELECTRIC		ELEC'NIC		DDC	COMMENTS
SETPOINTS		PSIG	**180**	HW SUPPLY					
RESET CONTROL (oF):		HW HIGH		HW LOW		OA LOW		OA HIGH	
BURNER CONTROLS		O2 TRIM (Y/N)		OTHER					

COMMENTS:

PROJECT: UMCS STUDY
CLIENT CONTRACT NO.: DACA01-94-D-0033
CLIENT PROJ. ENG: STEVE ROWLEY
LOCATION: FORT DRUM, NY BLDG: **21510 VEH. WASH**

EMC NO.: 1406-006
DATE: 11/14/94
PREPARED BY:
CHECKED BY:
FILE: **21510DHW**

DOMESTIC HW SURVEY OBSERVATIONS

DHW-1	BOILER/CONVERTER NO.	MECH. ROOM	LOCATION (RM)
	SOURCE OF HEATING (PLANT)	WHOLE BLDNG	SERVES AREA

UNIT TYPE:

	NO.2 OIL		NO.6 OIL		N.GAS	X	ELEC		FUELS:
	STM/HW		HTHW/HW		HTHW/STM		OTHER		CONVERTER TYPE:
COMMENT:									

NAMEPLATE:

AO SMITH DURA-PO	MFG.	**DEN 40102**	MODEL	**9 KW**	CAPACITY OUTPUT (BTUH,KW)
	MFG.		MODEL		CAPACITY OUTPUT (BTUH,KW)

DOMESTIC HW CIRCULATION PUMP:				
	HW PUMP 1 - HP		MFG.	MODEL
	HW PUMP 2 - HP		MFG.	MODEL
	HW PUMP 3 - HP		MFG.	MODEL
COMMENT:				

DIMENSION:	DIAMETER (INCHS)		HEIGHT OR LENGTH (INCHES)	GALLON

OPERATION:

HOURS ON:	S	M	T	W	T	F	S	COMMENT
PRESENT START TIME	0							TIMECLOCK?
PRESENT STOP TIME	2400							
REQUIRED START TIME								
REQUIRED STOP TIME								

MONTHS ON:

J	F	M	A	M	J	J	A	S	O	N	D
1											

CONTROLS:

	X	PNEUMATIC		ELECTRIC		ELEC'NIC		DDC	COMMENTS
SETPOINTS				HW SUPPLY					
COMMENTS:									

E M C ENGINEERS, INC.

PROJECT: UMCS STUDY
CLIENT CONTRACT NO.: DACA01-94-D-0033
CLIENT PROJ. ENG: STEVE ROWLEY
LOCATION: FORT DRUM, NY BLDG: **21510** VEH WASH

EMC NO.: 1406-006
DATE: 11/14/94
PREPARED BY: **BG**
CHECKED BY:
FILE: **21510MA1**

AIR HANDLING UNIT SURVEY OBSERVATIONS

MAU01	AHU NO.	**WINTER WASH**	LOCATION (RM)
	REF. SYS. SERVING AHU	**WINTER WASH**	SERVES AREA

UNIT TYPE:

X	SINGLE ZN		2-PIPE FC		4-PIPE FC		UNIT HTR		H&V
	MULTIZONE		DOUBLE DT		REHEAT		INDUCTION		VAV
	NUMBER OF ZONES				OTHER				
	COMMENT: NO EQUIPMENT RUNNING SINCE STILL UNDER CONSTRUCTION								

NAMEPLATE:

TRANE					MFG.				MODEL
5.0	SUPPLY FAN HP				MFG.				MODEL
	RET/EXH FAN HP				MFG.				MODEL
11250	CFM-HTG		CFM-CLG	**100%**	MIN %OA	**100%**	MAX %OA	**9.0%**	% HTG AREA SERVED
COMMENT:			**EWT 180 LWT 160**						
			GPM 68.8		NO EQUIPMENT RUNNING SINCE STILL UNDER CONSTRUCTION				

COILS:

X	NONE		STM		HW		ELEC		MOD VLV	PREHEAT
	NONE		STM	X	HW		ELEC	X	MOD VLV	HEATING
X	NONE		STM		HW		ELEC		MOD VLV	REHEAT
X	NONE		STM		HW		EVAP MEDIA		MOD VLV	HUMID.
X	NONE		DX		CW				MOD VLV	COOLING

OPERATION:

HOURS ON:	S	M	T	W	T	F	S	COMMENTS
PRESENT START TIME	0	0	0	0	0	0	0	TIMECLOCK?
PRESENT STOP TIME	2400 0	0	0	0	0	0	0	
REQUIRED START TIME								
REQUIRED STOP TIME								

MONTHS ON: NO EQUIPMENT RUNNING SINCE STILL UNDER CONSTRUCTION

J	F	M	A	M	J	J	A	S	O	N	D

CONTROLS:

	X	PNEUMATIC		ELECTRIC		ELEC'NIC	X	DDC	COMMENTS
THERMOSTAT TYPE:		SINGLE STPT		DUAL SETPNT		SETBACK			
SPACE SETPOINT (°F):		OCC HEAT		UNOCC HEAT		OCC COOL		UNOCC COOL	
OTHER SETPOINTS (°F):		HOT DECK		COLD DECK		MIXED AIR		OTHER	
DAMPER CONTROL:	N	MIN OA (Y/N)	Y	MAX OA (Y/N)	N	RA (Y/N)	N	EA (Y/N)	
		MA CONTROL	Y	ECONO-DB		ECONO-ENT		OTHER	
DEMAND LIMIT:		(Y = YES ; N = NO)							

COMMENTS:

E M C ENGINEERS, INC.

PROJECT: UMCS STUDY
CLIENT CONTRACT NO.: DACA01-94-D-0033
CLIENT PROJ. ENG: STEVE ROWLEY
LOCATION: FORT DRUM, NY BLDG: **21510** VEH WASH

EMC NO.: 1406-006
DATE: 11/14/94
PREPARED BY: **BG**
CHECKED BY:
FILE: **21510MA2**

AIR HANDLING UNIT SURVEY OBSERVATIONS

MAU2	AHU NO.	**WINTER WASH**	LOCATION (RM)
	REF. SYS. SERVING AHU	**WINTER WASH**	SERVES AREA

UNIT TYPE:

X	SINGLE ZN		2-PIPE FC		4-PIPE FC		UNIT HTR		H&V
	MULTIZONE		DOUBLE DT		REHEAT		INDUCTION		VAV
	NUMBER OF ZONES				OTHER				
	COMMENT:								

NAMEPLATE:

TRANE					MFG.				MODEL
3.0	SUPPLY FAN HP				MFG.				MODEL
	RET/EXH FAN HP				MFG.				MODEL
5625	CFM-HTG		CFM-CLG	**100%**	MIN %OA	**100%**	MAX %OA	**9.0%**	% HTG AREA SERVED
COMMENT:			**EWT 180 LWT 160**						
			GPM 34.4		NO EQUIPMENT RUNNING SINCE STILL UNDER CONSTRUCTION				

COILS:

X	NONE		STM		HW		ELEC		MOD VLV	PREHEAT
	NONE		STM	X	HW		ELEC	X	MOD VLV	HEATING
X	NONE		STM		HW		ELEC		MOD VLV	REHEAT
X	NONE		STM		HW		EVAP MEDIA		MOD VLV	HUMID.
X	NONE		DX		CW				MOD VLV	COOLING

OPERATION:

HOURS ON:	S	M	T	W	T	F	S	COMMENTS
PRESENT START TIME	**0**	**0**	**0**	**0**	**0**	**0**	**0**	TIMECLOCK?
PRESENT STOP TIME	2400 **0**	**0**	**0**	**0**	**0**	**0**	**0**	
REQUIRED START TIME								
REQUIRED STOP TIME								

MONTHS ON:

J	F	M	A	M	J	J	A	S	O	N	D
(											

CONTROLS:

	X	PNEUMATIC		ELECTRIC		ELEC'NIC	X	DDC	COMMENTS
THERMOSTAT TYPE:		SINGLE STPT		DUAL SETPNT		SETBACK			
SPACE SETPOINT (°F):		OCC HEAT		UNOCC HEAT		OCC COOL		UNOCC COOL	
OTHER SETPOINTS (°F):		HOT DECK		COLD DECK		MIXED AIR		OTHER	
DAMPER CONTROL:	**N**	MIN OA (Y/N)	**Y**	MAX OA (Y/N)	**N**	RA (Y/N)	**N**	EA (Y/N)	
		MA CONTROL	**Y**	ECONO-DB		ECONO-ENT		OTHER	
DEMAND LIMIT:		(Y = YES ; N = NO)							

COMMENTS: NO EQUIPMENT RUNNING SINCE STILL UNDER CONSTRUCTION

E M C ENGINEERS, INC.

PROJECT: UMCS STUDY
CLIENT CONTRACT NO.: DACA01-94-D-0033
CLIENT PROJ. ENG: STEVE ROWLEY
LOCATION: FORT DRUM, NY BLDG: **21510** VEH WASH

EMC NO.: 1406-006
DATE: 11/14/94
PREPARED BY: **BG**
CHECKED BY:
FILE: **21510HV1**

AIR HANDLING UNIT SURVEY OBSERVATIONS

HV1	AHU NO.	**CONTROL ROOM ATTIC**	LOCATION (RM)
	REF. SYS. SERVING AHU	**CONTROL ROOM**	SERVES AREA

UNIT TYPE:

X	SINGLE ZN		2-PIPE FC		4-PIPE FC		UNIT HTR		H&V
	MULTIZONE		DOUBLE DT		REHEAT		INDUCTION		VAV
	NUMBER OF ZONES				OTHER				
	COMMENT:	NO EQUIPMENT RUNNING SINCE STILL UNDER CONSTRUCTION							

NAMEPLATE:

TRANE				MFG.					MODEL
0.8	SUPPLY FAN HP			MFG.					MODEL
	RET/EXH FAN HP			MFG.					MODEL
1220	CFM-HTG		CFM-CLG	**100%** MIN %OA	**100%**	MAX %OA	**9.0%**	% HTG AREA SERVED	
COMMENT:	**EWT 180 LWT 160**								
	GPM 3	NO EQUIPMENT RUNNING SINCE STILL UNDER CONSTRUCTION							

COILS:

X	NONE		STM		HW		ELEC		MOD VLV	PREHEAT
	NONE		STM	X	HW		ELEC	X	MOD VLV	HEATING
X	NONE		STM		HW		ELEC		MOD VLV	REHEAT
X	NONE		STM		HW		EVAP MEDIA		MOD VLV	HUMID.
X	NONE		DX		CW				MOD VLV	COOLING

OPERATION:

HOURS ON:	S	M	T	W	T	F	S	COMMENTS
PRESENT START TIME	0	0	0	0	0	0	0	TIMECLOCK?
PRESENT STOP TIME	2400	0	0	0	0	0	0	
REQUIRED START TIME								
REQUIRED STOP TIME								

MONTHS ON:

J	F	M	A	M	J	J	A	S	O	N	D

CONTROLS:

		PNEUMATIC		ELECTRIC		ELEC'NIC	X	DDC	COMMENTS
THERMOSTAT TYPE:		SINGLE STPT		DUAL SETPNT		SETBACK			
SPACE SETPOINT (°F):		OCC HEAT		UNOCC HEAT		OCC COOL		UNOCC COOL	
OTHER SETPOINTS (°F):		HOT DECK		COLD DECK		MIXED AIR		OTHER	
DAMPER CONTROL:	N	MIN OA (Y/N)	Y	MAX OA (Y/N)	Y	RA (Y/N)	N	EA (Y/N)	
		MA CONTROL	Y	ECONO-DB		ECONO-ENT		OTHER	
DEMAND LIMIT:		(Y = YES ; N = NO)							

COMMENTS:

NO EQUIPMENT RUNNING SINCE STILL UNDER CONSTRUCTION

E M C ENGINEERS, INC.

PROJECT: UMCS STUDY
CLIENT CONTRACT NO.: DACA01-94-D-0033
CLIENT PROJ. ENG: STEVE ROWLEY
LOCATION: FORT DRUM, NY BLDG: **21510** VEH.WASH.

EMC NO.: 1406-006
DATE: **********
PREPARED BY: **BG**
CHECKED BY:
FILE: **21510HX1**

BOILER & CONVERTER SURVEY OBSERVATIONS

HX-1	BOILER/CONVERTER NO.	MECHANICAL ROOM	LOCATION (RM)
B-1,2	SOURCE OF HEATING (PLANT)	HEATED SLAB SNOW MELTING	SERVES AREA

UNIT TYPE:

	STEAM		PSIG		HW		TEMP.		BOILER TYPE:
	NO.2 OIL		NO.6 OIL		N.GAS		ELEC		FUELS:
	STM/HW	X	HTHW/HW		HTHW/STM		OTHER		CONVERTER TYPE:
	SPACE HEAT		DHW	X	OTHER				USE:
COMMENT:	**FOR SNOW MELTING**								% HTG AREA SERVED
									BB RADIATION ONLY

NAMEPLATE:

ARMSTRONG	MFG.	**3X15X84030**	MODEL		CAPACITY OUTPUT (BTUH)	
					CAPACITY INPUT (BTUH)	
	MFG.		MODEL		CAPACITY OUTPUT (BTUH)	
					CAPACITY INPUT (BTUH)	
2	HW PUMP 1 - HP	**US MOTORS**	MFG.			MODEL
	HW PUMP 2 - HP		MFG.			MODEL
	HW PUMP 3 - HP		MFG.			MODEL
COMMENT:	**GLYCOL TO GLYCOL CONVERTOR**		EWT 180	LWT 150	70 GPM	
			HEAD 50'			

OPERATION:

HOURS ON:	S	M	T	W	T	F	S	COMMENT
PRESENT START TIME	**0**	**0**	**0**	**0**	**0**	**0**	**0**	TIMECLOCK?
PRESENT STOP TIME	**2400**	**2400**	**2400**	**2400**	**2400**	**2400**	**2400**	
REQUIRED START TIME								
REQUIRED STOP TIME								

MONTHS ON:

J	F	M	A	M	J	J	A	S	O	N	D
1	**1**	**1**	**1**	**1**	**1**	**1**	**1**	**1**	**1**	**1**	**1**

CONTROLS:

	X	PNEUMATIC		ELECTRIC		ELEC'NIC		DDC	COMMENTS
SETPOINTS		PSIG	**140**	HW SUPPLY					
RESET CONTROL (oF):		HW HIGH		HW LOW		OA LOW		OA HIGH	
BURNER CONTROLS		O2 TRIM (Y/N)		OTHER					

COMMENTS:

E M C ENGINEERS, INC.

PROJECT: UMCS STUDY
CLIENT CONTRACT NO.: DACA01-94-D-0033
CLIENT PROJ. ENG: STEVE ROWLEY
LOCATION: FORT DRUM, NY BLDG: **21510** VEH WASH

EMC NO.: 1406-006
DATE: 11/14/94
PREPARED BY: **BG**
CHECKED BY:
FILE: **21510HV1**

AIR HANDLING UNIT SURVEY OBSERVATIONS

HV1	AHU NO.	**CONTROL ROOM ATTIC**	LOCATION (RM)
	REF. SYS. SERVING AHU	**CONTROL ROOM**	SERVES AREA

UNIT TYPE:

X	SINGLE ZN		2-PIPE FC		4-PIPE FC		UNIT HTR		H&V
	MULTIZONE		DOUBLE DT		REHEAT		INDUCTION		VAV
	NUMBER OF ZONES				OTHER				
	COMMENT:	NO EQUIPMENT RUNNING SINCE STILL UNDER CONSTRUCTION							

NAMEPLATE:

TRANE				MFG.				MODEL
0.8	SUPPLY FAN HP			MFG.				MODEL
	RET/EXH FAN HP			MFG.				MODEL
1220	CFM-HTG		CFM-CLG	**100%** MIN %OA	**100%**	MAX %OA	**9.0%**	% HTG AREA SERVED
COMMENT:		**EWT 180 LWT 160**						
		GPM 3		NO EQUIPMENT RUNNING SINCE STILL UNDER CONSTRUCTION				

COILS:

X	NONE		STM		HW		ELEC		MOD VLV	PREHEAT
	NONE		STM	**X**	HW		ELEC	**X**	MOD VLV	HEATING
X	NONE		STM		HW		ELEC		MOD VLV	REHEAT
X	NONE		STM		HW		EVAP MEDIA		MOD VLV	HUMID.
X	NONE		DX		CW				MOD VLV	COOLING

OPERATION:

HOURS ON:	S	M	T	W	T	F	S	COMMENTS
PRESENT START TIME	**0**	**0**	**0**	**0**	**0**	**0**	**0**	TIMECLOCK?
PRESENT STOP TIME	24:00 **0**	**0**	**0**	**0**	**0**	**0**	**0**	
REQUIRED START TIME								
REQUIRED STOP TIME								

MONTHS ON:

J	F	M	A	M	J	J	A	S	O	N	D
(											

CONTROLS:

		PNEUMATIC		ELECTRIC		ELEC'NIC	**X**	DDC	COMMENTS
THERMOSTAT TYPE:		SINGLE STPT		DUAL SETPNT		SETBACK			
SPACE SETPOINT (°F):		OCC HEAT		UNOCC HEAT		OCC COOL		UNOCC COOL	
OTHER SETPOINTS (°F):		HOT DECK		COLD DECK		MIXED AIR		OTHER	
DAMPER CONTROL:	**N**	MIN OA (Y/N)	**Y**	MAX OA (Y/N)	**Y**	RA (Y/N)	**N**	EA (Y/N)	
		MA CONTROL	**Y**	ECONO-DB		ECONO-ENT		OTHER	
DEMAND LIMIT:		(Y = YES ; N = NO)							

COMMENTS:
NO EQUIPMENT RUNNING SINCE STILL UNDER CONSTRUCTION

E M C ENGINEERS, INC.

PROJECT: UMCS STUDY
CLIENT CONTRACT NO.: DACA01-94-D-0033
CLIENT PROJ. ENG: STEVE ROWLEY
LOCATION: FORT DRUM, NY BLDG: **21510** VEH WASH

EMC NO.: 1406-006
DATE: 11/14/94
PREPARED BY: **BG**
CHECKED BY:
FILE: **21510M10**

AIR HANDLING UNIT SURVEY OBSERVATIONS

MAU10	AHU NO.	**WINTER WASH**	LOCATION (RM)
	REF. SYS. SERVING AHU	**WINTER WASH**	SERVES AREA

UNIT TYPE:

X	SINGLE ZN		2-PIPE FC		4-PIPE FC		UNIT HTR		H&V
	MULTIZONE		DOUBLE DT		REHEAT		INDUCTION		VAV
	NUMBER OF ZONES				OTHER				
	COMMENT:								

NAMEPLATE:

TRANE					MFG.				MODEL
5.0	SUPPLY FAN HP				MFG.				MODEL
	RET/EXH FAN HP				MFG.				MODEL
11250	CFM-HTG		CFM-CLG	**100%**	MIN %OA	**100%**	MAX %OA	**9.0%**	% HTG AREA SERVED
COMMENT:			**EWT 180 LWT 160**						
			GPM 68.8		NO EQUIPMENT RUNNING SINCE STILL UNDER CONSTRUCTION				

COILS:

X	NONE		STM		HW		ELEC		MOD VLV	PREHEAT
	NONE		STM	X	HW		ELEC	X	MOD VLV	HEATING
X	NONE		STM		HW		ELEC		MOD VLV	REHEAT
X	NONE		STM		HW		EVAP MEDIA		MOD VLV	HUMID.
X	NONE		DX		CW				MOD VLV	COOLING

OPERATION:

HOURS ON:	S	M	T	W	T	F	S	COMMENTS
PRESENT START TIME	0	0	0	0	0	0	0	TIMECLOCK?
PRESENT STOP TIME	2400	0	0	0	0	0	0	
REQUIRED START TIME								
REQUIRED STOP TIME								

MONTHS ON:

J	F	M	A	M	J	J	A	S	O	N	D

CONTROLS:

	X	PNEUMATIC		ELECTRIC		ELEC'NIC	X	DDC	COMMENTS
THERMOSTAT TYPE:		SINGLE STPT		DUAL SETPNT		SETBACK			
SPACE SETPOINT (°F):		OCC HEAT		UNOCC HEAT		OCC COOL		UNOCC COOL	
OTHER SETPOINTS (°F):		HOT DECK		COLD DECK		MIXED AIR		OTHER	
DAMPER CONTROL:	N	MIN OA (Y/N)	Y	MAX OA (Y/N)	N	RA (Y/N)	N	EA (Y/N)	
		MA CONTROL	Y	ECONO-DB		ECONO-ENT		OTHER	
DEMAND LIMIT:		(Y = YES ; N = NO)							

COMMENTS:

E M C ENGINEERS, INC.

PROJECT: UMCS STUDY
CLIENT CONTRACT NO.: DACA01-94-D-0033
CLIENT PROJ. ENG: STEVE ROWLEY
LOCATION: FORT DRUM, NY BLDG: **21510** VEH WASH

EMC NO.: 1406-006
DATE: 11/14/94
PREPARED BY: **BG**
CHECKED BY:
FILE: **21510MA1**

AIR HANDLING UNIT SURVEY OBSERVATIONS

MAU01	AHU NO.	**WINTER WASH**	LOCATION (RM)
	REF. SYS. SERVING AHU	**WINTER WASH**	SERVES AREA

UNIT TYPE:

X	SINGLE ZN		2-PIPE FC		4-PIPE FC		UNIT HTR		H&V
	MULTIZONE		DOUBLE DT		REHEAT		INDUCTION		VAV
	NUMBER OF ZONES				OTHER				
	COMMENT: NO EQUIPMENT RUNNING SINCE STILL UNDER CONSTRUCTION								

NAMEPLATE:

TRANE					MFG.				MODEL
5.0	SUPPLY FAN HP				MFG.				MODEL
	RET/EXH FAN HP				MFG.				MODEL
11250	CFM-HTG		CFM-CLG	**100%**	MIN %OA	**100%**	MAX %OA	**9.0%**	% HTG AREA SERVED
COMMENT:			**EWT 180 LWT 160**						
			GPM 68.8		NO EQUIPMENT RUNNING SINCE STILL UNDER CONSTRUCTION				

COILS:

X	NONE		STM		HW		ELEC		MOD VLV	PREHEAT
	NONE		STM	X	HW		ELEC	X	MOD VLV	HEATING
X	NONE		STM		HW		ELEC		MOD VLV	REHEAT
X	NONE		STM		HW		EVAP MEDIA		MOD VLV	HUMID.
X	NONE		DX		CW				MOD VLV	COOLING

OPERATION:

HOURS ON:	S	M	T	W	T	F	S	COMMENTS
PRESENT START TIME	**0**	**0**	**0**	**0**	**0**	**0**	**0**	TIMECLOCK?
PRESENT STOP TIME	**0**	**0**	**0**	**0**	**0**	**0**	**0**	
REQUIRED START TIME								
REQUIRED STOP TIME								

MONTHS ON: NO EQUIPMENT RUNNING SINCE STILL UNDER CONSTRUCTION

J	F	M	A	M	J	J	A	S	O	N	D

CONTROLS:

		PNEUMATIC		ELECTRIC		ELEC'NIC	X	DDC	COMMENTS
THERMOSTAT TYPE:		SINGLE STPT		DUAL SETPNT		SETBACK			
SPACE SETPOINT (°F):		OCC HEAT		UNOCC HEAT		OCC COOL		UNOCC COOL	
OTHER SETPOINTS (°F):		HOT DECK		COLD DECK		MIXED AIR		OTHER	
DAMPER CONTROL:	**N**	MIN OA (Y/N)	**Y**	MAX OA (Y/N)	**N**	RA (Y/N)	**N**	EA (Y/N)	
		MA CONTROL	**Y**	ECONO-DB		ECONO-ENT		OTHER	
DEMAND LIMIT:		(Y = YES ; N = NO)							
COMMENTS:									

E M C ENGINEERS, INC.

PROJECT: UMCS STUDY
CLIENT CONTRACT NO.: DACA01-94-D-0033
CLIENT PROJ. ENG: STEVE ROWLEY
LOCATION: FORT DRUM, NY BLDG: **21510** VEH WASH

EMC NO.: 1406-006
DATE: 11/14/94
PREPARED BY: **BG**
CHECKED BY:
FILE: **21510MA2**

AIR HANDLING UNIT SURVEY OBSERVATIONS

MAU2	AHU NO.	**WINTER WASH**	LOCATION (RM)
	REF. SYS. SERVING AHU	**WINTER WASH**	SERVES AREA

UNIT TYPE:

X	SINGLE ZN		2-PIPE FC		4-PIPE FC		UNIT HTR		H&V
	MULTIZONE		DOUBLE DT		REHEAT		INDUCTION		VAV
	NUMBER OF ZONES				OTHER				
	COMMENT:								

NAMEPLATE:

TRANE					MFG.				MODEL
3.0	SUPPLY FAN HP				MFG.				MODEL
	RET/EXH FAN HP				MFG.				MODEL
5625	CFM-HTG		CFM-CLG	**100%**	MIN %OA	**100%**	MAX %OA	**9.0%**	% HTG AREA SERVED
COMMENT:			**EWT 180 LWT 160**						
			GPM 34.4		NO EQUIPMENT RUNNING SINCE STILL UNDER CONSTRUCTION				

COILS:

X	NONE		STM		HW		ELEC		MOD VLV	PREHEAT
	NONE		STM	**X**	HW		ELEC	**X**	MOD VLV	HEATING
X	NONE		STM		HW		ELEC		MOD VLV	REHEAT
X	NONE		STM		HW		EVAP MEDIA		MOD VLV	HUMID.
X	NONE		DX		CW				MOD VLV	COOLING

OPERATION:

HOURS ON:	S	M	T	W	T	F	S	COMMENTS
PRESENT START TIME	**0**	**0**	**0**	**0**	**0**	**0**	**0**	TIMECLOCK?
PRESENT STOP TIME	**0**	**0**	**0**	**0**	**0**	**0**	**0**	
REQUIRED START TIME								
REQUIRED STOP TIME								

MONTHS ON:

J	F	M	A	M	J	J	A	S	O	N	D

CONTROLS:

		PNEUMATIC		ELECTRIC		ELEC'NIC	**X**	DDC	COMMENTS
THERMOSTAT TYPE:		SINGLE STPT		DUAL SETPNT		SETBACK			
SPACE SETPOINT (°F):		OCC HEAT		UNOCC HEAT		OCC COOL		UNOCC COOL	
OTHER SETPOINTS (°F):		HOT DECK		COLD DECK		MIXED AIR		OTHER	
DAMPER CONTROL:	**N**	MIN OA (Y/N)	**Y**	MAX OA (Y/N)	**N**	RA (Y/N)	**N**	EA (Y/N)	
		MA CONTROL	**Y**	ECONO-DB		ECONO-ENT		OTHER	
DEMAND LIMIT:		(Y = YES ; N = NO)							
COMMENTS:	NO EQUIPMENT RUNNING SINCE STILL UNDER CONSTRUCTION								

E M C ENGINEERS, INC.

PROJECT: UMCS STUDY
CLIENT CONTRACT NO.: DACA01-94-D-0033
CLIENT PROJ. ENG: STEVE ROWLEY
LOCATION: FORT DRUM, NY BLDG: **21510** VEH WASH

EMC NO.: 1406-006
DATE: 11/14/94
PREPARED BY: **BG**
CHECKED BY:
FILE: **21510MA4**

AIR HANDLING UNIT SURVEY OBSERVATIONS

MAU4	AHU NO.	**WINTER WASH**	LOCATION (RM)
	REF. SYS. SERVING AHU	**WINTER WASH**	SERVES AREA

UNIT TYPE:

X	SINGLE ZN		2-PIPE FC		4-PIPE FC		UNIT HTR		H&V
	MULTIZONE		DOUBLE DT		REHEAT		INDUCTION		VAV
	NUMBER OF ZONES				OTHER				
	COMMENT:								

NAMEPLATE:

TRANE					MFG.				MODEL
5.0	SUPPLY FAN HP				MFG.				MODEL
	RET/EXH FAN HP				MFG.				MODEL
11250	CFM-HTG		CFM-CLG	**100%**	MIN %OA	**100%**	MAX %OA	**9.0%**	% HTG AREA SERVED
COMMENT:			**EWT 180 LWT 160 GPM 34.4**						
			NO EQUIPMENT RUNNING SINCE STILL UNDER CONSTRUCTION						

COILS:

X	NONE		STM		HW		ELEC		MOD VLV	PREHEAT
	NONE		STM	X	HW		ELEC	X	MOD VLV	HEATING
X	NONE		STM		HW		ELEC		MOD VLV	REHEAT
X	NONE		STM		HW		EVAP MEDIA		MOD VLV	HUMID.
X	NONE		DX		CW				MOD VLV	COOLING

OPERATION:

HOURS ON:	S	M	T	W	T	F	S	COMMENTS
PRESENT START TIME	0	0	0	0	0	0	0	TIMECLOCK?
PRESENT STOP TIME	0	0	0	0	0	0	0	
REQUIRED START TIME								
REQUIRED STOP TIME								

MONTHS ON: NO EQUIPMENT RUNNING SINCE STILL UNDER CONSTRUCTION

J	F	M	A	M	J	J	A	S	O	N	D

CONTROLS:

		PNEUMATIC		ELECTRIC		ELEC'NIC	X	DDC	COMMENTS
THERMOSTAT TYPE:		SINGLE STPT		DUAL SETPNT		SETBACK			
SPACE SETPOINT (°F):		OCC HEAT		UNOCC HEAT		OCC COOL		UNOCC COOL	
OTHER SETPOINTS (°F):		HOT DECK		COLD DECK		MIXED AIR		OTHER	
DAMPER CONTROL:	N	MIN OA (Y/N)	Y	MAX OA (Y/N)	Y	RA (Y/N)	Y	EA (Y/N)	
		MA CONTROL	Y	ECONO-DB		ECONO-ENT		OTHER	
DEMAND LIMIT:		(Y = YES ; N = NO)							

COMMENTS:

E M C ENGINEERS, INC.

PROJECT: UMCS STUDY
CLIENT CONTRACT NO.: DACA01-94-D-0033
CLIENT PROJ. ENG: STEVE ROWLEY
LOCATION: FORT DRUM, NY BLDG: **21510** VEH WASH

EMC NO.: 1406-006
DATE: 11/14/94
PREPARED BY: **BG**
CHECKED BY:
FILE: **21510MA5**

AIR HANDLING UNIT SURVEY OBSERVATIONS

MAU5	AHU NO.	**WINTER WASH**	LOCATION (RM)
	REF. SYS. SERVING AHU	**WINTER WASH**	SERVES AREA

UNIT TYPE:

X	SINGLE ZN		2-PIPE FC		4-PIPE FC		UNIT HTR		H&V
	MULTIZONE		DOUBLE DT		REHEAT		INDUCTION		VAV
	NUMBER OF ZONES				OTHER				
	COMMENT: NO EQUIPMENT RUNNING SINCE STILL UNDER CONSTRUCTION								

NAMEPLATE:

TRANE				MFG.					MODEL
3.0	SUPPLY FAN HP			MFG.					MODEL
	RET/EXH FAN HP			MFG.					MODEL
5625	CFM-HTG		CFM-CLG	**100%**	MIN %OA	**100%**	MAX %OA	**9.0%**	% HTG AREA SERVED
COMMENT:		**EWT 180 LWT 160**							
		GPM 34.4		NO EQUIPMENT RUNNING SINCE STILL UNDER CONSTRUCTION					

COILS:

X	NONE		STM		HW		ELEC		MOD VLV	PREHEAT
	NONE		STM	X	HW		ELEC	X	MOD VLV	HEATING
X	NONE		STM		HW		ELEC		MOD VLV	REHEAT
X	NONE		STM		HW		EVAP MEDIA		MOD VLV	HUMID.
X	NONE		DX		CW				MOD VLV	COOLING

OPERATION:

HOURS ON:	S	M	T	W	T	F	S	COMMENTS
PRESENT START TIME	**0**	**0**	**0**	**0**	**0**	**0**	**0**	TIMECLOCK?
PRESENT STOP TIME	**0**	**0**	**0**	**0**	**0**	**0**	**0**	
REQUIRED START TIME								
REQUIRED STOP TIME								

MONTHS ON:

J	F	M	A	M	J	J	A	S	O	N	D

CONTROLS:

		PNEUMATIC		ELECTRIC		ELEC'NIC	X	DDC	COMMENTS
THERMOSTAT TYPE:		SINGLE STPT		DUAL SETPNT		SETBACK			
SPACE SETPOINT (°F):		OCC HEAT		UNOCC HEAT		OCC COOL		UNOCC COOL	
OTHER SETPOINTS (°F):		HOT DECK		COLD DECK		MIXED AIR		OTHER	
DAMPER CONTROL:	**N**	MIN OA (Y/N)	**Y**	MAX OA (Y/N)	**N**	RA (Y/N)	**N**	EA (Y/N)	
		MA CONTROL	**Y**	ECONO-DB		ECONO-ENT		OTHER	
DEMAND LIMIT:		(Y = YES ; N = NO)							
COMMENTS:									

E M C ENGINEERS, INC.

PROJECT: UMCS STUDY
CLIENT CONTRACT NO.: DACA01-94-D-0033
CLIENT PROJ. ENG: STEVE ROWLEY
LOCATION: FORT DRUM, NY BLDG: **21510** VEH WASH

EMC NO.: 1406-006
DATE: 11/14/94
PREPARED BY: **BG**
CHECKED BY:
FILE: **21510MA6**

AIR HANDLING UNIT SURVEY OBSERVATIONS

MAU6	AHU NO.	**WINTER WASH**	LOCATION (RM)
	REF. SYS. SERVING AHU	**WINTER WASH**	SERVES AREA

UNIT TYPE:

X	SINGLE ZN		2-PIPE FC		4-PIPE FC		UNIT HTR		H&V
	MULTIZONE		DOUBLE DT		REHEAT		INDUCTION		VAV
	NUMBER OF ZONES				OTHER				
	COMMENT: NO EQUIPMENT RUNNING SINCE STILL UNDER CONSTRUCTION								

NAMEPLATE:

TRANE					MFG.				MODEL
5.0	SUPPLY FAN HP				MFG.				MODEL
	RET/EXH FAN HP				MFG.				MODEL
11250	CFM-HTG		CFM-CLG	**100%**	MIN %OA	**100%**	MAX %OA	**9.0%**	% HTG AREA SERVED
COMMENT:			**EWT 180 LWT 160**						
			GPM 68.8		NO EQUIPMENT RUNNING SINCE STILL UNDER CONSTRUCTION				

COILS:

X	NONE		STM		HW		ELEC		MOD VLV	PREHEAT
	NONE		STM	X	HW		ELEC	X	MOD VLV	HEATING
X	NONE		STM		HW		ELEC		MOD VLV	REHEAT
X	NONE		STM		HW		EVAP MEDIA		MOD VLV	HUMID.
X	NONE		DX		CW				MOD VLV	COOLING

OPERATION:

HOURS ON:	S	M	T	W	T	F	S	COMMENTS
PRESENT START TIME	**0**	**0**	**0**	**0**	**0**	**0**	**0**	TIMECLOCK?
PRESENT STOP TIME	**0**	**0**	**0**	**0**	**0**	**0**	**0**	
REQUIRED START TIME								
REQUIRED STOP TIME								

MONTHS ON:

J	F	M	A	M	J	J	A	S	O	N	D

CONTROLS:

		PNEUMATIC		ELECTRIC		ELEC'NIC	X	DDC	COMMENTS
THERMOSTAT TYPE:		SINGLE STPT		DUAL SETPNT		SETBACK			
SPACE SETPOINT (°F):		OCC HEAT		UNOCC HEAT		OCC COOL		UNOCC COOL	
OTHER SETPOINTS (°F):		HOT DECK		COLD DECK		MIXED AIR		OTHER	
DAMPER CONTROL:	N	MIN OA (Y/N)	Y	MAX OA (Y/N)	N	RA (Y/N)	N	EA (Y/N)	
		MA CONTROL	Y	ECONO-DB		ECONO-ENT		OTHER	
DEMAND LIMIT:	N	(Y = YES ; N = NO)							

COMMENTS:

E M C ENGINEERS, INC.

PROJECT: UMCS STUDY
CLIENT CONTRACT NO.: DACA01-94-D-0033
CLIENT PROJ. ENG: STEVE ROWLEY
LOCATION: FORT DRUM, NY BLDG: **21510** VEH WASH

EMC NO.: 1406-006
DATE: 11/14/94
PREPARED BY: **BG**
CHECKED BY:
FILE: **21510MA7**

AIR HANDLING UNIT SURVEY OBSERVATIONS

MAU7	AHU NO.	**WINTER WASH**	LOCATION (RM)
	REF. SYS. SERVING AHU	**WINTER WASH**	SERVES AREA

UNIT TYPE:

X	SINGLE ZN		2-PIPE FC		4-PIPE FC		UNIT HTR		H&V
	MULTIZONE		DOUBLE DT		REHEAT		INDUCTION		VAV
	NUMBER OF ZONES				OTHER				
	COMMENT:				NO EQUIPMENT RUNNING SINCE STILL UNDER CONSTRUCTION				

NAMEPLATE:

TRANE					MFG.				MODEL
3.0	SUPPLY FAN HP				MFG.				MODEL
	RET/EXH FAN HP				MFG.				MODEL
5625	CFM-HTG		CFM-CLG	**100%**	MIN %OA	**100%**	MAX %OA	**9.0%**	% HTG AREA SERVED
COMMENT:			**EWT 180 LWT 160**						
			GPM 34.4		NO EQUIPMENT RUNNING SINCE STILL UNDER CONSTRUCTION				

COILS:

X	NONE		STM		HW		ELEC		MOD VLV	PREHEAT
	NONE		STM	X	HW		ELEC	X	MOD VLV	HEATING
X	NONE		STM		HW		ELEC		MOD VLV	REHEAT
X	NONE		STM		HW		EVAP MEDIA		MOD VLV	HUMID.
X	NONE		DX		CW				MOD VLV	COOLING

OPERATION:

HOURS ON:	S	M	T	W	T	F	S	COMMENTS
PRESENT START TIME	**0**	**0**	**0**	**0**	**0**	**0**	**0**	TIMECLOCK?
PRESENT STOP TIME	**0**	**0**	**0**	**0**	**0**	**0**	**0**	
REQUIRED START TIME								
REQUIRED STOP TIME								

MONTHS ON:

J	F	M	A	M	J	J	A	S	O	N	D

CONTROLS:

		PNEUMATIC		ELECTRIC		ELEC'NIC	X	DDC	COMMENTS
THERMOSTAT TYPE:		SINGLE STPT		DUAL SETPNT		SETBACK			
SPACE SETPOINT (°F):		OCC HEAT		UNOCC HEAT		OCC COOL		UNOCC COOL	
OTHER SETPOINTS (°F):		HOT DECK		COLD DECK		MIXED AIR		OTHER	
DAMPER CONTROL:	**N**	MIN OA (Y/N)	**Y**	MAX OA (Y/N)	**N**	RA (Y/N)	**N**	EA (Y/N)	
		MA CONTROL	**Y**	ECONO-DB		ECONO-ENT		OTHER	
DEMAND LIMIT:	**N**	(Y = YES ; N = NO)							
COMMENTS:									

E M C ENGINEERS, INC.

PROJECT: UMCS STUDY
CLIENT CONTRACT NO.: DACA01-94-D-0033
CLIENT PROJ. ENG: STEVE ROWLEY
LOCATION: FORT DRUM, NY BLDG: **21510** VEH WASH

EMC NO.: 1406-006
DATE: 11/14/94
PREPARED BY: **BG**
CHECKED BY:
FILE: **21510MA9**

AIR HANDLING UNIT SURVEY OBSERVATIONS

MAU9	AHU NO.	**WINTER WASH**	LOCATION (RM)
	REF. SYS. SERVING AHU	**WINTER WASH**	SERVES AREA

UNIT TYPE:

X	SINGLE ZN		2-PIPE FC		4-PIPE FC		UNIT HTR		H&V
	MULTIZONE		DOUBLE DT		REHEAT		INDUCTION		VAV
	NUMBER OF ZONES				OTHER				
	COMMENT: NO EQUIPMENT RUNNING SINCE STILL UNDER CONSTRUCTION								

NAMEPLATE:

TRANE					MFG.				MODEL
5.0	SUPPLY FAN HP				MFG.				MODEL
	RET/EXH FAN HP				MFG.				MODEL
11250	CFM-HTG		CFM-CLG	**100%**	MIN %OA	**100%**	MAX %OA	**9.0%**	% HTG AREA SERVED
COMMENT:			**EWT 180 LWT 160**						
			GPM 68.8		NO EQUIPMENT RUNNING SINCE STILL UNDER CONSTRUCTION				

COILS:

X	NONE		STM		HW		ELEC		MOD VLV	PREHEAT
	NONE		STM	X	HW		ELEC	X	MOD VLV	HEATING
X	NONE		STM		HW		ELEC		MOD VLV	REHEAT
X	NONE		STM		HW		EVAP MEDIA		MOD VLV	HUMID.
X	NONE		DX		CW				MOD VLV	COOLING

OPERATION:

HOURS ON:	S	M	T	W	T	F	S	COMMENTS
PRESENT START TIME	**0**	**0**	**0**	**0**	**0**	**0**	**0**	TIMECLOCK?
PRESENT STOP TIME	**0**	**0**	**0**	**0**	**0**	**0**	**0**	
REQUIRED START TIME								
REQUIRED STOP TIME								

MONTHS ON:

J	F	M	A	M	J	J	A	S	O	N	D

CONTROLS:

		PNEUMATIC		ELECTRIC		ELEC'NIC	X	DDC	COMMENTS
THERMOSTAT TYPE:		SINGLE STPT		DUAL SETPNT		SETBACK			
SPACE SETPOINT (°F):		OCC HEAT		UNOCC HEAT		OCC COOL		UNOCC COOL	
OTHER SETPOINTS (°F):		HOT DECK		COLD DECK		MIXED AIR		OTHER	
DAMPER CONTROL:	**N**	MIN OA (Y/N)	**Y**	MAX OA (Y/N)	**N**	RA (Y/N)	**N**	EA (Y/N)	
		MA CONTROL	**Y**	ECONO-DB		ECONO-ENT		OTHER	
DEMAND LIMIT:		(Y = YES ; N = NO)							

COMMENTS:

E M C ENGINEERS, INC.

PROJECT: UMCS STUDY
CLIENT CONTRACT NO.: DACA01-94-D-0033
CLIENT PROJ. ENG: STEVE ROWLEY
LOCATION: FORT DRUM, NY BLDG: **21510** VEH.WASH.

EMC NO.: 1406-006
DATE: 11/14/94
PREPARED BY: **BG**
CHECKED BY:
FILE: **21510HX1**

BOILER & CONVERTER SURVEY OBSERVATIONS

HX-1	BOILER/CONVERTER NO.	MECHANICAL ROOM	LOCATION (RM)
B-1,2	SOURCE OF HEATING (PLANT)	HEATED SLAB SNOW MELTING	SERVES AREA

UNIT TYPE:

	STEAM		PSIG		HW		TEMP.		BOILER TYPE:
	NO.2 OIL		NO.6 OIL		N.GAS		ELEC		FUELS:
	STM/HW	X	HTHW/HW		HTHW/STM		OTHER		CONVERTER TYPE:
	SPACE HEAT		DHW	X	OTHER				USE:
COMMENT:	**FOR SNOW MELTING**								% HTG AREA SERVED
									BB RADIATION ONLY

NAMEPLATE:

ARMSTRONG	MFG.	**3X15X84030**	MODEL		CAPACITY OUTPUT (BTUH)	
					CAPACITY INPUT (BTUH)	
	MFG.		MODEL		CAPACITY OUTPUT (BTUH)	
					CAPACITY INPUT (BTUH)	
2	HW PUMP 1 - HP	**US MOTORS**	MFG.			MODEL
	HW PUMP 2 - HP		MFG.			MODEL
	HW PUMP 3 - HP		MFG.			MODEL
COMMENT:	**GLYCOL TO GLYCOL CONVERTOR**		EWT 180	LWT 150	70 GPM	
			HEAD 50'			

OPERATION:

HOURS ON:	S	M	T	W	T	F	S	COMMENT
PRESENT START TIME	**0**	**0**	**0**	**0**	**0**	**0**	**0**	TIMECLOCK?
PRESENT STOP TIME	**2400**	**2400**	**2400**	**2400**	**2400**	**2400**	**2400**	
REQUIRED START TIME								
REQUIRED STOP TIME								

MONTHS ON:

J	F	M	A	M	J	J	A	S	O	N	D
1	**1**	**1**	**1**	**1**	**1**	**1**	**1**	**1**	**1**	**1**	**1**

CONTROLS:

	X	PNEUMATIC		ELECTRIC		ELEC'NIC		DDC	COMMENTS
SETPOINTS		PSIG	**140**	HW SUPPLY					
RESET CONTROL (oF):		HW HIGH		HW LOW		OA LOW		OA HIGH	
BURNER CONTROLS		O2 TRIM (Y/N)		OTHER					
COMMENTS:									

1.HEATING AND VENTILATING UNIT WITHOUT RETURN FAN

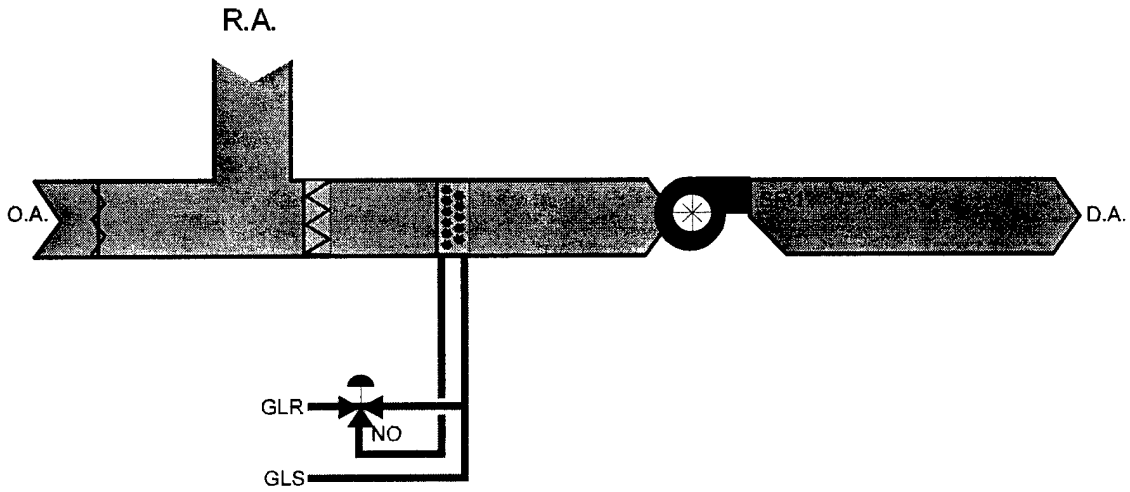

2. HEATING AND VENTILATING UNIT

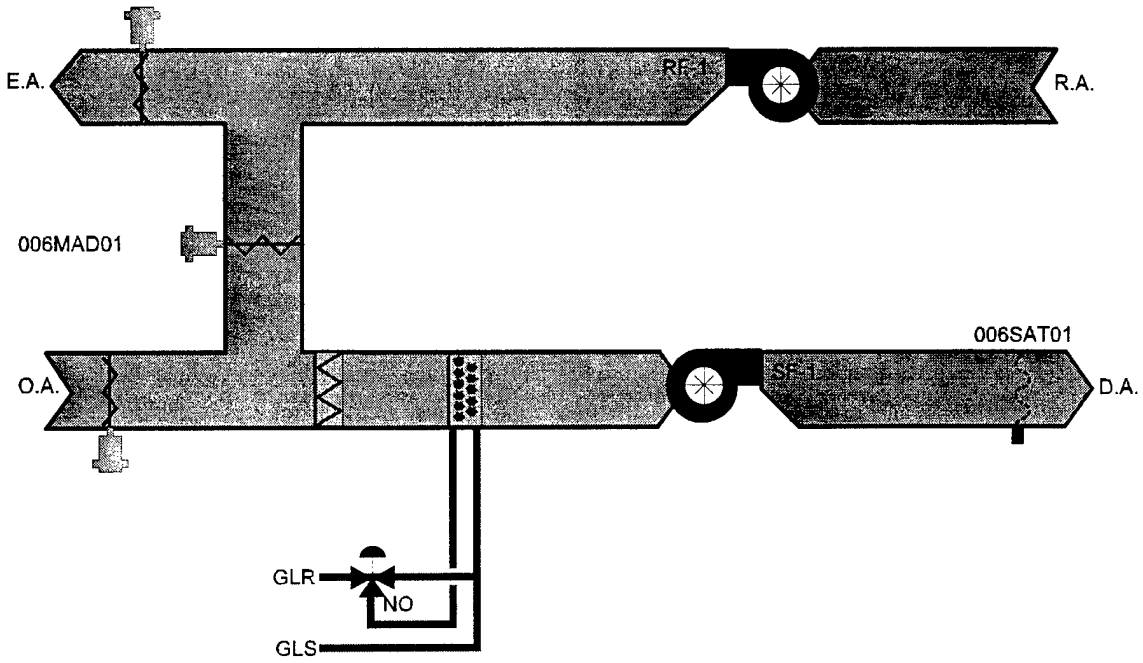

3. SINGLE ZONE AHU WITHOUT RETURN FAN

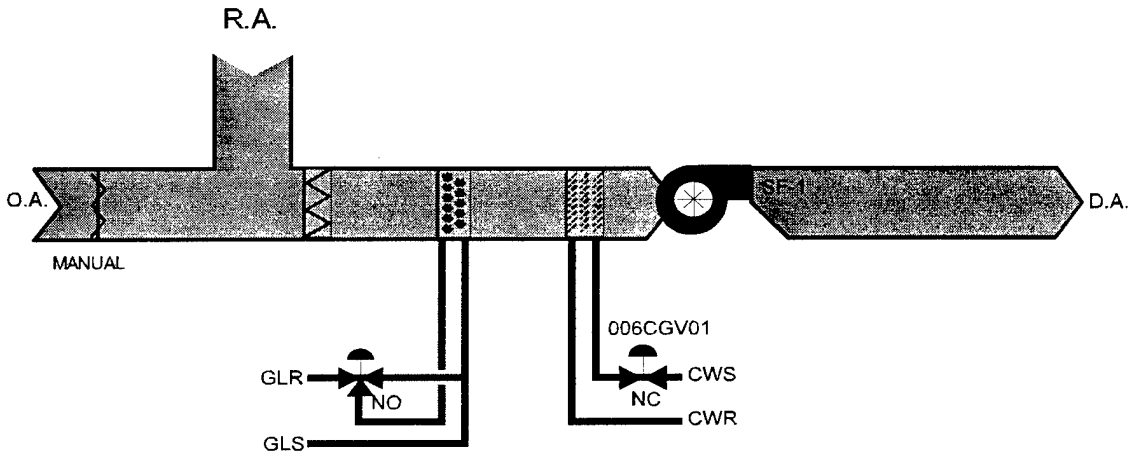

4. SINGLE ZONE AHU

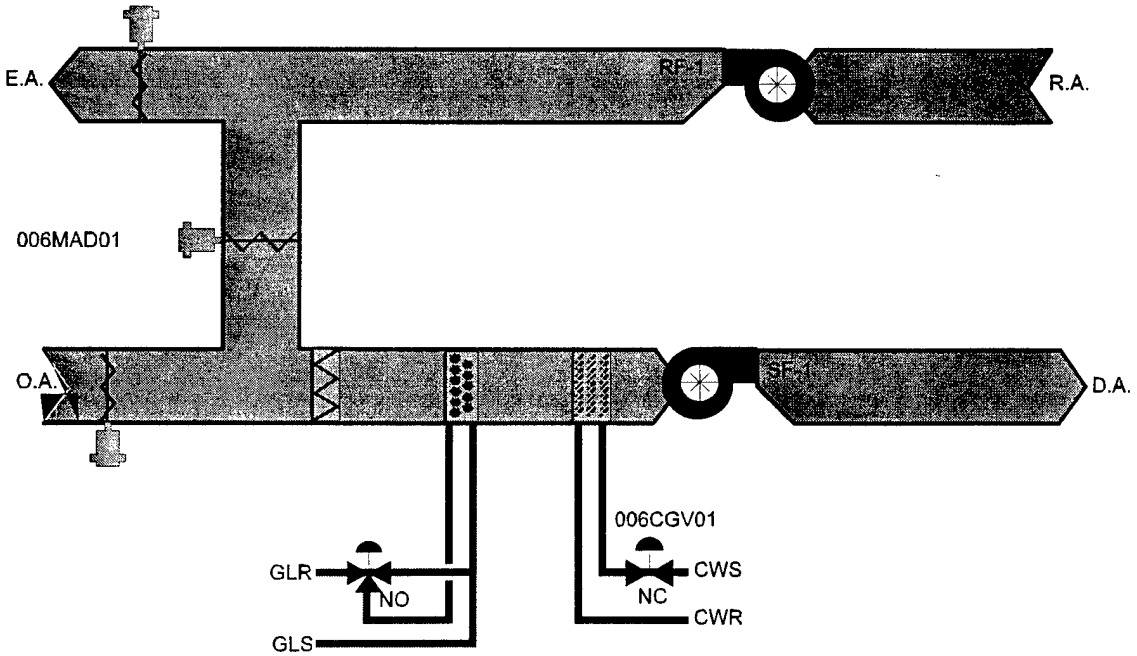

5. SINGLE ZONE AHU WITH HUMIDIFICATION

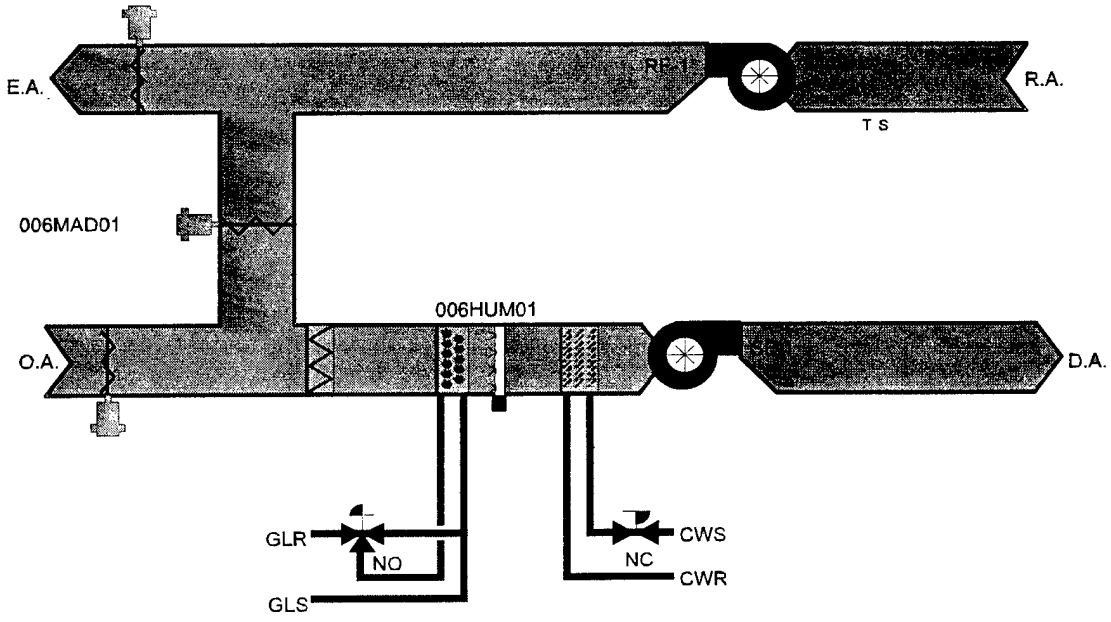

6. MULTI-ZONE AHU

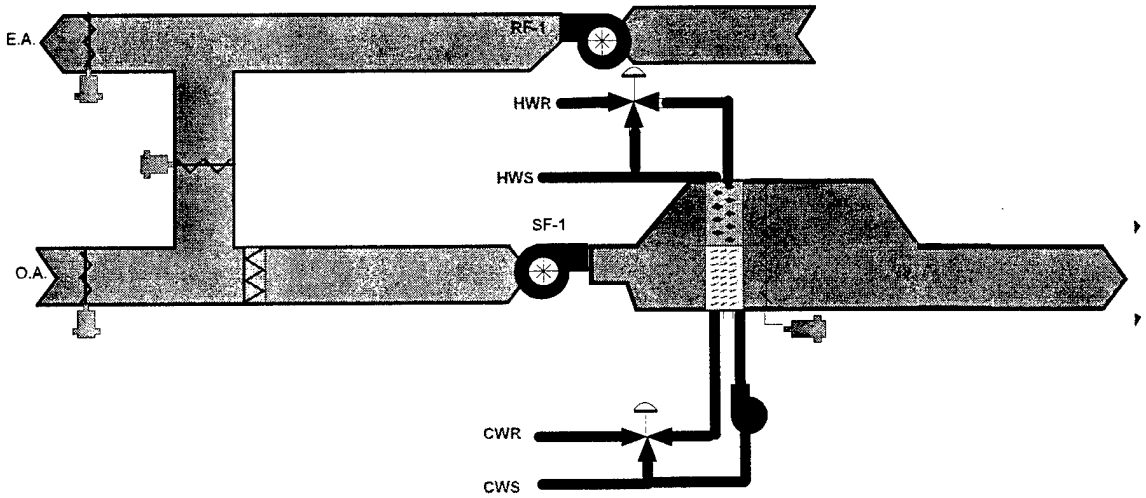

7. VAV AHU

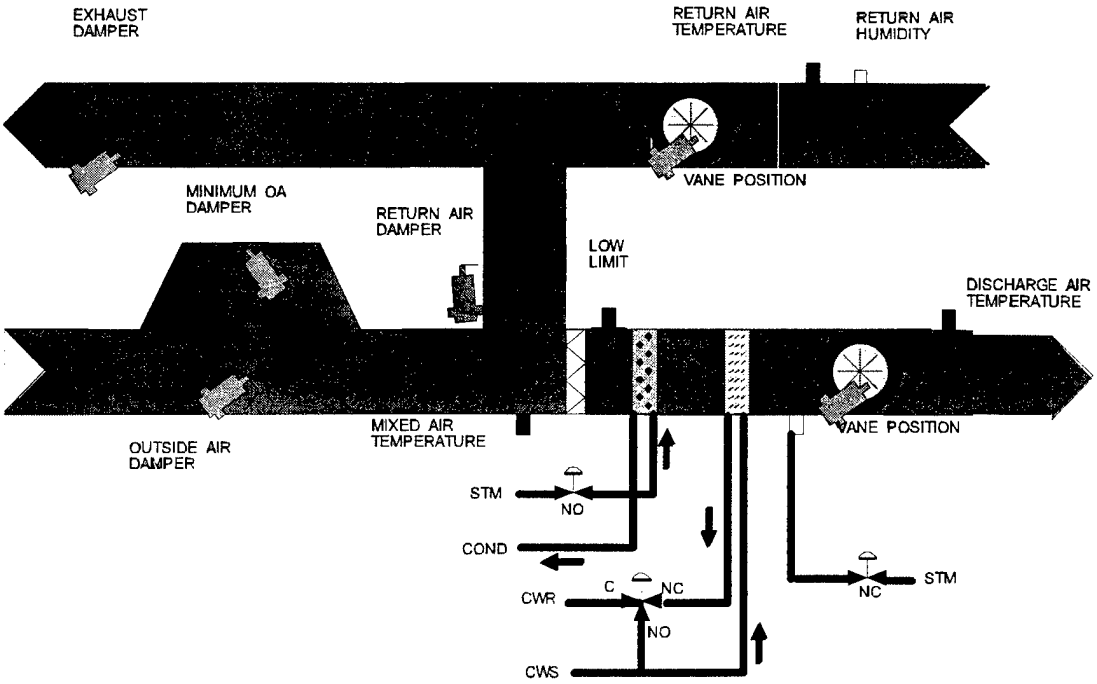
EXHAUST DAMPER
RETURN AIR TEMPERATURE
RETURN AIR HUMIDITY
VANE POSITION
MINIMUM OA DAMPER
RETURN AIR DAMPER
LOW LIMIT
DISCHARGE AIR TEMPERATURE
VANE POSITION
OUTSIDE AIR DAMPER
MIXED AIR TEMPERATURE
STM
NO
COND
CWR
C
NC
NO
CWS
NC
STM

8. CHILLER AND PUMPS

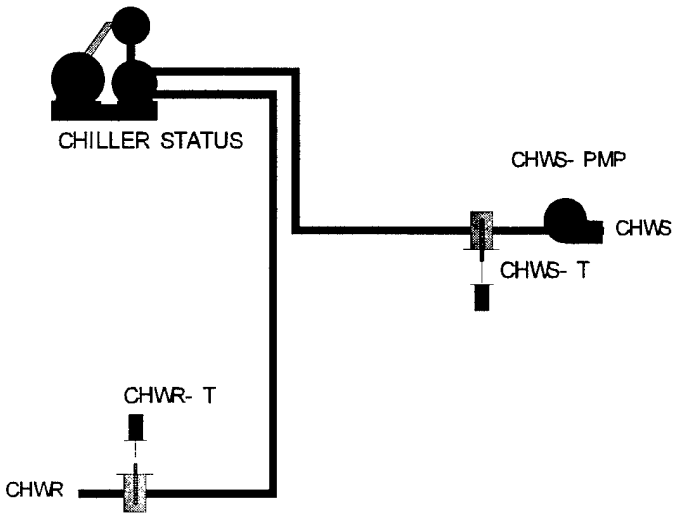

9. CONVERTER AND PUMPS

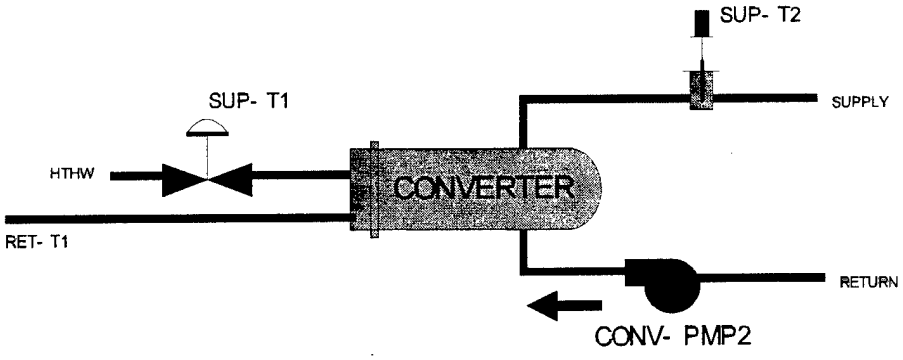

10. HOT WATER BOILER AND PUMPS

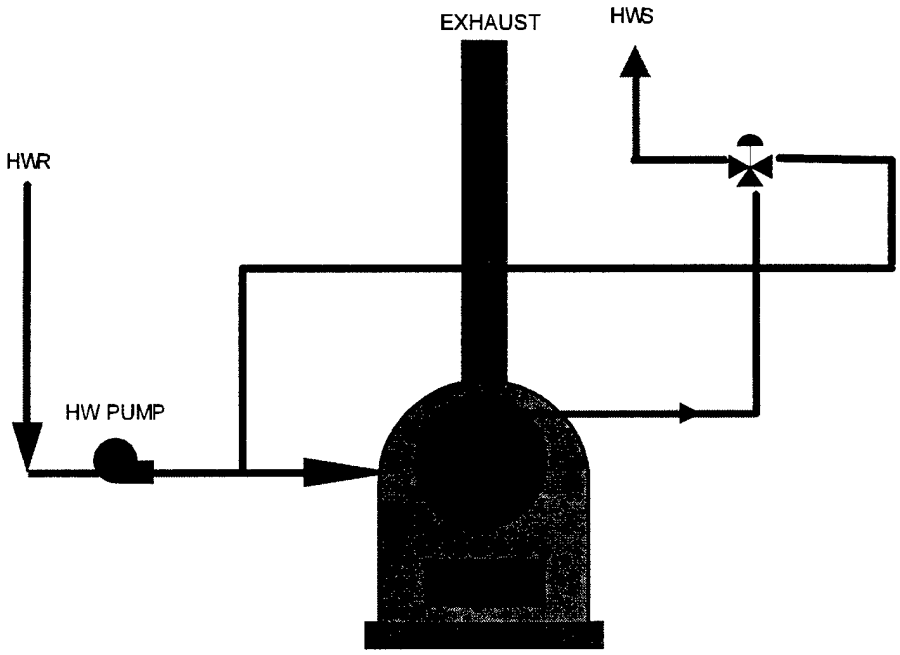

11. CONDENSING UNIT

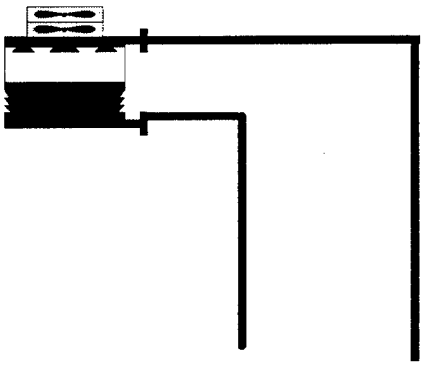

HOT GAS REFRIGERANT RETURN

12. PERIMETER RADIATION

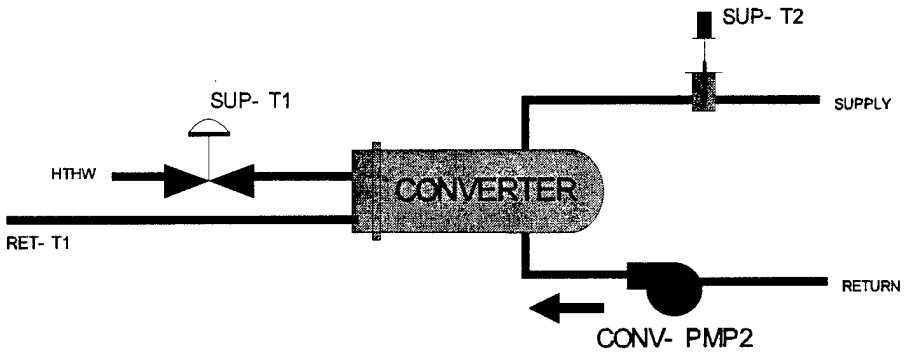

APPENDIX I

COMPUTER SIMULATIONS

APPENDIX I

DOE-2 COMPUTER SIMULATIONS

Appendix I contains the DOE-2 input and output files.

I.1 BASE RUN

A base model was run for 20 representative buildings. The existing loads, systems, and plants were entered into the DOE-2 program and the outputs simulated the current energy usage, which was compared with the available utility data for accuracy.

I.2 RUN 1, SCHEDULED START/STOP & NIGHT SETBACK

Run 1 modified the Base Run, to simulate the energy usage if HVAC equipment was turned off when the building was unoccupied. The minimum space temperature setpoint was reduced to 50°F. If the space temperature dropped below 50°F for a certain hour, the pump controlling fin tube radiation would be turned on. Upon a further drop in space temperature, or if fin tube radiation was not available, the space air handling units cycled on for that hour.

I.3 RUN 2, ECONOMIZER MODEL

Run 2 modified Run 1, to simulate the addition of an economizer function, where applicable.

I.4 RUN 3, DDC MODEL

Run 3 modified Run 2, to simulate direct digital control (DDC) of HVAC equipment to prevent overheating or overcooling of spaces. The space temperature setpoints are 68°F for winter and 78°F for summer.

I.5 RUN 4, FORCED VENTILATION MODEL

Run 4 modified Run 3, to simulate forced ventilation. The air handling units in this model recirculate and heat 100% space return air (0% outside air) to heat the space before the space is occupied each day. This is applicable to air handling units which provide heating and have return air ducts, and to spaces which have less than 24 hours of operation per day.

SAMPLE DOE-2 COMPUTER SIMULATION OUTPUT

EMC ENGINEERS INC. EZDOE - ELITE SOFTWARE DEVELOPMENT INC DOE-2.1D 3/26/1995 12:19:33 PDL RUN 1
DENVER, CO 80227 DIV CMD/CNTL BLDG BASE MODEL
REPORT- BEPS ESTIMATED BUILDING ENERGY PERFORMANCE WEATHER FILE- MASSENA, NY

ENERGY TYPE IN SITE MBTU-	STEAM	ELECTRICITY	RECOVERED
CATEGORY OF USE			
SPACE HEAT	8226.92	0.00	0.00
SPACE COOL	0.00	29.71	0.00
HVAC AUX	0.00	1188.68	0.00
DOM HOT WTR	0.00	0.00	0.00
AUX SOLAR	0.00	0.00	0.00
LIGHTS	0.00	923.34	0.00
VERT TRANS	0.00	0.00	0.00
MISC EQUIP	0.00	16.26	0.00
TOTAL	8226.92	2157.99	0.00

29.71 MBTU = 8726 kWH is entered into the Energy Constant Calculation Sheet under COOLING (kWH) - BASERUN.

8226.92 MBTU is entered into the Energy Constant Calculation Sheet under HEATING (MBTU) - BASERUN.

TOTAL SITE ENERGY 10385.03 MBTU 129.3 KBTU/SQFT-YR GROSS-AREA 129.3 KBTU/SQFT-YR NET-AREA
TOTAL SOURCE ENERGY 14707.69 MBTU 183.2 KBTU/SQFT-YR GROSS-AREA 183.2 KBTU/SQFT-YR NET-AREA

PERCENT OF HOURS ANY SYSTEM ZONE OUTSIDE OF THROTTLING RANGE = 4.2
PERCENT OF HOURS ANY PLANT LOAD NOT SATISFIED = 0.0

NOTE ELECTRICITY AND/OR FUEL USED TO GENERATE ELECTRICITY IS APPORTIONED BASED ON THE YEARLY DEMAND. ALL OTHER ENERGY TYPES ARE APPORTIONED HOURLY.

COMPUTER SIMULATIONS

BUILDING 36

COMPUTER SIMULATIONS
BUILDING 36

BASE RUN

LDL PROCESSOR INPUT DATA

3/18/1995 13:28:38 LDL RUN 1

```
*  3 *
*  4 *
*  5 *          $----------------------------------$
*  6 *          $EZ-DOE LOADS INPUT$
*  7 *          $----------------------------------$
*  8 *
*  9 *            $ GENERAL PROJECT DATA
* 10 *
* 11 * TITLE LINE-1 *   EMC    ENGINEERS    INC.   *
* 12 *      LINE-2 *EZDOE - ELITE SOFTWARE DEVELOPMENT INC*
* 13 *      LINE-3 *   DENVER,     CO     80227   *
* 14 *
* 15 *      LINE-4 *BUILDING 36, MEDICAL CENTER (WILCOX)   *
* 16 *      LINE-5 *BASE MODEL                      * ..
* 17 *
* 18 * ABORT          ERRORS ..
* 19 * DIAGNOSTIC      WARNINGS ..
* 20 * LOADS-REPORT     VERIFICATION=(LV-A,LV-B,LV-C)
* 21 *              SUMMARY=(LS-A,LS-B,LS-C,LS-D,LS-E,LS-F,LS-K) ..
* 22 * BUILDING-LOCATION  LATITUDE = 44.0
* 23 *              ALTITUDE = 655.
* 24 *              AZIMUTH = -130.
* 25 *              TIME-ZONE =  5
* 26 *              GROSS-AREA =  26440
* 27 *              HOLIDAY = NO
* 28 *              SHIELDING-COEF = 0.29
* 29 *              X-REF = 0.0
* 30 *              Y-REF = 0.0 ..
* 31 * RUN-PERIOD      JAN 1 1994 THRU DEC 31 1994 ..
* 32 *
* 33 *
* 34 *               $ SCHEDULES
* 35 *
* 36 * LIGHTS    =DAY-SCHEDULE  (1,2) (1.)
* 37 *                  (3,11) (0.5)
* 38 *                  (12,13) (0.6)
* 39 *                  (14,24) (1.) ..
* 40 *
* 41 * OCCUP     =DAY-SCHEDULE  (1,5) (0.)
* 42 *                  (6,10) (0.1,0.5,0.9,0.8,0.5)
* 43 *                  (11,14) (0.7,0.9,0.8,0.4)
* 44 *                  (15,16) (0.3)
* 45 *                  (17,18) (0.5,0.9)
```

```
* 46 *                    (19,20) (0.7,0.2)
* 47 *                    (21,24) (0.) ..
* 48 *
* 49 * APPLIANCE  =DAY-SCHEDULE  (1) (0.)
* 50 *                    (2,3) (0.7)
* 51 *                    (4,12) (0.02)
* 52 *                    (13,15) (0.6)
* 53 *                    (16,18) (0.02)
* 54 *                    (19,20) (0.7)
* 55 *                    (21,24) (0.8) ..
* 56 *
* 57 * CND_DAY    =DAY-SCHEDULE  (1,24) (1.) ..
* 58 *
* 59 * FULL_OFFD  =DAY-SCHEDULE  (1,24) (0.) ..
* 60 *
* 61 * appliance  =DAY-SCHEDULE  (1,5) (0.)
* 62 *                    (6,7) (0.4)
* 63 *                    (8,11) (0.6)
* 64 *                    (12,13) (0.8)
* 65 *                    (14,15) (0.6)
* 66 *                    (16,17) (0.8)
* 67 *                    (18,19) (0.6)
* 68 *                    (20,24) (0.) ..
* 69 *
* 70 * lights    =DAY-SCHEDULE  (1,5) (0.2)
* 71 *                    (6) (0.5)
* 72 *                    (7,13) (0.8)
* 73 *                    (14,15) (0.9)
* 74 *                    (16,18) (0.8)
* 75 *                    (19,20) (0.7)
* 76 *                    (21,24) (0.2) ..
* 77 *
* 78 * FULL_ON_D  =DAY-SCHEDULE  (1,24) (1.) ..
* 79 *
* 80 *
* 81 * PEOPLE     =WEEK-SCHEDULE  (ALL) OCCUP  ..
* 82 *
* 83 * LIGHTS_WK  =WEEK-SCHEDULE  (ALL) lights  ..
* 84 *
* 85 * APPLI_WK   =WEEK-SCHEDULE  (ALL) appliance  ..
* 86 *
* 87 * CND_WK     =WEEK-SCHEDULE  (ALL) CND_DAY  ..
* 88 *
* 89 * FULL_OFFW  =WEEK-SCHEDULE  (ALL) FULL_OFFD  ..
* 90 *
* 91 * FULL_ON_W  =WEEK-SCHEDULE  (ALL) FULL_ON_D  ..
* 92 *
* 93 *
* 94 * $ FULL_ON SCHEDULE
* 95 * FULL_ON    =SCHEDULE THRU DEC 31 FULL_ON_W  ..
```

```
*  96 *
*  97 * $ LOADS OCCUPANCY SCHED
*  98 * OCCUPANCY  =SCHEDULE THRU DEC 31 PEOPLE  ..
*  99 *
* 100 * $ LIGHTING SCHEDULE
* 101 * LIGHTS_0N  =SCHEDULE THRU DEC 31 LIGHTS_WK  ..
* 102 *
* 103 * $ APPLIANCE SCHEDULE
* 104 * APPLI_ON   =SCHEDULE THRU DEC 31 APPLI_WK  ..
* 105 *
* 106 * $ COND VENTIL SCHED
* 107 * CND_SCHED  =SCHEDULE THRU MAR  1 FULL_OFFW
* 108 *                THRU NOV 30 CND_WK
* 109 *                THRU DEC 31 FULL_OFFW  ..
* 110 *
* 111 *
* 112 *
* 113 *              $ CONSTRUCTION TYPES
* 114 *
* 115 *
* 116 *
* 117 *
* 118 *  $ DOOR CONSTRUCTION
* 119 * DOORCON  =CONSTRUCTION   U-VALUE =  0.400  ..
* 120 * FLOOR    =CONSTRUCTION   U-VALUE =  0.100
* 121 *                  ABSORPTANCE = 1.000
* 122 *                  ROUGHNESS = 1  ..
* 123 * ROOFCON  =CONSTRUCTION   U-VALUE =  0.050  ..
* 124 * EXWALL   =CONSTRUCTION   U-VALUE =  0.200
* 125 *                  ABSORPTANCE = 0.750  ..
* 126 * INWALL   =CONSTRUCTION   U-VALUE =  0.500  ..
* 127 *
* 128 * GTYPE_1  =GLASS-TYPE    SHADING-COEF = 0.400
* 129 *                PANES = 1
* 130 *                GLASS-CONDUCTANCE =  1.130  ..
* 131 * GTYPE_2  =GLASS-TYPE    SHADING-COEF = 0.300
* 132 *                PANES = 1
* 133 *                GLASS-CONDUCTANCE =  0.790  ..
* 134 * GTYPE_3  =GLASS-TYPE    SHADING-COEF = 0.400
* 135 *                PANES = 1
* 136 *                GLASS-CONDUCTANCE =  0.360  ..
* 137 *
* 138 *
* 139 *
* 140 *
* 141 *              $ SPACE DESCRIPTION
* 142 *
* 143 * SECTIONAB  =SPACE    AREA = 19740.0  VOLUME = 177660.0
* 144 *              AZIMUTH = -150  ZONE-TYPE = CONDITIONED
* 145 *              PEOPLE-SCHEDULE = OCCUPANCY  NUMBER-OF-PEOPLE = 150.0
```

```
* 146 *          PEOPLE-HEAT-GAIN = 650.0
* 147 *          LIGHTING-TYPE = REC-FLUOR-RV  LIGHTING-KW = 12.0
* 148 *          LIGHTING-SCHEDULE = LIGHTS_0N
* 149 *          EQUIP-SCHEDULE = OCCUPANCY  EQUIPMENT-KW = 11.0
* 150 *          SOURCE-SCHEDULE = FULL_ON  SOURCE-TYPE = HOT-WATER
* 151 *          SOURCE-BTU/HR = 11500.0  SOURCE-SENSIBLE = 0.1
* 152 *          SOURCE-LATENT = 0.2  INF-METHOD = AIR-CHANGE
* 153 *          AIR-CHANGES/HR = 0.33  INF-SCHEDULE = FULL_ON  ..
* 154 *
* 155 *        I-W     HEIGHT = 9.0  WIDTH = 128.0  CONS = INWALL
* 156 *             AZIMUTH = -150  NEXT-TO = SECTIONC  ..
* 157 *
* 158 *        E-W     HEIGHT = 9.0  WIDTH = 159.0  CONS = EXWALL
* 159 *             AZIMUTH = 120  ..
* 160 *
* 161 *         WINDOW HEIGHT = 9.0  WIDTH = 4.0  G-T = GTYPE_1
* 162 *             MULTIPLIER = 4.0  ..
* 163 *
* 164 *         DOOR   HEIGHT = 8.0  WIDTH = 7.0  CONS = DOORCON ..
* 165 *
* 166 *         WINDOW HEIGHT = 9.0  WIDTH = 5.0  G-T = GTYPE_1 ..
* 167 *
* 168 *         WINDOW HEIGHT = 5.0  WIDTH = 4.0  G-T = GTYPE_1
* 169 *             MULTIPLIER = 14.0  ..
* 170 *
* 171 *        E-W     HEIGHT = 9.0  WIDTH = 128.0  CONS = EXWALL
* 172 *             AZIMUTH = 30  ..
* 173 *
* 174 *         DOOR   HEIGHT = 8.0  WIDTH = 4.0  CONS = DOORCON ..
* 175 *
* 176 *        E-W     HEIGHT = 9.0  WIDTH = 159.0  CONS = EXWALL
* 177 *             AZIMUTH = -60  ..
* 178 *
* 179 *         WINDOW HEIGHT = 6.0  WIDTH = 4.0  G-T = GTYPE_1
* 180 *             MULTIPLIER = 5.0  ..
* 181 *
* 182 *         DOOR   HEIGHT = 7.0  WIDTH = 4.0  CONS = DOORCON ..
* 183 *
* 184 *         DOOR   HEIGHT = 10.0  WIDTH = 20.0  CONS = DOORCON ..
* 185 *
* 186 *         DOOR   HEIGHT = 9.0  WIDTH = 4.0  CONS = DOORCON
* 187 *             MULTIPLIER = 2.0  ..
* 188 *
* 189 *         DOOR   HEIGHT = 9.0  WIDTH = 6.0  CONS = DOORCON ..
* 190 *
* 191 *         DOOR   HEIGHT = 9.0  WIDTH = 6.0  CONS = DOORCON ..
* 192 *
* 193 *        ROOF     HEIGHT = 159.0  WIDTH = 128.0  CONS = ROOFCON
* 194 *             AZIMUTH = -150  TILT = 0  ..
* 195 *
```

```
* 196 *          U-W     HEIGHT = 159.0  WIDTH = 128.0  CONS = FLOOR
* 197 *                  AZIMUTH = -150   ..
* 198 *
* 199 *
* 200 * SECTIONC  =SPACE    AREA = 6700.0  VOLUME = 60300.0
* 201 *                AZIMUTH = -150  ZONE-TYPE = CONDITIONED
* 202 *                PEOPLE-SCHEDULE = OCCUPANCY  NUMBER-OF-PEOPLE = 100.0
* 203 *                PEOPLE-HEAT-GAIN = 650.0
* 204 *                LIGHTING-TYPE = REC-FLUOR-RV  LIGHTING-KW = 7.0
* 205 *                LIGHTING-SCHEDULE = LIGHTS_0N
* 206 *                EQUIP-SCHEDULE = OCCUPANCY  EQUIPMENT-KW = 3.0
* 207 *                INF-METHOD = AIR-CHANGE  AIR-CHANGES/HR = 0.33
* 208 *                INF-SCHEDULE = FULL_ON   ..
* 209 *
* 210 *          E-W     HEIGHT = 9.0  WIDTH = 108.0  CONS = INWALL
* 211 *                  AZIMUTH = -150   ..
* 212 *
* 213 *           WINDOW HEIGHT = 9.0  WIDTH = 4.0  G-T = GTYPE_1
* 214 *                  MULTIPLIER = 4.0   ..
* 215 *
* 216 *           DOOR   HEIGHT = 8.0  WIDTH = 7.5  CONS = DOORCON ..
* 217 *
* 218 *           WINDOW HEIGHT = 9.0  WIDTH = 5.0  G-T = GTYPE_1 ..
* 219 *
* 220 *           WINDOW HEIGHT = 5.0  WIDTH = 4.0  G-T = GTYPE_1
* 221 *                  MULTIPLIER = 14.0   ..
* 222 *
* 223 *          E-W     HEIGHT = 9.0  WIDTH = 62.0  CONS = EXWALL
* 224 *                  AZIMUTH = 120   ..
* 225 *
* 226 *          E-W     HEIGHT = 9.0  WIDTH = 108.0  CONS = EXWALL
* 227 *                  AZIMUTH = 30   ..
* 228 *
* 229 *          I-W     HEIGHT = 9.0  WIDTH = 62.0  CONS = EXWALL
* 230 *                  AZIMUTH = -60  NEXT-TO = SECTIONAB   ..
* 231 *
* 232 *          ROOF    HEIGHT = 62.0  WIDTH = 108.0  CONS = ROOFCON
* 233 *                  AZIMUTH = -150  TILT = 0   ..
* 234 *
* 235 *          U-W     HEIGHT = 62.0  WIDTH = 108.0  CONS = FLOOR
* 236 *                  AZIMUTH = -150   ..
* 237 *
* 238 *
* 239 * END  ..
* 240 * COMPUTE LOADS  ..
* 241 *
* 242 * INPUT SYSTEMS  ..
```

```
* 243 *
* 244 *
* 245 *            $----------------------------------$
* 246 *            $EZ-DOE SYSTEMS INPUT$
* 247 *            $----------------------------------$
* 248 *
* 249 *              $ GENERAL PROJECT DATA
* 250 *
* 251 * TITLE LINE-1 *   EMC    ENGINEERS    INC.   *
* 252 *      LINE-2 *EZDOE - ELITE SOFTWARE DEVELOPMENT INC*
* 253 *      LINE-3 *   DENVER,     CO     80227   *
* 254 *
* 255 *      LINE-4 *BUILDING 36, MEDICAL CENTER (WILCOX)   *
* 256 *      LINE-5 *BASE MODEL                      * ..
* 257 * ABORT          ERRORS ..
* 258 * DIAGNOSTIC      WARNINGS ..
* 259 * SYSTEMS-REPORT   VERIFICATION=(SV-A,SV-B)
* 260 *               SUMMARY=(SS-A,SS-B,SS-C,SS-D,SS-E,SS-F,SS-G,
* 261 *                    SS-H,SS-I,SS-J,SS-K,SS-L,SS-M,SS-N,
* 262 *                    SS-O) ..
* 263 *
* 264 *              $ SCHEDULES
* 265 *
* 266 * D_FULL    =DAY-SCHEDULE  (1,24) (1.) ..
* 267 * D_OFF     =DAY-SCHEDULE  (1,24) (0.) ..
* 268 * HEAT_68_D  =DAY-SCHEDULE  (1,24) (70.) ..
* 269 * COOL_72_D  =DAY-SCHEDULE  (1,24) (72.) ..
* 270 *
* 271 * W_FULL    =WEEK-SCHEDULE  (ALL) D_FULL  ..
* 272 *
* 273 * W_OFF     =WEEK-SCHEDULE  (ALL) D_OFF  ..
* 274 *
* 275 * HEAT_68_W  =WEEK-SCHEDULE  (ALL) HEAT_68_D  ..
* 276 *
* 277 * COOL_72_W  =WEEK-SCHEDULE  (ALL) COOL_72_D  ..
* 278 *
* 279 *
* 280 * FULL_ON    =SCHEDULE THRU DEC 31 W_FULL  ..
* 281 *
* 282 * FULL_OFF   =SCHEDULE THRU DEC 31 W_OFF  ..
* 283 *
* 284 * HEAT_68    =SCHEDULE THRU DEC 31 HEAT_68_W  ..
* 285 *
* 286 * COOL_72    =SCHEDULE THRU DEC 31 COOL_72_W  ..
* 287 *
```

```
* 288 *
* 289 *
* 290 *              $ ZONE DESCRIPTION
* 291 *
* 292 * SECTIONAB  =ZONE    DESIGN-HEAT-T = 68.0  DESIGN-COOL-T = 72.0
* 293 *              HEAT-TEMP-SCH = HEAT_68  COOL-TEMP-SCH = COOL_72
* 294 *              ZONE-TYPE = CONDITIONED
* 295 *              THERMOSTAT-TYPE = PROPORTIONAL  THROTTLING-RANGE = 1.0
* 296 *              BASEBOARD-CTRL = THERMOSTATIC
* 297 *              BASEBOARD-RATING = -261500.  ASSIGNED-CFM = 17135.
* 298 *              OUTSIDE-AIR-CFM = 3925.  SIZING-OPTION = FROM-LOADS
* 299 *              RATED-CFM = 17135.0   ..
* 300 *
* 301 * SECTIONC   =ZONE    DESIGN-HEAT-T = 68.0  DESIGN-COOL-T = 72.0
* 302 *              HEAT-TEMP-SCH = HEAT_68  COOL-TEMP-SCH = COOL_72
* 303 *              ZONE-TYPE = CONDITIONED
* 304 *              THERMOSTAT-TYPE = PROPORTIONAL  THROTTLING-RANGE = 1.0
* 305 *              BASEBOARD-CTRL = THERMOSTATIC
* 306 *              BASEBOARD-RATING = -83000.  ASSIGNED-CFM = 6950.
* 307 *              OUTSIDE-AIR-CFM = 1200.  SIZING-OPTION = FROM-LOADS
* 308 *              RATED-CFM = 6950.0   ..
* 309 *
* 310 *
* 311 *              $ SYSTEM DESCRIPTION
* 312 *
* 313 * SYSTEMAB   =SYSTEM    SYSTEM-TYPE = SZRH
* 314 *               MAX-SUPPLY-T = 120.0  MIN-SUPPLY-T = 55.0
* 315 *               PREHEAT-T = 55.0  MIN-HUMIDITY = 30.0
* 316 *               ECONO-LIMIT-T = 65.0  ECONO-LOW-LIMIT = 55.0
* 317 *               OA-CONTROL = FIXED  SUPPLY-CFM = 17135.
* 318 *               RETURN-CFM = 13210.  RATED-CFM = 17135.
* 319 *               MIN-OUTSIDE-AIR = 0.35  SUPPLY-DELTA-T = 2.4
* 320 *               SUPPLY-KW = 0.00118
* 321 *               MOTOR-PLACEMENT = OUTSIDE-AIRFLOW
* 322 *               NIGHT-CYCLE-CTRL = STAY-OFF  NIGHT-VENT-DT = 0.0
* 323 *               MIN-CFM-RATIO = 1.0  COOLING-CAPACITY = 500000.
* 324 *               HEATING-CAPACITY = -818500.  FURNACE-AUX = 0.
* 325 *               PREHEAT-SOURCE = HOT-WATER
* 326 *               ZONE-NAMES = (SECTIONAB)  ..
* 327 *
* 328 * ADDITIONC  =SYSTEM    SYSTEM-TYPE = SZRH
* 329 *               MAX-SUPPLY-T = 120.0  MIN-SUPPLY-T = 55.0
* 330 *               PREHEAT-T = 55.0  MIN-HUMIDITY = 30.0
* 331 *               ECONO-LIMIT-T = 65.0  ECONO-LOW-LIMIT = 55.0
* 332 *               OA-CONTROL = FIXED  SUPPLY-CFM = 6950.
* 333 *               RETURN-CFM = 5750.  RATED-CFM = 6950.
* 334 *               MIN-OUTSIDE-AIR = 0.17  SUPPLY-DELTA-T = 2.4
* 335 *               SUPPLY-KW = 0.00081
* 336 *               MOTOR-PLACEMENT = OUTSIDE-AIRFLOW
* 337 *               NIGHT-CYCLE-CTRL = STAY-OFF  RETURN-STATIC = 1.25
```

```
* 338 *              RETURN-EFF = 0.88  NIGHT-VENT-DT = 0.0
* 339 *              MIN-CFM-RATIO = 1.0  COOLING-CAPACITY = 204000.
* 340 *              HEATING-CAPACITY = -235452.  FURNACE-AUX = 0.
* 341 *              PREHEAT-SOURCE = HOT-WATER
* 342 *              HUMIDIFIER-TYPE = ELECTRIC
* 343 *              ZONE-NAMES = (SECTIONC)  ..
* 344 *
* 345 * END  ..
* 346 * COMPUTE SYSTEMS  ..
* 347 *
* 348 * INPUT PLANT  ..

        P D L   P R O C E S S O R   I N P U T   D A T A

            3/18/1995   13:28:38  PDL RUN  1



* 349 *
* 350 *
* 351 *            $-------------------------------------$
* 352 *            $ E Z - D O E   P L A N T S   I N P U T $
* 353 *            $-------------------------------------$
* 354 *
* 355 *              $ GENERAL PROJECT DATA
* 356 *
* 357 * TITLE  LINE-1 *    EMC     ENGINEERS     INC.    *
* 358 *       LINE-2 *EZDOE - ELITE SOFTWARE DEVELOPMENT INC*
* 359 *       LINE-3 *    DENVER,      CO      80227    *
* 360 *
* 361 *       LINE-4 *BUILDING 36, MEDICAL CENTER (WILCOX)    *
* 362 *       LINE-5 *BASE MODEL                          * ..
* 363 *
* 364 * ABORT           ERRORS  ..
* 365 * DIAGNOSTIC       WARNINGS ..
* 366 * PLANT-REPORT      VERIFICATION=(PV-A)
* 367 *                SUMMARY=(PS-A,PS-B,PS-D,PS-H,PS-I,BEPS)  ..
* 368 *
* 369 *                $ SCHEDULES
* 370 *
* 371 * DAY_ON     =DAY-SCHEDULE  (1,7) (0.)
* 372 *                    (8,18) (1.)
* 373 *                    (19,24) (0.) ..
* 374 *
* 375 *
* 376 * FULL_0N    =WEEK-SCHEDULE  (ALL) DAY_ON  ..
* 377 *
* 378 *
* 379 * $ heating plant schedule
```

```
* 380 * heating   =SCHEDULE THRU DEC 31 FULL_0N ..
* 381 *
* 382 *
* 383 *
* 384 *              $ EQUIPMENT DESCRIPTION
* 385 *
* 386 * HW_BOILER  =PLANT-EQUIPMENT   TYPE = HW-BOILER
* 387 *              SIZE = 1.  INSTALLED-NUMBER = 2
* 388 *              MAX-NUMBER-AVAIL = 2 ..
* 389 *
* 390 * CHILLERS   =PLANT-EQUIPMENT   TYPE = OPEN-REC-CHLR
* 391 *              SIZE = 0.3  INSTALLED-NUMBER = 2
* 392 *              MAX-NUMBER-AVAIL = 2 ..
* 393 *
* 394 * ADDITION   =PLANT-EQUIPMENT   TYPE = HERM-REC-CHLR
* 395 *              SIZE = 0.2 ..
* 396 *
* 397 * PLANT-PARAMETERS     BOILER-CONTROL = STANDBY  MAKEUP-WTR-T = 50.
* 398 *              STM-BOILER-HIR = 0.76  HW-BOILER-HIR = 1.27
* 399 *              CHILLER-CONTROL = STANDBY  OPEN-REC-COND-TYPE = AIR
* 400 *              HERM-REC-COND-TYPE = AIR  COMP-TO-TWR-WTR = 2.77
* 401 *              CCIRC-HEAD = 100.0  HCIRC-HEAD = 70.0   ..
* 402 *
* 403 *
* 404 * PART-LOAD-RATIO  TYPE = HW-BOILER
* 405 *          MIN-RATIO      = 0.2500  MAX-RATIO      = 1.0000
* 406 *          OPERATING-RATIO  =  1.0000  ELEC-INPUT-RATIO =  0.0220 ..
* 407 *
* 408 * ENERGY-RESOURCE      RESOURCE = ELECTRICITY ..
* 409 * ENERGY-RESOURCE      RESOURCE = FUEL-OIL ..
* 410 *
* 411 * ENERGY-STORAGE   HEAT-STORE-RATE = 1.51  HEAT-SUPPLY-RATE = 1.51
* 412 *              HTANK-BASE-T = 144.0  HTANK-T-RANGE = 15.6
* 413 *              HEAT-STORE-SCH = heating   ..
* 414 *
* 415 *
* 416 *
* 417 * END ..
* 418 * COMPUTE PLANT ..
* 419 * STOP ..
```

ENERGY TYPE
IN SITE MBTU-

CATEGORY OF USE	ELECTRICITY	FUEL-OIL
SPACE HEAT	152.88	3216.97
SPACE COOL	137.42	0.00
HVAC AUX	939.92	0.00
DOM HOT WTR	7.11	157.79
AUX SOLAR	0.00	0.00
LIGHTS	319.53	0.00
VERT TRANS	0.00	0.00
MISC EQUIP	148.24	0.00
TOTAL	1705.10	3374.75

TOTAL SITE ENERGY 5079.78 MBTU 192.1 KBTU/SQFT-YR GROSS-AREA 192.1 KBTU/SQFT-YR NET-AREA
TOTAL SOURCE ENERGY 8495.00 MBTU 321.3 KBTU/SQFT-YR GROSS-AREA 321.3 KBTU/SQFT-YR NET-AREA

PERCENT OF HOURS ANY SYSTEM ZONE OUTSIDE OF THROTTLING RANGE = 0.0
PERCENT OF HOURS ANY PLANT LOAD NOT SATISFIED = 10.9

NOTE ELECTRICITY AND/OR FUEL USED TO GENERATE ELECTRICITY IS APPORTIONED BASED ON THE YEARLY DEMAND. ALL OTHER ENERGY TYPES ARE APPORTIONED HOURLY.

EMC ENGINEERS INC. EZDOE - ELITE SOFTWARE DEVELOPMENT INC DOE-2.1D 3/18/1995 13:28:38 PDL RUN
DENVER, CO 80227 BUILDING 36, MEDICAL CENTER (WILCOX) BASE MODEL
REPORT- PS-B MONTHLY PEAK AND TOTAL ENERGY USE WEATHER FILE- MASSENA, NY

MO	UTILITY-	ELECTRICITY	FUEL OIL
JAN	TOTAL(MBTU)	153.012	653.22
	PEAK(KBTU)	258.942	1545.11
	DY/HR	6/ 7	6/ 6
FEB	TOTAL(MBTU)	134.945	508.952
	PEAK(KBTU)	234.672	1152.937
	DY/HR	5/ 8	5/ 5
MAR	TOTAL(MBTU)	148.032	507.33
	PEAK(KBTU)	233.889	1146.403
	DY/HR	8/18	9/ 5
APR	TOTAL(MBTU)	136.441	293.495
	PEAK(KBTU)	251.021	889.841
	DY/HR	15/18	1/ 5
MAY	TOTAL(MBTU)	138.775	163.931
	PEAK(KBTU)	260.843	704.053
	DY/HR	31/12	3/ 2
JUN	TOTAL(MBTU)	138.557	50.085
	PEAK(KBTU)	264.052	444.895
	DY/HR	28/18	8/ 5
JUL	TOTAL(MBTU)	149.882	32.026
	PEAK(KBTU)	266.578	373.834
	DY/HR	18/12	25/ 5
AUG	TOTAL(MBTU)	146.152	39.196
	PEAK(KBTU)	263.637	366.231
	DY/HR	9/18	22/ 5
SEP	TOTAL(MBTU)	136.259	81.033
	PEAK(KBTU)	266.154	568.801
	DY/HR	4/18	24/ 4
OCT	TOTAL(MBTU)	136.954	184.841
	PEAK(KBTU)	254.161	660.751
	DY/HR	8/18	21/ 6
NOV	TOTAL(MBTU)	137.735	341.866
	PEAK(KBTU)	231.132	911.135
	DY/HR	30/18	27/ 5

DEC	TOTAL(MBTU)	148.305	518.756
	PEAK(KBTU)	233.072	1122.791
	DY/HR	23/ 8	3/ 4
	ONE YEAR	1705.05	3374.731
	USE/PEAK	266.578	1545.11

COMPUTER SIMULATIONS
BUILDING 36

RUN 1 - SCHEDULE START/STOP AND NIGHT SETBACK

```
INPUT LOADS  ..

                $-----------------------------------$
                $ E Z - D O E   L O A D S  I N P U T $
                $-----------------------------------$

                   $ GENERAL PROJECT DATA

TITLE  LINE-1 *      EMC      ENGINEERS      INC.     *
       LINE-2 *EZDOE - ELITE SOFTWARE DEVELOPMENT INC*
       LINE-3 *      DENVER,        CO       80227     *

       LINE-4 *BUILDING 36, MEDICAL CENTER (WILCOX)     *
       LINE-5 *MODEL WITH SET BACK                      * ..

ABORT               ERRORS  ..
DIAGNOSTIC          WARNINGS ..
LOADS-REPORT        VERIFICATION=(LV-A,LV-B,LV-C)
                    SUMMARY=(LS-A,LS-B,LS-C,LS-D,LS-E,LS-F,LS-K)  ..
BUILDING-LOCATION   LATITUDE = 44.0
                    ALTITUDE = 655.
                    AZIMUTH = -130.
                    TIME-ZONE =  5
                    GROSS-AREA =  26440
                    HOLIDAY = NO
                    SHIELDING-COEF = 0.29
                    X-REF = 0.0
                    Y-REF = 0.0  ..
RUN-PERIOD          JAN 1 1994 THRU DEC 31 1994  ..


                    $ SCHEDULES

LIGHTS      =DAY-SCHEDULE  (1,2) (1.)
                           (3,11) (0.5)
                           (12,13) (0.6)
                           (14,24) (1.) ..

OCCUP       =DAY-SCHEDULE  (1,5) (0.)
                           (6,10) (0.1,0.5,0.9,0.8,0.5)
                           (11,14) (0.7,0.9,0.8,0.4)
                           (15,16) (0.3)
                           (17,18) (0.5,0.9)
                           (19,20) (0.7,0.2)
                           (21,24) (0.) ..

APPLIANCE   =DAY-SCHEDULE  (1) (0.)
                           (2,3) (0.7)
                           (4,12) (0.02)
                           (13,15) (0.6)
                           (16,18) (0.02)
                           (19,20) (0.7)
                           (21,24) (0.8) ..

CND_DAY     =DAY-SCHEDULE  (1,24) (1.) ..

FULL_OFFD   =DAY-SCHEDULE  (1,24) (0.) ..

appliance   =DAY-SCHEDULE  (1,5) (0.)
                           (6,7) (0.4)
                           (8,11) (0.6)
                           (12,13) (0.8)
                           (14,15) (0.6)
                           (16,17) (0.8)
                           (18,19) (0.6)
                           (20,24) (0.) ..

lights      =DAY-SCHEDULE  (1,5) (0.2)
                           (6) (0.5)
                           (7,13) (0.8)
                           (14,15) (0.9)
                           (16,18) (0.8)
                           (19,20) (0.7)
                           (21,24) (0.2) ..

FULL_ON_D   =DAY-SCHEDULE  (1,24) (1.) ..


PEOPLE      =WEEK-SCHEDULE  (ALL) OCCUP  ..

LIGHTS_WK   =WEEK-SCHEDULE  (ALL) lights  ..

APPLI_WK    =WEEK-SCHEDULE  (ALL) appliance  ..

CND_WK      =WEEK-SCHEDULE  (ALL) CND_DAY  ..

FULL_OFFW   =WEEK-SCHEDULE  (ALL) FULL_OFFD  ..

FULL_ON_W   =WEEK-SCHEDULE  (ALL) FULL_ON_D  ..


$ FULL_ON SCHEDULE
FULL_ON     =SCHEDULE THRU DEC 31 FULL_ON_W  ..

$ LOADS OCCUPANCY SCHED
OCCUPANCY   =SCHEDULE THRU DEC 31 PEOPLE  ..

$ LIGHTING SCHEDULE
LIGHTS_ON   =SCHEDULE THRU DEC 31 LIGHTS_WK  ..

$ APPLIANCE SCHEDULE
APPLI_ON    =SCHEDULE THRU DEC 31 APPLI_WK  ..

$ COND VENTIL SCHED
CND_SCHED   =SCHEDULE THRU MAR  1 FULL_OFFW
                      THRU NOV 30 CND_WK
```

```
                    THRU DEC 31 FULL_OFFW  ..


                    $ CONSTRUCTION TYPES


 $ DOOR CONSTRUCTION
DOORCON  =CONSTRUCTION   U-VALUE =  0.400  ..
FLOOR    =CONSTRUCTION   U-VALUE =  0.100
                          ABSORPTANCE = 1.000
                          ROUGHNESS = 1  ..
ROOFCON  =CONSTRUCTION   U-VALUE =  0.050  ..
EXWALL   =CONSTRUCTION   U-VALUE =  0.200
                          ABSORPTANCE = 0.750  ..
INWALL   =CONSTRUCTION   U-VALUE =  0.500  ..

GTYPE_1  =GLASS-TYPE     SHADING-COEF = 0.400
                         PANES = 1
                         GLASS-CONDUCTANCE =  1.130  ..
GTYPE_2  =GLASS-TYPE     SHADING-COEF = 0.300
                         PANES = 1
                         GLASS-CONDUCTANCE =  0.790  ..
GTYPE_3  =GLASS-TYPE     SHADING-COEF = 0.400
                         PANES = 1
                         GLASS-CONDUCTANCE =  0.360  ..


                    $ SPACE DESCRIPTION

SECTIONAB  =SPACE    AREA = 19740.0  VOLUME = 177660.0
                     AZIMUTH = -150  ZONE-TYPE = CONDITIONED
                     PEOPLE-SCHEDULE = OCCUPANCY  NUMBER-OF-PEOPLE = 150.0
                     PEOPLE-HEAT-GAIN = 650.0
                     LIGHTING-TYPE = REC-FLUOR-RV  LIGHTING-KW = 12.0
                     LIGHTING-SCHEDULE = LIGHTS_ON
                     EQUIP-SCHEDULE = OCCUPANCY  EQUIPMENT-KW = 11.0
                     SOURCE-SCHEDULE = FULL_ON  SOURCE-TYPE = HOT-WATER
                     SOURCE-BTU/HR = 11500.0  SOURCE-SENSIBLE = 0.1
                     SOURCE-LATENT = 0.2  INF-METHOD = AIR-CHANGE
                     AIR-CHANGES/HR = 0.33  INF-SCHEDULE = FULL_ON   ..

               I-W      HEIGHT = 9.0  WIDTH = 128.0  CONS = INWALL
                        AZIMUTH = -150  NEXT-TO = SECTIONC   ..

               E-W      HEIGHT = 9.0  WIDTH = 159.0  CONS = EXWALL
                        AZIMUTH = 120   ..

                 WINDOW HEIGHT = 9.0  WIDTH = 4.0  G-T = GTYPE_1
                        MULTIPLIER = 4.0   ..

                 DOOR   HEIGHT = 8.0  WIDTH = 7.0  CONS = DOORCON ..

                 WINDOW HEIGHT = 9.0  WIDTH = 5.0  G-T = GTYPE_1 ..

                 WINDOW HEIGHT = 5.0  WIDTH = 4.0  G-T = GTYPE_1
                        MULTIPLIER = 14.0   ..

               E-W      HEIGHT = 9.0  WIDTH = 128.0  CONS = EXWALL
                        AZIMUTH = 30   ..

                 DOOR   HEIGHT = 8.0  WIDTH = 4.0  CONS = DOORCON ..

               E-W      HEIGHT = 9.0  WIDTH = 159.0  CONS = EXWALL
                        AZIMUTH = -60   ..

                 WINDOW HEIGHT = 6.0  WIDTH = 4.0  G-T = GTYPE_1
                        MULTIPLIER = 5.0   ..

                 DOOR   HEIGHT = 7.0  WIDTH = 4.0  CONS = DOORCON ..

                 DOOR   HEIGHT = 10.0  WIDTH = 20.0  CONS = DOORCON ..

                 DOOR   HEIGHT = 9.0  WIDTH = 4.0  CONS = DOORCON
                        MULTIPLIER = 2.0   ..

                 DOOR   HEIGHT = 9.0  WIDTH = 6.0  CONS = DOORCON ..

                 DOOR   HEIGHT = 9.0  WIDTH = 6.0  CONS = DOORCON ..

               ROOF     HEIGHT = 159.0  WIDTH = 128.0  CONS = ROOFCON
                        AZIMUTH = -150  TILT = 0   ..

              U-W      HEIGHT = 159.0  WIDTH = 128.0  CONS = FLOOR
                        AZIMUTH = -150   ..


SECTIONC   =SPACE    AREA = 6700.0  VOLUME = 60300.0
                     AZIMUTH = -150  ZONE-TYPE = CONDITIONED
                     PEOPLE-SCHEDULE = OCCUPANCY  NUMBER-OF-PEOPLE = 100.0
                     PEOPLE-HEAT-GAIN = 650.0
                     LIGHTING-TYPE = REC-FLUOR-RV  LIGHTING-KW = 7.0
                     LIGHTING-SCHEDULE = LIGHTS_ON
                     EQUIP-SCHEDULE = OCCUPANCY  EQUIPMENT-KW = 3.0
                     INF-METHOD = AIR-CHANGE  AIR-CHANGES/HR = 0.33
                     INF-SCHEDULE = FULL_ON   ..

               E-W      HEIGHT = 9.0  WIDTH = 108.0  CONS = INWALL
                        AZIMUTH = -150   ..

                 WINDOW HEIGHT = 9.0  WIDTH = 4.0  G-T = GTYPE_1
                        MULTIPLIER = 4.0   ..

                 DOOR   HEIGHT = 8.0  WIDTH = 7.5  CONS = DOORCON ..
```

```
                WINDOW HEIGHT = 9.0  WIDTH = 5.0  G-T = GTYPE_1 ..

                WINDOW HEIGHT = 5.0  WIDTH = 4.0  G-T = GTYPE_1
                       MULTIPLIER = 14.0   ..

               E-W     HEIGHT = 9.0  WIDTH = 62.0  CONS = EXWALL
                       AZIMUTH = 120   ..

               E-W     HEIGHT = 9.0  WIDTH = 108.0  CONS = EXWALL
                       AZIMUTH = 30   ..

               I-W     HEIGHT = 9.0  WIDTH = 62.0  CONS = EXWALL
                       AZIMUTH = -60  NEXT-TO = SECTIONAB   ..

               ROOF    HEIGHT = 62.0  WIDTH = 108.0  CONS = ROOFCON
                       AZIMUTH = -150  TILT = 0   ..

              U-W     HEIGHT = 62.0  WIDTH = 108.0  CONS = FLOOR
                       AZIMUTH = -150   ..


END  ..
COMPUTE LOADS  ..

INPUT SYSTEMS  ..


                $---------------------------------------$
                $ E Z - D O E   S Y S T E M S  I N P U T $
                $---------------------------------------$

                   $ GENERAL PROJECT DATA

TITLE  LINE-1 *     EMC      ENGINEERS      INC.     *
       LINE-2 *EZDOE - ELITE SOFTWARE DEVELOPMENT INC*
       LINE-3 *     DENVER,       CO       80227     *

       LINE-4 *BUILDING 36, MEDICAL CENTER (WILCOX)    *
       LINE-5 *MODEL WITH SET BACK                      * ..
ABORT              ERRORS  ..
DIAGNOSTIC         WARNINGS ..
SYSTEMS-REPORT     SUMMARY=(SS-A,SS-B,SS-C)  ..

                   $ SCHEDULES

D_FULL      =DAY-SCHEDULE  (1,24) (1.) ..
D_OFF       =DAY-SCHEDULE  (1,24) (0.) ..
HEAT_68_D   =DAY-SCHEDULE  (1,24) (68.) ..
COOL_72_D   =DAY-SCHEDULE  (1,24) (72.) ..
FAN_W_SB_D  =DAY-SCHEDULE  (1,5) (0.)
                           (6,15) (1.)
                           (16,24) (0.) ..
HT68_WSB_D  =DAY-SCHEDULE  (1,5) (50.)
                           (6,15) (70.)
                           (16,24) (50.) ..
CL72_WSB_D  =DAY-SCHEDULE  (1,5) (85.)
                           (6,15) (72.)
                           (16,24) (85.) ..
HEAT_50_D   =DAY-SCHEDULE  (1,24) (50.) ..
COOL_85_D   =DAY-SCHEDULE  (1,24) (85.) ..

W_FULL      =WEEK-SCHEDULE  (ALL) D_FULL  ..

W_OFF       =WEEK-SCHEDULE  (ALL) D_OFF  ..

HEAT_68_W   =WEEK-SCHEDULE  (ALL) HEAT_68_D  ..

COOL_72_W   =WEEK-SCHEDULE  (ALL) COOL_72_D  ..

FAN_W_SB_W  =WEEK-SCHEDULE  (WD)  FAN_W_SB_D
                            (SAT) D_OFF
                            (SUN) D_OFF
                            (HOL) FAN_W_SB_D ..

HT68_WSB_W  =WEEK-SCHEDULE  (WD)  HT68_WSB_D
                            (SAT) HEAT_50_D
                            (SUN) HEAT_50_D
                            (HOL) HT68_WSB_D ..

CL72_WSB_W  =WEEK-SCHEDULE  (WD)  CL72_WSB_D
                            (SAT) COOL_85_D
                            (SUN) COOL_85_D
                            (HOL) CL72_WSB_D ..


FULL_ON     =SCHEDULE THRU DEC 31 W_FULL  ..

FULL_OFF    =SCHEDULE THRU DEC 31 W_OFF  ..

HEAT_68     =SCHEDULE THRU DEC 31 HEAT_68_W  ..

COOL_72     =SCHEDULE THRU DEC 31 COOL_72_W  ..

$ FAN WITH SET BACK
FAN_W_SB    =SCHEDULE THRU DEC 31 FAN_W_SB_W  ..

HT68_WSB    =SCHEDULE THRU DEC 31 HT68_WSB_W  ..

CL72_WSB    =SCHEDULE THRU DEC 31 CL72_WSB_W  ..


                   $ ZONE DESCRIPTION

SECTIONAB  =ZONE    DESIGN-HEAT-T = 68.0  DESIGN-COOL-T = 72.0
                    HEAT-TEMP-SCH = HT68_WSB  COOL-TEMP-SCH = CL72_WSB
                    ZONE-TYPE = CONDITIONED
                    THERMOSTAT-TYPE = PROPORTIONAL  THROTTLING-RANGE = 1.0
```

```
                    BASEBOARD-CTRL = THERMOSTATIC
                    BASEBOARD-RATING = -261500.  ASSIGNED-CFM = 17135.
                    OUTSIDE-AIR-CFM = 3925.  SIZING-OPTION = FROM-LOADS
                    RATED-CFM = 17135.0   ..

SECTIONC    =ZONE   DESIGN-HEAT-T = 68.0  DESIGN-COOL-T = 72.0
                    HEAT-TEMP-SCH = HT68_WSB  COOL-TEMP-SCH = CL72_WSB
                    ZONE-TYPE = CONDITIONED
                    THERMOSTAT-TYPE = PROPORTIONAL  THROTTLING-RANGE = 1.0
                    BASEBOARD-CTRL = THERMOSTATIC
                    BASEBOARD-RATING = -83000.  ASSIGNED-CFM = 6950.
                    OUTSIDE-AIR-CFM = 1200.  SIZING-OPTION = FROM-LOADS
                    RATED-CFM = 6950.0   ..


                    $ SYSTEM DESCRIPTION

SYSTEMAB    =SYSTEM   SYSTEM-TYPE = SZRH
                      MAX-SUPPLY-T = 120.0  MIN-SUPPLY-T = 55.0
                      PREHEAT-T = 55.0  MIN-HUMIDITY = 30.0
                      ECONO-LIMIT-T = 65.0  ECONO-LOW-LIMIT = 55.0
                      OA-CONTROL = FIXED  SUPPLY-CFM = 17135.
                      RETURN-CFM = 13210.  RATED-CFM = 17135.
                      MIN-OUTSIDE-AIR = 0.35  FAN-SCHEDULE = FAN_W_SB
                      SUPPLY-DELTA-T = 2.4  SUPPLY-KW = 0.00118
                      MOTOR-PLACEMENT = OUTSIDE-AIRFLOW
                      NIGHT-CYCLE-CTRL = CYCLE-ON-ANY  NIGHT-VENT-DT = 0.0
                      MIN-CFM-RATIO = 1.0  COOLING-CAPACITY = 500000.
                      HEATING-CAPACITY = -818500.  FURNACE-AUX = 0.
                      PREHEAT-SOURCE = HOT-WATER
                      ZONE-NAMES = (SECTIONAB)   ..

ADDITIONC   =SYSTEM   SYSTEM-TYPE = SZRH
                      MAX-SUPPLY-T = 120.0  MIN-SUPPLY-T = 55.0
                      PREHEAT-T = 55.0  MIN-HUMIDITY = 30.0
                      ECONO-LIMIT-T = 65.0  ECONO-LOW-LIMIT = 55.0
                      OA-CONTROL = FIXED  SUPPLY-CFM = 6950.
                      RETURN-CFM = 5750.  RATED-CFM = 6950.
                      MIN-OUTSIDE-AIR = 0.17  FAN-SCHEDULE = FAN_W_SB
                      SUPPLY-DELTA-T = 2.4  SUPPLY-KW = 0.00081
                      MOTOR-PLACEMENT = OUTSIDE-AIRFLOW
                      NIGHT-CYCLE-CTRL = CYCLE-ON-ANY
                      RETURN-STATIC = 1.25  RETURN-EFF = 0.88
                      NIGHT-VENT-DT = 0.0  MIN-CFM-RATIO = 1.0
                      COOLING-CAPACITY = 204000.
                      HEATING-CAPACITY = -235452.  FURNACE-AUX = 0.
                      PREHEAT-SOURCE = HOT-WATER
                      HUMIDIFIER-TYPE = ELECTRIC
                      ZONE-NAMES = (SECTIONC)   ..

END   ..
COMPUTE SYSTEMS   ..

INPUT PLANT   ..


                  $-------------------------------------$
                  $ E Z - D O E   P L A N T S  I N P U T $
                  $-------------------------------------$

                     $ GENERAL PROJECT DATA

TITLE   LINE-1 *      EMC      ENGINEERS      INC.      *
        LINE-2 *EZDOE - ELITE SOFTWARE DEVELOPMENT INC*
        LINE-3 *      DENVER,        CO       80227     *

        LINE-4 *BUILDING 36, MEDICAL CENTER (WILCOX)     *
        LINE-5 *MODEL WITH SET BACK                      * ..

ABORT               ERRORS   ..
DIAGNOSTIC          WARNINGS ..
PLANT-REPORT        VERIFICATION=(PV-A)
                    SUMMARY=(PS-A,PS-B,PS-D,PS-H,PS-I,BEPS)   ..

                    $ SCHEDULES

DAY_ON      =DAY-SCHEDULE  (1,7) (0.)
                           (8,18) (1.)
                           (19,24) (0.) ..


FULL_ON     =WEEK-SCHEDULE  (ALL) DAY_ON   ..

$ heating plant schedule
heating     =SCHEDULE THRU DEC 31 FULL_ON   ..


                    $ EQUIPMENT DESCRIPTION

HW_BOILER   =PLANT-EQUIPMENT   TYPE = HW-BOILER
                    SIZE = 1.   INSTALLED-NUMBER = 2
                    MAX-NUMBER-AVAIL = 2   ..

CHILLERS    =PLANT-EQUIPMENT   TYPE = OPEN-REC-CHLR
                    SIZE = 0.3   INSTALLED-NUMBER = 2
                    MAX-NUMBER-AVAIL = 2   ..

ADDITION    =PLANT-EQUIPMENT   TYPE = HERM-REC-CHLR
                    SIZE = 0.2   ..

PLANT-PARAMETERS    BOILER-CONTROL = STANDBY  MAKEUP-WTR-T = 50.
                    STM-BOILER-HIR = 0.76  HW-BOILER-HIR = 1.27
                    CHILLER-CONTROL = STANDBY  OPEN-REC-COND-TYPE = AIR
                    HERM-REC-COND-TYPE = AIR  COMP-TO-TWR-WTR = 2.77
                    CCIRC-HEAD = 100.0  HCIRC-HEAD = 70.0     ..
```

```
PART-LOAD-RATIO  TYPE = HW-BOILER
                 MIN-RATIO         =  0.2500  MAX-RATIO         =  1.0000
                 OPERATING-RATIO   =  1.0000  ELEC-INPUT-RATIO =  0.0220  ..

ENERGY-RESOURCE       RESOURCE = ELECTRICITY  ..
ENERGY-RESOURCE       RESOURCE = FUEL-OIL  ..

ENERGY-STORAGE    HEAT-STORE-RATE = 1.51  HEAT-SUPPLY-RATE = 1.51
                      HTANK-BASE-T = 144.0  HTANK-T-RANGE = 15.6
                      HEAT-STORE-SCH = heating    ..


END  ..
COMPUTE PLANT ..
STOP ..
```

ENERGY TYPE IN SITE MBTU-	ELECTRICITY	FUEL-OIL
CATEGORY OF USE		
SPACE HEAT	55.21	1,604.77
SPACE COOL	111.06	0.00
HVAC AUX	421.84	0.00
DOM HOT WTR	8.11	163.12
AUX SOLAR	0.00	0.00
LIGHTS	319.54	0.00
VERT TRANS	0.00	0.00
MISC EQUIP	148.25	0.00
TOTAL	1,064.01	1,767.89

TOTAL SITE ENERGY 2831.87 MBTU 107.1 KBTU/SQFT-YR GROSS-AREA 107.1 KBTU/SQFT-YR NET-AREA
TOTAL SOURCE ENERGY 4962.97 MBTU 187.7 KBTU/SQFT-YR GROSS-AREA 187.7 KBTU/SQFT-YR NET-AREA

PERCENT OF HOURS ANY SYSTEM ZONE OUTSIDE OF THROTTLING RANGE = 2.8
PERCENT OF HOURS ANY PLANT LOAD NOT SATISFIED = 5.9

NOTE ELECTRICITY AND/OR FUEL USED TO GENERATE ELECTRICITY IS APPORTIONED BASED ON THE YEARLY DEMAND. ALL OTHER ENERGY TYPES ARE APPORTIONED HOURLY.

MO	UTILITY-	ELECTRICITY	FUEL-OIL
	TOTAL(MBTU)	92.611	347.711
JAN	PEAK(KBTU)	270.525	2262.462
	DY/HR	5/12	24/ 6
	TOTAL(MBTU)	82.241	261.440
FEB	PEAK(KBTU)	262.313	2169.392
	DY/HR	4/ 9	14/ 6
	TOTAL(MBTU)	90.965	264.035
MAR	PEAK(KBTU)	259.891	2041.857
	DY/HR	28/ 8	28/ 6
	TOTAL(MBTU)	84.529	152.647
APR	PEAK(KBTU)	240.778	1672.403
	DY/HR	4/ 7	4/ 6
	TOTAL(MBTU)	86.899	91.392
MAY	PEAK(KBTU)	266.450	1191.631
	DY/HR	31/12	2/ 6
	TOTAL(MBTU)	88.038	33.505
JUN	PEAK(KBTU)	268.793	516.865
	DY/HR	28/12	8/ 6
	TOTAL(MBTU)	95.320	28.018
JUL	PEAK(KBTU)	272.129	280.625
	DY/HR	18/12	25/ 6
	TOTAL(MBTU)	95.103	29.070
AUG	PEAK(KBTU)	268.777	298.103
	DY/HR	9/12	25/ 6
	TOTAL(MBTU)	87.175	44.045
SEP	PEAK(KBTU)	270.861	641.512
	DY/HR	2/12	23/ 6
	TOTAL(MBTU)	85.357	97.164
OCT	PEAK(KBTU)	237.891	936.710
	DY/HR	31/ 8	28/ 6
	TOTAL(MBTU)	85.763	167.459
NOV	PEAK(KBTU)	259.891	1939.039
	DY/HR	28/ 8	28/ 6
	TOTAL(MBTU)	89.949	251.433
DEC	PEAK(KBTU)	261.347	1987.531
	DY/HR	23/ 8	19/ 6
	ONE YEAR	1063.952	1767.921
	USE/PEAK	272.129	2262.462

```
*   3 *
*   4 *
*   5 *                  $-----------------------------------$
*   6 *                  $ E Z - D O E   L O A D S  I N P U T $
*   7 *                  $-----------------------------------$
*   8 *
*   9 *                     $ GENERAL PROJECT DATA
*  10 *
*  11 * TITLE  LINE-1 *      EMC       ENGINEERS       INC.      *
*  12 *        LINE-2 *EZDOE - ELITE SOFTWARE DEVELOPMENT INC*
*  13 *        LINE-3 *      DENVER,        CO        80227     *
*  14 *
*  15 *        LINE-4 *BUILDING 36, MEDICAL CENTER (WILCOX)     *
*  16 *        LINE-5 *MODEL WITH SET BACK AND DDC              * ..
*  17 *
*  18 * ABORT               ERRORS  ..
*  19 * DIAGNOSTIC          WARNINGS ..
*  20 * LOADS-REPORT        VERIFICATION=(LV-A,LV-B,LV-C)
*  21 *                     SUMMARY=(LS-A,LS-B,LS-C,LS-D,LS-E,LS-F,LS-K)  ..
*  22 * BUILDING-LOCATION   LATITUDE = 44.0
*  23 *                     ALTITUDE = 655.
*  24 *                     AZIMUTH = -130.
*  25 *                     TIME-ZONE =  5
*  26 *                     GROSS-AREA =  26440
*  27 *                     HOLIDAY = NO
*  28 *                     SHIELDING-COEF = 0.29
*  29 *                     X-REF = 0.0
*  30 *                     Y-REF = 0.0  ..
*  31 * RUN-PERIOD         JAN 1 1994 THRU DEC 31 1994  ..   .
*  32 *
*  33 *
*  34 *                      $ SCHEDULES
*  35 *
*  36 * LIGHTS     =DAY-SCHEDULE  (1,2) (1.)
*  37 *                           (3,11) (0.5)
*  38 *                           (12,13) (0.6)
*  39 *                           (14,24) (1.) ..
*  40 *
*  41 * OCCUP      =DAY-SCHEDULE  (1,5) (0.)
*  42 *                           (6,10) (0.1,0.5,0.9,0.8,0.5)
*  43 *                           (11,14) (0.7,0.9,0.8,0.4)
*  44 *                           (15,16) (0.3)
*  45 *                           (17,18) (0.5,0.9)
*  46 *                           (19,20) (0.7,0.2)
*  47 *                           (21,24) (0.) ..
*  48 *
*  49 * APPLIANCE  =DAY-SCHEDULE  (1) (0.)
*  50 *                           (2,3) (0.7)
*  51 *                           (4,12) (0.02)
*  52 *                           (13,15) (0.6)
*  53 *                           (16,18) (0.02)
*  54 *                           (19,20) (0.7)
*  55 *                           (21,24) (0.8) ..
*  56 *
*  57 * CND_DAY    =DAY-SCHEDULE  (1,24) (1.) ..
*  58 *
*  59 * FULL_OFFD  =DAY-SCHEDULE  (1,24) (0.) ..
*  60 *
*  61 * appliance  =DAY-SCHEDULE  (1,5) (0.)
*  62 *                           (6,7) (0.4)
*  63 *                           (8,11) (0.6)
*  64 *                           (12,13) (0.8)
*  65 *                           (14,15) (0.6)
*  66 *                           (16,17) (0.8)
*  67 *                           (18,19) (0.6)
*  68 *                           (20,24) (0.) ..
*  69 *
*  70 * lights     =DAY-SCHEDULE  (1,5) (0.2)
*  71 *                           (6) (0.5)
*  72 *                           (7,13) (0.8)
*  73 *                           (14,15) (0.9)
*  74 *                           (16,18) (0.8)
*  75 *                           (19,20) (0.7)
*  76 *                           (21,24) (0.2) ..
*  77 *
*  78 * FULL_ON_D  =DAY-SCHEDULE  (1,24) (1.) ..
*  79 *
*  80 *
*  81 * PEOPLE     =WEEK-SCHEDULE  (ALL) OCCUP  ..
*  82 *
*  83 * LIGHTS_WK  =WEEK-SCHEDULE  (ALL) lights  ..
*  84 *
*  85 * APPLI_WK   =WEEK-SCHEDULE  (ALL) appliance  ..
*  86 *
*  87 * CND_WK     =WEEK-SCHEDULE  (ALL) CND_DAY  ..
*  88 *
*  89 * FULL_OFFW  =WEEK-SCHEDULE  (ALL) FULL_OFFD  ..
*  90 *
*  91 * FULL_ON_W  =WEEK-SCHEDULE  (ALL) FULL_ON_D  ..
*  92 *
*  93 *
*  94 * $ FULL_ON SCHEDULE
*  95 * FULL_ON    =SCHEDULE THRU DEC 31 FULL_ON_W  ..
*  96 *
*  97 * $ LOADS OCCUPANCY SCHED
*  98 * OCCUPANCY  =SCHEDULE THRU DEC 31 PEOPLE  ..
*  99 *
* 100 * $ LIGHTING SCHEDULE
* 101 * LIGHTS_ON  =SCHEDULE THRU DEC 31 LIGHTS_WK  ..
* 102 *
```

```
* 103 * $ APPLIANCE SCHEDULE
* 104 * APPLI_ON   =SCHEDULE THRU DEC 31 APPLI_WK  ..
* 105 *
* 106 * $ COND VENTIL SCHED
* 107 * CND_SCHED  =SCHEDULE THRU MAR  1 FULL_OFFW
* 108 *                      THRU NOV 30 CND_WK
* 109 *                      THRU DEC 31 FULL_OFFW  ..
* 110 *
* 111 *
* 112 *
* 113 *                    $ CONSTRUCTION TYPES
* 114 *
* 115 *
* 116 *
* 117 *
* 118 *  $ DOOR CONSTRUCTION
* 119 * DOORCON  =CONSTRUCTION   U-VALUE =  0.400  ..
* 120 * FLOOR    =CONSTRUCTION   U-VALUE =  0.100
* 121 *                           ABSORPTANCE = 1.000
* 122 *                           ROUGHNESS = 1  ..
* 123 * ROOFCON  =CONSTRUCTION   U-VALUE =  0.050  ..
* 124 * EXWALL   =CONSTRUCTION   U-VALUE =  0.200
* 125 *                           ABSORPTANCE = 0.750  ..
* 126 * INWALL   =CONSTRUCTION   U-VALUE =  0.500  ..
* 127 *
* 128 * GTYPE_1  =GLASS-TYPE     SHADING-COEF = 0.400
* 129 *                          PANES = 1
* 130 *                          GLASS-CONDUCTANCE =  1.130  ..
* 131 * GTYPE_2  =GLASS-TYPE     SHADING-COEF = 0.300
* 132 *                          PANES = 1
* 133 *                          GLASS-CONDUCTANCE =  0.790  ..
* 134 * GTYPE_3  =GLASS-TYPE     SHADING-COEF = 0.400
* 135 *                          PANES = 1
* 136 *                          GLASS-CONDUCTANCE =  0.360  ..
* 137 *
* 138 *
* 139 *
* 140 *
* 141 *                    $ SPACE DESCRIPTION
* 142 *
* 143 * SECTIONAB  =SPACE     AREA = 19740.0  VOLUME = 177660.0
* 144 *                       AZIMUTH = -150  ZONE-TYPE = CONDITIONED
* 145 *                       PEOPLE-SCHEDULE = OCCUPANCY  NUMBER-OF-PEOPLE = 150.0
* 146 *                       PEOPLE-HEAT-GAIN = 650.0
* 147 *                       LIGHTING-TYPE = REC-FLUOR-RV  LIGHTING-KW = 12.0
* 148 *                       LIGHTING-SCHEDULE = LIGHTS_ON
* 149 *                       EQUIP-SCHEDULE = OCCUPANCY  EQUIPMENT-KW = 11.0
* 150 *                       SOURCE-SCHEDULE = FULL_ON  SOURCE-TYPE = HOT-WATER
* 151 *                       SOURCE-BTU/HR = 11500.0  SOURCE-SENSIBLE = 0.1
* 152 *                       SOURCE-LATENT = 0.2  INF-METHOD = AIR-CHANGE
* 153 *                       AIR-CHANGES/HR = 0.33  INF-SCHEDULE = FULL_ON   ..
* 154 *
* 155 *                I-W      HEIGHT = 9.0  WIDTH = 128.0  CONS = INWALL
* 156 *                         AZIMUTH = -150  NEXT-TO = SECTIONC   ..
* 157 *
* 158 *                E-W      HEIGHT = 9.0  WIDTH = 159.0  CONS = EXWALL
* 159 *                         AZIMUTH = 120   ..
* 160 *
* 161 *                  WINDOW HEIGHT = 9.0  WIDTH = 4.0  G-T = GTYPE_1
* 162 *                         MULTIPLIER = 4.0   ..
* 163 *
* 164 *                  DOOR   HEIGHT = 8.0  WIDTH = 7.0  CONS = DOORCON ..
* 165 *
* 166 *                  WINDOW HEIGHT = 9.0  WIDTH = 5.0  G-T = GTYPE_1 ..
* 167 *
* 168 *                  WINDOW HEIGHT = 5.0  WIDTH = 4.0  G-T = GTYPE_1
* 169 *                         MULTIPLIER = 14.0   ..
* 170 *
* 171 *                E-W      HEIGHT = 9.0  WIDTH = 128.0  CONS = EXWALL
* 172 *                         AZIMUTH = 30   ..
* 173 *
* 174 *                  DOOR   HEIGHT = 8.0  WIDTH = 4.0  CONS = DOORCON ..
* 175 *
* 176 *                E-W      HEIGHT = 9.0  WIDTH = 159.0  CONS = EXWALL
* 177 *                         AZIMUTH = -60   ..
* 178 *
* 179 *                  WINDOW HEIGHT = 6.0  WIDTH = 4.0  G-T = GTYPE_1
* 180 *                         MULTIPLIER = 5.0   ..
* 181 *
* 182 *                  DOOR   HEIGHT = 7.0  WIDTH = 4.0  CONS = DOORCON ..
* 183 *
* 184 *                  DOOR   HEIGHT = 10.0  WIDTH = 20.0  CONS = DOORCON ..
* 185 *
* 186 *                  DOOR   HEIGHT = 9.0  WIDTH = 4.0  CONS = DOORCON
* 187 *                         MULTIPLIER = 2.0   ..
* 188 *
* 189 *                  DOOR   HEIGHT = 9.0  WIDTH = 6.0  CONS = DOORCON ..
* 190 *
* 191 *                  DOOR   HEIGHT = 9.0  WIDTH = 6.0  CONS = DOORCON ..
* 192 *
* 193 *                ROOF     HEIGHT = 159.0  WIDTH = 128.0  CONS = ROOFCON
* 194 *                         AZIMUTH = -150  TILT = 0   ..
* 195 *
* 196 *               U-W      HEIGHT = 159.0  WIDTH = 128.0  CONS = FLOOR
* 197 *                         AZIMUTH = -150   ..
* 198 *
* 199 *
* 200 * SECTIONC   =SPACE     AREA = 6700.0  VOLUME = 60300.0
* 201 *                       AZIMUTH = -150  ZONE-TYPE = CONDITIONED
* 202 *                       PEOPLE-SCHEDULE = OCCUPANCY  NUMBER-OF-PEOPLE = 100.0
* 203 *                       PEOPLE-HEAT-GAIN = 650.0
* 204 *                       LIGHTING-TYPE = REC-FLUOR-RV  LIGHTING-KW = 7.0
* 205 *                       LIGHTING-SCHEDULE = LIGHTS_ON
* 206 *                       EQUIP-SCHEDULE = OCCUPANCY  EQUIPMENT-KW = 3.0
* 207 *                       INF-METHOD = AIR-CHANGE  AIR-CHANGES/HR = 0.33
* 208 *                       INF-SCHEDULE = FULL_ON   ..
* 209 *
* 210 *                E-W      HEIGHT = 9.0  WIDTH = 108.0  CONS = INWALL
```

```
* 211 *                        AZIMUTH = -150   ..
* 212 *
* 213 *                  WINDOW HEIGHT = 9.0  WIDTH = 4.0  G-T = GTYPE_1
* 214 *                        MULTIPLIER = 4.0   ..
* 215 *
* 216 *                  DOOR   HEIGHT = 8.0  WIDTH = 7.5  CONS = DOORCON ..
* 217 *
* 218 *                  WINDOW HEIGHT = 9.0  WIDTH = 5.0  G-T = GTYPE_1 ..
* 219 *
* 220 *                  WINDOW HEIGHT = 5.0  WIDTH = 4.0  G-T = GTYPE_1
* 221 *                        MULTIPLIER = 14.0   ..
* 222 *
* 223 *                E-W       HEIGHT = 9.0  WIDTH = 62.0  CONS = EXWALL
* 224 *                          AZIMUTH = 120   ..
* 225 *
* 226 *                E-W       HEIGHT = 9.0  WIDTH = 108.0  CONS = EXWALL
* 227 *                          AZIMUTH = 30   ..
* 228 *
* 229 *                I-W       HEIGHT = 9.0  WIDTH = 62.0  CONS = EXWALL
* 230 *                          AZIMUTH = -60  NEXT-TO = SECTIONAB   ..
* 231 *
* 232 *                ROOF      HEIGHT = 62.0  WIDTH = 108.0  CONS = ROOFCON
* 233 *                          AZIMUTH = -150  TILT = 0   ..
* 234 *
* 235 *               U-W       HEIGHT = 62.0  WIDTH = 108.0  CONS = FLOOR
* 236 *                          AZIMUTH = -150   ..
* 237 *
* 238 *
* 239 * END  ..
* 240 * COMPUTE LOADS  ..
* 241 *
* 242 * INPUT SYSTEMS  ..
```

```
* 243 *
* 244 *
* 245 *                $----------------------------------------$
* 246 *                $ E Z - D O E   S Y S T E M S  I N P U T $
* 247 *                $----------------------------------------$
* 248 *
* 249 *                   $ GENERAL PROJECT DATA
* 250 *
* 251 * TITLE  LINE-1 *     EMC      ENGINEERS      INC.     *
* 252 *        LINE-2 *EZDOE - ELITE SOFTWARE DEVELOPMENT INC*
* 253 *        LINE-3 *     DENVER,       CO       80227     *
* 254 *
* 255 *        LINE-4 *BUILDING 36, MEDICAL CENTER (WILCOX)    *
* 256 *        LINE-5 *MODEL WITH SET BACK AND DDC             * ..
* 257 * ABORT              ERRORS  ..
* 258 * DIAGNOSTIC         WARNINGS ..
* 259 * SYSTEMS-REPORT     VERIFICATION=(SV-A,SV-B)
* 260 *                    SUMMARY=(SS-A,SS-B,SS-C,SS-D,SS-E,SS-F,SS-G,
* 261 *                            SS-H,SS-I,SS-J,SS-K,SS-L,SS-M,SS-N,
* 262 *                            SS-O)  ..
* 263 *
* 264 *                    $ SCHEDULES
* 265 *
* 266 * D_FULL      =DAY-SCHEDULE  (1,24) (1.) ..
* 267 * D_OFF       =DAY-SCHEDULE  (1,24) (0.) ..
* 268 * HEAT_68_D   =DAY-SCHEDULE  (1,24) (68.) ..
* 269 * COOL_72_D   =DAY-SCHEDULE  (1,24) (78.) ..
* 270 * FAN_W_SB_D =DAY-SCHEDULE  (1,5) (0.)
* 271 *                           (6,15) (1.)
* 272 *                           (16,24) (0.) ..
* 273 * HT68_WSB_D =DAY-SCHEDULE  (1,5) (50.)
* 274 *                           (6,15) (68.)
* 275 *                           (16,24) (50.) ..
* 276 * CL72_WSB_D =DAY-SCHEDULE  (1,5) (85.)
* 277 *                           (6,15) (78.)
* 278 *                           (16,24) (85.) ..
* 279 * HEAT_50_D   =DAY-SCHEDULE  (1,24) (50.) ..
* 280 * COOL_85_D   =DAY-SCHEDULE  (1,24) (85.) ..
* 281 *
* 282 * W_FULL      =WEEK-SCHEDULE   (ALL) D_FULL  ..
* 283 *
* 284 * W_OFF       =WEEK-SCHEDULE   (ALL) D_OFF  ..
* 285 *
* 286 * HEAT_68_W   =WEEK-SCHEDULE   (ALL) HEAT_68_D  ..
* 287 *
* 288 * COOL_72_W   =WEEK-SCHEDULE   (ALL) COOL_72_D  ..
* 289 *
* 290 * FAN_W_SB_W =WEEK-SCHEDULE   (WD)  FAN_W_SB_D
* 291 *                             (SAT) D_OFF
* 292 *                             (SUN) D_OFF
* 293 *                             (HOL) FAN_W_SB_D ..
* 294 *
* 295 * HT68_WSB_W =WEEK-SCHEDULE   (WD)  HT68_WSB_D
* 296 *                             (SAT) HEAT_50_D
* 297 *                             (SUN) HEAT_50_D
* 298 *                             (HOL) HT68_WSB_D ..
* 299 *
* 300 * CL72_WSB_W =WEEK-SCHEDULE   (WD)  CL72_WSB_D
* 301 *                             (SAT) COOL_85_D
* 302 *                             (SUN) COOL_85_D
* 303 *                             (HOL) CL72_WSB_D ..
* 304 *
* 305 *
* 306 * FULL_ON     =SCHEDULE THRU DEC 31 W_FULL  ..
* 307 *
* 308 * FULL_OFF    =SCHEDULE THRU DEC 31 W_OFF  ..
* 309 *
* 310 * HEAT_68     =SCHEDULE THRU DEC 31 HEAT_68_W  ..
* 311 *
* 312 * COOL_72     =SCHEDULE THRU DEC 31 COOL_72_W  ..
* 313 *
* 314 * $ FAN WITH SET BACK
* 315 * FAN_W_SB    =SCHEDULE THRU DEC 31 FAN_W_SB_W  ..
* 316 *
* 317 * HT68_WSB    =SCHEDULE THRU DEC 31 HT68_WSB_W  ..
* 318 *
* 319 * CL72_WSB    =SCHEDULE THRU DEC 31 CL72_WSB_W  ..
* 320 *
* 321 *
* 322 *
* 323 *                      $ ZONE DESCRIPTION
* 324 *
* 325 * SECTIONAB   =ZONE     DESIGN-HEAT-T = 68.0  DESIGN-COOL-T = 72.0
* 326 *                       HEAT-TEMP-SCH = HT68_WSB  COOL-TEMP-SCH = CL72_WSB
* 327 *                       ZONE-TYPE = CONDITIONED
* 328 *                       THERMOSTAT-TYPE = PROPORTIONAL  THROTTLING-RANGE = 1.0
* 329 *                       BASEBOARD-CTRL = THERMOSTATIC
* 330 *                       BASEBOARD-RATING = -261500.  ASSIGNED-CFM = 17135.
* 331 *                       OUTSIDE-AIR-CFM = 3925.  SIZING-OPTION = FROM-LOADS
* 332 *                       RATED-CFM = 17135.0   ..
* 333 *
* 334 * SECTIONC    =ZONE     DESIGN-HEAT-T = 68.0  DESIGN-COOL-T = 72.0
* 335 *                       HEAT-TEMP-SCH = HT68_WSB  COOL-TEMP-SCH = CL72_WSB
* 336 *                       ZONE-TYPE = CONDITIONED
* 337 *                       THERMOSTAT-TYPE = PROPORTIONAL  THROTTLING-RANGE = 1.0
* 338 *                       BASEBOARD-CTRL = THERMOSTATIC
* 339 *                       BASEBOARD-RATING = -83000.  ASSIGNED-CFM = 6950.
* 340 *                       OUTSIDE-AIR-CFM = 1200.  SIZING-OPTION = FROM-LOADS
* 341 *                       RATED-CFM = 6950.0   ..
* 342 *
```

```
* 343 *
* 344 *                     $ SYSTEM DESCRIPTION
* 345 *
* 346 * SYSTEMAB   =SYSTEM     SYSTEM-TYPE = SZRH
* 347 *                        MAX-SUPPLY-T = 120.0  MIN-SUPPLY-T = 55.0
* 348 *                        PREHEAT-T = 55.0  MIN-HUMIDITY = 30.0
* 349 *                        ECONO-LIMIT-T = 65.0  ECONO-LOW-LIMIT = 55.0
* 350 *                        OA-CONTROL = FIXED  SUPPLY-CFM = 17135.
* 351 *                        RETURN-CFM = 13210.  RATED-CFM = 17135.
* 352 *                        MIN-OUTSIDE-AIR = 0.35  FAN-SCHEDULE = FAN_W_SB
* 353 *                        SUPPLY-DELTA-T = 2.4  SUPPLY-KW = 0.00118
* 354 *                        MOTOR-PLACEMENT = OUTSIDE-AIRFLOW
* 355 *                        NIGHT-CYCLE-CTRL = CYCLE-ON-ANY  NIGHT-VENT-DT = 0.0
* 356 *                        MIN-CFM-RATIO = 1.0  COOLING-CAPACITY = 500000.
* 357 *                        HEATING-CAPACITY = -818500.  FURNACE-AUX = 0.
* 358 *                        PREHEAT-SOURCE = HOT-WATER
* 359 *                        ZONE-NAMES = (SECTIONAB)  ..
* 360 *
* 361 * ADDITIONC  =SYSTEM     SYSTEM-TYPE = SZRH
* 362 *                        MAX-SUPPLY-T = 120.0  MIN-SUPPLY-T = 55.0
* 363 *                        PREHEAT-T = 55.0  MIN-HUMIDITY = 30.0
* 364 *                        ECONO-LIMIT-T = 65.0  ECONO-LOW-LIMIT = 55.0
* 365 *                        OA-CONTROL = FIXED  SUPPLY-CFM = 6950.
* 366 *                        RETURN-CFM = 5750.  RATED-CFM = 6950.
* 367 *                        MIN-OUTSIDE-AIR = 0.17  FAN-SCHEDULE = FAN_W_SB
* 368 *                        SUPPLY-DELTA-T = 2.4  SUPPLY-KW = 0.00081
* 369 *                        MOTOR-PLACEMENT = OUTSIDE-AIRFLOW
* 370 *                        NIGHT-CYCLE-CTRL = CYCLE-ON-ANY
* 371 *                        RETURN-STATIC = 1.25  RETURN-EFF = 0.88
* 372 *                        NIGHT-VENT-DT = 0.0  MIN-CFM-RATIO = 1.0
* 373 *                        COOLING-CAPACITY = 204000.
* 374 *                        HEATING-CAPACITY = -235452.  FURNACE-AUX = 0.
* 375 *                        PREHEAT-SOURCE = HOT-WATER
* 376 *                        HUMIDIFIER-TYPE = ELECTRIC
* 377 *                        ZONE-NAMES = (SECTIONC)  ..
* 378 *
* 379 * END  ..
* 380 * COMPUTE SYSTEMS  ..
* 381 *
* 382 * INPUT PLANT  ..
```

```
* 383 *
* 384 *
* 385 *                  $-------------------------------------$
* 386 *                  $ E Z - D O E   P L A N T S  I N P U T $
* 387 *                  $-------------------------------------$
* 388 *
* 389 *                     $ GENERAL PROJECT DATA
* 390 *
* 391 * TITLE  LINE-1 *     EMC      ENGINEERS      INC.     *
* 392 *        LINE-2 *EZDOE - ELITE SOFTWARE DEVELOPMENT INC*
* 393 *        LINE-3 *     DENVER,       CO       80227     *
* 394 *
* 395 *        LINE-4 *BUILDING 36, MEDICAL CENTER (WILCOX)    *
* 396 *        LINE-5 *MODEL WITH SET BACK AND DDC             * ..
* 397 *
* 398 * ABORT              ERRORS  ..
* 399 * DIAGNOSTIC         WARNINGS ..
* 400 * PLANT-REPORT       VERIFICATION=(PV-A)
* 401 *                    SUMMARY=(PS-A,PS-B,PS-D,PS-H,PS-I,BEPS)  ..
* 402 *
* 403 *                     $ SCHEDULES
* 404 *
* 405 * DAY_ON     =DAY-SCHEDULE  (1,7) (0.)
* 406 *                           (8,18) (1.)
* 407 *                           (19,24) (0.) ..
* 408 *
* 409 *
* 410 * FULL_ON    =WEEK-SCHEDULE  (ALL) DAY_ON  ..
* 411 *
* 412 *
* 413 * $ heating plant schedule
* 414 * heating    =SCHEDULE THRU DEC 31 FULL_ON  ..
* 415 *
* 416 *
* 417 *
* 418 *                     $ EQUIPMENT DESCRIPTION
* 419 *
* 420 * HW_BOILER  =PLANT-EQUIPMENT   TYPE = HW-BOILER
* 421 *                      SIZE = 1.  INSTALLED-NUMBER = 2
* 422 *                      MAX-NUMBER-AVAIL = 2  ..
* 423 *
* 424 * CHILLERS   =PLANT-EQUIPMENT   TYPE = OPEN-REC-CHLR
* 425 *                      SIZE = 0.3  INSTALLED-NUMBER = 2
* 426 *                      MAX-NUMBER-AVAIL = 2  ..
* 427 *
* 428 * ADDITION   =PLANT-EQUIPMENT   TYPE = HERM-REC-CHLR
* 429 *                      SIZE = 0.2  ..
* 430 *
* 431 * PLANT-PARAMETERS      BOILER-CONTROL = STANDBY  MAKEUP-WTR-T = 50.
* 432 *                      STM-BOILER-HIR = 0.76  HW-BOILER-HIR = 1.27
* 433 *                      CHILLER-CONTROL = STANDBY  OPEN-REC-COND-TYPE = AIR
* 434 *                      HERM-REC-COND-TYPE = AIR  COMP-TO-TWR-WTR = 2.77
* 435 *                      CCIRC-HEAD = 100.0  HCIRC-HEAD = 70.0    ..
* 436 *
* 437 *
* 438 * PART-LOAD-RATIO  TYPE = HW-BOILER
* 439 *                  MIN-RATIO        =  0.2500  MAX-RATIO        =  1.0000
* 440 *                  OPERATING-RATIO  =  1.0000  ELEC-INPUT-RATIO =  0.0220  ..
* 441 *
* 442 * ENERGY-RESOURCE       RESOURCE = ELECTRICITY  ..
* 443 * ENERGY-RESOURCE       RESOURCE = FUEL-OIL  ..
* 444 *
* 445 * ENERGY-STORAGE    HEAT-STORE-RATE = 1.51  HEAT-SUPPLY-RATE = 1.51
* 446 *                      HTANK-BASE-T = 144.0  HTANK-T-RANGE = 15.6
* 447 *                      HEAT-STORE-SCH = heating    ..
* 448 *
* 449 *
* 450 *
* 451 * END  ..
* 452 * COMPUTE PLANT ..
* 453 * STOP ..
```

EMC ENGINEERS INC. EZDOE - ELITE SOFTWARE DEVELOPMENT INC DOE-2.1D 3/18/1995 16: 9:36 PDL RUN 1
DENVER, CO 80227 BUILDING 36, MEDICAL CENTER (WILCOX) MODEL WITH SET BACK AND DDC
REPORT- BEPS ESTIMATED BUILDING ENERGY PERFORMANCE WEATHER FILE- MASSENA, NY

ENERGY TYPE IN SITE MBTU-	ELECTRICITY	FUEL-OIL
CATEGORY OF USE		
SPACE HEAT	51.02	1,476.55
SPACE COOL	70.45	0.00
HVAC AUX	390.74	0.00
DOM HOT WTR	8.16	163.40
AUX SOLAR	0.00	0.00
LIGHTS	319.53	0.00
VERT TRANS	0.00	0.00
MISC EQUIP	148.24	0.00
TOTAL	988.14	1,639.96

TOTAL SITE ENERGY 2627.97 MBTU 99.4 KBTU/SQFT-YR GROSS-AREA 99.4 KBTU/SQFT-YR NET-AREA
TOTAL SOURCE ENERGY 4607.21 MBTU 174.3 KBTU/SQFT-YR GROSS-AREA 174.3 KBTU/SQFT-YR NET-AREA

PERCENT OF HOURS ANY SYSTEM ZONE OUTSIDE OF THROTTLING RANGE = 0.9
PERCENT OF HOURS ANY PLANT LOAD NOT SATISFIED = 1.5

NOTE ELECTRICITY AND/OR FUEL USED TO GENERATE ELECTRICITY IS APPORTIONED BASED
ON THE YEARLY DEMAND. ALL OTHER ENERGY TYPES ARE APPORTIONED HOURLY.

MO	UTILITY-	ELECTRICITY	FUEL-OIL
	TOTAL(MBTU)	87.964	333.986
JAN	PEAK(KBTU)	262.145	2187.135
	DY/HR	5/12	24/ 6
	TOTAL(MBTU)	78.080	248.818
FEB	PEAK(KBTU)	254.265	2073.191
	DY/HR	28/ 8	14/ 6
	TOTAL(MBTU)	86.407	249.467
MAR	PEAK(KBTU)	254.265	1942.342
	DY/HR	28/ 8	28/ 6
	TOTAL(MBTU)	80.161	139.501
APR	PEAK(KBTU)	232.265	1559.475
	DY/HR	29/12	4/ 6
	TOTAL(MBTU)	81.196	77.946
MAY	PEAK(KBTU)	232.265	1089.544
	DY/HR	20/ 8	2/ 6
	TOTAL(MBTU)	78.523	27.569
JUN	PEAK(KBTU)	264.036	371.782
	DY/HR	29/12	8/ 6
	TOTAL(MBTU)	84.555	26.665
JUL	PEAK(KBTU)	268.525	35.840
	DY/HR	18/12	31/ 1
	TOTAL(MBTU)	84.196	26.665
AUG	PEAK(KBTU)	265.207	35.840
	DY/HR	9/12	31/ 1
	TOTAL(MBTU)	79.705	34.159
SEP	PEAK(KBTU)	267.256	537.079
	DY/HR	2/12	23/ 6
	TOTAL(MBTU)	80.577	83.379
OCT	PEAK(KBTU)	232.265	877.132
	DY/HR	31/ 8	28/ 6
	TOTAL(MBTU)	81.505	154.517
NOV	PEAK(KBTU)	254.265	1840.654
	DY/HR	28/ 8	28/ 6
	TOTAL(MBTU)	85.267	237.162
DEC	PEAK(KBTU)	254.265	1892.755
	DY/HR	28/ 8	19/ 6
	ONE YEAR	988.136	1639.834
	USE/PEAK	268.525	2187.135

COMPUTER SIMULATIONS
BUILDING 36

RUN 4 - FORCED VENTILATION

```
*   3 *
*   4 *
*   5 *                 $-----------------------------------$
*   6 *                 $ E Z - D O E   L O A D S  I N P U T $
*   7 *                 $-----------------------------------$
*   8 *
*   9 *                    $ GENERAL PROJECT DATA
*  10 *
*  11 * TITLE  LINE-1 *     EMC      ENGINEERS      INC.     *
*  12 *        LINE-2 *EZDOE - ELITE SOFTWARE DEVELOPMENT INC*
*  13 *        LINE-3 *     DENVER,       CO       80227     *
*  14 *
*  15 *        LINE-4 *BUILDING 36, MEDICAL CENTER (WILCOX)    *
*  16 *        LINE-5 *MODEL W SB, DDC, & FORCED VENTILATION   * ..
*  17 *
*  18 * ABORT              ERRORS  ..
*  19 * DIAGNOSTIC         WARNINGS ..
*  20 * LOADS-REPORT       VERIFICATION=(LV-A,LV-B,LV-C)
*  21 *                    SUMMARY=(LS-A,LS-B,LS-C,LS-D,LS-E,LS-F,LS-K)  ..
*  22 * BUILDING-LOCATION  LATITUDE = 44.0
*  23 *                    ALTITUDE = 655.
*  24 *                    AZIMUTH = -130.
*  25 *                    TIME-ZONE =  5
*  26 *                    GROSS-AREA =  26440
*  27 *                    HOLIDAY = NO
*  28 *                    SHIELDING-COEF = 0.29
*  29 *                    X-REF = 0.0
*  30 *                    Y-REF = 0.0  ..
*  31 * RUN-PERIOD        JAN 1 1994 THRU DEC 31 1994  ..
*  32 *
*  33 *
*  34 *                     $ SCHEDULES
*  35 *
*  36 * LIGHTS     =DAY-SCHEDULE  (1,2) (1.)
*  37 *                           (3,11) (0.5)
*  38 *                           (12,13) (0.6)
*  39 *                           (14,24) (1.) ..
*  40 *
*  41 * OCCUP      =DAY-SCHEDULE  (1,5) (0.)
*  42 *                           (6,10) (0.1,0.5,0.9,0.8,0.5)
*  43 *                           (11,14) (0.7,0.9,0.8,0.4)
*  44 *                           (15,16) (0.3)
*  45 *                           (17,18) (0.5,0.9)
*  46 *                           (19,20) (0.7,0.2)
*  47 *                           (21,24) (0.) ..
*  48 *
*  49 * APPLIANCE  =DAY-SCHEDULE  (1) (0.)
*  50 *                           (2,3) (0.7)
*  51 *                           (4,12) (0.02)
*  52 *                           (13,15) (0.6)
*  53 *                           (16,18) (0.02)
*  54 *                           (19,20) (0.7)
*  55 *                           (21,24) (0.8) ..
*  56 *
*  57 * CND_DAY    =DAY-SCHEDULE  (1,24) (1.) ..
*  58 *
*  59 * FULL_OFFD  =DAY-SCHEDULE  (1,24) (0.) ..
*  60 *
*  61 * appliance  =DAY-SCHEDULE  (1,5) (0.)
*  62 *                           (6,7) (0.4)
*  63 *                           (8,11) (0.6)
*  64 *                           (12,13) (0.8)
*  65 *                           (14,15) (0.6)
*  66 *                           (16,17) (0.8)
*  67 *                           (18,19) (0.6)
*  68 *                           (20,24) (0.) ..
*  69 *
*  70 * lights     =DAY-SCHEDULE  (1,5) (0.2)
*  71 *                           (6) (0.5)
*  72 *                           (7,13) (0.8)
*  73 *                           (14,15) (0.9)
*  74 *                           (16,18) (0.8)
*  75 *                           (19,20) (0.7)
*  76 *                           (21,24) (0.2) ..
*  77 *
*  78 * FULL_ON_D  =DAY-SCHEDULE  (1,24) (1.) ..
*  79 *
*  80 *
*  81 * PEOPLE     =WEEK-SCHEDULE  (ALL) OCCUP  ..
*  82 *
*  83 * LIGHTS_WK  =WEEK-SCHEDULE  (ALL) lights  ..
*  84 *
*  85 * APPLI_WK   =WEEK-SCHEDULE  (ALL) appliance  ..
*  86 *
*  87 * CND_WK     =WEEK-SCHEDULE  (ALL) CND_DAY  ..
*  88 *
*  89 * FULL_OFFW  =WEEK-SCHEDULE  (ALL) FULL_OFFD  ..
*  90 *
*  91 * FULL_ON_W  =WEEK-SCHEDULE  (ALL) FULL_ON_D  ..
*  92 *
*  93 *
*  94 * $ FULL_ON SCHEDULE
*  95 * FULL_ON    =SCHEDULE THRU DEC 31 FULL_ON_W  ..
*  96 *
*  97 * $ LOADS OCCUPANCY SCHED
*  98 * OCCUPANCY  =SCHEDULE THRU DEC 31 PEOPLE  ..
*  99 *
* 100 * $ LIGHTING SCHEDULE
* 101 * LIGHTS_ON  =SCHEDULE THRU DEC 31 LIGHTS_WK  ..
* 102 *
```

```
* 103 * $ APPLIANCE SCHEDULE
* 104 * APPLI_ON   =SCHEDULE THRU DEC 31 APPLI_WK  ..
* 105 *
* 106 * $ COND VENTIL SCHED
* 107 * CND_SCHED  =SCHEDULE THRU MAR  1 FULL_OFFW
* 108 *                       THRU NOV 30 CND_WK
* 109 *                       THRU DEC 31 FULL_OFFW  ..
* 110 *
* 111 *
* 112 *
* 113 *                     $ CONSTRUCTION TYPES
* 114 *
* 115 *
* 116 *
* 117 *
* 118 *  $ DOOR CONSTRUCTION
* 119 * DOORCON  =CONSTRUCTION   U-VALUE =  0.400  ..
* 120 * FLOOR    =CONSTRUCTION   U-VALUE =  0.100
* 121 *                           ABSORPTANCE = 1.000
* 122 *                           ROUGHNESS = 1  ..
* 123 * ROOFCON  =CONSTRUCTION   U-VALUE =  0.050  ..
* 124 * EXWALL   =CONSTRUCTION   U-VALUE =  0.200
* 125 *                           ABSORPTANCE = 0.750  ..
* 126 * INWALL   =CONSTRUCTION   U-VALUE =  0.500  ..
* 127 *
* 128 * GTYPE_1  =GLASS-TYPE     SHADING-COEF = 0.400
* 129 *                          PANES = 1
* 130 *                          GLASS-CONDUCTANCE =  1.130  ..
* 131 * GTYPE_2  =GLASS-TYPE     SHADING-COEF = 0.300
* 132 *                          PANES = 1
* 133 *                          GLASS-CONDUCTANCE =  0.790  ..
* 134 * GTYPE_3  =GLASS-TYPE     SHADING-COEF = 0.400
* 135 *                          PANES = 1
* 136 *                          GLASS-CONDUCTANCE =  0.360  ..
* 137 *
* 138 *
* 139 *
* 140 *
* 141 *                     $ SPACE DESCRIPTION
* 142 *
* 143 * SECTIONAB  =SPACE     AREA = 19740.0  VOLUME = 177660.0
* 144 *                       AZIMUTH = -150  ZONE-TYPE = CONDITIONED
* 145 *                       PEOPLE-SCHEDULE = OCCUPANCY  NUMBER-OF-PEOPLE = 150.0
* 146 *                       PEOPLE-HEAT-GAIN = 650.0
* 147 *                       LIGHTING-TYPE = REC-FLUOR-RV  LIGHTING-KW = 12.0
* 148 *                       LIGHTING-SCHEDULE = LIGHTS_ON
* 149 *                       EQUIP-SCHEDULE = OCCUPANCY  EQUIPMENT-KW = 11.0
* 150 *                       SOURCE-SCHEDULE = FULL_ON  SOURCE-TYPE = HOT-WATER
* 151 *                       SOURCE-BTU/HR = 11500.0  SOURCE-SENSIBLE = 0.1
* 152 *                       SOURCE-LATENT = 0.2  INF-METHOD = AIR-CHANGE
* 153 *                       AIR-CHANGES/HR = 0.33  INF-SCHEDULE = FULL_ON   ..
* 154 *
* 155 *               I-W       HEIGHT = 9.0  WIDTH = 128.0  CONS = INWALL
* 156 *                         AZIMUTH = -150  NEXT-TO = SECTIONC   ..
* 157 *
* 158 *               E-W       HEIGHT = 9.0  WIDTH = 159.0  CONS = EXWALL
* 159 *                         AZIMUTH = 120   ..
* 160 *
* 161 *                 WINDOW HEIGHT = 9.0  WIDTH = 4.0  G-T = GTYPE_1
* 162 *                        MULTIPLIER = 4.0   ..
* 163 *
* 164 *                 DOOR   HEIGHT = 8.0  WIDTH = 7.0  CONS = DOORCON ..
* 165 *
* 166 *                 WINDOW HEIGHT = 9.0  WIDTH = 5.0  G-T = GTYPE_1 ..
* 167 *
* 168 *                 WINDOW HEIGHT = 5.0  WIDTH = 4.0  G-T = GTYPE_1
* 169 *                        MULTIPLIER = 14.0   ..
* 170 *
* 171 *               E-W       HEIGHT = 9.0  WIDTH = 128.0  CONS = EXWALL
* 172 *                         AZIMUTH = 30   ..
* 173 *
* 174 *                 DOOR   HEIGHT = 8.0  WIDTH = 4.0  CONS = DOORCON ..
* 175 *
* 176 *               E-W       HEIGHT = 9.0  WIDTH = 159.0  CONS = EXWALL
* 177 *                         AZIMUTH = -60   ..
* 178 *
* 179 *                 WINDOW HEIGHT = 6.0  WIDTH = 4.0  G-T = GTYPE_1
* 180 *                        MULTIPLIER = 5.0   ..
* 181 *
* 182 *                 DOOR   HEIGHT = 7.0  WIDTH = 4.0  CONS = DOORCON ..
* 183 *
* 184 *                 DOOR   HEIGHT = 10.0  WIDTH = 20.0  CONS = DOORCON ..
* 185 *
* 186 *                 DOOR   HEIGHT = 9.0  WIDTH = 4.0  CONS = DOORCON
* 187 *                        MULTIPLIER = 2.0   ..
* 188 *
* 189 *                 DOOR   HEIGHT = 9.0  WIDTH = 6.0  CONS = DOORCON ..
* 190 *
* 191 *                 DOOR   HEIGHT = 9.0  WIDTH = 6.0  CONS = DOORCON ..
* 192 *
* 193 *               ROOF      HEIGHT = 159.0  WIDTH = 128.0  CONS = ROOFCON
* 194 *                         AZIMUTH = -150  TILT = 0   ..
* 195 *
* 196 *              U-W       HEIGHT = 159.0  WIDTH = 128.0  CONS = FLOOR
* 197 *                         AZIMUTH = -150   ..
* 198 *
* 199 *
* 200 * SECTIONC   =SPACE     AREA = 6700.0  VOLUME = 60300.0
* 201 *                       AZIMUTH = -150  ZONE-TYPE = CONDITIONED
* 202 *                       PEOPLE-SCHEDULE = OCCUPANCY  NUMBER-OF-PEOPLE = 100.0
* 203 *                       PEOPLE-HEAT-GAIN = 650.0
* 204 *                       LIGHTING-TYPE = REC-FLUOR-RV  LIGHTING-KW = 7.0
* 205 *                       LIGHTING-SCHEDULE = LIGHTS_ON
* 206 *                       EQUIP-SCHEDULE = OCCUPANCY  EQUIPMENT-KW = 3.0
* 207 *                       INF-METHOD = AIR-CHANGE  AIR-CHANGES/HR = 0.33
* 208 *                       INF-SCHEDULE = FULL_ON   ..
* 209 *
* 210 *                E-W       HEIGHT = 9.0  WIDTH = 108.0  CONS = INWALL
```

```
* 211 *                        AZIMUTH = -150   ..
* 212 *
* 213 *                  WINDOW HEIGHT = 9.0  WIDTH = 4.0  G-T = GTYPE_1
* 214 *                         MULTIPLIER = 4.0   ..
* 215 *
* 216 *                  DOOR   HEIGHT = 8.0  WIDTH = 7.5  CONS = DOORCON ..
* 217 *
* 218 *                  WINDOW HEIGHT = 9.0  WIDTH = 5.0  G-T = GTYPE_1 ..
* 219 *
* 220 *                  WINDOW HEIGHT = 5.0  WIDTH = 4.0  G-T = GTYPE_1
* 221 *                         MULTIPLIER = 14.0   ..
* 222 *
* 223 *                E-W      HEIGHT = 9.0  WIDTH = 62.0  CONS = EXWALL
* 224 *                         AZIMUTH = 120   ..
* 225 *
* 226 *                E-W      HEIGHT = 9.0  WIDTH = 108.0  CONS = EXWALL
* 227 *                         AZIMUTH = 30   ..
* 228 *
* 229 *                I-W      HEIGHT = 9.0  WIDTH = 62.0  CONS = EXWALL
* 230 *                         AZIMUTH = -60  NEXT-TO = SECTIONAB   ..
* 231 *
* 232 *                ROOF     HEIGHT = 62.0  WIDTH = 108.0  CONS = ROOFCON
* 233 *                         AZIMUTH = -150  TILT = 0   ..
* 234 *
* 235 *               U-W      HEIGHT = 62.0  WIDTH = 108.0  CONS = FLOOR
* 236 *                         AZIMUTH = -150   ..
* 237 *
* 238 *
* 239 * END  ..
* 240 * COMPUTE LOADS  ..
* 241 *
* 242 * INPUT SYSTEMS  ..
```

```
* 243 *
* 244 *
* 245 *                  $--------------------------------------$
* 246 *                  $ E Z - D O E   S Y S T E M S  I N P U T $
* 247 *                  $--------------------------------------$
* 248 *
* 249 *                     $ GENERAL PROJECT DATA
* 250 *
* 251 * TITLE  LINE-1 *     EMC      ENGINEERS      INC.     *
* 252 *        LINE-2 *EZDOE - ELITE SOFTWARE DEVELOPMENT INC*
* 253 *        LINE-3 *     DENVER,       CO       80227     *
* 254 *
* 255 *        LINE-4 *BUILDING 36, MEDICAL CENTER (WILCOX)    *
* 256 *        LINE-5 *MODEL W SB, DDC, & FORCED VENTILATION   * ..
* 257 * ABORT               ERRORS  ..
* 258 * DIAGNOSTIC          WARNINGS ..
* 259 * SYSTEMS-REPORT      VERIFICATION=(SV-A,SV-B)
* 260 *                     SUMMARY=(SS-A,SS-B,SS-C,SS-D,SS-E,SS-F,SS-G,
* 261 *                             SS-H,SS-I,SS-J,SS-K,SS-L,SS-M,SS-N,
* 262 *                             SS-O)  ..
* 263 *
* 264 *                      $ SCHEDULES
* 265 *
* 266 * D_FULL      =DAY-SCHEDULE  (1,24) (1.) ..
* 267 * D_OFF       =DAY-SCHEDULE  (1,24) (0.) ..
* 268 * HEAT_68_D   =DAY-SCHEDULE  (1,24) (68.) ..
* 269 * COOL_72_D   =DAY-SCHEDULE  (1,24) (78.) ..
* 270 * FAN_W_SB_D =DAY-SCHEDULE  (1,5) (0.)
* 271 *                            (6,15) (1.)
* 272 *                            (16,24) (0.) ..
* 273 * HT68_WSB_D =DAY-SCHEDULE  (1,5) (50.)
* 274 *                            (6,15) (68.)
* 275 *                            (16,24) (50.) ..
* 276 * CL72_WSB_D =DAY-SCHEDULE  (1,5) (85.)
* 277 *                            (6,15) (78.)
* 278 *                            (16,24) (85.) ..
* 279 * HEAT_50_D   =DAY-SCHEDULE  (1,24) (50.) ..
* 280 * COOL_85_D   =DAY-SCHEDULE  (1,24) (85.) ..
* 281 * MOA.35_D    =DAY-SCHEDULE  (1,6) (0.)
* 282 *                            (7,15) (0.35)
* 283 *                            (16,24) (0.) ..
* 284 * MOA.17_D    =DAY-SCHEDULE  (1,6) (0.)
* 285 *                            (7,15) (0.17)
* 286 *                            (16,24) (0.) ..
* 287 *
* 288 * W_FULL      =WEEK-SCHEDULE  (ALL) D_FULL  ..
* 289 *
* 290 * W_OFF       =WEEK-SCHEDULE  (ALL) D_OFF  ..
* 291 *
* 292 * HEAT_68_W   =WEEK-SCHEDULE  (ALL) HEAT_68_D  ..
* 293 *
* 294 * COOL_72_W   =WEEK-SCHEDULE  (ALL) COOL_72_D  ..
* 295 *
* 296 * FAN_W_SB_W =WEEK-SCHEDULE  (WD)  FAN_W_SB_D
* 297 *                            (SAT) D_OFF
* 298 *                            (SUN) D_OFF
* 299 *                            (HOL) FAN_W_SB_D ..
* 300 *
* 301 * HT68_WSB_W =WEEK-SCHEDULE  (WD)  HT68_WSB_D
* 302 *                            (SAT) HEAT_50_D
* 303 *                            (SUN) HEAT_50_D
* 304 *                            (HOL) HT68_WSB_D ..
* 305 *
* 306 * CL72_WSB_W =WEEK-SCHEDULE  (WD)  CL72_WSB_D
* 307 *                            (SAT) COOL_85_D
* 308 *                            (SUN) COOL_85_D
* 309 *                            (HOL) CL72_WSB_D ..
* 310 *
* 311 * MOA.35_W    =WEEK-SCHEDULE  (WD)  MOA.35_D
* 312 *                            (SAT) D_OFF
* 313 *                            (SUN) D_OFF
* 314 *                            (HOL) MOA.35_D ..
* 315 *
* 316 * MOA.17_W    =WEEK-SCHEDULE  (WD)  MOA.17_D
* 317 *                            (SAT) D_OFF
* 318 *                            (SUN) D_OFF
* 319 *                            (HOL) MOA.17_D ..
* 320 *
* 321 *
* 322 * FULL_ON     =SCHEDULE THRU DEC 31 W_FULL  ..
* 323 *
* 324 * FULL_OFF    =SCHEDULE THRU DEC 31 W_OFF  ..
* 325 *
* 326 * HEAT_68     =SCHEDULE THRU DEC 31 HEAT_68_W  ..
* 327 *
* 328 * COOL_72     =SCHEDULE THRU DEC 31 COOL_72_W  ..
* 329 *
* 330 * $ FAN WITH SET BACK
* 331 * FAN_W_SB    =SCHEDULE THRU DEC 31 FAN_W_SB_W  ..
* 332 *
* 333 * HT68_WSB    =SCHEDULE THRU DEC 31 HT68_WSB_W  ..
* 334 *
* 335 * CL78_WSB    =SCHEDULE THRU DEC 31 CL72_WSB_W  ..
* 336 *
* 337 * $ FORCED VENTILATION
* 338 * MOA_.35_FV =SCHEDULE THRU DEC 31 MOA.35_W  ..
* 339 *
* 340 * $ FORCED VENTILATION
* 341 * MOA_.17_FV =SCHEDULE THRU DEC 31 MOA.17_W  ..
* 342 *
```

```
* 343 *
* 344 *
* 345 *                        $ ZONE DESCRIPTION
* 346 *
* 347 * SECTIONAB   =ZONE      DESIGN-HEAT-T = 68.0  DESIGN-COOL-T = 72.0
* 348 *                        HEAT-TEMP-SCH = HT68_WSB  COOL-TEMP-SCH = CL78_WSB
* 349 *                        ZONE-TYPE = CONDITIONED
* 350 *                        THERMOSTAT-TYPE = PROPORTIONAL  THROTTLING-RANGE = 1.0
* 351 *                        BASEBOARD-CTRL = THERMOSTATIC
* 352 *                        BASEBOARD-RATING = -261500.  ASSIGNED-CFM = 17135.
* 353 *                        OUTSIDE-AIR-CFM = 3925.  SIZING-OPTION = FROM-LOADS
* 354 *                        RATED-CFM = 17135.0   ..
* 355 *
* 356 * SECTIONC    =ZONE      DESIGN-HEAT-T = 68.0  DESIGN-COOL-T = 72.0
* 357 *                        HEAT-TEMP-SCH = HT68_WSB  COOL-TEMP-SCH = CL78_WSB
* 358 *                        ZONE-TYPE = CONDITIONED
* 359 *                        THERMOSTAT-TYPE = PROPORTIONAL  THROTTLING-RANGE = 1.0
* 360 *                        BASEBOARD-CTRL = THERMOSTATIC
* 361 *                        BASEBOARD-RATING = -83000.  ASSIGNED-CFM = 6950.
* 362 *                        OUTSIDE-AIR-CFM = 1200.  SIZING-OPTION = FROM-LOADS
* 363 *                        RATED-CFM = 6950.0   ..
* 364 *
* 365 *
* 366 *                        $ SYSTEM DESCRIPTION
* 367 *
* 368 * SYSTEMAB    =SYSTEM      SYSTEM-TYPE = SZRH
* 369 *                          MAX-SUPPLY-T = 120.0  MIN-SUPPLY-T = 55.0
* 370 *                          PREHEAT-T = 55.0  MIN-HUMIDITY = 30.0
* 371 *                          ECONO-LIMIT-T = 65.0  ECONO-LOW-LIMIT = 55.0
* 372 *                          OA-CONTROL = FIXED  SUPPLY-CFM = 17135.
* 373 *                          RETURN-CFM = 13210.  RATED-CFM = 17135.
* 374 *                          MIN-OUTSIDE-AIR = 0.35  MIN-AIR-SCH = MOA_.35_FV
* 375 *                          FAN-SCHEDULE = FAN_W_SB  SUPPLY-DELTA-T = 2.4
* 376 *                          SUPPLY-KW = 0.00118
* 377 *                          MOTOR-PLACEMENT = OUTSIDE-AIRFLOW
* 378 *                          NIGHT-CYCLE-CTRL = CYCLE-ON-ANY  NIGHT-VENT-DT = 0.0
* 379 *                          MIN-CFM-RATIO = 1.0  COOLING-CAPACITY = 500000.
* 380 *                          HEATING-CAPACITY = -818500.  FURNACE-AUX = 0.
* 381 *                          PREHEAT-SOURCE = HOT-WATER
* 382 *                          ZONE-NAMES = (SECTIONAB)  ..
* 383 *
* 384 * ADDITIONC   =SYSTEM      SYSTEM-TYPE = SZRH
* 385 *                          MAX-SUPPLY-T = 120.0  MIN-SUPPLY-T = 55.0
* 386 *                          PREHEAT-T = 55.0  MIN-HUMIDITY = 30.0
* 387 *                          ECONO-LIMIT-T = 65.0  ECONO-LOW-LIMIT = 55.0
* 388 *                          OA-CONTROL = FIXED  SUPPLY-CFM = 6950.
* 389 *                          RETURN-CFM = 5750.  RATED-CFM = 6950.
* 390 *                          MIN-OUTSIDE-AIR = 0.17  MIN-AIR-SCH = MOA_.17_FV
* 391 *                          FAN-SCHEDULE = FAN_W_SB  SUPPLY-DELTA-T = 2.4
* 392 *                          SUPPLY-KW = 0.00081
* 393 *                          MOTOR-PLACEMENT = OUTSIDE-AIRFLOW
* 394 *                          NIGHT-CYCLE-CTRL = CYCLE-ON-ANY
* 395 *                          RETURN-STATIC = 1.25  RETURN-EFF = 0.88
* 396 *                          NIGHT-VENT-DT = 0.0  MIN-CFM-RATIO = 1.0
* 397 *                          COOLING-CAPACITY = 204000.
* 398 *                          HEATING-CAPACITY = -235452.  FURNACE-AUX = 0.
* 399 *                          PREHEAT-SOURCE = HOT-WATER
* 400 *                          HUMIDIFIER-TYPE = ELECTRIC
* 401 *                          ZONE-NAMES = (SECTIONC)  ..
* 402 *
* 403 * END  ..
* 404 * COMPUTE SYSTEMS  ..
* 405 *
* 406 * INPUT PLANT  ..
```

P D L P R O C E S S O R I N P U T D A T A

3/25/1995 9:30:55 PDL RUN 1

```
* 407 *
* 408 *
* 409 *                  $------------------------------------$
* 410 *                  $ E Z - D O E   P L A N T S  I N P U T $
* 411 *                  $------------------------------------$
* 412 *
* 413 *                     $ GENERAL PROJECT DATA
* 414 *
* 415 * TITLE  LINE-1 *     EMC      ENGINEERS      INC.     *
* 416 *        LINE-2 *EZDOE - ELITE SOFTWARE DEVELOPMENT INC*
* 417 *        LINE-3 *     DENVER,       CO       80227     *
* 418 *
* 419 *        LINE-4 *BUILDING 36, MEDICAL CENTER (WILCOX)    *
* 420 *        LINE-5 *MODEL W SB, DDC, & FORCED VENTILATION   * ..
* 421 *
* 422 * ABORT              ERRORS  ..
* 423 * DIAGNOSTIC         WARNINGS ..
* 424 * PLANT-REPORT       VERIFICATION=(PV-A)
* 425 *                    SUMMARY=(PS-A,PS-B,PS-D,PS-H,PS-I,BEPS)  ..
* 426 *
* 427 *                     $ SCHEDULES
* 428 *
* 429 * DAY_ON     =DAY-SCHEDULE  (1,7) (0.)
* 430 *                           (8,18) (1.)
* 431 *                           (19,24) (0.) ..
* 432 *
* 433 *
* 434 * FULL_ON    =WEEK-SCHEDULE  (ALL) DAY_ON  ..
* 435 *
* 436 *
* 437 * $ heating plant schedule
* 438 * heating    =SCHEDULE THRU DEC 31 FULL_ON  ..
* 439 *
* 440 *
* 441 *
* 442 *                     $ EQUIPMENT DESCRIPTION
* 443 *
* 444 * HW_BOILER  =PLANT-EQUIPMENT   TYPE = HW-BOILER
* 445 *                       SIZE = 1.  INSTALLED-NUMBER = 2
* 446 *                       MAX-NUMBER-AVAIL = 2  ..
* 447 *
* 448 * CHILLERS   =PLANT-EQUIPMENT   TYPE = OPEN-REC-CHLR
* 449 *                       SIZE = 0.3  INSTALLED-NUMBER = 2
* 450 *                       MAX-NUMBER-AVAIL = 2  ..
* 451 *
* 452 * ADDITION   =PLANT-EQUIPMENT   TYPE = HERM-REC-CHLR
* 453 *                       SIZE = 0.2  ..
* 454 *
* 455 * PLANT-PARAMETERS      BOILER-CONTROL = STANDBY  MAKEUP-WTR-T = 50.
* 456 *                       STM-BOILER-HIR = 0.76  HW-BOILER-HIR = 1.27
* 457 *                       CHILLER-CONTROL = STANDBY  OPEN-REC-COND-TYPE = AIR
* 458 *                       HERM-REC-COND-TYPE = AIR  COMP-TO-TWR-WTR = 2.77
* 459 *                       CCIRC-HEAD = 100.0  HCIRC-HEAD = 70.0    ..
* 460 *
* 461 *
* 462 * PART-LOAD-RATIO  TYPE = HW-BOILER
* 463 *                  MIN-RATIO        =  0.2500  MAX-RATIO        =  1.0000
* 464 *                  OPERATING-RATIO  =  1.0000  ELEC-INPUT-RATIO =  0.0220  ..
* 465 *
* 466 * ENERGY-RESOURCE       RESOURCE = ELECTRICITY  ..
* 467 * ENERGY-RESOURCE       RESOURCE = FUEL-OIL  ..
* 468 *
* 469 * ENERGY-STORAGE    HEAT-STORE-RATE = 1.51  HEAT-SUPPLY-RATE = 1.51
* 470 *                       HTANK-BASE-T = 144.0  HTANK-T-RANGE = 15.6
* 471 *                       HEAT-STORE-SCH = heating    ..
* 472 *
* 473 *
* 474 *
* 475 * END  ..
* 476 * COMPUTE PLANT ..
* 477 * STOP ..
```

ENERGY TYPE IN SITE MBTU-	ELECTRICITY	FUEL-OIL
CATEGORY OF USE		
SPACE HEAT	53.08	1,627.48
SPACE COOL	76.54	0.00
HVAC AUX	401.32	0.00
DOM HOT WTR	8.10	163.06
AUX SOLAR	0.00	0.00
LIGHTS	319.52	0.00
VERT TRANS	0.00	0.00
MISC EQUIP	148.24	0.00
TOTAL	1,006.79	1,790.55

TOTAL SITE ENERGY 2797.62 MBTU 105.8 KBTU/SQFT-YR GROSS-AREA 105.8 KBTU/SQFT-YR NET-AREA
TOTAL SOURCE ENERGY 4814.29 MBTU 182.1 KBTU/SQFT-YR GROSS-AREA 182.1 KBTU/SQFT-YR NET-AREA

PERCENT OF HOURS ANY SYSTEM ZONE OUTSIDE OF THROTTLING RANGE = 0.9
PERCENT OF HOURS ANY PLANT LOAD NOT SATISFIED = 1.6

NOTE ELECTRICITY AND/OR FUEL USED TO GENERATE ELECTRICITY IS APPORTIONED BASED ON THE YEARLY DEMAND. ALL OTHER ENERGY TYPES ARE APPORTIONED HOURLY.

MO	UTILITY-	ELECTRICITY	FUEL-OIL
	TOTAL(MBTU)	89.663	364.806
JAN	PEAK(KBTU)	263.565	2251.282
	DY/HR	5/12	6/ 7
	TOTAL(MBTU)	79.558	272.620
FEB	PEAK(KBTU)	256.267	2097.675
	DY/HR	4/12	14/ 7
	TOTAL(MBTU)	87.925	273.046
MAR	PEAK(KBTU)	256.074	1967.243
	DY/HR	28/ 8	28/ 7
	TOTAL(MBTU)	81.569	150.741
APR	PEAK(KBTU)	236.961	1476.706
	DY/HR	4/ 7	4/ 7
	TOTAL(MBTU)	82.831	84.349
MAY	PEAK(KBTU)	234.074	1030.680
	DY/HR	20/12	2/ 7
	TOTAL(MBTU)	79.967	28.033
JUN	PEAK(KBTU)	265.278	303.689
	DY/HR	29/12	8/ 7
	TOTAL(MBTU)	86.155	27.105
JUL	PEAK(KBTU)	269.764	36.431
	DY/HR	18/12	31/ 1
	TOTAL(MBTU)	85.741	27.105
AUG	PEAK(KBTU)	266.446	36.431
	DY/HR	9/12	31/ 1
	TOTAL(MBTU)	81.223	37.277
SEP	PEAK(KBTU)	268.495	544.247
	DY/HR	2/12	23/ 7
	TOTAL(MBTU)	82.305	93.318
OCT	PEAK(KBTU)	234.074	947.856
	DY/HR	31/ 8	28/ 7
	TOTAL(MBTU)	82.959	169.727
NOV	PEAK(KBTU)	256.074	1834.113
	DY/HR	28/ 8	28/ 7
	TOTAL(MBTU)	86.929	262.668
DEC	PEAK(KBTU)	256.074	1909.914
	DY/HR	30/ 8	19/ 7
	ONE YEAR	1006.825	1790.795
	USE/PEAK	269.764	2251.282

COMPUTER SIMULATIONS

BUILDING 1750

COMPUTER SIMULATIONS
BUILDING 1750

BASE RUN

LDL PROCESSOR INPUT DATA

3/18/1995 12:54:14 LDL RUN 1

```
*  3 *
*  4 *
*  5 *          $----------------------------------$
*  6 *          $EZ-DOE LOADS INPUT$
*  7 *          $----------------------------------$
*  8 *
*  9 *            $ GENERAL PROJECT DATA
* 10 *
* 11 * TITLE LINE-1 *   EMC    ENGINEERS    INC.   *
* 12 *      LINE-2 *EZDOE - ELITE SOFTWARE DEVELOPMENT INC*
* 13 *      LINE-3 *   DENVER,     CO     80227   *
* 14 *
* 15 *      LINE-4 *BUILDING 1750 MOTOR REPAIR SHOP       *
* 16 *      LINE-5 *BASE MODEL                          * ..
* 17 *
* 18 * ABORT          ERRORS ..
* 19 * DIAGNOSTIC      WARNINGS ..
* 20 * LOADS-REPORT     SUMMARY=(LS-C,LS-D)
* 21 *              HOURLY-DATA-SAVE = YES ..
* 22 * BUILDING-LOCATION  HOLIDAY = NO
* 23 *              X-REF = 0.0
* 24 *              Y-REF = 0.0 ..
* 25 * RUN-PERIOD      JAN 1 1994 THRU DEC 31 1994 ..
* 26 *
* 27 *
* 28 *               $ SCHEDULES
* 29 *
* 30 * FULL_ON_D  =DAY-SCHEDULE  (1,24) (1.) ..
* 31 *
* 32 * FULL_OFF_D =DAY-SCHEDULE  (1,24) (0.) ..
* 33 *
* 34 * LIGHT_ON_D =DAY-SCHEDULE  (1,5) (0.23)
* 35 *                   (6,7) (0.35)
* 36 *                   (8,9) (0.5,0.6)
* 37 *                   (10,11) (0.75)
* 38 *                   (12) (0.5)
* 39 *                   (13,14) (0.75)
* 40 *                   (15) (0.5)
* 41 *                   (16,18) (0.4)
* 42 *                   (19) (0.3)
* 43 *                   (20,24) (0.23) ..
* 44 *
* 45 * LT_ON_WKND =DAY-SCHEDULE  (1,6) (0.23)
```

```
* 46 *                    (7,19) (0.07)
* 47 *                    (20,24) (0.23) ..
* 48 *
* 49 * PEOPLE_D  =DAY-SCHEDULE  (1,5) (0.)
* 50 *                    (6,7) (0.1,0.5)
* 51 *                    (8,11) (1.)
* 52 *                    (12) (0.8)
* 53 *                    (13,16) (1.)
* 54 *                    (17,18) (0.5,0.1)
* 55 *                    (19,24) (0.) ..
* 56 *
* 57 * EQUIP_ON_D =DAY-SCHEDULE  (1,5) (0.05)
* 58 *                    (6,7) (0.1,0.2)
* 59 *                    (8,9) (0.3)
* 60 *                    (10,11) (0.4,0.7)
* 61 *                    (12,13) (0.4)
* 62 *                    (14,15) (0.8)
* 63 *                    (16,18) (0.7,0.3,0.1)
* 64 *                    (19,24) (0.05) ..
* 65 *
* 66 * SHOP_INF_D =DAY-SCHEDULE  (1,7) (0.1)
* 67 *                    (8) (1.)
* 68 *                    (9,16) (0.1)
* 69 *                    (17) (1.)
* 70 *                    (18,24) (0.1) ..
* 71 *
* 72 *
* 73 * FULL_ON_W  =WEEK-SCHEDULE  (ALL) FULL_ON_D  ..
* 74 *
* 75 * FULL_OFF_W =WEEK-SCHEDULE  (ALL) FULL_OFF_D  ..
* 76 *
* 77 * LIGHT_ON_W =WEEK-SCHEDULE  (WD)  LIGHT_ON_D
* 78 *                    (WEH) LT_ON_WKND  ..
* 79 *
* 80 * PEOPLE_W  =WEEK-SCHEDULE  (WD)  PEOPLE_D
* 81 *                    (WEH) FULL_OFF_D  ..
* 82 *
* 83 * EQUIP_W  =WEEK-SCHEDULE  (WD)  EQUIP_ON_D
* 84 *                    (WEH) FULL_OFF_D  ..
* 85 *
* 86 * SHOP_IFL_W =WEEK-SCHEDULE  (WD)  SHOP_INF_D
* 87 *                    (WEH) FULL_OFF_D  ..
* 88 *
* 89 *
* 90 * $ FULL ON SCHEDULE
* 91 * FULL_ON   =SCHEDULE THRU DEC 31 FULL_ON_W  ..
* 92 *
* 93 * $ FULL OFF SCHEDULE
* 94 * FULL_OFF  =SCHEDULE THRU DEC 31 FULL_OFF_W  ..
* 95 *
```

```
*  96 * $ LIGHTING SCHEDULE
*  97 * LIGHT_SCHD =SCHEDULE THRU DEC 31 LIGHT_ON_W ..
*  98 *
*  99 * $ OCCUPANCY SCHEDULE
* 100 * PEOPLE_SCH =SCHEDULE THRU DEC 31 PEOPLE_W ..
* 101 *
* 102 * $ EQUIPMENT SCHEDULE
* 103 * EQUIP_SCHD =SCHEDULE THRU DEC 31 EQUIP_W ..
* 104 *
* 105 * $ SHOP INFILTRATION SCHED
* 106 * SHOP_INFIL =SCHEDULE THRU DEC 31 SHOP_IFL_W ..
* 107 *
* 108 *
* 109 *
* 110 *              $ CONSTRUCTION TYPES
* 111 *
* 112 *
* 113 *
* 114 * FLOORCON =CONSTRUCTION  U-VALUE =  0.010 ..
* 115 *
* 116 *  $ ADMINISTRATION ROOF CONSTRUCTION
* 117 * ADMROOF  =CONSTRUCTION  LAYERS = ASHR-17  ..
* 118 *
* 119 *  $ ROOF CONSTRUCTION
* 120 * ROOFCON  =CONSTRUCTION  U-VALUE =  0.050 ..
* 121 * SHOPWALL =LAYERS       MATERIAL=(AS01,IN23)
* 122 *                  THICKNESS=(0.005,0.167) ..
* 123 * WALLCON  =CONSTRUCTION  LAYERS = SHOPWALL ..
* 124 * INWALL   =CONSTRUCTION  U-VALUE =  0.500 ..
* 125 * DOORCON  =CONSTRUCTION  U-VALUE =  0.400 ..
* 126 *
* 127 * G_TYPE1  =GLASS-TYPE    SHADING-COEF = 1.000
* 128 *                  PANES = 1
* 129 *                  GLASS-CONDUCTANCE =  1.130 ..
* 130 *
* 131 *
* 132 *
* 133 *
* 134 *              $ SPACE DESCRIPTION
* 135 *
* 136 * EQUIP_SHOP =SPACE   AREA = 7280.0  VOLUME = 149240.0
* 137 *              AZIMUTH = 90  ZONE-TYPE = CONDITIONED
* 138 *              PEOPLE-SCHEDULE = PEOPLE_SCH  NUMBER-OF-PEOPLE = 40.0
* 139 *              PEOPLE-HEAT-GAIN = 700.0  LIGHTING-TYPE = INCAND
* 140 *              LIGHTING-KW = 5.23  LIGHTING-SCHEDULE = LIGHT_SCHD
* 141 *              EQUIP-SCHEDULE = EQUIP_SCHD  EQUIPMENT-KW = 18.0
* 142 *              INF-METHOD = AIR-CHANGE  AIR-CHANGES/HR = 0.2
* 143 *              INF-SCHEDULE = SHOP_INFIL  ..
* 144 *
* 145 *         U-W     HEIGHT = 104.0  WIDTH = 70.0  CONS = FLOORCON
```

```
* 146 *              AZIMUTH = 90  ..
* 147 *
* 148 *         ROOF    HEIGHT = 104.0  WIDTH = 70.0  CONS = ROOFCON
* 149 *              AZIMUTH = 90  TILT = 0  ..
* 150 *
* 151 *         E-W     HEIGHT = 20.5  WIDTH = 104.0  CONS = WALLCON
* 152 *              AZIMUTH = 180  ..
* 153 *
* 154 *          DOOR   HEIGHT = 14.0  WIDTH = 16.0  CONS = DOORCON
* 155 *              MULTIPLIER = 5.0  ..
* 156 *
* 157 *         E-W     HEIGHT = 20.5  WIDTH = 70.0  CONS = WALLCON
* 158 *              AZIMUTH = 90  ..
* 159 *
* 160 *         E-W     HEIGHT = 20.5  WIDTH = 104.0  CONS = WALLCON
* 161 *              AZIMUTH = 0  ..
* 162 *
* 163 *          DOOR   HEIGHT = 14.0  WIDTH = 16.0  CONS = DOORCON
* 164 *              MULTIPLIER = 5.0  ..
* 165 *
* 166 *         E-W     HEIGHT = 20.5  WIDTH = 16.0  CONS = WALLCON
* 167 *              AZIMUTH = 270  ..
* 168 *
* 169 *
* 170 * AUTOREPAIR =SPACE    AREA = 7280.0  VOLUME = 149240.0
* 171 *              AZIMUTH = 90  ZONE-TYPE = CONDITIONED
* 172 *              PEOPLE-SCHEDULE = PEOPLE_SCH  NUMBER-OF-PEOPLE = 40.0
* 173 *              PEOPLE-HEAT-GAIN = 700.0  LIGHTING-TYPE = INCAND
* 174 *              LIGHTING-KW = 5.23  LIGHTING-SCHEDULE = LIGHT_SCHD
* 175 *              EQUIP-SCHEDULE = EQUIP_SCHD  EQUIPMENT-KW = 18.0
* 176 *              INF-METHOD = AIR-CHANGE  AIR-CHANGES/HR = 0.2
* 177 *              INF-SCHEDULE = SHOP_INFIL  ..
* 178 *
* 179 *         U-W     HEIGHT = 104.0  WIDTH = 70.0  CONS = FLOORCON
* 180 *              AZIMUTH = 90  ..
* 181 *
* 182 *         ROOF    HEIGHT = 104.0  WIDTH = 70.0  CONS = ROOFCON
* 183 *              AZIMUTH = 90  TILT = 0  ..
* 184 *
* 185 *         E-W     HEIGHT = 20.5  WIDTH = 104.0  CONS = WALLCON
* 186 *              AZIMUTH = 180  ..
* 187 *
* 188 *          DOOR   HEIGHT = 14.0  WIDTH = 16.0  CONS = DOORCON
* 189 *              MULTIPLIER = 5.0  ..
* 190 *
* 191 *         E-W     HEIGHT = 20.5  WIDTH = 70.0  CONS = WALLCON
* 192 *              AZIMUTH = 270  ..
* 193 *                                .
* 194 *         E-W     HEIGHT = 20.5  WIDTH = 104.0  CONS = WALLCON
* 195 *              AZIMUTH = 0  ..
```

```
* 196 *
* 197 *          DOOR  HEIGHT = 14.0  WIDTH = 16.0  CONS = DOORCON
* 198 *              MULTIPLIER = 5.0  ..
* 199 *
* 200 *         E-W    HEIGHT = 20.5  WIDTH = 16.0  CONS = WALLCON
* 201 *              AZIMUTH = 90  ..
* 202 *
* 203 *
* 204 * SUPPLYAREA =SPACE   AREA = 4080.0  VOLUME = 73440.0
* 205 *              AZIMUTH = 90  ZONE-TYPE = CONDITIONED
* 206 *              PEOPLE-SCHEDULE = PEOPLE_SCH  NUMBER-OF-PEOPLE = 25.0
* 207 *              PEOPLE-HEAT-GAIN = 700.0  LIGHTING-TYPE = SUS-FLUOR
* 208 *              LIGHTING-KW = 3.77  LIGHTING-SCHEDULE = LIGHT_SCHD
* 209 *              EQUIP-SCHEDULE = EQUIP_SCHD  EQUIPMENT-KW = 7.0
* 210 *              INF-METHOD = AIR-CHANGE  AIR-CHANGES/HR = 0.05
* 211 *              INF-SCHEDULE = FULL_ON  ..
* 212 *
* 213 *         U-W    HEIGHT = 80.0  WIDTH = 51.0  CONS = FLOORCON
* 214 *              AZIMUTH = 90  ..
* 215 *
* 216 *         ROOF   HEIGHT = 80.0  WIDTH = 51.0  CONS = ROOFCON
* 217 *              AZIMUTH = 90  TILT = 0  ..
* 218 *
* 219 *         E-W    HEIGHT = 18.0  WIDTH = 80.0  CONS = WALLCON
* 220 *              AZIMUTH = 0  ..
* 221 *
* 222 *          DOOR  HEIGHT = 7.5  WIDTH = 3.0  CONS = DOORCON
* 223 *              MULTIPLIER = 2.0  ..
* 224 *
* 225 *         E-W    HEIGHT = 18.0  WIDTH = 32.0  CONS = WALLCON
* 226 *              AZIMUTH = 180  ..
* 227 *
* 228 *          DOOR  HEIGHT = 7.5  WIDTH = 3.0  CONS = DOORCON ..
* 229 *
* 230 *
* 231 * ADMIN    =SPACE   AREA = 6440.0  VOLUME = 64400.0
* 232 *              AZIMUTH = 90  ZONE-TYPE = CONDITIONED
* 233 *              PEOPLE-SCHEDULE = PEOPLE_SCH  NUMBER-OF-PEOPLE = 40.0
* 234 *              PEOPLE-HEAT-GAIN = 550.0
* 235 *              LIGHTING-TYPE = REC-FLUOR-RV  LIGHTING-KW = 4.13
* 236 *              LIGHTING-SCHEDULE = LIGHT_SCHD
* 237 *              EQUIP-SCHEDULE = EQUIP_SCHD  EQUIPMENT-KW = 16.0
* 238 *              INF-METHOD = AIR-CHANGE  AIR-CHANGES/HR = 0.15
* 239 *              INF-SCHEDULE = PEOPLE_SCH  ..
* 240 *
* 241 *         U-W    HEIGHT = 46.0  WIDTH = 140.0  CONS = FLOORCON
* 242 *              AZIMUTH = 90  ..
* 243 *
* 244 *         ROOF   HEIGHT = 46.0  WIDTH = 140.0  CONS = ADMROOF
* 245 *              AZIMUTH = 90  TILT = 0  ..
```

```
* 246 *
* 247 *          E-W     HEIGHT = 10.0  WIDTH = 140.0  CONS = WALLCON
* 248 *               AZIMUTH = 90  ..
* 249 *
* 250 *           DOOR   HEIGHT = 7.5  WIDTH = 3.0  CONS = DOORCON
* 251 *               MULTIPLIER = 4.0  ..
* 252 *
* 253 *           WINDOW HEIGHT = 5.0  WIDTH = 4.0  G-T = G_TYPE1
* 254 *               MULTIPLIER = 8.0  ..
* 255 *
* 256 *          E-W     HEIGHT = 10.0  WIDTH = 140.0  CONS = WALLCON
* 257 *               AZIMUTH = 270  ..
* 258 *
* 259 *           DOOR   HEIGHT = 7.5  WIDTH = 3.0  CONS = DOORCON
* 260 *               MULTIPLIER = 4.0  ..
* 261 *
* 262 *           WINDOW HEIGHT = 5.0  WIDTH = 4.0  G-T = G_TYPE1
* 263 *               MULTIPLIER = 8.0  ..
* 264 *
* 265 *          E-W     HEIGHT = 10.0  WIDTH = 10.0  CONS = WALLCON
* 266 *               AZIMUTH = 180  ..
* 267 *
* 268 *
* 269 * INSPECTION =SPACE   AREA = 3204.0  VOLUME = 65682.0
* 270 *               AZIMUTH = 90  ZONE-TYPE = CONDITIONED
* 271 *               PEOPLE-SCHEDULE = PEOPLE_SCH  NUMBER-OF-PEOPLE = 10.0
* 272 *               PEOPLE-HEAT-GAIN = 700.0  LIGHTING-TYPE = INCAND
* 273 *               LIGHTING-KW = 3.52  LIGHTING-SCHEDULE = LIGHT_SCHD
* 274 *               EQUIP-SCHEDULE = EQUIP_SCHD  EQUIPMENT-KW = 10.0
* 275 *               INF-METHOD = AIR-CHANGE  AIR-CHANGES/HR = 0.3
* 276 *               INF-SCHEDULE = SHOP_INFIL  ..
* 277 *
* 278 *          U-W     HEIGHT = 36.0  WIDTH = 89.0  CONS = FLOORCON
* 279 *               AZIMUTH = 90  ..
* 280 *
* 281 *          ROOF    HEIGHT = 36.0  WIDTH = 89.0  CONS = ROOFCON
* 282 *               AZIMUTH = 90  TILT = 0  ..
* 283 *
* 284 *          E-W     HEIGHT = 20.5  WIDTH = 89.0  CONS = WALLCON
* 285 *               AZIMUTH = 90  ..
* 286 *
* 287 *           DOOR   HEIGHT = 14.0  WIDTH = 16.0  CONS = DOORCON
* 288 *               MULTIPLIER = 4.0  ..
* 289 *
* 290 *          E-W     HEIGHT = 20.5  WIDTH = 89.0  CONS = WALLCON
* 291 *               AZIMUTH = 270  ..
* 292 *
* 293 *           DOOR   HEIGHT = 14.0  WIDTH = 16.0  CONS = DOORCON
* 294 *               MULTIPLIER = 4.0  ..
* 295 *
```

```
* 296 *
* 297 * ICS_WRHSE  =SPACE    AREA = 12240.0  VOLUME = 220320.0
* 298 *               AZIMUTH = 90  ZONE-TYPE = CONDITIONED
* 299 *               PEOPLE-SCHEDULE = PEOPLE_SCH  NUMBER-OF-PEOPLE = 5.0
* 300 *               PEOPLE-HEAT-GAIN = 600.0  LIGHTING-TYPE = INCAND
* 301 *               LIGHTING-KW = 6.01  LIGHTING-SCHEDULE = LIGHT_SCHD
* 302 *               EQUIP-SCHEDULE = EQUIP_SCHD  EQUIPMENT-KW = 2.0
* 303 *               INF-METHOD = NONE   ..
* 304 *
* 305 *          U-W     HEIGHT = 80.0  WIDTH = 153.0  CONS = FLOORCON
* 306 *                  AZIMUTH = 90   ..
* 307 *
* 308 *          ROOF    HEIGHT = 80.0  WIDTH = 153.0  CONS = ROOFCON
* 309 *                  AZIMUTH = 90  TILT = 0   ..
* 310 *
* 311 *          E-W     HEIGHT = 18.0  WIDTH = 153.0  CONS = WALLCON
* 312 *                  AZIMUTH = 90   ..
* 313 *
* 314 *          E-W     HEIGHT = 18.0  WIDTH = 80.0  CONS = WALLCON
* 315 *                  AZIMUTH = 180   ..
* 316 *
* 317 *           DOOR   HEIGHT = 14.0  WIDTH = 16.0  CONS = DOORCON ..
* 318 *
* 319 *           DOOR   HEIGHT = 7.5  WIDTH = 3.0  CONS = DOORCON ..
* 320 *
* 321 *          E-W     HEIGHT = 18.0  WIDTH = 153.0  CONS = WALLCON
* 322 *                  AZIMUTH = 270   ..
* 323 *
* 324 *          E-W     HEIGHT = 18.0  WIDTH = 44.0  CONS = WALLCON
* 325 *                  AZIMUTH = 0   ..
* 326 *
* 327 *
* 328 * END  ..
* 329 * COMPUTE LOADS  ..
* 330 *
* 331 * INPUT SYSTEMS  ..

        SDL PROCESSOR INPUT DATA

           3/18/1995   12:54:14  SDL RUN  1




* 332 *
* 333 *
* 334 *           $-------------------------------------$
* 335 *           $EZ-DOE SYSTEMS INPUT$
* 336 *           $-------------------------------------$
* 337 *
```

```
* 338 *                $ GENERAL PROJECT DATA
* 339 *
* 340 * TITLE  LINE-1 *    EMC     ENGINEERS     INC.    *
* 341 *       LINE-2 *EZDOE - ELITE SOFTWARE DEVELOPMENT INC*
* 342 *       LINE-3 *    DENVER,      CO      80227    *
* 343 *
* 344 *       LINE-4 *BUILDING 1750 MOTOR REPAIR SHOP        *
* 345 *       LINE-5 *BASE MODEL                             * ..
* 346 * ABORT            ERRORS ..
* 347 * DIAGNOSTIC        WARNINGS ..
* 348 * SYSTEMS-REPORT     SUMMARY=(SS-A,SS-C,SS-F,SS-O)  ..
* 349 *
* 350 *                $ SCHEDULES
* 351 *
* 352 * FULL_ON_D  =DAY-SCHEDULE  (1,24) (1.) ..
* 353 * FULL_OFF_D =DAY-SCHEDULE  (1,24) (0.) ..
* 354 * HEAT1_ON_D =DAY-SCHEDULE  (1,24) (55.) ..
* 355 * HEAT2_ON_D =DAY-SCHEDULE  (1,24) (74.) ..
* 356 *
* 357 * FULL_ON_W  =WEEK-SCHEDULE  (ALL) FULL_ON_D  ..
* 358 *
* 359 * FULL_OFF_W =WEEK-SCHEDULE  (ALL) FULL_OFF_D  ..
* 360 *
* 361 * HEAT1_ON_W =WEEK-SCHEDULE  (ALL) HEAT1_ON_D  ..
* 362 *
* 363 * HEAT2_ON_W =WEEK-SCHEDULE  (ALL) HEAT2_ON_D  ..
* 364 *
* 365 *
* 366 * $ FULL ON SCHEDULE
* 367 * FULL_ON    =SCHEDULE THRU DEC 31 FULL_ON_W  ..
* 368 *
* 369 * $ FULL OFF SCHEDULE
* 370 * FULL_OFF   =SCHEDULE THRU DEC 31 FULL_OFF_W  ..
* 371 *
* 372 * $ HEAT SCHEDULE, 55 DEG
* 373 * HEAT55_ON  =SCHEDULE THRU DEC 31 HEAT1_ON_W  ..
* 374 *
* 375 * $ HEAT SCHEDULE 68 DEG
* 376 * HEAT68_ON  =SCHEDULE THRU DEC 31 HEAT2_ON_W  ..
* 377 *
* 378 *
* 379 *
* 380 *                $ ZONE DESCRIPTION
* 381 *
* 382 * EQUIP_SHOP =ZONE    DESIGN-HEAT-T = 55.0  DESIGN-COOL-T = 75.0
* 383 *                HEAT-TEMP-SCH = HEAT55_ON  ZONE-TYPE = CONDITIONED
* 384 *                THERMOSTAT-TYPE = PROPORTIONAL  ASSIGNED-CFM = 9700.
* 385 *                OUTSIDE-AIR-CFM = 9700.  SIZING-OPTION = FROM-LOADS
* 386 *                RATED-CFM = 9700.0  MIN-CFM-RATIO = 1.0
* 387 *                EXHAUST-CFM = 9700.0  HEATING-CAPACITY = -652520.0   ..
```

```
* 388 *
* 389 * AUTOREPAIR =ZONE   DESIGN-HEAT-T = 55.0  DESIGN-COOL-T = 75.0
* 390 *              HEAT-TEMP-SCH = HEAT55_ON  ZONE-TYPE = CONDITIONED
* 391 *              THERMOSTAT-TYPE = PROPORTIONAL  ASSIGNED-CFM = 9700.
* 392 *              OUTSIDE-AIR-CFM = 9700.  SIZING-OPTION = FROM-LOADS
* 393 *              RATED-CFM = 9700.0  MIN-CFM-RATIO = 1.0
* 394 *              EXHAUST-CFM = 9700.0  HEATING-CAPACITY = -652520.0  ..
* 395 *
* 396 * SUPPLYAREA =ZONE   DESIGN-HEAT-T = 68.0  DESIGN-COOL-T = 75.0
* 397 *              HEAT-TEMP-SCH = HEAT68_ON  ZONE-TYPE = CONDITIONED
* 398 *              THERMOSTAT-TYPE = PROPORTIONAL
* 399 *              BASEBOARD-CTRL = THERMOSTATIC
* 400 *              BASEBOARD-RATING = -44320.  ASSIGNED-CFM = 1230.
* 401 *              OUTSIDE-AIR-CFM = 344.  SIZING-OPTION = FROM-LOADS
* 402 *              RATED-CFM = 1230.0  MIN-CFM-RATIO = 1.0
* 403 *              EXHAUST-CFM = 344.0  HEATING-CAPACITY = -28080.0  ..
* 404 *
* 405 * ADMIN    =ZONE   DESIGN-HEAT-T = 68.0  DESIGN-COOL-T = 75.0
* 406 *              HEAT-TEMP-SCH = HEAT68_ON  ZONE-TYPE = CONDITIONED
* 407 *              THERMOSTAT-TYPE = PROPORTIONAL
* 408 *              BASEBOARD-CTRL = THERMOSTATIC
* 409 *              BASEBOARD-RATING = -87340.  ASSIGNED-CFM = 3290.
* 410 *              OUTSIDE-AIR-CFM = 1020.  SIZING-OPTION = FROM-LOADS
* 411 *              RATED-CFM = 3290.0  MIN-CFM-RATIO = 1.0
* 412 *              EXHAUST-CFM = 1020.0  HEATING-CAPACITY = -83400.0  ..
* 413 *
* 414 * INSPECTION =ZONE   DESIGN-HEAT-T = 55.0  DESIGN-COOL-T = 75.0
* 415 *              HEAT-TEMP-SCH = HEAT55_ON  ZONE-TYPE = CONDITIONED
* 416 *              THERMOSTAT-TYPE = PROPORTIONAL  ASSIGNED-CFM = 4000.
* 417 *              OUTSIDE-AIR-CFM = 4000.  SIZING-OPTION = FROM-LOADS
* 418 *              RATED-CFM = 4000.0  MIN-CFM-RATIO = 1.0
* 419 *              EXHAUST-CFM = 4000.0  HEATING-CAPACITY = -269080.0  ..
* 420 *
* 421 * ICS_WRHSE  =ZONE   DESIGN-HEAT-T = 55.0  DESIGN-COOL-T = 75.0
* 422 *              HEAT-TEMP-SCH = HEAT55_ON  ZONE-TYPE = CONDITIONED
* 423 *              THERMOSTAT-TYPE = PROPORTIONAL  ASSIGNED-CFM = 14606.
* 424 *              OUTSIDE-AIR-CFM = 14606.  SIZING-OPTION = FROM-LOADS
* 425 *              RATED-CFM = 14606.0  MIN-CFM-RATIO = 1.0
* 426 *              HEATING-CAPACITY = -613940.0  ..
* 427 *
* 428 *
* 429 *              $ SYSTEM DESCRIPTION
* 430 *
* 431 * HV3AB    =SYSTEM   SYSTEM-TYPE = HVSYS
* 432 *                MAX-SUPPLY-T = 55.0  HEATING-SCHEDULE = HEAT55_ON
* 433 *                MIN-HUMIDITY = 30.0  ECONO-LIMIT-T = 65.0
* 434 *                ECONO-LOW-LIMIT = 55.0  HEAT-CONTROL = COLDEST
* 435 *                SUPPLY-CFM = 9700.  RATED-CFM = 9700.
* 436 *                MIN-OUTSIDE-AIR = 1.0  FAN-SCHEDULE = HEAT55_ON
* 437 *                SUPPLY-DELTA-T = 2.4  SUPPLY-KW = 0.00078
```

```
* 438 *              MOTOR-PLACEMENT = OUTSIDE-AIRFLOW
* 439 *              NIGHT-CYCLE-CTRL = STAY-OFF  NIGHT-VENT-DT = 0.0
* 440 *              HEATING-CAPACITY = -652520.  FURNACE-AUX = 0.
* 441 *              ZONE-NAMES = (EQUIP_SHOP) ..
* 442 *
* 443 * HV3CD    =SYSTEM   SYSTEM-TYPE = HVSYS
* 444 *              MAX-SUPPLY-T = 55.0  HEATING-SCHEDULE = HEAT55_ON
* 445 *              MIN-HUMIDITY = 30.0  ECONO-LIMIT-T = 65.0
* 446 *              ECONO-LOW-LIMIT = 55.0  HEAT-CONTROL = COLDEST
* 447 *              SUPPLY-CFM = 9700.  RATED-CFM = 9700.
* 448 *              MIN-OUTSIDE-AIR = 1.0  FAN-SCHEDULE = HEAT55_ON
* 449 *              SUPPLY-DELTA-T = 2.4  SUPPLY-KW = 0.00078
* 450 *              MOTOR-PLACEMENT = OUTSIDE-AIRFLOW
* 451 *              NIGHT-CYCLE-CTRL = STAY-OFF  NIGHT-VENT-DT = 0.0
* 452 *              HEATING-CAPACITY = -652520.  FURNACE-AUX = 0.
* 453 *              ZONE-NAMES = (AUTOREPAIR) ..
* 454 *
* 455 * HV2      =SYSTEM   SYSTEM-TYPE = HVSYS
* 456 *              MAX-SUPPLY-T = 68.0  HEATING-SCHEDULE = HEAT68_ON
* 457 *              MIN-HUMIDITY = 30.0  ECONO-LIMIT-T = 65.0
* 458 *              ECONO-LOW-LIMIT = 55.0  HEAT-CONTROL = COLDEST
* 459 *              SUPPLY-CFM = 1230.  RATED-CFM = 1230.
* 460 *              MIN-OUTSIDE-AIR = 0.28  FAN-SCHEDULE = HEAT68_ON
* 461 *              SUPPLY-DELTA-T = 2.4  SUPPLY-KW = 0.00078
* 462 *              MOTOR-PLACEMENT = OUTSIDE-AIRFLOW
* 463 *              NIGHT-CYCLE-CTRL = STAY-OFF  NIGHT-VENT-DT = 0.0
* 464 *              HEATING-CAPACITY = -28080.  FURNACE-AUX = 0.
* 465 *              RETURN-AIR-PATH = DUCT
* 466 *              ZONE-NAMES = (SUPPLYAREA) ..
* 467 *
* 468 * HV1      =SYSTEM   SYSTEM-TYPE = HVSYS
* 469 *              MAX-SUPPLY-T = 68.0  HEATING-SCHEDULE = HEAT68_ON
* 470 *              MIN-HUMIDITY = 30.0  ECONO-LIMIT-T = 65.0
* 471 *              ECONO-LOW-LIMIT = 55.0  HEAT-CONTROL = COLDEST
* 472 *              SUPPLY-CFM = 3290.  RATED-CFM = 3290.
* 473 *              MIN-OUTSIDE-AIR = 0.31  FAN-SCHEDULE = HEAT68_ON
* 474 *              SUPPLY-DELTA-T = 2.4  SUPPLY-KW = 0.00078
* 475 *              MOTOR-PLACEMENT = OUTSIDE-AIRFLOW
* 476 *              NIGHT-CYCLE-CTRL = STAY-OFF  NIGHT-VENT-DT = 0.0
* 477 *              HEATING-CAPACITY = -83400.  FURNACE-AUX = 0.
* 478 *              RETURN-AIR-PATH = DUCT
* 479 *              ZONE-NAMES = (ADMIN) ..
* 480 *
* 481 * HV4      =SYSTEM   SYSTEM-TYPE = HVSYS
* 482 *              MAX-SUPPLY-T = 55.0  HEATING-SCHEDULE = HEAT55_ON
* 483 *              MIN-HUMIDITY = 30.0  ECONO-LIMIT-T = 65.0
* 484 *              ECONO-LOW-LIMIT = 55.0  HEAT-CONTROL = COLDEST
* 485 *              SUPPLY-CFM = 4000.  RATED-CFM = 4000.
* 486 *              MIN-OUTSIDE-AIR = 1.0  FAN-SCHEDULE = HEAT55_ON
* 487 *              SUPPLY-DELTA-T = 2.4  SUPPLY-KW = 0.00078
```

```
* 488 *                MOTOR-PLACEMENT = OUTSIDE-AIRFLOW
* 489 *                NIGHT-CYCLE-CTRL = STAY-OFF  NIGHT-VENT-DT = 0.0
* 490 *                HEATING-CAPACITY = -269080.  FURNACE-AUX = 0.
* 491 *                ZONE-NAMES = (INSPECTION) ..
* 492 *
* 493 * UH_ZONE6  =SYSTEM    SYSTEM-TYPE = UHT
* 494 *                MAX-SUPPLY-T = 91.9  HEATING-SCHEDULE = HEAT55_ON
* 495 *                RATED-CFM = 14606.  FAN-SCHEDULE = HEAT55_ON
* 496 *                SUPPLY-DELTA-T = 0.2  SUPPLY-KW = 0.00008
* 497 *                NIGHT-CYCLE-CTRL = CYCLE-ON-ANY
* 498 *                HEATING-CAPACITY = -613940.  FURNACE-AUX = 0.
* 499 *                ZONE-NAMES = (ICS_WRHSE) ..
* 500 *
* 501 * END ..
* 502 * COMPUTE SYSTEMS ..
* 503 *
* 504 * INPUT PLANT ..

        P D L  P R O C E S S O R  I N P U T  D A T A

            3/18/1995   12:54:14  PDL RUN  1




* 505 *
* 506 *
* 507 *            $-------------------------------------$
* 508 *            $ E Z - D O E  P L A N T S  I N P U T $
* 509 *            $-------------------------------------$
* 510 *
* 511 *              $ GENERAL PROJECT DATA
* 512 *
* 513 * TITLE  LINE-1 *    EMC     ENGINEERS     INC.    *
* 514 *       LINE-2 *EZDOE - ELITE SOFTWARE DEVELOPMENT INC*
* 515 *       LINE-3 *    DENVER,      CO      80227    *
* 516 *
* 517 *       LINE-4 *BUILDING 1750 MOTOR REPAIR SHOP        *
* 518 *       LINE-5 *BASE MODEL                          * ..
* 519 *
* 520 * ABORT           ERRORS ..
* 521 * DIAGNOSTIC       WARNINGS ..
* 522 * PLANT-REPORT      SUMMARY=(PS-A,PS-B,BEPS)
* 523 *  ..
* 524 *
* 525 *                $ SCHEDULES
* 526 *
* 527 *
* 528 *
* 529 *
```

```
* 530 *
* 531 *              $ EQUIPMENT DESCRIPTION
* 532 *
* 533 * BOILER1&2  =PLANT-EQUIPMENT   TYPE = HW-BOILER
* 534 *               SIZE = 1.4  INSTALLED-NUMBER = 2
* 535 *               MAX-NUMBER-AVAIL = 2  ..
* 536 *
* 537 * DHW      =PLANT-EQUIPMENT   TYPE = HW-BOILER
* 538 *               SIZE = 0.3  ..
* 539 *
* 540 * PLANT-PARAMETERS     CCIRC-HEAD = 63.2    ..
* 541 *
* 542 *
* 543 * ENERGY-RESOURCE      RESOURCE = ELECTRICITY  ..
* 544 * ENERGY-RESOURCE      RESOURCE = FUEL-OIL  ..
* 545 *
* 546 * BOILERS    =LOAD-ASSIGNMENT  TYPE = HEATING
* 547 *                    OPERATION-MODE = RUN-NEEDED
* 548 *
* 549 *                    LOAD-RANGE =    1.338
* 550 *                    PLANT-EQUIPMENT = BOILER1&2
* 551 *                    NUMBER =    2  ..
* 552 *
* 553 * DHWASSIGN  =LOAD-ASSIGNMENT  TYPE = HEATING
* 554 *                    OPERATION-MODE = RUN-ALL
* 555 *
* 556 *                    LOAD-RANGE =    0.315
* 557 *                    PLANT-EQUIPMENT = DHW
* 558 *                    NUMBER =    1  ..
* 559 *
* 560 *
* 561 *
* 562 * END  ..
* 563 * COMPUTE PLANT ..
* 564 * STOP ..
```

ENERGY TYPE IN SITE MBTU-	ELECTRICITY	FUEL-OIL
CATEGORY OF USE		
SPACE HEAT	156.60	5899.24
SPACE COOL	0.00	0.00
HVAC AUX	723.64	0.00
DOM HOT WTR	0.00	0.00
AUX SOLAR	0.00	0.00
LIGHTS	271.96	0.00
VERT TRANS	0.00	0.00
MISC EQUIP	381.19	0.00
TOTAL	1533.39	5899.24

TOTAL SITE ENERGY 7432.58 MBTU 183.4 KBTU/SQFT-YR GROSS-AREA 183.4 KBTU/SQFT-YR NET-AREA
TOTAL SOURCE ENERGY 10503.86 MBTU 259.2 KBTU/SQFT-YR GROSS-AREA 259.2 KBTU/SQFT-YR NET-AREA

PERCENT OF HOURS ANY SYSTEM ZONE OUTSIDE OF THROTTLING RANGE = 3.0
PERCENT OF HOURS ANY PLANT LOAD NOT SATISFIED = 0.0

NOTE ELECTRICITY AND/OR FUEL USED TO GENERATE ELECTRICITY IS APPORTIONED BASED ON THE YEARLY DEMAND. ALL OTHER ENERGY TYPES ARE APPORTIONED HOURLY.

EMC ENGINEERS INC. EZDOE - ELITE SOFTWARE DEVELOPMENT INC DOE-2.1D 3/18/1995 12:54:14 PDL RUN 1
DENVER, CO 80227 BUILDING 1750 MOTOR REPAIR SHOP BASE MODEL
REPORT- PS-B MONTHLY PEAK AND TOTAL ENERGY USE WEATHER FILE- MASSENA, NY

MO	UTILITY- ELECTRICITY		FUEL-OIL
JAN	TOTAL(MBTU)	144.965	1294.618
	PEAK(KBTU)	411.57	3357.942
	DY/HR	5/14	26/ 7
FEB	TOTAL(MBTU)	130.085	1000.627
	PEAK(KBTU)	387.164	2619.186
	DY/HR	14/14	17/ 4
MAR	TOTAL(MBTU)	143.654	919.308
	PEAK(KBTU)	380.507	2737.162
	DY/HR	3/14	9/ 7
APR	TOTAL(MBTU)	127.344	392.443
	PEAK(KBTU)	380.353	1728.876
	DY/HR	1/14	3/ 5
MAY	TOTAL(MBTU)	123.384	162.484
	PEAK(KBTU)	376.273	1220.346
	DY/HR	3/14	17/ 5
JUN	TOTAL(MBTU)	113.542	24.218
	PEAK(KBTU)	353.341	627.001
	DY/HR	7/14	8/ 6
JUL	TOTAL(MBTU)	112.208	13.42
	PEAK(KBTU)	339.608	310.915
	DY/HR	29/14	25/ 5
AUG	TOTAL(MBTU)	117.484	21.148
	PEAK(KBTU)	351.652	563.525
	DY/HR	30/14	22/ 5
SEP	TOTAL(MBTU)	116.585	80.559
	PEAK(KBTU)	352.079	1134.098
	DY/HR	14/14	24/ 6
OCT	TOTAL(MBTU)	126.017	280.843
	PEAK(KBTU)	380.366	1450.643
	DY/HR	27/14	21/ 6
NOV	TOTAL(MBTU)	135.025	643.896
	PEAK(KBTU)	380.424	2102.096
	DY/HR	25/14	29/ 7

DEC	TOTAL(MBTU)	143.045	1065.676
	PEAK(KBTU)	387.224	2784.487
	DY/HR	28/11	31/ 4
	ONE YEAR	1533.338	5899.24
	USE/PEAK	411.57	3357.942

COMPUTER SIMULATIONS
BUILDING 1750

RUN 1 - SCHEDULE START/STOP AND NIGHT SETBACK

```
INPUT LOADS  ..

                $-----------------------------------$
                $ E Z - D O E   L O A D S   I N P U T $
                $-----------------------------------$

                   $ GENERAL PROJECT DATA

TITLE  LINE-1 *      EMC       ENGINEERS       INC.      *
       LINE-2 *EZDOE - ELITE SOFTWARE DEVELOPMENT INC*
       LINE-3 *      DENVER,        CO        80227     *

       LINE-4 *BUILDING 1750 MOTOR REPAIR SHOP          *
       LINE-5 *MODEL W SETBACK                          * ..

ABORT              ERRORS  ..
DIAGNOSTIC         WARNINGS ..
LOADS-REPORT       SUMMARY=(LS-C,LS-D)
                   HOURLY-DATA-SAVE = YES  ..
BUILDING-LOCATION  HOLIDAY = NO
                   X-REF = 0.0
                   Y-REF = 0.0  ..
RUN-PERIOD         JAN 1 1994 THRU DEC 31 1994  ..


                   $ SCHEDULES

FULL_ON_D  =DAY-SCHEDULE  (1,24) (1.) ..

FULL_OFF_D =DAY-SCHEDULE  (1,24) (0.) ..

LIGHT_ON_D =DAY-SCHEDULE  (1,5) (0.23)
                          (6,7) (0.35)
                          (8,9) (0.5,0.6)
                          (10,11) (0.75)
                          (12) (0.5)
                          (13,14) (0.75)
                          (15) (0.5)
                          (16,18) (0.4)
                          (19) (0.3)
                          (20,24) (0.23) ..

LT_ON_WKND =DAY-SCHEDULE  (1,6) (0.23)
                          (7,19) (0.07)
                          (20,24) (0.23) ..

PEOPLE_D   =DAY-SCHEDULE  (1,5) (0.)
                          (6,7) (0.1,0.5)
                          (8,11) (1.)
                          (12) (0.8)
                          (13,16) (1.)
                          (17,18) (0.5,0.1)
                          (19,24) (0.) ..

EQUIP_ON_D =DAY-SCHEDULE  (1,5) (0.05)
                          (6,7) (0.1,0.2)
                          (8,9) (0.3)
                          (10,11) (0.4,0.7)
                          (12,13) (0.4)
                          (14,15) (0.8)
                          (16,18) (0.7,0.3,0.1)
                          (19,24) (0.05) ..

SHOP_INF_D =DAY-SCHEDULE  (1,7) (0.1)
                          (8) (1.)
                          (9,16) (0.1)
                          (17) (1.)
                          (18,24) (0.1) ..


FULL_ON_W  =WEEK-SCHEDULE  (ALL) FULL_ON_D  ..

FULL_OFF_W =WEEK-SCHEDULE  (ALL) FULL_OFF_D  ..

LIGHT_ON_W =WEEK-SCHEDULE  (WD)  LIGHT_ON_D
                           (WEH) LT_ON_WKND  ..

PEOPLE_W   =WEEK-SCHEDULE  (WD)  PEOPLE_D
                           (WEH) FULL_OFF_D  ..

EQUIP_W    =WEEK-SCHEDULE  (WD)  EQUIP_ON_D
                           (WEH) FULL_OFF_D  ..

SHOP_IFL_W =WEEK-SCHEDULE  (WD)  SHOP_INF_D
                           (WEH) FULL_OFF_D  ..


$ FULL ON SCHEDULE
FULL_ON    =SCHEDULE THRU DEC 31 FULL_ON_W  ..

$ FULL OFF SCHEDULE
FULL_OFF   =SCHEDULE THRU DEC 31 FULL_OFF_W  ..

$ LIGHTING SCHEDULE
LIGHT_SCHD =SCHEDULE THRU DEC 31 LIGHT_ON_W  ..

$ OCCUPANCY SCHEDULE
PEOPLE_SCH =SCHEDULE THRU DEC 31 PEOPLE_W  ..

$ EQUIPMENT SCHEDULE
EQUIP_SCHD =SCHEDULE THRU DEC 31 EQUIP_W  ..

$ SHOP INFILTRATION SCHED
SHOP_INFIL =SCHEDULE THRU DEC 31 SHOP_IFL_W  ..
```

```
                    $ CONSTRUCTION TYPES


FLOORCON =CONSTRUCTION   U-VALUE =  0.010  ..

 $ ADMINISTRATION ROOF CONSTRUCTION
ADMROOF  =CONSTRUCTION   LAYERS = ASHR-17   ..

 $ ROOF CONSTRUCTION
ROOFCON  =CONSTRUCTION   U-VALUE =  0.050  ..
SHOPWALL =LAYERS         MATERIAL=(AS01,IN23)
                         THICKNESS=(0.005,0.167)  ..
WALLCON  =CONSTRUCTION   LAYERS = SHOPWALL  ..
INWALL   =CONSTRUCTION   U-VALUE =  0.500  ..
DOORCON  =CONSTRUCTION   U-VALUE =  0.400  ..

G_TYPE1  =GLASS-TYPE     SHADING-COEF = 1.000
                         PANES = 1
                         GLASS-CONDUCTANCE =  1.130  ..


                    $ SPACE DESCRIPTION

EQUIP_SHOP =SPACE    AREA = 7280.0  VOLUME = 149240.0
                     AZIMUTH = 90  ZONE-TYPE = CONDITIONED
                     PEOPLE-SCHEDULE = PEOPLE_SCH  NUMBER-OF-PEOPLE = 40.0
                     PEOPLE-HEAT-GAIN = 700.0  LIGHTING-TYPE = INCAND
                     LIGHTING-KW = 5.23  LIGHTING-SCHEDULE = LIGHT_SCHD
                     EQUIP-SCHEDULE = EQUIP_SCHD  EQUIPMENT-KW = 18.0
                     INF-METHOD = AIR-CHANGE  AIR-CHANGES/HR = 0.2
                     INF-SCHEDULE = SHOP_INFIL   ..

             U-W      HEIGHT = 104.0  WIDTH = 70.0  CONS = FLOORCON
                      AZIMUTH = 90   ..

              ROOF    HEIGHT = 104.0  WIDTH = 70.0  CONS = ROOFCON
                      AZIMUTH = 90  TILT = 0   ..

              E-W     HEIGHT = 20.5  WIDTH = 104.0  CONS = WALLCON
                      AZIMUTH = 180   ..

                DOOR  HEIGHT = 14.0  WIDTH = 16.0  CONS = DOORCON
                      MULTIPLIER = 5.0   ..

              E-W     HEIGHT = 20.5  WIDTH = 70.0  CONS = WALLCON
                      AZIMUTH = 90   ..

              E-W     HEIGHT = 20.5  WIDTH = 104.0  CONS = WALLCON
                      AZIMUTH = 0   ..

                DOOR  HEIGHT = 14.0  WIDTH = 16.0  CONS = DOORCON
                      MULTIPLIER = 5.0   ..

              E-W     HEIGHT = 20.5  WIDTH = 16.0  CONS = WALLCON
                      AZIMUTH = 270   ..


AUTOREPAIR =SPACE    AREA = 7280.0  VOLUME = 149240.0
                     AZIMUTH = 90  ZONE-TYPE = CONDITIONED
                     PEOPLE-SCHEDULE = PEOPLE_SCH  NUMBER-OF-PEOPLE = 40.0
                     PEOPLE-HEAT-GAIN = 700.0  LIGHTING-TYPE = INCAND
                     LIGHTING-KW = 5.23  LIGHTING-SCHEDULE = LIGHT_SCHD
                     EQUIP-SCHEDULE = EQUIP_SCHD  EQUIPMENT-KW = 18.0
                     INF-METHOD = AIR-CHANGE  AIR-CHANGES/HR = 0.2
                     INF-SCHEDULE = SHOP_INFIL   ..

             U-W      HEIGHT = 104.0  WIDTH = 70.0  CONS = FLOORCON
                      AZIMUTH = 90   ..

              ROOF    HEIGHT = 104.0  WIDTH = 70.0  CONS = ROOFCON
                      AZIMUTH = 90  TILT = 0   ..

              E-W     HEIGHT = 20.5  WIDTH = 104.0  CONS = WALLCON
                      AZIMUTH = 180   ..

                DOOR  HEIGHT = 14.0  WIDTH = 16.0  CONS = DOORCON
                      MULTIPLIER = 5.0   ..

              E-W     HEIGHT = 20.5  WIDTH = 70.0  CONS = WALLCON
                      AZIMUTH = 270   ..

              E-W     HEIGHT = 20.5  WIDTH = 104.0  CONS = WALLCON
                      AZIMUTH = 0   ..

                DOOR  HEIGHT = 14.0  WIDTH = 16.0  CONS = DOORCON
                      MULTIPLIER = 5.0   ..

              E-W     HEIGHT = 20.5  WIDTH = 16.0  CONS = WALLCON
                      AZIMUTH = 90   ..


SUPPLYAREA =SPACE    AREA = 4080.0  VOLUME = 73440.0
                     AZIMUTH = 90  ZONE-TYPE = CONDITIONED
                     PEOPLE-SCHEDULE = PEOPLE_SCH  NUMBER-OF-PEOPLE = 25.0
                     PEOPLE-HEAT-GAIN = 700.0  LIGHTING-TYPE = SUS-FLUOR
                     LIGHTING-KW = 3.77  LIGHTING-SCHEDULE = LIGHT_SCHD
                     EQUIP-SCHEDULE = EQUIP_SCHD  EQUIPMENT-KW = 7.0
                     INF-METHOD = AIR-CHANGE  AIR-CHANGES/HR = 0.05
                     INF-SCHEDULE = FULL_ON   ..

             U-W      HEIGHT = 80.0  WIDTH = 51.0  CONS = FLOORCON
                      AZIMUTH = 90   ..

              ROOF    HEIGHT = 80.0  WIDTH = 51.0  CONS = ROOFCON
                      AZIMUTH = 90  TILT = 0   ..
```

```
                E-W       HEIGHT = 18.0  WIDTH = 80.0  CONS = WALLCON
                          AZIMUTH = 0    ..

                  DOOR    HEIGHT = 7.5  WIDTH = 3.0  CONS = DOORCON
                          MULTIPLIER = 2.0    ..

                E-W       HEIGHT = 18.0  WIDTH = 32.0  CONS = WALLCON
                          AZIMUTH = 180    ..

                  DOOR    HEIGHT = 7.5  WIDTH = 3.0  CONS = DOORCON ..

ADMIN       =SPACE      AREA = 6440.0  VOLUME = 64400.0
                        AZIMUTH = 90  ZONE-TYPE = CONDITIONED
                        PEOPLE-SCHEDULE = PEOPLE_SCH  NUMBER-OF-PEOPLE = 40.0
                        PEOPLE-HEAT-GAIN = 550.0
                        LIGHTING-TYPE = REC-FLUOR-RV  LIGHTING-KW = 4.13
                        LIGHTING-SCHEDULE = LIGHT_SCHD
                        EQUIP-SCHEDULE = EQUIP_SCHD  EQUIPMENT-KW = 16.0
                        INF-METHOD = AIR-CHANGE  AIR-CHANGES/HR = 0.15
                        INF-SCHEDULE = PEOPLE_SCH    ..

                U-W       HEIGHT = 46.0  WIDTH = 140.0  CONS = FLOORCON
                          AZIMUTH = 90    ..

                ROOF      HEIGHT = 46.0  WIDTH = 140.0  CONS = ADMROOF
                          AZIMUTH = 90  TILT = 0    ..

                E-W       HEIGHT = 10.0  WIDTH = 140.0  CONS = WALLCON
                          AZIMUTH = 90    ..

                  DOOR    HEIGHT = 7.5  WIDTH = 3.0  CONS = DOORCON
                          MULTIPLIER = 4.0    ..

                  WINDOW HEIGHT = 5.0  WIDTH = 4.0  G-T = G_TYPE1
                          MULTIPLIER = 8.0    ..

                E-W       HEIGHT = 10.0  WIDTH = 140.0  CONS = WALLCON
                          AZIMUTH = 270    ..

                  DOOR    HEIGHT = 7.5  WIDTH = 3.0  CONS = DOORCON
                          MULTIPLIER = 4.0    ..

                  WINDOW HEIGHT = 5.0  WIDTH = 4.0  G-T = G_TYPE1
                          MULTIPLIER = 8.0    ..

                E-W       HEIGHT = 10.0  WIDTH = 10.0  CONS = WALLCON
                          AZIMUTH = 180    ..

INSPECTION =SPACE     AREA = 3204.0  VOLUME = 65682.0
                      AZIMUTH = 90  ZONE-TYPE = CONDITIONED
                      PEOPLE-SCHEDULE = PEOPLE_SCH  NUMBER-OF-PEOPLE = 10.0
                      PEOPLE-HEAT-GAIN = 700.0  LIGHTING-TYPE = INCAND
                      LIGHTING-KW = 3.52  LIGHTING-SCHEDULE = LIGHT_SCHD
                      EQUIP-SCHEDULE = EQUIP_SCHD  EQUIPMENT-KW = 10.0
                      INF-METHOD = AIR-CHANGE  AIR-CHANGES/HR = 0.3
                      INF-SCHEDULE = SHOP_INFIL    ..

                U-W       HEIGHT = 36.0  WIDTH = 89.0  CONS = FLOORCON
                          AZIMUTH = 90    ..

                ROOF      HEIGHT = 36.0  WIDTH = 89.0  CONS = ROOFCON
                          AZIMUTH = 90  TILT = 0    ..

                E-W       HEIGHT = 20.5  WIDTH = 89.0  CONS = WALLCON
                          AZIMUTH = 90    ..

                  DOOR    HEIGHT = 14.0  WIDTH = 16.0  CONS = DOORCON
                          MULTIPLIER = 4.0    ..

                E-W       HEIGHT = 20.5  WIDTH = 89.0  CONS = WALLCON
                          AZIMUTH = 270    ..

                  DOOR    HEIGHT = 14.0  WIDTH = 16.0  CONS = DOORCON
                          MULTIPLIER = 4.0    ..

ICS_WRHSE   =SPACE      AREA = 12240.0  VOLUME = 220320.0
                        AZIMUTH = 90  ZONE-TYPE = CONDITIONED
                        PEOPLE-SCHEDULE = PEOPLE_SCH  NUMBER-OF-PEOPLE = 5.0
                        PEOPLE-HEAT-GAIN = 600.0  LIGHTING-TYPE = INCAND
                        LIGHTING-KW = 6.01  LIGHTING-SCHEDULE = LIGHT_SCHD
                        EQUIP-SCHEDULE = EQUIP_SCHD  EQUIPMENT-KW = 2.0
                        INF-METHOD = NONE    ..

                U-W       HEIGHT = 80.0  WIDTH = 153.0  CONS = FLOORCON
                          AZIMUTH = 90    ..

                ROOF      HEIGHT = 80.0  WIDTH = 153.0  CONS = ROOFCON
                          AZIMUTH = 90  TILT = 0    ..

                E-W       HEIGHT = 18.0  WIDTH = 153.0  CONS = WALLCON
                          AZIMUTH = 90    ..

                E-W       HEIGHT = 18.0  WIDTH = 80.0  CONS = WALLCON
                          AZIMUTH = 180    ..

                  DOOR    HEIGHT = 14.0  WIDTH = 16.0  CONS = DOORCON ..

                  DOOR    HEIGHT = 7.5  WIDTH = 3.0  CONS = DOORCON ..

                E-W       HEIGHT = 18.0  WIDTH = 153.0  CONS = WALLCON
                          AZIMUTH = 270    ..

                E-W       HEIGHT = 18.0  WIDTH = 44.0  CONS = WALLCON
                          AZIMUTH = 0    ..
```

```
END  ..
COMPUTE LOADS  ..

INPUT SYSTEMS  ..

                $---------------------------------------$
                $ E Z - D O E   S Y S T E M S  I N P U T $
                $---------------------------------------$

                   $ GENERAL PROJECT DATA

TITLE  LINE-1 *      EMC       ENGINEERS       INC.      *
       LINE-2 *EZDOE - ELITE SOFTWARE DEVELOPMENT INC*
       LINE-3 *      DENVER,        CO        80227     *

       LINE-4 *BUILDING 1750 MOTOR REPAIR SHOP          *
       LINE-5 *MODEL W SETBACK                          * ..
ABORT               ERRORS  ..
DIAGNOSTIC          WARNINGS ..
SYSTEMS-REPORT      SUMMARY=(SS-A,SS-B,SS-C)  ..

                   $ SCHEDULES

FULL_ON_D  =DAY-SCHEDULE  (1,24) (1.) ..
FULL_OFF_D =DAY-SCHEDULE  (1,24) (0.) ..
HEAT1_ON_D =DAY-SCHEDULE  (1,24) (55.) ..
HEAT2_ON_D =DAY-SCHEDULE  (1,24) (68.) ..
FAN_WSB_D  =DAY-SCHEDULE  (1,4) (0.)
                          (5,17) (1.)
                          (18,24) (0.) ..
HT68_WSB_D =DAY-SCHEDULE  (1,4) (50.)
                          (5,17) (74.)
                          (18,24) (50.) ..
HEAT50_D   =DAY-SCHEDULE  (1,24) (50.) ..
HT55_WSB_D =DAY-SCHEDULE  (1,4) (50.)
                          (5,17) (55.)
                          (18,24) (50.) ..

FULL_ON_W  =WEEK-SCHEDULE  (ALL) FULL_ON_D  ..

FULL_OFF_W =WEEK-SCHEDULE  (ALL) FULL_OFF_D  ..

HEAT1_ON_W =WEEK-SCHEDULE  (ALL) HEAT1_ON_D  ..

HEAT2_ON_W =WEEK-SCHEDULE  (ALL) HEAT2_ON_D  ..

FAN_WSB_W  =WEEK-SCHEDULE  (WD)  FAN_WSB_D
                           (SAT) FULL_OFF_D
                           (SUN) FULL_OFF_D
                           (HOL) FAN_WSB_D ..

HT55_WSB_W =WEEK-SCHEDULE  (WD)  HT55_WSB_D
                           (SAT) HEAT50_D
                           (SUN) HEAT50_D
                           (HOL) HT55_WSB_D ..

HT68_WSB_W =WEEK-SCHEDULE  (WD)  HT68_WSB_D
                           (SAT) HEAT50_D
                           (SUN) HEAT50_D
                           (HOL) HT68_WSB_D ..


$ FULL ON SCHEDULE
FULL_ON    =SCHEDULE THRU DEC 31 FULL_ON_W  ..

$ FULL OFF SCHEDULE
FULL_OFF   =SCHEDULE THRU DEC 31 FULL_OFF_W  ..

$ HEAT SCHEDULE, 55 DEG
HEAT55_ON  =SCHEDULE THRU DEC 31 HEAT1_ON_W  ..

$ HEAT SCHEDULE 68 DEG
HEAT68_ON  =SCHEDULE THRU DEC 31 HEAT2_ON_W  ..

$ FAN SCHED WITH SET BACK
FAN_W_SB   =SCHEDULE THRU DEC 31 FAN_WSB_W  ..

$ HEAT 55F WITH 50F SET B
HT55_W_SB  =SCHEDULE THRU DEC 31 HT55_WSB_W  ..

$ HEAT 68F W 50F SET BACK
HT68_W_SB  =SCHEDULE THRU DEC 31 HT68_WSB_W  ..


                   $ ZONE DESCRIPTION

EQUIP_SHOP =ZONE    DESIGN-HEAT-T = 55.0  DESIGN-COOL-T = 75.0
                    HEAT-TEMP-SCH = HT55_W_SB  ZONE-TYPE = CONDITIONED
                    THERMOSTAT-TYPE = PROPORTIONAL  ASSIGNED-CFM = 9700.
                    OUTSIDE-AIR-CFM = 9700.  SIZING-OPTION = FROM-LOADS
                    RATED-CFM = 9700.0  MIN-CFM-RATIO = 1.0
                    EXHAUST-CFM = 9700.0  HEATING-CAPACITY = -652520.0   ..

AUTOREPAIR =ZONE    DESIGN-HEAT-T = 55.0  DESIGN-COOL-T = 75.0
                    HEAT-TEMP-SCH = HT55_W_SB  ZONE-TYPE = CONDITIONED
                    THERMOSTAT-TYPE = PROPORTIONAL  ASSIGNED-CFM = 9700.
                    OUTSIDE-AIR-CFM = 9700.  SIZING-OPTION = FROM-LOADS
                    RATED-CFM = 9700.0  MIN-CFM-RATIO = 1.0
                    EXHAUST-CFM = 9700.0  HEATING-CAPACITY = -652520.0   ..

SUPPLYAREA =ZONE    DESIGN-HEAT-T = 68.0  DESIGN-COOL-T = 75.0
                    HEAT-TEMP-SCH = HT68_W_SB  ZONE-TYPE = CONDITIONED
                    THERMOSTAT-TYPE = PROPORTIONAL
                    BASEBOARD-CTRL = THERMOSTATIC
                    BASEBOARD-RATING = -44320.  ASSIGNED-CFM = 1230.
                    OUTSIDE-AIR-CFM = 344.  SIZING-OPTION = FROM-LOADS
```

```
                    RATED-CFM = 1230.0  MIN-CFM-RATIO = 1.0
                    EXHAUST-CFM = 344.0  HEATING-CAPACITY = -28080.0   ..

ADMIN       =ZONE   DESIGN-HEAT-T = 68.0  DESIGN-COOL-T = 75.0
                    HEAT-TEMP-SCH = HT68_W_SB  ZONE-TYPE = CONDITIONED
                    THERMOSTAT-TYPE = PROPORTIONAL
                    BASEBOARD-CTRL = THERMOSTATIC
                    BASEBOARD-RATING = -87340.  ASSIGNED-CFM = 3290.
                    OUTSIDE-AIR-CFM = 1020.  SIZING-OPTION = FROM-LOADS
                    RATED-CFM = 3290.0  MIN-CFM-RATIO = 1.0
                    EXHAUST-CFM = 1020.0  HEATING-CAPACITY = -83400.0   ..

INSPECTION =ZONE    DESIGN-HEAT-T = 55.0  DESIGN-COOL-T = 75.0
                    HEAT-TEMP-SCH = HT55_W_SB  ZONE-TYPE = CONDITIONED
                    THERMOSTAT-TYPE = PROPORTIONAL  ASSIGNED-CFM = 4000.
                    OUTSIDE-AIR-CFM = 4000.  SIZING-OPTION = FROM-LOADS
                    RATED-CFM = 4000.0  MIN-CFM-RATIO = 1.0
                    EXHAUST-CFM = 4000.0  HEATING-CAPACITY = -269080.0   ..

ICS_WRHSE   =ZONE   DESIGN-HEAT-T = 55.0  DESIGN-COOL-T = 75.0
                    HEAT-TEMP-SCH = HT55_W_SB  ZONE-TYPE = CONDITIONED
                    THERMOSTAT-TYPE = PROPORTIONAL  ASSIGNED-CFM = 14606.
                    OUTSIDE-AIR-CFM = 14606.  SIZING-OPTION = FROM-LOADS
                    RATED-CFM = 14606.0  MIN-CFM-RATIO = 1.0
                    HEATING-CAPACITY = -613940.0   ..


                    $ SYSTEM DESCRIPTION

HV3AB       =SYSTEM   SYSTEM-TYPE = HVSYS
                      MAX-SUPPLY-T = 55.0  HEATING-SCHEDULE = HEAT55_ON
                      MIN-HUMIDITY = 30.0  ECONO-LIMIT-T = 65.0
                      ECONO-LOW-LIMIT = 55.0  HEAT-CONTROL = COLDEST
                      SUPPLY-CFM = 9700.  RATED-CFM = 9700.
                      MIN-OUTSIDE-AIR = 1.0  FAN-SCHEDULE = FAN_W_SB
                      SUPPLY-DELTA-T = 2.4  SUPPLY-KW = 0.00078
                      MOTOR-PLACEMENT = OUTSIDE-AIRFLOW
                      NIGHT-CYCLE-CTRL = CYCLE-ON-ANY  NIGHT-VENT-DT = 0.0
                      HEATING-CAPACITY = -652520.  FURNACE-AUX = 0.
                      ZONE-NAMES = (EQUIP_SHOP)  ..

HV3CD       =SYSTEM   SYSTEM-TYPE = HVSYS
                      MAX-SUPPLY-T = 55.0  HEATING-SCHEDULE = HEAT55_ON
                      MIN-HUMIDITY = 30.0  ECONO-LIMIT-T = 65.0
                      ECONO-LOW-LIMIT = 55.0  HEAT-CONTROL = COLDEST
                      SUPPLY-CFM = 9700.  RATED-CFM = 9700.
                      MIN-OUTSIDE-AIR = 1.0  FAN-SCHEDULE = FAN_W_SB
                      SUPPLY-DELTA-T = 2.4  SUPPLY-KW = 0.00078
                      MOTOR-PLACEMENT = OUTSIDE-AIRFLOW
                      NIGHT-CYCLE-CTRL = CYCLE-ON-ANY  NIGHT-VENT-DT = 0.0
                      HEATING-CAPACITY = -652520.  FURNACE-AUX = 0.
                      ZONE-NAMES = (AUTOREPAIR)  ..

HV2         =SYSTEM   SYSTEM-TYPE = HVSYS
                      MAX-SUPPLY-T = 68.0  HEATING-SCHEDULE = HEAT68_ON
                      MIN-HUMIDITY = 30.0  ECONO-LIMIT-T = 65.0
                      ECONO-LOW-LIMIT = 55.0  HEAT-CONTROL = COLDEST
                      SUPPLY-CFM = 1230.  RATED-CFM = 1230.
                      MIN-OUTSIDE-AIR = 0.28  FAN-SCHEDULE = FAN_W_SB
                      SUPPLY-DELTA-T = 2.4  SUPPLY-KW = 0.00078
                      MOTOR-PLACEMENT = OUTSIDE-AIRFLOW
                      NIGHT-CYCLE-CTRL = CYCLE-ON-ANY  NIGHT-VENT-DT = 0.0
                      HEATING-CAPACITY = -28080.  FURNACE-AUX = 0.
                      RETURN-AIR-PATH = DUCT
                      ZONE-NAMES = (SUPPLYAREA)  ..

HV1         =SYSTEM   SYSTEM-TYPE = HVSYS
                      MAX-SUPPLY-T = 68.0  HEATING-SCHEDULE = HEAT68_ON
                      MIN-HUMIDITY = 30.0  ECONO-LIMIT-T = 65.0
                      ECONO-LOW-LIMIT = 55.0  HEAT-CONTROL = COLDEST
                      SUPPLY-CFM = 3290.  RATED-CFM = 3290.
                      MIN-OUTSIDE-AIR = 0.31  FAN-SCHEDULE = FAN_W_SB
                      SUPPLY-DELTA-T = 2.4  SUPPLY-KW = 0.00078
                      MOTOR-PLACEMENT = OUTSIDE-AIRFLOW
                      NIGHT-CYCLE-CTRL = CYCLE-ON-ANY  NIGHT-VENT-DT = 0.0
                      HEATING-CAPACITY = -83400.  FURNACE-AUX = 0.
                      RETURN-AIR-PATH = DUCT
                      ZONE-NAMES = (ADMIN)  ..

HV4         =SYSTEM   SYSTEM-TYPE = HVSYS
                      MAX-SUPPLY-T = 55.0  HEATING-SCHEDULE = HEAT55_ON
                      MIN-HUMIDITY = 30.0  ECONO-LIMIT-T = 65.0
                      ECONO-LOW-LIMIT = 55.0  HEAT-CONTROL = COLDEST
                      SUPPLY-CFM = 4000.  RATED-CFM = 4000.
                      MIN-OUTSIDE-AIR = 1.0  FAN-SCHEDULE = FAN_W_SB
                      SUPPLY-DELTA-T = 2.4  SUPPLY-KW = 0.00078
                      MOTOR-PLACEMENT = OUTSIDE-AIRFLOW
                      NIGHT-CYCLE-CTRL = CYCLE-ON-ANY  NIGHT-VENT-DT = 0.0
                      HEATING-CAPACITY = -269080.  FURNACE-AUX = 0.
                      ZONE-NAMES = (INSPECTION)  ..

UH_ZONE6    =SYSTEM   SYSTEM-TYPE = UHT
                      MAX-SUPPLY-T = 91.9  HEATING-SCHEDULE = HEAT55_ON
                      RATED-CFM = 14606.  FAN-SCHEDULE = FAN_W_SB
                      SUPPLY-DELTA-T = 0.2  SUPPLY-KW = 0.00008
                      NIGHT-CYCLE-CTRL = CYCLE-ON-ANY
                      HEATING-CAPACITY = -613940.  FURNACE-AUX = 0.
                      ZONE-NAMES = (ICS_WRHSE)  ..

END  ..
COMPUTE SYSTEMS  ..

INPUT PLANT  ..

                $------------------------------------$
                $ E Z - D O E   P L A N T S  I N P U T $
                $------------------------------------$
```

```
                    $ GENERAL PROJECT DATA

TITLE  LINE-1 *      EMC       ENGINEERS       INC.      *
       LINE-2 *EZDOE - ELITE SOFTWARE DEVELOPMENT INC*
       LINE-3 *      DENVER,       CO       80227      *

       LINE-4 *BUILDING 1750 MOTOR REPAIR SHOP          *
       LINE-5 *MODEL W SETBACK                          * ..

ABORT                ERRORS  ..
DIAGNOSTIC           WARNINGS ..
PLANT-REPORT         SUMMARY=(PS-A,PS-B,BEPS)
  ..

                    $ SCHEDULES



                    $ EQUIPMENT DESCRIPTION

BOILER1&2  =PLANT-EQUIPMENT   TYPE = HW-BOILER
                      SIZE = 1.4  INSTALLED-NUMBER = 2
                      MAX-NUMBER-AVAIL = 2  ..

DHW        =PLANT-EQUIPMENT   TYPE = HW-BOILER
                      SIZE = 0.3  ..

PLANT-PARAMETERS       CCIRC-HEAD = 63.2    ..


ENERGY-RESOURCE        RESOURCE = ELECTRICITY  ..
ENERGY-RESOURCE        RESOURCE = FUEL-OIL  ..

BOILERS    =LOAD-ASSIGNMENT  TYPE = HEATING
                             OPERATION-MODE = RUN-NEEDED

                             LOAD-RANGE =    1.338
                             PLANT-EQUIPMENT = BOILER1&2
                             NUMBER =    2  ..

DHWASSIGN  =LOAD-ASSIGNMENT  TYPE = HEATING
                             OPERATION-MODE = RUN-ALL

                             LOAD-RANGE =    0.315
                             PLANT-EQUIPMENT = DHW
                             NUMBER =    1  ..


END  ..
COMPUTE PLANT ..
STOP ..
```

ENERGY TYPE IN SITE MBTU-	ELECTRICITY	FUEL-OIL	
CATEGORY OF USE			
SPACE HEAT	94.53	3,657.21	0.00
SPACE COOL	0.00	0.00	0.00
HVAC AUX	354.52	0.00	0.00
DOM HOT WTR	0.00	0.00	0.00
AUX SOLAR	0.00	0.00	0.00
LIGHTS	271.97	0.00	0.00
VERT TRANS	0.00	0.00	0.00
MISC EQUIP	381.20	0.00	0.00
TOTAL	1,102.21	3,657.21	0.00

TOTAL SITE ENERGY 4759.40 MBTU 117.4 KBTU/SQFT-YR GROSS-AREA 117.4 KBTU/SQFT-YR NET-AREA
TOTAL SOURCE ENERGY 6967.08 MBTU 171.9 KBTU/SQFT-YR GROSS-AREA 171.9 KBTU/SQFT-YR NET-AREA

PERCENT OF HOURS ANY SYSTEM ZONE OUTSIDE OF THROTTLING RANGE = 18.8
PERCENT OF HOURS ANY PLANT LOAD NOT SATISFIED = 0.0

NOTE ELECTRICITY AND/OR FUEL USED TO GENERATE ELECTRICITY IS APPORTIONED BASED ON THE YEARLY DEMAND. ALL OTHER ENERGY TYPES ARE APPORTIONED HOURLY.

MO	UTILITY-	ELECTRICITY	FUEL-OIL
JAN	TOTAL(MBTU)	120.729	955.836
	PEAK(KBTU)	412.035	3429.182
	DY/HR	6/14	26/ 7
FEB	TOTAL(MBTU)	104.201	674.975
	PEAK(KBTU)	387.884	2715.991
	DY/HR	14/11	17/ 5
MAR	TOTAL(MBTU)	110.853	572.435
	PEAK(KBTU)	380.992	2838.768
	DY/HR	14/14	9/ 7
APR	TOTAL(MBTU)	84.767	175.379
	PEAK(KBTU)	380.737	1628.674
	DY/HR	1/14	1/ 5
MAY	TOTAL(MBTU)	81.020	60.379
	PEAK(KBTU)	380.596	1302.111
	DY/HR	3/14	17/ 5
JUN	TOTAL(MBTU)	77.303	5.159
	PEAK(KBTU)	353.880	494.732
	DY/HR	7/14	8/ 5
JUL	TOTAL(MBTU)	73.744	0.580
	PEAK(KBTU)	339.608	62.960
	DY/HR	29/14	11/ 6
AUG	TOTAL(MBTU)	80.480	3.612
	PEAK(KBTU)	351.873	225.582
	DY/HR	30/14	22/ 5
SEP	TOTAL(MBTU)	78.597	19.043
	PEAK(KBTU)	352.400	774.443
	DY/HR	14/14	23/ 6
OCT	TOTAL(MBTU)	81.139	117.514
	PEAK(KBTU)	380.706	1516.821
	DY/HR	27/14	21/ 6
NOV	TOTAL(MBTU)	96.384	351.498
	PEAK(KBTU)	380.949	2413.598
	DY/HR	28/14	29/ 7
DEC	TOTAL(MBTU)	112.968	720.802
	PEAK(KBTU)	387.766	2773.932
	DY/HR	28/11	28/ 7
	ONE YEAR	1102.185	3657.211
	USE/PEAK	412.035	3429.182

COMPUTER SIMULATIONS
BUILDING 1750

RUN 3 - DDC

```
*   3 *
*   4 *
*   5 *                 $-----------------------------------$
*   6 *                 $ E Z - D O E   L O A D S  I N P U T $
*   7 *                 $-----------------------------------$
*   8 *
*   9 *                    $ GENERAL PROJECT DATA
*  10 *
*  11 * TITLE  LINE-1 *     EMC      ENGINEERS      INC.     *
*  12 *        LINE-2 *EZDOE - ELITE SOFTWARE DEVELOPMENT INC*
*  13 *        LINE-3 *     DENVER,       CO       80227     *
*  14 *
*  15 *        LINE-4 *BUILDING 1750 MOTOR REPAIR SHOP          *
*  16 *        LINE-5 *MODEL WITH SET BACK AND DDC              * ..
*  17 *
*  18 * ABORT              ERRORS  ..
*  19 * DIAGNOSTIC         WARNINGS ..
*  20 * LOADS-REPORT       SUMMARY=(LS-C,LS-D)
*  21 *                    HOURLY-DATA-SAVE = YES  ..
*  22 * BUILDING-LOCATION  HOLIDAY = NO
*  23 *                    X-REF = 0.0
*  24 *                    Y-REF = 0.0  ..
*  25 * RUN-PERIOD         JAN 1 1994 THRU DEC 31 1994  ..
*  26 *
*  27 *
*  28 *                     $ SCHEDULES
*  29 *
*  30 * FULL_ON_D  =DAY-SCHEDULE  (1,24) (1.) ..
*  31 *
*  32 * FULL_OFF_D =DAY-SCHEDULE  (1,24) (0.) ..
*  33 *
*  34 * LIGHT_ON_D =DAY-SCHEDULE  (1,5) (0.23)
*  35 *                           (6,7) (0.35)
*  36 *                           (8,9) (0.5,0.6)
*  37 *                           (10,11) (0.75)
*  38 *                           (12) (0.5)
*  39 *                           (13,14) (0.75)
*  40 *                           (15) (0.5)
*  41 *                           (16,18) (0.4)
*  42 *                           (19) (0.3)
*  43 *                           (20,24) (0.23) ..
*  44 *
*  45 * LT_ON_WKND =DAY-SCHEDULE  (1,6) (0.23)
*  46 *                           (7,19) (0.07)
*  47 *                           (20,24) (0.23) ..
*  48 *
*  49 * PEOPLE_D   =DAY-SCHEDULE  (1,5) (0.)
*  50 *                           (6,7) (0.1,0.5)
*  51 *                           (8,11) (1.)
*  52 *                           (12) (0.8)
*  53 *                           (13,16) (1.)
*  54 *                           (17,18) (0.5,0.1)
*  55 *                           (19,24) (0.) ..
*  56 *
*  57 * EQUIP_ON_D =DAY-SCHEDULE  (1,5) (0.05)
*  58 *                           (6,7) (0.1,0.2)
*  59 *                           (8,9) (0.3)
*  60 *                           (10,11) (0.4,0.7)
*  61 *                           (12,13) (0.4)
*  62 *                           (14,15) (0.8)
*  63 *                           (16,18) (0.7,0.3,0.1)
*  64 *                           (19,24) (0.05) ..
*  65 *
*  66 * SHOP_INF_D =DAY-SCHEDULE  (1,7) (0.1)
*  67 *                           (8) (1.)
*  68 *                           (9,16) (0.1)
*  69 *                           (17) (1.)
*  70 *                           (18,24) (0.1) ..
*  71 *
*  72 *
*  73 * FULL_ON_W  =WEEK-SCHEDULE  (ALL) FULL_ON_D  ..
*  74 *
*  75 * FULL_OFF_W =WEEK-SCHEDULE  (ALL) FULL_OFF_D  ..
*  76 *
*  77 * LIGHT_ON_W =WEEK-SCHEDULE  (WD)  LIGHT_ON_D
*  78 *                           (WEH) LT_ON_WKND  ..
*  79 *
*  80 * PEOPLE_W   =WEEK-SCHEDULE  (WD)  PEOPLE_D
*  81 *                           (WEH) FULL_OFF_D  ..
*  82 *
*  83 * EQUIP_W    =WEEK-SCHEDULE  (WD)  EQUIP_ON_D
*  84 *                           (WEH) FULL_OFF_D  ..
*  85 *
*  86 * SHOP_IFL_W =WEEK-SCHEDULE  (WD)  SHOP_INF_D
*  87 *                           (WEH) FULL_OFF_D  ..
*  88 *
*  89 *
*  90 * $ FULL ON SCHEDULE
*  91 * FULL_ON    =SCHEDULE THRU DEC 31 FULL_ON_W  ..
*  92 *
*  93 * $ FULL OFF SCHEDULE
*  94 * FULL_OFF   =SCHEDULE THRU DEC 31 FULL_OFF_W  ..
*  95 *
*  96 * $ LIGHTING SCHEDULE
*  97 * LIGHT_SCHD =SCHEDULE THRU DEC 31 LIGHT_ON_W  ..
*  98 *
*  99 * $ OCCUPANCY SCHEDULE
* 100 * PEOPLE_SCH =SCHEDULE THRU DEC 31 PEOPLE_W  ..
* 101 *
* 102 * $ EQUIPMENT SCHEDULE
```

```
* 103 * EQUIP_SCHD =SCHEDULE THRU DEC 31 EQUIP_W  ..
* 104 *
* 105 * $ SHOP INFILTRATION SCHED
* 106 * SHOP_INFIL =SCHEDULE THRU DEC 31 SHOP_IFL_W  ..
* 107 *
* 108 *
* 109 *
* 110 *                      $ CONSTRUCTION TYPES
* 111 *
* 112 *
* 113 *
* 114 * FLOORCON =CONSTRUCTION   U-VALUE =  0.010  ..
* 115 *
* 116 *  $ ADMINISTRATION ROOF CONSTRUCTION
* 117 * ADMROOF  =CONSTRUCTION   LAYERS = ASHR-17   ..
* 118 *
* 119 *  $ ROOF CONSTRUCTION
* 120 * ROOFCON  =CONSTRUCTION   U-VALUE =  0.050  ..
* 121 * SHOPWALL =LAYERS         MATERIAL=(AS01,IN23)
* 122 *                          THICKNESS=(0.005,0.167)  ..
* 123 * WALLCON  =CONSTRUCTION   LAYERS = SHOPWALL  ..
* 124 * INWALL   =CONSTRUCTION   U-VALUE =  0.500  ..
* 125 * DOORCON  =CONSTRUCTION   U-VALUE =  0.400  ..
* 126 *
* 127 * G_TYPE1  =GLASS-TYPE     SHADING-COEF = 1.000
* 128 *                          PANES = 1
* 129 *                          GLASS-CONDUCTANCE =  1.130  ..
* 130 *
* 131 *
* 132 *
* 133 *
* 134 *                     $ SPACE DESCRIPTION
* 135 *
* 136 * EQUIP_SHOP =SPACE    AREA = 7280.0  VOLUME = 149240.0
* 137 *                      AZIMUTH = 90  ZONE-TYPE = CONDITIONED
* 138 *                      PEOPLE-SCHEDULE = PEOPLE_SCH  NUMBER-OF-PEOPLE = 40.0
* 139 *                      PEOPLE-HEAT-GAIN = 700.0  LIGHTING-TYPE = INCAND
* 140 *                      LIGHTING-KW = 5.23  LIGHTING-SCHEDULE = LIGHT_SCHD
* 141 *                      EQUIP-SCHEDULE = EQUIP_SCHD  EQUIPMENT-KW = 18.0
* 142 *                      INF-METHOD = AIR-CHANGE  AIR-CHANGES/HR = 0.2
* 143 *                      INF-SCHEDULE = SHOP_INFIL   ..
* 144 *
* 145 *              U-W      HEIGHT = 104.0  WIDTH = 70.0  CONS = FLOORCON
* 146 *                        AZIMUTH = 90   ..
* 147 *
* 148 *               ROOF     HEIGHT = 104.0  WIDTH = 70.0  CONS = ROOFCON
* 149 *                        AZIMUTH = 90  TILT = 0   ..
* 150 *
* 151 *               E-W      HEIGHT = 20.5  WIDTH = 104.0  CONS = WALLCON
* 152 *                        AZIMUTH = 180   ..
* 153 *
* 154 *                 DOOR   HEIGHT = 14.0  WIDTH = 16.0  CONS = DOORCON
* 155 *                        MULTIPLIER = 5.0   ..
* 156 *
* 157 *               E-W      HEIGHT = 20.5  WIDTH = 70.0  CONS = WALLCON
* 158 *                        AZIMUTH = 90   ..
* 159 *
* 160 *               E-W      HEIGHT = 20.5  WIDTH = 104.0  CONS = WALLCON
* 161 *                        AZIMUTH = 0   ..
* 162 *
* 163 *                 DOOR   HEIGHT = 14.0  WIDTH = 16.0  CONS = DOORCON
* 164 *                        MULTIPLIER = 5.0   ..
* 165 *
* 166 *               E-W      HEIGHT = 20.5  WIDTH = 16.0  CONS = WALLCON
* 167 *                        AZIMUTH = 270   ..
* 168 *
* 169 *
* 170 * AUTOREPAIR =SPACE    AREA = 7280.0  VOLUME = 149240.0
* 171 *                      AZIMUTH = 90  ZONE-TYPE = CONDITIONED
* 172 *                      PEOPLE-SCHEDULE = PEOPLE_SCH  NUMBER-OF-PEOPLE = 40.0
* 173 *                      PEOPLE-HEAT-GAIN = 700.0  LIGHTING-TYPE = INCAND
* 174 *                      LIGHTING-KW = 5.23  LIGHTING-SCHEDULE = LIGHT_SCHD
* 175 *                      EQUIP-SCHEDULE = EQUIP_SCHD  EQUIPMENT-KW = 18.0
* 176 *                      INF-METHOD = AIR-CHANGE  AIR-CHANGES/HR = 0.2
* 177 *                      INF-SCHEDULE = SHOP_INFIL   ..
* 178 *
* 179 *              U-W      HEIGHT = 104.0  WIDTH = 70.0  CONS = FLOORCON
* 180 *                        AZIMUTH = 90   ..
* 181 *
* 182 *               ROOF     HEIGHT = 104.0  WIDTH = 70.0  CONS = ROOFCON
* 183 *                        AZIMUTH = 90  TILT = 0   ..
* 184 *
* 185 *               E-W      HEIGHT = 20.5  WIDTH = 104.0  CONS = WALLCON
* 186 *                        AZIMUTH = 180   ..
* 187 *
* 188 *                 DOOR   HEIGHT = 14.0  WIDTH = 16.0  CONS = DOORCON
* 189 *                        MULTIPLIER = 5.0   ..
* 190 *
* 191 *               E-W      HEIGHT = 20.5  WIDTH = 70.0  CONS = WALLCON
* 192 *                        AZIMUTH = 270   ..
* 193 *
* 194 *               E-W      HEIGHT = 20.5  WIDTH = 104.0  CONS = WALLCON
* 195 *                        AZIMUTH = 0   ..
* 196 *
* 197 *                 DOOR   HEIGHT = 14.0  WIDTH = 16.0  CONS = DOORCON
* 198 *                        MULTIPLIER = 5.0   ..
* 199 *
* 200 *               E-W      HEIGHT = 20.5  WIDTH = 16.0  CONS = WALLCON
* 201 *                        AZIMUTH = 90   ..
* 202 *
* 203 *
* 204 * SUPPLYAREA =SPACE    AREA = 4080.0  VOLUME = 73440.0
* 205 *                      AZIMUTH = 90  ZONE-TYPE = CONDITIONED
* 206 *                      PEOPLE-SCHEDULE = PEOPLE_SCH  NUMBER-OF-PEOPLE = 25.0
* 207 *                      PEOPLE-HEAT-GAIN = 700.0  LIGHTING-TYPE = SUS-FLUOR
* 208 *                      LIGHTING-KW = 3.77  LIGHTING-SCHEDULE = LIGHT_SCHD
* 209 *                      EQUIP-SCHEDULE = EQUIP_SCHD  EQUIPMENT-KW = 7.0
* 210 *                      INF-METHOD = AIR-CHANGE  AIR-CHANGES/HR = 0.05
```

```
* 211 *                      INF-SCHEDULE = FULL_ON   ..
* 212 *
* 213 *              U-W      HEIGHT = 80.0  WIDTH = 51.0  CONS = FLOORCON
* 214 *                       AZIMUTH = 90   ..
* 215 *
* 216 *               ROOF    HEIGHT = 80.0  WIDTH = 51.0  CONS = ROOFCON
* 217 *                       AZIMUTH = 90  TILT = 0   ..
* 218 *
* 219 *               E-W     HEIGHT = 18.0  WIDTH = 80.0  CONS = WALLCON
* 220 *                       AZIMUTH = 0   ..
* 221 *
* 222 *                 DOOR  HEIGHT = 7.5  WIDTH = 3.0  CONS = DOORCON
* 223 *                       MULTIPLIER = 2.0   ..
* 224 *
* 225 *               E-W     HEIGHT = 18.0  WIDTH = 32.0  CONS = WALLCON
* 226 *                       AZIMUTH = 180   ..
* 227 *
* 228 *                 DOOR  HEIGHT = 7.5  WIDTH = 3.0  CONS = DOORCON ..
* 229 *
* 230 *
* 231 * ADMIN      =SPACE    AREA = 6440.0  VOLUME = 64400.0
* 232 *                      AZIMUTH = 90  ZONE-TYPE = CONDITIONED
* 233 *                      PEOPLE-SCHEDULE = PEOPLE_SCH  NUMBER-OF-PEOPLE = 40.0
* 234 *                      PEOPLE-HEAT-GAIN = 550.0
* 235 *                      LIGHTING-TYPE = REC-FLUOR-RV  LIGHTING-KW = 4.13
* 236 *                      LIGHTING-SCHEDULE = LIGHT_SCHD
* 237 *                      EQUIP-SCHEDULE = EQUIP_SCHD  EQUIPMENT-KW = 16.0
* 238 *                      INF-METHOD = AIR-CHANGE  AIR-CHANGES/HR = 0.15
* 239 *                      INF-SCHEDULE = PEOPLE_SCH   ..
* 240 *
* 241 *              U-W      HEIGHT = 46.0  WIDTH = 140.0  CONS = FLOORCON
* 242 *                       AZIMUTH = 90   ..
* 243 *
* 244 *               ROOF    HEIGHT = 46.0  WIDTH = 140.0  CONS = ADMROOF
* 245 *                       AZIMUTH = 90  TILT = 0   ..
* 246 *
* 247 *               E-W     HEIGHT = 10.0  WIDTH = 140.0  CONS = WALLCON
* 248 *                       AZIMUTH = 90   ..
* 249 *
* 250 *                 DOOR  HEIGHT = 7.5  WIDTH = 3.0  CONS = DOORCON
* 251 *                       MULTIPLIER = 4.0   ..
* 252 *
* 253 *                 WINDOW HEIGHT = 5.0  WIDTH = 4.0  G-T = G_TYPE1
* 254 *                       MULTIPLIER = 8.0   ..
* 255 *
* 256 *               E-W     HEIGHT = 10.0  WIDTH = 140.0  CONS = WALLCON
* 257 *                       AZIMUTH = 270   ..
* 258 *
* 259 *                 DOOR  HEIGHT = 7.5  WIDTH = 3.0  CONS = DOORCON
* 260 *                       MULTIPLIER = 4.0   ..
* 261 *
* 262 *                 WINDOW HEIGHT = 5.0  WIDTH = 4.0  G-T = G_TYPE1
* 263 *                       MULTIPLIER = 8.0   ..
* 264 *
* 265 *               E-W     HEIGHT = 10.0  WIDTH = 10.0  CONS = WALLCON
* 266 *                       AZIMUTH = 180   ..
* 267 *
* 268 *
* 269 * INSPECTION =SPACE    AREA = 3204.0  VOLUME = 65682.0
* 270 *                      AZIMUTH = 90  ZONE-TYPE = CONDITIONED
* 271 *                      PEOPLE-SCHEDULE = PEOPLE_SCH  NUMBER-OF-PEOPLE = 10.0
* 272 *                      PEOPLE-HEAT-GAIN = 700.0  LIGHTING-TYPE = INCAND
* 273 *                      LIGHTING-KW = 3.52  LIGHTING-SCHEDULE = LIGHT_SCHD
* 274 *                      EQUIP-SCHEDULE = EQUIP_SCHD  EQUIPMENT-KW = 10.0
* 275 *                      INF-METHOD = AIR-CHANGE  AIR-CHANGES/HR = 0.3
* 276 *                      INF-SCHEDULE = SHOP_INFIL   ..
* 277 *
* 278 *              U-W      HEIGHT = 36.0  WIDTH = 89.0  CONS = FLOORCON
* 279 *                       AZIMUTH = 90   ..
* 280 *
* 281 *               ROOF    HEIGHT = 36.0  WIDTH = 89.0  CONS = ROOFCON
* 282 *                       AZIMUTH = 90  TILT = 0   ..
* 283 *
* 284 *               E-W     HEIGHT = 20.5  WIDTH = 89.0  CONS = WALLCON
* 285 *                       AZIMUTH = 90   ..
* 286 *
* 287 *                 DOOR  HEIGHT = 14.0  WIDTH = 16.0  CONS = DOORCON
* 288 *                       MULTIPLIER = 4.0   ..
* 289 *
* 290 *               E-W     HEIGHT = 20.5  WIDTH = 89.0  CONS = WALLCON
* 291 *                       AZIMUTH = 270   ..
* 292 *
* 293 *                 DOOR  HEIGHT = 14.0  WIDTH = 16.0  CONS = DOORCON
* 294 *                       MULTIPLIER = 4.0   ..
* 295 *
* 296 *
* 297 * ICS_WRHSE  =SPACE    AREA = 12240.0  VOLUME = 220320.0
* 298 *                      AZIMUTH = 90  ZONE-TYPE = CONDITIONED
* 299 *                      PEOPLE-SCHEDULE = PEOPLE_SCH  NUMBER-OF-PEOPLE = 5.0
* 300 *                      PEOPLE-HEAT-GAIN = 600.0  LIGHTING-TYPE = INCAND
* 301 *                      LIGHTING-KW = 6.01  LIGHTING-SCHEDULE = LIGHT_SCHD
* 302 *                      EQUIP-SCHEDULE = EQUIP_SCHD  EQUIPMENT-KW = 2.0
* 303 *                      INF-METHOD = NONE   ..
* 304 *
* 305 *              U-W      HEIGHT = 80.0  WIDTH = 153.0  CONS = FLOORCON
* 306 *                       AZIMUTH = 90   ..
* 307 *
* 308 *               ROOF    HEIGHT = 80.0  WIDTH = 153.0  CONS = ROOFCON
* 309 *                       AZIMUTH = 90  TILT = 0   ..
* 310 *
* 311 *               E-W     HEIGHT = 18.0  WIDTH = 153.0  CONS = WALLCON
* 312 *                       AZIMUTH = 90   ..
* 313 *
* 314 *               E-W     HEIGHT = 18.0  WIDTH = 80.0  CONS = WALLCON
* 315 *                       AZIMUTH = 180   ..
* 316 *
* 317 *                 DOOR  HEIGHT = 14.0  WIDTH = 16.0  CONS = DOORCON ..
* 318 *
```

```
* 319 *                  DOOR   HEIGHT = 7.5  WIDTH = 3.0  CONS = DOORCON ..
* 320 *
* 321 *                E-W      HEIGHT = 18.0  WIDTH = 153.0  CONS = WALLCON
* 322 *                         AZIMUTH = 270   ..
* 323 *
* 324 *                E-W      HEIGHT = 18.0  WIDTH = 44.0  CONS = WALLCON
* 325 *                         AZIMUTH = 0   ..
* 326 *
* 327 *
* 328 * END  ..
* 329 * COMPUTE LOADS  ..
* 330 *
* 331 * INPUT SYSTEMS  ..
```

```
* 332 *
* 333 *
* 334 *                $----------------------------------------$
* 335 *                $ E Z - D O E   S Y S T E M S  I N P U T $
* 336 *                $----------------------------------------$
* 337 *
* 338 *                   $ GENERAL PROJECT DATA
* 339 *
* 340 * TITLE  LINE-1 *     EMC      ENGINEERS      INC.     *
* 341 *        LINE-2 *EZDOE - ELITE SOFTWARE DEVELOPMENT INC*
* 342 *        LINE-3 *     DENVER,       CO       80227     *
* 343 *
* 344 *        LINE-4 *BUILDING 1750 MOTOR REPAIR SHOP         *
* 345 *        LINE-5 *MODEL WITH SET BACK AND DDC             * ..
* 346 * ABORT              ERRORS  ..
* 347 * DIAGNOSTIC         WARNINGS ..
* 348 * SYSTEMS-REPORT     SUMMARY=(SS-A,SS-C,SS-F,SS-O)  ..
* 349 *
* 350 *                    $ SCHEDULES
* 351 *
* 352 * FULL_ON_D  =DAY-SCHEDULE  (1,24) (1.) ..
* 353 * FULL_OFF_D =DAY-SCHEDULE  (1,24) (0.) ..
* 354 * HEAT1_ON_D =DAY-SCHEDULE  (1,24) (55.) ..
* 355 * HEAT2_ON_D =DAY-SCHEDULE  (1,24) (68.) ..
* 356 * FAN_WSB_D  =DAY-SCHEDULE  (1,4) (0.)
* 357 *                           (5,17) (1.)
* 358 *                           (18,24) (0.) ..
* 359 * HT68_WSB_D =DAY-SCHEDULE  (1,4) (50.)
* 360 *                           (5,17) (68.)
* 361 *                           (18,24) (50.) ..
* 362 * HEAT50_D   =DAY-SCHEDULE  (1,24) (50.) ..
* 363 * HT55_WSB_D =DAY-SCHEDULE  (1,4) (50.)
* 364 *                           (5,17) (55.)
* 365 *                           (18,24) (50.) ..
* 366 *
* 367 * FULL_ON_W  =WEEK-SCHEDULE  (ALL) FULL_ON_D  ..
* 368 *
* 369 * FULL_OFF_W =WEEK-SCHEDULE  (ALL) FULL_OFF_D  ..
* 370 *
* 371 * HEAT1_ON_W =WEEK-SCHEDULE  (ALL) HEAT1_ON_D  ..
* 372 *
* 373 * HEAT2_ON_W =WEEK-SCHEDULE  (ALL) HEAT2_ON_D  ..
* 374 *
* 375 * FAN_WSB_W  =WEEK-SCHEDULE  (WD)  FAN_WSB_D
* 376 *                           (SAT) FULL_OFF_D
* 377 *                           (SUN) FULL_OFF_D
* 378 *                           (HOL) FAN_WSB_D ..
* 379 *
* 380 * HT55_WSB_W =WEEK-SCHEDULE  (WD)  HT55_WSB_D
* 381 *                           (SAT) HEAT50_D
* 382 *                           (SUN) HEAT50_D
* 383 *                           (HOL) HT55_WSB_D ..
* 384 *
* 385 * HT68_WSB_W =WEEK-SCHEDULE  (WD)  HT68_WSB_D
* 386 *                           (SAT) HEAT50_D
* 387 *                           (SUN) HEAT50_D
* 388 *                           (HOL) HT68_WSB_D ..
* 389 *
* 390 *
* 391 * $ FULL ON SCHEDULE
* 392 * FULL_ON    =SCHEDULE THRU DEC 31 FULL_ON_W  ..
* 393 *
* 394 * $ FULL OFF SCHEDULE
* 395 * FULL_OFF   =SCHEDULE THRU DEC 31 FULL_OFF_W  ..
* 396 *
* 397 * $ HEAT SCHEDULE, 55 DEG
* 398 * HEAT55_ON  =SCHEDULE THRU DEC 31 HEAT1_ON_W  ..
* 399 *
* 400 * $ HEAT SCHEDULE 68 DEG
* 401 * HEAT68_ON  =SCHEDULE THRU DEC 31 HEAT2_ON_W  ..
* 402 *
* 403 * $ FAN SCHED WITH SET BACK
* 404 * FAN_W_SB   =SCHEDULE THRU DEC 31 FAN_WSB_W  ..
* 405 *
* 406 * $ HEAT 55F WITH 50F SET B
* 407 * HT55_W_SB  =SCHEDULE THRU DEC 31 HT55_WSB_W  ..
* 408 *
* 409 * $ HEAT 68F W 50F SET BACK
* 410 * HT68_W_SB  =SCHEDULE THRU DEC 31 HT68_WSB_W  ..
* 411 *
* 412 *
* 413 *
* 414 *                    $ ZONE DESCRIPTION
* 415 *
* 416 * EQUIP_SHOP =ZONE    DESIGN-HEAT-T = 55.0  DESIGN-COOL-T = 75.0
* 417 *                     HEAT-TEMP-SCH = HT55_W_SB  ZONE-TYPE = CONDITIONED
* 418 *                     THERMOSTAT-TYPE = PROPORTIONAL  ASSIGNED-CFM = 9700.
* 419 *                     OUTSIDE-AIR-CFM = 9700.  SIZING-OPTION = FROM-LOADS
* 420 *                     RATED-CFM = 9700.0  MIN-CFM-RATIO = 1.0
* 421 *                     EXHAUST-CFM = 9700.0  HEATING-CAPACITY = -652520.0   ..
* 422 *
* 423 * AUTOREPAIR =ZONE    DESIGN-HEAT-T = 55.0  DESIGN-COOL-T = 75.0
* 424 *                     HEAT-TEMP-SCH = HT55_W_SB  ZONE-TYPE = CONDITIONED
* 425 *                     THERMOSTAT-TYPE = PROPORTIONAL  ASSIGNED-CFM = 9700.
* 426 *                     OUTSIDE-AIR-CFM = 9700.  SIZING-OPTION = FROM-LOADS
* 427 *                     RATED-CFM = 9700.0  MIN-CFM-RATIO = 1.0
* 428 *                     EXHAUST-CFM = 9700.0  HEATING-CAPACITY = -652520.0   ..
* 429 *
* 430 * SUPPLYAREA =ZONE    DESIGN-HEAT-T = 68.0  DESIGN-COOL-T = 75.0
* 431 *                     HEAT-TEMP-SCH = HT68_W_SB  ZONE-TYPE = CONDITIONED
```

```
* 432 *                      THERMOSTAT-TYPE = PROPORTIONAL
* 433 *                      BASEBOARD-CTRL = THERMOSTATIC
* 434 *                      BASEBOARD-RATING = -44320.  ASSIGNED-CFM = 1230.
* 435 *                      OUTSIDE-AIR-CFM = 344.  SIZING-OPTION = FROM-LOADS
* 436 *                      RATED-CFM = 1230.0  MIN-CFM-RATIO = 1.0
* 437 *                      EXHAUST-CFM = 344.0  HEATING-CAPACITY = -28080.0   ..
* 438 *
* 439 * ADMIN       =ZONE    DESIGN-HEAT-T = 68.0  DESIGN-COOL-T = 75.0
* 440 *                      HEAT-TEMP-SCH = HT68_W_SB  ZONE-TYPE = CONDITIONED
* 441 *                      THERMOSTAT-TYPE = PROPORTIONAL
* 442 *                      BASEBOARD-CTRL = THERMOSTATIC
* 443 *                      BASEBOARD-RATING = -87340.  ASSIGNED-CFM = 3290.
* 444 *                      OUTSIDE-AIR-CFM = 1020.  SIZING-OPTION = FROM-LOADS
* 445 *                      RATED-CFM = 3290.0  MIN-CFM-RATIO = 1.0
* 446 *                      EXHAUST-CFM = 1020.0  HEATING-CAPACITY = -83400.0   ..
* 447 *
* 448 * INSPECTION =ZONE    DESIGN-HEAT-T = 55.0  DESIGN-COOL-T = 75.0
* 449 *                      HEAT-TEMP-SCH = HT55_W_SB  ZONE-TYPE = CONDITIONED
* 450 *                      THERMOSTAT-TYPE = PROPORTIONAL  ASSIGNED-CFM = 4000.
* 451 *                      OUTSIDE-AIR-CFM = 4000.  SIZING-OPTION = FROM-LOADS
* 452 *                      RATED-CFM = 4000.0  MIN-CFM-RATIO = 1.0
* 453 *                      EXHAUST-CFM = 4000.0  HEATING-CAPACITY = -269080.0   ..
* 454 *
* 455 * ICS_WRHSE  =ZONE    DESIGN-HEAT-T = 55.0  DESIGN-COOL-T = 75.0
* 456 *                      HEAT-TEMP-SCH = HT55_W_SB  ZONE-TYPE = CONDITIONED
* 457 *                      THERMOSTAT-TYPE = PROPORTIONAL  ASSIGNED-CFM = 14606.
* 458 *                      OUTSIDE-AIR-CFM = 14606.  SIZING-OPTION = FROM-LOADS
* 459 *                      RATED-CFM = 14606.0  MIN-CFM-RATIO = 1.0
* 460 *                      HEATING-CAPACITY = -613940.0   ..
* 461 *
* 462 *
* 463 *                      $ SYSTEM DESCRIPTION
* 464 *
* 465 * HV3AB       =SYSTEM    SYSTEM-TYPE = HVSYS
* 466 *                        MAX-SUPPLY-T = 55.0  HEATING-SCHEDULE = HEAT55_ON
* 467 *                        MIN-HUMIDITY = 30.0  ECONO-LIMIT-T = 65.0
* 468 *                        ECONO-LOW-LIMIT = 55.0  HEAT-CONTROL = COLDEST
* 469 *                        SUPPLY-CFM = 9700.  RATED-CFM = 9700.
* 470 *                        MIN-OUTSIDE-AIR = 1.0  FAN-SCHEDULE = FAN_W_SB
* 471 *                        SUPPLY-DELTA-T = 2.4  SUPPLY-KW = 0.00078
* 472 *                        MOTOR-PLACEMENT = OUTSIDE-AIRFLOW
* 473 *                        NIGHT-CYCLE-CTRL = CYCLE-ON-ANY  NIGHT-VENT-DT = 0.0
* 474 *                        HEATING-CAPACITY = -652520.  FURNACE-AUX = 0.
* 475 *                        ZONE-NAMES = (EQUIP_SHOP)  ..
* 476 *
* 477 * HV3CD       =SYSTEM    SYSTEM-TYPE = HVSYS
* 478 *                        MAX-SUPPLY-T = 55.0  HEATING-SCHEDULE = HEAT55_ON
* 479 *                        MIN-HUMIDITY = 30.0  ECONO-LIMIT-T = 65.0
* 480 *                        ECONO-LOW-LIMIT = 55.0  HEAT-CONTROL = COLDEST
* 481 *                        SUPPLY-CFM = 9700.  RATED-CFM = 9700.
* 482 *                        MIN-OUTSIDE-AIR = 1.0  FAN-SCHEDULE = FAN_W_SB
* 483 *                        SUPPLY-DELTA-T = 2.4  SUPPLY-KW = 0.00078
* 484 *                        MOTOR-PLACEMENT = OUTSIDE-AIRFLOW
* 485 *                        NIGHT-CYCLE-CTRL = CYCLE-ON-ANY  NIGHT-VENT-DT = 0.0
* 486 *                        HEATING-CAPACITY = -652520.  FURNACE-AUX = 0.
* 487 *                        ZONE-NAMES = (AUTOREPAIR)  ..
* 488 *
* 489 * HV2         =SYSTEM    SYSTEM-TYPE = HVSYS
* 490 *                        MAX-SUPPLY-T = 68.0  HEATING-SCHEDULE = HEAT68_ON
* 491 *                        MIN-HUMIDITY = 30.0  ECONO-LIMIT-T = 65.0
* 492 *                        ECONO-LOW-LIMIT = 55.0  HEAT-CONTROL = COLDEST
* 493 *                        SUPPLY-CFM = 1230.  RATED-CFM = 1230.
* 494 *                        MIN-OUTSIDE-AIR = 0.28  FAN-SCHEDULE = FAN_W_SB
* 495 *                        SUPPLY-DELTA-T = 2.4  SUPPLY-KW = 0.00078
* 496 *                        MOTOR-PLACEMENT = OUTSIDE-AIRFLOW
* 497 *                        NIGHT-CYCLE-CTRL = CYCLE-ON-ANY  NIGHT-VENT-DT = 0.0
* 498 *                        HEATING-CAPACITY = -28080.  FURNACE-AUX = 0.
* 499 *                        RETURN-AIR-PATH = DUCT
* 500 *                        ZONE-NAMES = (SUPPLYAREA)  ..
* 501 *
* 502 * HV1         =SYSTEM    SYSTEM-TYPE = HVSYS
* 503 *                        MAX-SUPPLY-T = 68.0  HEATING-SCHEDULE = HEAT68_ON
* 504 *                        MIN-HUMIDITY = 30.0  ECONO-LIMIT-T = 65.0
* 505 *                        ECONO-LOW-LIMIT = 55.0  HEAT-CONTROL = COLDEST
* 506 *                        SUPPLY-CFM = 3290.  RATED-CFM = 3290.
* 507 *                        MIN-OUTSIDE-AIR = 0.31  FAN-SCHEDULE = FAN_W_SB
* 508 *                        SUPPLY-DELTA-T = 2.4  SUPPLY-KW = 0.00078
* 509 *                        MOTOR-PLACEMENT = OUTSIDE-AIRFLOW
* 510 *                        NIGHT-CYCLE-CTRL = CYCLE-ON-ANY  NIGHT-VENT-DT = 0.0
* 511 *                        HEATING-CAPACITY = -83400.  FURNACE-AUX = 0.
* 512 *                        RETURN-AIR-PATH = DUCT
* 513 *                        ZONE-NAMES = (ADMIN)  ..
* 514 *
* 515 * HV4         =SYSTEM    SYSTEM-TYPE = HVSYS
* 516 *                        MAX-SUPPLY-T = 55.0  HEATING-SCHEDULE = HEAT55_ON
* 517 *                        MIN-HUMIDITY = 30.0  ECONO-LIMIT-T = 65.0
* 518 *                        ECONO-LOW-LIMIT = 55.0  HEAT-CONTROL = COLDEST
* 519 *                        SUPPLY-CFM = 4000.  RATED-CFM = 4000.
* 520 *                        MIN-OUTSIDE-AIR = 1.0  FAN-SCHEDULE = FAN_W_SB
* 521 *                        SUPPLY-DELTA-T = 2.4  SUPPLY-KW = 0.00078
* 522 *                        MOTOR-PLACEMENT = OUTSIDE-AIRFLOW
* 523 *                        NIGHT-CYCLE-CTRL = CYCLE-ON-ANY  NIGHT-VENT-DT = 0.0
* 524 *                        HEATING-CAPACITY = -269080.  FURNACE-AUX = 0.
* 525 *                        ZONE-NAMES = (INSPECTION)  ..
* 526 *
* 527 * UH_ZONE6    =SYSTEM    SYSTEM-TYPE = UHT
* 528 *                        MAX-SUPPLY-T = 91.9  HEATING-SCHEDULE = HEAT55_ON
* 529 *                        RATED-CFM = 14606.  FAN-SCHEDULE = FAN_W_SB
* 530 *                        SUPPLY-DELTA-T = 0.2  SUPPLY-KW = 0.00008
* 531 *                        NIGHT-CYCLE-CTRL = CYCLE-ON-ANY
* 532 *                        HEATING-CAPACITY = -613940.  FURNACE-AUX = 0.
* 533 *                        ZONE-NAMES = (ICS_WRHSE)  ..
* 534 *
* 535 * END  ..
* 536 * COMPUTE SYSTEMS  ..
* 537 *
* 538 * INPUT PLANT  ..
```

```
* 539 *
* 540 *
* 541 *                  $-------------------------------------$
* 542 *                  $ E Z - D O E  P L A N T S  I N P U T $
* 543 *                  $-------------------------------------$
* 544 *
* 545 *                     $ GENERAL PROJECT DATA
* 546 *
* 547 * TITLE  LINE-1 *     EMC      ENGINEERS      INC.     *
* 548 *        LINE-2 *EZDOE - ELITE SOFTWARE DEVELOPMENT INC*
* 549 *        LINE-3 *     DENVER,       CO       80227     *
* 550 *
* 551 *        LINE-4 *BUILDING 1750 MOTOR REPAIR SHOP         *
* 552 *        LINE-5 *MODEL WITH SET BACK AND DDC             * ..
* 553 *
* 554 * ABORT              ERRORS  ..
* 555 * DIAGNOSTIC         WARNINGS ..
* 556 * PLANT-REPORT       SUMMARY=(PS-A,PS-B,BEPS)
* 557 *   ..
* 558 *
* 559 *                     $ SCHEDULES
* 560 *
* 561 *
* 562 *
* 563 *
* 564 *
* 565 *                     $ EQUIPMENT DESCRIPTION
* 566 *
* 567 * BOILER1&2  =PLANT-EQUIPMENT   TYPE = HW-BOILER
* 568 *                       SIZE = 1.4  INSTALLED-NUMBER = 2
* 569 *                       MAX-NUMBER-AVAIL = 2  ..
* 570 *
* 571 * DHW        =PLANT-EQUIPMENT   TYPE = HW-BOILER
* 572 *                       SIZE = 0.3  ..
* 573 *
* 574 * PLANT-PARAMETERS      CCIRC-HEAD = 63.2    ..
* 575 *
* 576 *
* 577 * ENERGY-RESOURCE       RESOURCE = ELECTRICITY  ..
* 578 * ENERGY-RESOURCE       RESOURCE = FUEL-OIL  ..
* 579 *
* 580 * BOILERS    =LOAD-ASSIGNMENT  TYPE = HEATING
* 581 *                              OPERATION-MODE = RUN-NEEDED
* 582 *
* 583 *                              LOAD-RANGE =    1.338
* 584 *                              PLANT-EQUIPMENT = BOILER1&2
* 585 *                              NUMBER =    2  ..
* 586 *
* 587 * DHWASSIGN  =LOAD-ASSIGNMENT  TYPE = HEATING
* 588 *                              OPERATION-MODE = RUN-ALL
* 589 *
* 590 *                              LOAD-RANGE =    0.315
* 591 *                              PLANT-EQUIPMENT = DHW
* 592 *                              NUMBER =    1  ..
* 593 *
* 594 *
* 595 *
* 596 * END  ..
* 597 * COMPUTE PLANT ..
* 598 * STOP ..
```

EMC ENGINEERS INC. EZDOE - ELITE SOFTWARE DEVELOPMENT INC DOE-2.1D 3/18/1995 13: 5:55 PDL RUN 1
DENVER, CO 80227 BUILDING 1750 MOTOR REPAIR SHOP MODEL WITH SET BACK AND DDC
REPORT- BEPS ESTIMATED BUILDING ENERGY PERFORMANCE WEATHER FILE- MASSENA, NY

ENERGY TYPE IN SITE MBTU-	ELECTRICITY	FUEL-OIL	
CATEGORY OF USE			
SPACE HEAT	92.52	3,580.20	0.00
SPACE COOL	0.00	0.00	0.00
HVAC AUX	351.96	0.00	0.00
DOM HOT WTR	0.00	0.00	0.00
AUX SOLAR	0.00	0.00	0.00
LIGHTS	271.97	0.00	0.00
VERT TRANS	0.00	0.00	0.00
MISC EQUIP	381.19	0.00	0.00
TOTAL	1,097.64	3,580.20	0.00

TOTAL SITE ENERGY 4677.81 MBTU 115.4 KBTU/SQFT-YR GROSS-AREA 115.4 KBTU/SQFT-YR NET-AREA
TOTAL SOURCE ENERGY 6876.34 MBTU 169.7 KBTU/SQFT-YR GROSS-AREA 169.7 KBTU/SQFT-YR NET-AREA

PERCENT OF HOURS ANY SYSTEM ZONE OUTSIDE OF THROTTLING RANGE = 8.3
PERCENT OF HOURS ANY PLANT LOAD NOT SATISFIED = 0.0

NOTE ELECTRICITY AND/OR FUEL USED TO GENERATE ELECTRICITY IS APPORTIONED BASED
ON THE YEARLY DEMAND. ALL OTHER ENERGY TYPES ARE APPORTIONED HOURLY.

MO	UTILITY-	ELECTRICITY	FUEL-OIL
	TOTAL(MBTU)	120.725	952.820
JAN	PEAK(KBTU)	412.034	3428.815
	DY/HR	6/14	26/ 7
	TOTAL(MBTU)	104.248	669.902
FEB	PEAK(KBTU)	387.883	2713.303
	DY/HR	14/11	17/ 5
	TOTAL(MBTU)	110.782	563.598
MAR	PEAK(KBTU)	380.991	2838.634
	DY/HR	14/14	9/ 7
	TOTAL(MBTU)	84.285	164.349
APR	PEAK(KBTU)	380.736	1624.751
	DY/HR	1/14	1/ 5
	TOTAL(MBTU)	79.887	49.970
MAY	PEAK(KBTU)	377.610	1259.930
	DY/HR	3/14	17/ 5
	TOTAL(MBTU)	76.743	2.386
JUN	PEAK(KBTU)	353.614	311.086
	DY/HR	7/14	8/ 5
	TOTAL(MBTU)	73.694	0.402
JUL	PEAK(KBTU)	339.608	41.266
	DY/HR	29/14	25/ 5
	TOTAL(MBTU)	79.955	1.260
AUG	PEAK(KBTU)	339.608	188.520
	DY/HR	31/14	22/ 5
	TOTAL(MBTU)	77.584	11.537
SEP	PEAK(KBTU)	339.608	701.929
	DY/HR	30/14	23/ 6
	TOTAL(MBTU)	80.198	105.917
OCT	PEAK(KBTU)	380.705	1480.557
	DY/HR	27/14	21/ 6
	TOTAL(MBTU)	96.172	342.238
NOV	PEAK(KBTU)	380.948	2415.152
	DY/HR	28/14	29/ 7
	TOTAL(MBTU)	112.890	714.665
DEC	PEAK(KBTU)	387.765	2773.210
	DY/HR	28/11	28/ 7
	ONE YEAR	1097.161	3579.044
	USE/PEAK	412.034	3428.815

```
*   3 *
*   4 *
*   5 *                  $----------------------------------$
*   6 *                  $ E Z - D O E   L O A D S  I N P U T $
*   7 *                  $----------------------------------$
*   8 *
*   9 *                     $ GENERAL PROJECT DATA
*  10 *
*  11 * TITLE  LINE-1 *      EMC       ENGINEERS       INC.     *
*  12 *        LINE-2 *EZDOE - ELITE SOFTWARE DEVELOPMENT INC*
*  13 *        LINE-3 *      DENVER,        CO        80227     *
*  14 *
*  15 *        LINE-4 *BUILDING 1750 MOTOR REPAIR SHOP          *
*  16 *        LINE-5 *MODEL WITH SET BACK AND DDC              * ..
*  17 *
*  18 * ABORT               ERRORS  ..
*  19 * DIAGNOSTIC          WARNINGS ..
*  20 * LOADS-REPORT        SUMMARY=(LS-C,LS-D)
*  21 *                     HOURLY-DATA-SAVE = YES  ..
*  22 * BUILDING-LOCATION   HOLIDAY = NO
*  23 *                     X-REF = 0.0
*  24 *                     Y-REF = 0.0  ..
*  25 * RUN-PERIOD          JAN 1 1994 THRU DEC 31 1994  ..
*  26 *
*  27 *
*  28 *                      $ SCHEDULES
*  29 *
*  30 * FULL_ON_D  =DAY-SCHEDULE  (1,24) (1.) ..
*  31 *
*  32 * FULL_OFF_D =DAY-SCHEDULE  (1,24) (0.) ..
*  33 *
*  34 * LIGHT_ON_D =DAY-SCHEDULE  (1,5) (0.23)
*  35 *                           (6,7) (0.35)
*  36 *                           (8,9) (0.5,0.6)
*  37 *                           (10,11) (0.75)
*  38 *                           (12) (0.5)
*  39 *                           (13,14) (0.75)
*  40 *                           (15) (0.5)
*  41 *                           (16,18) (0.4)
*  42 *                           (19) (0.3)
*  43 *                           (20,24) (0.23) ..
*  44 *
*  45 * LT_ON_WKND =DAY-SCHEDULE  (1,6) (0.23)
*  46 *                           (7,19) (0.07)
*  47 *                           (20,24) (0.23) ..
*  48 *
*  49 * PEOPLE_D   =DAY-SCHEDULE  (1,5) (0.)
*  50 *                           (6,7) (0.1,0.5)
*  51 *                           (8,11) (1.)
*  52 *                           (12) (0.8)
*  53 *                           (13,16) (1.)
*  54 *                           (17,18) (0.5,0.1)
*  55 *                           (19,24) (0.) ..
*  56 *
*  57 * EQUIP_ON_D =DAY-SCHEDULE  (1,5) (0.05)
*  58 *                           (6,7) (0.1,0.2)
*  59 *                           (8,9) (0.3)
*  60 *                           (10,11) (0.4,0.7)
*  61 *                           (12,13) (0.4)
*  62 *                           (14,15) (0.8)
*  63 *                           (16,18) (0.7,0.3,0.1)
*  64 *                           (19,24) (0.05) ..
*  65 *
*  66 * SHOP_INF_D =DAY-SCHEDULE  (1,7) (0.1)
*  67 *                           (8) (1.)
*  68 *                           (9,16) (0.1)
*  69 *                           (17) (1.)
*  70 *                           (18,24) (0.1) ..
*  71 *
*  72 *
*  73 * FULL_ON_W  =WEEK-SCHEDULE  (ALL) FULL_ON_D  ..
*  74 *
*  75 * FULL_OFF_W =WEEK-SCHEDULE  (ALL) FULL_OFF_D  ..
*  76 *
*  77 * LIGHT_ON_W =WEEK-SCHEDULE  (WD)  LIGHT_ON_D
*  78 *                           (WEH) LT_ON_WKND  ..
*  79 *
*  80 * PEOPLE_W   =WEEK-SCHEDULE  (WD)  PEOPLE_D
*  81 *                           (WEH) FULL_OFF_D  ..
*  82 *
*  83 * EQUIP_W    =WEEK-SCHEDULE  (WD)  EQUIP_ON_D
*  84 *                           (WEH) FULL_OFF_D  ..
*  85 *
*  86 * SHOP_IFL_W =WEEK-SCHEDULE  (WD)  SHOP_INF_D
*  87 *                           (WEH) FULL_OFF_D  ..
*  88 *
*  89 *
*  90 * $ FULL ON SCHEDULE
*  91 * FULL_ON    =SCHEDULE THRU DEC 31 FULL_ON_W  ..
*  92 *
*  93 * $ FULL OFF SCHEDULE
*  94 * FULL_OFF   =SCHEDULE THRU DEC 31 FULL_OFF_W  ..
*  95 *
*  96 * $ LIGHTING SCHEDULE
*  97 * LIGHT_SCHD =SCHEDULE THRU DEC 31 LIGHT_ON_W  ..
*  98 *
*  99 * $ OCCUPANCY SCHEDULE
* 100 * PEOPLE_SCH =SCHEDULE THRU DEC 31 PEOPLE_W  ..
* 101 *
* 102 * $ EQUIPMENT SCHEDULE
```

```
* 103 * EQUIP_SCHD =SCHEDULE THRU DEC 31 EQUIP_W  ..
* 104 *
* 105 * $ SHOP INFILTRATION SCHED
* 106 * SHOP_INFIL =SCHEDULE THRU DEC 31 SHOP_IFL_W  ..
* 107 *
* 108 *
* 109 *
* 110 *                      $ CONSTRUCTION TYPES
* 111 *
* 112 *
* 113 *
* 114 * FLOORCON =CONSTRUCTION   U-VALUE =  0.010  ..
* 115 *
* 116 *  $ ADMINISTRATION ROOF CONSTRUCTION
* 117 * ADMROOF  =CONSTRUCTION   LAYERS = ASHR-17   ..
* 118 *
* 119 *  $ ROOF CONSTRUCTION
* 120 * ROOFCON  =CONSTRUCTION   U-VALUE =  0.050  ..
* 121 * SHOPWALL =LAYERS         MATERIAL=(AS01,IN23)
* 122 *                          THICKNESS=(0.005,0.167)  ..
* 123 * WALLCON  =CONSTRUCTION   LAYERS = SHOPWALL  ..
* 124 * INWALL   =CONSTRUCTION   U-VALUE =  0.500  ..
* 125 * DOORCON  =CONSTRUCTION   U-VALUE =  0.400  ..
* 126 *
* 127 * G_TYPE1  =GLASS-TYPE     SHADING-COEF = 1.000
* 128 *                          PANES = 1
* 129 *                          GLASS-CONDUCTANCE =  1.130  ..
* 130 *
* 131 *
* 132 *
* 133 *
* 134 *                     $ SPACE DESCRIPTION
* 135 *
* 136 * EQUIP_SHOP =SPACE    AREA = 7280.0  VOLUME = 149240.0
* 137 *                      AZIMUTH = 90  ZONE-TYPE = CONDITIONED
* 138 *                      PEOPLE-SCHEDULE = PEOPLE_SCH  NUMBER-OF-PEOPLE = 40.0
* 139 *                      PEOPLE-HEAT-GAIN = 700.0  LIGHTING-TYPE = INCAND
* 140 *                      LIGHTING-KW = 5.23  LIGHTING-SCHEDULE = LIGHT_SCHD
* 141 *                      EQUIP-SCHEDULE = EQUIP_SCHD  EQUIPMENT-KW = 18.0
* 142 *                      INF-METHOD = AIR-CHANGE  AIR-CHANGES/HR = 0.2
* 143 *                      INF-SCHEDULE = SHOP_INFIL   ..
* 144 *
* 145 *              U-W      HEIGHT = 104.0  WIDTH = 70.0  CONS = FLOORCON
* 146 *                        AZIMUTH = 90   ..
* 147 *
* 148 *               ROOF     HEIGHT = 104.0  WIDTH = 70.0  CONS = ROOFCON
* 149 *                        AZIMUTH = 90  TILT = 0   ..
* 150 *
* 151 *               E-W      HEIGHT = 20.5  WIDTH = 104.0  CONS = WALLCON
* 152 *                        AZIMUTH = 180   ..
* 153 *
* 154 *                 DOOR   HEIGHT = 14.0  WIDTH = 16.0  CONS = DOORCON
* 155 *                        MULTIPLIER = 5.0   ..
* 156 *
* 157 *               E-W      HEIGHT = 20.5  WIDTH = 70.0  CONS = WALLCON
* 158 *                        AZIMUTH = 90   ..
* 159 *
* 160 *               E-W      HEIGHT = 20.5  WIDTH = 104.0  CONS = WALLCON
* 161 *                        AZIMUTH = 0   ..
* 162 *
* 163 *                 DOOR   HEIGHT = 14.0  WIDTH = 16.0  CONS = DOORCON
* 164 *                        MULTIPLIER = 5.0   ..
* 165 *
* 166 *               E-W      HEIGHT = 20.5  WIDTH = 16.0  CONS = WALLCON
* 167 *                        AZIMUTH = 270   ..
* 168 *
* 169 *
* 170 * AUTOREPAIR =SPACE    AREA = 7280.0  VOLUME = 149240.0
* 171 *                      AZIMUTH = 90  ZONE-TYPE = CONDITIONED
* 172 *                      PEOPLE-SCHEDULE = PEOPLE_SCH  NUMBER-OF-PEOPLE = 40.0
* 173 *                      PEOPLE-HEAT-GAIN = 700.0  LIGHTING-TYPE = INCAND
* 174 *                      LIGHTING-KW = 5.23  LIGHTING-SCHEDULE = LIGHT_SCHD
* 175 *                      EQUIP-SCHEDULE = EQUIP_SCHD  EQUIPMENT-KW = 18.0
* 176 *                      INF-METHOD = AIR-CHANGE  AIR-CHANGES/HR = 0.2
* 177 *                      INF-SCHEDULE = SHOP_INFIL   ..
* 178 *
* 179 *              U-W      HEIGHT = 104.0  WIDTH = 70.0  CONS = FLOORCON
* 180 *                        AZIMUTH = 90   ..
* 181 *
* 182 *               ROOF     HEIGHT = 104.0  WIDTH = 70.0  CONS = ROOFCON
* 183 *                        AZIMUTH = 90  TILT = 0   ..
* 184 *
* 185 *               E-W      HEIGHT = 20.5  WIDTH = 104.0  CONS = WALLCON
* 186 *                        AZIMUTH = 180   ..
* 187 *
* 188 *                 DOOR   HEIGHT = 14.0  WIDTH = 16.0  CONS = DOORCON
* 189 *                        MULTIPLIER = 5.0   ..
* 190 *
* 191 *               E-W      HEIGHT = 20.5  WIDTH = 70.0  CONS = WALLCON
* 192 *                        AZIMUTH = 270   ..
* 193 *
* 194 *               E-W      HEIGHT = 20.5  WIDTH = 104.0  CONS = WALLCON
* 195 *                        AZIMUTH = 0   ..
* 196 *
* 197 *                 DOOR   HEIGHT = 14.0  WIDTH = 16.0  CONS = DOORCON
* 198 *                        MULTIPLIER = 5.0   ..
* 199 *
* 200 *               E-W      HEIGHT = 20.5  WIDTH = 16.0  CONS = WALLCON
* 201 *                        AZIMUTH = 90   ..
* 202 *
* 203 *
* 204 * SUPPLYAREA =SPACE    AREA = 4080.0  VOLUME = 73440.0
* 205 *                      AZIMUTH = 90  ZONE-TYPE = CONDITIONED
* 206 *                      PEOPLE-SCHEDULE = PEOPLE_SCH  NUMBER-OF-PEOPLE = 25.0
* 207 *                      PEOPLE-HEAT-GAIN = 700.0  LIGHTING-TYPE = SUS-FLUOR
* 208 *                      LIGHTING-KW = 3.77  LIGHTING-SCHEDULE = LIGHT_SCHD
* 209 *                      EQUIP-SCHEDULE = EQUIP_SCHD  EQUIPMENT-KW = 7.0
* 210 *                      INF-METHOD = AIR-CHANGE  AIR-CHANGES/HR = 0.05
```

```
* 211 *                      INF-SCHEDULE = FULL_ON   ..
* 212 *
* 213 *              U-W      HEIGHT = 80.0  WIDTH = 51.0  CONS = FLOORCON
* 214 *                       AZIMUTH = 90   ..
* 215 *
* 216 *               ROOF    HEIGHT = 80.0  WIDTH = 51.0  CONS = ROOFCON
* 217 *                       AZIMUTH = 90  TILT = 0   ..
* 218 *
* 219 *               E-W     HEIGHT = 18.0  WIDTH = 80.0  CONS = WALLCON
* 220 *                       AZIMUTH = 0   ..
* 221 *
* 222 *                 DOOR  HEIGHT = 7.5  WIDTH = 3.0  CONS = DOORCON
* 223 *                       MULTIPLIER = 2.0   ..
* 224 *
* 225 *               E-W     HEIGHT = 18.0  WIDTH = 32.0  CONS = WALLCON
* 226 *                       AZIMUTH = 180   ..
* 227 *
* 228 *                 DOOR  HEIGHT = 7.5  WIDTH = 3.0  CONS = DOORCON ..
* 229 *
* 230 *
* 231 * ADMIN       =SPACE    AREA = 6440.0  VOLUME = 64400.0
* 232 *                       AZIMUTH = 90  ZONE-TYPE = CONDITIONED
* 233 *                       PEOPLE-SCHEDULE = PEOPLE_SCH  NUMBER-OF-PEOPLE = 40.0
* 234 *                       PEOPLE-HEAT-GAIN = 550.0
* 235 *                       LIGHTING-TYPE = REC-FLUOR-RV  LIGHTING-KW = 4.13
* 236 *                       LIGHTING-SCHEDULE = LIGHT_SCHD
* 237 *                       EQUIP-SCHEDULE = EQUIP_SCHD  EQUIPMENT-KW = 16.0
* 238 *                       INF-METHOD = AIR-CHANGE  AIR-CHANGES/HR = 0.15
* 239 *                       INF-SCHEDULE = PEOPLE_SCH   ..
* 240 *
* 241 *              U-W      HEIGHT = 46.0  WIDTH = 140.0  CONS = FLOORCON
* 242 *                       AZIMUTH = 90   ..
* 243 *
* 244 *               ROOF    HEIGHT = 46.0  WIDTH = 140.0  CONS = ADMROOF
* 245 *                       AZIMUTH = 90  TILT = 0   ..
* 246 *
* 247 *               E-W     HEIGHT = 10.0  WIDTH = 140.0  CONS = WALLCON
* 248 *                       AZIMUTH = 90   ..
* 249 *
* 250 *                 DOOR  HEIGHT = 7.5  WIDTH = 3.0  CONS = DOORCON
* 251 *                       MULTIPLIER = 4.0   ..
* 252 *
* 253 *                 WINDOW HEIGHT = 5.0  WIDTH = 4.0  G-T = G_TYPE1
* 254 *                       MULTIPLIER = 8.0   ..
* 255 *
* 256 *               E-W     HEIGHT = 10.0  WIDTH = 140.0  CONS = WALLCON
* 257 *                       AZIMUTH = 270   ..
* 258 *
* 259 *                 DOOR  HEIGHT = 7.5  WIDTH = 3.0  CONS = DOORCON
* 260 *                       MULTIPLIER = 4.0   ..
* 261 *
* 262 *                 WINDOW HEIGHT = 5.0  WIDTH = 4.0  G-T = G_TYPE1
* 263 *                       MULTIPLIER = 8.0   ..
* 264 *
* 265 *               E-W     HEIGHT = 10.0  WIDTH = 10.0  CONS = WALLCON
* 266 *                       AZIMUTH = 180   ..
* 267 *
* 268 *
* 269 * INSPECTION =SPACE     AREA = 3204.0  VOLUME = 65682.0
* 270 *                       AZIMUTH = 90  ZONE-TYPE = CONDITIONED
* 271 *                       PEOPLE-SCHEDULE = PEOPLE_SCH  NUMBER-OF-PEOPLE = 10.0
* 272 *                       PEOPLE-HEAT-GAIN = 700.0  LIGHTING-TYPE = INCAND
* 273 *                       LIGHTING-KW = 3.52  LIGHTING-SCHEDULE = LIGHT_SCHD
* 274 *                       EQUIP-SCHEDULE = EQUIP_SCHD  EQUIPMENT-KW = 10.0
* 275 *                       INF-METHOD = AIR-CHANGE  AIR-CHANGES/HR = 0.3
* 276 *                       INF-SCHEDULE = SHOP_INFIL   ..
* 277 *
* 278 *              U-W      HEIGHT = 36.0  WIDTH = 89.0  CONS = FLOORCON
* 279 *                       AZIMUTH = 90   ..
* 280 *
* 281 *               ROOF    HEIGHT = 36.0  WIDTH = 89.0  CONS = ROOFCON
* 282 *                       AZIMUTH = 90  TILT = 0   ..
* 283 *
* 284 *               E-W     HEIGHT = 20.5  WIDTH = 89.0  CONS = WALLCON
* 285 *                       AZIMUTH = 90   ..
* 286 *
* 287 *                 DOOR  HEIGHT = 14.0  WIDTH = 16.0  CONS = DOORCON
* 288 *                       MULTIPLIER = 4.0   ..
* 289 *
* 290 *               E-W     HEIGHT = 20.5  WIDTH = 89.0  CONS = WALLCON
* 291 *                       AZIMUTH = 270   ..
* 292 *
* 293 *                 DOOR  HEIGHT = 14.0  WIDTH = 16.0  CONS = DOORCON
* 294 *                       MULTIPLIER = 4.0   ..
* 295 *
* 296 *
* 297 * ICS_WRHSE  =SPACE     AREA = 12240.0  VOLUME = 220320.0
* 298 *                       AZIMUTH = 90  ZONE-TYPE = CONDITIONED
* 299 *                       PEOPLE-SCHEDULE = PEOPLE_SCH  NUMBER-OF-PEOPLE = 5.0
* 300 *                       PEOPLE-HEAT-GAIN = 600.0  LIGHTING-TYPE = INCAND
* 301 *                       LIGHTING-KW = 6.01  LIGHTING-SCHEDULE = LIGHT_SCHD
* 302 *                       EQUIP-SCHEDULE = EQUIP_SCHD  EQUIPMENT-KW = 2.0
* 303 *                       INF-METHOD = NONE   ..
* 304 *
* 305 *              U-W      HEIGHT = 80.0  WIDTH = 153.0  CONS = FLOORCON
* 306 *                       AZIMUTH = 90   ..
* 307 *
* 308 *               ROOF    HEIGHT = 80.0  WIDTH = 153.0  CONS = ROOFCON
* 309 *                       AZIMUTH = 90  TILT = 0   ..
* 310 *
* 311 *               E-W     HEIGHT = 18.0  WIDTH = 153.0  CONS = WALLCON
* 312 *                       AZIMUTH = 90   ..
* 313 *
* 314 *               E-W     HEIGHT = 18.0  WIDTH = 80.0  CONS = WALLCON
* 315 *                       AZIMUTH = 180   ..
* 316 *
* 317 *                 DOOR  HEIGHT = 14.0  WIDTH = 16.0  CONS = DOORCON ..
* 318 *
```

```
* 319 *                  DOOR   HEIGHT = 7.5  WIDTH = 3.0  CONS = DOORCON ..
* 320 *
* 321 *                E-W      HEIGHT = 18.0  WIDTH = 153.0  CONS = WALLCON
* 322 *                         AZIMUTH = 270   ..
* 323 *
* 324 *                E-W      HEIGHT = 18.0  WIDTH = 44.0  CONS = WALLCON
* 325 *                         AZIMUTH = 0   ..
* 326 *
* 327 *
* 328 * END  ..
* 329 * COMPUTE LOADS  ..
* 330 *
* 331 * INPUT SYSTEMS  ..
```

```
* 332 *
* 333 *
* 334 *                  $--------------------------------------$
* 335 *                  $ E Z - D O E  S Y S T E M S  I N P U T $
* 336 *                  $--------------------------------------$
* 337 *
* 338 *                     $ GENERAL PROJECT DATA
* 339 *
* 340 * TITLE  LINE-1 *     EMC      ENGINEERS      INC.     *
* 341 *        LINE-2 *EZDOE - ELITE SOFTWARE DEVELOPMENT INC*
* 342 *        LINE-3 *     DENVER,       CO       80227     *
* 343 *
* 344 *        LINE-4 *BUILDING 1750 MOTOR REPAIR SHOP         *
* 345 *        LINE-5 *MODEL WITH SET BACK AND DDC             * ..
* 346 * ABORT               ERRORS  ..
* 347 * DIAGNOSTIC          WARNINGS ..
* 348 * SYSTEMS-REPORT      SUMMARY=(SS-A,SS-C,SS-F,SS-O)  ..
* 349 *
* 350 *                      $ SCHEDULES
* 351 *
* 352 * FULL_ON_D  =DAY-SCHEDULE  (1,24) (1.) ..
* 353 * FULL_OFF_D =DAY-SCHEDULE  (1,24) (0.) ..
* 354 * HEAT1_ON_D =DAY-SCHEDULE  (1,24) (55.) ..
* 355 * HEAT2_ON_D =DAY-SCHEDULE  (1,24) (68.) ..
* 356 * FAN_WSB_D  =DAY-SCHEDULE  (1,4) (0.)
* 357 *                           (5,17) (1.)
* 358 *                           (18,24) (0.) ..
* 359 * HT68_WSB_D =DAY-SCHEDULE  (1,4) (50.)
* 360 *                           (5,17) (68.)
* 361 *                           (18,24) (50.) ..
* 362 * HEAT50_D   =DAY-SCHEDULE  (1,24) (50.) ..
* 363 * HT55_WSB_D =DAY-SCHEDULE  (1,4) (50.)
* 364 *                           (5,17) (55.)
* 365 *                           (18,24) (50.) ..
* 366 * MOA.28_D   =DAY-SCHEDULE  (1,5) (0.)
* 367 *                           (6,17) (0.28)
* 368 *                           (18,24) (0.) ..
* 369 * MOA.31_D   =DAY-SCHEDULE  (1,5) (0.)
* 370 *                           (6,17) (0.31)
* 371 *                           (18,24) (0.) ..
* 372 *
* 373 * FULL_ON_W  =WEEK-SCHEDULE  (ALL) FULL_ON_D  ..
* 374 *
* 375 * FULL_OFF_W =WEEK-SCHEDULE  (ALL) FULL_OFF_D  ..
* 376 *
* 377 * HEAT1_ON_W =WEEK-SCHEDULE  (ALL) HEAT1_ON_D  ..
* 378 *
* 379 * HEAT2_ON_W =WEEK-SCHEDULE  (ALL) HEAT2_ON_D  ..
* 380 *
* 381 * FAN_WSB_W  =WEEK-SCHEDULE  (WD)  FAN_WSB_D
* 382 *                           (SAT) FULL_OFF_D
* 383 *                           (SUN) FULL_OFF_D
* 384 *                           (HOL) FAN_WSB_D ..
* 385 *
* 386 * HT55_WSB_W =WEEK-SCHEDULE  (WD)  HT55_WSB_D
* 387 *                           (SAT) HEAT50_D
* 388 *                           (SUN) HEAT50_D
* 389 *                           (HOL) HT55_WSB_D ..
* 390 *
* 391 * HT68_WSB_W =WEEK-SCHEDULE  (WD)  HT68_WSB_D
* 392 *                           (SAT) HEAT50_D
* 393 *                           (SUN) HEAT50_D
* 394 *                           (HOL) HT68_WSB_D ..
* 395 *
* 396 * MOA.28_W   =WEEK-SCHEDULE  (WD)  MOA.28_D
* 397 *                           (SAT) FULL_OFF_D
* 398 *                           (SUN) FULL_OFF_D
* 399 *                           (HOL) MOA.28_D ..
* 400 *
* 401 * MOA.31_W   =WEEK-SCHEDULE  (WD)  MOA.31_D
* 402 *                           (SAT) FULL_OFF_D
* 403 *                           (SUN) FULL_OFF_D
* 404 *                           (HOL) MOA.31_D ..
* 405 *
* 406 *
* 407 * $ FULL ON SCHEDULE
* 408 * FULL_ON    =SCHEDULE THRU DEC 31 FULL_ON_W  ..
* 409 *
* 410 * $ FULL OFF SCHEDULE
* 411 * FULL_OFF   =SCHEDULE THRU DEC 31 FULL_OFF_W  ..
* 412 *
* 413 * $ HEAT SCHEDULE, 55 DEG
* 414 * HEAT55_ON  =SCHEDULE THRU DEC 31 HEAT1_ON_W  ..
* 415 *
* 416 * $ HEAT SCHEDULE 68 DEG
* 417 * HEAT68_ON  =SCHEDULE THRU DEC 31 HEAT2_ON_W  ..
* 418 *
* 419 * $ FAN SCHED WITH SET BACK
* 420 * FAN_W_SB   =SCHEDULE THRU DEC 31 FAN_WSB_W  ..
* 421 *
* 422 * $ HEAT 55F WITH 50F SET B
* 423 * HT55_W_SB  =SCHEDULE THRU DEC 31 HT55_WSB_W  ..
* 424 *
* 425 * $ HEAT 68F W 50F SET BACK
* 426 * HT68_W_SB  =SCHEDULE THRU DEC 31 HT68_WSB_W  ..
* 427 *
* 428 * $ FORCED VENTILATION
* 429 * MOA.28_FV  =SCHEDULE THRU DEC 31 MOA.28_W  ..
* 430 *
* 431 * $ FORCED VENTILATION
```

```
* 432 * MOA.31_FV  =SCHEDULE THRU DEC 31 MOA.31_W  ..
* 433 *
* 434 *
* 435 *
* 436 *                        $ ZONE DESCRIPTION
* 437 *
* 438 * EQUIP_SHOP =ZONE     DESIGN-HEAT-T = 55.0  DESIGN-COOL-T = 75.0
* 439 *                      HEAT-TEMP-SCH = HT55_W_SB  ZONE-TYPE = CONDITIONED
* 440 *                      THERMOSTAT-TYPE = PROPORTIONAL  ASSIGNED-CFM = 9700.
* 441 *                      OUTSIDE-AIR-CFM = 9700.  SIZING-OPTION = FROM-LOADS
* 442 *                      RATED-CFM = 9700.0  MIN-CFM-RATIO = 1.0
* 443 *                      EXHAUST-CFM = 9700.0  HEATING-CAPACITY = -652520.0   ..
* 444 *
* 445 * AUTOREPAIR =ZONE     DESIGN-HEAT-T = 55.0  DESIGN-COOL-T = 75.0
* 446 *                      HEAT-TEMP-SCH = HT55_W_SB  ZONE-TYPE = CONDITIONED
* 447 *                      THERMOSTAT-TYPE = PROPORTIONAL  ASSIGNED-CFM = 9700.
* 448 *                      OUTSIDE-AIR-CFM = 9700.  SIZING-OPTION = FROM-LOADS
* 449 *                      RATED-CFM = 9700.0  MIN-CFM-RATIO = 1.0
* 450 *                      EXHAUST-CFM = 9700.0  HEATING-CAPACITY = -652520.0   ..
* 451 *
* 452 * SUPPLYAREA =ZONE     DESIGN-HEAT-T = 68.0  DESIGN-COOL-T = 75.0
* 453 *                      HEAT-TEMP-SCH = HT68_W_SB  ZONE-TYPE = CONDITIONED
* 454 *                      THERMOSTAT-TYPE = PROPORTIONAL
* 455 *                      BASEBOARD-CTRL = THERMOSTATIC
* 456 *                      BASEBOARD-RATING = -44320.  ASSIGNED-CFM = 1230.
* 457 *                      OUTSIDE-AIR-CFM = 344.  SIZING-OPTION = FROM-LOADS
* 458 *                      RATED-CFM = 1230.0  MIN-CFM-RATIO = 1.0
* 459 *                      EXHAUST-CFM = 344.0  HEATING-CAPACITY = -28080.0   ..
* 460 *
* 461 * ADMIN       =ZONE     DESIGN-HEAT-T = 68.0  DESIGN-COOL-T = 75.0
* 462 *                      HEAT-TEMP-SCH = HT68_W_SB  ZONE-TYPE = CONDITIONED
* 463 *                      THERMOSTAT-TYPE = PROPORTIONAL
* 464 *                      BASEBOARD-CTRL = THERMOSTATIC
* 465 *                      BASEBOARD-RATING = -87340.  ASSIGNED-CFM = 3290.
* 466 *                      OUTSIDE-AIR-CFM = 1020.  SIZING-OPTION = FROM-LOADS
* 467 *                      RATED-CFM = 3290.0  MIN-CFM-RATIO = 1.0
* 468 *                      EXHAUST-CFM = 1020.0  HEATING-CAPACITY = -83400.0   ..
* 469 *
* 470 * INSPECTION =ZONE     DESIGN-HEAT-T = 55.0  DESIGN-COOL-T = 75.0
* 471 *                      HEAT-TEMP-SCH = HT55_W_SB  ZONE-TYPE = CONDITIONED
* 472 *                      THERMOSTAT-TYPE = PROPORTIONAL  ASSIGNED-CFM = 4000.
* 473 *                      OUTSIDE-AIR-CFM = 4000.  SIZING-OPTION = FROM-LOADS
* 474 *                      RATED-CFM = 4000.0  MIN-CFM-RATIO = 1.0
* 475 *                      EXHAUST-CFM = 4000.0  HEATING-CAPACITY = -269080.0   ..
* 476 *
* 477 * ICS_WRHSE  =ZONE     DESIGN-HEAT-T = 55.0  DESIGN-COOL-T = 75.0
* 478 *                      HEAT-TEMP-SCH = HT55_W_SB  ZONE-TYPE = CONDITIONED
* 479 *                      THERMOSTAT-TYPE = PROPORTIONAL  ASSIGNED-CFM = 14606.
* 480 *                      OUTSIDE-AIR-CFM = 14606.  SIZING-OPTION = FROM-LOADS
* 481 *                      RATED-CFM = 14606.0  MIN-CFM-RATIO = 1.0
* 482 *                      HEATING-CAPACITY = -613940.0   ..
* 483 *
* 484 *
* 485 *                        $ SYSTEM DESCRIPTION
* 486 *
* 487 * HV3AB       =SYSTEM     SYSTEM-TYPE = HVSYS
* 488 *                         MAX-SUPPLY-T = 55.0  HEATING-SCHEDULE = HEAT55_ON
* 489 *                         MIN-HUMIDITY = 30.0  ECONO-LIMIT-T = 65.0
* 490 *                         ECONO-LOW-LIMIT = 55.0  HEAT-CONTROL = COLDEST
* 491 *                         SUPPLY-CFM = 9700.  RATED-CFM = 9700.
* 492 *                         MIN-OUTSIDE-AIR = 1.0  FAN-SCHEDULE = FAN_W_SB
* 493 *                         SUPPLY-DELTA-T = 2.4  SUPPLY-KW = 0.00078
* 494 *                         MOTOR-PLACEMENT = OUTSIDE-AIRFLOW
* 495 *                         NIGHT-CYCLE-CTRL = CYCLE-ON-ANY  NIGHT-VENT-DT = 0.0
* 496 *                         HEATING-CAPACITY = -652520.  FURNACE-AUX = 0.
* 497 *                         ZONE-NAMES = (EQUIP_SHOP)  ..
* 498 *
* 499 * HV3CD       =SYSTEM     SYSTEM-TYPE = HVSYS
* 500 *                         MAX-SUPPLY-T = 55.0  HEATING-SCHEDULE = HEAT55_ON
* 501 *                         MIN-HUMIDITY = 30.0  ECONO-LIMIT-T = 65.0
* 502 *                         ECONO-LOW-LIMIT = 55.0  HEAT-CONTROL = COLDEST
* 503 *                         SUPPLY-CFM = 9700.  RATED-CFM = 9700.
* 504 *                         MIN-OUTSIDE-AIR = 1.0  FAN-SCHEDULE = FAN_W_SB
* 505 *                         SUPPLY-DELTA-T = 2.4  SUPPLY-KW = 0.00078
* 506 *                         MOTOR-PLACEMENT = OUTSIDE-AIRFLOW
* 507 *                         NIGHT-CYCLE-CTRL = CYCLE-ON-ANY  NIGHT-VENT-DT = 0.0
* 508 *                         HEATING-CAPACITY = -652520.  FURNACE-AUX = 0.
* 509 *                         ZONE-NAMES = (AUTOREPAIR)  ..
* 510 *
* 511 * HV2         =SYSTEM     SYSTEM-TYPE = HVSYS
* 512 *                         MAX-SUPPLY-T = 68.0  HEATING-SCHEDULE = HEAT68_ON
* 513 *                         MIN-HUMIDITY = 30.0  ECONO-LIMIT-T = 65.0
* 514 *                         ECONO-LOW-LIMIT = 55.0  HEAT-CONTROL = COLDEST
* 515 *                         SUPPLY-CFM = 1230.  RATED-CFM = 1230.
* 516 *                         MIN-OUTSIDE-AIR = 0.28  MIN-AIR-SCH = MOA.28_FV
* 517 *                         FAN-SCHEDULE = FAN_W_SB  SUPPLY-DELTA-T = 2.4
* 518 *                         SUPPLY-KW = 0.00078
* 519 *                         MOTOR-PLACEMENT = OUTSIDE-AIRFLOW
* 520 *                         NIGHT-CYCLE-CTRL = CYCLE-ON-ANY  NIGHT-VENT-DT = 0.0
* 521 *                         HEATING-CAPACITY = -28080.  FURNACE-AUX = 0.
* 522 *                         RETURN-AIR-PATH = DUCT
* 523 *                         ZONE-NAMES = (SUPPLYAREA)  ..
* 524 *
* 525 * HV1         =SYSTEM     SYSTEM-TYPE = HVSYS
* 526 *                         MAX-SUPPLY-T = 68.0  HEATING-SCHEDULE = HEAT68_ON
* 527 *                         MIN-HUMIDITY = 30.0  ECONO-LIMIT-T = 65.0
* 528 *                         ECONO-LOW-LIMIT = 55.0  HEAT-CONTROL = COLDEST
* 529 *                         SUPPLY-CFM = 3290.  RATED-CFM = 3290.
* 530 *                         MIN-OUTSIDE-AIR = 0.31  MIN-AIR-SCH = MOA.31_FV
* 531 *                         FAN-SCHEDULE = FAN_W_SB  SUPPLY-DELTA-T = 2.4
* 532 *                         SUPPLY-KW = 0.00078
* 533 *                         MOTOR-PLACEMENT = OUTSIDE-AIRFLOW
* 534 *                         NIGHT-CYCLE-CTRL = CYCLE-ON-ANY  NIGHT-VENT-DT = 0.0
* 535 *                         HEATING-CAPACITY = -83400.  FURNACE-AUX = 0.
* 536 *                         RETURN-AIR-PATH = DUCT
* 537 *                         ZONE-NAMES = (ADMIN)  ..
* 538 *
* 539 * HV4         =SYSTEM     SYSTEM-TYPE = HVSYS
```

```
* 540 *                        MAX-SUPPLY-T = 55.0  HEATING-SCHEDULE = HEAT55_ON
* 541 *                        MIN-HUMIDITY = 30.0  ECONO-LIMIT-T = 65.0
* 542 *                        ECONO-LOW-LIMIT = 55.0  HEAT-CONTROL = COLDEST
* 543 *                        SUPPLY-CFM = 4000.  RATED-CFM = 4000.
* 544 *                        MIN-OUTSIDE-AIR = 1.0  FAN-SCHEDULE = FAN_W_SB
* 545 *                        SUPPLY-DELTA-T = 2.4  SUPPLY-KW = 0.00078
* 546 *                        MOTOR-PLACEMENT = OUTSIDE-AIRFLOW
* 547 *                        NIGHT-CYCLE-CTRL = CYCLE-ON-ANY  NIGHT-VENT-DT = 0.0
* 548 *                        HEATING-CAPACITY = -269080.  FURNACE-AUX = 0.
* 549 *                        ZONE-NAMES = (INSPECTION)  ..
* 550 *
* 551 * UH_ZONE6    =SYSTEM    SYSTEM-TYPE = UHT
* 552 *                        MAX-SUPPLY-T = 91.9  HEATING-SCHEDULE = HEAT55_ON
* 553 *                        RATED-CFM = 14606.  FAN-SCHEDULE = FAN_W_SB
* 554 *                        SUPPLY-DELTA-T = 0.2  SUPPLY-KW = 0.00008
* 555 *                        NIGHT-CYCLE-CTRL = CYCLE-ON-ANY
* 556 *                        HEATING-CAPACITY = -613940.  FURNACE-AUX = 0.
* 557 *                        ZONE-NAMES = (ICS_WRHSE)  ..
* 558 *
* 559 * END  ..
* 560 * COMPUTE SYSTEMS  ..
* 561 *
* 562 * INPUT PLANT  ..
```

```
* 563 *
* 564 *
* 565 *                  $-----------------------------------$
* 566 *                  $ E Z - D O E  P L A N T S  I N P U T $
* 567 *                  $-----------------------------------$
* 568 *
* 569 *                     $ GENERAL PROJECT DATA
* 570 *
* 571 * TITLE  LINE-1 *      EMC       ENGINEERS       INC.      *
* 572 *        LINE-2 *EZDOE - ELITE SOFTWARE DEVELOPMENT INC*
* 573 *        LINE-3 *      DENVER,        CO        80227      *
* 574 *
* 575 *        LINE-4 *BUILDING 1750 MOTOR REPAIR SHOP          *
* 576 *        LINE-5 *MODEL WITH SET BACK AND DDC              * ..
* 577 *
* 578 * ABORT               ERRORS  ..
* 579 * DIAGNOSTIC          WARNINGS ..
* 580 * PLANT-REPORT        SUMMARY=(PS-A,PS-B,BEPS)
* 581 *   ..
* 582 *
* 583 *                      $ SCHEDULES
* 584 *
* 585 *
* 586 *
* 587 *
* 588 *
* 589 *                      $ EQUIPMENT DESCRIPTION
* 590 *
* 591 * BOILER1&2  =PLANT-EQUIPMENT   TYPE = HW-BOILER
* 592 *                       SIZE = 1.4  INSTALLED-NUMBER = 2
* 593 *                       MAX-NUMBER-AVAIL = 2  ..
* 594 *
* 595 * DHW        =PLANT-EQUIPMENT   TYPE = HW-BOILER
* 596 *                       SIZE = 0.3  ..
* 597 *
* 598 * PLANT-PARAMETERS      CCIRC-HEAD = 63.2    ..
* 599 *
* 600 *
* 601 * ENERGY-RESOURCE       RESOURCE = ELECTRICITY  ..
* 602 * ENERGY-RESOURCE       RESOURCE = FUEL-OIL  ..
* 603 *
* 604 * BOILERS    =LOAD-ASSIGNMENT  TYPE = HEATING
* 605 *                               OPERATION-MODE = RUN-NEEDED
* 606 *
* 607 *                               LOAD-RANGE =    1.338
* 608 *                               PLANT-EQUIPMENT = BOILER1&2
* 609 *                               NUMBER =    2  ..
* 610 *
* 611 * DHWASSIGN  =LOAD-ASSIGNMENT  TYPE = HEATING
* 612 *                               OPERATION-MODE = RUN-ALL
* 613 *
* 614 *                               LOAD-RANGE =    0.315
* 615 *                               PLANT-EQUIPMENT = DHW
* 616 *                               NUMBER =    1  ..
* 617 *
* 618 *
* 619 *
* 620 * END  ..
* 621 * COMPUTE PLANT ..
* 622 * STOP ..
```

ENERGY TYPE IN SITE MBTU-	ELECTRICITY	FUEL-OIL	
CATEGORY OF USE			
SPACE HEAT	92.46	3,579.04	0.00
SPACE COOL	0.00	0.00	0.00
HVAC AUX	351.57	0.00	0.00
DOM HOT WTR	0.00	0.00	0.00
AUX SOLAR	0.00	0.00	0.00
LIGHTS	271.97	0.00	0.00
VERT TRANS	0.00	0.00	0.00
MISC EQUIP	381.20	0.00	0.00
TOTAL	1,097.19	3,579.04	0.00

TOTAL SITE ENERGY 4676.20 MBTU 115.4 KBTU/SQFT-YR GROSS-AREA 115.4 KBTU/SQFT-YR NET-AREA
TOTAL SOURCE ENERGY 6873.82 MBTU 169.6 KBTU/SQFT-YR GROSS-AREA 169.6 KBTU/SQFT-YR NET-AREA

PERCENT OF HOURS ANY SYSTEM ZONE OUTSIDE OF THROTTLING RANGE = 8.3
PERCENT OF HOURS ANY PLANT LOAD NOT SATISFIED = 0.0

NOTE ELECTRICITY AND/OR FUEL USED TO GENERATE ELECTRICITY IS APPORTIONED BASED ON THE YEARLY DEMAND. ALL OTHER ENERGY TYPES ARE APPORTIONED HOURLY.

MO	UTILITY-	ELECTRICITY	FUEL-OIL
JAN	TOTAL(MBTU)	120.725	952.826
	PEAK(KBTU)	412.034	3428.822
	DY/HR	6/14	26/ 7
FEB	TOTAL(MBTU)	104.248	669.907
	PEAK(KBTU)	387.883	2713.302
	DY/HR	14/11	17/ 5
MAR	TOTAL(MBTU)	110.782	563.604
	PEAK(KBTU)	380.991	2838.642
	DY/HR	14/14	9/ 7
APR	TOTAL(MBTU)	84.285	164.352
	PEAK(KBTU)	380.736	1624.752
	DY/HR	1/14	1/ 5
MAY	TOTAL(MBTU)	79.910	50.011
	PEAK(KBTU)	377.611	1259.579
	DY/HR	3/14	17/ 5
JUN	TOTAL(MBTU)	76.873	2.745
	PEAK(KBTU)	353.647	311.189
	DY/HR	7/14	8/ 5
JUL	TOTAL(MBTU)	73.836	0.791
	PEAK(KBTU)	339.608	41.974
	DY/HR	29/14	25/ 5
AUG	TOTAL(MBTU)	80.061	1.546
	PEAK(KBTU)	339.608	188.670
	DY/HR	31/14	22/ 5
SEP	TOTAL(MBTU)	77.641	11.644
	PEAK(KBTU)	339.608	701.150
	DY/HR	30/14	23/ 6
OCT	TOTAL(MBTU)	80.195	105.851
	PEAK(KBTU)	380.705	1480.532
	DY/HR	27/14	21/ 6
NOV	TOTAL(MBTU)	96.172	342.242
	PEAK(KBTU)	380.948	2415.190
	DY/HR	28/14	29/ 7
DEC	TOTAL(MBTU)	112.890	714.671
	PEAK(KBTU)	387.765	2773.217
	DY/HR	28/11	28/ 7
	ONE YEAR	1097.616	3580.190
	USE/PEAK	412.034	3428.822

COMPUTER SIMULATIONS

BUILDING 2060

COMPUTER SIMULATIONS
BUILDING 2060

BASE RUN

LDL PROCESSOR INPUT DATA

3/18/1995 13: 7:49 LDL RUN 1

```
*  3 *
*  4 *
*  5 *            $----------------------------------$
*  6 *            $EZ-DOE LOADS INPUT$
*  7 *            $----------------------------------$
*  8 *
*  9 *              $ GENERAL PROJECT DATA
* 10 *
* 11 * TITLE  LINE-1 *    EMC     ENGINEERS     INC.    *
* 12 *       LINE-2 *EZDOE - ELITE SOFTWARE DEVELOPMENT INC*
* 13 *       LINE-3 *    DENVER,      CO      80227    *
* 14 *
* 15 *       LINE-4 *BUILDING 2060, MNT. HANGAR AVUM        *
* 16 *       LINE-5 *BASE MODEL                        * ..
* 17 *
* 18 * ABORT            ERRORS ..
* 19 * DIAGNOSTIC       WARNINGS ..
* 20 * LOADS-REPORT      SUMMARY=(LS-K)
* 21 *                 HOURLY-DATA-SAVE = YES ..
* 22 * BUILDING-LOCATION  HOLIDAY = NO
* 23 *                 X-REF = 0.0
* 24 *                 Y-REF = 0.0 ..
* 25 * RUN-PERIOD       JAN 1 1994 THRU DEC 31 1994 ..
* 26 *
* 27 *
* 28 *                  $ SCHEDULES
* 29 *
* 30 * FULL_ON_D  =DAY-SCHEDULE  (1,24) (1.) ..
* 31 *
* 32 * FULL_OFF_D =DAY-SCHEDULE  (1,24) (0.) ..
* 33 *
* 34 * LIGHT_ON_D =DAY-SCHEDULE  (1,5) (0.2)
* 35 *                        (6,7) (0.35)
* 36 *                        (8,9) (0.5,0.7)
* 37 *                        (10,11) (0.9)
* 38 *                        (12) (0.8)
* 39 *                        (13,14) (0.9)
* 40 *                        (15) (0.5)
* 41 *                        (16,18) (0.4)
* 42 *                        (19) (0.3)
* 43 *                        (20,24) (0.2) ..
* 44 *
* 45 * LT_ON_WKND =DAY-SCHEDULE  (1,6) (0.23)
```

```
* 46 *                    (7,19) (0.07)
* 47 *                    (20,24) (0.23) ..
* 48 *
* 49 * PEOPLE_D  =DAY-SCHEDULE  (1,4) (0.)
* 50 *                    (5,6) (0.1)
* 51 *                    (7) (0.5)
* 52 *                    (8,11) (1.)
* 53 *                    (12) (0.8)
* 54 *                    (13,16) (1.)
* 55 *                    (17,18) (0.5,0.1)
* 56 *                    (19,24) (0.) ..
* 57 *
* 58 * EQUIP_ON_D =DAY-SCHEDULE  (1,5) (0.)
* 59 *                    (6,10) (0.3,0.4,0.5,0.6,0.8)
* 60 *                    (11,13) (0.7,0.5,0.8)
* 61 *                    (14,15) (0.9)
* 62 *                    (16,18) (0.8,0.5,0.1)
* 63 *                    (19,24) (0.) ..
* 64 *
* 65 * DHW_D     =DAY-SCHEDULE  (1,6) (0.)
* 66 *                    (7,8) (0.1,0.2)
* 67 *                    (9,10) (0.1)
* 68 *                    (11,13) (0.2,0.4,0.3)
* 69 *                    (14,16) (0.2)
* 70 *                    (17) (0.1)
* 71 *                    (18,24) (0.) ..
* 72 *
* 73 *
* 74 * FULL_ON_W  =WEEK-SCHEDULE  (ALL) FULL_ON_D  ..
* 75 *
* 76 * FULL_OFF_W =WEEK-SCHEDULE  (ALL) FULL_OFF_D  ..
* 77 *
* 78 * LIGHT_ON_W =WEEK-SCHEDULE  (WD)  LIGHT_ON_D
* 79 *                    (WEH) LT_ON_WKND  ..
* 80 *
* 81 * PEOPLE_W  =WEEK-SCHEDULE  (WD)  PEOPLE_D
* 82 *                    (WEH) FULL_OFF_D  ..
* 83 *
* 84 * EQUIP_W   =WEEK-SCHEDULE  (WD)  EQUIP_ON_D
* 85 *                    (WEH) FULL_OFF_D  ..
* 86 *
* 87 * BAY_INFL_W =WEEK-SCHEDULE  (WD)  FULL_ON_D
* 88 *                    (WEH) FULL_OFF_D  ..
* 89 *
* 90 * DHW_W     =WEEK-SCHEDULE  (WD)  DHW_D
* 91 *                    (WEH) FULL_OFF_D  ..
* 92 *
* 93 *
* 94 * $ FULL OFF SCHEDULE
* 95 * FULL_OFF   =SCHEDULE THRU DEC 31 FULL_OFF_W  ..
```

```
*  96 *
*  97 * $ LIGHTING SCHEDULE
*  98 * LIGHT_SCHD =SCHEDULE THRU DEC 31 LIGHT_ON_W ..
*  99 *
* 100 * $ OCCUPANCY SCHEDULE
* 101 * PEOPLE_SCH =SCHEDULE THRU DEC 31 PEOPLE_W ..
* 102 *
* 103 * $ EQUIPMENT SCHEDULE
* 104 * EQUIP_SCHD =SCHEDULE THRU DEC 31 EQUIP_W ..
* 105 *
* 106 * $ BAY INFILTRATION SCHED
* 107 * BAY_INFILT =SCHEDULE THRU DEC 31 BAY_INFL_W ..
* 108 *
* 109 * $ DOMESTIC HW SCHEDULE
* 110 * DHW_SCHED  =SCHEDULE THRU DEC 31 DHW_W ..
* 111 *
* 112 * $ FULL ON SCHEDULE
* 113 * FULL_ON   =SCHEDULE THRU DEC 31 FULL_ON_W ..
* 114 *
* 115 *
* 116 *
* 117 *              $ CONSTRUCTION TYPES
* 118 *
* 119 *
* 120 *
* 121 * FLOORCON =CONSTRUCTION  U-VALUE =  0.010 ..
* 122 *
* 123 *  $ ADMINISTRATION ROOF CONSTRUCTION
* 124 * ADMROOF  =CONSTRUCTION  U-VALUE =  0.050 ..
* 125 *
* 126 *  $ ROOF CONSTRUCTION
* 127 * CEILING  =LAYERS       MATERIAL=(AS01,IN76,HF-E3)
* 128 *                  THICKNESS=(0.005,0.250,0.031) ..
* 129 * ROOFCON  =CONSTRUCTION  LAYERS = CEILING  ..
* 130 * WALLCON  =CONSTRUCTION  U-VALUE =  0.200 ..
* 131 * INWALL  =CONSTRUCTION  U-VALUE = 20.000 ..
* 132 * DOORCON  =CONSTRUCTION  U-VALUE =  0.400 ..
* 133 *
* 134 * G_TYPE1  =GLASS-TYPE    SHADING-COEF = 1.000
* 135 *                  PANES = 1
* 136 *                  GLASS-CONDUCTANCE =  1.130 ..
* 137 *
* 138 *
* 139 *
* 140 *
* 141 *              $ SPACE DESCRIPTION
* 142 *
* 143 * BAY_A    =SPACE   AREA = 18914.0  VOLUME = 699818.0
* 144 *               AZIMUTH = 315  TEMPERATURE = (57.)
* 145 *               ZONE-TYPE = CONDITIONED  PEOPLE-SCHEDULE = PEOPLE_SCH
```

```
* 146 *              NUMBER-OF-PEOPLE = 20.0  PEOPLE-HEAT-GAIN = 700.0
* 147 *              LIGHTING-TYPE = INCAND  LIGHTING-W/SQFT = 0.8
* 148 *              LIGHTING-SCHEDULE = LIGHT_SCHD
* 149 *              EQUIP-SCHEDULE = EQUIP_SCHD  EQUIPMENT-KW = 15.0
* 150 *              SOURCE-SENSIBLE = 0.0  INF-METHOD = AIR-CHANGE
* 151 *              AIR-CHANGES/HR = 0.89  INF-SCHEDULE = BAY_INFILT   ..
* 152 *
* 153 *           U-W     HEIGHT = 48.0  WIDTH = 386.0  CONS = FLOORCON
* 154 *                AZIMUTH = 315   ..
* 155 *
* 156 *           ROOF    HEIGHT = 48.0  WIDTH = 386.0  CONS = ROOFCON
* 157 *                AZIMUTH = 315  TILT = 0   ..
* 158 *
* 159 *           E-W     HEIGHT = 37.0  WIDTH = 48.0  CONS = WALLCON
* 160 *                AZIMUTH = 45   ..
* 161 *
* 162 *           E-W     HEIGHT = 37.0  WIDTH = 48.0  CONS = WALLCON
* 163 *                AZIMUTH = 225   ..
* 164 *
* 165 *           E-W     HEIGHT = 37.0  WIDTH = 386.0  CONS = WALLCON
* 166 *                AZIMUTH = 315   ..
* 167 *
* 168 *            DOOR   HEIGHT = 14.0  WIDTH = 30.5  CONS = DOORCON
* 169 *                MULTIPLIER = 10.0   ..
* 170 *
* 171 *           I-W     HEIGHT = 37.0  WIDTH = 1000.0  CONS = INWALL
* 172 *                AZIMUTH = 135  NEXT-TO = BAY_B   ..
* 173 *
* 174 *
* 175 * BAY_B     =SPACE    AREA = 18914.0  VOLUME = 699818.0
* 176 *              AZIMUTH = 315  TEMPERATURE = (57.)
* 177 *              ZONE-TYPE = CONDITIONED  PEOPLE-SCHEDULE = PEOPLE_SCH
* 178 *              NUMBER-OF-PEOPLE = 20.0  PEOPLE-HEAT-GAIN = 700.0
* 179 *              LIGHTING-TYPE = INCAND  LIGHTING-W/SQFT = 0.8
* 180 *              LIGHTING-SCHEDULE = LIGHT_SCHD
* 181 *              EQUIP-SCHEDULE = EQUIP_SCHD  EQUIPMENT-KW = 15.0
* 182 *              SOURCE-SENSIBLE = 0.0  INF-METHOD = AIR-CHANGE
* 183 *              AIR-CHANGES/HR = 0.05  INF-SCHEDULE = FULL_ON   ..
* 184 *
* 185 *           U-W     HEIGHT = 48.0  WIDTH = 386.0  CONS = FLOORCON
* 186 *                AZIMUTH = 315   ..
* 187 *
* 188 *           ROOF    HEIGHT = 48.0  WIDTH = 386.0  CONS = ROOFCON
* 189 *                AZIMUTH = 315  TILT = 0   ..
* 190 *
* 191 *           E-W     HEIGHT = 37.0  WIDTH = 48.0  CONS = WALLCON
* 192 *                AZIMUTH = 45   ..
* 193 *
* 194 *           E-W     HEIGHT = 37.0  WIDTH = 48.0  CONS = WALLCON
* 195 *                AZIMUTH = 225   ..
```

```
* 196 *
* 197 *          E-W     HEIGHT = 37.0  WIDTH = 192.0  CONS = WALLCON
* 198 *               AZIMUTH = 135  ..
* 199 *
* 200 *
* 201 * ADMIN_C   =SPACE   AREA = 10545.0  VOLUME = 168720.0
* 202 *               AZIMUTH = 315  TEMPERATURE = (68.)
* 203 *               ZONE-TYPE = CONDITIONED  PEOPLE-SCHEDULE = PEOPLE_SCH
* 204 *               NUMBER-OF-PEOPLE = 20.0  PEOPLE-HEAT-GAIN = 550.0
* 205 *               LIGHTING-TYPE = REC-FLUOR-RV  LIGHTING-W/SQFT = 0.76
* 206 *               LIGHTING-SCHEDULE = LIGHT_SCHD
* 207 *               EQUIP-SCHEDULE = EQUIP_SCHD  EQUIPMENT-KW = 7.5
* 208 *               SOURCE-SCHEDULE = DHW_SCHED  SOURCE-TYPE = HOT-WATER
* 209 *               SOURCE-BTU/HR = 640000.0  SOURCE-SENSIBLE = 0.02
* 210 *               SOURCE-LATENT = 0.01  INF-METHOD = AIR-CHANGE
* 211 *               AIR-CHANGES/HR = 0.05  INF-SCHEDULE = FULL_ON  ..
* 212 *
* 213 *          U-W     HEIGHT = 56.0  WIDTH = 188.0  CONS = FLOORCON
* 214 *               AZIMUTH = 315  ..
* 215 *
* 216 *          ROOF    HEIGHT = 56.0  WIDTH = 188.0  CONS = ADMROOF
* 217 *               AZIMUTH = 315  TILT = 0  ..
* 218 *
* 219 *          E-W     HEIGHT = 16.0  WIDTH = 56.0  CONS = WALLCON
* 220 *               AZIMUTH = 225  ..
* 221 *
* 222 *           WINDOW HEIGHT = 4.0  WIDTH = 2.0  G-T = G_TYPE1
* 223 *               MULTIPLIER = 2.0  ..
* 224 *
* 225 *           WINDOW HEIGHT = 4.0  WIDTH = 2.0  G-T = G_TYPE1
* 226 *               MULTIPLIER = 2.0  ..
* 227 *
* 228 *           DOOR   HEIGHT = 7.5  WIDTH = 3.0  CONS = DOORCON
* 229 *               MULTIPLIER = 3.0  ..
* 230 *
* 231 *          E-W     HEIGHT = 16.0  WIDTH = 186.0  CONS = WALLCON
* 232 *               AZIMUTH = 135  ..
* 233 *
* 234 *           WINDOW HEIGHT = 4.0  WIDTH = 2.0  G-T = G_TYPE1
* 235 *               MULTIPLIER = 23.0  ..
* 236 *
* 237 *           DOOR   HEIGHT = 7.5  WIDTH = 3.0  CONS = DOORCON
* 238 *               MULTIPLIER = 4.0  ..
* 239 *
* 240 *          E-W     HEIGHT = 16.0  WIDTH = 56.0  CONS = WALLCON
* 241 *               AZIMUTH = 45  ..
* 242 *
* 243 *           WINDOW HEIGHT = 4.0  WIDTH = 2.0  G-T = G_TYPE1
* 244 *               MULTIPLIER = 2.0  ..
* 245 *
```

```
* 246 *            DOOR   HEIGHT = 7.5  WIDTH = 3.0  CONS = DOORCON
* 247 *                MULTIPLIER = 5.0  ..
* 248 *
* 249 *
* 250 *
* 251 *              $ HOURLY REPORT DESCRIPTION
* 252 *
* 253 * LD1      =REPORT-BLOCK VARIABLE-TYPE = BAY_A
* 254 *                VARIABLE-LIST = (48) ..
* 255 * LD2      =REPORT-BLOCK VARIABLE-TYPE = BAY_B
* 256 *                VARIABLE-LIST = (48) ..
* 257 * LD3      =REPORT-BLOCK VARIABLE-TYPE = ADMIN_C
* 258 *                VARIABLE-LIST = (48) ..
* 259 * END ..
* 260 * COMPUTE LOADS ..
* 261 *
* 262 * INPUT SYSTEMS ..
```

SDL PROCESSOR INPUT DATA

3/18/1995 13: 7:49 SDL RUN 1

```
* 263 *
* 264 *
* 265 *            $----------------------------------------$
* 266 *            $EZ-DOE SYSTEMS INPUT$
* 267 *            $----------------------------------------$
* 268 *
* 269 *              $ GENERAL PROJECT DATA
* 270 *
* 271 * TITLE  LINE-1 *   EMC    ENGINEERS    INC.   *
* 272 *       LINE-2 *EZDOE - ELITE SOFTWARE DEVELOPMENT INC*
* 273 *       LINE-3 *   DENVER,     CO     80227   *
* 274 *
* 275 *       LINE-4 *BUILDING 2060, MNT. HANGAR AVUM       *
* 276 *       LINE-5 *BASE MODEL                          * ..
* 277 * ABORT           ERRORS ..
* 278 * DIAGNOSTIC       WARNINGS ..
* 279 * SYSTEMS-REPORT   VERIFICATION=(SV-B)
* 280 *              SUMMARY=(SS-A,SS-B,SS-C,SS-D,SS-F,SS-G,SS-K,
* 281 *                   SS-L,SS-M)
* 282 *              HOURLY-DATA-SAVE = YES ..
* 283 *
* 284 *              $ SCHEDULES
* 285 *
* 286 * FULL_ON_D  =DAY-SCHEDULE  (1,24) (1.) ..
* 287 * FULL_OFF_D =DAY-SCHEDULE  (1,24) (0.) ..
```

```
* 288 * HEAT1_ON_D =DAY-SCHEDULE  (1,24) (55.) ..
* 289 * HEAT2_ON_D =DAY-SCHEDULE  (1,24) (74.) ..
* 290 * COOL_D    =DAY-SCHEDULE  (1,24) (75.) ..
* 291 * COOL_80_D  =DAY-SCHEDULE  (1,24) (80.) ..
* 292 * MAU_ON_D   =DAY-SCHEDULE  (1,8) (0.)
* 293 *                    (9,16) (1.)
* 294 *                    (17,24) (0.) ..
* 295 *
* 296 * FULL_ON_W  =WEEK-SCHEDULE  (ALL) FULL_ON_D  ..
* 297 *
* 298 * FULL_OFF_W =WEEK-SCHEDULE  (ALL) FULL_OFF_D  ..
* 299 *
* 300 * HEAT1_ON_W =WEEK-SCHEDULE  (ALL) HEAT1_ON_D  ..
* 301 *
* 302 * HEAT2_ON_W =WEEK-SCHEDULE  (ALL) HEAT2_ON_D  ..
* 303 *
* 304 * COOL_W    =WEEK-SCHEDULE  (ALL) COOL_D  ..
* 305 *
* 306 * COOL_80_W  =WEEK-SCHEDULE  (ALL) COOL_80_D  ..
* 307 *
* 308 * MAU_ON_W   =WEEK-SCHEDULE  (WD)  MAU_ON_D
* 309 *                    (WEH) FULL_OFF_D  ..
* 310 *
* 311 *
* 312 * $ FULL ON SCHEDULE
* 313 * FULL_ON    =SCHEDULE THRU DEC 31 FULL_ON_W  ..
* 314 *
* 315 * $ FULL OFF SCHEDULE
* 316 * FULL_OFF   =SCHEDULE THRU DEC 31 FULL_OFF_W  ..
* 317 *
* 318 * $ HEAT SCHEDULE, 55 DEG
* 319 * HEAT55_0N  =SCHEDULE THRU MAY 15 HEAT1_ON_W
* 320 *               THRU OCT  1 FULL_OFF_W
* 321 *               THRU DEC 31 HEAT1_ON_W  ..
* 322 *
* 323 * $ HEAT SCHEDULE 68 DEG
* 324 * HEAT68_ON  =SCHEDULE THRU MAY 15 HEAT2_ON_W
* 325 *               THRU OCT  1 FULL_OFF_W
* 326 *               THRU DEC 31 HEAT2_ON_W  ..
* 327 *
* 328 * $ COOLING SCHEDULE
* 329 * COOL_SCHED =SCHEDULE THRU MAY 15 FULL_OFF_W
* 330 *               THRU OCT  1 COOL_W
* 331 *               THRU DEC 31 FULL_OFF_W  ..
* 332 *
* 333 * $ COOL SCHED 80 DEH
* 334 * COOL_80    =SCHEDULE THRU MAY 15 FULL_OFF_W
* 335 *               THRU OCT  1 COOL_80_W
* 336 *               THRU DEC 31 FULL_OFF_W  ..
* 337 *
```

```
* 338 * $ MAU SCHEDULE
* 339 * MAU_ON    =SCHEDULE THRU MAY 15 MAU_ON_W
* 340 *              THRU OCT  1 FULL_OFF_W
* 341 *              THRU DEC 31 MAU_ON_W ..
* 342 *
* 343 * $ HV_1 ON SCHEDULE
* 344 * HV_1_ON   =SCHEDULE THRU DEC 31 FULL_ON_W ..
* 345 *
* 346 *
* 347 *
* 348 *              $ ZONE DESCRIPTION
* 349 *
* 350 * BAY_A    =ZONE   DESIGN-HEAT-T = 57.0  DESIGN-COOL-T = 90.0
* 351 *             HEAT-TEMP-SCH = HEAT55_0N  ZONE-TYPE = CONDITIONED
* 352 *             THERMOSTAT-TYPE = PROPORTIONAL
* 353 *             BASEBOARD-CTRL = THERMOSTATIC  ASSIGNED-CFM = 198000.
* 354 *             SIZING-OPTION = FROM-LOADS  MIN-CFM-RATIO = 1.0
* 355 *             EXHAUST-STATIC = 0.75  ..
* 356 *
* 357 * BAY_B    =ZONE   DESIGN-HEAT-T = 57.0  DESIGN-COOL-T = 90.0
* 358 *             HEAT-TEMP-SCH = HEAT55_0N  ZONE-TYPE = CONDITIONED
* 359 *             THERMOSTAT-TYPE = PROPORTIONAL
* 360 *             BASEBOARD-CTRL = THERMOSTATIC  ASSIGNED-CFM = 55920.
* 361 *             OUTSIDE-AIR-CFM = 55920.  SIZING-OPTION = FROM-LOADS
* 362 *             MIN-CFM-RATIO = 1.0  EXHAUST-STATIC = 0.75  ..
* 363 *
* 364 * ADMIN_C  =ZONE   DESIGN-HEAT-T = 68.0  DESIGN-COOL-T = 75.0
* 365 *             HEAT-TEMP-SCH = HEAT68_ON  ZONE-TYPE = CONDITIONED
* 366 *             THERMOSTAT-TYPE = PROPORTIONAL
* 367 *             BASEBOARD-CTRL = THERMOSTATIC
* 368 *             BASEBOARD-RATING = -129500.  ASSIGNED-CFM = 19600.
* 369 *             OUTSIDE-AIR-CFM = 2940.  SIZING-OPTION = FROM-LOADS
* 370 *             EXHAUST-CFM = 2940.0  ..
* 371 *
* 372 *
* 373 *             $ SYSTEM DESCRIPTION
* 374 *
* 375 * DUH      =SYSTEM   SYSTEM-TYPE = UHT
* 376 *               MAX-SUPPLY-T = 135.0  RATED-CFM = 198000.
* 377 *               FAN-SCHEDULE = FULL_ON  SUPPLY-DELTA-T = 0.2
* 378 *               SUPPLY-KW = 0.00014  NIGHT-CYCLE-CTRL = CYCLE-ON-ANY
* 379 *               HEATING-CAPACITY = -6739200.  FURNACE-AUX = 0.
* 380 *               ZONE-NAMES = (BAY_A)  ..
* 381 *
* 382 * RMAU     =SYSTEM   SYSTEM-TYPE = SZRH
* 383 *               MAX-SUPPLY-T = 135.0  MIN-SUPPLY-T = 55.0
* 384 *               HEATING-SCHEDULE = MAU_ON  PREHEAT-T = 15.0
* 385 *               MIN-HUMIDITY = 30.0  ECONO-LIMIT-T = 65.0
* 386 *               ECONO-LOW-LIMIT = 55.0  OA-CONTROL = FIXED
* 387 *               SUPPLY-CFM = 55920.  RATED-CFM = 55920.
```

```
* 388 *              MIN-OUTSIDE-AIR = 1.0  RECOVERY-EFF = 0.37
* 389 *              FAN-SCHEDULE = MAU_ON  SUPPLY-DELTA-T = 2.4
* 390 *              SUPPLY-KW = 0.00112  NIGHT-CYCLE-CTRL = STAY-OFF
* 391 *              NIGHT-VENT-DT = 0.0  MIN-CFM-RATIO = 1.0
* 392 *              COOL-FT-MIN = 0.  HEATING-CAPACITY = -2536800.
* 393 *              FURNACE-AUX = 0.
* 394 *              ZONE-NAMES = (BAY_B)  ..
* 395 *
* 396 * HV-1     =SYSTEM   SYSTEM-TYPE = HVSYS
* 397 *              MAX-SUPPLY-T = 135.0  HEATING-SCHEDULE = HV_1_ON
* 398 *              MIN-HUMIDITY = 30.0  ECONO-LIMIT-T = 65.0
* 399 *              ECONO-LOW-LIMIT = 55.0  HEAT-CONTROL = COLDEST
* 400 *              SUPPLY-CFM = 19600.  RETURN-CFM = 16660.
* 401 *              RATED-CFM = 19600.  MIN-OUTSIDE-AIR = 0.15
* 402 *              SUPPLY-DELTA-T = 2.4  SUPPLY-KW = 0.00119
* 403 *              MOTOR-PLACEMENT = OUTSIDE-AIRFLOW
* 404 *              NIGHT-CYCLE-CTRL = STAY-OFF  NIGHT-VENT-DT = 0.0
* 405 *              HEATING-CAPACITY = -243400.  FURNACE-AUX = 0.
* 406 *              ZONE-NAMES = (ADMIN_C)  ..
* 407 *
* 408 *
* 409 *            $ HOURLY REPORT DESCRIPTION
* 410 *
* 411 * sys1     =REPORT-BLOCK VARIABLE-TYPE = DUH
* 412 *              VARIABLE-LIST = (5,7,9,10) ..
* 413 * SYS2     =REPORT-BLOCK VARIABLE-TYPE = RMAU
* 414 *              VARIABLE-LIST = (5,7,9,10) ..
* 415 * SYS3     =REPORT-BLOCK VARIABLE-TYPE = HV-1
* 416 *              VARIABLE-LIST = (5,7,9,10) ..
* 417 * REP2     = HOURLY-REPORT  REPORT-SCHEDULE = FULL_ON
* 418 *              REPORT-BLOCK = (sys1,SYS2,SYS3)
* 419 *  ..
* 420 * END  ..
* 421 * COMPUTE SYSTEMS  ..
* 422 *
* 423 * INPUT PLANT  ..

        PDL PROCESSOR INPUT DATA

           3/18/1995   13: 7:49  PDL RUN  1




* 424 *
* 425 *
* 426 *          $-----------------------------------$
* 427 *          $EZ-DOE PLANTS INPUT$
* 428 *          $-----------------------------------$
* 429 *
```

```
* 430 *                $ GENERAL PROJECT DATA
* 431 *
* 432 * TITLE  LINE-1 *    EMC     ENGINEERS     INC.    *
* 433 *       LINE-2 *EZDOE - ELITE SOFTWARE DEVELOPMENT INC*
* 434 *       LINE-3 *    DENVER,      CO      80227    *
* 435 *
* 436 *       LINE-4 *BUILDING 2060, MNT. HANGAR AVUM        *
* 437 *       LINE-5 *BASE MODEL                             * ..
* 438 *
* 439 * ABORT            ERRORS ..
* 440 * DIAGNOSTIC       WARNINGS ..
* 441 * PLANT-REPORT      SUMMARY=(PS-A,PS-B,BEPS)
* 442 *
* 443 *               HOURLY-DATA-SAVE = YES  ..
* 444 *
* 445 *               $ SCHEDULES
* 446 *
* 447 *
* 448 *
* 449 *
* 450 *
* 451 *               $ EQUIPMENT DESCRIPTION
* 452 *
* 453 * BOILER    =PLANT-EQUIPMENT   TYPE = HW-BOILER
* 454 *                 SIZE = 8.4  ..
* 455 *
* 456 * ACC8      =PLANT-EQUIPMENT   TYPE = OPEN-CENT-CHLR
* 457 *                 SIZE = 0.1  ..
* 458 *
* 459 * DHW       =PLANT-EQUIPMENT   TYPE = HW-BOILER
* 460 *                 SIZE = 0.6  ..
* 461 *
* 462 * PLANT-PARAMETERS     OPEN-CENT-COND-TYPE = AIR  CCIRC-HEAD = 63.2
* 463 *                 HCIRC-HEAD = 100.0    ..
* 464 *
* 465 *
* 466 * ENERGY-RESOURCE      RESOURCE = ELECTRICITY  ..
* 467 * ENERGY-RESOURCE      RESOURCE = FUEL-OIL  ..
* 468 *
* 469 *
* 470 *
* 471 * END  ..
* 472 * COMPUTE PLANT ..
* 473 * STOP ..
```

ENERGY TYPE IN SITE MBTU-	ELECTRICITY	FUEL-OIL
CATEGORY OF USE		
SPACE HEAT	329.58	6998.54
SPACE COOL	0.00	0.00
HVAC AUX	1236.42	0.00
DOM HOT WTR	26.19	547.04
AUX SOLAR	0.00	0.00
LIGHTS	397.03	0.00
VERT TRANS	0.00	0.00
MISC EQUIP	259.56	0.00
TOTAL	2248.76	7545.58

TOTAL SITE ENERGY 9794.29 MBTU 202.5 KBTU/SQFT-YR GROSS-AREA 202.5 KBTU/SQFT-YR NET-AREA
TOTAL SOURCE ENERGY 14298.49 MBTU 295.6 KBTU/SQFT-YR GROSS-AREA 295.6 KBTU/SQFT-YR NET-AREA

PERCENT OF HOURS ANY SYSTEM ZONE OUTSIDE OF THROTTLING RANGE = 0.0
PERCENT OF HOURS ANY PLANT LOAD NOT SATISFIED = 0.0

NOTE ELECTRICITY AND/OR FUEL USED TO GENERATE ELECTRICITY IS APPORTIONED BASED ON THE YEARLY DEMAND. ALL OTHER ENERGY TYPES ARE APPORTIONED HOURLY.

EMC ENGINEERS INC. EZDOE - ELITE SOFTWARE DEVELOPMENT INC DOE-2.1D 3/18/1995 13: 7:49 PDL RUN 1
DENVER, CO 80227 BUILDING 2060, MNT. HANGAR AVUM BASE MODEL
REPORT- PS-B MONTHLY PEAK AND TOTAL ENERGY USE WEATHER FILE- MASSENA, NY

MO	UTILITY- ELECTRICITY		FUEL-OIL
JAN	TOTAL(MBTU)	269.163	1836.808
	PEAK(KBTU)	781.834	8082.728
	DY/HR	5/14	5/12
FEB	TOTAL(MBTU)	231.709	1270.027
	PEAK(KBTU)	770.717	5868.426
	DY/HR	14/14	4/12
MAR	TOTAL(MBTU)	248.778	1220.336
	PEAK(KBTU)	768.043	5219.054
	DY/HR	3/14	9/ 9
APR	TOTAL(MBTU)	193.073	446.334
	PEAK(KBTU)	711.472	2963.707
	DY/HR	1/10	1/12
MAY	TOTAL(MBTU)	156.8	154.024
	PEAK(KBTU)	666.761	2136.915
	DY/HR	2/14	3/12
JUN	TOTAL(MBTU)	121.019	54.464
	PEAK(KBTU)	361.867	370.077
	DY/HR	7/14	30/12
JUL	TOTAL(MBTU)	123.839	55.502
	PEAK(KBTU)	361.867	370.077
	DY/HR	28/14	29/12
AUG	TOTAL(MBTU)	126.479	58.604
	PEAK(KBTU)	361.867	661.293
	DY/HR	19/14	6/24
SEP	TOTAL(MBTU)	123.751	57.965
	PEAK(KBTU)	336.269	370.077
	DY/HR	5/11	30/12
OCT	TOTAL(MBTU)	189.699	323.514
	PEAK(KBTU)	698.226	2819.212
	DY/HR	26/13	26/12
NOV	TOTAL(MBTU)	214.036	742.149
	PEAK(KBTU)	754.056	3710.586
	DY/HR	22/14	22/12

DEC	TOTAL(MBTU)	250.377	1325.843
	PEAK(KBTU)	768.775	5499.183
	DY/HR	30/14	23/12
	ONE YEAR	2248.724	7545.568
	USE/PEAK	781.834	8082.728

COMPUTER SIMULATIONS
BUILDING 2060

RUN 1 - SCHEDULE START/STOP AND NIGHT SETBACK

```
*   3 *
*   4 *
*   5 *                 $-----------------------------------$
*   6 *                 $ E Z - D O E   L O A D S   I N P U T $
*   7 *                 $-----------------------------------$
*   8 *
*   9 *                    $ GENERAL PROJECT DATA
*  10 *
*  11 * TITLE  LINE-1 *     EMC      ENGINEERS      INC.     *
*  12 *        LINE-2 *EZDOE - ELITE SOFTWARE DEVELOPMENT INC*
*  13 *        LINE-3 *     DENVER,       CO       80227     *
*  14 *
*  15 *        LINE-4 *BUILDING 2060, MNT. HANGAR AVUM         *
*  16 *        LINE-5 *MODEL WITH SET BACK                     * ..
*  17 *
*  18 * ABORT              ERRORS  ..
*  19 * DIAGNOSTIC         WARNINGS ..
*  20 * LOADS-REPORT       HOURLY-DATA-SAVE = YES  ..
*  21 * BUILDING-LOCATION  HOLIDAY = NO
*  22 *                    X-REF = 0.0
*  23 *                    Y-REF = 0.0  ..
*  24 * RUN-PERIOD         JAN 1 1994 THRU DEC 31 1994  ..
*  25 *
*  26 *
*  27 *                     $ SCHEDULES
*  28 *
*  29 * FULL_ON_D  =DAY-SCHEDULE  (1,24) (1.) ..
*  30 *
*  31 * FULL_OFF_D =DAY-SCHEDULE  (1,24) (0.) ..
*  32 *
*  33 * LIGHT_ON_D =DAY-SCHEDULE  (1,5) (0.2)
*  34 *                           (6,7) (0.35)
*  35 *                           (8,9) (0.5,0.7)
*  36 *                           (10,11) (0.9)
*  37 *                           (12) (0.8)
*  38 *                           (13,14) (0.9)
*  39 *                           (15) (0.5)
*  40 *                           (16,18) (0.4)
*  41 *                           (19) (0.3)
*  42 *                           (20,24) (0.2) ..
*  43 *
*  44 * LT_ON_WKND =DAY-SCHEDULE  (1,6) (0.23)
*  45 *                           (7,19) (0.07)
*  46 *                           (20,24) (0.23) ..
*  47 *
*  48 * PEOPLE_D   =DAY-SCHEDULE  (1,4) (0.)
*  49 *                           (5,6) (0.1)
*  50 *                           (7) (0.5)
*  51 *                           (8,11) (1.)
*  52 *                           (12) (0.8)
*  53 *                           (13,16) (1.)
*  54 *                           (17,18) (0.5,0.1)
*  55 *                           (19,24) (0.) ..
*  56 *
*  57 * EQUIP_ON_D =DAY-SCHEDULE  (1,5) (0.)
*  58 *                           (6,10) (0.3,0.4,0.5,0.6,0.8)
*  59 *                           (11,13) (0.7,0.5,0.8)
*  60 *                           (14,15) (0.9)
*  61 *                           (16,18) (0.8,0.5,0.1)
*  62 *                           (19,24) (0.) ..
*  63 *
*  64 * DHW_D      =DAY-SCHEDULE  (1,6) (0.)
*  65 *                           (7,8) (0.1,0.2)
*  66 *                           (9,10) (0.1)
*  67 *                           (11,13) (0.2,0.4,0.3)
*  68 *                           (14,16) (0.2)
*  69 *                           (17) (0.1)
*  70 *                           (18,24) (0.) ..
*  71 *
*  72 *
*  73 * FULL_ON_W  =WEEK-SCHEDULE  (ALL) FULL_ON_D  ..
*  74 *
*  75 * FULL_OFF_W =WEEK-SCHEDULE  (ALL) FULL_OFF_D  ..
*  76 *
*  77 * LIGHT_ON_W =WEEK-SCHEDULE  (WD)  LIGHT_ON_D
*  78 *                           (WEH) LT_ON_WKND  ..
*  79 *
*  80 * PEOPLE_W   =WEEK-SCHEDULE  (WD)  PEOPLE_D
*  81 *                           (WEH) FULL_OFF_D  ..
*  82 *
*  83 * EQUIP_W    =WEEK-SCHEDULE  (WD)  EQUIP_ON_D
*  84 *                           (WEH) FULL_OFF_D  ..
*  85 *
*  86 * BAY_INFL_W =WEEK-SCHEDULE  (WD)  FULL_ON_D
*  87 *                           (WEH) FULL_OFF_D  ..
*  88 *
*  89 * DHW_W      =WEEK-SCHEDULE  (WD)  DHW_D
*  90 *                           (WEH) FULL_OFF_D  ..
*  91 *
*  92 *
*  93 * $ FULL OFF SCHEDULE
*  94 * FULL_OFF   =SCHEDULE THRU DEC 31 FULL_OFF_W  ..
*  95 *
*  96 * $ LIGHTING SCHEDULE
*  97 * LIGHT_SCHD =SCHEDULE THRU DEC 31 LIGHT_ON_W  ..
*  98 *
*  99 * $ OCCUPANCY SCHEDULE
* 100 * PEOPLE_SCH =SCHEDULE THRU DEC 31 PEOPLE_W  ..
* 101 *
* 102 * $ EQUIPMENT SCHEDULE
```

```
* 103 * EQUIP_SCHD =SCHEDULE THRU DEC 31 EQUIP_W  ..
* 104 *
* 105 * $ BAY INFILTRATION SCHED
* 106 * BAY_INFILT =SCHEDULE THRU DEC 31 BAY_INFL_W  ..
* 107 *
* 108 * $ DOMESTIC HW SCHEDULE
* 109 * DHW_SCHED  =SCHEDULE THRU DEC 31 DHW_W  ..
* 110 *
* 111 * $ FULL ON SCHEDULE
* 112 * FULL_ON    =SCHEDULE THRU DEC 31 FULL_ON_W  ..
* 113 *
* 114 *
* 115 *
* 116 *                    $ CONSTRUCTION TYPES
* 117 *
* 118 *
* 119 *
* 120 * FLOORCON =CONSTRUCTION   U-VALUE =  0.010  ..
* 121 *
* 122 *  $ ADMINISTRATION ROOF CONSTRUCTION
* 123 * ADMROOF  =CONSTRUCTION   U-VALUE =  0.050  ..
* 124 *
* 125 *  $ ROOF CONSTRUCTION
* 126 * CEILING  =LAYERS         MATERIAL=(AS01,IN76,HF-E3)
* 127 *                           THICKNESS=(0.005,0.250,0.031)  ..
* 128 * ROOFCON  =CONSTRUCTION   LAYERS = CEILING   ..
* 129 * WALLCON  =CONSTRUCTION   U-VALUE =  0.200  ..
* 130 * INWALL   =CONSTRUCTION   U-VALUE = 20.000  ..
* 131 * DOORCON  =CONSTRUCTION   U-VALUE =  0.400  ..
* 132 *
* 133 * G_TYPE1  =GLASS-TYPE     SHADING-COEF = 1.000
* 134 *                           PANES = 1
* 135 *                           GLASS-CONDUCTANCE =  1.130  ..
* 136 *
* 137 *
* 138 *
* 139 *
* 140 *                    $ SPACE DESCRIPTION
* 141 *
* 142 * BAY_A      =SPACE    AREA = 18914.0  VOLUME = 699818.0
* 143 *                      AZIMUTH = 315  TEMPERATURE = (57.)
* 144 *                      ZONE-TYPE = CONDITIONED  PEOPLE-SCHEDULE = PEOPLE_SCH
* 145 *                      NUMBER-OF-PEOPLE = 20.0  PEOPLE-HEAT-GAIN = 700.0
* 146 *                      LIGHTING-TYPE = INCAND  LIGHTING-W/SQFT = 0.8
* 147 *                      LIGHTING-SCHEDULE = LIGHT_SCHD
* 148 *                      EQUIP-SCHEDULE = EQUIP_SCHD  EQUIPMENT-KW = 15.0
* 149 *                      SOURCE-SENSIBLE = 0.0  INF-METHOD = AIR-CHANGE
* 150 *                      AIR-CHANGES/HR = 0.89  INF-SCHEDULE = BAY_INFILT   ..
* 151 *
* 152 *              U-W      HEIGHT = 48.0  WIDTH = 386.0  CONS = FLOORCON
* 153 *                        AZIMUTH = 315   ..
* 154 *
* 155 *                ROOF     HEIGHT = 48.0  WIDTH = 386.0  CONS = ROOFCON
* 156 *                         AZIMUTH = 315  TILT = 0   ..
* 157 *
* 158 *                E-W      HEIGHT = 37.0  WIDTH = 48.0  CONS = WALLCON
* 159 *                         AZIMUTH = 45   ..
* 160 *
* 161 *                E-W      HEIGHT = 37.0  WIDTH = 48.0  CONS = WALLCON
* 162 *                         AZIMUTH = 225   ..
* 163 *
* 164 *                E-W      HEIGHT = 37.0  WIDTH = 386.0  CONS = WALLCON
* 165 *                         AZIMUTH = 315   ..
* 166 *
* 167 *                  DOOR   HEIGHT = 14.0  WIDTH = 30.5  CONS = DOORCON
* 168 *                         MULTIPLIER = 10.0   ..
* 169 *
* 170 *                I-W      HEIGHT = 37.0  WIDTH = 1000.0  CONS = INWALL
* 171 *                         AZIMUTH = 135  NEXT-TO = BAY_B   ..
* 172 *
* 173 *
* 174 * BAY_B      =SPACE    AREA = 18914.0  VOLUME = 699818.0
* 175 *                      AZIMUTH = 315  TEMPERATURE = (57.)
* 176 *                      ZONE-TYPE = CONDITIONED  PEOPLE-SCHEDULE = PEOPLE_SCH
* 177 *                      NUMBER-OF-PEOPLE = 20.0  PEOPLE-HEAT-GAIN = 700.0
* 178 *                      LIGHTING-TYPE = INCAND  LIGHTING-W/SQFT = 0.8
* 179 *                      LIGHTING-SCHEDULE = LIGHT_SCHD
* 180 *                      EQUIP-SCHEDULE = EQUIP_SCHD  EQUIPMENT-KW = 15.0
* 181 *                      SOURCE-SENSIBLE = 0.0  INF-METHOD = AIR-CHANGE
* 182 *                      AIR-CHANGES/HR = 0.05  INF-SCHEDULE = FULL_ON   ..
* 183 *
* 184 *              U-W      HEIGHT = 48.0  WIDTH = 386.0  CONS = FLOORCON
* 185 *                        AZIMUTH = 315   ..
* 186 *
* 187 *                ROOF     HEIGHT = 48.0  WIDTH = 386.0  CONS = ROOFCON
* 188 *                         AZIMUTH = 315  TILT = 0   ..
* 189 *
* 190 *                E-W      HEIGHT = 37.0  WIDTH = 48.0  CONS = WALLCON
* 191 *                         AZIMUTH = 45   ..
* 192 *
* 193 *                E-W      HEIGHT = 37.0  WIDTH = 48.0  CONS = WALLCON
* 194 *                         AZIMUTH = 225   ..
* 195 *
* 196 *                E-W      HEIGHT = 37.0  WIDTH = 192.0  CONS = WALLCON
* 197 *                         AZIMUTH = 135   ..
* 198 *
* 199 *
* 200 * ADMIN_C    =SPACE    AREA = 10545.0  VOLUME = 168720.0
* 201 *                      AZIMUTH = 315  TEMPERATURE = (68.)
* 202 *                      ZONE-TYPE = CONDITIONED  PEOPLE-SCHEDULE = PEOPLE_SCH
* 203 *                      NUMBER-OF-PEOPLE = 20.0  PEOPLE-HEAT-GAIN = 550.0
* 204 *                      LIGHTING-TYPE = REC-FLUOR-RV  LIGHTING-W/SQFT = 0.76
* 205 *                      LIGHTING-SCHEDULE = LIGHT_SCHD
* 206 *                      EQUIP-SCHEDULE = EQUIP_SCHD  EQUIPMENT-KW = 7.5
* 207 *                      SOURCE-SCHEDULE = DHW_SCHED  SOURCE-TYPE = HOT-WATER
* 208 *                      SOURCE-BTU/HR = 640000.0  SOURCE-SENSIBLE = 0.02
* 209 *                      SOURCE-LATENT = 0.01  INF-METHOD = AIR-CHANGE
* 210 *                      AIR-CHANGES/HR = 0.05  INF-SCHEDULE = FULL_ON   ..
```

```
* 211 *
* 212 *              U-W      HEIGHT = 56.0  WIDTH = 188.0  CONS = FLOORCON
* 213 *                       AZIMUTH = 315   ..
* 214 *
* 215 *               ROOF    HEIGHT = 56.0  WIDTH = 188.0  CONS = ADMROOF
* 216 *                       AZIMUTH = 315  TILT = 0   ..
* 217 *
* 218 *               E-W     HEIGHT = 16.0  WIDTH = 56.0  CONS = WALLCON
* 219 *                       AZIMUTH = 225   ..
* 220 *
* 221 *                 WINDOW HEIGHT = 4.0  WIDTH = 2.0  G-T = G_TYPE1
* 222 *                       MULTIPLIER = 2.0   ..
* 223 *
* 224 *                 WINDOW HEIGHT = 4.0  WIDTH = 2.0  G-T = G_TYPE1
* 225 *                       MULTIPLIER = 2.0   ..
* 226 *
* 227 *                 DOOR   HEIGHT = 7.5  WIDTH = 3.0  CONS = DOORCON
* 228 *                       MULTIPLIER = 3.0   ..
* 229 *
* 230 *               E-W     HEIGHT = 16.0  WIDTH = 186.0  CONS = WALLCON
* 231 *                       AZIMUTH = 135   ..
* 232 *
* 233 *                 WINDOW HEIGHT = 4.0  WIDTH = 2.0  G-T = G_TYPE1
* 234 *                       MULTIPLIER = 23.0   ..
* 235 *
* 236 *                 DOOR   HEIGHT = 7.5  WIDTH = 3.0  CONS = DOORCON
* 237 *                       MULTIPLIER = 4.0   ..
* 238 *
* 239 *               E-W     HEIGHT = 16.0  WIDTH = 56.0  CONS = WALLCON
* 240 *                       AZIMUTH = 45   ..
* 241 *
* 242 *                 WINDOW HEIGHT = 4.0  WIDTH = 2.0  G-T = G_TYPE1
* 243 *                       MULTIPLIER = 2.0   ..
* 244 *
* 245 *                 DOOR   HEIGHT = 7.5  WIDTH = 3.0  CONS = DOORCON
* 246 *                       MULTIPLIER = 5.0   ..
* 247 *
* 248 *
* 249 * END  ..
* 250 * COMPUTE LOADS  ..
* 251 *
* 252 * INPUT SYSTEMS  ..
```

```
* 253 *
* 254 *
* 255 *                  $---------------------------------------$
* 256 *                  $ E Z - D O E   S Y S T E M S  I N P U T $
* 257 *                  $---------------------------------------$
* 258 *
* 259 *                     $ GENERAL PROJECT DATA
* 260 *
* 261 * TITLE  LINE-1 *     EMC      ENGINEERS      INC.     *
* 262 *        LINE-2 *EZDOE - ELITE SOFTWARE DEVELOPMENT INC*
* 263 *        LINE-3 *     DENVER,       CO       80227     *
* 264 *
* 265 *        LINE-4 *BUILDING 2060, MNT. HANGAR AVUM         *
* 266 *        LINE-5 *MODEL WITH SET BACK                      * ..
* 267 * ABORT              ERRORS  ..
* 268 * DIAGNOSTIC         WARNINGS ..
* 269 * SYSTEMS-REPORT     VERIFICATION=(SV-B)
* 270 *                    SUMMARY=(SS-A,SS-B,SS-C,SS-K,SS-L,SS-M)
* 271 *                    HOURLY-DATA-SAVE = YES  ..
* 272 *
* 273 *                     $ SCHEDULES
* 274 *
* 275 * FULL_ON_D  =DAY-SCHEDULE  (1,24) (1.) ..
* 276 * FULL_OFF_D =DAY-SCHEDULE  (1,24) (0.) ..
* 277 * HEAT1_ON_D =DAY-SCHEDULE  (1,24) (55.) ..
* 278 * HEAT2_ON_D =DAY-SCHEDULE  (1,24) (74.) ..
* 279 * COOL_D     =DAY-SCHEDULE  (1,24) (75.) ..
* 280 * COOL_80_D  =DAY-SCHEDULE  (1,24) (80.) ..
* 281 * MAU_ON_D   =DAY-SCHEDULE  (1,8) (0.)
* 282 *                           (9,16) (1.)
* 283 *                           (17,24) (0.) ..
* 284 * FAN_WSBA_D =DAY-SCHEDULE  (1,4) (0.)
* 285 *                           (5,21) (1.)
* 286 *                           (22,24) (0.) ..
* 287 * FAN_WSBB_D =DAY-SCHEDULE  (1,4) (0.)
* 288 *                           (5,17) (1.)
* 289 *                           (18,24) (0.) ..
* 290 * FAN_WSBC_D =DAY-SCHEDULE  (1,2) (1.)
* 291 *                           (3,4) (0.)
* 292 *                           (5,24) (1.) ..
* 293 * HT55WSBA_D =DAY-SCHEDULE  (1,4) (50.)
* 294 *                           (5,21) (55.)
* 295 *                           (22,24) (50.) ..
* 296 * HT55WSBB_D =DAY-SCHEDULE  (1,4) (50.)
* 297 *                           (5,17) (55.)
* 298 *                           (18,24) (50.) ..
* 299 * HT55WSBC_D =DAY-SCHEDULE  (1,2) (55.)
* 300 *                           (3,4) (50.)
* 301 *                           (5,24) (55.) ..
* 302 * HT68_WSB_D =DAY-SCHEDULE  (1,4) (50.)
* 303 *                           (5,17) (74.)
* 304 *                           (18,24) (50.) ..
* 305 * HEAT_50_D  =DAY-SCHEDULE  (1,24) (50.) ..
* 306 *
* 307 * FULL_ON_W  =WEEK-SCHEDULE  (ALL) FULL_ON_D  ..
* 308 *
* 309 * FULL_OFF_W =WEEK-SCHEDULE  (ALL) FULL_OFF_D  ..
* 310 *
* 311 * HEAT1_ON_W =WEEK-SCHEDULE  (ALL) HEAT1_ON_D  ..
* 312 *
* 313 * HEAT2_ON_W =WEEK-SCHEDULE  (ALL) HEAT2_ON_D  ..
* 314 *
* 315 * COOL_W     =WEEK-SCHEDULE  (ALL) COOL_D  ..
* 316 *
* 317 * COOL_80_W  =WEEK-SCHEDULE  (ALL) COOL_80_D  ..
* 318 *
* 319 * MAU_ON_W   =WEEK-SCHEDULE  (WD)  MAU_ON_D
* 320 *                           (WEH) FULL_OFF_D  ..
* 321 *
* 322 * FAN_WSB1_W =WEEK-SCHEDULE  (MON) FAN_WSBA_D
* 323 *                           (TUE) FAN_WSBA_D
* 324 *                           (WED) FAN_WSBA_D
* 325 *                           (THU) FAN_WSBA_D
* 326 *                           (FRI) FAN_WSBB_D
* 327 *                           (SAT) FULL_OFF_D
* 328 *                           (SUN) FULL_OFF_D
* 329 *                           (HOL) FAN_WSBA_D ..
* 330 *
* 331 * FAN_WSB2_W =WEEK-SCHEDULE  (MON) FAN_WSBC_D
* 332 *                           (TUE) FAN_WSBC_D
* 333 *                           (WED) FAN_WSBC_D
* 334 *                           (THU) FAN_WSBC_D
* 335 *                           (FRI) FAN_WSBB_D
* 336 *                           (SAT) FULL_OFF_D
* 337 *                           (SUN) FULL_OFF_D
* 338 *                           (HOL) FAN_WSBC_D ..
* 339 *
* 340 * FAN_WSB3_W =WEEK-SCHEDULE  (WD)  FAN_WSBB_D
* 341 *                           (SAT) FULL_OFF_D
* 342 *                           (SUN) FULL_OFF_D
* 343 *                           (HOL) FAN_WSBB_D ..
* 344 *
* 345 * HT55WSB1_W =WEEK-SCHEDULE  (MON) HT55WSBA_D
* 346 *                           (TUE) HT55WSBA_D
* 347 *                           (WED) HT55WSBA_D
* 348 *                           (THU) HT55WSBA_D
* 349 *                           (FRI) HT55WSBB_D
* 350 *                           (SAT) HEAT_50_D
* 351 *                           (SUN) HEAT_50_D
* 352 *                           (HOL) HT55WSBA_D ..
```

```
* 353 *
* 354 * HT55WSB2_W =WEEK-SCHEDULE  (MON) HT55WSBC_D
* 355 *                           (TUE) HT55WSBC_D
* 356 *                           (WED) HT55WSBC_D
* 357 *                           (THU) HT55WSBC_D
* 358 *                           (FRI) HT55WSBB_D
* 359 *                           (SAT) HEAT_50_D
* 360 *                           (SUN) HEAT_50_D
* 361 *                           (HOL) HT55WSBC_D ..
* 362 *
* 363 * HT68_WSB_W =WEEK-SCHEDULE  (WD)  HT68_WSB_D
* 364 *                           (WEH) HEAT_50_D  ..
* 365 *
* 366 *
* 367 * $ FULL ON SCHEDULE
* 368 * FULL_ON    =SCHEDULE THRU DEC 31 FULL_ON_W  ..
* 369 *
* 370 * $ FULL OFF SCHEDULE
* 371 * FULL_OFF   =SCHEDULE THRU DEC 31 FULL_OFF_W  ..
* 372 *
* 373 * $ HEAT SCHEDULE, 55 DEG
* 374 * HEAT55_ON  =SCHEDULE THRU DEC 31 HEAT1_ON_W  ..
* 375 *
* 376 * $ HEAT SCHEDULE 68 DEG
* 377 * HEAT68_ON  =SCHEDULE THRU DEC 31 HEAT2_ON_W  ..
* 378 *
* 379 * $ COOLING SCHEDULE
* 380 * COOL_SCHED =SCHEDULE THRU MAY 15 FULL_OFF_W
* 381 *                      THRU OCT  1 COOL_W
* 382 *                      THRU DEC 31 FULL_OFF_W  ..
* 383 *
* 384 * $ COOL SCHED 80 DEH
* 385 * COOL_80    =SCHEDULE THRU MAY 15 FULL_OFF_W
* 386 *                      THRU OCT  1 COOL_80_W
* 387 *                      THRU DEC 31 FULL_OFF_W  ..
* 388 *
* 389 * $ MAU SCHEDULE
* 390 * MAU_ON     =SCHEDULE THRU MAY 15 MAU_ON_W
* 391 *                      THRU OCT  1 FULL_OFF_W
* 392 *                      THRU DEC 31 MAU_ON_W  ..
* 393 *
* 394 * $ HV_1 ON SCHEDULE
* 395 * HV_1_ON    =SCHEDULE THRU DEC 31 FULL_ON_W  ..
* 396 *
* 397 * $ HANGAR FAN SB, WINTER
* 398 * FAN_WSB1   =SCHEDULE THRU MAY 15 FAN_WSB2_W
* 399 *                      THRU OCT  1 FULL_OFF_W
* 400 *                      THRU DEC 31 FAN_WSB2_W  ..
* 401 *
* 402 * $ OPERATIONS FAN SET BACK
* 403 * FAN_WSB_2  =SCHEDULE THRU DEC 31 FAN_WSB3_W  ..
* 404 *
* 405 * $ HANGER HEAT SET BACK
* 406 * HEAT_WSB_1 =SCHEDULE THRU DEC 31 HT55WSB1_W  ..
* 407 *
* 408 * $ OPERATIONS HEAT W SB
* 409 * HT68_WSB   =SCHEDULE THRU DEC 31 HT68_WSB_W  ..
* 410 *
* 411 *
* 412 *
* 413 *                      $ ZONE DESCRIPTION
* 414 *
* 415 * BAY_A      =ZONE     DESIGN-HEAT-T = 57.0  DESIGN-COOL-T = 90.0
* 416 *                      HEAT-TEMP-SCH = HEAT_WSB_1  ZONE-TYPE = CONDITIONED
* 417 *                      THERMOSTAT-TYPE = PROPORTIONAL
* 418 *                      BASEBOARD-CTRL = THERMOSTATIC  ASSIGNED-CFM = 198000.
* 419 *                      SIZING-OPTION = FROM-LOADS  MIN-CFM-RATIO = 1.0
* 420 *                      EXHAUST-STATIC = 0.75   ..
* 421 *
* 422 * BAY_B      =ZONE     DESIGN-HEAT-T = 57.0  DESIGN-COOL-T = 90.0
* 423 *                      HEAT-TEMP-SCH = HEAT_WSB_1  ZONE-TYPE = CONDITIONED
* 424 *                      THERMOSTAT-TYPE = PROPORTIONAL
* 425 *                      BASEBOARD-CTRL = THERMOSTATIC  ASSIGNED-CFM = 55920.
* 426 *                      OUTSIDE-AIR-CFM = 55920.  SIZING-OPTION = FROM-LOADS
* 427 *                      MIN-CFM-RATIO = 1.0  EXHAUST-STATIC = 0.75   ..
* 428 *
* 429 * ADMIN_C    =ZONE     DESIGN-HEAT-T = 68.0  DESIGN-COOL-T = 75.0
* 430 *                      HEAT-TEMP-SCH = HT68_WSB  ZONE-TYPE = CONDITIONED
* 431 *                      THERMOSTAT-TYPE = PROPORTIONAL
* 432 *                      BASEBOARD-CTRL = THERMOSTATIC
* 433 *                      BASEBOARD-RATING = -129500.  ASSIGNED-CFM = 19600.
* 434 *                      OUTSIDE-AIR-CFM = 2940.  SIZING-OPTION = FROM-LOADS
* 435 *                      EXHAUST-CFM = 2940.0   ..
* 436 *
* 437 *
* 438 *                      $ SYSTEM DESCRIPTION
* 439 *
* 440 * DUH        =SYSTEM     SYSTEM-TYPE = UHT
* 441 *                        MAX-SUPPLY-T = 135.0  RATED-CFM = 198000.
* 442 *                        FAN-SCHEDULE = FAN_WSB1  SUPPLY-DELTA-T = 0.2
* 443 *                        SUPPLY-KW = 0.00014  NIGHT-CYCLE-CTRL = CYCLE-ON-ANY
* 444 *                        HEATING-CAPACITY = -6739200.  FURNACE-AUX = 0.
* 445 *                        ZONE-NAMES = (BAY_A)  ..
* 446 *
* 447 * RMAU       =SYSTEM     SYSTEM-TYPE = SZRH
* 448 *                        MAX-SUPPLY-T = 135.0  MIN-SUPPLY-T = 55.0
* 449 *                        HEATING-SCHEDULE = MAU_ON  PREHEAT-T = 15.0
* 450 *                        MIN-HUMIDITY = 30.0  ECONO-LIMIT-T = 65.0
* 451 *                        ECONO-LOW-LIMIT = 55.0  OA-CONTROL = FIXED
* 452 *                        SUPPLY-CFM = 55920.  RATED-CFM = 55920.
* 453 *                        MIN-OUTSIDE-AIR = 1.0  RECOVERY-EFF = 0.37
* 454 *                        FAN-SCHEDULE = MAU_ON  SUPPLY-DELTA-T = 2.4
* 455 *                        SUPPLY-KW = 0.00112  NIGHT-CYCLE-CTRL = STAY-OFF
* 456 *                        NIGHT-VENT-DT = 0.0  MIN-CFM-RATIO = 1.0
* 457 *                        COOL-FT-MIN = 0.  HEATING-CAPACITY = -2536800.
* 458 *                        FURNACE-AUX = 0.
* 459 *                        ZONE-NAMES = (BAY_B)  ..
* 460 *
```

```
* 461 * HV-1        =SYSTEM     SYSTEM-TYPE = HVSYS
* 462 *                         MAX-SUPPLY-T = 135.0  HEATING-SCHEDULE = HV_1_ON
* 463 *                         MIN-HUMIDITY = 30.0  ECONO-LIMIT-T = 65.0
* 464 *                         ECONO-LOW-LIMIT = 55.0  HEAT-CONTROL = COLDEST
* 465 *                         SUPPLY-CFM = 19600.  RETURN-CFM = 16660.
* 466 *                         RATED-CFM = 19600.  MIN-OUTSIDE-AIR = 0.15
* 467 *                         FAN-SCHEDULE = FAN_WSB_2  SUPPLY-DELTA-T = 2.4
* 468 *                         SUPPLY-KW = 0.00119
* 469 *                         MOTOR-PLACEMENT = OUTSIDE-AIRFLOW
* 470 *                         NIGHT-CYCLE-CTRL = CYCLE-ON-ANY  NIGHT-VENT-DT = 0.0
* 471 *                         HEATING-CAPACITY = -243400.  FURNACE-AUX = 0.
* 472 *                         ZONE-NAMES = (ADMIN_C)  ..
* 473 *
* 474 * END  ..
* 475 * COMPUTE SYSTEMS  ..
* 476 *
* 477 * INPUT PLANT  ..
```

```
* 478 *
* 479 *
* 480 *                  $-------------------------------------$
* 481 *                  $ E Z - D O E   P L A N T S  I N P U T $
* 482 *                  $-------------------------------------$
* 483 *
* 484 *                     $ GENERAL PROJECT DATA
* 485 *
* 486 * TITLE  LINE-1 *     EMC      ENGINEERS      INC.     *
* 487 *        LINE-2 *EZDOE - ELITE SOFTWARE DEVELOPMENT INC*
* 488 *        LINE-3 *     DENVER,       CO       80227     *
* 489 *
* 490 *        LINE-4 *BUILDING 2060, MNT. HANGAR AVUM         *
* 491 *        LINE-5 *MODEL WITH SET BACK                      * ..
* 492 *
* 493 * ABORT              ERRORS  ..
* 494 * DIAGNOSTIC         WARNINGS ..
* 495 * PLANT-REPORT       SUMMARY=(PS-A,PS-B,BEPS)
* 496 *
* 497 *                    HOURLY-DATA-SAVE = YES  ..
* 498 *
* 499 *                     $ SCHEDULES
* 500 *
* 501 *
* 502 *
* 503 *
* 504 *
* 505 *                     $ EQUIPMENT DESCRIPTION
* 506 *
* 507 * BOILER     =PLANT-EQUIPMENT   TYPE = HW-BOILER
* 508 *                       SIZE = 8.4  ..
* 509 *
* 510 * ACC8       =PLANT-EQUIPMENT   TYPE = OPEN-CENT-CHLR
* 511 *                       SIZE = 0.1  ..
* 512 *
* 513 * DHW        =PLANT-EQUIPMENT   TYPE = HW-BOILER
* 514 *                       SIZE = 0.6  ..
* 515 *
* 516 * PLANT-PARAMETERS      OPEN-CENT-COND-TYPE = AIR  CCIRC-HEAD = 63.2
* 517 *                       HCIRC-HEAD = 100.0    ..
* 518 *
* 519 *
* 520 * ENERGY-RESOURCE       RESOURCE = ELECTRICITY  ..
* 521 * ENERGY-RESOURCE       RESOURCE = FUEL-OIL  ..
* 522 *
* 523 *
* 524 *
* 525 * END  ..
* 526 * COMPUTE PLANT ..
* 527 * STOP ..
```

ENERGY TYPE IN SITE MBTU-	ELECTRICITY	FUEL-OIL	
CATEGORY OF USE			
SPACE HEAT	271.90	6,130.65	0.00
SPACE COOL	0.00	0.00	0.00
HVAC AUX	862.59	0.00	0.00
DOM HOT WTR	25.55	543.79	0.00
AUX SOLAR	0.00	0.00	0.00
LIGHTS	397.04	0.00	0.00
VERT TRANS	0.00	0.00	0.00
MISC EQUIP	259.56	0.00	0.00
TOTAL	1,816.63	6,674.45	0.00

TOTAL SITE ENERGY 8491.05 MBTU 175.5 KBTU/SQFT-YR GROSS-AREA 175.5 KBTU/SQFT-YR NET-AREA
TOTAL SOURCE ENERGY 12129.75 MBTU 250.8 KBTU/SQFT-YR GROSS-AREA 250.8 KBTU/SQFT-YR NET-AREA

PERCENT OF HOURS ANY SYSTEM ZONE OUTSIDE OF THROTTLING RANGE = 3.1
PERCENT OF HOURS ANY PLANT LOAD NOT SATISFIED = 0.0

NOTE ELECTRICITY AND/OR FUEL USED TO GENERATE ELECTRICITY IS APPORTIONED BASED
ON THE YEARLY DEMAND. ALL OTHER ENERGY TYPES ARE APPORTIONED HOURLY.

MO	UTILITY-	ELECTRICITY	FUEL-OIL
JAN	TOTAL(MBTU)	201.451	1556.348
	PEAK(KBTU)	786.494	8532.827
	DY/HR	5/14	24/ 5
FEB	TOTAL(MBTU)	175.927	1062.697
	PEAK(KBTU)	775.967	7522.946
	DY/HR	14/14	14/ 5
MAR	TOTAL(MBTU)	192.132	1046.211
	PEAK(KBTU)	772.441	7002.586
	DY/HR	3/14	28/ 5
APR	TOTAL(MBTU)	143.839	377.972
	PEAK(KBTU)	727.414	6430.143
	DY/HR	1/10	4/ 5
MAY	TOTAL(MBTU)	111.927	137.584
	PEAK(KBTU)	679.302	3590.305
	DY/HR	2/14	3/ 6
JUN	TOTAL(MBTU)	86.854	59.948
	PEAK(KBTU)	365.969	465.511
	DY/HR	29/14	8/12
JUL	TOTAL(MBTU)	80.657	49.065
	PEAK(KBTU)	365.969	413.000
	DY/HR	28/14	28/12
AUG	TOTAL(MBTU)	89.672	59.128
	PEAK(KBTU)	365.969	435.545
	DY/HR	30/14	30/12
SEP	TOTAL(MBTU)	89.462	71.273
	PEAK(KBTU)	365.969	476.974
	DY/HR	29/14	23/12
OCT	TOTAL(MBTU)	136.919	261.586
	PEAK(KBTU)	707.215	4604.947
	DY/HR	26/13	31/ 6
NOV	TOTAL(MBTU)	165.626	641.499
	PEAK(KBTU)	765.173	6811.792
	DY/HR	28/14	28/ 6
DEC	TOTAL(MBTU)	187.455	1088.130
	PEAK(KBTU)	773.178	7543.772
	DY/HR	30/14	26/ 6
	ONE YEAR	1661.921	6411.443
	USE/PEAK	786.494	8532.827

```
*   3 *
*   4 *
*   5 *                  $-----------------------------------$
*   6 *                  $ E Z - D O E   L O A D S   I N P U T $
*   7 *                  $-----------------------------------$
*   8 *
*   9 *                     $ GENERAL PROJECT DATA
*  10 *
*  11 * TITLE  LINE-1 *     EMC      ENGINEERS      INC.     *
*  12 *        LINE-2 *EZDOE - ELITE SOFTWARE DEVELOPMENT INC*
*  13 *        LINE-3 *     DENVER,       CO       80227     *
*  14 *
*  15 *        LINE-4 *BUILDING 2060, MNT. HANGAR AVUM         *
*  16 *        LINE-5 *MODEL WITH SET BACK AND DDC             * ..
*  17 *
*  18 * ABORT              ERRORS  ..
*  19 * DIAGNOSTIC         WARNINGS ..
*  20 * LOADS-REPORT       HOURLY-DATA-SAVE = YES  ..
*  21 * BUILDING-LOCATION  HOLIDAY = NO
*  22 *                    X-REF = 0.0
*  23 *                    Y-REF = 0.0  ..
*  24 * RUN-PERIOD         JAN 1 1994 THRU DEC 31 1994  ..
*  25 *
*  26 *
*  27 *                     $ SCHEDULES
*  28 *
*  29 * FULL_ON_D  =DAY-SCHEDULE  (1,24) (1.) ..
*  30 *
*  31 * FULL_OFF_D =DAY-SCHEDULE  (1,24) (0.) ..
*  32 *
*  33 * LIGHT_ON_D =DAY-SCHEDULE  (1,5) (0.2)
*  34 *                           (6,7) (0.35)
*  35 *                           (8,9) (0.5,0.7)
*  36 *                           (10,11) (0.9)
*  37 *                           (12) (0.8)
*  38 *                           (13,14) (0.9)
*  39 *                           (15) (0.5)
*  40 *                           (16,18) (0.4)
*  41 *                           (19) (0.3)
*  42 *                           (20,24) (0.2) ..
*  43 *
*  44 * LT_ON_WKND =DAY-SCHEDULE  (1,6) (0.23)
*  45 *                           (7,19) (0.07)
*  46 *                           (20,24) (0.23) ..
*  47 *
*  48 * PEOPLE_D   =DAY-SCHEDULE  (1,4) (0.)
*  49 *                           (5,6) (0.1)
*  50 *                           (7) (0.5)
*  51 *                           (8,11) (1.)
*  52 *                           (12) (0.8)
*  53 *                           (13,16) (1.)
*  54 *                           (17,18) (0.5,0.1)
*  55 *                           (19,24) (0.) ..
*  56 *
*  57 * EQUIP_ON_D =DAY-SCHEDULE  (1,5) (0.)
*  58 *                           (6,10) (0.3,0.4,0.5,0.6,0.8)
*  59 *                           (11,13) (0.7,0.5,0.8)
*  60 *                           (14,15) (0.9)
*  61 *                           (16,18) (0.8,0.5,0.1)
*  62 *                           (19,24) (0.) ..
*  63 *
*  64 * DHW_D      =DAY-SCHEDULE  (1,6) (0.)
*  65 *                           (7,8) (0.1,0.2)
*  66 *                           (9,10) (0.1)
*  67 *                           (11,13) (0.2,0.4,0.3)
*  68 *                           (14,16) (0.2)
*  69 *                           (17) (0.1)
*  70 *                           (18,24) (0.) ..
*  71 *
*  72 *
*  73 * FULL_ON_W  =WEEK-SCHEDULE  (ALL) FULL_ON_D  ..
*  74 *
*  75 * FULL_OFF_W =WEEK-SCHEDULE  (ALL) FULL_OFF_D  ..
*  76 *
*  77 * LIGHT_ON_W =WEEK-SCHEDULE  (WD)  LIGHT_ON_D
*  78 *                           (WEH) LT_ON_WKND  ..
*  79 *
*  80 * PEOPLE_W   =WEEK-SCHEDULE  (WD)  PEOPLE_D
*  81 *                           (WEH) FULL_OFF_D  ..
*  82 *
*  83 * EQUIP_W    =WEEK-SCHEDULE  (WD)  EQUIP_ON_D
*  84 *                           (WEH) FULL_OFF_D  ..
*  85 *
*  86 * BAY_INFL_W =WEEK-SCHEDULE  (WD)  FULL_ON_D
*  87 *                           (WEH) FULL_OFF_D  ..
*  88 *
*  89 * DHW_W      =WEEK-SCHEDULE  (WD)  DHW_D
*  90 *                           (WEH) FULL_OFF_D  ..
*  91 *
*  92 *
*  93 * $ FULL OFF SCHEDULE
*  94 * FULL_OFF   =SCHEDULE THRU DEC 31 FULL_OFF_W  ..
*  95 *
*  96 * $ LIGHTING SCHEDULE
*  97 * LIGHT_SCHD =SCHEDULE THRU DEC 31 LIGHT_ON_W  ..
*  98 *
*  99 * $ OCCUPANCY SCHEDULE
* 100 * PEOPLE_SCH =SCHEDULE THRU DEC 31 PEOPLE_W  ..
* 101 *
* 102 * $ EQUIPMENT SCHEDULE
```

```
* 103 * EQUIP_SCHD =SCHEDULE THRU DEC 31 EQUIP_W  ..
* 104 *
* 105 * $ BAY INFILTRATION SCHED
* 106 * BAY_INFILT =SCHEDULE THRU DEC 31 BAY_INFL_W  ..
* 107 *
* 108 * $ DOMESTIC HW SCHEDULE
* 109 * DHW_SCHED  =SCHEDULE THRU DEC 31 DHW_W  ..
* 110 *
* 111 * $ FULL ON SCHEDULE
* 112 * FULL_ON    =SCHEDULE THRU DEC 31 FULL_ON_W  ..
* 113 *
* 114 *
* 115 *
* 116 *                     $ CONSTRUCTION TYPES
* 117 *
* 118 *
* 119 *
* 120 * FLOORCON =CONSTRUCTION   U-VALUE =  0.010  ..
* 121 *
* 122 *  $ ADMINISTRATION ROOF CONSTRUCTION
* 123 * ADMROOF  =CONSTRUCTION   U-VALUE =  0.050  ..
* 124 *
* 125 *  $ ROOF CONSTRUCTION
* 126 * CEILING  =LAYERS         MATERIAL=(AS01,IN76,HF-E3)
* 127 *                           THICKNESS=(0.005,0.250,0.031)  ..
* 128 * ROOFCON  =CONSTRUCTION   LAYERS = CEILING   ..
* 129 * WALLCON  =CONSTRUCTION   U-VALUE =  0.200  ..
* 130 * INWALL   =CONSTRUCTION   U-VALUE = 20.000  ..
* 131 * DOORCON  =CONSTRUCTION   U-VALUE =  0.400  ..
* 132 *
* 133 * G_TYPE1  =GLASS-TYPE     SHADING-COEF = 1.000
* 134 *                           PANES = 1
* 135 *                           GLASS-CONDUCTANCE =  1.130  ..
* 136 *
* 137 *
* 138 *
* 139 *
* 140 *                     $ SPACE DESCRIPTION
* 141 *
* 142 * BAY_A      =SPACE    AREA = 18914.0  VOLUME = 699818.0
* 143 *                      AZIMUTH = 315  TEMPERATURE = (57.)
* 144 *                      ZONE-TYPE = CONDITIONED  PEOPLE-SCHEDULE = PEOPLE_SCH
* 145 *                      NUMBER-OF-PEOPLE = 20.0  PEOPLE-HEAT-GAIN = 700.0
* 146 *                      LIGHTING-TYPE = INCAND  LIGHTING-W/SQFT = 0.8
* 147 *                      LIGHTING-SCHEDULE = LIGHT_SCHD
* 148 *                      EQUIP-SCHEDULE = EQUIP_SCHD  EQUIPMENT-KW = 15.0
* 149 *                      SOURCE-SENSIBLE = 0.0  INF-METHOD = AIR-CHANGE
* 150 *                      AIR-CHANGES/HR = 0.89  INF-SCHEDULE = BAY_INFILT   ..
* 151 *
* 152 *             U-W      HEIGHT = 48.0  WIDTH = 386.0  CONS = FLOORCON
* 153 *                       AZIMUTH = 315   ..
* 154 *
* 155 *               ROOF    HEIGHT = 48.0  WIDTH = 386.0  CONS = ROOFCON
* 156 *                       AZIMUTH = 315  TILT = 0   ..
* 157 *
* 158 *               E-W     HEIGHT = 37.0  WIDTH = 48.0  CONS = WALLCON
* 159 *                       AZIMUTH = 45   ..
* 160 *
* 161 *               E-W     HEIGHT = 37.0  WIDTH = 48.0  CONS = WALLCON
* 162 *                       AZIMUTH = 225   ..
* 163 *
* 164 *               E-W     HEIGHT = 37.0  WIDTH = 386.0  CONS = WALLCON
* 165 *                       AZIMUTH = 315   ..
* 166 *
* 167 *                 DOOR  HEIGHT = 14.0  WIDTH = 30.5  CONS = DOORCON
* 168 *                       MULTIPLIER = 10.0   ..
* 169 *
* 170 *               I-W     HEIGHT = 37.0  WIDTH = 1000.0  CONS = INWALL
* 171 *                       AZIMUTH = 135  NEXT-TO = BAY_B   ..
* 172 *
* 173 *
* 174 * BAY_B      =SPACE    AREA = 18914.0  VOLUME = 699818.0
* 175 *                      AZIMUTH = 315  TEMPERATURE = (57.)
* 176 *                      ZONE-TYPE = CONDITIONED  PEOPLE-SCHEDULE = PEOPLE_SCH
* 177 *                      NUMBER-OF-PEOPLE = 20.0  PEOPLE-HEAT-GAIN = 700.0
* 178 *                      LIGHTING-TYPE = INCAND  LIGHTING-W/SQFT = 0.8
* 179 *                      LIGHTING-SCHEDULE = LIGHT_SCHD
* 180 *                      EQUIP-SCHEDULE = EQUIP_SCHD  EQUIPMENT-KW = 15.0
* 181 *                      SOURCE-SENSIBLE = 0.0  INF-METHOD = AIR-CHANGE
* 182 *                      AIR-CHANGES/HR = 0.05  INF-SCHEDULE = FULL_ON   ..
* 183 *
* 184 *             U-W      HEIGHT = 48.0  WIDTH = 386.0  CONS = FLOORCON
* 185 *                       AZIMUTH = 315   ..
* 186 *
* 187 *               ROOF    HEIGHT = 48.0  WIDTH = 386.0  CONS = ROOFCON
* 188 *                       AZIMUTH = 315  TILT = 0   ..
* 189 *
* 190 *               E-W     HEIGHT = 37.0  WIDTH = 48.0  CONS = WALLCON
* 191 *                       AZIMUTH = 45   ..
* 192 *
* 193 *               E-W     HEIGHT = 37.0  WIDTH = 48.0  CONS = WALLCON
* 194 *                       AZIMUTH = 225   ..
* 195 *
* 196 *               E-W     HEIGHT = 37.0  WIDTH = 192.0  CONS = WALLCON
* 197 *                       AZIMUTH = 135   ..
* 198 *
* 199 *
* 200 * ADMIN_C    =SPACE    AREA = 10545.0  VOLUME = 168720.0
* 201 *                      AZIMUTH = 315  TEMPERATURE = (68.)
* 202 *                      ZONE-TYPE = CONDITIONED  PEOPLE-SCHEDULE = PEOPLE_SCH
* 203 *                      NUMBER-OF-PEOPLE = 20.0  PEOPLE-HEAT-GAIN = 550.0
* 204 *                      LIGHTING-TYPE = REC-FLUOR-RV  LIGHTING-W/SQFT = 0.76
* 205 *                      LIGHTING-SCHEDULE = LIGHT_SCHD
* 206 *                      EQUIP-SCHEDULE = EQUIP_SCHD  EQUIPMENT-KW = 7.5
* 207 *                      SOURCE-SCHEDULE = DHW_SCHED  SOURCE-TYPE = HOT-WATER
* 208 *                      SOURCE-BTU/HR = 640000.0  SOURCE-SENSIBLE = 0.02
* 209 *                      SOURCE-LATENT = 0.01  INF-METHOD = AIR-CHANGE
* 210 *                      AIR-CHANGES/HR = 0.05  INF-SCHEDULE = FULL_ON   ..
```

```
* 211 *
* 212 *                U-W       HEIGHT = 56.0  WIDTH = 188.0  CONS = FLOORCON
* 213 *                          AZIMUTH = 315   ..
* 214 *
* 215 *                 ROOF     HEIGHT = 56.0  WIDTH = 188.0  CONS = ADMROOF
* 216 *                          AZIMUTH = 315  TILT = 0   ..
* 217 *
* 218 *                 E-W      HEIGHT = 16.0  WIDTH = 56.0  CONS = WALLCON
* 219 *                          AZIMUTH = 225   ..
* 220 *
* 221 *                   WINDOW HEIGHT = 4.0  WIDTH = 2.0  G-T = G_TYPE1
* 222 *                          MULTIPLIER = 2.0   ..
* 223 *
* 224 *                   WINDOW HEIGHT = 4.0  WIDTH = 2.0  G-T = G_TYPE1
* 225 *                          MULTIPLIER = 2.0   ..
* 226 *
* 227 *                   DOOR   HEIGHT = 7.5  WIDTH = 3.0  CONS = DOORCON
* 228 *                          MULTIPLIER = 3.0   ..
* 229 *
* 230 *                 E-W      HEIGHT = 16.0  WIDTH = 186.0  CONS = WALLCON
* 231 *                          AZIMUTH = 135   ..
* 232 *
* 233 *                   WINDOW HEIGHT = 4.0  WIDTH = 2.0  G-T = G_TYPE1
* 234 *                          MULTIPLIER = 23.0   ..
* 235 *
* 236 *                   DOOR   HEIGHT = 7.5  WIDTH = 3.0  CONS = DOORCON
* 237 *                          MULTIPLIER = 4.0   ..
* 238 *
* 239 *                 E-W      HEIGHT = 16.0  WIDTH = 56.0  CONS = WALLCON
* 240 *                          AZIMUTH = 45   ..
* 241 *
* 242 *                   WINDOW HEIGHT = 4.0  WIDTH = 2.0  G-T = G_TYPE1
* 243 *                          MULTIPLIER = 2.0   ..
* 244 *
* 245 *                   DOOR   HEIGHT = 7.5  WIDTH = 3.0  CONS = DOORCON
* 246 *                          MULTIPLIER = 5.0   ..
* 247 *
* 248 *
* 249 * END  ..
* 250 * COMPUTE LOADS  ..
* 251 *
* 252 * INPUT SYSTEMS  ..
```

COMPUTER SIMULATIONS
BUILDING 2060

RUN 3 - DDC

```
* 253 *
* 254 *
* 255 *                 $----------------------------------------$
* 256 *                 $ E Z - D O E  S Y S T E M S  I N P U T $
* 257 *                 $----------------------------------------$
* 258 *
* 259 *                    $ GENERAL PROJECT DATA
* 260 *
* 261 * TITLE  LINE-1 *     EMC      ENGINEERS      INC.     *
* 262 *        LINE-2 *EZDOE - ELITE SOFTWARE DEVELOPMENT INC*
* 263 *        LINE-3 *     DENVER,       CO       80227     *
* 264 *
* 265 *        LINE-4 *BUILDING 2060, MNT. HANGAR AVUM         *
* 266 *        LINE-5 *MODEL WITH SET BACK AND DDC             * ..
* 267 * ABORT               ERRORS  ..
* 268 * DIAGNOSTIC          WARNINGS ..
* 269 * SYSTEMS-REPORT      VERIFICATION=(SV-B)
* 270 *                     SUMMARY=(SS-A,SS-B,SS-C,SS-F,SS-G,SS-K,SS-L,
* 271 *                              SS-M)
* 272 *                     HOURLY-DATA-SAVE = YES  ..
* 273 *
* 274 *                      $ SCHEDULES
* 275 *
* 276 * FULL_ON_D  =DAY-SCHEDULE  (1,24) (1.) ..
* 277 * FULL_OFF_D =DAY-SCHEDULE  (1,24) (0.) ..
* 278 * HEAT1_ON_D =DAY-SCHEDULE  (1,24) (55.) ..
* 279 * HEAT2_ON_D =DAY-SCHEDULE  (1,24) (68.) ..
* 280 * COOL_D     =DAY-SCHEDULE  (1,24) (75.) ..
* 281 * COOL_80_D  =DAY-SCHEDULE  (1,24) (80.) ..
* 282 * MAU_ON_D   =DAY-SCHEDULE  (1,8) (0.)
* 283 *                           (9,16) (1.)
* 284 *                           (17,24) (0.) ..
* 285 * FAN_WSBA_D =DAY-SCHEDULE  (1,4) (0.)
* 286 *                           (5,21) (1.)
* 287 *                           (22,24) (0.) ..
* 288 * FAN_WSBB_D =DAY-SCHEDULE  (1,4) (0.)
* 289 *                           (5,17) (1.)
* 290 *                           (18,24) (0.) ..
* 291 * FAN_WSBC_D =DAY-SCHEDULE  (1,2) (1.)
* 292 *                           (3,4) (0.)
* 293 *                           (5,24) (1.) ..
* 294 * HT55WSBA_D =DAY-SCHEDULE  (1,4) (50.)
* 295 *                           (5,21) (55.)
* 296 *                           (22,24) (50.) ..
* 297 * HT55WSBB_D =DAY-SCHEDULE  (1,4) (50.)
* 298 *                           (5,17) (55.)
* 299 *                           (18,24) (50.) ..
* 300 * HT55WSBC_D =DAY-SCHEDULE  (1,2) (55.)
* 301 *                           (3,4) (50.)
* 302 *                           (5,24) (55.) ..
* 303 * HT68_WSB_D =DAY-SCHEDULE  (1,4) (50.)
* 304 *                           (5,17) (68.)
* 305 *                           (18,24) (50.) ..
* 306 * HEAT_50_D  =DAY-SCHEDULE  (1,24) (50.) ..
* 307 *
* 308 * FULL_ON_W  =WEEK-SCHEDULE  (ALL) FULL_ON_D  ..
* 309 *
* 310 * FULL_OFF_W =WEEK-SCHEDULE  (ALL) FULL_OFF_D  ..
* 311 *
* 312 * HEAT1_ON_W =WEEK-SCHEDULE  (ALL) HEAT1_ON_D  ..
* 313 *
* 314 * HEAT2_ON_W =WEEK-SCHEDULE  (ALL) HEAT2_ON_D  ..
* 315 *
* 316 * COOL_W     =WEEK-SCHEDULE  (ALL) COOL_D  ..
* 317 *
* 318 * COOL_80_W  =WEEK-SCHEDULE  (ALL) COOL_80_D  ..
* 319 *
* 320 * MAU_ON_W   =WEEK-SCHEDULE  (WD)  MAU_ON_D
* 321 *                           (WEH) FULL_OFF_D  ..
* 322 *
* 323 * FAN_WSB1_W =WEEK-SCHEDULE  (MON) FAN_WSBA_D
* 324 *                           (TUE) FAN_WSBA_D
* 325 *                           (WED) FAN_WSBA_D
* 326 *                           (THU) FAN_WSBA_D
* 327 *                           (FRI) FAN_WSBB_D
* 328 *                           (SAT) FULL_OFF_D
* 329 *                           (SUN) FULL_OFF_D
* 330 *                           (HOL) FAN_WSBA_D ..
* 331 *
* 332 * FAN_WSB2_W =WEEK-SCHEDULE  (MON) FAN_WSBC_D
* 333 *                           (TUE) FAN_WSBC_D
* 334 *                           (WED) FAN_WSBC_D
* 335 *                           (THU) FAN_WSBC_D
* 336 *                           (FRI) FAN_WSBB_D
* 337 *                           (SAT) FULL_OFF_D
* 338 *                           (SUN) FULL_OFF_D
* 339 *                           (HOL) FAN_WSBC_D ..
* 340 *
* 341 * FAN_WSB3_W =WEEK-SCHEDULE  (ALL) FAN_WSBB_D  ..
* 342 *
* 343 * HT55WSB1_W =WEEK-SCHEDULE  (MON) HT55WSBA_D
* 344 *                           (TUE) HT55WSBA_D
* 345 *                           (WED) HT55WSBA_D
* 346 *                           (THU) HT55WSBA_D
* 347 *                           (FRI) HT55WSBB_D
* 348 *                           (SAT) HEAT_50_D
* 349 *                           (SUN) HEAT_50_D
* 350 *                           (HOL) HT55WSBA_D ..
* 351 *
* 352 * HT55WSB2_W =WEEK-SCHEDULE  (MON) HT55WSBC_D
```

```
*                                (TUE) HT55WSBC_D
*                                (WED) HT55WSBC_D
*                                (THU) HT55WSBC_D
*                                (FRI) HT55WSBB_D
*                                (SAT) HEAT_50_D
*                                (SUN) HEAT_50_D
*                                (HOL) HT55WSBC_D ..
*
* HT68_WSB_W =WEEK-SCHEDULE   (ALL) HT68_WSB_D  ..
*
*
* $ FULL ON SCHEDULE
* FULL_ON     =SCHEDULE THRU DEC 31 FULL_ON_W  ..
*
* $ FULL OFF SCHEDULE
* FULL_OFF    =SCHEDULE THRU DEC 31 FULL_OFF_W  ..
*
* $ HEAT SCHEDULE, 55 DEG
* HEAT55_ON   =SCHEDULE THRU MAY 15 HEAT1_ON_W
*                       THRU OCT  1 FULL_OFF_W
*                       THRU DEC 31 HEAT1_ON_W  ..
*
* $ HEAT SCHEDULE 68 DEG
* HEAT68_ON   =SCHEDULE THRU MAY 15 HEAT2_ON_W
*                       THRU OCT  1 FULL_OFF_W
*                       THRU DEC 31 HEAT2_ON_W  ..
*
* $ COOLING SCHEDULE
* COOL_SCHED =SCHEDULE THRU MAY 15 FULL_OFF_W
*                       THRU OCT  1 COOL_W
*                       THRU DEC 31 FULL_OFF_W  ..
*
* $ COOL SCHED 80 DEH
* COOL_80     =SCHEDULE THRU MAY 15 FULL_OFF_W
*                       THRU OCT  1 COOL_80_W
*                       THRU DEC 31 FULL_OFF_W  ..
*
* $ MAU SCHEDULE
* MAU_ON      =SCHEDULE THRU MAY 15 MAU_ON_W
*                       THRU OCT  1 FULL_OFF_W
*                       THRU DEC 31 MAU_ON_W  ..
*
* $ HV_1 ON SCHEDULE
* HV_1_ON     =SCHEDULE THRU DEC 31 FULL_ON_W  ..
*
* $ HANGAR FAN SB, WINTER
* FAN_WSB1    =SCHEDULE THRU MAY 15 FAN_WSB2_W
*                       THRU OCT  1 FULL_OFF_W
*                       THRU DEC 31 FAN_WSB2_W  ..
*
* $ OPERATIONS FAN SET BACK
* FAN_WSB_2   =SCHEDULE THRU DEC 31 FAN_WSB3_W  ..
*
* $ HANGER HEAT SET BACK
* HEAT_WSB_1 =SCHEDULE THRU DEC 31 HT55WSB1_W  ..
*
* $ OPERATIONS HEAT W SB
* HT68_WSB    =SCHEDULE THRU DEC 31 HT68_WSB_W  ..
*
*
*
*                       $ ZONE DESCRIPTION
*
* BAY_A       =ZONE     DESIGN-HEAT-T = 57.0  DESIGN-COOL-T = 90.0
*                       HEAT-TEMP-SCH = HEAT_WSB_1  ZONE-TYPE = CONDITIONED
*                       THERMOSTAT-TYPE = PROPORTIONAL
*                       BASEBOARD-CTRL = THERMOSTATIC  ASSIGNED-CFM = 198000.
*                       SIZING-OPTION = FROM-LOADS  MIN-CFM-RATIO = 1.0
*                       EXHAUST-STATIC = 0.75   ..
*
* BAY_B       =ZONE     DESIGN-HEAT-T = 57.0  DESIGN-COOL-T = 90.0
*                       HEAT-TEMP-SCH = HEAT_WSB_1  ZONE-TYPE = CONDITIONED
*                       THERMOSTAT-TYPE = PROPORTIONAL
*                       BASEBOARD-CTRL = THERMOSTATIC  ASSIGNED-CFM = 55920.
*                       OUTSIDE-AIR-CFM = 55920.  SIZING-OPTION = FROM-LOADS
*                       MIN-CFM-RATIO = 1.0  EXHAUST-STATIC = 0.75   ..
*
* ADMIN_C     =ZONE     DESIGN-HEAT-T = 68.0  DESIGN-COOL-T = 75.0
*                       HEAT-TEMP-SCH = HT68_WSB  ZONE-TYPE = CONDITIONED
*                       THERMOSTAT-TYPE = PROPORTIONAL
*                       BASEBOARD-CTRL = THERMOSTATIC
*                       BASEBOARD-RATING = -129500.  ASSIGNED-CFM = 19600.
*                       OUTSIDE-AIR-CFM = 2940.  SIZING-OPTION = FROM-LOADS
*                       EXHAUST-CFM = 2940.0   ..
*
*
*                       $ SYSTEM DESCRIPTION
*
* DUH         =SYSTEM     SYSTEM-TYPE = UHT
*                         MAX-SUPPLY-T = 135.0  RATED-CFM = 198000.
*                         FAN-SCHEDULE = FAN_WSB1  SUPPLY-DELTA-T = 0.2
*                         SUPPLY-KW = 0.00014  NIGHT-CYCLE-CTRL = CYCLE-ON-ANY
*                         HEATING-CAPACITY = -6739200.  FURNACE-AUX = 0.
*                         ZONE-NAMES = (BAY_A)  ..
*
* RMAU        =SYSTEM     SYSTEM-TYPE = SZRH
*                         MAX-SUPPLY-T = 135.0  MIN-SUPPLY-T = 55.0
*                         HEATING-SCHEDULE = MAU_ON  PREHEAT-T = 15.0
*                         MIN-HUMIDITY = 30.0  ECONO-LIMIT-T = 65.0
*                         ECONO-LOW-LIMIT = 55.0  OA-CONTROL = FIXED
*                         SUPPLY-CFM = 55920.  RATED-CFM = 55920.
*                         MIN-OUTSIDE-AIR = 1.0  RECOVERY-EFF = 0.37
*                         FAN-SCHEDULE = MAU_ON  SUPPLY-DELTA-T = 2.4
*                         SUPPLY-KW = 0.00112  NIGHT-CYCLE-CTRL = STAY-OFF
*                         NIGHT-VENT-DT = 0.0  MIN-CFM-RATIO = 1.0
*                         COOL-FT-MIN = 0.  HEATING-CAPACITY = -2536800.
*                         FURNACE-AUX = 0.
*                         ZONE-NAMES = (BAY_B)  ..
```

```
* 461 *
* 462 * HV-1        =SYSTEM     SYSTEM-TYPE = HVSYS
* 463 *                         MAX-SUPPLY-T = 135.0  HEATING-SCHEDULE = HV_1_ON
* 464 *                         MIN-HUMIDITY = 30.0  ECONO-LIMIT-T = 65.0
* 465 *                         ECONO-LOW-LIMIT = 55.0  HEAT-CONTROL = COLDEST
* 466 *                         SUPPLY-CFM = 19600.  RETURN-CFM = 16660.
* 467 *                         RATED-CFM = 19600.  MIN-OUTSIDE-AIR = 0.15
* 468 *                         FAN-SCHEDULE = FAN_WSB_2  SUPPLY-DELTA-T = 2.4
* 469 *                         SUPPLY-KW = 0.00119
* 470 *                         MOTOR-PLACEMENT = OUTSIDE-AIRFLOW
* 471 *                         NIGHT-CYCLE-CTRL = CYCLE-ON-ANY  NIGHT-VENT-DT = 0.0
* 472 *                         HEATING-CAPACITY = -243400.  FURNACE-AUX = 0.
* 473 *                         ZONE-NAMES = (ADMIN_C)  ..
* 474 *
* 475 * END  ..
* 476 * COMPUTE SYSTEMS  ..
* 477 *
* 478 * INPUT PLANT  ..
```

```
* 479 *
* 480 *
* 481 *                  $-------------------------------------$
* 482 *                  $ E Z - D O E  P L A N T S  I N P U T $
* 483 *                  $-------------------------------------$
* 484 *
* 485 *                     $ GENERAL PROJECT DATA
* 486 *
* 487 * TITLE  LINE-1 *     EMC      ENGINEERS      INC.     *
* 488 *        LINE-2 *EZDOE - ELITE SOFTWARE DEVELOPMENT INC*
* 489 *        LINE-3 *     DENVER,       CO       80227     *
* 490 *
* 491 *        LINE-4 *BUILDING 2060, MNT. HANGAR AVUM         *
* 492 *        LINE-5 *MODEL WITH SET BACK AND DDC             * ..
* 493 *
* 494 * ABORT               ERRORS  ..
* 495 * DIAGNOSTIC          WARNINGS ..
* 496 * PLANT-REPORT        SUMMARY=(PS-A,PS-B,BEPS)
* 497 *
* 498 *                     HOURLY-DATA-SAVE = YES  ..
* 499 *
* 500 *                      $ SCHEDULES
* 501 *
* 502 *
* 503 *
* 504 *
* 505 *
* 506 *                      $ EQUIPMENT DESCRIPTION
* 507 *
* 508 * BOILER      =PLANT-EQUIPMENT   TYPE = HW-BOILER
* 509 *                       SIZE = 8.4  ..
* 510 *
* 511 * ACC8        =PLANT-EQUIPMENT   TYPE = OPEN-CENT-CHLR
* 512 *                       SIZE = 0.1  ..
* 513 *
* 514 * DHW         =PLANT-EQUIPMENT   TYPE = HW-BOILER
* 515 *                       SIZE = 0.6  ..
* 516 *
* 517 * PLANT-PARAMETERS      OPEN-CENT-COND-TYPE = AIR  CCIRC-HEAD = 63.2
* 518 *                       HCIRC-HEAD = 100.0    ..
* 519 *
* 520 *
* 521 * ENERGY-RESOURCE       RESOURCE = ELECTRICITY  ..
* 522 * ENERGY-RESOURCE       RESOURCE = FUEL-OIL  ..
* 523 *
* 524 *
* 525 *
* 526 * END  ..
* 527 * COMPUTE PLANT ..
* 528 * STOP ..
```

EMC ENGINEERS INC. EZDOE - ELITE SOFTWARE DEVELOPMENT INC DOE-2.1D 3/19/1995 10: 1:47 PDL RUN 1
DENVER, CO 80227 BUILDING 2060, MNT. HANGAR AVUM MODEL WITH SET BACK AND DDC
REPORT- BEPS ESTIMATED BUILDING ENERGY PERFORMANCE WEATHER FILE- MASSENA, NY

ENERGY TYPE IN SITE MBTU-	ELECTRICITY	FUEL-OIL	
CATEGORY OF USE			
SPACE HEAT	263.30	5,902.15	0.00
SPACE COOL	0.00	0.00	0.00
HVAC AUX	848.57	0.00	0.00
DOM HOT WTR	26.10	546.72	0.00
AUX SOLAR	0.00	0.00	0.00
LIGHTS	397.03	0.00	0.00
VERT TRANS	0.00	0.00	0.00
MISC EQUIP	259.56	0.00	0.00
TOTAL	1,794.58	6,448.87	0.00

TOTAL SITE ENERGY 8243.44 MBTU 170.4 KBTU/SQFT-YR GROSS-AREA 170.4 KBTU/SQFT-YR NET-AREA
TOTAL SOURCE ENERGY 11837.95 MBTU 244.7 KBTU/SQFT-YR GROSS-AREA 244.7 KBTU/SQFT-YR NET-AREA

PERCENT OF HOURS ANY SYSTEM ZONE OUTSIDE OF THROTTLING RANGE = 1.4
PERCENT OF HOURS ANY PLANT LOAD NOT SATISFIED = 0.0

NOTE ELECTRICITY AND/OR FUEL USED TO GENERATE ELECTRICITY IS APPORTIONED BASED
ON THE YEARLY DEMAND. ALL OTHER ENERGY TYPES ARE APPORTIONED HOURLY.

MO	UTILITY-	ELECTRICITY	FUEL-OIL
	TOTAL(MBTU)	214.385	1582.559
JAN	PEAK(KBTU)	786.427	8521.037
	DY/HR	5/14	24/ 5
	TOTAL(MBTU)	186.968	1077.526
FEB	PEAK(KBTU)	775.901	7516.637
	DY/HR	14/14	14/ 5
	TOTAL(MBTU)	204.015	1051.163
MAR	PEAK(KBTU)	772.375	7005.229
	DY/HR	3/14	28/ 5
	TOTAL(MBTU)	157.072	374.451
APR	PEAK(KBTU)	722.670	6355.310
	DY/HR	1/10	4/ 5
	TOTAL(MBTU)	123.171	131.786
MAY	PEAK(KBTU)	671.681	3502.395
	DY/HR	2/14	3/ 6
	TOTAL(MBTU)	93.841	55.010
JUN	PEAK(KBTU)	365.903	425.532
	DY/HR	20/14	20/12
	TOTAL(MBTU)	91.617	49.670
JUL	PEAK(KBTU)	365.903	405.652
	DY/HR	28/14	28/12
	TOTAL(MBTU)	96.699	55.932
AUG	PEAK(KBTU)	365.903	427.341
	DY/HR	30/14	30/12
	TOTAL(MBTU)	97.649	67.063
SEP	PEAK(KBTU)	365.903	428.273
	DY/HR	28/14	15/12
	TOTAL(MBTU)	151.094	256.304
OCT	PEAK(KBTU)	702.720	4381.661
	DY/HR	26/13	31/ 6
	TOTAL(MBTU)	177.459	639.706
NOV	PEAK(KBTU)	763.903	6800.820
	DY/HR	28/14	28/ 6
	TOTAL(MBTU)	200.593	1107.701
DEC	PEAK(KBTU)	773.112	7521.751
	DY/HR	30/14	26/ 6
	ONE YEAR	1794.564	6448.871
	USE/PEAK	786.427	8521.037

COMPUTER SIMULATIONS
BUILDING 2060

RUN 4 - FORCED VENTILATION

```
*   3 *
*   4 *
*   5 *                $-----------------------------------$
*   6 *                $ E Z - D O E   L O A D S  I N P U T $
*   7 *                $-----------------------------------$
*   8 *
*   9 *                   $ GENERAL PROJECT DATA
*  10 *
*  11 * TITLE  LINE-1 *     EMC      ENGINEERS      INC.     *
*  12 *        LINE-2 *EZDOE - ELITE SOFTWARE DEVELOPMENT INC*
*  13 *        LINE-3 *     DENVER,       CO       80227     *
*  14 *
*  15 *        LINE-4 *BUILDING 2060, MNT. HANGAR AVUM         *
*  16 *        LINE-5 *SETBACK, DDC, & FORCED VENTILATION      * ..
*  17 *
*  18 * ABORT              ERRORS  ..
*  19 * DIAGNOSTIC         WARNINGS ..
*  20 * LOADS-REPORT       HOURLY-DATA-SAVE = YES  ..
*  21 * BUILDING-LOCATION  HOLIDAY = NO
*  22 *                    X-REF = 0.0
*  23 *                    Y-REF = 0.0  ..
*  24 * RUN-PERIOD         JAN 1 1994 THRU DEC 31 1994  ..
*  25 *
*  26 *
*  27 *                    $ SCHEDULES
*  28 *
*  29 * FULL_ON_D  =DAY-SCHEDULE  (1,24) (1.) ..
*  30 *
*  31 * FULL_OFF_D =DAY-SCHEDULE  (1,24) (0.) ..
*  32 *
*  33 * LIGHT_ON_D =DAY-SCHEDULE  (1,5) (0.2)
*  34 *                           (6,7) (0.35)
*  35 *                           (8,9) (0.5,0.7)
*  36 *                           (10,11) (0.9)
*  37 *                           (12) (0.8)
*  38 *                           (13,14) (0.9)
*  39 *                           (15) (0.5)
*  40 *                           (16,18) (0.4)
*  41 *                           (19) (0.3)
*  42 *                           (20,24) (0.2) ..
*  43 *
*  44 * LT_ON_WKND =DAY-SCHEDULE  (1,6) (0.23)
*  45 *                           (7,19) (0.07)
*  46 *                           (20,24) (0.23) ..
*  47 *
*  48 * PEOPLE_D   =DAY-SCHEDULE  (1,4) (0.)
*  49 *                           (5,6) (0.1)
*  50 *                           (7) (0.5)
*  51 *                           (8,11) (1.)
*  52 *                           (12) (0.8)
*  53 *                           (13,16) (1.)
*  54 *                           (17,18) (0.5,0.1)
*  55 *                           (19,24) (0.) ..
*  56 *
*  57 * EQUIP_ON_D =DAY-SCHEDULE  (1,5) (0.)
*  58 *                           (6,10) (0.3,0.4,0.5,0.6,0.8)
*  59 *                           (11,13) (0.7,0.5,0.8)
*  60 *                           (14,15) (0.9)
*  61 *                           (16,18) (0.8,0.5,0.1)
*  62 *                           (19,24) (0.) ..
*  63 *
*  64 * DHW_D      =DAY-SCHEDULE  (1,6) (0.)
*  65 *                           (7,8) (0.1,0.2)
*  66 *                           (9,10) (0.1)
*  67 *                           (11,13) (0.2,0.4,0.3)
*  68 *                           (14,16) (0.2)
*  69 *                           (17) (0.1)
*  70 *                           (18,24) (0.) ..
*  71 *
*  72 *
*  73 * FULL_ON_W  =WEEK-SCHEDULE  (ALL) FULL_ON_D  ..
*  74 *
*  75 * FULL_OFF_W =WEEK-SCHEDULE  (ALL) FULL_OFF_D  ..
*  76 *
*  77 * LIGHT_ON_W =WEEK-SCHEDULE  (WD)  LIGHT_ON_D
*  78 *                            (WEH) LT_ON_WKND  ..
*  79 *
*  80 * PEOPLE_W   =WEEK-SCHEDULE  (WD)  PEOPLE_D
*  81 *                            (WEH) FULL_OFF_D  ..
*  82 *
*  83 * EQUIP_W    =WEEK-SCHEDULE  (WD)  EQUIP_ON_D
*  84 *                            (WEH) FULL_OFF_D  ..
*  85 *
*  86 * BAY_INFL_W =WEEK-SCHEDULE  (WD)  FULL_ON_D
*  87 *                            (WEH) FULL_OFF_D  ..
*  88 *
*  89 * DHW_W      =WEEK-SCHEDULE  (WD)  DHW_D
*  90 *                            (WEH) FULL_OFF_D  ..
*  91 *
*  92 *
*  93 * $ FULL OFF SCHEDULE
*  94 * FULL_OFF   =SCHEDULE THRU DEC 31 FULL_OFF_W  ..
*  95 *
*  96 * $ LIGHTING SCHEDULE
*  97 * LIGHT_SCHD =SCHEDULE THRU DEC 31 LIGHT_ON_W  ..
*  98 *
*  99 * $ OCCUPANCY SCHEDULE
* 100 * PEOPLE_SCH =SCHEDULE THRU DEC 31 PEOPLE_W  ..
* 101 *
* 102 * $ EQUIPMENT SCHEDULE
```

```
* 103 * EQUIP_SCHD =SCHEDULE THRU DEC 31 EQUIP_W  ..
* 104 *
* 105 * $ BAY INFILTRATION SCHED
* 106 * BAY_INFILT =SCHEDULE THRU DEC 31 BAY_INFL_W  ..
* 107 *
* 108 * $ DOMESTIC HW SCHEDULE
* 109 * DHW_SCHED  =SCHEDULE THRU DEC 31 DHW_W  ..
* 110 *
* 111 * $ FULL ON SCHEDULE
* 112 * FULL_ON    =SCHEDULE THRU DEC 31 FULL_ON_W  ..
* 113 *
* 114 *
* 115 *
* 116 *                     $ CONSTRUCTION TYPES
* 117 *
* 118 *
* 119 *
* 120 * FLOORCON =CONSTRUCTION   U-VALUE =  0.010  ..
* 121 *
* 122 *  $ ADMINISTRATION ROOF CONSTRUCTION
* 123 * ADMROOF  =CONSTRUCTION   U-VALUE =  0.050  ..
* 124 *
* 125 *  $ ROOF CONSTRUCTION
* 126 * CEILING  =LAYERS         MATERIAL=(AS01,IN76,HF-E3)
* 127 *                          THICKNESS=(0.005,0.250,0.031)  ..
* 128 * ROOFCON  =CONSTRUCTION   LAYERS = CEILING   ..
* 129 * WALLCON  =CONSTRUCTION   U-VALUE =  0.200  ..
* 130 * INWALL   =CONSTRUCTION   U-VALUE = 20.000  ..
* 131 * DOORCON  =CONSTRUCTION   U-VALUE =  0.400  ..
* 132 *
* 133 * G_TYPE1  =GLASS-TYPE     SHADING-COEF = 1.000
* 134 *                          PANES = 1
* 135 *                          GLASS-CONDUCTANCE =  1.130  ..
* 136 *
* 137 *
* 138 *
* 139 *
* 140 *                     $ SPACE DESCRIPTION
* 141 *
* 142 * BAY_A      =SPACE    AREA = 18914.0  VOLUME = 699818.0
* 143 *                      AZIMUTH = 315  TEMPERATURE = (57.)
* 144 *                      ZONE-TYPE = CONDITIONED  PEOPLE-SCHEDULE = PEOPLE_SCH
* 145 *                      NUMBER-OF-PEOPLE = 20.0  PEOPLE-HEAT-GAIN = 700.0
* 146 *                      LIGHTING-TYPE = INCAND  LIGHTING-W/SQFT = 0.8
* 147 *                      LIGHTING-SCHEDULE = LIGHT_SCHD
* 148 *                      EQUIP-SCHEDULE = EQUIP_SCHD  EQUIPMENT-KW = 15.0
* 149 *                      SOURCE-SENSIBLE = 0.0  INF-METHOD = AIR-CHANGE
* 150 *                      AIR-CHANGES/HR = 0.89  INF-SCHEDULE = BAY_INFILT   ..
* 151 *
* 152 *              U-W      HEIGHT = 48.0  WIDTH = 386.0  CONS = FLOORCON
* 153 *                        AZIMUTH = 315   ..
* 154 *
* 155 *                ROOF    HEIGHT = 48.0  WIDTH = 386.0  CONS = ROOFCON
* 156 *                        AZIMUTH = 315  TILT = 0   ..
* 157 *
* 158 *                E-W     HEIGHT = 37.0  WIDTH = 48.0  CONS = WALLCON
* 159 *                        AZIMUTH = 45   ..
* 160 *
* 161 *                E-W     HEIGHT = 37.0  WIDTH = 48.0  CONS = WALLCON
* 162 *                        AZIMUTH = 225   ..
* 163 *
* 164 *                E-W     HEIGHT = 37.0  WIDTH = 386.0  CONS = WALLCON
* 165 *                        AZIMUTH = 315   ..
* 166 *
* 167 *                  DOOR  HEIGHT = 14.0  WIDTH = 30.5  CONS = DOORCON
* 168 *                        MULTIPLIER = 10.0   ..
* 169 *
* 170 *                I-W     HEIGHT = 37.0  WIDTH = 1000.0  CONS = INWALL
* 171 *                        AZIMUTH = 135  NEXT-TO = BAY_B   ..
* 172 *
* 173 *
* 174 * BAY_B      =SPACE    AREA = 18914.0  VOLUME = 699818.0
* 175 *                      AZIMUTH = 315  TEMPERATURE = (57.)
* 176 *                      ZONE-TYPE = CONDITIONED  PEOPLE-SCHEDULE = PEOPLE_SCH
* 177 *                      NUMBER-OF-PEOPLE = 20.0  PEOPLE-HEAT-GAIN = 700.0
* 178 *                      LIGHTING-TYPE = INCAND  LIGHTING-W/SQFT = 0.8
* 179 *                      LIGHTING-SCHEDULE = LIGHT_SCHD
* 180 *                      EQUIP-SCHEDULE = EQUIP_SCHD  EQUIPMENT-KW = 15.0
* 181 *                      SOURCE-SENSIBLE = 0.0  INF-METHOD = AIR-CHANGE
* 182 *                      AIR-CHANGES/HR = 0.05  INF-SCHEDULE = FULL_ON   ..
* 183 *
* 184 *              U-W      HEIGHT = 48.0  WIDTH = 386.0  CONS = FLOORCON
* 185 *                        AZIMUTH = 315   ..
* 186 *
* 187 *                ROOF    HEIGHT = 48.0  WIDTH = 386.0  CONS = ROOFCON
* 188 *                        AZIMUTH = 315  TILT = 0   ..
* 189 *
* 190 *                E-W     HEIGHT = 37.0  WIDTH = 48.0  CONS = WALLCON
* 191 *                        AZIMUTH = 45   ..
* 192 *
* 193 *                E-W     HEIGHT = 37.0  WIDTH = 48.0  CONS = WALLCON
* 194 *                        AZIMUTH = 225   ..
* 195 *
* 196 *                E-W     HEIGHT = 37.0  WIDTH = 192.0  CONS = WALLCON
* 197 *                        AZIMUTH = 135   ..
* 198 *
* 199 *
* 200 * ADMIN_C    =SPACE    AREA = 10545.0  VOLUME = 168720.0
* 201 *                      AZIMUTH = 315  TEMPERATURE = (68.)
* 202 *                      ZONE-TYPE = CONDITIONED  PEOPLE-SCHEDULE = PEOPLE_SCH
* 203 *                      NUMBER-OF-PEOPLE = 20.0  PEOPLE-HEAT-GAIN = 550.0
* 204 *                      LIGHTING-TYPE = REC-FLUOR-RV  LIGHTING-W/SQFT = 0.76
* 205 *                      LIGHTING-SCHEDULE = LIGHT_SCHD
* 206 *                      EQUIP-SCHEDULE = EQUIP_SCHD  EQUIPMENT-KW = 7.5
* 207 *                      SOURCE-SCHEDULE = DHW_SCHED  SOURCE-TYPE = HOT-WATER
* 208 *                      SOURCE-BTU/HR = 640000.0  SOURCE-SENSIBLE = 0.02
* 209 *                      SOURCE-LATENT = 0.01  INF-METHOD = AIR-CHANGE
* 210 *                      AIR-CHANGES/HR = 0.05  INF-SCHEDULE = FULL_ON   ..
```

```
* 211 *
* 212 *              U-W      HEIGHT = 56.0  WIDTH = 188.0  CONS = FLOORCON
* 213 *                        AZIMUTH = 315   ..
* 214 *
* 215 *               ROOF     HEIGHT = 56.0  WIDTH = 188.0  CONS = ADMROOF
* 216 *                        AZIMUTH = 315  TILT = 0   ..
* 217 *
* 218 *               E-W      HEIGHT = 16.0  WIDTH = 56.0  CONS = WALLCON
* 219 *                        AZIMUTH = 225   ..
* 220 *
* 221 *                 WINDOW HEIGHT = 4.0  WIDTH = 2.0  G-T = G_TYPE1
* 222 *                        MULTIPLIER = 2.0   ..
* 223 *
* 224 *                 WINDOW HEIGHT = 4.0  WIDTH = 2.0  G-T = G_TYPE1
* 225 *                        MULTIPLIER = 2.0   ..
* 226 *
* 227 *                 DOOR   HEIGHT = 7.5  WIDTH = 3.0  CONS = DOORCON
* 228 *                        MULTIPLIER = 3.0   ..
* 229 *
* 230 *               E-W      HEIGHT = 16.0  WIDTH = 186.0  CONS = WALLCON
* 231 *                        AZIMUTH = 135   ..
* 232 *
* 233 *                 WINDOW HEIGHT = 4.0  WIDTH = 2.0  G-T = G_TYPE1
* 234 *                        MULTIPLIER = 23.0   ..
* 235 *
* 236 *                 DOOR   HEIGHT = 7.5  WIDTH = 3.0  CONS = DOORCON
* 237 *                        MULTIPLIER = 4.0   ..
* 238 *
* 239 *               E-W      HEIGHT = 16.0  WIDTH = 56.0  CONS = WALLCON
* 240 *                        AZIMUTH = 45   ..
* 241 *
* 242 *                 WINDOW HEIGHT = 4.0  WIDTH = 2.0  G-T = G_TYPE1
* 243 *                        MULTIPLIER = 2.0   ..
* 244 *
* 245 *                 DOOR   HEIGHT = 7.5  WIDTH = 3.0  CONS = DOORCON
* 246 *                        MULTIPLIER = 5.0   ..
* 247 *
* 248 *
* 249 * END  ..
* 250 * COMPUTE LOADS  ..
* 251 *
* 252 * INPUT SYSTEMS  ..
```

S D L P R O C E S S O R I N P U T D A T A

4/ 5/1995 13:38:48 SDL RUN 1

```
*
*
*                    $-----------------------------------------$
*                    $ E Z - D O E   S Y S T E M S   I N P U T $
*                    $-----------------------------------------$
*
*                       $ GENERAL PROJECT DATA
*
* TITLE  LINE-1 *      EMC       ENGINEERS       INC.      *
*        LINE-2 *EZDOE - ELITE SOFTWARE DEVELOPMENT INC*
*        LINE-3 *      DENVER,        CO        80227      *
*
*        LINE-4 *BUILDING 2060, MNT. HANGAR AVUM          *
*        LINE-5 *SETBACK, DDC, & FORCED VENTILATION       * ..
* ABORT              ERRORS  ..
* DIAGNOSTIC         WARNINGS ..
* SYSTEMS-REPORT     VERIFICATION=(SV-B)
*                    SUMMARY=(SS-A,SS-B,SS-C,SS-K,SS-L,SS-M)
*                    HOURLY-DATA-SAVE = YES  ..
*
*                       $ SCHEDULES
*
* FULL_ON_D  =DAY-SCHEDULE  (1,24) (1.) ..
* FULL_OFF_D =DAY-SCHEDULE  (1,24) (0.) ..
* HEAT1_ON_D =DAY-SCHEDULE  (1,24) (55.) ..
* HEAT2_ON_D =DAY-SCHEDULE  (1,24) (68.) ..
* COOL_D     =DAY-SCHEDULE  (1,24) (75.) ..
* COOL_80_D  =DAY-SCHEDULE  (1,24) (80.) ..
* MAU_ON_D   =DAY-SCHEDULE  (1,8) (0.)
*                           (9,16) (1.)
*                           (17,24) (0.) ..
* FAN_WSBA_D =DAY-SCHEDULE  (1,4) (0.)
*                           (5,21) (1.)
*                           (22,24) (0.) ..
* FAN_WSBB_D =DAY-SCHEDULE  (1,4) (0.)
*                           (5,17) (1.)
*                           (18,24) (0.) ..
* FAN_WSBC_D =DAY-SCHEDULE  (1,2) (1.)
*                           (3,4) (0.)
*                           (5,24) (1.) ..
* HT55WSBA_D =DAY-SCHEDULE  (1,4) (50.)
*                           (5,21) (55.)
*                           (22,24) (50.) ..
* HT55WSBB_D =DAY-SCHEDULE  (1,4) (50.)
*                           (5,17) (55.)
*                           (18,24) (50.) ..
* HT55WSBC_D =DAY-SCHEDULE  (1,2) (55.)
*                           (3,4) (50.)
*                           (5,24) (55.) ..
* HT68_WSB_D =DAY-SCHEDULE  (1,4) (50.)
*                           (5,17) (68.)
*                           (18,24) (50.) ..
* HEAT_50_D  =DAY-SCHEDULE  (1,24) (50.) ..
* MOA.15_D   =DAY-SCHEDULE  (1,5) (0.)
*                           (6,17) (0.15)
*                           (18,24) (0.) ..
*
* FULL_ON_W  =WEEK-SCHEDULE  (ALL) FULL_ON_D  ..
*
* FULL_OFF_W =WEEK-SCHEDULE  (ALL) FULL_OFF_D  ..
*
* HEAT1_ON_W =WEEK-SCHEDULE  (ALL) HEAT1_ON_D  ..
*
* HEAT2_ON_W =WEEK-SCHEDULE  (ALL) HEAT2_ON_D  ..
*
* COOL_W     =WEEK-SCHEDULE  (ALL) COOL_D  ..
*
* COOL_80_W  =WEEK-SCHEDULE  (ALL) COOL_80_D  ..
*
* MAU_ON_W   =WEEK-SCHEDULE  (WD)  MAU_ON_D
*                            (WEH) FULL_OFF_D  ..
*
* FAN_WSB1_W =WEEK-SCHEDULE  (MON) FAN_WSBA_D
*                            (TUE) FAN_WSBA_D
*                            (WED) FAN_WSBA_D
*                            (THU) FAN_WSBA_D
*                            (FRI) FAN_WSBB_D
*                            (SAT) FULL_OFF_D
*                            (SUN) FULL_OFF_D
*                            (HOL) FAN_WSBA_D ..
*
* FAN_WSB2_W =WEEK-SCHEDULE  (MON) FAN_WSBC_D
*                            (TUE) FAN_WSBC_D
*                            (WED) FAN_WSBC_D
*                            (THU) FAN_WSBC_D
*                            (FRI) FAN_WSBB_D
*                            (SAT) FULL_OFF_D
*                            (SUN) FULL_OFF_D
*                            (HOL) FAN_WSBC_D ..
*
* FAN_WSB3_W =WEEK-SCHEDULE  (ALL) FAN_WSBB_D  ..
*
* HT55WSB1_W =WEEK-SCHEDULE  (MON) HT55WSBA_D
*                            (TUE) HT55WSBA_D
*                            (WED) HT55WSBA_D
*                            (THU) HT55WSBA_D
*                            (FRI) HT55WSBB_D
*                            (SAT) HEAT_50_D
*                            (SUN) HEAT_50_D
*                            (HOL) HT55WSBA_D ..
```

```
* 353 *
* 354 * HT55WSB2_W =WEEK-SCHEDULE  (MON) HT55WSBC_D
* 355 *                           (TUE) HT55WSBC_D
* 356 *                           (WED) HT55WSBC_D
* 357 *                           (THU) HT55WSBC_D
* 358 *                           (FRI) HT55WSBB_D
* 359 *                           (SAT) HEAT_50_D
* 360 *                           (SUN) HEAT_50_D
* 361 *                           (HOL) HT55WSBC_D ..
* 362 *
* 363 * HT68_WSB_W =WEEK-SCHEDULE  (ALL) HT68_WSB_D  ..
* 364 *
* 365 * MOA.15_W   =WEEK-SCHEDULE  (ALL) MOA.15_D  ..
* 366 *
* 367 *
* 368 * $ FULL ON SCHEDULE
* 369 * FULL_ON    =SCHEDULE THRU DEC 31 FULL_ON_W  ..
* 370 *
* 371 * $ FULL OFF SCHEDULE
* 372 * FULL_OFF   =SCHEDULE THRU DEC 31 FULL_OFF_W  ..
* 373 *
* 374 * $ HEAT SCHEDULE, 55 DEG
* 375 * HEAT55_ON  =SCHEDULE THRU MAY 15 HEAT1_ON_W
* 376 *                      THRU OCT  1 FULL_OFF_W
* 377 *                      THRU DEC 31 HEAT1_ON_W  ..
* 378 *
* 379 * $ HEAT SCHEDULE 68 DEG
* 380 * HEAT68_ON  =SCHEDULE THRU MAY 15 HEAT2_ON_W
* 381 *                      THRU OCT  1 FULL_OFF_W
* 382 *                      THRU DEC 31 HEAT2_ON_W  ..
* 383 *
* 384 * $ COOLING SCHEDULE
* 385 * COOL_SCHED =SCHEDULE THRU MAY 15 FULL_OFF_W
* 386 *                      THRU OCT  1 COOL_W
* 387 *                      THRU DEC 31 FULL_OFF_W  ..
* 388 *
* 389 * $ COOL SCHED 80 DEH
* 390 * COOL_80    =SCHEDULE THRU MAY 15 FULL_OFF_W
* 391 *                      THRU OCT  1 COOL_80_W
* 392 *                      THRU DEC 31 FULL_OFF_W  ..
* 393 *
* 394 * $ MAU SCHEDULE
* 395 * MAU_ON     =SCHEDULE THRU MAY 15 MAU_ON_W
* 396 *                      THRU OCT  1 FULL_OFF_W
* 397 *                      THRU DEC 31 MAU_ON_W  ..
* 398 *
* 399 * $ HV_1 ON SCHEDULE
* 400 * HV_1_ON    =SCHEDULE THRU DEC 31 FULL_ON_W  ..
* 401 *
* 402 * $ HANGAR FAN SB, WINTER
* 403 * FAN_WSB1   =SCHEDULE THRU MAY 15 FAN_WSB2_W
* 404 *                      THRU OCT  1 FULL_OFF_W
* 405 *                      THRU DEC 31 FAN_WSB2_W  ..
* 406 *
* 407 * $ OPERATIONS FAN SET BACK
* 408 * FAN_WSB_2  =SCHEDULE THRU DEC 31 FAN_WSB3_W  ..
* 409 *
* 410 * $ HANGER HEAT SET BACK
* 411 * HEAT_WSB_1 =SCHEDULE THRU DEC 31 HT55WSB1_W  ..
* 412 *
* 413 * $ OPERATIONS HEAT W SB
* 414 * HT68_WSB   =SCHEDULE THRU DEC 31 HT68_WSB_W  ..
* 415 *
* 416 * $ FORCED VENTILATION
* 417 * MOA.15_FV  =SCHEDULE THRU DEC 31 MOA.15_W  ..
* 418 *
* 419 *
* 420 *
* 421 *                      $ ZONE DESCRIPTION
* 422 *
* 423 * BAY_A      =ZONE     DESIGN-HEAT-T = 57.0  DESIGN-COOL-T = 90.0
* 424 *                      HEAT-TEMP-SCH = HEAT_WSB_1  ZONE-TYPE = CONDITIONED
* 425 *                      THERMOSTAT-TYPE = PROPORTIONAL
* 426 *                      BASEBOARD-CTRL = THERMOSTATIC  ASSIGNED-CFM = 198000.
* 427 *                      SIZING-OPTION = FROM-LOADS  MIN-CFM-RATIO = 1.0
* 428 *                      EXHAUST-STATIC = 0.75   ..
* 429 *
* 430 * BAY_B      =ZONE     DESIGN-HEAT-T = 57.0  DESIGN-COOL-T = 90.0
* 431 *                      HEAT-TEMP-SCH = HEAT_WSB_1  ZONE-TYPE = CONDITIONED
* 432 *                      THERMOSTAT-TYPE = PROPORTIONAL
* 433 *                      BASEBOARD-CTRL = THERMOSTATIC  ASSIGNED-CFM = 55920.
* 434 *                      OUTSIDE-AIR-CFM = 55920.  SIZING-OPTION = FROM-LOADS
* 435 *                      MIN-CFM-RATIO = 1.0  EXHAUST-STATIC = 0.75   ..
* 436 *
* 437 * ADMIN_C    =ZONE     DESIGN-HEAT-T = 68.0  DESIGN-COOL-T = 75.0
* 438 *                      HEAT-TEMP-SCH = HT68_WSB  ZONE-TYPE = CONDITIONED
* 439 *                      THERMOSTAT-TYPE = PROPORTIONAL
* 440 *                      BASEBOARD-CTRL = THERMOSTATIC
* 441 *                      BASEBOARD-RATING = -129500.  ASSIGNED-CFM = 19600.
* 442 *                      OUTSIDE-AIR-CFM = 2940.  SIZING-OPTION = FROM-LOADS
* 443 *                      EXHAUST-CFM = 2940.0   ..
* 444 *
* 445 *
* 446 *                      $ SYSTEM DESCRIPTION
* 447 *
* 448 * DUH        =SYSTEM     SYSTEM-TYPE = UHT
* 449 *                        MAX-SUPPLY-T = 135.0  RATED-CFM = 198000.
* 450 *                        FAN-SCHEDULE = FAN_WSB1  SUPPLY-DELTA-T = 0.2
* 451 *                        SUPPLY-KW = 0.00014  NIGHT-CYCLE-CTRL = CYCLE-ON-ANY
* 452 *                        HEATING-CAPACITY = -6739200.  FURNACE-AUX = 0.
* 453 *                        ZONE-NAMES = (BAY_A)  ..
* 454 *
* 455 * RMAU       =SYSTEM     SYSTEM-TYPE = SZRH
* 456 *                        MAX-SUPPLY-T = 135.0  MIN-SUPPLY-T = 55.0
* 457 *                        HEATING-SCHEDULE = MAU_ON  PREHEAT-T = 15.0
* 458 *                        MIN-HUMIDITY = 30.0  ECONO-LIMIT-T = 65.0
* 459 *                        ECONO-LOW-LIMIT = 55.0  OA-CONTROL = FIXED
* 460 *                        SUPPLY-CFM = 55920.  RATED-CFM = 55920.
```

```
* 461 *                       MIN-OUTSIDE-AIR = 1.0  RECOVERY-EFF = 0.37
* 462 *                       FAN-SCHEDULE = MAU_ON  SUPPLY-DELTA-T = 2.4
* 463 *                       SUPPLY-KW = 0.00112  NIGHT-CYCLE-CTRL = STAY-OFF
* 464 *                       NIGHT-VENT-DT = 0.0  MIN-CFM-RATIO = 1.0
* 465 *                       COOL-FT-MIN = 0.  HEATING-CAPACITY = -2536800.
* 466 *                       FURNACE-AUX = 0.
* 467 *                       ZONE-NAMES = (BAY_B)  ..
* 468 *
* 469 * HV-1       =SYSTEM    SYSTEM-TYPE = HVSYS
* 470 *                       MAX-SUPPLY-T = 135.0  HEATING-SCHEDULE = HV_1_ON
* 471 *                       MIN-HUMIDITY = 30.0  ECONO-LIMIT-T = 65.0
* 472 *                       ECONO-LOW-LIMIT = 55.0  HEAT-CONTROL = COLDEST
* 473 *                       SUPPLY-CFM = 19600.  RETURN-CFM = 16660.
* 474 *                       RATED-CFM = 19600.  MIN-OUTSIDE-AIR = 0.15
* 475 *                       MIN-AIR-SCH = MOA.15_FV  FAN-SCHEDULE = FAN_WSB_2
* 476 *                       SUPPLY-DELTA-T = 2.4  SUPPLY-KW = 0.00119
* 477 *                       MOTOR-PLACEMENT = OUTSIDE-AIRFLOW
* 478 *                       NIGHT-CYCLE-CTRL = CYCLE-ON-ANY  NIGHT-VENT-DT = 0.0
* 479 *                       HEATING-CAPACITY = -243400.  FURNACE-AUX = 0.
* 480 *                       ZONE-NAMES = (ADMIN_C)  ..
* 481 *
* 482 * END  ..
* 483 * COMPUTE SYSTEMS  ..
* 484 *
* 485 * INPUT PLANT  ..
```

```
* 486 *
* 487 *
* 488 *                  $-------------------------------------$
* 489 *                  $ E Z - D O E  P L A N T S  I N P U T $
* 490 *                  $-------------------------------------$
* 491 *
* 492 *                     $ GENERAL PROJECT DATA
* 493 *
* 494 * TITLE  LINE-1 *     EMC      ENGINEERS      INC.     *
* 495 *        LINE-2 *EZDOE - ELITE SOFTWARE DEVELOPMENT INC*
* 496 *        LINE-3 *     DENVER,       CO       80227     *
* 497 *
* 498 *        LINE-4 *BUILDING 2060, MNT. HANGAR AVUM         *
* 499 *        LINE-5 *SETBACK, DDC, & FORCED VENTILATION      * ..
* 500 *
* 501 * ABORT              ERRORS  ..
* 502 * DIAGNOSTIC         WARNINGS ..
* 503 * PLANT-REPORT       SUMMARY=(PS-A,PS-B,BEPS)
* 504 *
* 505 *                    HOURLY-DATA-SAVE = YES  ..
* 506 *
* 507 *                     $ SCHEDULES
* 508 *
* 509 *
* 510 *
* 511 *
* 512 *
* 513 *                     $ EQUIPMENT DESCRIPTION
* 514 *
* 515 * BOILER     =PLANT-EQUIPMENT   TYPE = HW-BOILER
* 516 *                       SIZE = 8.4  ..
* 517 *
* 518 * ACC8       =PLANT-EQUIPMENT   TYPE = OPEN-CENT-CHLR
* 519 *                       SIZE = 0.1  ..
* 520 *
* 521 * DHW        =PLANT-EQUIPMENT   TYPE = HW-BOILER
* 522 *                       SIZE = 0.6  ..
* 523 *
* 524 * PLANT-PARAMETERS      OPEN-CENT-COND-TYPE = AIR  CCIRC-HEAD = 63.2
* 525 *                       HCIRC-HEAD = 100.0    ..
* 526 *
* 527 *
* 528 * ENERGY-RESOURCE       RESOURCE = ELECTRICITY  ..
* 529 * ENERGY-RESOURCE       RESOURCE = FUEL-OIL  ..
* 530 *
* 531 *
* 532 *
* 533 * END  ..
* 534 * COMPUTE PLANT ..
* 535 * STOP ..
```

ENERGY TYPE IN SITE MBTU-	ELECTRICITY	FUEL-OIL	
CATEGORY OF USE			
SPACE HEAT	263.27	5,901.54	0.00
SPACE COOL	0.00	0.00	0.00
HVAC AUX	848.81	0.00	0.00
DOM HOT WTR	26.10	546.71	0.00
AUX SOLAR	0.00	0.00	0.00
LIGHTS	397.03	0.00	0.00
VERT TRANS	0.00	0.00	0.00
MISC EQUIP	259.56	0.00	0.00
TOTAL	1,794.79	6,448.25	0.00

TOTAL SITE ENERGY 8243.02 MBTU 170.4 KBTU/SQFT-YR GROSS-AREA 170.4 KBTU/SQFT-YR NET-AREA
TOTAL SOURCE ENERGY 11837.96 MBTU 244.7 KBTU/SQFT-YR GROSS-AREA 244.7 KBTU/SQFT-YR NET-AREA

PERCENT OF HOURS ANY SYSTEM ZONE OUTSIDE OF THROTTLING RANGE = 1.4
PERCENT OF HOURS ANY PLANT LOAD NOT SATISFIED = 0.0

NOTE ELECTRICITY AND/OR FUEL USED TO GENERATE ELECTRICITY IS APPORTIONED BASED ON THE YEARLY DEMAND. ALL OTHER ENERGY TYPES ARE APPORTIONED HOURLY.

MO	UTILITY-	ELECTRICITY	FUEL-OIL
JAN	TOTAL(MBTU)	214.385	1582.559
	PEAK(KBTU)	786.427	8521.037
	DY/HR	5/14	24/ 5
FEB	TOTAL(MBTU)	186.968	1077.526
	PEAK(KBTU)	775.901	7516.637
	DY/HR	14/14	14/ 5
MAR	TOTAL(MBTU)	204.015	1051.163
	PEAK(KBTU)	772.375	7005.229
	DY/HR	3/14	28/ 5
APR	TOTAL(MBTU)	157.072	374.452
	PEAK(KBTU)	722.670	6355.310
	DY/HR	1/10	4/ 5
MAY	TOTAL(MBTU)	122.994	131.485
	PEAK(KBTU)	671.681	3502.395
	DY/HR	2/14	3/ 6
JUN	TOTAL(MBTU)	93.653	54.507
	PEAK(KBTU)	365.903	425.307
	DY/HR	20/14	20/12
JUL	TOTAL(MBTU)	92.090	50.236
	PEAK(KBTU)	365.903	408.914
	DY/HR	28/14	28/12
AUG	TOTAL(MBTU)	97.033	56.190
	PEAK(KBTU)	365.903	427.267
	DY/HR	30/14	30/12
SEP	TOTAL(MBTU)	97.595	66.775
	PEAK(KBTU)	365.903	428.257
	DY/HR	28/14	15/12
OCT	TOTAL(MBTU)	150.915	255.956
	PEAK(KBTU)	702.720	4381.661
	DY/HR	26/13	31/ 6
NOV	TOTAL(MBTU)	177.459	639.707
	PEAK(KBTU)	763.903	6800.820
	DY/HR	28/14	28/ 6
DEC	TOTAL(MBTU)	200.593	1107.701
	PEAK(KBTU)	773.112	7521.751
	DY/HR	30/14	26/ 6
	ONE YEAR	1794.772	6448.254
	USE/PEAK	786.427	8521.037

COMPUTER SIMULATIONS

BUILDING 2065

COMPUTER SIMULATIONS
BUILDING 2065

BASE RUN

LDL PROCESSOR INPUT DATA

3/19/1995 11:52:15 LDL RUN 1

```
*  3 *
*  4 *
*  5 *            $----------------------------------$
*  6 *            $EZ-DOE LOADS INPUT$
*  7 *            $----------------------------------$
*  8 *
*  9 *              $ GENERAL PROJECT DATA
* 10 *
* 11 * TITLE LINE-1 *   EMC    ENGINEERS    INC.   *
* 12 *      LINE-2 *EZDOE - ELITE SOFTWARE DEVELOPMENT INC*
* 13 *      LINE-3 *   DENVER,     CO     80227   *
* 14 *
* 15 *      LINE-4 *BUILDING 2065, AF OPS              *
* 16 *      LINE-5 *BASE MODEL                       * ..
* 17 *
* 18 * ABORT           ERRORS ..
* 19 * DIAGNOSTIC      WARNINGS ..
* 20 * LOADS-REPORT     SUMMARY=(LS-C,LS-D) ..
* 21 * BUILDING-LOCATION  X-REF = 0.0
* 22 *                Y-REF = 0.0 ..
* 23 * RUN-PERIOD      JAN 1 1994 THRU DEC 31 1994 ..
* 24 *
* 25 *
* 26 *               $ SCHEDULES
* 27 *
* 28 * FULL_ON_D  =DAY-SCHEDULE  (1,24) (1.) ..
* 29 *
* 30 * FULL_OFF_D =DAY-SCHEDULE  (1,24) (0.) ..
* 31 *
* 32 * PEOPLE_D   =DAY-SCHEDULE  (1,6) (0.1)
* 33 *                    (7) (0.5)
* 34 *                    (8,11) (0.8)
* 35 *                    (12,16) (0.7,0.6,0.9,0.6,0.5)
* 36 *                    (17,18) (0.4,0.3)
* 37 *                    (19,24) (0.1) ..
* 38 *
* 39 * PEOPLE_SAT =DAY-SCHEDULE  (1,24) (0.1) ..
* 40 *
* 41 * LIGHT_D    =DAY-SCHEDULE  (1,7) (0.2)
* 42 *                    (8,12) (0.4,0.5,0.6,0.7,0.3)
* 43 *                    (13,15) (0.7,0.6,0.45)
* 44 *                    (16,24) (0.2) ..
* 45 *
```

```
* 46 * LIGHT_SAT  =DAY-SCHEDULE  (1,24) (0.2) ..
* 47 *
* 48 *
* 49 * PEOPLE_W  =WEEK-SCHEDULE  (WD)  PEOPLE_D
* 50 *                    (WEH) PEOPLE_SAT  ..
* 51 *
* 52 * FULL_ON_W  =WEEK-SCHEDULE  (ALL) FULL_ON_D  ..
* 53 *
* 54 * FULL_OFF_W =WEEK-SCHEDULE  (ALL) FULL_OFF_D  ..
* 55 *
* 56 * LIGHT_ON_W =WEEK-SCHEDULE  (WD)  LIGHT_D
* 57 *                    (WEH) LIGHT_SAT  ..
* 58 *
* 59 *
* 60 * $ FULL ON SCHEDULE
* 61 * FULL_ON   =SCHEDULE THRU DEC 31 FULL_ON_W  ..
* 62 *
* 63 * $ FULL OFF SCHEDULE
* 64 * FULL_OFF   =SCHEDULE THRU DEC 31 FULL_OFF_W  ..
* 65 *
* 66 * $ OCCUPANCY SCHEDULE
* 67 * PEOPLE_SCD =SCHEDULE THRU DEC 31 PEOPLE_W  ..
* 68 *
* 69 * $ LIGHTING SCHEDULE
* 70 * LIGHT_SCHD =SCHEDULE THRU DEC 31 LIGHT_ON_W  ..
* 71 *
* 72 *
* 73 *
* 74 *              $ CONSTRUCTION TYPES
* 75 *
* 76 *
* 77 *
* 78 * FLOORCON =CONSTRUCTION   U-VALUE =  0.100  ..
* 79 * ROOF_CON =CONSTRUCTION   U-VALUE =  0.050  ..
* 80 * WALL_CON =CONSTRUCTION   U-VALUE =  0.200  ..
* 81 * DOOR_CON =CONSTRUCTION   U-VALUE =  0.400  ..
* 82 * AIRWALL  =CONSTRUCTION   U-VALUE = 20.000  ..
* 83 *
* 84 * G_TYPE1  =GLASS-TYPE    GLASS-TYPE-CODE =  1
* 85 *                  PANES = 1
* 86 *                  GLASS-CONDUCTANCE =  1.130  ..
* 87 *
* 88 *
* 89 *
* 90 *
* 91 *              $ SPACE DESCRIPTION
* 92 *
* 93 * ADMIN     =SPACE    AREA = 4322.0  VOLUME = 38898.0
* 94 *               ZONE-TYPE = CONDITIONED  PEOPLE-SCHEDULE = PEOPLE_SCD
* 95 *               NUMBER-OF-PEOPLE = 100.0  PEOPLE-HEAT-GAIN = 550.0
```

```
*  96 *              LIGHTING-TYPE = REC-FLUOR-RV  LIGHTING-KW = 2.44
*  97 *              LIGHTING-SCHEDULE = LIGHT_SCHD
*  98 *              EQUIP-SCHEDULE = FULL_ON  EQUIPMENT-KW = 2.0
*  99 *              INF-METHOD = AIR-CHANGE  AIR-CHANGES/HR = 0.5
* 100 *               INF-SCHEDULE = FULL_ON   ..
* 101 *
* 102 *         U-W     HEIGHT = 67.0  WIDTH = 64.5  CONS = FLOORCON
* 103 *                 AZIMUTH = 270   ..
* 104 *
* 105 *          ROOF    HEIGHT = 67.0  WIDTH = 64.5  CONS = ROOF_CON
* 106 *                 AZIMUTH = 270  TILT = 0   ..
* 107 *
* 108 *          E-W     HEIGHT = 9.0  WIDTH = 67.0  CONS = WALL_CON
* 109 *                 AZIMUTH = 0   ..
* 110 *
* 111 *           WINDOW HEIGHT = 4.0  WIDTH = 4.0  G-T = G_TYPE1
* 112 *                 MULTIPLIER = 4.0   ..
* 113 *
* 114 *           DOOR   HEIGHT = 7.5  WIDTH = 3.0  CONS = DOOR_CON ..
* 115 *
* 116 *          E-W     HEIGHT = 9.0  WIDTH = 70.0  CONS = WALL_CON
* 117 *                 AZIMUTH = 90   ..
* 118 *
* 119 *           WINDOW HEIGHT = 4.0  WIDTH = 6.0  G-T = G_TYPE1
* 120 *                 MULTIPLIER = 2.0   ..
* 121 *
* 122 *          E-W     HEIGHT = 9.0  WIDTH = 59.0  CONS = WALL_CON
* 123 *                 AZIMUTH = 270   ..
* 124 *
* 125 *           WINDOW HEIGHT = 4.0  WIDTH = 14.0  G-T = G_TYPE1 ..
* 126 *
* 127 *           WINDOW HEIGHT = 4.0  WIDTH = 4.0  G-T = G_TYPE1
* 128 *                 MULTIPLIER = 3.0   ..
* 129 *
* 130 *
* 131 * 24HR_OPS_A =SPACE    AREA = 7652.0  VOLUME = 68868.0
* 132 *                 ZONE-TYPE = CONDITIONED  PEOPLE-SCHEDULE = PEOPLE_SCD
* 133 *                 NUMBER-OF-PEOPLE = 60.0  PEOPLE-HEAT-GAIN = 550.0
* 134 *                 LIGHTING-TYPE = REC-FLUOR-RV  LIGHTING-KW = 6.56
* 135 *                 LIGHTING-SCHEDULE = LIGHT_SCHD
* 136 *                 EQUIP-SCHEDULE = FULL_ON  EQUIPMENT-KW = 5.0
* 137 *                 INF-METHOD = AIR-CHANGE  AIR-CHANGES/HR = 0.5
* 138 *                 INF-SCHEDULE = FULL_ON   ..
* 139 *
* 140 *          U-W     HEIGHT = 78.7  WIDTH = 148.0  CONS = FLOORCON
* 141 *                 AZIMUTH = 270   ..
* 142 *
* 143 *           ROOF    HEIGHT = 78.7  WIDTH = 148.0  CONS = ROOF_CON
* 144 *                 AZIMUTH = 270  TILT = 0   ..
* 145 *
```

```
* 146 *          E-W     HEIGHT = 9.0  WIDTH = 148.0  CONS = WALL_CON
* 147 *               AZIMUTH = 90  ..
* 148 *
* 149 *           WINDOW HEIGHT = 4.0  WIDTH = 10.0  G-T = G_TYPE1
* 150 *               MULTIPLIER = 2.0  ..
* 151 *
* 152 *           WINDOW HEIGHT = 4.0  WIDTH = 24.0  G-T = G_TYPE1 ..
* 153 *
* 154 *           DOOR   HEIGHT = 7.5  WIDTH = 3.0  CONS = FLOORCON ..
* 155 *
* 156 *          E-W     HEIGHT = 9.0  WIDTH = 51.0  CONS = WALL_CON
* 157 *               AZIMUTH = 180  ..
* 158 *
* 159 *           WINDOW HEIGHT = 4.0  WIDTH = 8.0  G-T = G_TYPE1 ..
* 160 *
* 161 *          E-W     HEIGHT = 9.0  WIDTH = 160.0  CONS = WALL_CON
* 162 *               AZIMUTH = 270  ..
* 163 *
* 164 *           WINDOW HEIGHT = 4.0  WIDTH = 4.0  G-T = G_TYPE1
* 165 *               MULTIPLIER = 4.0  ..
* 166 *
* 167 *           WINDOW HEIGHT = 14.0  WIDTH = 4.0  G-T = G_TYPE1 ..
* 168 *
* 169 *           WINDOW HEIGHT = 8.0  WIDTH = 4.0  G-T = G_TYPE1 ..
* 170 *
* 171 *           DOOR   HEIGHT = 7.5  WIDTH = 3.0  CONS = DOOR_CON
* 172 *               MULTIPLIER = 2.0  ..
* 173 *
* 174 *          E-W     HEIGHT = 9.0  WIDTH = 60.0  CONS = WALL_CON
* 175 *               AZIMUTH = 0  ..
* 176 *
* 177 *           WINDOW HEIGHT = 4.0  WIDTH = 4.0  G-T = G_TYPE1
* 178 *               MULTIPLIER = 2.0  ..
* 179 *
* 180 *
* 181 * FIREHOUSE  =SPACE   AREA = 5928.0  VOLUME = 59280.0
* 182 *               ZONE-TYPE = CONDITIONED  PEOPLE-SCHEDULE = PEOPLE_SCD
* 183 *               NUMBER-OF-PEOPLE = 25.0  PEOPLE-HEAT-GAIN = 550.0
* 184 *               LIGHTING-TYPE = REC-FLUOR-RV  LIGHTING-KW = 3.0
* 185 *               LIGHTING-SCHEDULE = LIGHT_SCHD
* 186 *               EQUIP-SCHEDULE = FULL_ON  EQUIPMENT-KW = 1.0
* 187 *               INF-METHOD = AIR-CHANGE  AIR-CHANGES/HR = 0.5
* 188 *               INF-SCHEDULE = FULL_ON  ..
* 189 *
* 190 *          U-W     HEIGHT = 78.0  WIDTH = 75.0  CONS = FLOORCON
* 191 *               AZIMUTH = 270  ..
* 192 *
* 193 *           ROOF    HEIGHT = 78.0  WIDTH = 75.0  CONS = ROOF_CON
* 194 *               AZIMUTH = 270  TILT = 0  ..
* 195 *
```

```
* 196 *          E-W     HEIGHT = 9.0  WIDTH = 20.0  CONS = WALL_CON
* 197 *               AZIMUTH = 0   ..
* 198 *
* 199 *          E-W     HEIGHT = 9.0  WIDTH = 76.0  CONS = WALL_CON
* 200 *               AZIMUTH = 90   ..
* 201 *
* 202 *           WINDOW HEIGHT = 4.0  WIDTH = 2.0  G-T = G_TYPE1
* 203 *               MULTIPLIER = 5.0   ..
* 204 *
* 205 *           WINDOW HEIGHT = 4.0  WIDTH = 5.0  G-T = G_TYPE1 ..
* 206 *
* 207 *          E-W     HEIGHT = 9.0  WIDTH = 78.0  CONS = WALL_CON
* 208 *               AZIMUTH = 180   ..
* 209 *
* 210 *          E-W     HEIGHT = 9.0  WIDTH = 76.0  CONS = WALL_CON
* 211 *               AZIMUTH = 270   ..
* 212 *
* 213 *           DOOR   HEIGHT = 8.0  WIDTH = 12.0  CONS = DOOR_CON
* 214 *               MULTIPLIER = 4.0   ..
* 215 *
* 216 *
* 217 * TOWER     =SPACE    AREA = 1728.0  VOLUME = 15552.0
* 218 *               ZONE-TYPE = CONDITIONED  PEOPLE-SCHEDULE = FULL_ON
* 219 *               NUMBER-OF-PEOPLE = 5.0  PEOPLE-HEAT-GAIN = 550.0
* 220 *               LIGHTING-TYPE = REC-FLUOR-RV  LIGHTING-KW = 0.5
* 221 *               LIGHTING-SCHEDULE = LIGHT_SCHD
* 222 *               EQUIP-SCHEDULE = FULL_ON  EQUIPMENT-KW = 12.0
* 223 *               INF-METHOD = AIR-CHANGE  AIR-CHANGES/HR = 0.5
* 224 *               INF-SCHEDULE = FULL_ON   ..
* 225 *
* 226 *          U-W     HEIGHT = 42.0  WIDTH = 42.0  CONS = FLOORCON
* 227 *               AZIMUTH = 270   ..
* 228 *
* 229 *          ROOF    HEIGHT = 42.0  WIDTH = 42.0  CONS = ROOF_CON
* 230 *               AZIMUTH = 270  TILT = 0   ..
* 231 *
* 232 *          E-W     HEIGHT = 9.0  WIDTH = 20.0  CONS = WALL_CON
* 233 *               AZIMUTH = 30   ..
* 234 *
* 235 *           WINDOW HEIGHT = 5.0  WIDTH = 20.0  G-T = G_TYPE1 ..
* 236 *
* 237 *          E-W     HEIGHT = 9.0  WIDTH = 20.0  CONS = WALL_CON
* 238 *               AZIMUTH = 90   ..
* 239 *
* 240 *           WINDOW HEIGHT = 5.0  WIDTH = 20.0  G-T = G_TYPE1 ..
* 241 *
* 242 *          E-W     HEIGHT = 9.0  WIDTH = 20.0  CONS = WALL_CON
* 243 *               AZIMUTH = 150   ..
* 244 *
* 245 *           WINDOW HEIGHT = 5.0  WIDTH = 20.0  G-T = G_TYPE1 ..
```

```
* 246 *
* 247 *          E-W     HEIGHT = 9.0  WIDTH = 20.0  CONS = WALL_CON
* 248 *               AZIMUTH = 210   ..
* 249 *
* 250 *           WINDOW HEIGHT = 5.0  WIDTH = 20.0  G-T = G_TYPE1 ..
* 251 *
* 252 *          E-W     HEIGHT = 9.0  WIDTH = 20.0  CONS = WALL_CON
* 253 *               AZIMUTH = 270   ..
* 254 *
* 255 *           WINDOW HEIGHT = 5.0  WIDTH = 20.0  G-T = G_TYPE1 ..
* 256 *
* 257 *          E-W     HEIGHT = 9.0  WIDTH = 20.0  CONS = WALL_CON
* 258 *               AZIMUTH = 330   ..
* 259 *
* 260 *           WINDOW HEIGHT = 5.0  WIDTH = 20.0  G-T = G_TYPE1 ..
* 261 *
* 262 *
* 263 * 24HR_OPS_B =SPACE    AREA = 4000.0  VOLUME = 36000.0
* 264 *               ZONE-TYPE = CONDITIONED  PEOPLE-SCHEDULE = PEOPLE_SCD
* 265 *               NUMBER-OF-PEOPLE = 40.0  PEOPLE-HEAT-GAIN = 550.0
* 266 *               EQUIP-SCHEDULE = FULL_ON  EQUIPMENT-KW = 15.0
* 267 *               FLOOR-WEIGHT = 0.1  INF-METHOD = AIR-CHANGE
* 268 *               AIR-CHANGES/HR = 0.5  INF-SCHEDULE = FULL_ON   ..
* 269 *
* 270 *          I-W     HEIGHT = 9.0  WIDTH = 145.0  CONS = AIRWALL
* 271 *               NEXT-TO = 24HR_OPS_A   ..
* 272 *
* 273 *
* 274 * END ..
* 275 * COMPUTE LOADS ..
* 276 *
* 277 * INPUT SYSTEMS ..

        SDL PROCESSOR INPUT DATA

            3/19/1995   11:52:15  SDL RUN  1



* 278 *
* 279 *
* 280 *            $-------------------------------------$
* 281 *            $EZ-DOE SYSTEMS INPUT$
* 282 *            $-------------------------------------$
* 283 *
* 284 *              $ GENERAL PROJECT DATA
* 285 *
* 286 * TITLE  LINE-1 *   EMC     ENGINEERS     INC.    *
* 287 *       LINE-2 *EZDOE - ELITE SOFTWARE DEVELOPMENT INC*
```

```
* 288 *      LINE-3 *    DENVER,     CO     80227    *
* 289 *
* 290 *      LINE-4 *BUILDING 2065, AF OPS                *
* 291 *      LINE-5 *BASE MODEL                          * ..
* 292 * ABORT           ERRORS ..
* 293 * DIAGNOSTIC      WARNINGS ..
* 294 * SYSTEMS-REPORT    SUMMARY=(SS-A,SS-B,SS-C,SS-F,SS-H,SS-K,SS-O) ..
* 295 *
* 296 *                $ SCHEDULES
* 297 *
* 298 * FULL_ON_D  =DAY-SCHEDULE  (1,24) (1.) ..
* 299 * FULL_OFF_D =DAY-SCHEDULE  (1,24) (1.) ..
* 300 * HEAT_68_D  =DAY-SCHEDULE  (1,24) (73.) ..
* 301 * COOL_75_D  =DAY-SCHEDULE  (1,24) (75.) ..
* 302 * COOL_78_D  =DAY-SCHEDULE  (1,24) (78.) ..
* 303 * HT_AVAIL_D =DAY-SCHEDULE  (1,24) (1.) ..
* 304 *
* 305 * FULL_ON_W  =WEEK-SCHEDULE  (ALL) FULL_ON_D  ..
* 306 *
* 307 * FULL_OFF_W =WEEK-SCHEDULE  (ALL) FULL_OFF_D  ..
* 308 *
* 309 * HEAT_68_W  =WEEK-SCHEDULE  (ALL) HEAT_68_D  ..
* 310 *
* 311 * COOL_75_W  =WEEK-SCHEDULE  (ALL) COOL_75_D  ..
* 312 *
* 313 * COOL_78_W  =WEEK-SCHEDULE  (ALL) COOL_78_D  ..
* 314 *
* 315 * HT_AVAIL_W =WEEK-SCHEDULE  (ALL) HT_AVAIL_D  ..
* 316 *
* 317 *
* 318 * $ FULL_ON SCHEDULE
* 319 * FULL_ON    =SCHEDULE THRU DEC 31 FULL_ON_W  ..
* 320 *
* 321 * $ FULL OFF SCHEDULE
* 322 * FULL_OFF   =SCHEDULE THRU DEC 31 FULL_OFF_W  ..
* 323 *
* 324 * $ HEATING SCHEDULE
* 325 * HEAT_68    =SCHEDULE THRU DEC 31 HEAT_68_W  ..
* 326 *
* 327 * COOL_75_Y  =SCHEDULE THRU DEC 31 COOL_75_W  ..
* 328 *
* 329 * COOL_78_Y  =SCHEDULE THRU DEC 31 COOL_78_W  ..
* 330 *
* 331 * $ MONTHS HEAT IS AVAIL.
* 332 * HEAT_AVAIL =SCHEDULE THRU MAY 31 HT_AVAIL_W
* 333 *                THRU SEP 15 FULL_OFF_W
* 334 *                THRU DEC 31 HT_AVAIL_W  ..
* 335 *
* 336 *
* 337 *
```

```
* 338 *              $ ZONE DESCRIPTION
* 339 *
* 340 * ADMIN     =ZONE    DESIGN-HEAT-T = 68.0  DESIGN-COOL-T = 75.0
* 341 *              HEAT-TEMP-SCH = HEAT_68  ZONE-TYPE = CONDITIONED
* 342 *              THERMOSTAT-TYPE = PROPORTIONAL  THROTTLING-RANGE = 1.0
* 343 *              BASEBOARD-CTRL = THERMOSTATIC
* 344 *              BASEBOARD-RATING = -95079.  ASSIGNED-CFM = 5250.
* 345 *              OUTSIDE-AIR-CFM = 420.  SIZING-OPTION = FROM-LOADS   ..
* 346 *
* 347 * 24HR_OPS_A =ZONE    DESIGN-HEAT-T = 68.0  DESIGN-COOL-T = 75.0
* 348 *              HEAT-TEMP-SCH = HEAT_68  ZONE-TYPE = CONDITIONED
* 349 *              THERMOSTAT-TYPE = PROPORTIONAL  THROTTLING-RANGE = 1.0
* 350 *              BASEBOARD-CTRL = THERMOSTATIC
* 351 *              BASEBOARD-RATING = -158366.  ASSIGNED-CFM = 9660.
* 352 *              OUTSIDE-AIR-CFM = 4637.  SIZING-OPTION = FROM-LOADS   ..
* 353 *
* 354 * FIREHOUSE  =ZONE    DESIGN-HEAT-T = 68.0  DESIGN-COOL-T = 75.0
* 355 *              HEAT-TEMP-SCH = HEAT_68  COOL-TEMP-SCH = COOL_75_Y
* 356 *              ZONE-TYPE = CONDITIONED
* 357 *              THERMOSTAT-TYPE = PROPORTIONAL  THROTTLING-RANGE = 1.0
* 358 *              BASEBOARD-CTRL = THERMOSTATIC
* 359 *              BASEBOARD-RATING = -117900.  ASSIGNED-CFM = 6840.
* 360 *              OUTSIDE-AIR-CFM = 4172.  SIZING-OPTION = FROM-LOADS   ..
* 361 *
* 362 * TOWER     =ZONE    DESIGN-HEAT-T = 68.0  DESIGN-COOL-T = 78.0
* 363 *              HEAT-TEMP-SCH = HEAT_68  COOL-TEMP-SCH = COOL_78_Y
* 364 *              ZONE-TYPE = CONDITIONED
* 365 *              THERMOSTAT-TYPE = PROPORTIONAL  THROTTLING-RANGE = 1.0
* 366 *              BASEBOARD-CTRL = THERMOSTATIC
* 367 *              BASEBOARD-RATING = -2119.  ASSIGNED-CFM = 2415.
* 368 *              SIZING-OPTION = FROM-LOADS   ..
* 369 *
* 370 * 24HR_OPS_B =ZONE    DESIGN-HEAT-T = 68.0  DESIGN-COOL-T = 75.0
* 371 *              COOL-TEMP-SCH = COOL_75_Y  ZONE-TYPE = CONDITIONED
* 372 *              THERMOSTAT-TYPE = PROPORTIONAL  THROTTLING-RANGE = 1.0
* 373 *              BASEBOARD-CTRL = THERMOSTATIC  ASSIGNED-CFM = 8200.
* 374 *              SIZING-OPTION = FROM-LOADS   ..
* 375 *
* 376 *
* 377 *              $ SYSTEM DESCRIPTION
* 378 *
* 379 * HV_3      =SYSTEM    SYSTEM-TYPE = HVSYS
* 380 *                MAX-SUPPLY-T = 120.0  HEATING-SCHEDULE = HEAT_AVAIL
* 381 *                MIN-HUMIDITY = 30.0  ECONO-LIMIT-T = 65.0
* 382 *                ECONO-LOW-LIMIT = 55.0  HEAT-CONTROL = COLDEST
* 383 *                SUPPLY-CFM = 5250.  RETURN-CFM = 4830.
* 384 *                RATED-CFM = 5250.  MIN-OUTSIDE-AIR = 0.08
* 385 *                SUPPLY-DELTA-T = 2.4  SUPPLY-KW = 0.00078
* 386 *                NIGHT-CYCLE-CTRL = STAY-OFF  NIGHT-VENT-DT = 0.0
* 387 *                HEATING-CAPACITY = -56900.  FURNACE-AUX = 0.
```

```
* 388 *                ZONE-NAMES = (ADMIN) ..
* 389 *
* 390 * HV_1&2&MU1 =SYSTEM   SYSTEM-TYPE = HVSYS
* 391 *                MAX-SUPPLY-T = 120.0  HEATING-SCHEDULE = HEAT_AVAIL
* 392 *                MIN-HUMIDITY = 30.0  ECONO-LIMIT-T = 65.0
* 393 *                ECONO-LOW-LIMIT = 55.0  HEAT-CONTROL = COLDEST
* 394 *                SUPPLY-CFM = 9660.  RETURN-CFM = 5023.
* 395 *                RATED-CFM = 9660.  MIN-OUTSIDE-AIR = 0.48
* 396 *                SUPPLY-DELTA-T = 2.4  SUPPLY-KW = 0.00078
* 397 *                NIGHT-CYCLE-CTRL = STAY-OFF  NIGHT-VENT-DT = 0.0
* 398 *                HEATING-CAPACITY = -466800.  FURNACE-AUX = 0.
* 399 *                ZONE-NAMES = (24HR_OPS_A) ..
* 400 *
* 401 * HV_4&MU2  =SYSTEM   SYSTEM-TYPE = HVSYS
* 402 *                MAX-SUPPLY-T = 120.0  HEATING-SCHEDULE = HEAT_AVAIL
* 403 *                MIN-HUMIDITY = 30.0  ECONO-LIMIT-T = 65.0
* 404 *                ECONO-LOW-LIMIT = 55.0  HEAT-CONTROL = COLDEST
* 405 *                SUPPLY-CFM = 6840.  RETURN-CFM = 2668.
* 406 *                RATED-CFM = 6840.  MIN-OUTSIDE-AIR = 0.61
* 407 *                SUPPLY-DELTA-T = 2.4  SUPPLY-KW = 0.00078
* 408 *                NIGHT-CYCLE-CTRL = STAY-OFF  NIGHT-VENT-DT = 0.0
* 409 *                HEATING-CAPACITY = -360300.  FURNACE-AUX = 0.
* 410 *                ZONE-NAMES = (FIREHOUSE) ..
* 411 *
* 412 * AC1-7    =SYSTEM   SYSTEM-TYPE = PTAC
* 413 *                MAX-SUPPLY-T = 75.0  MIN-SUPPLY-T = 50.0
* 414 *                HEATING-SCHEDULE = FULL_OFF  SUPPLY-CFM = 8200.
* 415 *                RATED-CFM = 8200.  FAN-CONTROL = CONSTANT-VOLUME
* 416 *                SUPPLY-DELTA-T = 0.2  SUPPLY-KW = 0.00007
* 417 *                NIGHT-CYCLE-CTRL = STAY-OFF  NIGHT-VENT-DT = 0.0
* 418 *                COOLING-CAPACITY = 178000.  COOL-SH-CAP = 160500.
* 419 *                COOL-FT-MIN = 0.  MIN-HP-T = 0.
* 420 *                HP-SUPP-SOURCE = HOT-WATER  FURNACE-AUX = 0.
* 421 *                ZONE-NAMES = (24HR_OPS_B) ..
* 422 *
* 423 * AC9      =SYSTEM   SYSTEM-TYPE = PTAC
* 424 *                MAX-SUPPLY-T = 75.0  MIN-SUPPLY-T = 50.0
* 425 *                HEATING-SCHEDULE = FULL_OFF  SUPPLY-CFM = 2415.
* 426 *                RATED-CFM = 2415.  FAN-CONTROL = CONSTANT-VOLUME
* 427 *                SUPPLY-DELTA-T = 0.2  SUPPLY-KW = 0.00007
* 428 *                NIGHT-CYCLE-CTRL = STAY-OFF  NIGHT-VENT-DT = 0.0
* 429 *                COOLING-CAPACITY = 64300.  COOL-SH-CAP = 48900.
* 430 *                COOL-FT-MIN = 0.  MIN-HP-T = 0.
* 431 *                HP-SUPP-SOURCE = HOT-WATER  FURNACE-AUX = 0.
* 432 *                ZONE-NAMES = (TOWER) ..
* 433 *
* 434 * END ..
* 435 * COMPUTE SYSTEMS ..
* 436 *
* 437 * INPUT PLANT ..
```

PDL PROCESSOR INPUT DATA

3/19/1995 11:52:15 PDL RUN 1

```
* 438 *
* 439 *
* 440 *          $-----------------------------------$
* 441 *          $EZ-DOE PLANTS INPUT$
* 442 *          $-----------------------------------$
* 443 *
* 444 *            $ GENERAL PROJECT DATA
* 445 *
* 446 * TITLE  LINE-1 *   EMC    ENGINEERS    INC.   *
* 447 *      LINE-2 *EZDOE - ELITE SOFTWARE DEVELOPMENT INC*
* 448 *      LINE-3 *   DENVER,    CO     80227   *
* 449 *
* 450 *      LINE-4 *BUILDING 2065, AF OPS              *
* 451 *      LINE-5 *BASE MODEL                        * ..
* 452 *
* 453 * ABORT          ERRORS ..
* 454 * DIAGNOSTIC      WARNINGS ..
* 455 * PLANT-REPORT     SUMMARY=(PS-A,PS-B,BEPS)
* 456 *  ..
* 457 *
* 458 *              $ SCHEDULES
* 459 *
* 460 * FULL_ON_D  =DAY-SCHEDULE  (1,24) (1.) ..
* 461 *
* 462 *
* 463 * FULL_ON_W  =WEEK-SCHEDULE  (ALL) FULL_ON_D  ..
* 464 *
* 465 *
* 466 * $ FULL ON SCHEDULE
* 467 * FULL_ON    =SCHEDULE THRU DEC 31 FULL_ON_W  ..
* 468 *
* 469 *
* 470 *
* 471 *              $ EQUIPMENT DESCRIPTION
* 472 *
* 473 * B1       =PLANT-EQUIPMENT   TYPE = STM-BOILER
* 474 *               SIZE = 2.  ..
* 475 *
* 476 * PLANT-PARAMETERS     BOILER-CONTROL = STANDBY  STM-BOILER-HIR = 1.25    ..
* 477 *
* 478 *
* 479 * ENERGY-RESOURCE      RESOURCE = ELECTRICITY  ..
```

```
* 480 * ENERGY-RESOURCE      RESOURCE = FUEL-OIL  ..
* 481 *
* 482 * ENERGY-STORAGE    HEAT-STORE-RATE = 2.65  HEAT-SUPPLY-RATE = 2.65
* 483 *                  HTANK-BASE-T = 195.0  HTANK-T-RANGE = 50.0
* 484 *                  HEAT-STORE-SCH = FULL_ON    ..
* 485 *
* 486 *
* 487 *
* 488 * END  ..
* 489 * COMPUTE PLANT ..
* 490 * STOP ..
```

ENERGY TYPE IN SITE MBTU-	ELECTRICITY	FUEL-OIL
CATEGORY OF USE		
SPACE HEAT	249.14	5984.51
SPACE COOL	230.54	0.00
HVAC AUX	512.43	0.00
DOM HOT WTR	0.00	0.00
AUX SOLAR	0.00	0.00
LIGHTS	103.24	0.00
VERT TRANS	0.00	0.00
MISC EQUIP	1046.30	0.00
TOTAL	2141.65	5984.51

TOTAL SITE ENERGY 8126.29 MBTU 343.9 KBTU/SQFT-YR GROSS-AREA 343.9 KBTU/SQFT-YR NET-AREA
TOTAL SOURCE ENERGY 12416.28 MBTU 525.4 KBTU/SQFT-YR GROSS-AREA 525.4 KBTU/SQFT-YR NET-AREA

PERCENT OF HOURS ANY SYSTEM ZONE OUTSIDE OF THROTTLING RANGE = 11.5
PERCENT OF HOURS ANY PLANT LOAD NOT SATISFIED = 0.0

NOTE ELECTRICITY AND/OR FUEL USED TO GENERATE ELECTRICITY IS APPORTIONED BASED ON THE YEARLY DEMAND. ALL OTHER ENERGY TYPES ARE APPORTIONED HOURLY.

EMC ENGINEERS INC. EZDOE - ELITE SOFTWARE DEVELOPMENT INC DOE-2.1D 3/19/1995 11:52:15 PDL RUN 1
DENVER, CO 80227 BUILDING 2065, AF OPS BASE MODEL
REPORT- PS-B MONTHLY PEAK AND TOTAL ENERGY USE WEATHER FILE- MASSENA, NY

MO	UTILITY- ELECTRICITY		FUEL-OIL
JAN	TOTAL(MBTU)	185.364	1091.334
	PEAK(KBTU)	279.509	2019.768
	DY/HR	26/13	5/ 6
FEB	TOTAL(MBTU)	167.475	870.866
	PEAK(KBTU)	280.238	1804.124
	DY/HR	7/11	5/ 7
MAR	TOTAL(MBTU)	185.417	867.872
	PEAK(KBTU)	281.566	1821.711
	DY/HR	11/11	9/ 6
APR	TOTAL(MBTU)	178.054	522.177
	PEAK(KBTU)	276.248	1395.56
	DY/HR	11/13	1/ 4
MAY	TOTAL(MBTU)	178.539	306.861
	PEAK(KBTU)	277.365	1114.209
	DY/HR	31/13	3/ 2
JUN	TOTAL(MBTU)	171.584	96.667
	PEAK(KBTU)	296.074	725.043
	DY/HR	17/13	8/ 5
JUL	TOTAL(MBTU)	182.064	56.038
	PEAK(KBTU)	315.76	571.738
	DY/HR	18/13	25/ 5
AUG	TOTAL(MBTU)	178.572	81.119
	PEAK(KBTU)	299.966	760.861
	DY/HR	9/14	6/24
SEP	TOTAL(MBTU)	172.296	177.184
	PEAK(KBTU)	311.658	970.388
	DY/HR	2/14	24/ 6
OCT	TOTAL(MBTU)	178.662	383.213
	PEAK(KBTU)	274.831	1162.638
	DY/HR	26/13	21/ 6
NOV	TOTAL(MBTU)	178.357	624.278
	PEAK(KBTU)	281.634	1519.746
	DY/HR	29/13	27/ 7

DEC	TOTAL(MBTU)	185.394	906.904
	PEAK(KBTU)	279.713	1769.074
	DY/HR	13/13	3/10
	ONE YEAR	2141.778	5984.514
	USE/PEAK	315.76	2019.768

COMPUTER SIMULATIONS
BUILDING 2065

RUN 1 - SCHEDULE START/STOP AND NIGHT SETBACK

```
*   3 *
*   4 *
*   5 *                 $----------------------------------$
*   6 *                 $ E Z - D O E   L O A D S  I N P U T $
*   7 *                 $----------------------------------$
*   8 *
*   9 *                    $ GENERAL PROJECT DATA
*  10 *
*  11 * TITLE  LINE-1 *     EMC      ENGINEERS      INC.     *
*  12 *        LINE-2 *EZDOE - ELITE SOFTWARE DEVELOPMENT INC*
*  13 *        LINE-3 *     DENVER,       CO       80227     *
*  14 *
*  15 *        LINE-4 *BUILDING 2065, AF OPS                  *
*  16 *        LINE-5 *MODEL WITH SET BACK                    * ..
*  17 *
*  18 * ABORT              ERRORS  ..
*  19 * DIAGNOSTIC         WARNINGS ..
*  20 * LOADS-REPORT       SUMMARY=(LS-C,LS-D)  ..
*  21 * BUILDING-LOCATION  X-REF = 0.0
*  22 *                    Y-REF = 0.0  ..
*  23 * RUN-PERIOD         JAN 1 1994 THRU DEC 31 1994  ..
*  24 *
*  25 *
*  26 *                     $ SCHEDULES
*  27 *
*  28 * FULL_ON_D  =DAY-SCHEDULE  (1,24) (1.) ..
*  29 *
*  30 * FULL_OFF_D =DAY-SCHEDULE  (1,24) (0.) ..
*  31 *
*  32 * PEOPLE_D   =DAY-SCHEDULE  (1,6) (0.1)
*  33 *                           (7) (0.5)
*  34 *                           (8,11) (0.8)
*  35 *                           (12,16) (0.7,0.6,0.9,0.6,0.5)
*  36 *                           (17,18) (0.4,0.3)
*  37 *                           (19,24) (0.1) ..
*  38 *
*  39 * PEOPLE_SAT =DAY-SCHEDULE  (1,24) (0.1) ..
*  40 *
*  41 * LIGHT_D    =DAY-SCHEDULE  (1,7) (0.2)
*  42 *                           (8,12) (0.4,0.5,0.6,0.7,0.3)
*  43 *                           (13,15) (0.7,0.6,0.45)
*  44 *                           (16,24) (0.2) ..
*  45 *
*  46 * LIGHT_SAT  =DAY-SCHEDULE  (1,24) (0.2) ..
*  47 *
*  48 *
*  49 * PEOPLE_W   =WEEK-SCHEDULE  (WD)  PEOPLE_D
*  50 *                            (WEH) PEOPLE_SAT  ..
*  51 *
*  52 * FULL_ON_W  =WEEK-SCHEDULE  (ALL) FULL_ON_D  ..
*  53 *
*  54 * FULL_OFF_W =WEEK-SCHEDULE  (ALL) FULL_OFF_D  ..
*  55 *
*  56 * LIGHT_ON_W =WEEK-SCHEDULE  (WD)  LIGHT_D
*  57 *                            (WEH) LIGHT_SAT  ..
*  58 *
*  59 *
*  60 * $ FULL ON SCHEDULE
*  61 * FULL_ON    =SCHEDULE THRU DEC 31 FULL_ON_W  ..
*  62 *
*  63 * $ FULL OFF SCHEDULE
*  64 * FULL_OFF   =SCHEDULE THRU DEC 31 FULL_OFF_W  ..
*  65 *
*  66 * $ OCCUPANCY SCHEDULE
*  67 * PEOPLE_SCD =SCHEDULE THRU DEC 31 PEOPLE_W  ..
*  68 *
*  69 * $ LIGHTING SCHEDULE
*  70 * LIGHT_SCHD =SCHEDULE THRU DEC 31 LIGHT_ON_W  ..
*  71 *
*  72 *
*  73 *
*  74 *                     $ CONSTRUCTION TYPES
*  75 *
*  76 *
*  77 *
*  78 * FLOORCON =CONSTRUCTION   U-VALUE =  0.100  ..
*  79 * ROOF_CON =CONSTRUCTION   U-VALUE =  0.050  ..
*  80 * WALL_CON =CONSTRUCTION   U-VALUE =  0.200  ..
*  81 * DOOR_CON =CONSTRUCTION   U-VALUE =  0.400  ..
*  82 * AIRWALL  =CONSTRUCTION   U-VALUE = 20.000  ..
*  83 *
*  84 * G_TYPE1  =GLASS-TYPE     GLASS-TYPE-CODE =  1
*  85 *                          PANES = 1
*  86 *                          GLASS-CONDUCTANCE =  1.130  ..
*  87 *
*  88 *
*  89 *
*  90 *
*  91 *                    $ SPACE DESCRIPTION
*  92 *
*  93 * ADMIN      =SPACE    AREA = 4322.0  VOLUME = 38898.0
*  94 *                      ZONE-TYPE = CONDITIONED  PEOPLE-SCHEDULE = PEOPLE_SCD
*  95 *                      NUMBER-OF-PEOPLE = 100.0  PEOPLE-HEAT-GAIN = 550.0
*  96 *                      LIGHTING-TYPE = REC-FLUOR-RV  LIGHTING-KW = 2.44
*  97 *                      LIGHTING-SCHEDULE = LIGHT_SCHD
*  98 *                      EQUIP-SCHEDULE = FULL_ON  EQUIPMENT-KW = 2.0
*  99 *                      INF-METHOD = AIR-CHANGE  AIR-CHANGES/HR = 0.5
* 100 *                      INF-SCHEDULE = FULL_ON   ..
* 101 *
* 102 *             U-W      HEIGHT = 67.0  WIDTH = 64.5  CONS = FLOORCON
```

```
* 103 *                        AZIMUTH = 270   ..
* 104 *
* 105 *               ROOF     HEIGHT = 67.0  WIDTH = 64.5  CONS = ROOF_CON
* 106 *                        AZIMUTH = 270  TILT = 0   ..
* 107 *
* 108 *               E-W      HEIGHT = 9.0  WIDTH = 67.0  CONS = WALL_CON
* 109 *                        AZIMUTH = 0   ..
* 110 *
* 111 *                 WINDOW HEIGHT = 4.0  WIDTH = 4.0  G-T = G_TYPE1
* 112 *                        MULTIPLIER = 4.0   ..
* 113 *
* 114 *                 DOOR   HEIGHT = 7.5  WIDTH = 3.0  CONS = DOOR_CON ..
* 115 *
* 116 *               E-W      HEIGHT = 9.0  WIDTH = 70.0  CONS = WALL_CON
* 117 *                        AZIMUTH = 90   ..
* 118 *
* 119 *                 WINDOW HEIGHT = 4.0  WIDTH = 6.0  G-T = G_TYPE1
* 120 *                        MULTIPLIER = 2.0   ..
* 121 *
* 122 *               E-W      HEIGHT = 9.0  WIDTH = 59.0  CONS = WALL_CON
* 123 *                        AZIMUTH = 270   ..
* 124 *
* 125 *                 WINDOW HEIGHT = 4.0  WIDTH = 14.0  G-T = G_TYPE1 ..
* 126 *
* 127 *                 WINDOW HEIGHT = 4.0  WIDTH = 4.0  G-T = G_TYPE1
* 128 *                        MULTIPLIER = 3.0   ..
* 129 *
* 130 *
* 131 * 24HR_OPS_A =SPACE    AREA = 7652.0  VOLUME = 68868.0
* 132 *                      ZONE-TYPE = CONDITIONED  PEOPLE-SCHEDULE = PEOPLE_SCD
* 133 *                      NUMBER-OF-PEOPLE = 60.0  PEOPLE-HEAT-GAIN = 550.0
* 134 *                      LIGHTING-TYPE = REC-FLUOR-RV  LIGHTING-KW = 6.56
* 135 *                      LIGHTING-SCHEDULE = LIGHT_SCHD
* 136 *                      EQUIP-SCHEDULE = FULL_ON  EQUIPMENT-KW = 5.0
* 137 *                      INF-METHOD = AIR-CHANGE  AIR-CHANGES/HR = 0.5
* 138 *                      INF-SCHEDULE = FULL_ON   ..
* 139 *
* 140 *             U-W       HEIGHT = 78.7  WIDTH = 148.0  CONS = FLOORCON
* 141 *                        AZIMUTH = 270   ..
* 142 *
* 143 *               ROOF     HEIGHT = 78.7  WIDTH = 148.0  CONS = ROOF_CON
* 144 *                        AZIMUTH = 270  TILT = 0   ..
* 145 *
* 146 *               E-W      HEIGHT = 9.0  WIDTH = 148.0  CONS = WALL_CON
* 147 *                        AZIMUTH = 90   ..
* 148 *
* 149 *                 WINDOW HEIGHT = 4.0  WIDTH = 10.0  G-T = G_TYPE1
* 150 *                        MULTIPLIER = 2.0   ..
* 151 *
* 152 *                 WINDOW HEIGHT = 4.0  WIDTH = 24.0  G-T = G_TYPE1 ..
* 153 *
* 154 *                 DOOR   HEIGHT = 7.5  WIDTH = 3.0  CONS = FLOORCON ..
* 155 *
* 156 *               E-W      HEIGHT = 9.0  WIDTH = 51.0  CONS = WALL_CON
* 157 *                        AZIMUTH = 180   ..
* 158 *
* 159 *                 WINDOW HEIGHT = 4.0  WIDTH = 8.0  G-T = G_TYPE1 ..
* 160 *
* 161 *               E-W      HEIGHT = 9.0  WIDTH = 160.0  CONS = WALL_CON
* 162 *                        AZIMUTH = 270   ..
* 163 *
* 164 *                 WINDOW HEIGHT = 4.0  WIDTH = 4.0  G-T = G_TYPE1
* 165 *                        MULTIPLIER = 4.0   ..
* 166 *
* 167 *                 WINDOW HEIGHT = 14.0  WIDTH = 4.0  G-T = G_TYPE1 ..
* 168 *
* 169 *                 WINDOW HEIGHT = 8.0  WIDTH = 4.0  G-T = G_TYPE1 ..
* 170 *
* 171 *                 DOOR   HEIGHT = 7.5  WIDTH = 3.0  CONS = DOOR_CON
* 172 *                        MULTIPLIER = 2.0   ..
* 173 *
* 174 *               E-W      HEIGHT = 9.0  WIDTH = 60.0  CONS = WALL_CON
* 175 *                        AZIMUTH = 0   ..
* 176 *
* 177 *                 WINDOW HEIGHT = 4.0  WIDTH = 4.0  G-T = G_TYPE1
* 178 *                        MULTIPLIER = 2.0   ..
* 179 *
* 180 *
* 181 * FIREHOUSE  =SPACE    AREA = 5928.0  VOLUME = 59280.0
* 182 *                      ZONE-TYPE = CONDITIONED  PEOPLE-SCHEDULE = PEOPLE_SCD
* 183 *                      NUMBER-OF-PEOPLE = 25.0  PEOPLE-HEAT-GAIN = 550.0
* 184 *                      LIGHTING-TYPE = REC-FLUOR-RV  LIGHTING-KW = 3.0
* 185 *                      LIGHTING-SCHEDULE = LIGHT_SCHD
* 186 *                      EQUIP-SCHEDULE = FULL_ON  EQUIPMENT-KW = 1.0
* 187 *                      INF-METHOD = AIR-CHANGE  AIR-CHANGES/HR = 0.5
* 188 *                      INF-SCHEDULE = FULL_ON   ..
* 189 *
* 190 *             U-W       HEIGHT = 78.0  WIDTH = 75.0  CONS = FLOORCON
* 191 *                        AZIMUTH = 270   ..
* 192 *
* 193 *               ROOF     HEIGHT = 78.0  WIDTH = 75.0  CONS = ROOF_CON
* 194 *                        AZIMUTH = 270  TILT = 0   ..
* 195 *
* 196 *               E-W      HEIGHT = 9.0  WIDTH = 20.0  CONS = WALL_CON
* 197 *                        AZIMUTH = 0   ..
* 198 *
* 199 *               E-W      HEIGHT = 9.0  WIDTH = 76.0  CONS = WALL_CON
* 200 *                        AZIMUTH = 90   ..
* 201 *
* 202 *                 WINDOW HEIGHT = 4.0  WIDTH = 2.0  G-T = G_TYPE1
* 203 *                        MULTIPLIER = 5.0   ..
* 204 *
* 205 *                 WINDOW HEIGHT = 4.0  WIDTH = 5.0  G-T = G_TYPE1 ..
* 206 *
* 207 *               E-W      HEIGHT = 9.0  WIDTH = 78.0  CONS = WALL_CON
* 208 *                        AZIMUTH = 180   ..
* 209 *
* 210 *               E-W      HEIGHT = 9.0  WIDTH = 76.0  CONS = WALL_CON
```

```
* 211 *                          AZIMUTH = 270    ..
* 212 *
* 213 *                  DOOR    HEIGHT = 8.0  WIDTH = 12.0  CONS = DOOR_CON
* 214 *                          MULTIPLIER = 4.0    ..
* 215 *
* 216 *
* 217 * TOWER       =SPACE     AREA = 1728.0  VOLUME = 15552.0
* 218 *                        ZONE-TYPE = CONDITIONED  PEOPLE-SCHEDULE = FULL_ON
* 219 *                        NUMBER-OF-PEOPLE = 5.0  PEOPLE-HEAT-GAIN = 550.0
* 220 *                        LIGHTING-TYPE = REC-FLUOR-RV  LIGHTING-KW = 0.5
* 221 *                        LIGHTING-SCHEDULE = LIGHT_SCHD
* 222 *                        EQUIP-SCHEDULE = FULL_ON  EQUIPMENT-KW = 12.0
* 223 *                        INF-METHOD = AIR-CHANGE  AIR-CHANGES/HR = 0.5
* 224 *                        INF-SCHEDULE = FULL_ON    ..
* 225 *
* 226 *                U-W      HEIGHT = 42.0  WIDTH = 42.0  CONS = FLOORCON
* 227 *                          AZIMUTH = 270    ..
* 228 *
* 229 *                 ROOF     HEIGHT = 42.0  WIDTH = 42.0  CONS = ROOF_CON
* 230 *                          AZIMUTH = 270  TILT = 0    ..
* 231 *
* 232 *                 E-W      HEIGHT = 9.0  WIDTH = 20.0  CONS = WALL_CON
* 233 *                          AZIMUTH = 30    ..
* 234 *
* 235 *                   WINDOW HEIGHT = 5.0  WIDTH = 20.0  G-T = G_TYPE1 ..
* 236 *
* 237 *                 E-W      HEIGHT = 9.0  WIDTH = 20.0  CONS = WALL_CON
* 238 *                          AZIMUTH = 90    ..
* 239 *
* 240 *                   WINDOW HEIGHT = 5.0  WIDTH = 20.0  G-T = G_TYPE1 ..
* 241 *
* 242 *                 E-W      HEIGHT = 9.0  WIDTH = 20.0  CONS = WALL_CON
* 243 *                          AZIMUTH = 150    ..
* 244 *
* 245 *                   WINDOW HEIGHT = 5.0  WIDTH = 20.0  G-T = G_TYPE1 ..
* 246 *
* 247 *                 E-W      HEIGHT = 9.0  WIDTH = 20.0  CONS = WALL_CON
* 248 *                          AZIMUTH = 210    ..
* 249 *
* 250 *                   WINDOW HEIGHT = 5.0  WIDTH = 20.0  G-T = G_TYPE1 ..
* 251 *
* 252 *                 E-W      HEIGHT = 9.0  WIDTH = 20.0  CONS = WALL_CON
* 253 *                          AZIMUTH = 270    ..
* 254 *
* 255 *                   WINDOW HEIGHT = 5.0  WIDTH = 20.0  G-T = G_TYPE1 ..
* 256 *
* 257 *                 E-W      HEIGHT = 9.0  WIDTH = 20.0  CONS = WALL_CON
* 258 *                          AZIMUTH = 330    ..
* 259 *
* 260 *                   WINDOW HEIGHT = 5.0  WIDTH = 20.0  G-T = G_TYPE1 ..
* 261 *
* 262 *
* 263 * 24HR_OPS_B =SPACE     AREA = 4000.0  VOLUME = 36000.0
* 264 *                        ZONE-TYPE = CONDITIONED  PEOPLE-SCHEDULE = PEOPLE_SCD
* 265 *                        NUMBER-OF-PEOPLE = 40.0  PEOPLE-HEAT-GAIN = 550.0
* 266 *                        EQUIP-SCHEDULE = FULL_ON  EQUIPMENT-KW = 15.0
* 267 *                        FLOOR-WEIGHT = 0.1  INF-METHOD = AIR-CHANGE
* 268 *                        AIR-CHANGES/HR = 0.5  INF-SCHEDULE = FULL_ON    ..
* 269 *
* 270 *                 I-W      HEIGHT = 9.0  WIDTH = 145.0  CONS = AIRWALL
* 271 *                          NEXT-TO = 24HR_OPS_A    ..
* 272 *
* 273 *
* 274 * END  ..
* 275 * COMPUTE LOADS  ..
* 276 *
* 277 * INPUT SYSTEMS  ..
```

```
* 278 *
* 279 *
* 280 *                  $---------------------------------------$
* 281 *                  $ E Z - D O E   S Y S T E M S  I N P U T $
* 282 *                  $---------------------------------------$
* 283 *
* 284 *                     $ GENERAL PROJECT DATA
* 285 *
* 286 * TITLE  LINE-1 *      EMC      ENGINEERS      INC.     *
* 287 *        LINE-2 *EZDOE - ELITE SOFTWARE DEVELOPMENT INC*
* 288 *        LINE-3 *      DENVER,        CO       80227     *
* 289 *
* 290 *        LINE-4 *BUILDING 2065, AF OPS                    *
* 291 *        LINE-5 *MODEL WITH SET BACK                      * ..
* 292 * ABORT               ERRORS  ..
* 293 * DIAGNOSTIC          WARNINGS ..
* 294 * SYSTEMS-REPORT      SUMMARY=(SS-A,SS-B,SS-C,SS-F,SS-H,SS-K,SS-O)  ..
* 295 *
* 296 *                      $ SCHEDULES
* 297 *
* 298 * FULL_ON_D  =DAY-SCHEDULE  (1,24) (1.) ..
* 299 * FULL_OFF_D =DAY-SCHEDULE  (1,24) (1.) ..
* 300 * HEAT_68_D  =DAY-SCHEDULE  (1,24) (73.) ..
* 301 * COOL_75_D  =DAY-SCHEDULE  (1,24) (75.) ..
* 302 * COOL_78_D  =DAY-SCHEDULE  (1,24) (78.) ..
* 303 * HT_AVAIL_D =DAY-SCHEDULE  (1,24) (1.) ..
* 304 * FAN_WSB_D  =DAY-SCHEDULE  (1,6) (0.)
* 305 *                           (7,16) (1.)
* 306 *                           (17,24) (0.) ..
* 307 * HT_W_SB_D  =DAY-SCHEDULE  (1,6) (50.)
* 308 *                           (7,16) (74.)
* 309 *                           (17,24) (50.) ..
* 310 * HEAT50_D   =DAY-SCHEDULE  (1,24) (50.) ..
* 311 *
* 312 * FULL_ON_W  =WEEK-SCHEDULE  (ALL) FULL_ON_D  ..
* 313 *
* 314 * FULL_OFF_W =WEEK-SCHEDULE  (ALL) FULL_OFF_D  ..
* 315 *
* 316 * HEAT_68_W  =WEEK-SCHEDULE  (ALL) HEAT_68_D  ..
* 317 *
* 318 * COOL_75_W  =WEEK-SCHEDULE  (ALL) COOL_75_D  ..
* 319 *
* 320 * COOL_78_W  =WEEK-SCHEDULE  (ALL) COOL_78_D  ..
* 321 *
* 322 * HT_AVAIL_W =WEEK-SCHEDULE  (ALL) HT_AVAIL_D  ..
* 323 *
* 324 * FAN_WSB_W  =WEEK-SCHEDULE  (WD)  FAN_WSB_D
* 325 *                           (SAT) FULL_OFF_D
* 326 *                           (SUN) FULL_OFF_D
* 327 *                           (HOL) FAN_WSB_D ..
* 328 *
* 329 * HT68_WSB_W =WEEK-SCHEDULE  (WD)  HT_W_SB_D
* 330 *                           (SAT) HEAT50_D
* 331 *                           (SUN) HEAT50_D
* 332 *                           (HOL) HT_W_SB_D ..
* 333 *
* 334 *
* 335 * $ FULL_ON SCHEDULE
* 336 * FULL_ON    =SCHEDULE THRU DEC 31 FULL_ON_W  ..
* 337 *
* 338 * $ FULL OFF SCHEDULE
* 339 * FULL_OFF   =SCHEDULE THRU DEC 31 FULL_OFF_W  ..
* 340 *
* 341 * $ HEATING SCHEDULE
* 342 * HEAT_68    =SCHEDULE THRU DEC 31 HEAT_68_W  ..
* 343 *
* 344 * COOL_75_Y  =SCHEDULE THRU DEC 31 COOL_75_W  ..
* 345 *
* 346 * COOL_78_Y  =SCHEDULE THRU DEC 31 COOL_78_W  ..
* 347 *
* 348 * $ MONTHS HEAT IS AVAIL.
* 349 * HEAT_AVAIL =SCHEDULE THRU MAY 31 HT_AVAIL_W
* 350 *                      THRU SEP 15 FULL_OFF_W
* 351 *                      THRU DEC 31 HT_AVAIL_W  ..
* 352 *
* 353 * $ FAN SET BACK SCHEDULE
* 354 * FAN_W_SB   =SCHEDULE THRU DEC 31 FAN_WSB_W  ..
* 355 *
* 356 * $ HEATING SCHD W SET BACK
* 357 * HT68_WSB   =SCHEDULE THRU MAY 15 HT68_WSB_W
* 358 *                      THRU OCT  1 FULL_OFF_W
* 359 *                      THRU DEC 31 HT68_WSB_W  ..
* 360 *
* 361 *
* 362 *
* 363 *                      $ ZONE DESCRIPTION
* 364 *
* 365 * ADMIN       =ZONE    DESIGN-HEAT-T = 68.0  DESIGN-COOL-T = 75.0
* 366 *                      HEAT-TEMP-SCH = HT68_WSB  ZONE-TYPE = CONDITIONED
* 367 *                      THERMOSTAT-TYPE = PROPORTIONAL  THROTTLING-RANGE = 1.0
* 368 *                      BASEBOARD-CTRL = THERMOSTATIC
* 369 *                      BASEBOARD-RATING = -95079.  ASSIGNED-CFM = 5250.
* 370 *                      OUTSIDE-AIR-CFM = 420.  SIZING-OPTION = FROM-LOADS   ..
* 371 *
* 372 * 24HR_OPS_A =ZONE    DESIGN-HEAT-T = 68.0  DESIGN-COOL-T = 75.0
* 373 *                      HEAT-TEMP-SCH = HEAT_68  ZONE-TYPE = CONDITIONED
* 374 *                      THERMOSTAT-TYPE = PROPORTIONAL  THROTTLING-RANGE = 1.0
* 375 *                      BASEBOARD-CTRL = THERMOSTATIC
* 376 *                      BASEBOARD-RATING = -158366.  ASSIGNED-CFM = 9660.
* 377 *                      OUTSIDE-AIR-CFM = 4637.  SIZING-OPTION = FROM-LOADS   ..
```

```
* 378 *
* 379 * FIREHOUSE  =ZONE     DESIGN-HEAT-T = 68.0  DESIGN-COOL-T = 75.0
* 380 *                     HEAT-TEMP-SCH = HEAT_68  COOL-TEMP-SCH = COOL_75_Y
* 381 *                     ZONE-TYPE = CONDITIONED
* 382 *                     THERMOSTAT-TYPE = PROPORTIONAL  THROTTLING-RANGE = 1.0
* 383 *                     BASEBOARD-CTRL = THERMOSTATIC
* 384 *                     BASEBOARD-RATING = -117900.  ASSIGNED-CFM = 6840.
* 385 *                     OUTSIDE-AIR-CFM = 4172.  SIZING-OPTION = FROM-LOADS   ..
* 386 *
* 387 * TOWER      =ZONE     DESIGN-HEAT-T = 68.0  DESIGN-COOL-T = 78.0
* 388 *                     HEAT-TEMP-SCH = HEAT_68  COOL-TEMP-SCH = COOL_78_Y
* 389 *                     ZONE-TYPE = CONDITIONED
* 390 *                     THERMOSTAT-TYPE = PROPORTIONAL  THROTTLING-RANGE = 1.0
* 391 *                     BASEBOARD-CTRL = THERMOSTATIC
* 392 *                     BASEBOARD-RATING = -2119.  ASSIGNED-CFM = 2415.
* 393 *                     SIZING-OPTION = FROM-LOADS   ..
* 394 *
* 395 * 24HR_OPS_B =ZONE     DESIGN-HEAT-T = 68.0  DESIGN-COOL-T = 75.0
* 396 *                     COOL-TEMP-SCH = COOL_75_Y  ZONE-TYPE = CONDITIONED
* 397 *                     THERMOSTAT-TYPE = PROPORTIONAL  THROTTLING-RANGE = 1.0
* 398 *                     BASEBOARD-CTRL = THERMOSTATIC  ASSIGNED-CFM = 8200.
* 399 *                     SIZING-OPTION = FROM-LOADS   ..
* 400 *
* 401 *
* 402 *                     $ SYSTEM DESCRIPTION
* 403 *
* 404 * HV_3       =SYSTEM    SYSTEM-TYPE = HVSYS
* 405 *                       MAX-SUPPLY-T = 120.0  HEATING-SCHEDULE = HEAT_AVAIL
* 406 *                       MIN-HUMIDITY = 30.0  ECONO-LIMIT-T = 65.0
* 407 *                       ECONO-LOW-LIMIT = 55.0  HEAT-CONTROL = COLDEST
* 408 *                       SUPPLY-CFM = 5250.  RETURN-CFM = 4830.
* 409 *                       RATED-CFM = 5250.  MIN-OUTSIDE-AIR = 0.08
* 410 *                       FAN-SCHEDULE = FAN_W_SB  SUPPLY-DELTA-T = 2.4
* 411 *                       SUPPLY-KW = 0.00078  NIGHT-CYCLE-CTRL = CYCLE-ON-ANY
* 412 *                       NIGHT-VENT-DT = 0.0  HEATING-CAPACITY = -56900.
* 413 *                       FURNACE-AUX = 0.
* 414 *                       ZONE-NAMES = (ADMIN)  ..
* 415 *
* 416 * HV_1&2&MU1 =SYSTEM    SYSTEM-TYPE = HVSYS
* 417 *                       MAX-SUPPLY-T = 120.0  HEATING-SCHEDULE = HEAT_AVAIL
* 418 *                       MIN-HUMIDITY = 30.0  ECONO-LIMIT-T = 65.0
* 419 *                       ECONO-LOW-LIMIT = 55.0  HEAT-CONTROL = COLDEST
* 420 *                       SUPPLY-CFM = 9660.  RETURN-CFM = 5023.
* 421 *                       RATED-CFM = 9660.  MIN-OUTSIDE-AIR = 0.48
* 422 *                       SUPPLY-DELTA-T = 2.4  SUPPLY-KW = 0.00078
* 423 *                       NIGHT-CYCLE-CTRL = STAY-OFF  NIGHT-VENT-DT = 0.0
* 424 *                       HEATING-CAPACITY = -466800.  FURNACE-AUX = 0.
* 425 *                       ZONE-NAMES = (24HR_OPS_A)  ..
* 426 *
* 427 * HV_4&MU2   =SYSTEM    SYSTEM-TYPE = HVSYS
* 428 *                       MAX-SUPPLY-T = 120.0  HEATING-SCHEDULE = HEAT_AVAIL
* 429 *                       MIN-HUMIDITY = 30.0  ECONO-LIMIT-T = 65.0
* 430 *                       ECONO-LOW-LIMIT = 55.0  HEAT-CONTROL = COLDEST
* 431 *                       SUPPLY-CFM = 6840.  RETURN-CFM = 2668.
* 432 *                       RATED-CFM = 6840.  MIN-OUTSIDE-AIR = 0.61
* 433 *                       SUPPLY-DELTA-T = 2.4  SUPPLY-KW = 0.00078
* 434 *                       NIGHT-CYCLE-CTRL = STAY-OFF  NIGHT-VENT-DT = 0.0
* 435 *                       HEATING-CAPACITY = -360300.  FURNACE-AUX = 0.
* 436 *                       ZONE-NAMES = (FIREHOUSE)  ..
* 437 *
* 438 * AC1-7      =SYSTEM    SYSTEM-TYPE = PTAC
* 439 *                       MAX-SUPPLY-T = 75.0  MIN-SUPPLY-T = 50.0
* 440 *                       HEATING-SCHEDULE = FULL_OFF  SUPPLY-CFM = 8200.
* 441 *                       RATED-CFM = 8200.  FAN-CONTROL = CONSTANT-VOLUME
* 442 *                       SUPPLY-DELTA-T = 0.2  SUPPLY-KW = 0.00007
* 443 *                       NIGHT-CYCLE-CTRL = STAY-OFF  NIGHT-VENT-DT = 0.0
* 444 *                       COOLING-CAPACITY = 178000.  COOL-SH-CAP = 160500.
* 445 *                       COOL-FT-MIN = 0.  MIN-HP-T = 0.
* 446 *                       HP-SUPP-SOURCE = HOT-WATER  FURNACE-AUX = 0.
* 447 *                       ZONE-NAMES = (24HR_OPS_B)  ..
* 448 *
* 449 * AC9        =SYSTEM    SYSTEM-TYPE = PTAC
* 450 *                       MAX-SUPPLY-T = 75.0  MIN-SUPPLY-T = 50.0
* 451 *                       HEATING-SCHEDULE = FULL_OFF  SUPPLY-CFM = 2415.
* 452 *                       RATED-CFM = 2415.  FAN-CONTROL = CONSTANT-VOLUME
* 453 *                       SUPPLY-DELTA-T = 0.2  SUPPLY-KW = 0.00007
* 454 *                       NIGHT-CYCLE-CTRL = STAY-OFF  NIGHT-VENT-DT = 0.0
* 455 *                       COOLING-CAPACITY = 64300.  COOL-SH-CAP = 48900.
* 456 *                       COOL-FT-MIN = 0.  MIN-HP-T = 0.
* 457 *                       HP-SUPP-SOURCE = HOT-WATER  FURNACE-AUX = 0.
* 458 *                       ZONE-NAMES = (TOWER)  ..
* 459 *
* 460 * END  ..
* 461 * COMPUTE SYSTEMS  ..
* 462 *
* 463 * INPUT PLANT  ..
```

```
* 464 *
* 465 *
* 466 *                 $-------------------------------------$
* 467 *                 $ E Z - D O E   P L A N T S  I N P U T $
* 468 *                 $-------------------------------------$
* 469 *
* 470 *                    $ GENERAL PROJECT DATA
* 471 *
* 472 * TITLE  LINE-1 *     EMC      ENGINEERS      INC.     *
* 473 *        LINE-2 *EZDOE - ELITE SOFTWARE DEVELOPMENT INC*
* 474 *        LINE-3 *     DENVER,       CO       80227     *
* 475 *
* 476 *        LINE-4 *BUILDING 2065, AF OPS                  *
* 477 *        LINE-5 *MODEL WITH SET BACK                    * ..
* 478 *
* 479 * ABORT              ERRORS  ..
* 480 * DIAGNOSTIC         WARNINGS ..
* 481 * PLANT-REPORT       SUMMARY=(PS-A,PS-B,BEPS)
* 482 *   ..
* 483 *
* 484 *                    $ SCHEDULES
* 485 *
* 486 * FULL_ON_D  =DAY-SCHEDULE  (1,24) (1.) ..
* 487 *
* 488 *
* 489 * FULL_ON_W  =WEEK-SCHEDULE  (ALL) FULL_ON_D  ..
* 490 *
* 491 *
* 492 * $ FULL ON SCHEDULE
* 493 * FULL_ON    =SCHEDULE THRU DEC 31 FULL_ON_W  ..
* 494 *
* 495 *
* 496 *
* 497 *                    $ EQUIPMENT DESCRIPTION
* 498 *
* 499 * B1         =PLANT-EQUIPMENT   TYPE = STM-BOILER
* 500 *                       SIZE = 2.  ..
* 501 *
* 502 * PLANT-PARAMETERS      BOILER-CONTROL = STANDBY  STM-BOILER-HIR = 1.25    ..
* 503 *
* 504 *
* 505 * ENERGY-RESOURCE       RESOURCE = ELECTRICITY  ..
* 506 * ENERGY-RESOURCE       RESOURCE = FUEL-OIL  ..
* 507 *
* 508 * ENERGY-STORAGE    HEAT-STORE-RATE = 2.65  HEAT-SUPPLY-RATE = 2.65
* 509 *                       HTANK-BASE-T = 195.0  HTANK-T-RANGE = 50.0
* 510 *                       HEAT-STORE-SCH = FULL_ON    ..
* 511 *
* 512 *
* 513 *
* 514 * END  ..
* 515 * COMPUTE PLANT ..
* 516 * STOP ..
```

ENERGY TYPE IN SITE MBTU-	ELECTRICITY	FUEL-OIL	
CATEGORY OF USE			
SPACE HEAT	246.91	5,823.04	0.00
SPACE COOL	230.54	0.00	0.00
HVAC AUX	461.54	0.00	0.00
DOM HOT WTR	0.00	0.00	0.00
AUX SOLAR	0.00	0.00	0.00
LIGHTS	103.24	0.00	0.00
VERT TRANS	0.00	0.00	0.00
MISC EQUIP	1,046.30	0.00	0.00
TOTAL	2,088.53	5,823.04	0.00

TOTAL SITE ENERGY 7911.78 MBTU 334.8 KBTU/SQFT-YR GROSS-AREA 334.8 KBTU/SQFT-YR NET-AREA
TOTAL SOURCE ENERGY 12095.36 MBTU 511.9 KBTU/SQFT-YR GROSS-AREA 511.9 KBTU/SQFT-YR NET-AREA

PERCENT OF HOURS ANY SYSTEM ZONE OUTSIDE OF THROTTLING RANGE = 13.4
PERCENT OF HOURS ANY PLANT LOAD NOT SATISFIED = 0.0

NOTE ELECTRICITY AND/OR FUEL USED TO GENERATE ELECTRICITY IS APPORTIONED BASED ON THE YEARLY DEMAND. ALL OTHER ENERGY TYPES ARE APPORTIONED HOURLY.

MO	UTILITY-	ELECTRICITY	FUEL-OIL
	TOTAL(MBTU)	181.232	1056.780
JAN	PEAK(KBTU)	279.509	1974.659
	DY/HR	26/13	5/12
	TOTAL(MBTU)	163.560	848.168
FEB	PEAK(KBTU)	280.238	1752.482
	DY/HR	7/11	4/10
	TOTAL(MBTU)	180.789	845.937
MAR	PEAK(KBTU)	281.566	1822.741
	DY/HR	11/11	9/ 7
	TOTAL(MBTU)	173.762	510.916
APR	PEAK(KBTU)	278.735	1361.783
	DY/HR	12/11	1/ 7
	TOTAL(MBTU)	173.751	295.578
MAY	PEAK(KBTU)	277.329	1084.669
	DY/HR	31/13	3/ 7
	TOTAL(MBTU)	167.098	93.336
JUN	PEAK(KBTU)	296.038	686.635
	DY/HR	17/13	8/ 5
	TOTAL(MBTU)	177.843	54.004
JUL	PEAK(KBTU)	315.724	539.656
	DY/HR	18/13	25/ 5
	TOTAL(MBTU)	173.929	78.488
AUG	PEAK(KBTU)	299.930	764.804
	DY/HR	9/14	6/24
	TOTAL(MBTU)	167.670	170.872
SEP	PEAK(KBTU)	311.622	932.667
	DY/HR	2/14	24/ 6
	TOTAL(MBTU)	174.287	376.479
OCT	PEAK(KBTU)	274.832	1201.440
	DY/HR	26/14	28/ 7
	TOTAL(MBTU)	173.758	609.909
NOV	PEAK(KBTU)	281.634	1521.693
	DY/HR	29/13	29/ 7
	TOTAL(MBTU)	180.974	882.664
DEC	PEAK(KBTU)	279.713	1782.068
	DY/HR	13/13	28/ 7
	ONE YEAR	2088.653	5823.131
	USE/PEAK	315.724	1974.659

COMPUTER SIMULATIONS
BUILDING 2065

RUN 3 - DDC

```
*   3 *
*   4 *
*   5 *                  $----------------------------------$
*   6 *                  $ E Z - D O E   L O A D S  I N P U T $
*   7 *                  $----------------------------------$
*   8 *
*   9 *                     $ GENERAL PROJECT DATA
*  10 *
*  11 * TITLE  LINE-1 *     EMC      ENGINEERS      INC.     *
*  12 *        LINE-2 *EZDOE - ELITE SOFTWARE DEVELOPMENT INC*
*  13 *        LINE-3 *     DENVER,       CO       80227     *
*  14 *
*  15 *        LINE-4 *BUILDING 2065, AF OPS                   *
*  16 *        LINE-5 *MODEL WITH SET BACK AND DDC              * ..
*  17 *
*  18 * ABORT              ERRORS  ..
*  19 * DIAGNOSTIC         WARNINGS ..
*  20 * LOADS-REPORT       SUMMARY=(LS-C,LS-D)  ..
*  21 * BUILDING-LOCATION  X-REF = 0.0
*  22 *                     Y-REF = 0.0  ..
*  23 * RUN-PERIOD         JAN 1 1994 THRU DEC 31 1994  ..
*  24 *
*  25 *
*  26 *                      $ SCHEDULES
*  27 *
*  28 * FULL_ON_D  =DAY-SCHEDULE  (1,24) (1.) ..
*  29 *
*  30 * FULL_OFF_D =DAY-SCHEDULE  (1,24) (0.) ..
*  31 *
*  32 * PEOPLE_D   =DAY-SCHEDULE  (1,6) (0.1)
*  33 *                           (7) (0.5)
*  34 *                           (8,11) (0.8)
*  35 *                           (12,16) (0.7,0.6,0.9,0.6,0.5)
*  36 *                           (17,18) (0.4,0.3)
*  37 *                           (19,24) (0.1) ..
*  38 *
*  39 * PEOPLE_SAT =DAY-SCHEDULE  (1,24) (0.1) ..
*  40 *
*  41 * LIGHT_D    =DAY-SCHEDULE  (1,7) (0.2)
*  42 *                           (8,12) (0.4,0.5,0.6,0.7,0.3)
*  43 *                           (13,15) (0.7,0.6,0.45)
*  44 *                           (16,24) (0.2) ..
*  45 *
*  46 * LIGHT_SAT  =DAY-SCHEDULE  (1,24) (0.2) ..
*  47 *
*  48 *
*  49 * PEOPLE_W   =WEEK-SCHEDULE  (WD)  PEOPLE_D
*  50 *                            (WEH) PEOPLE_SAT  ..
*  51 *
*  52 * FULL_ON_W  =WEEK-SCHEDULE  (ALL) FULL_ON_D  ..
*  53 *
*  54 * FULL_OFF_W =WEEK-SCHEDULE  (ALL) FULL_OFF_D  ..
*  55 *
*  56 * LIGHT_ON_W =WEEK-SCHEDULE  (WD)  LIGHT_D
*  57 *                            (WEH) LIGHT_SAT  ..
*  58 *
*  59 *
*  60 * $ FULL ON SCHEDULE
*  61 * FULL_ON    =SCHEDULE THRU DEC 31 FULL_ON_W  ..
*  62 *
*  63 * $ FULL OFF SCHEDULE
*  64 * FULL_OFF   =SCHEDULE THRU DEC 31 FULL_OFF_W  ..
*  65 *
*  66 * $ OCCUPANCY SCHEDULE
*  67 * PEOPLE_SCD =SCHEDULE THRU DEC 31 PEOPLE_W  ..
*  68 *
*  69 * $ LIGHTING SCHEDULE
*  70 * LIGHT_SCHD =SCHEDULE THRU DEC 31 LIGHT_ON_W  ..
*  71 *
*  72 *
*  73 *
*  74 *                      $ CONSTRUCTION TYPES
*  75 *
*  76 *
*  77 *
*  78 * FLOORCON =CONSTRUCTION   U-VALUE =  0.100  ..
*  79 * ROOF_CON =CONSTRUCTION   U-VALUE =  0.050  ..
*  80 * WALL_CON =CONSTRUCTION   U-VALUE =  0.200  ..
*  81 * DOOR_CON =CONSTRUCTION   U-VALUE =  0.400  ..
*  82 * AIRWALL  =CONSTRUCTION   U-VALUE = 20.000  ..
*  83 *
*  84 * G_TYPE1  =GLASS-TYPE     GLASS-TYPE-CODE =  1
*  85 *                          PANES = 1
*  86 *                          GLASS-CONDUCTANCE =  1.130  ..
*  87 *
*  88 *
*  89 *
*  90 *
*  91 *                      $ SPACE DESCRIPTION
*  92 *
*  93 * ADMIN      =SPACE     AREA = 4322.0  VOLUME = 38898.0
*  94 *                       ZONE-TYPE = CONDITIONED  PEOPLE-SCHEDULE = PEOPLE_SCD
*  95 *                       NUMBER-OF-PEOPLE = 100.0  PEOPLE-HEAT-GAIN = 550.0
*  96 *                       LIGHTING-TYPE = REC-FLUOR-RV  LIGHTING-KW = 2.44
*  97 *                       LIGHTING-SCHEDULE = LIGHT_SCHD
*  98 *                       EQUIP-SCHEDULE = FULL_ON  EQUIPMENT-KW = 2.0
*  99 *                       INF-METHOD = AIR-CHANGE  AIR-CHANGES/HR = 0.5
* 100 *                       INF-SCHEDULE = FULL_ON   ..
* 101 *
* 102 *             U-W       HEIGHT = 67.0  WIDTH = 64.5  CONS = FLOORCON
```

```
* 103 *                       AZIMUTH = 270   ..
* 104 *
* 105 *               ROOF     HEIGHT = 67.0  WIDTH = 64.5  CONS = ROOF_CON
* 106 *                        AZIMUTH = 270  TILT = 0   ..
* 107 *
* 108 *               E-W      HEIGHT = 9.0  WIDTH = 67.0  CONS = WALL_CON
* 109 *                        AZIMUTH = 0   ..
* 110 *
* 111 *                 WINDOW HEIGHT = 4.0  WIDTH = 4.0  G-T = G_TYPE1
* 112 *                        MULTIPLIER = 4.0   ..
* 113 *
* 114 *                 DOOR   HEIGHT = 7.5  WIDTH = 3.0  CONS = DOOR_CON ..
* 115 *
* 116 *               E-W      HEIGHT = 9.0  WIDTH = 70.0  CONS = WALL_CON
* 117 *                        AZIMUTH = 90   ..
* 118 *
* 119 *                 WINDOW HEIGHT = 4.0  WIDTH = 6.0  G-T = G_TYPE1
* 120 *                        MULTIPLIER = 2.0   ..
* 121 *
* 122 *               E-W      HEIGHT = 9.0  WIDTH = 59.0  CONS = WALL_CON
* 123 *                        AZIMUTH = 270   ..
* 124 *
* 125 *                 WINDOW HEIGHT = 4.0  WIDTH = 14.0  G-T = G_TYPE1 ..
* 126 *
* 127 *                 WINDOW HEIGHT = 4.0  WIDTH = 4.0  G-T = G_TYPE1
* 128 *                        MULTIPLIER = 3.0   ..
* 129 *
* 130 *
* 131 * 24HR_OPS_A =SPACE    AREA = 7652.0  VOLUME = 68868.0
* 132 *                      ZONE-TYPE = CONDITIONED  PEOPLE-SCHEDULE = PEOPLE_SCD
* 133 *                      NUMBER-OF-PEOPLE = 60.0  PEOPLE-HEAT-GAIN = 550.0
* 134 *                      LIGHTING-TYPE = REC-FLUOR-RV  LIGHTING-KW = 6.56
* 135 *                      LIGHTING-SCHEDULE = LIGHT_SCHD
* 136 *                      EQUIP-SCHEDULE = FULL_ON  EQUIPMENT-KW = 5.0
* 137 *                      INF-METHOD = AIR-CHANGE  AIR-CHANGES/HR = 0.5
* 138 *                      INF-SCHEDULE = FULL_ON   ..
* 139 *
* 140 *             U-W       HEIGHT = 78.7  WIDTH = 148.0  CONS = FLOORCON
* 141 *                        AZIMUTH = 270   ..
* 142 *
* 143 *               ROOF     HEIGHT = 78.7  WIDTH = 148.0  CONS = ROOF_CON
* 144 *                        AZIMUTH = 270  TILT = 0   ..
* 145 *
* 146 *               E-W      HEIGHT = 9.0  WIDTH = 148.0  CONS = WALL_CON
* 147 *                        AZIMUTH = 90   ..
* 148 *
* 149 *                 WINDOW HEIGHT = 4.0  WIDTH = 10.0  G-T = G_TYPE1
* 150 *                        MULTIPLIER = 2.0   ..
* 151 *
* 152 *                 WINDOW HEIGHT = 4.0  WIDTH = 24.0  G-T = G_TYPE1 ..
* 153 *
* 154 *                 DOOR   HEIGHT = 7.5  WIDTH = 3.0  CONS = FLOORCON ..
* 155 *
* 156 *               E-W      HEIGHT = 9.0  WIDTH = 51.0  CONS = WALL_CON
* 157 *                        AZIMUTH = 180   ..
* 158 *
* 159 *                 WINDOW HEIGHT = 4.0  WIDTH = 8.0  G-T = G_TYPE1 ..
* 160 *
* 161 *               E-W      HEIGHT = 9.0  WIDTH = 160.0  CONS = WALL_CON
* 162 *                        AZIMUTH = 270   ..
* 163 *
* 164 *                 WINDOW HEIGHT = 4.0  WIDTH = 4.0  G-T = G_TYPE1
* 165 *                        MULTIPLIER = 4.0   ..
* 166 *
* 167 *                 WINDOW HEIGHT = 14.0  WIDTH = 4.0  G-T = G_TYPE1 ..
* 168 *
* 169 *                 WINDOW HEIGHT = 8.0  WIDTH = 4.0  G-T = G_TYPE1 ..
* 170 *
* 171 *                 DOOR   HEIGHT = 7.5  WIDTH = 3.0  CONS = DOOR_CON
* 172 *                        MULTIPLIER = 2.0   ..
* 173 *
* 174 *               E-W      HEIGHT = 9.0  WIDTH = 60.0  CONS = WALL_CON
* 175 *                        AZIMUTH = 0   ..
* 176 *
* 177 *                 WINDOW HEIGHT = 4.0  WIDTH = 4.0  G-T = G_TYPE1
* 178 *                        MULTIPLIER = 2.0   ..
* 179 *
* 180 *
* 181 * FIREHOUSE  =SPACE    AREA = 5928.0  VOLUME = 59280.0
* 182 *                      ZONE-TYPE = CONDITIONED  PEOPLE-SCHEDULE = PEOPLE_SCD
* 183 *                      NUMBER-OF-PEOPLE = 25.0  PEOPLE-HEAT-GAIN = 550.0
* 184 *                      LIGHTING-TYPE = REC-FLUOR-RV  LIGHTING-KW = 3.0
* 185 *                      LIGHTING-SCHEDULE = LIGHT_SCHD
* 186 *                      EQUIP-SCHEDULE = FULL_ON  EQUIPMENT-KW = 1.0
* 187 *                      INF-METHOD = AIR-CHANGE  AIR-CHANGES/HR = 0.5
* 188 *                      INF-SCHEDULE = FULL_ON   ..
* 189 *
* 190 *             U-W       HEIGHT = 78.0  WIDTH = 75.0  CONS = FLOORCON
* 191 *                        AZIMUTH = 270   ..
* 192 *
* 193 *               ROOF     HEIGHT = 78.0  WIDTH = 75.0  CONS = ROOF_CON
* 194 *                        AZIMUTH = 270  TILT = 0   ..
* 195 *
* 196 *               E-W      HEIGHT = 9.0  WIDTH = 20.0  CONS = WALL_CON
* 197 *                        AZIMUTH = 0   ..
* 198 *
* 199 *               E-W      HEIGHT = 9.0  WIDTH = 76.0  CONS = WALL_CON
* 200 *                        AZIMUTH = 90   ..
* 201 *
* 202 *                 WINDOW HEIGHT = 4.0  WIDTH = 2.0  G-T = G_TYPE1
* 203 *                        MULTIPLIER = 5.0   ..
* 204 *
* 205 *                 WINDOW HEIGHT = 4.0  WIDTH = 5.0  G-T = G_TYPE1 ..
* 206 *
* 207 *               E-W      HEIGHT = 9.0  WIDTH = 78.0  CONS = WALL_CON
* 208 *                        AZIMUTH = 180   ..
* 209 *
* 210 *               E-W      HEIGHT = 9.0  WIDTH = 76.0  CONS = WALL_CON
```

```
* 211 *                          AZIMUTH = 270    ..
* 212 *
* 213 *                  DOOR    HEIGHT = 8.0  WIDTH = 12.0  CONS = DOOR_CON
* 214 *                          MULTIPLIER = 4.0    ..
* 215 *
* 216 *
* 217 * TOWER       =SPACE     AREA = 1728.0  VOLUME = 15552.0
* 218 *                        ZONE-TYPE = CONDITIONED  PEOPLE-SCHEDULE = FULL_ON
* 219 *                        NUMBER-OF-PEOPLE = 5.0  PEOPLE-HEAT-GAIN = 550.0
* 220 *                        LIGHTING-TYPE = REC-FLUOR-RV  LIGHTING-KW = 0.5
* 221 *                        LIGHTING-SCHEDULE = LIGHT_SCHD
* 222 *                        EQUIP-SCHEDULE = FULL_ON  EQUIPMENT-KW = 12.0
* 223 *                        INF-METHOD = AIR-CHANGE  AIR-CHANGES/HR = 0.5
* 224 *                        INF-SCHEDULE = FULL_ON    ..
* 225 *
* 226 *                U-W      HEIGHT = 42.0  WIDTH = 42.0  CONS = FLOORCON
* 227 *                          AZIMUTH = 270    ..
* 228 *
* 229 *                 ROOF     HEIGHT = 42.0  WIDTH = 42.0  CONS = ROOF_CON
* 230 *                          AZIMUTH = 270  TILT = 0    ..
* 231 *
* 232 *                 E-W      HEIGHT = 9.0  WIDTH = 20.0  CONS = WALL_CON
* 233 *                          AZIMUTH = 30    ..
* 234 *
* 235 *                   WINDOW HEIGHT = 5.0  WIDTH = 20.0  G-T = G_TYPE1 ..
* 236 *
* 237 *                 E-W      HEIGHT = 9.0  WIDTH = 20.0  CONS = WALL_CON
* 238 *                          AZIMUTH = 90    ..
* 239 *
* 240 *                   WINDOW HEIGHT = 5.0  WIDTH = 20.0  G-T = G_TYPE1 ..
* 241 *
* 242 *                 E-W      HEIGHT = 9.0  WIDTH = 20.0  CONS = WALL_CON
* 243 *                          AZIMUTH = 150    ..
* 244 *
* 245 *                   WINDOW HEIGHT = 5.0  WIDTH = 20.0  G-T = G_TYPE1 ..
* 246 *
* 247 *                 E-W      HEIGHT = 9.0  WIDTH = 20.0  CONS = WALL_CON
* 248 *                          AZIMUTH = 210    ..
* 249 *
* 250 *                   WINDOW HEIGHT = 5.0  WIDTH = 20.0  G-T = G_TYPE1 ..
* 251 *
* 252 *                 E-W      HEIGHT = 9.0  WIDTH = 20.0  CONS = WALL_CON
* 253 *                          AZIMUTH = 270    ..
* 254 *
* 255 *                   WINDOW HEIGHT = 5.0  WIDTH = 20.0  G-T = G_TYPE1 ..
* 256 *
* 257 *                 E-W      HEIGHT = 9.0  WIDTH = 20.0  CONS = WALL_CON
* 258 *                          AZIMUTH = 330    ..
* 259 *
* 260 *                   WINDOW HEIGHT = 5.0  WIDTH = 20.0  G-T = G_TYPE1 ..
* 261 *
* 262 *
* 263 * 24HR_OPS_B =SPACE     AREA = 4000.0  VOLUME = 36000.0
* 264 *                        ZONE-TYPE = CONDITIONED  PEOPLE-SCHEDULE = PEOPLE_SCD
* 265 *                        NUMBER-OF-PEOPLE = 40.0  PEOPLE-HEAT-GAIN = 550.0
* 266 *                        EQUIP-SCHEDULE = FULL_ON  EQUIPMENT-KW = 15.0
* 267 *                        FLOOR-WEIGHT = 0.1  INF-METHOD = AIR-CHANGE
* 268 *                        AIR-CHANGES/HR = 0.5  INF-SCHEDULE = FULL_ON    ..
* 269 *
* 270 *                 I-W      HEIGHT = 9.0  WIDTH = 145.0  CONS = AIRWALL
* 271 *                          NEXT-TO = 24HR_OPS_A    ..
* 272 *
* 273 *
* 274 * END  ..
* 275 * COMPUTE LOADS  ..
* 276 *
* 277 * INPUT SYSTEMS  ..
```

```
* 278 *
* 279 *
* 280 *                  $--------------------------------------$
* 281 *                  $ E Z - D O E  S Y S T E M S  I N P U T $
* 282 *                  $--------------------------------------$
* 283 *
* 284 *                     $ GENERAL PROJECT DATA
* 285 *
* 286 * TITLE  LINE-1 *     EMC      ENGINEERS      INC.     *
* 287 *        LINE-2 *EZDOE - ELITE SOFTWARE DEVELOPMENT INC*
* 288 *        LINE-3 *     DENVER,       CO       80227     *
* 289 *
* 290 *        LINE-4 *BUILDING 2065, AF OPS                  *
* 291 *        LINE-5 *MODEL WITH SET BACK AND DDC            * ..
* 292 * ABORT              ERRORS ..
* 293 * DIAGNOSTIC         WARNINGS ..
* 294 * SYSTEMS-REPORT     SUMMARY=(SS-A,SS-B,SS-C,SS-F,SS-H,SS-K,SS-O)  ..
* 295 *
* 296 *                     $ SCHEDULES
* 297 *
* 298 * FULL_ON_D  =DAY-SCHEDULE  (1,24) (1.) ..
* 299 * FULL_OFF_D =DAY-SCHEDULE  (1,24) (1.) ..
* 300 * HEAT_68_D  =DAY-SCHEDULE  (1,24) (68.) ..
* 301 * COOL_75_D  =DAY-SCHEDULE  (1,24) (75.) ..
* 302 * COOL_78_D  =DAY-SCHEDULE  (1,24) (78.) ..
* 303 * HT_AVAIL_D =DAY-SCHEDULE  (1,24) (1.) ..
* 304 * FAN_WSB_D  =DAY-SCHEDULE  (1,6) (0.)
* 305 *                           (7,16) (1.)
* 306 *                           (17,24) (0.) ..
* 307 * HT_W_SB_D  =DAY-SCHEDULE  (1,6) (50.)
* 308 *                           (7,16) (68.)
* 309 *                           (17,24) (50.) ..
* 310 * HEAT50_D   =DAY-SCHEDULE  (1,24) (50.) ..
* 311 *
* 312 * FULL_ON_W  =WEEK-SCHEDULE  (ALL) FULL_ON_D  ..
* 313 *
* 314 * FULL_OFF_W =WEEK-SCHEDULE  (ALL) FULL_OFF_D  ..
* 315 *
* 316 * HEAT_68_W  =WEEK-SCHEDULE  (ALL) HEAT_68_D  ..
* 317 *
* 318 * COOL_75_W  =WEEK-SCHEDULE  (ALL) COOL_75_D  ..
* 319 *
* 320 * COOL_78_W  =WEEK-SCHEDULE  (ALL) COOL_78_D  ..
* 321 *
* 322 * HT_AVAIL_W =WEEK-SCHEDULE  (ALL) HT_AVAIL_D  ..
* 323 *
* 324 * FAN_WSB_W  =WEEK-SCHEDULE  (WD)  FAN_WSB_D
* 325 *                           (SAT) FULL_OFF_D
* 326 *                           (SUN) FULL_OFF_D
* 327 *                           (HOL) FAN_WSB_D ..
* 328 *
* 329 * HT68_WSB_W =WEEK-SCHEDULE  (WD)  HT_W_SB_D
* 330 *                           (SAT) HEAT50_D
* 331 *                           (SUN) HEAT50_D
* 332 *                           (HOL) HT_W_SB_D ..
* 333 *
* 334 *
* 335 * $ FULL_ON SCHEDULE
* 336 * FULL_ON    =SCHEDULE THRU DEC 31 FULL_ON_W  ..
* 337 *
* 338 * $ FULL OFF SCHEDULE
* 339 * FULL_OFF   =SCHEDULE THRU DEC 31 FULL_OFF_W  ..
* 340 *
* 341 * $ HEATING SCHEDULE
* 342 * HEAT_68    =SCHEDULE THRU DEC 31 HEAT_68_W  ..
* 343 *
* 344 * COOL_75_Y  =SCHEDULE THRU DEC 31 COOL_75_W  ..
* 345 *
* 346 * COOL_78_Y  =SCHEDULE THRU DEC 31 COOL_78_W  ..
* 347 *
* 348 * $ MONTHS HEAT IS AVAIL.
* 349 * HEAT_AVAIL =SCHEDULE THRU MAY 31 HT_AVAIL_W
* 350 *                      THRU SEP 15 FULL_OFF_W
* 351 *                      THRU DEC 31 HT_AVAIL_W  ..
* 352 *
* 353 * $ FAN SET BACK SCHEDULE
* 354 * FAN_W_SB   =SCHEDULE THRU DEC 31 FAN_WSB_W  ..
* 355 *
* 356 * $ HEATING SCHD W SET BACK
* 357 * HT68_WSB   =SCHEDULE THRU MAY 15 HT68_WSB_W
* 358 *                      THRU OCT  1 FULL_OFF_W
* 359 *                      THRU DEC 31 HT68_WSB_W  ..
* 360 *
* 361 *
* 362 *
* 363 *                     $ ZONE DESCRIPTION
* 364 *
* 365 * ADMIN      =ZONE    DESIGN-HEAT-T = 68.0  DESIGN-COOL-T = 75.0
* 366 *                     HEAT-TEMP-SCH = HT68_WSB  ZONE-TYPE = CONDITIONED
* 367 *                     THERMOSTAT-TYPE = PROPORTIONAL  THROTTLING-RANGE = 1.0
* 368 *                     BASEBOARD-CTRL = THERMOSTATIC
* 369 *                     BASEBOARD-RATING = -95079.  ASSIGNED-CFM = 5250.
* 370 *                     OUTSIDE-AIR-CFM = 420.  SIZING-OPTION = FROM-LOADS   ..
* 371 *
* 372 * 24HR_OPS_A =ZONE    DESIGN-HEAT-T = 68.0  DESIGN-COOL-T = 75.0
* 373 *                     HEAT-TEMP-SCH = HEAT_68  ZONE-TYPE = CONDITIONED
* 374 *                     THERMOSTAT-TYPE = PROPORTIONAL  THROTTLING-RANGE = 1.0
* 375 *                     BASEBOARD-CTRL = THERMOSTATIC
* 376 *                     BASEBOARD-RATING = -158366.  ASSIGNED-CFM = 9660.
* 377 *                     OUTSIDE-AIR-CFM = 4637.  SIZING-OPTION = FROM-LOADS   ..
```

```
* 378 *
* 379 * FIREHOUSE  =ZONE     DESIGN-HEAT-T = 68.0  DESIGN-COOL-T = 75.0
* 380 *                     HEAT-TEMP-SCH = HEAT_68  COOL-TEMP-SCH = COOL_75_Y
* 381 *                     ZONE-TYPE = CONDITIONED
* 382 *                     THERMOSTAT-TYPE = PROPORTIONAL  THROTTLING-RANGE = 1.0
* 383 *                     BASEBOARD-CTRL = THERMOSTATIC
* 384 *                     BASEBOARD-RATING = -117900.  ASSIGNED-CFM = 6840.
* 385 *                     OUTSIDE-AIR-CFM = 4172.  SIZING-OPTION = FROM-LOADS   ..
* 386 *
* 387 * TOWER      =ZONE     DESIGN-HEAT-T = 68.0  DESIGN-COOL-T = 78.0
* 388 *                     HEAT-TEMP-SCH = HEAT_68  COOL-TEMP-SCH = COOL_78_Y
* 389 *                     ZONE-TYPE = CONDITIONED
* 390 *                     THERMOSTAT-TYPE = PROPORTIONAL  THROTTLING-RANGE = 1.0
* 391 *                     BASEBOARD-CTRL = THERMOSTATIC
* 392 *                     BASEBOARD-RATING = -2119.  ASSIGNED-CFM = 2415.
* 393 *                     SIZING-OPTION = FROM-LOADS   ..
* 394 *
* 395 * 24HR_OPS_B =ZONE     DESIGN-HEAT-T = 68.0  DESIGN-COOL-T = 75.0
* 396 *                     COOL-TEMP-SCH = COOL_75_Y  ZONE-TYPE = CONDITIONED
* 397 *                     THERMOSTAT-TYPE = PROPORTIONAL  THROTTLING-RANGE = 1.0
* 398 *                     BASEBOARD-CTRL = THERMOSTATIC  ASSIGNED-CFM = 8200.
* 399 *                     SIZING-OPTION = FROM-LOADS   ..
* 400 *
* 401 *
* 402 *                     $ SYSTEM DESCRIPTION
* 403 *
* 404 * HV_3       =SYSTEM    SYSTEM-TYPE = HVSYS
* 405 *                       MAX-SUPPLY-T = 120.0  HEATING-SCHEDULE = HEAT_AVAIL
* 406 *                       MIN-HUMIDITY = 30.0  ECONO-LIMIT-T = 65.0
* 407 *                       ECONO-LOW-LIMIT = 55.0  HEAT-CONTROL = COLDEST
* 408 *                       SUPPLY-CFM = 5250.  RETURN-CFM = 4830.
* 409 *                       RATED-CFM = 5250.  MIN-OUTSIDE-AIR = 0.08
* 410 *                       FAN-SCHEDULE = FAN_W_SB  SUPPLY-DELTA-T = 2.4
* 411 *                       SUPPLY-KW = 0.00078  NIGHT-CYCLE-CTRL = CYCLE-ON-ANY
* 412 *                       NIGHT-VENT-DT = 0.0  HEATING-CAPACITY = -56900.
* 413 *                       FURNACE-AUX = 0.
* 414 *                       ZONE-NAMES = (ADMIN)  ..
* 415 *
* 416 * HV_1&2&MU1 =SYSTEM    SYSTEM-TYPE = HVSYS
* 417 *                       MAX-SUPPLY-T = 120.0  HEATING-SCHEDULE = HEAT_AVAIL
* 418 *                       MIN-HUMIDITY = 30.0  ECONO-LIMIT-T = 65.0
* 419 *                       ECONO-LOW-LIMIT = 55.0  HEAT-CONTROL = COLDEST
* 420 *                       SUPPLY-CFM = 9660.  RETURN-CFM = 5023.
* 421 *                       RATED-CFM = 9660.  MIN-OUTSIDE-AIR = 0.48
* 422 *                       SUPPLY-DELTA-T = 2.4  SUPPLY-KW = 0.00078
* 423 *                       NIGHT-CYCLE-CTRL = STAY-OFF  NIGHT-VENT-DT = 0.0
* 424 *                       HEATING-CAPACITY = -466800.  FURNACE-AUX = 0.
* 425 *                       ZONE-NAMES = (24HR_OPS_A)  ..
* 426 *
* 427 * HV_4&MU2   =SYSTEM    SYSTEM-TYPE = HVSYS
* 428 *                       MAX-SUPPLY-T = 120.0  HEATING-SCHEDULE = HEAT_AVAIL
* 429 *                       MIN-HUMIDITY = 30.0  ECONO-LIMIT-T = 65.0
* 430 *                       ECONO-LOW-LIMIT = 55.0  HEAT-CONTROL = COLDEST
* 431 *                       SUPPLY-CFM = 6840.  RETURN-CFM = 2668.
* 432 *                       RATED-CFM = 6840.  MIN-OUTSIDE-AIR = 0.61
* 433 *                       SUPPLY-DELTA-T = 2.4  SUPPLY-KW = 0.00078
* 434 *                       NIGHT-CYCLE-CTRL = STAY-OFF  NIGHT-VENT-DT = 0.0
* 435 *                       HEATING-CAPACITY = -360300.  FURNACE-AUX = 0.
* 436 *                       ZONE-NAMES = (FIREHOUSE)  ..
* 437 *
* 438 * AC1-7      =SYSTEM    SYSTEM-TYPE = PTAC
* 439 *                       MAX-SUPPLY-T = 75.0  MIN-SUPPLY-T = 50.0
* 440 *                       HEATING-SCHEDULE = FULL_OFF  SUPPLY-CFM = 8200.
* 441 *                       RATED-CFM = 8200.  FAN-CONTROL = CONSTANT-VOLUME
* 442 *                       SUPPLY-DELTA-T = 0.2  SUPPLY-KW = 0.00007
* 443 *                       NIGHT-CYCLE-CTRL = STAY-OFF  NIGHT-VENT-DT = 0.0
* 444 *                       COOLING-CAPACITY = 178000.  COOL-SH-CAP = 160500.
* 445 *                       COOL-FT-MIN = 0.  MIN-HP-T = 0.
* 446 *                       HP-SUPP-SOURCE = HOT-WATER  FURNACE-AUX = 0.
* 447 *                       ZONE-NAMES = (24HR_OPS_B)  ..
* 448 *
* 449 * AC9        =SYSTEM    SYSTEM-TYPE = PTAC
* 450 *                       MAX-SUPPLY-T = 75.0  MIN-SUPPLY-T = 50.0
* 451 *                       HEATING-SCHEDULE = FULL_OFF  SUPPLY-CFM = 2415.
* 452 *                       RATED-CFM = 2415.  FAN-CONTROL = CONSTANT-VOLUME
* 453 *                       SUPPLY-DELTA-T = 0.2  SUPPLY-KW = 0.00007
* 454 *                       NIGHT-CYCLE-CTRL = STAY-OFF  NIGHT-VENT-DT = 0.0
* 455 *                       COOLING-CAPACITY = 64300.  COOL-SH-CAP = 48900.
* 456 *                       COOL-FT-MIN = 0.  MIN-HP-T = 0.
* 457 *                       HP-SUPP-SOURCE = HOT-WATER  FURNACE-AUX = 0.
* 458 *                       ZONE-NAMES = (TOWER)  ..
* 459 *
* 460 * END  ..
* 461 * COMPUTE SYSTEMS  ..
* 462 *
* 463 * INPUT PLANT  ..
```

```
* 464 *
* 465 *
* 466 *                  $-------------------------------------$
* 467 *                  $ E Z - D O E  P L A N T S  I N P U T $
* 468 *                  $-------------------------------------$
* 469 *
* 470 *                     $ GENERAL PROJECT DATA
* 471 *
* 472 * TITLE  LINE-1 *     EMC      ENGINEERS      INC.     *
* 473 *        LINE-2 *EZDOE - ELITE SOFTWARE DEVELOPMENT INC*
* 474 *        LINE-3 *     DENVER,       CO       80227     *
* 475 *
* 476 *        LINE-4 *BUILDING 2065, AF OPS                   *
* 477 *        LINE-5 *MODEL WITH SET BACK AND DDC             * ..
* 478 *
* 479 * ABORT               ERRORS  ..
* 480 * DIAGNOSTIC          WARNINGS ..
* 481 * PLANT-REPORT        SUMMARY=(PS-A,PS-B,BEPS)
* 482 *   ..
* 483 *
* 484 *                     $ SCHEDULES
* 485 *
* 486 * FULL_ON_D  =DAY-SCHEDULE  (1,24) (1.) ..
* 487 *
* 488 *
* 489 * FULL_ON_W  =WEEK-SCHEDULE  (ALL) FULL_ON_D  ..
* 490 *
* 491 *
* 492 * $ FULL ON SCHEDULE
* 493 * FULL_ON    =SCHEDULE THRU DEC 31 FULL_ON_W  ..
* 494 *
* 495 *
* 496 *
* 497 *                     $ EQUIPMENT DESCRIPTION
* 498 *
* 499 * B1         =PLANT-EQUIPMENT   TYPE = STM-BOILER
* 500 *                     SIZE = 2.  ..
* 501 *
* 502 * PLANT-PARAMETERS      BOILER-CONTROL = STANDBY  STM-BOILER-HIR = 1.25    ..
* 503 *
* 504 *
* 505 * ENERGY-RESOURCE       RESOURCE = ELECTRICITY  ..
* 506 * ENERGY-RESOURCE       RESOURCE = FUEL-OIL  ..
* 507 *
* 508 * ENERGY-STORAGE    HEAT-STORE-RATE = 2.65  HEAT-SUPPLY-RATE = 2.65
* 509 *                     HTANK-BASE-T = 195.0  HTANK-T-RANGE = 50.0
* 510 *                     HEAT-STORE-SCH = FULL_ON    ..
* 511 *
* 512 *
* 513 *
* 514 * END  ..
* 515 * COMPUTE PLANT ..
* 516 * STOP ..
```

ENERGY TYPE IN SITE MBTU-	ELECTRICITY	FUEL-OIL	
CATEGORY OF USE			
SPACE HEAT	208.36	4,707.61	0.00
SPACE COOL	133.11	0.00	0.00
HVAC AUX	459.80	0.00	0.00
DOM HOT WTR	0.00	0.00	0.00
AUX SOLAR	0.00	0.00	0.00
LIGHTS	103.24	0.00	0.00
VERT TRANS	0.00	0.00	0.00
MISC EQUIP	1,046.30	0.00	0.00
TOTAL	1,950.81	4,707.61	0.00

TOTAL SITE ENERGY 6658.57 MBTU 281.8 KBTU/SQFT-YR GROSS-AREA 281.8 KBTU/SQFT-YR NET-AREA
TOTAL SOURCE ENERGY 10566.29 MBTU 447.2 KBTU/SQFT-YR GROSS-AREA 447.2 KBTU/SQFT-YR NET-AREA

PERCENT OF HOURS ANY SYSTEM ZONE OUTSIDE OF THROTTLING RANGE = 7.3
PERCENT OF HOURS ANY PLANT LOAD NOT SATISFIED = 0.0

NOTE ELECTRICITY AND/OR FUEL USED TO GENERATE ELECTRICITY IS APPORTIONED BASED ON THE YEARLY DEMAND. ALL OTHER ENERGY TYPES ARE APPORTIONED HOURLY.

MO	UTILITY-	ELECTRICITY	FUEL-OIL
	TOTAL(MBTU)	174.314	950.134
JAN	PEAK(KBTU)	271.716	1916.483
	DY/HR	6/13	5/12
	TOTAL(MBTU)	154.251	746.075
FEB	PEAK(KBTU)	260.700	1610.066
	DY/HR	18/13	14/ 7
	TOTAL(MBTU)	170.203	726.479
MAR	PEAK(KBTU)	262.980	1707.180
	DY/HR	11/13	9/ 7
	TOTAL(MBTU)	158.918	381.120
APR	PEAK(KBTU)	259.170	1217.338
	DY/HR	11/11	1/ 7
	TOTAL(MBTU)	158.778	192.764
MAY	PEAK(KBTU)	269.223	896.030
	DY/HR	9/13	2/ 7
	TOTAL(MBTU)	156.595	43.538
JUN	PEAK(KBTU)	295.166	470.134
	DY/HR	17/13	8/ 6
	TOTAL(MBTU)	172.001	28.291
JUL	PEAK(KBTU)	315.677	376.789
	DY/HR	18/13	25/ 5
	TOTAL(MBTU)	164.684	37.815
AUG	PEAK(KBTU)	298.101	901.061
	DY/HR	9/14	6/24
	TOTAL(MBTU)	155.159	98.509
SEP	PEAK(KBTU)	311.541	771.169
	DY/HR	2/14	24/ 6
	TOTAL(MBTU)	157.992	252.564
OCT	PEAK(KBTU)	258.563	1030.247
	DY/HR	26/13	28/ 7
	TOTAL(MBTU)	159.331	483.114
NOV	PEAK(KBTU)	264.343	1379.622
	DY/HR	29/13	29/ 7
	TOTAL(MBTU)	168.704	767.234
DEC	PEAK(KBTU)	262.438	1653.525
	DY/HR	13/13	28/ 7
	ONE YEAR	1950.930	4707.639
	USE/PEAK	315.677	1916.483

```
*   3 *
*   4 *
*   5 *                 $-----------------------------------$
*   6 *                 $ E Z - D O E   L O A D S  I N P U T $
*   7 *                 $-----------------------------------$
*   8 *
*   9 *                    $ GENERAL PROJECT DATA
*  10 *
*  11 * TITLE  LINE-1 *     EMC      ENGINEERS      INC.     *
*  12 *        LINE-2 *EZDOE - ELITE SOFTWARE DEVELOPMENT INC*
*  13 *        LINE-3 *     DENVER,       CO       80227     *
*  14 *
*  15 *        LINE-4 *BUILDING 2065, AF OPS                    *
*  16 *        LINE-5 *MODEL WITH SET BACK AND DDC              * ..
*  17 *
*  18 * ABORT              ERRORS  ..
*  19 * DIAGNOSTIC         WARNINGS ..
*  20 * LOADS-REPORT       SUMMARY=(LS-C,LS-D)  ..
*  21 * BUILDING-LOCATION  X-REF = 0.0
*  22 *                    Y-REF = 0.0  ..
*  23 * RUN-PERIOD         JAN 1 1994 THRU DEC 31 1994  ..
*  24 *
*  25 *
*  26 *                     $ SCHEDULES
*  27 *
*  28 * FULL_ON_D  =DAY-SCHEDULE  (1,24) (1.) ..
*  29 *
*  30 * FULL_OFF_D =DAY-SCHEDULE  (1,24) (0.) ..
*  31 *
*  32 * PEOPLE_D   =DAY-SCHEDULE  (1,6) (0.1)
*  33 *                           (7) (0.5)
*  34 *                           (8,11) (0.8)
*  35 *                           (12,16) (0.7,0.6,0.9,0.6,0.5)
*  36 *                           (17,18) (0.4,0.3)
*  37 *                           (19,24) (0.1) ..
*  38 *
*  39 * PEOPLE_SAT =DAY-SCHEDULE  (1,24) (0.1) ..
*  40 *
*  41 * LIGHT_D    =DAY-SCHEDULE  (1,7) (0.2)
*  42 *                           (8,12) (0.4,0.5,0.6,0.7,0.3)
*  43 *                           (13,15) (0.7,0.6,0.45)
*  44 *                           (16,24) (0.2) ..
*  45 *
*  46 * LIGHT_SAT  =DAY-SCHEDULE  (1,24) (0.2) ..
*  47 *
*  48 *
*  49 * PEOPLE_W   =WEEK-SCHEDULE  (WD)  PEOPLE_D
*  50 *                           (WEH) PEOPLE_SAT  ..
*  51 *
*  52 * FULL_ON_W  =WEEK-SCHEDULE  (ALL) FULL_ON_D  ..
*  53 *
*  54 * FULL_OFF_W =WEEK-SCHEDULE  (ALL) FULL_OFF_D  ..
*  55 *
*  56 * LIGHT_ON_W =WEEK-SCHEDULE  (WD)  LIGHT_D
*  57 *                           (WEH) LIGHT_SAT  ..
*  58 *
*  59 *
*  60 * $ FULL ON SCHEDULE
*  61 * FULL_ON    =SCHEDULE THRU DEC 31 FULL_ON_W  ..
*  62 *
*  63 * $ FULL OFF SCHEDULE
*  64 * FULL_OFF   =SCHEDULE THRU DEC 31 FULL_OFF_W  ..
*  65 *
*  66 * $ OCCUPANCY SCHEDULE
*  67 * PEOPLE_SCD =SCHEDULE THRU DEC 31 PEOPLE_W  ..
*  68 *
*  69 * $ LIGHTING SCHEDULE
*  70 * LIGHT_SCHD =SCHEDULE THRU DEC 31 LIGHT_ON_W  ..
*  71 *
*  72 *
*  73 *
*  74 *                     $ CONSTRUCTION TYPES
*  75 *
*  76 *
*  77 *
*  78 * FLOORCON =CONSTRUCTION   U-VALUE =  0.100  ..
*  79 * ROOF_CON =CONSTRUCTION   U-VALUE =  0.050  ..
*  80 * WALL_CON =CONSTRUCTION   U-VALUE =  0.200  ..
*  81 * DOOR_CON =CONSTRUCTION   U-VALUE =  0.400  ..
*  82 * AIRWALL  =CONSTRUCTION   U-VALUE = 20.000  ..
*  83 *
*  84 * G_TYPE1  =GLASS-TYPE     GLASS-TYPE-CODE =  1
*  85 *                          PANES = 1
*  86 *                          GLASS-CONDUCTANCE =  1.130  ..
*  87 *
*  88 *
*  89 *
*  90 *
*  91 *                     $ SPACE DESCRIPTION
*  92 *
*  93 * ADMIN      =SPACE    AREA = 4322.0  VOLUME = 38898.0
*  94 *                      ZONE-TYPE = CONDITIONED  PEOPLE-SCHEDULE = PEOPLE_SCD
*  95 *                      NUMBER-OF-PEOPLE = 100.0  PEOPLE-HEAT-GAIN = 550.0
*  96 *                      LIGHTING-TYPE = REC-FLUOR-RV  LIGHTING-KW = 2.44
*  97 *                      LIGHTING-SCHEDULE = LIGHT_SCHD
*  98 *                      EQUIP-SCHEDULE = FULL_ON  EQUIPMENT-KW = 2.0
*  99 *                      INF-METHOD = AIR-CHANGE  AIR-CHANGES/HR = 0.5
* 100 *                      INF-SCHEDULE = FULL_ON   ..
* 101 *
* 102 *              U-W      HEIGHT = 67.0  WIDTH = 64.5  CONS = FLOORCON
```

```
* 103 *                         AZIMUTH = 270   ..
* 104 *
* 105 *                ROOF     HEIGHT = 67.0  WIDTH = 64.5  CONS = ROOF_CON
* 106 *                         AZIMUTH = 270  TILT = 0   ..
* 107 *
* 108 *                E-W      HEIGHT = 9.0  WIDTH = 67.0  CONS = WALL_CON
* 109 *                         AZIMUTH = 0   ..
* 110 *
* 111 *                  WINDOW HEIGHT = 4.0  WIDTH = 4.0  G-T = G_TYPE1
* 112 *                         MULTIPLIER = 4.0   ..
* 113 *
* 114 *                  DOOR   HEIGHT = 7.5  WIDTH = 3.0  CONS = DOOR_CON ..
* 115 *
* 116 *                E-W      HEIGHT = 9.0  WIDTH = 70.0  CONS = WALL_CON
* 117 *                         AZIMUTH = 90   ..
* 118 *
* 119 *                  WINDOW HEIGHT = 4.0  WIDTH = 6.0  G-T = G_TYPE1
* 120 *                         MULTIPLIER = 2.0   ..
* 121 *
* 122 *                E-W      HEIGHT = 9.0  WIDTH = 59.0  CONS = WALL_CON
* 123 *                         AZIMUTH = 270   ..
* 124 *
* 125 *                  WINDOW HEIGHT = 4.0  WIDTH = 14.0  G-T = G_TYPE1 ..
* 126 *
* 127 *                  WINDOW HEIGHT = 4.0  WIDTH = 4.0  G-T = G_TYPE1
* 128 *                         MULTIPLIER = 3.0   ..
* 129 *
* 130 *
* 131 * 24HR_OPS_A =SPACE    AREA = 7652.0  VOLUME = 68868.0
* 132 *                      ZONE-TYPE = CONDITIONED  PEOPLE-SCHEDULE = PEOPLE_SCD
* 133 *                      NUMBER-OF-PEOPLE = 60.0  PEOPLE-HEAT-GAIN = 550.0
* 134 *                      LIGHTING-TYPE = REC-FLUOR-RV  LIGHTING-KW = 6.56
* 135 *                      LIGHTING-SCHEDULE = LIGHT_SCHD
* 136 *                      EQUIP-SCHEDULE = FULL_ON  EQUIPMENT-KW = 5.0
* 137 *                      INF-METHOD = AIR-CHANGE  AIR-CHANGES/HR = 0.5
* 138 *                      INF-SCHEDULE = FULL_ON   ..
* 139 *
* 140 *              U-W      HEIGHT = 78.7  WIDTH = 148.0  CONS = FLOORCON
* 141 *                        AZIMUTH = 270   ..
* 142 *
* 143 *                ROOF     HEIGHT = 78.7  WIDTH = 148.0  CONS = ROOF_CON
* 144 *                         AZIMUTH = 270  TILT = 0   ..
* 145 *
* 146 *                E-W      HEIGHT = 9.0  WIDTH = 148.0  CONS = WALL_CON
* 147 *                         AZIMUTH = 90   ..
* 148 *
* 149 *                  WINDOW HEIGHT = 4.0  WIDTH = 10.0  G-T = G_TYPE1
* 150 *                         MULTIPLIER = 2.0   ..
* 151 *
* 152 *                  WINDOW HEIGHT = 4.0  WIDTH = 24.0  G-T = G_TYPE1 ..
* 153 *
* 154 *                  DOOR   HEIGHT = 7.5  WIDTH = 3.0  CONS = FLOORCON ..
* 155 *
* 156 *                E-W      HEIGHT = 9.0  WIDTH = 51.0  CONS = WALL_CON
* 157 *                         AZIMUTH = 180   ..
* 158 *
* 159 *                  WINDOW HEIGHT = 4.0  WIDTH = 8.0  G-T = G_TYPE1 ..
* 160 *
* 161 *                E-W      HEIGHT = 9.0  WIDTH = 160.0  CONS = WALL_CON
* 162 *                         AZIMUTH = 270   ..
* 163 *
* 164 *                  WINDOW HEIGHT = 4.0  WIDTH = 4.0  G-T = G_TYPE1
* 165 *                         MULTIPLIER = 4.0   ..
* 166 *
* 167 *                  WINDOW HEIGHT = 14.0  WIDTH = 4.0  G-T = G_TYPE1 ..
* 168 *
* 169 *                  WINDOW HEIGHT = 8.0  WIDTH = 4.0  G-T = G_TYPE1 ..
* 170 *
* 171 *                  DOOR   HEIGHT = 7.5  WIDTH = 3.0  CONS = DOOR_CON
* 172 *                         MULTIPLIER = 2.0   ..
* 173 *
* 174 *                E-W      HEIGHT = 9.0  WIDTH = 60.0  CONS = WALL_CON
* 175 *                         AZIMUTH = 0   ..
* 176 *
* 177 *                  WINDOW HEIGHT = 4.0  WIDTH = 4.0  G-T = G_TYPE1
* 178 *                         MULTIPLIER = 2.0   ..
* 179 *
* 180 *
* 181 * FIREHOUSE  =SPACE    AREA = 5928.0  VOLUME = 59280.0
* 182 *                      ZONE-TYPE = CONDITIONED  PEOPLE-SCHEDULE = PEOPLE_SCD
* 183 *                      NUMBER-OF-PEOPLE = 25.0  PEOPLE-HEAT-GAIN = 550.0
* 184 *                      LIGHTING-TYPE = REC-FLUOR-RV  LIGHTING-KW = 3.0
* 185 *                      LIGHTING-SCHEDULE = LIGHT_SCHD
* 186 *                      EQUIP-SCHEDULE = FULL_ON  EQUIPMENT-KW = 1.0
* 187 *                      INF-METHOD = AIR-CHANGE  AIR-CHANGES/HR = 0.5
* 188 *                      INF-SCHEDULE = FULL_ON   ..
* 189 *
* 190 *              U-W      HEIGHT = 78.0  WIDTH = 75.0  CONS = FLOORCON
* 191 *                        AZIMUTH = 270   ..
* 192 *
* 193 *                ROOF     HEIGHT = 78.0  WIDTH = 75.0  CONS = ROOF_CON
* 194 *                         AZIMUTH = 270  TILT = 0   ..
* 195 *
* 196 *                E-W      HEIGHT = 9.0  WIDTH = 20.0  CONS = WALL_CON
* 197 *                         AZIMUTH = 0   ..
* 198 *
* 199 *                E-W      HEIGHT = 9.0  WIDTH = 76.0  CONS = WALL_CON
* 200 *                         AZIMUTH = 90   ..
* 201 *
* 202 *                  WINDOW HEIGHT = 4.0  WIDTH = 2.0  G-T = G_TYPE1
* 203 *                         MULTIPLIER = 5.0   ..
* 204 *
* 205 *                  WINDOW HEIGHT = 4.0  WIDTH = 5.0  G-T = G_TYPE1 ..
* 206 *
* 207 *                E-W      HEIGHT = 9.0  WIDTH = 78.0  CONS = WALL_CON
* 208 *                         AZIMUTH = 180   ..
* 209 *
* 210 *                E-W      HEIGHT = 9.0  WIDTH = 76.0  CONS = WALL_CON
```

```
* 211 *                        AZIMUTH = 270   ..
* 212 *
* 213 *                 DOOR   HEIGHT = 8.0  WIDTH = 12.0  CONS = DOOR_CON
* 214 *                        MULTIPLIER = 4.0   ..
* 215 *
* 216 *
* 217 * TOWER      =SPACE    AREA = 1728.0  VOLUME = 15552.0
* 218 *                      ZONE-TYPE = CONDITIONED  PEOPLE-SCHEDULE = FULL_ON
* 219 *                      NUMBER-OF-PEOPLE = 5.0  PEOPLE-HEAT-GAIN = 550.0
* 220 *                      LIGHTING-TYPE = REC-FLUOR-RV  LIGHTING-KW = 0.5
* 221 *                      LIGHTING-SCHEDULE = LIGHT_SCHD
* 222 *                      EQUIP-SCHEDULE = FULL_ON  EQUIPMENT-KW = 12.0
* 223 *                      INF-METHOD = AIR-CHANGE  AIR-CHANGES/HR = 0.5
* 224 *                      INF-SCHEDULE = FULL_ON   ..
* 225 *
* 226 *               U-W     HEIGHT = 42.0  WIDTH = 42.0  CONS = FLOORCON
* 227 *                        AZIMUTH = 270   ..
* 228 *
* 229 *                ROOF    HEIGHT = 42.0  WIDTH = 42.0  CONS = ROOF_CON
* 230 *                        AZIMUTH = 270  TILT = 0   ..
* 231 *
* 232 *                E-W     HEIGHT = 9.0  WIDTH = 20.0  CONS = WALL_CON
* 233 *                        AZIMUTH = 30   ..
* 234 *
* 235 *                  WINDOW HEIGHT = 5.0  WIDTH = 20.0  G-T = G_TYPE1 ..
* 236 *
* 237 *                E-W     HEIGHT = 9.0  WIDTH = 20.0  CONS = WALL_CON
* 238 *                        AZIMUTH = 90   ..
* 239 *
* 240 *                  WINDOW HEIGHT = 5.0  WIDTH = 20.0  G-T = G_TYPE1 ..
* 241 *
* 242 *                E-W     HEIGHT = 9.0  WIDTH = 20.0  CONS = WALL_CON
* 243 *                        AZIMUTH = 150   ..
* 244 *
* 245 *                  WINDOW HEIGHT = 5.0  WIDTH = 20.0  G-T = G_TYPE1 ..
* 246 *
* 247 *                E-W     HEIGHT = 9.0  WIDTH = 20.0  CONS = WALL_CON
* 248 *                        AZIMUTH = 210   ..
* 249 *
* 250 *                  WINDOW HEIGHT = 5.0  WIDTH = 20.0  G-T = G_TYPE1 ..
* 251 *
* 252 *                E-W     HEIGHT = 9.0  WIDTH = 20.0  CONS = WALL_CON
* 253 *                        AZIMUTH = 270   ..
* 254 *
* 255 *                  WINDOW HEIGHT = 5.0  WIDTH = 20.0  G-T = G_TYPE1 ..
* 256 *
* 257 *                E-W     HEIGHT = 9.0  WIDTH = 20.0  CONS = WALL_CON
* 258 *                        AZIMUTH = 330   ..
* 259 *
* 260 *                  WINDOW HEIGHT = 5.0  WIDTH = 20.0  G-T = G_TYPE1 ..
* 261 *
* 262 *
* 263 * 24HR_OPS_B =SPACE    AREA = 4000.0  VOLUME = 36000.0
* 264 *                      ZONE-TYPE = CONDITIONED  PEOPLE-SCHEDULE = PEOPLE_SCD
* 265 *                      NUMBER-OF-PEOPLE = 40.0  PEOPLE-HEAT-GAIN = 550.0
* 266 *                      EQUIP-SCHEDULE = FULL_ON  EQUIPMENT-KW = 15.0
* 267 *                      FLOOR-WEIGHT = 0.1  INF-METHOD = AIR-CHANGE
* 268 *                      AIR-CHANGES/HR = 0.5  INF-SCHEDULE = FULL_ON   ..
* 269 *
* 270 *                I-W     HEIGHT = 9.0  WIDTH = 145.0  CONS = AIRWALL
* 271 *                        NEXT-TO = 24HR_OPS_A   ..
* 272 *
* 273 *
* 274 * END  ..
* 275 * COMPUTE LOADS  ..
* 276 *
* 277 * INPUT SYSTEMS  ..
```

```
* 278 *
* 279 *
* 280 *                  $---------------------------------------$
* 281 *                  $ E Z - D O E   S Y S T E M S  I N P U T $
* 282 *                  $---------------------------------------$
* 283 *
* 284 *                     $ GENERAL PROJECT DATA
* 285 *
* 286 * TITLE  LINE-1 *     EMC      ENGINEERS      INC.     *
* 287 *        LINE-2 *EZDOE - ELITE SOFTWARE DEVELOPMENT INC*
* 288 *        LINE-3 *     DENVER,       CO       80227     *
* 289 *
* 290 *        LINE-4 *BUILDING 2065, AF OPS                  *
* 291 *        LINE-5 *MODEL WITH SET BACK AND DDC            * ..
* 292 * ABORT               ERRORS  ..
* 293 * DIAGNOSTIC          WARNINGS ..
* 294 * SYSTEMS-REPORT      SUMMARY=(SS-A,SS-C,SS-F,SS-H,SS-K,SS-O)  ..
* 295 *
* 296 *                     $ SCHEDULES
* 297 *
* 298 * FULL_ON_D  =DAY-SCHEDULE  (1,24) (1.) ..
* 299 * FULL_OFF_D =DAY-SCHEDULE  (1,24) (1.) ..
* 300 * HEAT_68_D  =DAY-SCHEDULE  (1,24) (68.) ..
* 301 * COOL_75_D  =DAY-SCHEDULE  (1,24) (75.) ..
* 302 * COOL_78_D  =DAY-SCHEDULE  (1,24) (78.) ..
* 303 * HT_AVAIL_D =DAY-SCHEDULE  (1,24) (1.) ..
* 304 * FAN_WSB_D  =DAY-SCHEDULE  (1,6) (0.)
* 305 *                           (7,16) (1.)
* 306 *                           (17,24) (0.) ..
* 307 * HT_W_SB_D  =DAY-SCHEDULE  (1,6) (50.)
* 308 *                           (7,16) (68.)
* 309 *                           (17,24) (50.) ..
* 310 * HEAT50_D   =DAY-SCHEDULE  (1,24) (50.) ..
* 311 * MOA.08_D   =DAY-SCHEDULE  (1,7) (0.)
* 312 *                           (8,16) (0.08)
* 313 *                           (17,24) (0.) ..
* 314 *
* 315 * FULL_ON_W  =WEEK-SCHEDULE  (ALL) FULL_ON_D  ..
* 316 *
* 317 * FULL_OFF_W =WEEK-SCHEDULE  (ALL) FULL_OFF_D  ..
* 318 *
* 319 * HEAT_68_W  =WEEK-SCHEDULE  (ALL) HEAT_68_D  ..
* 320 *
* 321 * COOL_75_W  =WEEK-SCHEDULE  (ALL) COOL_75_D  ..
* 322 *
* 323 * COOL_78_W  =WEEK-SCHEDULE  (ALL) COOL_78_D  ..
* 324 *
* 325 * HT_AVAIL_W =WEEK-SCHEDULE  (ALL) HT_AVAIL_D  ..
* 326 *
* 327 * FAN_WSB_W  =WEEK-SCHEDULE  (WD)  FAN_WSB_D
* 328 *                           (SAT) FULL_OFF_D
* 329 *                           (SUN) FULL_OFF_D
* 330 *                           (HOL) FAN_WSB_D ..
* 331 *
* 332 * HT68_WSB_W =WEEK-SCHEDULE  (WD)  HT_W_SB_D
* 333 *                           (SAT) HEAT50_D
* 334 *                           (SUN) HEAT50_D
* 335 *                           (HOL) HT_W_SB_D ..
* 336 *
* 337 * MOA.08_W   =WEEK-SCHEDULE  (WD)  MOA.08_D
* 338 *                           (SAT) FULL_OFF_D
* 339 *                           (SUN) FULL_OFF_D
* 340 *                           (HOL) MOA.08_D ..
* 341 *
* 342 *
* 343 * $ FULL_ON SCHEDULE
* 344 * FULL_ON    =SCHEDULE THRU DEC 31 FULL_ON_W  ..
* 345 *
* 346 * $ FULL OFF SCHEDULE
* 347 * FULL_OFF   =SCHEDULE THRU DEC 31 FULL_OFF_W  ..
* 348 *
* 349 * $ HEATING SCHEDULE
* 350 * HEAT_68    =SCHEDULE THRU DEC 31 HEAT_68_W  ..
* 351 *
* 352 * COOL_75_Y  =SCHEDULE THRU DEC 31 COOL_75_W  ..
* 353 *
* 354 * COOL_78_Y  =SCHEDULE THRU DEC 31 COOL_78_W  ..
* 355 *
* 356 * $ MONTHS HEAT IS AVAIL.
* 357 * HEAT_AVAIL =SCHEDULE THRU MAY 31 HT_AVAIL_W
* 358 *                      THRU SEP 15 FULL_OFF_W
* 359 *                      THRU DEC 31 HT_AVAIL_W  ..
* 360 *
* 361 * $ FAN SET BACK SCHEDULE
* 362 * FAN_W_SB   =SCHEDULE THRU DEC 31 FAN_WSB_W  ..
* 363 *
* 364 * $ HEATING SCHD W SET BACK
* 365 * HT68_WSB   =SCHEDULE THRU MAY 15 HT68_WSB_W
* 366 *                      THRU OCT  1 FULL_OFF_W
* 367 *                      THRU DEC 31 HT68_WSB_W  ..
* 368 *
* 369 * $ FORCED VENTILATION
* 370 * MOA.08_FV  =SCHEDULE THRU DEC 31 MOA.08_W  ..
* 371 *
* 372 *
* 373 *
* 374 *                     $ ZONE DESCRIPTION
* 375 *
* 376 * ADMIN      =ZONE    DESIGN-HEAT-T = 68.0  DESIGN-COOL-T = 75.0
* 377 *                     HEAT-TEMP-SCH = HT68_WSB  ZONE-TYPE = CONDITIONED
```

```
* 378 *                      THERMOSTAT-TYPE = PROPORTIONAL  THROTTLING-RANGE = 1.0
* 379 *                      BASEBOARD-CTRL = THERMOSTATIC
* 380 *                      BASEBOARD-RATING = -95079.  ASSIGNED-CFM = 5250.
* 381 *                      OUTSIDE-AIR-CFM = 420.  SIZING-OPTION = FROM-LOADS   ..
* 382 *
* 383 * 24HR_OPS_A =ZONE     DESIGN-HEAT-T = 68.0  DESIGN-COOL-T = 75.0
* 384 *                      HEAT-TEMP-SCH = HEAT_68  ZONE-TYPE = CONDITIONED
* 385 *                      THERMOSTAT-TYPE = PROPORTIONAL  THROTTLING-RANGE = 1.0
* 386 *                      BASEBOARD-CTRL = THERMOSTATIC
* 387 *                      BASEBOARD-RATING = -158366.  ASSIGNED-CFM = 9660.
* 388 *                      OUTSIDE-AIR-CFM = 4637.  SIZING-OPTION = FROM-LOADS   ..
* 389 *
* 390 * FIREHOUSE  =ZONE     DESIGN-HEAT-T = 68.0  DESIGN-COOL-T = 75.0
* 391 *                      HEAT-TEMP-SCH = HEAT_68  COOL-TEMP-SCH = COOL_75_Y
* 392 *                      ZONE-TYPE = CONDITIONED
* 393 *                      THERMOSTAT-TYPE = PROPORTIONAL  THROTTLING-RANGE = 1.0
* 394 *                      BASEBOARD-CTRL = THERMOSTATIC
* 395 *                      BASEBOARD-RATING = -117900.  ASSIGNED-CFM = 6840.
* 396 *                      OUTSIDE-AIR-CFM = 4172.  SIZING-OPTION = FROM-LOADS   ..
* 397 *
* 398 * TOWER      =ZONE     DESIGN-HEAT-T = 68.0  DESIGN-COOL-T = 78.0
* 399 *                      HEAT-TEMP-SCH = HEAT_68  COOL-TEMP-SCH = COOL_78_Y
* 400 *                      ZONE-TYPE = CONDITIONED
* 401 *                      THERMOSTAT-TYPE = PROPORTIONAL  THROTTLING-RANGE = 1.0
* 402 *                      BASEBOARD-CTRL = THERMOSTATIC
* 403 *                      BASEBOARD-RATING = -2119.  ASSIGNED-CFM = 2415.
* 404 *                      SIZING-OPTION = FROM-LOADS   ..
* 405 *
* 406 * 24HR_OPS_B =ZONE     DESIGN-HEAT-T = 68.0  DESIGN-COOL-T = 75.0
* 407 *                      COOL-TEMP-SCH = COOL_75_Y  ZONE-TYPE = CONDITIONED
* 408 *                      THERMOSTAT-TYPE = PROPORTIONAL  THROTTLING-RANGE = 1.0
* 409 *                      BASEBOARD-CTRL = THERMOSTATIC  ASSIGNED-CFM = 8200.
* 410 *                      SIZING-OPTION = FROM-LOADS   ..
* 411 *
* 412 *
* 413 *                      $ SYSTEM DESCRIPTION
* 414 *
* 415 * HV_3       =SYSTEM     SYSTEM-TYPE = HVSYS
* 416 *                      MAX-SUPPLY-T = 120.0  HEATING-SCHEDULE = HEAT_AVAIL
* 417 *                      MIN-HUMIDITY = 30.0  ECONO-LIMIT-T = 65.0
* 418 *                      ECONO-LOW-LIMIT = 55.0  HEAT-CONTROL = COLDEST
* 419 *                      SUPPLY-CFM = 5250.  RETURN-CFM = 4830.
* 420 *                      RATED-CFM = 5250.  MIN-OUTSIDE-AIR = 0.08
* 421 *                      FAN-SCHEDULE = FAN_W_SB  SUPPLY-DELTA-T = 2.4
* 422 *                      SUPPLY-KW = 0.00078  NIGHT-CYCLE-CTRL = CYCLE-ON-ANY
* 423 *                      NIGHT-VENT-DT = 0.0  HEATING-CAPACITY = -56900.
* 424 *                      FURNACE-AUX = 0.
* 425 *                      ZONE-NAMES = (ADMIN)  ..
* 426 *
* 427 * HV_1&2&MU1 =SYSTEM     SYSTEM-TYPE = HVSYS
* 428 *                      MAX-SUPPLY-T = 120.0  HEATING-SCHEDULE = HEAT_AVAIL
* 429 *                      MIN-HUMIDITY = 30.0  ECONO-LIMIT-T = 65.0
* 430 *                      ECONO-LOW-LIMIT = 55.0  HEAT-CONTROL = COLDEST
* 431 *                      SUPPLY-CFM = 9660.  RETURN-CFM = 5023.
* 432 *                      RATED-CFM = 9660.  MIN-OUTSIDE-AIR = 0.48
* 433 *                      SUPPLY-DELTA-T = 2.4  SUPPLY-KW = 0.00078
* 434 *                      NIGHT-CYCLE-CTRL = STAY-OFF  NIGHT-VENT-DT = 0.0
* 435 *                      HEATING-CAPACITY = -466800.  FURNACE-AUX = 0.
* 436 *                      ZONE-NAMES = (24HR_OPS_A)  ..
* 437 *
* 438 * HV_4&MU2   =SYSTEM     SYSTEM-TYPE = HVSYS
* 439 *                      MAX-SUPPLY-T = 120.0  HEATING-SCHEDULE = HEAT_AVAIL
* 440 *                      MIN-HUMIDITY = 30.0  ECONO-LIMIT-T = 65.0
* 441 *                      ECONO-LOW-LIMIT = 55.0  HEAT-CONTROL = COLDEST
* 442 *                      SUPPLY-CFM = 6840.  RETURN-CFM = 2668.
* 443 *                      RATED-CFM = 6840.  MIN-OUTSIDE-AIR = 0.61
* 444 *                      SUPPLY-DELTA-T = 2.4  SUPPLY-KW = 0.00078
* 445 *                      NIGHT-CYCLE-CTRL = STAY-OFF  NIGHT-VENT-DT = 0.0
* 446 *                      HEATING-CAPACITY = -360300.  FURNACE-AUX = 0.
* 447 *                      ZONE-NAMES = (FIREHOUSE)  ..
* 448 *
* 449 * AC1-7      =SYSTEM     SYSTEM-TYPE = PTAC
* 450 *                      MAX-SUPPLY-T = 75.0  MIN-SUPPLY-T = 50.0
* 451 *                      HEATING-SCHEDULE = FULL_OFF  SUPPLY-CFM = 8200.
* 452 *                      RATED-CFM = 8200.  FAN-CONTROL = CONSTANT-VOLUME
* 453 *                      SUPPLY-DELTA-T = 0.2  SUPPLY-KW = 0.00007
* 454 *                      NIGHT-CYCLE-CTRL = STAY-OFF  NIGHT-VENT-DT = 0.0
* 455 *                      COOLING-CAPACITY = 178000.  COOL-SH-CAP = 160500.
* 456 *                      COOL-FT-MIN = 0.  MIN-HP-T = 0.
* 457 *                      HP-SUPP-SOURCE = HOT-WATER  FURNACE-AUX = 0.
* 458 *                      ZONE-NAMES = (24HR_OPS_B)  ..
* 459 *
* 460 * AC9        =SYSTEM     SYSTEM-TYPE = PTAC
* 461 *                      MAX-SUPPLY-T = 75.0  MIN-SUPPLY-T = 50.0
* 462 *                      HEATING-SCHEDULE = FULL_OFF  SUPPLY-CFM = 2415.
* 463 *                      RATED-CFM = 2415.  FAN-CONTROL = CONSTANT-VOLUME
* 464 *                      SUPPLY-DELTA-T = 0.2  SUPPLY-KW = 0.00007
* 465 *                      NIGHT-CYCLE-CTRL = STAY-OFF  NIGHT-VENT-DT = 0.0
* 466 *                      COOLING-CAPACITY = 64300.  COOL-SH-CAP = 48900.
* 467 *                      COOL-FT-MIN = 0.  MIN-HP-T = 0.
* 468 *                      HP-SUPP-SOURCE = HOT-WATER  FURNACE-AUX = 0.
* 469 *                      ZONE-NAMES = (TOWER)  ..
* 470 *
* 471 * END  ..
* 472 * COMPUTE SYSTEMS  ..
* 473 *
* 474 * INPUT PLANT  ..
```

```
* 475 *
* 476 *
* 477 *                $-------------------------------------$
* 478 *                $ E Z - D O E   P L A N T S  I N P U T $
* 479 *                $-------------------------------------$
* 480 *
* 481 *                   $ GENERAL PROJECT DATA
* 482 *
* 483 * TITLE  LINE-1 *     EMC      ENGINEERS      INC.     *
* 484 *        LINE-2 *EZDOE - ELITE SOFTWARE DEVELOPMENT INC*
* 485 *        LINE-3 *     DENVER,       CO       80227     *
* 486 *
* 487 *        LINE-4 *BUILDING 2065, AF OPS                  *
* 488 *        LINE-5 *MODEL WITH SET BACK AND DDC            * ..
* 489 *
* 490 * ABORT              ERRORS  ..
* 491 * DIAGNOSTIC         WARNINGS ..
* 492 * PLANT-REPORT       SUMMARY=(PS-A,PS-B,BEPS)
* 493 *   ..
* 494 *
* 495 *                     $ SCHEDULES
* 496 *
* 497 * FULL_ON_D  =DAY-SCHEDULE  (1,24) (1.) ..
* 498 *
* 499 *
* 500 * FULL_ON_W  =WEEK-SCHEDULE  (ALL) FULL_ON_D  ..
* 501 *
* 502 *
* 503 * $ FULL ON SCHEDULE
* 504 * FULL_ON    =SCHEDULE THRU DEC 31 FULL_ON_W  ..
* 505 *
* 506 *
* 507 *
* 508 *                     $ EQUIPMENT DESCRIPTION
* 509 *
* 510 * B1         =PLANT-EQUIPMENT   TYPE = STM-BOILER
* 511 *                       SIZE = 2.  ..
* 512 *
* 513 * PLANT-PARAMETERS      BOILER-CONTROL = STANDBY  STM-BOILER-HIR = 1.25    ..
* 514 *
* 515 *
* 516 * ENERGY-RESOURCE       RESOURCE = ELECTRICITY  ..
* 517 * ENERGY-RESOURCE       RESOURCE = FUEL-OIL  ..
* 518 *
* 519 * ENERGY-STORAGE    HEAT-STORE-RATE = 2.65  HEAT-SUPPLY-RATE = 2.65
* 520 *                       HTANK-BASE-T = 195.0  HTANK-T-RANGE = 50.0
* 521 *                       HEAT-STORE-SCH = FULL_ON    ..
* 522 *
* 523 *
* 524 *
* 525 * END  ..
* 526 * COMPUTE PLANT ..
* 527 * STOP ..
```

ENERGY TYPE IN SITE MBTU-	ELECTRICITY	FUEL-OIL	
CATEGORY OF USE			
SPACE HEAT	208.36	4,707.61	0.00
SPACE COOL	133.11	0.00	0.00
HVAC AUX	459.80	0.00	0.00
DOM HOT WTR	0.00	0.00	0.00
AUX SOLAR	0.00	0.00	0.00
LIGHTS	103.24	0.00	0.00
VERT TRANS	0.00	0.00	0.00
MISC EQUIP	1,046.30	0.00	0.00
TOTAL	1,950.81	4,707.61	0.00

TOTAL SITE ENERGY 6658.57 MBTU 281.8 KBTU/SQFT-YR GROSS-AREA 281.8 KBTU/SQFT-YR NET-AREA
TOTAL SOURCE ENERGY 10566.29 MBTU 447.2 KBTU/SQFT-YR GROSS-AREA 447.2 KBTU/SQFT-YR NET-AREA

PERCENT OF HOURS ANY SYSTEM ZONE OUTSIDE OF THROTTLING RANGE = 7.3
PERCENT OF HOURS ANY PLANT LOAD NOT SATISFIED = 0.0

NOTE ELECTRICITY AND/OR FUEL USED TO GENERATE ELECTRICITY IS APPORTIONED BASED ON THE YEARLY DEMAND. ALL OTHER ENERGY TYPES ARE APPORTIONED HOURLY.

MO	UTILITY-	ELECTRICITY	FUEL-OIL
	TOTAL(MBTU)	174.314	950.134
JAN	PEAK(KBTU)	271.716	1916.483
	DY/HR	6/13	5/12
	TOTAL(MBTU)	154.251	746.075
FEB	PEAK(KBTU)	260.700	1610.066
	DY/HR	18/13	14/ 7
	TOTAL(MBTU)	170.203	726.479
MAR	PEAK(KBTU)	262.980	1707.180
	DY/HR	11/13	9/ 7
	TOTAL(MBTU)	158.918	381.120
APR	PEAK(KBTU)	259.170	1217.338
	DY/HR	11/11	1/ 7
	TOTAL(MBTU)	158.778	192.764
MAY	PEAK(KBTU)	269.223	896.030
	DY/HR	9/13	2/ 7
	TOTAL(MBTU)	156.595	43.538
JUN	PEAK(KBTU)	295.166	470.134
	DY/HR	17/13	8/ 6
	TOTAL(MBTU)	172.001	28.291
JUL	PEAK(KBTU)	315.677	376.789
	DY/HR	18/13	25/ 5
	TOTAL(MBTU)	164.684	37.815
AUG	PEAK(KBTU)	298.101	901.061
	DY/HR	9/14	6/24
	TOTAL(MBTU)	155.159	98.509
SEP	PEAK(KBTU)	311.541	771.169
	DY/HR	2/14	24/ 6
	TOTAL(MBTU)	157.992	252.564
OCT	PEAK(KBTU)	258.563	1030.247
	DY/HR	26/13	28/ 7
	TOTAL(MBTU)	159.331	483.114
NOV	PEAK(KBTU)	264.343	1379.622
	DY/HR	29/13	29/ 7
	TOTAL(MBTU)	168.704	767.234
DEC	PEAK(KBTU)	262.438	1653.525
	DY/HR	13/13	28/ 7
	ONE YEAR	1950.930	4707.639
	USE/PEAK	315.677	1916.483

COMPUTER SIMULATIONS

BUILDING 4230

COMPUTER SIMULATIONS
BUILDING 4230

BASE RUN

LDL PROCESSOR INPUT DATA

3/18/1995 16:19:22 LDL RUN 1

```
*  3 *
*  4 *
*  5 *            $-----------------------------------$
*  6 *            $EZ-DOE LOADS INPUT$
*  7 *            $-----------------------------------$
*  8 *
*  9 *              $ GENERAL PROJECT DATA
* 10 *
* 11 * TITLE LINE-1 *   EMC    ENGINEERS    INC.   *
* 12 *      LINE-2 *EZDOE - ELITE SOFTWARE DEVELOPMENT INC*
* 13 *      LINE-3 *   DENVER,     CO     80227   *
* 14 *
* 15 *      LINE-4 *BUILDING 4230 BASE RUN              * ..
* 16 *
* 17 * ABORT          ERRORS ..
* 18 * DIAGNOSTIC      WARNINGS ..
* 19 * LOADS-REPORT     VERIFICATION=(LV-A,LV-B,LV-C)
* 20 *               SUMMARY=(LS-A,LS-B,LS-C,LS-D,LS-E,LS-F,LS-K) ..
* 21 * BUILDING-LOCATION  LATITUDE = 44.0
* 22 *               ALTITUDE = 655.
* 23 *               AZIMUTH = -130.
* 24 *               TIME-ZONE =  5
* 25 *               GROSS-AREA =  10220
* 26 *               HOLIDAY = NO
* 27 *               SHIELDING-COEF = 0.29
* 28 *               X-REF = 0.0
* 29 *               Y-REF = 0.0 ..
* 30 * RUN-PERIOD      JAN 1 1994 THRU DEC 31 1994 ..
* 31 *
* 32 *
* 33 *              $ SCHEDULES
* 34 *
* 35 * LIGHTS    =DAY-SCHEDULE  (1,2) (1.)
* 36 *                  (3,11) (0.5)
* 37 *                  (12,13) (0.6)
* 38 *                  (14,24) (1.) ..
* 39 *
* 40 * OCCUP     =DAY-SCHEDULE  (1,5) (0.)
* 41 *                  (6,10) (0.1,0.5,0.9,0.8,0.5)
* 42 *                  (11,14) (0.7,0.9,0.8,0.4)
* 43 *                  (15,16) (0.3)
* 44 *                  (17,18) (0.5,0.9)
* 45 *                  (19,20) (0.7,0.2)
```

```
* 46 *                    (21,24) (0.) ..
* 47 *
* 48 * APPLIANCE  =DAY-SCHEDULE  (1) (0.)
* 49 *                    (2,3) (0.7)
* 50 *                    (4,12) (0.02)
* 51 *                    (13,15) (0.6)
* 52 *                    (16,18) (0.02)
* 53 *                    (19,20) (0.7)
* 54 *                    (21,24) (0.8) ..
* 55 *
* 56 * FULL_ON_D  =DAY-SCHEDULE  (1,24) (1.) ..
* 57 *
* 58 * FULL_OFFD  =DAY-SCHEDULE  (1,24) (0.) ..
* 59 *
* 60 * appliance  =DAY-SCHEDULE  (1,6) (0.1)
* 61 *                    (7,11) (0.2)
* 62 *                    (12,14) (0.3)
* 63 *                    (15,20) (0.2)
* 64 *                    (21,24) (0.1) ..
* 65 *
* 66 * lights    =DAY-SCHEDULE  (1,5) (0.2)
* 67 *                    (6) (0.5)
* 68 *                    (7,17) (0.9)
* 69 *                    (18) (0.8)
* 70 *                    (19,20) (0.7)
* 71 *                    (21,24) (0.2) ..
* 72 *
* 73 * W&D_ON_D   =DAY-SCHEDULE  (1,2) (0.2,0.1)
* 74 *                    (3,4) (0.)
* 75 *                    (5) (0.1)
* 76 *                    (6,9) (0.3)
* 77 *                    (10,11) (0.2)
* 78 *                    (12,15) (0.3)
* 79 *                    (16) (0.4)
* 80 *                    (17,18) (0.6)
* 81 *                    (19,20) (0.8,1.)
* 82 *                    (21,22) (0.8)
* 83 *                    (23,24) (0.6,0.4) ..
* 84 *
* 85 *
* 86 * PEOPLE    =WEEK-SCHEDULE  (ALL) OCCUP  ..
* 87 *
* 88 * LIGHTS_WK  =WEEK-SCHEDULE  (ALL) lights  ..
* 89 *
* 90 * APPLI_WK   =WEEK-SCHEDULE  (ALL) appliance  ..
* 91 *
* 92 * CND_WK    =WEEK-SCHEDULE  (ALL) FULL_ON_D  ..
* 93 *
* 94 * FULL_OFFW  =WEEK-SCHEDULE  (ALL) FULL_OFFD  ..
* 95 *
```

```
* 96 * W&D_ON_W  =WEEK-SCHEDULE  (ALL) W&D_ON_D  ..
* 97 *
* 98 * FULL_ON_W =WEEK-SCHEDULE  (ALL) FULL_ON_D  ..
* 99 *
* 100 *
* 101 * $ FULL_ON SCHEDULE
* 102 * FULL_ON   =SCHEDULE THRU DEC 31 FULL_ON_W  ..
* 103 *
* 104 * $ LOADS OCCUPANCY SCHED
* 105 * OCCUPANCY  =SCHEDULE THRU DEC 31 PEOPLE  ..
* 106 *
* 107 * $ LIGHTING SCHEDULE
* 108 * LIGHTS_0N  =SCHEDULE THRU DEC 31 LIGHTS_WK  ..
* 109 *
* 110 * $ APPLIANCE SCHEDULE
* 111 * APPLI_ON  =SCHEDULE THRU DEC 31 APPLI_WK  ..
* 112 *
* 113 * $ COND VENTIL SCHED
* 114 * CND_SCHED  =SCHEDULE THRU MAR  1 FULL_OFFW
* 115 *                THRU NOV 30 CND_WK
* 116 *                THRU DEC 31 FULL_OFFW  ..
* 117 *
* 118 * FULL_0FF  =SCHEDULE THRU DEC 31 FULL_OFFW  ..
* 119 *
* 120 * W&D_ON    =SCHEDULE THRU DEC 31 W&D_ON_W  ..
* 121 *
* 122 *
* 123 *
* 124 *               $ CONSTRUCTION TYPES
* 125 *
* 126 *
* 127 *
* 128 *
* 129 *  $ DOOR CONSTRUCTION
* 130 * DOORCON  =CONSTRUCTION  U-VALUE =  0.400  ..
* 131 * FLOOR   =CONSTRUCTION  U-VALUE =  0.100
* 132 *                  ABSORPTANCE = 1.000
* 133 *                  ROUGHNESS = 1  ..
* 134 * ROOFCON  =CONSTRUCTION  U-VALUE =  0.050  ..
* 135 * EXWALL  =CONSTRUCTION  U-VALUE =  0.200
* 136 *                  ABSORPTANCE = 0.750  ..
* 137 * INWALL  =CONSTRUCTION  U-VALUE =  0.500  ..
* 138 *
* 139 * GTYPE_1  =GLASS-TYPE    SHADING-COEF = 0.400
* 140 *                  PANES = 1
* 141 *                  GLASS-CONDUCTANCE =  1.130  ..
* 142 * GTYPE_2  =GLASS-TYPE    SHADING-COEF = 0.300
* 143 *                  PANES = 1
* 144 *                  GLASS-CONDUCTANCE =  0.790  ..
* 145 * GTYPE_3  =GLASS-TYPE    SHADING-COEF = 0.400
```

```
* 146 *                PANES = 1
* 147 *                GLASS-CONDUCTANCE =  0.360  ..
* 148 *
* 149 *
* 150 *
* 151 *
* 152 *              $ SPACE DESCRIPTION
* 153 *
* 154 * LAUNDRY   =SPACE   AREA = 3060.0  VOLUME = 27540.0
* 155 *              AZIMUTH = 180  ZONE-TYPE = CONDITIONED
* 156 *              PEOPLE-SCHEDULE = OCCUPANCY  NUMBER-OF-PEOPLE = 15.0
* 157 *              PEOPLE-HEAT-GAIN = 550.0  LIGHTING-KW = 5.0
* 158 *              LIGHTING-SCHEDULE = FULL_ON  EQUIP-SCHEDULE = W&D_ON
* 159 *              EQUIPMENT-KW = 44.1  EQUIP-SENSIBLE = 0.05
* 160 *              SOURCE-SCHEDULE = FULL_ON  SOURCE-TYPE = GAS
* 161 *              SOURCE-BTU/HR = 263874.0  SOURCE-SENSIBLE = 0.01
* 162 *              INF-METHOD = AIR-CHANGE  AIR-CHANGES/HR = 0.5
* 163 *              INF-SCHEDULE = FULL_ON  ..
* 164 *
* 165 *         I-W     HEIGHT = 9.0  WIDTH = 34.0  CONS = INWALL
* 166 *                 AZIMUTH = 180  NEXT-TO = RETAIL  ..
* 167 *
* 168 *         E-W     HEIGHT = 9.0  WIDTH = 56.0  CONS = EXWALL
* 169 *                 AZIMUTH = -90  ..
* 170 *
* 171 *          DOOR   HEIGHT = 9.0  WIDTH = 3.0  CONS = DOORCON ..
* 172 *
* 173 *          WINDOW HEIGHT = 5.0  WIDTH = 4.0  G-T = GTYPE_1
* 174 *                 MULTIPLIER = 8.0  ..
* 175 *
* 176 *         E-W     HEIGHT = 9.0  WIDTH = 34.0  CONS = EXWALL
* 177 *                 AZIMUTH = -180  ..
* 178 *
* 179 *          DOOR   HEIGHT = 9.0  WIDTH = 5.0  CONS = DOORCON ..
* 180 *
* 181 *         I-W     HEIGHT = 9.0  WIDTH = 56.0  CONS = INWALL
* 182 *                 AZIMUTH = 90  NEXT-TO = RETAIL  ..
* 183 *
* 184 *         ROOF    HEIGHT = 34.0  WIDTH = 56.0  CONS = ROOFCON
* 185 *                 AZIMUTH = 180  TILT = 0  ..
* 186 *
* 187 *         U-W     HEIGHT = 34.0  WIDTH = 56.0  CONS = FLOOR
* 188 *                 AZIMUTH = 180  ..
* 189 *
* 190 *
* 191 * RETAIL    =SPACE   AREA = 7160.0  VOLUME = 64440.0
* 192 *              AZIMUTH = 180  ZONE-TYPE = CONDITIONED
* 193 *              PEOPLE-SCHEDULE = OCCUPANCY  NUMBER-OF-PEOPLE = 10.0
* 194 *              PEOPLE-HEAT-GAIN = 550.0  LIGHTING-KW = 12.0
* 195 *              LIGHTING-SCHEDULE = FULL_ON
```

```
* 196 *            EQUIP-SCHEDULE = APPLI_ON  EQUIPMENT-KW = 128.0
* 197 *            EQUIP-SENSIBLE = 0.1  INF-METHOD = AIR-CHANGE
* 198 *            AIR-CHANGES/HR = 1.0  INF-SCHEDULE = FULL_ON  ..
* 199 *
* 200 *          E-W     HEIGHT = 9.0  WIDTH = 118.0  CONS = EXWALL
* 201 *               AZIMUTH = 180  ..
* 202 *
* 203 *           WINDOW HEIGHT = 5.0  WIDTH = 4.0  G-T = GTYPE_1
* 204 *               MULTIPLIER = 8.0  ..
* 205 *
* 206 *           DOOR   HEIGHT = 8.0  WIDTH = 3.0  CONS = DOORCON
* 207 *               MULTIPLIER = 2.0  ..
* 208 *
* 209 *           DOOR   HEIGHT = 8.0  WIDTH = 3.0  CONS = DOORCON
* 210 *               MULTIPLIER = 2.0  ..
* 211 *
* 212 *          E-W     HEIGHT = 9.0  WIDTH = 23.0  CONS = EXWALL
* 213 *               AZIMUTH = -90  ..
* 214 *
* 215 *           WINDOW HEIGHT = 5.0  WIDTH = 4.0  G-T = GTYPE_1 ..
* 216 *
* 217 *           DOOR   HEIGHT = 8.0  WIDTH = 3.0  CONS = DOORCON ..
* 218 *
* 219 *          I-W     HEIGHT = 9.0  WIDTH = 34.0  CONS = INWALL
* 220 *               AZIMUTH = 180  NEXT-TO = LAUNDRY  ..
* 221 *
* 222 *          I-W     HEIGHT = 9.0  WIDTH = 56.0  CONS = INWALL
* 223 *               AZIMUTH = 90  NEXT-TO = LAUNDRY  ..
* 224 *
* 225 *          E-W     HEIGHT = 9.0  WIDTH = 84.0  CONS = EXWALL
* 226 *               AZIMUTH = 180  ..
* 227 *
* 228 *           DOOR   HEIGHT = 8.0  WIDTH = 3.0  CONS = DOORCON
* 229 *               MULTIPLIER = 4.0  ..
* 230 *
* 231 *           DOOR   HEIGHT = 8.0  WIDTH = 3.0  CONS = DOORCON
* 232 *               MULTIPLIER = 4.0  ..
* 233 *
* 234 *           DOOR   HEIGHT = 8.0  WIDTH = 8.0  CONS = DOORCON ..
* 235 *
* 236 *           DOOR   HEIGHT = 8.0  WIDTH = 8.0  CONS = DOORCON ..
* 237 *
* 238 *          E-W     HEIGHT = 9.0  WIDTH = 79.0  CONS = EXWALL
* 239 *               AZIMUTH = 90  ..
* 240 *
* 241 *           DOOR   HEIGHT = 8.0  WIDTH = 3.0  CONS = DOORCON ..
* 242 *
* 243 *           DOOR   HEIGHT = 8.0  WIDTH = 3.0  CONS = DOORCON ..
* 244 *
* 245 *          ROOF    HEIGHT = 79.0  WIDTH = 101.0  CONS = ROOFCON
```

```
* 246 *                AZIMUTH = 180  TILT = 0  ..
* 247 *
* 248 *          U-W    HEIGHT = 79.0  WIDTH = 101.0  CONS = FLOOR
* 249 *                 AZIMUTH = 180  ..
* 250 *
* 251 *
* 252 * END ..
* 253 * COMPUTE LOADS ..
* 254 *
* 255 * INPUT SYSTEMS ..
```

SDL PROCESSOR INPUT DATA

3/18/1995 16:19:22 SDL RUN 1

```
* 256 *
* 257 *
* 258 *            $---------------------------------------$
* 259 *            $EZ-DOE SYSTEMS INPUT$
* 260 *            $---------------------------------------$
* 261 *
* 262 *              $ GENERAL PROJECT DATA
* 263 *
* 264 * TITLE LINE-1 *   EMC    ENGINEERS    INC.   *
* 265 *      LINE-2 *EZDOE - ELITE SOFTWARE DEVELOPMENT INC*
* 266 *      LINE-3 *   DENVER,     CO     80227   *
* 267 *
* 268 *      LINE-4 *BUILDING 4230 BASE RUN              * ..
* 269 * ABORT          ERRORS ..
* 270 * DIAGNOSTIC      WARNINGS ..
* 271 * SYSTEMS-REPORT   VERIFICATION=(SV-A,SV-B)
* 272 *               SUMMARY=(SS-A,SS-B,SS-C,SS-D,SS-E,SS-F,SS-G,
* 273 *                    SS-H,SS-I,SS-J,SS-K,SS-L,SS-M,SS-N,
* 274 *                    SS-O) ..
* 275 *
* 276 *              $ SCHEDULES
* 277 *
* 278 * D_FULL    =DAY-SCHEDULE  (1,24) (1.) ..
* 279 * D_OFF     =DAY-SCHEDULE  (1,24) (0.) ..
* 280 * HEAT_68_D =DAY-SCHEDULE  (1,24) (73.) ..
* 281 * COOL_75_D =DAY-SCHEDULE  (1,24) (75.) ..
* 282 *
* 283 * W_FULL    =WEEK-SCHEDULE  (ALL) D_FULL ..
* 284 *
* 285 * W_OFF     =WEEK-SCHEDULE  (ALL) D_OFF ..
* 286 *
* 287 * HEAT_68_W =WEEK-SCHEDULE  (ALL) HEAT_68_D ..
```

```
* 288 *
* 289 * COOL_75_W  =WEEK-SCHEDULE  (ALL) COOL_75_D  ..
* 290 *
* 291 *
* 292 * FULL_ON    =SCHEDULE THRU DEC 31 W_FULL  ..
* 293 *
* 294 * FULL_OFF   =SCHEDULE THRU DEC 31 W_OFF  ..
* 295 *
* 296 * HEAT_68    =SCHEDULE THRU DEC 31 HEAT_68_W  ..
* 297 *
* 298 * COOL_75    =SCHEDULE THRU DEC 31 COOL_75_W  ..
* 299 *
* 300 *
* 301 *
* 302 *               $ ZONE DESCRIPTION
* 303 *
* 304 * LAUNDRY    =ZONE    DESIGN-HEAT-T = 68.0  DESIGN-COOL-T = 75.0
* 305 *               HEAT-TEMP-SCH = HEAT_68  COOL-TEMP-SCH = COOL_75
* 306 *               ZONE-TYPE = CONDITIONED
* 307 *               THERMOSTAT-TYPE = PROPORTIONAL  THROTTLING-RANGE = 1.0
* 308 *               ASSIGNED-CFM = 3620.  OUTSIDE-AIR-CFM = 100.
* 309 *               SIZING-OPTION = FROM-LOADS  ..
* 310 *
* 311 * RETAIL    =ZONE    DESIGN-HEAT-T = 68.0  DESIGN-COOL-T = 75.0
* 312 *               HEAT-TEMP-SCH = HEAT_68  COOL-TEMP-SCH = COOL_75
* 313 *               ZONE-TYPE = CONDITIONED
* 314 *               THERMOSTAT-TYPE = PROPORTIONAL  THROTTLING-RANGE = 1.0
* 315 *               ASSIGNED-CFM = 5755.  OUTSIDE-AIR-CFM = 800.
* 316 *               SIZING-OPTION = FROM-LOADS  MIN-CFM-RATIO = 0.34  ..
* 317 *
* 318 *
* 319 *               $ SYSTEM DESCRIPTION
* 320 *
* 321 * AH-1      =SYSTEM    SYSTEM-TYPE = SZRH
* 322 *                 MAX-SUPPLY-T = 120.0  MIN-SUPPLY-T = 50.0
* 323 *                 MIN-HUMIDITY = 30.0  ECONO-LIMIT-T = 65.0
* 324 *                 ECONO-LOW-LIMIT = 55.0  OA-CONTROL = FIXED
* 325 *                 SUPPLY-CFM = 2290.  RETURN-CFM = 1690.
* 326 *                 RATED-CFM = 2290.  MIN-OUTSIDE-AIR = 0.35
* 327 *                 SUPPLY-STATIC = 3.0  SUPPLY-EFF = 0.88
* 328 *                 NIGHT-CYCLE-CTRL = STAY-OFF  NIGHT-VENT-DT = 0.0
* 329 *                 MIN-CFM-RATIO = 1.0  COOLING-CAPACITY = 231000.
* 330 *                 HEATING-CAPACITY = -367700.  FURNACE-AUX = 0.
* 331 *                 PREHEAT-SOURCE = HOT-WATER
* 332 *                 ZONE-NAMES = (RETAIL)  ..
* 333 *
* 334 * AH-2      =SYSTEM    SYSTEM-TYPE = SZRH
* 335 *                 MAX-SUPPLY-T = 120.0  MIN-SUPPLY-T = 50.0
* 336 *                 MIN-HUMIDITY = 30.0  ECONO-LIMIT-T = 65.0
* 337 *                 ECONO-LOW-LIMIT = 55.0  OA-CONTROL = FIXED
```

```
* 338 *                SUPPLY-CFM = 3620.  RETURN-CFM = 3520.
* 339 *                RATED-CFM = 3620.  MIN-OUTSIDE-AIR = 0.33
* 340 *                SUPPLY-STATIC = 3.0  SUPPLY-EFF = 0.88
* 341 *                NIGHT-CYCLE-CTRL = STAY-OFF  NIGHT-VENT-DT = 0.0
* 342 *                MIN-CFM-RATIO = 1.0  COOLING-CAPACITY = 114000.
* 343 *                HEATING-CAPACITY = -160000.  FURNACE-AUX = 0.
* 344 *                PREHEAT-SOURCE = HOT-WATER
* 345 *                ZONE-NAMES = (LAUNDRY) ..
* 346 *
* 347 * END ..
* 348 * COMPUTE SYSTEMS ..
* 349 *
* 350 * INPUT PLANT ..
```

P D L P R O C E S S O R I N P U T D A T A

3/18/1995 16:19:22 PDL RUN 1

```
* 351 *
* 352 *
* 353 *             $-------------------------------------$
* 354 *             $ E Z - D O E  P L A N T S  I N P U T $
* 355 *             $-------------------------------------$
* 356 *
* 357 *               $ GENERAL PROJECT DATA
* 358 *
* 359 * TITLE  LINE-1 *    EMC     ENGINEERS     INC.    *
* 360 *       LINE-2 *EZDOE - ELITE SOFTWARE DEVELOPMENT INC*
* 361 *       LINE-3 *    DENVER,      CO      80227    *
* 362 *
* 363 *       LINE-4 *BUILDING 4230 BASE RUN              * ..
* 364 *
* 365 * ABORT           ERRORS ..
* 366 * DIAGNOSTIC       WARNINGS ..
* 367 * PLANT-REPORT      VERIFICATION=(PV-A)
* 368 *                SUMMARY=(PS-A,PS-B,PS-D,PS-H,PS-I,BEPS) ..
* 369 *
* 370 *                $ SCHEDULES
* 371 *
* 372 * DAY_ON    =DAY-SCHEDULE  (1,7) (0.)
* 373 *                    (8,18) (1.)
* 374 *                    (19,24) (0.) ..
* 375 *
* 376 *
* 377 * FULL_0N   =WEEK-SCHEDULE  (ALL) DAY_ON ..
* 378 *
* 379 *
```

```
* 380 * $ heating plant schedule
* 381 * heating   =SCHEDULE THRU DEC 31 FULL_ON ..
* 382 *
* 383 *
* 384 *
* 385 *              $ EQUIPMENT DESCRIPTION
* 386 *
* 387 * BOILER1   =PLANT-EQUIPMENT   TYPE = HW-BOILER
* 388 *              SIZE = 0.4 ..
* 389 *
* 390 * COND      =PLANT-EQUIPMENT   TYPE = HERM-REC-CHLR
* 391 *              SIZE = 0.2  INSTALLED-NUMBER = 2
* 392 *              MAX-NUMBER-AVAIL = 2 ..
* 393 *
* 394 * PLANT-PARAMETERS     BOILER-FUEL = NATURAL-GAS  MAKEUP-WTR-T = 50.
* 395 *              STM-BOILER-HIR = 0.76  CHILLER-CONTROL = STANDBY
* 396 *              OPEN-REC-COND-TYPE = AIR  HERM-REC-COND-TYPE = AIR
* 397 *              COMP-TO-TWR-WTR = 2.77  CCIRC-HEAD = 100.0
* 398 *              HCIRC-HEAD = 40.0   ..
* 399 *
* 400 *
* 401 * PART-LOAD-RATIO  TYPE = HW-BOILER
* 402 *           MIN-RATIO      = 0.2500  MAX-RATIO      = 1.0000
* 403 *           OPERATING-RATIO  =  1.0000  ELEC-INPUT-RATIO =  0.0220 ..
* 404 *
* 405 * ENERGY-RESOURCE      RESOURCE = ELECTRICITY ..
* 406 * ENERGY-RESOURCE      RESOURCE = NATURAL-GAS ..
* 407 *
* 408 * ENERGY-STORAGE    HEAT-STORE-RATE = 1.51  HEAT-SUPPLY-RATE = 1.51
* 409 *              HTANK-BASE-T = 144.0  HTANK-T-RANGE = 15.6
* 410 *              HEAT-STORE-SCH = heating   ..
* 411 *
* 412 *
* 413 *
* 414 * END ..
* 415 * COMPUTE PLANT ..
* 416 * STOP ..
```

EMC ENGINEERS INC. EZDOE - ELITE SOFTWARE DEVELOPMENT INC DOE-2.1D 3/18/1995 16:19:22 PDL RUN 1
DENVER, CO 80227 BUILDING 4230 BASE RUN
REPORT- BEPS ESTIMATED BUILDING ENERGY PERFORMANCE WEATHER FILE- MASSENA, NY

ENERGY TYPE IN SITE MBTU-	ELECTRICITY	NATURAL-GAS
CATEGORY OF USE		
SPACE HEAT	40.21	1077.67
SPACE COOL	87.96	0.00
HVAC AUX	114.70	0.00
DOM HOT WTR	0.00	0.00
AUX SOLAR	0.00	0.00
LIGHTS	508.23	0.00
VERT TRANS	0.00	0.00
MISC EQUIP	1159.21	2311.82
TOTAL	1910.31	3389.49

TOTAL SITE ENERGY 5299.52 MBTU 518.5 KBTU/SQFT-YR GROSS-AREA 518.5 KBTU/SQFT-YR NET-AREA
TOTAL SOURCE ENERGY 9125.90 MBTU 892.9 KBTU/SQFT-YR GROSS-AREA 892.9 KBTU/SQFT-YR NET-AREA

PERCENT OF HOURS ANY SYSTEM ZONE OUTSIDE OF THROTTLING RANGE = 0.5
PERCENT OF HOURS ANY PLANT LOAD NOT SATISFIED = 0.7

NOTE ELECTRICITY AND/OR FUEL USED TO GENERATE ELECTRICITY IS APPORTIONED BASED ON THE YEARLY DEMAND. ALL OTHER ENERGY TYPES ARE APPORTIONED HOURLY.

MO	UTILITY- ELECTRICITY		NATURAL-GAS
JAN	TOTAL(MBTU)	160.096	444.928
	PEAK(KBTU)	320.797	763.874
	DY/HR	31/20	24/ 7
FEB	TOTAL(MBTU)	144.588	350.322
	PEAK(KBTU)	320.797	718.212
	DY/HR	28/20	4/10
MAR	TOTAL(MBTU)	159.959	372.534
	PEAK(KBTU)	320.797	687.692
	DY/HR	31/20	26/10
APR	TOTAL(MBTU)	154.081	281.694
	PEAK(KBTU)	321.108	564.793
	DY/HR	30/20	1/ 5
MAY	TOTAL(MBTU)	160.197	242.567
	PEAK(KBTU)	340.494	541.491
	DY/HR	31/20	3/ 2
JUN	TOTAL(MBTU)	159.957	194.96
	PEAK(KBTU)	356.984	347.767
	DY/HR	28/20	7/ 4
JUL	TOTAL(MBTU)	171.81	198.131
	PEAK(KBTU)	363.045	325.904
	DY/HR	18/20	25/ 5
AUG	TOTAL(MBTU)	167.894	198.243
	PEAK(KBTU)	354.955	328.401
	DY/HR	9/20	25/ 6
SEP	TOTAL(MBTU)	159.176	204.604
	PEAK(KBTU)	357.724	397.936
	DY/HR	4/20	23/ 4
OCT	TOTAL(MBTU)	158.987	245.38
	PEAK(KBTU)	323.825	542.948
	DY/HR	17/20	25/ 5
NOV	TOTAL(MBTU)	153.784	290.321
	PEAK(KBTU)	320.797	605.86
	DY/HR	30/20	26/16

DEC	TOTAL(MBTU)	159.793	365.514
	PEAK(KBTU)	320.797	719.331
	DY/HR	31/20	3/ 4
	ONE YEAR	1910.323	3389.199
	USE/PEAK	363.045	763.874

COMPUTER SIMULATIONS
BUILDING 4230

RUN 2 - ECONOMIZER

```
INPUT LOADS  ..

                $-----------------------------------$
                $ E Z - D O E   L O A D S  I N P U T $
                $-----------------------------------$

                   $ GENERAL PROJECT DATA

TITLE  LINE-1 *     EMC      ENGINEERS      INC.     *
       LINE-2 *EZDOE - ELITE SOFTWARE DEVELOPMENT INC*
       LINE-3 *     DENVER,       CO       80227     *

       LINE-4 *BUILDING 4230 (24HR OP SO NO SET BACK)  *
       LINE-5 *MODEL WITH ECONOMIZER                   * ..

ABORT              ERRORS  ..
DIAGNOSTIC         WARNINGS ..
LOADS-REPORT       VERIFICATION=(LV-A,LV-B,LV-C)
                   SUMMARY=(LS-A,LS-B,LS-C,LS-D,LS-E,LS-F,LS-K)  ..
BUILDING-LOCATION  LATITUDE = 44.0
                   ALTITUDE = 655.
                   AZIMUTH = -130.
                   TIME-ZONE =  5
                   GROSS-AREA =  10220
                   HOLIDAY = NO
                   SHIELDING-COEF = 0.29
                   X-REF = 0.0
                   Y-REF = 0.0  ..
RUN-PERIOD         JAN 1 1994 THRU DEC 31 1994  ..


                   $ SCHEDULES

LIGHTS     =DAY-SCHEDULE  (1,2) (1.)
                          (3,11) (0.5)
                          (12,13) (0.6)
                          (14,24) (1.) ..

OCCUP      =DAY-SCHEDULE  (1,5) (0.)
                          (6,10) (0.1,0.5,0.9,0.8,0.5)
                          (11,14) (0.7,0.9,0.8,0.4)
                          (15,16) (0.3)
                          (17,18) (0.5,0.9)
                          (19,20) (0.7,0.2)
                          (21,24) (0.) ..

APPLIANCE  =DAY-SCHEDULE  (1) (0.)
                          (2,3) (0.7)
                          (4,12) (0.02)
                          (13,15) (0.6)
                          (16,18) (0.02)
                          (19,20) (0.7)
                          (21,24) (0.8) ..

FULL_ON_D  =DAY-SCHEDULE  (1,24) (1.) ..

FULL_OFFD  =DAY-SCHEDULE  (1,24) (0.) ..

appliance  =DAY-SCHEDULE  (1,6) (0.1)
                          (7,11) (0.2)
                          (12,14) (0.3)
                          (15,20) (0.2)
                          (21,24) (0.1) ..

lights     =DAY-SCHEDULE  (1,5) (0.2)
                          (6) (0.5)
                          (7,17) (0.9)
                          (18) (0.8)
                          (19,20) (0.7)
                          (21,24) (0.2) ..

W&D_ON_D   =DAY-SCHEDULE  (1,2) (0.2,0.1)
                          (3,4) (0.)
                          (5) (0.1)
                          (6,9) (0.3)
                          (10,11) (0.2)
                          (12,15) (0.3)
                          (16) (0.4)
                          (17,18) (0.6)
                          (19,20) (0.8,1.)
                          (21,22) (0.8)
                          (23,24) (0.6,0.4) ..


PEOPLE     =WEEK-SCHEDULE  (ALL) OCCUP  ..

LIGHTS_WK  =WEEK-SCHEDULE  (ALL) lights  ..

APPLI_WK   =WEEK-SCHEDULE  (ALL) appliance  ..

CND_WK     =WEEK-SCHEDULE  (ALL) FULL_ON_D  ..

FULL_OFFW  =WEEK-SCHEDULE  (ALL) FULL_OFFD  ..

W&D_ON_W   =WEEK-SCHEDULE  (ALL) W&D_ON_D  ..

FULL_ON_W  =WEEK-SCHEDULE  (ALL) FULL_ON_D  ..


$ FULL_ON SCHEDULE
FULL_ON    =SCHEDULE THRU DEC 31 FULL_ON_W  ..

$ LOADS OCCUPANCY SCHED
OCCUPANCY  =SCHEDULE THRU DEC 31 PEOPLE  ..

$ LIGHTING SCHEDULE
```

```
LIGHTS_ON  =SCHEDULE THRU DEC 31 LIGHTS_WK  ..

$ APPLIANCE SCHEDULE
APPLI_ON   =SCHEDULE THRU DEC 31 APPLI_WK  ..

$ COND VENTIL SCHED
CND_SCHED  =SCHEDULE THRU MAR  1 FULL_OFFW
                     THRU NOV 30 CND_WK
                     THRU DEC 31 FULL_OFFW  ..

FULL_OFF   =SCHEDULE THRU DEC 31 FULL_OFFW  ..

W&D_ON     =SCHEDULE THRU DEC 31 W&D_ON_W  ..


                   $ CONSTRUCTION TYPES


 $ DOOR CONSTRUCTION
DOORCON  =CONSTRUCTION   U-VALUE =  0.400  ..
FLOOR    =CONSTRUCTION   U-VALUE =  0.100
                          ABSORPTANCE = 1.000
                          ROUGHNESS = 1  ..
ROOFCON  =CONSTRUCTION   U-VALUE =  0.050  ..
EXWALL   =CONSTRUCTION   U-VALUE =  0.200
                          ABSORPTANCE = 0.750  ..
INWALL   =CONSTRUCTION   U-VALUE =  0.500  ..

GTYPE_1  =GLASS-TYPE     SHADING-COEF = 0.400
                         PANES = 1
                         GLASS-CONDUCTANCE =  1.130  ..
GTYPE_2  =GLASS-TYPE     SHADING-COEF = 0.300
                         PANES = 1
                         GLASS-CONDUCTANCE =  0.790  ..
GTYPE_3  =GLASS-TYPE     SHADING-COEF = 0.400
                         PANES = 1
                         GLASS-CONDUCTANCE =  0.360  ..


                   $ SPACE DESCRIPTION

LAUNDRY    =SPACE     AREA = 3060.0  VOLUME = 27540.0
                      AZIMUTH = 180  ZONE-TYPE = CONDITIONED
                      PEOPLE-SCHEDULE = OCCUPANCY  NUMBER-OF-PEOPLE = 15.0
                      PEOPLE-HEAT-GAIN = 550.0  LIGHTING-KW = 5.0
                      LIGHTING-SCHEDULE = FULL_ON  EQUIP-SCHEDULE = W&D_ON
                      EQUIPMENT-KW = 44.1  EQUIP-SENSIBLE = 0.05
                      SOURCE-SCHEDULE = FULL_ON  SOURCE-TYPE = GAS
                      SOURCE-BTU/HR = 263874.0  SOURCE-SENSIBLE = 0.01
                      INF-METHOD = AIR-CHANGE  AIR-CHANGES/HR = 0.5
                      INF-SCHEDULE = FULL_ON   ..

          I-W           HEIGHT = 9.0  WIDTH = 34.0  CONS = INWALL
                        AZIMUTH = 180  NEXT-TO = RETAIL   ..

          E-W           HEIGHT = 9.0  WIDTH = 56.0  CONS = EXWALL
                        AZIMUTH = -90   ..

            DOOR        HEIGHT = 9.0  WIDTH = 3.0  CONS = DOORCON ..

            WINDOW      HEIGHT = 5.0  WIDTH = 4.0  G-T = GTYPE_1
                        MULTIPLIER = 8.0   ..

          E-W           HEIGHT = 9.0  WIDTH = 34.0  CONS = EXWALL
                        AZIMUTH = -180   ..

            DOOR        HEIGHT = 9.0  WIDTH = 5.0  CONS = DOORCON ..

          I-W           HEIGHT = 9.0  WIDTH = 56.0  CONS = INWALL
                        AZIMUTH = 90  NEXT-TO = RETAIL   ..

          ROOF          HEIGHT = 34.0  WIDTH = 56.0  CONS = ROOFCON
                        AZIMUTH = 180  TILT = 0   ..

         U-W           HEIGHT = 34.0  WIDTH = 56.0  CONS = FLOOR
                        AZIMUTH = 180   ..


RETAIL     =SPACE     AREA = 7160.0  VOLUME = 64440.0
                      AZIMUTH = 180  ZONE-TYPE = CONDITIONED
                      PEOPLE-SCHEDULE = OCCUPANCY  NUMBER-OF-PEOPLE = 10.0
                      PEOPLE-HEAT-GAIN = 550.0  LIGHTING-KW = 12.0
                      LIGHTING-SCHEDULE = FULL_ON
                      EQUIP-SCHEDULE = APPLI_ON  EQUIPMENT-KW = 128.0
                      EQUIP-SENSIBLE = 0.1  INF-METHOD = AIR-CHANGE
                      AIR-CHANGES/HR = 1.0  INF-SCHEDULE = FULL_ON   ..

          E-W           HEIGHT = 9.0  WIDTH = 118.0  CONS = EXWALL
                        AZIMUTH = 180   ..

            WINDOW      HEIGHT = 5.0  WIDTH = 4.0  G-T = GTYPE_1
                        MULTIPLIER = 8.0   ..

            DOOR        HEIGHT = 8.0  WIDTH = 3.0  CONS = DOORCON
                        MULTIPLIER = 2.0   ..

            DOOR        HEIGHT = 8.0  WIDTH = 3.0  CONS = DOORCON
                        MULTIPLIER = 2.0   ..

          E-W           HEIGHT = 9.0  WIDTH = 23.0  CONS = EXWALL
                        AZIMUTH = -90   ..

            WINDOW      HEIGHT = 5.0  WIDTH = 4.0  G-T = GTYPE_1 ..
```

```
                DOOR    HEIGHT = 8.0  WIDTH = 3.0  CONS = DOORCON ..

               I-W      HEIGHT = 9.0  WIDTH = 34.0  CONS = INWALL
                        AZIMUTH = 180  NEXT-TO = LAUNDRY   ..

               I-W      HEIGHT = 9.0  WIDTH = 56.0  CONS = INWALL
                        AZIMUTH = 90  NEXT-TO = LAUNDRY   ..

               E-W      HEIGHT = 9.0  WIDTH = 84.0  CONS = EXWALL
                        AZIMUTH = 180   ..

                DOOR    HEIGHT = 8.0  WIDTH = 3.0  CONS = DOORCON
                        MULTIPLIER = 4.0   ..

                DOOR    HEIGHT = 8.0  WIDTH = 3.0  CONS = DOORCON
                        MULTIPLIER = 4.0   ..

                DOOR    HEIGHT = 8.0  WIDTH = 8.0  CONS = DOORCON ..

                DOOR    HEIGHT = 8.0  WIDTH = 8.0  CONS = DOORCON ..

               E-W      HEIGHT = 9.0  WIDTH = 79.0  CONS = EXWALL
                        AZIMUTH = 90   ..

                DOOR    HEIGHT = 8.0  WIDTH = 3.0  CONS = DOORCON ..

                DOOR    HEIGHT = 8.0  WIDTH = 3.0  CONS = DOORCON ..

               ROOF     HEIGHT = 79.0  WIDTH = 101.0  CONS = ROOFCON
                        AZIMUTH = 180  TILT = 0   ..

              U-W      HEIGHT = 79.0  WIDTH = 101.0  CONS = FLOOR
                        AZIMUTH = 180   ..


END  ..
COMPUTE LOADS  ..

INPUT SYSTEMS  ..


                  $---------------------------------------$
                  $ E Z - D O E   S Y S T E M S  I N P U T $
                  $---------------------------------------$

                     $ GENERAL PROJECT DATA

TITLE  LINE-1 *     EMC      ENGINEERS      INC.     *
       LINE-2 *EZDOE - ELITE SOFTWARE DEVELOPMENT INC*
       LINE-3 *     DENVER,       CO       80227     *

       LINE-4 *BUILDING 4230 (24HR OP SO NO SET BACK)  *
       LINE-5 *MODEL WITH ECONOMIZER                   * ..
ABORT              ERRORS  ..
DIAGNOSTIC         WARNINGS ..
SYSTEMS-REPORT     VERIFICATION=(SV-A,SV-B)
                   SUMMARY=(SS-A,SS-B,SS-C,SS-D,SS-E,SS-F,SS-G,
                            SS-H,SS-I,SS-J,SS-K,SS-L,SS-M,SS-N,
                            SS-O)  ..

                     $ SCHEDULES

D_FULL      =DAY-SCHEDULE  (1,24) (1.) ..
D_OFF       =DAY-SCHEDULE  (1,24) (0.) ..
HEAT_68_D   =DAY-SCHEDULE  (1,24) (73.) ..
COOL_75_D   =DAY-SCHEDULE  (1,24) (75.) ..

W_FULL      =WEEK-SCHEDULE  (ALL) D_FULL  ..

W_OFF       =WEEK-SCHEDULE  (ALL) D_OFF  ..

HEAT_68_W   =WEEK-SCHEDULE  (ALL) HEAT_68_D  ..

COOL_75_W   =WEEK-SCHEDULE  (ALL) COOL_75_D  ..


FULL_ON     =SCHEDULE THRU DEC 31 W_FULL  ..

FULL_OFF    =SCHEDULE THRU DEC 31 W_OFF  ..

HEAT_68     =SCHEDULE THRU DEC 31 HEAT_68_W  ..

COOL_75     =SCHEDULE THRU DEC 31 COOL_75_W  ..


                     $ ZONE DESCRIPTION

LAUNDRY     =ZONE    DESIGN-HEAT-T = 68.0  DESIGN-COOL-T = 75.0
                     HEAT-TEMP-SCH = HEAT_68  COOL-TEMP-SCH = COOL_75
                     ZONE-TYPE = CONDITIONED
                     THERMOSTAT-TYPE = PROPORTIONAL  THROTTLING-RANGE = 1.0
                     ASSIGNED-CFM = 3620.  OUTSIDE-AIR-CFM = 100.
                     SIZING-OPTION = FROM-LOADS   ..

RETAIL      =ZONE    DESIGN-HEAT-T = 68.0  DESIGN-COOL-T = 75.0
                     HEAT-TEMP-SCH = HEAT_68  COOL-TEMP-SCH = COOL_75
                     ZONE-TYPE = CONDITIONED
                     THERMOSTAT-TYPE = PROPORTIONAL  THROTTLING-RANGE = 1.0
                     ASSIGNED-CFM = 5755.  OUTSIDE-AIR-CFM = 800.
                     SIZING-OPTION = FROM-LOADS  MIN-CFM-RATIO = 0.34   ..
                                     .

                     $ SYSTEM DESCRIPTION

AH-1        =SYSTEM     SYSTEM-TYPE = SZRH
                        MAX-SUPPLY-T = 120.0  MIN-SUPPLY-T = 50.0
                        MIN-HUMIDITY = 30.0  ECONO-LIMIT-T = 65.0
```

```
                        ECONO-LOW-LIMIT = 55.0  SUPPLY-CFM = 2290.
                        RETURN-CFM = 1690.  RATED-CFM = 2290.
                        MIN-OUTSIDE-AIR = 0.35  SUPPLY-STATIC = 3.0
                        SUPPLY-EFF = 0.88  NIGHT-CYCLE-CTRL = STAY-OFF
                        NIGHT-VENT-DT = 0.0  MIN-CFM-RATIO = 1.0
                        COOLING-CAPACITY = 231000.
                        HEATING-CAPACITY = -367700.  FURNACE-AUX = 0.
                        PREHEAT-SOURCE = HOT-WATER
                        ZONE-NAMES = (RETAIL)  ..

AH-2        =SYSTEM     SYSTEM-TYPE = SZRH
                        MAX-SUPPLY-T = 120.0  MIN-SUPPLY-T = 50.0
                        MIN-HUMIDITY = 30.0  ECONO-LIMIT-T = 65.0
                        ECONO-LOW-LIMIT = 55.0  SUPPLY-CFM = 3620.
                        RETURN-CFM = 3520.  RATED-CFM = 3620.
                        MIN-OUTSIDE-AIR = 0.33  SUPPLY-STATIC = 3.0
                        SUPPLY-EFF = 0.88  NIGHT-CYCLE-CTRL = STAY-OFF
                        NIGHT-VENT-DT = 0.0  MIN-CFM-RATIO = 1.0
                        COOLING-CAPACITY = 114000.
                        HEATING-CAPACITY = -160000.  FURNACE-AUX = 0.
                        PREHEAT-SOURCE = HOT-WATER
                        ZONE-NAMES = (LAUNDRY)  ..

END  ..
COMPUTE SYSTEMS  ..

INPUT PLANT  ..


                  $--------------------------------------$
                  $ E Z - D O E   P L A N T S  I N P U T $
                  $--------------------------------------$

                     $ GENERAL PROJECT DATA

TITLE  LINE-1 *     EMC      ENGINEERS      INC.     *
       LINE-2 *EZDOE - ELITE SOFTWARE DEVELOPMENT INC*
       LINE-3 *     DENVER,       CO       80227     *

       LINE-4 *BUILDING 4230 (24HR OP SO NO SET BACK)  *
       LINE-5 *MODEL WITH ECONOMIZER                   * ..

ABORT              ERRORS  ..
DIAGNOSTIC         WARNINGS ..
PLANT-REPORT       VERIFICATION=(PV-A)
                   SUMMARY=(PS-A,PS-B,PS-D,PS-H,PS-I,BEPS)  ..

                   $ SCHEDULES

DAY_ON      =DAY-SCHEDULE  (1,7) (0.)
                           (8,18) (1.)
                           (19,24) (0.) ..


FULL_ON     =WEEK-SCHEDULE  (ALL) DAY_ON  ..


$ heating plant schedule
heating     =SCHEDULE THRU DEC 31 FULL_ON  ..


                   $ EQUIPMENT DESCRIPTION

BOILER1     =PLANT-EQUIPMENT   TYPE = HW-BOILER
                   SIZE = 0.4  ..

COND        =PLANT-EQUIPMENT   TYPE = HERM-REC-CHLR
                   SIZE = 0.2  INSTALLED-NUMBER = 2
                   MAX-NUMBER-AVAIL = 2  ..

PLANT-PARAMETERS       BOILER-FUEL = NATURAL-GAS  MAKEUP-WTR-T = 50.
                       STM-BOILER-HIR = 0.76  CHILLER-CONTROL = STANDBY
                       OPEN-REC-COND-TYPE = AIR  HERM-REC-COND-TYPE = AIR
                       COMP-TO-TWR-WTR = 2.77  CCIRC-HEAD = 100.0
                       HCIRC-HEAD = 40.0    ..


PART-LOAD-RATIO  TYPE = HW-BOILER
                 MIN-RATIO        =  0.2500  MAX-RATIO        =  1.0000
                 OPERATING-RATIO  =  1.0000  ELEC-INPUT-RATIO =  0.0220  ..

ENERGY-RESOURCE        RESOURCE = ELECTRICITY  ..
ENERGY-RESOURCE        RESOURCE = NATURAL-GAS  ..

ENERGY-STORAGE     HEAT-STORE-RATE = 1.51  HEAT-SUPPLY-RATE = 1.51
                       HTANK-BASE-T = 144.0  HTANK-T-RANGE = 15.6
                       HEAT-STORE-SCH = heating    ..


END  ..
COMPUTE PLANT ..
STOP ..
```

ENERGY TYPE IN SITE MBTU-	ELECTRICITY	NATURAL-GAS
CATEGORY OF USE		
SPACE HEAT	40.30	1,079.31
SPACE COOL	76.86	0.00
HVAC AUX	114.71	0.00
DOM HOT WTR	0.00	0.00
AUX SOLAR	0.00	0.00
LIGHTS	508.23	0.00
VERT TRANS	0.00	0.00
MISC EQUIP	1,159.21	2,311.82
TOTAL	1,899.32	3,391.13

TOTAL SITE ENERGY 5290.17 MBTU 517.6 KBTU/SQFT-YR GROSS-AREA 517.6 KBTU/SQFT-YR NET-AREA
TOTAL SOURCE ENERGY 9094.52 MBTU 889.9 KBTU/SQFT-YR GROSS-AREA 889.9 KBTU/SQFT-YR NET-AREA

PERCENT OF HOURS ANY SYSTEM ZONE OUTSIDE OF THROTTLING RANGE = 0.5
PERCENT OF HOURS ANY PLANT LOAD NOT SATISFIED = 0.7

NOTE ELECTRICITY AND/OR FUEL USED TO GENERATE ELECTRICITY IS APPORTIONED BASED ON THE YEARLY DEMAND. ALL OTHER ENERGY TYPES ARE APPORTIONED HOURLY.

MO	UTILITY-	ELECTRICITY	NATURAL-GAS
	TOTAL(MBTU)	160.096	444.928
JAN	PEAK(KBTU)	320.797	763.874
	DY/HR	31/20	24/ 7
	TOTAL(MBTU)	144.588	350.322
FEB	PEAK(KBTU)	320.797	718.212
	DY/HR	28/20	4/10
	TOTAL(MBTU)	159.959	372.534
MAR	PEAK(KBTU)	320.797	687.692
	DY/HR	31/20	26/10
	TOTAL(MBTU)	153.728	281.927
APR	PEAK(KBTU)	321.056	564.793
	DY/HR	30/20	1/ 5
	TOTAL(MBTU)	159.006	243.282
MAY	PEAK(KBTU)	340.492	541.491
	DY/HR	31/20	3/ 2
	TOTAL(MBTU)	157.929	195.304
JUN	PEAK(KBTU)	356.982	347.784
	DY/HR	28/20	7/ 4
	TOTAL(MBTU)	170.244	198.139
JUL	PEAK(KBTU)	363.045	325.912
	DY/HR	18/20	25/ 5
	TOTAL(MBTU)	165.244	198.373
AUG	PEAK(KBTU)	354.950	436.415
	DY/HR	9/20	6/24
	TOTAL(MBTU)	157.347	204.718
SEP	PEAK(KBTU)	357.724	397.936
	DY/HR	4/20	23/ 4
	TOTAL(MBTU)	157.741	245.484
OCT	PEAK(KBTU)	320.797	542.958
	DY/HR	25/20	25/ 5
	TOTAL(MBTU)	153.726	290.321
NOV	PEAK(KBTU)	320.797	605.860
	DY/HR	30/20	26/16
	TOTAL(MBTU)	159.717	365.514
DEC	PEAK(KBTU)	320.797	719.331
	DY/HR	31/20	3/ 4
	ONE YEAR	1899.325	3390.846
	USE/PEAK	363.045	763.874

COMPUTER SIMULATIONS
BUILDING 4230

RUN 3 - DDC

```
INPUT LOADS  ..

                $-----------------------------------$
                $ E Z - D O E   L O A D S   I N P U T $
                $-----------------------------------$

                   $ GENERAL PROJECT DATA

TITLE  LINE-1 *     EMC      ENGINEERS      INC.     *
       LINE-2 *EZDOE - ELITE SOFTWARE DEVELOPMENT INC*
       LINE-3 *     DENVER,       CO       80227     *

       LINE-4 *BUILDING 4230 (24HR OP SO NO SET BACK)  *
       LINE-5 *MODEL WITH ECONOMIZER & DDC             * ..

ABORT              ERRORS  ..
DIAGNOSTIC         WARNINGS ..
LOADS-REPORT       VERIFICATION=(LV-A,LV-B,LV-C)
                   SUMMARY=(LS-A,LS-B,LS-C,LS-D,LS-E,LS-F,LS-K)  ..
BUILDING-LOCATION  LATITUDE = 44.0
                   ALTITUDE = 655.
                   AZIMUTH = -130.
                   TIME-ZONE =  5
                   GROSS-AREA =  10220
                   HOLIDAY = NO
                   SHIELDING-COEF = 0.29
                   X-REF = 0.0
                   Y-REF = 0.0  ..
RUN-PERIOD         JAN 1 1994 THRU DEC 31 1994  ..


                   $ SCHEDULES

LIGHTS     =DAY-SCHEDULE  (1,2) (1.)
                          (3,11) (0.5)
                          (12,13) (0.6)
                          (14,24) (1.) ..

OCCUP      =DAY-SCHEDULE  (1,5) (0.)
                          (6,10) (0.1,0.5,0.9,0.8,0.5)
                          (11,14) (0.7,0.9,0.8,0.4)
                          (15,16) (0.3)
                          (17,18) (0.5,0.9)
                          (19,20) (0.7,0.2)
                          (21,24) (0.) ..

APPLIANCE  =DAY-SCHEDULE  (1) (0.)
                          (2,3) (0.7)
                          (4,12) (0.02)
                          (13,15) (0.6)
                          (16,18) (0.02)
                          (19,20) (0.7)
                          (21,24) (0.8) ..

FULL_ON_D  =DAY-SCHEDULE  (1,24) (1.) ..

FULL_OFFD  =DAY-SCHEDULE  (1,24) (0.) ..

appliance  =DAY-SCHEDULE  (1,6) (0.1)
                          (7,11) (0.2)
                          (12,14) (0.3)
                          (15,20) (0.2)
                          (21,24) (0.1) ..

lights     =DAY-SCHEDULE  (1,5) (0.2)
                          (6) (0.5)
                          (7,17) (0.9)
                          (18) (0.8)
                          (19,20) (0.7)
                          (21,24) (0.2) ..

W&D_ON_D   =DAY-SCHEDULE  (1,2) (0.2,0.1)
                          (3,4) (0.)
                          (5) (0.1)
                          (6,9) (0.3)
                          (10,11) (0.2)
                          (12,15) (0.3)
                          (16) (0.4)
                          (17,18) (0.6)
                          (19,20) (0.8,1.)
                          (21,22) (0.8)
                          (23,24) (0.6,0.4) ..


PEOPLE     =WEEK-SCHEDULE  (ALL) OCCUP  ..

LIGHTS_WK  =WEEK-SCHEDULE  (ALL) lights  ..

APPLI_WK   =WEEK-SCHEDULE  (ALL) appliance  ..

CND_WK     =WEEK-SCHEDULE  (ALL) FULL_ON_D  ..

FULL_OFFW  =WEEK-SCHEDULE  (ALL) FULL_OFFD  ..

W&D_ON_W   =WEEK-SCHEDULE  (ALL) W&D_ON_D  ..

FULL_ON_W  =WEEK-SCHEDULE  (ALL) FULL_ON_D  ..


$ FULL_ON SCHEDULE
FULL_ON    =SCHEDULE THRU DEC 31 FULL_ON_W  ..

$ LOADS OCCUPANCY SCHED
OCCUPANCY  =SCHEDULE THRU DEC 31 PEOPLE  ..

$ LIGHTING SCHEDULE
```

```
LIGHTS_ON  =SCHEDULE THRU DEC 31 LIGHTS_WK  ..

$ APPLIANCE SCHEDULE
APPLI_ON   =SCHEDULE THRU DEC 31 APPLI_WK  ..

$ COND VENTIL SCHED
CND_SCHED  =SCHEDULE THRU MAR  1 FULL_OFFW
                     THRU NOV 30 CND_WK
                     THRU DEC 31 FULL_OFFW  ..

FULL_OFF   =SCHEDULE THRU DEC 31 FULL_OFFW  ..

W&D_ON     =SCHEDULE THRU DEC 31 W&D_ON_W  ..


                   $ CONSTRUCTION TYPES


 $ DOOR CONSTRUCTION
DOORCON  =CONSTRUCTION   U-VALUE =  0.400  ..
FLOOR    =CONSTRUCTION   U-VALUE =  0.100
                          ABSORPTANCE = 1.000
                          ROUGHNESS = 1  ..
ROOFCON  =CONSTRUCTION   U-VALUE =  0.050  ..
EXWALL   =CONSTRUCTION   U-VALUE =  0.200
                          ABSORPTANCE = 0.750  ..
INWALL   =CONSTRUCTION   U-VALUE =  0.500  ..

GTYPE_1  =GLASS-TYPE     SHADING-COEF = 0.400
                         PANES = 1
                         GLASS-CONDUCTANCE =  1.130  ..
GTYPE_2  =GLASS-TYPE     SHADING-COEF = 0.300
                         PANES = 1
                         GLASS-CONDUCTANCE =  0.790  ..
GTYPE_3  =GLASS-TYPE     SHADING-COEF = 0.400
                         PANES = 1
                         GLASS-CONDUCTANCE =  0.360  ..


                   $ SPACE DESCRIPTION

LAUNDRY    =SPACE    AREA = 3060.0  VOLUME = 27540.0
                     AZIMUTH = 180  ZONE-TYPE = CONDITIONED
                     PEOPLE-SCHEDULE = OCCUPANCY  NUMBER-OF-PEOPLE = 15.0
                     PEOPLE-HEAT-GAIN = 550.0  LIGHTING-KW = 5.0
                     LIGHTING-SCHEDULE = FULL_ON  EQUIP-SCHEDULE = W&D_ON
                     EQUIPMENT-KW = 44.1  EQUIP-SENSIBLE = 0.05
                     SOURCE-SCHEDULE = FULL_ON  SOURCE-TYPE = GAS
                     SOURCE-BTU/HR = 263874.0  SOURCE-SENSIBLE = 0.01
                     INF-METHOD = AIR-CHANGE  AIR-CHANGES/HR = 0.5
                     INF-SCHEDULE = FULL_ON   ..

               I-W      HEIGHT = 9.0  WIDTH = 34.0  CONS = INWALL
                        AZIMUTH = 180  NEXT-TO = RETAIL   ..

               E-W      HEIGHT = 9.0  WIDTH = 56.0  CONS = EXWALL
                        AZIMUTH = -90   ..

                 DOOR   HEIGHT = 9.0  WIDTH = 3.0  CONS = DOORCON ..

                 WINDOW HEIGHT = 5.0  WIDTH = 4.0  G-T = GTYPE_1
                        MULTIPLIER = 8.0   ..

               E-W      HEIGHT = 9.0  WIDTH = 34.0  CONS = EXWALL
                        AZIMUTH = -180   ..

                 DOOR   HEIGHT = 9.0  WIDTH = 5.0  CONS = DOORCON ..

               I-W      HEIGHT = 9.0  WIDTH = 56.0  CONS = INWALL
                        AZIMUTH = 90  NEXT-TO = RETAIL   ..

               ROOF     HEIGHT = 34.0  WIDTH = 56.0  CONS = ROOFCON
                        AZIMUTH = 180  TILT = 0   ..

              U-W      HEIGHT = 34.0  WIDTH = 56.0  CONS = FLOOR
                        AZIMUTH = 180   ..


RETAIL     =SPACE    AREA = 7160.0  VOLUME = 64440.0
                     AZIMUTH = 180  ZONE-TYPE = CONDITIONED
                     PEOPLE-SCHEDULE = OCCUPANCY  NUMBER-OF-PEOPLE = 10.0
                     PEOPLE-HEAT-GAIN = 550.0  LIGHTING-KW = 12.0
                     LIGHTING-SCHEDULE = FULL_ON
                     EQUIP-SCHEDULE = APPLI_ON  EQUIPMENT-KW = 128.0
                     EQUIP-SENSIBLE = 0.1  INF-METHOD = AIR-CHANGE
                     AIR-CHANGES/HR = 1.0  INF-SCHEDULE = FULL_ON   ..

               E-W      HEIGHT = 9.0  WIDTH = 118.0  CONS = EXWALL
                        AZIMUTH = 180   ..

                 WINDOW HEIGHT = 5.0  WIDTH = 4.0  G-T = GTYPE_1
                        MULTIPLIER = 8.0   ..

                 DOOR   HEIGHT = 8.0  WIDTH = 3.0  CONS = DOORCON
                        MULTIPLIER = 2.0   ..

                 DOOR   HEIGHT = 8.0  WIDTH = 3.0  CONS = DOORCON
                        MULTIPLIER = 2.0   ..

               E-W      HEIGHT = 9.0  WIDTH = 23.0  CONS = EXWALL
                        AZIMUTH = -90   ..

                 WINDOW HEIGHT = 5.0  WIDTH = 4.0  G-T = GTYPE_1 ..
```

```
                DOOR    HEIGHT = 8.0  WIDTH = 3.0  CONS = DOORCON ..

               I-W      HEIGHT = 9.0  WIDTH = 34.0  CONS = INWALL
                        AZIMUTH = 180  NEXT-TO = LAUNDRY   ..

               I-W      HEIGHT = 9.0  WIDTH = 56.0  CONS = INWALL
                        AZIMUTH = 90  NEXT-TO = LAUNDRY   ..

               E-W      HEIGHT = 9.0  WIDTH = 84.0  CONS = EXWALL
                        AZIMUTH = 180   ..

                DOOR    HEIGHT = 8.0  WIDTH = 3.0  CONS = DOORCON
                        MULTIPLIER = 4.0   ..

                DOOR    HEIGHT = 8.0  WIDTH = 3.0  CONS = DOORCON
                        MULTIPLIER = 4.0   ..

                DOOR    HEIGHT = 8.0  WIDTH = 8.0  CONS = DOORCON ..

                DOOR    HEIGHT = 8.0  WIDTH = 8.0  CONS = DOORCON ..

               E-W      HEIGHT = 9.0  WIDTH = 79.0  CONS = EXWALL
                        AZIMUTH = 90   ..

                DOOR    HEIGHT = 8.0  WIDTH = 3.0  CONS = DOORCON ..

                DOOR    HEIGHT = 8.0  WIDTH = 3.0  CONS = DOORCON ..

               ROOF     HEIGHT = 79.0  WIDTH = 101.0  CONS = ROOFCON
                        AZIMUTH = 180  TILT = 0   ..

              U-W      HEIGHT = 79.0  WIDTH = 101.0  CONS = FLOOR
                        AZIMUTH = 180   ..

END  ..
COMPUTE LOADS  ..

INPUT SYSTEMS  ..

                $----------------------------------------$
                $ E Z - D O E   S Y S T E M S  I N P U T $
                $----------------------------------------$

                   $ GENERAL PROJECT DATA

TITLE  LINE-1 *     EMC      ENGINEERS      INC.     *
       LINE-2 *EZDOE - ELITE SOFTWARE DEVELOPMENT INC*
       LINE-3 *     DENVER,       CO       80227     *

       LINE-4 *BUILDING 4230 (24HR OP SO NO SET BACK)  *
       LINE-5 *MODEL WITH ECONOMIZER & DDC              * ..
ABORT               ERRORS  ..
DIAGNOSTIC          WARNINGS ..
SYSTEMS-REPORT      VERIFICATION=(SV-A,SV-B)
                    SUMMARY=(SS-A,SS-B,SS-C,SS-D,SS-E,SS-F,SS-G,
                             SS-H,SS-I,SS-J,SS-K,SS-L,SS-M,SS-N,
                             SS-O)  ..

                   $ SCHEDULES

D_FULL      =DAY-SCHEDULE  (1,24) (1.) ..
D_OFF       =DAY-SCHEDULE  (1,24) (0.) ..
HEAT_68_D   =DAY-SCHEDULE  (1,24) (68.) ..
COOL_75_D   =DAY-SCHEDULE  (1,24) (78.) ..

W_FULL      =WEEK-SCHEDULE  (ALL) D_FULL  ..

W_OFF       =WEEK-SCHEDULE  (ALL) D_OFF  ..

HEAT_68_W   =WEEK-SCHEDULE  (ALL) HEAT_68_D  ..

COOL_75_W   =WEEK-SCHEDULE  (ALL) COOL_75_D  ..


FULL_ON     =SCHEDULE THRU DEC 31 W_FULL  ..

FULL_OFF    =SCHEDULE THRU DEC 31 W_OFF  ..

HEAT_68     =SCHEDULE THRU DEC 31 HEAT_68_W  ..

COOL_75     =SCHEDULE THRU DEC 31 COOL_75_W  ..


                   $ ZONE DESCRIPTION

LAUNDRY     =ZONE    DESIGN-HEAT-T = 68.0  DESIGN-COOL-T = 75.0
                     HEAT-TEMP-SCH = HEAT_68  COOL-TEMP-SCH = COOL_75
                     ZONE-TYPE = CONDITIONED
                     THERMOSTAT-TYPE = PROPORTIONAL  THROTTLING-RANGE = 1.0
                     ASSIGNED-CFM = 3620.  OUTSIDE-AIR-CFM = 100.
                     SIZING-OPTION = FROM-LOADS   ..

RETAIL      =ZONE    DESIGN-HEAT-T = 68.0  DESIGN-COOL-T = 75.0
                     HEAT-TEMP-SCH = HEAT_68  COOL-TEMP-SCH = COOL_75
                     ZONE-TYPE = CONDITIONED
                     THERMOSTAT-TYPE = PROPORTIONAL  THROTTLING-RANGE = 1.0
                     ASSIGNED-CFM = 5755.  OUTSIDE-AIR-CFM = 800.
                     SIZING-OPTION = FROM-LOADS  MIN-CFM-RATIO = 0.34   ..


                   $ SYSTEM DESCRIPTION

AH-1        =SYSTEM    SYSTEM-TYPE = SZRH
                       MAX-SUPPLY-T = 120.0  MIN-SUPPLY-T = 50.0
                       MIN-HUMIDITY = 30.0  ECONO-LIMIT-T = 65.0
```

```
                        ECONO-LOW-LIMIT = 55.0  SUPPLY-CFM = 2290.
                        RETURN-CFM = 1690.  RATED-CFM = 2290.
                        MIN-OUTSIDE-AIR = 0.35  SUPPLY-STATIC = 3.0
                        SUPPLY-EFF = 0.88  NIGHT-CYCLE-CTRL = STAY-OFF
                        NIGHT-VENT-DT = 0.0  MIN-CFM-RATIO = 1.0
                        COOLING-CAPACITY = 231000.
                        HEATING-CAPACITY = -367700.  FURNACE-AUX = 0.
                        PREHEAT-SOURCE = HOT-WATER
                        ZONE-NAMES = (RETAIL)  ..

AH-2        =SYSTEM     SYSTEM-TYPE = SZRH
                        MAX-SUPPLY-T = 120.0  MIN-SUPPLY-T = 50.0
                        MIN-HUMIDITY = 30.0  ECONO-LIMIT-T = 65.0
                        ECONO-LOW-LIMIT = 55.0  SUPPLY-CFM = 3620.
                        RETURN-CFM = 3520.  RATED-CFM = 3620.
                        MIN-OUTSIDE-AIR = 0.33  SUPPLY-STATIC = 3.0
                        SUPPLY-EFF = 0.88  NIGHT-CYCLE-CTRL = STAY-OFF
                        NIGHT-VENT-DT = 0.0  MIN-CFM-RATIO = 1.0
                        COOLING-CAPACITY = 114000.
                        HEATING-CAPACITY = -160000.  FURNACE-AUX = 0.
                        PREHEAT-SOURCE = HOT-WATER
                        ZONE-NAMES = (LAUNDRY)  ..

END  ..
COMPUTE SYSTEMS  ..

INPUT PLANT  ..


                  $--------------------------------------$
                  $ E Z - D O E   P L A N T S  I N P U T $
                  $--------------------------------------$

                     $ GENERAL PROJECT DATA

TITLE  LINE-1 *      EMC       ENGINEERS       INC.      *
       LINE-2 *EZDOE - ELITE SOFTWARE DEVELOPMENT INC*
       LINE-3 *      DENVER,       CO       80227      *

       LINE-4 *BUILDING 4230 (24HR OP SO NO SET BACK)  *
       LINE-5 *MODEL WITH ECONOMIZER & DDC              * ..

ABORT               ERRORS  ..
DIAGNOSTIC          WARNINGS ..
PLANT-REPORT        VERIFICATION=(PV-A)
                    SUMMARY=(PS-A,PS-B,PS-D,PS-H,PS-I,BEPS)  ..

                    $ SCHEDULES

DAY_ON      =DAY-SCHEDULE  (1,7) (0.)
                           (8,18) (1.)
                           (19,24) (0.) ..


FULL_ON     =WEEK-SCHEDULE  (ALL) DAY_ON  ..


$ heating plant schedule
heating     =SCHEDULE THRU DEC 31 FULL_ON  ..


                    $ EQUIPMENT DESCRIPTION

BOILER1     =PLANT-EQUIPMENT   TYPE = HW-BOILER
                    SIZE = 0.4  ..

COND        =PLANT-EQUIPMENT   TYPE = HERM-REC-CHLR
                    SIZE = 0.2  INSTALLED-NUMBER = 2
                    MAX-NUMBER-AVAIL = 2  ..

PLANT-PARAMETERS    BOILER-FUEL = NATURAL-GAS  MAKEUP-WTR-T = 50.
                    STM-BOILER-HIR = 0.76  CHILLER-CONTROL = STANDBY
                    OPEN-REC-COND-TYPE = AIR  HERM-REC-COND-TYPE = AIR
                    COMP-TO-TWR-WTR = 2.77  CCIRC-HEAD = 100.0
                    HCIRC-HEAD = 40.0    ..


PART-LOAD-RATIO  TYPE = HW-BOILER
                 MIN-RATIO        =  0.2500  MAX-RATIO        =  1.0000
                 OPERATING-RATIO  =  1.0000  ELEC-INPUT-RATIO =  0.0220  ..

ENERGY-RESOURCE     RESOURCE = ELECTRICITY  ..
ENERGY-RESOURCE     RESOURCE = NATURAL-GAS  ..

ENERGY-STORAGE   HEAT-STORE-RATE = 1.51  HEAT-SUPPLY-RATE = 1.51
                    HTANK-BASE-T = 144.0  HTANK-T-RANGE = 15.6
                    HEAT-STORE-SCH = heating    ..


END  ..
COMPUTE PLANT ..
STOP ..
```

EMC ENGINEERS INC. EZDOE - ELITE SOFTWARE DEVELOPMENT INC DOE-2.1D 3/18/1995 16:25:57 PDL RUN 1
DENVER, CO 80227 BUILDING 4230 (24HR OP SO NO SET BACK) MODEL WITH ECONOMIZER & DDC
REPORT- BEPS ESTIMATED BUILDING ENERGY PERFORMANCE WEATHER FILE- MASSENA, NY

ENERGY TYPE IN SITE MBTU-	ELECTRICITY	NATURAL-GAS
CATEGORY OF USE		
SPACE HEAT	33.56	848.00
SPACE COOL	57.11	0.00
HVAC AUX	110.16	0.00
DOM HOT WTR	0.00	0.00
AUX SOLAR	0.00	0.00
LIGHTS	508.23	0.00
VERT TRANS	0.00	0.00
MISC EQUIP	1,159.21	2,311.82
TOTAL	1,868.27	3,159.82

TOTAL SITE ENERGY 5027.81 MBTU 492.0 KBTU/SQFT-YR GROSS-AREA 492.0 KBTU/SQFT-YR NET-AREA
TOTAL SOURCE ENERGY 8769.98 MBTU 858.1 KBTU/SQFT-YR GROSS-AREA 858.1 KBTU/SQFT-YR NET-AREA

PERCENT OF HOURS ANY SYSTEM ZONE OUTSIDE OF THROTTLING RANGE = 0.1
PERCENT OF HOURS ANY PLANT LOAD NOT SATISFIED = 0.4

NOTE ELECTRICITY AND/OR FUEL USED TO GENERATE ELECTRICITY IS APPORTIONED BASED ON THE YEARLY DEMAND. ALL OTHER ENERGY TYPES ARE APPORTIONED HOURLY.

MO	UTILITY-	ELECTRICITY	NATURAL-GAS
	TOTAL(MBTU)	159.505	416.059
JAN	PEAK(KBTU)	320.115	763.874
	DY/HR	31/20	6/17
	TOTAL(MBTU)	143.958	325.720
FEB	PEAK(KBTU)	320.115	672.626
	DY/HR	28/20	4/10
	TOTAL(MBTU)	159.068	343.437
MAR	PEAK(KBTU)	320.115	640.482
	DY/HR	31/20	26/10
	TOTAL(MBTU)	151.440	252.865
APR	PEAK(KBTU)	320.115	526.948
	DY/HR	3/20	1/ 5
	TOTAL(MBTU)	155.291	221.025
MAY	PEAK(KBTU)	331.898	478.692
	DY/HR	31/20	3/ 2
	TOTAL(MBTU)	153.519	190.819
JUN	PEAK(KBTU)	351.475	312.607
	DY/HR	28/20	7/14
	TOTAL(MBTU)	165.545	196.536
JUL	PEAK(KBTU)	359.359	300.127
	DY/HR	17/20	31/15
	TOTAL(MBTU)	161.228	196.724
AUG	PEAK(KBTU)	349.488	414.470
	DY/HR	9/20	6/24
	TOTAL(MBTU)	153.330	193.657
SEP	PEAK(KBTU)	353.715	349.559
	DY/HR	4/20	23/ 6
	TOTAL(MBTU)	154.893	221.765
OCT	PEAK(KBTU)	320.638	469.628
	DY/HR	23/20	25/ 5
	TOTAL(MBTU)	151.799	262.435
NOV	PEAK(KBTU)	320.115	554.302
	DY/HR	26/20	26/16
	TOTAL(MBTU)	158.702	338.493
DEC	PEAK(KBTU)	320.115	673.581
	DY/HR	31/20	3/ 4
	ONE YEAR	1868.278	3159.536
	USE/PEAK	359.359	763.874

COMPUTER SIMULATIONS

BUILDING 4305

COMPUTER SIMULATIONS
BUILDING 4305

BASE RUN

LDL PROCESSOR INPUT DATA

3/18/1995 16:32:24 LDL RUN 1

```
*  3 *
*  4 *
*  5 *            $----------------------------------$
*  6 *            $EZ-DOE LOADS INPUT$
*  7 *            $----------------------------------$
*  8 *
*  9 *              $ GENERAL PROJECT DATA
* 10 *
* 11 * TITLE LINE-1 *   EMC    ENGINEERS    INC.   *
* 12 *      LINE-2 *EZDOE - ELITE SOFTWARE DEVELOPMENT INC*
* 13 *      LINE-3 *   DENVER,     CO     80227   *
* 14 *
* 15 *      LINE-4 *BUILDING 4305 PHYSICAL FITNESS CENTER  *
* 16 *      LINE-5 *BASE MODEL                      * ..
* 17 *
* 18 * ABORT          ERRORS ..
* 19 * DIAGNOSTIC      WARNINGS ..
* 20 * LOADS-REPORT     HOURLY-DATA-SAVE = YES ..
* 21 * BUILDING-LOCATION  HOLIDAY = NO
* 22 *              X-REF = 0.0
* 23 *              Y-REF = 0.0 ..
* 24 * RUN-PERIOD      JAN 1 1994 THRU DEC 31 1994 ..
* 25 *
* 26 *
* 27 *              $ SCHEDULES
* 28 *
* 29 * FULL_ON_D  =DAY-SCHEDULE  (1,24) (1.) ..
* 30 *
* 31 * FULL_OFF_D =DAY-SCHEDULE  (1,24) (0.) ..
* 32 *
* 33 * LIGHT_ON_D =DAY-SCHEDULE  (1,5) (0.1)
* 34 *                    (6,7) (0.35)
* 35 *                    (8,9) (0.5,0.6)
* 36 *                    (10,11) (0.75)
* 37 *                    (12) (0.5)
* 38 *                    (13,14) (0.75)
* 39 *                    (15) (0.5)
* 40 *                    (16,18) (0.4)
* 41 *                    (19,20) (0.3,0.23)
* 42 *                    (21,24) (0.1) ..
* 43 *
* 44 * LT_ON_WKND =DAY-SCHEDULE  (1,6) (0.23)
* 45 *                    (7,19) (0.07)
```

```
* 46 *                    (20,24) (0.23) ..
* 47 *
* 48 * PEOPLE_D  =DAY-SCHEDULE  (1,5) (0.)
* 49 *                    (6,7) (0.1,0.5)
* 50 *                    (8,11) (1.)
* 51 *                    (12) (0.8)
* 52 *                    (13,16) (1.)
* 53 *                    (17,20) (0.5)
* 54 *                    (21,24) (0.) ..
* 55 *
* 56 * EQUIP_ON_D =DAY-SCHEDULE  (1,5) (0.05)
* 57 *                    (6,7) (0.1,0.2)
* 58 *                    (8,9) (0.3)
* 59 *                    (10,11) (0.4,0.7)
* 60 *                    (12,13) (0.4)
* 61 *                    (14,15) (0.8)
* 62 *                    (16,18) (0.7,0.3,0.1)
* 63 *                    (19,24) (0.05) ..
* 64 *
* 65 * SHOP_INF_D =DAY-SCHEDULE  (1,7) (0.1)
* 66 *                    (8) (1.)
* 67 *                    (9,16) (0.1)
* 68 *                    (17) (1.)
* 69 *                    (18,24) (0.1) ..
* 70 *
* 71 * DHW_D     =DAY-SCHEDULE  (1,5) (0.)
* 72 *                    (6,10) (0.1,0.3,0.4,0.5,0.15)
* 73 *                    (11) (0.25)
* 74 *                    (12,13) (0.7)
* 75 *                    (14,15) (0.5)
* 76 *                    (16,20) (0.8,1.,0.4,0.3,0.1)
* 77 *                    (21,24) (0.) ..
* 78 *
* 79 *
* 80 * FULL_ON_W  =WEEK-SCHEDULE  (ALL) FULL_ON_D  ..
* 81 *
* 82 * FULL_OFF_W =WEEK-SCHEDULE  (ALL) FULL_OFF_D  ..
* 83 *
* 84 * LIGHT_ON_W =WEEK-SCHEDULE  (WD)  LIGHT_ON_D
* 85 *                    (WEH) LT_ON_WKND  ..
* 86 *
* 87 * PEOPLE_W   =WEEK-SCHEDULE  (WD)  PEOPLE_D
* 88 *                    (WEH) FULL_OFF_D  ..
* 89 *
* 90 * EQUIP_W    =WEEK-SCHEDULE  (WD)  EQUIP_ON_D
* 91 *                    (WEH) FULL_OFF_D  ..
* 92 *
* 93 * SHOP_IFL_W =WEEK-SCHEDULE  (WD)  SHOP_INF_D
* 94 *                    (WEH) FULL_OFF_D  ..
* 95 *
```

```
*  96 * DHW_W     =WEEK-SCHEDULE  (WD)  DHW_D
*  97 *                      (WEH) FULL_OFF_D  ..
*  98 *
*  99 *
* 100 * $ FULL ON SCHEDULE
* 101 * FULL_ON    =SCHEDULE THRU DEC 31 FULL_ON_W  ..
* 102 *
* 103 * $ FULL OFF SCHEDULE
* 104 * FULL_OFF   =SCHEDULE THRU DEC 31 FULL_OFF_W  ..
* 105 *
* 106 * $ LIGHTING SCHEDULE
* 107 * LIGHT_SCHD =SCHEDULE THRU DEC 31 LIGHT_ON_W  ..
* 108 *
* 109 * $ OCCUPANCY SCHEDULE
* 110 * PEOPLE_SCH =SCHEDULE THRU DEC 31 PEOPLE_W  ..
* 111 *
* 112 * $ EQUIPMENT SCHEDULE
* 113 * EQUIP_SCHD =SCHEDULE THRU DEC 31 EQUIP_W  ..
* 114 *
* 115 * $ SHOP INFILTRATION SCHED
* 116 * SHOP_INFIL =SCHEDULE THRU DEC 31 SHOP_IFL_W  ..
* 117 *
* 118 * $ HOURS POOL IS HEATED
* 119 * POOL_HEAT  =SCHEDULE THRU DEC 31 FULL_ON_W  ..
* 120 *
* 121 * $ DHW SCHEDULE
* 122 * DHW_SCHED  =SCHEDULE THRU DEC 31 DHW_W  ..
* 123 *
* 124 * POOL_VENT  =SCHEDULE THRU MAY 15 FULL_OFF_W
* 125 *                    THRU OCT  1 FULL_ON_W
* 126 *                    THRU DEC 31 FULL_OFF_W  ..
* 127 *
* 128 *
* 129 *
* 130 *                  $ CONSTRUCTION TYPES
* 131 *
* 132 *
* 133 *
* 134 * FLOORCON =CONSTRUCTION   U-VALUE =  0.010  ..
* 135 *
* 136 *  $ ADMINISTRATION ROOF CONSTRUCTION
* 137 * ADMROOF  =CONSTRUCTION   LAYERS = ASHR-17   ..
* 138 *
* 139 *  $ ROOF CONSTRUCTION
* 140 * ROOFCON  =CONSTRUCTION   U-VALUE =  0.060  ..
* 141 * WALLCON  =CONSTRUCTION   U-VALUE =  0.055  ..
* 142 * INWALL   =CONSTRUCTION   U-VALUE =  0.500  ..
* 143 * DOORCON  =CONSTRUCTION   U-VALUE =  0.400  ..
* 144 * GLSSWALL =CONSTRUCTION   U-VALUE =  1.130  ..
* 145 *
```

```
* 146 * G_TYPE1  =GLASS-TYPE    SHADING-COEF = 1.000
* 147 *                PANES = 1
* 148 *                GLASS-CONDUCTANCE =  1.130  ..
* 149 *
* 150 *
* 151 *
* 152 *
* 153 *             $ SPACE DESCRIPTION
* 154 *
* 155 * GYM      =SPACE    AREA = 10518.0  VOLUME = 399684.0
* 156 *             ZONE-TYPE = CONDITIONED  PEOPLE-SCHEDULE = PEOPLE_SCH
* 157 *             NUMBER-OF-PEOPLE = 100.0  PEOPLE-HEAT-GAIN = 1350.0
* 158 *             LIGHTING-TYPE = INCAND  LIGHTING-KW = 6.9
* 159 *             LIGHTING-SCHEDULE = LIGHT_SCHD
* 160 *             EQUIP-SCHEDULE = EQUIP_SCHD  INF-METHOD = AIR-CHANGE
* 161 *             AIR-CHANGES/HR = 0.05  INF-SCHEDULE = FULL_ON   ..
* 162 *
* 163 *          ROOF    HEIGHT = 96.0  WIDTH = 112.0  CONS = ROOFCON
* 164 *               TILT = 0   ..
* 165 *
* 166 *          U-W     HEIGHT = 96.0  WIDTH = 112.0  CONS = FLOORCON ..
* 167 *
* 168 *          E-W     HEIGHT = 38.0  WIDTH = 74.0  CONS = WALLCON
* 169 *               AZIMUTH = 0   ..
* 170 *
* 171 *           DOOR   HEIGHT = 7.5  WIDTH = 3.0  CONS = DOORCON
* 172 *               MULTIPLIER = 2.0   ..
* 173 *
* 174 *          E-W     HEIGHT = 38.0  WIDTH = 96.0  CONS = WALLCON
* 175 *               AZIMUTH = 90   ..
* 176 *
* 177 *          E-W     HEIGHT = 38.0  WIDTH = 74.0  CONS = WALLCON
* 178 *               AZIMUTH = 180   ..
* 179 *
* 180 *
* 181 * RCQT_&_WT  =SPACE    AREA = 2974.0  VOLUME = 47584.0
* 182 *             ZONE-TYPE = CONDITIONED  PEOPLE-SCHEDULE = PEOPLE_SCH
* 183 *             NUMBER-OF-PEOPLE = 40.0  PEOPLE-HEAT-GAIN = 1350.0
* 184 *             LIGHTING-TYPE = INCAND  LIGHTING-KW = 2.3
* 185 *             LIGHTING-SCHEDULE = LIGHT_SCHD
* 186 *             EQUIP-SCHEDULE = EQUIP_SCHD  INF-METHOD = AIR-CHANGE
* 187 *             AIR-CHANGES/HR = 0.05  INF-SCHEDULE = FULL_ON   ..
* 188 *
* 189 *          ROOF    HEIGHT = 76.5  WIDTH = 38.9  CONS = ROOFCON
* 190 *               TILT = 0   ..
* 191 *
* 192 *          U-W     HEIGHT = 76.5  WIDTH = 38.9  CONS = ROOFCON ..
* 193 *
* 194 *
* 195 * LOBBY&OFFC =SPACE    AREA = 10428.0  VOLUME = 83424.0
```

```
* 196 *              ZONE-TYPE = CONDITIONED  PEOPLE-SCHEDULE = PEOPLE_SCH
* 197 *              NUMBER-OF-PEOPLE = 100.0  PEOPLE-HEAT-GAIN = 800.0
* 198 *              LIGHTING-TYPE = REC-FLUOR-RV  LIGHTING-KW = 2.0
* 199 *              LIGHTING-SCHEDULE = LIGHT_SCHD
* 200 *              EQUIP-SCHEDULE = EQUIP_SCHD
* 201 *              SOURCE-SCHEDULE = DHW_SCHED  SOURCE-TYPE = HOT-WATER
* 202 *              SOURCE-BTU/HR = 16000.0  SOURCE-SENSIBLE = 0.3
* 203 *              SOURCE-LATENT = 0.1  INF-METHOD = AIR-CHANGE
* 204 *              AIR-CHANGES/HR = 0.05  INF-SCHEDULE = FULL_ON  ..
* 205 *
* 206 *           ROOF    HEIGHT = 100.0  WIDTH = 104.3  CONS = ROOFCON
* 207 *                TILT = 0  ..
* 208 *
* 209 *           U-W     HEIGHT = 100.0  WIDTH = 104.3  CONS = ROOFCON ..
* 210 *
* 211 *           E-W     HEIGHT = 10.0  WIDTH = 197.1  CONS = WALLCON
* 212 *                AZIMUTH = 0  ..
* 213 *
* 214 *            DOOR   HEIGHT = 7.5  WIDTH = 3.0  CONS = DOORCON
* 215 *                MULTIPLIER = 7.0  ..
* 216 *
* 217 *           E-W     HEIGHT = 10.0  WIDTH = 52.0  CONS = WALLCON
* 218 *                AZIMUTH = 90  ..
* 219 *
* 220 *           E-W     HEIGHT = 10.0  WIDTH = 80.8  CONS = WALLCON
* 221 *                AZIMUTH = 180  ..
* 222 *
* 223 *            DOOR   HEIGHT = 7.5  WIDTH = 3.0  CONS = DOORCON
* 224 *                MULTIPLIER = 4.0  ..
* 225 *
* 226 *           E-W     HEIGHT = 10.0  WIDTH = 70.4  CONS = WALLCON
* 227 *                AZIMUTH = 270  ..
* 228 *
* 229 *           I-W     HEIGHT = 10.0  WIDTH = 114.0  CONS = GLSSWALL
* 230 *                AZIMUTH = 270  NEXT-TO = POOL  ..
* 231 *
* 232 *
* 233 * POOL     =SPACE   AREA = 8237.0  VOLUME = 296532.0
* 234 *              TEMPERATURE = (80.)  ZONE-TYPE = CONDITIONED
* 235 *              PEOPLE-SCHEDULE = PEOPLE_SCH  NUMBER-OF-PEOPLE = 40.0
* 236 *              PEOPLE-HEAT-GAIN = 800.0  LIGHTING-TYPE = INCAND
* 237 *              LIGHTING-KW = 3.0  LIGHTING-SCHEDULE = LIGHT_SCHD
* 238 *              EQUIP-SCHEDULE = POOL_HEAT  EQUIPMENT-KW = 46.65
* 239 *              EQUIP-SENSIBLE = 0.5  FLOOR-WEIGHT = 200.
* 240 *              FURNITURE-TYPE = HEAVY  FURN-WEIGHT = 15.
* 241 *              INF-METHOD = AIR-CHANGE  AIR-CHANGES/HR = 2.0
* 242 *              INF-SCHEDULE = POOL_VENT  ..
* 243 *
* 244 *           ROOF    HEIGHT = 108.7  WIDTH = 109.8  CONS = ROOFCON
* 245 *                TILT = 0  ..
```

```
* 246 *
* 247 *          U-W     HEIGHT = 108.7  WIDTH = 109.8  CONS = FLOORCON ..
* 248 *
* 249 *          E-W     HEIGHT = 36.0  WIDTH = 109.8  CONS = WALLCON
* 250 *                  AZIMUTH = 180   ..
* 251 *
* 252 *          E-W     HEIGHT = 36.0  WIDTH = 108.7  CONS = WALLCON
* 253 *                  AZIMUTH = 270   ..
* 254 *
* 255 *           DOOR   HEIGHT = 7.5  WIDTH = 3.0  CONS = DOORCON
* 256 *                  MULTIPLIER = 2.0   ..
* 257 *
* 258 *
* 259 * END ..
* 260 * COMPUTE LOADS ..
* 261 *
* 262 * INPUT SYSTEMS ..
```

S D L P R O C E S S O R I N P U T D A T A

3/18/1995 16:32:24 SDL RUN 1

```
* 263 *
* 264 *
* 265 *            $----------------------------------------$
* 266 *            $ E Z - D O E  S Y S T E M S  I N P U T $
* 267 *            $----------------------------------------$
* 268 *
* 269 *              $ GENERAL PROJECT DATA
* 270 *
* 271 * TITLE  LINE-1 *    EMC     ENGINEERS     INC.    *
* 272 *       LINE-2 *EZDOE - ELITE SOFTWARE DEVELOPMENT INC*
* 273 *       LINE-3 *    DENVER,      CO      80227    *
* 274 *
* 275 *       LINE-4 *BUILDING 4305 PHYSICAL FITNESS CENTER   *
* 276 *       LINE-5 *BASE MODEL                          * ..
* 277 * ABORT           ERRORS ..
* 278 * DIAGNOSTIC       WARNINGS ..
* 279 * SYSTEMS-REPORT    SUMMARY=(SS-A,SS-C,SS-F,SS-H,SS-K)
* 280 *               HOURLY-DATA-SAVE = YES  ..
* 281 *
* 282 *               $ SCHEDULES
* 283 *
* 284 * FULL_ON_D  =DAY-SCHEDULE  (1,24) (1.) ..
* 285 * FULL_OFF_D =DAY-SCHEDULE  (1,24) (0.) ..
* 286 * HEAT1_ON_D =DAY-SCHEDULE  (1,24) (74.) ..
* 287 * HEAT2_ON_D =DAY-SCHEDULE  (1,24) (80.) ..
```

```
* 288 * FAN_WSB_D  =DAY-SCHEDULE  (1,5) (0.)
* 289 *                (6,19) (1.)
* 290 *                (20,24) (0.) ..
* 291 * HT68_WSB_D =DAY-SCHEDULE  (1,5) (50.)
* 292 *                (6,19) (74.)
* 293 *                (20,24) (50.) ..
* 294 * HEAT_50_D  =DAY-SCHEDULE  (1,24) (50.) ..
* 295 *
* 296 * FULL_ON_W  =WEEK-SCHEDULE  (ALL) FULL_ON_D  ..
* 297 *
* 298 * FULL_OFF_W =WEEK-SCHEDULE  (ALL) FULL_OFF_D  ..
* 299 *
* 300 * HEAT1_ON_W =WEEK-SCHEDULE  (ALL) HEAT1_ON_D  ..
* 301 *
* 302 * HEAT2_ON_W =WEEK-SCHEDULE  (ALL) HEAT2_ON_D  ..
* 303 *
* 304 * FAN_WSB_W  =WEEK-SCHEDULE  (WD)  FAN_WSB_D
* 305 *                (SAT) FULL_OFF_D
* 306 *                (SUN) FULL_OFF_D
* 307 *                (HOL) FAN_WSB_D ..
* 308 *
* 309 * HT68_WSB_W =WEEK-SCHEDULE  (WD)  HT68_WSB_D
* 310 *                (SAT) FULL_OFF_D
* 311 *                (SUN) FULL_OFF_D
* 312 *                (HOL) HT68_WSB_D ..
* 313 *
* 314 *
* 315 * $ FULL ON SCHEDULE
* 316 * FULL_ON    =SCHEDULE THRU DEC 31 FULL_ON_W  ..
* 317 *
* 318 * $ FULL OFF SCHEDULE
* 319 * FULL_OFF   =SCHEDULE THRU DEC 31 FULL_OFF_W  ..
* 320 *
* 321 * $ HEAT SCHEDULE, 68 DEG
* 322 * HEAT68_ON  =SCHEDULE THRU DEC 31 HEAT1_ON_W  ..
* 323 *
* 324 * $ HEAT SCHEDULE 80 DEG
* 325 * HEAT80_ON  =SCHEDULE THRU DEC 31 HEAT2_ON_W  ..
* 326 *
* 327 * $ HEATING HOURS SCHEDULE
* 328 * HEAT_HRS   =SCHEDULE THRU DEC 31 FULL_ON_W  ..
* 329 *
* 330 * $ FAN SCHED W SET BACK
* 331 * FAN_W_SB   =SCHEDULE THRU DEC 31 FAN_WSB_W  ..
* 332 *
* 333 * $ HEAT SCHD WITH SET BACK
* 334 * HT68_W_SB  =SCHEDULE THRU DEC 31 HT68_WSB_W  ..
* 335 *
* 336 *
* 337 *
```

```
* 338 *              $ ZONE DESCRIPTION
* 339 *
* 340 * GYM       =ZONE    DESIGN-HEAT-T = 68.0  DESIGN-COOL-T = 80.0
* 341 *              HEAT-TEMP-SCH = HEAT68_ON  ZONE-TYPE = CONDITIONED
* 342 *              THERMOSTAT-TYPE = PROPORTIONAL
* 343 *              BASEBOARD-CTRL = THERMOSTATIC  ASSIGNED-CFM = 28950.
* 344 *              OUTSIDE-AIR-CFM = 4343.  SIZING-OPTION = FROM-LOADS
* 345 *              RATED-CFM = 28950.0  MIN-CFM-RATIO = 1.0
* 346 *              EXHAUST-CFM = 4343.0  HEATING-CAPACITY = -625320.0  ..
* 347 *
* 348 * RCQT_&_WT  =ZONE    DESIGN-HEAT-T = 68.0  DESIGN-COOL-T = 80.0
* 349 *              HEAT-TEMP-SCH = HEAT68_ON  ZONE-TYPE = CONDITIONED
* 350 *              THERMOSTAT-TYPE = PROPORTIONAL
* 351 *              BASEBOARD-CTRL = THERMOSTATIC  ASSIGNED-CFM = 9280.
* 352 *              OUTSIDE-AIR-CFM = 1392.  SIZING-OPTION = FROM-LOADS
* 353 *              RATED-CFM = 9280.0  MIN-CFM-RATIO = 1.0
* 354 *              EXHAUST-CFM = 1392.0  HEATING-CAPACITY =.-159516.0  ..
* 355 *
* 356 * LOBBY&OFFC =ZONE    DESIGN-HEAT-T = 68.0  DESIGN-COOL-T = 80.0
* 357 *              HEAT-TEMP-SCH = HEAT68_ON  ZONE-TYPE = CONDITIONED
* 358 *              THERMOSTAT-TYPE = PROPORTIONAL
* 359 *              BASEBOARD-CTRL = THERMOSTATIC
* 360 *              BASEBOARD-RATING = -44300.  ASSIGNED-CFM = 6595.
* 361 *              OUTSIDE-AIR-CFM = 1350.  SIZING-OPTION = FROM-LOADS
* 362 *              RATED-CFM = 6595.0  MIN-CFM-RATIO = 1.0
* 363 *              EXHAUST-CFM = 1350.0  HEATING-CAPACITY = -280247.0  ..
* 364 *
* 365 * POOL      =ZONE    DESIGN-HEAT-T = 80.0  DESIGN-COOL-T = 90.0
* 366 *              HEAT-TEMP-SCH = HEAT80_ON  ZONE-TYPE = CONDITIONED
* 367 *              THERMOSTAT-TYPE = PROPORTIONAL
* 368 *              BASEBOARD-CTRL = THERMOSTATIC  ASSIGNED-CFM = 24620.
* 369 *              OUTSIDE-AIR-CFM = 1585.  SIZING-OPTION = FROM-LOADS
* 370 *              RATED-CFM = 24620.0  MIN-CFM-RATIO = 1.0
* 371 *              EXHAUST-CFM = 1585.0  HEATING-CAPACITY = -327413.0  ..
* 372 *
* 373 *
* 374 *              $ SYSTEM DESCRIPTION
* 375 *
* 376 * HV_1      =SYSTEM    SYSTEM-TYPE = HVSYS
* 377 *                MAX-SUPPLY-T = 135.0  HEATING-SCHEDULE = HEAT68_ON
* 378 *                MIN-HUMIDITY = 30.0  ECONO-LIMIT-T = 65.0
* 379 *                ECONO-LOW-LIMIT = 55.0  HEAT-CONTROL = COLDEST
* 380 *                SUPPLY-CFM = 38230.  RETURN-CFM = 32400.
* 381 *                RATED-CFM = 38230.  MIN-OUTSIDE-AIR = 0.15
* 382 *                SUPPLY-DELTA-T = 2.4  SUPPLY-KW = 0.00078
* 383 *                MOTOR-PLACEMENT = OUTSIDE-AIRFLOW
* 384 *                NIGHT-CYCLE-CTRL = CYCLE-ON-ANY  NIGHT-VENT-DT = 0.0
* 385 *                HEATING-CAPACITY = -784836.  FURNACE-AUX = 0.
* 386 *                RETURN-AIR-PATH = DUCT
* 387 *                ZONE-NAMES = (GYM, RCQT_&_WT)  ..
```

```
* 388 *
* 389 * HV_2     =SYSTEM    SYSTEM-TYPE = HVSYS
* 390 *              MAX-SUPPLY-T = 120.0  HEATING-SCHEDULE = HEAT80_ON
* 391 *              MIN-HUMIDITY = 30.0  ECONO-LIMIT-T = 65.0
* 392 *              ECONO-LOW-LIMIT = 55.0  HEAT-CONTROL = COLDEST
* 393 *              SUPPLY-CFM = 24620.  RETURN-CFM = 23036.
* 394 *              RATED-CFM = 24620.  MIN-OUTSIDE-AIR = 0.06
* 395 *              FAN-SCHEDULE = HEAT_HRS  SUPPLY-DELTA-T = 2.4
* 396 *              SUPPLY-KW = 0.00039
* 397 *              MOTOR-PLACEMENT = OUTSIDE-AIRFLOW
* 398 *              NIGHT-CYCLE-CTRL = STAY-OFF  NIGHT-VENT-DT = 0.0
* 399 *              HEATING-CAPACITY = -327413.  FURNACE-AUX = 0.
* 400 *              ZONE-NAMES = (POOL)  ..
* 401 *
* 402 * HV_3     =SYSTEM    SYSTEM-TYPE = HVSYS
* 403 *              MAX-SUPPLY-T = 135.0  HEATING-SCHEDULE = HEAT68_ON
* 404 *              MIN-HUMIDITY = 30.0  ECONO-LIMIT-T = 65.0
* 405 *              ECONO-LOW-LIMIT = 55.0  HEAT-CONTROL = COLDEST
* 406 *              SUPPLY-CFM = 6595.  RETURN-CFM = 5245.
* 407 *              RATED-CFM = 6595.  MIN-OUTSIDE-AIR = 0.21
* 408 *              SUPPLY-DELTA-T = 2.4  SUPPLY-KW = 0.00078
* 409 *              NIGHT-CYCLE-CTRL = CYCLE-ON-ANY  NIGHT-VENT-DT = 0.0
* 410 *              HEATING-CAPACITY = -280247.  FURNACE-AUX = 0.
* 411 *              ZONE-NAMES = (LOBBY&OFFC)  ..
* 412 *
* 413 * END  ..
* 414 * COMPUTE SYSTEMS  ..
* 415 *
* 416 * INPUT PLANT  ..

        PDL PROCESSOR INPUT DATA

            3/18/1995   16:32:24  PDL RUN  1




* 417 *
* 418 *
* 419 *            $-----------------------------------$
* 420 *            $EZ-DOE PLANTS INPUT$
* 421 *            $-----------------------------------$
* 422 *
* 423 *              $ GENERAL PROJECT DATA
* 424 *
* 425 * TITLE  LINE-1 *   EMC     ENGINEERS     INC.    *
* 426 *       LINE-2 *EZDOE - ELITE SOFTWARE DEVELOPMENT INC*
* 427 *       LINE-3 *    DENVER,      CO .   80227    *
* 428 *
* 429 *       LINE-4 *BUILDING 4305 PHYSICAL FITNESS CENTER   *
```

```
* 430 *      LINE-5 *BASE MODEL                    * ..
* 431 *
* 432 * ABORT          ERRORS ..
* 433 * DIAGNOSTIC      WARNINGS ..
* 434 * PLANT-REPORT     SUMMARY=(PS-A,PS-B,BEPS)
* 435 *
* 436 *              HOURLY-DATA-SAVE = YES ..
* 437 *
* 438 *              $ SCHEDULES
* 439 *
* 440 *
* 441 *
* 442 *
* 443 *
* 444 *              $ EQUIPMENT DESCRIPTION
* 445 *
* 446 * B1_&_B2   =PLANT-EQUIPMENT   TYPE = HW-BOILER
* 447 *              SIZE = 1.6  INSTALLED-NUMBER = 2
* 448 *              MAX-NUMBER-AVAIL = 2 ..
* 449 *
* 450 * DHW      =PLANT-EQUIPMENT   TYPE = DHW-HEATER
* 451 *              SIZE = 0.4  INSTALLED-NUMBER = 2
* 452 *              MAX-NUMBER-AVAIL = 2 ..
* 453 *
* 454 * PLANT-PARAMETERS     MAKEUP-WTR-T = 180.  CCIRC-HEAD = 63.0
* 455 *              HCIRC-DESIGN-T-DROP = 20.0   ..
* 456 *
* 457 *
* 458 * ENERGY-RESOURCE      RESOURCE = ELECTRICITY ..
* 459 * ENERGY-RESOURCE      RESOURCE = FUEL-OIL ..
* 460 * ENERGY-RESOURCE      RESOURCE = NATURAL-GAS ..
* 461 *
* 462 *
* 463 *
* 464 * END ..
* 465 * COMPUTE PLANT ..
* 466 * STOP ..
```

ENERGY TYPE IN SITE MBTU-	ELECTRICITY	FUEL-OIL	NATURAL-GAS
CATEGORY OF USE			
SPACE HEAT	174.10	4012.62	0.00
SPACE COOL	0.00	0.00	0.00
HVAC AUX	1385.29	0.00	0.00
DOM HOT WTR	0.00	0.00	250.49
AUX SOLAR	0.00	0.00	0.00
LIGHTS	123.73	0.00	0.00
VERT TRANS	0.00	0.00	0.00
MISC EQUIP	1394.84	0.00	0.00
TOTAL	3077.96	4012.62	250.49

TOTAL SITE ENERGY 7341.03 MBTU 228.3 KBTU/SQFT-YR GROSS-AREA 228.3 KBTU/SQFT-YR NET-AREA
TOTAL SOURCE ENERGY 13506.15 MBTU 420.0 KBTU/SQFT-YR GROSS-AREA 420.0 KBTU/SQFT-YR NET-AREA

PERCENT OF HOURS ANY SYSTEM ZONE OUTSIDE OF THROTTLING RANGE = 0.0
PERCENT OF HOURS ANY PLANT LOAD NOT SATISFIED = 0.0

NOTE ELECTRICITY AND/OR FUEL USED TO GENERATE ELECTRICITY IS APPORTIONED BASED ON THE YEARLY DEMAND. ALL OTHER ENERGY TYPES ARE APPORTIONED HOURLY.

EMC ENGINEERS INC. EZDOE - ELITE SOFTWARE DEVELOPMENT INC DOE-2.1D 3/19/1995 11:52:15 PDL RUN 1
DENVER, CO 80227 BUILDING 2065, AF OPS BASE MODEL
REPORT- PS-B MONTHLY PEAK AND TOTAL ENERGY USE WEATHER FILE- MASSENA, NY

MO	UTILITY- ELECTRICITY		FUEL-OIL	NATURAL-GAS
JAN	TOTAL(MBTU)	272.354	729.426	21.116
	PEAK(KBTU)	389.439	1544.666	46.013
	DY/HR	31/14	26/ 6	31/17
FEB	TOTAL(MBTU)	245.733	577.441	19.223
	PEAK(KBTU)	389.439	1341.365	46.013
	DY/HR	28/10	17/ 4	28/17
MAR	TOTAL(MBTU)	270.843	547.891	21.408
	PEAK(KBTU)	389.439	1398.541	46.013
	DY/HR	28/11	9/ 5	31/17
APR	TOTAL(MBTU)	254.024	296.065	20.534
	PEAK(KBTU)	378.406	1060.423	46.013
	DY/HR	1/10	3/ 5	29/17
MAY	TOTAL(MBTU)	259.036	246	21.262
	PEAK(KBTU)	389.439	1336.328	46.013
	DY/HR	20/14	16/ 3	31/17
JUN	TOTAL(MBTU)	242.699	81.219	20.68
	PEAK(KBTU)	386.103	822.919	46.013
	DY/HR	7/14	7/ 4	30/17
JUL	TOTAL(MBTU)	248.275	58.279	21.116
	PEAK(KBTU)	367.063	626.037	46.013
	DY/HR	8/10	24/14	29/17
AUG	TOTAL(MBTU)	249.921	71.329	21.408
	PEAK(KBTU)	378.107	1366.807	46.013
	DY/HR	24/10	6/24	31/17
SEP	TOTAL(MBTU)	248.83	204.421	20.68
	PEAK(KBTU)	389.439	1095.54	46.013
	DY/HR	23/14	23/ 4	30/17
OCT	TOTAL(MBTU)	258.234	218.067	21.116
	PEAK(KBTU)	377.144	846.511	46.013
	DY/HR	27/11	21/ 6	31/17
NOV	TOTAL(MBTU)	257.287	378.422	20.68
	PEAK(KBTU)	389.439	1169.195	46.013
	DY/HR	28/10	28/ 4	30/17

DEC	TOTAL(MBTU)	270.702	604.051	21.262
	PEAK(KBTU)	389.439	1384.531	46.013
	DY/HR	30/14	31/ 4	30/17
	ONE YEAR	3077.937	4012.611	250.486
	USE/PEAK	389.439	1544.666	46.013

COMPUTER SIMULATIONS
BUILDING 4305

RUN 1 - SCHEDULE START/STOP AND NIGHT SETBACK

```
*   3 *
*   4 *
*   5 *                  $----------------------------------$
*   6 *                  $ E Z - D O E   L O A D S  I N P U T $
*   7 *                  $----------------------------------$
*   8 *
*   9 *                     $ GENERAL PROJECT DATA
*  10 *
*  11 * TITLE  LINE-1 *     EMC      ENGINEERS      INC.     *
*  12 *        LINE-2 *EZDOE - ELITE SOFTWARE DEVELOPMENT INC*
*  13 *        LINE-3 *     DENVER,       CO       80227     *
*  14 *
*  15 *        LINE-4 *BUILDING 4305 PHYSICAL FITNESS CENTER   *
*  16 *        LINE-5 *MODEL WITH SET BACK                     * ..
*  17 *
*  18 * ABORT              ERRORS  ..
*  19 * DIAGNOSTIC         WARNINGS ..
*  20 * LOADS-REPORT       HOURLY-DATA-SAVE = YES  ..
*  21 * BUILDING-LOCATION  HOLIDAY = NO
*  22 *                    X-REF = 0.0
*  23 *                    Y-REF = 0.0  ..
*  24 * RUN-PERIOD         JAN 1 1994 THRU DEC 31 1994  ..
*  25 *
*  26 *
*  27 *                     $ SCHEDULES
*  28 *
*  29 * FULL_ON_D  =DAY-SCHEDULE  (1,24) (1.) ..
*  30 *
*  31 * FULL_OFF_D =DAY-SCHEDULE  (1,24) (0.) ..
*  32 *
*  33 * LIGHT_ON_D =DAY-SCHEDULE  (1,5) (0.1)
*  34 *                           (6,7) (0.35)
*  35 *                           (8,9) (0.5,0.6)
*  36 *                           (10,11) (0.75)
*  37 *                           (12) (0.5)
*  38 *                           (13,14) (0.75)
*  39 *                           (15) (0.5)
*  40 *                           (16,18) (0.4)
*  41 *                           (19,20) (0.3,0.23)
*  42 *                           (21,24) (0.1) ..
*  43 *
*  44 * LT_ON_WKND =DAY-SCHEDULE  (1,6) (0.23)
*  45 *                           (7,19) (0.07)
*  46 *                           (20,24) (0.23) ..
*  47 *
*  48 * PEOPLE_D   =DAY-SCHEDULE  (1,5) (0.)
*  49 *                           (6,7) (0.1,0.5)
*  50 *                           (8,11) (1.)
*  51 *                           (12) (0.8)
*  52 *                           (13,16) (1.)
*  53 *                           (17,20) (0.5)
*  54 *                           (21,24) (0.) ..
*  55 *
*  56 * EQUIP_ON_D =DAY-SCHEDULE  (1,5) (0.05)
*  57 *                           (6,7) (0.1,0.2)
*  58 *                           (8,9) (0.3)
*  59 *                           (10,11) (0.4,0.7)
*  60 *                           (12,13) (0.4)
*  61 *                           (14,15) (0.8)
*  62 *                           (16,18) (0.7,0.3,0.1)
*  63 *                           (19,24) (0.05) ..
*  64 *
*  65 * SHOP_INF_D =DAY-SCHEDULE  (1,7) (0.1)
*  66 *                           (8) (1.)
*  67 *                           (9,16) (0.1)
*  68 *                           (17) (1.)
*  69 *                           (18,24) (0.1) ..
*  70 *
*  71 * DHW_D      =DAY-SCHEDULE  (1,5) (0.)
*  72 *                           (6,10) (0.1,0.3,0.4,0.5,0.15)
*  73 *                           (11) (0.25)
*  74 *                           (12,13) (0.7)
*  75 *                           (14,15) (0.5)
*  76 *                           (16,20) (0.8,1.,0.4,0.3,0.1)
*  77 *                           (21,24) (0.) ..
*  78 *
*  79 *
*  80 * FULL_ON_W  =WEEK-SCHEDULE  (ALL) FULL_ON_D  ..
*  81 *
*  82 * FULL_OFF_W =WEEK-SCHEDULE  (ALL) FULL_OFF_D  ..
*  83 *
*  84 * LIGHT_ON_W =WEEK-SCHEDULE  (WD)  LIGHT_ON_D
*  85 *                           (WEH) LT_ON_WKND  ..
*  86 *
*  87 * PEOPLE_W   =WEEK-SCHEDULE  (WD)  PEOPLE_D
*  88 *                           (WEH) FULL_OFF_D  ..
*  89 *
*  90 * EQUIP_W    =WEEK-SCHEDULE  (WD)  EQUIP_ON_D
*  91 *                           (WEH) FULL_OFF_D  ..
*  92 *
*  93 * SHOP_IFL_W =WEEK-SCHEDULE  (WD)  SHOP_INF_D
*  94 *                           (WEH) FULL_OFF_D  ..
*  95 *
*  96 * DHW_W      =WEEK-SCHEDULE  (WD)  DHW_D
*  97 *                           (WEH) FULL_OFF_D  ..
*  98 *
*  99 *
* 100 * $ FULL ON SCHEDULE
* 101 * FULL_ON    =SCHEDULE THRU DEC 31 FULL_ON_W  ..
* 102 *
```

```
* 103 * $ FULL OFF SCHEDULE
* 104 * FULL_OFF   =SCHEDULE THRU DEC 31 FULL_OFF_W  ..
* 105 *
* 106 * $ LIGHTING SCHEDULE
* 107 * LIGHT_SCHD =SCHEDULE THRU DEC 31 LIGHT_ON_W  ..
* 108 *
* 109 * $ OCCUPANCY SCHEDULE
* 110 * PEOPLE_SCH =SCHEDULE THRU DEC 31 PEOPLE_W  ..
* 111 *
* 112 * $ EQUIPMENT SCHEDULE
* 113 * EQUIP_SCHD =SCHEDULE THRU DEC 31 EQUIP_W  ..
* 114 *
* 115 * $ SHOP INFILTRATION SCHED
* 116 * SHOP_INFIL =SCHEDULE THRU DEC 31 SHOP_IFL_W  ..
* 117 *
* 118 * $ HOURS POOL IS HEATED
* 119 * POOL_HEAT  =SCHEDULE THRU DEC 31 FULL_ON_W  ..
* 120 *
* 121 * $ DHW SCHEDULE
* 122 * DHW_SCHED  =SCHEDULE THRU DEC 31 DHW_W  ..
* 123 *
* 124 * POOL_VENT  =SCHEDULE THRU MAY 15 FULL_OFF_W
* 125 *                      THRU OCT  1 FULL_ON_W
* 126 *                      THRU DEC 31 FULL_OFF_W  ..
* 127 *
* 128 *
* 129 *
* 130 *                    $ CONSTRUCTION TYPES
* 131 *
* 132 *
* 133 *
* 134 * FLOORCON =CONSTRUCTION   U-VALUE =  0.010  ..
* 135 *
* 136 *  $ ADMINISTRATION ROOF CONSTRUCTION
* 137 * ADMROOF  =CONSTRUCTION   LAYERS = ASHR-17   ..
* 138 *
* 139 *  $ ROOF CONSTRUCTION
* 140 * ROOFCON  =CONSTRUCTION   U-VALUE =  0.060  ..
* 141 * WALLCON  =CONSTRUCTION   U-VALUE =  0.055  ..
* 142 * INWALL   =CONSTRUCTION   U-VALUE =  0.500  ..
* 143 * DOORCON  =CONSTRUCTION   U-VALUE =  0.400  ..
* 144 * GLSSWALL =CONSTRUCTION   U-VALUE =  1.130  ..
* 145 *
* 146 * G_TYPE1  =GLASS-TYPE     SHADING-COEF = 1.000
* 147 *                          PANES = 1
* 148 *                          GLASS-CONDUCTANCE =  1.130  ..
* 149 *
* 150 *
* 151 *
* 152 *
* 153 *                    $ SPACE DESCRIPTION
* 154 *
* 155 * GYM         =SPACE    AREA = 10518.0  VOLUME = 399684.0
* 156 *                       ZONE-TYPE = CONDITIONED  PEOPLE-SCHEDULE = PEOPLE_SCH
* 157 *                       NUMBER-OF-PEOPLE = 100.0  PEOPLE-HEAT-GAIN = 1350.0
* 158 *                       LIGHTING-TYPE = INCAND  LIGHTING-KW = 6.9
* 159 *                       LIGHTING-SCHEDULE = LIGHT_SCHD
* 160 *                       EQUIP-SCHEDULE = EQUIP_SCHD  INF-METHOD = AIR-CHANGE
* 161 *                       AIR-CHANGES/HR = 0.05  INF-SCHEDULE = FULL_ON   ..
* 162 *
* 163 *               ROOF     HEIGHT = 96.0  WIDTH = 112.0  CONS = ROOFCON
* 164 *                        TILT = 0   ..
* 165 *
* 166 *              U-W      HEIGHT = 96.0  WIDTH = 112.0  CONS = FLOORCON ..
* 167 *
* 168 *               E-W      HEIGHT = 38.0  WIDTH = 74.0  CONS = WALLCON
* 169 *                        AZIMUTH = 0   ..
* 170 *
* 171 *                 DOOR   HEIGHT = 7.5  WIDTH = 3.0  CONS = DOORCON
* 172 *                        MULTIPLIER = 2.0   ..
* 173 *
* 174 *               E-W      HEIGHT = 38.0  WIDTH = 96.0  CONS = WALLCON
* 175 *                        AZIMUTH = 90   ..
* 176 *
* 177 *               E-W      HEIGHT = 38.0  WIDTH = 74.0  CONS = WALLCON
* 178 *                        AZIMUTH = 180   ..
* 179 *
* 180 *
* 181 * RCQT_&_WT  =SPACE    AREA = 2974.0  VOLUME = 47584.0
* 182 *                       ZONE-TYPE = CONDITIONED  PEOPLE-SCHEDULE = PEOPLE_SCH
* 183 *                       NUMBER-OF-PEOPLE = 40.0  PEOPLE-HEAT-GAIN = 1350.0
* 184 *                       LIGHTING-TYPE = INCAND  LIGHTING-KW = 2.3
* 185 *                       LIGHTING-SCHEDULE = LIGHT_SCHD
* 186 *                       EQUIP-SCHEDULE = EQUIP_SCHD  INF-METHOD = AIR-CHANGE
* 187 *                       AIR-CHANGES/HR = 0.05  INF-SCHEDULE = FULL_ON   ..
* 188 *
* 189 *               ROOF     HEIGHT = 76.5  WIDTH = 38.9  CONS = ROOFCON
* 190 *                        TILT = 0   ..
* 191 *
* 192 *              U-W      HEIGHT = 76.5  WIDTH = 38.9  CONS = ROOFCON ..
* 193 *
* 194 *
* 195 * LOBBY&OFFC =SPACE    AREA = 10428.0  VOLUME = 83424.0
* 196 *                       ZONE-TYPE = CONDITIONED  PEOPLE-SCHEDULE = PEOPLE_SCH
* 197 *                       NUMBER-OF-PEOPLE = 100.0  PEOPLE-HEAT-GAIN = 800.0
* 198 *                       LIGHTING-TYPE = REC-FLUOR-RV  LIGHTING-KW = 2.0
* 199 *                       LIGHTING-SCHEDULE = LIGHT_SCHD
* 200 *                       EQUIP-SCHEDULE = EQUIP_SCHD
* 201 *                       SOURCE-SCHEDULE = DHW_SCHED  SOURCE-TYPE = HOT-WATER
* 202 *                       SOURCE-BTU/HR = 16000.0  SOURCE-SENSIBLE = 0.3
* 203 *                       SOURCE-LATENT = 0.1  INF-METHOD = AIR-CHANGE
* 204 *                       AIR-CHANGES/HR = 0.05  INF-SCHEDULE = FULL_ON   ..
* 205 *
* 206 *               ROOF     HEIGHT = 100.0  WIDTH = 104.3  CONS = ROOFCON
* 207 *                        TILT = 0   ..
* 208 *
* 209 *              U-W      HEIGHT = 100.0  WIDTH = 104.3  CONS = ROOFCON ..
* 210 *
```

```
* 211 *                E-W       HEIGHT = 10.0  WIDTH = 197.1  CONS = WALLCON
* 212 *                          AZIMUTH = 0   ..
* 213 *
* 214 *                  DOOR    HEIGHT = 7.5  WIDTH = 3.0  CONS = DOORCON
* 215 *                          MULTIPLIER = 7.0   ..
* 216 *
* 217 *                E-W       HEIGHT = 10.0  WIDTH = 52.0  CONS = WALLCON
* 218 *                          AZIMUTH = 90   ..
* 219 *
* 220 *                E-W       HEIGHT = 10.0  WIDTH = 80.8  CONS = WALLCON
* 221 *                          AZIMUTH = 180   ..
* 222 *
* 223 *                  DOOR    HEIGHT = 7.5  WIDTH = 3.0  CONS = DOORCON
* 224 *                          MULTIPLIER = 4.0   ..
* 225 *
* 226 *                E-W       HEIGHT = 10.0  WIDTH = 70.4  CONS = WALLCON
* 227 *                          AZIMUTH = 270   ..
* 228 *
* 229 *                I-W       HEIGHT = 10.0  WIDTH = 114.0  CONS = GLSSWALL
* 230 *                          AZIMUTH = 270  NEXT-TO = POOL   ..
* 231 *
* 232 *
* 233 * POOL        =SPACE     AREA = 8237.0  VOLUME = 296532.0
* 234 *                        TEMPERATURE = (80.)  ZONE-TYPE = CONDITIONED
* 235 *                        PEOPLE-SCHEDULE = PEOPLE_SCH  NUMBER-OF-PEOPLE = 40.0
* 236 *                        PEOPLE-HEAT-GAIN = 800.0  LIGHTING-TYPE = INCAND
* 237 *                        LIGHTING-KW = 3.0  LIGHTING-SCHEDULE = LIGHT_SCHD
* 238 *                        EQUIP-SCHEDULE = POOL_HEAT  EQUIPMENT-KW = 46.65
* 239 *                        EQUIP-SENSIBLE = 0.5  FLOOR-WEIGHT = 200.
* 240 *                        FURNITURE-TYPE = HEAVY  FURN-WEIGHT = 15.
* 241 *                        INF-METHOD = AIR-CHANGE  AIR-CHANGES/HR = 2.0
* 242 *                        INF-SCHEDULE = POOL_VENT   ..
* 243 *
* 244 *                  ROOF    HEIGHT = 108.7  WIDTH = 109.8  CONS = ROOFCON
* 245 *                          TILT = 0   ..
* 246 *
* 247 *                U-W      HEIGHT = 108.7  WIDTH = 109.8  CONS = FLOORCON ..
* 248 *
* 249 *                  E-W     HEIGHT = 36.0  WIDTH = 109.8  CONS = WALLCON
* 250 *                          AZIMUTH = 180   ..
* 251 *
* 252 *                  E-W     HEIGHT = 36.0  WIDTH = 108.7  CONS = WALLCON
* 253 *                          AZIMUTH = 270   ..
* 254 *
* 255 *                    DOOR  HEIGHT = 7.5  WIDTH = 3.0  CONS = DOORCON
* 256 *                          MULTIPLIER = 2.0   ..
* 257 *
* 258 *
* 259 * END  ..
* 260 * COMPUTE LOADS  ..
* 261 *
* 262 * INPUT SYSTEMS  ..
```

```
* 263 *
* 264 *
* 265 *                 $---------------------------------------$
* 266 *                 $ E Z - D O E  S Y S T E M S  I N P U T $
* 267 *                 $---------------------------------------$
* 268 *
* 269 *                    $ GENERAL PROJECT DATA
* 270 *
* 271 * TITLE  LINE-1 *     EMC      ENGINEERS      INC.     *
* 272 *        LINE-2 *EZDOE - ELITE SOFTWARE DEVELOPMENT INC*
* 273 *        LINE-3 *     DENVER,       CO       80227     *
* 274 *
* 275 *        LINE-4 *BUILDING 4305 PHYSICAL FITNESS CENTER   *
* 276 *        LINE-5 *MODEL WITH SET BACK                      * ..
* 277 * ABORT              ERRORS  ..
* 278 * DIAGNOSTIC         WARNINGS ..
* 279 * SYSTEMS-REPORT     SUMMARY=(SS-A,SS-B,SS-C)
* 280 *                    HOURLY-DATA-SAVE = YES  ..
* 281 *
* 282 *                    $ SCHEDULES
* 283 *
* 284 * FULL_ON_D  =DAY-SCHEDULE  (1,24) (1.) ..
* 285 * FULL_OFF_D =DAY-SCHEDULE  (1,24) (0.) ..
* 286 * HEAT1_ON_D =DAY-SCHEDULE  (1,24) (74.) ..
* 287 * HEAT2_ON_D =DAY-SCHEDULE  (1,24) (80.) ..
* 288 * FAN_WSB_D  =DAY-SCHEDULE  (1,5) (0.)
* 289 *                           (6,19) (1.)
* 290 *                           (20,24) (0.) ..
* 291 * HT68_WSB_D =DAY-SCHEDULE  (1,5) (50.)
* 292 *                           (6,19) (74.)
* 293 *                           (20,24) (50.) ..
* 294 * HEAT_50_D  =DAY-SCHEDULE  (1,24) (50.) ..
* 295 *
* 296 * FULL_ON_W  =WEEK-SCHEDULE  (ALL) FULL_ON_D  ..
* 297 *
* 298 * FULL_OFF_W =WEEK-SCHEDULE  (ALL) FULL_OFF_D  ..
* 299 *
* 300 * HEAT1_ON_W =WEEK-SCHEDULE  (ALL) HEAT1_ON_D  ..
* 301 *
* 302 * HEAT2_ON_W =WEEK-SCHEDULE  (ALL) HEAT2_ON_D  ..
* 303 *
* 304 * FAN_WSB_W  =WEEK-SCHEDULE  (WD)  FAN_WSB_D
* 305 *                           (SAT) FULL_OFF_D
* 306 *                           (SUN) FULL_OFF_D
* 307 *                           (HOL) FAN_WSB_D ..
* 308 *
* 309 * HT68_WSB_W =WEEK-SCHEDULE  (WD)  HT68_WSB_D
* 310 *                           (SAT) FULL_OFF_D
* 311 *                           (SUN) FULL_OFF_D
* 312 *                           (HOL) HT68_WSB_D ..
* 313 *
* 314 *
* 315 * $ FULL ON SCHEDULE
* 316 * FULL_ON    =SCHEDULE THRU DEC 31 FULL_ON_W  ..
* 317 *
* 318 * $ FULL OFF SCHEDULE
* 319 * FULL_OFF   =SCHEDULE THRU DEC 31 FULL_OFF_W  ..
* 320 *
* 321 * $ HEAT SCHEDULE, 68 DEG
* 322 * HEAT68_ON  =SCHEDULE THRU DEC 31 HEAT1_ON_W  ..
* 323 *
* 324 * $ HEAT SCHEDULE 80 DEG
* 325 * HEAT80_ON  =SCHEDULE THRU DEC 31 HEAT2_ON_W  ..
* 326 *
* 327 * $ HEATING HOURS SCHEDULE
* 328 * HEAT_HRS   =SCHEDULE THRU DEC 31 FULL_ON_W  ..
* 329 *
* 330 * $ FAN SCHED W SET BACK
* 331 * FAN_W_SB   =SCHEDULE THRU DEC 31 FAN_WSB_W  ..
* 332 *
* 333 * $ HEAT SCHD WITH SET BACK
* 334 * HT68_W_SB  =SCHEDULE THRU DEC 31 HT68_WSB_W  ..
* 335 *
* 336 *
* 337 *
* 338 *                    $ ZONE DESCRIPTION
* 339 *
* 340 * GYM         =ZONE    DESIGN-HEAT-T = 68.0  DESIGN-COOL-T = 80.0
* 341 *                      HEAT-TEMP-SCH = HT68_W_SB  ZONE-TYPE = CONDITIONED
* 342 *                      THERMOSTAT-TYPE = PROPORTIONAL
* 343 *                      BASEBOARD-CTRL = THERMOSTATIC  ASSIGNED-CFM = 28950.
* 344 *                      OUTSIDE-AIR-CFM = 4343.  SIZING-OPTION = FROM-LOADS
* 345 *                      RATED-CFM = 28950.0  MIN-CFM-RATIO = 1.0
* 346 *                      EXHAUST-CFM = 4343.0  HEATING-CAPACITY = -625320.0   ..
* 347 *
* 348 * RCQT_&_WT  =ZONE    DESIGN-HEAT-T = 68.0  DESIGN-COOL-T = 80.0
* 349 *                      HEAT-TEMP-SCH = HT68_W_SB  ZONE-TYPE = CONDITIONED
* 350 *                      THERMOSTAT-TYPE = PROPORTIONAL
* 351 *                      BASEBOARD-CTRL = THERMOSTATIC  ASSIGNED-CFM = 9280.
* 352 *                      OUTSIDE-AIR-CFM = 1392.  SIZING-OPTION = FROM-LOADS
* 353 *                      RATED-CFM = 9280.0  MIN-CFM-RATIO = 1.0
* 354 *                      EXHAUST-CFM = 1392.0  HEATING-CAPACITY = -159516.0   ..
* 355 *
* 356 * LOBBY&OFFC =ZONE    DESIGN-HEAT-T = 68.0  DESIGN-COOL-T = 80.0
* 357 *                      HEAT-TEMP-SCH = HT68_W_SB  ZONE-TYPE = CONDITIONED
* 358 *                      THERMOSTAT-TYPE = PROPORTIONAL
* 359 *                      BASEBOARD-CTRL = THERMOSTATIC
* 360 *                      BASEBOARD-RATING = -44300.  ASSIGNED-CFM = 6595.
* 361 *                      OUTSIDE-AIR-CFM = 1350.  SIZING-OPTION = FROM-LOADS
* 362 *                      RATED-CFM = 6595.0  MIN-CFM-RATIO = 1.0
```

```
* 363 *                      EXHAUST-CFM = 1350.0  HEATING-CAPACITY = -280247.0   ..
* 364 *
* 365 * POOL       =ZONE     DESIGN-HEAT-T = 80.0  DESIGN-COOL-T = 90.0
* 366 *                      HEAT-TEMP-SCH = HEAT80_ON  ZONE-TYPE = CONDITIONED
* 367 *                      THERMOSTAT-TYPE = PROPORTIONAL
* 368 *                      BASEBOARD-CTRL = THERMOSTATIC  ASSIGNED-CFM = 24620.
* 369 *                      OUTSIDE-AIR-CFM = 1585.  SIZING-OPTION = FROM-LOADS
* 370 *                      RATED-CFM = 24620.0  MIN-CFM-RATIO = 1.0
* 371 *                      EXHAUST-CFM = 1585.0  HEATING-CAPACITY = -327413.0   ..
* 372 *
* 373 *
* 374 *                      $ SYSTEM DESCRIPTION
* 375 *
* 376 * HV_1       =SYSTEM     SYSTEM-TYPE = HVSYS
* 377 *                        MAX-SUPPLY-T = 135.0  HEATING-SCHEDULE = HEAT68_ON
* 378 *                        MIN-HUMIDITY = 30.0  ECONO-LIMIT-T = 65.0
* 379 *                        ECONO-LOW-LIMIT = 55.0  HEAT-CONTROL = COLDEST
* 380 *                        SUPPLY-CFM = 38230.  RETURN-CFM = 32400.
* 381 *                        RATED-CFM = 38230.  MIN-OUTSIDE-AIR = 0.15
* 382 *                        FAN-SCHEDULE = FAN_W_SB  SUPPLY-DELTA-T = 2.4
* 383 *                        SUPPLY-KW = 0.00078
* 384 *                        MOTOR-PLACEMENT = OUTSIDE-AIRFLOW
* 385 *                        NIGHT-CYCLE-CTRL = CYCLE-ON-ANY  NIGHT-VENT-DT = 0.0
* 386 *                        HEATING-CAPACITY = -784836.  FURNACE-AUX = 0.
* 387 *                        RETURN-AIR-PATH = DUCT
* 388 *                        ZONE-NAMES = (GYM, RCQT_&_WT)  ..
* 389 *
* 390 * HV_2       =SYSTEM     SYSTEM-TYPE = HVSYS
* 391 *                        MAX-SUPPLY-T = 120.0  HEATING-SCHEDULE = HEAT80_ON
* 392 *                        MIN-HUMIDITY = 30.0  ECONO-LIMIT-T = 65.0
* 393 *                        ECONO-LOW-LIMIT = 55.0  HEAT-CONTROL = COLDEST
* 394 *                        SUPPLY-CFM = 24620.  RETURN-CFM = 23036.
* 395 *                        RATED-CFM = 24620.  MIN-OUTSIDE-AIR = 0.06
* 396 *                        FAN-SCHEDULE = HEAT_HRS  SUPPLY-DELTA-T = 2.4
* 397 *                        SUPPLY-KW = 0.00039
* 398 *                        MOTOR-PLACEMENT = OUTSIDE-AIRFLOW
* 399 *                        NIGHT-CYCLE-CTRL = STAY-OFF  NIGHT-VENT-DT = 0.0
* 400 *                        HEATING-CAPACITY = -327413.  FURNACE-AUX = 0.
* 401 *                        ZONE-NAMES = (POOL)  ..
* 402 *
* 403 * HV_3       =SYSTEM     SYSTEM-TYPE = HVSYS
* 404 *                        MAX-SUPPLY-T = 135.0  HEATING-SCHEDULE = HEAT68_ON
* 405 *                        MIN-HUMIDITY = 30.0  ECONO-LIMIT-T = 65.0
* 406 *                        ECONO-LOW-LIMIT = 55.0  HEAT-CONTROL = COLDEST
* 407 *                        SUPPLY-CFM = 6595.  RETURN-CFM = 5245.
* 408 *                        RATED-CFM = 6595.  MIN-OUTSIDE-AIR = 0.21
* 409 *                        FAN-SCHEDULE = FAN_W_SB  SUPPLY-DELTA-T = 2.4
* 410 *                        SUPPLY-KW = 0.00078  NIGHT-CYCLE-CTRL = CYCLE-ON-ANY
* 411 *                        NIGHT-VENT-DT = 0.0  HEATING-CAPACITY = -280247.
* 412 *                        FURNACE-AUX = 0.
* 413 *                        ZONE-NAMES = (LOBBY&OFFC)  ..
* 414 *
* 415 * END  ..
* 416 * COMPUTE SYSTEMS  ..
* 417 *
* 418 * INPUT PLANT  ..
```

```
* 419 *
* 420 *
* 421 *                 $-------------------------------------$
* 422 *                 $ E Z - D O E   P L A N T S  I N P U T $
* 423 *                 $-------------------------------------$
* 424 *
* 425 *                    $ GENERAL PROJECT DATA
* 426 *
* 427 * TITLE  LINE-1 *     EMC      ENGINEERS      INC.     *
* 428 *        LINE-2 *EZDOE - ELITE SOFTWARE DEVELOPMENT INC*
* 429 *        LINE-3 *     DENVER,       CO       80227     *
* 430 *
* 431 *        LINE-4 *BUILDING 4305 PHYSICAL FITNESS CENTER   *
* 432 *        LINE-5 *MODEL WITH SET BACK                      * ..
* 433 *
* 434 * ABORT              ERRORS  ..
* 435 * DIAGNOSTIC         WARNINGS ..
* 436 * PLANT-REPORT       SUMMARY=(PS-A,PS-B,BEPS)
* 437 *
* 438 *                    HOURLY-DATA-SAVE = YES  ..
* 439 *
* 440 *                     $ SCHEDULES
* 441 *
* 442 *
* 443 *
* 444 *
* 445 *
* 446 *                     $ EQUIPMENT DESCRIPTION
* 447 *
* 448 * B1_&_B2     =PLANT-EQUIPMENT   TYPE = HW-BOILER
* 449 *                      SIZE = 1.6  INSTALLED-NUMBER = 2
* 450 *                      MAX-NUMBER-AVAIL = 2  ..
* 451 *
* 452 * DHW         =PLANT-EQUIPMENT   TYPE = DHW-HEATER
* 453 *                      SIZE = 0.4  INSTALLED-NUMBER = 2
* 454 *                      MAX-NUMBER-AVAIL = 2  ..
* 455 *
* 456 * PLANT-PARAMETERS      MAKEUP-WTR-T = 180.  CCIRC-HEAD = 63.0
* 457 *                      HCIRC-DESIGN-T-DROP = 20.0    ..
* 458 *
* 459 *
* 460 * ENERGY-RESOURCE       RESOURCE = ELECTRICITY  ..
* 461 * ENERGY-RESOURCE       RESOURCE = FUEL-OIL  ..
* 462 * ENERGY-RESOURCE       RESOURCE = NATURAL-GAS  ..
* 463 *
* 464 *
* 465 *
* 466 * END  ..
* 467 * COMPUTE PLANT ..
* 468 * STOP ..
```

ENERGY TYPE IN SITE MBTU-	ELECTRICITY	FUEL-OIL	NATURAL-GAS
CATEGORY OF USE			
SPACE HEAT	101.94	2,273.58	0.00
SPACE COOL	0.00	0.00	0.00
HVAC AUX	779.59	0.00	0.00
DOM HOT WTR	0.00	0.00	250.49
AUX SOLAR	0.00	0.00	0.00
LIGHTS	123.73	0.00	0.00
VERT TRANS	0.00	0.00	0.00
MISC EQUIP	1,394.84	0.00	0.00
TOTAL	2,400.09	2,273.58	250.49

TOTAL SITE ENERGY 4924.04 MBTU 153.1 KBTU/SQFT-YR GROSS-AREA 153.1 KBTU/SQFT-YR NET-AREA
TOTAL SOURCE ENERGY 9731.19 MBTU 302.6 KBTU/SQFT-YR GROSS-AREA 302.6 KBTU/SQFT-YR NET-AREA

PERCENT OF HOURS ANY SYSTEM ZONE OUTSIDE OF THROTTLING RANGE = 0.5
PERCENT OF HOURS ANY PLANT LOAD NOT SATISFIED = 0.0

NOTE ELECTRICITY AND/OR FUEL USED TO GENERATE ELECTRICITY IS APPORTIONED BASED
ON THE YEARLY DEMAND. ALL OTHER ENERGY TYPES ARE APPORTIONED HOURLY

EMC ENGINEERS INC. EZDOE - ELITE SOFTWARE DEVELOPMENT INC DOE-2.1D 3/27/1995 12:53:33 PDL RUN 1
DENVER, CO 80227 BUILDING 4305 PHYSICAL FITNESS CENTER MODEL WITH SET BACK
REPORT- PS-B MONTHLY PEAK AND TOTAL ENERGY USE WEATHER FILE- MASSENA, NY

MO	UTILITY-	ELECTRICITY	FUEL-OIL	NATURAL-GAS
	TOTAL(MBTU)	209.519	407.881	21.116
JAN	PEAK(KBTU)	390.231	1700.861	46.013
	DY/HR	31/14	26/ 7	31/17
	TOTAL(MBTU)	190.489	311.438	19.223
FEB	PEAK(KBTU)	390.231	1548.634	46.013
	DY/HR	28/14	8/ 6	28/17
	TOTAL(MBTU)	210.814	296.494	21.408
MAR	PEAK(KBTU)	390.231	1574.661	46.013
	DY/HR	31/11	9/ 6	31/17
	TOTAL(MBTU)	195.520	143.650	20.534
APR	PEAK(KBTU)	390.231	1222.364	46.013
	DY/HR	25/10	4/ 6	29/17
	TOTAL(MBTU)	203.098	166.364	21.262
MAY	PEAK(KBTU)	390.231	1626.238	46.013
	DY/HR	20/14	16/ 6	31/17
	TOTAL(MBTU)	192.463	64.652	20.680
JUN	PEAK(KBTU)	387.041	752.570	46.013
	DY/HR	7/14	7/ 7	30/17
	TOTAL(MBTU)	193.702	46.841	21.116
JUL	PEAK(KBTU)	367.895	556.820	46.013
	DY/HR	8/10	24/14	29/17
	TOTAL(MBTU)	198.562	56.959	21.408
AUG	PEAK(KBTU)	378.921	665.199	46.013
	DY/HR	24/10	25/ 6	31/17
	TOTAL(MBTU)	197.694	157.681	20.680
SEP	PEAK(KBTU)	390.231	1106.376	46.013
	DY/HR	23/14	23/ 6	30/17
	TOTAL(MBTU)	198.669	108.786	21.116
OCT	PEAK(KBTU)	383.489	925.569	46.013
	DY/HR	27/10	21/ 6	31/17
	TOTAL(MBTU)	200.046	194.384	20.680
NOV	PEAK(KBTU)	390.231	1458.630	46.013
	DY/HR	30/11	28/ 7	30/17
	TOTAL(MBTU)	209.398	318.448	21.262
DEC	PEAK(KBTU)	390.231	1533.566	46.013
	DY/HR	30/14	19/ 7	30/17
	ONE YEAR	2399.974	2273.579	250.486
	USE/PEAK	390.231	1700.861	46.013

COMPUTER SIMULATIONS
BUILDING 4305

RUN 3 - DDC

```
*   3 *
*   4 *
*   5 *                 $-----------------------------------$
*   6 *                 $ E Z - D O E   L O A D S   I N P U T $
*   7 *                 $-----------------------------------$
*   8 *
*   9 *                    $ GENERAL PROJECT DATA
*  10 *
*  11 * TITLE  LINE-1 *     EMC      ENGINEERS      INC.     *
*  12 *       LINE-2 *EZDOE - ELITE SOFTWARE DEVELOPMENT INC*
*  13 *       LINE-3 *     DENVER,       CO       80227     *
*  14 *
*  15 *       LINE-4 *BUILDING 4305 PHYSICAL FITNESS CENTER   *
*  16 *       LINE-5 *MODEL WITH SET BACK AND DDC              * ..
*  17 *
*  18 * ABORT              ERRORS  ..
*  19 * DIAGNOSTIC         WARNINGS ..
*  20 * LOADS-REPORT       HOURLY-DATA-SAVE = YES  ..
*  21 * BUILDING-LOCATION  HOLIDAY = NO
*  22 *                    X-REF = 0.0
*  23 *                    Y-REF = 0.0  ..
*  24 * RUN-PERIOD         JAN 1 1994 THRU DEC 31 1994  ..
*  25 *
*  26 *
*  27 *                     $ SCHEDULES
*  28 *
*  29 * FULL_ON_D  =DAY-SCHEDULE  (1,24) (1.) ..
*  30 *
*  31 * FULL_OFF_D =DAY-SCHEDULE  (1,24) (0.) ..
*  32 *
*  33 * LIGHT_ON_D =DAY-SCHEDULE  (1,5) (0.1)
*  34 *                           (6,7) (0.35)
*  35 *                           (8,9) (0.5,0.6)
*  36 *                           (10,11) (0.75)
*  37 *                           (12) (0.5)
*  38 *                           (13,14) (0.75)
*  39 *                           (15) (0.5)
*  40 *                           (16,18) (0.4)
*  41 *                           (19,20) (0.3,0.23)
*  42 *                           (21,24) (0.1) ..
*  43 *
*  44 * LT_ON_WKND =DAY-SCHEDULE  (1,6) (0.23)
*  45 *                           (7,19) (0.07)
*  46 *                           (20,24) (0.23) ..
*  47 *
*  48 * PEOPLE_D   =DAY-SCHEDULE  (1,5) (0.)
*  49 *                           (6,7) (0.1,0.5)
*  50 *                           (8,11) (1.)
*  51 *                           (12) (0.8)
*  52 *                           (13,16) (1.)
*  53 *                           (17,20) (0.5)
*  54 *                           (21,24) (0.) ..
*  55 *
*  56 * EQUIP_ON_D =DAY-SCHEDULE  (1,5) (0.05)
*  57 *                           (6,7) (0.1,0.2)
*  58 *                           (8,9) (0.3)
*  59 *                           (10,11) (0.4,0.7)
*  60 *                           (12,13) (0.4)
*  61 *                           (14,15) (0.8)
*  62 *                           (16,18) (0.7,0.3,0.1)
*  63 *                           (19,24) (0.05) ..
*  64 *
*  65 * SHOP_INF_D =DAY-SCHEDULE  (1,7) (0.1)
*  66 *                           (8) (1.)
*  67 *                           (9,16) (0.1)
*  68 *                           (17) (1.)
*  69 *                           (18,24) (0.1) ..
*  70 *
*  71 * DHW_D      =DAY-SCHEDULE  (1,5) (0.)
*  72 *                           (6,10) (0.1,0.3,0.4,0.5,0.15)
*  73 *                           (11) (0.25)
*  74 *                           (12,13) (0.7)
*  75 *                           (14,15) (0.5)
*  76 *                           (16,20) (0.8,1.,0.4,0.3,0.1)
*  77 *                           (21,24) (0.) ..
*  78 *
*  79 *
*  80 * FULL_ON_W  =WEEK-SCHEDULE  (ALL) FULL_ON_D  ..
*  81 *
*  82 * FULL_OFF_W =WEEK-SCHEDULE  (ALL) FULL_OFF_D  ..
*  83 *
*  84 * LIGHT_ON_W =WEEK-SCHEDULE  (WD)  LIGHT_ON_D
*  85 *                           (WEH) LT_ON_WKND  ..
*  86 *
*  87 * PEOPLE_W   =WEEK-SCHEDULE  (WD)  PEOPLE_D
*  88 *                           (WEH) FULL_OFF_D  ..
*  89 *
*  90 * EQUIP_W    =WEEK-SCHEDULE  (WD)  EQUIP_ON_D
*  91 *                           (WEH) FULL_OFF_D  ..
*  92 *
*  93 * SHOP_IFL_W =WEEK-SCHEDULE  (WD)  SHOP_INF_D
*  94 *                           (WEH) FULL_OFF_D  ..
*  95 *
*  96 * DHW_W      =WEEK-SCHEDULE  (WD)  DHW_D
*  97 *                           (WEH) FULL_OFF_D  ..
*  98 *
*  99 *
* 100 * $ FULL ON SCHEDULE
* 101 * FULL_ON    =SCHEDULE THRU DEC 31 FULL_ON_W  ..
* 102 *
```

```
* 103 * $ FULL OFF SCHEDULE
* 104 * FULL_OFF   =SCHEDULE THRU DEC 31 FULL_OFF_W  ..
* 105 *
* 106 * $ LIGHTING SCHEDULE
* 107 * LIGHT_SCHD =SCHEDULE THRU DEC 31 LIGHT_ON_W  ..
* 108 *
* 109 * $ OCCUPANCY SCHEDULE
* 110 * PEOPLE_SCH =SCHEDULE THRU DEC 31 PEOPLE_W  ..
* 111 *
* 112 * $ EQUIPMENT SCHEDULE
* 113 * EQUIP_SCHD =SCHEDULE THRU DEC 31 EQUIP_W  ..
* 114 *
* 115 * $ SHOP INFILTRATION SCHED
* 116 * SHOP_INFIL =SCHEDULE THRU DEC 31 SHOP_IFL_W  ..
* 117 *
* 118 * $ HOURS POOL IS HEATED
* 119 * POOL_HEAT  =SCHEDULE THRU DEC 31 FULL_ON_W  ..
* 120 *
* 121 * $ DHW SCHEDULE
* 122 * DHW_SCHED  =SCHEDULE THRU DEC 31 DHW_W  ..
* 123 *
* 124 * POOL_VENT  =SCHEDULE THRU MAY 15 FULL_OFF_W
* 125 *                      THRU OCT  1 FULL_ON_W
* 126 *                      THRU DEC 31 FULL_OFF_W  ..
* 127 *
* 128 *
* 129 *
* 130 *                    $ CONSTRUCTION TYPES
* 131 *
* 132 *
* 133 *
* 134 * FLOORCON =CONSTRUCTION   U-VALUE =  0.010  ..
* 135 *
* 136 *  $ ADMINISTRATION ROOF CONSTRUCTION
* 137 * ADMROOF  =CONSTRUCTION   LAYERS = ASHR-17   ..
* 138 *
* 139 *  $ ROOF CONSTRUCTION
* 140 * ROOFCON  =CONSTRUCTION   U-VALUE =  0.060  ..
* 141 * WALLCON  =CONSTRUCTION   U-VALUE =  0.055  ..
* 142 * INWALL   =CONSTRUCTION   U-VALUE =  0.500  ..
* 143 * DOORCON  =CONSTRUCTION   U-VALUE =  0.400  ..
* 144 * GLSSWALL =CONSTRUCTION   U-VALUE =  1.130  ..
* 145 *
* 146 * G_TYPE1  =GLASS-TYPE     SHADING-COEF = 1.000
* 147 *                          PANES = 1
* 148 *                          GLASS-CONDUCTANCE =  1.130  ..
* 149 *
* 150 *
* 151 *
* 152 *
* 153 *                    $ SPACE DESCRIPTION
* 154 *
* 155 * GYM         =SPACE    AREA = 10518.0  VOLUME = 399684.0
* 156 *                       ZONE-TYPE = CONDITIONED  PEOPLE-SCHEDULE = PEOPLE_SCH
* 157 *                       NUMBER-OF-PEOPLE = 100.0  PEOPLE-HEAT-GAIN = 1350.0
* 158 *                       LIGHTING-TYPE = INCAND  LIGHTING-KW = 6.9
* 159 *                       LIGHTING-SCHEDULE = LIGHT_SCHD
* 160 *                       EQUIP-SCHEDULE = EQUIP_SCHD  INF-METHOD = AIR-CHANGE
* 161 *                       AIR-CHANGES/HR = 0.05  INF-SCHEDULE = FULL_ON   ..
* 162 *
* 163 *              ROOF     HEIGHT = 96.0  WIDTH = 112.0  CONS = ROOFCON
* 164 *                       TILT = 0   ..
* 165 *
* 166 *             U-W      HEIGHT = 96.0  WIDTH = 112.0  CONS = FLOORCON ..
* 167 *
* 168 *              E-W      HEIGHT = 38.0  WIDTH = 74.0  CONS = WALLCON
* 169 *                       AZIMUTH = 0   ..
* 170 *
* 171 *                DOOR   HEIGHT = 7.5  WIDTH = 3.0  CONS = DOORCON
* 172 *                       MULTIPLIER = 2.0   ..
* 173 *
* 174 *              E-W      HEIGHT = 38.0  WIDTH = 96.0  CONS = WALLCON
* 175 *                       AZIMUTH = 90   ..
* 176 *
* 177 *              E-W      HEIGHT = 38.0  WIDTH = 74.0  CONS = WALLCON
* 178 *                       AZIMUTH = 180   ..
* 179 *
* 180 *
* 181 * RCQT_&_WT  =SPACE    AREA = 2974.0  VOLUME = 47584.0
* 182 *                       ZONE-TYPE = CONDITIONED  PEOPLE-SCHEDULE = PEOPLE_SCH
* 183 *                       NUMBER-OF-PEOPLE = 40.0  PEOPLE-HEAT-GAIN = 1350.0
* 184 *                       LIGHTING-TYPE = INCAND  LIGHTING-KW = 2.3
* 185 *                       LIGHTING-SCHEDULE = LIGHT_SCHD
* 186 *                       EQUIP-SCHEDULE = EQUIP_SCHD  INF-METHOD = AIR-CHANGE
* 187 *                       AIR-CHANGES/HR = 0.05  INF-SCHEDULE = FULL_ON   ..
* 188 *
* 189 *              ROOF     HEIGHT = 76.5  WIDTH = 38.9  CONS = ROOFCON
* 190 *                       TILT = 0   ..
* 191 *
* 192 *             U-W      HEIGHT = 76.5  WIDTH = 38.9  CONS = ROOFCON ..
* 193 *
* 194 *
* 195 * LOBBY&OFFC =SPACE    AREA = 10428.0  VOLUME = 83424.0
* 196 *                       ZONE-TYPE = CONDITIONED  PEOPLE-SCHEDULE = PEOPLE_SCH
* 197 *                       NUMBER-OF-PEOPLE = 100.0  PEOPLE-HEAT-GAIN = 800.0
* 198 *                       LIGHTING-TYPE = REC-FLUOR-RV  LIGHTING-KW = 2.0
* 199 *                       LIGHTING-SCHEDULE = LIGHT_SCHD
* 200 *                       EQUIP-SCHEDULE = EQUIP_SCHD
* 201 *                       SOURCE-SCHEDULE = DHW_SCHED  SOURCE-TYPE = HOT-WATER
* 202 *                       SOURCE-BTU/HR = 16000.0  SOURCE-SENSIBLE = 0.3
* 203 *                       SOURCE-LATENT = 0.1  INF-METHOD = AIR-CHANGE
* 204 *                       AIR-CHANGES/HR = 0.05  INF-SCHEDULE = FULL_ON   ..
* 205 *
* 206 *              ROOF     HEIGHT = 100.0  WIDTH = 104.3  CONS = ROOFCON
* 207 *                       TILT = 0   ..
* 208 *
* 209 *             U-W      HEIGHT = 100.0  WIDTH = 104.3  CONS = ROOFCON ..
* 210 *
```

```
* 211 *                E-W       HEIGHT = 10.0  WIDTH = 197.1  CONS = WALLCON
* 212 *                          AZIMUTH = 0   ..
* 213 *
* 214 *                  DOOR    HEIGHT = 7.5  WIDTH = 3.0  CONS = DOORCON
* 215 *                          MULTIPLIER = 7.0   ..
* 216 *
* 217 *                E-W       HEIGHT = 10.0  WIDTH = 52.0  CONS = WALLCON
* 218 *                          AZIMUTH = 90   ..
* 219 *
* 220 *                E-W       HEIGHT = 10.0  WIDTH = 80.8  CONS = WALLCON
* 221 *                          AZIMUTH = 180   ..
* 222 *
* 223 *                  DOOR    HEIGHT = 7.5  WIDTH = 3.0  CONS = DOORCON
* 224 *                          MULTIPLIER = 4.0   ..
* 225 *
* 226 *                E-W       HEIGHT = 10.0  WIDTH = 70.4  CONS = WALLCON
* 227 *                          AZIMUTH = 270   ..
* 228 *
* 229 *                I-W       HEIGHT = 10.0  WIDTH = 114.0  CONS = GLSSWALL
* 230 *                          AZIMUTH = 270  NEXT-TO = POOL   ..
* 231 *
* 232 *
* 233 * POOL        =SPACE     AREA = 8237.0  VOLUME = 296532.0
* 234 *                        TEMPERATURE = (80.)  ZONE-TYPE = CONDITIONED
* 235 *                        PEOPLE-SCHEDULE = PEOPLE_SCH  NUMBER-OF-PEOPLE = 40.0
* 236 *                        PEOPLE-HEAT-GAIN = 800.0  LIGHTING-TYPE = INCAND
* 237 *                        LIGHTING-KW = 3.0  LIGHTING-SCHEDULE = LIGHT_SCHD
* 238 *                        EQUIP-SCHEDULE = POOL_HEAT  EQUIPMENT-KW = 46.65
* 239 *                        EQUIP-SENSIBLE = 0.5  FLOOR-WEIGHT = 200.
* 240 *                        FURNITURE-TYPE = HEAVY  FURN-WEIGHT = 15.
* 241 *                        INF-METHOD = AIR-CHANGE  AIR-CHANGES/HR = 2.0
* 242 *                        INF-SCHEDULE = POOL_VENT   ..
* 243 *
* 244 *                ROOF      HEIGHT = 108.7  WIDTH = 109.8  CONS = ROOFCON
* 245 *                          TILT = 0   ..
* 246 *
* 247 *               U-W       HEIGHT = 108.7  WIDTH = 109.8  CONS = FLOORCON ..
* 248 *
* 249 *                E-W       HEIGHT = 36.0  WIDTH = 109.8  CONS = WALLCON
* 250 *                          AZIMUTH = 180   ..
* 251 *
* 252 *                E-W       HEIGHT = 36.0  WIDTH = 108.7  CONS = WALLCON
* 253 *                          AZIMUTH = 270   ..
* 254 *
* 255 *                  DOOR    HEIGHT = 7.5  WIDTH = 3.0  CONS = DOORCON
* 256 *                          MULTIPLIER = 2.0   ..
* 257 *
* 258 *
* 259 * END  ..
* 260 * COMPUTE LOADS  ..
* 261 *
* 262 * INPUT SYSTEMS  ..
```

```
* 263 *
* 264 *
* 265 *                  $----------------------------------------$
* 266 *                  $ E Z - D O E  S Y S T E M S  I N P U T $
* 267 *                  $----------------------------------------$
* 268 *
* 269 *                     $ GENERAL PROJECT DATA
* 270 *
* 271 * TITLE  LINE-1 *     EMC      ENGINEERS      INC.     *
* 272 *        LINE-2 *EZDOE - ELITE SOFTWARE DEVELOPMENT INC*
* 273 *        LINE-3 *     DENVER,       CO       80227     *
* 274 *
* 275 *        LINE-4 *BUILDING 4305 PHYSICAL FITNESS CENTER   *
* 276 *        LINE-5 *MODEL WITH SET BACK AND DDC              * ..
* 277 * ABORT               ERRORS  ..
* 278 * DIAGNOSTIC          WARNINGS ..
* 279 * SYSTEMS-REPORT      SUMMARY=(SS-A,SS-C,SS-F,SS-H,SS-K)
* 280 *                     HOURLY-DATA-SAVE = YES  ..
* 281 *
* 282 *                      $ SCHEDULES
* 283 *
* 284 * FULL_ON_D  =DAY-SCHEDULE  (1,24) (1.) ..
* 285 * FULL_OFF_D =DAY-SCHEDULE  (1,24) (0.) ..
* 286 * HEAT1_ON_D =DAY-SCHEDULE  (1,24) (68.) ..
* 287 * HEAT2_ON_D =DAY-SCHEDULE  (1,24) (80.) ..
* 288 * FAN_WSB_D  =DAY-SCHEDULE  (1,5) (0.)
* 289 *                           (6,19) (1.)
* 290 *                           (20,24) (0.) ..
* 291 * HT68_WSB_D =DAY-SCHEDULE  (1,5) (50.)
* 292 *                           (6,19) (68.)
* 293 *                           (20,24) (50.) ..
* 294 * HEAT_50_D  =DAY-SCHEDULE  (1,24) (50.) ..
* 295 *
* 296 * FULL_ON_W  =WEEK-SCHEDULE  (ALL) FULL_ON_D  ..
* 297 *
* 298 * FULL_OFF_W =WEEK-SCHEDULE  (ALL) FULL_OFF_D  ..
* 299 *
* 300 * HEAT1_ON_W =WEEK-SCHEDULE  (ALL) HEAT1_ON_D  ..
* 301 *
* 302 * HEAT2_ON_W =WEEK-SCHEDULE  (ALL) HEAT2_ON_D  ..
* 303 *
* 304 * FAN_WSB_W  =WEEK-SCHEDULE  (WD)  FAN_WSB_D
* 305 *                           (SAT) FULL_OFF_D
* 306 *                           (SUN) FULL_OFF_D
* 307 *                           (HOL) FAN_WSB_D ..
* 308 *
* 309 * HT68_WSB_W =WEEK-SCHEDULE  (WD)  HT68_WSB_D
* 310 *                           (SAT) FULL_OFF_D
* 311 *                           (SUN) FULL_OFF_D
* 312 *                           (HOL) HT68_WSB_D ..
* 313 *
* 314 *
* 315 * $ FULL ON SCHEDULE
* 316 * FULL_ON    =SCHEDULE THRU DEC 31 FULL_ON_W  ..
* 317 *
* 318 * $ FULL OFF SCHEDULE
* 319 * FULL_OFF   =SCHEDULE THRU DEC 31 FULL_OFF_W  ..
* 320 *
* 321 * $ HEAT SCHEDULE, 68 DEG
* 322 * HEAT68_ON  =SCHEDULE THRU DEC 31 HEAT1_ON_W  ..
* 323 *
* 324 * $ HEAT SCHEDULE 80 DEG
* 325 * HEAT80_ON  =SCHEDULE THRU DEC 31 HEAT2_ON_W  ..
* 326 *
* 327 * $ HEATING HOURS SCHEDULE
* 328 * HEAT_HRS   =SCHEDULE THRU DEC 31 FULL_ON_W  ..
* 329 *
* 330 * $ FAN SCHED W SET BACK
* 331 * FAN_W_SB   =SCHEDULE THRU DEC 31 FAN_WSB_W  ..
* 332 *
* 333 * $ HEAT SCHD WITH SET BACK
* 334 * HT68_W_SB  =SCHEDULE THRU DEC 31 HT68_WSB_W  ..
* 335 *
* 336 *
* 337 *
* 338 *                      $ ZONE DESCRIPTION
* 339 *
* 340 * GYM         =ZONE    DESIGN-HEAT-T = 68.0  DESIGN-COOL-T = 80.0
* 341 *                      HEAT-TEMP-SCH = HT68_W_SB  ZONE-TYPE = CONDITIONED
* 342 *                      THERMOSTAT-TYPE = PROPORTIONAL
* 343 *                      BASEBOARD-CTRL = THERMOSTATIC  ASSIGNED-CFM = 28950.
* 344 *                      OUTSIDE-AIR-CFM = 4343.  SIZING-OPTION = FROM-LOADS
* 345 *                      RATED-CFM = 28950.0  MIN-CFM-RATIO = 1.0
* 346 *                      EXHAUST-CFM = 4343.0  HEATING-CAPACITY = -625320.0   ..
* 347 *
* 348 * RCQT_&_WT  =ZONE    DESIGN-HEAT-T = 68.0  DESIGN-COOL-T = 80.0
* 349 *                      HEAT-TEMP-SCH = HT68_W_SB  ZONE-TYPE = CONDITIONED
* 350 *                      THERMOSTAT-TYPE = PROPORTIONAL
* 351 *                      BASEBOARD-CTRL = THERMOSTATIC  ASSIGNED-CFM = 9280.
* 352 *                      OUTSIDE-AIR-CFM = 1392.  SIZING-OPTION = FROM-LOADS
* 353 *                      RATED-CFM = 9280.0  MIN-CFM-RATIO = 1.0
* 354 *                      EXHAUST-CFM = 1392.0  HEATING-CAPACITY = -159516.0   ..
* 355 *
* 356 * LOBBY&OFFC =ZONE    DESIGN-HEAT-T = 68.0  DESIGN-COOL-T = 80.0
* 357 *                      HEAT-TEMP-SCH = HT68_W_SB  ZONE-TYPE = CONDITIONED
* 358 *                      THERMOSTAT-TYPE = PROPORTIONAL
* 359 *                      BASEBOARD-CTRL = THERMOSTATIC
* 360 *                      BASEBOARD-RATING = -44300.  ASSIGNED-CFM = 6595.
* 361 *                      OUTSIDE-AIR-CFM = 1350.  SIZING-OPTION = FROM-LOADS
* 362 *                      RATED-CFM = 6595.0  MIN-CFM-RATIO = 1.0
```

```
* 363 *                       EXHAUST-CFM = 1350.0  HEATING-CAPACITY = -280247.0   ..
* 364 *
* 365 * POOL        =ZONE     DESIGN-HEAT-T = 80.0  DESIGN-COOL-T = 90.0
* 366 *                       HEAT-TEMP-SCH = HEAT80_ON  ZONE-TYPE = CONDITIONED
* 367 *                       THERMOSTAT-TYPE = PROPORTIONAL
* 368 *                       BASEBOARD-CTRL = THERMOSTATIC  ASSIGNED-CFM = 24620.
* 369 *                       OUTSIDE-AIR-CFM = 1585.  SIZING-OPTION = FROM-LOADS
* 370 *                       RATED-CFM = 24620.0  MIN-CFM-RATIO = 1.0
* 371 *                       EXHAUST-CFM = 1585.0  HEATING-CAPACITY = -327413.0   ..
* 372 *
* 373 *
* 374 *                       $ SYSTEM DESCRIPTION
* 375 *
* 376 * HV_1        =SYSTEM     SYSTEM-TYPE = HVSYS
* 377 *                         MAX-SUPPLY-T = 135.0  HEATING-SCHEDULE = HEAT68_ON
* 378 *                         MIN-HUMIDITY = 30.0  ECONO-LIMIT-T = 65.0
* 379 *                         ECONO-LOW-LIMIT = 55.0  HEAT-CONTROL = COLDEST
* 380 *                         SUPPLY-CFM = 38230.  RETURN-CFM = 32400.
* 381 *                         RATED-CFM = 38230.  MIN-OUTSIDE-AIR = 0.15
* 382 *                         FAN-SCHEDULE = FAN_W_SB  SUPPLY-DELTA-T = 2.4
* 383 *                         SUPPLY-KW = 0.00078
* 384 *                         MOTOR-PLACEMENT = OUTSIDE-AIRFLOW
* 385 *                         NIGHT-CYCLE-CTRL = CYCLE-ON-ANY  NIGHT-VENT-DT = 0.0
* 386 *                         HEATING-CAPACITY = -784836.  FURNACE-AUX = 0.
* 387 *                         RETURN-AIR-PATH = DUCT
* 388 *                         ZONE-NAMES = (GYM, RCQT_&_WT)  ..
* 389 *
* 390 * HV_2        =SYSTEM     SYSTEM-TYPE = HVSYS
* 391 *                         MAX-SUPPLY-T = 120.0  HEATING-SCHEDULE = HEAT80_ON
* 392 *                         MIN-HUMIDITY = 30.0  ECONO-LIMIT-T = 65.0
* 393 *                         ECONO-LOW-LIMIT = 55.0  HEAT-CONTROL = COLDEST
* 394 *                         SUPPLY-CFM = 24620.  RETURN-CFM = 23036.
* 395 *                         RATED-CFM = 24620.  MIN-OUTSIDE-AIR = 0.06
* 396 *                         FAN-SCHEDULE = HEAT_HRS  SUPPLY-DELTA-T = 2.4
* 397 *                         SUPPLY-KW = 0.00039
* 398 *                         MOTOR-PLACEMENT = OUTSIDE-AIRFLOW
* 399 *                         NIGHT-CYCLE-CTRL = STAY-OFF  NIGHT-VENT-DT = 0.0
* 400 *                         HEATING-CAPACITY = -327413.  FURNACE-AUX = 0.
* 401 *                         ZONE-NAMES = (POOL)  ..
* 402 *
* 403 * HV_3        =SYSTEM     SYSTEM-TYPE = HVSYS
* 404 *                         MAX-SUPPLY-T = 135.0  HEATING-SCHEDULE = HEAT68_ON
* 405 *                         MIN-HUMIDITY = 30.0  ECONO-LIMIT-T = 65.0
* 406 *                         ECONO-LOW-LIMIT = 55.0  HEAT-CONTROL = COLDEST
* 407 *                         SUPPLY-CFM = 6595.  RETURN-CFM = 5245.
* 408 *                         RATED-CFM = 6595.  MIN-OUTSIDE-AIR = 0.21
* 409 *                         FAN-SCHEDULE = FAN_W_SB  SUPPLY-DELTA-T = 2.4
* 410 *                         SUPPLY-KW = 0.00078  NIGHT-CYCLE-CTRL = CYCLE-ON-ANY
* 411 *                         NIGHT-VENT-DT = 0.0  HEATING-CAPACITY = -280247.
* 412 *                         FURNACE-AUX = 0.
* 413 *                         ZONE-NAMES = (LOBBY&OFFC)  ..
* 414 *
* 415 * END  ..
* 416 * COMPUTE SYSTEMS  ..
* 417 *
* 418 * INPUT PLANT  ..
```

```
* 419 *
* 420 *
* 421 *                 $-------------------------------------$
* 422 *                 $ E Z - D O E  P L A N T S  I N P U T $
* 423 *                 $-------------------------------------$
* 424 *
* 425 *                    $ GENERAL PROJECT DATA
* 426 *
* 427 * TITLE  LINE-1 *     EMC      ENGINEERS      INC.     *
* 428 *        LINE-2 *EZDOE - ELITE SOFTWARE DEVELOPMENT INC*
* 429 *        LINE-3 *     DENVER,       CO       80227     *
* 430 *
* 431 *        LINE-4 *BUILDING 4305 PHYSICAL FITNESS CENTER   *
* 432 *        LINE-5 *MODEL WITH SET BACK AND DDC              * ..
* 433 *
* 434 * ABORT              ERRORS  ..
* 435 * DIAGNOSTIC         WARNINGS ..
* 436 * PLANT-REPORT       SUMMARY=(PS-A,PS-B,BEPS)
* 437 *
* 438 *                    HOURLY-DATA-SAVE = YES  ..
* 439 *
* 440 *                     $ SCHEDULES
* 441 *
* 442 *
* 443 *
* 444 *
* 445 *
* 446 *                     $ EQUIPMENT DESCRIPTION
* 447 *
* 448 * B1_&_B2     =PLANT-EQUIPMENT   TYPE = HW-BOILER
* 449 *                      SIZE = 1.6  INSTALLED-NUMBER = 2
* 450 *                      MAX-NUMBER-AVAIL = 2  ..
* 451 *
* 452 * DHW         =PLANT-EQUIPMENT   TYPE = DHW-HEATER
* 453 *                      SIZE = 0.4  INSTALLED-NUMBER = 2
* 454 *                      MAX-NUMBER-AVAIL = 2  ..
* 455 *
* 456 * PLANT-PARAMETERS      MAKEUP-WTR-T = 180.  CCIRC-HEAD = 63.0
* 457 *                      HCIRC-DESIGN-T-DROP = 20.0    ..
* 458 *
* 459 *
* 460 * ENERGY-RESOURCE      RESOURCE = ELECTRICITY  ..
* 461 * ENERGY-RESOURCE      RESOURCE = FUEL-OIL  ..
* 462 * ENERGY-RESOURCE      RESOURCE = NATURAL-GAS  ..
* 463 *
* 464 *
* 465 *
* 466 * END  ..
* 467 * COMPUTE PLANT ..
* 468 * STOP ..
```

ENERGY TYPE IN SITE MBTU-	ELECTRICITY	FUEL-OIL	NATURAL-GAS
CATEGORY OF USE			
SPACE HEAT	92.41	1,959.74	0.00
SPACE COOL	0.00	0.00	0.00
HVAC AUX	776.18	0.00	0.00
DOM HOT WTR	0.00	0.00	250.49
AUX SOLAR	0.00	0.00	0.00
LIGHTS	123.73	0.00	0.00
VERT TRANS	0.00	0.00	0.00
MISC EQUIP	1,394.83	0.00	0.00
TOTAL	2,387.16	1,959.74	250.49

TOTAL SITE ENERGY 4597.26 MBTU 143.0 KBTU/SQFT-YR GROSS-AREA 143.0 KBTU/SQFT-YR NET-AREA
TOTAL SOURCE ENERGY 9378.52 MBTU 291.6 KBTU/SQFT-YR GROSS-AREA 291.6 KBTU/SQFT-YR NET-AREA

PERCENT OF HOURS ANY SYSTEM ZONE OUTSIDE OF THROTTLING RANGE = 0.1
PERCENT OF HOURS ANY PLANT LOAD NOT SATISFIED = 0.0

NOTE ELECTRICITY AND/OR FUEL USED TO GENERATE ELECTRICITY IS APPORTIONED BASED ON THE YEARLY DEMAND. ALL OTHER ENERGY TYPES ARE APPORTIONED HOURLY.

MO	UTILITY-	ELECTRICITY	FUEL-OIL	NATURAL-GAS
	TOTAL(MBTU)	209.597	373.243	21.116
JAN	PEAK(KBTU)	389.781	1612.407	46.013
	DY/HR	31/14	26/ 6	31/17
	TOTAL(MBTU)	189.908	277.856	19.223
FEB	PEAK(KBTU)	389.781	1541.600	46.013
	DY/HR	28/14	14/ 7	28/17
	TOTAL(MBTU)	209.450	253.933	21.408
MAR	PEAK(KBTU)	389.781	1486.245	46.013
	DY/HR	28/14	28/ 7	31/17
	TOTAL(MBTU)	193.137	100.265	20.534
APR	PEAK(KBTU)	388.782	1061.692	46.013
	DY/HR	4/10	4/ 6	29/17
	TOTAL(MBTU)	201.685	142.639	21.262
MAY	PEAK(KBTU)	389.781	1373.928	46.013
	DY/HR	20/11	16/ 6	31/17
	TOTAL(MBTU)	191.834	60.446	20.680
JUN	PEAK(KBTU)	386.704	596.514	46.013
	DY/HR	7/14	7/14	30/17
	TOTAL(MBTU)	193.412	46.028	21.116
JUL	PEAK(KBTU)	367.524	556.251	46.013
	DY/HR	8/10	24/14	29/17
	TOTAL(MBTU)	198.201	55.113	21.408
AUG	PEAK(KBTU)	378.058	585.740	46.013
	DY/HR	24/10	6/24	31/17
	TOTAL(MBTU)	196.919	146.079	20.680
SEP	PEAK(KBTU)	389.781	906.787	46.013
	DY/HR	23/14	23/ 6	30/17
	TOTAL(MBTU)	196.277	70.961	21.116
OCT	PEAK(KBTU)	375.296	771.642	46.013
	DY/HR	28/ 8	21/ 6	31/17
	TOTAL(MBTU)	198.096	151.178	20.680
NOV	PEAK(KBTU)	389.781	1394.402	46.013
	DY/HR	29/10	28/ 7	30/17
	TOTAL(MBTU)	208.527	281.994	21.262
DEC	PEAK(KBTU)	389.781	1503.113	46.013
	DY/HR	30/14	5/ 7	30/17
	ONE YEAR	2387.043	1959.736	250.486
	USE/PEAK	389.781	1612.407	46.013

```
*   3 *
*   4 *
*   5 *                 $----------------------------------$
*   6 *                 $ E Z - D O E  L O A D S  I N P U T $
*   7 *                 $----------------------------------$
*   8 *
*   9 *                    $ GENERAL PROJECT DATA
*  10 *
*  11 * TITLE  LINE-1 *     EMC      ENGINEERS      INC.     *
*  12 *        LINE-2 *EZDOE - ELITE SOFTWARE DEVELOPMENT INC*
*  13 *        LINE-3 *     DENVER,        CO       80227    *
*  14 *
*  15 *        LINE-4 *BUILDING 4305 PHYSICAL FITNESS CENTER   *
*  16 *        LINE-5 *MODEL WITH SET BACK AND DDC             * ..
*  17 *
*  18 * ABORT               ERRORS  ..
*  19 * DIAGNOSTIC          WARNINGS ..
*  20 * LOADS-REPORT        HOURLY-DATA-SAVE = YES  ..
*  21 * BUILDING-LOCATION   HOLIDAY = NO
*  22 *                     X-REF = 0.0
*  23 *                     Y-REF = 0.0  ..
*  24 * RUN-PERIOD          JAN 1 1994 THRU DEC 31 1994  ..
*  25 *
*  26 *
*  27 *                      $ SCHEDULES
*  28 *
*  29 * FULL_ON_D  =DAY-SCHEDULE  (1,24) (1.) ..
*  30 *
*  31 * FULL_OFF_D =DAY-SCHEDULE  (1,24) (0.) ..
*  32 *
*  33 * LIGHT_ON_D =DAY-SCHEDULE  (1,5) (0.1)
*  34 *                           (6,7) (0.35)
*  35 *                           (8,9) (0.5,0.6)
*  36 *                           (10,11) (0.75)
*  37 *                           (12) (0.5)
*  38 *                           (13,14) (0.75)
*  39 *                           (15) (0.5)
*  40 *                           (16,18) (0.4)
*  41 *                           (19,20) (0.3,0.23)
*  42 *                           (21,24) (0.1) ..
*  43 *
*  44 * LT_ON_WKND =DAY-SCHEDULE  (1,6) (0.23)
*  45 *                           (7,19) (0.07)
*  46 *                           (20,24) (0.23) ..
*  47 *
*  48 * PEOPLE_D   =DAY-SCHEDULE  (1,5) (0.)
*  49 *                           (6,7) (0.1,0.5)
*  50 *                           (8,11) (1.)
*  51 *                           (12) (0.8)
*  52 *                           (13,16) (1.)
*  53 *                           (17,20) (0.5)
*  54 *                           (21,24) (0.) ..
*  55 *
*  56 * EQUIP_ON_D =DAY-SCHEDULE  (1,5) (0.05)
*  57 *                           (6,7) (0.1,0.2)
*  58 *                           (8,9) (0.3)
*  59 *                           (10,11) (0.4,0.7)
*  60 *                           (12,13) (0.4)
*  61 *                           (14,15) (0.8)
*  62 *                           (16,18) (0.7,0.3,0.1)
*  63 *                           (19,24) (0.05) ..
*  64 *
*  65 * SHOP_INF_D =DAY-SCHEDULE  (1,7) (0.1)
*  66 *                           (8) (1.)
*  67 *                           (9,16) (0.1)
*  68 *                           (17) (1.)
*  69 *                           (18,24) (0.1) ..
*  70 *
*  71 * DHW_D      =DAY-SCHEDULE  (1,5) (0.)
*  72 *                           (6,10) (0.1,0.3,0.4,0.5,0.15)
*  73 *                           (11) (0.25)
*  74 *                           (12,13) (0.7)
*  75 *                           (14,15) (0.5)
*  76 *                           (16,20) (0.8,1.,0.4,0.3,0.1)
*  77 *                           (21,24) (0.) ..
*  78 *
*  79 *
*  80 * FULL_ON_W  =WEEK-SCHEDULE  (ALL) FULL_ON_D  ..
*  81 *
*  82 * FULL_OFF_W =WEEK-SCHEDULE  (ALL) FULL_OFF_D  ..
*  83 *
*  84 * LIGHT_ON_W =WEEK-SCHEDULE  (WD)  LIGHT_ON_D
*  85 *                           (WEH) LT_ON_WKND  ..
*  86 *
*  87 * PEOPLE_W   =WEEK-SCHEDULE  (WD)  PEOPLE_D
*  88 *                           (WEH) FULL_OFF_D  ..
*  89 *
*  90 * EQUIP_W    =WEEK-SCHEDULE  (WD)  EQUIP_ON_D
*  91 *                           (WEH) FULL_OFF_D  ..
*  92 *
*  93 * SHOP_IFL_W =WEEK-SCHEDULE  (WD)  SHOP_INF_D
*  94 *                           (WEH) FULL_OFF_D  ..
*  95 *
*  96 * DHW_W      =WEEK-SCHEDULE  (WD)  DHW_D
*  97 *                           (WEH) FULL_OFF_D  ..
*  98 *
*  99 *
* 100 * $ FULL ON SCHEDULE
* 101 * FULL_ON    =SCHEDULE THRU DEC 31 FULL_ON_W  ..
* 102 *
```

```
* 103 * $ FULL OFF SCHEDULE
* 104 * FULL_OFF   =SCHEDULE THRU DEC 31 FULL_OFF_W  ..
* 105 *
* 106 * $ LIGHTING SCHEDULE
* 107 * LIGHT_SCHD =SCHEDULE THRU DEC 31 LIGHT_ON_W  ..
* 108 *
* 109 * $ OCCUPANCY SCHEDULE
* 110 * PEOPLE_SCH =SCHEDULE THRU DEC 31 PEOPLE_W  ..
* 111 *
* 112 * $ EQUIPMENT SCHEDULE
* 113 * EQUIP_SCHD =SCHEDULE THRU DEC 31 EQUIP_W  ..
* 114 *
* 115 * $ SHOP INFILTRATION SCHED
* 116 * SHOP_INFIL =SCHEDULE THRU DEC 31 SHOP_IFL_W  ..
* 117 *
* 118 * $ HOURS POOL IS HEATED
* 119 * POOL_HEAT  =SCHEDULE THRU DEC 31 FULL_ON_W  ..
* 120 *
* 121 * $ DHW SCHEDULE
* 122 * DHW_SCHED  =SCHEDULE THRU DEC 31 DHW_W  ..
* 123 *
* 124 * POOL_VENT  =SCHEDULE THRU MAY 15 FULL_OFF_W
* 125 *                      THRU OCT  1 FULL_ON_W
* 126 *                      THRU DEC 31 FULL_OFF_W  ..
* 127 *
* 128 *
* 129 *
* 130 *                    $ CONSTRUCTION TYPES
* 131 *
* 132 *
* 133 *
* 134 * FLOORCON =CONSTRUCTION   U-VALUE =  0.010  ..
* 135 *
* 136 *  $ ADMINISTRATION ROOF CONSTRUCTION
* 137 * ADMROOF  =CONSTRUCTION   LAYERS = ASHR-17   ..
* 138 *
* 139 *  $ ROOF CONSTRUCTION
* 140 * ROOFCON  =CONSTRUCTION   U-VALUE =  0.060  ..
* 141 * WALLCON  =CONSTRUCTION   U-VALUE =  0.055  ..
* 142 * INWALL   =CONSTRUCTION   U-VALUE =  0.500  ..
* 143 * DOORCON  =CONSTRUCTION   U-VALUE =  0.400  ..
* 144 * GLSSWALL =CONSTRUCTION   U-VALUE =  1.130  ..
* 145 *
* 146 * G_TYPE1  =GLASS-TYPE     SHADING-COEF = 1.000
* 147 *                          PANES = 1
* 148 *                          GLASS-CONDUCTANCE =  1.130  ..
* 149 *
* 150 *
* 151 *
* 152 *
* 153 *                    $ SPACE DESCRIPTION
* 154 *
* 155 * GYM        =SPACE    AREA = 10518.0  VOLUME = 399684.0
* 156 *                      ZONE-TYPE = CONDITIONED  PEOPLE-SCHEDULE = PEOPLE_SCH
* 157 *                      NUMBER-OF-PEOPLE = 100.0  PEOPLE-HEAT-GAIN = 1350.0
* 158 *                      LIGHTING-TYPE = INCAND  LIGHTING-KW = 6.9
* 159 *                      LIGHTING-SCHEDULE = LIGHT_SCHD
* 160 *                      EQUIP-SCHEDULE = EQUIP_SCHD  INF-METHOD = AIR-CHANGE
* 161 *                      AIR-CHANGES/HR = 0.05  INF-SCHEDULE = FULL_ON   ..
* 162 *
* 163 *              ROOF     HEIGHT = 96.0  WIDTH = 112.0  CONS = ROOFCON
* 164 *                       TILT = 0   ..
* 165 *
* 166 *             U-W      HEIGHT = 96.0  WIDTH = 112.0  CONS = FLOORCON ..
* 167 *
* 168 *              E-W      HEIGHT = 38.0  WIDTH = 74.0  CONS = WALLCON
* 169 *                       AZIMUTH = 0   ..
* 170 *
* 171 *                DOOR   HEIGHT = 7.5  WIDTH = 3.0  CONS = DOORCON
* 172 *                       MULTIPLIER = 2.0   ..
* 173 *
* 174 *              E-W      HEIGHT = 38.0  WIDTH = 96.0  CONS = WALLCON
* 175 *                       AZIMUTH = 90   ..
* 176 *
* 177 *              E-W      HEIGHT = 38.0  WIDTH = 74.0  CONS = WALLCON
* 178 *                       AZIMUTH = 180   ..
* 179 *
* 180 *
* 181 * RCQT_&_WT  =SPACE    AREA = 2974.0  VOLUME = 47584.0
* 182 *                      ZONE-TYPE = CONDITIONED  PEOPLE-SCHEDULE = PEOPLE_SCH
* 183 *                      NUMBER-OF-PEOPLE = 40.0  PEOPLE-HEAT-GAIN = 1350.0
* 184 *                      LIGHTING-TYPE = INCAND  LIGHTING-KW = 2.3
* 185 *                      LIGHTING-SCHEDULE = LIGHT_SCHD
* 186 *                      EQUIP-SCHEDULE = EQUIP_SCHD  INF-METHOD = AIR-CHANGE
* 187 *                      AIR-CHANGES/HR = 0.05  INF-SCHEDULE = FULL_ON   ..
* 188 *
* 189 *              ROOF     HEIGHT = 76.5  WIDTH = 38.9  CONS = ROOFCON
* 190 *                       TILT = 0   ..
* 191 *
* 192 *             U-W      HEIGHT = 76.5  WIDTH = 38.9  CONS = ROOFCON ..
* 193 *
* 194 *
* 195 * LOBBY&OFFC =SPACE    AREA = 10428.0  VOLUME = 83424.0
* 196 *                      ZONE-TYPE = CONDITIONED  PEOPLE-SCHEDULE = PEOPLE_SCH
* 197 *                      NUMBER-OF-PEOPLE = 100.0  PEOPLE-HEAT-GAIN = 800.0
* 198 *                      LIGHTING-TYPE = REC-FLUOR-RV  LIGHTING-KW = 2.0
* 199 *                      LIGHTING-SCHEDULE = LIGHT_SCHD
* 200 *                      EQUIP-SCHEDULE = EQUIP_SCHD
* 201 *                      SOURCE-SCHEDULE = DHW_SCHED  SOURCE-TYPE = HOT-WATER
* 202 *                      SOURCE-BTU/HR = 16000.0  SOURCE-SENSIBLE = 0.3
* 203 *                      SOURCE-LATENT = 0.1  INF-METHOD = AIR-CHANGE
* 204 *                      AIR-CHANGES/HR = 0.05  INF-SCHEDULE = FULL_ON   ..
* 205 *
* 206 *              ROOF     HEIGHT = 100.0  WIDTH = 104.3  CONS = ROOFCON
* 207 *                       TILT = 0   ..
* 208 *
* 209 *             U-W      HEIGHT = 100.0  WIDTH = 104.3  CONS = ROOFCON ..
* 210 *
```

```
* 211 *                E-W       HEIGHT = 10.0  WIDTH = 197.1  CONS = WALLCON
* 212 *                          AZIMUTH = 0   ..
* 213 *
* 214 *                  DOOR    HEIGHT = 7.5  WIDTH = 3.0  CONS = DOORCON
* 215 *                          MULTIPLIER = 7.0   ..
* 216 *
* 217 *                E-W       HEIGHT = 10.0  WIDTH = 52.0  CONS = WALLCON
* 218 *                          AZIMUTH = 90   ..
* 219 *
* 220 *                E-W       HEIGHT = 10.0  WIDTH = 80.8  CONS = WALLCON
* 221 *                          AZIMUTH = 180   ..
* 222 *
* 223 *                  DOOR    HEIGHT = 7.5  WIDTH = 3.0  CONS = DOORCON
* 224 *                          MULTIPLIER = 4.0   ..
* 225 *
* 226 *                E-W       HEIGHT = 10.0  WIDTH = 70.4  CONS = WALLCON
* 227 *                          AZIMUTH = 270   ..
* 228 *
* 229 *                I-W       HEIGHT = 10.0  WIDTH = 114.0  CONS = GLSSWALL
* 230 *                          AZIMUTH = 270  NEXT-TO = POOL   ..
* 231 *
* 232 *
* 233 * POOL        =SPACE     AREA = 8237.0  VOLUME = 296532.0
* 234 *                        TEMPERATURE = (80.)  ZONE-TYPE = CONDITIONED
* 235 *                        PEOPLE-SCHEDULE = PEOPLE_SCH  NUMBER-OF-PEOPLE = 40.0
* 236 *                        PEOPLE-HEAT-GAIN = 800.0  LIGHTING-TYPE = INCAND
* 237 *                        LIGHTING-KW = 3.0  LIGHTING-SCHEDULE = LIGHT_SCHD
* 238 *                        EQUIP-SCHEDULE = POOL_HEAT  EQUIPMENT-KW = 46.65
* 239 *                        EQUIP-SENSIBLE = 0.5  FLOOR-WEIGHT = 200.
* 240 *                        FURNITURE-TYPE = HEAVY  FURN-WEIGHT = 15.
* 241 *                        INF-METHOD = AIR-CHANGE  AIR-CHANGES/HR = 2.0
* 242 *                        INF-SCHEDULE = POOL_VENT   ..
* 243 *
* 244 *                  ROOF     HEIGHT = 108.7  WIDTH = 109.8  CONS = ROOFCON
* 245 *                           TILT = 0   ..
* 246 *
* 247 *                U-W      HEIGHT = 108.7  WIDTH = 109.8  CONS = FLOORCON ..
* 248 *
* 249 *                  E-W      HEIGHT = 36.0  WIDTH = 109.8  CONS = WALLCON
* 250 *                           AZIMUTH = 180   ..
* 251 *
* 252 *                  E-W      HEIGHT = 36.0  WIDTH = 108.7  CONS = WALLCON
* 253 *                           AZIMUTH = 270   ..
* 254 *
* 255 *                    DOOR   HEIGHT = 7.5  WIDTH = 3.0  CONS = DOORCON
* 256 *                           MULTIPLIER = 2.0   ..
* 257 *
* 258 *
* 259 * END  ..
* 260 * COMPUTE LOADS  ..
* 261 *
* 262 * INPUT SYSTEMS  ..
```

```
*                  $-------------------------------------$
*                  $ E Z - D O E  S Y S T E M S  I N P U T $
*                  $-------------------------------------$
*
*                     $ GENERAL PROJECT DATA
*
* TITLE  LINE-1 *     EMC      ENGINEERS      INC.     *
*        LINE-2 *EZDOE - ELITE SOFTWARE DEVELOPMENT INC*
*        LINE-3 *     DENVER,       CO       80227     *
*
*        LINE-4 *BUILDING 4305 PHYSICAL FITNESS CENTER   *
*        LINE-5 *MODEL WITH SET BACK AND DDC              * ..
* ABORT                ERRORS  ..
* DIAGNOSTIC           WARNINGS ..
* SYSTEMS-REPORT       SUMMARY=(SS-A,SS-C,SS-F,SS-H,SS-K)
*                      HOURLY-DATA-SAVE = YES  ..
*
*                      $ SCHEDULES
*
* FULL_ON_D. =DAY-SCHEDULE  (1,24) (1.) ..
* FULL_OFF_D =DAY-SCHEDULE  (1,24) (0.) ..
* HEAT1_ON_D =DAY-SCHEDULE  (1,24) (68.) ..
* HEAT2_ON_D =DAY-SCHEDULE  (1,24) (80.) ..
* FAN_WSB_D  =DAY-SCHEDULE  (1,5) (0.)
*                           (6,19) (1.)
*                           (20,24) (0.) ..
* HT68_WSB_D =DAY-SCHEDULE  (1,5) (50.)
*                           (6,19) (68.)
*                           (20,24) (50.) ..
* HEAT_50_D  =DAY-SCHEDULE  (1,24) (50.) ..
* MOA.15_D   =DAY-SCHEDULE  (1,6) (0.)
*                           (7,19) (0.15)
*                           (20,24) (0.) ..
* MOA.21_D   =DAY-SCHEDULE  (1,6) (0.)
*                           (7,19) (0.21)
*                           (20,24) (0.) ..
*
* FULL_ON_W  =WEEK-SCHEDULE  (ALL) FULL_ON_D  ..
*
* FULL_OFF_W =WEEK-SCHEDULE  (ALL) FULL_OFF_D  ..
*
* HEAT1_ON_W =WEEK-SCHEDULE  (ALL) HEAT1_ON_D  ..
*
* HEAT2_ON_W =WEEK-SCHEDULE  (ALL) HEAT2_ON_D  ..
*
* FAN_WSB_W  =WEEK-SCHEDULE  (WD)  FAN_WSB_D
*                            (SAT) FULL_OFF_D
*                            (SUN) FULL_OFF_D
*                            (HOL) FAN_WSB_D ..
*
* HT68_WSB_W =WEEK-SCHEDULE  (WD)  HT68_WSB_D
*                            (SAT) FULL_OFF_D
*                            (SUN) FULL_OFF_D
*                            (HOL) HT68_WSB_D ..
*
* MOA.15_W   =WEEK-SCHEDULE  (WD)  MOA.15_D
*                            (SAT) FULL_OFF_D
*                            (SUN) FULL_OFF_D
*                            (HOL) MOA.15_D ..
*
* MOA.21_W   =WEEK-SCHEDULE  (WD)  MOA.21_D
*                            (SAT) FULL_OFF_D
*                            (SUN) FULL_OFF_D
*                            (HOL) MOA.21_D ..
*
*
* $ FULL ON SCHEDULE
* FULL_ON    =SCHEDULE THRU DEC 31 FULL_ON_W  ..
*
* $ FULL OFF SCHEDULE
* FULL_OFF   =SCHEDULE THRU DEC 31 FULL_OFF_W  ..
*
* $ HEAT SCHEDULE, 68 DEG
* HEAT68_ON  =SCHEDULE THRU DEC 31 HEAT1_ON_W  ..
*
* $ HEAT SCHEDULE 80 DEG
* HEAT80_ON  =SCHEDULE THRU DEC 31 HEAT2_ON_W  ..
*
* $ HEATING HOURS SCHEDULE
* HEAT_HRS   =SCHEDULE THRU DEC 31 FULL_ON_W  ..
*
* $ FAN SCHED W SET BACK
* FAN_W_SB   =SCHEDULE THRU DEC 31 FAN_WSB_W  ..
*
* $ HEAT SCHD WITH SET BACK
* HT68_W_SB  =SCHEDULE THRU DEC 31 HT68_WSB_W  ..
*
* MOA_.15_FV =SCHEDULE THRU DEC 31 MOA.15_W  ..
*
* MOA_.21_FV =SCHEDULE THRU DEC 31 MOA.21_W  ..
*
*
*
*                     $ ZONE DESCRIPTION
*
* GYM         =ZONE    DESIGN-HEAT-T = 68.0  DESIGN-COOL-T = 80.0
*                      HEAT-TEMP-SCH = HT68_W_SB  ZONE-TYPE = CONDITIONED
*                      THERMOSTAT-TYPE = PROPORTIONAL
```

```
* 363 *                      BASEBOARD-CTRL = THERMOSTATIC  ASSIGNED-CFM = 28950.
* 364 *                      OUTSIDE-AIR-CFM = 4343.  SIZING-OPTION = FROM-LOADS
* 365 *                      RATED-CFM = 28950.0  MIN-CFM-RATIO = 1.0
* 366 *                      EXHAUST-CFM = 4343.0  HEATING-CAPACITY = -625320.0   ..
* 367 *
* 368 * RCQT_&_WT  =ZONE     DESIGN-HEAT-T = 68.0  DESIGN-COOL-T = 80.0
* 369 *                      HEAT-TEMP-SCH = HT68_W_SB  ZONE-TYPE = CONDITIONED
* 370 *                      THERMOSTAT-TYPE = PROPORTIONAL
* 371 *                      BASEBOARD-CTRL = THERMOSTATIC  ASSIGNED-CFM = 9280.
* 372 *                      OUTSIDE-AIR-CFM = 1392.  SIZING-OPTION = FROM-LOADS
* 373 *                      RATED-CFM = 9280.0  MIN-CFM-RATIO = 1.0
* 374 *                      EXHAUST-CFM = 1392.0  HEATING-CAPACITY = -159516.0   ..
* 375 *
* 376 * LOBBY&OFFC =ZONE     DESIGN-HEAT-T = 68.0  DESIGN-COOL-T = 80.0
* 377 *                      HEAT-TEMP-SCH = HT68_W_SB  ZONE-TYPE = CONDITIONED
* 378 *                      THERMOSTAT-TYPE = PROPORTIONAL
* 379 *                      BASEBOARD-CTRL = THERMOSTATIC
* 380 *                      BASEBOARD-RATING = -44300.  ASSIGNED-CFM = 6595.
* 381 *                      OUTSIDE-AIR-CFM = 1350.  SIZING-OPTION = FROM-LOADS
* 382 *                      RATED-CFM = 6595.0  MIN-CFM-RATIO = 1.0
* 383 *                      EXHAUST-CFM = 1350.0  HEATING-CAPACITY = -280247.0   ..
* 384 *
* 385 * POOL        =ZONE    DESIGN-HEAT-T = 80.0  DESIGN-COOL-T = 90.0
* 386 *                      HEAT-TEMP-SCH = HEAT80_ON  ZONE-TYPE = CONDITIONED
* 387 *                      THERMOSTAT-TYPE = PROPORTIONAL
* 388 *                      BASEBOARD-CTRL = THERMOSTATIC  ASSIGNED-CFM = 24620.
* 389 *                      OUTSIDE-AIR-CFM = 1585.  SIZING-OPTION = FROM-LOADS
* 390 *                      RATED-CFM = 24620.0  MIN-CFM-RATIO = 1.0
* 391 *                      EXHAUST-CFM = 1585.0  HEATING-CAPACITY = -327413.0   ..
* 392 *
* 393 *
* 394 *                      $ SYSTEM DESCRIPTION
* 395 *
* 396 * HV_1        =SYSTEM    SYSTEM-TYPE = HVSYS
* 397 *                        MAX-SUPPLY-T = 135.0  HEATING-SCHEDULE = HEAT68_ON
* 398 *                        MIN-HUMIDITY = 30.0  ECONO-LIMIT-T = 65.0
* 399 *                        ECONO-LOW-LIMIT = 55.0  HEAT-CONTROL = COLDEST
* 400 *                        SUPPLY-CFM = 38230.  RETURN-CFM = 32400.
* 401 *                        RATED-CFM = 38230.  MIN-OUTSIDE-AIR = 0.15
* 402 *                        MIN-AIR-SCH = MOA_.15_FV  FAN-SCHEDULE = FAN_W_SB
* 403 *                        SUPPLY-DELTA-T = 2.4  SUPPLY-KW = 0.00078
* 404 *                        MOTOR-PLACEMENT = OUTSIDE-AIRFLOW
* 405 *                        NIGHT-CYCLE-CTRL = CYCLE-ON-ANY  NIGHT-VENT-DT = 0.0
* 406 *                        HEATING-CAPACITY = -784836.  FURNACE-AUX = 0.
* 407 *                        RETURN-AIR-PATH = DUCT
* 408 *                        ZONE-NAMES = (GYM, RCQT_&_WT)  ..
* 409 *
* 410 * HV_2        =SYSTEM    SYSTEM-TYPE = HVSYS
* 411 *                        MAX-SUPPLY-T = 120.0  HEATING-SCHEDULE = HEAT80_ON
* 412 *                        MIN-HUMIDITY = 30.0  ECONO-LIMIT-T = 65.0
* 413 *                        ECONO-LOW-LIMIT = 55.0  HEAT-CONTROL = COLDEST
* 414 *                        SUPPLY-CFM = 24620.  RETURN-CFM = 23036.
* 415 *                        RATED-CFM = 24620.  MIN-OUTSIDE-AIR = 0.06
* 416 *                        FAN-SCHEDULE = HEAT_HRS  SUPPLY-DELTA-T = 2.4
* 417 *                        SUPPLY-KW = 0.00039
* 418 *                        MOTOR-PLACEMENT = OUTSIDE-AIRFLOW
* 419 *                        NIGHT-CYCLE-CTRL = STAY-OFF  NIGHT-VENT-DT = 0.0
* 420 *                        HEATING-CAPACITY = -327413.  FURNACE-AUX = 0.
* 421 *                        ZONE-NAMES = (POOL)  ..
* 422 *
* 423 * HV_3        =SYSTEM    SYSTEM-TYPE = HVSYS
* 424 *                        MAX-SUPPLY-T = 135.0  HEATING-SCHEDULE = HEAT68_ON
* 425 *                        MIN-HUMIDITY = 30.0  ECONO-LIMIT-T = 65.0
* 426 *                        ECONO-LOW-LIMIT = 55.0  HEAT-CONTROL = COLDEST
* 427 *                        SUPPLY-CFM = 6595.  RETURN-CFM = 5245.
* 428 *                        RATED-CFM = 6595.  MIN-OUTSIDE-AIR = 0.21
* 429 *                        MIN-AIR-SCH = MOA_.21_FV  FAN-SCHEDULE = FAN_W_SB
* 430 *                        SUPPLY-DELTA-T = 2.4  SUPPLY-KW = 0.00078
* 431 *                        NIGHT-CYCLE-CTRL = CYCLE-ON-ANY  NIGHT-VENT-DT = 0.0
* 432 *                        HEATING-CAPACITY = -280247.  FURNACE-AUX = 0.
* 433 *                        ZONE-NAMES = (LOBBY&OFFC)  ..
* 434 *
* 435 * END  ..
* 436 * COMPUTE SYSTEMS  ..
* 437 *
* 438 * INPUT PLANT  ..
```

```
* 439 *
* 440 *
* 441 *                  $-------------------------------------$
* 442 *                  $ E Z - D O E   P L A N T S  I N P U T $
* 443 *                  $-------------------------------------$
* 444 *
* 445 *                     $ GENERAL PROJECT DATA
* 446 *
* 447 * TITLE  LINE-1 *     EMC      ENGINEERS      INC.     *
* 448 *        LINE-2 *EZDOE - ELITE SOFTWARE DEVELOPMENT INC*
* 449 *        LINE-3 *     DENVER,       CO       80227     *
* 450 *
* 451 *        LINE-4 *BUILDING 4305 PHYSICAL FITNESS CENTER   *
* 452 *        LINE-5 *MODEL WITH SET BACK AND DDC              * ..
* 453 *
* 454 * ABORT               ERRORS  ..
* 455 * DIAGNOSTIC          WARNINGS ..
* 456 * PLANT-REPORT        SUMMARY=(PS-A,PS-B,BEPS)
* 457 *
* 458 *                     HOURLY-DATA-SAVE = YES  ..
* 459 *
* 460 *                      $ SCHEDULES
* 461 *
* 462 *
* 463 *
* 464 *
* 465 *
* 466 *                      $ EQUIPMENT DESCRIPTION
* 467 *
* 468 * B1_&_B2     =PLANT-EQUIPMENT   TYPE = HW-BOILER
* 469 *                       SIZE = 1.6  INSTALLED-NUMBER = 2
* 470 *                       MAX-NUMBER-AVAIL = 2  ..
* 471 *
* 472 * DHW         =PLANT-EQUIPMENT   TYPE = DHW-HEATER
* 473 *                       SIZE = 0.4  INSTALLED-NUMBER = 2
* 474 *                       MAX-NUMBER-AVAIL = 2  ..
* 475 *
* 476 * PLANT-PARAMETERS      MAKEUP-WTR-T = 180.  CCIRC-HEAD = 63.0
* 477 *                       HCIRC-DESIGN-T-DROP = 20.0    ..
* 478 *
* 479 *
* 480 * ENERGY-RESOURCE       RESOURCE = ELECTRICITY  ..
* 481 * ENERGY-RESOURCE       RESOURCE = FUEL-OIL  ..
* 482 * ENERGY-RESOURCE       RESOURCE = NATURAL-GAS  ..
* 483 *
* 484 *
* 485 *
* 486 * END  ..
* 487 * COMPUTE PLANT ..
* 488 * STOP ..
```

ENERGY TYPE IN SITE MBTU-	ELECTRICITY	FUEL-OIL	NATURAL-GAS
CATEGORY OF USE			
SPACE HEAT	92.54	1,963.69	0.00
SPACE COOL	0.00	0.00	0.00
HVAC AUX	776.25	0.00	0.00
DOM HOT WTR	0.00	0.00	250.49
AUX SOLAR	0.00	0.00	0.00
LIGHTS	123.73	0.00	0.00
VERT TRANS	0.00	0.00	0.00
MISC EQUIP	1,394.83	0.00	0.00
TOTAL	2,387.35	1,963.69	250.49

TOTAL SITE ENERGY 4601.41 MBTU 143.1 KBTU/SQFT-YR GROSS-AREA 143.1 KBTU/SQFT-YR NET-AREA
TOTAL SOURCE ENERGY 9383.03 MBTU 291.8 KBTU/SQFT-YR GROSS-AREA 291.8 KBTU/SQFT-YR NET-AREA

PERCENT OF HOURS ANY SYSTEM ZONE OUTSIDE OF THROTTLING RANGE = 0.1
PERCENT OF HOURS ANY PLANT LOAD NOT SATISFIED = 0.0

NOTE ELECTRICITY AND/OR FUEL USED TO GENERATE ELECTRICITY IS APPORTIONED BASED ON THE YEARLY DEMAND. ALL OTHER ENERGY TYPES ARE APPORTIONED HOURLY.

MO	UTILITY-	ELECTRICITY	FUEL-OIL	NATURAL-GAS
	TOTAL(MBTU)	209.605	373.990	21.116
JAN	PEAK(KBTU)	389.781	1612.448	46.013
	DY/HR	31/14	26/ 6	31/17
	TOTAL(MBTU)	189.923	278.490	19.223
FEB	PEAK(KBTU)	389.781	1542.173	46.013
	DY/HR	28/14	14/ 7	28/17
	TOTAL(MBTU)	209.472	254.610	21.408
MAR	PEAK(KBTU)	389.781	1487.953	46.013
	DY/HR	28/14	28/ 7	31/17
	TOTAL(MBTU)	193.156	100.634	20.534
APR	PEAK(KBTU)	388.876	1061.655	46.013
	DY/HR	4/10	4/ 6	29/17
	TOTAL(MBTU)	201.659	142.682	21.262
MAY	PEAK(KBTU)	389.781	1373.095	46.013
	DY/HR	20/11	16/ 6	31/17
	TOTAL(MBTU)	191.852	60.398	20.680
JUN	PEAK(KBTU)	386.699	596.427	46.013
	DY/HR	7/14	7/14	30/17
	TOTAL(MBTU)	193.461	46.163	21.116
JUL	PEAK(KBTU)	367.484	555.144	46.013
	DY/HR	8/10	24/14	29/17
	TOTAL(MBTU)	198.223	55.140	21.408
AUG	PEAK(KBTU)	378.053	586.569	46.013
	DY/HR	24/10	6/24	31/17
	TOTAL(MBTU)	196.923	145.992	20.680
SEP	PEAK(KBTU)	389.781	902.635	46.013
	DY/HR	23/14	23/ 6	30/17
	TOTAL(MBTU)	196.289	71.182	21.116
OCT	PEAK(KBTU)	375.448	772.229	46.013
	DY/HR	28/ 8	21/ 6	31/17
	TOTAL(MBTU)	198.121	151.723	20.680
NOV	PEAK(KBTU)	389.781	1396.758	46.013
	DY/HR	29/10	28/ 7	30/17
	TOTAL(MBTU)	208.543	282.690	21.262
DEC	PEAK(KBTU)	389.781	1504.624	46.013
	DY/HR	30/14	5/ 7	30/17
	ONE YEAR	2387.227	1963.694	250.486
	USE/PEAK	389.781	1612.448	46.013

COMPUTER SIMULATIONS

BUILDING 4530

COMPUTER SIMULATIONS
BUILDING 4530

BASE RUN

LDL PROCESSOR INPUT DATA

3/18/1995 16:52:17 LDL RUN 1

```
*  3 *
*  4 *
*  5 *            $----------------------------------$
*  6 *            $EZ-DOE LOADS INPUT$
*  7 *            $----------------------------------$
*  8 *
*  9 *              $ GENERAL PROJECT DATA
* 10 *
* 11 * TITLE LINE-1 *   EMC    ENGINEERS    INC.   *
* 12 *      LINE-2 *EZDOE - ELITE SOFTWARE DEVELOPMENT INC*
* 13 *      LINE-3 *   DENVER,     CO     80227   *
* 14 *
* 15 *      LINE-4 *BUILDING 4530, SMA BUILDING          *
* 16 *      LINE-5 *BASE MODEL                          * ..
* 17 *
* 18 * ABORT           ERRORS ..
* 19 * DIAGNOSTIC      WARNINGS ..
* 20 * LOADS-REPORT     SUMMARY=(LS-C,LS-D)
* 21 *               HOURLY-DATA-SAVE = YES ..
* 22 * BUILDING-LOCATION  HOLIDAY = NO
* 23 *               X-REF = 0.0
* 24 *               Y-REF = 0.0 ..
* 25 * RUN-PERIOD      JAN 1 1994 THRU DEC 31 1994 ..
* 26 *
* 27 *
* 28 *                $ SCHEDULES
* 29 *
* 30 * FULL_ON_D  =DAY-SCHEDULE  (1,24) (1.) ..
* 31 *
* 32 * FULL_OFF_D =DAY-SCHEDULE  (1,24) (0.) ..
* 33 *
* 34 * LIGHT_ON_D =DAY-SCHEDULE  (1,5) (0.23)
* 35 *                          (6,7) (0.35)
* 36 *                          (8,9) (0.5,0.6)
* 37 *                          (10,11) (0.75)
* 38 *                          (12) (0.5)
* 39 *                          (13,14) (0.75)
* 40 *                          (15) (0.5)
* 41 *                          (16,18) (0.4)
* 42 *                          (19) (0.3)
* 43 *                          (20,24) (0.23) ..
* 44 *
* 45 * LT_ON_WKND =DAY-SCHEDULE  (1,6) (0.23)
```

```
* 46 *                    (7,19) (0.07)
* 47 *                    (20,24) (0.23) ..
* 48 *
* 49 * PEOPLE_D  =DAY-SCHEDULE  (1,5) (0.)
* 50 *                    (6,7) (0.1,0.5)
* 51 *                    (8,11) (1.)
* 52 *                    (12) (0.8)
* 53 *                    (13,16) (1.)
* 54 *                    (17,18) (0.5,0.1)
* 55 *                    (19,24) (0.) ..
* 56 *
* 57 * EQUIP_ON_D =DAY-SCHEDULE  (1,5) (0.05)
* 58 *                    (6,7) (0.1,0.2)
* 59 *                    (8,9) (0.3)
* 60 *                    (10,11) (0.4,0.7)
* 61 *                    (12,13) (0.4)
* 62 *                    (14,15) (0.8)
* 63 *                    (16,18) (0.7,0.3,0.1)
* 64 *                    (19,24) (0.05) ..
* 65 *
* 66 * SHOP_INF_D =DAY-SCHEDULE  (1,7) (0.1)
* 67 *                    (8) (1.)
* 68 *                    (9,16) (0.1)
* 69 *                    (17) (1.)
* 70 *                    (18,24) (0.1) ..
* 71 *
* 72 *
* 73 * FULL_ON_W  =WEEK-SCHEDULE  (ALL) FULL_ON_D  ..
* 74 *
* 75 * FULL_OFF_W =WEEK-SCHEDULE  (ALL) FULL_OFF_D  ..
* 76 *
* 77 * LIGHT_ON_W =WEEK-SCHEDULE  (WD)  LIGHT_ON_D
* 78 *                    (WEH) LT_ON_WKND  ..
* 79 *
* 80 * PEOPLE_W  =WEEK-SCHEDULE  (WD)  PEOPLE_D
* 81 *                    (WEH) FULL_OFF_D  ..
* 82 *
* 83 * EQUIP_W   =WEEK-SCHEDULE  (WD)  EQUIP_ON_D
* 84 *                    (WEH) FULL_OFF_D  ..
* 85 *
* 86 * SHOP_IFL_W =WEEK-SCHEDULE  (WD)  SHOP_INF_D
* 87 *                    (WEH) FULL_OFF_D  ..
* 88 *
* 89 *
* 90 * $ FULL ON SCHEDULE
* 91 * FULL_ON   =SCHEDULE THRU DEC 31 FULL_ON_W  ..
* 92 *
* 93 * $ FULL OFF SCHEDULE
* 94 * FULL_OFF  =SCHEDULE THRU DEC 31 FULL_OFF_W  ..
* 95 *
```

```
*  96 * $ LIGHTING SCHEDULE
*  97 * LIGHT_SCHD =SCHEDULE THRU DEC 31 LIGHT_ON_W ..
*  98 *
*  99 * $ OCCUPANCY SCHEDULE
* 100 * PEOPLE_SCH =SCHEDULE THRU DEC 31 PEOPLE_W ..
* 101 *
* 102 * $ EQUIPMENT SCHEDULE
* 103 * EQUIP_SCHD =SCHEDULE THRU DEC 31 EQUIP_W ..
* 104 *
* 105 * $ SHOP INFILTRATION SCHED
* 106 * SHOP_INFIL =SCHEDULE THRU DEC 31 SHOP_IFL_W ..
* 107 *
* 108 *
* 109 *
* 110 *              $ CONSTRUCTION TYPES
* 111 *
* 112 *
* 113 *
* 114 * FLOORCON =CONSTRUCTION   U-VALUE =  0.010 ..
* 115 *
* 116 *  $ ROOF CONSTRUCITON
* 117 * ROOFCON  =CONSTRUCTION   U-VALUE =  0.030 ..
* 118 *
* 119 *  $ WALL CONSTRUCITON
* 120 * WALL_CON =CONSTRUCTION   U-VALUE =  0.010 ..
* 121 * LDOORCON =CONSTRUCTION   U-VALUE =  0.400 ..
* 122 * SDOORCON =CONSTRUCTION   U-VALUE =  1.000 ..
* 123 *
* 124 * G_TYPE1  =GLASS-TYPE    SHADING-COEF = 1.000
* 125 *                PANES = 1
* 126 *                GLASS-CONDUCTANCE =  1.130 ..
* 127 *
* 128 *
* 129 *
* 130 *
* 131 *              $ SPACE DESCRIPTION
* 132 *
* 133 * ADMIN&TOOL =SPACE    AREA = 14228.0  VOLUME = 128052.0
* 134 *              TEMPERATURE = (68.)  ZONE-TYPE = CONDITIONED
* 135 *              PEOPLE-SCHEDULE = PEOPLE_SCH  NUMBER-OF-PEOPLE = 40.0
* 136 *              PEOPLE-HEAT-GAIN = 450.0  PEOPLE-HG-LAT = 0.2
* 137 *              PEOPLE-HG-SENS = 0.8  LIGHTING-TYPE = REC-FLUOR-RV
* 138 *              LIGHTING-KW = 22.9  LIGHTING-SCHEDULE = LIGHT_SCHD
* 139 *              SOURCE-SCHEDULE = FULL_ON  SOURCE-TYPE = HOT-WATER
* 140 *              SOURCE-BTU/HR = 23630.0  SOURCE-SENSIBLE = 0.0
* 141 *              INF-METHOD = AIR-CHANGE  AIR-CHANGES/HR = 0.5
* 142 *              INF-SCHEDULE = FULL_ON  ..
* 143 *
* 144 *         U-W     HEIGHT = 110.0  WIDTH = 129.5  CONS = FLOORCON ..
* 145 *
```

```
* 146 *          ROOF    HEIGHT = 110.0  WIDTH = 129.5  CONS = ROOFCON
* 147 *               TILT = 0  ..
* 148 *
* 149 *          E-W     HEIGHT = 9.0  WIDTH = 129.5  CONS = WALL_CON
* 150 *               AZIMUTH = 0  ..
* 151 *
* 152 *           WINDOW HEIGHT = 4.0  WIDTH = 2.0  G-T = G_TYPE1
* 153 *               MULTIPLIER = 13.0  ..
* 154 *
* 155 *           DOOR   HEIGHT = 7.5  WIDTH = 3.0  CONS = SDOORCON
* 156 *               MULTIPLIER = 3.0  ..
* 157 *
* 158 *          E-W     HEIGHT = 9.0  WIDTH = 86.0  CONS = WALL_CON
* 159 *               AZIMUTH = 0  ..
* 160 *
* 161 *           WINDOW HEIGHT = 4.0  WIDTH = 4.0  G-T = G_TYPE1
* 162 *               MULTIPLIER = 12.0  ..
* 163 *
* 164 *           DOOR   HEIGHT = 7.5  WIDTH = 2.0  CONS = SDOORCON
* 165 *               MULTIPLIER = 2.0  ..
* 166 *
* 167 *
* 168 * VEH_MNT   =SPACE   AREA = 33660.0  VOLUME = 1000000.0
* 169 *               TEMPERATURE = (60.)  ZONE-TYPE = CONDITIONED
* 170 *               PEOPLE-SCHEDULE = PEOPLE_SCH  NUMBER-OF-PEOPLE = 50.0
* 171 *               PEOPLE-HEAT-GAIN = 450.0  PEOPLE-HG-LAT = 0.2
* 172 *               PEOPLE-HG-SENS = 0.8  LIGHTING-TYPE = INCAND
* 173 *               LIGHTING-KW = 14.15  LIGHTING-SCHEDULE = LIGHT_SCHD
* 174 *               INF-METHOD = AIR-CHANGE  AIR-CHANGES/HR = 1.0
* 175 *               INF-SCHEDULE = FULL_ON  ..
* 176 *
* 177 *          U-W     HEIGHT = 165.0  WIDTH = 204.0  CONS = FLOORCON ..
* 178 *
* 179 *          ROOF    HEIGHT = 165.0  WIDTH = 204.0  CONS = ROOFCON
* 180 *               TILT = 0  ..
* 181 *
* 182 *          E-W     HEIGHT = 32.5  WIDTH = 204.0  CONS = WALL_CON
* 183 *               AZIMUTH = 0  ..
* 184 *
* 185 *           DOOR   HEIGHT = 14.0  WIDTH = 27.0  CONS = LDOORCON
* 186 *               MULTIPLIER = 6.0  ..
* 187 *
* 188 *           DOOR   HEIGHT = 7.5  WIDTH = 3.0  CONS = SDOORCON
* 189 *               MULTIPLIER = 3.0  ..
* 190 *
* 191 *          E-W     HEIGHT = 32.5  WIDTH = 204.0  CONS = WALL_CON
* 192 *               AZIMUTH = 180  ..
* 193 *
* 194 *           DOOR   HEIGHT = 14.0  WIDTH = 27.0  CONS = LDOORCON
* 195 *               MULTIPLIER = 6.0  ..
```

```
* 196 *
* 197 *          DOOR  HEIGHT = 7.5  WIDTH = 3.0  CONS = SDOORCON
* 198 *              MULTIPLIER = 3.0  ..
* 199 *
* 200 *
* 201 * PAINT&CUR. =SPACE   AREA = 29040.0  VOLUME = 943800.0
* 202 *              TEMPERATURE = (60.)  ZONE-TYPE = CONDITIONED
* 203 *              PEOPLE-SCHEDULE = PEOPLE_SCH  NUMBER-OF-PEOPLE = 40.0
* 204 *              PEOPLE-HEAT-GAIN = 450.0  PEOPLE-HG-LAT = 0.2
* 205 *              PEOPLE-HG-SENS = 0.8  LIGHTING-TYPE = INCAND
* 206 *              LIGHTING-KW = 8.1  LIGHTING-SCHEDULE = LIGHT_SCHD
* 207 *              INF-METHOD = AIR-CHANGE  AIR-CHANGES/HR = 0.96
* 208 *              INF-SCHEDULE = FULL_ON  ..
* 209 *
* 210 *         U-W     HEIGHT = 165.0  WIDTH = 176.0  CONS = FLOORCON ..
* 211 *
* 212 *         ROOF    HEIGHT = 165.0  WIDTH = 176.0  CONS = ROOFCON
* 213 *              TILT = 0  ..
* 214 *
* 215 *         E-W     HEIGHT = 32.5  WIDTH = 176.0  CONS = WALL_CON
* 216 *              AZIMUTH = 0  ..
* 217 *
* 218 *          DOOR  HEIGHT = 14.0  WIDTH = 27.0  CONS = LDOORCON
* 219 *              MULTIPLIER = 5.0  ..
* 220 *
* 221 *          DOOR  HEIGHT = 7.5  WIDTH = 3.0  CONS = SDOORCON
* 222 *              MULTIPLIER = 2.0  ..
* 223 *
* 224 *         E-W     HEIGHT = 32.5  WIDTH = 176.0  CONS = WALL_CON
* 225 *              AZIMUTH = 180  ..
* 226 *
* 227 *          DOOR  HEIGHT = 14.0  WIDTH = 27.0  CONS = LDOORCON
* 228 *              MULTIPLIER = 5.0  ..
* 229 *
* 230 *          DOOR  HEIGHT = 7.5  WIDTH = 3.0  CONS = SDOORCON
* 231 *              MULTIPLIER = 2.0  ..
* 232 *
* 233 *         E-W     HEIGHT = 32.5  WIDTH = 165.0  CONS = WALL_CON
* 234 *              AZIMUTH = 270  ..
* 235 *
* 236 *          DOOR  HEIGHT = 7.5  WIDTH = 3.0  CONS = SDOORCON
* 237 *              MULTIPLIER = 3.0  ..
* 238 *
* 239 *
* 240 * VEH_BOD_SH =SPACE   AREA = 14628.0  VOLUME = 475410.0
* 241 *              TEMPERATURE = (60.)  ZONE-TYPE = CONDITIONED
* 242 *              PEOPLE-SCHEDULE = PEOPLE_SCH  NUMBER-OF-PEOPLE = 40.0
* 243 *              PEOPLE-HEAT-GAIN = 450.0  PEOPLE-HG-LAT = 0.2
* 244 *              PEOPLE-HG-SENS = 0.8  LIGHTING-TYPE = INCAND
* 245 *              LIGHTING-KW = 6.8  LIGHTING-SCHEDULE = LIGHT_SCHD
```

```
* 246 *              INF-METHOD = AIR-CHANGE  AIR-CHANGES/HR = 0.43
* 247 *              INF-SCHEDULE = FULL_ON   ..
* 248 *
* 249 *          U-W     HEIGHT = 69.0  WIDTH = 212.0  CONS = FLOORCON ..
* 250 *
* 251 *          ROOF    HEIGHT = 69.0  WIDTH = 212.0  CONS = ROOFCON
* 252 *               TILT = 0   ..
* 253 *
* 254 *          E-W     HEIGHT = 32.5  WIDTH = 212.0  CONS = WALL_CON
* 255 *               AZIMUTH = 0   ..
* 256 *
* 257 *           DOOR   HEIGHT = 14.0  WIDTH = 27.0  CONS = LDOORCON
* 258 *               MULTIPLIER = 4.0   ..
* 259 *
* 260 *           DOOR   HEIGHT = 7.5  WIDTH = 3.0  CONS = SDOORCON
* 261 *               MULTIPLIER = 2.0   ..
* 262 *
* 263 *          E-W     HEIGHT = 32.5  WIDTH = 212.0  CONS = WALL_CON
* 264 *               AZIMUTH = 180   ..
* 265 *
* 266 *           DOOR   HEIGHT = 14.0  WIDTH = 27.0  CONS = LDOORCON
* 267 *               MULTIPLIER = 5.0   ..
* 268 *
* 269 *           DOOR   HEIGHT = 7.5  WIDTH = 3.0  CONS = SDOORCON
* 270 *               MULTIPLIER = 3.0   ..
* 271 *
* 272 *          E-W     HEIGHT = 32.5  WIDTH = 69.0  CONS = WALL_CON
* 273 *               AZIMUTH = 270   ..
* 274 *
* 275 *           DOOR   HEIGHT = 7.5  WIDTH = 3.0  CONS = SDOORCON
* 276 *               MULTIPLIER = 2.0   ..
* 277 *
* 278 *
* 279 * ADMIN&ELEC =SPACE    AREA = 10085.0  VOLUME = 90765.0
* 280 *              TEMPERATURE = (68.)  ZONE-TYPE = CONDITIONED
* 281 *              PEOPLE-SCHEDULE = PEOPLE_SCH  NUMBER-OF-PEOPLE = 40.0
* 282 *              PEOPLE-HEAT-GAIN = 450.0  PEOPLE-HG-LAT = 0.2
* 283 *              PEOPLE-HG-SENS = 0.8  LIGHTING-TYPE = REC-FLUOR-RV
* 284 *              LIGHTING-KW = 9.79  LIGHTING-SCHEDULE = LIGHT_SCHD
* 285 *              INF-METHOD = AIR-CHANGE  AIR-CHANGES/HR = 0.5
* 286 *              INF-SCHEDULE = FULL_ON   ..
* 287 *
* 288 *          U-W     HEIGHT = 83.0  WIDTH = 129.5  CONS = FLOORCON ..
* 289 *
* 290 *          ROOF    HEIGHT = 83.0  WIDTH = 129.5  CONS = ROOFCON
* 291 *               TILT = 0   ..
* 292 *
* 293 *          E-W     HEIGHT = 9.0  WIDTH = 125.0  CONS = WALL_CON
* 294 *               AZIMUTH = 270   ..
* 295 *
```

```
* 296 *          DOOR  HEIGHT = 7.5  WIDTH = 3.0  CONS = SDOORCON
* 297 *              MULTIPLIER = 3.0  ..
* 298 *
* 299 *          DOOR  HEIGHT = 14.0  WIDTH = 14.5  CONS = LDOORCON ..
* 300 *
* 301 *          DOOR  HEIGHT = 9.0  WIDTH = 14.5  CONS = LDOORCON
* 302 *              MULTIPLIER = 3.0  ..
* 303 *
* 304 *
* 305 * CANVAS&ARM =SPACE   AREA = 21746.0  VOLUME = 130020.0
* 306 *              TEMPERATURE = (60.)  ZONE-TYPE = CONDITIONED
* 307 *              PEOPLE-SCHEDULE = PEOPLE_SCH  NUMBER-OF-PEOPLE = 40.0
* 308 *              PEOPLE-HEAT-GAIN = 450.0  PEOPLE-HG-LAT = 0.2
* 309 *              PEOPLE-HG-SENS = 0.8  LIGHTING-TYPE = REC-FLUOR-RV
* 310 *              LIGHTING-KW = 13.67  LIGHTING-SCHEDULE = LIGHT_SCHD
* 311 *              INF-METHOD = AIR-CHANGE  AIR-CHANGES/HR = 0.5
* 312 *              INF-SCHEDULE = FULL_ON  ..
* 313 *
* 314 *         U-W    HEIGHT = 84.0  WIDTH = 259.0  CONS = FLOORCON ..
* 315 *
* 316 *         ROOF   HEIGHT = 84.0  WIDTH = 259.0  CONS = ROOFCON
* 317 *              TILT = 0  ..
* 318 *
* 319 *         E-W    HEIGHT = 9.0  WIDTH = 129.5  CONS = WALL_CON
* 320 *              AZIMUTH = 180  ..
* 321 *
* 322 *          DOOR  HEIGHT = 7.5  WIDTH = 3.0  CONS = SDOORCON
* 323 *              MULTIPLIER = 3.0  ..
* 324 *
* 325 *         E-W    HEIGHT = 25.0  WIDTH = 120.0  CONS = WALL_CON
* 326 *              AZIMUTH = 90  ..
* 327 *
* 328 *          DOOR  HEIGHT = 7.5  WIDTH = 3.0  CONS = SDOORCON
* 329 *              MULTIPLIER = 3.0  ..
* 330 *
* 331 *
* 332 * PAINT&DYN  =SPACE   AREA = 1775.0  VOLUME = 15975.0
* 333 *              TEMPERATURE = (60.)  ZONE-TYPE = CONDITIONED
* 334 *              PEOPLE-SCHEDULE = PEOPLE_SCH  NUMBER-OF-PEOPLE = 15.0
* 335 *              PEOPLE-HEAT-GAIN = 450.0  PEOPLE-HG-LAT = 0.2
* 336 *              PEOPLE-HG-SENS = 0.8  LIGHTING-TYPE = REC-FLUOR-RV
* 337 *              LIGHTING-KW = 0.45  LIGHTING-SCHEDULE = LIGHT_SCHD
* 338 *              INF-METHOD = AIR-CHANGE  AIR-CHANGES/HR = 0.5
* 339 *              INF-SCHEDULE = FULL_ON  ..
* 340 *
* 341 *         U-W    HEIGHT = 22.0  WIDTH = 129.5  CONS = FLOORCON ..
* 342 *
* 343 *         ROOF   HEIGHT = 22.0  WIDTH = 129.5  CONS = ROOFCON
* 344 *              TILT = 0  ..
* 345 *
```

```
* 346 *
* 347 * SHOPSUPPLY =SPACE   AREA = 29641.0  VOLUME = 741025.0
* 348 *              TEMPERATURE = (60.)  ZONE-TYPE = CONDITIONED
* 349 *              PEOPLE-SCHEDULE = PEOPLE_SCH  NUMBER-OF-PEOPLE = 40.0
* 350 *              PEOPLE-HEAT-GAIN = 450.0  PEOPLE-HG-LAT = 0.2
* 351 *              PEOPLE-HG-SENS = 0.8  LIGHTING-TYPE = REC-FLUOR-RV
* 352 *              LIGHTING-KW = 4.7  LIGHTING-SCHEDULE = LIGHT_SCHD
* 353 *              INF-METHOD = AIR-CHANGE  AIR-CHANGES/HR = 0.5
* 354 *              INF-SCHEDULE = FULL_ON   ..
* 355 *
* 356 *         U-W     HEIGHT = 228.9  WIDTH = 129.5  CONS = FLOORCON ..
* 357 *
* 358 *         ROOF    HEIGHT = 228.5  WIDTH = 129.5  CONS = ROOFCON
* 359 *              TILT = 0   ..
* 360 *
* 361 *         E-W     HEIGHT = 25.0  WIDTH = 211.0  CONS = WALL_CON
* 362 *              AZIMUTH = 0   ..
* 363 *
* 364 *          DOOR   HEIGHT = 7.5  WIDTH = 3.0  CONS = SDOORCON
* 365 *              MULTIPLIER = 2.0   ..
* 366 *
* 367 *          DOOR   HEIGHT = 8.0  WIDTH = 8.0  CONS = LDOORCON
* 368 *              MULTIPLIER = 2.0   ..
* 369 *
* 370 *
* 371 * BATTERIES  =SPACE   AREA = 4705.0  VOLUME = 84690.0
* 372 *              TEMPERATURE = (60.)  ZONE-TYPE = CONDITIONED
* 373 *              PEOPLE-SCHEDULE = PEOPLE_SCH  NUMBER-OF-PEOPLE = 40.0
* 374 *              PEOPLE-HEAT-GAIN = 450.0  PEOPLE-HG-LAT = 0.2
* 375 *              PEOPLE-HG-SENS = 0.8  LIGHTING-TYPE = REC-FLUOR-RV
* 376 *              LIGHTING-KW = 11.08  LIGHTING-SCHEDULE = LIGHT_SCHD
* 377 *              INF-METHOD = AIR-CHANGE  AIR-CHANGES/HR = 0.5
* 378 *              INF-SCHEDULE = FULL_ON   ..
* 379 *
* 380 *         U-W     HEIGHT = 39.2  WIDTH = 120.0  CONS = FLOORCON ..
* 381 *
* 382 *         ROOF    HEIGHT = 39.2  WIDTH = 120.0  CONS = ROOFCON
* 383 *              TILT = 0   ..
* 384 *
* 385 *         E-W     HEIGHT = 18.0  WIDTH = 120.0  CONS = WALL_CON
* 386 *              AZIMUTH = 180   ..
* 387 *
* 388 *          DOOR   HEIGHT = 7.5  WIDTH = 3.0  CONS = SDOORCON
* 389 *              MULTIPLIER = 2.0   ..
* 390 *
* 391 *
* 392 * PAINT_BTHS =SPACE   AREA = 3742.0  VOLUME = 44688.0
* 393 *              TEMPERATURE = (72.)  ZONE-TYPE = CONDITIONED
* 394 *              AREA/PERSON = 100.0  INF-METHOD = NONE   ..
* 395 *
```

```
* 396 *          U-W     HEIGHT = 61.2  WIDTH = 61.2  CONS = FLOORCON ..
* 397 *
* 398 *           ROOF    HEIGHT = 61.2  WIDTH = 61.2  CONS = ROOFCON
* 399 *                 TILT = 0  ..
* 400 *
* 401 *
* 402 * END ..
* 403 * COMPUTE LOADS ..
* 404 *
* 405 * INPUT SYSTEMS ..

        S D L  P R O C E S S O R  I N P U T  D A T A

            3/18/1995   16:52:17  SDL RUN  1



* 406 *
* 407 *
* 408 *            $---------------------------------------$
* 409 *            $ E Z - D O E  S Y S T E M S  I N P U T $
* 410 *            $---------------------------------------$
* 411 *
* 412 *              $ GENERAL PROJECT DATA
* 413 *
* 414 * TITLE  LINE-1 *   EMC     ENGINEERS     INC.    *
* 415 *       LINE-2 *EZDOE - ELITE SOFTWARE DEVELOPMENT INC*
* 416 *       LINE-3 *    DENVER,      CO      80227    *
* 417 *
* 418 *       LINE-4 *BUILDING 4530, SMA BUILDING          *
* 419 *       LINE-5 *BASE MODEL                          * ..
* 420 * ABORT            ERRORS ..
* 421 * DIAGNOSTIC        WARNINGS ..
* 422 * SYSTEMS-REPORT    SUMMARY=(SS-A,SS-C,SS-K)
* 423 *                HOURLY-DATA-SAVE = YES ..
* 424 *
* 425 *                $ SCHEDULES
* 426 *
* 427 * FULL_ON_D  =DAY-SCHEDULE  (1,24) (1.) ..
* 428 * FULL_OFF_D =DAY-SCHEDULE  (1,24) (0.) ..
* 429 * HEAT_H_D   =DAY-SCHEDULE  (1,6) (55.)
* 430 *                    (7,17) (74.)
* 431 *                    (18,24) (55.) ..
* 432 * HEAT_L_D   =DAY-SCHEDULE  (1,6) (47.)
* 433 *                    (7,17) (60.)
* 434 *                    (18,24) (47.) ..
* 435 * HEAT_68_D  =DAY-SCHEDULE  (1,24) (74.) ..
* 436 * HEAT_60_D  =DAY-SCHEDULE  (1,24) (60.) ..
* 437 * HEAT_72_D  =DAY-SCHEDULE  (1,24) (72.) ..
```

```
* 438 * PAINT_MAUD =DAY-SCHEDULE  (1,7) (0.)
* 439 *                          (8,17) (1.)
* 440 *                          (18,24) (0.) ..
* 441 *
* 442 * FULL_ON_W  =WEEK-SCHEDULE  (ALL) FULL_ON_D  ..
* 443 *
* 444 * FULL_OFF_W =WEEK-SCHEDULE  (ALL) FULL_OFF_D  ..
* 445 *
* 446 * HEAT_H_W   =WEEK-SCHEDULE  (ALL) HEAT_H_D  ..
* 447 *
* 448 * HEAT_L_W   =WEEK-SCHEDULE  (ALL) HEAT_L_D  ..
* 449 *
* 450 * HEAT_68_W  =WEEK-SCHEDULE  (ALL) HEAT_68_D  ..
* 451 *
* 452 * HEAT_60_W  =WEEK-SCHEDULE  (ALL) HEAT_60_D  ..
* 453 *
* 454 * HEAT_72_W  =WEEK-SCHEDULE  (ALL) HEAT_72_D  ..
* 455 *
* 456 * PAINT_MAUW =WEEK-SCHEDULE  (WD)  PAINT_MAUD
* 457 *                          (WEH) FULL_OFF_D  ..
* 458 *
* 459 *
* 460 * $ FULL ON SCHEDULE
* 461 * FULL_ON    =SCHEDULE THRU DEC 31 FULL_ON_W  ..
* 462 *
* 463 * $ FULL OFF SCHEDULE
* 464 * FULL_OFF   =SCHEDULE THRU DEC 31 FULL_OFF_W  ..
* 465 *
* 466 * $ HIGH HEAT SCHEDULE
* 467 * HEAT_H_SCH =SCHEDULE THRU DEC 31 HEAT_H_W  ..
* 468 *
* 469 * $ HEAT LOW SCHEDULE
* 470 * HEAT_L_SCH =SCHEDULE THRU DEC 31 HEAT_L_W  ..
* 471 *
* 472 * $ HEAT 68 DEG
* 473 * HEAT_68_Y  =SCHEDULE THRU DEC 31 HEAT_68_W  ..
* 474 *
* 475 * $ HEAT 60 DEG
* 476 * HEAT_60_Y  =SCHEDULE THRU DEC 31 HEAT_60_W  ..
* 477 *
* 478 * $ HEAT 72 DEG
* 479 * HEAT_72_Y  =SCHEDULE THRU DEC 31 HEAT_72_W  ..
* 480 *
* 481 * $ PAINT BOOTH MAU SCHED
* 482 * PAINT_MAU  =SCHEDULE THRU DEC 31 PAINT_MAUW  ..
* 483 *
* 484 *
* 485 *
* 486 *                $ ZONE DESCRIPTION
* 487 *
```

```
* 488 * ADMIN&TOOL =ZONE   DESIGN-HEAT-T = 68.0  DESIGN-COOL-T = 75.0
* 489 *              HEAT-TEMP-SCH = HEAT_68_Y  ZONE-TYPE = CONDITIONED
* 490 *              THERMOSTAT-TYPE = PROPORTIONAL
* 491 *              BASEBOARD-CTRL = THERMOSTATIC
* 492 *              BASEBOARD-RATING = -66440.  ASSIGNED-CFM = 23765.
* 493 *              OUTSIDE-AIR-CFM = 4700.  SIZING-OPTION = FROM-LOADS
* 494 *              RATED-CFM = 23765.0  MIN-CFM-RATIO = 1.0
* 495 *              EXHAUST-CFM = 4700.0  HEATING-CAPACITY = -510100.0  ..
* 496 *
* 497 * VEH_MNT   =ZONE   DESIGN-HEAT-T = 60.0  DESIGN-COOL-T = 80.0
* 498 *              HEAT-TEMP-SCH = HEAT_60_Y  ZONE-TYPE = CONDITIONED
* 499 *              THERMOSTAT-TYPE = PROPORTIONAL
* 500 *              BASEBOARD-CTRL = THERMOSTATIC
* 501 *              BASEBOARD-RATING = -750000.  ASSIGNED-CFM = 51300.
* 502 *              OUTSIDE-AIR-CFM = 51300.  SIZING-OPTION = FROM-LOADS
* 503 *              RATED-CFM = 51300.0  MIN-CFM-RATIO = 1.0
* 504 *              EXHAUST-CFM = 51300.0  HEATING-CAPACITY = -3698000.0  ..
* 505 *
* 506 * PAINT&CUR. =ZONE   DESIGN-HEAT-T = 60.0  DESIGN-COOL-T = 80.0
* 507 *              HEAT-TEMP-SCH = HEAT_60_Y  ZONE-TYPE = CONDITIONED
* 508 *              THERMOSTAT-TYPE = PROPORTIONAL
* 509 *              BASEBOARD-CTRL = THERMOSTATIC
* 510 *              BASEBOARD-RATING = -613000.  ASSIGNED-CFM = 35460.
* 511 *              OUTSIDE-AIR-CFM = 35460.  SIZING-OPTION = FROM-LOADS
* 512 *              RATED-CFM = 35460.0  MIN-CFM-RATIO = 1.0
* 513 *              HEATING-CAPACITY = -2560000.0  ..
* 514 *
* 515 * VEH_BOD_SH =ZONE   DESIGN-HEAT-T = 60.0  DESIGN-COOL-T = 80.0
* 516 *              HEAT-TEMP-SCH = HEAT_60_Y  ZONE-TYPE = CONDITIONED
* 517 *              THERMOSTAT-TYPE = PROPORTIONAL
* 518 *              BASEBOARD-CTRL = THERMOSTATIC
* 519 *              BASEBOARD-RATING = -385000.  ASSIGNED-CFM = 30360.
* 520 *              OUTSIDE-AIR-CFM = 30360.  SIZING-OPTION = FROM-LOADS
* 521 *              RATED-CFM = 30360.0  MIN-CFM-RATIO = 1.0
* 522 *              HEATING-CAPACITY = -2196000.0  ..
* 523 *
* 524 * ADMIN&ELEC =ZONE   DESIGN-HEAT-T = 68.0  DESIGN-COOL-T = 75.0
* 525 *              HEAT-TEMP-SCH = HEAT_68_Y  ZONE-TYPE = CONDITIONED
* 526 *              THERMOSTAT-TYPE = PROPORTIONAL
* 527 *              BASEBOARD-CTRL = THERMOSTATIC
* 528 *              BASEBOARD-RATING = -17200.  ASSIGNED-CFM = 30170.
* 529 *              OUTSIDE-AIR-CFM = 22290.  SIZING-OPTION = FROM-LOADS
* 530 *              RATED-CFM = 30170.0  MIN-CFM-RATIO = 1.0
* 531 *              EXHAUST-CFM = 22290.0  HEATING-CAPACITY = -1905300.0  ..
* 532 *
* 533 * CANVAS&ARM =ZONE   DESIGN-HEAT-T = 68.0  DESIGN-COOL-T = 80.0
* 534 *              HEAT-TEMP-SCH = HEAT_68_Y  ZONE-TYPE = CONDITIONED
* 535 *              THERMOSTAT-TYPE = PROPORTIONAL
* 536 *              BASEBOARD-CTRL = THERMOSTATIC
* 537 *              BASEBOARD-RATING = -29400.  ASSIGNED-CFM = 24090.
```

```
* 538 *              OUTSIDE-AIR-CFM = 7970.  SIZING-OPTION = FROM-LOADS
* 539 *              RATED-CFM = 24090.0  MIN-CFM-RATIO = 1.0
* 540 *              EXHAUST-CFM = 7970.0  HEATING-CAPACITY = -816700.0  ..
* 541 *
* 542 * PAINT&DYN  =ZONE   DESIGN-HEAT-T = 60.0  DESIGN-COOL-T = 80.0
* 543 *              HEAT-TEMP-SCH = HEAT_60_Y  ZONE-TYPE = CONDITIONED
* 544 *              THERMOSTAT-TYPE = PROPORTIONAL
* 545 *              BASEBOARD-CTRL = THERMOSTATIC  ASSIGNED-CFM = 5400.
* 546 *              OUTSIDE-AIR-CFM = 5400.  SIZING-OPTION = FROM-LOADS
* 547 *              RATED-CFM = 5400.0  MIN-CFM-RATIO = 1.0
* 548 *              EXHAUST-CFM = 5400.0  HEATING-CAPACITY = -498400.0  ..
* 549 *
* 550 * SHOPSUPPLY =ZONE   DESIGN-HEAT-T = 60.0  DESIGN-COOL-T = 80.0
* 551 *              HEAT-TEMP-SCH = HEAT_60_Y  ZONE-TYPE = CONDITIONED
* 552 *              THERMOSTAT-TYPE = PROPORTIONAL
* 553 *              BASEBOARD-CTRL = THERMOSTATIC  ASSIGNED-CFM = 27700.
* 554 *              SIZING-OPTION = FROM-LOADS  RATED-CFM = 27700.0
* 555 *              MIN-CFM-RATIO = 1.0  HEATING-CAPACITY = -996800.0  ..
* 556 *
* 557 * BATTERIES  =ZONE   DESIGN-HEAT-T = 60.0  DESIGN-COOL-T = 80.0
* 558 *              HEAT-TEMP-SCH = HEAT_60_Y  ZONE-TYPE = CONDITIONED
* 559 *              THERMOSTAT-TYPE = PROPORTIONAL
* 560 *              BASEBOARD-CTRL = THERMOSTATIC  ASSIGNED-CFM = 21000.
* 561 *              OUTSIDE-AIR-CFM = 21000.  SIZING-OPTION = FROM-LOADS
* 562 *              RATED-CFM = 21000.0  MIN-CFM-RATIO = 1.0
* 563 *              EXHAUST-CFM = 21000.0  HEATING-CAPACITY = -1645000.0  ..
* 564 *
* 565 * PAINT_BTHS =ZONE   DESIGN-HEAT-T = 72.0  DESIGN-COOL-T = 85.0
* 566 *              HEAT-TEMP-SCH = HEAT_72_Y  ZONE-TYPE = CONDITIONED
* 567 *              THERMOSTAT-TYPE = PROPORTIONAL
* 568 *              BASEBOARD-CTRL = THERMOSTATIC  ASSIGNED-CFM = 49700.
* 569 *              OUTSIDE-AIR-CFM = 49700.  SIZING-OPTION = FROM-LOADS
* 570 *              RATED-CFM = 49700.0  MIN-CFM-RATIO = 1.0
* 571 *              EXHAUST-CFM = 49700.0  HEATING-CAPACITY = -4255000.0  ..
* 572 *
* 573 *
* 574 *              $ SYSTEM DESCRIPTION
* 575 *
* 576 * HV_1      =SYSTEM   SYSTEM-TYPE = HVSYS
* 577 *                MAX-SUPPLY-T = 135.0  HEATING-SCHEDULE = FULL_ON
* 578 *                MIN-HUMIDITY = 30.0  ECONO-LIMIT-T = 65.0
* 579 *                ECONO-LOW-LIMIT = 55.0  HEAT-CONTROL = COLDEST
* 580 *                SUPPLY-CFM = 23765.  RETURN-CFM = 19012.
* 581 *                RATED-CFM = 23765.  MIN-OUTSIDE-AIR = 0.2
* 582 *                SUPPLY-DELTA-T = 2.4  SUPPLY-KW = 0.00078
* 583 *                MOTOR-PLACEMENT = OUTSIDE-AIRFLOW
* 584 *                NIGHT-CYCLE-CTRL = STAY-OFF  NIGHT-VENT-DT = 0.0
* 585 *                HEATING-CAPACITY = -510100.  FURNACE-AUX = 0.
* 586 *                ZONE-NAMES = (ADMIN&TOOL)  ..
* 587 *
```

```
* 588 * HV_2     =SYSTEM    SYSTEM-TYPE = HVSYS
* 589 *               MAX-SUPPLY-T = 135.0  HEATING-SCHEDULE = FULL_ON
* 590 *               MIN-HUMIDITY = 30.0  ECONO-LIMIT-T = 65.0
* 591 *               ECONO-LOW-LIMIT = 55.0  HEAT-CONTROL = COLDEST
* 592 *               SUPPLY-CFM = 30170.  RETURN-CFM = 7844.
* 593 *               RATED-CFM = 30170.  MIN-OUTSIDE-AIR = 0.74
* 594 *               SUPPLY-DELTA-T = 2.4  SUPPLY-KW = 0.00078
* 595 *               MOTOR-PLACEMENT = OUTSIDE-AIRFLOW
* 596 *               NIGHT-CYCLE-CTRL = STAY-OFF  NIGHT-VENT-DT = 0.0
* 597 *               HEATING-CAPACITY = -1905300.  FURNACE-AUX = 0.
* 598 *               ZONE-NAMES = (ADMIN&ELEC)  ..
* 599 *
* 600 * HV_3     =SYSTEM    SYSTEM-TYPE = HVSYS
* 601 *               MAX-SUPPLY-T = 135.0  HEATING-SCHEDULE = FULL_ON
* 602 *               MIN-HUMIDITY = 30.0  ECONO-LIMIT-T = 65.0
* 603 *               ECONO-LOW-LIMIT = 55.0  HEAT-CONTROL = COLDEST
* 604 *               SUPPLY-CFM = 24090.  RETURN-CFM = 16120.
* 605 *               RATED-CFM = 24090.  MIN-OUTSIDE-AIR = 0.33
* 606 *               SUPPLY-DELTA-T = 2.4  SUPPLY-KW = 0.00078
* 607 *               MOTOR-PLACEMENT = OUTSIDE-AIRFLOW
* 608 *               NIGHT-CYCLE-CTRL = STAY-OFF  NIGHT-VENT-DT = 0.0
* 609 *               HEATING-CAPACITY = -855600.  FURNACE-AUX = 0.
* 610 *               ZONE-NAMES = (CANVAS&ARM)  ..
* 611 *
* 612 * MAU_5    =SYSTEM    SYSTEM-TYPE = HVSYS
* 613 *               MAX-SUPPLY-T = 135.0  HEATING-SCHEDULE = FULL_ON
* 614 *               MIN-HUMIDITY = 30.0  ECONO-LIMIT-T = 65.0
* 615 *               ECONO-LOW-LIMIT = 55.0  HEAT-CONTROL = COLDEST
* 616 *               SUPPLY-CFM = 5400.  RATED-CFM = 5400.
* 617 *               MIN-OUTSIDE-AIR = 1.0  SUPPLY-DELTA-T = 2.4
* 618 *               SUPPLY-KW = 0.00078
* 619 *               MOTOR-PLACEMENT = OUTSIDE-AIRFLOW
* 620 *               NIGHT-CYCLE-CTRL = STAY-OFF  NIGHT-VENT-DT = 0.0
* 621 *               HEATING-CAPACITY = -498400.  FURNACE-AUX = 0.
* 622 *               ZONE-NAMES = (PAINT&DYN)  ..
* 623 *
* 624 * SUPPLY_UH  =SYSTEM    SYSTEM-TYPE = UHT
* 625 *               MAX-SUPPLY-T = 135.0  HEATING-SCHEDULE = FULL_ON
* 626 *               RATED-CFM = 27700.  SUPPLY-DELTA-T = 0.18
* 627 *               SUPPLY-KW = 0.000059
* 628 *               NIGHT-CYCLE-CTRL = CYCLE-ON-ANY
* 629 *               HEATING-CAPACITY = -996800.  FURNACE-AUX = 0.
* 630 *               ZONE-NAMES = (SHOPSUPPLY)  ..
* 631 *
* 632 * MAU_6&7   =SYSTEM    SYSTEM-TYPE = HVSYS
* 633 *               MAX-SUPPLY-T = 135.0  HEATING-SCHEDULE = FULL_ON
* 634 *               MIN-HUMIDITY = 30.0  ECONO-LIMIT-T = 65.0
* 635 *               ECONO-LOW-LIMIT = 55.0  HEAT-CONTROL = COLDEST
* 636 *               SUPPLY-CFM = 42220.  RATED-CFM = 42220.
* 637 *               MIN-OUTSIDE-AIR = 1.0  SUPPLY-DELTA-T = 2.4
```

```
* 638 *                SUPPLY-KW = 0.00078
* 639 *                MOTOR-PLACEMENT = OUTSIDE-AIRFLOW
* 640 *                NIGHT-CYCLE-CTRL = STAY-OFF  NIGHT-VENT-DT = 0.0
* 641 *                HEATING-CAPACITY = -1645000.  FURNACE-AUX = 0.
* 642 *                ZONE-NAMES = (BATTERIES)  ..
* 643 *
* 644 * MAU_1&2A  =SYSTEM    SYSTEM-TYPE = HVSYS
* 645 *                MAX-SUPPLY-T = 135.0  HEATING-SCHEDULE = FULL_ON
* 646 *                MIN-HUMIDITY = 30.0  ECONO-LIMIT-T = 65.0
* 647 *                ECONO-LOW-LIMIT = 55.0  HEAT-CONTROL = COLDEST
* 648 *                SUPPLY-CFM = 51300.  RATED-CFM = 51300.
* 649 *                MIN-OUTSIDE-AIR = 1.0  RECOVERY-EFF = 0.2
* 650 *                SUPPLY-DELTA-T = 2.4  SUPPLY-KW = 0.00078
* 651 *                MOTOR-PLACEMENT = OUTSIDE-AIRFLOW
* 652 *                NIGHT-CYCLE-CTRL = STAY-OFF  NIGHT-VENT-DT = 0.0
* 653 *                HEATING-CAPACITY = -3698000.  FURNACE-AUX = 0.
* 654 *                ZONE-NAMES = (VEH_MNT)  ..
* 655 *
* 656 * MAU_1&2B  =SYSTEM    SYSTEM-TYPE = HVSYS
* 657 *                MAX-SUPPLY-T = 135.0  HEATING-SCHEDULE = FULL_ON
* 658 *                MIN-HUMIDITY = 30.0  ECONO-LIMIT-T = 65.0
* 659 *                ECONO-LOW-LIMIT = 55.0  HEAT-CONTROL = COLDEST
* 660 *                SUPPLY-CFM = 35460.  RATED-CFM = 35460.
* 661 *                MIN-OUTSIDE-AIR = 1.0  RECOVERY-EFF = 0.2
* 662 *                SUPPLY-DELTA-T = 2.4  SUPPLY-KW = 0.00078
* 663 *                MOTOR-PLACEMENT = OUTSIDE-AIRFLOW
* 664 *                NIGHT-CYCLE-CTRL = STAY-OFF  NIGHT-VENT-DT = 0.0
* 665 *                HEATING-CAPACITY = -2560000.  FURNACE-AUX = 0.
* 666 *                ZONE-NAMES = (PAINT&CUR.)  ..
* 667 *
* 668 * MAU_3     =SYSTEM    SYSTEM-TYPE = HVSYS
* 669 *                MAX-SUPPLY-T = 135.0  HEATING-SCHEDULE = FULL_ON
* 670 *                MIN-HUMIDITY = 30.0  ECONO-LIMIT-T = 65.0
* 671 *                ECONO-LOW-LIMIT = 55.0  HEAT-CONTROL = COLDEST
* 672 *                SUPPLY-CFM = 30360.  RATED-CFM = 30360.
* 673 *                MIN-OUTSIDE-AIR = 1.0  SUPPLY-DELTA-T = 2.4
* 674 *                SUPPLY-KW = 0.00078
* 675 *                MOTOR-PLACEMENT = OUTSIDE-AIRFLOW
* 676 *                NIGHT-CYCLE-CTRL = STAY-OFF  NIGHT-VENT-DT = 0.0
* 677 *                HEATING-CAPACITY = -2196000.  FURNACE-AUX = 0.
* 678 *                ZONE-NAMES = (VEH_BOD_SH)  ..
* 679 *
* 680 * MAU_4_8_&9 =SYSTEM    SYSTEM-TYPE = HVSYS
* 681 *                MAX-SUPPLY-T = 135.0  HEATING-SCHEDULE = PAINT_MAU
* 682 *                MIN-HUMIDITY = 30.0  ECONO-LIMIT-T = 65.0
* 683 *                ECONO-LOW-LIMIT = 55.0  HEAT-CONTROL = COLDEST
* 684 *                SUPPLY-CFM = 49700.  RATED-CFM = 49700.
* 685 *                MIN-OUTSIDE-AIR = 1.0  FAN-SCHEDULE = PAINT_MAU
* 686 *                SUPPLY-DELTA-T = 2.4  SUPPLY-KW = 0.00078
* 687 *                MOTOR-PLACEMENT = OUTSIDE-AIRFLOW
```

```
* 688 *                NIGHT-CYCLE-CTRL = STAY-OFF  NIGHT-VENT-DT = 0.0
* 689 *                HEATING-CAPACITY = -4245000.  FURNACE-AUX = 0.
* 690 *                ZONE-NAMES = (PAINT_BTHS)  ..
* 691 *
* 692 * END  ..
* 693 * COMPUTE SYSTEMS  ..
* 694 *
* 695 * INPUT PLANT  ..

        P D L   P R O C E S S O R   I N P U T   D A T A

            3/18/1995   16:52:17  PDL RUN  1




* 696 *
* 697 *
* 698 *             $--------------------------------------$
* 699 *             $ E Z - D O E   P L A N T S  I N P U T $
* 700 *             $--------------------------------------$
* 701 *
* 702 *               $ GENERAL PROJECT DATA
* 703 *
* 704 * TITLE  LINE-1 *    EMC     ENGINEERS     INC.    *
* 705 *       LINE-2 *EZDOE - ELITE SOFTWARE DEVELOPMENT INC*
* 706 *       LINE-3 *    DENVER,      CO      80227    *
* 707 *
* 708 *       LINE-4 *BUILDING 4530, SMA BUILDING          *
* 709 *       LINE-5 *BASE MODEL                          * ..
* 710 *
* 711 * ABORT            ERRORS  ..
* 712 * DIAGNOSTIC       WARNINGS ..
* 713 * PLANT-REPORT      SUMMARY=(PS-A,PS-B,BEPS)
* 714 *
* 715 *               HOURLY-DATA-SAVE = YES  ..
* 716 *
* 717 *               $ SCHEDULES
* 718 *
* 719 * FULL_ON_D  =DAY-SCHEDULE  (1,24) (1.) ..
* 720 *
* 721 *
* 722 * FULL_ON_W  =WEEK-SCHEDULE  (ALL) FULL_ON_D  ..
* 723 *
* 724 *
* 725 * $ FULL ON SCHEDULE
* 726 * FULL_ON_SC =SCHEDULE THRU DEC 31 FULL_ON_W  ..
* 727 *
* 728 *
* 729 *
```

```
* 730 *                $ EQUIPMENT DESCRIPTION
* 731 *
* 732 * HTP_1     =PLANT-EQUIPMENT   TYPE = HTANK-STORAGE
* 733 *                SIZE = 22.4  ..
* 734 *
* 735 * PLANT-PARAMETERS     CCIRC-HEAD = 63.2  HCIRC-HEAD = 100.0
* 736 *                HCIRC-DESIGN-T-DROP = 20.0    ..
* 737 *
* 738 *
* 739 * ENERGY-RESOURCE      RESOURCE = ELECTRICITY  ..
* 740 * ENERGY-RESOURCE      RESOURCE = STEAM  ..
* 741 *
* 742 * ENERGY-STORAGE    HEAT-STORE-RATE = 22.4  HEAT-SUPPLY-RATE = 22.4
* 743 *                HTANK-BASE-T = 195.0  HTANK-T-RANGE = 5.0
* 744 *                HEAT-STORE-SCH = FULL_ON_SC    ..
* 745 *
* 746 *      HEAT-RECOVERY
* 747 *          SUPPLY-1 = (HTANK-STORAGE)
* 748 *          DEMAND-1 = (SPACE-HEAT,PROCESS-HEAT)  ..
* 749 *
* 750 *
* 751 *
* 752 * END  ..
* 753 * COMPUTE PLANT ..
* 754 * STOP ..
```

ENERGY TYPE IN SITE MBTU-	STEAM	ELECTRICITY	RECOVERED
CATEGORY OF USE			
SPACE HEAT	61691.20	0.00	0.00
SPACE COOL	0.00	0.00	0.00
HVAC AUX	0.00	8065.36	0.00
DOM HOT WTR	207.01	0.00	0.00
AUX SOLAR	0.00	0.00	0.00
LIGHTS	0.00	893.59	0.00
VERT TRANS	0.00	0.00	0.00
MISC EQUIP	0.00	0.00	0.00
TOTAL	61898.21	8958.96	0.00

TOTAL SITE ENERGY 70857.42 MBTU 434.0 KBTU/SQFT-YR GROSS-AREA 434.0 KBTU/SQFT-YR NET-AREA
TOTAL SOURCE ENERGY 130068.23 MBTU 796.7 KBTU/SQFT-YR GROSS-AREA 796.7 KBTU/SQFT-YR NET-AREA

PERCENT OF HOURS ANY SYSTEM ZONE OUTSIDE OF THROTTLING RANGE = 4.2
PERCENT OF HOURS ANY PLANT LOAD NOT SATISFIED = 0.0

NOTE ELECTRICITY AND/OR FUEL USED TO GENERATE ELECTRICITY IS APPORTIONED BASED ON THE YEARLY DEMAND. ALL OTHER ENERGY TYPES ARE APPORTIONED HOURLY.

EMC ENGINEERS INC. EZDOE - ELITE SOFTWARE DEVELOPMENT INC DOE-2.1D 3/18/1995 16:52:17 PDL RUN 1
DENVER, CO 80227 BUILDING 4530, SMA BUILDING BASE MODEL
REPORT- PS-B MONTHLY PEAK AND TOTAL ENERGY USE WEATHER FILE- MASSENA, NY

MO	UTILITY- STEAM		ELECTRICITY
JAN	TOTAL(MBTU)	11502.539	758.693
	PEAK(KBTU)	25323.368	1253.22
	DY/HR	26/ 8	5/13
FEB	TOTAL(MBTU)	8956.939	687.959
	PEAK(KBTU)	21237.568	1251.5
	DY/HR	4/10	4/10
MAR	TOTAL(MBTU)	8865.385	764.398
	PEAK(KBTU)	21426.776	1250.548
	DY/HR	9/ 8	3/10
APR	TOTAL(MBTU)	4760.452	735.109
	PEAK(KBTU)	14520.016	1249.223
	DY/HR	1/ 8	19/14
MAY	TOTAL(MBTU)	2784.868	760.305
	PEAK(KBTU)	12082.52	1248.948
	DY/HR	16/ 8	3/10
JUN	TOTAL(MBTU)	1174.324	737.896
	PEAK(KBTU)	6163.782	1247.652
	DY/HR	8/ 5	30/14
JUL	TOTAL(MBTU)	1207.404	756.858
	PEAK(KBTU)	5214.752	1247.652
	DY/HR	25/ 5	29/14
AUG	TOTAL(MBTU)	1194.955	763.359
	PEAK(KBTU)	5436.226	1247.652
	DY/HR	22/ 5	31/14
SEP	TOTAL(MBTU)	2015.566	737.965
	PEAK(KBTU)	9023.556	1248.416
	DY/HR	24/ 4	14/10
OCT	TOTAL(MBTU)	3667.707	757.13
	PEAK(KBTU)	14408.24	1249.046
	DY/HR	28/ 8	26/11
NOV	TOTAL(MBTU)	6356.56	738.469
	PEAK(KBTU)	16516.016	1249.581
	DY/HR	29/ 8	21/14

DEC	TOTAL(MBTU)	9411.517	761.07
	PEAK(KBTU)	21749.744	1250.888
	DY/HR	28/ 8	20/10
	ONE YEAR	61898.211	8959.213
	USE/PEAK	25323.368	1253.22

COMPUTER SIMULATIONS
BUILDING 4530

RUN 1 - SCHEDULE START/STOP AND NIGHT SETBACK

```
*   3 *
*   4 *
*   5 *                  $----------------------------------$
*   6 *                  $ E Z - D O E   L O A D S  I N P U T $
*   7 *                  $----------------------------------$
*   8 *
*   9 *                     $ GENERAL PROJECT DATA
*  10 *
*  11 * TITLE  LINE-1 *     EMC      ENGINEERS      INC.     *
*  12 *        LINE-2 *EZDOE - ELITE SOFTWARE DEVELOPMENT INC*
*  13 *        LINE-3 *     DENVER,       CO       80227     *
*  14 *
*  15 *        LINE-4 *BUILDING 4530, SMA BUILDING             *
*  16 *        LINE-5 *MODEL WITH SET BACK                     * ..
*  17 *
*  18 * ABORT              ERRORS  ..
*  19 * DIAGNOSTIC         WARNINGS ..
*  20 * LOADS-REPORT       SUMMARY=(LS-C,LS-D)
*  21 *                    HOURLY-DATA-SAVE = YES  ..
*  22 * BUILDING-LOCATION  HOLIDAY = NO
*  23 *                    X-REF = 0.0
*  24 *                    Y-REF = 0.0  ..
*  25 * RUN-PERIOD         JAN 1 1994 THRU DEC 31 1994  ..
*  26 *
*  27 *
*  28 *                     $ SCHEDULES
*  29 *
*  30 * FULL_ON_D  =DAY-SCHEDULE  (1,24) (1.) ..
*  31 *
*  32 * FULL_OFF_D =DAY-SCHEDULE  (1,24) (0.) ..
*  33 *
*  34 * LIGHT_ON_D =DAY-SCHEDULE  (1,5) (0.23)
*  35 *                           (6,7) (0.35)
*  36 *                           (8,9) (0.5,0.6)
*  37 *                           (10,11) (0.75)
*  38 *                           (12) (0.5)
*  39 *                           (13,14) (0.75)
*  40 *                           (15) (0.5)
*  41 *                           (16,18) (0.4)
*  42 *                           (19) (0.3)
*  43 *                           (20,24) (0.23) ..
*  44 *
*  45 * LT_ON_WKND =DAY-SCHEDULE  (1,6) (0.23)
*  46 *                           (7,19) (0.07)
*  47 *                           (20,24) (0.23) ..
*  48 *
*  49 * PEOPLE_D   =DAY-SCHEDULE  (1,5) (0.)
*  50 *                           (6,7) (0.1,0.5)
*  51 *                           (8,11) (1.)
*  52 *                           (12) (0.8)
*  53 *                           (13,16) (1.)
*  54 *                           (17,18) (0.5,0.1)
*  55 *                           (19,24) (0.) ..
*  56 *
*  57 * EQUIP_ON_D =DAY-SCHEDULE  (1,5) (0.05)
*  58 *                           (6,7) (0.1,0.2)
*  59 *                           (8,9) (0.3)
*  60 *                           (10,11) (0.4,0.7)
*  61 *                           (12,13) (0.4)
*  62 *                           (14,15) (0.8)
*  63 *                           (16,18) (0.7,0.3,0.1)
*  64 *                           (19,24) (0.05) ..
*  65 *
*  66 * SHOP_INF_D =DAY-SCHEDULE  (1,7) (0.1)
*  67 *                           (8) (1.)
*  68 *                           (9,16) (0.1)
*  69 *                           (17) (1.)
*  70 *                           (18,24) (0.1) ..
*  71 *
*  72 *
*  73 * FULL_ON_W  =WEEK-SCHEDULE  (ALL) FULL_ON_D  ..
*  74 *
*  75 * FULL_OFF_W =WEEK-SCHEDULE  (ALL) FULL_OFF_D  ..
*  76 *
*  77 * LIGHT_ON_W =WEEK-SCHEDULE  (WD)  LIGHT_ON_D
*  78 *                           (WEH) LT_ON_WKND  ..
*  79 *
*  80 * PEOPLE_W   =WEEK-SCHEDULE  (WD)  PEOPLE_D
*  81 *                           (WEH) FULL_OFF_D  ..
*  82 *
*  83 * EQUIP_W    =WEEK-SCHEDULE  (WD)  EQUIP_ON_D
*  84 *                           (WEH) FULL_OFF_D  ..
*  85 *
*  86 * SHOP_IFL_W =WEEK-SCHEDULE  (WD)  SHOP_INF_D
*  87 *                           (WEH) FULL_OFF_D  ..
*  88 *
*  89 *
*  90 * $ FULL ON SCHEDULE
*  91 * FULL_ON    =SCHEDULE THRU DEC 31 FULL_ON_W  ..
*  92 *
*  93 * $ FULL OFF SCHEDULE
*  94 * FULL_OFF   =SCHEDULE THRU DEC 31 FULL_OFF_W  ..
*  95 *
*  96 * $ LIGHTING SCHEDULE
*  97 * LIGHT_SCHD =SCHEDULE THRU DEC 31 LIGHT_ON_W  ..
*  98 *
*  99 * $ OCCUPANCY SCHEDULE
* 100 * PEOPLE_SCH =SCHEDULE THRU DEC 31 PEOPLE_W  ..
* 101 *
* 102 * $ EQUIPMENT SCHEDULE
```

```
* 103 * EQUIP_SCHD =SCHEDULE THRU DEC 31 EQUIP_W  ..
* 104 *
* 105 * $ SHOP INFILTRATION SCHED
* 106 * SHOP_INFIL =SCHEDULE THRU DEC 31 SHOP_IFL_W  ..
* 107 *
* 108 *
* 109 *
* 110 *                      $ CONSTRUCTION TYPES
* 111 *
* 112 *
* 113 *
* 114 * FLOORCON =CONSTRUCTION   U-VALUE =  0.010  ..
* 115 *
* 116 *  $ ROOF CONSTRUCITON
* 117 * ROOFCON  =CONSTRUCTION   U-VALUE =  0.030  ..
* 118 *
* 119 *  $ WALL CONSTRUCITON
* 120 * WALL_CON =CONSTRUCTION   U-VALUE =  0.010  ..
* 121 * LDOORCON =CONSTRUCTION   U-VALUE =  0.400  ..
* 122 * SDOORCON =CONSTRUCTION   U-VALUE =  1.000  ..
* 123 *
* 124 * G_TYPE1  =GLASS-TYPE     SHADING-COEF = 1.000
* 125 *                          PANES = 1
* 126 *                          GLASS-CONDUCTANCE =  1.130  ..
* 127 *
* 128 *
* 129 *
* 130 *
* 131 *                      $ SPACE DESCRIPTION
* 132 *
* 133 * ADMIN&TOOL =SPACE    AREA = 14228.0  VOLUME = 128052.0
* 134 *                      TEMPERATURE = (68.)  ZONE-TYPE = CONDITIONED
* 135 *                      PEOPLE-SCHEDULE = PEOPLE_SCH  NUMBER-OF-PEOPLE = 40.0
* 136 *                      PEOPLE-HEAT-GAIN = 450.0  PEOPLE-HG-LAT = 0.2
* 137 *                      PEOPLE-HG-SENS = 0.8  LIGHTING-TYPE = REC-FLUOR-RV
* 138 *                      LIGHTING-KW = 22.9  LIGHTING-SCHEDULE = LIGHT_SCHD
* 139 *                      SOURCE-SCHEDULE = FULL_ON  SOURCE-TYPE = HOT-WATER
* 140 *                      SOURCE-BTU/HR = 23630.0  SOURCE-SENSIBLE = 0.0
* 141 *                      INF-METHOD = AIR-CHANGE  AIR-CHANGES/HR = 0.5
* 142 *                      INF-SCHEDULE = FULL_ON   ..
* 143 *
* 144 *              U-W      HEIGHT = 110.0  WIDTH = 129.5  CONS = FLOORCON ..
* 145 *
* 146 *               ROOF     HEIGHT = 110.0  WIDTH = 129.5  CONS = ROOFCON
* 147 *                        TILT = 0   ..
* 148 *
* 149 *               E-W      HEIGHT = 9.0  WIDTH = 129.5  CONS = WALL_CON
* 150 *                        AZIMUTH = 0   ..
* 151 *
* 152 *                 WINDOW HEIGHT = 4.0  WIDTH = 2.0  G-T = G_TYPE1
* 153 *                        MULTIPLIER = 13.0   ..
* 154 *
* 155 *                 DOOR   HEIGHT = 7.5  WIDTH = 3.0  CONS = SDOORCON
* 156 *                        MULTIPLIER = 3.0   ..
* 157 *
* 158 *               E-W      HEIGHT = 9.0  WIDTH = 86.0  CONS = WALL_CON
* 159 *                        AZIMUTH = 0   ..
* 160 *
* 161 *                 WINDOW HEIGHT = 4.0  WIDTH = 4.0  G-T = G_TYPE1
* 162 *                        MULTIPLIER = 12.0   ..
* 163 *
* 164 *                 DOOR   HEIGHT = 7.5  WIDTH = 2.0  CONS = SDOORCON
* 165 *                        MULTIPLIER = 2.0   ..
* 166 *
* 167 *
* 168 * VEH_MNT     =SPACE    AREA = 33660.0  VOLUME = 1000000.0
* 169 *                       TEMPERATURE = (60.)  ZONE-TYPE = CONDITIONED
* 170 *                       PEOPLE-SCHEDULE = PEOPLE_SCH  NUMBER-OF-PEOPLE = 50.0
* 171 *                       PEOPLE-HEAT-GAIN = 450.0  PEOPLE-HG-LAT = 0.2
* 172 *                       PEOPLE-HG-SENS = 0.8  LIGHTING-TYPE = INCAND
* 173 *                       LIGHTING-KW = 14.15  LIGHTING-SCHEDULE = LIGHT_SCHD
* 174 *                       INF-METHOD = AIR-CHANGE  AIR-CHANGES/HR = 1.0
* 175 *                       INF-SCHEDULE = FULL_ON   ..
* 176 *
* 177 *              U-W      HEIGHT = 165.0  WIDTH = 204.0  CONS = FLOORCON ..
* 178 *
* 179 *               ROOF     HEIGHT = 165.0  WIDTH = 204.0  CONS = ROOFCON
* 180 *                        TILT = 0   ..
* 181 *
* 182 *               E-W      HEIGHT = 32.5  WIDTH = 204.0  CONS = WALL_CON
* 183 *                        AZIMUTH = 0   ..
* 184 *
* 185 *                 DOOR   HEIGHT = 14.0  WIDTH = 27.0  CONS = LDOORCON
* 186 *                        MULTIPLIER = 6.0   ..
* 187 *
* 188 *                 DOOR   HEIGHT = 7.5  WIDTH = 3.0  CONS = SDOORCON
* 189 *                        MULTIPLIER = 3.0   ..
* 190 *
* 191 *               E-W      HEIGHT = 32.5  WIDTH = 204.0  CONS = WALL_CON
* 192 *                        AZIMUTH = 180   ..
* 193 *
* 194 *                 DOOR   HEIGHT = 14.0  WIDTH = 27.0  CONS = LDOORCON
* 195 *                        MULTIPLIER = 6.0   ..
* 196 *
* 197 *                 DOOR   HEIGHT = 7.5  WIDTH = 3.0  CONS = SDOORCON
* 198 *                        MULTIPLIER = 3.0   ..
* 199 *
* 200 *
* 201 * PAINT&CUR. =SPACE     AREA = 29040.0  VOLUME = 943800.0
* 202 *                       TEMPERATURE = (60.)  ZONE-TYPE = CONDITIONED
* 203 *                       PEOPLE-SCHEDULE = PEOPLE_SCH  NUMBER-OF-PEOPLE = 40.0
* 204 *                       PEOPLE-HEAT-GAIN = 450.0  PEOPLE-HG-LAT = 0.2
* 205 *                       PEOPLE-HG-SENS = 0.8  LIGHTING-TYPE = INCAND
* 206 *                       LIGHTING-KW = 8.1  LIGHTING-SCHEDULE = LIGHT_SCHD
* 207 *                       INF-METHOD = AIR-CHANGE  AIR-CHANGES/HR = 0.96
* 208 *                       INF-SCHEDULE = FULL_ON   ..
* 209 *
* 210 *              U-W      HEIGHT = 165.0  WIDTH = 176.0  CONS = FLOORCON ..
```

```
* 211 *
* 212 *                ROOF      HEIGHT = 165.0  WIDTH = 176.0  CONS = ROOFCON
* 213 *                          TILT = 0   ..
* 214 *
* 215 *                E-W       HEIGHT = 32.5  WIDTH = 176.0  CONS = WALL_CON
* 216 *                          AZIMUTH = 0   ..
* 217 *
* 218 *                  DOOR    HEIGHT = 14.0  WIDTH = 27.0  CONS = LDOORCON
* 219 *                          MULTIPLIER = 5.0   ..
* 220 *
* 221 *                  DOOR    HEIGHT = 7.5  WIDTH = 3.0  CONS = SDOORCON
* 222 *                          MULTIPLIER = 2.0   ..
* 223 *
* 224 *                E-W       HEIGHT = 32.5  WIDTH = 176.0  CONS = WALL_CON
* 225 *                          AZIMUTH = 180   ..
* 226 *
* 227 *                  DOOR    HEIGHT = 14.0  WIDTH = 27.0  CONS = LDOORCON
* 228 *                          MULTIPLIER = 5.0   ..
* 229 *
* 230 *                  DOOR    HEIGHT = 7.5  WIDTH = 3.0  CONS = SDOORCON
* 231 *                          MULTIPLIER = 2.0   ..
* 232 *
* 233 *                E-W       HEIGHT = 32.5  WIDTH = 165.0  CONS = WALL_CON
* 234 *                          AZIMUTH = 270   ..
* 235 *
* 236 *                  DOOR    HEIGHT = 7.5  WIDTH = 3.0  CONS = SDOORCON
* 237 *                          MULTIPLIER = 3.0   ..
* 238 *
* 239 *
* 240 * VEH_BOD_SH =SPACE    AREA = 14628.0  VOLUME = 475410.0
* 241 *                      TEMPERATURE = (60.)  ZONE-TYPE = CONDITIONED
* 242 *                      PEOPLE-SCHEDULE = PEOPLE_SCH  NUMBER-OF-PEOPLE = 40.0
* 243 *                      PEOPLE-HEAT-GAIN = 450.0  PEOPLE-HG-LAT = 0.2
* 244 *                      PEOPLE-HG-SENS = 0.8  LIGHTING-TYPE = INCAND
* 245 *                      LIGHTING-KW = 6.8  LIGHTING-SCHEDULE = LIGHT_SCHD
* 246 *                      INF-METHOD = AIR-CHANGE  AIR-CHANGES/HR = 0.43
* 247 *                      INF-SCHEDULE = FULL_ON   ..
* 248 *
* 249 *              U-W      HEIGHT = 69.0  WIDTH = 212.0  CONS = FLOORCON ..
* 250 *
* 251 *                ROOF      HEIGHT = 69.0  WIDTH = 212.0  CONS = ROOFCON
* 252 *                          TILT = 0   ..
* 253 *
* 254 *                E-W       HEIGHT = 32.5  WIDTH = 212.0  CONS = WALL_CON
* 255 *                          AZIMUTH = 0   ..
* 256 *
* 257 *                  DOOR    HEIGHT = 14.0  WIDTH = 27.0  CONS = LDOORCON
* 258 *                          MULTIPLIER = 4.0   ..
* 259 *
* 260 *                  DOOR    HEIGHT = 7.5  WIDTH = 3.0  CONS = SDOORCON
* 261 *                          MULTIPLIER = 2.0   ..
* 262 *
* 263 *                E-W       HEIGHT = 32.5  WIDTH = 212.0  CONS = WALL_CON
* 264 *                          AZIMUTH = 180   ..
* 265 *
* 266 *                  DOOR    HEIGHT = 14.0  WIDTH = 27.0  CONS = LDOORCON
* 267 *                          MULTIPLIER = 5.0   ..
* 268 *
* 269 *                  DOOR    HEIGHT = 7.5  WIDTH = 3.0  CONS = SDOORCON
* 270 *                          MULTIPLIER = 3.0   ..
* 271 *
* 272 *                E-W       HEIGHT = 32.5  WIDTH = 69.0  CONS = WALL_CON
* 273 *                          AZIMUTH = 270   ..
* 274 *
* 275 *                  DOOR    HEIGHT = 7.5  WIDTH = 3.0  CONS = SDOORCON
* 276 *                          MULTIPLIER = 2.0   ..
* 277 *
* 278 *
* 279 * ADMIN&ELEC =SPACE    AREA = 10085.0  VOLUME = 90765.0
* 280 *                      TEMPERATURE = (68.)  ZONE-TYPE = CONDITIONED
* 281 *                      PEOPLE-SCHEDULE = PEOPLE_SCH  NUMBER-OF-PEOPLE = 40.0
* 282 *                      PEOPLE-HEAT-GAIN = 450.0  PEOPLE-HG-LAT = 0.2
* 283 *                      PEOPLE-HG-SENS = 0.8  LIGHTING-TYPE = REC-FLUOR-RV
* 284 *                      LIGHTING-KW = 9.79  LIGHTING-SCHEDULE = LIGHT_SCHD
* 285 *                      INF-METHOD = AIR-CHANGE  AIR-CHANGES/HR = 0.5
* 286 *                      INF-SCHEDULE = FULL_ON   ..
* 287 *
* 288 *              U-W      HEIGHT = 83.0  WIDTH = 129.5  CONS = FLOORCON ..
* 289 *
* 290 *                ROOF      HEIGHT = 83.0  WIDTH = 129.5  CONS = ROOFCON
* 291 *                          TILT = 0   ..
* 292 *
* 293 *                E-W       HEIGHT = 9.0  WIDTH = 125.0  CONS = WALL_CON
* 294 *                          AZIMUTH = 270   ..
* 295 *
* 296 *                  DOOR    HEIGHT = 7.5  WIDTH = 3.0  CONS = SDOORCON
* 297 *                          MULTIPLIER = 3.0   ..
* 298 *
* 299 *                  DOOR    HEIGHT = 14.0  WIDTH = 14.5  CONS = LDOORCON ..
* 300 *
* 301 *                  DOOR    HEIGHT = 9.0  WIDTH = 14.5  CONS = LDOORCON
* 302 *                          MULTIPLIER = 3.0   ..
* 303 *
* 304 *
* 305 * CANVAS&ARM =SPACE    AREA = 21746.0  VOLUME = 130020.0
* 306 *                      TEMPERATURE = (60.)  ZONE-TYPE = CONDITIONED
* 307 *                      PEOPLE-SCHEDULE = PEOPLE_SCH  NUMBER-OF-PEOPLE = 40.0
* 308 *                      PEOPLE-HEAT-GAIN = 450.0  PEOPLE-HG-LAT = 0.2
* 309 *                      PEOPLE-HG-SENS = 0.8  LIGHTING-TYPE = REC-FLUOR-RV
* 310 *                      LIGHTING-KW = 13.67  LIGHTING-SCHEDULE = LIGHT_SCHD
* 311 *                      INF-METHOD = AIR-CHANGE  AIR-CHANGES/HR = 0.5
* 312 *                      INF-SCHEDULE = FULL_ON   ..
* 313 *
* 314 *              U-W      HEIGHT = 84.0  WIDTH = 259.0  CONS = FLOORCON ..
* 315 *
* 316 *                ROOF      HEIGHT = 84.0  WIDTH = 259.0  CONS = ROOFCON
* 317 *                          TILT = 0   ..
* 318 *
```

```
* 319 *                E-W       HEIGHT = 9.0  WIDTH = 129.5  CONS = WALL_CON
* 320 *                          AZIMUTH = 180   ..
* 321 *
* 322 *                  DOOR    HEIGHT = 7.5  WIDTH = 3.0  CONS = SDOORCON
* 323 *                          MULTIPLIER = 3.0   ..
* 324 *
* 325 *                E-W       HEIGHT = 25.0  WIDTH = 120.0  CONS = WALL_CON
* 326 *                          AZIMUTH = 90   ..
* 327 *
* 328 *                  DOOR    HEIGHT = 7.5  WIDTH = 3.0  CONS = SDOORCON
* 329 *                          MULTIPLIER = 3.0   ..
* 330 *
* 331 *
* 332 * PAINT&DYN  =SPACE     AREA = 1775.0  VOLUME = 15975.0
* 333 *                       TEMPERATURE = (60.)  ZONE-TYPE = CONDITIONED
* 334 *                       PEOPLE-SCHEDULE = PEOPLE_SCH  NUMBER-OF-PEOPLE = 15.0
* 335 *                       PEOPLE-HEAT-GAIN = 450.0  PEOPLE-HG-LAT = 0.2
* 336 *                       PEOPLE-HG-SENS = 0.8  LIGHTING-TYPE = REC-FLUOR-RV
* 337 *                       LIGHTING-KW = 0.45  LIGHTING-SCHEDULE = LIGHT_SCHD
* 338 *                       INF-METHOD = AIR-CHANGE  AIR-CHANGES/HR = 0.5
* 339 *                       INF-SCHEDULE = FULL_ON   ..
* 340 *
* 341 *              U-W       HEIGHT = 22.0  WIDTH = 129.5  CONS = FLOORCON ..
* 342 *
* 343 *               ROOF      HEIGHT = 22.0  WIDTH = 129.5  CONS = ROOFCON
* 344 *                         TILT = 0   ..
* 345 *
* 346 *
* 347 * SHOPSUPPLY =SPACE     AREA = 29641.0  VOLUME = 741025.0
* 348 *                       TEMPERATURE = (60.)  ZONE-TYPE = CONDITIONED
* 349 *                       PEOPLE-SCHEDULE = PEOPLE_SCH  NUMBER-OF-PEOPLE = 40.0
* 350 *                       PEOPLE-HEAT-GAIN = 450.0  PEOPLE-HG-LAT = 0.2
* 351 *                       PEOPLE-HG-SENS = 0.8  LIGHTING-TYPE = REC-FLUOR-RV
* 352 *                       LIGHTING-KW = 4.7  LIGHTING-SCHEDULE = LIGHT_SCHD
* 353 *                       INF-METHOD = AIR-CHANGE  AIR-CHANGES/HR = 0.5
* 354 *                       INF-SCHEDULE = FULL_ON   ..
* 355 *
* 356 *              U-W       HEIGHT = 228.9  WIDTH = 129.5  CONS = FLOORCON ..
* 357 *
* 358 *               ROOF      HEIGHT = 228.5  WIDTH = 129.5  CONS = ROOFCON
* 359 *                         TILT = 0   ..
* 360 *
* 361 *               E-W       HEIGHT = 25.0  WIDTH = 211.0  CONS = WALL_CON
* 362 *                         AZIMUTH = 0   ..
* 363 *
* 364 *                 DOOR    HEIGHT = 7.5  WIDTH = 3.0  CONS = SDOORCON
* 365 *                         MULTIPLIER = 2.0   ..
* 366 *
* 367 *                 DOOR    HEIGHT = 8.0  WIDTH = 8.0  CONS = LDOORCON
* 368 *                         MULTIPLIER = 2.0   ..
* 369 *
* 370 *
* 371 * BATTERIES  =SPACE     AREA = 4705.0  VOLUME = 84690.0
* 372 *                       TEMPERATURE = (60.)  ZONE-TYPE = CONDITIONED
* 373 *                       PEOPLE-SCHEDULE = PEOPLE_SCH  NUMBER-OF-PEOPLE = 40.0
* 374 *                       PEOPLE-HEAT-GAIN = 450.0  PEOPLE-HG-LAT = 0.2
* 375 *                       PEOPLE-HG-SENS = 0.8  LIGHTING-TYPE = REC-FLUOR-RV
* 376 *                       LIGHTING-KW = 11.08  LIGHTING-SCHEDULE = LIGHT_SCHD
* 377 *                       INF-METHOD = AIR-CHANGE  AIR-CHANGES/HR = 0.5
* 378 *                       INF-SCHEDULE = FULL_ON   ..
* 379 *
* 380 *              U-W       HEIGHT = 39.2  WIDTH = 120.0  CONS = FLOORCON ..
* 381 *
* 382 *               ROOF      HEIGHT = 39.2  WIDTH = 120.0  CONS = ROOFCON
* 383 *                         TILT = 0   ..
* 384 *
* 385 *               E-W       HEIGHT = 18.0  WIDTH = 120.0  CONS = WALL_CON
* 386 *                         AZIMUTH = 180   ..
* 387 *
* 388 *                 DOOR    HEIGHT = 7.5  WIDTH = 3.0  CONS = SDOORCON
* 389 *                         MULTIPLIER = 2.0   ..
* 390 *
* 391 *
* 392 * PAINT_BTHS =SPACE     AREA = 3742.0  VOLUME = 44688.0
* 393 *                       TEMPERATURE = (72.)  ZONE-TYPE = CONDITIONED
* 394 *                       AREA/PERSON = 100.0  INF-METHOD = NONE   ..
* 395 *
* 396 *              U-W       HEIGHT = 61.2  WIDTH = 61.2  CONS = FLOORCON ..
* 397 *
* 398 *               ROOF      HEIGHT = 61.2  WIDTH = 61.2  CONS = ROOFCON
* 399 *                         TILT = 0   ..
* 400 *
* 401 *
* 402 * END  ..
* 403 * COMPUTE LOADS  ..
* 404 *
* 405 * INPUT SYSTEMS  ..
```

```
* 406 *
* 407 *
* 408 *                  $--------------------------------------$
* 409 *                  $ E Z - D O E  S Y S T E M S  I N P U T $
* 410 *                  $--------------------------------------$
* 411 *
* 412 *                     $ GENERAL PROJECT DATA
* 413 *
* 414 * TITLE  LINE-1 *     EMC      ENGINEERS      INC.     *
* 415 *        LINE-2 *EZDOE - ELITE SOFTWARE DEVELOPMENT INC*
* 416 *        LINE-3 *     DENVER,       CO       80227     *
* 417 *
* 418 *        LINE-4 *BUILDING 4530, SMA BUILDING             *
* 419 *        LINE-5 *MODEL WITH SET BACK                     * ..
* 420 * ABORT              ERRORS  ..
* 421 * DIAGNOSTIC         WARNINGS ..
* 422 * SYSTEMS-REPORT     SUMMARY=(SS-A,SS-B,SS-C,SS-H)
* 423 *                    HOURLY-DATA-SAVE = YES  ..
* 424 *
* 425 *                     $ SCHEDULES
* 426 *
* 427 * FULL_ON_D  =DAY-SCHEDULE  (1,24) (1.) ..
* 428 * FULL_OFF_D =DAY-SCHEDULE  (1,24) (0.) ..
* 429 * HEAT_H_D   =DAY-SCHEDULE  (1,6) (55.)
* 430 *                           (7,17) (74.)
* 431 *                           (18,24) (55.) ..
* 432 * HEAT_L_D   =DAY-SCHEDULE  (1,6) (47.)
* 433 *                           (7,17) (60.)
* 434 *                           (18,24) (47.) ..
* 435 * HEAT_68_D  =DAY-SCHEDULE  (1,24) (74.) ..
* 436 * HEAT_60_D  =DAY-SCHEDULE  (1,24) (60.) ..
* 437 * HEAT_72_D  =DAY-SCHEDULE  (1,24) (72.) ..
* 438 * PAINT_MAUD =DAY-SCHEDULE  (1,7) (0.)
* 439 *                           (8,17) (1.)
* 440 *                           (18,24) (0.) ..
* 441 * FAN_WSB_D  =DAY-SCHEDULE  (1,5) (0.)
* 442 *                           (6,15) (1.)
* 443 *                           (16,24) (0.) ..
* 444 * HT60_WSB_D =DAY-SCHEDULE  (1,5) (47.)
* 445 *                           (6,15) (60.)
* 446 *                           (16,24) (47.) ..
* 447 * HEAT_50_D  =DAY-SCHEDULE  (1,24) (50.) ..
* 448 * HT68_WSB_D =DAY-SCHEDULE  (1,5) (50.)
* 449 *                           (6,15) (74.)
* 450 *                           (16,24) (50.) ..
* 451 * HV2_SB_D   =DAY-SCHEDULE  (1,5) (65.)
* 452 *                           (6,15) (74.)
* 453 *                           (16,24) (65.) ..
* 454 * HEAT_47_D  =DAY-SCHEDULE  (1,24) (47.) ..
* 455 *
* 456 * FULL_ON_W  =WEEK-SCHEDULE  (ALL) FULL_ON_D  ..
* 457 *
* 458 * FULL_OFF_W =WEEK-SCHEDULE  (ALL) FULL_OFF_D  ..
* 459 *
* 460 * HEAT_H_W   =WEEK-SCHEDULE  (ALL) HEAT_H_D  ..
* 461 *
* 462 * HEAT_L_W   =WEEK-SCHEDULE  (ALL) HEAT_L_D  ..
* 463 *
* 464 * HEAT_68_W  =WEEK-SCHEDULE  (ALL) HEAT_68_D  ..
* 465 *
* 466 * HEAT_60_W  =WEEK-SCHEDULE  (ALL) HEAT_60_D  ..
* 467 *
* 468 * HEAT_72_W  =WEEK-SCHEDULE  (ALL) HEAT_72_D  ..
* 469 *
* 470 * PAINT_MAUW =WEEK-SCHEDULE  (ALL) PAINT_MAUD  ..
* 471 *
* 472 * FAN_WSB_W  =WEEK-SCHEDULE  (ALL) FAN_WSB_D  ..
* 473 *
* 474 * HT60_WSB_W =WEEK-SCHEDULE  (ALL) HT60_WSB_D  ..
* 475 *
* 476 * HT68_WSB_W =WEEK-SCHEDULE  (ALL) HT68_WSB_D  ..
* 477 *
* 478 * HV2_HTSB_W =WEEK-SCHEDULE  (ALL) HV2_SB_D  ..
* 479 *
* 480 *
* 481 * $ FULL ON SCHEDULE
* 482 * FULL_ON    =SCHEDULE THRU DEC 31 FULL_ON_W  ..
* 483 *
* 484 * $ FULL OFF SCHEDULE
* 485 * FULL_OFF   =SCHEDULE THRU DEC 31 FULL_OFF_W  ..
* 486 *
* 487 * $ HIGH HEAT SCHEDULE
* 488 * HEAT_H_SCH =SCHEDULE THRU DEC 31 HEAT_H_W  ..
* 489 *
* 490 * $ HEAT LOW SCHEDULE
* 491 * HEAT_L_SCH =SCHEDULE THRU DEC 31 HEAT_L_W  ..
* 492 *
* 493 * $ HEAT 68 DEG
* 494 * HEAT_68_Y  =SCHEDULE THRU DEC 31 HEAT_68_W  ..
* 495 *
* 496 * $ HEAT 60 DEG
* 497 * HEAT_60_Y  =SCHEDULE THRU DEC 31 HEAT_60_W  ..
* 498 *
* 499 * $ HEAT 72 DEG
* 500 * HEAT_72_Y  =SCHEDULE THRU DEC 31 HEAT_72_W  ..
* 501 *
* 502 * $ PAINT BOOTH MAU SCHED
* 503 * PAINT_MAU  =SCHEDULE THRU DEC 31 PAINT_MAUW  ..
* 504 *
* 505 * $ FAN SCHD WITH SET BACK
```

```
* 506 * FAN_W_SB   =SCHEDULE THRU DEC 31 FAN_WSB_W  ..
* 507 *
* 508 * $ HEAT 60F W SET BACK
* 509 * HT60_W_SB  =SCHEDULE THRU DEC 31 HT60_WSB_W  ..
* 510 *
* 511 * HT68_W_SB  =SCHEDULE THRU DEC 31 HT68_WSB_W  ..
* 512 *
* 513 * $ HV2 SETBACK SCHED
* 514 * HV2_HT_SB  =SCHEDULE THRU DEC 31 HV2_HTSB_W  ..
* 515 *
* 516 *
* 517 *
* 518 *                       $ ZONE DESCRIPTION
* 519 *
* 520 * ADMIN&TOOL =ZONE     DESIGN-HEAT-T = 68.0  DESIGN-COOL-T = 75.0
* 521 *                      HEAT-TEMP-SCH = HT68_W_SB  ZONE-TYPE = CONDITIONED
* 522 *                      THERMOSTAT-TYPE = PROPORTIONAL
* 523 *                      BASEBOARD-CTRL = THERMOSTATIC
* 524 *                      BASEBOARD-RATING = -66440.  ASSIGNED-CFM = 23765.
* 525 *                      OUTSIDE-AIR-CFM = 4700.  SIZING-OPTION = FROM-LOADS
* 526 *                      RATED-CFM = 23765.0  MIN-CFM-RATIO = 1.0
* 527 *                      EXHAUST-CFM = 4700.0  HEATING-CAPACITY = -510100.0   ..
* 528 *
* 529 * VEH_MNT     =ZONE     DESIGN-HEAT-T = 60.0  DESIGN-COOL-T = 80.0
* 530 *                      HEAT-TEMP-SCH = HT60_W_SB  ZONE-TYPE = CONDITIONED
* 531 *                      THERMOSTAT-TYPE = PROPORTIONAL
* 532 *                      BASEBOARD-CTRL = THERMOSTATIC
* 533 *                      BASEBOARD-RATING = -750000.  ASSIGNED-CFM = 51300.
* 534 *                      OUTSIDE-AIR-CFM = 51300.  SIZING-OPTION = FROM-LOADS
* 535 *                      RATED-CFM = 51300.0  MIN-CFM-RATIO = 1.0
* 536 *                      EXHAUST-CFM = 51300.0  HEATING-CAPACITY = -3698000.0   ..
* 537 *
* 538 * PAINT&CUR. =ZONE     DESIGN-HEAT-T = 60.0  DESIGN-COOL-T = 80.0
* 539 *                      HEAT-TEMP-SCH = HT60_W_SB  ZONE-TYPE = CONDITIONED
* 540 *                      THERMOSTAT-TYPE = PROPORTIONAL
* 541 *                      BASEBOARD-CTRL = THERMOSTATIC
* 542 *                      BASEBOARD-RATING = -613000.  ASSIGNED-CFM = 35460.
* 543 *                      OUTSIDE-AIR-CFM = 35460.  SIZING-OPTION = FROM-LOADS
* 544 *                      RATED-CFM = 35460.0  MIN-CFM-RATIO = 1.0
* 545 *                      HEATING-CAPACITY = -2560000.0   ..
* 546 *
* 547 * VEH_BOD_SH =ZONE     DESIGN-HEAT-T = 60.0  DESIGN-COOL-T = 80.0
* 548 *                      HEAT-TEMP-SCH = HT60_W_SB  ZONE-TYPE = CONDITIONED
* 549 *                      THERMOSTAT-TYPE = PROPORTIONAL
* 550 *                      BASEBOARD-CTRL = THERMOSTATIC
* 551 *                      BASEBOARD-RATING = -385000.  ASSIGNED-CFM = 30360.
* 552 *                      OUTSIDE-AIR-CFM = 30360.  SIZING-OPTION = FROM-LOADS
* 553 *                      RATED-CFM = 30360.0  MIN-CFM-RATIO = 1.0
* 554 *                      HEATING-CAPACITY = -2196000.0   ..
* 555 *
* 556 * ADMIN&ELEC =ZONE     DESIGN-HEAT-T = 68.0  DESIGN-COOL-T = 75.0
* 557 *                      HEAT-TEMP-SCH = HV2_HT_SB  ZONE-TYPE = CONDITIONED
* 558 *                      THERMOSTAT-TYPE = PROPORTIONAL
* 559 *                      BASEBOARD-CTRL = THERMOSTATIC
* 560 *                      BASEBOARD-RATING = -17200.  ASSIGNED-CFM = 30170.
* 561 *                      OUTSIDE-AIR-CFM = 22290.  SIZING-OPTION = FROM-LOADS
* 562 *                      RATED-CFM = 30170.0  MIN-CFM-RATIO = 1.0
* 563 *                      EXHAUST-CFM = 22290.0  HEATING-CAPACITY = -1905300.0   ..
* 564 *
* 565 * CANVAS&ARM =ZONE     DESIGN-HEAT-T = 68.0  DESIGN-COOL-T = 80.0
* 566 *                      HEAT-TEMP-SCH = HT68_W_SB  ZONE-TYPE = CONDITIONED
* 567 *                      THERMOSTAT-TYPE = PROPORTIONAL
* 568 *                      BASEBOARD-CTRL = THERMOSTATIC
* 569 *                      BASEBOARD-RATING = -29400.  ASSIGNED-CFM = 24090.
* 570 *                      OUTSIDE-AIR-CFM = 7970.  SIZING-OPTION = FROM-LOADS
* 571 *                      RATED-CFM = 24090.0  MIN-CFM-RATIO = 1.0
* 572 *                      EXHAUST-CFM = 7970.0  HEATING-CAPACITY = -816700.0   ..
* 573 *
* 574 * PAINT&DYN  =ZONE     DESIGN-HEAT-T = 60.0  DESIGN-COOL-T = 80.0
* 575 *                      HEAT-TEMP-SCH = HT60_W_SB  ZONE-TYPE = CONDITIONED
* 576 *                      THERMOSTAT-TYPE = PROPORTIONAL
* 577 *                      BASEBOARD-CTRL = THERMOSTATIC  ASSIGNED-CFM = 5400.
* 578 *                      OUTSIDE-AIR-CFM = 5400.  SIZING-OPTION = FROM-LOADS
* 579 *                      RATED-CFM = 5400.0  MIN-CFM-RATIO = 1.0
* 580 *                      EXHAUST-CFM = 5400.0  HEATING-CAPACITY = -498400.0   ..
* 581 *
* 582 * SHOPSUPPLY =ZONE     DESIGN-HEAT-T = 60.0  DESIGN-COOL-T = 80.0
* 583 *                      HEAT-TEMP-SCH = HT60_W_SB  ZONE-TYPE = CONDITIONED
* 584 *                      THERMOSTAT-TYPE = PROPORTIONAL
* 585 *                      BASEBOARD-CTRL = THERMOSTATIC  ASSIGNED-CFM = 27700.
* 586 *                      SIZING-OPTION = FROM-LOADS  RATED-CFM = 27700.0
* 587 *                      MIN-CFM-RATIO = 1.0  HEATING-CAPACITY = -996800.0   ..
* 588 *
* 589 * BATTERIES  =ZONE     DESIGN-HEAT-T = 60.0  DESIGN-COOL-T = 80.0
* 590 *                      HEAT-TEMP-SCH = HT60_W_SB  ZONE-TYPE = CONDITIONED
* 591 *                      THERMOSTAT-TYPE = PROPORTIONAL
* 592 *                      BASEBOARD-CTRL = THERMOSTATIC  ASSIGNED-CFM = 21000.
* 593 *                      OUTSIDE-AIR-CFM = 21000.  SIZING-OPTION = FROM-LOADS
* 594 *                      RATED-CFM = 21000.0  MIN-CFM-RATIO = 1.0
* 595 *                      EXHAUST-CFM = 21000.0  HEATING-CAPACITY = -1645000.0   ..
* 596 *
* 597 * PAINT_BTHS =ZONE     DESIGN-HEAT-T = 72.0  DESIGN-COOL-T = 85.0
* 598 *                      HEAT-TEMP-SCH = HEAT_72_Y  ZONE-TYPE = CONDITIONED
* 599 *                      THERMOSTAT-TYPE = PROPORTIONAL
* 600 *                      BASEBOARD-CTRL = THERMOSTATIC  ASSIGNED-CFM = 49700.
* 601 *                      OUTSIDE-AIR-CFM = 49700.  SIZING-OPTION = FROM-LOADS
* 602 *                      RATED-CFM = 49700.0  MIN-CFM-RATIO = 1.0
* 603 *                      EXHAUST-CFM = 49700.0  HEATING-CAPACITY = -4255000.0   ..
* 604 *
* 605 *
* 606 *                       $ SYSTEM DESCRIPTION
* 607 *
* 608 * HV_1        =SYSTEM    SYSTEM-TYPE = HVSYS
* 609 *                        MAX-SUPPLY-T = 135.0  HEATING-SCHEDULE = FULL_ON
* 610 *                        MIN-HUMIDITY = 30.0  ECONO-LIMIT-T = 65.0
* 611 *                        ECONO-LOW-LIMIT = 55.0  HEAT-CONTROL = COLDEST
* 612 *                        SUPPLY-CFM = 23765.  RETURN-CFM = 19012.
* 613 *                        RATED-CFM = 23765.  MIN-OUTSIDE-AIR = 0.2
```

```
* 614 *                        FAN-SCHEDULE = FAN_W_SB  SUPPLY-DELTA-T = 2.4
* 615 *                        SUPPLY-KW = 0.00078
* 616 *                        MOTOR-PLACEMENT = OUTSIDE-AIRFLOW
* 617 *                        NIGHT-CYCLE-CTRL = CYCLE-ON-ANY  NIGHT-VENT-DT = 0.0
* 618 *                        HEATING-CAPACITY = -510100.  FURNACE-AUX = 0.
* 619 *                        ZONE-NAMES = (ADMIN&TOOL)  ..
* 620 *
* 621 * HV_2         =SYSTEM   SYSTEM-TYPE = HVSYS
* 622 *                        MAX-SUPPLY-T = 135.0  HEATING-SCHEDULE = FULL_ON
* 623 *                        MIN-HUMIDITY = 30.0  ECONO-LIMIT-T = 65.0
* 624 *                        ECONO-LOW-LIMIT = 55.0  HEAT-CONTROL = COLDEST
* 625 *                        SUPPLY-CFM = 30170.  RETURN-CFM = 7844.
* 626 *                        RATED-CFM = 30170.  MIN-OUTSIDE-AIR = 0.74
* 627 *                        FAN-SCHEDULE = FULL_ON  SUPPLY-DELTA-T = 2.4
* 628 *                        SUPPLY-KW = 0.00078
* 629 *                        MOTOR-PLACEMENT = OUTSIDE-AIRFLOW
* 630 *                        NIGHT-CYCLE-CTRL = CYCLE-ON-ANY  NIGHT-VENT-DT = 0.0
* 631 *                        HEATING-CAPACITY = -1905300.  FURNACE-AUX = 0.
* 632 *                        ZONE-NAMES = (ADMIN&ELEC)  ..
* 633 *
* 634 * HV_3         =SYSTEM   SYSTEM-TYPE = HVSYS
* 635 *                        MAX-SUPPLY-T = 135.0  HEATING-SCHEDULE = FULL_ON
* 636 *                        MIN-HUMIDITY = 30.0  ECONO-LIMIT-T = 65.0
* 637 *                        ECONO-LOW-LIMIT = 55.0  HEAT-CONTROL = COLDEST
* 638 *                        SUPPLY-CFM = 24090.  RETURN-CFM = 16120.
* 639 *                        RATED-CFM = 24090.  MIN-OUTSIDE-AIR = 0.33
* 640 *                        FAN-SCHEDULE = FAN_W_SB  SUPPLY-DELTA-T = 2.4
* 641 *                        SUPPLY-KW = 0.00078
* 642 *                        MOTOR-PLACEMENT = OUTSIDE-AIRFLOW
* 643 *                        NIGHT-CYCLE-CTRL = CYCLE-ON-ANY  NIGHT-VENT-DT = 0.0
* 644 *                        HEATING-CAPACITY = -855600.  FURNACE-AUX = 0.
* 645 *                        ZONE-NAMES = (CANVAS&ARM)  ..
* 646 *
* 647 * MAU_5        =SYSTEM   SYSTEM-TYPE = HVSYS
* 648 *                        MAX-SUPPLY-T = 135.0  HEATING-SCHEDULE = FULL_ON
* 649 *                        MIN-HUMIDITY = 30.0  ECONO-LIMIT-T = 65.0
* 650 *                        ECONO-LOW-LIMIT = 55.0  HEAT-CONTROL = COLDEST
* 651 *                        SUPPLY-CFM = 5400.  RATED-CFM = 5400.
* 652 *                        MIN-OUTSIDE-AIR = 1.0  FAN-SCHEDULE = FAN_W_SB
* 653 *                        SUPPLY-DELTA-T = 2.4  SUPPLY-KW = 0.00078
* 654 *                        MOTOR-PLACEMENT = OUTSIDE-AIRFLOW
* 655 *                        NIGHT-CYCLE-CTRL = CYCLE-ON-ANY  NIGHT-VENT-DT = 0.0
* 656 *                        HEATING-CAPACITY = -498400.  FURNACE-AUX = 0.
* 657 *                        ZONE-NAMES = (PAINT&DYN)  ..
* 658 *
* 659 * SUPPLY_UH   =SYSTEM   SYSTEM-TYPE = UHT
* 660 *                        MAX-SUPPLY-T = 135.0  HEATING-SCHEDULE = FULL_ON
* 661 *                        RATED-CFM = 27700.  SUPPLY-DELTA-T = 0.18
* 662 *                        SUPPLY-KW = 0.000059
* 663 *                        NIGHT-CYCLE-CTRL = CYCLE-ON-ANY
* 664 *                        HEATING-CAPACITY = -996800.  FURNACE-AUX = 0.
* 665 *                        ZONE-NAMES = (SHOPSUPPLY)  ..
* 666 *
* 667 * MAU_6&7      =SYSTEM   SYSTEM-TYPE = HVSYS
* 668 *                        MAX-SUPPLY-T = 135.0  HEATING-SCHEDULE = FULL_ON
* 669 *                        MIN-HUMIDITY = 30.0  ECONO-LIMIT-T = 65.0
* 670 *                        ECONO-LOW-LIMIT = 55.0  HEAT-CONTROL = COLDEST
* 671 *                        SUPPLY-CFM = 42220.  RATED-CFM = 42220.
* 672 *                        MIN-OUTSIDE-AIR = 1.0  FAN-SCHEDULE = FAN_W_SB
* 673 *                        SUPPLY-DELTA-T = 2.4  SUPPLY-KW = 0.00078
* 674 *                        MOTOR-PLACEMENT = OUTSIDE-AIRFLOW
* 675 *                        NIGHT-CYCLE-CTRL = CYCLE-ON-ANY  NIGHT-VENT-DT = 0.0
* 676 *                        HEATING-CAPACITY = -1645000.  FURNACE-AUX = 0.
* 677 *                        ZONE-NAMES = (BATTERIES)  ..
* 678 *
* 679 * MAU_1&2A     =SYSTEM   SYSTEM-TYPE = HVSYS
* 680 *                        MAX-SUPPLY-T = 135.0  HEATING-SCHEDULE = FULL_ON
* 681 *                        MIN-HUMIDITY = 30.0  ECONO-LIMIT-T = 65.0
* 682 *                        ECONO-LOW-LIMIT = 55.0  HEAT-CONTROL = COLDEST
* 683 *                        SUPPLY-CFM = 51300.  RETURN-CFM = 22982.
* 684 *                        RATED-CFM = 51300.  MIN-OUTSIDE-AIR = 0.55
* 685 *                        MAX-OA-FRACTION = 0.55  FAN-SCHEDULE = FAN_W_SB
* 686 *                        SUPPLY-DELTA-T = 2.4  SUPPLY-KW = 0.00078
* 687 *                        MOTOR-PLACEMENT = OUTSIDE-AIRFLOW
* 688 *                        NIGHT-CYCLE-CTRL = CYCLE-ON-ANY  NIGHT-VENT-DT = 0.0
* 689 *                        HEATING-CAPACITY = -3698000.  FURNACE-AUX = 0.
* 690 *                        ZONE-NAMES = (VEH_MNT)  ..
* 691 *
* 692 * MAU_1&2B     =SYSTEM   SYSTEM-TYPE = HVSYS
* 693 *                        MAX-SUPPLY-T = 135.0  HEATING-SCHEDULE = FULL_ON
* 694 *                        MIN-HUMIDITY = 30.0  ECONO-LIMIT-T = 65.0
* 695 *                        ECONO-LOW-LIMIT = 55.0  HEAT-CONTROL = COLDEST
* 696 *                        SUPPLY-CFM = 35460.  RETURN-CFM = 15886.
* 697 *                        RATED-CFM = 35460.  MIN-OUTSIDE-AIR = 0.55
* 698 *                        MAX-OA-FRACTION = 0.55  FAN-SCHEDULE = FAN_W_SB
* 699 *                        SUPPLY-DELTA-T = 2.4  SUPPLY-KW = 0.00078
* 700 *                        MOTOR-PLACEMENT = OUTSIDE-AIRFLOW
* 701 *                        NIGHT-CYCLE-CTRL = CYCLE-ON-ANY  NIGHT-VENT-DT = 0.0
* 702 *                        HEATING-CAPACITY = -2560000.  FURNACE-AUX = 0.
* 703 *                        ZONE-NAMES = (PAINT&CUR.)  ..
* 704 *
* 705 * MAU_3        =SYSTEM   SYSTEM-TYPE = HVSYS
* 706 *                        MAX-SUPPLY-T = 135.0  HEATING-SCHEDULE = FULL_ON
* 707 *                        MIN-HUMIDITY = 30.0  ECONO-LIMIT-T = 65.0
* 708 *                        ECONO-LOW-LIMIT = 55.0  HEAT-CONTROL = COLDEST
* 709 *                        SUPPLY-CFM = 30360.  RATED-CFM = 30360.
* 710 *                        MIN-OUTSIDE-AIR = 1.0  FAN-SCHEDULE = FAN_W_SB
* 711 *                        SUPPLY-DELTA-T = 2.4  SUPPLY-KW = 0.00078
* 712 *                        MOTOR-PLACEMENT = OUTSIDE-AIRFLOW
* 713 *                        NIGHT-CYCLE-CTRL = CYCLE-ON-ANY  NIGHT-VENT-DT = 0.0
* 714 *                        HEATING-CAPACITY = -2196000.  FURNACE-AUX = 0.
* 715 *                        ZONE-NAMES = (VEH_BOD_SH)  ..
* 716 *
* 717 * MAU_4_8_&9 =SYSTEM    SYSTEM-TYPE = HVSYS
* 718 *                        MAX-SUPPLY-T = 135.0  HEATING-SCHEDULE = PAINT_MAU
* 719 *                        MIN-HUMIDITY = 30.0  ECONO-LIMIT-T = 65.0
* 720 *                        ECONO-LOW-LIMIT = 55.0  HEAT-CONTROL = COLDEST
* 721 *                        SUPPLY-CFM = 49700.  RATED-CFM = 49700.
```

```
* 722 *                      MIN-OUTSIDE-AIR = 1.0  FAN-SCHEDULE = PAINT_MAU
* 723 *                      SUPPLY-DELTA-T = 2.4  SUPPLY-KW = 0.00078
* 724 *                      MOTOR-PLACEMENT = OUTSIDE-AIRFLOW
* 725 *                      NIGHT-CYCLE-CTRL = CYCLE-ON-ANY  NIGHT-VENT-DT = 0.0
* 726 *                      HEATING-CAPACITY = -4245000.  FURNACE-AUX = 0.
* 727 *                      ZONE-NAMES = (PAINT_BTHS)  ..
* 728 *
* 729 * END  ..
* 730 * COMPUTE SYSTEMS  ..
* 731 *
* 732 * INPUT PLANT  ..
```

```
* 733 *
* 734 *
* 735 *                  $-------------------------------------$
* 736 *                  $ E Z - D O E   P L A N T S   I N P U T $
* 737 *                  $-------------------------------------$
* 738 *
* 739 *                     $ GENERAL PROJECT DATA
* 740 *
* 741 * TITLE  LINE-1 *     EMC      ENGINEERS      INC.     *
* 742 *        LINE-2 *EZDOE - ELITE SOFTWARE DEVELOPMENT INC*
* 743 *        LINE-3 *     DENVER,       CO       80227     *
* 744 *
* 745 *        LINE-4 *BUILDING 4530, SMA BUILDING             *
* 746 *        LINE-5 *MODEL WITH SET BACK                     * ..
* 747 *
* 748 * ABORT              ERRORS  ..
* 749 * DIAGNOSTIC         WARNINGS ..
* 750 * PLANT-REPORT       SUMMARY=(PS-A,PS-B,PS-C,PS-D,PS-G,PS-H,PS-I,
* 751 *                             BEPS)
* 752 *
* 753 *                    HOURLY-DATA-SAVE = YES  ..
* 754 *
* 755 *                     $ SCHEDULES
* 756 *
* 757 * FULL_ON_D  =DAY-SCHEDULE  (1,24) (1.) ..
* 758 *
* 759 *
* 760 * FULL_ON_W  =WEEK-SCHEDULE  (ALL) FULL_ON_D  ..
* 761 *
* 762 *
* 763 * $ FULL ON SCHEDULE
* 764 * FULL_ON_SC =SCHEDULE THRU DEC 31 FULL_ON_W  ..
* 765 *
* 766 *
* 767 *
* 768 *                     $ EQUIPMENT DESCRIPTION
* 769 *
* 770 * HTP_1      =PLANT-EQUIPMENT   TYPE = HTANK-STORAGE
* 771 *                    SIZE = 22.4  ..
* 772 *
* 773 * PLANT-PARAMETERS      CCIRC-HEAD = 63.2  HCIRC-HEAD = 100.0
* 774 *                       HCIRC-DESIGN-T-DROP = 20.0    ..
* 775 *
* 776 *
* 777 * ENERGY-RESOURCE       RESOURCE = ELECTRICITY  ..
* 778 * ENERGY-RESOURCE       RESOURCE = STEAM  ..
* 779 *
* 780 * ENERGY-STORAGE    HEAT-STORE-RATE = 22.4  HEAT-SUPPLY-RATE = 22.4
* 781 *                       HTANK-BASE-T = 195.0  HTANK-T-RANGE = 5.0
* 782 *                       HEAT-STORE-SCH = FULL_ON_SC    ..
* 783 *
* 784 *       HEAT-RECOVERY
* 785 *            SUPPLY-1 = (HTANK-STORAGE)
* 786 *            DEMAND-1 = (SPACE-HEAT,PROCESS-HEAT)  ..
* 787 *
* 788 *
* 789 *
* 790 * END  ..
* 791 * COMPUTE PLANT ..
* 792 * STOP ..
```

ENERGY TYPE IN SITE MBTU-	STEAM	ELECTRICITY	RECOVERED
CATEGORY OF USE			
SPACE HEAT	39,962.97	0.00	
SPACE COOL	0.00	0.00	
HVAC AUX	0.00	5,576.35	
DOM HOT WTR	207.01	0.00	
AUX SOLAR	0.00	0.00	
LIGHTS	0.00	893.63	
VERT TRANS	0.00	0.00	
MISC EQUIP	0.00	0.00	
TOTAL	40,169.98	6,469.98	

TOTAL SITE ENERGY 46639.48 MBTU 285.7 KBTU/SQFT-YR GROSS-AREA 285.7 KBTU/SQFT-YR NET-AREA
TOTAL SOURCE ENERGY 86378.05 MBTU 529.1 KBTU/SQFT-YR GROSS-AREA 529.1 KBTU/SQFT-YR NET-AREA

PERCENT OF HOURS ANY SYSTEM ZONE OUTSIDE OF THROTTLING RANGE = 10.4
PERCENT OF HOURS ANY PLANT LOAD NOT SATISFIED = 0.0

NOTE ELECTRICITY AND/OR FUEL USED TO GENERATE ELECTRICITY IS APPORTIONED BASED ON THE YEARLY DEMAND. ALL OTHER ENERGY TYPES ARE APPORTIONED HOURLY.

MO	UTILITY-	STEAM	ELECTRICITY
	TOTAL(MBTU)	7587.865	611.574
JAN	PEAK(KBTU)	24099.928	1241.908
	DY/HR	5/12	28/11
	TOTAL(MBTU)	5444.344	526.106
FEB	PEAK(KBTU)	21835.632	1241.737
	DY/HR	5/ 9	4/10
	TOTAL(MBTU)	5366.305	577.743
MAR	PEAK(KBTU)	21750.360	1240.741
	DY/HR	27/ 9	3/10
	TOTAL(MBTU)	3024.105	551.161
APR	PEAK(KBTU)	16569.712	1239.079
	DY/HR	3/ 9	1/10
	TOTAL(MBTU)	1925.721	542.524
MAY	PEAK(KBTU)	13214.208	1238.826
	DY/HR	16/ 8	3/10
	TOTAL(MBTU)	1093.786	471.779
JUN	PEAK(KBTU)	6980.922	1236.328
	DY/HR	8/ 6	30/14
	TOTAL(MBTU)	1168.520	479.620
JUL	PEAK(KBTU)	5555.964	1236.328
	DY/HR	25/ 6	29/14
	TOTAL(MBTU)	1148.874	487.484
AUG	PEAK(KBTU)	6041.078	1236.328
	DY/HR	22/ 6	31/14
	TOTAL(MBTU)	1487.204	517.075
SEP	PEAK(KBTU)	9859.286	1237.380
	DY/HR	24/ 8	23/10
	TOTAL(MBTU)	2389.076	566.174
OCT	PEAK(KBTU)	14980.736	1238.526
	DY/HR	28/ 9	26/11
	TOTAL(MBTU)	3789.899	553.933
NOV	PEAK(KBTU)	18598.536	1239.119
	DY/HR	27/ 9	22/10
	TOTAL(MBTU)	5744.163	584.447
DEC	PEAK(KBTU)	21610.208	1241.139
	DY/HR	3/ 9	30/10
	ONE YEAR	40169.865	6469.619
	USE/PEAK	24099.928	1241.908

```
*   3 *
*   4 *
*   5 *                 $-----------------------------------$
*   6 *                 $ E Z - D O E   L O A D S   I N P U T $
*   7 *                 $-----------------------------------$
*   8 *
*   9 *                    $ GENERAL PROJECT DATA
*  10 *
*  11 * TITLE  LINE-1 *     EMC      ENGINEERS      INC.     *
*  12 *       LINE-2 *EZDOE - ELITE SOFTWARE DEVELOPMENT INC*
*  13 *       LINE-3 *    DENVER,       CO       80227     *
*  14 *
*  15 *       LINE-4 *BUILDING 4530, SMA BUILDING            *
*  16 *       LINE-5 *MODEL WITH SET BACK AND DDC            * ..
*  17 *
*  18 * ABORT              ERRORS  ..
*  19 * DIAGNOSTIC         WARNINGS ..
*  20 * LOADS-REPORT       SUMMARY=(LS-C,LS-D)
*  21 *                    HOURLY-DATA-SAVE = YES  ..
*  22 * BUILDING-LOCATION  HOLIDAY = NO
*  23 *                    X-REF = 0.0
*  24 *                    Y-REF = 0.0  ..
*  25 * RUN-PERIOD         JAN 1 1994 THRU DEC 31 1994  ..
*  26 *
*  27 *
*  28 *                    $ SCHEDULES
*  29 *
*  30 * FULL_ON_D  =DAY-SCHEDULE  (1,24) (1.) ..
*  31 *
*  32 * FULL_OFF_D =DAY-SCHEDULE  (1,24) (0.) ..
*  33 *
*  34 * LIGHT_ON_D =DAY-SCHEDULE  (1,5) (0.23)
*  35 *                           (6,7) (0.35)
*  36 *                           (8,9) (0.5,0.6)
*  37 *                           (10,11) (0.75)
*  38 *                           (12) (0.5)
*  39 *                           (13,14) (0.75)
*  40 *                           (15) (0.5)
*  41 *                           (16,18) (0.4)
*  42 *                           (19) (0.3)
*  43 *                           (20,24) (0.23) ..
*  44 *
*  45 * LT_ON_WKND =DAY-SCHEDULE  (1,6) (0.23)
*  46 *                           (7,19) (0.07)
*  47 *                           (20,24) (0.23) ..
*  48 *
*  49 * PEOPLE_D   =DAY-SCHEDULE  (1,5) (0.)
*  50 *                           (6,7) (0.1,0.5)
*  51 *                           (8,11) (1.)
*  52 *                           (12) (0.8)
*  53 *                           (13,16) (1.)
*  54 *                           (17,18) (0.5,0.1)
*  55 *                           (19,24) (0.) ..
*  56 *
*  57 * EQUIP_ON_D =DAY-SCHEDULE  (1,5) (0.05)
*  58 *                           (6,7) (0.1,0.2)
*  59 *                           (8,9) (0.3)
*  60 *                           (10,11) (0.4,0.7)
*  61 *                           (12,13) (0.4)
*  62 *                           (14,15) (0.8)
*  63 *                           (16,18) (0.7,0.3,0.1)
*  64 *                           (19,24) (0.05) ..
*  65 *
*  66 * SHOP_INF_D =DAY-SCHEDULE  (1,7) (0.1)
*  67 *                           (8) (1.)
*  68 *                           (9,16) (0.1)
*  69 *                           (17) (1.)
*  70 *                           (18,24) (0.1) ..
*  71 *
*  72 *
*  73 * FULL_ON_W  =WEEK-SCHEDULE  (ALL) FULL_ON_D  ..
*  74 *
*  75 * FULL_OFF_W =WEEK-SCHEDULE  (ALL) FULL_OFF_D  ..
*  76 *
*  77 * LIGHT_ON_W =WEEK-SCHEDULE  (WD)  LIGHT_ON_D
*  78 *                            (WEH) LT_ON_WKND  ..
*  79 *
*  80 * PEOPLE_W   =WEEK-SCHEDULE  (WD)  PEOPLE_D
*  81 *                            (WEH) FULL_OFF_D  ..
*  82 *
*  83 * EQUIP_W    =WEEK-SCHEDULE  (WD)  EQUIP_ON_D
*  84 *                            (WEH) FULL_OFF_D  ..
*  85 *
*  86 * SHOP_IFL_W =WEEK-SCHEDULE  (WD)  SHOP_INF_D
*  87 *                            (WEH) FULL_OFF_D  ..
*  88 *
*  89 *
*  90 * $ FULL ON SCHEDULE
*  91 * FULL_ON    =SCHEDULE THRU DEC 31 FULL_ON_W  ..
*  92 *
*  93 * $ FULL OFF SCHEDULE
*  94 * FULL_OFF   =SCHEDULE THRU DEC 31 FULL_OFF_W  ..
*  95 *
*  96 * $ LIGHTING SCHEDULE
*  97 * LIGHT_SCHD =SCHEDULE THRU DEC 31 LIGHT_ON_W  ..
*  98 *
*  99 * $ OCCUPANCY SCHEDULE
* 100 * PEOPLE_SCH =SCHEDULE THRU DEC 31 PEOPLE_W  ..
* 101 *
* 102 * $ EQUIPMENT SCHEDULE
```

```
* 103 * EQUIP_SCHD =SCHEDULE THRU DEC 31 EQUIP_W  ..
* 104 *
* 105 * $ SHOP INFILTRATION SCHED
* 106 * SHOP_INFIL =SCHEDULE THRU DEC 31 SHOP_IFL_W  ..
* 107 *
* 108 *
* 109 *
* 110 *                      $ CONSTRUCTION TYPES
* 111 *
* 112 *
* 113 *
* 114 * FLOORCON =CONSTRUCTION   U-VALUE =  0.010  ..
* 115 *
* 116 *  $ ROOF CONSTRUCITON
* 117 * ROOFCON  =CONSTRUCTION   U-VALUE =  0.030  ..
* 118 *
* 119 *  $ WALL CONSTRUCITON
* 120 * WALL_CON =CONSTRUCTION   U-VALUE =  0.010  ..
* 121 * LDOORCON =CONSTRUCTION   U-VALUE =  0.400  ..
* 122 * SDOORCON =CONSTRUCTION   U-VALUE =  1.000  ..
* 123 *
* 124 * G_TYPE1  =GLASS-TYPE     SHADING-COEF = 1.000
* 125 *                          PANES = 1
* 126 *                          GLASS-CONDUCTANCE =  1.130  ..
* 127 *
* 128 *
* 129 *
* 130 *
* 131 *                      $ SPACE DESCRIPTION
* 132 *
* 133 * ADMIN&TOOL =SPACE     AREA = 14228.0  VOLUME = 128052.0
* 134 *                       TEMPERATURE = (68.)  ZONE-TYPE = CONDITIONED
* 135 *                       PEOPLE-SCHEDULE = PEOPLE_SCH  NUMBER-OF-PEOPLE = 40.0
* 136 *                       PEOPLE-HEAT-GAIN = 450.0  PEOPLE-HG-LAT = 0.2
* 137 *                       PEOPLE-HG-SENS = 0.8  LIGHTING-TYPE = REC-FLUOR-RV
* 138 *                       LIGHTING-KW = 22.9  LIGHTING-SCHEDULE = LIGHT_SCHD
* 139 *                       SOURCE-SCHEDULE = FULL_ON  SOURCE-TYPE = HOT-WATER
* 140 *                       SOURCE-BTU/HR = 23630.0  SOURCE-SENSIBLE = 0.0
* 141 *                       INF-METHOD = AIR-CHANGE  AIR-CHANGES/HR = 0.5
* 142 *                       INF-SCHEDULE = FULL_ON   ..
* 143 *
* 144 *              U-W      HEIGHT = 110.0  WIDTH = 129.5  CONS = FLOORCON ..
* 145 *
* 146 *               ROOF     HEIGHT = 110.0  WIDTH = 129.5  CONS = ROOFCON
* 147 *                        TILT = 0   ..
* 148 *
* 149 *               E-W      HEIGHT = 9.0  WIDTH = 129.5  CONS = WALL_CON
* 150 *                        AZIMUTH = 0   ..
* 151 *
* 152 *                 WINDOW HEIGHT = 4.0  WIDTH = 2.0  G-T = G_TYPE1
* 153 *                        MULTIPLIER = 13.0   ..
* 154 *
* 155 *                 DOOR   HEIGHT = 7.5  WIDTH = 3.0  CONS = SDOORCON
* 156 *                        MULTIPLIER = 3.0   ..
* 157 *
* 158 *               E-W      HEIGHT = 9.0  WIDTH = 86.0  CONS = WALL_CON
* 159 *                        AZIMUTH = 0   ..
* 160 *
* 161 *                 WINDOW HEIGHT = 4.0  WIDTH = 4.0  G-T = G_TYPE1
* 162 *                        MULTIPLIER = 12.0   ..
* 163 *
* 164 *                 DOOR   HEIGHT = 7.5  WIDTH = 2.0  CONS = SDOORCON
* 165 *                        MULTIPLIER = 2.0   ..
* 166 *
* 167 *
* 168 * VEH_MNT    =SPACE     AREA = 33660.0  VOLUME = 1000000.0
* 169 *                       TEMPERATURE = (60.)  ZONE-TYPE = CONDITIONED
* 170 *                       PEOPLE-SCHEDULE = PEOPLE_SCH  NUMBER-OF-PEOPLE = 50.0
* 171 *                       PEOPLE-HEAT-GAIN = 450.0  PEOPLE-HG-LAT = 0.2
* 172 *                       PEOPLE-HG-SENS = 0.8  LIGHTING-TYPE = INCAND
* 173 *                       LIGHTING-KW = 14.15  LIGHTING-SCHEDULE = LIGHT_SCHD
* 174 *                       INF-METHOD = AIR-CHANGE  AIR-CHANGES/HR = 1.0
* 175 *                       INF-SCHEDULE = FULL_ON   ..
* 176 *
* 177 *              U-W      HEIGHT = 165.0  WIDTH = 204.0  CONS = FLOORCON ..
* 178 *
* 179 *               ROOF     HEIGHT = 165.0  WIDTH = 204.0  CONS = ROOFCON
* 180 *                        TILT = 0   ..
* 181 *
* 182 *               E-W      HEIGHT = 32.5  WIDTH = 204.0  CONS = WALL_CON
* 183 *                        AZIMUTH = 0   ..
* 184 *
* 185 *                 DOOR   HEIGHT = 14.0  WIDTH = 27.0  CONS = LDOORCON
* 186 *                        MULTIPLIER = 6.0   ..
* 187 *
* 188 *                 DOOR   HEIGHT = 7.5  WIDTH = 3.0  CONS = SDOORCON
* 189 *                        MULTIPLIER = 3.0   ..
* 190 *
* 191 *               E-W      HEIGHT = 32.5  WIDTH = 204.0  CONS = WALL_CON
* 192 *                        AZIMUTH = 180   ..
* 193 *
* 194 *                 DOOR   HEIGHT = 14.0  WIDTH = 27.0  CONS = LDOORCON
* 195 *                        MULTIPLIER = 6.0   ..
* 196 *
* 197 *                 DOOR   HEIGHT = 7.5  WIDTH = 3.0  CONS = SDOORCON
* 198 *                        MULTIPLIER = 3.0   ..
* 199 *
* 200 *
* 201 * PAINT&CUR. =SPACE     AREA = 29040.0  VOLUME = 943800.0
* 202 *                       TEMPERATURE = (60.)  ZONE-TYPE = CONDITIONED
* 203 *                       PEOPLE-SCHEDULE = PEOPLE_SCH  NUMBER-OF-PEOPLE = 40.0
* 204 *                       PEOPLE-HEAT-GAIN = 450.0  PEOPLE-HG-LAT = 0.2
* 205 *                       PEOPLE-HG-SENS = 0.8  LIGHTING-TYPE = INCAND
* 206 *                       LIGHTING-KW = 8.1  LIGHTING-SCHEDULE = LIGHT_SCHD
* 207 *                       INF-METHOD = AIR-CHANGE  AIR-CHANGES/HR = 0.96
* 208 *                       INF-SCHEDULE = FULL_ON   ..
* 209 *
* 210 *              U-W      HEIGHT = 165.0  WIDTH = 176.0  CONS = FLOORCON ..
```

```
* 211 *
* 212 *                ROOF      HEIGHT = 165.0  WIDTH = 176.0  CONS = ROOFCON
* 213 *                          TILT = 0    ..
* 214 *
* 215 *                E-W       HEIGHT = 32.5  WIDTH = 176.0  CONS = WALL_CON
* 216 *                          AZIMUTH = 0    ..
* 217 *
* 218 *                  DOOR    HEIGHT = 14.0  WIDTH = 27.0  CONS = LDOORCON
* 219 *                          MULTIPLIER = 5.0    ..
* 220 *
* 221 *                  DOOR    HEIGHT = 7.5  WIDTH = 3.0  CONS = SDOORCON
* 222 *                          MULTIPLIER = 2.0    ..
* 223 *
* 224 *                E-W       HEIGHT = 32.5  WIDTH = 176.0  CONS = WALL_CON
* 225 *                          AZIMUTH = 180    ..
* 226 *
* 227 *                  DOOR    HEIGHT = 14.0  WIDTH = 27.0  CONS = LDOORCON
* 228 *                          MULTIPLIER = 5.0    ..
* 229 *
* 230 *                  DOOR    HEIGHT = 7.5  WIDTH = 3.0  CONS = SDOORCON
* 231 *                          MULTIPLIER = 2.0    ..
* 232 *
* 233 *                E-W       HEIGHT = 32.5  WIDTH = 165.0  CONS = WALL_CON
* 234 *                          AZIMUTH = 270    ..
* 235 *
* 236 *                  DOOR    HEIGHT = 7.5  WIDTH = 3.0  CONS = SDOORCON
* 237 *                          MULTIPLIER = 3.0    ..
* 238 *
* 239 *
* 240 * VEH_BOD_SH =SPACE     AREA = 14628.0  VOLUME = 475410.0
* 241 *                       TEMPERATURE = (60.)  ZONE-TYPE = CONDITIONED
* 242 *                       PEOPLE-SCHEDULE = PEOPLE_SCH  NUMBER-OF-PEOPLE = 40.0
* 243 *                       PEOPLE-HEAT-GAIN = 450.0  PEOPLE-HG-LAT = 0.2
* 244 *                       PEOPLE-HG-SENS = 0.8  LIGHTING-TYPE = INCAND
* 245 *                       LIGHTING-KW = 6.8  LIGHTING-SCHEDULE = LIGHT_SCHD
* 246 *                       INF-METHOD = AIR-CHANGE  AIR-CHANGES/HR = 0.43
* 247 *                       INF-SCHEDULE = FULL_ON    ..
* 248 *
* 249 *              U-W       HEIGHT = 69.0  WIDTH = 212.0  CONS = FLOORCON ..
* 250 *
* 251 *                ROOF      HEIGHT = 69.0  WIDTH = 212.0  CONS = ROOFCON
* 252 *                          TILT = 0    ..
* 253 *
* 254 *                E-W       HEIGHT = 32.5  WIDTH = 212.0  CONS = WALL_CON
* 255 *                          AZIMUTH = 0    ..
* 256 *
* 257 *                  DOOR    HEIGHT = 14.0  WIDTH = 27.0  CONS = LDOORCON
* 258 *                          MULTIPLIER = 4.0    ..
* 259 *
* 260 *                  DOOR    HEIGHT = 7.5  WIDTH = 3.0  CONS = SDOORCON
* 261 *                          MULTIPLIER = 2.0    ..
* 262 *
* 263 *                E-W       HEIGHT = 32.5  WIDTH = 212.0  CONS = WALL_CON
* 264 *                          AZIMUTH = 180    ..
* 265 *
* 266 *                  DOOR    HEIGHT = 14.0  WIDTH = 27.0  CONS = LDOORCON
* 267 *                          MULTIPLIER = 5.0    ..
* 268 *
* 269 *                  DOOR    HEIGHT = 7.5  WIDTH = 3.0  CONS = SDOORCON
* 270 *                          MULTIPLIER = 3.0    ..
* 271 *
* 272 *                E-W       HEIGHT = 32.5  WIDTH = 69.0  CONS = WALL_CON
* 273 *                          AZIMUTH = 270    ..
* 274 *
* 275 *                  DOOR    HEIGHT = 7.5  WIDTH = 3.0  CONS = SDOORCON
* 276 *                          MULTIPLIER = 2.0    ..
* 277 *
* 278 *
* 279 * ADMIN&ELEC =SPACE     AREA = 10085.0  VOLUME = 90765.0
* 280 *                       TEMPERATURE = (68.)  ZONE-TYPE = CONDITIONED
* 281 *                       PEOPLE-SCHEDULE = PEOPLE_SCH  NUMBER-OF-PEOPLE = 40.0
* 282 *                       PEOPLE-HEAT-GAIN = 450.0  PEOPLE-HG-LAT = 0.2
* 283 *                       PEOPLE-HG-SENS = 0.8  LIGHTING-TYPE = REC-FLUOR-RV
* 284 *                       LIGHTING-KW = 9.79  LIGHTING-SCHEDULE = LIGHT_SCHD
* 285 *                       INF-METHOD = AIR-CHANGE  AIR-CHANGES/HR = 0.5
* 286 *                       INF-SCHEDULE = FULL_ON    ..
* 287 *
* 288 *              U-W       HEIGHT = 83.0  WIDTH = 129.5  CONS = FLOORCON ..
* 289 *
* 290 *                ROOF      HEIGHT = 83.0  WIDTH = 129.5  CONS = ROOFCON
* 291 *                          TILT = 0    ..
* 292 *
* 293 *                E-W       HEIGHT = 9.0  WIDTH = 125.0  CONS = WALL_CON
* 294 *                          AZIMUTH = 270    ..
* 295 *
* 296 *                  DOOR    HEIGHT = 7.5  WIDTH = 3.0  CONS = SDOORCON
* 297 *                          MULTIPLIER = 3.0    ..
* 298 *
* 299 *                  DOOR    HEIGHT = 14.0  WIDTH = 14.5  CONS = LDOORCON ..
* 300 *
* 301 *                  DOOR    HEIGHT = 9.0  WIDTH = 14.5  CONS = LDOORCON
* 302 *                          MULTIPLIER = 3.0    ..
* 303 *
* 304 *
* 305 * CANVAS&ARM =SPACE     AREA = 21746.0  VOLUME = 130020.0
* 306 *                       TEMPERATURE = (60.)  ZONE-TYPE = CONDITIONED
* 307 *                       PEOPLE-SCHEDULE = PEOPLE_SCH  NUMBER-OF-PEOPLE = 40.0
* 308 *                       PEOPLE-HEAT-GAIN = 450.0  PEOPLE-HG-LAT = 0.2
* 309 *                       PEOPLE-HG-SENS = 0.8  LIGHTING-TYPE = REC-FLUOR-RV
* 310 *                       LIGHTING-KW = 13.67  LIGHTING-SCHEDULE = LIGHT_SCHD
* 311 *                       INF-METHOD = AIR-CHANGE  AIR-CHANGES/HR = 0.5
* 312 *                       INF-SCHEDULE = FULL_ON    ..
* 313 *
* 314 *              U-W       HEIGHT = 84.0  WIDTH = 259.0  CONS = FLOORCON ..
* 315 *
* 316 *                ROOF      HEIGHT = 84.0  WIDTH = 259.0  CONS = ROOFCON
* 317 *                          TILT = 0    ..
* 318 *
```

```
* 319 *                E-W       HEIGHT = 9.0  WIDTH = 129.5  CONS = WALL_CON
* 320 *                          AZIMUTH = 180   ..
* 321 *
* 322 *                  DOOR    HEIGHT = 7.5  WIDTH = 3.0  CONS = SDOORCON
* 323 *                          MULTIPLIER = 3.0   ..
* 324 *
* 325 *                E-W       HEIGHT = 25.0  WIDTH = 120.0  CONS = WALL_CON
* 326 *                          AZIMUTH = 90   ..
* 327 *
* 328 *                  DOOR    HEIGHT = 7.5  WIDTH = 3.0  CONS = SDOORCON
* 329 *                          MULTIPLIER = 3.0   ..
* 330 *
* 331 *
* 332 * PAINT&DYN  =SPACE     AREA = 1775.0  VOLUME = 15975.0
* 333 *                       TEMPERATURE = (60.)  ZONE-TYPE = CONDITIONED
* 334 *                       PEOPLE-SCHEDULE = PEOPLE_SCH  NUMBER-OF-PEOPLE = 15.0
* 335 *                       PEOPLE-HEAT-GAIN = 450.0  PEOPLE-HG-LAT = 0.2
* 336 *                       PEOPLE-HG-SENS = 0.8  LIGHTING-TYPE = REC-FLUOR-RV
* 337 *                       LIGHTING-KW = 0.45  LIGHTING-SCHEDULE = LIGHT_SCHD
* 338 *                       INF-METHOD = AIR-CHANGE  AIR-CHANGES/HR = 0.5
* 339 *                       INF-SCHEDULE = FULL_ON   ..
* 340 *
* 341 *              U-W       HEIGHT = 22.0  WIDTH = 129.5  CONS = FLOORCON ..
* 342 *
* 343 *               ROOF      HEIGHT = 22.0  WIDTH = 129.5  CONS = ROOFCON
* 344 *                         TILT = 0   ..
* 345 *
* 346 *
* 347 * SHOPSUPPLY =SPACE     AREA = 29641.0  VOLUME = 741025.0
* 348 *                       TEMPERATURE = (60.)  ZONE-TYPE = CONDITIONED
* 349 *                       PEOPLE-SCHEDULE = PEOPLE_SCH  NUMBER-OF-PEOPLE = 40.0
* 350 *                       PEOPLE-HEAT-GAIN = 450.0  PEOPLE-HG-LAT = 0.2
* 351 *                       PEOPLE-HG-SENS = 0.8  LIGHTING-TYPE = REC-FLUOR-RV
* 352 *                       LIGHTING-KW = 4.7  LIGHTING-SCHEDULE = LIGHT_SCHD
* 353 *                       INF-METHOD = AIR-CHANGE  AIR-CHANGES/HR = 0.5
* 354 *                       INF-SCHEDULE = FULL_ON   ..
* 355 *
* 356 *              U-W       HEIGHT = 228.9  WIDTH = 129.5  CONS = FLOORCON ..
* 357 *
* 358 *               ROOF      HEIGHT = 228.5  WIDTH = 129.5  CONS = ROOFCON
* 359 *                         TILT = 0   ..
* 360 *
* 361 *               E-W       HEIGHT = 25.0  WIDTH = 211.0  CONS = WALL_CON
* 362 *                         AZIMUTH = 0   ..
* 363 *
* 364 *                 DOOR    HEIGHT = 7.5  WIDTH = 3.0  CONS = SDOORCON
* 365 *                         MULTIPLIER = 2.0   ..
* 366 *
* 367 *                 DOOR    HEIGHT = 8.0  WIDTH = 8.0  CONS = LDOORCON
* 368 *                         MULTIPLIER = 2.0   ..
* 369 *
* 370 *
* 371 * BATTERIES  =SPACE     AREA = 4705.0  VOLUME = 84690.0
* 372 *                       TEMPERATURE = (60.)  ZONE-TYPE = CONDITIONED
* 373 *                       PEOPLE-SCHEDULE = PEOPLE_SCH  NUMBER-OF-PEOPLE = 40.0
* 374 *                       PEOPLE-HEAT-GAIN = 450.0  PEOPLE-HG-LAT = 0.2
* 375 *                       PEOPLE-HG-SENS = 0.8  LIGHTING-TYPE = REC-FLUOR-RV
* 376 *                       LIGHTING-KW = 11.08  LIGHTING-SCHEDULE = LIGHT_SCHD
* 377 *                       INF-METHOD = AIR-CHANGE  AIR-CHANGES/HR = 0.5
* 378 *                       INF-SCHEDULE = FULL_ON   ..
* 379 *
* 380 *              U-W       HEIGHT = 39.2  WIDTH = 120.0  CONS = FLOORCON ..
* 381 *
* 382 *               ROOF      HEIGHT = 39.2  WIDTH = 120.0  CONS = ROOFCON
* 383 *                         TILT = 0   ..
* 384 *
* 385 *               E-W       HEIGHT = 18.0  WIDTH = 120.0  CONS = WALL_CON
* 386 *                         AZIMUTH = 180   ..
* 387 *
* 388 *                 DOOR    HEIGHT = 7.5  WIDTH = 3.0  CONS = SDOORCON
* 389 *                         MULTIPLIER = 2.0   ..
* 390 *
* 391 *
* 392 * PAINT_BTHS =SPACE     AREA = 3742.0  VOLUME = 44688.0
* 393 *                       TEMPERATURE = (72.)  ZONE-TYPE = CONDITIONED
* 394 *                       AREA/PERSON = 100.0  INF-METHOD = NONE   ..
* 395 *
* 396 *              U-W       HEIGHT = 61.2  WIDTH = 61.2  CONS = FLOORCON ..
* 397 *
* 398 *               ROOF      HEIGHT = 61.2  WIDTH = 61.2  CONS = ROOFCON
* 399 *                         TILT = 0   ..
* 400 *
* 401 *
* 402 * END  ..
* 403 * COMPUTE LOADS  ..
* 404 *
* 405 * INPUT SYSTEMS  ..
```

COMPUTER SIMULATIONS
BUILDING 4530

RUN 3 - DDC

```
* 406 *
* 407 *
* 408 *                  $--------------------------------------$
* 409 *                  $ E Z - D O E  S Y S T E M S  I N P U T $
* 410 *                  $--------------------------------------$
* 411 *
* 412 *                     $ GENERAL PROJECT DATA
* 413 *
* 414 * TITLE  LINE-1 *     EMC      ENGINEERS      INC.     *
* 415 *        LINE-2 *EZDOE - ELITE SOFTWARE DEVELOPMENT INC*
* 416 *        LINE-3 *     DENVER,       CO       80227     *
* 417 *
* 418 *        LINE-4 *BUILDING 4530, SMA BUILDING             *
* 419 *        LINE-5 *MODEL WITH SET BACK AND DDC             * ..
* 420 * ABORT              ERRORS  ..
* 421 * DIAGNOSTIC         WARNINGS ..
* 422 * SYSTEMS-REPORT     SUMMARY=(SS-A,SS-C,SS-F,SS-K,SS-O)
* 423 *                    HOURLY-DATA-SAVE = YES  ..
* 424 *
* 425 *                     $ SCHEDULES
* 426 *
* 427 * FULL_ON_D  =DAY-SCHEDULE  (1,24) (1.) ..
* 428 * FULL_OFF_D =DAY-SCHEDULE  (1,24) (0.) ..
* 429 * HEAT_H_D   =DAY-SCHEDULE  (1,6) (55.)
* 430 *                           (7,17) (68.)
* 431 *                           (18,24) (55.) ..
* 432 * HEAT_L_D   =DAY-SCHEDULE  (1,6) (47.)
* 433 *                           (7,17) (60.)
* 434 *                           (18,24) (47.) ..
* 435 * HEAT_68_D  =DAY-SCHEDULE  (1,24) (68.) ..
* 436 * HEAT_60_D  =DAY-SCHEDULE  (1,24) (60.) ..
* 437 * HEAT_72_D  =DAY-SCHEDULE  (1,24) (72.) ..
* 438 * PAINT_MAUD =DAY-SCHEDULE  (1,7) (0.)
* 439 *                           (8,17) (1.)
* 440 *                           (18,24) (0.) ..
* 441 * FAN_WSB_D  =DAY-SCHEDULE  (1,5) (0.)
* 442 *                           (6,15) (1.)
* 443 *                           (16,24) (0.) ..
* 444 * HT60_WSB_D =DAY-SCHEDULE  (1,5) (47.)
* 445 *                           (6,15) (60.)
* 446 *                           (16,24) (47.) ..
* 447 * HEAT_50_D  =DAY-SCHEDULE  (1,24) (50.) ..
* 448 * HT68_WSB_D =DAY-SCHEDULE  (1,5) (50.)
* 449 *                           (6,15) (68.)
* 450 *                           (16,24) (50.) ..
* 451 * HV2_SB_D   =DAY-SCHEDULE  (1,5) (65.)
* 452 *                           (6,15) (68.)
* 453 *                           (16,24) (65.) ..
* 454 * HEAT_47_D  =DAY-SCHEDULE  (1,24) (47.) ..
* 455 *
* 456 * FULL_ON_W  =WEEK-SCHEDULE  (ALL) FULL_ON_D  ..
* 457 *
* 458 * FULL_OFF_W =WEEK-SCHEDULE  (ALL) FULL_OFF_D  ..
* 459 *
* 460 * HEAT_H_W   =WEEK-SCHEDULE  (ALL) HEAT_H_D  ..
* 461 *
* 462 * HEAT_L_W   =WEEK-SCHEDULE  (ALL) HEAT_L_D  ..
* 463 *
* 464 * HEAT_68_W  =WEEK-SCHEDULE  (ALL) HEAT_68_D  ..
* 465 *
* 466 * HEAT_60_W  =WEEK-SCHEDULE  (ALL) HEAT_60_D  ..
* 467 *
* 468 * HEAT_72_W  =WEEK-SCHEDULE  (ALL) HEAT_72_D  ..
* 469 *
* 470 * PAINT_MAUW =WEEK-SCHEDULE  (ALL) PAINT_MAUD  ..
* 471 *
* 472 * FAN_WSB_W  =WEEK-SCHEDULE  (ALL) FAN_WSB_D  ..
* 473 *
* 474 * HT60_WSB_W =WEEK-SCHEDULE  (ALL) HT60_WSB_D  ..
* 475 *
* 476 * HT68_WSB_W =WEEK-SCHEDULE  (ALL) HT68_WSB_D  ..
* 477 *
* 478 * HV2_HTSB_W =WEEK-SCHEDULE  (ALL) HV2_SB_D  ..
* 479 *
* 480 *
* 481 * $ FULL ON SCHEDULE
* 482 * FULL_ON    =SCHEDULE THRU DEC 31 FULL_ON_W  ..
* 483 *
* 484 * $ FULL OFF SCHEDULE
* 485 * FULL_OFF   =SCHEDULE THRU DEC 31 FULL_OFF_W  ..
* 486 *
* 487 * $ HIGH HEAT SCHEDULE
* 488 * HEAT_H_SCH =SCHEDULE THRU DEC 31 HEAT_H_W  ..
* 489 *
* 490 * $ HEAT LOW SCHEDULE
* 491 * HEAT_L_SCH =SCHEDULE THRU DEC 31 HEAT_L_W  ..
* 492 *
* 493 * $ HEAT 68 DEG
* 494 * HEAT_68_Y  =SCHEDULE THRU DEC 31 HEAT_68_W  ..
* 495 *
* 496 * $ HEAT 60 DEG
* 497 * HEAT_60_Y  =SCHEDULE THRU DEC 31 HEAT_60_W  ..
* 498 *
* 499 * $ HEAT 72 DEG
* 500 * HEAT_72_Y  =SCHEDULE THRU DEC 31 HEAT_72_W  ..
* 501 *
* 502 * $ PAINT BOOTH MAU SCHED
* 503 * PAINT_MAU  =SCHEDULE THRU DEC 31 PAINT_MAUW  ..
* 504 *
* 505 * $ FAN SCHD WITH SET BACK
```

```
* 506 * FAN_W_SB    =SCHEDULE THRU DEC 31 FAN_WSB_W  ..
* 507 *
* 508 * $ HEAT 60F W SET BACK
* 509 * HT60_W_SB  =SCHEDULE THRU DEC 31 HT60_WSB_W  ..
* 510 *
* 511 * HT68_W_SB  =SCHEDULE THRU DEC 31 HT68_WSB_W  ..
* 512 *
* 513 * $ HV2 SETBACK SCHED
* 514 * HV2_HT_SB  =SCHEDULE THRU DEC 31 HV2_HTSB_W  ..
* 515 *
* 516 *
* 517 *
* 518 *                        $ ZONE DESCRIPTION
* 519 *
* 520 * ADMIN&TOOL =ZONE     DESIGN-HEAT-T = 68.0  DESIGN-COOL-T = 75.0
* 521 *                      HEAT-TEMP-SCH = HT68_W_SB  ZONE-TYPE = CONDITIONED
* 522 *                      THERMOSTAT-TYPE = PROPORTIONAL
* 523 *                      BASEBOARD-CTRL = THERMOSTATIC
* 524 *                      BASEBOARD-RATING = -66440.  ASSIGNED-CFM = 23765.
* 525 *                      OUTSIDE-AIR-CFM = 4700.  SIZING-OPTION = FROM-LOADS
* 526 *                      RATED-CFM = 23765.0  MIN-CFM-RATIO = 1.0
* 527 *                      EXHAUST-CFM = 4700.0  HEATING-CAPACITY = -510100.0   ..
* 528 *
* 529 * VEH_MNT     =ZONE    DESIGN-HEAT-T = 60.0  DESIGN-COOL-T = 80.0
* 530 *                      HEAT-TEMP-SCH = HT60_W_SB  ZONE-TYPE = CONDITIONED
* 531 *                      THERMOSTAT-TYPE = PROPORTIONAL
* 532 *                      BASEBOARD-CTRL = THERMOSTATIC
* 533 *                      BASEBOARD-RATING = -750000.  ASSIGNED-CFM = 51300.
* 534 *                      OUTSIDE-AIR-CFM = 51300.  SIZING-OPTION = FROM-LOADS
* 535 *                      RATED-CFM = 51300.0  MIN-CFM-RATIO = 1.0
* 536 *                      EXHAUST-CFM = 51300.0  HEATING-CAPACITY = -3698000.0   ..
* 537 *
* 538 * PAINT&CUR. =ZONE     DESIGN-HEAT-T = 60.0  DESIGN-COOL-T = 80.0
* 539 *                      HEAT-TEMP-SCH = HT60_W_SB  ZONE-TYPE = CONDITIONED
* 540 *                      THERMOSTAT-TYPE = PROPORTIONAL
* 541 *                      BASEBOARD-CTRL = THERMOSTATIC
* 542 *                      BASEBOARD-RATING = -613000.  ASSIGNED-CFM = 35460.
* 543 *                      OUTSIDE-AIR-CFM = 35460.  SIZING-OPTION = FROM-LOADS
* 544 *                      RATED-CFM = 35460.0  MIN-CFM-RATIO = 1.0
* 545 *                      HEATING-CAPACITY = -2560000.0   ..
* 546 *
* 547 * VEH_BOD_SH =ZONE     DESIGN-HEAT-T = 60.0  DESIGN-COOL-T = 80.0
* 548 *                      HEAT-TEMP-SCH = HT60_W_SB  ZONE-TYPE = CONDITIONED
* 549 *                      THERMOSTAT-TYPE = PROPORTIONAL
* 550 *                      BASEBOARD-CTRL = THERMOSTATIC
* 551 *                      BASEBOARD-RATING = -385000.  ASSIGNED-CFM = 30360.
* 552 *                      OUTSIDE-AIR-CFM = 30360.  SIZING-OPTION = FROM-LOADS
* 553 *                      RATED-CFM = 30360.0  MIN-CFM-RATIO = 1.0
* 554 *                      HEATING-CAPACITY = -2196000.0   ..
* 555 *
* 556 * ADMIN&ELEC =ZONE     DESIGN-HEAT-T = 68.0  DESIGN-COOL-T = 75.0
* 557 *                      HEAT-TEMP-SCH = HV2_HT_SB  ZONE-TYPE = CONDITIONED
* 558 *                      THERMOSTAT-TYPE = PROPORTIONAL
* 559 *                      BASEBOARD-CTRL = THERMOSTATIC
* 560 *                      BASEBOARD-RATING = -17200.  ASSIGNED-CFM = 30170.
* 561 *                      OUTSIDE-AIR-CFM = 22290.  SIZING-OPTION = FROM-LOADS
* 562 *                      RATED-CFM = 30170.0  MIN-CFM-RATIO = 1.0
* 563 *                      EXHAUST-CFM = 22290.0  HEATING-CAPACITY = -1905300.0   ..
* 564 *
* 565 * CANVAS&ARM =ZONE     DESIGN-HEAT-T = 68.0  DESIGN-COOL-T = 80.0
* 566 *                      HEAT-TEMP-SCH = HT68_W_SB  ZONE-TYPE = CONDITIONED
* 567 *                      THERMOSTAT-TYPE = PROPORTIONAL
* 568 *                      BASEBOARD-CTRL = THERMOSTATIC
* 569 *                      BASEBOARD-RATING = -29400.  ASSIGNED-CFM = 24090.
* 570 *                      OUTSIDE-AIR-CFM = 7970.  SIZING-OPTION = FROM-LOADS
* 571 *                      RATED-CFM = 24090.0  MIN-CFM-RATIO = 1.0
* 572 *                      EXHAUST-CFM = 7970.0  HEATING-CAPACITY = -816700.0   ..
* 573 *
* 574 * PAINT&DYN  =ZONE     DESIGN-HEAT-T = 60.0  DESIGN-COOL-T = 80.0
* 575 *                      HEAT-TEMP-SCH = HT60_W_SB  ZONE-TYPE = CONDITIONED
* 576 *                      THERMOSTAT-TYPE = PROPORTIONAL
* 577 *                      BASEBOARD-CTRL = THERMOSTATIC  ASSIGNED-CFM = 5400.
* 578 *                      OUTSIDE-AIR-CFM = 5400.  SIZING-OPTION = FROM-LOADS
* 579 *                      RATED-CFM = 5400.0  MIN-CFM-RATIO = 1.0
* 580 *                      EXHAUST-CFM = 5400.0  HEATING-CAPACITY = -498400.0   ..
* 581 *
* 582 * SHOPSUPPLY =ZONE     DESIGN-HEAT-T = 60.0  DESIGN-COOL-T = 80.0
* 583 *                      HEAT-TEMP-SCH = HT60_W_SB  ZONE-TYPE = CONDITIONED
* 584 *                      THERMOSTAT-TYPE = PROPORTIONAL
* 585 *                      BASEBOARD-CTRL = THERMOSTATIC  ASSIGNED-CFM = 27700.
* 586 *                      SIZING-OPTION = FROM-LOADS  RATED-CFM = 27700.0
* 587 *                      MIN-CFM-RATIO = 1.0  HEATING-CAPACITY = -996800.0   ..
* 588 *
* 589 * BATTERIES  =ZONE     DESIGN-HEAT-T = 60.0  DESIGN-COOL-T = 80.0
* 590 *                      HEAT-TEMP-SCH = HT60_W_SB  ZONE-TYPE = CONDITIONED
* 591 *                      THERMOSTAT-TYPE = PROPORTIONAL
* 592 *                      BASEBOARD-CTRL = THERMOSTATIC  ASSIGNED-CFM = 21000.
* 593 *                      OUTSIDE-AIR-CFM = 21000.  SIZING-OPTION = FROM-LOADS
* 594 *                      RATED-CFM = 21000.0  MIN-CFM-RATIO = 1.0
* 595 *                      EXHAUST-CFM = 21000.0  HEATING-CAPACITY = -1645000.0   ..
* 596 *
* 597 * PAINT_BTHS =ZONE     DESIGN-HEAT-T = 72.0  DESIGN-COOL-T = 85.0
* 598 *                      HEAT-TEMP-SCH = HEAT_72_Y  ZONE-TYPE = CONDITIONED
* 599 *                      THERMOSTAT-TYPE = PROPORTIONAL
* 600 *                      BASEBOARD-CTRL = THERMOSTATIC  ASSIGNED-CFM = 49700.
* 601 *                      OUTSIDE-AIR-CFM = 49700.  SIZING-OPTION = FROM-LOADS
* 602 *                      RATED-CFM = 49700.0  MIN-CFM-RATIO = 1.0
* 603 *                      EXHAUST-CFM = 49700.0  HEATING-CAPACITY = -4255000.0   ..
* 604 *
* 605 *
* 606 *                        $ SYSTEM DESCRIPTION
* 607 *
* 608 * HV_1        =SYSTEM     SYSTEM-TYPE = HVSYS
* 609 *                         MAX-SUPPLY-T = 135.0  HEATING-SCHEDULE = FULL_ON
* 610 *                         MIN-HUMIDITY = 30.0  ECONO-LIMIT-T = 65.0
* 611 *                         ECONO-LOW-LIMIT = 55.0  HEAT-CONTROL = COLDEST
* 612 *                         SUPPLY-CFM = 23765.  RETURN-CFM = 19012.
* 613 *                         RATED-CFM = 23765.  MIN-OUTSIDE-AIR = 0.2
```

```
* 614 *                       FAN-SCHEDULE = FAN_W_SB  SUPPLY-DELTA-T = 2.4
* 615 *                       SUPPLY-KW = 0.00078
* 616 *                       MOTOR-PLACEMENT = OUTSIDE-AIRFLOW
* 617 *                       NIGHT-CYCLE-CTRL = CYCLE-ON-ANY  NIGHT-VENT-DT = 0.0
* 618 *                       HEATING-CAPACITY = -510100.  FURNACE-AUX = 0.
* 619 *                       ZONE-NAMES = (ADMIN&TOOL)  ..
* 620 *
* 621 * HV_2        =SYSTEM   SYSTEM-TYPE = HVSYS
* 622 *                       MAX-SUPPLY-T = 135.0  HEATING-SCHEDULE = FULL_ON
* 623 *                       MIN-HUMIDITY = 30.0  ECONO-LIMIT-T = 65.0
* 624 *                       ECONO-LOW-LIMIT = 55.0  HEAT-CONTROL = COLDEST
* 625 *                       SUPPLY-CFM = 30170.  RETURN-CFM = 7844.
* 626 *                       RATED-CFM = 30170.  MIN-OUTSIDE-AIR = 0.74
* 627 *                       FAN-SCHEDULE = FULL_ON  SUPPLY-DELTA-T = 2.4
* 628 *                       SUPPLY-KW = 0.00078
* 629 *                       MOTOR-PLACEMENT = OUTSIDE-AIRFLOW
* 630 *                       NIGHT-CYCLE-CTRL = CYCLE-ON-ANY  NIGHT-VENT-DT = 0.0
* 631 *                       HEATING-CAPACITY = -1905300.  FURNACE-AUX = 0.
* 632 *                       ZONE-NAMES = (ADMIN&ELEC)  ..
* 633 *
* 634 * HV_3        =SYSTEM   SYSTEM-TYPE = HVSYS
* 635 *                       MAX-SUPPLY-T = 135.0  HEATING-SCHEDULE = FULL_ON
* 636 *                       MIN-HUMIDITY = 30.0  ECONO-LIMIT-T = 65.0
* 637 *                       ECONO-LOW-LIMIT = 55.0  HEAT-CONTROL = COLDEST
* 638 *                       SUPPLY-CFM = 24090.  RETURN-CFM = 16120.
* 639 *                       RATED-CFM = 24090.  MIN-OUTSIDE-AIR = 0.33
* 640 *                       FAN-SCHEDULE = FAN_W_SB  SUPPLY-DELTA-T = 2.4
* 641 *                       SUPPLY-KW = 0.00078
* 642 *                       MOTOR-PLACEMENT = OUTSIDE-AIRFLOW
* 643 *                       NIGHT-CYCLE-CTRL = CYCLE-ON-ANY  NIGHT-VENT-DT = 0.0
* 644 *                       HEATING-CAPACITY = -855600.  FURNACE-AUX = 0.
* 645 *                       ZONE-NAMES = (CANVAS&ARM)  ..
* 646 *
* 647 * MAU_5       =SYSTEM   SYSTEM-TYPE = HVSYS
* 648 *                       MAX-SUPPLY-T = 135.0  HEATING-SCHEDULE = FULL_ON
* 649 *                       MIN-HUMIDITY = 30.0  ECONO-LIMIT-T = 65.0
* 650 *                       ECONO-LOW-LIMIT = 55.0  HEAT-CONTROL = COLDEST
* 651 *                       SUPPLY-CFM = 5400.  RATED-CFM = 5400.
* 652 *                       MIN-OUTSIDE-AIR = 1.0  FAN-SCHEDULE = FAN_W_SB
* 653 *                       SUPPLY-DELTA-T = 2.4  SUPPLY-KW = 0.00078
* 654 *                       MOTOR-PLACEMENT = OUTSIDE-AIRFLOW
* 655 *                       NIGHT-CYCLE-CTRL = CYCLE-ON-ANY  NIGHT-VENT-DT = 0.0
* 656 *                       HEATING-CAPACITY = -498400.  FURNACE-AUX = 0.
* 657 *                       ZONE-NAMES = (PAINT&DYN)  ..
* 658 *
* 659 * SUPPLY_UH   =SYSTEM   SYSTEM-TYPE = UHT
* 660 *                       MAX-SUPPLY-T = 135.0  HEATING-SCHEDULE = FULL_ON
* 661 *                       RATED-CFM = 27700.  SUPPLY-DELTA-T = 0.18
* 662 *                       SUPPLY-KW = 0.000059
* 663 *                       NIGHT-CYCLE-CTRL = CYCLE-ON-ANY
* 664 *                       HEATING-CAPACITY = -996800.  FURNACE-AUX = 0.
* 665 *                       ZONE-NAMES = (SHOPSUPPLY)  ..
* 666 *
* 667 * MAU_6&7     =SYSTEM   SYSTEM-TYPE = HVSYS
* 668 *                       MAX-SUPPLY-T = 135.0  HEATING-SCHEDULE = FULL_ON
* 669 *                       MIN-HUMIDITY = 30.0  ECONO-LIMIT-T = 65.0
* 670 *                       ECONO-LOW-LIMIT = 55.0  HEAT-CONTROL = COLDEST
* 671 *                       SUPPLY-CFM = 42220.  RATED-CFM = 42220.
* 672 *                       MIN-OUTSIDE-AIR = 1.0  FAN-SCHEDULE = FAN_W_SB
* 673 *                       SUPPLY-DELTA-T = 2.4  SUPPLY-KW = 0.00078
* 674 *                       MOTOR-PLACEMENT = OUTSIDE-AIRFLOW
* 675 *                       NIGHT-CYCLE-CTRL = CYCLE-ON-ANY  NIGHT-VENT-DT = 0.0
* 676 *                       HEATING-CAPACITY = -1645000.  FURNACE-AUX = 0.
* 677 *                       ZONE-NAMES = (BATTERIES)  ..
* 678 *
* 679 * MAU_1&2A    =SYSTEM   SYSTEM-TYPE = HVSYS
* 680 *                       MAX-SUPPLY-T = 135.0  HEATING-SCHEDULE = FULL_ON
* 681 *                       MIN-HUMIDITY = 30.0  ECONO-LIMIT-T = 65.0
* 682 *                       ECONO-LOW-LIMIT = 55.0  HEAT-CONTROL = COLDEST
* 683 *                       SUPPLY-CFM = 51300.  RETURN-CFM = 22982.
* 684 *                       RATED-CFM = 51300.  MIN-OUTSIDE-AIR = 0.55
* 685 *                       MAX-OA-FRACTION = 0.55  FAN-SCHEDULE = FAN_W_SB
* 686 *                       SUPPLY-DELTA-T = 2.4  SUPPLY-KW = 0.00078
* 687 *                       MOTOR-PLACEMENT = OUTSIDE-AIRFLOW
* 688 *                       NIGHT-CYCLE-CTRL = CYCLE-ON-ANY  NIGHT-VENT-DT = 0.0
* 689 *                       HEATING-CAPACITY = -3698000.  FURNACE-AUX = 0.
* 690 *                       ZONE-NAMES = (VEH_MNT)  ..
* 691 *
* 692 * MAU_1&2B    =SYSTEM   SYSTEM-TYPE = HVSYS
* 693 *                       MAX-SUPPLY-T = 135.0  HEATING-SCHEDULE = FULL_ON
* 694 *                       MIN-HUMIDITY = 30.0  ECONO-LIMIT-T = 65.0
* 695 *                       ECONO-LOW-LIMIT = 55.0  HEAT-CONTROL = COLDEST
* 696 *                       SUPPLY-CFM = 35460.  RETURN-CFM = 15886.
* 697 *                       RATED-CFM = 35460.  MIN-OUTSIDE-AIR = 0.55
* 698 *                       MAX-OA-FRACTION = 0.55  FAN-SCHEDULE = FAN_W_SB
* 699 *                       SUPPLY-DELTA-T = 2.4  SUPPLY-KW = 0.00078
* 700 *                       MOTOR-PLACEMENT = OUTSIDE-AIRFLOW
* 701 *                       NIGHT-CYCLE-CTRL = CYCLE-ON-ANY  NIGHT-VENT-DT = 0.0
* 702 *                       HEATING-CAPACITY = -2560000.  FURNACE-AUX = 0.
* 703 *                       ZONE-NAMES = (PAINT&CUR.)  ..
* 704 *
* 705 * MAU_3       =SYSTEM   SYSTEM-TYPE = HVSYS
* 706 *                       MAX-SUPPLY-T = 135.0  HEATING-SCHEDULE = FULL_ON
* 707 *                       MIN-HUMIDITY = 30.0  ECONO-LIMIT-T = 65.0
* 708 *                       ECONO-LOW-LIMIT = 55.0  HEAT-CONTROL = COLDEST
* 709 *                       SUPPLY-CFM = 30360.  RATED-CFM = 30360.
* 710 *                       MIN-OUTSIDE-AIR = 1.0  FAN-SCHEDULE = FAN_W_SB
* 711 *                       SUPPLY-DELTA-T = 2.4  SUPPLY-KW = 0.00078
* 712 *                       MOTOR-PLACEMENT = OUTSIDE-AIRFLOW
* 713 *                       NIGHT-CYCLE-CTRL = CYCLE-ON-ANY  NIGHT-VENT-DT = 0.0
* 714 *                       HEATING-CAPACITY = -2196000.  FURNACE-AUX = 0.
* 715 *                       ZONE-NAMES = (VEH_BOD_SH)  ..
* 716 *
* 717 * MAU_4_8_&9 =SYSTEM    SYSTEM-TYPE = HVSYS
* 718 *                       MAX-SUPPLY-T = 135.0  HEATING-SCHEDULE = PAINT_MAU
* 719 *                       MIN-HUMIDITY = 30.0  ECONO-LIMIT-T = 65.0
* 720 *                       ECONO-LOW-LIMIT = 55.0  HEAT-CONTROL = COLDEST
* 721 *                       SUPPLY-CFM = 49700.  RATED-CFM = 49700.
```

```
* 722 *                       MIN-OUTSIDE-AIR = 1.0  FAN-SCHEDULE = PAINT_MAU
* 723 *                       SUPPLY-DELTA-T = 2.4  SUPPLY-KW = 0.00078
* 724 *                       MOTOR-PLACEMENT = OUTSIDE-AIRFLOW
* 725 *                       NIGHT-CYCLE-CTRL = CYCLE-ON-ANY  NIGHT-VENT-DT = 0.0
* 726 *                       HEATING-CAPACITY = -4245000.  FURNACE-AUX = 0.
* 727 *                       ZONE-NAMES = (PAINT_BTHS)  ..
* 728 *
* 729 * END  ..
* 730 * COMPUTE SYSTEMS  ..
* 731 *
* 732 * INPUT PLANT  ..
```

```
* 733 *
* 734 *
* 735 *                  $-------------------------------------$
* 736 *                  $ E Z - D O E   P L A N T S  I N P U T $
* 737 *                  $-------------------------------------$
* 738 *
* 739 *                     $ GENERAL PROJECT DATA
* 740 *
* 741 * TITLE  LINE-1 *      EMC      ENGINEERS      INC.     *
* 742 *        LINE-2 *EZDOE - ELITE SOFTWARE DEVELOPMENT INC*
* 743 *        LINE-3 *     DENVER,       CO       80227     *
* 744 *
* 745 *        LINE-4 *BUILDING 4530, SMA BUILDING             *
* 746 *        LINE-5 *MODEL WITH SET BACK AND DDC             * ..
* 747 *
* 748 * ABORT              ERRORS  ..
* 749 * DIAGNOSTIC         WARNINGS ..
* 750 * PLANT-REPORT       SUMMARY=(PS-A,PS-B,BEPS)
* 751 *
* 752 *                    HOURLY-DATA-SAVE = YES  ..
* 753 *
* 754 *                     $ SCHEDULES
* 755 *
* 756 * FULL_ON_D  =DAY-SCHEDULE  (1,24) (1.) ..
* 757 *
* 758 *
* 759 * FULL_ON_W  =WEEK-SCHEDULE  (ALL) FULL_ON_D  ..
* 760 *
* 761 *
* 762 * $ FULL ON SCHEDULE
* 763 * FULL_ON_SC =SCHEDULE THRU DEC 31 FULL_ON_W  ..
* 764 *
* 765 *
* 766 *
* 767 *                     $ EQUIPMENT DESCRIPTION
* 768 *
* 769 * HTP_1      =PLANT-EQUIPMENT   TYPE = HTANK-STORAGE
* 770 *                       SIZE = 22.4  ..
* 771 *
* 772 * PLANT-PARAMETERS      CCIRC-HEAD = 63.2  HCIRC-HEAD = 100.0
* 773 *                       HCIRC-DESIGN-T-DROP = 20.0    ..
* 774 *
* 775 *
* 776 * ENERGY-RESOURCE       RESOURCE = ELECTRICITY  ..
* 777 * ENERGY-RESOURCE       RESOURCE = STEAM  ..
* 778 *
* 779 * ENERGY-STORAGE    HEAT-STORE-RATE = 22.4  HEAT-SUPPLY-RATE = 22.4
* 780 *                       HTANK-BASE-T = 195.0  HTANK-T-RANGE = 5.0
* 781 *                       HEAT-STORE-SCH = FULL_ON_SC    ..
* 782 *
* 783 *       HEAT-RECOVERY
* 784 *             SUPPLY-1 = (HTANK-STORAGE)
* 785 *             DEMAND-1 = (SPACE-HEAT,PROCESS-HEAT)  ..
* 786 *
* 787 *
* 788 *
* 789 * END  ..
* 790 * COMPUTE PLANT ..
* 791 * STOP ..
```

ENERGY TYPE IN SITE MBTU-	STEAM	ELECTRICITY	RECOVERED
CATEGORY OF USE			
SPACE HEAT	38,831.10	0.00	
SPACE COOL	0.00	0.00	
HVAC AUX	0.00	5,580.76	
DOM HOT WTR	207.01	0.00	
AUX SOLAR	0.00	0.00	
LIGHTS	0.00	893.58	
VERT TRANS	0.00	0.00	
MISC EQUIP	0.00	0.00	
TOTAL	39,038.11	6,474.34	

TOTAL SITE ENERGY 45512.52 MBTU 278.8 KBTU/SQFT-YR GROSS-AREA 278.8 KBTU/SQFT-YR NET-AREA
TOTAL SOURCE ENERGY 84506.33 MBTU 517.6 KBTU/SQFT-YR GROSS-AREA 517.6 KBTU/SQFT-YR NET-AREA

PERCENT OF HOURS ANY SYSTEM ZONE OUTSIDE OF THROTTLING RANGE = 10.1
PERCENT OF HOURS ANY PLANT LOAD NOT SATISFIED = 0.0

NOTE ELECTRICITY AND/OR FUEL USED TO GENERATE ELECTRICITY IS APPORTIONED BASED ON THE YEARLY DEMAND. ALL OTHER ENERGY TYPES ARE APPORTIONED HOURLY.

MO	UTILITY-	STEAM	ELECTRICITY
	TOTAL(MBTU)	7463.962	611.311
JAN	PEAK(KBTU)	24061.784	1241.555
	DY/HR	5/12	28/11
	TOTAL(MBTU)	5318.054	525.869
FEB	PEAK(KBTU)	21451.624	1241.384
	DY/HR	5/ 9	4/10
	TOTAL(MBTU)	5226.063	577.480
MAR	PEAK(KBTU)	21211.848	1240.388
	DY/HR	27/ 9	3/10
	TOTAL(MBTU)	2905.046	550.909
APR	PEAK(KBTU)	16069.480	1238.726
	DY/HR	3/ 9	1/10
	TOTAL(MBTU)	1832.945	544.061
MAY	PEAK(KBTU)	12657.776	1238.473
	DY/HR	16/ 8	3/10
	TOTAL(MBTU)	1047.609	471.796
JUN	PEAK(KBTU)	6578.166	1235.975
	DY/HR	8/ 6	30/14
	TOTAL(MBTU)	1144.529	480.750
JUL	PEAK(KBTU)	5190.638	1235.975
	DY/HR	25/ 6	29/14
	TOTAL(MBTU)	1111.930	487.941
AUG	PEAK(KBTU)	5645.498	1235.975
	DY/HR	22/ 6	31/14
	TOTAL(MBTU)	1424.578	519.071
SEP	PEAK(KBTU)	9449.142	1237.027
	DY/HR	24/ 6	23/10
	TOTAL(MBTU)	2281.590	567.474
OCT	PEAK(KBTU)	14462.744	1238.173
	DY/HR	28/ 9	26/11
	TOTAL(MBTU)	3668.782	553.680
NOV	PEAK(KBTU)	18068.296	1238.766
	DY/HR	27/ 9	22/10
	TOTAL(MBTU)	5612.904	584.184
DEC	PEAK(KBTU)	21238.344	1240.786
	DY/HR	3/ 9	30/10
	ONE YEAR	39037.989	6474.526
	USE/PEAK	24061.784	1241.555

COMPUTER SIMULATIONS
BUILDING 4530

RUN 4 - FORCED VENTILATION

```
*   3 *
*   4 *
*   5 *                 $-----------------------------------$
*   6 *                 $ E Z - D O E   L O A D S   I N P U T $
*   7 *                 $-----------------------------------$
*   8 *
*   9 *                    $ GENERAL PROJECT DATA
*  10 *
*  11 * TITLE  LINE-1 *     EMC      ENGINEERS      INC.     *
*  12 *       LINE-2 *EZDOE - ELITE SOFTWARE DEVELOPMENT INC*
*  13 *       LINE-3 *     DENVER,       CO       80227     *
*  14 *
*  15 *       LINE-4 *BUILDING 4530, SMA BUILDING             *
*  16 *       LINE-5 *SET BACK, DDC, AND FORCED VENTILATION   * ..
*  17 *
*  18 * ABORT              ERRORS  ..
*  19 * DIAGNOSTIC         WARNINGS ..
*  20 * LOADS-REPORT       SUMMARY=(LS-C,LS-D)
*  21 *                    HOURLY-DATA-SAVE = YES  ..
*  22 * BUILDING-LOCATION  HOLIDAY = NO
*  23 *                    X-REF = 0.0
*  24 *                    Y-REF = 0.0  ..
*  25 * RUN-PERIOD         JAN 1 1994 THRU DEC 31 1994  ..
*  26 *
*  27 *
*  28 *                     $ SCHEDULES
*  29 *
*  30 * FULL_ON_D  =DAY-SCHEDULE  (1,24) (1.) ..
*  31 *
*  32 * FULL_OFF_D =DAY-SCHEDULE  (1,24) (0.) ..
*  33 *
*  34 * LIGHT_ON_D =DAY-SCHEDULE  (1,5) (0.23)
*  35 *                           (6,7) (0.35)
*  36 *                           (8,9) (0.5,0.6)
*  37 *                           (10,11) (0.75)
*  38 *                           (12) (0.5)
*  39 *                           (13,14) (0.75)
*  40 *                           (15) (0.5)
*  41 *                           (16,18) (0.4)
*  42 *                           (19) (0.3)
*  43 *                           (20,24) (0.23) ..
*  44 *
*  45 * LT_ON_WKND =DAY-SCHEDULE  (1,6) (0.23)
*  46 *                           (7,19) (0.07)
*  47 *                           (20,24) (0.23) ..
*  48 *
*  49 * PEOPLE_D   =DAY-SCHEDULE  (1,5) (0.)
*  50 *                           (6,7) (0.1,0.5)
*  51 *                           (8,11) (1.)
*  52 *                           (12) (0.8)
*  53 *                           (13,16) (1.)
*  54 *                           (17,18) (0.5,0.1)
*  55 *                           (19,24) (0.) ..
*  56 *
*  57 * EQUIP_ON_D =DAY-SCHEDULE  (1,5) (0.05)
*  58 *                           (6,7) (0.1,0.2)
*  59 *                           (8,9) (0.3)
*  60 *                           (10,11) (0.4,0.7)
*  61 *                           (12,13) (0.4)
*  62 *                           (14,15) (0.8)
*  63 *                           (16,18) (0.7,0.3,0.1)
*  64 *                           (19,24) (0.05) ..
*  65 *
*  66 * SHOP_INF_D =DAY-SCHEDULE  (1,7) (0.1)
*  67 *                           (8) (1.)
*  68 *                           (9,16) (0.1)
*  69 *                           (17) (1.)
*  70 *                           (18,24) (0.1) ..
*  71 *
*  72 *
*  73 * FULL_ON_W  =WEEK-SCHEDULE  (ALL) FULL_ON_D  ..
*  74 *
*  75 * FULL_OFF_W =WEEK-SCHEDULE  (ALL) FULL_OFF_D  ..
*  76 *
*  77 * LIGHT_ON_W =WEEK-SCHEDULE  (WD)  LIGHT_ON_D
*  78 *                            (WEH) LT_ON_WKND  ..
*  79 *
*  80 * PEOPLE_W   =WEEK-SCHEDULE  (WD)  PEOPLE_D
*  81 *                            (WEH) FULL_OFF_D  ..
*  82 *
*  83 * EQUIP_W    =WEEK-SCHEDULE  (WD)  EQUIP_ON_D
*  84 *                            (WEH) FULL_OFF_D  ..
*  85 *
*  86 * SHOP_IFL_W =WEEK-SCHEDULE  (WD)  SHOP_INF_D
*  87 *                            (WEH) FULL_OFF_D  ..
*  88 *
*  89 *
*  90 * $ FULL ON SCHEDULE
*  91 * FULL_ON    =SCHEDULE THRU DEC 31 FULL_ON_W  ..
*  92 *
*  93 * $ FULL OFF SCHEDULE
*  94 * FULL_OFF   =SCHEDULE THRU DEC 31 FULL_OFF_W  ..
*  95 *
*  96 * $ LIGHTING SCHEDULE
*  97 * LIGHT_SCHD =SCHEDULE THRU DEC 31 LIGHT_ON_W  ..
*  98 *
*  99 * $ OCCUPANCY SCHEDULE
* 100 * PEOPLE_SCH =SCHEDULE THRU DEC 31 PEOPLE_W  ..
* 101 *
* 102 * $ EQUIPMENT SCHEDULE
```

```
* 103 * EQUIP_SCHD =SCHEDULE THRU DEC 31 EQUIP_W  ..
* 104 *
* 105 * $ SHOP INFILTRATION SCHED
* 106 * SHOP_INFIL =SCHEDULE THRU DEC 31 SHOP_IFL_W  ..
* 107 *
* 108 *
* 109 *
* 110 *                      $ CONSTRUCTION TYPES
* 111 *
* 112 *
* 113 *
* 114 * FLOORCON =CONSTRUCTION   U-VALUE =  0.010  ..
* 115 *
* 116 *  $ ROOF CONSTRUCITON
* 117 * ROOFCON  =CONSTRUCTION   U-VALUE =  0.030  ..
* 118 *
* 119 *  $ WALL CONSTRUCITON
* 120 * WALL_CON =CONSTRUCTION   U-VALUE =  0.010  ..
* 121 * LDOORCON =CONSTRUCTION   U-VALUE =  0.400  ..
* 122 * SDOORCON =CONSTRUCTION   U-VALUE =  1.000  ..
* 123 *
* 124 * G_TYPE1  =GLASS-TYPE     SHADING-COEF = 1.000
* 125 *                          PANES = 1
* 126 *                          GLASS-CONDUCTANCE =  1.130  ..
* 127 *
* 128 *
* 129 *
* 130 *
* 131 *                      $ SPACE DESCRIPTION
* 132 *
* 133 * ADMIN&TOOL =SPACE    AREA = 14228.0  VOLUME = 128052.0
* 134 *                      TEMPERATURE = (68.)  ZONE-TYPE = CONDITIONED
* 135 *                      PEOPLE-SCHEDULE = PEOPLE_SCH  NUMBER-OF-PEOPLE = 40.0
* 136 *                      PEOPLE-HEAT-GAIN = 450.0  PEOPLE-HG-LAT = 0.2
* 137 *                      PEOPLE-HG-SENS = 0.8  LIGHTING-TYPE = REC-FLUOR-RV
* 138 *                      LIGHTING-KW = 22.9  LIGHTING-SCHEDULE = LIGHT_SCHD
* 139 *                      SOURCE-SCHEDULE = FULL_ON  SOURCE-TYPE = HOT-WATER
* 140 *                      SOURCE-BTU/HR = 23630.0  SOURCE-SENSIBLE = 0.0
* 141 *                      INF-METHOD = AIR-CHANGE  AIR-CHANGES/HR = 0.5
* 142 *                      INF-SCHEDULE = FULL_ON   ..
* 143 *
* 144 *              U-W      HEIGHT = 110.0  WIDTH = 129.5  CONS = FLOORCON ..
* 145 *
* 146 *               ROOF     HEIGHT = 110.0  WIDTH = 129.5  CONS = ROOFCON
* 147 *                        TILT = 0   ..
* 148 *
* 149 *               E-W      HEIGHT = 9.0  WIDTH = 129.5  CONS = WALL_CON
* 150 *                        AZIMUTH = 0   ..
* 151 *
* 152 *                 WINDOW HEIGHT = 4.0  WIDTH = 2.0  G-T = G_TYPE1
* 153 *                        MULTIPLIER = 13.0   ..
* 154 *
* 155 *                 DOOR   HEIGHT = 7.5  WIDTH = 3.0  CONS = SDOORCON
* 156 *                        MULTIPLIER = 3.0   ..
* 157 *
* 158 *               E-W      HEIGHT = 9.0  WIDTH = 86.0  CONS = WALL_CON
* 159 *                        AZIMUTH = 0   ..
* 160 *
* 161 *                 WINDOW HEIGHT = 4.0  WIDTH = 4.0  G-T = G_TYPE1
* 162 *                        MULTIPLIER = 12.0   ..
* 163 *
* 164 *                 DOOR   HEIGHT = 7.5  WIDTH = 2.0  CONS = SDOORCON
* 165 *                        MULTIPLIER = 2.0   ..
* 166 *
* 167 *
* 168 * VEH_MNT     =SPACE    AREA = 33660.0  VOLUME = 1000000.0
* 169 *                       TEMPERATURE = (60.)  ZONE-TYPE = CONDITIONED
* 170 *                       PEOPLE-SCHEDULE = PEOPLE_SCH  NUMBER-OF-PEOPLE = 50.0
* 171 *                       PEOPLE-HEAT-GAIN = 450.0  PEOPLE-HG-LAT = 0.2
* 172 *                       PEOPLE-HG-SENS = 0.8  LIGHTING-TYPE = INCAND
* 173 *                       LIGHTING-KW = 14.15  LIGHTING-SCHEDULE = LIGHT_SCHD
* 174 *                       INF-METHOD = AIR-CHANGE  AIR-CHANGES/HR = 1.0
* 175 *                       INF-SCHEDULE = FULL_ON   ..
* 176 *
* 177 *              U-W      HEIGHT = 165.0  WIDTH = 204.0  CONS = FLOORCON ..
* 178 *
* 179 *               ROOF     HEIGHT = 165.0  WIDTH = 204.0  CONS = ROOFCON
* 180 *                        TILT = 0   ..
* 181 *
* 182 *               E-W      HEIGHT = 32.5  WIDTH = 204.0  CONS = WALL_CON
* 183 *                        AZIMUTH = 0   ..
* 184 *
* 185 *                 DOOR   HEIGHT = 14.0  WIDTH = 27.0  CONS = LDOORCON
* 186 *                        MULTIPLIER = 6.0   ..
* 187 *
* 188 *                 DOOR   HEIGHT = 7.5  WIDTH = 3.0  CONS = SDOORCON
* 189 *                        MULTIPLIER = 3.0   ..
* 190 *
* 191 *               E-W      HEIGHT = 32.5  WIDTH = 204.0  CONS = WALL_CON
* 192 *                        AZIMUTH = 180   ..
* 193 *
* 194 *                 DOOR   HEIGHT = 14.0  WIDTH = 27.0  CONS = LDOORCON
* 195 *                        MULTIPLIER = 6.0   ..
* 196 *
* 197 *                 DOOR   HEIGHT = 7.5  WIDTH = 3.0  CONS = SDOORCON
* 198 *                        MULTIPLIER = 3.0   ..
* 199 *
* 200 *
* 201 * PAINT&CUR. =SPACE    AREA = 29040.0  VOLUME = 943800.0
* 202 *                      TEMPERATURE = (60.)  ZONE-TYPE = CONDITIONED
* 203 *                      PEOPLE-SCHEDULE = PEOPLE_SCH  NUMBER-OF-PEOPLE = 40.0
* 204 *                      PEOPLE-HEAT-GAIN = 450.0  PEOPLE-HG-LAT = 0.2
* 205 *                      PEOPLE-HG-SENS = 0.8  LIGHTING-TYPE = INCAND
* 206 *                      LIGHTING-KW = 8.1  LIGHTING-SCHEDULE = LIGHT_SCHD
* 207 *                      INF-METHOD = AIR-CHANGE  AIR-CHANGES/HR = 0.96
* 208 *                      INF-SCHEDULE = FULL_ON   ..
* 209 *
* 210 *              U-W      HEIGHT = 165.0  WIDTH = 176.0  CONS = FLOORCON ..
```

```
* 211 *
* 212 *                ROOF      HEIGHT = 165.0  WIDTH = 176.0  CONS = ROOFCON
* 213 *                          TILT = 0    ..
* 214 *
* 215 *                E-W       HEIGHT = 32.5  WIDTH = 176.0  CONS = WALL_CON
* 216 *                          AZIMUTH = 0    ..
* 217 *
* 218 *                  DOOR    HEIGHT = 14.0  WIDTH = 27.0  CONS = LDOORCON
* 219 *                          MULTIPLIER = 5.0    ..
* 220 *
* 221 *                  DOOR    HEIGHT = 7.5  WIDTH = 3.0  CONS = SDOORCON
* 222 *                          MULTIPLIER = 2.0    ..
* 223 *
* 224 *                E-W       HEIGHT = 32.5  WIDTH = 176.0  CONS = WALL_CON
* 225 *                          AZIMUTH = 180    ..
* 226 *
* 227 *                  DOOR    HEIGHT = 14.0  WIDTH = 27.0  CONS = LDOORCON
* 228 *                          MULTIPLIER = 5.0    ..
* 229 *
* 230 *                  DOOR    HEIGHT = 7.5  WIDTH = 3.0  CONS = SDOORCON
* 231 *                          MULTIPLIER = 2.0    ..
* 232 *
* 233 *                E-W       HEIGHT = 32.5  WIDTH = 165.0  CONS = WALL_CON
* 234 *                          AZIMUTH = 270    ..
* 235 *
* 236 *                  DOOR    HEIGHT = 7.5  WIDTH = 3.0  CONS = SDOORCON
* 237 *                          MULTIPLIER = 3.0    ..
* 238 *
* 239 *
* 240 * VEH_BOD_SH =SPACE     AREA = 14628.0  VOLUME = 475410.0
* 241 *                       TEMPERATURE = (60.)  ZONE-TYPE = CONDITIONED
* 242 *                       PEOPLE-SCHEDULE = PEOPLE_SCH  NUMBER-OF-PEOPLE = 40.0
* 243 *                       PEOPLE-HEAT-GAIN = 450.0  PEOPLE-HG-LAT = 0.2
* 244 *                       PEOPLE-HG-SENS = 0.8  LIGHTING-TYPE = INCAND
* 245 *                       LIGHTING-KW = 6.8  LIGHTING-SCHEDULE = LIGHT_SCHD
* 246 *                       INF-METHOD = AIR-CHANGE  AIR-CHANGES/HR = 0.43
* 247 *                       INF-SCHEDULE = FULL_ON    ..
* 248 *
* 249 *               U-W      HEIGHT = 69.0  WIDTH = 212.0  CONS = FLOORCON ..
* 250 *
* 251 *                ROOF      HEIGHT = 69.0  WIDTH = 212.0  CONS = ROOFCON
* 252 *                          TILT = 0    ..
* 253 *
* 254 *                E-W       HEIGHT = 32.5  WIDTH = 212.0  CONS = WALL_CON
* 255 *                          AZIMUTH = 0    ..
* 256 *
* 257 *                  DOOR    HEIGHT = 14.0  WIDTH = 27.0  CONS = LDOORCON
* 258 *                          MULTIPLIER = 4.0    ..
* 259 *
* 260 *                  DOOR    HEIGHT = 7.5  WIDTH = 3.0  CONS = SDOORCON
* 261 *                          MULTIPLIER = 2.0    ..
* 262 *
* 263 *                E-W       HEIGHT = 32.5  WIDTH = 212.0  CONS = WALL_CON
* 264 *                          AZIMUTH = 180    ..
* 265 *
* 266 *                  DOOR    HEIGHT = 14.0  WIDTH = 27.0  CONS = LDOORCON
* 267 *                          MULTIPLIER = 5.0    ..
* 268 *
* 269 *                  DOOR    HEIGHT = 7.5  WIDTH = 3.0  CONS = SDOORCON
* 270 *                          MULTIPLIER = 3.0    ..
* 271 *
* 272 *                E-W       HEIGHT = 32.5  WIDTH = 69.0  CONS = WALL_CON
* 273 *                          AZIMUTH = 270    ..
* 274 *
* 275 *                  DOOR    HEIGHT = 7.5  WIDTH = 3.0  CONS = SDOORCON
* 276 *                          MULTIPLIER = 2.0    ..
* 277 *
* 278 *
* 279 * ADMIN&ELEC =SPACE     AREA = 10085.0  VOLUME = 90765.0
* 280 *                       TEMPERATURE = (68.)  ZONE-TYPE = CONDITIONED
* 281 *                       PEOPLE-SCHEDULE = PEOPLE_SCH  NUMBER-OF-PEOPLE = 40.0
* 282 *                       PEOPLE-HEAT-GAIN = 450.0  PEOPLE-HG-LAT = 0.2
* 283 *                       PEOPLE-HG-SENS = 0.8  LIGHTING-TYPE = REC-FLUOR-RV
* 284 *                       LIGHTING-KW = 9.79  LIGHTING-SCHEDULE = LIGHT_SCHD
* 285 *                       INF-METHOD = AIR-CHANGE  AIR-CHANGES/HR = 0.5
* 286 *                       INF-SCHEDULE = FULL_ON    ..
* 287 *
* 288 *               U-W      HEIGHT = 83.0  WIDTH = 129.5  CONS = FLOORCON ..
* 289 *
* 290 *                ROOF      HEIGHT = 83.0  WIDTH = 129.5  CONS = ROOFCON
* 291 *                          TILT = 0    ..
* 292 *
* 293 *                E-W       HEIGHT = 9.0  WIDTH = 125.0  CONS = WALL_CON
* 294 *                          AZIMUTH = 270    ..
* 295 *
* 296 *                  DOOR    HEIGHT = 7.5  WIDTH = 3.0  CONS = SDOORCON
* 297 *                          MULTIPLIER = 3.0    ..
* 298 *
* 299 *                  DOOR    HEIGHT = 14.0  WIDTH = 14.5  CONS = LDOORCON ..
* 300 *
* 301 *                  DOOR    HEIGHT = 9.0  WIDTH = 14.5  CONS = LDOORCON
* 302 *                          MULTIPLIER = 3.0    ..
* 303 *
* 304 *
* 305 * CANVAS&ARM =SPACE     AREA = 21746.0  VOLUME = 130020.0
* 306 *                       TEMPERATURE = (60.)  ZONE-TYPE = CONDITIONED
* 307 *                       PEOPLE-SCHEDULE = PEOPLE_SCH  NUMBER-OF-PEOPLE = 40.0
* 308 *                       PEOPLE-HEAT-GAIN = 450.0  PEOPLE-HG-LAT = 0.2
* 309 *                       PEOPLE-HG-SENS = 0.8  LIGHTING-TYPE = REC-FLUOR-RV
* 310 *                       LIGHTING-KW = 13.67  LIGHTING-SCHEDULE = LIGHT_SCHD
* 311 *                       INF-METHOD = AIR-CHANGE  AIR-CHANGES/HR = 0.5
* 312 *                       INF-SCHEDULE = FULL_ON    ..
* 313 *
* 314 *               U-W      HEIGHT = 84.0  WIDTH = 259.0  CONS = FLOORCON ..
* 315 *
* 316 *                ROOF      HEIGHT = 84.0  WIDTH = 259.0  CONS = ROOFCON
* 317 *                          TILT = 0    ..
* 318 *
```

```
* 319 *                E-W       HEIGHT = 9.0  WIDTH = 129.5  CONS = WALL_CON
* 320 *                          AZIMUTH = 180   ..
* 321 *
* 322 *                  DOOR    HEIGHT = 7.5  WIDTH = 3.0  CONS = SDOORCON
* 323 *                          MULTIPLIER = 3.0   ..
* 324 *
* 325 *                E-W       HEIGHT = 25.0  WIDTH = 120.0  CONS = WALL_CON
* 326 *                          AZIMUTH = 90   ..
* 327 *
* 328 *                  DOOR    HEIGHT = 7.5  WIDTH = 3.0  CONS = SDOORCON
* 329 *                          MULTIPLIER = 3.0   ..
* 330 *
* 331 *
* 332 * PAINT&DYN  =SPACE     AREA = 1775.0  VOLUME = 15975.0
* 333 *                       TEMPERATURE = (60.)  ZONE-TYPE = CONDITIONED
* 334 *                       PEOPLE-SCHEDULE = PEOPLE_SCH  NUMBER-OF-PEOPLE = 15.0
* 335 *                       PEOPLE-HEAT-GAIN = 450.0  PEOPLE-HG-LAT = 0.2
* 336 *                       PEOPLE-HG-SENS = 0.8  LIGHTING-TYPE = REC-FLUOR-RV
* 337 *                       LIGHTING-KW = 0.45  LIGHTING-SCHEDULE = LIGHT_SCHD
* 338 *                       INF-METHOD = AIR-CHANGE  AIR-CHANGES/HR = 0.5
* 339 *                       INF-SCHEDULE = FULL_ON   ..
* 340 *
* 341 *              U-W       HEIGHT = 22.0  WIDTH = 129.5  CONS = FLOORCON ..
* 342 *
* 343 *               ROOF      HEIGHT = 22.0  WIDTH = 129.5  CONS = ROOFCON
* 344 *                         TILT = 0   ..
* 345 *
* 346 *
* 347 * SHOPSUPPLY =SPACE     AREA = 29641.0  VOLUME = 741025.0
* 348 *                       TEMPERATURE = (60.)  ZONE-TYPE = CONDITIONED
* 349 *                       PEOPLE-SCHEDULE = PEOPLE_SCH  NUMBER-OF-PEOPLE = 40.0
* 350 *                       PEOPLE-HEAT-GAIN = 450.0  PEOPLE-HG-LAT = 0.2
* 351 *                       PEOPLE-HG-SENS = 0.8  LIGHTING-TYPE = REC-FLUOR-RV
* 352 *                       LIGHTING-KW = 4.7  LIGHTING-SCHEDULE = LIGHT_SCHD
* 353 *                       INF-METHOD = AIR-CHANGE  AIR-CHANGES/HR = 0.5
* 354 *                       INF-SCHEDULE = FULL_ON   ..
* 355 *
* 356 *              U-W       HEIGHT = 228.9  WIDTH = 129.5  CONS = FLOORCON ..
* 357 *
* 358 *               ROOF      HEIGHT = 228.5  WIDTH = 129.5  CONS = ROOFCON
* 359 *                         TILT = 0   ..
* 360 *
* 361 *               E-W       HEIGHT = 25.0  WIDTH = 211.0  CONS = WALL_CON
* 362 *                         AZIMUTH = 0   ..
* 363 *
* 364 *                 DOOR    HEIGHT = 7.5  WIDTH = 3.0  CONS = SDOORCON
* 365 *                         MULTIPLIER = 2.0   ..
* 366 *
* 367 *                 DOOR    HEIGHT = 8.0  WIDTH = 8.0  CONS = LDOORCON
* 368 *                         MULTIPLIER = 2.0   ..
* 369 *
* 370 *
* 371 * BATTERIES  =SPACE     AREA = 4705.0  VOLUME = 84690.0
* 372 *                       TEMPERATURE = (60.)  ZONE-TYPE = CONDITIONED
* 373 *                       PEOPLE-SCHEDULE = PEOPLE_SCH  NUMBER-OF-PEOPLE = 40.0
* 374 *                       PEOPLE-HEAT-GAIN = 450.0  PEOPLE-HG-LAT = 0.2
* 375 *                       PEOPLE-HG-SENS = 0.8  LIGHTING-TYPE = REC-FLUOR-RV
* 376 *                       LIGHTING-KW = 11.08  LIGHTING-SCHEDULE = LIGHT_SCHD
* 377 *                       INF-METHOD = AIR-CHANGE  AIR-CHANGES/HR = 0.5
* 378 *                       INF-SCHEDULE = FULL_ON   ..
* 379 *
* 380 *              U-W       HEIGHT = 39.2  WIDTH = 120.0  CONS = FLOORCON ..
* 381 *
* 382 *               ROOF      HEIGHT = 39.2  WIDTH = 120.0  CONS = ROOFCON
* 383 *                         TILT = 0   ..
* 384 *
* 385 *               E-W       HEIGHT = 18.0  WIDTH = 120.0  CONS = WALL_CON
* 386 *                         AZIMUTH = 180   ..
* 387 *
* 388 *                 DOOR    HEIGHT = 7.5  WIDTH = 3.0  CONS = SDOORCON
* 389 *                         MULTIPLIER = 2.0   ..
* 390 *
* 391 *
* 392 * PAINT_BTHS =SPACE     AREA = 3742.0  VOLUME = 44688.0
* 393 *                       TEMPERATURE = (72.)  ZONE-TYPE = CONDITIONED
* 394 *                       AREA/PERSON = 100.0  INF-METHOD = NONE   ..
* 395 *
* 396 *              U-W       HEIGHT = 61.2  WIDTH = 61.2  CONS = FLOORCON ..
* 397 *
* 398 *               ROOF      HEIGHT = 61.2  WIDTH = 61.2  CONS = ROOFCON
* 399 *                         TILT = 0   ..
* 400 *
* 401 *
* 402 * END  ..
* 403 * COMPUTE LOADS  ..
* 404 *
* 405 * INPUT SYSTEMS  ..
```

S D L P R O C E S S O R I N P U T D A T A

3/18/1995 17: 5:42 SDL RUN 1

```
*
*
*                  $-------------------------------------$
*                  $ E Z - D O E   S Y S T E M S  I N P U T $
*                  $-------------------------------------$
*
*                     $ GENERAL PROJECT DATA
*
* TITLE  LINE-1 *     EMC      ENGINEERS      INC.     *
*        LINE-2 *EZDOE - ELITE SOFTWARE DEVELOPMENT INC*
*        LINE-3 *     DENVER,       CO       80227     *
*
*        LINE-4 *BUILDING 4530, SMA BUILDING             *
*        LINE-5 *SET BACK, DDC, AND FORCED VENTILATION   * ..
* ABORT              ERRORS  ..
* DIAGNOSTIC         WARNINGS ..
* SYSTEMS-REPORT     SUMMARY=(SS-A,SS-C,SS-F,SS-K,SS-O)
*                    HOURLY-DATA-SAVE = YES  ..
*
*                     $ SCHEDULES
*
* FULL_ON_D  =DAY-SCHEDULE  (1,24) (1.) ..
* FULL_OFF_D =DAY-SCHEDULE  (1,24) (0.) ..
* HEAT_H_D   =DAY-SCHEDULE  (1,6) (55.)
*                           (7,17) (68.)
*                           (18,24) (55.) ..
* HEAT_L_D   =DAY-SCHEDULE  (1,6) (47.)
*                           (7,17) (60.)
*                           (18,24) (47.) ..
* HEAT_68_D  =DAY-SCHEDULE  (1,24) (68.) ..
* HEAT_60_D  =DAY-SCHEDULE  (1,24) (60.) ..
* HEAT_72_D  =DAY-SCHEDULE  (1,24) (72.) ..
* PAINT_MAUD =DAY-SCHEDULE  (1,7) (0.)
*                           (8,17) (1.)
*                           (18,24) (0.) ..
* FAN_WSB_D  =DAY-SCHEDULE  (1,5) (0.)
*                           (6,15) (1.)
*                           (16,24) (0.) ..
* HT60_WSB_D =DAY-SCHEDULE  (1,5) (47.)
*                           (6,15) (60.)
*                           (16,24) (47.) ..
* HEAT_50_D  =DAY-SCHEDULE  (1,24) (50.) ..
* HT68_WSB_D =DAY-SCHEDULE  (1,5) (50.)
*                           (6,15) (68.)
*                           (16,24) (50.) ..
* HV2_SB_D   =DAY-SCHEDULE  (1,5) (65.)
*                           (6,15) (68.)
*                           (16,24) (65.) ..
* HEAT_47_D  =DAY-SCHEDULE  (1,24) (47.) ..
* MOA.2_D    =DAY-SCHEDULE  (1,6) (0.)
*                           (7,15) (0.2)
*                           (16,24) (0.) ..
* MOA.33_D   =DAY-SCHEDULE  (1,6) (0.)
*                           (7,15) (0.33)
*                           (16,24) (0.) ..
*
* FULL_ON_W  =WEEK-SCHEDULE  (ALL) FULL_ON_D  ..
*
* FULL_OFF_W =WEEK-SCHEDULE  (ALL) FULL_OFF_D  ..
*
* HEAT_H_W   =WEEK-SCHEDULE  (ALL) HEAT_H_D  ..
*
* HEAT_L_W   =WEEK-SCHEDULE  (ALL) HEAT_L_D  ..
*
* HEAT_68_W  =WEEK-SCHEDULE  (ALL) HEAT_68_D  ..
*
* HEAT_60_W  =WEEK-SCHEDULE  (ALL) HEAT_60_D  ..
*
* HEAT_72_W  =WEEK-SCHEDULE  (ALL) HEAT_72_D  ..
*
* PAINT_MAUW =WEEK-SCHEDULE  (WD)  PAINT_MAUD
*                            (WEH) FULL_OFF_D  ..
*
* FAN_WSB_W  =WEEK-SCHEDULE  (WD)  FAN_WSB_D
*                            (SAT) FULL_OFF_D
*                            (SUN) FULL_OFF_D
*                            (HOL) FAN_WSB_D ..
*
* HT60_WSB_W =WEEK-SCHEDULE  (WD)  HT60_WSB_D
*                            (SAT) HEAT_47_D
*                            (SUN) HEAT_47_D
*                            (HOL) HT60_WSB_D ..
*
* HT68_WSB_W =WEEK-SCHEDULE  (WD)  HT68_WSB_D
*                            (SAT) HEAT_50_D
*                            (SUN) HEAT_50_D
*                            (HOL) HT68_WSB_D ..
*
* HV2_HTSB_W =WEEK-SCHEDULE  (ALL) HV2_SB_D  ..
*
* MOA.2_W    =WEEK-SCHEDULE  (WD)  MOA.2_D
*                            (SAT) FULL_OFF_D
*                            (SUN) FULL_OFF_D
*                            (HOL) MOA.2_D ..
*
* MOA.33_W   =WEEK-SCHEDULE  (WD)  MOA.33_D
*                            (SAT) FULL_OFF_D
*                            (SUN) FULL_OFF_D
*                            (HOL) MOA.33_D ..
*
```

```
* 506 *
* 507 * $ FULL ON SCHEDULE
* 508 * FULL_ON     =SCHEDULE THRU DEC 31 FULL_ON_W  ..
* 509 *
* 510 * $ FULL OFF SCHEDULE
* 511 * FULL_OFF    =SCHEDULE THRU DEC 31 FULL_OFF_W  ..
* 512 *
* 513 * $ HIGH HEAT SCHEDULE
* 514 * HEAT_H_SCH =SCHEDULE THRU DEC 31 HEAT_H_W  ..
* 515 *
* 516 * $ HEAT LOW SCHEDULE
* 517 * HEAT_L_SCH =SCHEDULE THRU DEC 31 HEAT_L_W  ..
* 518 *
* 519 * $ HEAT 68 DEG
* 520 * HEAT_68_Y  =SCHEDULE THRU DEC 31 HEAT_68_W  ..
* 521 *
* 522 * $ HEAT 60 DEG
* 523 * HEAT_60_Y  =SCHEDULE THRU DEC 31 HEAT_60_W  ..
* 524 *
* 525 * $ HEAT 72 DEG
* 526 * HEAT_72_Y  =SCHEDULE THRU DEC 31 HEAT_72_W  ..
* 527 *
* 528 * $ PAINT BOOTH MAU SCHED
* 529 * PAINT_MAU  =SCHEDULE THRU DEC 31 PAINT_MAUW  ..
* 530 *
* 531 * $ FAN SCHD WITH SET BACK
* 532 * FAN_W_SB   =SCHEDULE THRU DEC 31 FAN_WSB_W  ..
* 533 *
* 534 * $ HEAT 60F W SET BACK
* 535 * HT60_W_SB  =SCHEDULE THRU DEC 31 HT60_WSB_W  ..
* 536 *
* 537 * HT68_W_SB  =SCHEDULE THRU DEC 31 HT68_WSB_W  ..
* 538 *
* 539 * $ HV2 SETBACK SCHED
* 540 * HV2_HT_SB  =SCHEDULE THRU DEC 31 HV2_HTSB_W  ..
* 541 *
* 542 * MOA_.2_FV  =SCHEDULE THRU DEC 31 MOA.2_W  ..
* 543 *
* 544 * MOA_.33_FV =SCHEDULE THRU DEC 31 MOA.33_W  ..
* 545 *
* 546 *
* 547 *
* 548 *                        $ ZONE DESCRIPTION
* 549 *
* 550 * ADMIN&TOOL =ZONE     DESIGN-HEAT-T = 68.0  DESIGN-COOL-T = 75.0
* 551 *                      HEAT-TEMP-SCH = HT68_W_SB  ZONE-TYPE = CONDITIONED
* 552 *                      THERMOSTAT-TYPE = PROPORTIONAL
* 553 *                      BASEBOARD-CTRL = THERMOSTATIC
* 554 *                      BASEBOARD-RATING = -66440.  ASSIGNED-CFM = 23765.
* 555 *                      OUTSIDE-AIR-CFM = 4700.  SIZING-OPTION = FROM-LOADS
* 556 *                      RATED-CFM = 23765.0  MIN-CFM-RATIO = 1.0
* 557 *                      EXHAUST-CFM = 4700.0  HEATING-CAPACITY = -510100.0   ..
* 558 *
* 559 * VEH_MNT     =ZONE     DESIGN-HEAT-T = 60.0  DESIGN-COOL-T = 80.0
* 560 *                      HEAT-TEMP-SCH = HT60_W_SB  ZONE-TYPE = CONDITIONED
* 561 *                      THERMOSTAT-TYPE = PROPORTIONAL
* 562 *                      BASEBOARD-CTRL = THERMOSTATIC
* 563 *                      BASEBOARD-RATING = -750000.  ASSIGNED-CFM = 51300.
* 564 *                      OUTSIDE-AIR-CFM = 51300.  SIZING-OPTION = FROM-LOADS
* 565 *                      RATED-CFM = 51300.0  MIN-CFM-RATIO = 1.0
* 566 *                      EXHAUST-CFM = 51300.0  HEATING-CAPACITY = -3698000.0   ..
* 567 *
* 568 * PAINT&CUR. =ZONE     DESIGN-HEAT-T = 60.0  DESIGN-COOL-T = 80.0
* 569 *                      HEAT-TEMP-SCH = HT60_W_SB  ZONE-TYPE = CONDITIONED
* 570 *                      THERMOSTAT-TYPE = PROPORTIONAL
* 571 *                      BASEBOARD-CTRL = THERMOSTATIC
* 572 *                      BASEBOARD-RATING = -613000.  ASSIGNED-CFM = 35460.
* 573 *                      OUTSIDE-AIR-CFM = 35460.  SIZING-OPTION = FROM-LOADS
* 574 *                      RATED-CFM = 35460.0  MIN-CFM-RATIO = 1.0
* 575 *                      HEATING-CAPACITY = -2560000.0   ..
* 576 *
* 577 * VEH_BOD_SH =ZONE     DESIGN-HEAT-T = 60.0  DESIGN-COOL-T = 80.0
* 578 *                      HEAT-TEMP-SCH = HT60_W_SB  ZONE-TYPE = CONDITIONED
* 579 *                      THERMOSTAT-TYPE = PROPORTIONAL
* 580 *                      BASEBOARD-CTRL = THERMOSTATIC
* 581 *                      BASEBOARD-RATING = -385000.  ASSIGNED-CFM = 30360.
* 582 *                      OUTSIDE-AIR-CFM = 30360.  SIZING-OPTION = FROM-LOADS
* 583 *                      RATED-CFM = 30360.0  MIN-CFM-RATIO = 1.0
* 584 *                      HEATING-CAPACITY = -2196000.0   ..
* 585 *
* 586 * ADMIN&ELEC =ZONE     DESIGN-HEAT-T = 68.0  DESIGN-COOL-T = 75.0
* 587 *                      HEAT-TEMP-SCH = HV2_HT_SB  ZONE-TYPE = CONDITIONED
* 588 *                      THERMOSTAT-TYPE = PROPORTIONAL
* 589 *                      BASEBOARD-CTRL = THERMOSTATIC
* 590 *                      BASEBOARD-RATING = -17200.  ASSIGNED-CFM = 30170.
* 591 *                      OUTSIDE-AIR-CFM = 22290.  SIZING-OPTION = FROM-LOADS
* 592 *                      RATED-CFM = 30170.0  MIN-CFM-RATIO = 1.0
* 593 *                      EXHAUST-CFM = 22290.0  HEATING-CAPACITY = -1905300.0   ..
* 594 *
* 595 * CANVAS&ARM =ZONE     DESIGN-HEAT-T = 68.0  DESIGN-COOL-T = 80.0
* 596 *                      HEAT-TEMP-SCH = HT68_W_SB  ZONE-TYPE = CONDITIONED
* 597 *                      THERMOSTAT-TYPE = PROPORTIONAL
* 598 *                      BASEBOARD-CTRL = THERMOSTATIC
* 599 *                      BASEBOARD-RATING = -29400.  ASSIGNED-CFM = 24090.
* 600 *                      OUTSIDE-AIR-CFM = 7970.  SIZING-OPTION = FROM-LOADS
* 601 *                      RATED-CFM = 24090.0  MIN-CFM-RATIO = 1.0
* 602 *                      EXHAUST-CFM = 7970.0  HEATING-CAPACITY = -816700.0   ..
* 603 *
* 604 * PAINT&DYN  =ZONE     DESIGN-HEAT-T = 60.0  DESIGN-COOL-T = 80.0
* 605 *                      HEAT-TEMP-SCH = HT60_W_SB  ZONE-TYPE = CONDITIONED
* 606 *                      THERMOSTAT-TYPE = PROPORTIONAL
* 607 *                      BASEBOARD-CTRL = THERMOSTATIC  ASSIGNED-CFM = 5400.
* 608 *                      OUTSIDE-AIR-CFM = 5400.  SIZING-OPTION = FROM-LOADS
* 609 *                      RATED-CFM = 5400.0  MIN-CFM-RATIO = 1.0
* 610 *                      EXHAUST-CFM = 5400.0  HEATING-CAPACITY = -498400.0   ..
* 611 *
* 612 * SHOPSUPPLY =ZONE     DESIGN-HEAT-T = 60.0  DESIGN-COOL-T = 80.0
* 613 *                      HEAT-TEMP-SCH = HT60_W_SB  ZONE-TYPE = CONDITIONED
```

```
* 614 *                      THERMOSTAT-TYPE = PROPORTIONAL
* 615 *                      BASEBOARD-CTRL = THERMOSTATIC  ASSIGNED-CFM = 27700.
* 616 *                      SIZING-OPTION = FROM-LOADS  RATED-CFM = 27700.0
* 617 *                      MIN-CFM-RATIO = 1.0  HEATING-CAPACITY = -996800.0   ..
* 618 *
* 619 * BATTERIES  =ZONE     DESIGN-HEAT-T = 60.0  DESIGN-COOL-T = 80.0
* 620 *                      HEAT-TEMP-SCH = HT60_W_SB  ZONE-TYPE = CONDITIONED
* 621 *                      THERMOSTAT-TYPE = PROPORTIONAL
* 622 *                      BASEBOARD-CTRL = THERMOSTATIC  ASSIGNED-CFM = 21000.
* 623 *                      OUTSIDE-AIR-CFM = 21000.  SIZING-OPTION = FROM-LOADS
* 624 *                      RATED-CFM = 21000.0  MIN-CFM-RATIO = 1.0
* 625 *                      EXHAUST-CFM = 21000.0  HEATING-CAPACITY = -1645000.0   ..
* 626 *
* 627 * PAINT_BTHS =ZONE     DESIGN-HEAT-T = 72.0  DESIGN-COOL-T = 85.0
* 628 *                      HEAT-TEMP-SCH = HEAT_72_Y  ZONE-TYPE = CONDITIONED
* 629 *                      THERMOSTAT-TYPE = PROPORTIONAL
* 630 *                      BASEBOARD-CTRL = THERMOSTATIC  ASSIGNED-CFM = 49700.
* 631 *                      OUTSIDE-AIR-CFM = 49700.  SIZING-OPTION = FROM-LOADS
* 632 *                      RATED-CFM = 49700.0  MIN-CFM-RATIO = 1.0
* 633 *                      EXHAUST-CFM = 49700.0  HEATING-CAPACITY = -4255000.0   ..
* 634 *
* 635 *
* 636 *                      $ SYSTEM DESCRIPTION
* 637 *
* 638 * HV_1        =SYSTEM    SYSTEM-TYPE = HVSYS
* 639 *                        MAX-SUPPLY-T = 135.0  HEATING-SCHEDULE = FULL_ON
* 640 *                        MIN-HUMIDITY = 30.0  ECONO-LIMIT-T = 65.0
* 641 *                        ECONO-LOW-LIMIT = 55.0  HEAT-CONTROL = COLDEST
* 642 *                        SUPPLY-CFM = 23765.  RETURN-CFM = 19012.
* 643 *                        RATED-CFM = 23765.  MIN-OUTSIDE-AIR = 0.2
* 644 *                        FAN-SCHEDULE = FAN_W_SB  SUPPLY-DELTA-T = 2.4
* 645 *                        SUPPLY-KW = 0.00078
* 646 *                        MOTOR-PLACEMENT = OUTSIDE-AIRFLOW
* 647 *                        NIGHT-CYCLE-CTRL = CYCLE-ON-ANY  NIGHT-VENT-DT = 0.0
* 648 *                        HEATING-CAPACITY = -510100.  FURNACE-AUX = 0.
* 649 *                        ZONE-NAMES = (ADMIN&TOOL)  ..
* 650 *
* 651 * HV_2        =SYSTEM    SYSTEM-TYPE = HVSYS
* 652 *                        MAX-SUPPLY-T = 135.0  HEATING-SCHEDULE = FULL_ON
* 653 *                        MIN-HUMIDITY = 30.0  ECONO-LIMIT-T = 65.0
* 654 *                        ECONO-LOW-LIMIT = 55.0  HEAT-CONTROL = COLDEST
* 655 *                        SUPPLY-CFM = 30170.  RETURN-CFM = 7844.
* 656 *                        RATED-CFM = 30170.  MIN-OUTSIDE-AIR = 0.74
* 657 *                        FAN-SCHEDULE = FULL_ON  SUPPLY-DELTA-T = 2.4
* 658 *                        SUPPLY-KW = 0.00078
* 659 *                        MOTOR-PLACEMENT = OUTSIDE-AIRFLOW
* 660 *                        NIGHT-CYCLE-CTRL = CYCLE-ON-ANY  NIGHT-VENT-DT = 0.0
* 661 *                        HEATING-CAPACITY = -1905300.  FURNACE-AUX = 0.
* 662 *                        ZONE-NAMES = (ADMIN&ELEC)  ..
* 663 *
* 664 * HV_3        =SYSTEM    SYSTEM-TYPE = HVSYS
* 665 *                        MAX-SUPPLY-T = 135.0  HEATING-SCHEDULE = FULL_ON
* 666 *                        MIN-HUMIDITY = 30.0  ECONO-LIMIT-T = 65.0
* 667 *                        ECONO-LOW-LIMIT = 55.0  HEAT-CONTROL = COLDEST
* 668 *                        SUPPLY-CFM = 24090.  RETURN-CFM = 16120.
* 669 *                        RATED-CFM = 24090.  MIN-OUTSIDE-AIR = 0.33
* 670 *                        FAN-SCHEDULE = FAN_W_SB  SUPPLY-DELTA-T = 2.4
* 671 *                        SUPPLY-KW = 0.00078
* 672 *                        MOTOR-PLACEMENT = OUTSIDE-AIRFLOW
* 673 *                        NIGHT-CYCLE-CTRL = CYCLE-ON-ANY  NIGHT-VENT-DT = 0.0
* 674 *                        HEATING-CAPACITY = -855600.  FURNACE-AUX = 0.
* 675 *                        ZONE-NAMES = (CANVAS&ARM)  ..
* 676 *
* 677 * MAU_5       =SYSTEM    SYSTEM-TYPE = HVSYS
* 678 *                        MAX-SUPPLY-T = 135.0  HEATING-SCHEDULE = FULL_ON
* 679 *                        MIN-HUMIDITY = 30.0  ECONO-LIMIT-T = 65.0
* 680 *                        ECONO-LOW-LIMIT = 55.0  HEAT-CONTROL = COLDEST
* 681 *                        SUPPLY-CFM = 5400.  RATED-CFM = 5400.
* 682 *                        MIN-OUTSIDE-AIR = 1.0  FAN-SCHEDULE = FAN_W_SB
* 683 *                        SUPPLY-DELTA-T = 2.4  SUPPLY-KW = 0.00078
* 684 *                        MOTOR-PLACEMENT = OUTSIDE-AIRFLOW
* 685 *                        NIGHT-CYCLE-CTRL = CYCLE-ON-ANY  NIGHT-VENT-DT = 0.0
* 686 *                        HEATING-CAPACITY = -498400.  FURNACE-AUX = 0.
* 687 *                        ZONE-NAMES = (PAINT&DYN)  ..
* 688 *
* 689 * SUPPLY_UH  =SYSTEM     SYSTEM-TYPE = UHT
* 690 *                        MAX-SUPPLY-T = 135.0  HEATING-SCHEDULE = FULL_ON
* 691 *                        RATED-CFM = 27700.  SUPPLY-DELTA-T = 0.18
* 692 *                        SUPPLY-KW = 0.000059
* 693 *                        NIGHT-CYCLE-CTRL = CYCLE-ON-ANY
* 694 *                        HEATING-CAPACITY = -996800.  FURNACE-AUX = 0.
* 695 *                        ZONE-NAMES = (SHOPSUPPLY)  ..
* 696 *
* 697 * MAU_6&7     =SYSTEM    SYSTEM-TYPE = HVSYS
* 698 *                        MAX-SUPPLY-T = 135.0  HEATING-SCHEDULE = FULL_ON
* 699 *                        MIN-HUMIDITY = 30.0  ECONO-LIMIT-T = 65.0
* 700 *                        ECONO-LOW-LIMIT = 55.0  HEAT-CONTROL = COLDEST
* 701 *                        SUPPLY-CFM = 42220.  RATED-CFM = 42220.
* 702 *                        MIN-OUTSIDE-AIR = 1.0  FAN-SCHEDULE = FAN_W_SB
* 703 *                        SUPPLY-DELTA-T = 2.4  SUPPLY-KW = 0.00078
* 704 *                        MOTOR-PLACEMENT = OUTSIDE-AIRFLOW
* 705 *                        NIGHT-CYCLE-CTRL = CYCLE-ON-ANY  NIGHT-VENT-DT = 0.0
* 706 *                        HEATING-CAPACITY = -1645000.  FURNACE-AUX = 0.
* 707 *                        ZONE-NAMES = (BATTERIES)  ..
* 708 *
* 709 * MAU_1&2A    =SYSTEM    SYSTEM-TYPE = HVSYS
* 710 *                        MAX-SUPPLY-T = 135.0  HEATING-SCHEDULE = FULL_ON
* 711 *                        MIN-HUMIDITY = 30.0  ECONO-LIMIT-T = 65.0
* 712 *                        ECONO-LOW-LIMIT = 55.0  HEAT-CONTROL = COLDEST
* 713 *                        SUPPLY-CFM = 51300.  RATED-CFM = 51300.
* 714 *                        MIN-OUTSIDE-AIR = 1.0  RECOVERY-EFF = 0.2
* 715 *                        FAN-SCHEDULE = FAN_W_SB  SUPPLY-DELTA-T = 2.4
* 716 *                        SUPPLY-KW = 0.00078
* 717 *                        MOTOR-PLACEMENT = OUTSIDE-AIRFLOW
* 718 *                        NIGHT-CYCLE-CTRL = CYCLE-ON-ANY  NIGHT-VENT-DT = 0.0
* 719 *                        HEATING-CAPACITY = -3698000.  FURNACE-AUX = 0.
* 720 *                        ZONE-NAMES = (VEH_MNT)  ..
* 721 *
```

```
* 722 * MAU_1&2B    =SYSTEM     SYSTEM-TYPE = HVSYS
* 723 *                         MAX-SUPPLY-T = 135.0  HEATING-SCHEDULE = FULL_ON
* 724 *                         MIN-HUMIDITY = 30.0  ECONO-LIMIT-T = 65.0
* 725 *                         ECONO-LOW-LIMIT = 55.0  HEAT-CONTROL = COLDEST
* 726 *                         SUPPLY-CFM = 35460.  RATED-CFM = 35460.
* 727 *                         MIN-OUTSIDE-AIR = 1.0  RECOVERY-EFF = 0.2
* 728 *                         FAN-SCHEDULE = FAN_W_SB  SUPPLY-DELTA-T = 2.4
* 729 *                         SUPPLY-KW = 0.00078
* 730 *                         MOTOR-PLACEMENT = OUTSIDE-AIRFLOW
* 731 *                         NIGHT-CYCLE-CTRL = CYCLE-ON-ANY  NIGHT-VENT-DT = 0.0
* 732 *                         HEATING-CAPACITY = -2560000.  FURNACE-AUX = 0.
* 733 *                         ZONE-NAMES = (PAINT&CUR.)  ..
* 734 *
* 735 * MAU_3       =SYSTEM     SYSTEM-TYPE = HVSYS
* 736 *                         MAX-SUPPLY-T = 135.0  HEATING-SCHEDULE = FULL_ON
* 737 *                         MIN-HUMIDITY = 30.0  ECONO-LIMIT-T = 65.0
* 738 *                         ECONO-LOW-LIMIT = 55.0  HEAT-CONTROL = COLDEST
* 739 *                         SUPPLY-CFM = 30360.  RATED-CFM = 30360.
* 740 *                         MIN-OUTSIDE-AIR = 1.0  FAN-SCHEDULE = FAN_W_SB
* 741 *                         SUPPLY-DELTA-T = 2.4  SUPPLY-KW = 0.00078
* 742 *                         MOTOR-PLACEMENT = OUTSIDE-AIRFLOW
* 743 *                         NIGHT-CYCLE-CTRL = CYCLE-ON-ANY  NIGHT-VENT-DT = 0.0
* 744 *                         HEATING-CAPACITY = -2196000.  FURNACE-AUX = 0.
* 745 *                         ZONE-NAMES = (VEH_BOD_SH)  ..
* 746 *
* 747 * MAU_4_8_&9 =SYSTEM      SYSTEM-TYPE = HVSYS
* 748 *                         MAX-SUPPLY-T = 135.0  HEATING-SCHEDULE = PAINT_MAU
* 749 *                         MIN-HUMIDITY = 30.0  ECONO-LIMIT-T = 65.0
* 750 *                         ECONO-LOW-LIMIT = 55.0  HEAT-CONTROL = COLDEST
* 751 *                         SUPPLY-CFM = 49700.  RATED-CFM = 49700.
* 752 *                         MIN-OUTSIDE-AIR = 1.0  FAN-SCHEDULE = PAINT_MAU
* 753 *                         SUPPLY-DELTA-T = 2.4  SUPPLY-KW = 0.00078
* 754 *                         MOTOR-PLACEMENT = OUTSIDE-AIRFLOW
* 755 *                         NIGHT-CYCLE-CTRL = CYCLE-ON-ANY  NIGHT-VENT-DT = 0.0
* 756 *                         HEATING-CAPACITY = -4245000.  FURNACE-AUX = 0.
* 757 *                         ZONE-NAMES = (PAINT_BTHS)  ..
* 758 *
* 759 * END  ..
* 760 * COMPUTE SYSTEMS  ..
* 761 *
* 762 * INPUT PLANT  ..
```

```
* 763 *
* 764 *
* 765 *                  $-------------------------------------$
* 766 *                  $ E Z - D O E   P L A N T S  I N P U T $
* 767 *                  $-------------------------------------$
* 768 *
* 769 *                     $ GENERAL PROJECT DATA
* 770 *
* 771 * TITLE  LINE-1 *     EMC      ENGINEERS      INC.     *
* 772 *        LINE-2 *EZDOE - ELITE SOFTWARE DEVELOPMENT INC*
* 773 *        LINE-3 *     DENVER,       CO       80227     *
* 774 *
* 775 *        LINE-4 *BUILDING 4530, SMA BUILDING             *
* 776 *        LINE-5 *SET BACK, DDC, AND FORCED VENTILATION   * ..
* 777 *
* 778 * ABORT              ERRORS  ..
* 779 * DIAGNOSTIC         WARNINGS ..
* 780 * PLANT-REPORT       SUMMARY=(PS-A,PS-B,BEPS)
* 781 *
* 782 *                    HOURLY-DATA-SAVE = YES  ..
* 783 *
* 784 *                     $ SCHEDULES
* 785 *
* 786 * FULL_ON_D  =DAY-SCHEDULE  (1,24) (1.) ..
* 787 *
* 788 *
* 789 * FULL_ON_W  =WEEK-SCHEDULE  (ALL) FULL_ON_D  ..
* 790 *
* 791 *
* 792 * $ FULL ON SCHEDULE
* 793 * FULL_ON_SC =SCHEDULE THRU DEC 31 FULL_ON_W  ..
* 794 *
* 795 *
* 796 *
* 797 *                     $ EQUIPMENT DESCRIPTION
* 798 *
* 799 * HTP_1      =PLANT-EQUIPMENT   TYPE = HTANK-STORAGE
* 800 *                       SIZE = 22.4  ..
* 801 *
* 802 * PLANT-PARAMETERS      CCIRC-HEAD = 63.2  HCIRC-HEAD = 100.0
* 803 *                       HCIRC-DESIGN-T-DROP = 20.0    ..
* 804 *
* 805 *
* 806 * ENERGY-RESOURCE       RESOURCE = ELECTRICITY  ..
* 807 * ENERGY-RESOURCE       RESOURCE = STEAM  ..
* 808 *
* 809 * ENERGY-STORAGE    HEAT-STORE-RATE = 22.4  HEAT-SUPPLY-RATE = 22.4
* 810 *                       HTANK-BASE-T = 195.0  HTANK-T-RANGE = 5.0
* 811 *                       HEAT-STORE-SCH = FULL_ON_SC    ..
* 812 *
* 813 *       HEAT-RECOVERY
* 814 *             SUPPLY-1 = (HTANK-STORAGE)
* 815 *             DEMAND-1 = (SPACE-HEAT,PROCESS-HEAT)  ..
* 816 *
* 817 *
* 818 *
* 819 * END  ..
* 820 * COMPUTE PLANT ..
* 821 * STOP ..
```

ENERGY TYPE IN SITE MBTU-	STEAM	ELECTRICITY	RECOVERED
CATEGORY OF USE			
SPACE HEAT	29,577.50	0.00	
SPACE COOL	0.00	0.00	
HVAC AUX	0.00	5,040.77	
DOM HOT WTR	207.01	0.00	
AUX SOLAR	0.00	0.00	
LIGHTS	0.00	893.57	
VERT TRANS	0.00	0.00	
MISC EQUIP	0.00	0.00	
TOTAL	29,784.51	5,934.35	

TOTAL SITE ENERGY 35718.89 MBTU 218.8 KBTU/SQFT-YR GROSS-AREA 218.8 KBTU/SQFT-YR NET-AREA
TOTAL SOURCE ENERGY 67461.87 MBTU 413.2 KBTU/SQFT-YR GROSS-AREA 413.2 KBTU/SQFT-YR NET-AREA

PERCENT OF HOURS ANY SYSTEM ZONE OUTSIDE OF THROTTLING RANGE = 11.8
PERCENT OF HOURS ANY PLANT LOAD NOT SATISFIED = 0.0

NOTE ELECTRICITY AND/OR FUEL USED TO GENERATE ELECTRICITY IS APPORTIONED BASED
ON THE YEARLY DEMAND. ALL OTHER ENERGY TYPES ARE APPORTIONED HOURLY.

MO	UTILITY-	STEAM	ELECTRICITY
	TOTAL(MBTU)	6608.349	585.494
JAN	PEAK(KBTU)	25113.384	1251.289
	DY/HR	5/12	31/11
	TOTAL(MBTU)	4477.930	497.904
FEB	PEAK(KBTU)	21627.304	1251.118
	DY/HR	14/ 9	4/10
	TOTAL(MBTU)	4373.149	545.270
MAR	PEAK(KBTU)	21544.560	1250.391
	DY/HR	9/ 9	14/10
	TOTAL(MBTU)	2081.119	508.036
APR	PEAK(KBTU)	14886.328	1248.631
	DY/HR	1/ 9	25/10
	TOTAL(MBTU)	1120.207	495.498
MAY	PEAK(KBTU)	12542.688	1248.309
	DY/HR	16/ 8	3/10
	TOTAL(MBTU)	410.007	412.064
JUN	PEAK(KBTU)	5725.480	1245.708
	DY/HR	8/ 6	30/14
	TOTAL(MBTU)	406.003	401.512
JUL	PEAK(KBTU)	3933.062	1245.708
	DY/HR	25/ 6	29/14
	TOTAL(MBTU)	424.280	431.170
AUG	PEAK(KBTU)	4595.550	1245.708
	DY/HR	22/ 6	31/14
	TOTAL(MBTU)	731.091	469.933
SEP	PEAK(KBTU)	8296.202	1246.777
	DY/HR	23/ 9	23/10
	TOTAL(MBTU)	1596.780	515.904
OCT	PEAK(KBTU)	14087.488	1247.920
	DY/HR	28/ 9	26/11
	TOTAL(MBTU)	2869.428	519.197
NOV	PEAK(KBTU)	17847.584	1249.372
	DY/HR	28/ 9	21/10
	TOTAL(MBTU)	4686.111	552.449
DEC	PEAK(KBTU)	21885.912	1250.519
	DY/HR	28/ 9	30/10
	ONE YEAR	29784.455	5934.433
	USE/PEAK	25113.384	1251.289