Limited Energy Study (Glass)

Energy Engineering Analysis Program (EEAP)
Fort Knox, Kentucky

Final Report
Volume 3 of 3

CONTRACT #DACA01-94-D-0034
SYSTEMS CORP PROJECT #94013.02
OCTOBER 28, 1994

Louisville District-
US Army Corps
of Engineers

19971016 192

DISTRIBUTION STATEMENT A
Approved for public release;
Distribution Unlimited

SYSTEMS*corp*

SYSTEMS ENGINEERING AND MANAGEMENT CORPORATION
Cherokee Place, Suite 306 ♦ 2200 Sutherland Avenue ♦ Knoxville, Tennessee 37919
Telephone 615-521-6536 Fax 615-524-7514

DTIC QUALITY INSPECTED 2

DEPARTMENT OF THE ARMY
CONSTRUCTION ENGINEERING RESEARCH LABORATORIES, CORPS OF ENGINEERS
P.O. BOX 9005
CHAMPAIGN, ILLINOIS 61826-9005

REPLY TO
ATTENTION OF: TR-I Library

17 Sep 1997

Based on SOW, these Energy Studies are unclassified/unlimited.
Distribution A. Approved for public release.

Marie Wakefield,
Librarian Engineering

VOLUME III

5. FEMP PROJECT 4 5-1

Infra-red Heat at Buildings:
5220
5253
6113-6118
6142-6147
6560
6564
6576
6577
6592

6. PROJECT 5 6-1

Window/wall Insulation at Buildings:
5297 & 6591

APPENDICES

A. Scope of Work A-1

B. Interim Review Comments and Responses B-1

C. Interim Review Presentation C-1

D. BUILDING 2647: Print Shop LCCID, Cost Estimate and Calculations . D-1

5 FEMP PROJECT 4: INFRA-RED HEAT AT 22 BUILDINGS

This section includes an FEMP project packet for FEMP Project 4: Infra-red Heat at 22 Buildings. Following this table of contents is a project summary table, the life cycle cost analysis for the project, and the life cycle cost analysis, cost estimates, and calculations for each building/area included in the project. Below is a detailed index of the information included in this section.

Table 5.1: Project Summary Infra-red Heat at 22 Buildings 5-2
FEMP Project 4 LCCA 5-3

Buildings:
5220 5-8
5253 5-22
6113-6118, 6142-6147 5-36
6560-6564, 6576, 6577 5-193
6592 5-283

Catalog Cut Sheets 5-296

NOTE: All the above buildings are also included in ECIP Project 2 except Hangars 5220 and 5253. This will increase the flexibility of the installation's funding alternatives.

TABLE 5.1
PROJECT SUMMARY:
INFRA-RED HEAT - FEMP PROJECT 4

ECO NUMBER	BUILDING NUMBER	BASELINE ENERGY (MBTU)	ECO ENERGY (MBTU)	ENERGY SAVINGS (MBTU)	1ST YEAR SAVINGS	INVESTMENT COST	NON-ENERGY ANNUAL RECURRING	TOTAL NON-ENERGY NON-RECURRING	SPB (YR)	SIR
1	5220	5,686	2,789	2,897	$25,042	$78,231	$0	$7,984	3.12	5.05
1	5253	3,528	1,730	1,797	$15,647	$45,837	$0	$7,097	2.93	5.38
1	6113-6118,6142-6147	14,811	7,265	7,547	$77,721	$503,778	$3,960	$191,341	6.48	2.44
1	6560-6564,6576,6577	6,569	3,222	3,347	$36,858	$263,339	$2,970	$108,338	7.14	2.22
1	6592	1,317	646	671	$4,810	$37,462	$990	$14,407	7.79	2.41
1	FEMP PROJECT 4	31,911	15,651	16,260	$160,076	$928,646	$7,920	$329,166	5.80	2.74

TABLE 5.1
PROJECT SUMMARY:
INFRA-RED HEAT - FEMP PROJECT 4

ECO NUMBER	BUILDING NUMBER	BASELINE ENERGY (MJ)	ECO ENERGY (MJ)	ENERGY SAVINGS (MJ)	1ST YEAR SAVINGS	INVESTMENT COST	NON-ENERGY ANNUAL RECURRING	TOTAL NON-ENERGY NON-RECURRING	SPB (YR)	SIR
1	5220	5,998,814	2,942,226	3,056,588	$25,042	$78,231	$0	$7,984	3.12	5.05
1	5253	3,721,671	1,825,361	1,896,310	$15,647	$45,837	$0	$7,097	2.93	5.38
1	6113-6118,6142-6147	15,626,111	7,664,111	7,962,001	$77,721	$503,778	$3,960	$191,341	6.48	2.44
1	6560-6564,6576,6577	6,930,612	3,399,242	3,531,370	$36,858	$263,339	$2,970	$108,338	7.14	2.22
1	6592	1,389,245	681,382	707,863	$4,810	$37,462	$990	$14,407	7.79	2.41
1	FEMP PROJECT 4	33,666,453	16,512,322	17,154,131	$160,076	$928,646	$7,920	$329,166	5.80	2.74

LIFE CYCLE COST ANALYSIS SUMMARY STUDY: PRJT4
ENERGY CONSERVATION INVESTMENT PROGRAM (ECIP) LCCID 1.080
INSTALLATION & LOCATION: FORT KNOX REGION NOS. 4 CENSUS: 3
PROJECT NO. & TITLE: PRJT4 FEMP PROJECT 4 - INFRARED HEAT
FISCAL YEAR 95 DISCRETE PORTION NAME: INFRARED
ANALYSIS DATE: 10-26-94 ECONOMIC LIFE 20 YEARS PREPARED BY: JAH

1. INVESTMENT

A. CONSTRUCTION COST	$ 844224.		
B. SIOH	$ 42211.		
C. DESIGN COST	$ 42211.		
D. TOTAL COST (1A+1B+1C)	$ 928646.		
E. SALVAGE VALUE OF EXISTING EQUIPMENT		$ 0.	
F. PUBLIC UTILITY COMPANY REBATE		$ 0.	
G. TOTAL INVESTMENT (1D - 1E - 1F)			$ 928646.

2. ENERGY SAVINGS (+) / COST (-)
DATE OF NISTIR 85-3273-X USED FOR DISCOUNT FACTORS OCT 1993

FUEL	UNIT COST $/MBTU(1)	SAVINGS MBTU/YR(2)	ANNUAL $ SAVINGS(3)	DISCOUNT FACTOR(4)	DISCOUNTED SAVINGS(5)
A. ELECT	$ .00	0.	$ 0.	15.61	$ 0.
B. DIST	$ 6.60	30595.	$ 201924.	17.56	$ 3545781.
C. RESID	$ .00	0.	$ 0.	19.97	$ 0.
D. NAT G	$ 4.62	-14335.	$ -66226.	20.96	$ -1388101.
E. COAL	$ .00	0.	$ 0.	17.58	$ 0.
F. LPG	$ .00	0.	$ 0.	16.12	$ 0.
M. DEMAND SAVINGS			$ 0.	14.74	$ 0.
N. TOTAL		16260.	$ 135698.		$ 2157681.

3. NON ENERGY SAVINGS(+) / COST(-)

A. ANNUAL RECURRING (+/-) $ 7920.
(1) DISCOUNT FACTOR (TABLE A) 14.74
(2) DISCOUNTED SAVING/COST (3A X 3A1) $ 116741.

B. NON RECURRING SAVINGS(+) / COSTS(-)

ITEM	SAVINGS(+) COST(-) (1)	YR OC (2)	DISCNT FACTR (3)	DISCOUNTED SAVINGS(+)/ COST(-)(4)
1. REPAIR	$ 78508.	5	.86	67517.
2. REPAIR2	$ 78508.	15	.63	49460.
3. REPAIR3	$ 9575.	7	.81	7756.
4. REPAIR4	$ 9575.	14	.65	6224.
5. ENVIR	$ 152999.	3	.91	139229.
d. TOTAL	$ 329166.			270186.

C. TOTAL NON ENERGY DISCOUNTED SAVINGS(+)/COST(-)(3A2+3Bd4) $ 386927.

4. FIRST YEAR DOLLAR SAVINGS 2N3+3A+(3Bd1/(YRS ECONOMIC LIFE)) $ 160076.

5. SIMPLE PAYBACK PERIOD (1G/4) 5.80 YEARS

6. TOTAL NET DISCOUNTED SAVINGS (2N5+3C) $ 2544608.

7. SAVINGS TO INVESTMENT RATIO (SIR)=(6 / 1G)= 2.74
(IF < 1 PROJECT DOES NOT QUALIFY)

8. ADJUSTED INTERNAL RATE OF RETURN (AIRR): 8.43 %

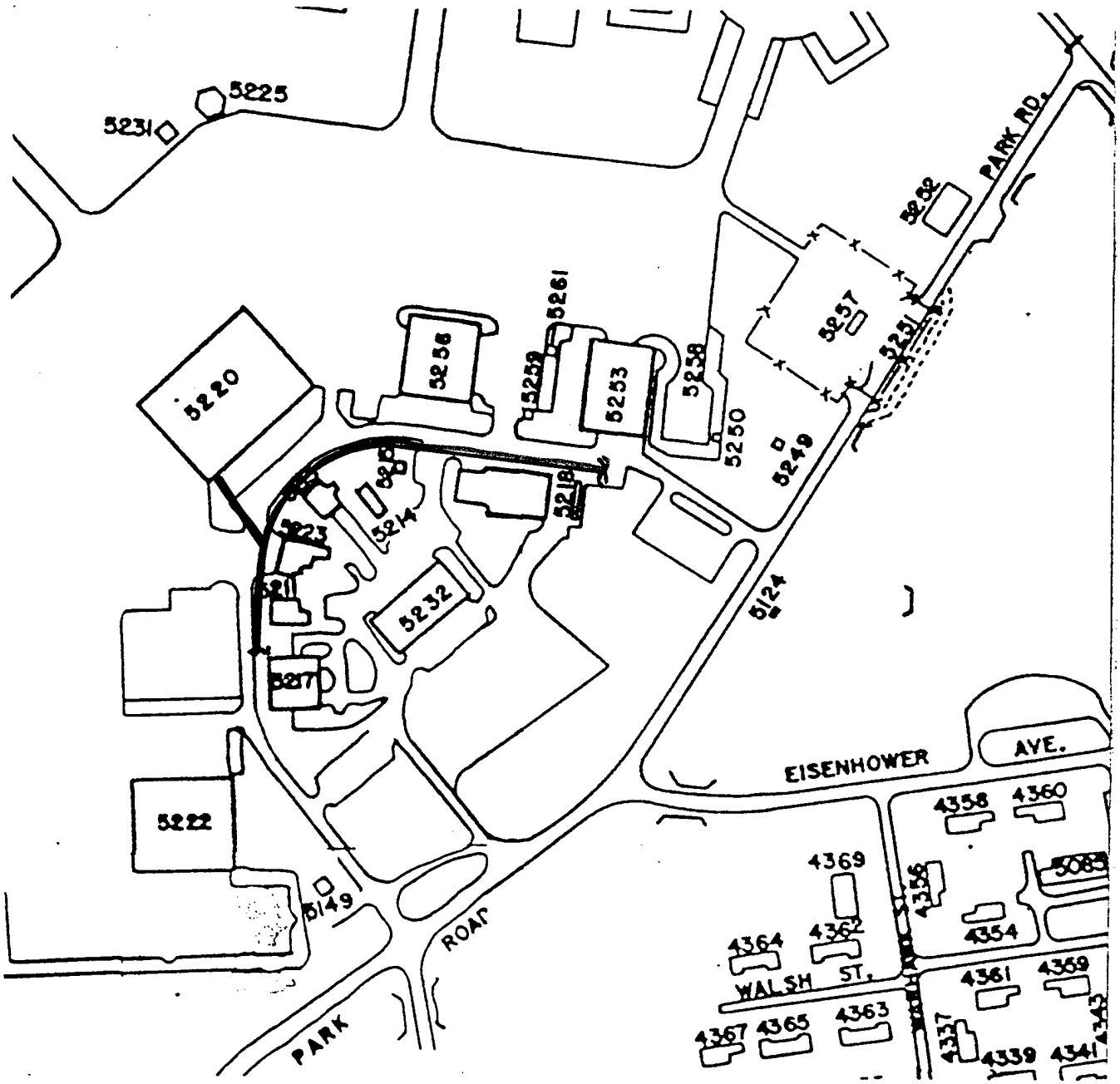

GODMAN AIRFIELD - BLDG 5220

EXISTING NG MAIN

PROPOSED NG MAIN

SYSTEMS corp SYSTEMS ENGINEERING AND MANAGEMENT CORPORATION KNOXVILLE, TENNESSEE 37919		FT. KNOX GLASS STUDY NEW NATURAL GAS LINES REQUIRED	
DRAWN BY B. YATES	JOB NO. 94013.02	SHEET NO.	
CHECKED BY J. HOLLENSBE	DATE 10-07-94		

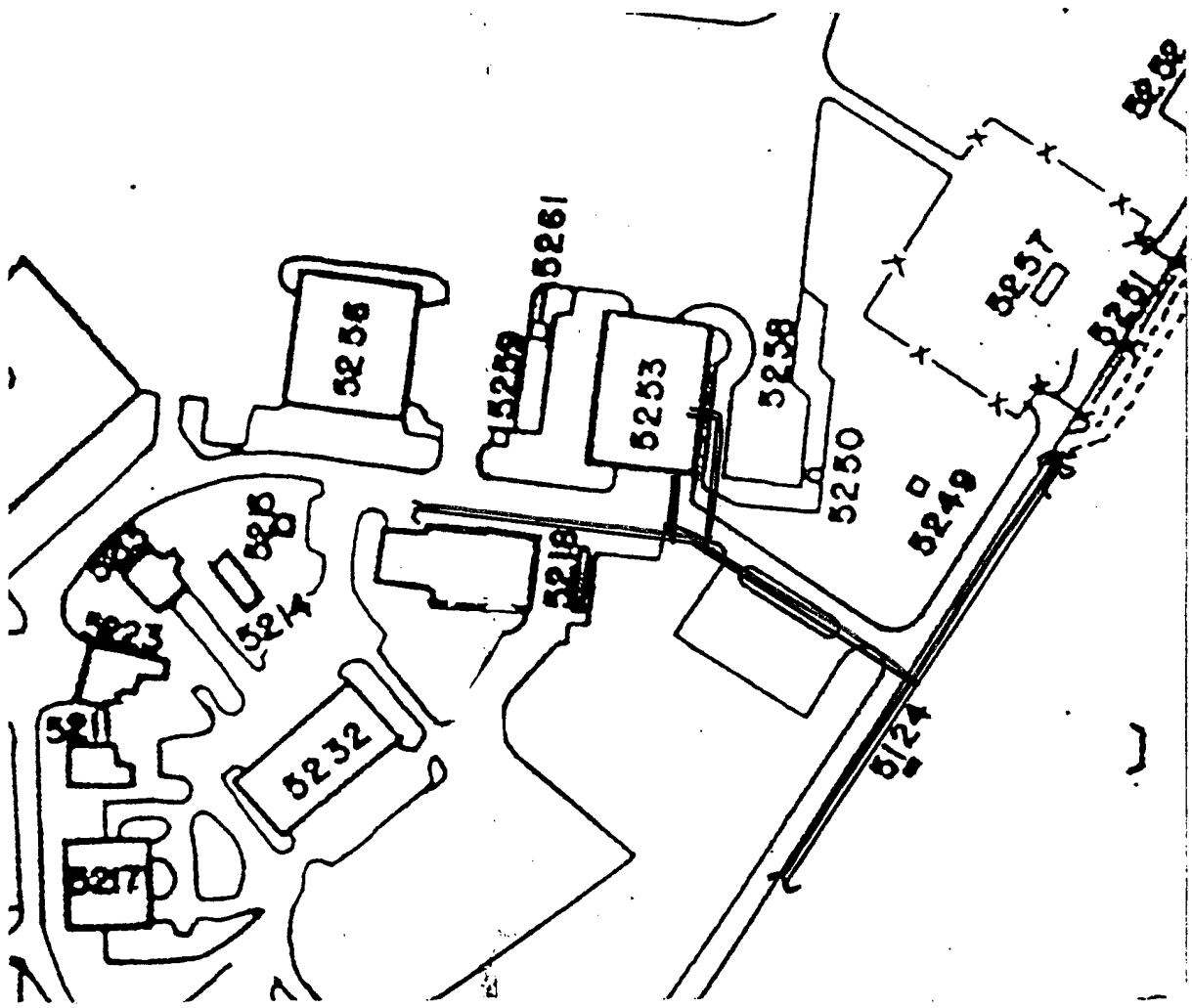

GODMAN AIRFIELD – BLDG 5253

EXISTING NG MAIN

PROPOSED NG MAIN

SYSTEMS corp SYSTEMS ENGINEERING AND MANAGEMENT CORPORATION KNOXVILLE, TENNESSEE 37919		FT. KNOX GLASS STUDY NEW NATURAL GAS LINES REQUIRED	
DRAWN BY B. YATES	JOB NO. 94013.02	SHEET NO.	
CHECKED BY J. HOLLENSBE	DATE 10-07-94		

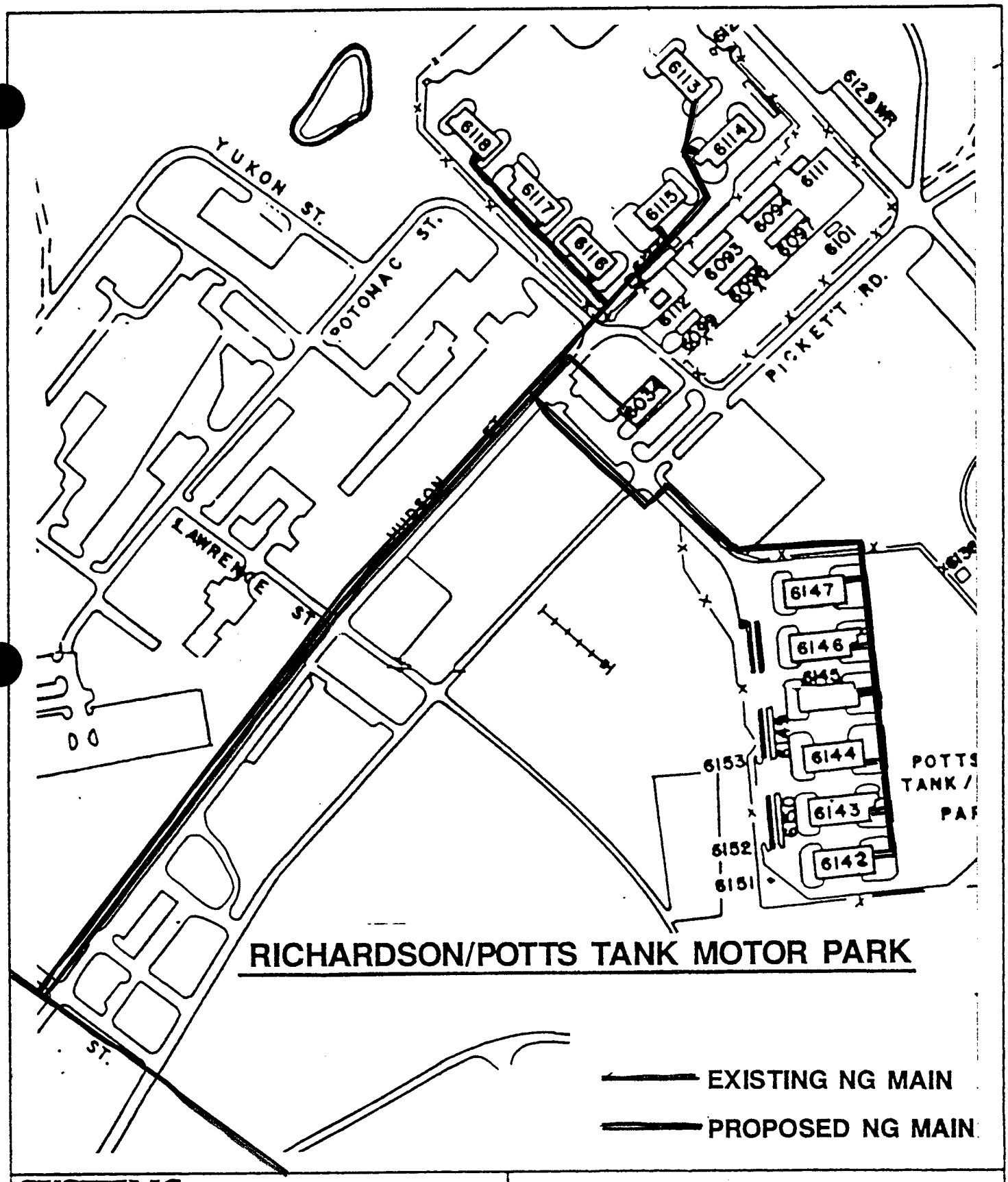

RICHARDSON/POTTS TANK MOTOR PARK

SYSTEMS corp

SYSTEMS ENGINEERING AND MANAGEMENT CORPORATION
KNOXVILLE, TENNESSEE 37919

FT. KNOX GLASS STUDY

NEW NATURAL GAS LINES REQUIRED

DRAWN BY	B. YATES	JOB NO.	94013.02	SHEET NO.
CHECKED BY	J. HOLLENSBE	DATE	10-07-94	

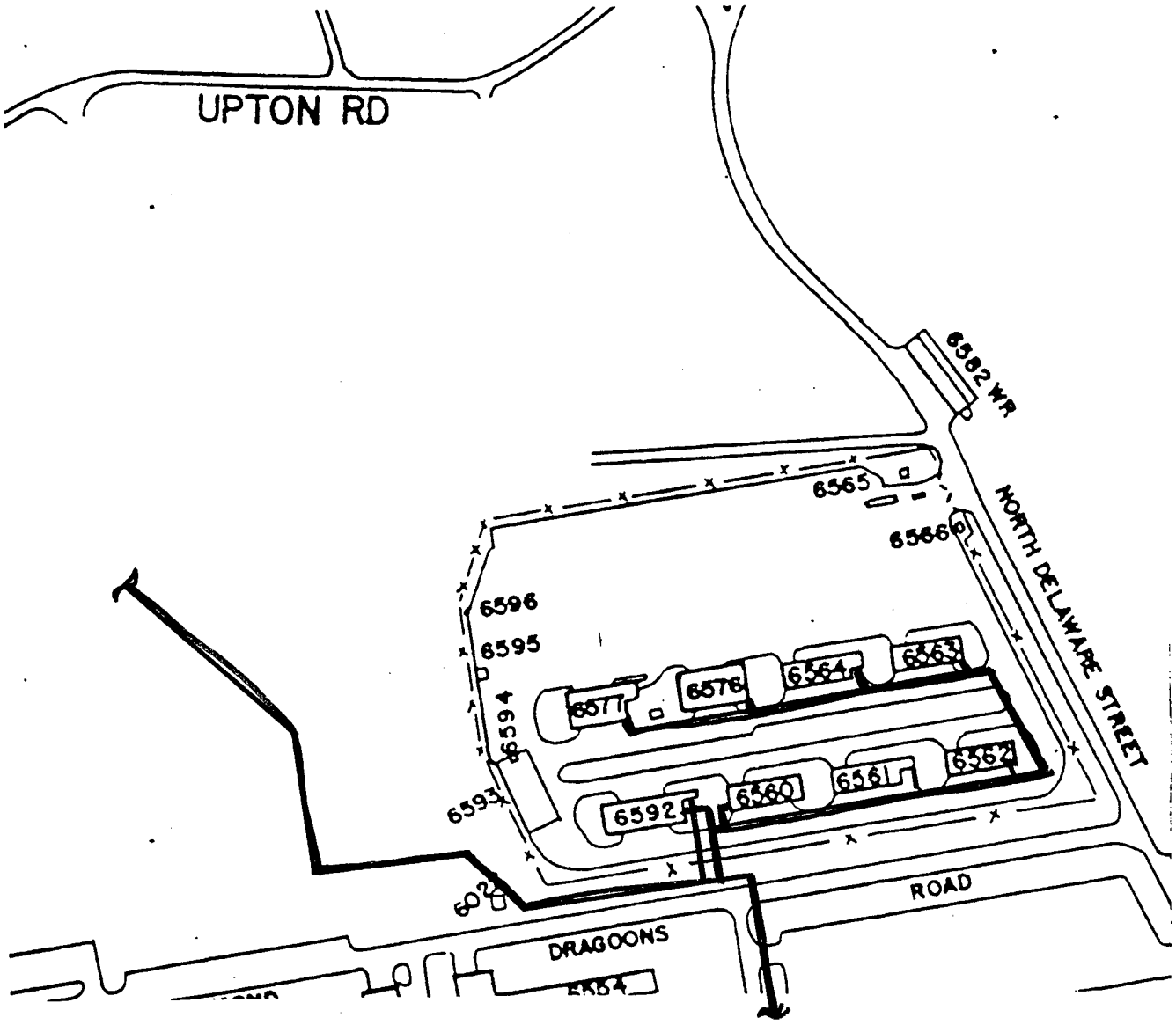

FARMER TANK MOTOR PARK

EXISTING NG MAIN

PROPOSED NG MAIN

SYSTEMS corp SYSTEMS ENGINEERING AND MANAGEMENT CORPORATION KNOXVILLE, TENNESSEE 37919		FT. KNOX GLASS STUDY NEW NATURAL GAS LINES REQUIRED	
DRAWN BY B. YATES	JOB NO. 94013.02	SHEET NO.	
CHECKED BY J. HOLLENSBE	DATE 10-07-94		

LIFE CYCLE COST ANALYSIS SUMMARY STUDY: 5220ECO1
ENERGY CONSERVATION INVESTMENT PROGRAM (ECIP) LCCID 1.080
INSTALLATION & LOCATION: FORT KNOX REGION NOS. 4 CENSUS: 3
PROJECT NO. & TITLE: 5220ECO1 ECO-1 INFRARED HEAT
FISCAL YEAR 95 DISCRETE PORTION NAME: INFRARED
ANALYSIS DATE: 10-26-94 ECONOMIC LIFE 20 YEARS PREPARED BY: JAH

1. INVESTMENT

A. CONSTRUCTION COST	$ 71119.			
B. SIOH	$ 3556.			
C. DESIGN COST	$ 3556.			
D. TOTAL COST (1A+1B+1C)	$ 78231.			
E. SALVAGE VALUE OF EXISTING EQUIPMENT		$ 0.		
F. PUBLIC UTILITY COMPANY REBATE		$ 0.		
G. TOTAL INVESTMENT (1D - 1E - 1F)			$ 78231.	

2. ENERGY SAVINGS (+) / COST (-)
DATE OF NISTIR 85-3273-X USED FOR DISCOUNT FACTORS OCT 1993

FUEL	UNIT COST $/MBTU(1)	SAVINGS MBTU/YR(2)	ANNUAL $ SAVINGS(3)	DISCOUNT FACTOR(4)	DISCOUNTED SAVINGS(5)
A. ELECT	$ .00	0.	$ 0.	15.61	$ 0.
B. DIST	$ 6.60	5686.	$ 37528.	17.56	$ 658985.
C. RESID	$ .00	0.	$ 0.	19.97	$ 0.
D. NAT.G	$ 4.62	-2789.	$ -12885.	20.96	$ -270073.
E. COAL	$ .00	0.	$ 0.	17.58	$ 0.
F. LPG	$ .00	0.	$ 0.	16.12	$ 0.
M. DEMAND SAVINGS			$ 0.	14.74	$ 0.
N. TOTAL		2897.	$ 24642.		$ 388911.

3. NON ENERGY SAVINGS(+) / COST(-)

A. ANNUAL RECURRING (+/-) $ 0.
(1) DISCOUNT FACTOR (TABLE A) 14.74
(2) DISCOUNTED SAVING/COST (3A X 3A1) $ 0.

B. NON RECURRING SAVINGS(+) / COSTS(-)

ITEM	SAVINGS(+) COST(-) (1)	YR OC (2)	DISCNT FACTR (3)	DISCOUNTED SAVINGS(+)/ COST(-)(4)
1. REPAIR	$ 3992.	5	.86	3433.
2. REPAIR2	$ 3992.	15	.63	2515.
d. TOTAL	$ 7984.			5948.

C. TOTAL NON ENERGY DISCOUNTED SAVINGS(+)/COST(-)(3A2+3Bd4) $ 5948.

4. FIRST YEAR DOLLAR SAVINGS 2N3+3A+(3Bd1/(YRS ECONOMIC LIFE)) $ 25042.

5. SIMPLE PAYBACK PERIOD (1G/4) 3.12 YEARS

6. TOTAL NET DISCOUNTED SAVINGS (2N5+3C) $ 394859.

7. SAVINGS TO INVESTMENT RATIO (SIR)=(6 / 1G)= 5.05
(IF < 1 PROJECT DOES NOT QUALIFY)

8. ADJUSTED INTERNAL RATE OF RETURN (AIRR): 11.79 %

FT KNOX LIMITED EEAP (GLASS)

ECO - 1: INFRARED HEATING CALCULATIONS

BUILDING NUMBER: 5220

BUILDING HEATING TEMPERATURE SETPOINT: 68 F
OUTSIDE DESIGN TEMPERATURE 1 F
TEMPERATURE DIFFERENCE 67 F

INFILTRATION LOSSES =	1	AIR CHGS	X	965210	VOL (CU FT)	X	67	F TEMP DIFF	X 0.019	=	1.23	MBTU / HR
FLOOR LOSSES =	820	LINEAR FEET OF PERIMETER				X	67	F TEMP DIFF	X 0.81	=	0.04	MBTU / HR

SURFACE HEAT LOSSES

FLAT BUILT UP ROOF =	33773	AREA (SF)	X	0.105	U VALUE (BTU/ HR - SF - F)	X	67	F TEMPERATURE DIFFERENCE		=	0.24	MBTU / HR
8" RED BRICK WALL =	6467	AREA (SF)	X	0.14	U VALUE (BTU/ HR - SF - F)	X	67	F TEMPERATURE DIFFERENCE		=	0.06	MBTU / HR
8" CINDER BLOCK WALL =		AREA (SF)	X	0.389	U VALUE (BTU/ HR - SF - F)	X	67	F TEMPERATURE DIFFERENCE		=	0.00	MBTU / HR
CORR MTL PNL WALL =	5763	AREA (SF)	X	0.17	U VALUE (BTU/ HR - SF - F)	X	67	F TEMPERATURE DIFFERENCE		=	0.07	MBTU / HR
CLR SGL PANE WINDOWS =	4301	AREA (SF)	X	1.235	U VALUE (BTU/ HR - SF - F)	X	67	F TEMPERATURE DIFFERENCE		=	0.36	MBTU / HR
TINTED DBL PANE WIN'W =		AREA (SF)	X	0.65	U VALUE (BTU/ HR - SF - F)	X	67	F TEMPERATURE DIFFERENCE		=	0.00	MBTU / HR
METAL ROLL UP DOORS =		AREA (SF)	X	0.56	U VALUE (BTU/ HR - SF - F)	X	67	F TEMPERATURE DIFFERENCE		=	0.00	MBTU / HR
METAL GLAZED O'HEAD DR =		AREA (SF)	X	0.214	U VALUE (BTU/ HR - SF - F)	X	67	F TEMPERATURE DIFFERENCE		=	0.00	MBTU / HR
LG MTL SLIDING DOOR =	1764	AREA (SF)	X	0.56	U VALUE (BTU/ HR - SF - F)	X	67	F TEMPERATURE DIFFERENCE		=	0.07	MBTU / HR
METAL PERSONNEL DR =		AREA (SF)	X	0.56	U VALUE (BTU/ HR - SF - F)	X	67	F TEMPERATURE DIFFERENCE		=	0.00	MBTU / HR
MTL/ GLAZED PERSONNEL=	100	AREA (SF)	X	0.615	U VALUE (BTU/ HR - SF - F)	X	67	F TEMPERATURE DIFFERENCE		=	0.00	MBTU / HR

TOTAL BASELINE HEAT LOSSES = **2.06** **MBTU / HR**
= **2,176.78** **MJ/HR**

FT KNOX LIMITED EEAP (GLASS)

ECO - 1: INFRARED HEATING CALCULATIONS

BUILDING NUMBER: **5220**

BUILDING HEATING TEMPERATURE SETPOINT:	55	F
OUTSIDE DESIGN TEMPERATURE	1	F
TEMPERATURE DIFFERENCE	54	F

INFILTRATION LOSSES =	1	AIR CHGS	X	965210	VOL (CU FT)	X	54	F TEMP DIFF	X	0.019	=	0.99 MBTU / HR
FLOOR LOSSES =	820	LINEAR FEET OF PERIMETER				X	54	F TEMP DIFF	X	0.81	=	0.04 MBTU / HR

SURFACE HEAT LOSSES

FLAT BUILT UP ROOF =	33773	AREA (SF)	X	0.105	U VALUE (BTU/ HR - SF - F)	X	54	F TEMPERATURE DIFFERENCE	=	0.19	MBTU / HR
8" RED BRICK WALL =	6467	AREA (SF)	X	0.14	U VALUE (BTU/ HR - SF - F)	X	54	F TEMPERATURE DIFFERENCE	=	0.05	MBTU / HR
8" CINDER BLOCK WALL =	0	AREA (SF)	X	0.389	U VALUE (BTU/ HR - SF - F)	X	54	F TEMPERATURE DIFFERENCE	=	0.00	MBTU / HR
CORR MTL PNL WALL =	5763	AREA (SF)	X	0.17	U VALUE (BTU/ HR - SF - F)	X	54	F TEMPERATURE DIFFERENCE	=	0.05	MBTU / HR
CLR SGL PANE WINDOWS =	4301	AREA (SF)	X	1.235	U VALUE (BTU/ HR - SF - F)	X	54	F TEMPERATURE DIFFERENCE	=	0.29	MBTU / HR
TINTED DBL PANE WIN'W =	0	AREA (SF)	X	0.65	U VALUE (BTU/ HR - SF - F)	X	54	F TEMPERATURE DIFFERENCE	=	0.00	MBTU / HR
METAL ROLL UP DOORS =	0	AREA (SF)	X	0.56	U VALUE (BTU/ HR - SF - F)	X	54	F TEMPERATURE DIFFERENCE	=	0.00	MBTU / HR
METAL GLAZED O'HEAD DR =	0	AREA (SF)	X	0.214	U VALUE (BTU/ HR - SF - F)	X	54	F TEMPERATURE DIFFERENCE	=	0.00	MBTU / HR
LG MTL SLIDING DOOR =	1764	AREA (SF)	X	0.56	U VALUE (BTU/ HR - SF - F)	X	54	F TEMPERATURE DIFFERENCE	=	0.05	MBTU / HR
METAL PERSONNEL DR =	0	AREA (SF)	X	0.56	U VALUE (BTU/ HR - SF - F)	X	54	F TEMPERATURE DIFFERENCE	=	0.00	MBTU / HR
MTL/ GLAZED PERSONNEL=	100	AREA (SF)	X	0.615	U VALUE (BTU/ HR - SF - F)	X	54	F TEMPERATURE DIFFERENCE	=	0.00	MBTU / HR

TOTAL ECO HEAT LOSSES	=	**1.66**	**MBTU / HR**
	=	**1,754.42**	**MJ/HR**

FT KNOX LIMITED EEAP (GLASS)

ECO - 1: INFRARED HEATING CALCULATIONS

	BASELINE	ECO - 1
SYSTEM EFFICIENCY	60%	90%
OUTSIDE DESIGN TEMP (F)	1	1
HTG TEMP SETPOINT (F)	68	55
HEATING DEGREE DAYS	4616	3396
TOTAL HEAT LOSSES (MBTU / HR)	2.06	1.66
$ /MBTU -FUEL OIL	$6.60	$6.60
$ /MBTU -NATURAL GAS	$4.62	$4.62
$ /MBTU -PPG	$10.84	$10.84

BUILDING NUMBER **5220**

GLOSSARY OF TERMS

1 MBTU = 1055 MJ
0.019=CONSTANT
.81 = CONSTANT FOR SLAB PERIMETER UNINSULATED FROM ASHRAE
CORR FACTOR = EMPIRICAL CORRECTION FACTOR FOR HEATING EFFECT VS 65 F DEGREE-DAYS FROM ASHRAE FUNDAMENTALS 1989 PG28.2

ANNUAL HEATING ENERGY CONSUMPTION (DEGREE DAY METHOD)

BASELINE = (2.06 MBTU / HR X 4616 DEGREE DAYS X 24 HRS/DAY) / (0.6 SYS EFF X 67 TEMP DIFFERENCE) = 5,686.08 MBTU/YR

5,686.08 MBTU/YR X CORR FACTOR 1 = 5,686.08 MBTU/YR

ECO - 1 = (1.66 MBTU / HR X 3396 DEGREE DAYS X 24 HRS/DAY) / (0.9 SYS EFF X 54 TEMP DIFFERENCE) = 2,788.84 MBTU/YR

2,788.84 MBTU/YR X CORR FACTOR 1 = 2,788.84 MBTU/YR

ECO - 1 ANNUAL HEATING ENERGY CONSUMPTION SAVINGS = 2,897.24 MBTU/YR
= 3,056,590.86 MJ/YR

ANNUAL HEATING ENERGY COST

BASELINE = 5,686.08 MBTU / YR X 6.6 $ /MBTU = 37,528.16 $ /YR

ECO - 1 = 2,788.84 MBTU / YR X 4.62 $ /MBTU = 12,884.45 $ /YR

ECO - 1 ANNUAL HEATING ENERGY COST SAVINGS = 24,643.71 $ /YR

Estimate: BLDG 5220 Date: 14-Oct-94
Description: COST ESTIMATE
Project: LIMITED EEAP(GLASSBid Date:
Location: FORT KNOX, KY Job #: 94013.02
Sq. footage: ******** City indx:Louisville, KY

Line #	Description	Manhours	Matl	Labor	Equipment	Sub	Total
0205541750	PAVEMENT REMOVAL, BITUMINOUS, 4" TO 6" THICK					8.00 S.Y.	
Unit values		0.10	0.00	2.09	3.02	0.00	5.11
Totals		0.76	$0	$17	$24	$0	$41
0205543200	SITE REMOVAL,STEEL PIPE,WELDED CONNECTION, 4"DIAMETER					550.00 L.F.	
Unit values		0.15	0.00	3.16	1.29	0.00	4.44
Totals		82.50	$0	$1,736	$707	$0	$2,443
0207183600	HVAC DEMO,MECH EQPT HEAVY ITEM					2.00 Ton	
Unit values		14.55	0.00	380.36	0.00	0.00	380.36
Totals		29.09	$0	$761	$0	$0	$761
0208400600	REMOVE PIPE INSULATION UP TO 4" DIAMETER PIPE					300.00 L.F.	
Unit values		0.07	0.00	1.97	0.24	0.00	2.21
Totals		21.30	$0	$592	$71	$0	$663
0208401000	REMOVE INSULATION FROM PIPE FITTING, UP TO 4" DIAMETER PIPE					100.00 Ea.	
Unit values		0.20	0.00	5.55	0.68	0.00	6.23
Totals		20.00	$0	$555	$68	$0	$623
0222541900	TAMPING TRENCH B'FILL, VIBRATING PLATE, ADD					11.00 C.Y.	
Unit values		0.09	0.00	1.74	0.67	0.00	2.41
Totals		0.98	$0	$19	$7	$0	$26
0222582800	TRENCH EXCVTNG 40HP CHNTRNCHR&BKFL 12"W24"D					140.00 L.F.	
Unit values		0.01	0.00	0.24	0.24	0.00	0.47
Totals		1.40	$0	$33	$33	$0	$66
0251040380	ASPHALTIC CONCRETE PAVEMENT, PAVING, WEARING COURSE, 2" THICK					8.00 S.Y.	
Unit values		0.02	1.90	0.33	0.30	0.00	2.53
Totals		0.12	$15	$3	$2	$0	$20

0260120200	BEDDING, FOR PIPE IN TRENCH SAND, DEAD OR BANK				3.00 C.Y.	
Unit values	0.16	2.43	3.37	1.37	0.00	7.17
Totals	0.48	$7	$10	$4	$0	$21
0260120500	BEDDING, PLACING IN TRENCH				3.00 C.Y.	
Unit values	0.09	0.00	1.74	0.67	0.00	2.41
Totals	0.27	$0	$5	$2	$0	$7
0266907800	CUT IN VALVES, W/DUCK TIP GASKET, 4" DIAMETER				1.00 Ea.	
Unit values	1.56	259.60	35.47	5.91	0.00	300.98
Totals	1.56	$260	$35	$6	$0	$301
0268520200	GAS SERVICE & DISTRIB PIPING,POLYETHYLENE,60-PSI 2" DIAM COIL SDR 11				140.00 L.F.	
Unit values	0.07	0.75	1.48	0.00	0.00	2.23
Totals	9.38	$105	$207	$0	$0	$312
0268520600	GAS SERVICE&DISTRIB PIPING,SCH40 STEEL PLAIN END,TAR COAT&WRAP 2"DIAM				150.00 L.F.	
Unit values	0.11	2.19	3.18	0.19	0.00	5.55
Totals	17.10	$328	$476	$28	$0	$832

Line #	Description					
	Manhours	Matl	Labor	Equipment	Sub	Total
U02 SITEWORK	185	$715	$4,449	$952	$0	$6,116
1554510245	HTG INFA-RD UNT GAS ELEC IGN				1.00 LS	
Unit values	0.00	0.00	0.00	0.00	52476.00	52476.00
Totals	0.00	$0	$0	$0	$52,476	$52,476
1562600137	GAS APPLIANCE REGULATORS DOUBLE DIAPHRAGM TYPE 1-1/4" PIPE SIZE				1.00 Ea.	
Unit values	0.53	226.00	12.10	0.00	0.00	238.10
Totals	0.53	$226	$12	$0	$0	$238
1562600139	GAS APPLIANCE REGULATORS DOUBLE DIAPHRAGM TYPE 2" PIPE SIZE				1.00 Ea.	
Unit values	0.73	420.00	16.42	0.00	0.00	436.42
Totals	0.73	$420	$16	$0	$0	$436
U15 MECHANICAL	2	$646	$28	$0	$52,476	$53,150

Line #	Description					
	Manhours	Matl	Labor	Equipment	Sub	Total
ESTIMATE TOTAL	187	$1,361	$4,477	$952	$52,476	$59,266
SALES TAX	0.00%	$0				
MATL MARKUP	0.00%	$0				
LABOR MARKUP	0.00%		$0			
EQUIPT MARKUP	0.00%			$0		
SUB MARKUP	0.00%				$0	
TOTAL BEFORE CONTINGENC		$1,361	$4,477	$952	$52,476	$59,266
CONTINGENCY	10.00%					$5,927
BOND	0.00%					$0
PROFIT	10.00%					$5,927
JOB TOTAL						$71,119

Estimate:	BLDG 5220	Date:	14-Oct-94
Description:	COST ESTIMATE		
Project:	LIMITED EEAP(GLASS	Bid Date:	
Location:	FORT KNOX, KY	Job #:	94013.02
Sq. footage:	********	City indx:	Louisville, KY

SUMMARY

	Manhours	Matl	Labor	Equipment	Sub	Total
U02 SITEWORK	185	$715	$4,449	$952	$0	$6,116
U15 MECHANICAL	2	$646	$28	$0	$52,476	$53,150
TOTAL	187	$1,361	$4,477	$952	$52,476	$59,266
SALES TAX	0.00%	$0				
MATL MARKUP	0.00%	$0				
LABOR MARKUP	0.00%		$0			
EQUIPT MARKUP	0.00%			$0		
SUB MARKUP	0.00%				$0	
TOTAL BEFORE CONTINGENC		$1,361	$4,477	$952	$52,476	$59,266
CONTINGENCY	10.00%					$5,927
BOND	0.00%					$0
PROFIT	10.00%					$5,927
JOB TOTAL						$71,119

Estimate: BLDG 5220 Date: 14-Oct-94
Description: INFRARED HEATING SYSTEM COST ESTIMATE
Project: LIMITED EEAP(GLASSBid Date:
Location: FORT KNOX, KY Job #: 94013.02
Sq. footage: City indx:Louisville, KY

Line #	Description					
	Manhours	Matl	Labor	Equipment	Sub	Total
0913100200	115V, 20 AMP POWER WIRING INCL CONDUIT, WIRE, AND RECEPTACLES				1000.00 L.F.	
Unit values	0.15	2.22	4.57	0.00	0.00	6.79
Totals	149.00	$2,216	$4,572	$0	$0	$6,788
A09 ELECTRICAL	149	$2,216	$4,572	$0	$0	$6,788

Line #	Description	Manhours	Matl	Labor	Equipment	Sub	Total
1517010650	BLACK STEEL RADIANT PIPE, SCHEDULE 40, THREADED, 4" DIAM W/CPLGS					1000.00 L.F.	
Unit values		0.44	4.17	10.30	0.00	0.00	14.47
Totals		444.00	$4,170	$10,302	$0	$0	$14,472
1517011310	GAS SERVICE PIPE STEEL GALV SCH 40 THRD W/CPLG & HNGR SZD FOR CVRG 10'OC 1/2" DIAM					1000.00 L.F.	
Unit values		0.13	1.64	2.88	0.00	0.00	4.52
Totals		127.00	$1,640	$2,876	$0	$0	$4,516
1519010320	ALUMINUM REFLECTORS W/HANGERS					141.00 Ea.	
Unit values		0.50	39.79	3.80	0.00	0.00	43.59
Totals		70.50	$5,610	$536	$0	$0	$6,146
1524105040	VACUUM PUMP AND VENT PIPING					4.00 Ea.	
Unit values		3.00	738.35	120.15	0.00	0.00	858.50
Totals		12.00	$2,953	$481	$0	$0	$3,434
1552301020	CRV- B12 GAS FIRED BURNER 120 MBH & COMBUSTION CHAMBER					16.00 Ea.	
Unit values		1.00	900.00	44.06	0.00	0.00	944.06
Totals		16.00	$14,400	$705	$0	$0	$15,105
1574205220	ELECTRIC THERMOSTAT W/ COVER AND WIRING					4.00 Ea.	
Unit values		1.00	75.00	27.55	0.00	0.00	102.55
Totals		4.00	$300	$110	$0	$0	$410
U15 MECHANICAL		674	$29,073	$15,010	$0	$0	$44,083

Line #	Description					
	Manhours	Matl	Labor	Equipment	Sub	Total
1631200100	HEATING SYSTEM POWER / CONTROL PANEL				4.00 Ea.	
Unit values	2.96	330.76	70.58	0.00	0.00	401.34
Totals	11.85	$1,323	$282	$0	$0	$1,605
U16 ELECTRICAL	12	$1,323	$282	$0	$0	$1,605

Line #	Description					
	Manhours	Matl	Labor	Equipment	Sub	Total
ESTIMATE TOTAL	835	$32,612	$19,864	$0	$0	$52,476
SALES TAX	0.00%	$0				
MATL MARKUP	0.00%	$0				
LABOR MARKUP	0.00%		$0			
EQUIPT MARKUP	0.00%			$0		
SUB MARKUP	0.00%				$0	
TOTAL BEFORE CONTINGENC		$32,612	$19,864	$0	$0	$52,476
CONTINGENCY	0.00%					$0
BOND	0.00%					$0
PROFIT	0.00%					$0
JOB TOTAL						$52,476

Estimate: BLDG 5220 Date: 14-Oct-94
Description: INFRARED HEATING SYSTEM COST ESTIMATE
Project: LIMITED EEAP(GLASSBid Date:
Location: FORT KNOX, KY Job #: 94013.02
Sq. footage: City indx:Louisville, KY

SUMMARY

	Manhours	Matl	Labor	Equipment	Sub	Total
A09 ELECTRICAL	149	$2,216	$4,572	$0	$0	$6,788
U15 MECHANICAL	674	$29,073	$15,010	$0	$0	$44,083
U16 ELECTRICAL	12	$1,323	$282	$0	$0	$1,605
TOTAL	835	$32,612	$19,864	$0	$0	$52,476
SALES TAX	0.00%	$0				
MATL MARKUP	0.00%	$0				
LABOR MARKUP	0.00%		$0			
EQUIPT MARKUP	0.00%			$0		
SUB MARKUP	0.00%				$0	
TOTAL BEFORE CONTINGENC		$32,612	$19,864	$0	$0	$52,476
CONTINGENCY	0.00%					$0
BOND	0.00%					$0
PROFIT	0.00%					$0
JOB TOTAL						$52,476

LIFE CYCLE COST ANALYSIS SUMMARY STUDY: 5253ECO1
ENERGY CONSERVATION INVESTMENT PROGRAM (ECIP) LCCID 1.080
INSTALLATION & LOCATION: FORT KNOX REGION NOS. 4 CENSUS: 3
PROJECT NO. & TITLE: 5253ECO1 ECO-1 INFRARED HEAT
FISCAL YEAR 95 DISCRETE PORTION NAME: INFRARED
ANALYSIS DATE: 10-26-94 ECONOMIC LIFE 20 YEARS PREPARED BY: JAH

1. INVESTMENT

A. CONSTRUCTION COST	$ 41670.	
B. SIOH	$ 2084.	
C. DESIGN COST	$ 2084.	
D. TOTAL COST (1A+1B+1C)	$ 45837.	
E. SALVAGE VALUE OF EXISTING EQUIPMENT	$ 0.	
F. PUBLIC UTILITY COMPANY REBATE	$ 0.	
G. TOTAL INVESTMENT (1D - 1E - 1F)		$ 45837.

2. ENERGY SAVINGS (+) / COST (-)
DATE OF NISTIR 85-3273-X USED FOR DISCOUNT FACTORS OCT 1993

FUEL	UNIT COST $/MBTU(1)	SAVINGS MBTU/YR(2)	ANNUAL $ SAVINGS(3)	DISCOUNT FACTOR(4)	DISCOUNTED SAVINGS(5)
A. ELECT	$ .00	0.	$ 0.	15.61	$ 0.
B. DIST	$ 6.60	3528.	$ 23285.	17.56	$ 408881.
C. RESID	$ .00	0.	$ 0.	19.97	$ 0.
D. NAT G	$ 4.62	-1730.	$ -7993.	20.96	$ -167525.
E. COAL	$ .00	0.	$ 0.	17.58	$ 0.
F. LPG	$ .00	0.	$ 0.	16.12	$ 0.
M. DEMAND SAVINGS			$ 0.	14.74	$ 0.
N. TOTAL		1798.	$ 15292.		$ 241356.

3. NON ENERGY SAVINGS(+) / COST(-)

A. ANNUAL RECURRING (+/-) $ 0.
(1) DISCOUNT FACTOR (TABLE A) 14.74
(2) DISCOUNTED SAVING/COST (3A X 3A1) $ 0.

B. NON RECURRING SAVINGS(+) / COSTS(-)

ITEM	SAVINGS(+) COST(-) (1)	YR OC (2)	DISCNT FACTR (3)	DISCOUNTED SAVINGS(+)/ COST(-)(4)
1. REPAIR	$ 3548.	5	.86	3052.
2. REPAIR2	$ 3548.	15	.63	2235.
d. TOTAL	$ 7097.			5287.

C. TOTAL NON ENERGY DISCOUNTED SAVINGS(+)/COST(-)(3A2+3Bd4) $ 5287.

4. FIRST YEAR DOLLAR SAVINGS 2N3+3A+(3Bd1/(YRS ECONOMIC LIFE)) $ 15647.

5. SIMPLE PAYBACK PERIOD (1G/4) 2.93 YEARS

6. TOTAL NET DISCOUNTED SAVINGS (2N5+3C) $ 246643.

7. SAVINGS TO INVESTMENT RATIO (SIR)=(6 / 1G)= 5.38
(IF < 1 PROJECT DOES NOT QUALIFY)

8. ADJUSTED INTERNAL RATE OF RETURN (AIRR): 12.15 %

FT KNOX LIMITED EEAP (GLASS)

ECO - 1: INFRARED HEATING CALCULATIONS

BUILDING NUMBER: 5253

BUILDING HEATING TEMPERATURE SETPOINT:	60	F
OUTSIDE DESIGN TEMPERATURE	1	F
TEMPERATURE DIFFERENCE	59	F

INFILTRATION LOSSES =	1	AIR CHGS	X	411840	VOL (CU FT)	X	59	F TEMP DIFF	X 0.019	=	0.46	MBTU / HR
FLOOR LOSSES =	504	LINEAR FEET OF PERIMETER				X	59	F TEMP DIFF	X 0.81	=	0.02	MBTU / HR

SURFACE HEAT LOSSES

FLAT BUILT UP ROOF =	14976	AREA (SF)	X	0.207	U VALUE (BTU/ HR - SF - F)	X	59	F TEMPERATURE DIFFERENCE		=	0.18	MBTU / HR
8" RED BRICK WALL =		AREA (SF)	X	0.176	U VALUE (BTU/ HR - SF - F)	X	59	F TEMPERATURE DIFFERENCE		=	0.00	MBTU / HR
8" CINDER BLOCK WALL =	7559	AREA (SF)	X	0.389	U VALUE (BTU/ HR - SF - F)	X	59	F TEMPERATURE DIFFERENCE		=	0.17	MBTU / HR
CORR MTL PNL WALL =	1696	AREA (SF)	X	0.17	U VALUE (BTU/ HR - SF - F)	X	59	F TEMPERATURE DIFFERENCE		=	0.02	MBTU / HR
CLR SGL PANE WINDOWS =	2968	AREA (SF)	X	1.235	U VALUE (BTU/ HR - SF - F)	X	59	F TEMPERATURE DIFFERENCE		=	0.22	MBTU / HR
TINTED DBL PANE WIN'W =		AREA (SF)	X	0.65	U VALUE (BTU/ HR - SF - F)	X	59	F TEMPERATURE DIFFERENCE		=	0.00	MBTU / HR
METAL ROLL UP DOORS =		AREA (SF)	X	0.56	U VALUE (BTU/ HR - SF - F)	X	59	F TEMPERATURE DIFFERENCE		=	0.00	MBTU / HR
METAL GLAZED O'HEAD DR =		AREA (SF)	X	0.214	U VALUE (BTU/ HR - SF - F)	X	59	F TEMPERATURE DIFFERENCE		=	0.00	MBTU / HR
LG MTL SLIDING DOOR =	1568	AREA (SF)	X	0.56	U VALUE (BTU/ HR - SF - F)	X	59	F TEMPERATURE DIFFERENCE		=	0.05	MBTU / HR
METAL PERSONNEL DR =		AREA (SF)	X	0.56	U VALUE (BTU/ HR - SF - F)	X	59	F TEMPERATURE DIFFERENCE		=	0.00	MBTU / HR
MTL/ GLAZED PERSONNEL=		AREA (SF)	X	0.615	U VALUE (BTU/ HR - SF - F)	X	59	F TEMPERATURE DIFFERENCE		=	0.00	MBTU / HR

TOTAL BASELINE HEAT LOSSES	=	**1.13**	**MBTU / HR**
	=	**1,189.23**	**MJ/HR**

FT KNOX LIMITED EEAP (GLASS)

ECO - 1: INFRARED HEATING CALCULATIONS

BUILDING NUMBER: **5253**

BUILDING HEATING TEMPERATURE SETPOINT:	55	F
OUTSIDE DESIGN TEMPERATURE	1	F
TEMPERATURE DIFFERENCE	54	F

INFILTRATION LOSSES =	1	AIR CHGS	X	411840	VOL (CU FT)	X	54	F TEMP DIFF	X	0.019	=	0.42	MBTU / HR
FLOOR LOSSES =	504	LINEAR FEET OF PERIMETER				X	54	F TEMP DIFF	X	0.81	=	0.02	MBTU / HR

SURFACE HEAT LOSSES

FLAT BUILT UP ROOF =	14976	AREA (SF)	X	0.207	U VALUE (BTU/ HR - SF - F)	X	54	F TEMPERATURE DIFFERENCE	=	0.17	MBTU / HR
8" RED BRICK WALL =	0	AREA (SF)	X	0.176	U VALUE (BTU/ HR - SF - F)	X	54	F TEMPERATURE DIFFERENCE	=	0.00	MBTU / HR
8" CINDER BLOCK WALL =	7559	AREA (SF)	X	0.389	U VALUE (BTU/ HR - SF - F)	X	54	F TEMPERATURE DIFFERENCE	=	0.16	MBTU / HR
CORR MTL PNL WALL =	1696	AREA (SF)	X	0.17	U VALUE (BTU/ HR - SF - F)	X	54	F TEMPERATURE DIFFERENCE	=	0.02	MBTU / HR
CLR SGL PANE WINDOWS =	2968	AREA (SF)	X	1.235	U VALUE (BTU/ HR - SF - F)	X	54	F TEMPERATURE DIFFERENCE	=	0.20	MBTU / HR
TINTED DBL PANE WIN'W =	0	AREA (SF)	X	0.65	U VALUE (BTU/ HR - SF - F)	X	54	F TEMPERATURE DIFFERENCE	=	0.00	MBTU / HR
METAL ROLL UP DOORS =	0	AREA (SF)	X	0.56	U VALUE (BTU/ HR - SF - F)	X	54	F TEMPERATURE DIFFERENCE	=	0.00	MBTU / HR
METAL GLAZED O'HEAD DR =	0	AREA (SF)	X	0.214	U VALUE (BTU/ HR - SF - F)	X	54	F TEMPERATURE DIFFERENCE	=	0.00	MBTU / HR
LG MTL SLIDING DOOR =	1568	AREA (SF)	X	0.56	U VALUE (BTU/ HR - SF - F)	X	54	F TEMPERATURE DIFFERENCE	=	0.05	MBTU / HR
METAL PERSONNEL DR =	0	AREA (SF)	X	0.56	U VALUE (BTU/ HR - SF - F)	X	54	F TEMPERATURE DIFFERENCE	=	0.00	MBTU / HR
MTL/ GLAZED PERSONNEL=	0	AREA (SF)	X	0.615	U VALUE (BTU/ HR - SF - F)	X	54	F TEMPERATURE DIFFERENCE	=	0.00	MBTU / HR

TOTAL ECO HEAT LOSSES	=	**1.03**	**MBTU / HR**
	=	**1,088.44**	**MJ/HR**

FT KNOX LIMITED EEAP (GLASS)

ECO - 1: INFRARED HEATING CALCULATIONS

	BASELINE	ECO - 1
SYSTEM EFFICIENCY	60%	90%
OUTSIDE DESIGN TEMP (F)	1	1
HTG TEMP SETPOINT (F)	60	55
HEATING DEGREE DAYS	4616	3396
TOTAL HEAT LOSSES (MBTU / HR)	1.13	1.03
$ /MBTU -FUEL OIL	$6.60	$6.60
$ /MBTU -NATURAL GAS	$4.62	$4.62
$ /MBTU -PPG	$10.84	$10.84

BUILDING NUMBER **5253**

GLOSSARY OF TERMS

1 MBTU = 1055 MJ
0.019=CONSTANT
.81 = CONSTANT FOR SLAB PERIMETER UNINSULATED FROM ASHRAE
CORR FACTOR = EMPIRICAL CORRECTION FACTOR FOR HEATING EFFECT VS 65 F DEGREE-DAYS FROM ASHRAE FUNDAMENTALS 1989 PG28.2

ANNUAL HEATING ENERGY CONSUMPTION (DEGREE DAY METHOD)

BASELINE =	1.13 / 0.6	MBTU / HR X SYS EFF	4616 X 59	DEGREE DAYS X TEMP DIFFERENCE	24	HRS/DAY	=	3,527.65	MBTU/YR
	3,527.65	MBTU/YR	X	CORR FACTOR	1		=	3,527.65	MBTU/YR
ECO - 1 =	1.03 / 0.9	MBTU / HR X SYS EFF	3396 X 54	DEGREE DAYS X TEMP DIFFERENCE	24	HRS/DAY	=	1,730.20	MBTU/YR
	1,730.20	MBTU/YR	X	CORR FACTOR	1		=	1,730.20	MBTU/YR
	ECO - 1 ANNUAL HEATING ENERGY CONSUMPTION SAVINGS						=	**1,797.45**	**MBTU/YR**
							=	**1,896,311.19**	**MJ/YR**

ANNUAL HEATING ENERGY COST

BASELINE =	3,527.65	MBTU / YR X	6.6	$ /MBTU	=	23,282.50	$ /YR
ECO - 1 =	1,730.20	MBTU / YR X	4.62	$ /MBTU	=	7,993.52	$ /YR
	ECO - 1 ANNUAL HEATING ENERGY COST SAVINGS				=	**15,288.97**	**$ /YR**

Estimate: BLDG 5253 Date: 14-Oct-94
Description: COST ESTIMATE
Project: LIMITED EEAP(GLASSBid Date:
Location: FORT KNOX, KY Job #: 94013.02
Sq. footage: ******** City indx:Louisville, KY

Line #	Description	Manhours	Matl	Labor	Equipment	Sub	Total
0205541750	PAVEMENT REMOVAL, BITUMINOUS, 4" TO 6" THICK					8.00 S.Y.	
Unit values		0.10	0.00	2.09	3.02	0.00	5.11
Totals		0.76	$0	$17	$24	$0	$41
0205543200	SITE REMOVAL,STEEL PIPE,WELDED CONNECTION, 4"DIAMETER					350.00 L.F.	
Unit values		0.15	0.00	3.16	1.29	0.00	4.44
Totals		52.50	$0	$1,105	$450	$0	$1,555
0207183600	HVAC DEMO,MECH EQPT HEAVY ITEM					2.00 Ton	
Unit values		14.55	0.00	380.36	0.00	0.00	380.36
Totals		29.09	$0	$761	$0	$0	$761
0208400600	REMOVE PIPE INSULATION UP TO 4" DIAMETER PIPE					300.00 L.F.	
Unit values		0.07	0.00	1.97	0.24	0.00	2.21
Totals		21.30	$0	$592	$71	$0	$663
0208401000	REMOVE INSULATION FROM PIPE FITTING, UP TO 4" DIAMETER PIPE					100.00 Ea.	
Unit values		0.20	0.00	5.55	0.68	0.00	6.23
Totals		20.00	$0	$555	$68	$0	$623
0222541900	TAMPING TRENCH B'FILL, VIBRATING PLATE, ADD					11.00 C.Y.	
Unit values		0.09	0.00	1.74	0.67	0.00	2.41
Totals		0.98	$0	$19	$7	$0	$26
0222582800	TRENCH EXCVTNG 40HP CHNTRNCHR&BKFL 12"W24"D					70.00 L.F.	
Unit values		0.01	0.00	0.24	0.24	0.00	0.47
Totals		0.70	$0	$17	$17	$0	$34
0251040380	ASPHALTIC CONCRETE PAVEMENT, PAVING, WEARING COURSE, 2" THICK					8.00 S.Y.	
Unit values		0.02	1.90	0.33	0.30	0.00	2.53
Totals		0.12	$15	$3	$2	$0	$20

0260120200	BEDDING, FOR PIPE IN TRENCH SAND, DEAD OR BANK				3.00 C.Y.	
Unit values	0.16	2.43	3.37	1.37	0.00	7.17
Totals	0.48	$7	$10	$4	$0	$21
0260120500	BEDDING, PLACING IN TRENCH				3.00 C.Y.	
Unit values	0.09	0.00	1.74	0.67	0.00	2.41
Totals	0.27	$0	$5	$2	$0	$7
0266907800	CUT IN VALVES, W/DUCK TIP GASKET, 4" DIAMETER				1.00 Ea.	
Unit values	1.56	259.60	35.47	5.91	0.00	300.98
Totals	1.56	$260	$35	$6	$0	$301
0268520200	GAS SERVICE & DISTRIB PIPING,POLYETHYLENE,60-PSI 2" DIAM COIL SDR 11				70.00 L.F.	
Unit values	0.07	0.75	1.48	0.00	0.00	2.23
Totals	4.69	$53	$104	$0	$0	$157
0268520600	GAS SERVICE&DISTRIB PIPING,SCH40 STEEL PLAIN END,TAR COAT&WRAP 2"DIAM				100.00 L.F.	
Unit values	0.11	2.19	3.18	0.19	0.00	5.55
Totals	11.40	$219	$318	$19	$0	$556

Line #	Description					
	Manhours	Matl	Labor	Equipment	Sub	Total
U02 SITEWORK	144	$554	$3,541	$670	$0	$4,765
1554510245	HTG INFA-RD UNT GAS ELEC IGN				1.00 LS	
Unit values	0.00	0.00	0.00	0.00	29286.00	29286.00
Totals	0.00	$0	$0	$0	$29,286	$29,286
1562600137	GAS APPLIANCE REGULATORS DOUBLE DIAPHRAGM TYPE 1-1/4" PIPE SIZE				1.00 Ea.	
Unit values	0.53	226.00	12.10	0.00	0.00	238.10
Totals	0.53	$226	$12	$0	$0	$238
1562600139	GAS APPLIANCE REGULATORS DOUBLE DIAPHRAGM TYPE 2" PIPE SIZE				1.00 Ea.	
Unit values	0.73	420.00	16.42	0.00	0.00	436.42
Totals	0.73	$420	$16	$0	$0	$436
U15 MECHANICAL	2	$646	$28	$0	$29,286	$29,960

Line #	Description					
	Manhours	Matl	Labor	Equipment	Sub	Total
ESTIMATE TOTAL	146	$1,200	$3,569	$670	$29,286	$34,725
SALES TAX	0.00%	$0				
MATL MARKUP	0.00%	$0				
LABOR MARKUP	0.00%		$0			
EQUIPT MARKUP	0.00%			$0		
SUB MARKUP	0.00%				$0	
TOTAL BEFORE CONTINGENC		$1,200	$3,569	$670	$29,286	$34,725
CONTINGENCY	10.00%					$3,473
BOND	0.00%					$0
PROFIT	10.00%					$3,473
JOB TOTAL						$41,670

Estimate: BLDG 5253 Date: 14-Oct-94
Description: COST ESTIMATE
Project: LIMITED EEAP(GLASSBid Date:
Location: FORT KNOX, KY Job #: 94013.02
Sq. footage: ******** City indx:Louisville, KY

SUMMARY

	Manhours	Matl	Labor	Equipment	Sub	Total
U02 SITEWORK	144	$554	$3,541	$670	$0	$4,765
U15 MECHANICAL	2	$646	$28	$0	$29,286	$29,960
TOTAL	146	$1,200	$3,569	$670	$29,286	$34,725
SALES TAX	0.00%	$0				
MATL MARKUP	0.00%	$0				
LABOR MARKUP	0.00%		$0			
EQUIPT MARKUP	0.00%			$0		
SUB MARKUP	0.00%				$0	
TOTAL BEFORE CONTINGENC		$1,200	$3,569	$670	$29,286	$34,725
CONTINGENCY	10.00%					$3,473
BOND	0.00%					$0
PROFIT	10.00%					$3,473
JOB TOTAL						$41,670

Estimate: BLDG 5253 Date: 14-Oct-94
Description: INFRARED HEATING SYSTEM COST ESTIMATE
Project: LIMITED EEAP(GLASSBid Date:
Location: FORT KNOX, KY Job #: 94013.02
Sq. footage: City indx:Louisville, KY

Line #	Description					
	Manhours	Matl	Labor	Equipment	Sub	Total
0913100200	115V, 20 AMP POWER WIRING INCL CONDUIT, WIRE, AND RECEPTACLES				450.00 L.F.	
Unit values	0.15	2.22	4.57	0.00	0.00	6.79
Totals	67.05	$997	$2,058	$0	$0	$3,055
0913100200	CO-RAY-VAC VANTAGE 2 POWER FEEDER INSTALLATION, INCL CONDUIT, WIRE, AND RECEPTACLES				140.00 L.F.	
Unit values	0.15	2.22	4.57	0.00	0.00	6.79
Totals	20.86	$310	$640	$0	$0	$950
A09 ELECTRICAL	88	$1,307	$2,698	$0	$0	$4,005

Line #	Description	Manhours	Matl	Labor	Equipment	Sub	Total
1517010650	BLACK STEEL RADIANT PIPE, SCHEDULE 40, THREADED, 4" DIAM W/CPLGS					500.00 L.F.	
Unit values		0.44	4.17	10.30	0.00	0.00	14.47
Totals		222.00	$2,085	$5,151	$0	$0	$7,236
1517011310	GAS SERVICE PIPE STEEL GALV SCH 40 THRD W/CPLG & HNGR SZD FOR CVRG 10'OC 1/2" DIAM					640.00 L.F.	
Unit values		0.13	1.64	2.88	0.00	0.00	4.52
Totals		81.28	$1,050	$1,840	$0	$0	$2,890
1519010320	ALUMINUM REFLECTORS W/HANGERS					66.00 Ea.	
Unit values		0.50	39.79	3.80	0.00	0.00	43.59
Totals		33.00	$2,626	$251	$0	$0	$2,877
1524105040	VACUUM PUMP AND VENT PIPING					2.00 Ea.	
Unit values		3.00	738.35	120.15	0.00	0.00	858.50
Totals		6.00	$1,477	$240	$0	$0	$1,717
1552301020	CRV - B12 GAS FIRED BURNER 120 MBH & COMBUSTION CHAMBER					6.00 Ea.	
Unit values		1.00	900.00	44.06	0.00	0.00	944.06
Totals		6.00	$5,400	$264	$0	$0	$5,664
1554510160	CO RAY-VAC VANTAGE 2 INFA-RD HTG UNT, GAS 60MBH					6.00 Ea.	
Unit values		4.00	420.00	81.70	0.00	0.00	501.70
Totals		24.00	$2,520	$490	$0	$0	$3,010
1556800120	CO-RAY-VAC VANTAGE 2 VENT CHIMNEY					6.00 Ea.	
Unit values		1.60	70.00	76.50	0.00	0.00	146.50
Totals		9.60	$420	$459	$0	$0	$879
1574205220	ELECTRIC THERMOSTAT W/ COVER AND WIRING					2.00 Ea.	
Unit values		1.00	75.00	27.55	0.00	0.00	102.55
Totals		2.00	$150	$55	$0	$0	$205
U15 MECHANICAL		384	$15,728	$8,750	$0	$0	$24,478

Line #	Description					
	Manhours	Matl	Labor	Equipment	Sub	Total
1631200100	HEATING SYSTEM POWER / CONTROL PANEL				2.00 Ea.	
Unit values	2.96	330.76	70.58	0.00	0.00	401.34
Totals	5.93	$662	$141	$0	$0	$803
U16 ELECTRICAL	6	$662	$141	$0	$0	$803

Line #	Description					
	Manhours	Matl	Labor	Equipment	Sub	Total
ESTIMATE TOTAL	478	$17,697	$11,589	$0	$0	$29,286
SALES TAX	0.00%	$0				
MATL MARKUP	0.00%	$0				
LABOR MARKUP	0.00%		$0			
EQUIPT MARKUP	0.00%			$0		
SUB MARKUP	0.00%				$0	
TOTAL BEFORE CONTINGENC		$17,697	$11,589	$0	$0	$29,286
CONTINGENCY	0.00%					$0
BOND	0.00%					$0
PROFIT	0.00%					$0
JOB TOTAL						$29,286

Estimate: BLDG 5253 Date: 14-Oct-94
Description: INFRARED HEATING SYSTEM COST ESTIMATE
Project: LIMITED EEAP(GLASSBid Date:
Location: FORT KNOX, KY Job #: 94013.02
Sq. footage: City indx:Louisville, KY

SUMMARY

	Manhours	Matl	Labor	Equipment	Sub	Total
A09 ELECTRICAL	88	$1,307	$2,698	$0	$0	$4,005
U15 MECHANICAL	384	$15,728	$8,750	$0	$0	$24,478
U16 ELECTRICAL	6	$662	$141	$0	$0	$803
TOTAL	478	$17,697	$11,589	$0	$0	$29,286
SALES TAX	0.00%	$0				
MATL MARKUP	0.00%	$0				
LABOR MARKUP	0.00%		$0			
EQUIPT MARKUP	0.00%			$0		
SUB MARKUP	0.00%				$0	
TOTAL BEFORE CONTINGENC		$17,697	$11,589	$0	$0	$29,286
CONTINGENCY	0.00%					$0
BOND	0.00%					$0
PROFIT	0.00%					$0
JOB TOTAL						$29,286

LIFE CYCLE COST ANALYSIS SUMMARY STUDY: 6113ECO1
ENERGY CONSERVATION INVESTMENT PROGRAM (ECIP) LCCID 1.080
INSTALLATION & LOCATION: FORT KNOX REGION NOS. 4 CENSUS: 3
PROJECT NO. & TITLE: 6113ECO1 ECO-1 INFRARED HEAT
FISCAL YEAR 95 DISCRETE PORTION NAME: INFRARED
ANALYSIS DATE: 10-18-94 ECONOMIC LIFE 20 YEARS PREPARED BY: JAH

1. INVESTMENT

A. CONSTRUCTION COST	$ 457980.		
B. SIOH	$ 22899.		
C. DESIGN COST	$ 22899.		
D. TOTAL COST (1A+1B+1C)	$ 503778.		
E. SALVAGE VALUE OF EXISTING EQUIPMENT		$ 0.	
F. PUBLIC UTILITY COMPANY REBATE		$ 0.	
G. TOTAL INVESTMENT (1D - 1E - 1F)			$ 503778.

2. ENERGY SAVINGS (+) / COST (-)
DATE OF NISTIR 85-3273-X USED FOR DISCOUNT FACTORS OCT 1993

FUEL	UNIT COST $/MBTU(1)	SAVINGS MBTU/YR(2)	ANNUAL $ SAVINGS(3)	DISCOUNT FACTOR(4)	DISCOUNTED SAVINGS(5)
A. ELECT	$ .00	0.	$ 0.	15.61	$ 0.
B. DIST	$ 6.60	14811.	$ 97756.	17.56	$ 1716591.
C. RESID	$ .00	0.	$ 0.	19.97	$ 0.
D. NAT G	$ 4.62	-7265.	$ -33562.	20.96	$ -703465.
E. COAL	$ .00	0.	$ 0.	17.58	$ 0.
F. LPG	$ .00	0.	$ 0.	16.12	$ 0.
M. DEMAND SAVINGS			$ 0.	14.74	$ 0.
N. TOTAL		7547.	$ 64194.		$ 1013126.

3. NON ENERGY SAVINGS(+) / COST(-)

A. ANNUAL RECURRING (+/-) $ 3960.
(1) DISCOUNT FACTOR (TABLE A) 14.74
(2) DISCOUNTED SAVING/COST (3A X 3A1) $ 58370.

B. NON RECURRING SAVINGS(+) / COSTS(-)

ITEM	SAVINGS(+) COST(-) (1)	YR OC (2)	DISCNT FACTR (3)	DISCOUNTED SAVINGS(+)/ COST(-)(4)
1. REPAIR	$ 47903.	5	.86	41197.
2. REPAIR2	$ 47903.	15	.63	30179.
3. REPAIR3	$ 3636.	7	.81	2945.
4. REPAIR4	$ 3636.	14	.65	2364.
5. ENVIR	$ 88261.	3	.91	80318.
d. TOTAL	$ 191341.			157003.

C. TOTAL NON ENERGY DISCOUNTED SAVINGS(+)/COST(-)(3A2+3Bd4) $ 215373.

4. FIRST YEAR DOLLAR SAVINGS 2N3+3A+(3Bd1/(YRS ECONOMIC LIFE)) $ 77721.

5. SIMPLE PAYBACK PERIOD (1G/4) 6.48 YEARS

6. TOTAL NET DISCOUNTED SAVINGS (2N5+3C) $ 1228500.

7. SAVINGS TO INVESTMENT RATIO (SIR)=(6 / 1G)= 2.44
(IF < 1 PROJECT DOES NOT QUALIFY)

8. ADJUSTED INTERNAL RATE OF RETURN (AIRR): 7.80 %

Estimate: 61XX AREA Date: 06-Aug-94
Description: COST ESTIMATE
Project: LIMITED EEAP(GLASSBid Date:
Location: FORT KNOX, KY Job #: 94013.02
Sq. footage: MAIN GAS LINE City indx:Louisville, KY

Line #	Description	Manhours	Matl	Labor	Equipment	Sub	Total
0222541900	TAMPING TRENCH B'FILL, VIBRATING PLATE, ADD					122.50 C.Y.	
Unit values		0.09	0.00	1.74	0.67	0.00	2.41
Totals		10.90	$0	$213	$82	$0	$295
0222582800	TRENCH EXCVTNG 40HP CHNTRNCHR&BKFL 12"W24"D					1650.00 L.F.	
Unit values		0.01	0.00	0.24	0.24	0.00	0.47
Totals		16.50	$0	$390	$390	$0	$780
0260120200	BEDDING, FOR PIPE IN TRENCH SAND, DEAD OR BANK					31.00 C.Y.	
Unit values		0.16	2.43	3.37	1.37	0.00	7.17
Totals		4.96	$75	$105	$42	$0	$222
0260120500	BEDDING, PLACING IN TRENCH					31.00 C.Y.	
Unit values		0.09	0.00	1.74	0.67	0.00	2.41
Totals		2.76	$0	$54	$21	$0	$75
0266907800	CUT IN VALVES, W/DUCK TIP GASKET, 4" DIAMETER					1.00 Ea.	
Unit values		1.56	259.60	35.47	5.91	0.00	300.98
Totals		1.56	$260	$35	$6	$0	$301
0268520350	GAS SERVICE & DISTRIB PIPINGPOLYETHYLENE,60P-SI 4"DIA,SDR11,CPLG@40FT					1650.00 L.F.	
Unit values		0.11	2.43	2.45	0.41	0.00	5.29
Totals		178.20	$4,016	$4,037	$678	$0	$8,731
U02 SITEWORK		215	$4,351	$4,834	$1,219	$0	$10,404

Line #	Description					
	Manhours	Matl	Labor	Equipment	Sub	Total
1562600142	GAS APPLIANCE REGULATORS DOUBLE DIAPHRAGM TYPE 4" PIPE SIZE				1.00 Ea.	
Unit values	2.00	1450.00	40.85	0.00	0.00	1490.85
Totals	2.00	$1,450	$41	$0	$0	$1,491
U15 MECHANICAL	2	$1,450	$41	$0	$0	$1,491

Line #	Description					
	Manhours	Matl	Labor	Equipment	Sub	Total
ESTIMATE TOTAL	217	$5,801	$4,875	$1,219	$0	$11,895
SALES TAX	0.00%	$0				
MATL MARKUP	0.00%	$0				
LABOR MARKUP	0.00%		$0			
EQUIPT MARKUP	0.00%			$0		
SUB MARKUP	0.00%				$0	
TOTAL BEFORE CONTINGENC		$5,801	$4,875	$1,219	$0	$11,895
CONTINGENCY	10.00%					$1,190
BOND	0.00%					$0
PROFIT	10.00%					$1,190
JOB TOTAL						$14,274

Estimate:	61XX AREA	Date:	06-Aug-94
Description:	COST ESTIMATE		
Project:	LIMITED EEAP(GLASS	Bid Date:	
Location:	FORT KNOX, KY	Job #:	94013.02
Sq. footage:	MAIN GAS LINE	City indx:	Louisville, KY

SUMMARY

	Manhours	Matl	Labor	Equipment	Sub	Total
U02 SITEWORK	215	$4,351	$4,834	$1,219	$0	$10,404
U15 MECHANICAL	2	$1,450	$41	$0	$0	$1,491
TOTAL	217	$5,801	$4,875	$1,219	$0	$11,895
SALES TAX	0.00%	$0				
MATL MARKUP	0.00%	$0				
LABOR MARKUP	0.00%		$0			
EQUIPT MARKUP	0.00%			$0		
SUB MARKUP	0.00%				$0	
TOTAL BEFORE CONTINGENC		$5,801	$4,875	$1,219	$0	$11,895
CONTINGENCY	10.00%					$1,190
BOND	0.00%					$0
PROFIT	10.00%					$1,190
JOB TOTAL						$14,274

Estimate: 611X AREA Date: 06-Aug-94
Description: COST ESTIMATE
Project: LIMITED EEAP(GLASSBid Date:
Location: FORT KNOX, KY Job #: 94013.02
Sq. footage: SUBMAIN GAS LINE City indx:Louisville, KY

Line #	Description	Manhours	Matl	Labor	Equipment	Sub	Total
0222541900	TAMPING TRENCH B'FILL, VIBRATING PLATE, ADD					44.00 C.Y.	
Unit values		0.09	0.00	1.74	0.67	0.00	2.41
Totals		3.92	$0	$76	$29	$0	$105
0222582800	TRENCH EXCVTNG 40HP CHNTRNCHR&BKFL 12"W24"D					590.00 L.F.	
Unit values		0.01	0.00	0.24	0.24	0.00	0.47
Totals		5.90	$0	$139	$139	$0	$278
0222700100	HORZ BORNG, .5"WALL, 3"DIA CASING, ROCKY SOIL					410.00 L.F.	
Unit values		0.03	15.58	0.62	0.10	10000.00	10016.30
Totals		11.89	$6,386	$253	$42	$10,000	$16,681
0260120200	BEDDING, FOR PIPE IN TRENCH SAND, DEAD OR BANK					11.00 C.Y.	
Unit values		0.16	2.43	3.37	1.37	0.00	7.17
Totals		1.76	$27	$37	$15	$0	$79
0260120500	BEDDING, PLACING IN TRENCH					11.00 C.Y.	
Unit values		0.09	0.00	1.74	0.67	0.00	2.41
Totals		0.98	$0	$19	$7	$0	$26
0266907800	CUT IN VALVES, W/DUCK TIP GASKET, 4" DIAMETER					1.00 Ea.	
Unit values		1.56	259.60	35.47	5.91	0.00	300.98
Totals		1.56	$260	$35	$6	$0	$301
0268520200	GAS SERVICE & DISTRIB PIPING,POLYETHYLENE,60-PSI 2" DIAM COIL SDR 11					1000.00 L.F.	
Unit values		0.07	0.75	1.48	0.00	0.00	2.23
Totals		67.00	$753	$1,480	$0	$0	$2,233
U02 SITEWORK		93	$7,426	$2,039	$238	$10,000	$19,703

Line #	Description					
	Manhours	Matl	Labor	Equipment	Sub	Total
1562600139	GAS APPLIANCE REGULATORS DOUBLE DIAPHRAGM TYPE 2" PIPE SIZE				1.00 Ea.	
Unit values	0.73	420.00	16.42	0.00	0.00	436.42
Totals	0.73	$420	$16	$0	$0	$436
U15 MECHANICAL	1	$420	$16	$0	$0	$436

Line #	Description					
	Manhours	Matl	Labor	Equipment	Sub	Total
ESTIMATE TOTAL	94	$7,846	$2,055	$238	$10,000	$20,139
SALES TAX	0.00%	$0				
MATL MARKUP	0.00%	$0				
LABOR MARKUP	0.00%		$0			
EQUIPT MARKUP	0.00%			$0		
SUB MARKUP	0.00%				$0	
TOTAL BEFORE CONTINGENC		$7,846	$2,055	$238	$10,000	$20,139
CONTINGENCY	10.00%					$2,014
BOND	0.00%					$0
PROFIT	10.00%					$2,014
JOB TOTAL						$24,167

Estimate:	611X AREA	Date:	06-Aug-94
Description:	COST ESTIMATE		
Project:	LIMITED EEAP(GLASS	Bid Date:	
Location:	FORT KNOX, KY	Job #:	94013.02
Sq. footage:	SUBMAIN GAS LINE	City indx:	Louisville, KY

SUMMARY

	Manhours	Matl	Labor	Equipment	Sub	Total
U02 SITEWORK	93	$7,426	$2,039	$238	$10,000	$19,703
U15 MECHANICAL	1	$420	$16	$0	$0	$436
TOTAL	94	$7,846	$2,055	$238	$10,000	$20,139
SALES TAX	0.00%	$0				
MATL MARKUP	0.00%	$0				
LABOR MARKUP	0.00%		$0			
EQUIPT MARKUP	0.00%			$0		
SUB MARKUP	0.00%				$0	
TOTAL BEFORE CONTINGENC		$7,846	$2,055	$238	$10,000	$20,139
CONTINGENCY	10.00%					$2,014
BOND	0.00%					$0
PROFIT	10.00%					$2,014
JOB TOTAL						$24,167

Estimate:	BLDG 6113	Date:	14-Oct-94
Description:	COST ESTIMATE		
Project:	LIMITED EEAP(GLASS	Bid Date:	
Location:	FORT KNOX, KY	Job #:	94013.02
Sq. footage:	6900.00	City indx:	Louisville, KY

Line #	Description	Manhours	Matl	Labor	Equipment	Sub	Total
0205543200	SITE REMOVAL,STEEL PIPE,WELDED CONNECTION, 4"DIAMETER					320.00 L.F.	
Unit values		0.15	0.00	3.16	1.29	0.00	4.44
Totals		48.00	$0	$1,010	$411	$0	$1,421
0207183600	HVAC DEMO,MECH EQPT HEAVY ITEM					0.75 Ton	
Unit values		14.55	0.00	380.36	0.00	0.00	380.36
Totals		10.91	$0	$285	$0	$0	$285
0208400600	REMOVE PIPE INSULATION UP TO 4" DIAMETER PIPE					170.00 L.F.	
Unit values		0.07	0.00	1.97	0.24	0.00	2.21
Totals		12.07	$0	$336	$40	$0	$376
0208401000	REMOVE INSULATION FROM PIPE FITTING, UP TO 4" DIAMETER PIPE					50.00 Ea.	
Unit values		0.20	0.00	5.55	0.68	0.00	6.23
Totals		10.00	$0	$278	$34	$0	$312
0266907800	CUT IN VALVES, W/DUCK TIP GASKET, 4" DIAMETER					1.00 Ea.	
Unit values		1.56	259.60	35.47	5.91	0.00	300.98
Totals		1.56	$260	$35	$6	$0	$301
0268520550	GAS SERVICE&DISTRIB PIPING,SCH40 STEEL PLAIN END,TAR COAT&WRAP 1"DIAM					50.00 L.F.	
Unit values		0.11	1.92	2.96	0.17	0.00	5.06
Totals		5.35	$96	$148	$9	$0	$253
U02 SITEWORK		88	$356	$2,092	$500	$0	$2,948

Line #	Description	Manhours	Matl	Labor	Equipment	Sub	Total
1554510245	HTG INFA-RD UNT GAS ELEC IGN (See Attached for Breakdown)					1.00 LS	
Unit values		8.00	760.00	163.40	0.00	21687.00	22610.40
Totals		8.00	$760	$163	$0	$21,687	$22,610
1562600137	GAS APPLIANCE REGULATORS DOUBLE DIAPHRAGM TYPE 1-1/4" PIPE SIZE					1.00 Ea.	
Unit values		0.53	226.00	12.10	0.00	0.00	238.10
Totals		0.53	$226	$12	$0	$0	$238
U15 MECHANICAL		9	$986	$175	$0	$21,687	$22,848

Line #	Description					
	Manhours	Matl	Labor	Equipment	Sub	Total
ESTIMATE TOTAL	97	$1,342	$2,267	$500	$21,687	$25,796
SALES TAX	0.00%	$0				
MATL MARKUP	0.00%	$0				
LABOR MARKUP	0.00%		$0			
EQUIPT MARKUP	0.00%			$0		
SUB MARKUP	0.00%				$0	
TOTAL BEFORE CONTINGENC		$1,342	$2,267	$500	$21,687	$25,796
CONTINGENCY	10.00%					$2,580
BOND	0.00%					$0
PROFIT	10.00%					$2,580
JOB TOTAL						$30,955

Estimate:	BLDG 6113	Date:	14-Oct-94
Description:	COST ESTIMATE		
Project:	LIMITED EEAP(GLASS	Bid Date:	
Location:	FORT KNOX, KY	Job #:	94013.02
Sq. footage:	6900.00	City indx:	Louisville, KY

SUMMARY

	Manhours	Matl	Labor	Equipment	Sub	Total
U02 SITEWORK	88	$356	$2,092	$500	$0	$2,948
U15 MECHANICAL	9	$986	$175	$0	$21,687	$22,848
TOTAL	97	$1,342	$2,267	$500	$21,687	$25,796
SALES TAX	0.00%	$0				
MATL MARKUP	0.00%	$0				
LABOR MARKUP	0.00%		$0			
EQUIPT MARKUP	0.00%			$0		
SUB MARKUP	0.00%				$0	
TOTAL BEFORE CONTINGENC		$1,342	$2,267	$500	$21,687	$25,796
CONTINGENCY	10.00%					$2,580
BOND	0.00%					$0
PROFIT	10.00%					$2,580
JOB TOTAL						$30,955

Estimate:	BLDG 6113	Date:	14-Oct-94
Description:	INFRARED HEATING SYSTEM COST ESTIMATE		
Project:	LIMITED EEAP(GLASS	Bid Date:	
Location:	FORT KNOX, KY	Job #:	94013.02
Sq. footage:		City indx:	Louisville, KY

Line #	Description	Manhours	Matl	Labor	Equipment	Sub	Total
0913100200	115V, 20 AMP POWER WIRING INCL CONDUIT, WIRE, AND RECEPTACLES					230.00 L.F.	
Unit values		0.15	2.22	4.57	0.00	0.00	6.79
Totals		34.27	$510	$1,052	$0	$0	$1,562
0913100200	CO-RAY-VAC VANTAGE 2 POWER FEEDER INSTALLATION, INCL CONDUIT, WIRE, AND RECEPTACLES					120.00 L.F.	
Unit values		0.15	2.22	4.57	0.00	0.00	6.79
Totals		17.88	$266	$549	$0	$0	$815
A09 ELECTRICAL		53	$776	$1,601	$0	$0	$2,377

Line #	Description					
	Manhours	Matl	Labor	Equipment	Sub	Total
1517010650	BLACK STEEL RADIANT PIPE, SCHEDULE 40, THREADED, 4" DIAM W/CPLGS				220.00 L.F.	
Unit values	0.44	4.17	10.30	0.00	0.00	14.47
Totals	97.68	$917	$2,267	$0	$0	$3,184
1517011310	GAS SERVICE PIPE STEEL GALV SCH 40 THRD W/CPLG & HNGR SZD FOR CVRG 10'OC 1/2" DIAM				340.00 L.F.	
Unit values	0.13	1.64	2.88	0.00	0.00	4.52
Totals	43.18	$558	$978	$0	$0	$1,536
1519010320	ALUMINUM REFLECTORS W/HANGERS				29.00 Ea.	
Unit values	0.50	39.79	3.80	0.00	0.00	43.59
Totals	14.50	$1,154	$110	$0	$0	$1,264
1524105040	VACUUM PUMP AND VENT PIPING				1.00 Ea.	
Unit values	3.00	738.35	120.15	0.00	0.00	858.50
Totals	3.00	$738	$120	$0	$0	$858
1552301020	CRV-90 GAS FIRED BURNER, 90 MBH & COMBUSTION CHAMBER				6.00 Ea.	
Unit values	1.00	860.00	44.06	0.00	0.00	904.06
Totals	6.00	$5,160	$264	$0	$0	$5,424
1554510160	CO-RAY-VAC VANTAGE 2 INFA-RD HTG UNT, GAS 100MBH				1.00 Ea.	
Unit values	6.00	1065.00	163.40	0.00	0.00	1228.40
Totals	6.00	$1,065	$163	$0	$0	$1,228
1554510220	CO-RAY-VAC VANTAGE 2 INFA-RD HTG UNIT, GAS 40 MBH				4.00 Ea.	
Unit values	4.00	935.00	81.70	0.00	0.00	1016.70
Totals	16.00	$3,740	$327	$0	$0	$4,067
1556800120	CO-RAY-VAC VANTAGE 2 VENT PIPE				5.00 Ea.	
Unit values	1.60	70.00	76.50	0.00	0.00	146.50
Totals	8.00	$350	$382	$0	$0	$732
1574205220	ELECTRIC THERMOSTAT W/ COVER AND WIRING				6.00 Ea.	
Unit values	1.00	75.00	27.55	0.00	0.00	102.55
Totals	6.00	$450	$165	$0	$0	$615

Line #	Description					
	Manhours	Matl	Labor	Equipment	Sub	Total
U15 MECHANICAL	201	$14,132	$4,776	$0	$0	$18,908
1631200100	HEATING SYSTEM POWER / CONTROL PANEL					
					1.00 Ea.	
Unit values	2.96	330.76	70.58	0.00	0.00	401.34
Totals	2.96	$331	$71	$0	$0	$402
U16 ELECTRICAL	3	$331	$71	$0	$0	$402

Line #	Description					
	Manhours	Matl	Labor	Equipment	Sub	Total
ESTIMATE TOTAL	257	$15,239	$6,448	$0	$0	$21,687
SALES TAX	0.00%	$0				
MATL MARKUP	0.00%	$0				
LABOR MARKUP	0.00%		$0			
EQUIPT MARKUP	0.00%			$0		
SUB MARKUP	0.00%				$0	
TOTAL BEFORE CONTINGENC		$15,239	$6,448	$0	$0	$21,687
CONTINGENCY	0.00%					$0
BOND	0.00%					$0
PROFIT	0.00%					$0
JOB TOTAL						$21,687

Estimate: BLDG 6113 Date: 14-Oct-94
Description: INFRARED HEATING SYSTEM COST ESTIMATE
Project: LIMITED EEAP(GLASSBid Date:
Location: FORT KNOX, KY Job #: 94013.02
Sq. footage: City indx:Louisville, KY

SUMMARY

	Manhours	Matl	Labor	Equipment	Sub	Total
A09 ELECTRICAL	53	$776	$1,601	$0	$0	$2,377
U15 MECHANICAL	201	$14,132	$4,776	$0	$0	$18,908
U16 ELECTRICAL	3	$331	$71	$0	$0	$402
TOTAL	257	$15,239	$6,448	$0	$0	$21,687
SALES TAX	0.00%	$0				
MATL MARKUP	0.00%	$0				
LABOR MARKUP	0.00%		$0			
EQUIPT MARKUP	0.00%			$0		
SUB MARKUP	0.00%				$0	
TOTAL BEFORE CONTINGENC		$15,239	$6,448	$0	$0	$21,687
CONTINGENCY	0.00%					$0
BOND	0.00%					$0
PROFIT	0.00%					$0
JOB TOTAL						$21,687

Estimate:	BLDG 6114	Date:	14-Oct-94
Description:	COST ESTIMATE		
Project:	LIMITED EEAP(GLASS	Bid Date:	
Location:	FORT KNOX, KY	Job #:	94013.02
Sq. footage:	6900.00	City indx:	Louisville, KY

Line #	Description	Manhours	Matl	Labor	Equipment	Sub	Total
0205543200	SITE REMOVAL,STEEL PIPE,WELDED CONNECTION, 4"DIAMETER					320.00 L.F.	
Unit values		0.15	0.00	3.16	1.29	0.00	4.44
Totals		48.00	$0	$1,010	$411	$0	$1,421
0207180380	HVAC DEMO,BOILER GAS/OIL STL >150MBH					1.00 Ea.	
Unit values		12.00	0.00	323.82	0.00	0.00	323.82
Totals		12.00	$0	$324	$0	$0	$324
0207183600	HVAC DEMO,MECH EQPT HEAVY ITEM					0.75 Ton	
Unit values		14.55	0.00	380.36	0.00	0.00	380.36
Totals		10.91	$0	$285	$0	$0	$285
0208400600	REMOVE PIPE INSULATION UP TO 4" DIAMETER PIPE					170.00 L.F.	
Unit values		0.07	0.00	1.97	0.24	0.00	2.21
Totals		12.07	$0	$336	$40	$0	$376
0208401000	REMOVE INSULATION FROM PIPE FITTING, UP TO 4" DIAMETER PIPE					50.00 Ea.	
Unit values		0.20	0.00	5.55	0.68	0.00	6.23
Totals		10.00	$0	$278	$34	$0	$312
0266907800	CUT IN VALVES, W/DUCK TIP GASKET, 4" DIAMETER					1.00 Ea.	
Unit values		1.56	259.60	35.47	5.91	0.00	300.98
Totals		1.56	$260	$35	$6	$0	$301
0268520550	GAS SERVICE&DISTRIB PIPING,SCH40 STEEL PLAIN END,TAR COAT&WRAP 1"DIAM					50.00 L.F.	
Unit values		0.11	1.92	2.96	0.17	0.00	5.06
Totals		5.35	$96	$148	$9	$0	$253
U02 SITEWORK		100	$356	$2,416	$500	$0	$3,272

Line #	Description					
	Manhours	Matl	Labor	Equipment	Sub	Total
1554510245	HTG INFA-RD UNT GAS ELEC IGN (See Attached for Breakdown					
					1.00 LS	
Unit values	8.00	760.00	163.40	0.00	21687.00	22610.40
Totals	8.00	$760	$163	$0	$21,687	$22,610
1562600137	GAS APPLIANCE REGULATORS DOUBLE DIAPHRAGM TYPE 1-1/4" PIPE SIZE				1.00 Ea.	
Unit values	0.53	226.00	12.10	0.00	0.00	238.10
Totals	0.53	$226	$12	$0	$0	$238
U15 MECHANICAL	9	$986	$175	$0	$21,687	$22,848

Line #	Description					
	Manhours	Matl	Labor	Equipment	Sub	Total
ESTIMATE TOTAL	109	$1,342	$2,591	$500	$21,687	$26,120
SALES TAX	0.00%	$0				
MATL MARKUP	0.00%	$0				
LABOR MARKUP	0.00%		$0			
EQUIPT MARKUP	0.00%			$0		
SUB MARKUP	0.00%				$0	
TOTAL BEFORE CONTINGENC		$1,342	$2,591	$500	$21,687	$26,120
CONTINGENCY	10.00%					$2,612
BOND	0.00%					$0
PROFIT	10.00%					$2,612
JOB TOTAL						$31,344

Estimate:	BLDG 6114	Date:	14-Oct-94
Description:	COST ESTIMATE		
Project:	LIMITED EEAP(GLASS	Bid Date:	
Location:	FORT KNOX, KY	Job #:	94013.02
Sq. footage:	6900.00	City indx:	Louisville, KY

SUMMARY

	Manhours	Matl	Labor	Equipment	Sub	Total
U02 SITEWORK	100	$356	$2,416	$500	$0	$3,272
U15 MECHANICAL	9	$986	$175	$0	$21,687	$22,848
TOTAL	109	$1,342	$2,591	$500	$21,687	$26,120
SALES TAX	0.00%	$0				
MATL MARKUP	0.00%	$0				
LABOR MARKUP	0.00%		$0			
EQUIPT MARKUP	0.00%			$0		
SUB MARKUP	0.00%				$0	
TOTAL BEFORE CONTINGENC		$1,342	$2,591	$500	$21,687	$26,120
CONTINGENCY	10.00%					$2,612
BOND	0.00%					$0
PROFIT	10.00%					$2,612
JOB TOTAL						$31,344

Estimate: BLDG 6114 Date: 14-Oct-94
Description: INFRARED HEATING SYSTEM COST ESTIMATE
Project: LIMITED EEAP(GLASSBid Date:
Location: FORT KNOX, KY Job #: 94013.02
Sq. footage: City indx:Louisville, KY

Line #	Description					
	Manhours	Matl	Labor	Equipment	Sub	Total
0913100200	115V, 20 AMP POWER WIRING INCL CONDUIT, WIRE, AND RECEPTACLES				230.00 L.F.	
Unit values	0.15	2.22	4.57	0.00	0.00	6.79
Totals	34.27	$510	$1,052	$0	$0	$1,562
0913100200	CO-RAY-VAC VANTAGE 2 POWER FEEDER INSTALLATION, INCL CONDUIT, WIRE, AND RECEPTACLES				120.00 L.F.	
Unit values	0.15	2.22	4.57	0.00	0.00	6.79
Totals	17.88	$266	$549	$0	$0	$815
A09 ELECTRICAL	53	$776	$1,601	$0	$0	$2,377

Line #	Description	Manhours	Matl	Labor	Equipment	Sub	Total
1517010650	BLACK STEEL RADIANT PIPE, SCHEDULE 40, THREADED, 4" DIAM W/CPLGS					220.00 L.F.	
Unit values		0.44	4.17	10.30	0.00	0.00	14.47
Totals		97.68	$917	$2,267	$0	$0	$3,184
1517011310	GAS SERVICE PIPE STEEL GALV SCH 40 THRD W/CPLG & HNGR SZD FOR CVRG 10'OC 1/2" DIAM					340.00 L.F.	
Unit values		0.13	1.64	2.88	0.00	0.00	4.52
Totals		43.18	$558	$978	$0	$0	$1,536
1519010320	ALUMINUM REFLECTORS W/HANGERS					29.00 Ea.	
Unit values		0.50	39.79	3.80	0.00	0.00	43.59
Totals		14.50	$1,154	$110	$0	$0	$1,264
1524105040	VACUUM PUMP AND VENT PIPING					1.00 Ea.	
Unit values		3.00	738.35	120.15	0.00	0.00	858.50
Totals		3.00	$738	$120	$0	$0	$858
1552301020	CRV-90 GAS FIRED BURNER, 90 MBH & COMBUSTION CHAMBER					6.00 Ea.	
Unit values		1.00	860.00	44.06	0.00	0.00	904.06
Totals		6.00	$5,160	$264	$0	$0	$5,424
1554510160	CO-RAY-VAC VANTAGE 2 INFA-RD HTG UNT, GAS 100MBH					1.00 Ea.	
Unit values		6.00	1065.00	163.40	0.00	0.00	1228.40
Totals		6.00	$1,065	$163	$0	$0	$1,228
1554510220	CO-RAY-VAC VANTAGE 2 INFA-RD HTG UNIT, GAS 40 MBH					4.00 Ea.	
Unit values		4.00	935.00	81.70	0.00	0.00	1016.70
Totals		16.00	$3,740	$327	$0	$0	$4,067
1556800120	CO-RAY-VAC VANTAGE 2 VENT PIPE					5.00 Ea.	
Unit values		1.60	70.00	76.50	0.00	0.00	146.50
Totals		8.00	$350	$382	$0	$0	$732
1574205220	ELECTRIC THERMOSTAT W/ COVER AND WIRING					6.00 Ea.	
Unit values		1.00	75.00	27.55	0.00	0.00	102.55
Totals		6.00	$450	$165	$0	$0	$615

Line #	Description					
	Manhours	Matl	Labor	Equipment	Sub	Total
U15 MECHANICAL	201	$14,132	$4,776	$0	$0	$18,908
1631200100	HEATING SYSTEM POWER / CONTROL PANEL					
					1.00 Ea.	
Unit values	2.96	330.76	70.58	0.00	0.00	401.34
Totals	2.96	$331	$71	$0	$0	$402
U16 ELECTRICAL	3	$331	$71	$0	$0	$402

Line #	Description					
	Manhours	Matl	Labor	Equipment	Sub	Total
ESTIMATE TOTAL	257	$15,239	$6,448	$0	$0	$21,687
SALES TAX	0.00%	$0				
MATL MARKUP	0.00%	$0				
LABOR MARKUP	0.00%		$0			
EQUIPT MARKUP	0.00%			$0		
SUB MARKUP	0.00%				$0	
TOTAL BEFORE CONTINGENC		$15,239	$6,448	$0	$0	$21,687
CONTINGENCY	0.00%					$0
BOND	0.00%					$0
PROFIT	0.00%					$0
JOB TOTAL						$21,687

Estimate: BLDG 6114 Date: 14-Oct-94
Description: INFRARED HEATING SYSTEM COST ESTIMATE
Project: LIMITED EEAP(GLASSBid Date:
Location: FORT KNOX, KY Job #: 94013.02
Sq. footage: City indx:Louisville, KY

SUMMARY

	Manhours	Matl	Labor	Equipment	Sub	Total
A09 ELECTRICAL	53	$776	$1,601	$0	$0	$2,377
U15 MECHANICAL	201	$14,132	$4,776	$0	$0	$18,908
U16 ELECTRICAL	3	$331	$71	$0	$0	$402
TOTAL	257	$15,239	$6,448	$0	$0	$21,687
SALES TAX	0.00%	$0				
MATL MARKUP	0.00%	$0				
LABOR MARKUP	0.00%		$0			
EQUIPT MARKUP	0.00%			$0		
SUB MARKUP	0.00%				$0	
TOTAL BEFORE CONTINGENC		$15,239	$6,448	$0	$0	$21,687
CONTINGENCY	0.00%					$0
BOND	0.00%					$0
PROFIT	0.00%					$0
JOB TOTAL						$21,687

Estimate: BLDG 6115 Date: 14-Oct-94
Description: COST ESTIMATE
Project: LIMITED EEAP(GLASSBid Date:
Location: FORT KNOX, KY Job #: 94013.02
Sq. footage: 6900.00 City indx:Louisville, KY

Line #	Description					
	Manhours	Matl	Labor	Equipment	Sub	Total
0205543200	SITE REMOVAL,STEEL PIPE,WELDED CONNECTION, 4"DIAMETER				320.00 L.F.	
Unit values	0.15	0.00	3.16	1.29	0.00	4.44
Totals	48.00	$0	$1,010	$411	$0	$1,421
0207183600	HVAC DEMO,MECH EQPT HEAVY ITEM				0.75 Ton	
Unit values	14.55	0.00	380.36	0.00	0.00	380.36
Totals	10.91	$0	$285	$0	$0	$285
0208400600	REMOVE PIPE INSULATION UP TO 4" DIAMETER PIPE				170.00 L.F.	
Unit values	0.07	0.00	1.97	0.24	0.00	2.21
Totals	12.07	$0	$336	$40	$0	$376
0208401000	REMOVE INSULATION FROM PIPE FITTING, UP TO 4" DIAMETER PIPE				50.00 Ea.	
Unit values	0.20	0.00	5.55	0.68	0.00	6.23
Totals	10.00	$0	$278	$34	$0	$312
0266907800	CUT IN VALVES, W/DUCK TIP GASKET, 4" DIAMETER				1.00 Ea.	
Unit values	1.56	259.60	35.47	5.91	0.00	300.98
Totals	1.56	$260	$35	$6	$0	$301
0268520550	GAS SERVICE&DISTRIB PIPING,SCH40 STEEL PLAIN END,TAR COAT&WRAP 1"DIAM				50.00 L.F.	
Unit values	0.11	1.92	2.96	0.17	0.00	5.06
Totals	5.35	$96	$148	$9	$0	$253
U02 SITEWORK	88	$356	$2,092	$500	$0	$2,948

Line #	Description					
	Manhours	Matl	Labor	Equipment	Sub	Total
1554510245	HTG INFA-RD UNT GAS ELEC IGN (See Attached for Breakdown)				1.00 LS	
Unit values	8.00	760.00	163.40	0.00	21687.00	22610.40
Totals	8.00	$760	$163	$0	$21,687	$22,610
1562600137	GAS APPLIANCE REGULATORS DOUBLE DIAPHRAGM TYPE 1-1/4" PIPE SIZE				1.00 Ea.	
Unit values	0.53	226.00	12.10	0.00	0.00	238.10
Totals	0.53	$226	$12	$0	$0	$238
U15 MECHANICAL	9	$986	$175	$0	$21,687	$22,848

Line #	Description					
	Manhours	Matl	Labor	Equipment	Sub	Total
ESTIMATE TOTAL	97	$1,342	$2,267	$500	$21,687	$25,796
SALES TAX	0.00%	$0				
MATL MARKUP	0.00%	$0				
LABOR MARKUP	0.00%		$0			
EQUIPT MARKUP	0.00%			$0		
SUB MARKUP	0.00%				$0	
TOTAL BEFORE CONTINGENC		$1,342	$2,267	$500	$21,687	$25,796
CONTINGENCY	10.00%					$2,580
BOND	0.00%					$0
PROFIT	10.00%					$2,580
JOB TOTAL						$30,955

Estimate:	BLDG 6115	Date:	14-Oct-94
Description:	COST ESTIMATE		
Project:	LIMITED EEAP(GLASS	Bid Date:	
Location:	FORT KNOX, KY	Job #:	94013.02
Sq. footage:	6900.00	City indx:	Louisville, KY

SUMMARY

	Manhours	Matl	Labor	Equipment	Sub	Total
U02 SITEWORK	88	$356	$2,092	$500	$0	$2,948
U15 MECHANICAL	9	$986	$175	$0	$21,687	$22,848
TOTAL	97	$1,342	$2,267	$500	$21,687	$25,796
SALES TAX	0.00%	$0				
MATL MARKUP	0.00%	$0				
LABOR MARKUP	0.00%		$0			
EQUIPT MARKUP	0.00%			$0		
SUB MARKUP	0.00%				$0	
TOTAL BEFORE CONTINGENC		$1,342	$2,267	$500	$21,687	$25,796
CONTINGENCY	10.00%					$2,580
BOND	0.00%					$0
PROFIT	10.00%					$2,580
JOB TOTAL						$30,955

Estimate: BLDG 6115 Date: 14-Oct-94
Description: INFRARED HEATING SYSTEM COST ESTIMATE
Project: LIMITED EEAP(GLASSBid Date:
Location: FORT KNOX, KY Job #: 94013.02
Sq. footage: City indx:Louisville, KY

Line #	Description					
	Manhours	Matl	Labor	Equipment	Sub	Total
0913100200	115V, 20 AMP POWER WIRING INCL CONDUIT, WIRE, AND RECEPTACLES				230.00 L.F.	
Unit values	0.15	2.22	4.57	0.00	0.00	6.79
Totals	34.27	$510	$1,052	$0	$0	$1,562
0913100200	CO-RAY-VAC VANTAGE 2 POWER FEEDER INSTALLATION, INCL CONDUIT, WIRE, AND RECEPTACLES				120.00 L.F.	
Unit values	0.15	2.22	4.57	0.00	0.00	6.79
Totals	17.88	$266	$549	$0	$0	$815
A09 ELECTRICAL	53	$776	$1,601	$0	$0	$2,377

Line #	Description	Manhours	Matl	Labor	Equipment	Sub	Total
1517010650	BLACK STEEL RADIANT PIPE, SCHEDULE 40, THREADED, 4" DIAM W/CPLGS					220.00 L.F.	
Unit values		0.44	4.17	10.30	0.00	0.00	14.47
Totals		97.68	$917	$2,267	$0	$0	$3,184
1517011310	GAS SERVICE PIPE STEEL GALV SCH 40 THRD W/CPLG & HNGR SZD FOR CVRG 10'OC 1/2" DIAM					340.00 L.F.	
Unit values		0.13	1.64	2.88	0.00	0.00	4.52
Totals		43.18	$558	$978	$0	$0	$1,536
1519010320	ALUMINUM REFLECTORS W/HANGERS					29.00 Ea.	
Unit values		0.50	39.79	3.80	0.00	0.00	43.59
Totals		14.50	$1,154	$110	$0	$0	$1,264
1524105040	VACUUM PUMP AND VENT PIPING					1.00 Ea.	
Unit values		3.00	738.35	120.15	0.00	0.00	858.50
Totals		3.00	$738	$120	$0	$0	$858
1552301020	CRV-90 GAS FIRED BURNER, 90 MBH & COMBUSTION CHAMBER					6.00 Ea.	
Unit values		1.00	860.00	44.06	0.00	0.00	904.06
Totals		6.00	$5,160	$264	$0	$0	$5,424
1554510160	CO-RAY-VAC VANTAGE 2 INFA-RD HTG UNT, GAS 100MBH					1.00 Ea.	
Unit values		6.00	1065.00	163.40	0.00	0.00	1228.40
Totals		6.00	$1,065	$163	$0	$0	$1,228
1554510220	CO-RAY-VAC VANTAGE 2 INFA-RD HTG UNIT, GAS 40 MBH					4.00 Ea.	
Unit values		4.00	935.00	81.70	0.00	0.00	1016.70
Totals		16.00	$3,740	$327	$0	$0	$4,067
1556800120	CO-RAY-VAC VANTAGE 2 VENT PIPE					5.00 Ea.	
Unit values		1.60	70.00	76.50	0.00	0.00	146.50
Totals		8.00	$350	$382	$0	$0	$732
1574205220	ELECTRIC THERMOSTAT W/ COVER AND WIRING					6.00 Ea.	
Unit values		1.00	75.00	27.55	0.00	0.00	102.55
Totals		6.00	$450	$165	$0	$0	$615

Line #	Description					
	Manhours	Matl	Labor	Equipment	Sub	Total
U15 MECHANICAL	201	$14,132	$4,776	$0	$0	$18,908
1631200100	HEATING SYSTEM POWER / CONTROL PANEL					
					1.00 Ea.	
Unit values	2.96	330.76	70.58	0.00	0.00	401.34
Totals	2.96	$331	$71	$0	$0	$402
U16 ELECTRICAL	3	$331	$71	$0	$0	$402

Line #	Description					
	Manhours	Matl	Labor	Equipment	Sub	Total
ESTIMATE TOTAL	257	$15,239	$6,448	$0	$0	$21,687
SALES TAX	0.00%	$0				
MATL MARKUP	0.00%	$0				
LABOR MARKUP	0.00%		$0			
EQUIPT MARKUP	0.00%			$0		
SUB MARKUP	0.00%				$0	
TOTAL BEFORE CONTINGENC		$15,239	$6,448	$0	$0	$21,687
CONTINGENCY	0.00%					$0
BOND	0.00%					$0
PROFIT	0.00%					$0
JOB TOTAL						$21,687

Estimate: BLDG 6115 Date: 14-Oct-94
Description: INFRARED HEATING SYSTEM COST ESTIMATE
Project: LIMITED EEAP(GLASSBid Date:
Location: FORT KNOX, KY Job #: 94013.02
Sq. footage: City indx:Louisville, KY

SUMMARY

	Manhours	Matl	Labor	Equipment	Sub	Total
A09 ELECTRICAL	53	$776	$1,601	$0	$0	$2,377
U15 MECHANICAL	201	$14,132	$4,776	$0	$0	$18,908
U16 ELECTRICAL	3	$331	$71	$0	$0	$402
TOTAL	257	$15,239	$6,448	$0	$0	$21,687
SALES TAX	0.00%	$0				
MATL MARKUP	0.00%	$0				
LABOR MARKUP	0.00%		$0			
EQUIPT MARKUP	0.00%			$0		
SUB MARKUP	0.00%				$0	
TOTAL BEFORE CONTINGENC		$15,239	$6,448	$0	$0	$21,687
CONTINGENCY	0.00%					$0
BOND	0.00%					$0
PROFIT	0.00%					$0
JOB TOTAL						$21,687

Estimate:	BLDG 6116	Date:	14-Oct-94
Description:	COST ESTIMATE		
Project:	LIMITED EEAP(GLASS	Bid Date:	
Location:	FORT KNOX, KY	Job #:	94013.02
Sq. footage:	6900.00	City indx:	Louisville, KY

Line #	Description	Manhours	Matl	Labor	Equipment	Sub	Total
0205543200	SITE REMOVAL,STEEL PIPE,WELDED CONNECTION, 4"DIAMETER					320.00 L.F.	
Unit values		0.15	0.00	3.16	1.29	0.00	4.44
Totals		48.00	$0	$1,010	$411	$0	$1,421
0207183600	HVAC DEMO,MECH EQPT HEAVY ITEM					0.75 Ton	
Unit values		14.55	0.00	380.36	0.00	0.00	380.36
Totals		10.91	$0	$285	$0	$0	$285
0208400600	REMOVE PIPE INSULATION UP TO 4" DIAMETER PIPE					170.00 L.F.	
Unit values		0.07	0.00	1.97	0.24	0.00	2.21
Totals		12.07	$0	$336	$40	$0	$376
0208401000	REMOVE INSULATION FROM PIPE FITTING, UP TO 4" DIAMETER PIPE					50.00 Ea.	
Unit values		0.20	0.00	5.55	0.68	0.00	6.23
Totals		10.00	$0	$278	$34	$0	$312
0266907800	CUT IN VALVES, W/DUCK TIP GASKET, 4" DIAMETER					1.00 Ea.	
Unit values		1.56	259.60	35.47	5.91	0.00	300.98
Totals		1.56	$260	$35	$6	$0	$301
0268520550	GAS SERVICE&DISTRIB PIPING,SCH40 STEEL PLAIN END,TAR COAT&WRAP 1"DIAM					50.00 L.F.	
Unit values		0.11	1.92	2.96	0.17	0.00	5.06
Totals		5.35	$96	$148	$9	$0	$253
U02 SITEWORK		88	$356	$2,092	$500	$0	$2,948

Line #	Description					
	Manhours	Matl	Labor	Equipment	Sub	Total
1554510245	HTG INFA-RD UNT GAS ELEC IGN				(See Attached for Breakdow	
					1.00 LS	
Unit values	8.00	760.00	163.40	0.00	21687.00	22610.40
Totals	8.00	$760	$163	$0	$21,687	$22,610
1562600137	GAS APPLIANCE REGULATORS DOUBLE DIAPHRAGM TYPE 1-1/4" PIPE SIZE				1.00 Ea.	
Unit values	0.53	226.00	12.10	0.00	0.00	238.10
Totals	0.53	$226	$12	$0	$0	$238
U15 MECHANICAL	9	$986	$175	$0	$21,687	$22,848

Line #	Description					
	Manhours	Matl	Labor	Equipment	Sub	Total
ESTIMATE TOTAL	97	$1,342	$2,267	$500	$21,687	$25,796
SALES TAX	0.00%	$0				
MATL MARKUP	0.00%	$0				
LABOR MARKUP	0.00%		$0			
EQUIPT MARKUP	0.00%			$0		
SUB MARKUP	0.00%				$0	
TOTAL BEFORE CONTINGENC		$1,342	$2,267	$500	$21,687	$25,796
CONTINGENCY	10.00%					$2,580
BOND	0.00%					$0
PROFIT	10.00%					$2,580
JOB TOTAL						$30,955

Estimate:	BLDG 6116	Date:	14-Oct-94
Description:	COST ESTIMATE		
Project:	LIMITED EEAP(GLASS	Bid Date:	
Location:	FORT KNOX, KY	Job #:	94013.02
Sq. footage:	6900.00	City indx:	Louisville, KY

SUMMARY

	Manhours	Matl	Labor	Equipment	Sub	Total
U02 SITEWORK	88	$356	$2,092	$500	$0	$2,948
U15 MECHANICAL	9	$986	$175	$0	$21,687	$22,848
TOTAL	97	$1,342	$2,267	$500	$21,687	$25,796
SALES TAX	0.00%	$0				
MATL MARKUP	0.00%	$0				
LABOR MARKUP	0.00%		$0			
EQUIPT MARKUP	0.00%			$0		
SUB MARKUP	0.00%				$0	
TOTAL BEFORE CONTINGENC		$1,342	$2,267	$500	$21,687	$25,796
CONTINGENCY	10.00%					$2,580
BOND	0.00%					$0
PROFIT	10.00%					$2,580
JOB TOTAL						$30,955

Estimate: BLDG 6116 Date: 14-Oct-94
Description: INFRARED HEATING SYSTEM COST ESTIMATE
Project: LIMITED EEAP(GLASSBid Date:
Location: FORT KNOX, KY Job #: 94013.02
Sq. footage: City indx:Louisville, KY

Line #	Description					
	Manhours	Matl	Labor	Equipment	Sub	Total
0913100200	115V, 20 AMP POWER WIRING INCL CONDUIT, WIRE, AND RECEPTACLES				230.00 L.F.	
Unit values	0.15	2.22	4.57	0.00	0.00	6.79
Totals	34.27	$510	$1,052	$0	$0	$1,562
0913100200	CO-RAY-VAC VANTAGE 2 POWER FEEDER INSTALLATION, INCL CONDUIT, WIRE, AND RECEPTACLES				120.00 L.F.	
Unit values	0.15	2.22	4.57	0.00	0.00	6.79
Totals	17.88	$266	$549	$0	$0	$815
A09 ELECTRICAL	53	$776	$1,601	$0	$0	$2,377

Line #	Description	Manhours	Matl	Labor	Equipment	Sub	Total
1517010650	BLACK STEEL RADIANT PIPE, SCHEDULE 40, THREADED, 4" DIAM W/CPLGS					220.00 L.F.	
Unit values		0.44	4.17	10.30	0.00	0.00	14.47
Totals		97.68	$917	$2,267	$0	$0	$3,184
1517011310	GAS SERVICE PIPE STEEL GALV SCH 40 THRD W/CPLG & HNGR SZD FOR CVRG 10'OC 1/2" DIAM					340.00 L.F.	
Unit values		0.13	1.64	2.88	0.00	0.00	4.52
Totals		43.18	$558	$978	$0	$0	$1,536
1519010320	ALUMINUM REFLECTORS W/HANGERS					29.00 Ea.	
Unit values		0.50	39.79	3.80	0.00	0.00	43.59
Totals		14.50	$1,154	$110	$0	$0	$1,264
1524105040	VACUUM PUMP AND VENT PIPING					1.00 Ea.	
Unit values		3.00	738.35	120.15	0.00	0.00	858.50
Totals		3.00	$738	$120	$0	$0	$858
1552301020	CRV-90 GAS FIRED BURNER, 90 MBH & COMBUSTION CHAMBER					6.00 Ea.	
Unit values		1.00	860.00	44.06	0.00	0.00	904.06
Totals		6.00	$5,160	$264	$0	$0	$5,424
1554510160	CO-RAY-VAC VANTAGE 2 INFA-RD HTG UNT, GAS 100MBH					1.00 Ea.	
Unit values		6.00	1065.00	163.40	0.00	0.00	1228.40
Totals		6.00	$1,065	$163	$0	$0	$1,228
1554510220	CO-RAY-VAC VANTAGE 2 INFA-RD HTG UNIT, GAS 40 MBH					4.00 Ea.	
Unit values		4.00	935.00	81.70	0.00	0.00	1016.70
Totals		16.00	$3,740	$327	$0	$0	$4,067
1556800120	CO-RAY-VAC VANTAGE 2 VENT PIPE					5.00 Ea.	
Unit values		1.60	70.00	76.50	0.00	0.00	146.50
Totals		8.00	$350	$382	$0	$0	$732
1574205220	ELECTRIC THERMOSTAT W/ COVER AND WIRING					6.00 Ea.	
Unit values		1.00	75.00	27.55	0.00	0.00	102.55
Totals		6.00	$450	$165	$0	$0	$615

Line #	Description					
	Manhours	Matl	Labor	Equipment	Sub	Total
U15 MECHANICAL	201	$14,132	$4,776	$0	$0	$18,908
1631200100	HEATING SYSTEM POWER / CONTROL PANEL					
					1.00 Ea.	
Unit values	2.96	330.76	70.58	0.00	0.00	401.34
Totals	2.96	$331	$71	$0	$0	$402
U16 ELECTRICAL	3	$331	$71	$0	$0	$402

Line #	Description					
	Manhours	Matl	Labor	Equipment	Sub	Total
ESTIMATE TOTAL	257	$15,239	$6,448	$0	$0	$21,687
SALES TAX	0.00%	$0				
MATL MARKUP	0.00%	$0				
LABOR MARKUP	0.00%		$0			
EQUIPT MARKUP	0.00%			$0		
SUB MARKUP	0.00%				$0	
TOTAL BEFORE CONTINGENC		$15,239	$6,448	$0	$0	$21,687
CONTINGENCY	0.00%					$0
BOND	0.00%					$0
PROFIT	0.00%					$0
JOB TOTAL						$21,687

Estimate: BLDG 6116 Date: 14-Oct-94
Description: INFRARED HEATING SYSTEM COST ESTIMATE
Project: LIMITED EEAP(GLASSBid Date:
Location: FORT KNOX, KY Job #: 94013.02
Sq. footage: City indx:Louisville, KY

SUMMARY

	Manhours	Matl	Labor	Equipment	Sub	Total
A09 ELECTRICAL	53	$776	$1,601	$0	$0	$2,377
U15 MECHANICAL	201	$14,132	$4,776	$0	$0	$18,908
U16 ELECTRICAL	3	$331	$71	$0	$0	$402
TOTAL	257	$15,239	$6,448	$0	$0	$21,687
SALES TAX	0.00%	$0				
MATL MARKUP	0.00%	$0				
LABOR MARKUP	0.00%		$0			
EQUIPT MARKUP	0.00%			$0		
SUB MARKUP	0.00%				$0	
TOTAL BEFORE CONTINGENC		$15,239	$6,448	$0	$0	$21,687
CONTINGENCY	0.00%					$0
BOND	0.00%					$0
PROFIT	0.00%					$0
JOB TOTAL						$21,687

Estimate: BLDG 6117 Date: 14-Oct-94
Description: COST ESTIMATE
Project: LIMITED EEAP(GLASSBid Date:
Location: FORT KNOX, KY Job #: 94013.02
Sq. footage: 6900.00 City indx:Louisville, KY

Line #	Description	Manhours	Matl	Labor	Equipment	Sub	Total
0205543200	SITE REMOVAL,STEEL PIPE,WELDED CONNECTION, 4"DIAMETER					320.00 L.F.	
Unit values		0.15	0.00	3.16	1.29	0.00	4.44
Totals		48.00	$0	$1,010	$411	$0	$1,421
0207180380	HVAC DEMO,BOILER GAS/OIL STL >150MBH					1.00 Ea.	
Unit values		12.00	0.00	323.82	0.00	0.00	323.82
Totals		12.00	$0	$324	$0	$0	$324
0207183600	HVAC DEMO,MECH EQPT HEAVY ITEM					0.75 Ton	
Unit values		14.55	0.00	380.36	0.00	0.00	380.36
Totals		10.91	$0	$285	$0	$0	$285
0208400600	REMOVE PIPE INSULATION UP TO 4" DIAMETER PIPE					170.00 L.F.	
Unit values		0.07	0.00	1.97	0.24	0.00	2.21
Totals		12.07	$0	$336	$40	$0	$376
0208401000	REMOVE INSULATION FROM PIPE FITTING, UP TO 4" DIAMETER PIPE					50.00 Ea.	
Unit values		0.20	0.00	5.55	0.68	0.00	6.23
Totals		10.00	$0	$278	$34	$0	$312
0266907800	CUT IN VALVES, W/DUCK TIP GASKET, 4" DIAMETER					1.00 Ea.	
Unit values		1.56	259.60	35.47	5.91	0.00	300.98
Totals		1.56	$260	$35	$6	$0	$301
0268520550	GAS SERVICE&DISTRIB PIPING,SCH40 STEEL PLAIN END,TAR COAT&WRAP 1"DIAM					50.00 L.F.	
Unit values		0.11	1.92	2.96	0.17	0.00	5.06
Totals		5.35	$96	$148	$9	$0	$253
U02 SITEWORK		100	$356	$2,416	$500	$0	$3,272

Line #	Description					
	Manhours	Matl	Labor	Equipment	Sub	Total
1554510245	HTG INFA-RD UNT GAS ELEC IGN (See Attached for Breakdown					
					1.00 LS	
Unit values	8.00	760.00	163.40	0.00	21687.00	22610.40
Totals	8.00	$760	$163	$0	$21,687	$22,610
1562600137	GAS APPLIANCE REGULATORS DOUBLE DIAPHRAGM TYPE 1-1/4" PIPE SIZE					
					1.00 Ea.	
Unit values	0.53	226.00	12.10	0.00	0.00	238.10
Totals	0.53	$226	$12	$0	$0	$238
U15 MECHANICAL	9	$986	$175	$0	$21,687	$22,848

Line #	Description					
	Manhours	Matl	Labor	Equipment	Sub	Total
ESTIMATE TOTAL	109	$1,342	$2,591	$500	$21,687	$26,120
SALES TAX	0.00%	$0				
MATL MARKUP	0.00%	$0				
LABOR MARKUP	0.00%		$0			
EQUIPT MARKUP	0.00%			$0		
SUB MARKUP	0.00%				$0	
TOTAL BEFORE CONTINGENC		$1,342	$2,591	$500	$21,687	$26,120
CONTINGENCY	10.00%					$2,612
BOND	0.00%					$0
PROFIT	10.00%					$2,612
JOB TOTAL						$31,344

Estimate:	BLDG 6117	Date:	14-Oct-94
Description:	COST ESTIMATE		
Project:	LIMITED EEAP(GLASS	Bid Date:	
Location:	FORT KNOX, KY	Job #:	94013.02
Sq. footage:	6900.00	City indx:	Louisville, KY

SUMMARY

	Manhours	Matl	Labor	Equipment	Sub	Total
U02 SITEWORK	100	$356	$2,416	$500	$0	$3,272
U15 MECHANICAL	9	$986	$175	$0	$21,687	$22,848
TOTAL	109	$1,342	$2,591	$500	$21,687	$26,120
SALES TAX	0.00%	$0				
MATL MARKUP	0.00%	$0				
LABOR MARKUP	0.00%		$0			
EQUIPT MARKUP	0.00%			$0		
SUB MARKUP	0.00%				$0	
TOTAL BEFORE CONTINGENC		$1,342	$2,591	$500	$21,687	$26,120
CONTINGENCY	10.00%					$2,612
BOND	0.00%					$0
PROFIT	10.00%					$2,612
JOB TOTAL						$31,344

Estimate: BLDG 6117 Date: 14-Oct-94
Description: INFRARED HEATING SYSTEM COST ESTIMATE
Project: LIMITED EEAP(GLASSBid Date:
Location: FORT KNOX, KY Job #: 94013.02
Sq. footage: City indx:Louisville, KY

Line #	Description					
	Manhours	Matl	Labor	Equipment	Sub	Total
0913100200	115V, 20 AMP POWER WIRING INCL CONDUIT, WIRE, AND RECEPTACLES				230.00 L.F.	
Unit values	0.15	2.22	4.57	0.00	0.00	6.79
Totals	34.27	$510	$1,052	$0	$0	$1,562
0913100200	CO-RAY-VAC VANTAGE 2 POWER FEEDER INSTALLATION, INCL CONDUIT, WIRE, AND RECEPTACLES				120.00 L.F.	
Unit values	0.15	2.22	4.57	0.00	0.00	6.79
Totals	17.88	$266	$549	$0	$0	$815
A09 ELECTRICAL	53	$776	$1,601	$0	$0	$2,377

Line #	Description	Manhours	Matl	Labor	Equipment	Sub	Total
1517010650	BLACK STEEL RADIANT PIPE, SCHEDULE 40, THREADED, 4" DIAM W/CPLGS					220.00 L.F.	
Unit values		0.44	4.17	10.30	0.00	0.00	14.47
Totals		97.68	$917	$2,267	$0	$0	$3,184
1517011310	GAS SERVICE PIPE STEEL GALV SCH 40 THRD W/CPLG & HNGR SZD FOR CVRG 10'OC 1/2" DIAM					340.00 L.F.	
Unit values		0.13	1.64	2.88	0.00	0.00	4.52
Totals		43.18	$558	$978	$0	$0	$1,536
1519010320	ALUMINUM REFLECTORS W/HANGERS					29.00 Ea.	
Unit values		0.50	39.79	3.80	0.00	0.00	43.59
Totals		14.50	$1,154	$110	$0	$0	$1,264
1524105040	VACUUM PUMP AND VENT PIPING					1.00 Ea.	
Unit values		3.00	738.35	120.15	0.00	0.00	858.50
Totals		3.00	$738	$120	$0	$0	$858
1552301020	CRV-90 GAS FIRED BURNER, 90 MBH & COMBUSTION CHAMBER					6.00 Ea.	
Unit values		1.00	860.00	44.06	0.00	0.00	904.06
Totals		6.00	$5,160	$264	$0	$0	$5,424
1554510160	CO-RAY-VAC VANTAGE 2 INFA-RD HTG UNT, GAS 100MBH					1.00 Ea.	
Unit values		6.00	1065.00	163.40	0.00	0.00	1228.40
Totals		6.00	$1,065	$163	$0	$0	$1,228
1554510220	CO-RAY-VAC VANTAGE 2 INFA-RD HTG UNIT, GAS 40 MBH					4.00 Ea.	
Unit values		4.00	935.00	81.70	0.00	0.00	1016.70
Totals		16.00	$3,740	$327	$0	$0	$4,067
1556800120	CO-RAY-VAC VANTAGE 2 VENT PIPE					5.00 Ea.	
Unit values		1.60	70.00	76.50	0.00	0.00	146.50
Totals		8.00	$350	$382	$0	$0	$732
1574205220	ELECTRIC THERMOSTAT W/ COVER AND WIRING					6.00 Ea.	
Unit values		1.00	75.00	27.55	0.00	0.00	102.55
Totals		6.00	$450	$165	$0	$0	$615

Line #	Description					
	Manhours	Matl	Labor	Equipment	Sub	Total
U15 MECHANICAL	201	$14,132	$4,776	$0	$0	$18,908
1631200100	HEATING SYSTEM POWER / CONTROL PANEL					
					1.00 Ea.	
Unit values	2.96	330.76	70.58	0.00	0.00	401.34
Totals	2.96	$331	$71	$0	$0	$402
U16 ELECTRICAL	3	$331	$71	$0	$0	$402

Line #	Description					
	Manhours	Matl	Labor	Equipment	Sub	Total
ESTIMATE TOTAL	257	$15,239	$6,448	$0	$0	$21,687
SALES TAX	0.00%	$0				
MATL MARKUP	0.00%	$0				
LABOR MARKUP	0.00%		$0			
EQUIPT MARKUP	0.00%			$0		
SUB MARKUP	0.00%				$0	
TOTAL BEFORE CONTINGENC		$15,239	$6,448	$0	$0	$21,687
CONTINGENCY	0.00%					$0
BOND	0.00%					$0
PROFIT	0.00%					$0
JOB TOTAL						$21,687

Estimate: BLDG 6117 Date: 14-Oct-94
Description: INFRARED HEATING SYSTEM COST ESTIMATE
Project: LIMITED EEAP(GLASSBid Date:
Location: FORT KNOX, KY Job #: 94013.02
Sq. footage: City indx:Louisville, KY

SUMMARY

	Manhours	Matl	Labor	Equipment	Sub	Total
A09 ELECTRICAL	53	$776	$1,601	$0	$0	$2,377
U15 MECHANICAL	201	$14,132	$4,776	$0	$0	$18,908
U16 ELECTRICAL	3	$331	$71	$0	$0	$402
TOTAL	257	$15,239	$6,448	$0	$0	$21,687
SALES TAX	0.00%	$0				
MATL MARKUP	0.00%	$0				
LABOR MARKUP	0.00%		$0			
EQUIPT MARKUP	0.00%			$0		
SUB MARKUP	0.00%				$0	
TOTAL BEFORE CONTINGENC		$15,239	$6,448	$0	$0	$21,687
CONTINGENCY	0.00%					$0
BOND	0.00%					$0
PROFIT	0.00%					$0
JOB TOTAL						$21,687

Estimate:	BLDG 6118	Date:	14-Oct-94
Description:	COST ESTIMATE		
Project:	LIMITED EEAP(GLASS	Bid Date:	
Location:	FORT KNOX, KY	Job #:	94013.02
Sq. footage:	6900.00	City indx:	Louisville, KY

Line #	Description	Manhours	Matl	Labor	Equipment	Sub	Total
0205543200	SITE REMOVAL,STEEL PIPE,WELDED CONNECTION, 4"DIAMETER					320.00 L.F.	
Unit values		0.15	0.00	3.16	1.29	0.00	4.44
Totals		48.00	$0	$1,010	$411	$0	$1,421
0207183600	HVAC DEMO,MECH EQPT HEAVY ITEM					0.75 Ton	
Unit values		14.55	0.00	380.36	0.00	0.00	380.36
Totals		10.91	$0	$285	$0	$0	$285
0208400600	REMOVE PIPE INSULATION UP TO 4" DIAMETER PIPE					170.00 L.F.	
Unit values		0.07	0.00	1.97	0.24	0.00	2.21
Totals		12.07	$0	$336	$40	$0	$376
0208401000	REMOVE INSULATION FROM PIPE FITTING, UP TO 4" DIAMETER PIPE					50.00 Ea.	
Unit values		0.20	0.00	5.55	0.68	0.00	6.23
Totals		10.00	$0	$278	$34	$0	$312
0266907800	CUT IN VALVES, W/DUCK TIP GASKET, 4" DIAMETER					1.00 Ea.	
Unit values		1.56	259.60	35.47	5.91	0.00	300.98
Totals		1.56	$260	$35	$6	$0	$301
0268520550	GAS SERVICE&DISTRIB PIPING,SCH40 STEEL PLAIN END,TAR COAT&WRAP 1"DIAM					50.00 L.F.	
Unit values		0.11	1.92	2.96	0.17	0.00	5.06
Totals		5.35	$96	$148	$9	$0	$253
U02 SITEWORK		88	$356	$2,092	$500	$0	$2,948

Line #	Description					
	Manhours	Matl	Labor	Equipment	Sub	Total
1554510245	HTG INFA-RD UNT GAS ELEC IGN			(See Attached for Breakdown		
					1.00 LS	
Unit values	8.00	760.00	163.40	0.00	21687.00	22610.40
Totals	8.00	$760	$163	$0	$21,687	$22,610
1562600137	GAS APPLIANCE REGULATORS DOUBLE DIAPHRAGM TYPE 1-1/4" PIPE SIZE				1.00 Ea.	
Unit values	0.53	226.00	12.10	0.00	0.00	238.10
Totals	0.53	$226	$12	$0	$0	$238
U15 MECHANICAL	9	$986	$175	$0	$21,687	$22,848

Line #	Description					
	Manhours	Matl	Labor	Equipment	Sub	Total
ESTIMATE TOTAL	97	$1,342	$2,267	$500	$21,687	$25,796
SALES TAX	0.00%	$0				
MATL MARKUP	0.00%	$0				
LABOR MARKUP	0.00%		$0			
EQUIPT MARKUP	0.00%			$0		
SUB MARKUP	0.00%				$0	
TOTAL BEFORE CONTINGENC		$1,342	$2,267	$500	$21,687	$25,796
CONTINGENCY	10.00%					$2,580
BOND	0.00%					$0
PROFIT	10.00%					$2,580
JOB TOTAL						$30,955

Estimate:	BLDG 6118	Date:	14-Oct-94
Description:	COST ESTIMATE		
Project:	LIMITED EEAP(GLASS	Bid Date:	
Location:	FORT KNOX, KY	Job #:	94013.02
Sq. footage:	6900.00	City indx:	Louisville, KY

SUMMARY

	Manhours	Matl	Labor	Equipment	Sub	Total
U02 SITEWORK	88	$356	$2,092	$500	$0	$2,948
U15 MECHANICAL	9	$986	$175	$0	$21,687	$22,848
TOTAL	97	$1,342	$2,267	$500	$21,687	$25,796
SALES TAX	0.00%	$0				
MATL MARKUP	0.00%	$0				
LABOR MARKUP	0.00%		$0			
EQUIPT MARKUP	0.00%			$0		
SUB MARKUP	0.00%				$0	
TOTAL BEFORE CONTINGENC		$1,342	$2,267	$500	$21,687	$25,796
CONTINGENCY	10.00%					$2,580
BOND	0.00%					$0
PROFIT	10.00%					$2,580
JOB TOTAL						$30,955

Estimate:	BLDG 6118	Date:	14-Oct-94
Description:	INFRARED HEATING SYSTEM COST ESTIMATE		
Project:	LIMITED EEAP(GLASS	Bid Date:	
Location:	FORT KNOX, KY	Job #:	94013.02
Sq. footage:		City indx:	Louisville, KY

Line #	Description	Manhours	Matl	Labor	Equipment	Sub	Total
0913100200	115V, 20 AMP POWER WIRING INCL CONDUIT, WIRE, AND RECEPTACLES					230.00 L.F.	
Unit values		0.15	2.22	4.57	0.00	0.00	6.79
Totals		34.27	$510	$1,052	$0	$0	$1,562
0913100200	CO-RAY-VAC VANTAGE 2 POWER FEEDER INSTALLATION, INCL CONDUIT, WIRE, AND RECEPTACLES					120.00 L.F.	
Unit values		0.15	2.22	4.57	0.00	0.00	6.79
Totals		17.88	$266	$549	$0	$0	$815
A09 ELECTRICAL		53	$776	$1,601	$0	$0	$2,377

Line #	Description	Manhours	Matl	Labor	Equipment	Sub	Total
1517010650	BLACK STEEL RADIANT PIPE, SCHEDULE 40, THREADED, 4" DIAM W/CPLGS					220.00 L.F.	
Unit values		0.44	4.17	10.30	0.00	0.00	14.47
Totals		97.68	$917	$2,267	$0	$0	$3,184
1517011310	GAS SERVICE PIPE STEEL GALV SCH 40 THRD W/CPLG & HNGR SZD FOR CVRG 10'OC 1/2" DIAM					340.00 L.F.	
Unit values		0.13	1.64	2.88	0.00	0.00	4.52
Totals		43.18	$558	$978	$0	$0	$1,536
1519010320	ALUMINUM REFLECTORS W/HANGERS					29.00 Ea.	
Unit values		0.50	39.79	3.80	0.00	0.00	43.59
Totals		14.50	$1,154	$110	$0	$0	$1,264
1524105040	VACUUM PUMP AND VENT PIPING					1.00 Ea.	
Unit values		3.00	738.35	120.15	0.00	0.00	858.50
Totals		3.00	$738	$120	$0	$0	$858
1552301020	CRV-90 GAS FIRED BURNER, 90 MBH & COMBUSTION CHAMBER					6.00 Ea.	
Unit values		1.00	860.00	44.06	0.00	0.00	904.06
Totals		6.00	$5,160	$264	$0	$0	$5,424
1554510160	CO-RAY-VAC VANTAGE 2 INFA-RD HTG UNT, GAS 100MBH					1.00 Ea.	
Unit values		6.00	1065.00	163.40	0.00	0.00	1228.40
Totals		6.00	$1,065	$163	$0	$0	$1,228
1554510220	CO-RAY-VAC VANTAGE 2 INFA-RD HTG UNIT, GAS 40 MBH					4.00 Ea.	
Unit values		4.00	935.00	81.70	0.00	0.00	1016.70
Totals		16.00	$3,740	$327	$0	$0	$4,067
1556800120	CO-RAY-VAC VANTAGE 2 VENT PIPE					5.00 Ea.	
Unit values		1.60	70.00	76.50	0.00	0.00	146.50
Totals		8.00	$350	$382	$0	$0	$732
1574205220	ELECTRIC THERMOSTAT W/ COVER AND WIRING					6.00 Ea.	
Unit values		1.00	75.00	27.55	0.00	0.00	102.55
Totals		6.00	$450	$165	$0	$0	$615

Line #	Description					
	Manhours	Matl	Labor	Equipment	Sub	Total
U15 MECHANICAL	201	$14,132	$4,776	$0	$0	$18,908
1631200100	HEATING SYSTEM POWER / CONTROL PANEL				1.00 Ea.	
Unit values	2.96	330.76	70.58	0.00	0.00	401.34
Totals	2.96	$331	$71	$0	$0	$402
U16 ELECTRICAL	3	$331	$71	$0	$0	$402

Line #	Description					
	Manhours	Matl	Labor	Equipment	Sub	Total
ESTIMATE TOTAL	257	$15,239	$6,448	$0	$0	$21,687
SALES TAX	0.00%	$0				
MATL MARKUP	0.00%	$0				
LABOR MARKUP	0.00%		$0			
EQUIPT MARKUP	0.00%			$0		
SUB MARKUP	0.00%				$0	
TOTAL BEFORE CONTINGENC		$15,239	$6,448	$0	$0	$21,687
CONTINGENCY	0.00%					$0
BOND	0.00%					$0
PROFIT	0.00%					$0
JOB TOTAL						$21,687

Estimate: BLDG 6118 Date: 14-Oct-94
Description: INFRARED HEATING SYSTEM COST ESTIMATE
Project: LIMITED EEAP(GLASSBid Date:
Location: FORT KNOX, KY Job #: 94013.02
Sq. footage: City indx:Louisville, KY

SUMMARY

	Manhours	Matl	Labor	Equipment	Sub	Total
A09 ELECTRICAL	53	$776	$1,601	$0	$0	$2,377
U15 MECHANICAL	201	$14,132	$4,776	$0	$0	$18,908
U16 ELECTRICAL	3	$331	$71	$0	$0	$402
TOTAL	257	$15,239	$6,448	$0	$0	$21,687
SALES TAX	0.00%	$0				
MATL MARKUP	0.00%	$0				
LABOR MARKUP	0.00%		$0			
EQUIPT MARKUP	0.00%			$0		
SUB MARKUP	0.00%				$0	
TOTAL BEFORE CONTINGENC		$15,239	$6,448	$0	$0	$21,687
CONTINGENCY	0.00%					$0
BOND	0.00%					$0
PROFIT	0.00%					$0
JOB TOTAL						$21,687

Estimate: 614X AREA Date: 06-Aug-94
Description: COST ESTIMATE
Project: LIMITED EEAP(GLASSBid Date:
Location: FORT KNOX, KY Job #: 94013.02
Sq. footage: SUBMAIN GAS LINE City indx:Louisville, KY

Line #	Description					
	Manhours	Matl	Labor	Equipment	Sub	Total
0222541900	TAMPING TRENCH B'FILL, VIBRATING PLATE, ADD				86.00 C.Y.	
Unit values	0.09	0.00	1.74	0.67	0.00	2.41
Totals	7.65	$0	$149	$57	$0	$206
0222582800	TRENCH EXCVTNG 40HP CHNTRNCHR&BKFL 12"W24"D				1160.00 L.F.	
Unit values	0.01	0.00	0.24	0.24	0.00	0.47
Totals	11.60	$0	$274	$274	$0	$548
0222700100	HORZ BORNG , .5"WALL, 3"DIA CASING, ROCKY SOIL				300.00 L.F.	
Unit values	0.03	15.58	0.62	0.10	10000.00	10016.30
Totals	8.70	$4,673	$185	$31	$10,000	$14,889
0260120200	BEDDING, FOR PIPE IN TRENCH SAND, DEAD OR BANK				21.50 C.Y.	
Unit values	0.16	2.43	3.37	1.37	0.00	7.17
Totals	3.44	$52	$72	$29	$0	$153
0260120500	BEDDING, PLACING IN TRENCH				21.50 C.Y.	
Unit values	0.09	0.00	1.74	0.67	0.00	2.41
Totals	1.91	$0	$37	$14	$0	$51
0266907800	CUT IN VALVES, W/DUCK TIP GASKET, 4" DIAMETER				1.00 Ea.	
Unit values	1.56	259.60	35.47	5.91	0.00	300.98
Totals	1.56	$260	$35	$6	$0	$301
0268520200	GAS SERVICE & DISTRIB PIPING,POLYETHYLENE,60-PSI 2" DIAM COIL SDR 11				1460.00 L.F.	
Unit values	0.07	0.75	1.48	0.00	0.00	2.23
Totals	97.82	$1,099	$2,161	$0	$0	$3,260
U02 SITEWORK	133	$6,084	$2,913	$411	$10,000	$19,408

Line #	Description					
	Manhours	Matl	Labor	Equipment	Sub	Total
1562600139	GAS APPLIANCE REGULATORS DOUBLE DIAPHRAGM TYPE 2" PIPE SIZE				1.00 Ea.	
Unit values	0.73	420.00	16.42	0.00	0.00	436.42
Totals	0.73	$420	$16	$0	$0	$436
U15 MECHANICAL	1	$420	$16	$0	$0	$436

Line #	Description					
	Manhours	Matl	Labor	Equipment	Sub	Total
ESTIMATE TOTAL	134	$6,504	$2,929	$411	$10,000	$19,844
SALES TAX	0.00%	$0				
MATL MARKUP	0.00%	$0				
LABOR MARKUP	0.00%		$0			
EQUIPT MARKUP	0.00%			$0		
SUB MARKUP	0.00%				$0	
TOTAL BEFORE CONTINGENC		$6,504	$2,929	$411	$10,000	$19,844
CONTINGENCY	10.00%					$1,984
BOND	0.00%					$0
PROFIT	10.00%					$1,984
JOB TOTAL						$23,813

Estimate: 614X AREA Date: 06-Aug-94
Description: COST ESTIMATE
Project: LIMITED EEAP(GLASSBid Date:
Location: FORT KNOX, KY Job #: 94013.02
Sq. footage: SUBMAIN GAS LINE City indx:Louisville, KY

SUMMARY

	Manhours	Matl	Labor	Equipment	Sub	Total
U02 SITEWORK	133	$6,084	$2,913	$411	$10,000	$19,408
U15 MECHANICAL	1	$420	$16	$0	$0	$436
TOTAL	134	$6,504	$2,929	$411	$10,000	$19,844
SALES TAX	0.00%	$0				
MATL MARKUP	0.00%	$0				
LABOR MARKUP	0.00%		$0			
EQUIPT MARKUP	0.00%			$0		
SUB MARKUP	0.00%				$0	
TOTAL BEFORE CONTINGENC		$6,504	$2,929	$411	$10,000	$19,844
CONTINGENCY	10.00%					$1,984
BOND	0.00%					$0
PROFIT	10.00%					$1,984
JOB TOTAL						$23,813

Estimate:	BLDG 6142	Date:	14-Oct-94
Description:	COST ESTIMATE		
Project:	LIMITED EEAP(GLASS	Bid Date:	
Location:	FORT KNOX, KY	Job #:	94013.02
Sq. footage:	8100.00	City indx:	Louisville, KY

Line #	Description	Manhours	Matl	Labor	Equipment	Sub	Total
0205543200	SITE REMOVAL,STEEL PIPE,WELDED CONNECTION, 4"DIAMETER					400.00 L.F.	
Unit values		0.15	0.00	3.16	1.29	0.00	4.44
Totals		60.00	$0	$1,262	$514	$0	$1,776
0207183600	HVAC DEMO,MECH EQPT HEAVY ITEM					0.75 Ton	
Unit values		14.55	0.00	380.36	0.00	0.00	380.36
Totals		10.91	$0	$285	$0	$0	$285
0208400600	REMOVE PIPE INSULATION UP TO 4" DIAMETER PIPE					200.00 L.F.	
Unit values		0.07	0.00	1.97	0.24	0.00	2.21
Totals		14.20	$0	$395	$47	$0	$442
0208401000	REMOVE INSULATION FROM PIPE FITTING, UP TO 4" DIAMETER PIPE					70.00 Ea.	
Unit values		0.20	0.00	5.55	0.68	0.00	6.23
Totals		14.00	$0	$389	$47	$0	$436
0266907800	CUT IN VALVES, W/DUCK TIP GASKET, 4" DIAMETER					1.00 Ea.	
Unit values		1.56	259.60	35.47	5.91	0.00	300.98
Totals		1.56	$260	$35	$6	$0	$301
0268520550	GAS SERVICE&DISTRIB PIPING,SCH40 STEEL PLAIN END,TAR COAT&WRAP 1"DIAM					50.00 L.F.	
Unit values		0.11	1.92	2.96	0.17	0.00	5.06
Totals		5.35	$96	$148	$9	$0	$253
U02 SITEWORK		107	$356	$2,514	$623	$0	$3,493

Line #	Description					
	Manhours	Matl	Labor	Equipment	Sub	Total
1554510245	HTG INFA-RD UNT GAS ELEC IGN (See Attached for Breakdown)				1.00 LS	
Unit values	0.00	0.00	0.00	0.00	25219.00	25219.00
Totals	0.00	$0	$0	$0	$25,219	$25,219
1562600137	GAS APPLIANCE REGULATORS DOUBLE DIAPHRAGM TYPE 1-1/4" PIPE SIZE				1.00 Ea.	
Unit values	0.53	226.00	12.10	0.00	0.00	238.10
Totals	0.53	$226	$12	$0	$0	$238
U15 MECHANICAL	1	$226	$12	$0	$25,219	$25,457

Line #	Description					
	Manhours	Matl	Labor	Equipment	Sub	Total
ESTIMATE TOTAL	108	$582	$2,526	$623	$25,219	$28,950
SALES TAX	0.00%	$0				
MATL MARKUP	0.00%	$0				
LABOR MARKUP	0.00%		$0			
EQUIPT MARKUP	0.00%			$0		
SUB MARKUP	0.00%				$0	
TOTAL BEFORE CONTINGENC		$582	$2,526	$623	$25,219	$28,950
CONTINGENCY	10.00%					$2,895
BOND	0.00%					$0
PROFIT	10.00%					$2,895
JOB TOTAL						$34,740

Estimate:	BLDG 6142	Date:	14-Oct-94
Description:	COST ESTIMATE		
Project:	LIMITED EEAP(GLASS	Bid Date:	
Location:	FORT KNOX, KY	Job #:	94013.02
Sq. footage:	8100.00	City indx:	Louisville, KY

SUMMARY

	Manhours	Matl	Labor	Equipment	Sub	Total
U02 SITEWORK	107	$356	$2,514	$623	$0	$3,493
U15 MECHANICAL	1	$226	$12	$0	$25,219	$25,457
TOTAL	108	$582	$2,526	$623	$25,219	$28,950
SALES TAX	0.00%	$0				
MATL MARKUP	0.00%	$0				
LABOR MARKUP	0.00%		$0			
EQUIPT MARKUP	0.00%			$0		
SUB MARKUP	0.00%				$0	
TOTAL BEFORE CONTINGENC		$582	$2,526	$623	$25,219	$28,950
CONTINGENCY	10.00%					$2,895
BOND	0.00%					$0
PROFIT	10.00%					$2,895
JOB TOTAL						$34,740

Estimate: BLDG 6142 Date: 14-Oct-94
Description: INFRARED HEATING SYSTEM COST ESTIMATE
Project: LIMITED EEAP(GLASSBid Date:
Location: FORT KNOX, KY Job #: 94013.02
Sq. footage: City indx:Louisville, KY

Line #	Description	Manhours	Matl	Labor	Equipment	Sub	Total
0913100200	115V, 20 AMP POWER WIRING INCL CONDUIT, WIRE, AND RECEPTACLES					340.00 L.F.	
Unit values		0.15	2.22	4.57	0.00	0.00	6.79
Totals		50.66	$753	$1,555	$0	$0	$2,308
0913100200	CO-RAY-VAC VANTAGE 2 POWER FEEDER INSTALLATION, INCL CONDUIT, WIRE, AND RECEPTACLES					120.00 L.F.	
Unit values		0.15	2.22	4.57	0.00	0.00	6.79
Totals		17.88	$266	$549	$0	$0	$815
A09 ELECTRICAL		69	$1,019	$2,104	$0	$0	$3,123

Line #	Description					
	Manhours	Matl	Labor	Equipment	Sub	Total
1517010650	BLACK STEEL RADIANT PIPE, SCHEDULE 40, THREADED, 4" DIAM W/CPLGS				330.00 L.F.	
Unit values	0.44	4.17	10.30	0.00	0.00	14.47
Totals	146.52	$1,376	$3,400	$0	$0	$4,776
1517011310	GAS SERVICE PIPE STEEL GALV SCH 40 THRD W/CPLG & HNGR SZD FOR CVRG 10'OC 1/2" DIAM				450.00 L.F.	
Unit values	0.13	1.64	2.88	0.00	0.00	4.52
Totals	57.15	$738	$1,294	$0	$0	$2,032
1519010320	ALUMINUM REFLECTORS W/HANGERS				45.00 Ea.	
Unit values	0.50	39.79	3.80	0.00	0.00	43.59
Totals	22.50	$1,791	$171	$0	$0	$1,962
1524105040	VACUUM PUMP AND VENT PIPING				1.00 Ea.	
Unit values	3.00	738.35	120.15	0.00	0.00	858.50
Totals	3.00	$738	$120	$0	$0	$858
1552301020	CRV-100 GAS FIRED BURNER, 100 MBH & COMBUSTION CHAMBER				6.00 Ea.	
Unit values	1.00	860.00	44.06	0.00	0.00	904.06
Totals	6.00	$5,160	$264	$0	$0	$5,424
1554510160	CO-RAY-VAC VANTAGE 2 INFA-RD HTG UNT, GAS 100MBH				1.00 Ea.	
Unit values	6.00	1065.00	163.40	0.00	0.00	1228.40
Totals	6.00	$1,065	$163	$0	$0	$1,228
1554510220	CO-RAY-VAC VANTAGE 2 INFA-RD HTG UNIT, GAS 40 MBH				4.00 Ea.	
Unit values	4.00	935.00	81.70	0.00	0.00	1016.70
Totals	16.00	$3,740	$327	$0	$0	$4,067
1556800120	CO-RAY-VAC VANTAGE 2 VENT PIPE				5.00 Ea.	
Unit values	1.60	70.00	76.50	0.00	0.00	146.50
Totals	8.00	$350	$382	$0	$0	$732
1574205220	ELECTRIC THERMOSTAT W/ COVER AND WIRING				6.00 Ea.	
Unit values	1.00	75.00	27.55	0.00	0.00	102.55
Totals	6.00	$450	$165	$0	$0	$615

Line #	Description					
	Manhours	Matl	Labor	Equipment	Sub	Total
U15 MECHANICAL	272	$15,408	$6,286	$0	$0	$21,694
1631200100	HEATING SYSTEM POWER / CONTROL PANEL					
					1.00 Ea.	
Unit values	2.96	330.76	70.58	0.00	0.00	401.34
Totals	2.96	$331	$71	$0	$0	$402
U16 ELECTRICAL	3	$331	$71	$0	$0	$402

Line #	Description					
	Manhours	Matl	Labor	Equipment	Sub	Total
ESTIMATE TOTAL	344	$16,758	$8,461	$0	$0	$25,219
SALES TAX	0.00%	$0				
MATL MARKUP	0.00%	$0				
LABOR MARKUP	0.00%		$0			
EQUIPT MARKUP	0.00%			$0		
SUB MARKUP	0.00%				$0	
TOTAL BEFORE CONTINGENC		$16,758	$8,461	$0	$0	$25,219
CONTINGENCY	0.00%					$0
BOND	0.00%					$0
PROFIT	0.00%					$0
JOB TOTAL						$25,219

Estimate: BLDG 6142 Date: 14-Oct-94
Description: INFRARED HEATING SYSTEM COST ESTIMATE
Project: LIMITED EEAP(GLASSBid Date:
Location: FORT KNOX, KY Job #: 94013.02
Sq. footage: City indx:Louisville, KY

SUMMARY

	Manhours	Matl	Labor	Equipment	Sub	Total
A09 ELECTRICAL	69	$1,019	$2,104	$0	$0	$3,123
U15 MECHANICAL	272	$15,408	$6,286	$0	$0	$21,694
U16 ELECTRICAL	3	$331	$71	$0	$0	$402
TOTAL	344	$16,758	$8,461	$0	$0	$25,219
SALES TAX	0.00%	$0				
MATL MARKUP	0.00%	$0				
LABOR MARKUP	0.00%		$0			
EQUIPT MARKUP	0.00%			$0		
SUB MARKUP	0.00%				$0	
TOTAL BEFORE CONTINGENC		$16,758	$8,461	$0	$0	$25,219
CONTINGENCY	0.00%					$0
BOND	0.00%					$0
PROFIT	0.00%					$0
JOB TOTAL						$25,219

Estimate:	BLDG 6143	Date:	14-Oct-94
Description:	COST ESTIMATE		
Project:	LIMITED EEAP(GLASS	Bid Date:	
Location:	FORT KNOX, KY	Job #:	94013.02
Sq. footage:	8100.00	City indx:	Louisville, KY

Line #	Description	Manhours	Matl	Labor	Equipment	Sub	Total
0205543200	SITE REMOVAL,STEEL PIPE,WELDED CONNECTION, 4"DIAMETER					400.00 L.F.	
Unit values		0.15	0.00	3.16	1.29	0.00	4.44
Totals		60.00	$0	$1,262	$514	$0	$1,776
0207180380	HVAC DEMO,BOILER GAS/OIL STL >150MBH					1.00 Ea.	
Unit values		12.00	0.00	323.82	0.00	0.00	323.82
Totals		12.00	$0	$324	$0	$0	$324
0207183600	HVAC DEMO,MECH EQPT HEAVY ITEM					0.75 Ton	
Unit values		14.55	0.00	380.36	0.00	0.00	380.36
Totals		10.91	$0	$285	$0	$0	$285
0208400600	REMOVE PIPE INSULATION UP TO 4" DIAMETER PIPE					200.00 L.F.	
Unit values		0.07	0.00	1.97	0.24	0.00	2.21
Totals		14.20	$0	$395	$47	$0	$442
0208401000	REMOVE INSULATION FROM PIPE FITTING, UP TO 4" DIAMETER PIPE					70.00 Ea.	
Unit values		0.20	0.00	5.55	0.68	0.00	6.23
Totals		14.00	$0	$389	$47	$0	$436
0266907800	CUT IN VALVES, W/DUCK TIP GASKET, 4" DIAMETER					1.00 Ea.	
Unit values		1.56	259.60	35.47	5.91	0.00	300.98
Totals		1.56	$260	$35	$6	$0	$301
0268520550	GAS SERVICE&DISTRIB PIPING,SCH40 STEEL PLAIN END,TAR COAT&WRAP 1"DIAM					50.00 L.F.	
Unit values		0.11	1.92	2.96	0.17	0.00	5.06
Totals		5.35	$96	$148	$9	$0	$253
U02 SITEWORK		119	$356	$2,838	$623	$0	$3,817

Line #	Description					
	Manhours	Matl	Labor	Equipment	Sub	Total
1554510245	HTG INFA-RD UNT GAS ELEC IGN (See Attached for Breakdown)				1.00 LS	
Unit values	0.00	0.00	0.00	0.00	25219.00	25219.00
Totals	0.00	$0	$0	$0	$25,219	$25,219
1562600137	GAS APPLIANCE REGULATORS DOUBLE DIAPHRAGM TYPE 1-1/4" PIPE SIZE				1.00 Ea.	
Unit values	0.53	226.00	12.10	0.00	0.00	238.10
Totals	0.53	$226	$12	$0	$0	$238
U15 MECHANICAL	1	$226	$12	$0	$25,219	$25,457

Line #	Description					
	Manhours	Matl	Labor	Equipment	Sub	Total
ESTIMATE TOTAL	120	$582	$2,850	$623	$25,219	$29,274
SALES TAX	0.00%	$0				
MATL MARKUP	0.00%	$0				
LABOR MARKUP	0.00%		$0			
EQUIPT MARKUP	0.00%			$0		
SUB MARKUP	0.00%				$0	
TOTAL BEFORE CONTINGENC		$582	$2,850	$623	$25,219	$29,274
CONTINGENCY	10.00%					$2,927
BOND	0.00%					$0
PROFIT	10.00%					$2,927
JOB TOTAL						$35,129

Estimate:	BLDG 6143	Date:	14-Oct-94
Description:	COST ESTIMATE		
Project:	LIMITED EEAP(GLASS	Bid Date:	
Location:	FORT KNOX, KY	Job #:	94013.02
Sq. footage:	8100.00	City indx:	Louisville, KY

SUMMARY

	Manhours	Matl	Labor	Equipment	Sub	Total
U02 SITEWORK	119	$356	$2,838	$623	$0	$3,817
U15 MECHANICAL	1	$226	$12	$0	$25,219	$25,457
TOTAL	120	$582	$2,850	$623	$25,219	$29,274
SALES TAX	0.00%	$0				
MATL MARKUP	0.00%	$0				
LABOR MARKUP	0.00%		$0			
EQUIPT MARKUP	0.00%			$0		
SUB MARKUP	0.00%				$0	
TOTAL BEFORE CONTINGENC		$582	$2,850	$623	$25,219	$29,274
CONTINGENCY	10.00%					$2,927
BOND	0.00%					$0
PROFIT	10.00%					$2,927
JOB TOTAL						$35,129

Estimate: BLDG 6143 Date: 14-Oct-94
Description: INFRARED HEATING SYSTEM COST ESTIMATE
Project: LIMITED EEAP(GLASSBid Date:
Location: FORT KNOX, KY Job #: 94013.02
Sq. footage: City indx:Louisville, KY

Line #	Description					
	Manhours	Matl	Labor	Equipment	Sub	Total
0913100200	115V, 20 AMP POWER WIRING INCL CONDUIT, WIRE, AND RECEPTACLES				340.00 L.F.	
Unit values	0.15	2.22	4.57	0.00	0.00	6.79
Totals	50.66	$753	$1,555	$0	$0	$2,308
0913100200	CO-RAY-VAC VANTAGE 2 POWER FEEDER INSTALLATION, INCL CONDUIT, WIRE, AND RECEPTACLES				120.00 L.F.	
Unit values	0.15	2.22	4.57	0.00	0.00	6.79
Totals	17.88	$266	$549	$0	$0	$815
A09 ELECTRICAL	69	$1,019	$2,104	$0	$0	$3,123

Line #	Description	Manhours	Matl	Labor	Equipment	Sub	Total
1517010650	BLACK STEEL RADIANT PIPE, SCHEDULE 40, THREADED, 4" DIAM W/CPLGS					330.00 L.F.	
Unit values		0.44	4.17	10.30	0.00	0.00	14.47
Totals		146.52	$1,376	$3,400	$0	$0	$4,776
1517011310	GAS SERVICE PIPE STEEL GALV SCH 40 THRD W/CPLG & HNGR SZD FOR CVRG 10'OC 1/2" DIAM					450.00 L.F.	
Unit values		0.13	1.64	2.88	0.00	0.00	4.52
Totals		57.15	$738	$1,294	$0	$0	$2,032
1519010320	ALUMINUM REFLECTORS W/HANGERS					45.00 Ea.	
Unit values		0.50	39.79	3.80	0.00	0.00	43.59
Totals		22.50	$1,791	$171	$0	$0	$1,962
1524105040	VACUUM PUMP AND VENT PIPING					1.00 Ea.	
Unit values		3.00	738.35	120.15	0.00	0.00	858.50
Totals		3.00	$738	$120	$0	$0	$858
1552301020	CRV-100 GAS FIRED BURNER, 100 MBH & COMBUSTION CHAMBER					6.00 Ea.	
Unit values		1.00	860.00	44.06	0.00	0.00	904.06
Totals		6.00	$5,160	$264	$0	$0	$5,424
1554510160	CO-RAY-VAC VANTAGE 2 INFA-RD HTG UNT, GAS 100MBH					1.00 Ea.	
Unit values		6.00	1065.00	163.40	0.00	0.00	1228.40
Totals		6.00	$1,065	$163	$0	$0	$1,228
1554510220	CO-RAY-VAC VANTAGE 2 INFA-RD HTG UNIT, GAS 40 MBH					4.00 Ea.	
Unit values		4.00	935.00	81.70	0.00	0.00	1016.70
Totals		16.00	$3,740	$327	$0	$0	$4,067
1556800120	CO-RAY-VAC VANTAGE 2 VENT PIPE					5.00 Ea.	
Unit values		1.60	70.00	76.50	0.00	0.00	146.50
Totals		8.00	$350	$382	$0	$0	$732
1574205220	ELECTRIC THERMOSTAT W/ COVER AND WIRING					6.00 Ea.	
Unit values		1.00	75.00	27.55	0.00	0.00	102.55
Totals		6.00	$450	$165	$0	$0	$615

Line #	Description					
	Manhours	Matl	Labor	Equipment	Sub	Total
U15 MECHANICAL	272	$15,408	$6,286	$0	$0	$21,694
1631200100	HEATING SYSTEM POWER / CONTROL PANEL				1.00 Ea.	
Unit values	2.96	330.76	70.58	0.00	0.00	401.34
Totals	2.96	$331	$71	$0	$0	$402
U16 ELECTRICAL	3	$331	$71	$0	$0	$402

Line #	Description					
	Manhours	Matl	Labor	Equipment	Sub	Total
ESTIMATE TOTAL	344	$16,758	$8,461	$0	$0	$25,219
SALES TAX	0.00%	$0				
MATL MARKUP	0.00%	$0				
LABOR MARKUP	0.00%		$0			
EQUIPT MARKUP	0.00%			$0		
SUB MARKUP	0.00%				$0	
TOTAL BEFORE CONTINGENC		$16,758	$8,461	$0	$0	$25,219
CONTINGENCY	0.00%					$0
BOND	0.00%					$0
PROFIT	0.00%					$0
JOB TOTAL						$25,219

Estimate: BLDG 6143 Date: 14-Oct-94
Description: INFRARED HEATING SYSTEM COST ESTIMATE
Project: LIMITED EEAP(GLASSBid Date:
Location: FORT KNOX, KY Job #: 94013.02
Sq. footage: City indx:Louisville, KY

SUMMARY

	Manhours	Matl	Labor	Equipment	Sub	Total
A09 ELECTRICAL	69	$1,019	$2,104	$0	$0	$3,123
U15 MECHANICAL	272	$15,408	$6,286	$0	$0	$21,694
U16 ELECTRICAL	3	$331	$71	$0	$0	$402
TOTAL	344	$16,758	$8,461	$0	$0	$25,219
SALES TAX	0.00%	$0				
MATL MARKUP	0.00%	$0				
LABOR MARKUP	0.00%		$0			
EQUIPT MARKUP	0.00%			$0		
SUB MARKUP	0.00%				$0	
TOTAL BEFORE CONTINGENC		$16,758	$8,461	$0	$0	$25,219
CONTINGENCY	0.00%					$0
BOND	0.00%					$0
PROFIT	0.00%					$0
JOB TOTAL						$25,219

Estimate:	BLDG 6144	Date:	14-Oct-94
Description:	COST ESTIMATE		
Project:	LIMITED EEAP(GLASS	Bid Date:	
Location:	FORT KNOX, KY	Job #:	94013.02
Sq. footage:	8100.00	City indx:	Louisville, KY

Line #	Description	Manhours	Matl	Labor	Equipment	Sub	Total
0205543200	SITE REMOVAL,STEEL PIPE,WELDED CONNECTION, 4"DIAMETER					400.00 L.F.	
Unit values		0.15	0.00	3.16	1.29	0.00	4.44
Totals		60.00	$0	$1,262	$514	$0	$1,776
0207183600	HVAC DEMO,MECH EQPT HEAVY ITEM					0.75 Ton	
Unit values		14.55	0.00	380.36	0.00	0.00	380.36
Totals		10.91	$0	$285	$0	$0	$285
0208400600	REMOVE PIPE INSULATION UP TO 4" DIAMETER PIPE					200.00 L.F.	
Unit values		0.07	0.00	1.97	0.24	0.00	2.21
Totals		14.20	$0	$395	$47	$0	$442
0208401000	REMOVE INSULATION FROM PIPE FITTING, UP TO 4" DIAMETER PIPE					70.00 Ea.	
Unit values		0.20	0.00	5.55	0.68	0.00	6.23
Totals		14.00	$0	$389	$47	$0	$436
0266907800	CUT IN VALVES, W/DUCK TIP GASKET, 4" DIAMETER					1.00 Ea.	
Unit values		1.56	259.60	35.47	5.91	0.00	300.98
Totals		1.56	$260	$35	$6	$0	$301
0268520550	GAS SERVICE&DISTRIB PIPING,SCH40 STEEL PLAIN END,TAR COAT&WRAP 1"DIAM					50.00 L.F.	
Unit values		0.11	1.92	2.96	0.17	0.00	5.06
Totals		5.35	$96	$148	$9	$0	$253
U02 SITEWORK		107	$356	$2,514	$623	$0	$3,493

Line #	Description					
	Manhours	Matl	Labor	Equipment	Sub	Total
1554510245	HTG INFA-RD UNT GAS ELEC IGN (See Attached for Breakdown)				1.00 LS	
Unit values	0.00	0.00	0.00	0.00	25219.00	25219.00
Totals	0.00	$0	$0	$0	$25,219	$25,219
1562600137	GAS APPLIANCE REGULATORS DOUBLE DIAPHRAGM TYPE 1-1/4" PIPE SIZE				1.00 Ea.	
Unit values	0.53	226.00	12.10	0.00	0.00	238.10
Totals	0.53	$226	$12	$0	$0	$238
U15 MECHANICAL	1	$226	$12	$0	$25,219	$25,457

Line #	Description					
	Manhours	Matl	Labor	Equipment	Sub	Total
ESTIMATE TOTAL	108	$582	$2,526	$623	$25,219	$28,950
SALES TAX	0.00%	$0				
MATL MARKUP	0.00%	$0				
LABOR MARKUP	0.00%		$0			
EQUIPT MARKUP	0.00%			$0		
SUB MARKUP	0.00%				$0	
TOTAL BEFORE CONTINGENC		$582	$2,526	$623	$25,219	$28,950
CONTINGENCY	10.00%					$2,895
BOND	0.00%					$0
PROFIT	10.00%					$2,895
JOB TOTAL						$34,740

Estimate:	BLDG 6144	Date:	14-Oct-94
Description:	COST ESTIMATE		
Project:	LIMITED EEAP(GLASS	Bid Date:	
Location:	FORT KNOX, KY	Job #:	94013.02
Sq. footage:	8100.00	City indx:	Louisville, KY

SUMMARY

	Manhours	Matl	Labor	Equipment	Sub	Total
U02 SITEWORK	107	$356	$2,514	$623	$0	$3,493
U15 MECHANICAL	1	$226	$12	$0	$25,219	$25,457
TOTAL	108	$582	$2,526	$623	$25,219	$28,950
SALES TAX	0.00%	$0				
MATL MARKUP	0.00%	$0				
LABOR MARKUP	0.00%		$0			
EQUIPT MARKUP	0.00%			$0		
SUB MARKUP	0.00%				$0	
TOTAL BEFORE CONTINGENC		$582	$2,526	$623	$25,219	$28,950
CONTINGENCY	10.00%					$2,895
BOND	0.00%					$0
PROFIT	10.00%					$2,895
JOB TOTAL						$34,740

Estimate: BLDG 6144 Date: 14-Oct-94
Description: INFRARED HEATING SYSTEM COST ESTIMATE
Project: LIMITED EEAP(GLASSBid Date:
Location: FORT KNOX, KY Job #: 94013.02
Sq. footage: City indx:Louisville, KY

Line #	Description					
	Manhours	Matl	Labor	Equipment	Sub	Total
0913100200	115V, 20 AMP POWER WIRING INCL CONDUIT, WIRE, AND RECEPTACLES				340.00 L.F.	
Unit values	0.15	2.22	4.57	0.00	0.00	6.79
Totals	50.66	$753	$1,555	$0	$0	$2,308
0913100200	CO-RAY-VAC VANTAGE 2 POWER FEEDER INSTALLATION, INCL CONDUIT, WIRE, AND RECEPTACLES				120.00 L.F.	
Unit values	0.15	2.22	4.57	0.00	0.00	6.79
Totals	17.88	$266	$549	$0	$0	$815
A09 ELECTRICAL	69	$1,019	$2,104	$0	$0	$3,123

Line #	Description	Manhours	Matl	Labor	Equipment	Sub	Total
1517010650	BLACK STEEL RADIANT PIPE, SCHEDULE 40, THREADED, 4" DIAM W/CPLGS					330.00 L.F.	
Unit values		0.44	4.17	10.30	0.00	0.00	14.47
Totals		146.52	$1,376	$3,400	$0	$0	$4,776
1517011310	GAS SERVICE PIPE STEEL GALV SCH 40 THRD W/CPLG & HNGR SZD FOR CVRG 10'OC 1/2" DIAM					450.00 L.F.	
Unit values		0.13	1.64	2.88	0.00	0.00	4.52
Totals		57.15	$738	$1,294	$0	$0	$2,032
1519010320	ALUMINUM REFLECTORS W/HANGERS					45.00 Ea.	
Unit values		0.50	39.79	3.80	0.00	0.00	43.59
Totals		22.50	$1,791	$171	$0	$0	$1,962
1524105040	VACUUM PUMP AND VENT PIPING					1.00 Ea.	
Unit values		3.00	738.35	120.15	0.00	0.00	858.50
Totals		3.00	$738	$120	$0	$0	$858
1552301020	CRV-100 GAS FIRED BURNER, 100 MBH & COMBUSTION CHAMBER					6.00 Ea.	
Unit values		1.00	860.00	44.06	0.00	0.00	904.06
Totals		6.00	$5,160	$264	$0	$0	$5,424
1554510160	CO-RAY-VAC VANTAGE 2 INFA-RD HTG UNT, GAS 100MBH					1.00 Ea.	
Unit values		6.00	1065.00	163.40	0.00	0.00	1228.40
Totals		6.00	$1,065	$163	$0	$0	$1,228
1554510220	CO-RAY-VAC VANTAGE 2 INFA-RD HTG UNIT, GAS 40 MBH					4.00 Ea.	
Unit values		4.00	935.00	81.70	0.00	0.00	1016.70
Totals		16.00	$3,740	$327	$0	$0	$4,067
1556800120	CO-RAY-VAC VANTAGE 2 VENT PIPE					5.00 Ea.	
Unit values		1.60	70.00	76.50	0.00	0.00	146.50
Totals		8.00	$350	$382	$0	$0	$732
1574205220	ELECTRIC THERMOSTAT W/ COVER AND WIRING					6.00 Ea.	
Unit values		1.00	75.00	27.55	0.00	0.00	102.55
Totals		6.00	$450	$165	$0	$0	$615

Line #	Description					
	Manhours	Matl	Labor	Equipment	Sub	Total
U15 MECHANICAL	272	$15,408	$6,286	$0	$0	$21,694
1631200100	HEATING SYSTEM POWER / CONTROL PANEL				1.00 Ea.	
Unit values	2.96	330.76	70.58	0.00	0.00	401.34
Totals	2.96	$331	$71	$0	$0	$402
U16 ELECTRICAL	3	$331	$71	$0	$0	$402

Line #	Description					
	Manhours	Matl	Labor	Equipment	Sub	Total
ESTIMATE TOTAL	344	$16,758	$8,461	$0	$0	$25,219
SALES TAX	0.00%	$0				
MATL MARKUP	0.00%	$0				
LABOR MARKUP	0.00%		$0			
EQUIPT MARKUP	0.00%			$0		
SUB MARKUP	0.00%				$0	
TOTAL BEFORE CONTINGENC		$16,758	$8,461	$0	$0	$25,219
CONTINGENCY	0.00%					$0
BOND	0.00%					$0
PROFIT	0.00%					$0
JOB TOTAL						$25,219

Estimate: BLDG 6144 Date: 14-Oct-94
Description: INFRARED HEATING SYSTEM COST ESTIMATE
Project: LIMITED EEAP(GLASSBid Date:
Location: FORT KNOX, KY Job #: 94013.02
Sq. footage: City indx:Louisville, KY

SUMMARY

	Manhours	Matl	Labor	Equipment	Sub	Total
A09 ELECTRICAL	69	$1,019	$2,104	$0	$0	$3,123
U15 MECHANICAL	272	$15,408	$6,286	$0	$0	$21,694
U16 ELECTRICAL	3	$331	$71	$0	$0	$402
TOTAL	344	$16,758	$8,461	$0	$0	$25,219
SALES TAX	0.00%	$0				
MATL MARKUP	0.00%	$0				
LABOR MARKUP	0.00%		$0			
EQUIPT MARKUP	0.00%			$0		
SUB MARKUP	0.00%				$0	
TOTAL BEFORE CONTINGENC		$16,758	$8,461	$0	$0	$25,219
CONTINGENCY	0.00%					$0
BOND	0.00%					$0
PROFIT	0.00%					$0
JOB TOTAL						$25,219

Estimate: BLDG 6145 Date: 14-Oct-94
Description: COST ESTIMATE
Project: LIMITED EEAP(GLASSBid Date:
Location: FORT KNOX, KY Job #: 94013.02
Sq. footage: 8100.00 City indx:Louisville, KY

Line #	Description	Manhours	Matl	Labor	Equipment	Sub	Total
0205543200	SITE REMOVAL,STEEL PIPE,WELDED CONNECTION, 4"DIAMETER					400.00 L.F.	
Unit values		0.15	0.00	3.16	1.29	0.00	4.44
Totals		60.00	$0	$1,262	$514	$0	$1,776
0207183600	HVAC DEMO,MECH EQPT HEAVY ITEM					0.75 Ton	
Unit values		14.55	0.00	380.36	0.00	0.00	380.36
Totals		10.91	$0	$285	$0	$0	$285
0208400600	REMOVE PIPE INSULATION UP TO 4" DIAMETER PIPE					200.00 L.F.	
Unit values		0.07	0.00	1.97	0.24	0.00	2.21
Totals		14.20	$0	$395	$47	$0	$442
0208401000	REMOVE INSULATION FROM PIPE FITTING, UP TO 4" DIAMETER PIPE					70.00 Ea.	
Unit values		0.20	0.00	5.55	0.68	0.00	6.23
Totals		14.00	$0	$389	$47	$0	$436
0266907800	CUT IN VALVES, W/DUCK TIP GASKET, 4" DIAMETER					1.00 Ea.	
Unit values		1.56	259.60	35.47	5.91	0.00	300.98
Totals		1.56	$260	$35	$6	$0	$301
0268520550	GAS SERVICE&DISTRIB PIPING,SCH40 STEEL PLAIN END,TAR COAT&WRAP 1"DIAM					50.00 L.F.	
Unit values		0.11	1.92	2.96	0.17	0.00	5.06
Totals		5.35	$96	$148	$9	$0	$253
U02 SITEWORK		107	$356	$2,514	$623	$0	$3,493

Line #	Description					
	Manhours	Matl	Labor	Equipment	Sub	Total
1554510245	HTG INFA-RD UNT GAS ELEC IGN (See Attached for Breakdown)				1.00 LS	
Unit values	0.00	0.00	0.00	0.00	25219.00	25219.00
Totals	0.00	$0	$0	$0	$25,219	$25,219
1562600137	GAS APPLIANCE REGULATORS DOUBLE DIAPHRAGM TYPE 1-1/4" PIPE SIZE				1.00 Ea.	
Unit values	0.53	226.00	12.10	0.00	0.00	238.10
Totals	0.53	$226	$12	$0	$0	$238
U15 MECHANICAL	1	$226	$12	$0	$25,219	$25,457

Line #	Description					
	Manhours	Matl	Labor	Equipment	Sub	Total
ESTIMATE TOTAL	108	$582	$2,526	$623	$25,219	$28,950
SALES TAX	0.00%	$0				
MATL MARKUP	0.00%	$0				
LABOR MARKUP	0.00%		$0			
EQUIPT MARKUP	0.00%			$0		
SUB MARKUP	0.00%				$0	
TOTAL BEFORE CONTINGENC		$582	$2,526	$623	$25,219	$28,950
CONTINGENCY	10.00%					$2,895
BOND	0.00%					$0
PROFIT	10.00%					$2,895
JOB TOTAL						$34,740

Estimate:	BLDG 6145	Date:	14-Oct-94
Description:	COST ESTIMATE		
Project:	LIMITED EEAP(GLASS	Bid Date:	
Location:	FORT KNOX, KY	Job #:	94013.02
Sq. footage:	8100.00	City indx:	Louisville, KY

SUMMARY

	Manhours	Matl	Labor	Equipment	Sub	Total
U02 SITEWORK	107	$356	$2,514	$623	$0	$3,493
U15 MECHANICAL	1	$226	$12	$0	$25,219	$25,457
TOTAL	108	$582	$2,526	$623	$25,219	$28,950
SALES TAX	0.00%	$0				
MATL MARKUP	0.00%	$0				
LABOR MARKUP	0.00%		$0			
EQUIPT MARKUP	0.00%			$0		
SUB MARKUP	0.00%				$0	
TOTAL BEFORE CONTINGENC		$582	$2,526	$623	$25,219	$28,950
CONTINGENCY	10.00%					$2,895
BOND	0.00%					$0
PROFIT	10.00%					$2,895
JOB TOTAL						$34,740

Estimate:	BLDG 6145	Date:	14-Oct-94
Description:	INFRARED HEATING SYSTEM COST ESTIMATE		
Project:	LIMITED EEAP(GLASSBid Date:		
Location:	FORT KNOX, KY	Job #:	94013.02
Sq. footage:		City indx:	Louisville, KY

Line #	Description					
	Manhours	Matl	Labor	Equipment	Sub	Total
0913100200	115V, 20 AMP POWER WIRING INCL CONDUIT, WIRE, AND RECEPTACLES				340.00 L.F.	
Unit values	0.15	2.22	4.57	0.00	0.00	6.79
Totals	50.66	$753	$1,555	$0	$0	$2,308
0913100200	CO-RAY-VAC VANTAGE 2 POWER FEEDER INSTALLATION, INCL CONDUIT, WIRE, AND RECEPTACLES				120.00 L.F.	
Unit values	0.15	2.22	4.57	0.00	0.00	6.79
Totals	17.88	$266	$549	$0	$0	$815
A09 ELECTRICAL	69	$1,019	$2,104	$0	$0	$3,123

Line #	Description	Manhours	Matl	Labor	Equipment	Sub	Total
1517010650	BLACK STEEL RADIANT PIPE, SCHEDULE 40, THREADED, 4" DIAM W/CPLGS					330.00 L.F.	
Unit values		0.44	4.17	10.30	0.00	0.00	14.47
Totals		146.52	$1,376	$3,400	$0	$0	$4,776
1517011310	GAS SERVICE PIPE STEEL GALV SCH 40 THRD W/CPLG & HNGR SZD FOR CVRG 10'OC 1/2" DIAM					450.00 L.F.	
Unit values		0.13	1.64	2.88	0.00	0.00	4.52
Totals		57.15	$738	$1,294	$0	$0	$2,032
1519010320	ALUMINUM REFLECTORS W/HANGERS					45.00 Ea.	
Unit values		0.50	39.79	3.80	0.00	0.00	43.59
Totals		22.50	$1,791	$171	$0	$0	$1,962
1524105040	VACUUM PUMP AND VENT PIPING					1.00 Ea.	
Unit values		3.00	738.35	120.15	0.00	0.00	858.50
Totals		3.00	$738	$120	$0	$0	$858
1552301020	CRV-100 GAS FIRED BURNER, 100 MBH & COMBUSTION CHAMBER					6.00 Ea.	
Unit values		1.00	860.00	44.06	0.00	0.00	904.06
Totals		6.00	$5,160	$264	$0	$0	$5,424
1554510160	CO-RAY-VAC VANTAGE 2 INFA-RD HTG UNT, GAS 100MBH					1.00 Ea.	
Unit values		6.00	1065.00	163.40	0.00	0.00	1228.40
Totals		6.00	$1,065	$163	$0	$0	$1,228
1554510220	CO-RAY-VAC VANTAGE 2 INFA-RD HTG UNIT, GAS 40 MBH					4.00 Ea.	
Unit values		4.00	935.00	81.70	0.00	0.00	1016.70
Totals		16.00	$3,740	$327	$0	$0	$4,067
1556800120	CO-RAY-VAC VANTAGE 2 VENT PIPE					5.00 Ea.	
Unit values		1.60	70.00	76.50	0.00	0.00	146.50
Totals		8.00	$350	$382	$0	$0	$732
1574205220	ELECTRIC THERMOSTAT W/ COVER AND WIRING					6.00 Ea.	
Unit values		1.00	75.00	27.55	0.00	0.00	102.55
Totals		6.00	$450	$165	$0	$0	$615

Line #	Description					
	Manhours	Matl	Labor	Equipment	Sub	Total
U15 MECHANICAL	272	$15,408	$6,286	$0	$0	$21,694
1631200100	HEATING SYSTEM POWER / CONTROL PANEL					
					1.00 Ea.	
Unit values	2.96	330.76	70.58	0.00	0.00	401.34
Totals	2.96	$331	$71	$0	$0	$402
U16 ELECTRICAL	3	$331	$71	$0	$0	$402

Line #	Description					
	Manhours	Matl	Labor	Equipment	Sub	Total
ESTIMATE TOTAL	344	$16,758	$8,461	$0	$0	$25,219
SALES TAX	0.00%	$0				
MATL MARKUP	0.00%	$0				
LABOR MARKUP	0.00%		$0			
EQUIPT MARKUP	0.00%			$0		
SUB MARKUP	0.00%				$0	
TOTAL BEFORE CONTINGENC		$16,758	$8,461	$0	$0	$25,219
CONTINGENCY	0.00%					$0
BOND	0.00%					$0
PROFIT	0.00%					$0
JOB TOTAL						$25,219

Estimate: BLDG 6145 Date: 14-Oct-94
Description: INFRARED HEATING SYSTEM COST ESTIMATE
Project: LIMITED EEAP(GLASSBid Date:
Location: FORT KNOX, KY Job #: 94013.02
Sq. footage: City indx:Louisville, KY

SUMMARY

	Manhours	Matl	Labor	Equipment	Sub	Total
A09 ELECTRICAL	69	$1,019	$2,104	$0	$0	$3,123
U15 MECHANICAL	272	$15,408	$6,286	$0	$0	$21,694
U16 ELECTRICAL	3	$331	$71	$0	$0	$402
TOTAL	344	$16,758	$8,461	$0	$0	$25,219
SALES TAX	0.00%	$0				
MATL MARKUP	0.00%	$0				
LABOR MARKUP	0.00%		$0			
EQUIPT MARKUP	0.00%			$0		
SUB MARKUP	0.00%				$0	
TOTAL BEFORE CONTINGENC		$16,758	$8,461	$0	$0	$25,219
CONTINGENCY	0.00%					$0
BOND	0.00%					$0
PROFIT	0.00%					$0
JOB TOTAL						$25,219

Estimate:	BLDG 6146	Date:	14-Oct-94
Description:	COST ESTIMATE		
Project:	LIMITED EEAP(GLASS	Bid Date:	
Location:	FORT KNOX, KY	Job #:	94013.02
Sq. footage:	8100.00	City indx:	Louisville, KY

Line #	Description	Manhours	Matl	Labor	Equipment	Sub	Total
0205543200	SITE REMOVAL,STEEL PIPE,WELDED CONNECTION, 4"DIAMETER					400.00 L.F.	
Unit values		0.15	0.00	3.16	1.29	0.00	4.44
Totals		60.00	$0	$1,262	$514	$0	$1,776
0207180380	HVAC DEMO,BOILER GAS/OIL STL >150MBH					1.00 Ea.	
Unit values		12.00	0.00	323.82	0.00	0.00	323.82
Totals		12.00	$0	$324	$0	$0	$324
0207183600	HVAC DEMO,MECH EQPT HEAVY ITEM					0.75 Ton	
Unit values		14.55	0.00	380.36	0.00	0.00	380.36
Totals		10.91	$0	$285	$0	$0	$285
0208400600	REMOVE PIPE INSULATION UP TO 4" DIAMETER PIPE					200.00 L.F.	
Unit values		0.07	0.00	1.97	0.24	0.00	2.21
Totals		14.20	$0	$395	$47	$0	$442
0208401000	REMOVE INSULATION FROM PIPE FITTING, UP TO 4" DIAMETER PIPE					70.00 Ea.	
Unit values		0.20	0.00	5.55	0.68	0.00	6.23
Totals		14.00	$0	$389	$47	$0	$436
0266907800	CUT IN VALVES, W/DUCK TIP GASKET, 4" DIAMETER					1.00 Ea.	
Unit values		1.56	259.60	35.47	5.91	0.00	300.98
Totals		1.56	$260	$35	$6	$0	$301
0268520550	GAS SERVICE&DISTRIB PIPING,SCH40 STEEL PLAIN END,TAR COAT&WRAP 1"DIAM					50.00 L.F.	
Unit values		0.11	1.92	2.96	0.17	0.00	5.06
Totals		5.35	$96	$148	$9	$0	$253
U02 SITEWORK		119	$356	$2,838	$623	$0	$3,817

Line #	Description					
	Manhours	Matl	Labor	Equipment	Sub	Total
1554510245	HTG INFA-RD UNT GAS ELEC IGN (See Attached for Breakdown)				1.00 LS	
Unit values	0.00	0.00	0.00	0.00	25219.00	25219.00
Totals	0.00	$0	$0	$0	$25,219	$25,219
1562600137	GAS APPLIANCE REGULATORS DOUBLE DIAPHRAGM TYPE 1-1/4" PIPE SIZE				1.00 Ea.	
Unit values	0.53	226.00	12.10	0.00	0.00	238.10
Totals	0.53	$226	$12	$0	$0	$238
U15 MECHANICAL	1	$226	$12	$0	$25,219	$25,457

Line #	Description					
	Manhours	Matl	Labor	Equipment	Sub	Total
ESTIMATE TOTAL	120	$582	$2,850	$623	$25,219	$29,274
SALES TAX	0.00%	$0				
MATL MARKUP	0.00%	$0				
LABOR MARKUP	0.00%		$0			
EQUIPT MARKUP	0.00%			$0		
SUB MARKUP	0.00%				$0	
TOTAL BEFORE CONTINGENC		$582	$2,850	$623	$25,219	$29,274
CONTINGENCY	10.00%					$2,927
BOND	0.00%					$0
PROFIT	10.00%					$2,927
JOB TOTAL						$35,129

Estimate: BLDG 6146 Date: 14-Oct-94
Description: COST ESTIMATE
Project: LIMITED EEAP(GLASSBid Date:
Location: FORT KNOX, KY Job #: 94013.02
Sq. footage: 8100.00 City indx:Louisville, KY

SUMMARY

	Manhours	Matl	Labor	Equipment	Sub	Total
U02 SITEWORK	119	$356	$2,838	$623	$0	$3,817
U15 MECHANICAL	1	$226	$12	$0	$25,219	$25,457
TOTAL	120	$582	$2,850	$623	$25,219	$29,274
SALES TAX	0.00%	$0				
MATL MARKUP	0.00%	$0				
LABOR MARKUP	0.00%		$0			
EQUIPT MARKUP	0.00%			$0		
SUB MARKUP	0.00%				$0	
TOTAL BEFORE CONTINGENC		$582	$2,850	$623	$25,219	$29,274
CONTINGENCY	10.00%					$2,927
BOND	0.00%					$0
PROFIT	10.00%					$2,927
JOB TOTAL						$35,129

Estimate: BLDG 6146 Date: 14-Oct-94
Description: INFRARED HEATING SYSTEM COST ESTIMATE
Project: LIMITED EEAP(GLASSBid Date:
Location: FORT KNOX, KY Job #: 94013.02
Sq. footage: City indx:Louisville, KY

Line #	Description	Manhours	Matl	Labor	Equipment	Sub	Total
0913100200	115V, 20 AMP POWER WIRING INCL CONDUIT, WIRE, AND RECEPTACLES					340.00 L.F.	
Unit values		0.15	2.22	4.57	0.00	0.00	6.79
Totals		50.66	$753	$1,555	$0	$0	$2,308
0913100200	CO-RAY-VAC VANTAGE 2 POWER FEEDER INSTALLATION, INCL CONDUIT, WIRE, AND RECEPTACLES					120.00 L.F.	
Unit values		0.15	2.22	4.57	0.00	0.00	6.79
Totals		17.88	$266	$549	$0	$0	$815
A09 ELECTRICAL		69	$1,019	$2,104	$0	$0	$3,123

Line #	Description	Manhours	Matl	Labor	Equipment	Sub	Total
1517010650	BLACK STEEL RADIANT PIPE, SCHEDULE 40, THREADED, 4" DIAM W/CPLGS					330.00 L.F.	
Unit values		0.44	4.17	10.30	0.00	0.00	14.47
Totals		146.52	$1,376	$3,400	$0	$0	$4,776
1517011310	GAS SERVICE PIPE STEEL GALV SCH 40 THRD W/CPLG & HNGR SZD FOR CVRG 10'OC 1/2" DIAM					450.00 L.F.	
Unit values		0.13	1.64	2.88	0.00	0.00	4.52
Totals		57.15	$738	$1,294	$0	$0	$2,032
1519010320	ALUMINUM REFLECTORS W/HANGERS					45.00 Ea.	
Unit values		0.50	39.79	3.80	0.00	0.00	43.59
Totals		22.50	$1,791	$171	$0	$0	$1,962
1524105040	VACUUM PUMP AND VENT PIPING					1.00 Ea.	
Unit values		3.00	738.35	120.15	0.00	0.00	858.50
Totals		3.00	$738	$120	$0	$0	$858
1552301020	CRV-100 GAS FIRED BURNER, 100 MBH & COMBUSTION CHAMBER					6.00 Ea.	
Unit values		1.00	860.00	44.06	0.00	0.00	904.06
Totals		6.00	$5,160	$264	$0	$0	$5,424
1554510160	CO-RAY-VAC VANTAGE 2 INFA-RD HTG UNT, GAS 100MBH					1.00 Ea.	
Unit values		6.00	1065.00	163.40	0.00	0.00	1228.40
Totals		6.00	$1,065	$163	$0	$0	$1,228
1554510220	CO-RAY-VAC VANTAGE 2 INFA-RD HTG UNIT, GAS 40 MBH					4.00 Ea.	
Unit values		4.00	935.00	81.70	0.00	0.00	1016.70
Totals		16.00	$3,740	$327	$0	$0	$4,067
1556800120	CO-RAY-VAC VANTAGE 2 VENT PIPE					5.00 Ea.	
Unit values		1.60	70.00	76.50	0.00	0.00	146.50
Totals		8.00	$350	$382	$0	$0	$732
1574205220	ELECTRIC THERMOSTAT W/ COVER AND WIRING					6.00 Ea.	
Unit values		1.00	75.00	27.55	0.00	0.00	102.55
Totals		6.00	$450	$165	$0	$0	$615

Line #	Description					
	Manhours	Matl	Labor	Equipment	Sub	Total
U15 MECHANICAL	272	$15,408	$6,286	$0	$0	$21,694
1631200100	HEATING SYSTEM POWER / CONTROL PANEL				1.00 Ea.	
Unit values	2.96	330.76	70.58	0.00	0.00	401.34
Totals	2.96	$331	$71	$0	$0	$402
U16 ELECTRICAL	3	$331	$71	$0	$0	$402

Line #	Description					
	Manhours	Matl	Labor	Equipment	Sub	Total
ESTIMATE TOTAL	344	$16,758	$8,461	$0	$0	$25,219
SALES TAX	0.00%	$0				
MATL MARKUP	0.00%	$0				
LABOR MARKUP	0.00%		$0			
EQUIPT MARKUP	0.00%			$0		
SUB MARKUP	0.00%				$0	
TOTAL BEFORE CONTINGENC		$16,758	$8,461	$0	$0	$25,219
CONTINGENCY	0.00%					$0
BOND	0.00%					$0
PROFIT	0.00%					$0
JOB TOTAL						$25,219

Estimate: BLDG 6146 Date: 14-Oct-94
Description: INFRARED HEATING SYSTEM COST ESTIMATE
Project: LIMITED EEAP(GLASSBid Date:
Location: FORT KNOX, KY Job #: 94013.02
Sq. footage: City indx:Louisville, KY

SUMMARY

	Manhours	Matl	Labor	Equipment	Sub	Total
A09 ELECTRICAL	69	$1,019	$2,104	$0	$0	$3,123
U15 MECHANICAL	272	$15,408	$6,286	$0	$0	$21,694
U16 ELECTRICAL	3	$331	$71	$0	$0	$402
TOTAL	344	$16,758	$8,461	$0	$0	$25,219
SALES TAX	0.00%	$0				
MATL MARKUP	0.00%	$0				
LABOR MARKUP	0.00%		$0			
EQUIPT MARKUP	0.00%			$0		
SUB MARKUP	0.00%				$0	
TOTAL BEFORE CONTINGENC		$16,758	$8,461	$0	$0	$25,219
CONTINGENCY	0.00%					$0
BOND	0.00%					$0
PROFIT	0.00%					$0
JOB TOTAL						$25,219

Estimate:	BLDG 6147	Date:	14-Oct-94
Description:	COST ESTIMATE		
Project:	LIMITED EEAP(GLASS	Bid Date:	
Location:	FORT KNOX, KY	Job #:	94013.02
Sq. footage:	8100.00	City indx:	Louisville, KY

Line #	Description	Manhours	Matl	Labor	Equipment	Sub	Total
0205543200	SITE REMOVAL,STEEL PIPE,WELDED CONNECTION, 4"DIAMETER					400.00 L.F.	
Unit values		0.15	0.00	3.16	1.29	0.00	4.44
Totals		60.00	$0	$1,262	$514	$0	$1,776
0207183600	HVAC DEMO,MECH EQPT HEAVY ITEM					0.75 Ton	
Unit values		14.55	0.00	380.36	0.00	0.00	380.36
Totals		10.91	$0	$285	$0	$0	$285
0208400600	REMOVE PIPE INSULATION UP TO 4" DIAMETER PIPE					200.00 L.F.	
Unit values		0.07	0.00	1.97	0.24	0.00	2.21
Totals		14.20	$0	$395	$47	$0	$442
0208401000	REMOVE INSULATION FROM PIPE FITTING, UP TO 4" DIAMETER PIPE					70.00 Ea.	
Unit values		0.20	0.00	5.55	0.68	0.00	6.23
Totals		14.00	$0	$389	$47	$0	$436
0266907800	CUT IN VALVES, W/DUCK TIP GASKET, 4" DIAMETER					1.00 Ea.	
Unit values		1.56	259.60	35.47	5.91	0.00	300.98
Totals		1.56	$260	$35	$6	$0	$301
0268520550	GAS SERVICE&DISTRIB PIPING,SCH40 STEEL PLAIN END,TAR COAT&WRAP 1"DIAM					50.00 L.F.	
Unit values		0.11	1.92	2.96	0.17	0.00	5.06
Totals		5.35	$96	$148	$9	$0	$253
U02 SITEWORK		107	$356	$2,514	$623	$0	$3,493

Line #	Description					
	Manhours	Matl	Labor	Equipment	Sub	Total
1554510245	HTG INFA-RD UNT GAS ELEC IGN (See Attached for Breakdown)				1.00 LS	
Unit values	0.00	0.00	0.00	0.00	25219.00	25219.00
Totals	0.00	$0	$0	$0	$25,219	$25,219
1562600137	GAS APPLIANCE REGULATORS DOUBLE DIAPHRAGM TYPE 1-1/4" PIPE SIZE				1.00 Ea.	
Unit values	0.53	226.00	12.10	0.00	0.00	238.10
Totals	0.53	$226	$12	$0	$0	$238
U15 MECHANICAL	1	$226	$12	$0	$25,219	$25,457

Line #	Description					
	Manhours	Matl	Labor	Equipment	Sub	Total
ESTIMATE TOTAL	108	$582	$2,526	$623	$25,219	$28,950
SALES TAX	0.00%	$0				
MATL MARKUP	0.00%	$0				
LABOR MARKUP	0.00%		$0			
EQUIPT MARKUP	0.00%			$0		
SUB MARKUP	0.00%				$0	
TOTAL BEFORE CONTINGENC		$582	$2,526	$623	$25,219	$28,950
CONTINGENCY	10.00%					$2,895
BOND	0.00%					$0
PROFIT	10.00%					$2,895
JOB TOTAL						$34,740

Estimate:	BLDG 6147	Date:	14-Oct-94
Description:	COST ESTIMATE		
Project:	LIMITED EEAP(GLASS	Bid Date:	
Location:	FORT KNOX, KY	Job #:	94013.02
Sq. footage:	8100.00	City indx:	Louisville, KY

SUMMARY

	Manhours	Matl	Labor	Equipment	Sub	Total
U02 SITEWORK	107	$356	$2,514	$623	$0	$3,493
U15 MECHANICAL	1	$226	$12	$0	$25,219	$25,457
TOTAL	108	$582	$2,526	$623	$25,219	$28,950
SALES TAX	0.00%	$0				
MATL MARKUP	0.00%	$0				
LABOR MARKUP	0.00%		$0			
EQUIPT MARKUP	0.00%			$0		
SUB MARKUP	0.00%				$0	
TOTAL BEFORE CONTINGENC		$582	$2,526	$623	$25,219	$28,950
CONTINGENCY	10.00%					$2,895
BOND	0.00%					$0
PROFIT	10.00%					$2,895
JOB TOTAL						$34,740

Estimate:	BLDG 6147	Date:	14-Oct-94
Description:	INFRARED HEATING SYSTEM COST ESTIMATE		
Project:	LIMITED EEAP(GLASS	Bid Date:	
Location:	FORT KNOX, KY	Job #:	94013.02
Sq. footage:		City indx:	Louisville, KY

Line #	Description	Manhours	Matl	Labor	Equipment	Sub	Total
0913100200	115V, 20 AMP POWER WIRING INCL CONDUIT, WIRE, AND RECEPTACLES					340.00 L.F.	
Unit values		0.15	2.22	4.57	0.00	0.00	6.79
Totals		50.66	$753	$1,555	$0	$0	$2,308
0913100200	CO-RAY-VAC VANTAGE 2 POWER FEEDER INSTALLATION, INCL CONDUIT, WIRE, AND RECEPTACLES					120.00 L.F.	
Unit values		0.15	2.22	4.57	0.00	0.00	6.79
Totals		17.88	$266	$549	$0	$0	$815
A09 ELECTRICAL		69	$1,019	$2,104	$0	$0	$3,123

Line #	Description	Manhours	Matl	Labor	Equipment	Sub	Total
1517010650	BLACK STEEL RADIANT PIPE, SCHEDULE 40, THREADED, 4" DIAM W/CPLGS					330.00 L.F.	
Unit values		0.44	4.17	10.30	0.00	0.00	14.47
Totals		146.52	$1,376	$3,400	$0	$0	$4,776
1517011310	GAS SERVICE PIPE STEEL GALV SCH 40 THRD W/CPLG & HNGR SZD FOR CVRG 10'OC 1/2" DIAM					450.00 L.F.	
Unit values		0.13	1.64	2.88	0.00	0.00	4.52
Totals		57.15	$738	$1,294	$0	$0	$2,032
1519010320	ALUMINUM REFLECTORS W/HANGERS					45.00 Ea.	
Unit values		0.50	39.79	3.80	0.00	0.00	43.59
Totals		22.50	$1,791	$171	$0	$0	$1,962
1524105040	VACUUM PUMP AND VENT PIPING					1.00 Ea.	
Unit values		3.00	738.35	120.15	0.00	0.00	858.50
Totals		3.00	$738	$120	$0	$0	$858
1552301020	CRV-100 GAS FIRED BURNER, 100 MBH & COMBUSTION CHAMBER					6.00 Ea.	
Unit values		1.00	860.00	44.06	0.00	0.00	904.06
Totals		6.00	$5,160	$264	$0	$0	$5,424
1554510160	CO-RAY-VAC VANTAGE 2 INFA-RD HTG UNT, GAS 100MBH					1.00 Ea.	
Unit values		6.00	1065.00	163.40	0.00	0.00	1228.40
Totals		6.00	$1,065	$163	$0	$0	$1,228
1554510220	CO-RAY-VAC VANTAGE 2 INFA-RD HTG UNIT, GAS 40 MBH					4.00 Ea.	
Unit values		4.00	935.00	81.70	0.00	0.00	1016.70
Totals		16.00	$3,740	$327	$0	$0	$4,067
1556800120	CO-RAY-VAC VANTAGE 2 VENT PIPE					5.00 Ea.	
Unit values		1.60	70.00	76.50	0.00	0.00	146.50
Totals		8.00	$350	$382	$0	$0	$732
1574205220	ELECTRIC THERMOSTAT W/ COVER AND WIRING					6.00 Ea.	
Unit values		1.00	75.00	27.55	0.00	0.00	102.55
Totals		6.00	$450	$165	$0	$0	$615

Line #	Description					
	Manhours	Matl	Labor	Equipment	Sub	Total
U15 MECHANICAL	272	$15,408	$6,286	$0	$0	$21,694
1631200100	HEATING SYSTEM POWER / CONTROL PANEL				1.00 Ea.	
Unit values	2.96	330.76	70.58	0.00	0.00	401.34
Totals	2.96	$331	$71	$0	$0	$402
U16 ELECTRICAL	3	$331	$71	$0	$0	$402

Line #	Description					
	Manhours	Matl	Labor	Equipment	Sub	Total
ESTIMATE TOTAL	344	$16,758	$8,461	$0	$0	$25,219
SALES TAX	0.00%	$0				
MATL MARKUP	0.00%	$0				
LABOR MARKUP	0.00%		$0			
EQUIPT MARKUP	0.00%			$0		
SUB MARKUP	0.00%				$0	
TOTAL BEFORE CONTINGENC		$16,758	$8,461	$0	$0	$25,219
CONTINGENCY	0.00%					$0
BOND	0.00%					$0
PROFIT	0.00%					$0
JOB TOTAL						$25,219

Estimate: BLDG 6147 Date: 14-Oct-94
Description: INFRARED HEATING SYSTEM COST ESTIMATE
Project: LIMITED EEAP(GLASSBid Date:
Location: FORT KNOX, KY Job #: 94013.02
Sq. footage: City indx:Louisville, KY

SUMMARY

	Manhours	Matl	Labor	Equipment	Sub	Total
A09 ELECTRICAL	69	$1,019	$2,104	$0	$0	$3,123
U15 MECHANICAL	272	$15,408	$6,286	$0	$0	$21,694
U16 ELECTRICAL	3	$331	$71	$0	$0	$402
TOTAL	344	$16,758	$8,461	$0	$0	$25,219
SALES TAX	0.00%	$0				
MATL MARKUP	0.00%	$0				
LABOR MARKUP	0.00%		$0			
EQUIPT MARKUP	0.00%			$0		
SUB MARKUP	0.00%				$0	
TOTAL BEFORE CONTINGENC		$16,758	$8,461	$0	$0	$25,219
CONTINGENCY	0.00%					$0
BOND	0.00%					$0
PROFIT	0.00%					$0
JOB TOTAL						$25,219

FT KNOX LIMITED EEAP (GLASS)

ECO - 1: INFRARED HEATING CALCULATIONS

BUILDING NUMBER: 6113

BUILDING HEATING TEMPERATURE SETPOINT: 60 F
OUTSIDE DESIGN TEMPERATURE 1 F
TEMPERATURE DIFFERENCE 59 F

INFILTRATION LOSSES =	1	AIR CHGS	X	114900	VOL (CU FT)	X	59	F TEMP DIFF	X	0.019	=	0.13	MBTU / HR
FLOOR LOSSES =	350	LINEAR FEET OF PERIMETER				X	59	F TEMP DIFF	X	0.81	=	0.02	MBTU / HR

SURFACE HEAT LOSSES

FLAT BUILT UP ROOF =	6900	AREA (SF)	X	0.105	U VALUE (BTU/ HR - SF - F)	X	59	F TEMPERATURE DIFFERENCE			=	0.04	MBTU / HR
FACE BRICK/BLK WALL =		AREA (SF)	X	0.176	U VALUE (BTU/ HR - SF - F)	X	59	F TEMPERATURE DIFFERENCE			=	0.00	MBTU / HR
8" CINDER BLOCK WALL =	2936	AREA (SF)	X	0.389	U VALUE (BTU/ HR - SF - F)	X	59	F TEMPERATURE DIFFERENCE			=	0.07	MBTU / HR
CORR MTL PNL WALL =	1165	AREA (SF)	X	0.17	U VALUE (BTU/ HR - SF - F)	X	59	F TEMPERATURE DIFFERENCE			=	0.01	MBTU / HR
CLR SGL PANE WINDOWS =	760	AREA (SF)	X	1.235	U VALUE (BTU/ HR - SF - F)	X	59	F TEMPERATURE DIFFERENCE			=	0.06	MBTU / HR
TINTED DBL PANE WIN'W =		AREA (SF)	X	0.65	U VALUE (BTU/ HR - SF - F)	X	59	F TEMPERATURE DIFFERENCE			=	0.00	MBTU / HR
METAL ROLL UP DOORS =	1344	AREA (SF)	X	0.56	U VALUE (BTU/ HR - SF - F)	X	59	F TEMPERATURE DIFFERENCE			=	0.04	MBTU / HR
METAL GLAZED O'HEAD DR =		AREA (SF)	X	0.214	U VALUE (BTU/ HR - SF - F)	X	59	F TEMPERATURE DIFFERENCE			=	0.00	MBTU / HR
LG MTL SLIDING DOOR =		AREA (SF)	X	0.56	U VALUE (BTU/ HR - SF - F)	X	59	F TEMPERATURE DIFFERENCE			=	0.00	MBTU / HR
METAL PERSONNEL DR=		AREA (SF)	X	0.56	U VALUE (BTU/ HR - SF - F)	X	59	F TEMPERATURE DIFFERENCE			=	0.00	MBTU / HR
MTL/ GLAZED PERSONNEL=	25	AREA (SF)	X	0.615	U VALUE (BTU/ HR - SF - F)	X	59	F TEMPERATURE DIFFERENCE			=	0.00	MBTU / HR

TOTAL BASELINE HEAT LOSSES	=	0.37	MBTU / HR
	=	388.28	MJ/HR

FT KNOX LIMITED EEAP (GLASS)

ECO - 1: INFRARED HEATING CALCULATIONS

BUILDING NUMBER: 6113

BUILDING HEATING TEMPERATURE SETPOINT: 55 F
OUTSIDE DESIGN TEMPERATURE 1 F
TEMPERATURE DIFFERENCE 54 F

INFILTRATION LOSSES =	1	AIR CHGS	X	114900	VOL (CU FT)	X	54	F TEMP DIFF	X	0.019	=	0.12	MBTU / HR
FLOOR LOSSES =	350	LINEAR FEET OF PERIMETER				X	54	F TEMP DIFF	X	0.81	=	0.02	MBTU / HR
SURFACE HEAT LOSSES													
FLAT BUILT UP ROOF =	6900	AREA (SF)	X	0.105	U VALUE (BTU/ HR - SF - F)	X	54	F TEMPERATURE DIFFERENCE			=	0.04	MBTU / HR
FACE BRICK/BLK WALL =	0	AREA (SF)	X	0.176	U VALUE (BTU/ HR - SF - F)	X	54	F TEMPERATURE DIFFERENCE			=	0.00	MBTU / HR
8" CINDER BLOCK WALL =	2936	AREA (SF)	X	0.389	U VALUE (BTU/ HR - SF - F)	X	54	F TEMPERATURE DIFFERENCE			=	0.06	MBTU / HR
CORR MTL PNL WALL =	1165	AREA (SF)	X	0.17	U VALUE (BTU/ HR - SF - F)	X	54	F TEMPERATURE DIFFERENCE			=	0.01	MBTU / HR
CLR SGL PANE WINDOWS =	760	AREA (SF)	X	1.235	U VALUE (BTU/ HR - SF - F)	X	54	F TEMPERATURE DIFFERENCE			=	0.05	MBTU / HR
TINTED DBL PANE WIN'W =	0	AREA (SF)	X	0.65	U VALUE (BTU/ HR - SF - F)	X	54	F TEMPERATURE DIFFERENCE			=	0.00	MBTU / HR
METAL ROLL UP DOORS =	1344	AREA (SF)	X	0.56	U VALUE (BTU/ HR - SF - F)	X	54	F TEMPERATURE DIFFERENCE			=	0.04	MBTU / HR
WOOD GLAZED O'HEAD DR =	0	AREA (SF)	X	0.214	U VALUE (BTU/ HR - SF - F)	X	54	F TEMPERATURE DIFFERENCE			=	0.00	MBTU / HR
LG MTL SLIDING DOOR =	0	AREA (SF)	X	0.56	U VALUE (BTU/ HR - SF - F)	X	54	F TEMPERATURE DIFFERENCE			=	0.00	MBTU / HR
METAL PERSONNEL DR=	0	AREA (SF)	X	0.56	U VALUE (BTU/ HR - SF - F)	X	54	F TEMPERATURE DIFFERENCE			=	0.00	MBTU / HR
MTL/ GLAZED PERSONNEL=	25	AREA (SF)	X	0.615	U VALUE (BTU/ HR - SF - F)	X	54	F TEMPERATURE DIFFERENCE			=	0.00	MBTU / HR
					TOTAL ECO HEAT LOSSES						=	0.34	MBTU / HR
											=	355.37	MJ/HR

FT KNOX LIMITED EEAP (GLASS)

ECO - 1: INFRARED HEATING CALCULATIONS

	BASELINE	ECO - 1
SYSTEM EFFICIENCY	60%	90%
OUTSIDE DESIGN TEMP (F)	1	1
HTG TEMP SETPOINT (F)	60	55
HEATING DEGREE DAYS	4616	3396
TOTAL HEAT LOSSES (MBTU / HR)	0.37	0.34
$ /MBTU -FUEL OIL	$6.60	$6.60
$ /MBTU -NATURAL GAS	$4.62	$4.62
$ /MBTU -PPG	$10.84	$10.84

BUILDING NUMBER 6113

GLOSSARY OF TERMS

1 MBTU = 1055 MJ
0.019=CONSTANT
.81 = CONSTANT FOR SLAB PERIMETER UNINSULATED FROM ASHRAE
CORR FACTOR = EMPIRICAL CORRECTION FACTOR FOR HEATING EFFECT VS 65 F DEGREE-DAYS FROM ASHRAE FUNDAMENTALS 1989 PG28.2

ANNUAL HEATING ENERGY CONSUMPTION (DEGREE DAY METHOD)

BASELINE =	0.37	MBTU / HR X	4616	DEGREE DAYS X	24	HRS/DAY			
	0.6	SYS EFF X	59	TEMP DIFFERENCE			=	1,151.76	MBTU/YR
	1,151.76	MBTU/YR	X	CORR FACTOR	1		=	1,151.76	MBTU/YR
ECO - 1 =	0.34	MBTU / HR X	3396	DEGREE DAYS X	24	HRS/DAY			
	0.9	SYS EFF X	54	TEMP DIFFERENCE			=	564.90	MBTU/YR
	564.90	MBTU/YR	X	CORR FACTOR	1		=	564.90	MBTU/YR
	ECO - 1 ANNUAL HEATING ENERGY CONSUMPTION SAVINGS						=	**586.86**	**MBTU/YR**
							=	**619,135.94**	**MJ/YR**

ANNUAL HEATING ENERGY COST

BASELINE =	1,151.76	MBTU / YR X	6.6	$ /MBTU	=	7,601.62	$ /YR
ECO - 1 =	564.90	MBTU / YR X	4.62	$ /MBTU	=	2,609.84	$ /YR
	ECO - 1 ANNUAL HEATING ENERGY COST SAVINGS				=	**4,991.77**	**$ /YR**

FT KNOX LIMITED EEAP (GLASS)

ECO - 1: INFRARED HEATING CALCULATIONS

BUILDING NUMBER: 6114

BUILDING HEATING TEMPERATURE SETPOINT: 60 F
OUTSIDE DESIGN TEMPERATURE 1 F
TEMPERATURE DIFFERENCE 59 F

INFILTRATION LOSSES =	1	AIR CHGS	X	114900	VOL (CU FT)	X	59	F TEMP DIFF	X	0.019	=	0.13	MBTU / HR
FLOOR LOSSES =	350	LINEAR FEET OF PERIMETER				X	59	F TEMP DIFF	X	0.81	=	0.02	MBTU / HR
SURFACE HEAT LOSSES													
FLAT BUILT UP ROOF =	6900	AREA (SF)	X	0.105	U VALUE (BTU/ HR - SF - F)	X	59	F TEMPERATURE DIFFERENCE			=	0.04	MBTU / HR
FACE BRICK/BLK WALL =		AREA (SF)	X	0.176	U VALUE (BTU/ HR - SF - F)	X	59	F TEMPERATURE DIFFERENCE			=	0.00	MBTU / HR
8" CINDER BLOCK WALL =	2936	AREA (SF)	X	0.389	U VALUE (BTU/ HR - SF - F)	X	59	F TEMPERATURE DIFFERENCE			=	0.07	MBTU / HR
CORR MTL PNL WALL =	1165	AREA (SF)	X	0.17	U VALUE (BTU/ HR - SF - F)	X	59	F TEMPERATURE DIFFERENCE			=	0.01	MBTU / HR
CLR SGL PANE WINDOWS =	760	AREA (SF)	X	1.235	U VALUE (BTU/ HR - SF - F)	X	59	F TEMPERATURE DIFFERENCE			=	0.06	MBTU / HR
TINTED DBL PANE WIN'W =		AREA (SF)	X	0.65	U VALUE (BTU/ HR - SF - F)	X	59	F TEMPERATURE DIFFERENCE			=	0.00	MBTU / HR
METAL ROLL UP DOORS =	1344	AREA (SF)	X	0.56	U VALUE (BTU/ HR - SF - F)	X	59	F TEMPERATURE DIFFERENCE			=	0.04	MBTU / HR
METAL GLAZED O'HEAD DR =		AREA (SF)	X	0.214	U VALUE (BTU/ HR - SF - F)	X	59	F TEMPERATURE DIFFERENCE			=	0.00	MBTU / HR
LG MTL SLIDING DOOR =		AREA (SF)	X	0.56	U VALUE (BTU/ HR - SF - F)	X	59	F TEMPERATURE DIFFERENCE			=	0.00	MBTU / HR
METAL PERSONNEL DR=		AREA (SF)	X	0.56	U VALUE (BTU/ HR - SF - F)	X	59	F TEMPERATURE DIFFERENCE			=	0.00	MBTU / HR
MTL/ GLAZED PERSONNEL=	25	AREA (SF)	X	0.615	U VALUE (BTU/ HR - SF - F)	X	59	F TEMPERATURE DIFFERENCE			=	0.00	MBTU / HR

TOTAL BASELINE HEAT LOSSES = 0.37 MBTU / HR
= 388.28 MJ/HR

FT KNOX LIMITED EEAP (GLASS)

ECO - 1: INFRARED HEATING CALCULATIONS

BUILDING NUMBER: 6114

BUILDING HEATING TEMPERATURE SETPOINT: 55 F
OUTSIDE DESIGN TEMPERATURE 1 F
TEMPERATURE DIFFERENCE 54 F

INFILTRATION LOSSES =	1	AIR CHGS	X	114900	VOL (CU FT)	X	54	F TEMP DIFF	X 0.019	= 0.12	MBTU / HR
FLOOR LOSSES =	350	LINEAR FEET OF PERIMETER				X	54	F TEMP DIFF	X 0.81	= 0.02	MBTU / HR
SURFACE HEAT LOSSES											
FLAT BUILT UP ROOF =	6900	AREA (SF)	X	0.105	U VALUE (BTU/ HR - SF - F)	X	54	F TEMPERATURE DIFFERENCE	=	0.04	MBTU / HR
FACE BRICK/BLK WALL =	0	AREA (SF)	X	0.176	U VALUE (BTU/ HR - SF - F)	X	54	F TEMPERATURE DIFFERENCE	=	0.00	MBTU / HR
8" CINDER BLOCK WALL =	2936	AREA (SF)	X	0.389	U VALUE (BTU/ HR - SF - F)	X	54	F TEMPERATURE DIFFERENCE	=	0.06	MBTU / HR
CORR MTL PNL WALL =	1165	AREA (SF)	X	0.17	U VALUE (BTU/ HR - SF - F)	X	54	F TEMPERATURE DIFFERENCE	=	0.01	MBTU / HR
CLR SGL PANE WINDOWS =	760	AREA (SF)	X	1.235	U VALUE (BTU/ HR - SF - F)	X	54	F TEMPERATURE DIFFERENCE	=	0.05	MBTU / HR
TINTED DBL PANE WIN'W =	0	AREA (SF)	X	0.65	U VALUE (BTU/ HR - SF - F)	X	54	F TEMPERATURE DIFFERENCE	=	0.00	MBTU / HR
METAL ROLL UP DOORS =	1344	AREA (SF)	X	0.56	U VALUE (BTU/ HR - SF - F)	X	54	F TEMPERATURE DIFFERENCE	=	0.04	MBTU / HR
WOOD GLAZED O'HEAD DR =	0	AREA (SF)	X	0.214	U VALUE (BTU/ HR - SF - F)	X	54	F TEMPERATURE DIFFERENCE	=	0.00	MBTU / HR
LG MTL SLIDING DOOR =	0	AREA (SF)	X	0.56	U VALUE (BTU/ HR - SF - F)	X	54	F TEMPERATURE DIFFERENCE	=	0.00	MBTU / HR
METAL PERSONNEL DR=	0	AREA (SF)	X	0.56	U VALUE (BTU/ HR - SF - F)	X	54	F TEMPERATURE DIFFERENCE	=	0.00	MBTU / HR
MTL/ GLAZED PERSONNEL=	25	AREA (SF)	X	0.615	U VALUE (BTU/ HR - SF - F)	X	54	F TEMPERATURE DIFFERENCE	=	0.00	MBTU / HR

TOTAL ECO HEAT LOSSES = **0.34** **MBTU / HR**
= **355.37** **MJ/HR**

FT KNOX LIMITED EEAP (GLASS)

ECO - 1: INFRARED HEATING CALCULATIONS

	BASELINE	ECO - 1
SYSTEM EFFICIENCY	60%	90%
OUTSIDE DESIGN TEMP (F)	1	1
HTG TEMP SETPOINT (F)	60	55
HEATING DEGREE DAYS	4616	3396
TOTAL HEAT LOSSES (MBTU / HR)	0.37	0.34
$ /MBTU -FUEL OIL	$6.60	$6.60
$ /MBTU -NATURAL GAS	$4.62	$4.62
$ /MBTU -PPG	$10.84	$10.84

BUILDING NUMBER **6114**

GLOSSARY OF TERMS

1 MBTU = 1055 MJ
0.019=CONSTANT
.81 = CONSTANT FOR SLAB PERIMETER UNINSULATED FROM ASHRAE
CORR FACTOR = EMPIRICAL CORRECTION FACTOR FOR HEATING EFFECT VS 65 F DEGREE-DAYS FROM ASHRAE FUNDAMENTALS 1989 PG28.2

ANNUAL HEATING ENERGY CONSUMPTION (DEGREE DAY METHOD)

BASELINE =	0.37	MBTU / HR	X	4616	DEGREE DAYS X 24 HRS/DAY				
	0.6	SYS EFF	X	59	TEMP DIFFERENCE	=	1,151.76	MBTU/YR	
	1,151.76	MBTU/YR	X		CORR FACTOR 1	=		1,151.76	MBTU/YR
ECO - 1 =	0.34	MBTU / HR	X	3396	DEGREE DAYS X 24 HRS/DAY				
	0.9	SYS EFF	X	54.	TEMP DIFFERENCE	=	564.90	MBTU/YR	
	564.90	MBTU/YR	X		CORR FACTOR 1	=		564.90	MBTU/YR
	ECO - 1 ANNUAL HEATING ENERGY CONSUMPTION SAVINGS					=		**586.86**	**MBTU/YR**
						=		**619,135.94**	**MJ/YR**

ANNUAL HEATING ENERGY COST

BASELINE =	1,151.76	MBTU / YR	X	6.6	$ /MBTU	=	7,601.62	$ /YR
ECO - 1 =	564.90	MBTU / YR	X	4.62	$ /MBTU	=	2,609.84	$ /YR
	ECO - 1 ANNUAL HEATING ENERGY COST SAVINGS					=	**4,991.77**	**$ /YR**

FT KNOX LIMITED EEAP (GLASS)

ECO - 1: INFRARED HEATING CALCULATIONS

BUILDING NUMBER: 6115

BUILDING HEATING TEMPERATURE SETPOINT: 60 F
OUTSIDE DESIGN TEMPERATURE 1 F
TEMPERATURE DIFFERENCE 59 F

INFILTRATION LOSSES =	1	AIR CHGS	X	114900	VOL (CU FT)	X	59	F TEMP DIFF	X 0.019	=	0.13	MBTU / HR
FLOOR LOSSES =	350	LINEAR FEET OF PERIMETER				X	59	F TEMP DIFF	X 0.81	=	0.02	MBTU / HR

SURFACE HEAT LOSSES

FLAT BUILT UP ROOF =	6900	AREA (SF)	X	0.105	U VALUE (BTU/ HR - SF - F)	X	59	F TEMPERATURE DIFFERENCE		=	0.04	MBTU / HR
FACE BRICK/BLK WALL =		AREA (SF)	X	0.176	U VALUE (BTU/ HR - SF - F)	X	59	F TEMPERATURE DIFFERENCE		=	0.00	MBTU / HR
8" CINDER BLOCK WALL =	2936	AREA (SF)	X	0.389	U VALUE (BTU/ HR - SF - F)	X	59	F TEMPERATURE DIFFERENCE		=	0.07	MBTU / HR
CORR MTL PNL WALL =	1165	AREA (SF)	X	0.17	U VALUE (BTU/ HR - SF - F)	X	59	F TEMPERATURE DIFFERENCE		=	0.01	MBTU / HR
CLR SGL PANE WINDOWS =	760	AREA (SF)	X	1.235	U VALUE (BTU/ HR - SF - F)	X	59	F TEMPERATURE DIFFERENCE		=	0.06	MBTU / HR
TINTED DBL PANE WIN'W =		AREA (SF)	X	0.65	U VALUE (BTU/ HR - SF - F)	X	59	F TEMPERATURE DIFFERENCE		=	0.00	MBTU / HR
METAL ROLL UP DOORS =	1344	AREA (SF)	X	0.56	U VALUE (BTU/ HR - SF - F)	X	59	F TEMPERATURE DIFFERENCE		=	0.04	MBTU / HR
METAL GLAZED O'HEAD DR =		AREA (SF)	X	0.214	U VALUE (BTU/ HR - SF - F)	X	59	F TEMPERATURE DIFFERENCE		=	0.00	MBTU / HR
LG MTL SLIDING DOOR =		AREA (SF)	X	0.56	U VALUE (BTU/ HR - SF - F)	X	59	F TEMPERATURE DIFFERENCE		=	0.00	MBTU / HR
METAL PERSONNEL DR=		AREA (SF)	X	0.56	U VALUE (BTU/ HR - SF - F)	X	59	F TEMPERATURE DIFFERENCE		=	0.00	MBTU / HR
MTL/ GLAZED PERSONNEL=	25	AREA (SF)	X	0.615	U VALUE (BTU/ HR - SF - F)	X	59	F TEMPERATURE DIFFERENCE		=	0.00	MBTU / HR

TOTAL BASELINE HEAT LOSSES	=	0.37	MBTU / HR
	=	388.28	MJ/HR

FT KNOX LIMITED EEAP (GLASS)

ECO - 1: INFRARED HEATING CALCULATIONS

BUILDING NUMBER: 6115

BUILDING HEATING TEMPERATURE SETPOINT: 55 F
OUTSIDE DESIGN TEMPERATURE 1 F
TEMPERATURE DIFFERENCE 54 F

INFILTRATION LOSSES =	1	AIR CHGS	X	114900	VOL (CU FT)	X	54	F TEMP DIFF	X 0.019	=	0.12	MBTU / HR
FLOOR LOSSES =	350	LINEAR FEET OF PERIMETER				X	54	F TEMP DIFF	X 0.81	=	0.02	MBTU / HR
SURFACE HEAT LOSSES												
FLAT BUILT UP ROOF =	6900	AREA (SF)	X	0.105	U VALUE (BTU/ HR - SF - F)	X	54	F TEMPERATURE DIFFERENCE		=	0.04	MBTU / HR
FACE BRICK/BLK WALL =	0	AREA (SF)	X	0.176	U VALUE (BTU/ HR - SF - F)	X	54	F TEMPERATURE DIFFERENCE		=	0.00	MBTU / HR
8" CINDER BLOCK WALL =	2936	AREA (SF)	X	0.389	U VALUE (BTU/ HR - SF - F)	X	54	F TEMPERATURE DIFFERENCE		=	0.06	MBTU / HR
CORR MTL PNL WALL =	1165	AREA (SF)	X	0.17	U VALUE (BTU/ HR - SF - F)	X	54	F TEMPERATURE DIFFERENCE		=	0.01	MBTU / HR
CLR SGL PANE WINDOWS =	760	AREA (SF)	X	1.235	U VALUE (BTU/ HR - SF - F)	X	54	F TEMPERATURE DIFFERENCE		=	0.05	MBTU / HR
TINTED DBL PANE WIN'W =	0	AREA (SF)	X	0.65	U VALUE (BTU/ HR - SF - F)	X	54	F TEMPERATURE DIFFERENCE.		=	0.00	MBTU / HR
METAL ROLL UP DOORS =	1344	AREA (SF)	X	0.56	U VALUE (BTU/ HR - SF - F)	X	54	F TEMPERATURE DIFFERENCE		=	0.04	MBTU / HR
WOOD GLAZED O'HEAD DR =	0	AREA (SF)	X	0.214	U VALUE (BTU/ HR - SF - F)	X	54	F TEMPERATURE DIFFERENCE		=	0.00	MBTU / HR
LG MTL SLIDING DOOR =	0	AREA (SF)	X	0.56	U VALUE (BTU/ HR - SF - F)	X	54	F TEMPERATURE DIFFERENCE		=	0.00	MBTU / HR
METAL PERSONNEL DR=	0	AREA (SF)	X	0.56	U VALUE (BTU/ HR - SF - F)	X	54	F TEMPERATURE DIFFERENCE		=	0.00	MBTU / HR
MTL/ GLAZED PERSONNEL=	25	AREA (SF)	X	0.615	U VALUE (BTU/ HR - SF - F)	X	54	F TEMPERATURE DIFFERENCE		=	0.00	MBTU / HR
					TOTAL ECO HEAT LOSSES					=	0.34	MBTU / HR
										=	355.37	MJ/HR

FT KNOX LIMITED EEAP (GLASS)

ECO - 1: INFRARED HEATING CALCULATIONS

	BASELINE	ECO - 1
SYSTEM EFFICIENCY	60%	90%
OUTSIDE DESIGN TEMP (F)	1	1
HTG TEMP SETPOINT (F)	60	55
HEATING DEGREE DAYS	4616	3396
TOTAL HEAT LOSSES (MBTU / HR)	0.37	0.34
$ /MBTU -FUEL OIL	$6.60	$6.60
$ /MBTU -NATURAL GAS	$4.62	$4.62
$ /MBTU -PPG	$10.84	$10.84

BUILDING NUMBER 6115

GLOSSARY OF TERMS

1 MBTU = 1055 MJ
0.019=CONSTANT
.81 = CONSTANT FOR SLAB PERIMETER UNINSULATED FROM ASHRAE
CORR FACTOR = EMPIRICAL CORRECTION FACTOR FOR HEATING EFFECT VS 65 F DEGREE-DAYS FROM ASHRAE FUNDAMENTALS 1989 PG28.2

ANNUAL HEATING ENERGY CONSUMPTION (DEGREE DAY METHOD)

BASELINE =	0.37	MBTU / HR	X	4616	DEGREE DAYS	X 24	HRS/DAY		
	0.6	SYS EFF	X	59	TEMP DIFFERENCE		=	1,151.76	MBTU/YR
	1,151.76	MBTU/YR	X		CORR FACTOR	1	=	1,151.76	MBTU/YR
ECO - 1 =	0.34	MBTU / HR	X	3396	DEGREE DAYS	X 24	HRS/DAY		
	0.9	SYS EFF	X	54	TEMP DIFFERENCE		=	564.90	MBTU/YR
	564.90	MBTU/YR	X		CORR FACTOR	1	=	564.90	MBTU/YR
	ECO - 1 ANNUAL HEATING ENERGY CONSUMPTION SAVINGS						=	586.86	MBTU/YR
							=	619,135.94	MJ/YR

ANNUAL HEATING ENERGY COST

BASELINE =	1,151.76	MBTU / YR	X	6.6	$ /MBTU	=	7,601.62 $ /YR
ECO - 1 =	564.90	MBTU / YR	X	4.62	$ /MBTU	=	2,609.84 $ /YR
	ECO - 1 ANNUAL HEATING ENERGY COST SAVINGS					=	4,991.77 $ /YR

FT KNOX LIMITED EEAP (GLASS)

ECO - 1: INFRARED HEATING CALCULATIONS

BUILDING NUMBER: 6116

BUILDING HEATING TEMPERATURE SETPOINT: 60 F
OUTSIDE DESIGN TEMPERATURE 1 F
TEMPERATURE DIFFERENCE 59 F

INFILTRATION LOSSES =	1	AIR CHGS	X	114900	VOL (CU FT)	X	59	F TEMP DIFF	X 0.019	=	0.13	MBTU / HR
FLOOR LOSSES =	350	LINEAR FEET OF PERIMETER				X	59	F TEMP DIFF	X 0.81	=	0.02	MBTU / HR

SURFACE HEAT LOSSES

FLAT BUILT UP ROOF =	6900	AREA (SF)	X	0.105	U VALUE (BTU/ HR - SF - F)	X	59	F TEMPERATURE DIFFERENCE		=	0.04	MBTU / HR
FACE BRICK/BLK WALL =		AREA (SF)	X	0.176	U VALUE (BTU/ HR - SF - F)	X	59	F TEMPERATURE DIFFERENCE		=	0.00	MBTU / HR
8" CINDER BLOCK WALL =	2936	AREA (SF)	X	0.389	U VALUE (BTU/ HR - SF - F)	X	59	F TEMPERATURE DIFFERENCE		=	0.07	MBTU / HR
CORR MTL PNL WALL =	1165	AREA (SF)	X	0.17	U VALUE (BTU/ HR - SF - F)	X	59	F TEMPERATURE DIFFERENCE		=	0.01	MBTU / HR
CLR SGL PANE WINDOWS =	760	AREA (SF)	X	1.235	U VALUE (BTU/ HR - SF - F)	X	59	F TEMPERATURE DIFFERENCE		=	0.06	MBTU / HR
TINTED DBL PANE WIN'W =		AREA (SF)	X	0.65	U VALUE (BTU/ HR - SF - F)	X	59	F TEMPERATURE DIFFERENCE		=	0.00	MBTU / HR
METAL ROLL UP DOORS =	1344	AREA (SF)	X	0.56	U VALUE (BTU/ HR - SF - F)	X	59	F TEMPERATURE DIFFERENCE		=	0.04	MBTU / HR
METAL GLAZED O'HEAD DR =		AREA (SF)	X	0.214	U VALUE (BTU/ HR - SF - F)	X	59	F TEMPERATURE DIFFERENCE		=	0.00	MBTU / HR
LG MTL SLIDING DOOR =		AREA (SF)	X	0.56	U VALUE (BTU/ HR - SF - F)	X	59	F TEMPERATURE DIFFERENCE		=	0.00	MBTU / HR
METAL PERSONNEL DR=		AREA (SF)	X	0.56	U VALUE (BTU/ HR - SF - F)	X	59	F TEMPERATURE DIFFERENCE		=	0.00	MBTU / HR
MTL/ GLAZED PERSONNEL=	25	AREA (SF)	X	0.615	U VALUE (BTU/ HR - SF - F)	X	59	F TEMPERATURE DIFFERENCE		=	0.00	MBTU / HR

TOTAL BASELINE HEAT LOSSES = 0.37 MBTU / HR
= 388.28 MJ/HR

FT KNOX LIMITED EEAP (GLASS)

ECO - 1: INFRARED HEATING CALCULATIONS

BUILDING NUMBER: 6116

BUILDING HEATING TEMPERATURE SETPOINT: 55 F
OUTSIDE DESIGN TEMPERATURE 1 F
TEMPERATURE DIFFERENCE 54 F

INFILTRATION LOSSES =	1	AIR CHGS	X	114900	VOL (CU FT)	X	54	F TEMP DIFF	X 0.019	=	0.12	MBTU / HR
FLOOR LOSSES =	350	LINEAR FEET OF PERIMETER				X	54	F TEMP DIFF	X 0.81	=	0.02	MBTU / HR
SURFACE HEAT LOSSES												
FLAT BUILT UP ROOF =	6900	AREA (SF)	X	0.105	U VALUE (BTU/ HR - SF - F)	X	54	F TEMPERATURE DIFFERENCE		=	0.04	MBTU / HR
FACE BRICK/BLK WALL =	0	AREA (SF)	X	0.176	U VALUE (BTU/ HR - SF - F)	X	54	F TEMPERATURE DIFFERENCE		=	0.00	MBTU / HR
8" CINDER BLOCK WALL =	2936	AREA (SF)	X	0.389	U VALUE (BTU/ HR - SF - F)	X	54	F TEMPERATURE DIFFERENCE		=	0.06	MBTU / HR
CORR MTL PNL WALL =	1165	AREA (SF)	X	0.17	U VALUE (BTU/ HR - SF - F)	X	54	F TEMPERATURE DIFFERENCE		=	0.01	MBTU / HR
CLR SGL PANE WINDOWS =	760	AREA (SF)	X	1.235	U VALUE (BTU/ HR - SF - F)	X	54	F TEMPERATURE DIFFERENCE		=	0.05	MBTU / HR
TINTED DBL PANE WIN'W =	0	AREA (SF)	X	0.65	U VALUE (BTU/ HR - SF - F)	X	54	F TEMPERATURE DIFFERENCE		=	0.00	MBTU / HR
METAL ROLL UP DOORS =	1344	AREA (SF)	X	0.56	U VALUE (BTU/ HR - SF - F)	X	54	F TEMPERATURE DIFFERENCE		=	0.04	MBTU / HR
WOOD GLAZED O'HEAD DR =	0	AREA (SF)	X	0.214	U VALUE (BTU/ HR - SF - F)	X	54	F TEMPERATURE DIFFERENCE		=	0.00	MBTU / HR
LG MTL SLIDING DOOR =	0	AREA (SF)	X	0.56	U VALUE (BTU/ HR - SF - F)	X	54	F TEMPERATURE DIFFERENCE		=	0.00	MBTU / HR
METAL PERSONNEL DR=	0	AREA (SF)	X	0.56	U VALUE (BTU/ HR - SF - F)	X	54	F TEMPERATURE DIFFERENCE		=	0.00	MBTU / HR
MTL/ GLAZED PERSONNEL=	25	AREA (SF)	X	0.615	U VALUE (BTU/ HR - SF - F)	X	54	F TEMPERATURE DIFFERENCE		=	0.00	MBTU / HR
					TOTAL ECO HEAT LOSSES					=	**0.34**	**MBTU / HR**
										=	**355.37**	**MJ/HR**

FT KNOX LIMITED EEAP (GLASS)

ECO - 1: INFRARED HEATING CALCULATIONS

	BASELINE	ECO - 1
SYSTEM EFFICIENCY	60%	90%
OUTSIDE DESIGN TEMP (F)	1	1
HTG TEMP SETPOINT (F)	60	55
HEATING DEGREE DAYS	4616	3396
TOTAL HEAT LOSSES (MBTU / HR)	0.37	0.34
$ /MBTU -FUEL OIL	$6.60	$6.60
$ /MBTU -NATURAL GAS	$4.62	$4.62
$ /MBTU -PPG	$10.84	$10.84

BUILDING NUMBER 6116

GLOSSARY OF TERMS

1 MBTU = 1055 MJ
0.019=CONSTANT
.81 = CONSTANT FOR SLAB PERIMETER UNINSULATED FROM ASHRAE
CORR FACTOR = EMPIRICAL CORRECTION FACTOR FOR HEATING EFFECT VS 65 F DEGREE-DAYS FROM ASHRAE FUNDAMENTALS 1989 PG28.2

ANNUAL HEATING ENERGY CONSUMPTION (DEGREE DAY METHOD)

BASELINE =	0.37	MBTU / HR	X	4616	DEGREE DAYS	X	24	HRS/DAY	
	0.6	SYS EFF	X	59	TEMP DIFFERENCE			=	1,151.76 MBTU/YR
	1,151.76	MBTU/YR	X		CORR FACTOR		1	=	1,151.76 MBTU/YR
ECO - 1 =	0.34	MBTU / HR	X	3396	DEGREE DAYS	X	24	HRS/DAY	
	0.9	SYS EFF	X	54	TEMP DIFFERENCE			=	564.90 MBTU/YR
	564.90	MBTU/YR	X		CORR FACTOR		1	=	564.90 MBTU/YR
	ECO - 1 ANNUAL HEATING ENERGY CONSUMPTION SAVINGS							=	586.86 MBTU/YR
								=	619,135.94 MJ/YR

ANNUAL HEATING ENERGY COST

BASELINE =	1,151.76	MBTU / YR	X	6.6	$ /MBTU	=	7,601.62 $ /YR
ECO - 1 =	564.90	MBTU / YR	X	4.62	$ /MBTU	=	2,609.84 $ /YR
	ECO - 1 ANNUAL HEATING ENERGY COST SAVINGS					=	4,991.77 $ /YR

FT KNOX LIMITED EEAP (GLASS)

ECO - 1: INFRARED HEATING CALCULATIONS

BUILDING NUMBER: 6117

BUILDING HEATING TEMPERATURE SETPOINT: 60 F
OUTSIDE DESIGN TEMPERATURE 1 F
TEMPERATURE DIFFERENCE 59 F

INFILTRATION LOSSES =	1	AIR CHGS X	114900	VOL (CU FT) X	59	F TEMP DIFF X	0.019	=	0.13	MBTU / HR
FLOOR LOSSES =	350	LINEAR FEET OF PERIMETER X			59	F TEMP DIFF X	0.81	=	0.02	MBTU / HR

SURFACE HEAT LOSSES

FLAT BUILT UP ROOF =	6900	AREA (SF) X	0.105	U VALUE (BTU/ HR - SF - F) X	59	F TEMPERATURE DIFFERENCE	=	0.04	MBTU / HR
FACE BRICK/BLK WALL =		AREA (SF) X	0.176	U VALUE (BTU/ HR - SF - F) X	59	F TEMPERATURE DIFFERENCE	=	0.00	MBTU / HR
8" CINDER BLOCK WALL =	2936	AREA (SF) X	0.389	U VALUE (BTU/ HR - SF - F) X	59	F TEMPERATURE DIFFERENCE	=	0.07	MBTU / HR
CORR MTL PNL WALL =	1165	AREA (SF) X	0.17	U VALUE (BTU/ HR - SF - F) X	59	F TEMPERATURE DIFFERENCE	=	0.01	MBTU / HR
CLR SGL PANE WINDOWS =	760	AREA (SF) X	1.235	U VALUE (BTU/ HR - SF - F) X	59	F TEMPERATURE DIFFERENCE	=	0.06	MBTU / HR
TINTED DBL PANE WIN'W =		AREA (SF) X	0.65	U VALUE (BTU/ HR - SF - F) X	59	F TEMPERATURE DIFFERENCE	=	0.00	MBTU / HR
METAL ROLL UP DOORS =	1344	AREA (SF) X	0.56	U VALUE (BTU/ HR - SF - F) X	59	F TEMPERATURE DIFFERENCE	=	0.04	MBTU / HR
METAL GLAZED O'HEAD DR =		AREA (SF) X	0.214	U VALUE (BTU/ HR - SF - F) X	59	F TEMPERATURE DIFFERENCE	=	0.00	MBTU / HR
LG MTL SLIDING DOOR =		AREA (SF) X	0.56	U VALUE (BTU/ HR - SF - F) X	59	F TEMPERATURE DIFFERENCE	=	0.00	MBTU / HR
METAL PERSONNEL DR=		AREA (SF) X	0.56	U VALUE (BTU/ HR - SF - F) X	59	F TEMPERATURE DIFFERENCE	=	0.00	MBTU / HR
MTL/ GLAZED PERSONNEL=	25	AREA (SF) X	0.615	U VALUE (BTU/ HR - SF - F) X	59	F TEMPERATURE DIFFERENCE	=	0.00	MBTU / HR

TOTAL BASELINE HEAT LOSSES = 0.37 MBTU / HR
= 388.28 MJ/HR

FT KNOX LIMITED EEAP (GLASS)

ECO - 1: INFRARED HEATING CALCULATIONS

BUILDING NUMBER: 6117

BUILDING HEATING TEMPERATURE SETPOINT: 55 F
OUTSIDE DESIGN TEMPERATURE 1 F
TEMPERATURE DIFFERENCE 54 F

INFILTRATION LOSSES =	1	AIR CHGS	X	114900	VOL (CU FT)	X	54	F TEMP DIFF	X 0.019	=	0.12 MBTU / HR
FLOOR LOSSES =	350	LINEAR FEET OF PERIMETER				X	54	F TEMP DIFF	X 0.81	=	0.02 MBTU / HR
SURFACE HEAT LOSSES											
FLAT BUILT UP ROOF =	6900	AREA (SF)	X	0.105	U VALUE (BTU/ HR - SF - F)	X	54	F TEMPERATURE DIFFERENCE		=	0.04 MBTU / HR
FACE BRICK/BLK WALL =	0	AREA (SF)	X	0.176	U VALUE (BTU/ HR - SF - F)	X	54	F TEMPERATURE DIFFERENCE		=	0.00 MBTU / HR
8" CINDER BLOCK WALL =	2936	AREA (SF)	X	0.389	U VALUE (BTU/ HR - SF - F)	X	54	F TEMPERATURE DIFFERENCE		=	0.06 MBTU / HR
CORR MTL PNL WALL =	1165	AREA (SF)	X	0.17	U VALUE (BTU/ HR - SF - F)	X	54	F TEMPERATURE DIFFERENCE		=	0.01 MBTU / HR
CLR SGL PANE WINDOWS =	760	AREA (SF)	X	1.235	U VALUE (BTU/ HR - SF - F)	X	54	F TEMPERATURE DIFFERENCE		=	0.05 MBTU / HR
TINTED DBL PANE WIN'W =	0	AREA (SF)	X	0.65	U VALUE (BTU/ HR - SF - F)	X	54	F TEMPERATURE DIFFERENCE		=	0.00 MBTU / HR
METAL ROLL UP DOORS =	1344	AREA (SF)	X	0.56	U VALUE (BTU/ HR - SF - F)	X	54	F TEMPERATURE DIFFERENCE		=	0.04 MBTU / HR
WOOD GLAZED O'HEAD DR =	0	AREA (SF)	X	0.214	U VALUE (BTU/ HR - SF - F)	X	54	F TEMPERATURE DIFFERENCE		=	0.00 MBTU / HR
LG MTL SLIDING DOOR =	0	AREA (SF)	X	0.56	U VALUE (BTU/ HR - SF - F)	X	54	F TEMPERATURE DIFFERENCE		=	0.00 MBTU / HR
METAL PERSONNEL DR=	0	AREA (SF)	X	0.56	U VALUE (BTU/ HR - SF - F)	X	54	F TEMPERATURE DIFFERENCE		=	0.00 MBTU / HR
MTL/ GLAZED PERSONNEL=	25	AREA (SF)	X	0.615	U VALUE (BTU/ HR - SF - F)	X	54	F TEMPERATURE DIFFERENCE		=	0.00 MBTU / HR

TOTAL ECO HEAT LOSSES = **0.34 MBTU / HR**
= **355.37 MJ/HR**

FT KNOX LIMITED EEAP (GLASS)

ECO - 1: INFRARED HEATING CALCULATIONS

	BASELINE	ECO - 1
SYSTEM EFFICIENCY	60%	90%
OUTSIDE DESIGN TEMP (F)	1	1
HTG TEMP SETPOINT (F)	60	55
HEATING DEGREE DAYS	4616	3396
TOTAL HEAT LOSSES (MBTU / HR)	0.37	0.34
$ /MBTU -FUEL OIL	$6.60	$6.60
$ /MBTU -NATURAL GAS	$4.62	$4.62
$ /MBTU -PPG	$10.84	$10.84

BUILDING NUMBER **6117**

GLOSSARY OF TERMS

1 MBTU = 1055 MJ
0.019=CONSTANT
.81 = CONSTANT FOR SLAB PERIMETER UNINSULATED FROM ASHRAE
CORR FACTOR = EMPIRICAL CORRECTION FACTOR FOR HEATING EFFECT VS 65 F DEGREE-DAYS FROM ASHRAE FUNDAMENTALS 1989 PG28.2

ANNUAL HEATING ENERGY CONSUMPTION (DEGREE DAY METHOD)

BASELINE =	0.37	MBTU / HR X	4616	DEGREE DAYS X	24	HRS/DAY		
	0.6	SYS EFF X	59	TEMP DIFFERENCE		=	1,151.76	MBTU/YR
	1,151.76	MBTU/YR	X	CORR FACTOR	1	=	1,151.76	MBTU/YR
ECO - 1 =	0.34	MBTU / HR X	3396	DEGREE DAYS X	24	HRS/DAY		
	0.9	SYS EFF X	54	TEMP DIFFERENCE		=	564.90	MBTU/YR .
	564.90	MBTU/YR	X	CORR FACTOR	1	=	564.90	MBTU/YR
	ECO - 1 ANNUAL HEATING ENERGY CONSUMPTION SAVINGS					=	**586.86**	**MBTU/YR**
						=	**619,135.94**	**MJ/YR**

ANNUAL HEATING ENERGY COST

BASELINE =	1,151.76	MBTU / YR X	6.6	$ /MBTU	=	7,601.62	$ /YR
ECO - 1 =	564.90	MBTU / YR X	4.62	$ /MBTU	=	2,609.84	$ /YR
	ECO - 1 ANNUAL HEATING ENERGY COST SAVINGS				=	**4,991.77**	**$ /YR**

FT KNOX LIMITED EEAP (GLASS)

ECO - 1: INFRARED HEATING CALCULATIONS

BUILDING NUMBER: 6118

BUILDING HEATING TEMPERATURE SETPOINT: 60 F
OUTSIDE DESIGN TEMPERATURE 1 F
TEMPERATURE DIFFERENCE 59 F

INFILTRATION LOSSES =	1	AIR CHGS	X	114900	VOL (CU FT)	X	59	F TEMP DIFF	X 0.019	=	0.13	MBTU / HR
FLOOR LOSSES =	350	LINEAR FEET OF PERIMETER				X	59	F TEMP DIFF	X 0.81	=	0.02	MBTU / HR

SURFACE HEAT LOSSES

FLAT BUILT UP ROOF =	6900	AREA (SF)	X	0.105	U VALUE (BTU/ HR - SF - F)	X	59	F TEMPERATURE DIFFERENCE	=	0.04	MBTU / HR
FACE BRICK/BLK WALL =		AREA (SF)	X	0.176	U VALUE (BTU/ HR - SF - F)	X	59	F TEMPERATURE DIFFERENCE	=	0.00	MBTU / HR
8" CINDER BLOCK WALL =	2936	AREA (SF)	X	0.389	U VALUE (BTU/ HR - SF - F)	X	59	F TEMPERATURE DIFFERENCE	=	0.07	MBTU / HR
CORR MTL PNL WALL =	1165	AREA (SF)	X	0.17	U VALUE (BTU/ HR - SF - F)	X	59	F TEMPERATURE DIFFERENCE	=	0.01	MBTU / HR
CLR SGL PANE WINDOWS =	760	AREA (SF)	X	1.235	U VALUE (BTU/ HR - SF - F)	X	59	F TEMPERATURE DIFFERENCE	=	0.06	MBTU / HR
TINTED DBL PANE WIN'W =		AREA (SF)	X	0.65	U VALUE (BTU/ HR - SF - F)	X	59	F TEMPERATURE DIFFERENCE	=	0.00	MBTU / HR
METAL ROLL UP DOORS =	1344	AREA (SF)	X	0.56	U VALUE (BTU/ HR - SF - F)	X	59	F TEMPERATURE DIFFERENCE	=	0.04	MBTU / HR
METAL GLAZED O'HEAD DR =		AREA (SF)	X	0.214	U VALUE (BTU/ HR - SF - F)	X	59	F TEMPERATURE DIFFERENCE	=	0.00	MBTU / HR
LG MTL SLIDING DOOR =		AREA (SF)	X	0.56	U VALUE (BTU/ HR - SF - F)	X	59	F TEMPERATURE DIFFERENCE	=	0.00	MBTU / HR
METAL PERSONNEL DR=		AREA (SF)	X	0.56	U VALUE (BTU/ HR - SF - F)	X	59	F TEMPERATURE DIFFERENCE	=	0.00	MBTU / HR
MTL/ GLAZED PERSONNEL=	25	AREA (SF)	X	0.615	U VALUE (BTU/ HR - SF - F)	X	59	F TEMPERATURE DIFFERENCE	=	0.00	MBTU / HR

TOTAL BASELINE HEAT LOSSES = **0.37** **MBTU / HR**
= **388.28** **MJ/HR**

FT KNOX LIMITED EEAP (GLASS)

ECO - 1: INFRARED HEATING CALCULATIONS

BUILDING NUMBER: 6118

BUILDING HEATING TEMPERATURE SETPOINT: 55 F
OUTSIDE DESIGN TEMPERATURE 1 F
TEMPERATURE DIFFERENCE 54 F

INFILTRATION LOSSES =	1	AIR CHGS	X	114900	VOL (CU FT)	X	54	F TEMP DIFF	X	0.019	=	0.12 MBTU / HR
FLOOR LOSSES =	350	LINEAR FEET OF PERIMETER				X	54	F TEMP DIFF	X	0.81	=	0.02 MBTU / HR

SURFACE HEAT LOSSES

FLAT BUILT UP ROOF =	6900	AREA (SF)	X	0.105	U VALUE (BTU/ HR - SF - F)	X	54	F TEMPERATURE DIFFERENCE	=	0.04	MBTU / HR
FACE BRICK/BLK WALL =	0	AREA (SF)	X	0.176	U VALUE (BTU/ HR - SF - F)	X	54	F TEMPERATURE DIFFERENCE	=	0.00	MBTU / HR
8" CINDER BLOCK WALL =	2936	AREA (SF)	X	0.389	U VALUE (BTU/ HR - SF - F)	X	54	F TEMPERATURE DIFFERENCE	=	0.06	MBTU / HR
CORR MTL PNL WALL =	1165	AREA (SF)	X	0.17	U VALUE (BTU/ HR - SF - F)	X	54	F TEMPERATURE DIFFERENCE	=	0.01	MBTU / HR
CLR SGL PANE WINDOWS =	760	AREA (SF)	X	1.235	U VALUE (BTU/ HR - SF - F)	X	54	F TEMPERATURE DIFFERENCE	=	0.05	MBTU / HR
TINTED DBL PANE WIN'W =	0	AREA (SF)	X	0.65	U VALUE (BTU/ HR - SF - F)	X	54	F TEMPERATURE DIFFERENCE	=	0.00	MBTU / HR
METAL ROLL UP DOORS =	1344	AREA (SF)	X	0.56	U VALUE (BTU/ HR - SF - F)	X	54	F TEMPERATURE DIFFERENCE	=	0.04	MBTU / HR
WOOD GLAZED O'HEAD DR =	0	AREA (SF)	X	0.214	U VALUE (BTU/ HR - SF - F)	X	54	F TEMPERATURE DIFFERENCE	=	0.00	MBTU / HR
LG MTL SLIDING DOOR =	0	AREA (SF)	X	0.56	U VALUE (BTU/ HR - SF - F)	X	54	F TEMPERATURE DIFFERENCE	=	0.00	MBTU / HR
METAL PERSONNEL DR=	0	AREA (SF)	X	0.56	U VALUE (BTU/ HR - SF - F)	X	54	F TEMPERATURE DIFFERENCE	=	0.00	MBTU / HR
MTL/ GLAZED PERSONNEL=	25	AREA (SF)	X	0.615	U VALUE (BTU/ HR - SF - F)	X	54	F TEMPERATURE DIFFERENCE	=	0.00	MBTU / HR

TOTAL ECO HEAT LOSSES = 0.34 MBTU / HR
= 355.37 MJ/HR

FT KNOX LIMITED EEAP (GLASS)

ECO - 1: INFRARED HEATING CALCULATIONS

	BASELINE	ECO - 1
SYSTEM EFFICIENCY	60%	90%
OUTSIDE DESIGN TEMP (F)	1	1
HTG TEMP SETPOINT (F)	60	55
HEATING DEGREE DAYS	4616	3396
TOTAL HEAT LOSSES (MBTU / HR)	0.37	0.34
$ /MBTU -FUEL OIL	$6.60	$6.60
$ /MBTU -NATURAL GAS	$4.62	$4.62
$ /MBTU -PPG	$10.84	$10.84

BUILDING NUMBER 6118

GLOSSARY OF TERMS

1 MBTU = 1055 MJ
0.019=CONSTANT
.81 = CONSTANT FOR SLAB PERIMETER UNINSULATED FROM ASHRAE
CORR FACTOR = EMPIRICAL CORRECTION FACTOR FOR HEATING EFFECT VS 65 F DEGREE-DAYS FROM ASHRAE FUNDAMENTALS 1989 PG28.2

ANNUAL HEATING ENERGY CONSUMPTION (DEGREE DAY METHOD)

BASELINE =	0.37	MBTU / HR	X	4616	DEGREE DAYS X 24 HRS/DAY				
	0.6	SYS EFF	X	59	TEMP DIFFERENCE	=	1,151.76	MBTU/YR	
	1,151.76	MBTU/YR	X		CORR FACTOR 1	=		1,151.76	MBTU/YR
ECO - 1 =	0.34	MBTU / HR	X	3396	DEGREE DAYS X 24 HRS/DAY				
	0.9	SYS EFF	X	54	TEMP DIFFERENCE	=	564.90	MBTU/YR	
	564.90	MBTU/YR	X		CORR FACTOR 1	=		564.90	MBTU/YR
	ECO - 1 ANNUAL HEATING ENERGY CONSUMPTION SAVINGS					=		**586.86**	**MBTU/YR**
						=		**619,135.94**	**MJ/YR**

ANNUAL HEATING ENERGY COST

BASELINE =	1,151.76	MBTU / YR	X	6.6	$ /MBTU	=	7,601.62	$ /YR
ECO - 1 =	564.90	MBTU / YR	X	4.62	$ /MBTU	=	2,609.84	$ /YR
	ECO - 1 ANNUAL HEATING ENERGY COST SAVINGS					=	**4,991.77**	**$ /YR**

FT KNOX LIMITED EEAP (GLASS)

ECO - 1: INFRARED HEATING CALCULATIONS

BUILDING NUMBER: 6142

BUILDING HEATING TEMPERATURE SETPOINT: 60 F
OUTSIDE DESIGN TEMPERATURE 1 F
TEMPERATURE DIFFERENCE 59 F

INFILTRATION LOSSES =	1	AIR CHGS	X	138900	VOL (CU FT)	X	59	F TEMP DIFF	X 0.019	=	0.16	MBTU / HR
FLOOR LOSSES =	390	LINEAR FEET OF PERIMETER				X	59	F TEMP DIFF	X 0.81	=	0.02	MBTU / HR

SURFACE HEAT LOSSES

FLAT BUILT UP ROOF =	8100	AREA (SF)	X	0.105	U VALUE (BTU/ HR - SF - F)	X	59	F TEMPERATURE DIFFERENCE		=	0.05	MBTU / HR
FACE BRICK/BLK WALL =		AREA (SF)	X	0.176	U VALUE (BTU/ HR - SF - F)	X	59	F TEMPERATURE DIFFERENCE		=	0.00	MBTU / HR
8" CINDER BLOCK WALL =	2743	AREA (SF)	X	0.389	U VALUE (BTU/ HR - SF - F)	X	59	F TEMPERATURE DIFFERENCE		=	0.06	MBTU / HR
CORR MTL PNL WALL =	1685	AREA (SF)	X	0.17	U VALUE (BTU/ HR - SF - F)	X	59	F TEMPERATURE DIFFERENCE		=	0.02	MBTU / HR
CLR SGL PANE WINDOWS =	760	AREA (SF)	X	1.235	U VALUE (BTU/ HR - SF - F)	X	59	F TEMPERATURE DIFFERENCE		=	0.06	MBTU / HR
TINTED DBL PANE WIN'W =		AREA (SF)	X	0.65	U VALUE (BTU/ HR - SF - F)	X	59	F TEMPERATURE DIFFERENCE		=	0.00	MBTU / HR
METAL ROLL UP DOORS =	1792	AREA (SF)	X	0.56	U VALUE (BTU/ HR - SF - F)	X	59	F TEMPERATURE DIFFERENCE		=	0.06	MBTU / HR
METAL GLAZED O'HEAD DR =		AREA (SF)	X	0.214	U VALUE (BTU/ HR - SF - F)	X	59	F TEMPERATURE DIFFERENCE		=	0.00	MBTU / HR
LG MTL SLIDING DOOR =		AREA (SF)	X	0.56	U VALUE (BTU/ HR - SF - F)	X	59	F TEMPERATURE DIFFERENCE		=	0.00	MBTU / HR
METAL PERSONNEL DR=		AREA (SF)	X	0.56	U VALUE (BTU/ HR - SF - F)	X	59	F TEMPERATURE DIFFERENCE		=	0.00	MBTU / HR
MTL/ GLAZED PERSONNEL=	50	AREA (SF)	X	0.615	U VALUE (BTU/ HR - SF - F)	X	59	F TEMPERATURE DIFFERENCE		=	0.00	MBTU / HR

TOTAL BASELINE HEAT LOSSES	=	**0.42**	**MBTU / HR**
	=	**443.92**	**MJ/HR**

FT KNOX LIMITED EEAP (GLASS)

ECO - 1: INFRARED HEATING CALCULATIONS

BUILDING NUMBER: 6142

BUILDING HEATING TEMPERATURE SETPOINT: 55 F
OUTSIDE DESIGN TEMPERATURE 1 F
TEMPERATURE DIFFERENCE 54 F

INFILTRATION LOSSES =	1	AIR CHGS	X	138900	VOL (CU FT)	X	54	F TEMP DIFF	X 0.019	= 0.14	MBTU / HR
FLOOR LOSSES =	390	LINEAR FEET OF PERIMETER				X	54	F TEMP DIFF	X 0.81	= 0.02	MBTU / HR
SURFACE HEAT LOSSES											
FLAT BUILT UP ROOF =	8100	AREA (SF)	X	0.105	U VALUE (BTU/ HR - SF - F)	X	54	F TEMPERATURE DIFFERENCE	=	0.05	MBTU / HR
FACE BRICK/BLK WALL =	0	AREA (SF)	X	0.176	U VALUE (BTU/ HR - SF - F)	X	54	F TEMPERATURE DIFFERENCE	=	0.00	MBTU / HR
8" CINDER BLOCK WALL =	2743	AREA (SF)	X	0.389	U VALUE (BTU/ HR - SF - F)	X	54	F TEMPERATURE DIFFERENCE	=	0.06	MBTU / HR
CORR MTL PNL WALL =	1685	AREA (SF)	X	0.17	U VALUE (BTU/ HR - SF - F)	X	54	F TEMPERATURE DIFFERENCE	=	0.02	MBTU / HR
CLR SGL PANE WINDOWS =	760	AREA (SF)	X	1.235	U VALUE (BTU/ HR - SF - F)	X	54	F TEMPERATURE DIFFERENCE	=	0.05	MBTU / HR
TINTED DBL PANE WIN'W =	0	AREA (SF)	X	0.65	U VALUE (BTU/ HR - SF - F)	X	54	F TEMPERATURE DIFFERENCE	=	0.00	MBTU / HR
METAL ROLL UP DOORS =	1792	AREA (SF)	X	0.56	U VALUE (BTU/ HR - SF - F)	X	54	F TEMPERATURE DIFFERENCE	=	0.05	MBTU / HR
WOOD GLAZED O'HEAD DR =	0	AREA (SF)	X	0.214	U VALUE (BTU/ HR - SF - F)	X	54	F TEMPERATURE DIFFERENCE	=	0.00	MBTU / HR
LG MTL SLIDING DOOR =	0	AREA (SF)	X	0.56	U VALUE (BTU/ HR - SF - F)	X	54	F TEMPERATURE DIFFERENCE	=	0.00	MBTU / HR
METAL PERSONNEL DR=	0	AREA (SF)	X	0.56	U VALUE (BTU/ HR - SF - F)	X	54	F TEMPERATURE DIFFERENCE	=	0.00	MBTU / HR
MTL/ GLAZED PERSONNEL=	50	AREA (SF)	X	0.615	U VALUE (BTU/ HR - SF - F)	X	54	F TEMPERATURE DIFFERENCE	=	0.00	MBTU / HR
					TOTAL ECO HEAT LOSSES				=	**0.39**	**MBTU / HR**
									=	**406.30**	**MJ/HR**

FT KNOX LIMITED EEAP (GLASS)

ECO - 1: INFRARED HEATING CALCULATIONS

	BASELINE	ECO - 1
SYSTEM EFFICIENCY	60%	90%
OUTSIDE DESIGN TEMP (F)	1	1
HTG TEMP SETPOINT (F)	60	55
HEATING DEGREE DAYS	4616	3396
TOTAL HEAT LOSSES (MBTU / HR)	0.42	0.39
$ /MBTU -FUEL OIL	$6.60	$6.60
$ /MBTU -NATURAL GAS	$4.62	$4.62
$ /MBTU -PPG	$10.84	$10.84

BUILDING NUMBER 6142

GLOSSARY OF TERMS

1 MBTU = 1055 MJ
0.019=CONSTANT
.81 = CONSTANT FOR SLAB PERIMETER UNINSULATED FROM ASHRAE
CORR FACTOR = EMPIRICAL CORRECTION FACTOR FOR HEATING EFFECT VS 65 F DEGREE-DAYS FROM ASHRAE FUNDAMENTALS 1989 PG28.2

ANNUAL HEATING ENERGY CONSUMPTION (DEGREE DAY METHOD)

BASELINE =	0.42	MBTU / HR	X	4616	DEGREE DAYS	X 24	HRS/DAY		
	0.6	SYS EFF	X	59	TEMP DIFFERENCE		=	1,316.82	MBTU/YR
	1,316.82	MBTU/YR	X		CORR FACTOR	1	=	1,316.82	MBTU/YR
ECO - 1 =	0.39	MBTU / HR	X	3396	DEGREE DAYS	X 24	HRS/DAY		
	0.9	SYS EFF	X	54	TEMP DIFFERENCE		=	645.86	MBTU/YR
	645.86	MBTU/YR	X		CORR FACTOR	1	=	645.86	MBTU/YR
	ECO - 1 ANNUAL HEATING ENERGY CONSUMPTION SAVINGS						=	670.96	MBTU/YR
							=	707,867.19	MJ/YR

ANNUAL HEATING ENERGY COST

BASELINE =	1,316.82	MBTU / YR	X	6.6	$ /MBTU	=	8,691.04 $ /YR
ECO - 1 =	645.86	MBTU / YR	X	4.62	$ /MBTU	=	2,983.87 $ /YR
	ECO - 1 ANNUAL HEATING ENERGY COST SAVINGS					=	5,707.17 $ /YR

FT KNOX LIMITED EEAP (GLASS)

ECO - 1: INFRARED HEATING CALCULATIONS

BUILDING NUMBER: 6143

BUILDING HEATING TEMPERATURE SETPOINT: 60 F
OUTSIDE DESIGN TEMPERATURE 1 F
TEMPERATURE DIFFERENCE 59 F

INFILTRATION LOSSES =	1	AIR CHGS	X	138900	VOL (CU FT)	X	59	F TEMP DIFF	X 0.019	=	0.16	MBTU / HR
FLOOR LOSSES =	390	LINEAR FEET OF PERIMETER				X	59	F TEMP DIFF	X 0.81	=	0.02	MBTU / HR

SURFACE HEAT LOSSES

FLAT BUILT UP ROOF =	8100	AREA (SF)	X	0.105	U VALUE (BTU/ HR - SF - F)	X	59	F TEMPERATURE DIFFERENCE		=	0.05	MBTU / HR
FACE BRICK/BLK WALL =		AREA (SF)	X	0.176	U VALUE (BTU/ HR - SF - F)	X	59	F TEMPERATURE DIFFERENCE		=	0.00	MBTU / HR
8" CINDER BLOCK WALL =	2743	AREA (SF)	X	0.389	U VALUE (BTU/ HR - SF - F)	X	59	F TEMPERATURE DIFFERENCE		=	0.06	MBTU / HR
CORR MTL PNL WALL =	1685	AREA (SF)	X	0.17	U VALUE (BTU/ HR - SF - F)	X	59	F TEMPERATURE DIFFERENCE		=	0.02	MBTU / HR
CLR SGL PANE WINDOWS =	760	AREA (SF)	X	1.235	U VALUE (BTU/ HR - SF - F)	X	59	F TEMPERATURE DIFFERENCE		=	0.06	MBTU / HR
TINTED DBL PANE WIN'W =		AREA (SF)	X	0.65	U VALUE (BTU/ HR - SF - F)	X	59	F TEMPERATURE DIFFERENCE		=	0.00	MBTU / HR
METAL ROLL UP DOORS =	1792	AREA (SF)	X	0.56	U VALUE (BTU/ HR - SF - F)	X	59	F TEMPERATURE DIFFERENCE		=	0.06	MBTU / HR
METAL GLAZED O'HEAD DR =		AREA (SF)	X	0.214	U VALUE (BTU/ HR - SF - F)	X	59	F TEMPERATURE DIFFERENCE		=	0.00	MBTU / HR
LG MTL SLIDING DOOR =		AREA (SF)	X	0.56	U VALUE (BTU/ HR - SF - F)	X	59	F TEMPERATURE DIFFERENCE		=	0.00	MBTU / HR
METAL PERSONNEL DR=		AREA (SF)	X	0.56	U VALUE (BTU/ HR - SF - F)	X	59	F TEMPERATURE DIFFERENCE		=	0.00	MBTU / HR
MTL/ GLAZED PERSONNEL=	50	AREA (SF)	X	0.615	U VALUE (BTU/ HR - SF - F)	X	59	F TEMPERATURE DIFFERENCE		=	0.00	MBTU / HR

TOTAL BASELINE HEAT LOSSES	=	0.42	MBTU / HR
	=	443.92	MJ/HR

FT KNOX LIMITED EEAP (GLASS)

ECO - 1: INFRARED HEATING CALCULATIONS

BUILDING NUMBER: 6143

BUILDING HEATING TEMPERATURE SETPOINT: 55 F
OUTSIDE DESIGN TEMPERATURE 1 F
TEMPERATURE DIFFERENCE 54 F

INFILTRATION LOSSES =	1	AIR CHGS	X	138900	VOL (CU FT)	X	54	F TEMP DIFF	X	0.019	=	0.14 MBTU / HR
FLOOR LOSSES =	390	LINEAR FEET OF PERIMETER				X	54	F TEMP DIFF	X	0.81	=	0.02 MBTU / HR
SURFACE HEAT LOSSES												
FLAT BUILT UP ROOF =	8100	AREA (SF)	X	0.105	U VALUE (BTU/ HR - SF - F)	X	54	F TEMPERATURE DIFFERENCE			=	0.05 MBTU / HR
FACE BRICK/BLK WALL =	0	AREA (SF)	X	0.176	U VALUE (BTU/ HR - SF - F)	X	54	F TEMPERATURE DIFFERENCE			=	0.00 MBTU / HR
8" CINDER BLOCK WALL =	2743	AREA (SF)	X	0.389	U VALUE (BTU/ HR - SF - F)	X	54	F TEMPERATURE DIFFERENCE			=	0.06 MBTU / HR
CORR MTL PNL WALL =	1685	AREA (SF)	X	0.17	U VALUE (BTU/ HR - SF - F)	X	54	F TEMPERATURE DIFFERENCE			=	0.02 MBTU / HR
CLR SGL PANE WINDOWS =	760	AREA (SF)	X	1.235	U VALUE (BTU/ HR - SF - F)	X	54	F TEMPERATURE DIFFERENCE			=	0.05 MBTU / HR
TINTED DBL PANE WIN'W =	0	AREA (SF)	X	0.65	U VALUE (BTU/ HR - SF - F)	X	54	F TEMPERATURE DIFFERENCE			=	0.00 MBTU / HR
METAL ROLL UP DOORS =	1792	AREA (SF)	X	0.56	U VALUE (BTU/ HR - SF - F)	X	54	F TEMPERATURE DIFFERENCE			=	0.05 MBTU / HR
WOOD GLAZED O'HEAD DR =	0	AREA (SF)	X	0.214	U VALUE (BTU/ HR - SF - F)	X	54	F TEMPERATURE DIFFERENCE			=	0.00 MBTU / HR
LG MTL SLIDING DOOR =	0	AREA (SF)	X	0.56	U VALUE (BTU/ HR - SF - F)	X	54	F TEMPERATURE DIFFERENCE			=	0.00 MBTU / HR
METAL PERSONNEL DR=	0	AREA (SF)	X	0.56	U VALUE (BTU/ HR - SF - F)	X	54	F TEMPERATURE DIFFERENCE			=	0.00 MBTU / HR
MTL/ GLAZED PERSONNEL=	50	AREA (SF)	X	0.615	U VALUE (BTU/ HR - SF - F)	X	54	F TEMPERATURE DIFFERENCE			=	0.00 MBTU / HR
					TOTAL ECO HEAT LOSSES						=	0.39 MBTU / HR
											=	406.30 MJ/HR

FT KNOX LIMITED EEAP (GLASS)

ECO - 1: INFRARED HEATING CALCULATIONS

	BASELINE	ECO - 1
SYSTEM EFFICIENCY	60%	90%
OUTSIDE DESIGN TEMP (F)	1	1
HTG TEMP SETPOINT (F)	60	55
HEATING DEGREE DAYS	4616	3396
TOTAL HEAT LOSSES (MBTU / HR)	0.42	0.39
$ /MBTU -FUEL OIL	$6.60	$6.60
$ /MBTU -NATURAL GAS	$4.62	$4.62
$ /MBTU -PPG	$10.84	$10.84

BUILDING NUMBER 6143

GLOSSARY OF TERMS

1 MBTU = 1055 MJ
0.019=CONSTANT
.81 = CONSTANT FOR SLAB PERIMETER UNINSULATED FROM ASHRAE
CORR FACTOR = EMPIRICAL CORRECTION FACTOR FOR HEATING EFFECT VS 65 F DEGREE-DAYS FROM ASHRAE FUNDAMENTALS 1989 PG28.2

ANNUAL HEATING ENERGY CONSUMPTION (DEGREE DAY METHOD)

BASELINE =	0.42 / 0.6	MBTU / HR X SYS EFF	4616 X 59	DEGREE DAYS X TEMP DIFFERENCE	24 HRS/DAY	=	1,316.82	MBTU/YR
	1,316.82	MBTU/YR	X	CORR FACTOR	1	=	1,316.82	MBTU/YR
ECO - 1 =	0.39 / 0.9	MBTU / HR X SYS EFF	3396 X 54	DEGREE DAYS X TEMP DIFFERENCE	24 HRS/DAY	=	645.86	MBTU/YR
	645.86	MBTU/YR	X	CORR FACTOR	1	=	645.86	MBTU/YR
	ECO - 1 ANNUAL HEATING ENERGY CONSUMPTION SAVINGS					=	670.96	MBTU/YR
						=	707,867.19	MJ/YR

ANNUAL HEATING ENERGY COST

BASELINE =	1,316.82	MBTU / YR X	6.6	$ /MBTU	=	8,691.04	$ /YR
ECO - 1 =	645.86	MBTU / YR X	4.62	$ /MBTU	=	2,983.87	$ /YR
	ECO - 1 ANNUAL HEATING ENERGY COST SAVINGS				=	5,707.17	$ /YR

FT KNOX LIMITED EEAP (GLASS)

ECO - 1: INFRARED HEATING CALCULATIONS

BUILDING NUMBER: 6144

BUILDING HEATING TEMPERATURE SETPOINT: 60 F
OUTSIDE DESIGN TEMPERATURE 1 F
TEMPERATURE DIFFERENCE 59 F

INFILTRATION LOSSES =	1	AIR CHGS	X	138900	VOL (CU FT)	X	59	F TEMP DIFF	X 0.019	=	0.16	MBTU / HR
FLOOR LOSSES =	390	LINEAR FEET OF PERIMETER				X	59	F TEMP DIFF	X 0.81	=	0.02	MBTU / HR
SURFACE HEAT LOSSES												
FLAT BUILT UP ROOF =	8100	AREA (SF)	X	0.105	U VALUE (BTU/ HR - SF - F)	X	59	F TEMPERATURE DIFFERENCE		=	0.05	MBTU / HR
FACE BRICK/BLK WALL =		AREA (SF)	X	0.176	U VALUE (BTU/ HR - SF - F)	X	59	F TEMPERATURE DIFFERENCE		=	0.00	MBTU / HR
8" CINDER BLOCK WALL =	2743	AREA (SF)	X	0.389	U VALUE (BTU/ HR - SF - F)	X	59	F TEMPERATURE DIFFERENCE		=	0.06	MBTU / HR
CORR MTL PNL WALL =	1685	AREA (SF)	X	0.17	U VALUE (BTU/ HR - SF - F)	X	59	F TEMPERATURE DIFFERENCE		=	0.02	MBTU / HR
CLR SGL PANE WINDOWS =	760	AREA (SF)	X	1.235	U VALUE (BTU/ HR - SF - F)	X	59	F TEMPERATURE DIFFERENCE		=	0.06	MBTU / HR
TINTED DBL PANE WIN'W =		AREA (SF)	X	0.65	U VALUE (BTU/ HR - SF - F)	X	59	F TEMPERATURE DIFFERENCE		=	0.00	MBTU / HR
METAL ROLL UP DOORS =	1792	AREA (SF)	X	0.56	U VALUE (BTU/ HR - SF - F)	X	59	F TEMPERATURE DIFFERENCE		=	0.06	MBTU / HR
METAL GLAZED O'HEAD DR =		AREA (SF)	X	0.214	U VALUE (BTU/ HR - SF - F)	X	59	F TEMPERATURE DIFFERENCE		=	0.00	MBTU / HR
LG MTL SLIDING DOOR =		AREA (SF)	X	0.56	U VALUE (BTU/ HR - SF - F)	X	59	F TEMPERATURE DIFFERENCE		=	0.00	MBTU / HR
METAL PERSONNEL DR=		AREA (SF)	X	0.56	U VALUE (BTU/ HR - SF - F)	X	59	F TEMPERATURE DIFFERENCE		=	0.00	MBTU / HR
MTL/ GLAZED PERSONNEL=	50	AREA (SF)	X	0.615	U VALUE (BTU/ HR - SF - F)	X	59	F TEMPERATURE DIFFERENCE		=	0.00	MBTU / HR
					TOTAL BASELINE HEAT LOSSES					=	**0.42**	**MBTU / HR**
										=	**443.92**	**MJ/HR**

FT KNOX LIMITED EEAP (GLASS)

ECO - 1: INFRARED HEATING CALCULATIONS

BUILDING NUMBER: 6144

BUILDING HEATING TEMPERATURE SETPOINT: 55 F
OUTSIDE DESIGN TEMPERATURE 1 F
TEMPERATURE DIFFERENCE 54 F

INFILTRATION LOSSES =	1	AIR CHGS	X	138900	VOL (CU FT)	X	54	F TEMP DIFF	X 0.019	=	0.14	MBTU / HR
FLOOR LOSSES =	390	LINEAR FEET OF PERIMETER				X	54	F TEMP DIFF	X 0.81	=	0.02	MBTU / HR
SURFACE HEAT LOSSES												
FLAT BUILT UP ROOF =	8100	AREA (SF)	X	0.105	U VALUE (BTU/ HR - SF - F)	X	54	F TEMPERATURE DIFFERENCE		=	0.05	MBTU / HR
FACE BRICK/BLK WALL =	0	AREA (SF)	X	0.176	U VALUE (BTU/ HR - SF - F)	X	54	F TEMPERATURE DIFFERENCE		=	0.00	MBTU / HR
8" CINDER BLOCK WALL =	2743	AREA (SF)	X	0.389	U VALUE (BTU/ HR - SF - F)	X	54	F TEMPERATURE DIFFERENCE		=	0.06	MBTU / HR
CORR MTL PNL WALL =	1685	AREA (SF)	X	0.17	U VALUE (BTU/ HR - SF - F)	X	54	F TEMPERATURE DIFFERENCE		=	0.02	MBTU / HR
CLR SGL PANE WINDOWS =	760	AREA (SF)	X	1.235	U VALUE (BTU/ HR - SF - F)	X	54	F TEMPERATURE DIFFERENCE		=	0.05	MBTU / HR
TINTED DBL PANE WIN'W =	0	AREA (SF)	X	0.65	U VALUE (BTU/ HR - SF - F)	X	54	F TEMPERATURE DIFFERENCE		=	0.00	MBTU / HR
METAL ROLL UP DOORS =	1792	AREA (SF)	X	0.56	U VALUE (BTU/ HR - SF - F)	X	54	F TEMPERATURE DIFFERENCE		=	0.05	MBTU / HR
WOOD GLAZED O'HEAD DR =	0	AREA (SF)	X	0.214	U VALUE (BTU/ HR - SF - F)	X	54	F TEMPERATURE DIFFERENCE		=	0.00	MBTU / HR
LG MTL SLIDING DOOR =	0	AREA (SF)	X	0.56	U VALUE (BTU/ HR - SF - F)	X	54	F TEMPERATURE DIFFERENCE		=	0.00	MBTU / HR
METAL PERSONNEL DR=	0	AREA (SF)	X	0.56	U VALUE (BTU/ HR - SF - F)	X	54	F TEMPERATURE DIFFERENCE		=	0.00	MBTU / HR
MTL/ GLAZED PERSONNEL=	50	AREA (SF)	X	0.615	U VALUE (BTU/ HR - SF - F)	X	54	F TEMPERATURE DIFFERENCE		=	0.00	MBTU / HR
					TOTAL ECO HEAT LOSSES					=	**0.39**	**MBTU / HR**
										=	**406.30**	**MJ/HR**

FT KNOX LIMITED EEAP (GLASS)

ECO - 1: INFRARED HEATING CALCULATIONS

	BASELINE	ECO - 1
SYSTEM EFFICIENCY	60%	90%
OUTSIDE DESIGN TEMP (F)	1	1
HTG TEMP SETPOINT (F)	60	55
HEATING DEGREE DAYS	4616	3396
TOTAL HEAT LOSSES (MBTU / HR)	0.42	0.39
$ /MBTU -FUEL OIL	$6.60	$6.60
$ /MBTU -NATURAL GAS	$4.62	$4.62
$ /MBTU -PPG	$10.84	$10.84

BUILDING NUMBER 6144

GLOSSARY OF TERMS

1 MBTU = 1055 MJ
0.019=CONSTANT
.81 = CONSTANT FOR SLAB PERIMETER UNINSULATED FROM ASHRAE
CORR FACTOR = EMPIRICAL CORRECTION FACTOR FOR HEATING EFFECT VS 65 F DEGREE-DAYS FROM ASHRAE FUNDAMENTALS 1989 PG28.2

ANNUAL HEATING ENERGY CONSUMPTION (DEGREE DAY METHOD)

BASELINE =	0.42 / 0.6	MBTU / HR X SYS EFF	4616 X 59	DEGREE DAYS X TEMP DIFFERENCE	24 HRS/DAY	=	1,316.82	MBTU/YR	
	1,316.82	MBTU/YR	X	CORR FACTOR	1	=		1,316.82	MBTU/YR
ECO - 1 =	0.39 / 0.9	MBTU / HR X SYS EFF	3396 X 54	DEGREE DAYS X TEMP DIFFERENCE	24 HRS/DAY	=	645.86	MBTU/YR	
	645.86	MBTU/YR	X	CORR FACTOR	1	=		645.86	MBTU/YR
	ECO - 1 ANNUAL HEATING ENERGY CONSUMPTION SAVINGS					=		670.96	MBTU/YR
						=		707,867.19	MJ/YR

ANNUAL HEATING ENERGY COST

BASELINE =	1,316.82	MBTU / YR X	6.6	$ /MBTU	=	8,691.04	$ /YR
ECO - 1 =	645.86	MBTU / YR X	4.62	$ /MBTU	=	2,983.87	$ /YR
	ECO - 1 ANNUAL HEATING ENERGY COST SAVINGS				=	5,707.17	$ /YR

FT KNOX LIMITED EEAP (GLASS)

ECO - 1: INFRARED HEATING CALCULATIONS

BUILDING NUMBER: 6145

BUILDING HEATING TEMPERATURE SETPOINT: 60 F
OUTSIDE DESIGN TEMPERATURE 1 F
TEMPERATURE DIFFERENCE 59 F

INFILTRATION LOSSES =	1	AIR CHGS	X	138900	VOL (CU FT)	X	59	F TEMP DIFF	X 0.019	=	0.16	MBTU / HR
FLOOR LOSSES =	390	LINEAR FEET OF PERIMETER				X	59	F TEMP DIFF	X 0.81	=	0.02	MBTU / HR
SURFACE HEAT LOSSES												
FLAT BUILT UP ROOF =	8100	AREA (SF)	X	0.105	U VALUE (BTU/ HR - SF - F)	X	59	F TEMPERATURE DIFFERENCE		=	0.05	MBTU / HR
FACE BRICK/BLK WALL =		AREA (SF)	X	0.176	U VALUE (BTU/ HR - SF - F)	X	59	F TEMPERATURE DIFFERENCE		=	0.00	MBTU / HR
8" CINDER BLOCK WALL =	2743	AREA (SF)	X	0.389	U VALUE (BTU/ HR - SF - F)	X	59	F TEMPERATURE DIFFERENCE		=	0.06	MBTU / HR
CORR MTL PNL WALL =	1685	AREA (SF)	X	0.17	U VALUE (BTU/ HR - SF - F)	X	59	F TEMPERATURE DIFFERENCE		=	0.02	MBTU / HR
CLR SGL PANE WINDOWS =	760	AREA (SF)	X	1.235	U VALUE (BTU/ HR - SF - F)	X	59	F TEMPERATURE DIFFERENCE		=	0.06	MBTU / HR
TINTED DBL PANE WIN'W =		AREA (SF)	X	0.65	U VALUE (BTU/ HR - SF - F)	X	59	F TEMPERATURE DIFFERENCE		=	0.00	MBTU / HR
METAL ROLL UP DOORS =	1792	AREA (SF)	X	0.56	U VALUE (BTU/ HR - SF - F)	X	59	F TEMPERATURE DIFFERENCE		=	0.06	MBTU / HR
METAL GLAZED O'HEAD DR =		AREA (SF)	X	0.214	U VALUE (BTU/ HR - SF - F)	X	59	F TEMPERATURE DIFFERENCE		=	0.00	MBTU / HR
LG MTL SLIDING DOOR =		AREA (SF)	X	0.56	U VALUE (BTU/ HR - SF - F)	X	59	F TEMPERATURE DIFFERENCE		=	0.00	MBTU / HR
METAL PERSONNEL DR=		AREA (SF)	X	0.56	U VALUE (BTU/ HR - SF - F)	X	59	F TEMPERATURE DIFFERENCE		=	0.00	MBTU / HR
MTL/ GLAZED PERSONNEL=	50	AREA (SF)	X	0.615	U VALUE (BTU/ HR - SF - F)	X	59	F TEMPERATURE DIFFERENCE		=	0.00	MBTU / HR
					TOTAL BASELINE HEAT LOSSES					=	**0.42**	**MBTU / HR**
										=	**443.92**	**MJ/HR**

FT KNOX LIMITED EEAP (GLASS)

ECO - 1: INFRARED HEATING CALCULATIONS

BUILDING NUMBER: 6145

BUILDING HEATING TEMPERATURE SETPOINT:	55	F
OUTSIDE DESIGN TEMPERATURE	1	F
TEMPERATURE DIFFERENCE	54	F

INFILTRATION LOSSES =	1	AIR CHGS	X	138900	VOL (CU FT)	X	54	F TEMP DIFF	X	0.019	=	0.14 MBTU / HR
FLOOR LOSSES =	390	LINEAR FEET OF PERIMETER				X	54	F TEMP DIFF	X	0.81	=	0.02 MBTU / HR

SURFACE HEAT LOSSES

FLAT BUILT UP ROOF =	8100	AREA (SF)	X	0.105	U VALUE (BTU/ HR - SF - F)	X	54	F TEMPERATURE DIFFERENCE	=	0.05	MBTU / HR
FACE BRICK/BLK WALL =	0	AREA (SF)	X	0.176	U VALUE (BTU/ HR - SF - F)	X	54	F TEMPERATURE DIFFERENCE	=	0.00	MBTU / HR
8" CINDER BLOCK WALL =	2743	AREA (SF)	X	0.389	U VALUE (BTU/ HR - SF - F)	X	54	F TEMPERATURE DIFFERENCE	=	0.06	MBTU / HR
CORR MTL PNL WALL =	1685	AREA (SF)	X	0.17	U VALUE (BTU/ HR - SF - F)	X	54	F TEMPERATURE DIFFERENCE	=	0.02	MBTU / HR
CLR SGL PANE WINDOWS =	760	AREA (SF)	X	1.235	U VALUE (BTU/ HR - SF - F)	X	54	F TEMPERATURE DIFFERENCE	=	0.05	MBTU / HR
TINTED DBL PANE WIN'W =	0	AREA (SF)	X	0.65	U VALUE (BTU/ HR - SF - F)	X	54	F TEMPERATURE DIFFERENCE	=	0.00	MBTU / HR
METAL ROLL UP DOORS =	1792	AREA (SF)	X	0.56	U VALUE (BTU/ HR - SF - F)	X	54	F TEMPERATURE DIFFERENCE	=	0.05	MBTU / HR
WOOD GLAZED O'HEAD DR =	0	AREA (SF)	X	0.214	U VALUE (BTU/ HR - SF - F)	X	54	F TEMPERATURE DIFFERENCE	=	0.00	MBTU / HR
LG MTL SLIDING DOOR =	0	AREA (SF)	X	0.56	U VALUE (BTU/ HR - SF - F)	X	54	F TEMPERATURE DIFFERENCE	=	0.00	MBTU / HR
METAL PERSONNEL DR=	0	AREA (SF)	X	0.56	U VALUE (BTU/ HR - SF - F)	X	54	F TEMPERATURE DIFFERENCE	=	0.00	MBTU / HR
MTL/ GLAZED PERSONNEL=	50	AREA (SF)	X	0.615	U VALUE (BTU/ HR - SF - F)	X	54	F TEMPERATURE DIFFERENCE	=	0.00	MBTU / HR

TOTAL ECO HEAT LOSSES	=	**0.39**	**MBTU / HR**
	=	**406.30**	**MJ/HR**

FT KNOX LIMITED EEAP (GLASS)

ECO - 1: INFRARED HEATING CALCULATIONS

	BASELINE	ECO - 1
SYSTEM EFFICIENCY	60%	90%
OUTSIDE DESIGN TEMP (F)	1	1
HTG TEMP SETPOINT (F)	60	55
HEATING DEGREE DAYS	4616	3396
TOTAL HEAT LOSSES (MBTU / HR)	0.42	0.39
$ /MBTU -FUEL OIL	$6.60	$6.60
$ /MBTU -NATURAL GAS	$4.62	$4.62
$ /MBTU -PPG	$10.84	$10.84

BUILDING NUMBER **6145**

GLOSSARY OF TERMS

1 MBTU = 1055 MJ
0.019=CONSTANT
.81 = CONSTANT FOR SLAB PERIMETER UNINSULATED FROM ASHRAE
CORR FACTOR = EMPIRICAL CORRECTION FACTOR FOR HEATING EFFECT VS 65 F DEGREE-DAYS FROM ASHRAE FUNDAMENTALS 1989 PG28.2

ANNUAL HEATING ENERGY CONSUMPTION (DEGREE DAY METHOD)

BASELINE =	0.42	MBTU / HR	X	4616	DEGREE DAYS X 24 HRS/DAY				
	0.6	SYS EFF	X	59	TEMP DIFFERENCE	=	1,316.82	MBTU/YR	
	1,316.82	MBTU/YR	X		CORR FACTOR 1	=		1,316.82	MBTU/YR
ECO - 1 =	0.39	MBTU / HR	X	3396	DEGREE DAYS X 24 HRS/DAY				
	0.9	SYS EFF	X	54	TEMP DIFFERENCE	=	645.86	MBTU/YR	
	645.86	MBTU/YR	X		CORR FACTOR 1	=		645.86	MBTU/YR
	ECO - 1 ANNUAL HEATING ENERGY CONSUMPTION SAVINGS					=		**670.96**	**MBTU/YR**
						=		**707,867.19**	**MJ/YR**

ANNUAL HEATING ENERGY COST

BASELINE =	1,316.82	MBTU / YR	X	6.6	$ /MBTU	=	8,691.04	$ /YR
ECO - 1 =	645.86	MBTU / YR	X	4.62	$ /MBTU	=	2,983.87	$ /YR
	ECO - 1 ANNUAL HEATING ENERGY COST SAVINGS					=	**5,707.17**	**$ /YR**

FT KNOX LIMITED EEAP (GLASS)

ECO - 1: INFRARED HEATING CALCULATIONS

BUILDING NUMBER: 6146

BUILDING HEATING TEMPERATURE SETPOINT: 60 F
OUTSIDE DESIGN TEMPERATURE 1 F
TEMPERATURE DIFFERENCE 59 F

INFILTRATION LOSSES =	1	AIR CHGS	X	138900	VOL (CU FT)	X	59	F TEMP DIFF	X 0.019	=	0.16	MBTU / HR
FLOOR LOSSES =	390	LINEAR FEET OF PERIMETER				X	59	F TEMP DIFF	X 0.81	=	0.02	MBTU / HR

SURFACE HEAT LOSSES

FLAT BUILT UP ROOF =	8100	AREA (SF)	X	0.105	U VALUE (BTU/ HR - SF - F)	X	59	F TEMPERATURE DIFFERENCE		=	0.05	MBTU / HR
FACE BRICK/BLK WALL =		AREA (SF)	X	0.176	U VALUE (BTU/ HR - SF - F)	X	59	F TEMPERATURE DIFFERENCE		=	0.00	MBTU / HR
8" CINDER BLOCK WALL =	2743	AREA (SF)	X	0.389	U VALUE (BTU/ HR - SF - F)	X	59	F TEMPERATURE DIFFERENCE		=	0.06	MBTU / HR
CORR MTL PNL WALL =	1685	AREA (SF)	X	0.17	U VALUE (BTU/ HR - SF - F)	X	59	F TEMPERATURE DIFFERENCE		=	0.02	MBTU / HR
CLR SGL PANE WINDOWS =	760	AREA (SF)	X	1.235	U VALUE (BTU/ HR - SF - F)	X	59	F TEMPERATURE DIFFERENCE		=	0.06	MBTU / HR
TINTED DBL PANE WIN'W =		AREA (SF)	X	0.65	U VALUE (BTU/ HR - SF - F)	X	59	F TEMPERATURE DIFFERENCE		=	0.00	MBTU / HR
METAL ROLL UP DOORS =	1792	AREA (SF)	X	0.56	U VALUE (BTU/ HR - SF - F)	X	59	F TEMPERATURE DIFFERENCE		=	0.06	MBTU / HR
METAL GLAZED O'HEAD DR =		AREA (SF)	X	0.214	U VALUE (BTU/ HR - SF - F)	X	59	F TEMPERATURE DIFFERENCE		=	0.00	MBTU / HR
LG MTL SLIDING DOOR =		AREA (SF)	X	0.56	U VALUE (BTU/ HR - SF - F)	X	59	F TEMPERATURE DIFFERENCE		=	0.00	MBTU / HR
METAL PERSONNEL DR=		AREA (SF)	X	0.56	U VALUE (BTU/ HR - SF - F)	X	59	F TEMPERATURE DIFFERENCE		=	0.00	MBTU / HR
MTL/ GLAZED PERSONNEL=	50	AREA (SF)	X	0.615	U VALUE (BTU/ HR - SF - F)	X	59	F TEMPERATURE DIFFERENCE		=	0.00	MBTU / HR

TOTAL BASELINE HEAT LOSSES = 0.42 MBTU / HR
= 443.92 MJ/HR

FT KNOX LIMITED EEAP (GLASS)

ECO - 1: INFRARED HEATING CALCULATIONS

BUILDING NUMBER: 6146

BUILDING HEATING TEMPERATURE SETPOINT: 55 F
OUTSIDE DESIGN TEMPERATURE 1 F
TEMPERATURE DIFFERENCE 54 F

INFILTRATION LOSSES =	1	AIR CHGS	X	138900	VOL (CU FT)	X	54	F TEMP DIFF	X	0.019	=	0.14 MBTU / HR
FLOOR LOSSES =	390	LINEAR FEET OF PERIMETER				X	54	F TEMP DIFF	X	0.81	=	0.02 MBTU / HR
SURFACE HEAT LOSSES												
FLAT BUILT UP ROOF =	8100	AREA (SF)	X	0.105	U VALUE (BTU/ HR - SF - F)	X	54	F TEMPERATURE DIFFERENCE			=	0.05 MBTU / HR
FACE BRICK/BLK WALL =	0	AREA (SF)	X	0.176	U VALUE (BTU/ HR - SF - F)	X	54	F TEMPERATURE DIFFERENCE			=	0.00 MBTU / HR
8" CINDER BLOCK WALL =	2743	AREA (SF)	X	0.389	U VALUE (BTU/ HR - SF - F)	X	54	F TEMPERATURE DIFFERENCE			=	0.06 MBTU / HR
CORR MTL PNL WALL =	1685	AREA (SF)	X	0.17	U VALUE (BTU/ HR - SF - F)	X	54	F TEMPERATURE DIFFERENCE			=	0.02 MBTU / HR
CLR SGL PANE WINDOWS =	760	AREA (SF)	X	1.235	U VALUE (BTU/ HR - SF - F)	X	54	F TEMPERATURE DIFFERENCE			=	0.05 MBTU / HR
TINTED DBL PANE WIN'W =	0	AREA (SF)	X	0.65	U VALUE (BTU/ HR - SF - F)	X	54	F TEMPERATURE DIFFERENCE			=	0.00 MBTU / HR
METAL ROLL UP DOORS =	1792	AREA (SF)	X	0.56	U VALUE (BTU/ HR - SF - F)	X	54	F TEMPERATURE DIFFERENCE			=	0.05 MBTU / HR
WOOD GLAZED O'HEAD DR =	0	AREA (SF)	X	0.214	U VALUE (BTU/ HR - SF - F)	X	54	F TEMPERATURE DIFFERENCE			=	0.00 MBTU / HR
LG MTL SLIDING DOOR =	0	AREA (SF)	X	0.56	U VALUE (BTU/ HR - SF - F)	X	54	F TEMPERATURE DIFFERENCE			=	0.00 MBTU / HR
METAL PERSONNEL DR=	0	AREA (SF)	X	0.56	U VALUE (BTU/ HR - SF - F)	X	54	F TEMPERATURE DIFFERENCE			=	0.00 MBTU / HR
MTL/ GLAZED PERSONNEL=	50	AREA (SF)	X	0.615	U VALUE (BTU/ HR - SF - F)	X	54	F TEMPERATURE DIFFERENCE			=	0.00 MBTU / HR
					TOTAL ECO HEAT LOSSES						=	**0.39 MBTU / HR**
											=	**406.30 MJ/HR**

FT KNOX LIMITED EEAP (GLASS)

ECO - 1: INFRARED HEATING CALCULATIONS

	BASELINE	ECO - 1
SYSTEM EFFICIENCY	60%	90%
OUTSIDE DESIGN TEMP (F)	1	1
HTG TEMP SETPOINT (F)	60	55
HEATING DEGREE DAYS	4616	3396
TOTAL HEAT LOSSES (MBTU / HR)	0.42	0.39
$ /MBTU -FUEL OIL	$6.60	$6.60
$ /MBTU -NATURAL GAS	$4.62	$4.62
$ /MBTU -PPG	$10.84	$10.84

BUILDING NUMBER 6146

GLOSSARY OF TERMS

1 MBTU = 1055 MJ
0.019=CONSTANT
.81 = CONSTANT FOR SLAB PERIMETER UNINSULATED FROM ASHRAE
CORR FACTOR = EMPIRICAL CORRECTION FACTOR FOR HEATING EFFECT VS 65 F DEGREE-DAYS FROM ASHRAE FUNDAMENTALS 1989 PG28.2

ANNUAL HEATING ENERGY CONSUMPTION (DEGREE DAY METHOD)

BASELINE =	0.42	MBTU / HR	X	4616	DEGREE DAYS	X 24	HRS/DAY		
	0.6	SYS EFF	X	59	TEMP DIFFERENCE		=	1,316.82	MBTU/YR
	1,316.82	MBTU/YR	X		CORR FACTOR	1	=	1,316.82	MBTU/YR
ECO - 1 =	0.39	MBTU / HR	X	3396	DEGREE DAYS	X 24	HRS/DAY		
	0.9	SYS EFF	X	54	TEMP DIFFERENCE		=	645.86	MBTU/YR
	645.86	MBTU/YR	X		CORR FACTOR	1	=	645.86	MBTU/YR
	ECO - 1 ANNUAL HEATING ENERGY CONSUMPTION SAVINGS						=	**670.96**	**MBTU/YR**
							=	**707,867.19**	**MJ/YR**

ANNUAL HEATING ENERGY COST

BASELINE =	1,316.82	MBTU / YR	X	6.6	$ /MBTU	=	8,691.04 $ /YR
ECO - 1 =	645.86	MBTU / YR	X	4.62	$ /MBTU	=	2,983.87 $ /YR
	ECO - 1 ANNUAL HEATING ENERGY COST SAVINGS					=	**5,707.17 $ /YR**

FT KNOX LIMITED EEAP (GLASS)

ECO - 1: INFRARED HEATING CALCULATIONS

BUILDING NUMBER: 6147

BUILDING HEATING TEMPERATURE SETPOINT: 60 F
OUTSIDE DESIGN TEMPERATURE 1 F
TEMPERATURE DIFFERENCE 59 F

INFILTRATION LOSSES =	1	AIR CHGS	X	138900	VOL (CU FT)	X	59	F TEMP DIFF	X 0.019	=	0.16	MBTU / HR
FLOOR LOSSES =	390	LINEAR FEET OF PERIMETER				X	59	F TEMP DIFF	X 0.81	=	0.02	MBTU / HR

SURFACE HEAT LOSSES

FLAT BUILT UP ROOF =	8100	AREA (SF)	X	0.105	U VALUE (BTU/ HR - SF - F)	X	59	F TEMPERATURE DIFFERENCE		=	0.05	MBTU / HR
FACE BRICK/BLK WALL =		AREA (SF)	X	0.176	U VALUE (BTU/ HR - SF - F)	X	59	F TEMPERATURE DIFFERENCE		=	0.00	MBTU / HR
8" CINDER BLOCK WALL =	2743	AREA (SF)	X	0.389	U VALUE (BTU/ HR - SF - F)	X	59	F TEMPERATURE DIFFERENCE		=	0.06	MBTU / HR
CORR MTL PNL WALL =	1685	AREA (SF)	X	0.17	U VALUE (BTU/ HR - SF - F)	X	59	F TEMPERATURE DIFFERENCE		=	0.02	MBTU / HR
CLR SGL PANE WINDOWS =	760	AREA (SF)	X	1.235	U VALUE (BTU/ HR - SF - F)	X	59	F TEMPERATURE DIFFERENCE		=	0.06	MBTU / HR
TINTED DBL PANE WIN'W =		AREA (SF)	X	0.65	U VALUE (BTU/ HR - SF - F)	X	59	F TEMPERATURE DIFFERENCE		=	0.00	MBTU / HR
METAL ROLL UP DOORS =	1792	AREA (SF)	X	0.56	U VALUE (BTU/ HR - SF - F)	X	59	F TEMPERATURE DIFFERENCE		=	0.06	MBTU / HR
METAL GLAZED O'HEAD DR =		AREA (SF)	X	0.214	U VALUE (BTU/ HR - SF - F)	X	59	F TEMPERATURE DIFFERENCE		=	0.00	MBTU / HR
LG MTL SLIDING DOOR =		AREA (SF)	X	0.56	U VALUE (BTU/ HR - SF - F)	X	59	F TEMPERATURE DIFFERENCE		=	0.00	MBTU / HR
METAL PERSONNEL DR=		AREA (SF)	X	0.56	U VALUE (BTU/ HR - SF - F)	X	59	F TEMPERATURE DIFFERENCE		=	0.00	MBTU / HR
MTL/ GLAZED PERSONNEL=	50	AREA (SF)	X	0.615	U VALUE (BTU/ HR - SF - F)	X	59	F TEMPERATURE DIFFERENCE		=	0.00	MBTU / HR

TOTAL BASELINE HEAT LOSSES = **0.42** **MBTU / HR**
= **443.92** **MJ/HR**

FT KNOX LIMITED EEAP (GLASS)

ECO - 1: INFRARED HEATING CALCULATIONS

BUILDING NUMBER: 6147

BUILDING HEATING TEMPERATURE SETPOINT:	55 F
OUTSIDE DESIGN TEMPERATURE	1 F
TEMPERATURE DIFFERENCE	54 F

INFILTRATION LOSSES =	1	AIR CHGS	X	138900	VOL (CU FT)	X	54	F TEMP DIFF	X	0.019	=	0.14 MBTU / HR
FLOOR LOSSES =	390	LINEAR FEET OF PERIMETER				X	54	F TEMP DIFF	X	0.81	=	0.02 MBTU / HR
SURFACE HEAT LOSSES												
FLAT BUILT UP ROOF =	8100	AREA (SF)	X	0.105	U VALUE (BTU/ HR - SF - F)	X	54	F TEMPERATURE DIFFERENCE			=	0.05 MBTU / HR
FACE BRICK/BLK WALL =	0	AREA (SF)	X	0.176	U VALUE (BTU/ HR - SF - F)	X	54	F TEMPERATURE DIFFERENCE			=	0.00 MBTU / HR
8" CINDER BLOCK WALL =	2743	AREA (SF)	X	0.389	U VALUE (BTU/ HR - SF - F)	X	54	F TEMPERATURE DIFFERENCE			=	0.06 MBTU / HR
CORR MTL PNL WALL =	1685	AREA (SF)	X	0.17	U VALUE (BTU/ HR - SF - F)	X	54	F TEMPERATURE DIFFERENCE			=	0.02 MBTU / HR
CLR SGL PANE WINDOWS =	760	AREA (SF)	X	1.235	U VALUE (BTU/ HR - SF - F)	X	54	F TEMPERATURE DIFFERENCE			=	0.05 MBTU / HR
TINTED DBL PANE WIN'W =	0	AREA (SF)	X	0.65	U VALUE (BTU/ HR - SF - F)	X	54	F TEMPERATURE DIFFERENCE			=	0.00 MBTU / HR
METAL ROLL UP DOORS =	1792	AREA (SF)	X	0.56	U VALUE (BTU/ HR - SF - F)	X	54	F TEMPERATURE DIFFERENCE			=	0.05 MBTU / HR
WOOD GLAZED O'HEAD DR =	0	AREA (SF)	X	0.214	U VALUE (BTU/ HR - SF - F)	X	54	F TEMPERATURE DIFFERENCE			=	0.00 MBTU / HR
LG MTL SLIDING DOOR =	0	AREA (SF)	X	0.56	U VALUE (BTU/ HR - SF - F)	X	54	F TEMPERATURE DIFFERENCE			=	0.00 MBTU / HR
METAL PERSONNEL DR=	0	AREA (SF)	X	0.56	U VALUE (BTU/ HR - SF - F)	X	54	F TEMPERATURE DIFFERENCE			=	0.00 MBTU / HR
MTL/ GLAZED PERSONNEL=	50	AREA (SF)	X	0.615	U VALUE (BTU/ HR - SF - F)	X	54	F TEMPERATURE DIFFERENCE			=	0.00 MBTU / HR

TOTAL ECO HEAT LOSSES = **0.39 MBTU / HR**
= **406.30 MJ/HR**

FT KNOX LIMITED EEAP (GLASS)

ECO - 1: INFRARED HEATING CALCULATIONS

	BASELINE	ECO - 1
SYSTEM EFFICIENCY	60%	90%
OUTSIDE DESIGN TEMP (F)	1	1
HTG TEMP SETPOINT (F)	60	55
HEATING DEGREE DAYS	4616	3396
TOTAL HEAT LOSSES (MBTU / HR)	0.42	0.39
$ /MBTU -FUEL OIL	$6.60	$6.60
$ /MBTU -NATURAL GAS	$4.62	$4.62
$ /MBTU -PPG	$10.84	$10.84

BUILDING NUMBER **6147**

GLOSSARY OF TERMS

1 MBTU = 1055 MJ
0.019=CONSTANT
.81 = CONSTANT FOR SLAB PERIMETER UNINSULATED FROM ASHRAE
CORR FACTOR = EMPIRICAL CORRECTION FACTOR FOR HEATING EFFECT VS 65 F DEGREE-DAYS FROM ASHRAE FUNDAMENTALS 1989 PG28.2

ANNUAL HEATING ENERGY CONSUMPTION (DEGREE DAY METHOD)

BASELINE =	0.42	MBTU / HR	X	4616	DEGREE DAYS	X	24	HRS/DAY	
	0.6	SYS EFF	X	59	TEMP DIFFERENCE		=	1,316.82	MBTU/YR
	1,316.82	MBTU/YR	X		CORR FACTOR	1	=	1,316.82	MBTU/YR
ECO - 1 =	0.39	MBTU / HR	X	3396	DEGREE DAYS	X	24	HRS/DAY	
	0.9	SYS EFF	X	54	TEMP DIFFERENCE		=	645.86	MBTU/YR
	645.86	MBTU/YR	X		CORR FACTOR	1	=	645.86	MBTU/YR
	ECO - 1 ANNUAL HEATING ENERGY CONSUMPTION SAVINGS						=	**670.96**	**MBTU/YR**
							=	**707,867.19**	**MJ/YR**

ANNUAL HEATING ENERGY COST

BASELINE =	1,316.82	MBTU / YR	X	6.6	$ /MBTU	=	8,691.04 $ /YR
ECO - 1 =	645.86	MBTU / YR	X	4.62	$ /MBTU	=	2,983.87 $ /YR
	ECO - 1 ANNUAL HEATING ENERGY COST SAVINGS					=	**5,707.17 $ /YR**

LIFE CYCLE COST ANALYSIS SUMMARY STUDY: 6560ECO1
ENERGY CONSERVATION INVESTMENT PROGRAM (ECIP) LCCID 1.080
INSTALLATION & LOCATION: FORT KNOX REGION NOS. 4 CENSUS: 3
PROJECT NO. & TITLE: 6560ECO1 ECO-1 INFRARED HEAT
FISCAL YEAR 95 DISCRETE PORTION NAME: INFRARED
ANALYSIS DATE: 10-18-94 ECONOMIC LIFE 20 YEARS PREPARED BY: JAH

1. INVESTMENT

A. CONSTRUCTION COST	$ 239399.	
B. SIOH	$ 11970.	
C. DESIGN COST	$ 11970.	
D. TOTAL COST (1A+1B+1C)	$ 263339.	
E. SALVAGE VALUE OF EXISTING EQUIPMENT	$ 0.	
F. PUBLIC UTILITY COMPANY REBATE	$ 0.	
G. TOTAL INVESTMENT (1D - 1E - 1F)		$ 263339.

2. ENERGY SAVINGS (+) / COST (-)
DATE OF NISTIR 85-3273-X USED FOR DISCOUNT FACTORS OCT 1993

FUEL	UNIT COST $/MBTU(1)	SAVINGS MBTU/YR(2)	ANNUAL $ SAVINGS(3)	DISCOUNT FACTOR(4)	DISCOUNTED SAVINGS(5)
A. ELECT	$ .00	0.	$ 0.	15.61	$ 0.
B. DIST	$ 6.60	6569.	$ 43357.	17.56	$ 761356.
C. RESID	$ .00	0.	$ 0.	19.97	$ 0.
D. NAT G	$ 4.62	-3222.	$ -14886.	20.96	$ -312006.
E. COAL	$ .00	0.	$ 0.	17.58	$ 0.
F. LPG	$ .00	0.	$ 0.	16.12	$ 0.
M. DEMAND SAVINGS			$ 0.	14.74	$ 0.
N. TOTAL		3347.	$ 28472.		$ 449350.

3. NON ENERGY SAVINGS(+) / COST(-)

A. ANNUAL RECURRING (+/-) $ 2970.
(1) DISCOUNT FACTOR (TABLE A) 14.74
(2) DISCOUNTED SAVING/COST (3A X 3A1) $ 43778.

B. NON RECURRING SAVINGS(+) / COSTS(-)

ITEM	SAVINGS(+) COST(-) (1)	YR OC (2)	DISCNT FACTR (3)	DISCOUNTED SAVINGS(+)/ COST(-)(4)
1. REPAIR	$ 19073.	5	.86	16402.
2. REPAIR2	$ 19073.	15	.63	12016.
3. REPAIR3	$ 2727.	7	.81	2209.
4. REPAIR4	$ 2727.	14	.65	1773.
5. ENVIR	$ 64738.	3	.91	58912.
d. TOTAL	$ 108338.			91312.

C. TOTAL NON ENERGY DISCOUNTED SAVINGS(+)/COST(-)(3A2+3Bd4) $ 135089.

4. FIRST YEAR DOLLAR SAVINGS 2N3+3A+(3Bd1/(YRS ECONOMIC LIFE)) $ 36858.

5. SIMPLE PAYBACK PERIOD (1G/4) 7.14 YEARS

6. TOTAL NET DISCOUNTED SAVINGS (2N5+3C) $ 584439.

7. SAVINGS TO INVESTMENT RATIO (SIR)=(6 / 1G)= 2.22
(IF < 1 PROJECT DOES NOT QUALIFY)

8. ADJUSTED INTERNAL RATE OF RETURN (AIRR): 7.29 %

Estimate:	65XX AREA	Date:	14-Oct-94
Description:	COST ESTIMATE		
Project:	LIMITED EEAP(GLASS	Bid Date:	
Location:	FORT KNOX, KY	Job #:	94013.02
Sq. footage:	MAIN GAS LINE	City indx:	Louisville, KY

Line #	Description	Manhours	Matl	Labor	Equipment	Sub	Total
0205542200	SITE DEMOLITION,PAVEMENT,CONCRETE,TO 24"THICK,REINFORCED					111.00 C.Y.	
Unit values		4.21	0.00	92.52	133.64	0.00	226.16
Totals		467.42	$0	$10,270	$14,834	$0	$25,104
0222541900	TAMPING TRENCH B'FILL, VIBRATING PLATE, ADD					111.00 C.Y.	
Unit values		0.09	0.00	1.74	0.67	0.00	2.41
Totals		9.88	$0	$193	$74	$0	$267
0222582800	TRENCH EXCVTNG 40HP CHNTRNCHR&BKFL 12"W24"D					1500.00 L.F.	
Unit values		0.01	0.00	0.24	0.24	0.00	0.47
Totals		15.00	$0	$355	$355	$0	$710
0251200400	CONCRETE PAVING, JOINTS/FINISH, 4500 PSI CONCRETE, 12" THICK					167.00 S.Y.	
Unit values		0.05	17.52	1.07	1.02	0.00	19.61
Totals		8.18	$2,926	$179	$170	$0	$3,275
0260120200	BEDDING, FOR PIPE IN TRENCH SAND, DEAD OR BANK					28.00 C.Y.	
Unit values		0.16	2.43	3.37	1.37	0.00	7.17
Totals		4.48	$68	$94	$38	$0	$200
0260120500	BEDDING, PLACING IN TRENCH					28.00 C.Y.	
Unit values		0.09	0.00	1.74	0.67	0.00	2.41
Totals		2.49	$0	$49	$19	$0	$68
0266907800	CUT IN VALVES, W/DUCK TIP GASKET, 4" DIAMETER					1.00 Ea.	
Unit values		1.56	259.60	35.47	5.91	0.00	300.98
Totals		1.56	$260	$35	$6	$0	$301
0268520200	GAS SERVICE & DISTRIB PIPING,POLYETHYLENE,60-PSI 2" DIAM COIL SDR 11					1500.00 L.F.	
Unit values		0.07	0.75	1.48	0.00	0.00	2.23
Totals		100.50	$1,129	$2,220	$0	$0	$3,349

Line #	Description					
	Manhours	Matl	Labor	Equipment	Sub	Total
U02 SITEWORK	610	$4,383	$13,395	$15,496	$0	$33,274
1562600139	GAS APPLIANCE REGULATORS DOUBLE DIAPHRAGM TYPE 2" PIPE SIZE				1.00 Ea.	
Unit values	0.73	420.00	16.42	0.00	0.00	436.42
Totals	0.73	$420	$16	$0	$0	$436
U15 MECHANICAL	1	$420	$16	$0	$0	$436

Line #	Description					
	Manhours	Matl	Labor	Equipment	Sub	Total
ESTIMATE TOTAL	611	$4,803	$13,411	$15,496	$0	$33,710
SALES TAX	0.00%	$0				
MATL MARKUP	0.00%	$0				
LABOR MARKUP	0.00%		$0			
EQUIPT MARKUP	0.00%			$0		
SUB MARKUP	0.00%				$0	
TOTAL BEFORE CONTINGENC		$4,803	$13,411	$15,496	$0	$33,710
CONTINGENCY	10.00%					$3,371
BOND	0.00%					$0
PROFIT	10.00%					$3,371
JOB TOTAL						$40,452

Estimate:	65XX AREA	Date:	14-Oct-94
Description:	COST ESTIMATE		
Project:	LIMITED EEAP(GLASS	Bid Date:	
Location:	FORT KNOX, KY	Job #:	94013.02
Sq. footage:	MAIN GAS LINE	City indx:	Louisville, KY

SUMMARY

	Manhours	Matl	Labor	Equipment	Sub	Total
U02 SITEWORK	610	$4,383	$13,395	$15,496	$0	$33,274
U15 MECHANICAL	1	$420	$16	$0	$0	$436
TOTAL	611	$4,803	$13,411	$15,496	$0	$33,710
SALES TAX	0.00%	$0				
MATL MARKUP	0.00%	$0				
LABOR MARKUP	0.00%		$0			
EQUIPT MARKUP	0.00%			$0		
SUB MARKUP	0.00%				$0	
TOTAL BEFORE CONTINGENC		$4,803	$13,411	$15,496	$0	$33,710
CONTINGENCY	10.00%					$3,371
BOND	0.00%					$0
PROFIT	10.00%					$3,371
JOB TOTAL						$40,452

Estimate:	BLDG 6560	Date:	14-Oct-94
Description:	COST ESTIMATE		
Project:	LIMITED EEAP(GLASS	Bid Date:	
Location:	FORT KNOX, KY	Job #:	94013.02
Sq. footage:	4800.00	City indx:	Louisville, KY

Line #	Description	Manhours	Matl	Labor	Equipment	Sub	Total
0205543200	SITE REMOVAL,STEEL PIPE,WELDED CONNECTION, 4"DIAMETER					400.00 L.F.	
Unit values		0.15	0.00	3.16	1.29	0.00	4.44
Totals		60.00	$0	$1,262	$514	$0	$1,776
0207183600	HVAC DEMO,MECH EQPT HEAVY ITEM					0.50 Ton	
Unit values		14.55	0.00	380.36	0.00	0.00	380.36
Totals		7.27	$0	$190	$0	$0	$190
0208400600	REMOVE PIPE INSULATION UP TO 4" DIAMETER PIPE					200.00 L.F.	
Unit values		0.07	0.00	1.97	0.24	0.00	2.21
Totals		14.20	$0	$395	$47	$0	$442
0208401000	REMOVE INSULATION FROM PIPE FITTING, UP TO 4" DIAMETER PIPE					100.00 Ea.	
Unit values		0.20	0.00	5.55	0.68	0.00	6.23
Totals		20.00	$0	$555	$68	$0	$623
0266907800	CUT IN VALVES, W/DUCK TIP GASKET, 4" DIAMETER					1.00 Ea.	
Unit values		1.56	259.60	35.47	5.91	0.00	300.98
Totals		1.56	$260	$35	$6	$0	$301
0268520550	GAS SERVICE&DISTRIB PIPING,SCH40 STEEL PLAIN END,TAR COAT&WRAP 1"DIAM					50.00 L.F.	
Unit values		0.11	1.92	2.96	0.17	0.00	5.06
Totals		5.35	$96	$148	$9	$0	$253
U02 SITEWORK		109	$356	$2,585	$644	$0	$3,585

Line #	Description					
	Manhours	Matl	Labor	Equipment	Sub	Total
1554510245	HTG INFA-RD UNT GAS ELEC IGN (See Attached for Breakdown)				1.00 LS.	
Unit values	0.00	0.00	0.00	0.00	18822.00	18822.00
Totals	0.00	$0	$0	$0	$18,822	$18,822
1562600137	GAS APPLIANCE REGULATORS DOUBLE DIAPHRAGM TYPE 1-1/4" PIPE SIZE				1.00 Ea.	
Unit values	0.53	226.00	12.10	0.00	0.00	238.10
Totals	0.53	$226	$12	$0	$0	$238
U15 MECHANICAL	1	$226	$12	$0	$18,822	$19,060

Line #	Description					
	Manhours	Matl	Labor	Equipment	Sub	Total
ESTIMATE TOTAL	110	$582	$2,597	$644	$18,822	$22,645
SALES TAX	0.00%	$0				
MATL MARKUP	0.00%	$0				
LABOR MARKUP	0.00%		$0			
EQUIPT MARKUP	0.00%			$0		
SUB MARKUP	0.00%				$0	
TOTAL BEFORE CONTINGENC		$582	$2,597	$644	$18,822	$22,645
CONTINGENCY	10.00%					$2,265
BOND	0.00%					$0
PROFIT	10.00%					$2,265
JOB TOTAL						$27,174

Estimate:	BLDG 6560	Date:	14-Oct-94
Description:	COST ESTIMATE		
Project:	LIMITED EEAP(GLASS	Bid Date:	
Location:	FORT KNOX, KY	Job #:	94013.02
Sq. footage:	4800.00	City indx:	Louisville, KY

SUMMARY

	Manhours	Matl	Labor	Equipment	Sub	Total
U02 SITEWORK	109	$356	$2,585	$644	$0	$3,585
U15 MECHANICAL	1	$226	$12	$0	$18,822	$19,060
TOTAL	110	$582	$2,597	$644	$18,822	$22,645
SALES TAX	0.00%	$0				
MATL MARKUP	0.00%	$0				
LABOR MARKUP	0.00%		$0			
EQUIPT MARKUP	0.00%			$0		
SUB MARKUP	0.00%				$0	
TOTAL BEFORE CONTINGENC		$582	$2,597	$644	$18,822	$22,645
CONTINGENCY	10.00%					$2,265
BOND	0.00%					$0
PROFIT	10.00%					$2,265
JOB TOTAL						$27,174

Estimate: BLDG 6560 Date: 14-Oct-94
Description: INFRARED HEATING SYSTEM COST ESTIMATE
Project: LIMITED EEAP(GLASSBid Date:
Location: FORT KNOX, KY Job #: 94013.02
Sq. footage: City indx:Louisville, KY

Line #	Description					
	Manhours	Matl	Labor	Equipment	Sub	Total
0913100200	115V, 20 AMP POWER WIRING INCL CONDUIT, WIRE, AND RECEPTACLES				300.00 L.F.	
Unit values	0.15	2.22	4.57	0.00	0.00	6.79
Totals	44.70	$665	$1,372	$0	$0	$2,037
0913100200	CO-RAY-VAC VANTAGE 2 POWER FEEDER INSTALLATION, INCL CONDUIT, WIRE, AND RECEPTACLES				50.00 L.F.	
Unit values	0.15	2.22	4.57	0.00	0.00	6.79
Totals	7.45	$111	$229	$0	$0	$340
A09 ELECTRICAL	53	$776	$1,601	$0	$0	$2,377

Line #	Description	Manhours	Matl	Labor	Equipment	Sub	Total
1517010650	BLACK STEEL RADIANT PIPE, SCHEDULE 40, THREADED, 4" DIAM W/CPLGS					275.00 L.F.	
Unit values		0.44	4.17	10.30	0.00	0.00	14.47
Totals		122.10	$1,147	$2,833	$0	$0	$3,980
1517011310	GAS SERVICE PIPE STEEL GALV SCH 40 THRD W/CPLG & HNGR SZD FOR CVRG 10'OC 1/2" DIAM					330.00 L.F.	
Unit values		0.13	1.64	2.88	0.00	0.00	4.52
Totals		41.91	$541	$949	$0	$0	$1,490
1519010320	ALUMINUM REFLECTORS W/HANGERS					38.00 Ea.	
Unit values		0.50	39.79	3.80	0.00	0.00	43.59
Totals		19.00	$1,512	$145	$0	$0	$1,657
1524105040	VACUUM PUMP AND VENT PIPING					1.00 Ea.	
Unit values		3.00	738.35	120.15	0.00	0.00	858.50
Totals		3.00	$738	$120	$0	$0	$858
1552301020	CRV-100 GAS FIRED BURNER, 100 MBH & COMBUSTION CHAMBER					6.00 Ea.	
Unit values		1.00	860.00	44.06	0.00	0.00	904.06
Totals		6.00	$5,160	$264	$0	$0	$5,424
1554510220	CO-RAY-VAC VANTAGE 2 INFA-RD HTG UNIT, GAS 40 MBH					2.00 Ea.	
Unit values		4.00	935.00	81.70	0.00	0.00	1016.70
Totals		8.00	$1,870	$163	$0	$0	$2,033
1556800120	CO-RAY-VAC VANTAGE 2 VENT PIPE					2.00 Ea.	
Unit values		1.60	70.00	76.50	0.00	0.00	146.50
Totals		3.20	$140	$153	$0	$0	$293
1574205220	ELECTRIC THERMOSTAT W/ COVER AND WIRING					3.00 Ea.	
Unit values		1.00	75.00	27.55	0.00	0.00	102.55
Totals		3.00	$225	$83	$0	$0	$308
U15 MECHANICAL		207	$11,333	$4,710	$0	$0	$16,043

Line #	Description					
	Manhours	Matl	Labor	Equipment	Sub	Total
1631200100	HEATING SYSTEM POWER / CONTROL PANEL					
					1.00 Ea.	
Unit values	2.96	330.76	70.58	0.00	0.00	401.34
Totals	2.96	$331	$71	$0	$0	$402
U16 ELECTRICAL	3	$331	$71	$0	$0	$402

Line #	Description					
	Manhours	Matl	Labor	Equipment	Sub	Total
ESTIMATE TOTAL	263	$12,440	$6,382	$0	$0	$18,822
SALES TAX	0.00%	$0				
MATL MARKUP	0.00%	$0				
LABOR MARKUP	0.00%		$0			
EQUIPT MARKUP	0.00%			$0		
SUB MARKUP	0.00%				$0	
TOTAL BEFORE CONTINGENC		$12,440	$6,382	$0	$0	$18,822
CONTINGENCY	0.00%					$0
BOND	0.00%					$0
PROFIT	0.00%					$0
JOB TOTAL						$18,822

Estimate: BLDG 6560 Date: 14-Oct-94
Description: INFRARED HEATING SYSTEM COST ESTIMATE
Project: LIMITED EEAP(GLASSBid Date:
Location: FORT KNOX, KY Job #: 94013.02
Sq. footage: City indx:Louisville, KY

SUMMARY

	Manhours	Matl	Labor	Equipment	Sub	Total
A09 ELECTRICAL	53	$776	$1,601	$0	$0	$2,377
U15 MECHANICAL	207	$11,333	$4,710	$0	$0	$16,043
U16 ELECTRICAL	3	$331	$71	$0	$0	$402
TOTAL	263	$12,440	$6,382	$0	$0	$18,822
SALES TAX	0.00%	$0				
MATL MARKUP	0.00%	$0				
LABOR MARKUP	0.00%		$0			
EQUIPT MARKUP	0.00%			$0		
SUB MARKUP	0.00%				$0	
TOTAL BEFORE CONTINGENC		$12,440	$6,382	$0	$0	$18,822
CONTINGENCY	0.00%					$0
BOND	0.00%					$0
PROFIT	0.00%					$0
JOB TOTAL						$18,822

Estimate:	BLDG 6561	Date:	14-Oct-94
Description:	COST ESTIMATE		
Project:	LIMITED EEAP(GLASS	Bid Date:	
Location:	FORT KNOX, KY	Job #:	94013.02
Sq. footage:	4800.00	City indx:	Louisville, KY

Line #	Description	Manhours	Matl	Labor	Equipment	Sub	Total
0205543200	SITE REMOVAL,STEEL PIPE,WELDED CONNECTION, 4"DIAMETER					400.00 L.F.	
Unit values		0.15	0.00	3.16	1.29	0.00	4.44
Totals		60.00	$0	$1,262	$514	$0	$1,776
0207180380	HVAC DEMO,BOILER GAS/OIL STL >150MBH					1.00 Ea.	
Unit values		12.00	0.00	323.82	0.00	0.00	323.82
Totals		12.00	$0	$324	$0	$0	$324
0207183600	HVAC DEMO,MECH EQPT HEAVY ITEM					0.50 Ton	
Unit values		14.55	0.00	380.36	0.00	0.00	380.36
Totals		7.27	$0	$190	$0	$0	$190
0208400600	REMOVE PIPE INSULATION UP TO 4" DIAMETER PIPE					200.00 L.F.	
Unit values		0.07	0.00	1.97	0.24	0.00	2.21
Totals		14.20	$0	$395	$47	$0	$442
0208401000	REMOVE INSULATION FROM PIPE FITTING, UP TO 4" DIAMETER PIPE					100.00 Ea.	
Unit values		0.20	0.00	5.55	0.68	0.00	6.23
Totals		20.00	$0	$555	$68	$0	$623
0266907800	CUT IN VALVES, W/DUCK TIP GASKET, 4" DIAMETER					1.00 Ea.	
Unit values		1.56	259.60	35.47	5.91	0.00	300.98
Totals		1.56	$260	$35	$6	$0	$301
0268520550	GAS SERVICE&DISTRIB PIPING,SCH40 STEEL PLAIN END,TAR COAT&WRAP 1"DIAM					50.00 L.F.	
Unit values		0.11	1.92	2.96	0.17	0.00	5.06
Totals		5.35	$96	$148	$9	$0	$253
U02 SITEWORK		121	$356	$2,909	$644	$0	$3,909

Line #	Description					
	Manhours	Matl	Labor	Equipment	Sub	Total
1554510245	HTG INFA-RD UNT GAS ELEC IGN (See Attached for Breakdown)				1.00 LS.	
Unit values	0.00	0.00	0.00	0.00	18822.00	18822.00
Totals	0.00	$0	$0	$0	$18,822	$18,822
1562600137	GAS APPLIANCE REGULATORS DOUBLE DIAPHRAGM TYPE 1-1/4" PIPE SIZE				1.00 Ea.	
Unit values	0.53	226.00	12.10	0.00	0.00	238.10
Totals	0.53	$226	$12	$0	$0	$238
U15 MECHANICAL	1	$226	$12	$0	$18,822	$19,060

Line #	Description					
	Manhours	Matl	Labor	Equipment	Sub	Total
ESTIMATE TOTAL	122	$582	$2,921	$644	$18,822	$22,969
SALES TAX	0.00%	$0				
MATL MARKUP	0.00%	$0				
LABOR MARKUP	0.00%		$0			
EQUIPT MARKUP	0.00%			$0		
SUB MARKUP	0.00%				$0	
TOTAL BEFORE CONTINGENC		$582	$2,921	$644	$18,822	$22,969
CONTINGENCY	10.00%					$2,297
BOND	0.00%					$0
PROFIT	10.00%					$2,297
JOB TOTAL						$27,563

Estimate:	BLDG 6561	Date:	14-Oct-94
Description:	COST ESTIMATE		
Project:	LIMITED EEAP(GLASS	Bid Date:	
Location:	FORT KNOX, KY	Job #:	94013.02
Sq. footage:	4800.00	City indx:	Louisville, KY

SUMMARY

	Manhours	Matl	Labor	Equipment	Sub	Total
U02 SITEWORK	121	$356	$2,909	$644	$0	$3,909
U15 MECHANICAL	1	$226	$12	$0	$18,822	$19,060
TOTAL	122	$582	$2,921	$644	$18,822	$22,969
SALES TAX	0.00%	$0				
MATL MARKUP	0.00%	$0				
LABOR MARKUP	0.00%		$0			
EQUIPT MARKUP	0.00%			$0		
SUB MARKUP	0.00%				$0	
TOTAL BEFORE CONTINGENC		$582	$2,921	$644	$18,822	$22,969
CONTINGENCY	10.00%					$2,297
BOND	0.00%					$0
PROFIT	10.00%					$2,297
JOB TOTAL						$27,563

Estimate: BLDG 6561 Date: 14-Oct-94
Description: INFRARED HEATING SYSTEM COST ESTIMATE
Project: LIMITED EEAP(GLASSBid Date:
Location: FORT KNOX, KY Job #: 94013.02
Sq. footage: City indx:Louisville, KY

Line #	Description					
	Manhours	Matl	Labor	Equipment	Sub	Total
0913100200	115V, 20 AMP POWER WIRING INCL CONDUIT, WIRE, AND RECEPTACLES				300.00 L.F.	
Unit values	0.15	2.22	4.57	0.00	0.00	6.79
Totals	44.70	$665	$1,372	$0	$0	$2,037
0913100200	CO-RAY-VAC VANTAGE 2 POWER FEEDER INSTALLATION, INCL CONDUIT, WIRE, AND RECEPTACLES				50.00 L.F.	
Unit values	0.15	2.22	4.57	0.00	0.00	6.79
Totals	7.45	$111	$229	$0	$0	$340
A09 ELECTRICAL	53	$776	$1,601	$0	$0	$2,377

Line #	Description	Manhours	Matl	Labor	Equipment	Sub	Total
1517010650	BLACK STEEL RADIANT PIPE, SCHEDULE 40, THREADED, 4" DIAM W/CPLGS					275.00 L.F.	
Unit values		0.44	4.17	10.30	0.00	0.00	14.47
Totals		122.10	$1,147	$2,833	$0	$0	$3,980
1517011310	GAS SERVICE PIPE STEEL GALV SCH 40 THRD W/CPLG & HNGR SZD FOR CVRG 10'OC 1/2" DIAM					330.00 L.F.	
Unit values		0.13	1.64	2.88	0.00	0.00	4.52
Totals		41.91	$541	$949	$0	$0	$1,490
1519010320	ALUMINUM REFLECTORS W/HANGERS					38.00 Ea.	
Unit values		0.50	39.79	3.80	0.00	0.00	43.59
Totals		19.00	$1,512	$145	$0	$0	$1,657
1524105040	VACUUM PUMP AND VENT PIPING					1.00 Ea.	
Unit values		3.00	738.35	120.15	0.00	0.00	858.50
Totals		3.00	$738	$120	$0	$0	$858
1552301020	CRV-100 GAS FIRED BURNER, 100 MBH & COMBUSTION CHAMBER					6.00 Ea.	
Unit values		1.00	860.00	44.06	0.00	0.00	904.06
Totals		6.00	$5,160	$264	$0	$0	$5,424
1554510220	CO-RAY-VAC VANTAGE 2 INFA-RD HTG UNIT, GAS 40 MBH					2.00 Ea.	
Unit values		4.00	935.00	81.70	0.00	0.00	1016.70
Totals		8.00	$1,870	$163	$0	$0	$2,033
1556800120	CO-RAY-VAC VANTAGE 2 VENT PIPE					2.00 Ea.	
Unit values		1.60	70.00	76.50	0.00	0.00	146.50
Totals		3.20	$140	$153	$0	$0	$293
1574205220	ELECTRIC THERMOSTAT W/ COVER AND WIRING					3.00 Ea.	
Unit values		1.00	75.00	27.55	0.00	0.00	102.55
Totals		3.00	$225	$83	$0	$0	$308
U15 MECHANICAL		207	$11,333	$4,710	$0	$0	$16,043

Line #	Description					
	Manhours	Matl	Labor	Equipment	Sub	Total
1631200100	HEATING SYSTEM POWER / CONTROL PANEL					
					1.00 Ea.	
Unit values	2.96	330.76	70.58	0.00	0.00	401.34
Totals	2.96	$331	$71	$0	$0	$402
U16 ELECTRICAL	3	$331	$71	$0	$0	$402

Line #	Description					
	Manhours	Matl	Labor	Equipment	Sub	Total
ESTIMATE TOTAL	263	$12,440	$6,382	$0	$0	$18,822
SALES TAX	0.00%	$0				
MATL MARKUP	0.00%	$0				
LABOR MARKUP	0.00%		$0			
EQUIPT MARKUP	0.00%			$0		
SUB MARKUP	0.00%				$0	
TOTAL BEFORE CONTINGENC		$12,440	$6,382	$0	$0	$18,822
CONTINGENCY	0.00%					$0
BOND	0.00%					$0
PROFIT	0.00%					$0
JOB TOTAL						$18,822

Estimate: BLDG 6561 Date: 14-Oct-94
Description: INFRARED HEATING SYSTEM COST ESTIMATE
Project: LIMITED EEAP(GLASSBid Date:
Location: FORT KNOX, KY Job #: 94013.02
Sq. footage: City indx:Louisville, KY

SUMMARY

	Manhours	Matl	Labor	Equipment	Sub	Total
A09 ELECTRICAL	53	$776	$1,601	$0	$0	$2,377
U15 MECHANICAL	207	$11,333	$4,710	$0	$0	$16,043
U16 ELECTRICAL	3	$331	$71	$0	$0	$402
TOTAL	263	$12,440	$6,382	$0	$0	$18,822
SALES TAX	0.00%	$0				
MATL MARKUP	0.00%	$0				
LABOR MARKUP	0.00%		$0			
EQUIPT MARKUP	0.00%			$0		
SUB MARKUP	0.00%				$0	
TOTAL BEFORE CONTINGENC		$12,440	$6,382	$0	$0	$18,822
CONTINGENCY	0.00%					$0
BOND	0.00%					$0
PROFIT	0.00%					$0
JOB TOTAL						$18,822

Estimate:	BLDG 6562	Date:	14-Oct-94
Description:	COST ESTIMATE		
Project:	LIMITED EEAP(GLASS	Bid Date:	
Location:	FORT KNOX, KY	Job #:	94013.02
Sq. footage:	4800.00	City indx:	Louisville, KY

Line #	Description	Manhours	Matl	Labor	Equipment	Sub	Total
0205543200	SITE REMOVAL,STEEL PIPE,WELDED CONNECTION, 4"DIAMETER					400.00 L.F.	
Unit values		0.15	0.00	3.16	1.29	0.00	4.44
Totals		60.00	$0	$1,262	$514	$0	$1,776
0207183600	HVAC DEMO,MECH EQPT HEAVY ITEM					0.50 Ton	
Unit values		14.55	0.00	380.36	0.00	0.00	380.36
Totals		7.27	$0	$190	$0	$0	$190
0208400600	REMOVE PIPE INSULATION UP TO 4" DIAMETER PIPE					200.00 L.F.	
Unit values		0.07	0.00	1.97	0.24	0.00	2.21
Totals		14.20	$0	$395	$47	$0	$442
0208401000	REMOVE INSULATION FROM PIPE FITTING, UP TO 4" DIAMETER PIPE					100.00 Ea.	
Unit values		0.20	0.00	5.55	0.68	0.00	6.23
Totals		20.00	$0	$555	$68	$0	$623
0266907800	CUT IN VALVES, W/DUCK TIP GASKET, 4" DIAMETER					1.00 Ea.	
Unit values		1.56	259.60	35.47	5.91	0.00	300.98
Totals		1.56	$260	$35	$6	$0	$301
0268520550	GAS SERVICE&DISTRIB PIPING,SCH40 STEEL PLAIN END,TAR COAT&WRAP 1"DIAM					50.00 L.F.	
Unit values		0.11	1.92	2.96	0.17	0.00	5.06
Totals		5.35	$96	$148	$9	$0	$253
U02 SITEWORK		109	$356	$2,585	$644	$0	$3,585

Line #	Description					
	Manhours	Matl	Labor	Equipment	Sub	Total
1554510245	HTG INFA-RD UNT GAS ELEC IGN (See Attached for Breakdown)				1.00 LS.	
Unit values	0.00	0.00	0.00	0.00	18822.00	18822.00
Totals	0.00	$0	$0	$0	$18,822	$18,822
1562600137	GAS APPLIANCE REGULATORS DOUBLE DIAPHRAGM TYPE 1-1/4" PIPE SIZE				1.00 Ea.	
Unit values	0.53	226.00	12.10	0.00	0.00	238.10
Totals	0.53	$226	$12	$0	$0	$238
U15 MECHANICAL	1	$226	$12	$0	$18,822	$19,060

Line #	Description					
	Manhours	Matl	Labor	Equipment	Sub	Total
ESTIMATE TOTAL	110	$582	$2,597	$644	$18,822	$22,645
SALES TAX	0.00%	$0				
MATL MARKUP	0.00%	$0				
LABOR MARKUP	0.00%		$0			
EQUIPT MARKUP	0.00%			$0		
SUB MARKUP	0.00%				$0	
TOTAL BEFORE CONTINGENC		$582	$2,597	$644	$18,822	$22,645
CONTINGENCY	10.00%					$2,265
BOND	0.00%					$0
PROFIT	10.00%					$2,265
JOB TOTAL						$27,174

Estimate:	BLDG 6562	Date:	14-Oct-94
Description:	COST ESTIMATE		
Project:	LIMITED EEAP(GLASS	Bid Date:	
Location:	FORT KNOX, KY	Job #:	94013.02
Sq. footage:	4800.00	City indx:	Louisville, KY

SUMMARY

	Manhours	Matl	Labor	Equipment	Sub	Total
U02 SITEWORK	109	$356	$2,585	$644	$0	$3,585
U15 MECHANICAL	1	$226	$12	$0	$18,822	$19,060
TOTAL	110	$582	$2,597	$644	$18,822	$22,645
SALES TAX	0.00%	$0				
MATL MARKUP	0.00%	$0				
LABOR MARKUP	0.00%		$0			
EQUIPT MARKUP	0.00%			$0		
SUB MARKUP	0.00%				$0	
TOTAL BEFORE CONTINGENC		$582	$2,597	$644	$18,822	$22,645
CONTINGENCY	10.00%					$2,265
BOND	0.00%					$0
PROFIT	10.00%					$2,265
JOB TOTAL						$27,174

Estimate:	BLDG 6562	Date:	14-Oct-94
Description:	INFRARED HEATING SYSTEM COST ESTIMATE		
Project:	LIMITED EEAP(GLASS	Bid Date:	
Location:	FORT KNOX, KY	Job #:	94013.02
Sq. footage:		City indx:	Louisville, KY

Line #	Description	Manhours	Matl	Labor	Equipment	Sub	Total
0913100200	115V, 20 AMP POWER WIRING INCL CONDUIT, WIRE, AND RECEPTACLES					300.00 L.F.	
Unit values		0.15	2.22	4.57	0.00	0.00	6.79
Totals		44.70	$665	$1,372	$0	$0	$2,037
0913100200	CO-RAY-VAC VANTAGE 2 POWER FEEDER INSTALLATION, INCL CONDUIT, WIRE, AND RECEPTACLES					50.00 L.F.	
Unit values		0.15	2.22	4.57	0.00	0.00	6.79
Totals		7.45	$111	$229	$0	$0	$340
A09 ELECTRICAL		53	$776	$1,601	$0	$0	$2,377

Line #	Description	Manhours	Matl	Labor	Equipment	Sub	Total
1517010650	BLACK STEEL RADIANT PIPE, SCHEDULE 40, THREADED, 4" DIAM W/CPLGS					275.00 L.F.	
Unit values		0.44	4.17	10.30	0.00	0.00	14.47
Totals		122.10	$1,147	$2,833	$0	$0	$3,980
1517011310	GAS SERVICE PIPE STEEL GALV SCH 40 THRD W/CPLG & HNGR SZD FOR CVRG 10'OC 1/2" DIAM					330.00 L.F.	
Unit values		0.13	1.64	2.88	0.00	0.00	4.52
Totals		41.91	$541	$949	$0	$0	$1,490
1519010320	ALUMINUM REFLECTORS W/HANGERS					38.00 Ea.	
Unit values		0.50	39.79	3.80	0.00	0.00	43.59
Totals		19.00	$1,512	$145	$0	$0	$1,657
1524105040	VACUUM PUMP AND VENT PIPING					1.00 Ea.	
Unit values		3.00	738.35	120.15	0.00	0.00	858.50
Totals		3.00	$738	$120	$0	$0	$858
1552301020	CRV-100 GAS FIRED BURNER, 100 MBH & COMBUSTION CHAMBER					6.00 Ea.	
Unit values		1.00	860.00	44.06	0.00	0.00	904.06
Totals		6.00	$5,160	$264	$0	$0	$5,424
1554510220	CO-RAY-VAC VANTAGE 2 INFA-RD HTG UNIT, GAS 40 MBH					2.00 Ea.	
Unit values		4.00	935.00	81.70	0.00	0.00	1016.70
Totals		8.00	$1,870	$163	$0	$0	$2,033
1556800120	CO-RAY-VAC VANTAGE 2 VENT PIPE					2.00 Ea.	
Unit values		1.60	70.00	76.50	0.00	0.00	146.50
Totals		3.20	$140	$153	$0	$0	$293
1574205220	ELECTRIC THERMOSTAT W/ COVER AND WIRING					3.00 Ea.	
Unit values		1.00	75.00	27.55	0.00	0.00	102.55
Totals		3.00	$225	$83	$0	$0	$308
U15 MECHANICAL		207	$11,333	$4,710	$0	$0	$16,043

Line #	Description					
	Manhours	Matl	Labor	Equipment	Sub	Total
1631200100	HEATING SYSTEM POWER / CONTROL PANEL				1.00 Ea.	
Unit values	2.96	330.76	70.58	0.00	0.00	401.34
Totals	2.96	$331	$71	$0	$0	$402
U16 ELECTRICAL	3	$331	$71	$0	$0	$402

Line #	Description					
	Manhours	Matl	Labor	Equipment	Sub	Total
ESTIMATE TOTAL	263	$12,440	$6,382	$0	$0	$18,822
SALES TAX	0.00%	$0				
MATL MARKUP	0.00%	$0				
LABOR MARKUP	0.00%		$0			
EQUIPT MARKUP	0.00%			$0		
SUB MARKUP	0.00%				$0	
TOTAL BEFORE CONTINGENC		$12,440	$6,382	$0	$0	$18,822
CONTINGENCY	0.00%					$0
BOND	0.00%					$0
PROFIT	0.00%					$0
JOB TOTAL						$18,822

Estimate: BLDG 6562 Date: 14-Oct-94
Description: INFRARED HEATING SYSTEM COST ESTIMATE
Project: LIMITED EEAP(GLASSBid Date:
Location: FORT KNOX, KY Job #: 94013.02
Sq. footage: City indx:Louisville, KY

SUMMARY

	Manhours	Matl	Labor	Equipment	Sub	Total
A09 ELECTRICAL	53	$776	$1,601	$0	$0	$2,377
U15 MECHANICAL	207	$11,333	$4,710	$0	$0	$16,043
U16 ELECTRICAL	3	$331	$71	$0	$0	$402
TOTAL	263	$12,440	$6,382	$0	$0	$18,822
SALES TAX	0.00%	$0				
MATL MARKUP	0.00%	$0				
LABOR MARKUP	0.00%		$0			
EQUIPT MARKUP	0.00%			$0		
SUB MARKUP	0.00%				$0	
TOTAL BEFORE CONTINGENC		$12,440	$6,382	$0	$0	$18,822
CONTINGENCY	0.00%					$0
BOND	0.00%					$0
PROFIT	0.00%					$0
JOB TOTAL						$18,822

Estimate:	BLDG 6563	Date:	14-Oct-94
Description:	COST ESTIMATE		
Project:	LIMITED EEAP(GLASS	Bid Date:	
Location:	FORT KNOX, KY	Job #:	94013.02
Sq. footage:	4800.00	City indx:	Louisville, KY

Line #	Description	Manhours	Matl	Labor	Equipment	Sub	Total
0205543200	SITE REMOVAL,STEEL PIPE,WELDED CONNECTION, 4"DIAMETER					400.00 L.F.	
Unit values		0.15	0.00	3.16	1.29	0.00	4.44
Totals		60.00	$0	$1,262	$514	$0	$1,776
0207183600	HVAC DEMO,MECH EQPT HEAVY ITEM					0.50 Ton	
Unit values		14.55	0.00	380.36	0.00	0.00	380.36
Totals		7.27	$0	$190	$0	$0	$190
0208400600	REMOVE PIPE INSULATION UP TO 4" DIAMETER PIPE					200.00 L.F.	
Unit values		0.07	0.00	1.97	0.24	0.00	2.21
Totals		14.20	$0	$395	$47	$0	$442
0208401000	REMOVE INSULATION FROM PIPE FITTING, UP TO 4" DIAMETER PIPE					100.00 Ea.	
Unit values		0.20	0.00	5.55	0.68	0.00	6.23
Totals		20.00	$0	$555	$68	$0	$623
0266907800	CUT IN VALVES, W/DUCK TIP GASKET, 4" DIAMETER					1.00 Ea.	
Unit values		1.56	259.60	35.47	5.91	0.00	300.98
Totals		1.56	$260	$35	$6	$0	$301
0268520550	GAS SERVICE&DISTRIB PIPING,SCH40 STEEL PLAIN END,TAR COAT&WRAP 1"DIAM					50.00 L.F.	
Unit values		0.11	1.92	2.96	0.17	0.00	5.06
Totals		5.35	$96	$148	$9	$0	$253
U02 SITEWORK		109	$356	$2,585	$644	$0	$3,585

Line #	Description					
	Manhours	Matl	Labor	Equipment	Sub	Total
1554510245	HTG INFA-RD UNT GAS ELEC IGN (See Attached for Breakdown)				1.00 LS.	
Unit values	0.00	0.00	0.00	0.00	18822.00	18822.00
Totals	0.00	$0	$0	$0	$18,822	$18,822
1562600137	GAS APPLIANCE REGULATORS DOUBLE DIAPHRAGM TYPE 1-1/4" PIPE SIZE				1.00 Ea.	
Unit values	0.53	226.00	12.10	0.00	0.00	238.10
Totals	0.53	$226	$12	$0	$0	$238
U15 MECHANICAL	1	$226	$12	$0	$18,822	$19,060

Line #	Description					
	Manhours	Matl	Labor	Equipment	Sub	Total
ESTIMATE TOTAL	110	$582	$2,597	$644	$18,822	$22,645
SALES TAX	0.00%	$0				
MATL MARKUP	0.00%	$0				
LABOR MARKUP	0.00%		$0			
EQUIPT MARKUP	0.00%			$0		
SUB MARKUP	0.00%				$0	
TOTAL BEFORE CONTINGENC		$582	$2,597	$644	$18,822	$22,645
CONTINGENCY	10.00%					$2,265
BOND	0.00%					$0
PROFIT	10.00%					$2,265
JOB TOTAL						$27,174

Estimate:	BLDG 6563	Date:	14-Oct-94
Description:	COST ESTIMATE		
Project:	LIMITED EEAP(GLASS	Bid Date:	
Location:	FORT KNOX, KY	Job #:	94013.02
Sq. footage:	4800.00	City indx:	Louisville, KY

SUMMARY

	Manhours	Matl	Labor	Equipment	Sub	Total
U02 SITEWORK	109	$356	$2,585	$644	$0	$3,585
U15 MECHANICAL	1	$226	$12	$0	$18,822	$19,060
TOTAL	110	$582	$2,597	$644	$18,822	$22,645
SALES TAX	0.00%	$0				
MATL MARKUP	0.00%	$0				
LABOR MARKUP	0.00%		$0			
EQUIPT MARKUP	0.00%			$0		
SUB MARKUP	0.00%				$0	
TOTAL BEFORE CONTINGENC		$582	$2,597	$644	$18,822	$22,645
CONTINGENCY	10.00%					$2,265
BOND	0.00%					$0
PROFIT	10.00%					$2,265
JOB TOTAL						$27,174

Estimate:	BLDG 6563	Date:	14-Oct-94
Description:	INFRARED HEATING SYSTEM COST ESTIMATE		
Project:	LIMITED EEAP(GLASS	Bid Date:	
Location:	FORT KNOX, KY	Job #:	94013.02
Sq. footage:		City indx:	Louisville, KY

Line #	Description	Manhours	Matl	Labor	Equipment	Sub	Total
0913100200	115V, 20 AMP POWER WIRING INCL CONDUIT, WIRE, AND RECEPTACLES					300.00 L.F.	
Unit values		0.15	2.22	4.57	0.00	0.00	6.79
Totals		44.70	$665	$1,372	$0	$0	$2,037
0913100200	CO-RAY-VAC VANTAGE 2 POWER FEEDER INSTALLATION, INCL CONDUIT, WIRE, AND RECEPTACLES					50.00 L.F.	
Unit values		0.15	2.22	4.57	0.00	0.00	6.79
Totals		7.45	$111	$229	$0	$0	$340
A09 ELECTRICAL		53	$776	$1,601	$0	$0	$2,377

Line #	Description	Manhours	Matl	Labor	Equipment	Sub	Total
1517010650	BLACK STEEL RADIANT PIPE, SCHEDULE 40, THREADED, 4" DIAM W/CPLGS					275.00 L.F.	
Unit values		0.44	4.17	10.30	0.00	0.00	14.47
Totals		122.10	$1,147	$2,833	$0	$0	$3,980
1517011310	GAS SERVICE PIPE STEEL GALV SCH 40 THRD W/CPLG & HNGR SZD FOR CVRG 10'OC 1/2" DIAM					330.00 L.F.	
Unit values		0.13	1.64	2.88	0.00	0.00	4.52
Totals		41.91	$541	$949	$0	$0	$1,490
1519010320	ALUMINUM REFLECTORS W/HANGERS					38.00 Ea.	
Unit values		0.50	39.79	3.80	0.00	0.00	43.59
Totals		19.00	$1,512	$145	$0	$0	$1,657
1524105040	VACUUM PUMP AND VENT PIPING					1.00 Ea.	
Unit values		3.00	738.35	120.15	0.00	0.00	858.50
Totals		3.00	$738	$120	$0	$0	$858
1552301020	CRV-100 GAS FIRED BURNER, 100 MBH & COMBUSTION CHAMBER					6.00 Ea.	
Unit values		1.00	860.00	44.06	0.00	0.00	904.06
Totals		6.00	$5,160	$264	$0	$0	$5,424
1554510220	CO-RAY-VAC VANTAGE 2 INFA-RD HTG UNIT, GAS 40 MBH					2.00 Ea.	
Unit values		4.00	935.00	81.70	0.00	0.00	1016.70
Totals		8.00	$1,870	$163	$0	$0	$2,033
1556800120	CO-RAY-VAC VANTAGE 2 VENT PIPE					2.00 Ea.	
Unit values		1.60	70.00	76.50	0.00	0.00	146.50
Totals		3.20	$140	$153	$0	$0	$293
1574205220	ELECTRIC THERMOSTAT W/ COVER AND WIRING					3.00 Ea.	
Unit values		1.00	75.00	27.55	0.00	0.00	102.55
Totals		3.00	$225	$83	$0	$0	$308
U15 MECHANICAL		207	$11,333	$4,710	$0	$0	$16,043

Line #	Description					
	Manhours	Matl	Labor	Equipment	Sub	Total
1631200100	HEATING SYSTEM POWER / CONTROL PANEL				1.00 Ea.	
Unit values	2.96	330.76	70.58	0.00	0.00	401.34
Totals	2.96	$331	$71	$0	$0	$402
U16 ELECTRICAL	3	$331	$71	$0	$0	$402

Line #	Description					
	Manhours	Matl	Labor	Equipment	Sub	Total
ESTIMATE TOTAL	263	$12,440	$6,382	$0	$0	$18,822
SALES TAX	0.00%	$0				
MATL MARKUP	0.00%	$0				
LABOR MARKUP	0.00%		$0			
EQUIPT MARKUP	0.00%			$0		
SUB MARKUP	0.00%				$0	
TOTAL BEFORE CONTINGENC		$12,440	$6,382	$0	$0	$18,822
CONTINGENCY	0.00%					$0
BOND	0.00%					$0
PROFIT	0.00%					$0
JOB TOTAL						$18,822

Estimate: BLDG 6563 Date: 14-Oct-94
Description: INFRARED HEATING SYSTEM COST ESTIMATE
Project: LIMITED EEAP(GLASSBid Date:
Location: FORT KNOX, KY Job #: 94013.02
Sq. footage: City indx:Louisville, KY

SUMMARY

	Manhours	Matl	Labor	Equipment	Sub	Total
A09 ELECTRICAL	53	$776	$1,601	$0	$0	$2,377
U15 MECHANICAL	207	$11,333	$4,710	$0	$0	$16,043
U16 ELECTRICAL	3	$331	$71	$0	$0	$402
TOTAL	263	$12,440	$6,382	$0	$0	$18,822
SALES TAX	0.00%	$0				
MATL MARKUP	0.00%	$0				
LABOR MARKUP	0.00%		$0			
EQUIPT MARKUP	0.00%			$0		
SUB MARKUP	0.00%				$0	
TOTAL BEFORE CONTINGENC		$12,440	$6,382	$0	$0	$18,822
CONTINGENCY	0.00%					$0
BOND	0.00%					$0
PROFIT	0.00%					$0
JOB TOTAL						$18,822

Estimate: BLDG 6564 Date: 14-Oct-94
Description: COST ESTIMATE
Project: LIMITED EEAP(GLASSBid Date:
Location: FORT KNOX, KY Job #: 94013.02
Sq. footage: 4800.00 City indx:Louisville, KY

Line #	Description	Manhours	Matl	Labor	Equipment	Sub	Total
0205543200	SITE REMOVAL,STEEL PIPE,WELDED CONNECTION, 4"DIAMETER					400.00 L.F.	
Unit values		0.15	0.00	3.16	1.29	0.00	4.44
Totals		60.00	$0	$1,262	$514	$0	$1,776
0207180380	HVAC DEMO,BOILER GAS/OIL STL >150MBH					1.00 Ea.	
Unit values		12.00	0.00	323.82	0.00	0.00	323.82
Totals		12.00	$0	$324	$0	$0	$324
0207183600	HVAC DEMO,MECH EQPT HEAVY ITEM					0.50 Ton	
Unit values		14.55	0.00	380.36	0.00	0.00	380.36
Totals		7.27	$0	$190	$0	$0	$190
0208400600	REMOVE PIPE INSULATION UP TO 4" DIAMETER PIPE					200.00 L.F.	
Unit values		0.07	0.00	1.97	0.24	0.00	2.21
Totals		14.20	$0	$395	$47	$0	$442
0208401000	REMOVE INSULATION FROM PIPE FITTING, UP TO 4" DIAMETER PIPE					100.00 Ea.	
Unit values		0.20	0.00	5.55	0.68	0.00	6.23
Totals		20.00	$0	$555	$68	$0	$623
0266907800	CUT IN VALVES, W/DUCK TIP GASKET, 4" DIAMETER					1.00 Ea.	
Unit values		1.56	259.60	35.47	5.91	0.00	300.98
Totals		1.56	$260	$35	$6	$0	$301
0268520550	GAS SERVICE&DISTRIB PIPING,SCH40 STEEL PLAIN END,TAR COAT&WRAP 1"DIAM					50.00 L.F.	
Unit values		0.11	1.92	2.96	0.17	0.00	5.06
Totals		5.35	$96	$148	$9	$0	$253
U02 SITEWORK		121	$356	$2,909	$644	$0	$3,909

Line #	Description					
	Manhours	Matl	Labor	Equipment	Sub	Total
1554510245	HTG INFA-RD UNT GAS ELEC IGN (See Attached for Breakdown)				1.00 LS.	
Unit values	0.00	0.00	0.00	0.00	18822.00	18822.00
Totals	0.00	$0	$0	$0	$18,822	$18,822
1562600137	GAS APPLIANCE REGULATORS DOUBLE DIAPHRAGM TYPE 1-1/4" PIPE SIZE				1.00 Ea.	
Unit values	0.53	226.00	12.10	0.00	0.00	238.10
Totals	0.53	$226	$12	$0	$0	$238
U15 MECHANICAL	1	$226	$12	$0	$18,822	$19,060

Line #	Description					
	Manhours	Matl	Labor	Equipment	Sub	Total
ESTIMATE TOTAL	122	$582	$2,921	$644	$18,822	$22,969
SALES TAX	0.00%	$0				
MATL MARKUP	0.00%	$0				
LABOR MARKUP	0.00%		$0			
EQUIPT MARKUP	0.00%			$0		
SUB MARKUP	0.00%				$0	
TOTAL BEFORE CONTINGENC		$582	$2,921	$644	$18,822	$22,969
CONTINGENCY	10.00%					$2,297
BOND	0.00%					$0
PROFIT	10.00%					$2,297
JOB TOTAL						$27,563

Estimate:	BLDG 6564	Date:	14-Oct-94
Description:	COST ESTIMATE		
Project:	LIMITED EEAP(GLASS	Bid Date:	
Location:	FORT KNOX, KY	Job #:	94013.02
Sq. footage:	4800.00	City indx:	Louisville, KY

SUMMARY

	Manhours	Matl	Labor	Equipment	Sub	Total
U02 SITEWORK	121	$356	$2,909	$644	$0	$3,909
U15 MECHANICAL	1	$226	$12	$0	$18,822	$19,060
TOTAL	122	$582	$2,921	$644	$18,822	$22,969
SALES TAX	0.00%	$0				
MATL MARKUP	0.00%	$0				
LABOR MARKUP	0.00%		$0			
EQUIPT MARKUP	0.00%			$0		
SUB MARKUP	0.00%				$0	
TOTAL BEFORE CONTINGENC		$582	$2,921	$644	$18,822	$22,969
CONTINGENCY	10.00%					$2,297
BOND	0.00%					$0
PROFIT	10.00%					$2,297
JOB TOTAL						$27,563

Estimate: BLDG 6564 Date: 14-Oct-94
Description: INFRARED HEATING SYSTEM COST ESTIMATE
Project: LIMITED EEAP(GLASSBid Date:
Location: FORT KNOX, KY Job #: 94013.02
Sq. footage: City indx:Louisville, KY

Line #	Description					
	Manhours	Matl	Labor	Equipment	Sub	Total
0913100200	115V, 20 AMP POWER WIRING INCL CONDUIT, WIRE, AND RECEPTACLES				300.00 L.F.	
Unit values	0.15	2.22	4.57	0.00	0.00	6.79
Totals	44.70	$665	$1,372	$0	$0	$2,037
0913100200	CO-RAY-VAC VANTAGE 2 POWER FEEDER INSTALLATION, INCL CONDUIT, WIRE, AND RECEPTACLES				50.00 L.F.	
Unit values	0.15	2.22	4.57	0.00	0.00	6.79
Totals	7.45	$111	$229	$0	$0	$340
A09 ELECTRICAL	53	$776	$1,601	$0	$0	$2,377

Line #	Description	Manhours	Matl	Labor	Equipment	Sub	Total
1517010650	BLACK STEEL RADIANT PIPE, SCHEDULE 40, THREADED, 4" DIAM W/CPLGS					275.00 L.F.	
Unit values		0.44	4.17	10.30	0.00	0.00	14.47
Totals		122.10	$1,147	$2,833	$0	$0	$3,980
1517011310	GAS SERVICE PIPE STEEL GALV SCH 40 THRD W/CPLG & HNGR SZD FOR CVRG 10'OC 1/2" DIAM					330.00 L.F.	
Unit values		0.13	1.64	2.88	0.00	0.00	4.52
Totals		41.91	$541	$949	$0	$0	$1,490
1519010320	ALUMINUM REFLECTORS W/HANGERS					38.00 Ea.	
Unit values		0.50	39.79	3.80	0.00	0.00	43.59
Totals		19.00	$1,512	$145	$0	$0	$1,657
1524105040	VACUUM PUMP AND VENT PIPING					1.00 Ea.	
Unit values		3.00	738.35	120.15	0.00	0.00	858.50
Totals		3.00	$738	$120	$0	$0	$858
1552301020	CRV-100 GAS FIRED BURNER, 100 MBH & COMBUSTION CHAMBER					6.00 Ea.	
Unit values		1.00	860.00	44.06	0.00	0.00	904.06
Totals		6.00	$5,160	$264	$0	$0	$5,424
1554510220	CO-RAY-VAC VANTAGE 2 INFA-RD HTG UNIT, GAS 40 MBH					2.00 Ea.	
Unit values		4.00	935.00	81.70	0.00	0.00	1016.70
Totals		8.00	$1,870	$163	$0	$0	$2,033
1556800120	CO-RAY-VAC VANTAGE 2 VENT PIPE					2.00 Ea.	
Unit values		1.60	70.00	76.50	0.00	0.00	146.50
Totals		3.20	$140	$153	$0	$0	$293
1574205220	ELECTRIC THERMOSTAT W/ COVER AND WIRING					3.00 Ea.	
Unit values		1.00	75.00	27.55	0.00	0.00	102.55
Totals		3.00	$225	$83	$0	$0	$308
U15 MECHANICAL		207	$11,333	$4,710	$0	$0	$16,043

Line #	Description					
	Manhours	Matl	Labor	Equipment	Sub	Total
1631200100	HEATING SYSTEM POWER / CONTROL PANEL					
					1.00 Ea.	
Unit values	2.96	330.76	70.58	0.00	0.00	401.34
Totals	2.96	$331	$71	$0	$0	$402
U16 ELECTRICAL	3	$331	$71	$0	$0	$402

Line #	Description					
	Manhours	Matl	Labor	Equipment	Sub	Total
ESTIMATE TOTAL	263	$12,440	$6,382	$0	$0	$18,822
SALES TAX	0.00%	$0				
MATL MARKUP	0.00%	$0				
LABOR MARKUP	0.00%		$0			
EQUIPT MARKUP	0.00%			$0		
SUB MARKUP	0.00%				$0	
TOTAL BEFORE CONTINGENC		$12,440	$6,382	$0	$0	$18,822
CONTINGENCY	0.00%					$0
BOND	0.00%					$0
PROFIT	0.00%					$0
JOB TOTAL						$18,822

Estimate: BLDG 6564 Date: 14-Oct-94
Description: INFRARED HEATING SYSTEM COST ESTIMATE
Project: LIMITED EEAP(GLASSBid Date:
Location: FORT KNOX, KY Job #: 94013.02
Sq. footage: City indx:Louisville, KY

SUMMARY

	Manhours	Matl	Labor	Equipment	Sub	Total
A09 ELECTRICAL	53	$776	$1,601	$0	$0	$2,377
U15 MECHANICAL	207	$11,333	$4,710	$0	$0	$16,043
U16 ELECTRICAL	3	$331	$71	$0	$0	$402
TOTAL	263	$12,440	$6,382	$0	$0	$18,822
SALES TAX	0.00%	$0				
MATL MARKUP	0.00%	$0				
LABOR MARKUP	0.00%		$0			
EQUIPT MARKUP	0.00%			$0		
SUB MARKUP	0.00%				$0	
TOTAL BEFORE CONTINGENC		$12,440	$6,382	$0	$0	$18,822
CONTINGENCY	0.00%					$0
BOND	0.00%					$0
PROFIT	0.00%					$0
JOB TOTAL						$18,822

Estimate: BLDG 6576 Date: 14-Oct-94
Description: COST ESTIMATE
Project: LIMITED EEAP(GLASSBid Date:
Location: FORT KNOX, KY Job #: 94013.02
Sq. footage: 6900.00 City indx:Louisville, KY

Line #	Description					
	Manhours	Matl	Labor	Equipment	Sub	Total
0205543200	SITE REMOVAL,STEEL PIPE,WELDED CONNECTION, 4"DIAMETER				320.00 L.F.	
Unit values	0.15	0.00	3.16	1.29	0.00	4.44
Totals	48.00	$0	$1,010	$411	$0	$1,421
0207180380	HVAC DEMO,BOILER GAS/OIL STL >150MBH				0.00 Ea.	
Unit values	12.00	0.00	323.82	0.00	0.00	323.82
Totals	0.00	$0	$0	$0	$0	$0
0207183600	HVAC DEMO,MECH EQPT HEAVY ITEM				0.75 Ton	
Unit values	14.55	0.00	380.36	0.00	0.00	380.36
Totals	10.91	$0	$285	$0	$0	$285
0208400600	REMOVE PIPE INSULATION UP TO 4" DIAMETER PIPE				170.00 L.F.	
Unit values	0.07	0.00	1.97	0.24	0.00	2.21
Totals	12.07	$0	$336	$40	$0	$376
0208401000	REMOVE INSULATION FROM PIPE FITTING, UP TO 4" DIAMETER PIPE				50.00 Ea.	
Unit values	0.20	0.00	5.55	0.68	0.00	6.23
Totals	10.00	$0	$278	$34	$0	$312
0266907800	CUT IN VALVES, W/DUCK TIP GASKET, 4" DIAMETER				1.00 Ea.	
Unit values	1.56	259.60	35.47	5.91	0.00	300.98
Totals	1.56	$260	$35	$6	$0	$301
0268520550	GAS SERVICE&DISTRIB PIPING,SCH40 STEEL PLAIN END,TAR COAT&WRAP 1"DIAM				50.00 L.F.	
Unit values	0.11	1.92	2.96	0.17	0.00	5.06
Totals	5.35	$96	$148	$9	$0	$253
U02 SITEWORK	88	$356	$2,092	$500	$0	$2,948

Line #	Description					
	Manhours	Matl	Labor	Equipment	Sub	Total
1554510245	HTG INFA-RD UNT GAS ELEC IGN (See Attached for Breakdown)				1.00 LS	
Unit values	8.00	760.00	163.40	0.00	21687.00	22610.40
Totals	8.00	$760	$163	$0	$21,687	$22,610
1562600137	GAS APPLIANCE REGULATORS DOUBLE DIAPHRAGM TYPE 1-1/4" PIPE SIZE				1.00 Ea.	
Unit values	0.53	226.00	12.10	0.00	0.00	238.10
Totals	0.53	$226	$12	$0	$0	$238
U15 MECHANICAL	9	$986	$175	$0	$21,687	$22,848

Line #	Description					
	Manhours	Matl	Labor	Equipment	Sub	Total
ESTIMATE TOTAL	97	$1,342	$2,267	$500	$21,687	$25,796
SALES TAX	0.00%	$0				
MATL MARKUP	0.00%	$0				
LABOR MARKUP	0.00%		$0			
EQUIPT MARKUP	0.00%			$0		
SUB MARKUP	0.00%				$0	
TOTAL BEFORE CONTINGENC		$1,342	$2,267	$500	$21,687	$25,796
CONTINGENCY	10.00%					$2,580
BOND	0.00%					$0
PROFIT	10.00%					$2,580
JOB TOTAL						$30,955

Estimate:	BLDG 6576	Date:	14-Oct-94
Description:	COST ESTIMATE		
Project:	LIMITED EEAP(GLASS	Bid Date:	
Location:	FORT KNOX, KY	Job #:	94013.02
Sq. footage:	6900.00	City indx:	Louisville, KY

SUMMARY

	Manhours	Matl	Labor	Equipment	Sub	Total
U02 SITEWORK	88	$356	$2,092	$500	$0	$2,948
U15 MECHANICAL	9	$986	$175	$0	$21,687	$22,848
TOTAL	97	$1,342	$2,267	$500	$21,687	$25,796
SALES TAX	0.00%	$0				
MATL MARKUP	0.00%	$0				
LABOR MARKUP	0.00%		$0			
EQUIPT MARKUP	0.00%			$0		
SUB MARKUP	0.00%				$0	
TOTAL BEFORE CONTINGENC		$1,342	$2,267	$500	$21,687	$25,796
CONTINGENCY	10.00%					$2,580
BOND	0.00%					$0
PROFIT	10.00%					$2,580
JOB TOTAL						$30,955

Estimate: BLDG 6576 Date: 14-Oct-94
Description: INFRARED HEATING SYSTEM COST ESTIMATE
Project: LIMITED EEAP(GLASSBid Date:
Location: FORT KNOX, KY Job #: 94013.02
Sq. footage: City indx:Louisville, KY

Line #	Description	Manhours	Matl	Labor	Equipment	Sub	Total
0913100200	115V, 20 AMP POWER WIRING INCL CONDUIT, WIRE, AND RECEPTACLES					230.00 L.F.	
Unit values		0.15	2.22	4.57	0.00	0.00	6.79
Totals		34.27	$510	$1,052	$0	$0	$1,562
0913100200	CO-RAY-VAC VANTAGE 2 POWER FEEDER INSTALLATION, INCL CONDUIT, WIRE, AND RECEPTACLES					120.00 L.F.	
Unit values		0.15	2.22	4.57	0.00	0.00	6.79
Totals		17.88	$266	$549	$0	$0	$815
A09 ELECTRICAL		53	$776	$1,601	$0	$0	$2,377

Line #	Description	Manhours	Matl	Labor	Equipment	Sub	Total
1517010650	BLACK STEEL RADIANT PIPE, SCHEDULE 40, THREADED, 4" DIAM W/CPLGS					220.00 L.F.	
Unit values		0.44	4.17	10.30	0.00	0.00	14.47
Totals		97.68	$917	$2,267	$0	$0	$3,184
1517011310	GAS SERVICE PIPE STEEL GALV SCH 40 THRD W/CPLG & HNGR SZD FOR CVRG 10'OC 1/2" DIAM					340.00 L.F.	
Unit values		0.13	1.64	2.88	0.00	0.00	4.52
Totals		43.18	$558	$978	$0	$0	$1,536
1519010320	ALUMINUM REFLECTORS W/HANGERS					29.00 Ea.	
Unit values		0.50	39.79	3.80	0.00	0.00	43.59
Totals		14.50	$1,154	$110	$0	$0	$1,264
1524105040	VACUUM PUMP AND VENT PIPING					1.00 Ea.	
Unit values		3.00	738.35	120.15	0.00	0.00	858.50
Totals		3.00	$738	$120	$0	$0	$858
1552301020	CRV-90 GAS FIRED BURNER, 90 MBH & COMBUSTION CHAMBER					6.00 Ea.	
Unit values		1.00	860.00	44.06	0.00	0.00	904.06
Totals		6.00	$5,160	$264	$0	$0	$5,424
1554510160	CO-RAY-VAC VANTAGE 2 INFA-RD HTG UNT, GAS 100MBH					1.00 Ea.	
Unit values		6.00	1065.00	163.40	0.00	0.00	1228.40
Totals		6.00	$1,065	$163	$0	$0	$1,228
1554510220	CO-RAY-VAC VANTAGE 2 INFA-RD HTG UNIT, GAS 40 MBH					4.00 Ea.	
Unit values		4.00	935.00	81.70	0.00	0.00	1016.70
Totals		16.00	$3,740	$327	$0	$0	$4,067
1556800120	CO-RAY-VAC VANTAGE 2 VENT PIPE					5.00 Ea.	
Unit values		1.60	70.00	76.50	0.00	0.00	146.50
Totals		8.00	$350	$382	$0	$0	$732
1574205220	ELECTRIC THERMOSTAT W/ COVER AND WIRING					6.00 Ea.	
Unit values		1.00	75.00	27.55	0.00	0.00	102.55
Totals		6.00	$450	$165	$0	$0	$615

Line #	Description					
	Manhours	Matl	Labor	Equipment	Sub	Total
U15 MECHANICAL	201	$14,132	$4,776	$0	$0	$18,908
1631200100	HEATING SYSTEM POWER / CONTROL PANEL				1.00 Ea.	
Unit values	2.96	330.76	70.58	0.00	0.00	401.34
Totals	2.96	$331	$71	$0	$0	$402
U16 ELECTRICAL	3	$331	$71	$0	$0	$402

Line #	Description					
	Manhours	Matl	Labor	Equipment	Sub	Total
ESTIMATE TOTAL	257	$15,239	$6,448	$0	$0	$21,687
SALES TAX	0.00%	$0				
MATL MARKUP	0.00%	$0				
LABOR MARKUP	0.00%		$0			
EQUIPT MARKUP	0.00%			$0		
SUB MARKUP	0.00%				$0	
TOTAL BEFORE CONTINGENC		$15,239	$6,448	$0	$0	$21,687
CONTINGENCY	0.00%					$0
BOND	0.00%					$0
PROFIT	0.00%					$0
JOB TOTAL						$21,687

Estimate: BLDG 6576 Date: 14-Oct-94
Description: INFRARED HEATING SYSTEM COST ESTIMATE
Project: LIMITED EEAP(GLASSBid Date:
Location: FORT KNOX, KY Job #: 94013.02
Sq. footage: City indx:Louisville, KY

SUMMARY

	Manhours	Matl	Labor	Equipment	Sub	Total
A09 ELECTRICAL	53	$776	$1,601	$0	$0	$2,377
U15 MECHANICAL	201	$14,132	$4,776	$0	$0	$18,908
U16 ELECTRICAL	3	$331	$71	$0	$0	$402
TOTAL	257	$15,239	$6,448	$0	$0	$21,687
SALES TAX	0.00%	$0				
MATL MARKUP	0.00%	$0				
LABOR MARKUP	0.00%		$0			
EQUIPT MARKUP	0.00%			$0		
SUB MARKUP	0.00%				$0	
TOTAL BEFORE CONTINGENC		$15,239	$6,448	$0	$0	$21,687
CONTINGENCY	0.00%					$0
BOND	0.00%					$0
PROFIT	0.00%					$0
JOB TOTAL						$21,687

Estimate:	BLDG 6577	Date:	14-Oct-94
Description:	COST ESTIMATE		
Project:	LIMITED EEAP(GLASS	Bid Date:	
Location:	FORT KNOX, KY	Job #:	94013.02
Sq. footage:	6900.00	City indx:	Louisville, KY

Line #	Description	Manhours	Matl	Labor	Equipment	Sub	Total
0205543200	SITE REMOVAL,STEEL PIPE,WELDED CONNECTION, 4"DIAMETER					320.00 L.F.	
Unit values		0.15	0.00	3.16	1.29	0.00	4.44
Totals		48.00	$0	$1,010	$411	$0	$1,421
0207180380	HVAC DEMO,BOILER GAS/OIL STL >150MBH					1.00 Ea.	
Unit values		12.00	0.00	323.82	0.00	0.00	323.82
Totals		12.00	$0	$324	$0	$0	$324
0207183600	HVAC DEMO,MECH EQPT HEAVY ITEM					0.75 Ton	
Unit values		14.55	0.00	380.36	0.00	0.00	380.36
Totals		10.91	$0	$285	$0	$0	$285
0208400600	REMOVE PIPE INSULATION UP TO 4" DIAMETER PIPE					170.00 L.F.	
Unit values		0.07	0.00	1.97	0.24	0.00	2.21
Totals		12.07	$0	$336	$40	$0	$376
0208401000	REMOVE INSULATION FROM PIPE FITTING, UP TO 4" DIAMETER PIPE					50.00 Ea.	
Unit values		0.20	0.00	5.55	0.68	0.00	6.23
Totals		10.00	$0	$278	$34	$0	$312
0266907800	CUT IN VALVES, W/DUCK TIP GASKET, 4" DIAMETER					1.00 Ea.	
Unit values		1.56	259.60	35.47	5.91	0.00	300.98
Totals		1.56	$260	$35	$6	$0	$301
0268520550	GAS SERVICE&DISTRIB PIPING,SCH40 STEEL PLAIN END,TAR COAT&WRAP 1"DIAM					50.00 L.F.	
Unit values		0.11	1.92	2.96	0.17	0.00	5.06
Totals		5.35	$96	$148	$9	$0	$253
U02 SITEWORK		100	$356	$2,416	$500	$0	$3,272

Line #	Description					
	Manhours	Matl	Labor	Equipment	Sub	Total
1554510245	HTG INFA-RD UNT GAS ELEC IGN (See Attached for Breakdown)				1.00 LS	
Unit values	8.00	760.00	163.40	0.00	21687.00	22610.40
Totals	8.00	$760	$163	$0	$21,687	$22,610
1562600137	GAS APPLIANCE REGULATORS DOUBLE DIAPHRAGM TYPE 1-1/4" PIPE SIZE				1.00 Ea.	
Unit values	0.53	226.00	12.10	0.00	0.00	238.10
Totals	0.53	$226	$12	$0	$0	$238
U15 MECHANICAL	9	$986	$175	$0	$21,687	$22,848

Line #	Description					
	Manhours	Matl	Labor	Equipment	Sub	Total
ESTIMATE TOTAL	109	$1,342	$2,591	$500	$21,687	$26,120
SALES TAX	0.00%	$0				
MATL MARKUP	0.00%	$0				
LABOR MARKUP	0.00%		$0			
EQUIPT MARKUP	0.00%			$0		
SUB MARKUP	0.00%				$0	
TOTAL BEFORE CONTINGENC		$1,342	$2,591	$500	$21,687	$26,120
CONTINGENCY	10.00%					$2,612
BOND	0.00%					$0
PROFIT	10.00%					$2,612
JOB TOTAL						$31,344

Estimate:	BLDG 6577	Date:	14-Oct-94
Description:	COST ESTIMATE		
Project:	LIMITED EEAP(GLASS	Bid Date:	
Location:	FORT KNOX, KY	Job #:	94013.02
Sq. footage:	6900.00	City indx:	Louisville, KY

SUMMARY

	Manhours	Matl	Labor	Equipment	Sub	Total
U02 SITEWORK	100	$356	$2,416	$500	$0	$3,272
U15 MECHANICAL	9	$986	$175	$0	$21,687	$22,848
TOTAL	109	$1,342	$2,591	$500	$21,687	$26,120
SALES TAX	0.00%	$0				
MATL MARKUP	0.00%	$0				
LABOR MARKUP	0.00%		$0			
EQUIPT MARKUP	0.00%			$0		
SUB MARKUP	0.00%				$0	
TOTAL BEFORE CONTINGENC		$1,342	$2,591	$500	$21,687	$26,120
CONTINGENCY	10.00%					$2,612
BOND	0.00%					$0
PROFIT	10.00%					$2,612
JOB TOTAL						$31,344

Estimate: BLDG 6577 Date: 14-Oct-94
Description: INFRARED HEATING SYSTEM COST ESTIMATE
Project: LIMITED EEAP(GLASSBid Date:
Location: FORT KNOX, KY Job #: 94013.02
Sq. footage: City indx:Louisville, KY

Line #	Description					
	Manhours	Matl	Labor	Equipment	Sub	Total
0913100200	115V, 20 AMP POWER WIRING INCL CONDUIT, WIRE, AND RECEPTACLES				230.00 L.F.	
Unit values	0.15	2.22	4.57	0.00	0.00	6.79
Totals	34.27	$510	$1,052	$0	$0	$1,562
0913100200	CO-RAY-VAC VANTAGE 2 POWER FEEDER INSTALLATION, INCL CONDUIT, WIRE, AND RECEPTACLES				120.00 L.F.	
Unit values	0.15	2.22	4.57	0.00	0.00	6.79
Totals	17.88	$266	$549	$0	$0	$815
A09 ELECTRICAL	53	$776	$1,601	$0	$0	$2,377

Line #	Description	Manhours	Matl	Labor	Equipment	Sub	Total
1517010650	BLACK STEEL RADIANT PIPE, SCHEDULE 40, THREADED, 4" DIAM W/CPLGS					220.00 L.F.	
Unit values		0.44	4.17	10.30	0.00	0.00	14.47
Totals		97.68	$917	$2,267	$0	$0	$3,184
1517011310	GAS SERVICE PIPE STEEL GALV SCH 40 THRD W/CPLG & HNGR SZD FOR CVRG 10'OC 1/2" DIAM					340.00 L.F.	
Unit values		0.13	1.64	2.88	0.00	0.00	4.52
Totals		43.18	$558	$978	$0	$0	$1,536
1519010320	ALUMINUM REFLECTORS W/HANGERS					29.00 Ea.	
Unit values		0.50	39.79	3.80	0.00	0.00	43.59
Totals		14.50	$1,154	$110	$0	$0	$1,264
1524105040	VACUUM PUMP AND VENT PIPING					1.00 Ea.	
Unit values		3.00	738.35	120.15	0.00	0.00	858.50
Totals		3.00	$738	$120	$0	$0	$858
1552301020	CRV-90 GAS FIRED BURNER, 90 MBH & COMBUSTION CHAMBER					6.00 Ea.	
Unit values		1.00	860.00	44.06	0.00	0.00	904.06
Totals		6.00	$5,160	$264	$0	$0	$5,424
1554510160	CO-RAY-VAC VANTAGE 2 INFA-RD HTG UNT, GAS 100MBH					1.00 Ea.	
Unit values		6.00	1065.00	163.40	0.00	0.00	1228.40
Totals		6.00	$1,065	$163	$0	$0	$1,228
1554510220	CO-RAY-VAC VANTAGE 2 INFA-RD HTG UNIT, GAS 40 MBH					4.00 Ea.	
Unit values		4.00	935.00	81.70	0.00	0.00	1016.70
Totals		16.00	$3,740	$327	$0	$0	$4,067
1556800120	CO-RAY-VAC VANTAGE 2 VENT PIPE					5.00 Ea.	
Unit values		1.60	70.00	76.50	0.00	0.00	146.50
Totals		8.00	$350	$382	$0	$0	$732
1574205220	ELECTRIC THERMOSTAT W/ COVER AND WIRING					6.00 Ea.	
Unit values		1.00	75.00	27.55	0.00	0.00	102.55
Totals		6.00	$450	$165	$0	$0	$615

Line #	Description					
	Manhours	Matl	Labor	Equipment	Sub	Total
U15 MECHANICAL	201	$14,132	$4,776	$0	$0	$18,908
1631200100	HEATING SYSTEM POWER / CONTROL PANEL					
					1.00 Ea.	
Unit values	2.96	330.76	70.58	0.00	0.00	401.34
Totals	2.96	$331	$71	$0	$0	$402
U16 ELECTRICAL	3	$331	$71	$0	$0	$402

Line #	Description					
	Manhours	Matl	Labor	Equipment	Sub	Total
ESTIMATE TOTAL	257	$15,239	$6,448	$0	$0	$21,687
SALES TAX	0.00%	$0				
MATL MARKUP	0.00%	$0				
LABOR MARKUP	0.00%		$0			
EQUIPT MARKUP	0.00%			$0		
SUB MARKUP	0.00%				$0	
TOTAL BEFORE CONTINGENC		$15,239	$6,448	$0	$0	$21,687
CONTINGENCY	0.00%					$0
BOND	0.00%					$0
PROFIT	0.00%					$0
JOB TOTAL						$21,687

Estimate: BLDG 6577 Date: 14-Oct-94
Description: INFRARED HEATING SYSTEM COST ESTIMATE
Project: LIMITED EEAP(GLASSBid Date:
Location: FORT KNOX, KY Job #: 94013.02
Sq. footage: City indx:Louisville, KY

SUMMARY

	Manhours	Matl	Labor	Equipment	Sub	Total
A09 ELECTRICAL	53	$776	$1,601	$0	$0	$2,377
U15 MECHANICAL	201	$14,132	$4,776	$0	$0	$18,908
U16 ELECTRICAL	3	$331	$71	$0	$0	$402
TOTAL	257	$15,239	$6,448	$0	$0	$21,687
SALES TAX	0.00%	$0				
MATL MARKUP	0.00%	$0				
LABOR MARKUP	0.00%		$0			
EQUIPT MARKUP	0.00%			$0		
SUB MARKUP	0.00%				$0	
TOTAL BEFORE CONTINGENC		$15,239	$6,448	$0	$0	$21,687
CONTINGENCY	0.00%					$0
BOND	0.00%					$0
PROFIT	0.00%					$0
JOB TOTAL						$21,687

FT KNOX LIMITED EEAP (GLASS)

ECO - 1: INFRARED HEATING CALCULATIONS

BUILDING NUMBER: 6560

BUILDING HEATING TEMPERATURE SETPOINT: 60 F
OUTSIDE DESIGN TEMPERATURE 1 F
TEMPERATURE DIFFERENCE 59 F

INFILTRATION LOSSES =	1	AIR CHGS	X	73600	VOL (CU FT)	X	59	F TEMP DIFF	X 0.019	=	0.08	MBTU / HR
FLOOR LOSSES =	320	LINEAR FEET OF PERIMETER				X	59	F TEMP DIFF	X 0.81	=	0.02	MBTU / HR

SURFACE HEAT LOSSES

FLAT BUILT UP ROOF =	4800	AREA (SF)	X	0.105	U VALUE (BTU/ HR - SF - F)	X	59	F TEMPERATURE DIFFERENCE		=	0.03	MBTU / HR
FACE BRICK/BLK WALL =		AREA (SF)	X	0.176	U VALUE (BTU/ HR - SF - F)	X	59	F TEMPERATURE DIFFERENCE		=	0.00	MBTU / HR
8" CINDER BLOCK WALL =	2440	AREA (SF)	X	0.389	U VALUE (BTU/ HR - SF - F)	X	59	F TEMPERATURE DIFFERENCE		=	0.06	MBTU / HR
CORR MTL PNL WALL =		AREA (SF)	X	0.17	U VALUE (BTU/ HR - SF - F)	X	59	F TEMPERATURE DIFFERENCE		=	0.00	MBTU / HR
CLR SGL PANE WINDOWS =	1123	AREA (SF)	X	1.235	U VALUE (BTU/ HR - SF - F)	X	59	F TEMPERATURE DIFFERENCE		=	0.08	MBTU / HR
TINTED DBL PANE WIN'W =		AREA (SF)	X	0.65	U VALUE (BTU/ HR - SF - F)	X	59	F TEMPERATURE DIFFERENCE		=	0.00	MBTU / HR
METAL ROLL UP DOORS =		AREA (SF)	X	0.56	U VALUE (BTU/ HR - SF - F)	X	59	F TEMPERATURE DIFFERENCE		=	0.00	MBTU / HR
METAL GLAZED O'HEAD DR =	1372	AREA (SF)	X	0.214	U VALUE (BTU/ HR - SF - F)	X	59	F TEMPERATURE DIFFERENCE		=	0.02	MBTU / HR
LG MTL SLIDING DOOR =		AREA (SF)	X	0.56	U VALUE (BTU/ HR - SF - F)	X	59	F TEMPERATURE DIFFERENCE		=	0.00	MBTU / HR
METAL PERSONNEL DR=		AREA (SF)	X	0.56	U VALUE (BTU/ HR - SF - F)	X	59	F TEMPERATURE DIFFERENCE		=	0.00	MBTU / HR
MTL/ GLAZED PERSONNEL=	25	AREA (SF)	X	0.615	U VALUE (BTU/ HR - SF - F)	X	59	F TEMPERATURE DIFFERENCE		=	0.00	MBTU / HR

TOTAL BASELINE HEAT LOSSES = **0.28** **MBTU / HR**
= **299.19** **MJ/HR**

FT KNOX LIMITED EEAP (GLASS)

ECO - 1: INFRARED HEATING CALCULATIONS

BUILDING NUMBER: 6560

BUILDING HEATING TEMPERATURE SETPOINT: 55 F
OUTSIDE DESIGN TEMPERATURE 1 F
TEMPERATURE DIFFERENCE 54 F

INFILTRATION LOSSES =	1	AIR CHGS	X	73600	VOL (CU FT)	X	54	F TEMP DIFF	X 0.019	=	0.08	MBTU / HR
FLOOR LOSSES =	320	LINEAR FEET OF PERIMETER				X	54	F TEMP DIFF	X 0.81	=	0.01	MBTU / HR
SURFACE HEAT LOSSES												
FLAT BUILT UP ROOF =	4800	AREA (SF)	X	0.105	U VALUE (BTU/ HR - SF - F)	X	54	F TEMPERATURE DIFFERENCE		=	0.03	MBTU / HR
FACE BRICK/BLK WALL =	0	AREA (SF)	X	0.176	U VALUE (BTU/ HR - SF - F)	X	54	F TEMPERATURE DIFFERENCE		=	0.00	MBTU / HR
8" CINDER BLOCK WALL =	2440	AREA (SF)	X	0.389	U VALUE (BTU/ HR - SF - F)	X	54	F TEMPERATURE DIFFERENCE		=	0.05	MBTU / HR
CORR MTL PNL WALL =	0	AREA (SF)	X	0.17	U VALUE (BTU/ HR - SF - F)	X	54	F TEMPERATURE DIFFERENCE		=	0.00	MBTU / HR
CLR SGL PANE WINDOWS =	1123	AREA (SF)	X	1.235	U VALUE (BTU/ HR - SF - F)	X	54	F TEMPERATURE DIFFERENCE		=	0.07	MBTU / HR
TINTED DBL PANE WIN'W =	0	AREA (SF)	X	0.65	U VALUE (BTU/ HR - SF - F)	X	54	F TEMPERATURE DIFFERENCE		=	0.00	MBTU / HR
METAL ROLL UP DOORS =	0	AREA (SF)	X	0.56	U VALUE (BTU/ HR - SF - F)	X	54	F TEMPERATURE DIFFERENCE		=	0.00	MBTU / HR
WOOD GLAZED O'HEAD DR =	1372	AREA (SF)	X	0.214	U VALUE (BTU/ HR - SF - F)	X	54	F TEMPERATURE DIFFERENCE		=	0.02	MBTU / HR
LG MTL SLIDING DOOR =	0	AREA (SF)	X	0.56	U VALUE (BTU/ HR - SF - F)	X	54	F TEMPERATURE DIFFERENCE		=	0.00	MBTU / HR
METAL PERSONNEL DR=	0	AREA (SF)	X	0.56	U VALUE (BTU/ HR - SF - F)	X	54	F TEMPERATURE DIFFERENCE		=	0.00	MBTU / HR
MTL/ GLAZED PERSONNEL=	25	AREA (SF)	X	0.615	U VALUE (BTU/ HR - SF - F)	X	54	F TEMPERATURE DIFFERENCE		=	0.00	MBTU / HR

TOTAL ECO HEAT LOSSES = 0.26 MBTU / HR
= 273.83 MJ/HR

FT KNOX LIMITED EEAP (GLASS)

ECO - 1: INFRARED HEATING CALCULATIONS

	BASELINE	ECO - 1
SYSTEM EFFICIENCY	60%	90%
OUTSIDE DESIGN TEMP (F)	1	1
HTG TEMP SETPOINT (F)	60	55
HEATING DEGREE DAYS	4616	3396
TOTAL HEAT LOSSES (MBTU / HR)	0.28	0.26
$ /MBTU -FUEL OIL	$6.60	$6.60
$ /MBTU -NATURAL GAS	$4.62	$4.62
$ /MBTU -PPG	$10.84	$10.84

BUILDING NUMBER **6560**

GLOSSARY OF TERMS

1 MBTU = 1055 MJ
0.019=CONSTANT
.81 = CONSTANT FOR SLAB PERIMETER UNINSULATED FROM ASHRAE
CORR FACTOR = EMPIRICAL CORRECTION FACTOR FOR HEATING EFFECT VS 65 F DEGREE-DAYS FROM ASHRAE FUNDAMENTALS 1989 PG28.2

ANNUAL HEATING ENERGY CONSUMPTION (DEGREE DAY METHOD)

BASELINE =	0.28	MBTU / HR	X	4616	DEGREE DAYS X 24 HRS/DAY				
	0.6	SYS EFF	X	59	TEMP DIFFERENCE	=	887.50	MBTU/YR	
	887.50	MBTU/YR	X		CORR FACTOR 1	=		887.50	MBTU/YR
ECO - 1 =	0.26	MBTU / HR	X	3396	DEGREE DAYS X 24 HRS/DAY				
	0.9	SYS EFF	X	54	TEMP DIFFERENCE	=	435.29	MBTU/YR	
	435.29	MBTU/YR	X		CORR FACTOR 1	=		435.29	MBTU/YR
	ECO - 1 ANNUAL HEATING ENERGY CONSUMPTION SAVINGS					=		**452.21**	**MBTU/YR**
						=		**477,080.96**	**MJ/YR**

ANNUAL HEATING ENERGY COST

BASELINE =	887.50	MBTU / YR	X	6.6	$ /MBTU	=	5,857.50	$ /YR
ECO - 1 =	435.29	MBTU / YR	X	4.62	$ /MBTU	=	2,011.04	$ /YR
	ECO - 1 ANNUAL HEATING ENERGY COST SAVINGS					=	**3,846.46**	**$ /YR**

FT KNOX LIMITED EEAP (GLASS)

ECO - 1: INFRARED HEATING CALCULATIONS

BUILDING NUMBER: 6561

BUILDING HEATING TEMPERATURE SETPOINT: 60 F
OUTSIDE DESIGN TEMPERATURE 1 F
TEMPERATURE DIFFERENCE 59 F

INFILTRATION LOSSES =	1	AIR CHGS	X	73600	VOL (CU FT)	X	59	F TEMP DIFF	X 0.019	=	0.08	MBTU / HR
FLOOR LOSSES =	320	LINEAR FEET OF PERIMETER				X	59	F TEMP DIFF	X 0.81	=	0.02	MBTU / HR
SURFACE HEAT LOSSES												
FLAT BUILT UP ROOF =	4800	AREA (SF)	X	0.105	U VALUE (BTU/ HR - SF - F)	X	59	F TEMPERATURE DIFFERENCE		=	0.03	MBTU / HR
FACE BRICK/BLK WALL =		AREA (SF)	X	0.176	U VALUE (BTU/ HR - SF - F)	X	59	F TEMPERATURE DIFFERENCE		=	0.00	MBTU / HR
8" CINDER BLOCK WALL =	2440	AREA (SF)	X	0.389	U VALUE (BTU/ HR - SF - F)	X	59	F TEMPERATURE DIFFERENCE		=	0.06	MBTU / HR
CORR MTL PNL WALL =		AREA (SF)	X	0.17	U VALUE (BTU/ HR - SF - F)	X	59	F TEMPERATURE DIFFERENCE		=	0.00	MBTU / HR
CLR SGL PANE WINDOWS =	1123	AREA (SF)	X	1.235	U VALUE (BTU/ HR - SF - F)	X	59	F TEMPERATURE DIFFERENCE		=	0.08	MBTU / HR
TINTED DBL PANE WIN'W =		AREA (SF)	X	0.65	U VALUE (BTU/ HR - SF - F)	X	59	F TEMPERATURE DIFFERENCE		=	0.00	MBTU / HR
METAL ROLL UP DOORS =		AREA (SF)	X	0.56	U VALUE (BTU/ HR - SF - F)	X	59	F TEMPERATURE DIFFERENCE		=	0.00	MBTU / HR
METAL GLAZED O'HEAD DR =	1372	AREA (SF)	X	0.214	U VALUE (BTU/ HR - SF - F)	X	59	F TEMPERATURE DIFFERENCE		=	0.02	MBTU / HR
LG MTL SLIDING DOOR =		AREA (SF)	X	0.56	U VALUE (BTU/ HR - SF - F)	X	59	F TEMPERATURE DIFFERENCE		=	0.00	MBTU / HR
METAL PERSONNEL DR=		AREA (SF)	X	0.56	U VALUE (BTU/ HR - SF - F)	X	59	F TEMPERATURE DIFFERENCE		=	0.00	MBTU / HR
MTL/ GLAZED PERSONNEL=	25	AREA (SF)	X	0.615	U VALUE (BTU/ HR - SF - F)	X	59	F TEMPERATURE DIFFERENCE		=	0.00	MBTU / HR

TOTAL BASELINE HEAT LOSSES = **0.28** **MBTU / HR**
= **299.19** **MJ/HR**

FT KNOX LIMITED EEAP (GLASS)

ECO - 1: INFRARED HEATING CALCULATIONS

BUILDING NUMBER: 6561

BUILDING HEATING TEMPERATURE SETPOINT: 55 F
OUTSIDE DESIGN TEMPERATURE 1 F
TEMPERATURE DIFFERENCE 54 F

INFILTRATION LOSSES =	1	AIR CHGS	X	73600	VOL (CU FT)	X	54	F TEMP DIFF	X	0.019	=	0.08 MBTU / HR
FLOOR LOSSES =	320	LINEAR FEET OF PERIMETER				X	54	F TEMP DIFF	X	0.81	=	0.01 MBTU / HR

SURFACE HEAT LOSSES

FLAT BUILT UP ROOF =	4800	AREA (SF)	X	0.105	U VALUE (BTU/ HR - SF - F)	X	54	F TEMPERATURE DIFFERENCE	=	0.03	MBTU / HR
FACE BRICK/BLK WALL =	0	AREA (SF)	X	0.176	U VALUE (BTU/ HR - SF - F)	X	54	F TEMPERATURE DIFFERENCE	=	0.00	MBTU / HR
8" CINDER BLOCK WALL =	2440	AREA (SF)	X	0.389	U VALUE (BTU/ HR - SF - F)	X	54	F TEMPERATURE DIFFERENCE	=	0.05	MBTU / HR
CORR MTL PNL WALL =	0	AREA (SF)	X	0.17	U VALUE (BTU/ HR - SF - F)	X	54	F TEMPERATURE DIFFERENCE	=	0.00	MBTU / HR
CLR SGL PANE WINDOWS =	1123	AREA (SF)	X	1.235	U VALUE (BTU/ HR - SF - F)	X	54	F TEMPERATURE DIFFERENCE	=	0.07	MBTU / HR
TINTED DBL PANE WIN'W =	0	AREA (SF)	X	0.65	U VALUE (BTU/ HR - SF - F)	X	54	F TEMPERATURE DIFFERENCE	=	0.00	MBTU / HR
METAL ROLL UP DOORS =	0	AREA (SF)	X	0.56	U VALUE (BTU/ HR - SF - F)	X	54	F TEMPERATURE DIFFERENCE	=	0.00	MBTU / HR
WOOD GLAZED O'HEAD DR =	1372	AREA (SF)	X	0.214	U VALUE (BTU/ HR - SF - F)	X	54	F TEMPERATURE DIFFERENCE	=	0.02	MBTU / HR
LG MTL SLIDING DOOR =	0	AREA (SF)	X	0.56	U VALUE (BTU/ HR - SF - F)	X	54	F TEMPERATURE DIFFERENCE	=	0.00	MBTU / HR
METAL PERSONNEL DR=	0	AREA (SF)	X	0.56	U VALUE (BTU/ HR - SF - F)	X	54	F TEMPERATURE DIFFERENCE	=	0.00	MBTU / HR
MTL/ GLAZED PERSONNEL=	25	AREA (SF)	X	0.615	U VALUE (BTU/ HR - SF - F)	X	54	F TEMPERATURE DIFFERENCE	=	0.00	MBTU / HR

TOTAL ECO HEAT LOSSES = **0.26** **MBTU / HR**
= **273.83** **MJ/HR**

FT KNOX LIMITED EEAP (GLASS)

ECO - 1: INFRARED HEATING CALCULATIONS

	BASELINE	ECO - 1
SYSTEM EFFICIENCY	60%	90%
OUTSIDE DESIGN TEMP (F)	1	1
HTG TEMP SETPOINT (F)	60	55
HEATING DEGREE DAYS	4616	3396
TOTAL HEAT LOSSES (MBTU / HR)	0.28	0.26
$ /MBTU -FUEL OIL	$6.60	$6.60
$ /MBTU -NATURAL GAS	$4.62	$4.62
$ /MBTU -PPG	$10.84	$10.84

BUILDING NUMBER 6561

GLOSSARY OF TERMS

1 MBTU = 1055 MJ
0.019=CONSTANT
.81 = CONSTANT FOR SLAB PERIMETER UNINSULATED FROM ASHRAE
CORR FACTOR = EMPIRICAL CORRECTION FACTOR FOR HEATING EFFECT VS 65 F DEGREE-DAYS FROM ASHRAE FUNDAMENTALS 1989 PG28.2

ANNUAL HEATING ENERGY CONSUMPTION (DEGREE DAY METHOD)

BASELINE =	0.28	MBTU / HR	X	4616	DEGREE DAYS X 24 HRS/DAY				
	0.6	SYS EFF	X	59	TEMP DIFFERENCE	=	887.50	MBTU/YR	
	887.50	MBTU/YR	X		CORR FACTOR 1	=		887.50	MBTU/YR
ECO - 1 =	0.26	MBTU / HR	X	3396	DEGREE DAYS X 24 HRS/DAY				
	0.9	SYS EFF	X	54	TEMP DIFFERENCE	=	435.29	MBTU/YR	
	435.29	MBTU/YR	X		CORR FACTOR 1	=		435.29	MBTU/YR
	ECO - 1 ANNUAL HEATING ENERGY CONSUMPTION SAVINGS					=		**452.21**	**MBTU/YR**
						=		**477,080.96**	**MJ/YR**

ANNUAL HEATING ENERGY COST

BASELINE =	887.50	MBTU / YR	X	6.6	$ /MBTU	=	5,857.50	$ /YR
ECO - 1 =	435.29	MBTU / YR	X	4.62	$ /MBTU	=	2,011.04	$ /YR
	ECO - 1 ANNUAL HEATING ENERGY COST SAVINGS					=	**3,846.46**	**$ /YR**

FT KNOX LIMITED EEAP (GLASS)

ECO - 1: INFRARED HEATING CALCULATIONS

BUILDING NUMBER: 6562

BUILDING HEATING TEMPERATURE SETPOINT: 60 F
OUTSIDE DESIGN TEMPERATURE 1 F
TEMPERATURE DIFFERENCE 59 F

INFILTRATION LOSSES =	1	AIR CHGS	X	73600	VOL (CU FT)	X	59	F TEMP DIFF	X 0.019	=	0.08	MBTU / HR
FLOOR LOSSES =	320	LINEAR FEET OF PERIMETER				X	59	F TEMP DIFF	X 0.81	=	0.02	MBTU / HR

SURFACE HEAT LOSSES

FLAT BUILT UP ROOF =	4800	AREA (SF)	X	0.105	U VALUE (BTU/ HR - SF - F)	X	59	F TEMPERATURE DIFFERENCE		=	0.03	MBTU / HR
FACE BRICK/BLK WALL =		AREA (SF)	X	0.176	U VALUE (BTU/ HR - SF - F)	X	59	F TEMPERATURE DIFFERENCE		=	0.00	MBTU / HR
8" CINDER BLOCK WALL =	2440	AREA (SF)	X	0.389	U VALUE (BTU/ HR - SF - F)	X	59	F TEMPERATURE DIFFERENCE		=	0.06	MBTU / HR
CORR MTL PNL WALL =		AREA (SF)	X	0.17	U VALUE (BTU/ HR - SF - F)	X	59	F TEMPERATURE DIFFERENCE		=	0.00	MBTU / HR
CLR SGL PANE WINDOWS =	1123	AREA (SF)	X	1.235	U VALUE (BTU/ HR - SF - F)	X	59	F TEMPERATURE DIFFERENCE		=	0.08	MBTU / HR
TINTED DBL PANE WIN'W =		AREA (SF)	X	0.65	U VALUE (BTU/ HR - SF - F)	X	59	F TEMPERATURE DIFFERENCE		=	0.00	MBTU / HR
METAL ROLL UP DOORS =		AREA (SF)	X	0.56	U VALUE (BTU/ HR - SF - F)	X	59	F TEMPERATURE DIFFERENCE		=	0.00	MBTU / HR
METAL GLAZED O'HEAD DR =	1372	AREA (SF)	X	0.214	U VALUE (BTU/ HR - SF - F)	X	59	F TEMPERATURE DIFFERENCE		=	0.02	MBTU / HR
LG MTL SLIDING DOOR =		AREA (SF)	X	0.56	U VALUE (BTU/ HR - SF - F)	X	59	F TEMPERATURE DIFFERENCE		=	0.00	MBTU / HR
METAL PERSONNEL DR=		AREA (SF)	X	0.56	U VALUE (BTU/ HR - SF - F)	X	59	F TEMPERATURE DIFFERENCE		=	0.00	MBTU / HR
MTL/ GLAZED PERSONNEL=	25	AREA (SF)	X	0.615	U VALUE (BTU/ HR - SF - F)	X	59	F TEMPERATURE DIFFERENCE		=	0.00	MBTU / HR

TOTAL BASELINE HEAT LOSSES	=	**0.28**	**MBTU / HR**
	=	**299.19**	**MJ/HR**

FT KNOX LIMITED EEAP (GLASS)

ECO - 1: INFRARED HEATING CALCULATIONS

BUILDING NUMBER: 6562

BUILDING HEATING TEMPERATURE SETPOINT: 55 F
OUTSIDE DESIGN TEMPERATURE 1 F
TEMPERATURE DIFFERENCE 54 F

INFILTRATION LOSSES =	1	AIR CHGS	X	73600	VOL (CU FT)	X	54	F TEMP DIFF	X	0.019	=	0.08	MBTU / HR
FLOOR LOSSES =	320	LINEAR FEET OF PERIMETER				X	54	F TEMP DIFF	X	0.81	=	0.01	MBTU / HR
SURFACE HEAT LOSSES													
FLAT BUILT UP ROOF =	4800	AREA (SF)	X	0.105	U VALUE (BTU/ HR - SF - F)	X	54	F TEMPERATURE DIFFERENCE			=	0.03	MBTU / HR
FACE BRICK/BLK WALL =	0	AREA (SF)	X	0.176	U VALUE (BTU/ HR - SF - F)	X	54	F TEMPERATURE DIFFERENCE			=	0.00	MBTU / HR
8" CINDER BLOCK WALL =	2440	AREA (SF)	X	0.389	U VALUE (BTU/ HR - SF - F)	X	54	F TEMPERATURE DIFFERENCE			=	0.05	MBTU / HR
CORR MTL PNL WALL =	0	AREA (SF)	X	0.17	U VALUE (BTU/ HR - SF - F)	X	54	F TEMPERATURE DIFFERENCE			=	0.00	MBTU / HR
CLR SGL PANE WINDOWS =	1123	AREA (SF)	X	1.235	U VALUE (BTU/ HR - SF - F)	X	54	F TEMPERATURE DIFFERENCE			=	0.07	MBTU / HR
TINTED DBL PANE WIN'W =	0	AREA (SF)	X	0.65	U VALUE (BTU/ HR - SF - F)	X	54	F TEMPERATURE DIFFERENCE			=	0.00	MBTU / HR
METAL ROLL UP DOORS =	0	AREA (SF)	X	0.56	U VALUE (BTU/ HR - SF - F)	X	54	F TEMPERATURE DIFFERENCE			=	0.00	MBTU / HR
WOOD GLAZED O'HEAD DR =	1372	AREA (SF)	X	0.214	U VALUE (BTU/ HR - SF - F)	X	54	F TEMPERATURE DIFFERENCE			=	0.02	MBTU / HR
LG MTL SLIDING DOOR =	0	AREA (SF)	X	0.56	U VALUE (BTU/ HR - SF - F)	X	54	F TEMPERATURE DIFFERENCE			=	0.00	MBTU / HR
METAL PERSONNEL DR=	0	AREA (SF)	X	0.56	U VALUE (BTU/ HR - SF - F)	X	54	F TEMPERATURE DIFFERENCE			=	0.00	MBTU / HR
MTL/ GLAZED PERSONNEL=	25	AREA (SF)	X	0.615	U VALUE (BTU/ HR - SF - F)	X	54	F TEMPERATURE DIFFERENCE			=	0.00	MBTU / HR
					TOTAL ECO HEAT LOSSES						=	**0.26**	**MBTU / HR**
											=	**273.83**	**MJ/HR**

FT KNOX LIMITED EEAP (GLASS)

ECO - 1: INFRARED HEATING CALCULATIONS

	BASELINE	ECO - 1
SYSTEM EFFICIENCY	60%	90%
OUTSIDE DESIGN TEMP (F)	1	1
HTG TEMP SETPOINT (F)	60	55
HEATING DEGREE DAYS	4616	3396
TOTAL HEAT LOSSES (MBTU / HR)	0.28	0.26
$ /MBTU -FUEL OIL	$6.60	$6.60
$ /MBTU -NATURAL GAS	$4.62	$4.62
$ /MBTU -PPG	$10.84	$10.84

BUILDING NUMBER 6562

GLOSSARY OF TERMS

1 MBTU = 1055 MJ
0.019=CONSTANT
.81 = CONSTANT FOR SLAB PERIMETER UNINSULATED FROM ASHRAE
CORR FACTOR = EMPIRICAL CORRECTION FACTOR FOR HEATING EFFECT VS 65 F DEGREE-DAYS FROM ASHRAE FUNDAMENTALS 1989 PG28.2

ANNUAL HEATING ENERGY CONSUMPTION (DEGREE DAY METHOD)

BASELINE =	0.28 / 0.6	MBTU / HR X SYS EFF X	4616 / 59	DEGREE DAYS X TEMP DIFFERENCE	24 HRS/DAY	=	887.50	MBTU/YR
	887.50	MBTU/YR X		CORR FACTOR	1	=	887.50	MBTU/YR
ECO - 1 =	0.26 / 0.9	MBTU / HR X SYS EFF X	3396 / 54	DEGREE DAYS X TEMP DIFFERENCE	24 HRS/DAY	=	435.29	MBTU/YR
	435.29	MBTU/YR X		CORR FACTOR	1	=	435.29	MBTU/YR
	ECO - 1 ANNUAL HEATING ENERGY CONSUMPTION SAVINGS					=	**452.21**	**MBTU/YR**
						=	**477,080.96**	**MJ/YR**

ANNUAL HEATING ENERGY COST

BASELINE =	887.50	MBTU / YR X	6.6	$ /MBTU	=	5,857.50	$ /YR
ECO - 1 =	435.29	MBTU / YR X	4.62	$ /MBTU	=	2,011.04	$ /YR
	ECO - 1 ANNUAL HEATING ENERGY COST SAVINGS				=	**3,846.46**	**$ /YR**

FT KNOX LIMITED EEAP (GLASS)

ECO - 1: INFRARED HEATING CALCULATIONS

BUILDING NUMBER: 6563

BUILDING HEATING TEMPERATURE SETPOINT: 60 F
OUTSIDE DESIGN TEMPERATURE 1 F
TEMPERATURE DIFFERENCE 59 F

INFILTRATION LOSSES =	1	AIR CHGS	X	73600	VOL (CU FT)	X	59	F TEMP DIFF	X 0.019	=	0.08	MBTU / HR
FLOOR LOSSES =	320	LINEAR FEET OF PERIMETER				X	59	F TEMP DIFF	X 0.81	=	0.02	MBTU / HR
SURFACE HEAT LOSSES												
FLAT BUILT UP ROOF =	4800	AREA (SF)	X	0.105	U VALUE (BTU/ HR - SF - F)	X	59	F TEMPERATURE DIFFERENCE		=	0.03	MBTU / HR
FACE BRICK/BLK WALL =		AREA (SF)	X	0.176	U VALUE (BTU/ HR - SF - F)	X	59	F TEMPERATURE DIFFERENCE		=	0.00	MBTU / HR
8" CINDER BLOCK WALL =	2440	AREA (SF)	X	0.389	U VALUE (BTU/ HR - SF - F)	X	59	F TEMPERATURE DIFFERENCE		=	0.06	MBTU / HR
CORR MTL PNL WALL =		AREA (SF)	X	0.17	U VALUE (BTU/ HR - SF - F)	X	59	F TEMPERATURE DIFFERENCE		=	0.00	MBTU / HR
CLR SGL PANE WINDOWS =	1123	AREA (SF)	X	1.235	U VALUE (BTU/ HR - SF - F)	X	59	F TEMPERATURE DIFFERENCE		=	0.08	MBTU / HR
TINTED DBL PANE WIN'W =		AREA (SF)	X	0.65	U VALUE (BTU/ HR - SF - F)	X	59	F TEMPERATURE DIFFERENCE		=	0.00	MBTU / HR
METAL ROLL UP DOORS =		AREA (SF)	X	0.56	U VALUE (BTU/ HR - SF - F)	X	59	F TEMPERATURE DIFFERENCE		=	0.00	MBTU / HR
METAL GLAZED O'HEAD DR =	1372	AREA (SF)	X	0.214	U VALUE (BTU/ HR - SF - F)	X	59	F TEMPERATURE DIFFERENCE		=	0.02	MBTU / HR
LG MTL SLIDING DOOR =		AREA (SF)	X	0.56	U VALUE (BTU/ HR - SF - F)	X	59	F TEMPERATURE DIFFERENCE		=	0.00	MBTU / HR
METAL PERSONNEL DR=		AREA (SF)	X	0.56	U VALUE (BTU/ HR - SF - F)	X	59	F TEMPERATURE DIFFERENCE		=	0.00	MBTU / HR
MTL/ GLAZED PERSONNEL=	25	AREA (SF)	X	0.615	U VALUE (BTU/ HR - SF - F)	X	59	F TEMPERATURE DIFFERENCE		=	0.00	MBTU / HR
					TOTAL BASELINE HEAT LOSSES					=	**0.28**	**MBTU / HR**
										=	**299.19**	**MJ/HR**

FT KNOX LIMITED EEAP (GLASS)

ECO - 1: INFRARED HEATING CALCULATIONS

BUILDING NUMBER: 6563

BUILDING HEATING TEMPERATURE SETPOINT: 55 F
OUTSIDE DESIGN TEMPERATURE 1 F
TEMPERATURE DIFFERENCE 54 F

INFILTRATION LOSSES =	1	AIR CHGS	X	73600	VOL (CU FT)	X	54	F TEMP DIFF	X	0.019	=	0.08	MBTU / HR
FLOOR LOSSES =	320	LINEAR FEET OF PERIMETER				X	54	F TEMP DIFF	X	0.81	=	0.01	MBTU / HR
SURFACE HEAT LOSSES													
FLAT BUILT UP ROOF =	4800	AREA (SF)	X	0.105	U VALUE (BTU/ HR - SF - F)	X	54	F TEMPERATURE DIFFERENCE			=	0.03	MBTU / HR
FACE BRICK/BLK WALL =	0	AREA (SF)	X	0.176	U VALUE (BTU/ HR - SF - F)	X	54	F TEMPERATURE DIFFERENCE			=	0.00	MBTU / HR
8" CINDER BLOCK WALL =	2440	AREA (SF)	X	0.389	U VALUE (BTU/ HR - SF - F)	X	54	F TEMPERATURE DIFFERENCE			=	0.05	MBTU / HR
CORR MTL PNL WALL =	0	AREA (SF)	X	0.17	U VALUE (BTU/ HR - SF - F)	X	54	F TEMPERATURE DIFFERENCE			=	0.00	MBTU / HR
CLR SGL PANE WINDOWS =	1123	AREA (SF)	X	1.235	U VALUE (BTU/ HR - SF - F)	X	54	F TEMPERATURE DIFFERENCE			=	0.07	MBTU / HR
TINTED DBL PANE WIN'W =	0	AREA (SF)	X	0.65	U VALUE (BTU/ HR - SF - F)	X	54	F TEMPERATURE DIFFERENCE			=	0.00	MBTU / HR
METAL ROLL UP DOORS =	0	AREA (SF)	X	0.56	U VALUE (BTU/ HR - SF - F)	X	54	F TEMPERATURE DIFFERENCE			=	0.00	MBTU / HR
WOOD GLAZED O'HEAD DR =	1372	AREA (SF)	X	0.214	U VALUE (BTU/ HR - SF - F)	X	54	F TEMPERATURE DIFFERENCE			=	0.02	MBTU / HR
LG MTL SLIDING DOOR =	0	AREA (SF)	X	0.56	U VALUE (BTU/ HR - SF - F)	X	54	F TEMPERATURE DIFFERENCE			=	0.00	MBTU / HR
METAL PERSONNEL DR=	0	AREA (SF)	X	0.56	U VALUE (BTU/ HR - SF - F)	X	54	F TEMPERATURE DIFFERENCE			=	0.00	MBTU / HR
MTL/ GLAZED PERSONNEL=	25	AREA (SF)	X	0.615	U VALUE (BTU/ HR - SF - F)	X	54	F TEMPERATURE DIFFERENCE			=	0.00	MBTU / HR
					TOTAL ECO HEAT LOSSES						=	0.26	MBTU / HR
											=	273.83	MJ/HR

FT KNOX LIMITED EEAP (GLASS)

ECO - 1: INFRARED HEATING CALCULATIONS

	BASELINE	ECO - 1
SYSTEM EFFICIENCY	60%	90%
OUTSIDE DESIGN TEMP (F)	1	1
HTG TEMP SETPOINT (F)	60	55
HEATING DEGREE DAYS	4616	3396
TOTAL HEAT LOSSES (MBTU / HR)	0.28	0.26
$ /MBTU -FUEL OIL	$6.60	$6.60
$ /MBTU -NATURAL GAS	$4.62	$4.62
$ /MBTU -PPG	$10.84	$10.84

BUILDING NUMBER **6563**

GLOSSARY OF TERMS

1 MBTU = 1055 MJ
0.019=CONSTANT
.81 = CONSTANT FOR SLAB PERIMETER UNINSULATED FROM ASHRAE
CORR FACTOR = EMPIRICAL CORRECTION FACTOR FOR HEATING EFFECT VS 65 F DEGREE-DAYS FROM ASHRAE FUNDAMENTALS 1989 PG28.2

ANNUAL HEATING ENERGY CONSUMPTION (DEGREE DAY METHOD)

BASELINE =	0.28 / 0.6	MBTU / HR X SYS EFF	4616 X 59	DEGREE DAYS X TEMP DIFFERENCE	24 HRS/DAY	=	887.50 MBTU/YR	
	887.50	MBTU/YR	X	CORR FACTOR	1	=	887.50	MBTU/YR
ECO - 1 =	0.26 / 0.9	MBTU / HR X SYS EFF	3396 X 54	DEGREE DAYS X TEMP DIFFERENCE	24 HRS/DAY	=	435.29 MBTU/YR	
	435.29	MBTU/YR	X	CORR FACTOR	1	=	435.29	MBTU/YR
	ECO -1 ANNUAL HEATING ENERGY CONSUMPTION SAVINGS					=	**452.21**	**MBTU/YR**
						=	**477,080.96**	**MJ/YR**

ANNUAL HEATING ENERGY COST

BASELINE =	887.50	MBTU / YR X	6.6	$ /MBTU	=	5,857.50	$ /YR
ECO - 1 =	435.29	MBTU / YR X	4.62	$ /MBTU	=	2,011.04	$ /YR
	ECO -1 ANNUAL HEATING ENERGY COST SAVINGS				=	**3,846.46**	**$ /YR**

FT KNOX LIMITED EEAP (GLASS)

ECO - 1: INFRARED HEATING CALCULATIONS

BUILDING NUMBER: 6564

BUILDING HEATING TEMPERATURE SETPOINT: 60 F
OUTSIDE DESIGN TEMPERATURE 1 F
TEMPERATURE DIFFERENCE 59 F

INFILTRATION LOSSES =	1	AIR CHGS	X	73600	VOL (CU FT)	X	59	F TEMP DIFF	X	0.019	=	0.08 MBTU / HR
FLOOR LOSSES =	320	LINEAR FEET OF PERIMETER				X	59	F TEMP DIFF	X	0.81	=	0.02 MBTU / HR

SURFACE HEAT LOSSES

FLAT BUILT UP ROOF =	4800	AREA (SF)	X	0.105	U VALUE (BTU/ HR - SF - F)	X	59	F TEMPERATURE DIFFERENCE			=	0.03 MBTU / HR
FACE BRICK/BLK WALL =		AREA (SF)	X	0.176	U VALUE (BTU/ HR - SF - F)	X	59	F TEMPERATURE DIFFERENCE			=	0.00 MBTU / HR
8" CINDER BLOCK WALL =	2440	AREA (SF)	X	0.389	U VALUE (BTU/ HR - SF - F)	X	59	F TEMPERATURE DIFFERENCE			=	0.06 MBTU / HR
CORR MTL PNL WALL =		AREA (SF)	X	0.17	U VALUE (BTU/ HR - SF - F)	X	59	F TEMPERATURE DIFFERENCE			=	0.00 MBTU / HR
CLR SGL PANE WINDOWS =	1123	AREA (SF)	X	1.235	U VALUE (BTU/ HR - SF - F)	X	59	F TEMPERATURE DIFFERENCE			=	0.08 MBTU / HR
TINTED DBL PANE WIN'W =		AREA (SF)	X	0.65	U VALUE (BTU/ HR - SF - F)	X	59	F TEMPERATURE DIFFERENCE			=	0.00 MBTU / HR
METAL ROLL UP DOORS =		AREA (SF)	X	0.56	U VALUE (BTU/ HR - SF - F)	X	59	F TEMPERATURE DIFFERENCE			=	0.00 MBTU / HR
METAL GLAZED O'HEAD DR =	1372	AREA (SF)	X	0.214	U VALUE (BTU/ HR - SF - F)	X	59	F TEMPERATURE DIFFERENCE			=	0.02 MBTU / HR
LG MTL SLIDING DOOR =		AREA (SF)	X	0.56	U VALUE (BTU/ HR - SF - F)	X	59	F TEMPERATURE DIFFERENCE			=	0.00 MBTU / HR
METAL PERSONNEL DR=		AREA (SF)	X	0.56	U VALUE (BTU/ HR - SF - F)	X	59	F TEMPERATURE DIFFERENCE			=	0.00 MBTU / HR
MTL/ GLAZED PERSONNEL=	25	AREA (SF)	X	0.615	U VALUE (BTU/ HR - SF - F)	X	59	F TEMPERATURE DIFFERENCE			=	0.00 MBTU / HR

TOTAL BASELINE HEAT LOSSES = **0.28 MBTU / HR**
= **299.19 MJ/HR**

FT KNOX LIMITED EEAP (GLASS)

ECO - 1: INFRARED HEATING CALCULATIONS

BUILDING NUMBER: 6564

BUILDING HEATING TEMPERATURE SETPOINT: 55 F
OUTSIDE DESIGN TEMPERATURE 1 F
TEMPERATURE DIFFERENCE 54 F

INFILTRATION LOSSES =	1	AIR CHGS	X	73600	VOL (CU FT)	X	54	F TEMP DIFF	X 0.019	=	0.08	MBTU / HR
FLOOR LOSSES =	320	LINEAR FEET OF PERIMETER				X	54	F TEMP DIFF	X 0.81	=	0.01	MBTU / HR
SURFACE HEAT LOSSES												
FLAT BUILT UP ROOF =	4800	AREA (SF)	X	0.105	U VALUE (BTU/ HR - SF - F)	X	54	F TEMPERATURE DIFFERENCE		=	0.03	MBTU / HR
FACE BRICK/BLK WALL =	0	AREA (SF)	X	0.176	U VALUE (BTU/ HR - SF - F)	X	54	F TEMPERATURE DIFFERENCE		=	0.00	MBTU / HR
8" CINDER BLOCK WALL =	2440	AREA (SF)	X	0.389	U VALUE (BTU/ HR - SF - F)	X	54	F TEMPERATURE DIFFERENCE		=	0.05	MBTU / HR
CORR MTL PNL WALL =	0	AREA (SF)	X	0.17	U VALUE (BTU/ HR - SF - F)	X	54	F TEMPERATURE DIFFERENCE		=	0.00	MBTU / HR
CLR SGL PANE WINDOWS =	1123	AREA (SF)	X	1.235	U VALUE (BTU/ HR - SF - F)	X	54	F TEMPERATURE DIFFERENCE		=	0.07	MBTU / HR
TINTED DBL PANE WIN'W =	0	AREA (SF)	X	0.65	U VALUE (BTU/ HR - SF - F)	X	54	F TEMPERATURE DIFFERENCE		=	0.00	MBTU / HR
METAL ROLL UP DOORS =	0	AREA (SF)	X	0.56	U VALUE (BTU/ HR - SF - F)	X	54	F TEMPERATURE DIFFERENCE		=	0.00	MBTU / HR
WOOD GLAZED O'HEAD DR =	1372	AREA (SF)	X	0.214	U VALUE (BTU/ HR - SF - F)	X	54	F TEMPERATURE DIFFERENCE		=	0.02	MBTU / HR
LG MTL SLIDING DOOR =	0	AREA (SF)	X	0.56	U VALUE (BTU/ HR - SF - F)	X	54	F TEMPERATURE DIFFERENCE		=	0.00	MBTU / HR
METAL PERSONNEL DR=	0	AREA (SF)	X	0.56	U VALUE (BTU/ HR - SF - F)	X	54	F TEMPERATURE DIFFERENCE		=	0.00	MBTU / HR
MTL/ GLAZED PERSONNEL=	25	AREA (SF)	X	0.615	U VALUE (BTU/ HR - SF - F)	X	54	F TEMPERATURE DIFFERENCE		=	0.00	MBTU / HR
					TOTAL ECO HEAT LOSSES					=	0.26	MBTU / HR
										=	273.83	MJ/HR

FT KNOX LIMITED EEAP (GLASS)

ECO - 1: INFRARED HEATING CALCULATIONS

	BASELINE	ECO - 1
SYSTEM EFFICIENCY	60%	90%
OUTSIDE DESIGN TEMP (F)	1	1
HTG TEMP SETPOINT (F)	60	55
HEATING DEGREE DAYS	4616	3396
TOTAL HEAT LOSSES (MBTU / HR)	0.28	0.26
$ /MBTU -FUEL OIL	$6.60	$6.60
$ /MBTU -NATURAL GAS	$4.62	$4.62
$ /MBTU -PPG	$10.84	$10.84

BUILDING NUMBER **6564**

GLOSSARY OF TERMS

1 MBTU = 1055 MJ
0.019=CONSTANT
.81 = CONSTANT FOR SLAB PERIMETER UNINSULATED FROM ASHRAE
CORR FACTOR = EMPIRICAL CORRECTION FACTOR FOR HEATING EFFECT VS 65 F DEGREE-DAYS FROM ASHRAE FUNDAMENTALS 1989 PG28.2

ANNUAL HEATING ENERGY CONSUMPTION (DEGREE DAY METHOD)

BASELINE =	0.28 / 0.6	MBTU / HR X SYS EFF X	4616 / 59	DEGREE DAYS X TEMP DIFFERENCE	24 HRS/DAY	= 887.50	MBTU/YR	
	887.50	MBTU/YR	X	CORR FACTOR	1	=	887.50	MBTU/YR
ECO - 1 =	0.26 / 0.9	MBTU / HR X SYS EFF X	3396 / 54	DEGREE DAYS X TEMP DIFFERENCE	24 HRS/DAY	= 435.29	MBTU/YR	
	435.29	MBTU/YR	X	CORR FACTOR	1	=	435.29	MBTU/YR
	ECO - 1 ANNUAL HEATING ENERGY CONSUMPTION SAVINGS					=	**452.21**	**MBTU/YR**
						=	**477,080.96**	**MJ/YR**

ANNUAL HEATING ENERGY COST

BASELINE =	887.50	MBTU / YR X	6.6	$ /MBTU	=	5,857.50	$ /YR
ECO - 1 =	435.29	MBTU / YR X	4.62	$ /MBTU	=	2,011.04	$ /YR
	ECO - 1 ANNUAL HEATING ENERGY COST SAVINGS				=	**3,846.46**	**$ /YR**

FT KNOX LIMITED EEAP (GLASS)

ECO - 1: INFRARED HEATING CALCULATIONS

BUILDING NUMBER: 6576

BUILDING HEATING TEMPERATURE SETPOINT: 60 F
OUTSIDE DESIGN TEMPERATURE 1 F
TEMPERATURE DIFFERENCE 59 F

INFILTRATION LOSSES =	1	AIR CHGS	X	114900	VOL (CU FT)	X	59	F TEMP DIFF	X 0.019	=	0.13	MBTU / HR
FLOOR LOSSES =	350	LINEAR FEET OF PERIMETER				X	59	F TEMP DIFF	X 0.81	=	0.02	MBTU / HR

SURFACE HEAT LOSSES

FLAT BUILT UP ROOF =	6900	AREA (SF)	X	0.105	U VALUE (BTU/ HR - SF - F)	X	59	F TEMPERATURE DIFFERENCE		=	0.04	MBTU / HR
FACE BRICK/BLK WALL =		AREA (SF)	X	0.176	U VALUE (BTU/ HR - SF - F)	X	59	F TEMPERATURE DIFFERENCE		=	0.00	MBTU / HR
8" CINDER BLOCK WALL =	2936	AREA (SF)	X	0.389	U VALUE (BTU/ HR - SF - F)	X	59	F TEMPERATURE DIFFERENCE		=	0.07	MBTU / HR
CORR MTL PNL WALL =	1165	AREA (SF)	X	0.17	U VALUE (BTU/ HR - SF - F)	X	59	F TEMPERATURE DIFFERENCE		=	0.01	MBTU / HR
CLR SGL PANE WINDOWS =	760	AREA (SF)	X	1.235	U VALUE (BTU/ HR - SF - F)	X	59	F TEMPERATURE DIFFERENCE		=	0.06	MBTU / HR
TINTED DBL PANE WIN'W =		AREA (SF)	X	0.65	U VALUE (BTU/ HR - SF - F)	X	59	F TEMPERATURE DIFFERENCE		=	0.00	MBTU / HR
METAL ROLL UP DOORS =		AREA (SF)	X	0.56	U VALUE (BTU/ HR - SF - F)	X	59	F TEMPERATURE DIFFERENCE		=	0.00	MBTU / HR
METAL GLAZED O'HEAD DR =	1344	AREA (SF)	X	0.214	U VALUE (BTU/ HR - SF - F)	X	59	F TEMPERATURE DIFFERENCE		=	0.02	MBTU / HR
LG MTL SLIDING DOOR =		AREA (SF)	X	0.56	U VALUE (BTU/ HR - SF - F)	X	59	F TEMPERATURE DIFFERENCE		=	0.00	MBTU / HR
METAL PERSONNEL DR=		AREA (SF)	X	0.56	U VALUE (BTU/ HR - SF - F)	X	59	F TEMPERATURE DIFFERENCE		=	0.00	MBTU / HR
MTL/ GLAZED PERSONNEL=	25	AREA (SF)	X	0.615	U VALUE (BTU/ HR - SF - F)	X	59	F TEMPERATURE DIFFERENCE		=	0.00	MBTU / HR

TOTAL BASELINE HEAT LOSSES = **0.34** **MBTU / HR**
= **359.33** **MJ/HR**

FT KNOX LIMITED EEAP (GLASS)

ECO - 1: INFRARED HEATING CALCULATIONS

BUILDING NUMBER: 6576

BUILDING HEATING TEMPERATURE SETPOINT: 55 F
OUTSIDE DESIGN TEMPERATURE 1 F
TEMPERATURE DIFFERENCE 54 F

INFILTRATION LOSSES =	1	AIR CHGS	X	114900	VOL (CU FT)	X	54	F TEMP DIFF	X	0.019	=	0.12 MBTU / HR
FLOOR LOSSES =	350	LINEAR FEET OF PERIMETER				X	54	F TEMP DIFF	X	0.81	=	0.02 MBTU / HR
SURFACE HEAT LOSSES												
FLAT BUILT UP ROOF =	6900	AREA (SF)	X	0.105	U VALUE (BTU/ HR - SF - F)	X	54	F TEMPERATURE DIFFERENCE			=	0.04 MBTU / HR
FACE BRICK/BLK WALL =	0	AREA (SF)	X	0.176	U VALUE (BTU/ HR - SF - F)	X	54	F TEMPERATURE DIFFERENCE			=	0.00 MBTU / HR
8" CINDER BLOCK WALL =	2936	AREA (SF)	X	0.389	U VALUE (BTU/ HR - SF - F)	X	54	F TEMPERATURE DIFFERENCE			=	0.06 MBTU / HR
CORR MTL PNL WALL =	1165	AREA (SF)	X	0.17	U VALUE (BTU/ HR - SF - F)	X	54	F TEMPERATURE DIFFERENCE			=	0.01 MBTU / HR
CLR SGL PANE WINDOWS =	760	AREA (SF)	X	1.235	U VALUE (BTU/ HR - SF - F)	X	54	F TEMPERATURE DIFFERENCE			=	0.05 MBTU / HR
TINTED DBL PANE WIN'W =	0	AREA (SF)	X	0.65	U VALUE (BTU/ HR - SF - F)	X	54	F TEMPERATURE DIFFERENCE			=	0.00 MBTU / HR
METAL ROLL UP DOORS =	0	AREA (SF)	X	0.56	U VALUE (BTU/ HR - SF - F)	X	54	F TEMPERATURE DIFFERENCE			=	0.00 MBTU / HR
WOOD GLAZED O'HEAD DR =	1344	AREA (SF)	X	0.214	U VALUE (BTU/ HR - SF - F)	X	54	F TEMPERATURE DIFFERENCE			=	0.02 MBTU / HR
LG MTL SLIDING DOOR =	0	AREA (SF)	X	0.56	U VALUE (BTU/ HR - SF - F)	X	54	F TEMPERATURE DIFFERENCE			=	0.00 MBTU / HR
METAL PERSONNEL DR=	0	AREA (SF)	X	0.56	U VALUE (BTU/ HR - SF - F)	X	54	F TEMPERATURE DIFFERENCE			=	0.00 MBTU / HR
MTL/ GLAZED PERSONNEL=	25	AREA (SF)	X	0.615	U VALUE (BTU/ HR - SF - F)	X	54	F TEMPERATURE DIFFERENCE			=	0.00 MBTU / HR

TOTAL ECO HEAT LOSSES = 0.31 MBTU / HR
= 328.88 MJ/HR

FT KNOX LIMITED EEAP (GLASS)

ECO - 1: INFRARED HEATING CALCULATIONS

	BASELINE	ECO - 1
SYSTEM EFFICIENCY	60%	90%
OUTSIDE DESIGN TEMP (F)	1	1
HTG TEMP SETPOINT (F)	60	55
HEATING DEGREE DAYS	4616	3396
TOTAL HEAT LOSSES (MBTU / HR)	0.34	0.31
$ /MBTU -FUEL OIL	$6.60	$6.60
$ /MBTU -NATURAL GAS	$4.62	$4.62
$ /MBTU -PPG	$10.84	$10.84

BUILDING NUMBER **6576**

GLOSSARY OF TERMS

1 MBTU = 1055 MJ
0.019=CONSTANT
.81 = CONSTANT FOR SLAB PERIMETER UNINSULATED FROM ASHRAE
CORR FACTOR = EMPIRICAL CORRECTION FACTOR FOR HEATING EFFECT VS 65 F DEGREE-DAYS FROM ASHRAE FUNDAMENTALS 1989 PG28.2

ANNUAL HEATING ENERGY CONSUMPTION (DEGREE DAY METHOD)

BASELINE =	0.34	MBTU / HR	X	4616	DEGREE DAYS	X	24	HRS/DAY		
	0.6	SYS EFF	X	59	TEMP DIFFERENCE				=	1,065.90 MBTU/YR
	1,065.90	MBTU/YR	X		CORR FACTOR		1		=	1,065.90 MBTU/YR
ECO - 1 =	0.31	MBTU / HR	X	3396	DEGREE DAYS	X	24	HRS/DAY		
	0.9	SYS EFF	X	54	TEMP DIFFERENCE				=	522.79 MBTU/YR
	522.79	MBTU/YR	X		CORR FACTOR		1		=	522.79 MBTU/YR
	ECO - 1 ANNUAL HEATING ENERGY CONSUMPTION SAVINGS								=	**543.11 MBTU/YR**
									=	**572,980.27 MJ/YR**

ANNUAL HEATING ENERGY COST

BASELINE =	1,065.90	MBTU / YR	X	6.6	$ /MBTU	=	7,034.93 $ /YR
ECO - 1 =	522.79	MBTU / YR	X	4.62	$ /MBTU	=	2,415.28 $ /YR
	ECO - 1 ANNUAL HEATING ENERGY COST SAVINGS					=	**4,619.64 $ /YR**

FT KNOX LIMITED EEAP (GLASS)

ECO - 1: INFRARED HEATING CALCULATIONS

BUILDING NUMBER: 6577

BUILDING HEATING TEMPERATURE SETPOINT: 60 F
OUTSIDE DESIGN TEMPERATURE 1 F
TEMPERATURE DIFFERENCE 59 F

INFILTRATION LOSSES =	1	AIR CHGS	X	114900	VOL (CU FT)	X	59	F TEMP DIFF	X 0.019	=	0.13	MBTU / HR
FLOOR LOSSES =	350	LINEAR FEET OF PERIMETER				X	59	F TEMP DIFF	X 0.81	=	0.02	MBTU / HR
SURFACE HEAT LOSSES												
FLAT BUILT UP ROOF =	6900	AREA (SF)	X	0.105	U VALUE (BTU/ HR - SF - F)	X	59	F TEMPERATURE DIFFERENCE		=	0.04	MBTU / HR
FACE BRICK/BLK WALL =		AREA (SF)	X	0.176	U VALUE (BTU/ HR - SF - F)	X	59	F TEMPERATURE DIFFERENCE		=	0.00	MBTU / HR
8" CINDER BLOCK WALL =	2936	AREA (SF)	X	0.389	U VALUE (BTU/ HR - SF - F)	X	59	F TEMPERATURE DIFFERENCE		=	0.07	MBTU / HR
CORR MTL PNL WALL =	1165	AREA (SF)	X	0.17	U VALUE (BTU/ HR - SF - F)	X	59	F TEMPERATURE DIFFERENCE		=	0.01	MBTU / HR
CLR SGL PANE WINDOWS =	760	AREA (SF)	X	1.235	U VALUE (BTU/ HR - SF - F)	X	59	F TEMPERATURE DIFFERENCE		=	0.06	MBTU / HR
TINTED DBL PANE WIN'W =		AREA (SF)	X	0.65	U VALUE (BTU/ HR - SF - F)	X	59	F TEMPERATURE DIFFERENCE		=	0.00	MBTU / HR
METAL ROLL UP DOORS =		AREA (SF)	X	0.56	U VALUE (BTU/ HR - SF - F)	X	59	F TEMPERATURE DIFFERENCE		=	0.00	MBTU / HR
METAL GLAZED O'HEAD DR =	1344	AREA (SF)	X	0.214	U VALUE (BTU/ HR - SF - F)	X	59	F TEMPERATURE DIFFERENCE		=	0.02	MBTU / HR
LG MTL SLIDING DOOR =		AREA (SF)	X	0.56	U VALUE (BTU/ HR - SF - F)	X	59	F TEMPERATURE DIFFERENCE		=	0.00	MBTU / HR
METAL PERSONNEL DR=		AREA (SF)	X	0.56	U VALUE (BTU/ HR - SF - F)	X	59	F TEMPERATURE DIFFERENCE		=	0.00	MBTU / HR
MTL/ GLAZED PERSONNEL=	25	AREA (SF)	X	0.615	U VALUE (BTU/ HR - SF - F)	X	59	F TEMPERATURE DIFFERENCE		=	0.00	MBTU / HR

TOTAL BASELINE HEAT LOSSES = **0.34** **MBTU / HR**
= **359.33** **MJ/HR**

FT KNOX LIMITED EEAP (GLASS)

ECO - 1: INFRARED HEATING CALCULATIONS

BUILDING NUMBER: 6577

BUILDING HEATING TEMPERATURE SETPOINT: 55 F
OUTSIDE DESIGN TEMPERATURE 1 F
TEMPERATURE DIFFERENCE 54 F

INFILTRATION LOSSES =	1	AIR CHGS	X	114900	VOL (CU FT)	X	54	F TEMP DIFF	X	0.019	=	0.12	MBTU / HR
FLOOR LOSSES =	350	LINEAR FEET OF PERIMETER				X	54	F TEMP DIFF	X	0.81	=	0.02	MBTU / HR
SURFACE HEAT LOSSES													
FLAT BUILT UP ROOF =	6900	AREA (SF)	X	0.105	U VALUE (BTU/ HR - SF - F)	X	54	F TEMPERATURE DIFFERENCE			=	0.04	MBTU / HR
FACE BRICK/BLK WALL =	0	AREA (SF)	X	0.176	U VALUE (BTU/ HR - SF - F)	X	54	F TEMPERATURE DIFFERENCE			=	0.00	MBTU / HR
8" CINDER BLOCK WALL =	2936	AREA (SF)	X	0.389	U VALUE (BTU/ HR - SF - F)	X	54	F TEMPERATURE DIFFERENCE			=	0.06	MBTU / HR
CORR MTL PNL WALL =	1165	AREA (SF)	X	0.17	U VALUE (BTU/ HR - SF - F)	X	54	F TEMPERATURE DIFFERENCE			=	0.01	MBTU / HR
CLR SGL PANE WINDOWS =	760	AREA (SF)	X	1.235	U VALUE (BTU/ HR - SF - F)	X	54	F TEMPERATURE DIFFERENCE			=	0.05	MBTU / HR
TINTED DBL PANE WIN'W =	0	AREA (SF)	X	0.65	U VALUE (BTU/ HR - SF - F)	X	54	F TEMPERATURE DIFFERENCE			=	0.00	MBTU / HR
METAL ROLL UP DOORS =	0	AREA (SF)	X	0.56	U VALUE (BTU/ HR - SF - F)	X	54	F TEMPERATURE DIFFERENCE			=	0.00	MBTU / HR
WOOD GLAZED O'HEAD DR =	1344	AREA (SF)	X	0.214	U VALUE (BTU/ HR - SF - F)	X	54	F TEMPERATURE DIFFERENCE			=	0.02	MBTU / HR
LG MTL SLIDING DOOR =	0	AREA (SF)	X	0.56	U VALUE (BTU/ HR - SF - F)	X	54	F TEMPERATURE DIFFERENCE			=	0.00	MBTU / HR
METAL PERSONNEL DR=	0	AREA (SF)	X	0.56	U VALUE (BTU/ HR - SF - F)	X	54	F TEMPERATURE DIFFERENCE			=	0.00	MBTU / HR
MTL/ GLAZED PERSONNEL=	25	AREA (SF)	X	0.615	U VALUE (BTU/ HR - SF - F)	X	54	F TEMPERATURE DIFFERENCE			=	0.00	MBTU / HR
					TOTAL ECO HEAT LOSSES						=	0.31	MBTU / HR
											=	328.88	MJ/HR

FT KNOX LIMITED EEAP (GLASS)

ECO - 1: INFRARED HEATING CALCULATIONS

	BASELINE	ECO - 1
SYSTEM EFFICIENCY	60%	90%
OUTSIDE DESIGN TEMP (F)	1	1
HTG TEMP SETPOINT (F)	60	55
HEATING DEGREE DAYS	4616	3396
TOTAL HEAT LOSSES (MBTU / HR)	0.34	0.31
$ /MBTU -FUEL OIL	$6.60	$6.60
$ /MBTU -NATURAL GAS	$4.62	$4.62
$ /MBTU -PPG	$10.84	$10.84

BUILDING NUMBER **6577**

GLOSSARY OF TERMS

1 MBTU = 1055 MJ
0.019=CONSTANT
.81 = CONSTANT FOR SLAB PERIMETER UNINSULATED FROM ASHRAE
CORR FACTOR = EMPIRICAL CORRECTION FACTOR FOR HEATING EFFECT VS 65 F DEGREE-DAYS FROM ASHRAE FUNDAMENTALS 1989 PG28.2

ANNUAL HEATING ENERGY CONSUMPTION (DEGREE DAY METHOD)

BASELINE =	0.34	MBTU / HR	X	4616	DEGREE DAYS X 24 HRS/DAY				
	0.6	SYS EFF	X	59	TEMP DIFFERENCE	=	1,065.90	MBTU/YR	
	1,065.90	MBTU/YR	X		CORR FACTOR 1	=		1,065.90	MBTU/YR
ECO - 1 =	0.31	MBTU / HR	X	3396	DEGREE DAYS X 24 HRS/DAY				
	0.9	SYS EFF	X	54	TEMP DIFFERENCE	=	522.79	MBTU/YR	
	522.79	MBTU/YR	X		CORR FACTOR 1	=		522.79	MBTU/YR
	ECO - 1 ANNUAL HEATING ENERGY CONSUMPTION SAVINGS					=		**543.11**	**MBTU/YR**
						=		**572,980.27**	**MJ/YR**

ANNUAL HEATING ENERGY COST

BASELINE =	1,065.90	MBTU / YR	X	6.6	$ /MBTU	=	7,034.93	$ /YR
ECO - 1 =	522.79	MBTU / YR	X	4.62	$ /MBTU	=	2,415.28	$ /YR
	ECO - 1 ANNUAL HEATING ENERGY COST SAVINGS					=	**4,619.64**	**$ /YR**

LIFE CYCLE COST ANALYSIS SUMMARY STUDY: 6592ECO1
ENERGY CONSERVATION INVESTMENT PROGRAM (ECIP) LCCID 1.080
INSTALLATION & LOCATION: FORT KNOX REGION NOS. 4 CENSUS: 3
PROJECT NO. & TITLE: 6592ECO1 ECO-1 INFRARED HEAT
FISCAL YEAR 95 DISCRETE PORTION NAME: INFRARED
ANALYSIS DATE: 10-18-94 ECONOMIC LIFE 20 YEARS PREPARED BY: JAH

1. INVESTMENT

A. CONSTRUCTION COST	$ 34056.	
B. SIOH	$ 1703.	
C. DESIGN COST	$ 1703.	
D. TOTAL COST (1A+1B+1C)	$ 37462.	
E. SALVAGE VALUE OF EXISTING EQUIPMENT	$ 0.	
F. PUBLIC UTILITY COMPANY REBATE	$ 0.	
G. TOTAL INVESTMENT (1D - 1E - 1F)		$ 37462.

2. ENERGY SAVINGS (+) / COST (-)
DATE OF NISTIR 85-3273-X USED FOR DISCOUNT FACTORS OCT 1993

FUEL	UNIT COST $/MBTU(1)	SAVINGS MBTU/YR(2)	ANNUAL $ SAVINGS(3)	DISCOUNT FACTOR(4)	DISCOUNTED SAVINGS(5)
A. ELECT	$ .00	0.	$ 0.	15.61	$ 0.
B. DIST	$ 6.60	0.	$ 0.	17.56	$ 0.
C. RESID	$ .00	0.	$ 0.	19.97	$ 0.
D. NAT G	$ 4.62	671.	$ 3100.	20.96	$ 64973.
E. COAL	$ .00	0.	$ 0.	17.58	$ 0.
F. LPG	$ .00	0.	$ 0.	16.12	$ 0.
M. DEMAND SAVINGS			$ 0.	14.74	$ 0.
N. TOTAL		671.	$ 3100.		$ 64973.

3. NON ENERGY SAVINGS(+) / COST(-)

A. ANNUAL RECURRING (+/-) $ 990.
(1) DISCOUNT FACTOR (TABLE A) 14.74
(2) DISCOUNTED SAVING/COST (3A X 3A1) $ 14593.

B. NON RECURRING SAVINGS(+) / COSTS(-)

ITEM	SAVINGS(+) COST(-) (1)	YR OC (2)	DISCNT FACTR (3)	DISCOUNTED SAVINGS(+)/ COST(-)(4)
1. REPAIR	$ 3992.	5	.86	3433.
2. REPAIR2	$ 3992.	15	.63	2515.
3. REPAIR3	$ 3211.	7	.81	2601.
4. REPAIR4	$ 3211.	14	.65	2087.
d. TOTAL	$ 14407.			10637.

C. TOTAL NON ENERGY DISCOUNTED SAVINGS(+)/COST(-)(3A2+3Bd4) $ 25229.

4. FIRST YEAR DOLLAR SAVINGS 2N3+3A+(3Bd1/(YRS ECONOMIC LIFE)) $ 4810.

5. SIMPLE PAYBACK PERIOD (1G/4) 7.79 YEARS

6. TOTAL NET DISCOUNTED SAVINGS (2N5+3C) $ 90202.

7. SAVINGS TO INVESTMENT RATIO (SIR)=(6 / 1G)= 2.41
(IF < 1 PROJECT DOES NOT QUALIFY)

8. ADJUSTED INTERNAL RATE OF RETURN (AIRR): 7.73 %

Estimate:	BLDG 6592	Date:	14-Oct-94
Description:	COST ESTIMATE		
Project:	LIMITED EEAP(GLASSBid Date:		
Location:	FORT KNOX, KY	Job #:	94013.02
Sq. footage:	8100.00	City indx:	Louisville, KY

Line #	Description					
	Manhours	Matl	Labor	Equipment	Sub	Total
0205543200	SITE REMOVAL,STEEL PIPE,WELDED CONNECTION, 4"DIAMETER				300.00 L.F.	
Unit values	0.15	0.00	3.16	1.29	0.00	4.44
Totals	45.00	$0	$947	$386	$0	$1,333
0207180380	HVAC DEMO,BOILER GAS/OIL STL >150MBH				1.00 Ea.	
Unit values	12.00	0.00	323.82	0.00	0.00	323.82
Totals	12.00	$0	$324	$0	$0	$324
0207183600	HVAC DEMO,MECH EQPT HEAVY ITEM				0.50 Ton	
Unit values	14.55	0.00	380.36	0.00	0.00	380.36
Totals	7.27	$0	$190	$0	$0	$190
0208400600	REMOVE PIPE INSULATION UP TO 4" DIAMETER PIPE				300.00 L.F.	
Unit values	0.07	0.00	1.97	0.24	0.00	2.21
Totals	21.30	$0	$592	$71	$0	$663
0208401000	REMOVE INSULATION FROM PIPE FITTING, UP TO 4" DIAMETER PIPE				60.00 Ea.	
Unit values	0.20	0.00	5.55	0.68	0.00	6.23
Totals	12.00	$0	$333	$41	$0	$374
0268520600	GAS SERVICE&DISTRIB PIPING,SCH40 STEEL PLAIN END,TAR COAT&WRAP 2"DIAM				50.00 L.F.	
Unit values	0.11	2.19	3.18	0.19	0.00	5.55
Totals	5.70	$109	$159	$9	$0	$277
U02 SITEWORK	104	$109	$2,545	$507	$0	$3,161

Line #	Description					
	Manhours	Matl	Labor	Equipment	Sub	Total
1554510245	HTG INFA-RD UNT GAS ELEC IGN (See Attached for Breakdown)					
					1.00 LS	
Unit values	0.00	0.00	0.00	0.00	25219.00	25219.00
Totals	0.00	$0	$0	$0	$25,219	$25,219
U15 MECHANICAL	0	$0	$0	$0	$25,219	$25,219

Line #	Description					
	Manhours	Matl	Labor	Equipment	Sub	Total
ESTIMATE TOTAL	104	$109	$2,545	$507	$25,219	$28,380
SALES TAX	0.00%	$0				
MATL MARKUP	0.00%	$0				
LABOR MARKUP	0.00%		$0			
EQUIPT MARKUP	0.00%			$0		
SUB MARKUP	0.00%				$0	
TOTAL BEFORE CONTINGENC		$109	$2,545	$507	$25,219	$28,380
CONTINGENCY	10.00%					$2,838
BOND	0.00%					$0
PROFIT	10.00%					$2,838
JOB TOTAL						$34,056

Estimate:	BLDG 6592	Date:	14-Oct-94
Description:	COST ESTIMATE		
Project:	LIMITED EEAP(GLASS	Bid Date:	
Location:	FORT KNOX, KY	Job #:	94013.02
Sq. footage:	8100.00	City indx:	Louisville, KY

SUMMARY

	Manhours	Matl	Labor	Equipment	Sub	Total
U02 SITEWORK	104	$109	$2,545	$507	$0	$3,161
U15 MECHANICAL	0	$0	$0	$0	$25,219	$25,219
TOTAL	104	$109	$2,545	$507	$25,219	$28,380
SALES TAX	0.00%	$0				
MATL MARKUP	0.00%	$0				
LABOR MARKUP	0.00%		$0			
EQUIPT MARKUP	0.00%			$0		
SUB MARKUP	0.00%				$0	
TOTAL BEFORE CONTINGENC		$109	$2,545	$507	$25,219	$28,380
CONTINGENCY	10.00%					$2,838
BOND	0.00%					$0
PROFIT	10.00%					$2,838
JOB TOTAL						$34,056

Estimate:	BLDG 6592	Date:	14-Oct-94
Description:	INFRARED HEATING SYSTEM COST ESTIMATE		
Project:	LIMITED EEAP(GLASSBid Date:		
Location:	FORT KNOX, KY	Job #:	94013.02
Sq. footage:		City indx:	Louisville, KY

Line #	Description					
	Manhours	Matl	Labor	Equipment	Sub	Total
0913100200	115V, 20 AMP POWER WIRING INCL CONDUIT, WIRE, AND RECEPTACLES				340.00 L.F.	
Unit values	0.15	2.22	4.57	0.00	0.00	6.79
Totals	50.66	$753	$1,555	$0	$0	$2,308
0913100200	CO-RAY-VAC VANTAGE 2 POWER FEEDER INSTALLATION, INCL CONDUIT, WIRE, AND RECEPTACLES				120.00 L.F.	
Unit values	0.15	2.22	4.57	0.00	0.00	6.79
Totals	17.88	$266	$549	$0	$0	$815
A09 ELECTRICAL	69	$1,019	$2,104	$0	$0	$3,123

Line #	Description	Manhours	Matl	Labor	Equipment	Sub	Total
1517010650	BLACK STEEL RADIANT PIPE, SCHEDULE 40, THREADED, 4" DIAM W/CPLGS					330.00 L.F.	
Unit values		0.44	4.17	10.30	0.00	0.00	14.47
Totals		146.52	$1,376	$3,400	$0	$0	$4,776
1517011310	GAS SERVICE PIPE STEEL GALV SCH 40 THRD W/CPLG & HNGR SZD FOR CVRG 10'OC 1/2" DIAM					450.00 L.F.	
Unit values		0.13	1.64	2.88	0.00	0.00	4.52
Totals		57.15	$738	$1,294	$0	$0	$2,032
1519010320	ALUMINUM REFLECTORS W/HANGERS					45.00 Ea.	
Unit values		0.50	39.79	3.80	0.00	0.00	43.59
Totals		22.50	$1,791	$171	$0	$0	$1,962
1524105040	VACUUM PUMP AND VENT PIPING					1.00 Ea.	
Unit values		3.00	738.35	120.15	0.00	0.00	858.50
Totals		3.00	$738	$120	$0	$0	$858
1552301020	CRV-100 GAS FIRED BURNER, 100 MBH & COMBUSTION CHAMBER					6.00 Ea.	
Unit values		1.00	860.00	44.06	0.00	0.00	904.06
Totals		6.00	$5,160	$264	$0	$0	$5,424
1554510160	CO-RAY-VAC VANTAGE 2 INFA-RD HTG UNT, GAS 100MBH					1.00 Ea.	
Unit values		6.00	1065.00	163.40	0.00	0.00	1228.40
Totals		6.00	$1,065	$163	$0	$0	$1,228
1554510220	CO-RAY-VAC VANTAGE 2 INFA-RD HTG UNIT, GAS 40 MBH					4.00 Ea.	
Unit values		4.00	935.00	81.70	0.00	0.00	1016.70
Totals		16.00	$3,740	$327	$0	$0	$4,067
1556800120	CO-RAY-VAC VANTAGE 2 VENT PIPE					5.00 Ea.	
Unit values		1.60	70.00	76.50	0.00	0.00	146.50
Totals		8.00	$350	$382	$0	$0	$732
1574205220	ELECTRIC THERMOSTAT W/ COVER AND WIRING					6.00 Ea.	
Unit values		1.00	75.00	27.55	0.00	0.00	102.55
Totals		6.00	$450	$165	$0	$0	$615

Line #	Description					
	Manhours	Matl	Labor	Equipment	Sub	Total
U15 MECHANICAL	272	$15,408	$6,286	$0	$0	$21,694
163i200100	HEATING SYSTEM POWER / CONTROL PANEL				1.00 Ea.	
Unit values	2.96	330.76	70.58	0.00	0.00	401.34
Totals	2.96	$331	$71	$0	$0	$402
U16 ELECTRICAL	3	$331	$71	$0	$0	$402

Line #	Description					
	Manhours	Matl	Labor	Equipment	Sub	Total
ESTIMATE TOTAL	344	$16,758	$8,461	$0	$0	$25,219
SALES TAX	0.00%	$0				
MATL MARKUP	0.00%	$0				
LABOR MARKUP	0.00%		$0			
EQUIPT MARKUP	0.00%			$0		
SUB MARKUP	0.00%				$0	
TOTAL BEFORE CONTINGENC		$16,758	$8,461	$0	$0	$25,219
CONTINGENCY	0.00%					$0
BOND	0.00%					$0
PROFIT	0.00%					$0
JOB TOTAL						$25,219

Estimate: BLDG 6592 Date: 14-Oct-94
Description: INFRARED HEATING SYSTEM COST ESTIMATE
Project: LIMITED EEAP(GLASSBid Date:
Location: FORT KNOX, KY Job #: 94013.02
Sq. footage: City indx:Louisville, KY

SUMMARY

	Manhours	Matl	Labor	Equipment	Sub	Total
A09 ELECTRICAL	69	$1,019	$2,104	$0	$0	$3,123
U15 MECHANICAL	272	$15,408	$6,286	$0	$0	$21,694
U16 ELECTRICAL	3	$331	$71	$0	$0	$402
TOTAL	344	$16,758	$8,461	$0	$0	$25,219
SALES TAX	0.00%	$0				
MATL MARKUP	0.00%	$0				
LABOR MARKUP	0.00%		$0			
EQUIPT MARKUP	0.00%			$0		
SUB MARKUP	0.00%				$0	
TOTAL BEFORE CONTINGENC		$16,758	$8,461	$0	$0	$25,219
CONTINGENCY	0.00%					$0
BOND	0.00%					$0
PROFIT	0.00%					$0
JOB TOTAL						$25,219

FT KNOX LIMITED EEAP (GLASS)

ECO - 1: INFRARED HEATING CALCULATIONS

BUILDING NUMBER: 6592

BUILDING HEATING TEMPERATURE SETPOINT: 60 F
OUTSIDE DESIGN TEMPERATURE 1 F
TEMPERATURE DIFFERENCE 59 F

INFILTRATION LOSSES =	1	AIR CHGS	X	138900	VOL (CU FT)	X	59	F TEMP DIFF	X	0.019	=	0.16 MBTU / HR
FLOOR LOSSES =	390	LINEAR FEET OF PERIMETER				X	59	F TEMP DIFF	X	0.81	=	0.02 MBTU / HR

SURFACE HEAT LOSSES

FLAT BUILT UP ROOF =	8100	AREA (SF)	X	0.105	U VALUE (BTU/ HR - SF - F)	X	59	F TEMPERATURE DIFFERENCE			=	0.05 MBTU / HR
FACE BRICK/BLK WALL =		AREA (SF)	X	0.176	U VALUE (BTU/ HR - SF - F)	X	59	F TEMPERATURE DIFFERENCE			=	0.00 MBTU / HR
8" CINDER BLOCK WALL =	2743	AREA (SF)	X	0.389	U VALUE (BTU/ HR - SF - F)	X	59	F TEMPERATURE DIFFERENCE			=	0.06 MBTU / HR
CORR MTL PNL WALL =	1685	AREA (SF)	X	0.17	U VALUE (BTU/ HR - SF - F)	X	59	F TEMPERATURE DIFFERENCE			=	0.02 MBTU / HR
CLR SGL PANE WINDOWS =	760	AREA (SF)	X	1.235	U VALUE (BTU/ HR - SF - F)	X	59	F TEMPERATURE DIFFERENCE			=	0.06 MBTU / HR
TINTED DBL PANE WIN'W =		AREA (SF)	X	0.65	U VALUE (BTU/ HR - SF - F)	X	59	F TEMPERATURE DIFFERENCE			=	0.00 MBTU / HR
METAL ROLL UP DOORS =	1792	AREA (SF)	X	0.56	U VALUE (BTU/ HR - SF - F)	X	59	F TEMPERATURE DIFFERENCE			=	0.06 MBTU / HR
METAL GLAZED O'HEAD DR =		AREA (SF)	X	0.214	U VALUE (BTU/ HR - SF - F)	X	59	F TEMPERATURE DIFFERENCE			=	0.00 MBTU / HR
LG MTL SLIDING DOOR =		AREA (SF)	X	0.56	U VALUE (BTU/ HR - SF - F)	X	59	F TEMPERATURE DIFFERENCE			=	0.00 MBTU / HR
METAL PERSONNEL DR=		AREA (SF)	X	0.56	U VALUE (BTU/ HR - SF - F)	X	59	F TEMPERATURE DIFFERENCE			=	0.00 MBTU / HR
MTL/ GLAZED PERSONNEL=	50	AREA (SF)	X	0.615	U VALUE (BTU/ HR - SF - F)	X	59	F TEMPERATURE DIFFERENCE			=	0.00 MBTU / HR

TOTAL BASELINE HEAT LOSSES = **0.42 MBTU / HR**
= **443.92 MJ/HR**

FT KNOX LIMITED EEAP (GLASS)

ECO - 1: INFRARED HEATING CALCULATIONS

BUILDING NUMBER: 6592

BUILDING HEATING TEMPERATURE SETPOINT: 55 F
OUTSIDE DESIGN TEMPERATURE 1 F
TEMPERATURE DIFFERENCE 54 F

INFILTRATION LOSSES =	1	AIR CHGS	X	138900	VOL (CU FT)	X	54	F TEMP DIFF	X 0.019	= 0.14	MBTU / HR
FLOOR LOSSES =	390	LINEAR FEET OF PERIMETER				X	54	F TEMP DIFF	X 0.81	= 0.02	MBTU / HR
SURFACE HEAT LOSSES											
FLAT BUILT UP ROOF =	8100	AREA (SF)	X	0.105	U VALUE (BTU/ HR - SF - F)	X	54	F TEMPERATURE DIFFERENCE		= 0.05	MBTU / HR
FACE BRICK/BLK WALL =	0	AREA (SF)	X	0.176	U VALUE (BTU/ HR - SF - F)	X	54	F TEMPERATURE DIFFERENCE		= 0.00	MBTU / HR
8" CINDER BLOCK WALL =	2743	AREA (SF)	X	0.389	U VALUE (BTU/ HR - SF - F)	X	54	F TEMPERATURE DIFFERENCE		= 0.06	MBTU / HR
CORR MTL PNL WALL =	1685	AREA (SF)	X	0.17	U VALUE (BTU/ HR - SF - F)	X	54	F TEMPERATURE DIFFERENCE		= 0.02	MBTU / HR
CLR SGL PANE WINDOWS =	760	AREA (SF)	X	1.235	U VALUE (BTU/ HR - SF - F)	X	54	F TEMPERATURE DIFFERENCE		= 0.05	MBTU / HR
TINTED DBL PANE WIN'W =	0	AREA (SF)	X	0.65	U VALUE (BTU/ HR - SF - F)	X	54	F TEMPERATURE DIFFERENCE		= 0.00	MBTU / HR
METAL ROLL UP DOORS =	1792	AREA (SF)	X	0.56	U VALUE (BTU/ HR - SF - F)	X	54	F TEMPERATURE DIFFERENCE		= 0.05	MBTU / HR
WOOD GLAZED O'HEAD DR =	0	AREA (SF)	X	0.214	U VALUE (BTU/ HR - SF - F)	X	54	F TEMPERATURE DIFFERENCE		= 0.00	MBTU / HR
LG MTL SLIDING DOOR =	0	AREA (SF)	X	0.56	U VALUE (BTU/ HR - SF - F)	X	54	F TEMPERATURE DIFFERENCE		= 0.00	MBTU / HR
METAL PERSONNEL DR=	0	AREA (SF)	X	0.56	U VALUE (BTU/ HR - SF - F)	X	54	F TEMPERATURE DIFFERENCE		= 0.00	MBTU / HR
MTL/ GLAZED PERSONNEL=	50	AREA (SF)	X	0.615	U VALUE (BTU/ HR - SF - F)	X	54	F TEMPERATURE DIFFERENCE		= 0.00	MBTU / HR
					TOTAL ECO HEAT LOSSES					= 0.39	MBTU / HR
										= 406.30	MJ/HR

FT KNOX LIMITED EEAP (GLASS)

ECO - 1: INFRARED HEATING CALCULATIONS

	BASELINE	ECO - 1
SYSTEM EFFICIENCY	60%	90%
OUTSIDE DESIGN TEMP (F)	1	1
HTG TEMP SETPOINT (F)	60	55
HEATING DEGREE DAYS	4616	3396
TOTAL HEAT LOSSES (MBTU / HR)	0.42	0.39
$ /MBTU -FUEL OIL	$6.60	$6.60
$ /MBTU -NATURAL GAS	$4.62	$4.62
$ /MBTU -PPG	$10.84	$10.84

BUILDING NUMBER **6592**

GLOSSARY OF TERMS

1 MBTU = 1055 MJ
0.019=CONSTANT
.81 = CONSTANT FOR SLAB PERIMETER UNINSULATED FROM ASHRAE
CORR FACTOR = EMPIRICAL CORRECTION FACTOR FOR HEATING EFFECT VS 65 F DEGREE-DAYS FROM ASHRAE FUNDAMENTALS 1989 PG28.2

ANNUAL HEATING ENERGY CONSUMPTION (DEGREE DAY METHOD)

BASELINE =	0.42	MBTU / HR	X	4616	DEGREE DAYS X 24 HRS/DAY				
	0.6	SYS EFF	X	59	TEMP DIFFERENCE	=	1,316.82	MBTU/YR	
	1,316.82	MBTU/YR	X		CORR FACTOR 1	=		1,316.82	MBTU/YR
ECO - 1 =	0.39	MBTU / HR	X	3396	DEGREE DAYS X 24 HRS/DAY				
	0.9	SYS EFF	X	54	TEMP DIFFERENCE	=	645.86	MBTU/YR	
	645.86	MBTU/YR	X		CORR FACTOR 1	=		645.86	MBTU/YR
	ECO - 1 ANNUAL HEATING ENERGY CONSUMPTION SAVINGS					=		670.96	MBTU/YR
						=		707,867.19	MJ/YR

ANNUAL HEATING ENERGY COST

BASELINE =	1,316.82	MBTU / YR	X	4.62	$ /MBTU	=	6,083.73	$ /YR
ECO - 1 =	645.86	MBTU / YR	X	4.62	$ /MBTU	=	2,983.87	$ /YR
	ECO - 1 ANNUAL HEATING ENERGY COST SAVINGS					=	3,099.85	$ /YR

CO-RAY-VAC®

CLASSIC

B-SERIES HEAVY DUTY INFRARED RADIANT HEATING SYSTEM WITH CAST IRON COMBUSTION CHAMBER

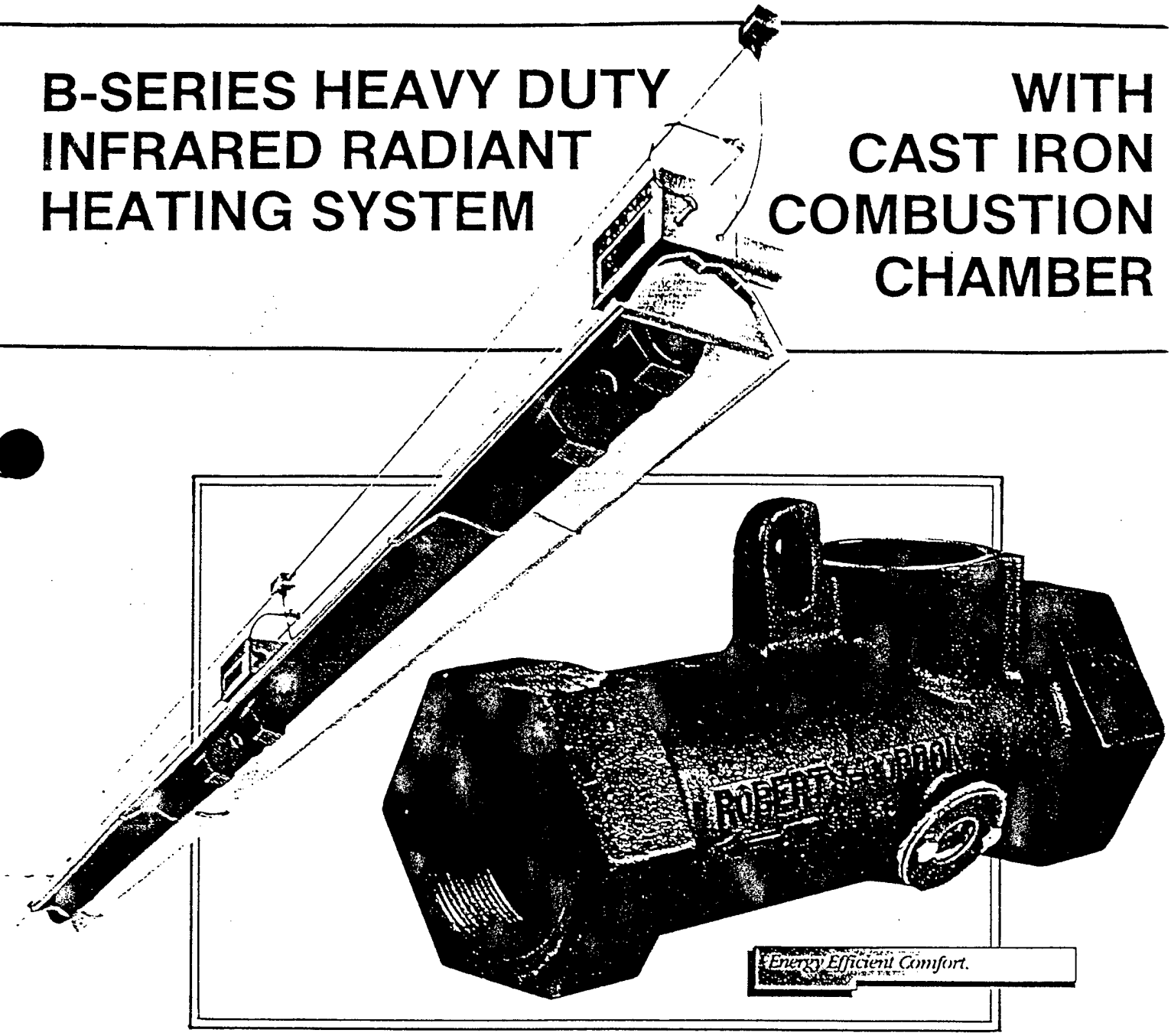

CO-RAY-VAC "Classic" B-Series Heavy Duty Systems Feature Cast Iron Combustion Chambers, Burners, Vacuum Pump Housing & Schedule 40 Pipe to Combine "Built Like They Used To" Durability with the Latest in Modern Gas Combustion Technology.

15-YEAR WARRANTY*

Everyone Says, "They Don't Build Them Like They Used To..."

Since CO-RAY-VAC infrared heating systems were first installed back in the early 1960's, satisfied customers around the country have enjoyed years of trouble-free operation with our heavy duty cast iron heating systems. Everyone says, "They don't build them like they used to,"...But Roberts-Gordon does. CO-RAY-VAC heavy duty systems are still available today. They feature all the modern improvements, but keep the original cast iron combustion chamber, burners and vacuum pump housing for rugged durability and top performance year after year. Offered exclusively by Roberts-Gordon, the CO-RAY-VAC "Classic" heavy duty series is especially suited for installations where an extended lifetime of trouble-free service is desired.

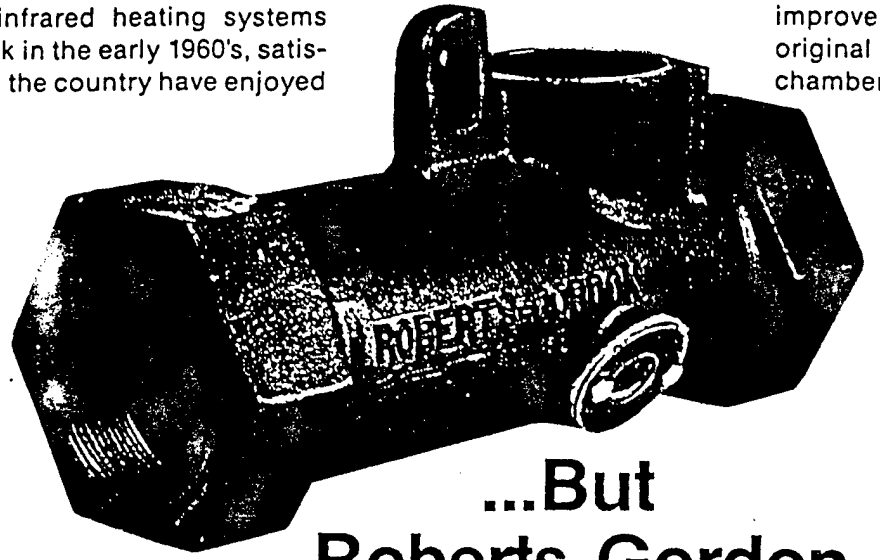

...But Roberts-Gordon Does!

* Roberts-Gordon cast iron combustion chambers and vacuum pump housing are warranteed for 15 years against manufacturing defects and defects in workmanship.

CO-RAY-VAC Gas-Fired, Fully Vented, Low-Intensity Radiant Heating System

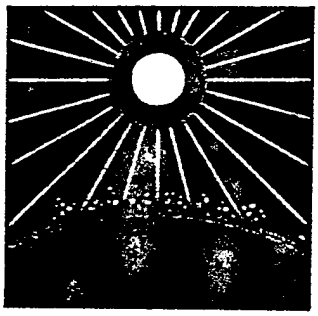

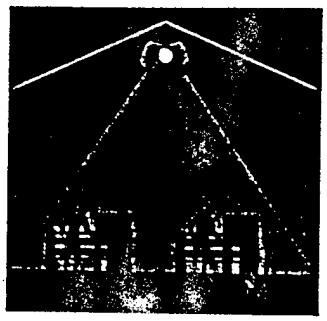

How Infrared Heating Works

High-efficiency CO-RAY-VAC heating systems warm the workplace in the same manner as the sun heats the earth. Like the sun, CO-RAY-VAC produces infrared rays. These low-intensity rays are directed downward by specially designed reflectors to spread a draftless blanket of warmth that heats the floor, people and objects directly. The warm floor and objects then release heat to warm the air. Since solid objects, not the air, are heated directly, people are comfortable at lower building thermostat settings.

Outstanding Efficiency, Comfort and Savings

Design-Certified by the American Gas Association.

Outstanding Energy Efficiency—Independently tested Annual Fuel Utilization (AFUE) rating of 90.43%.

Fuel Cost Savings—Customers document savings up to 50% and more on their annual heating costs.

Low Maintenance—Cast iron combustion chambers, burners & vacuum pump housings are especially designed for trouble-free service.

Clean, Quiet, Draft-Free, Uniform Heat—CO-RAY-VAC spreads heat evenly over large areas without noise, drafts or blasts of hot air. No swirling dust or grit, and no interference with your operations.

Greater Worker Comfort & Productivity—Because of the principle of CO-RAY-VAC infrared heating, employees are more comfortable in more favorable conditions. This can boost morale and productivity!

Faster Heat Recovery—Floor and objects act as heat reservoirs, giving off heat and providing fast heat recovery when large doors are closed.

These are the features of the CO-RAY-VAC Heavy Duty Systems...

- Burners in series; wide range of inputs from 20,000 to 120,000 BTU for high and low mounting heights.

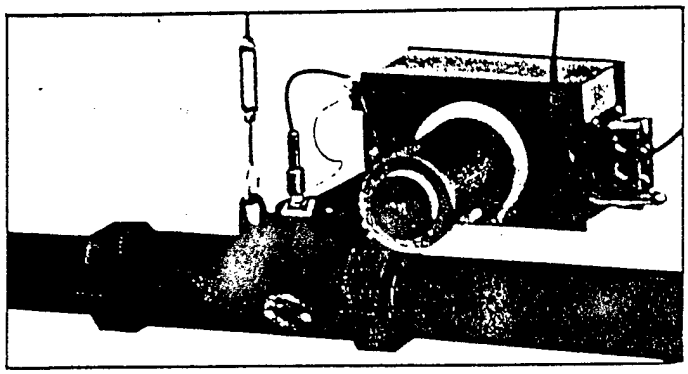

- Heavy duty cast iron combustion chamber for durability and long life.

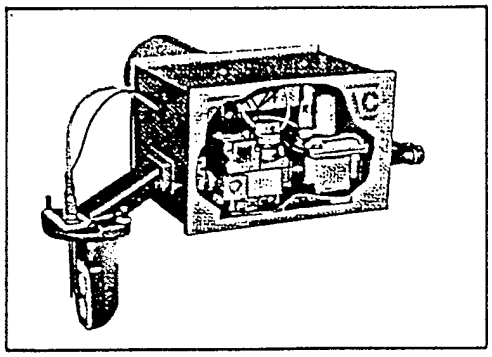

- Cast iron burner and modern direct spark electronic ignition systems eliminate standing pilots and are compatible with state-of-the-art temperature control systems.

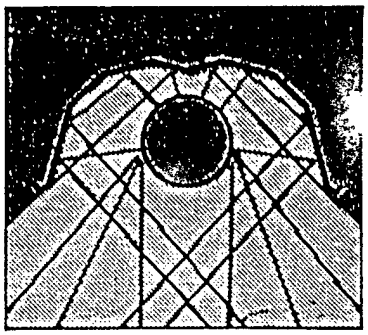

- Deep dish reflectors and perimeter reflectors maximize radiant output in all types of buildings.

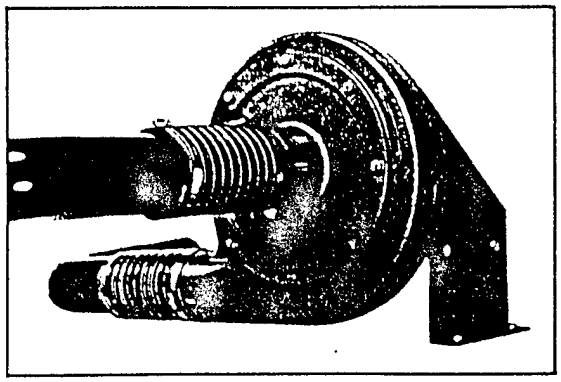

- Totally enclosed vacuum pump motor for superior, trouble-free operation even in the most severe building environments.
- Can be suspended up to 60 ft. or more from the floor to clear gantry cranes, high rising equipment, etc.
- Fully vented, uses natural or propane gas.

CO-RAY-VAC Heavy Duty Systems

Similar to standard CO-RAY-VAC system, but standard steel combustion chamber and standard radiant tube replaced with cast iron combustion chamber and schedule 40 steel radiant pipe.

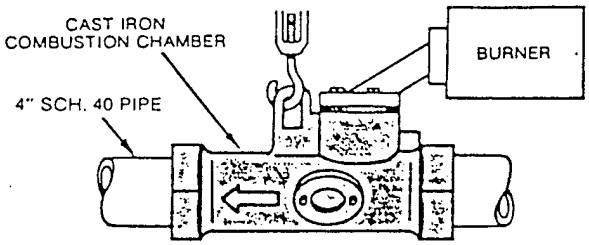

SPECIFICATIONS						
MODEL	CRV-B2	CRV-B4	CRV-B6	CRV-B8	CRV-B10	CRV-B12
GAS INPUT BTU/HR.	20,000	40,000	60,000	80,000	100,000	120,000
CLEARANCES TO COMBUSTIBLES WITH STANDARD REFLECTOR						
ABOVE	4"	4"	4"	4"	4"	4"
BELOW	48"	48"	48"	48"	60"	60"
SIDE	20"	20"	20"	20"	36"	36"

Here are just a few installations Nationwide in which CO-RAY-VAC Heavy Duty Cast Iron Combustion Chambers have provided dependable service for 15 years or more:

Marplex Products Co., Inc.

June 9, 1987

Mr. Harold Steineke
Wisconsin Instument & Control, Inc.
3196 N. Main Street
Oshkosh, WI 54901

Dear Mr. Steineke:

It is interesting to discover that Marplex's Co-Ray-Vac heating system was the first installation in Wisconsin and also one of the first in the country.

I am pleased to advise you that our system works very well even after 25 years. Our maintenance is minimal and we are looking forward to the next quarter century of operation.

Sincerely,

MARPLEX PRODUCTS CO., INC.

James L. Sweet
V-Pres. & Gen. Mgr.

JLS:mah

Rhinelander, Wisconsin 54501. (716) 362-3193

Rail's Autobody Repair
Belle Fourche, SD

Rice County Highway Department
Fairbault, MN

Robinson Welding
Livonia, MI

Sauder Woodworking Company
Archbold, OH

Scott Electric
Greensburg, PA

Stoddard Aero Service
Anchorage, AK

Tower Tool Company
Fraser, MI

White Castle Systems
Carteret, NJ

William Britland Auto Body, Inc.
Green Brook, NJ

Breach Mold & Tool
New Albany, IN

Brennan Marine
Bay City, MI

Clover Park Technical School
Tacoma, WA

Dakota Block Company
Rapid City, SD

Daytonna Country Club
Dayton, MN

Hass Cabinet Company
Sellersburg, IN

La Choy Food Products
Archbold, OH

Lang Manufacturing
Redmond, WA

CO-RAY-VAC
Division of
Roberts-Gordon, Inc.
Subsidary of A.J. Industries Inc.
1250 William Street • P.O. Box 44 • Buffalo, NY 14240
Phone: (716) 852-4400 • FAX: (716) 852-0854

CALL TOLL FREE: 1-800-828-7450
IN NEW YORK STATE: 1-800-221-0955

AMERICAN ASSOCIATION CAS DESIGN COMPLIES WITH NATIONAL SAFETY STANDARDS CERTIFIED

RODNEY WILL, INC.
Manufacturers' Representative
2104 NORTHFIELD DRIVE
LOUISVILLE, KENTUCKY 40222
PHONE 502 425-3561
FAX 502 425-3016

VANTAGE II®

Cost-Saving, Low-Intensity Infrared Unitary Heaters

RODNEY WILL, INC
Manufacturers' Representative
2104 NORTHFIELD DRIVE
LOUISVILLE, KENTUCKY 40222
PHONE 502 425-3581
FAX 502 425-3012

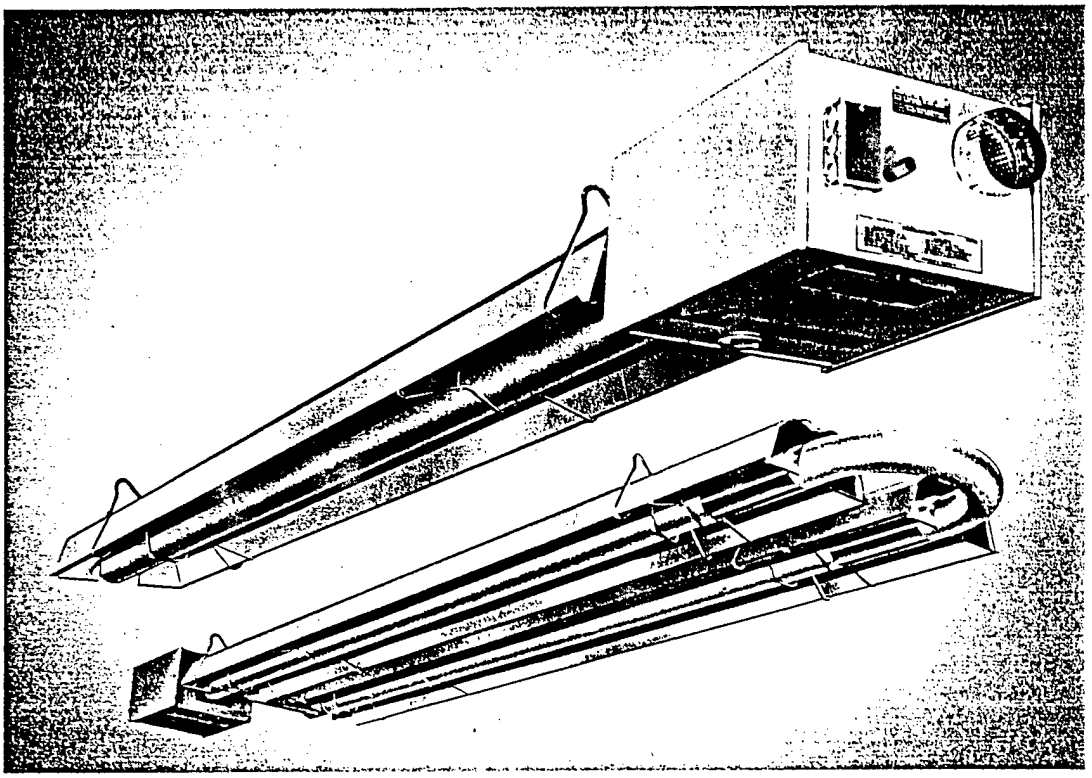

Roberts-Gordon, Inc.

Energy Efficient Comfort.

VANTAGE II Unitary Heaters Lower Fuel Costs and Raise Comfort Levels.

Demonstrated Savings

Modern gas combustion technology combined with the principles of infrared energy enable VANTAGE II heaters to reduce fuel costs substantially while improving comfort conditions. Users report heating bills cut by up to 50% or more!

Low Cost...Easy to Install and Maintain

The VANTAGE II models are low-cost, field-assembled infrared heaters that are easy to install and require only minimal maintenance. They are designed to provide years of economical operation and trouble-free service.

Versatility

VANTAGE II heaters can be installed separately or in combination to fit any floor plan. Straight, L- and U-tube configurations are available. Tube lengths are offered from 10 through 60 feet. Ideal for large areas as well as hard-to-heat spaces!

Reliability and Expertise

Roberts-Gordon pioneered low-intensity infrared heating systems in 1962 and manufactures the broadest line of low-intensity heating equipment in North America. Backed by a limited three-year warranty, each VANTAGE II unitary heater is built to uphold the well-established Roberts-Gordon standards of engineering excellence, efficiency and reliability.

Applications Include:

- Automotive Facilities
- Warehouses
- Manufacturing Facilities
- Fire Stations
- Agricultural Buildings
- Recreational Facilities
- Machine Shops
- Aircraft Hangars
- Vehicle Maintenance Buildings

Clean, quiet, draft-free Vantage radiant heat is ideal for automotive service facilities. Unlike forced-air unit heaters, Vantage does not spread dirt, grit or dust.

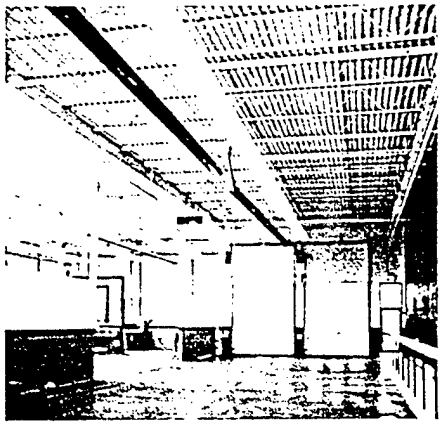

Vantage unitary heaters are available in a variety of lengths, shapes and configurations to fit any floor plan. Two straight-tube models are shown above in a car dealership.

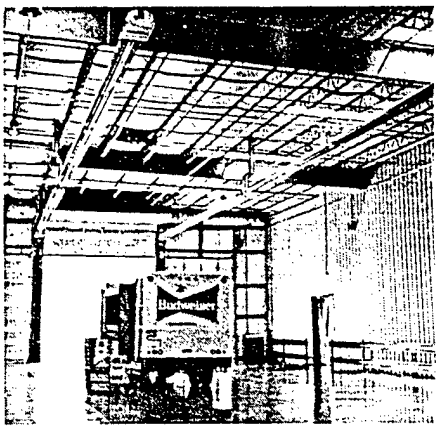

Floors are kept warm by Vantage infrared energy and act as heat reservoirs to provide rapid heat recovery after bay doors are closed in this warehouse/shipping area.

Features:

- Extensive use of corrosion-resistant materials.
- Weight-saving construction to ease installation.
- Forced draft design eliminates the need for a heat-siphoning draft hood.
- 10 through 60 foot tube lengths.
- Clean, quiet, draft-free heat.
- Three-year limited warranty on all components.
- A.G.A. design certified.

Burner Box:

- 40,000; 60,000; 80,000; 100,000; 125,000 and 150,000 BTU/Hr. models available.
- Natural gas and L.P. models available.
- Moisture-resistant design.
- Nickel plated steel burner cup.
- Outside air adapter standard.
- Hot surface ignition.
- Three-try ignition module.
- Door interlock safety switch.
- All components easily accessed.
- Electrostatically applied paint.
- Durable spot welded construction.
- Mica flame observation window.
- Balanced air rotor.
- Stainless steel flex gas line and high pressure gas cock included.

Tube and Reflector:

- 4" diameter 16-gauge tubing.
- Quick assembly couplings.
- Deep-dish aluminum reflectors maximize energy reflection, beaming virtually all of the radiant heat downward.
- Reflectors can be tilted 45° to direct heat where needed.
- Entire U-tube heater also can be tilted 45°.
- End caps included.
- Nickel plated hangers.
- Chrome plated hardware.
- Flue connector included.
- 180° U-package option.
- 90° L-package option.
- Decorative grille option.
- Side reflector option.

"The VANTAGE II heater utilizes design concepts and engineering principles proven by more than 25 years of infrared heating experience."

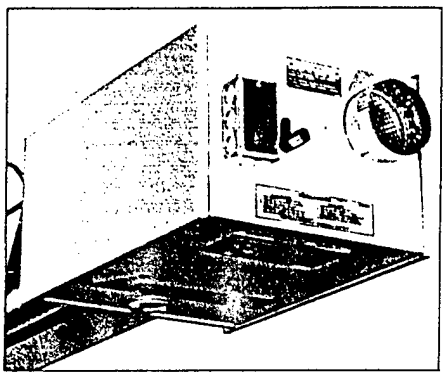

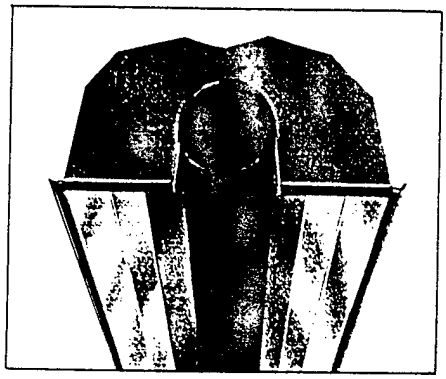

Architectural/Engineering Short Form Specifications
VANTAGE II CTH2 Series

Gas-fired, vented, infrared heaters shall be furnished and installed in accordance with governing codes and as shown per building drawing(s) as described below.

Heaters shall be VANTAGE II, model number CTH2- _____, _____ BTU/Hr. as manufactured by Roberts-Gordon, Inc., Buffalo, New York.

Heaters shall be equipped with a direct sense silicon-carbide hot surface ignition control system with 100% shut-off ignition device. Power supplied to each heater shall be 120V, 60Hz, 10. Heater to be equipped with totally enclosed motor with thermal overload motor protection, balanced air rotor, combustion air proving safety pressure switch, nickel plated burner cup, combustion chamber equipped with sight glass for visual inspection of igniter element and burner flame. Air intake collar standard. Radiant tube assembly to be 4" diameter, aluminized steel first 10 feet. Hot rolled steel remainder of unit. (Or at customer option, aluminized steel for entire tube length.) Reflector to be of aluminum material and designed to direct all radiant output below horizontal centerline of radiant tube. Heaters shall be vented in accordance with manufacturer's recommendations as approved by A.G.A. and ANSI Z-223.1 National Fuel Gas Code. Heaters shall be so designed to operate without requiring heater modifications or adjustments on _____ gas having a net heating value of _____ BTU per cubic foot and a specific gravity of _____.

Heaters shall be Design Certified by the American Gas Association (A.G.A.). Supplier shall provide a manufacturer's written warranty covering all components for a period of three (3) years.

VANTAGE II® CTH2 SERIES SPECIFICATIONS

FLUE CONNECTION	GAS CONNECTION	ELECTRICAL RATING	TUBE DIAMETER	IGNITION SYSTEM	MIN. GAS INLET PRES.
4" (O.D.)	1/2" NPT	120VAC, 60Hz. 1.0 amp run 5.0 amp start	4"	Hot surface (Three-try)	Nat. 4.6" W.C. L.P. 11.0" W.C.

MODEL	BTU/Hr. (Natural Gas or L.P.)	SHIPPING WEIGHT
CTH2-40	40,000	95 lbs.
CTH2-60	60,000	130 lbs.
CTH2-80	80,000	130 lbs.

MODEL	BTU/Hr. (Natural Gas or L.P.)	SHIPPING WEIGHT
CTH2-100	100,000	165 lbs.
CTH2-125	125,000	200 lbs.
CTH2-150	150,000	235 lbs.

DIMENSIONS (Standard Models) STRAIGHT

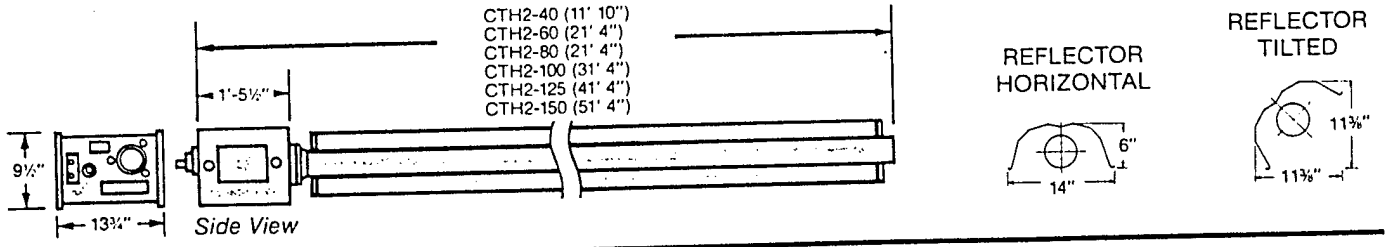

U-TUBE

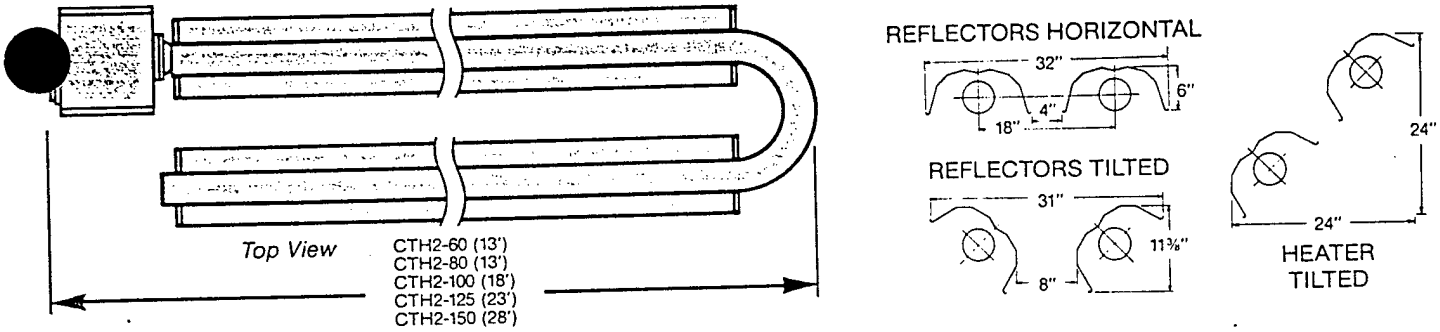

CLEARANCES TO COMBUSTIBLES*

		CTH2-40			CTH2-60			CTH2-80			CTH2-100			CTH2-125			CTH2-150		
Configuration	Reflector	Top	Below	Side	Top	Below	Side	Top	Below	Side	Top	Below	Side	Top	Below	Side	Top	Below	Side
Straight	Horizontal	4"	50"	22"	4"	60"	30"	4"	63"	33"	4"	68"	35"	4"	74"	41"	4"	77"	45"
Straight	Tilted	4"	45"	4"/42"	4"	54"	4"/50"	4"	60"	4"/56"	6"	68"	4"/60"	6"	72"	4"/65"	8"	78"	4"/70"
U-Tube	Horizontal	—	—	—	4"	60"	25"/30"	4"	66"	32"/33"	4"	73"	34"/35"	4"	76"	38"/41"	4"	81"	42"/45"
U-Tube	Tilted	—	—	—	4"	54"	18"/50"	4"	60"	18"/56"	6"	68"	18"/60"	6"	72"	18"/66"	8"	78"	18"/70"

Configuration	Heater	Top	Below	Side	Top	Below	Side	Top	Below	Side	Top	Below	Side	Top	Below	Side	Top	Below	Side
U-Tube	Tilted	—	—	—	4"	54"	4"/38"	4"	60"	4"/42"	4"	68"	4"/48"	4"	72"	4"/57"	4"	78"	4"/62"

*See installation manual for complete information.

Roberts-Gordon, Inc.

P.O. Box 44 • Buffalo, NY 14240-0044
Phone: (716) 852-4400 • Fax: (716) 852-0854

DESIGN AMERICAN GAS ASSOCIATION CERTIFIED

CALL TOLL FREE: 1-800-828-7450
IN NEW YORK: 1-800-221-0955

Printed in U.S.A.

6 FEMP PROJECT 5: WINDOW INSULATION AT TWO BUILDINGS

This section includes FEMP project packet for FEMP Project 5: Window Insulation at two buildings. Following this table of contents is a project summary table, the life cycle cost analysis for this project, and the life cycle cost analysis, cost estimates, and calculations for each building/area included in this project. Below is a detailed index of the information included in this section.

Table 6.1: Project Summary - Window/Wall Insulation at Two Buildings 6-2
FEMP Project 5 LCCA 6-3

Buildings:
5297 6-4
6991 6-11

Catalog Cut Sheets 6-18

TABLE 6.1
PROJECT SUMMARY:
WINDOW INSULATION - FEMP PROJECT 5

ECO NUMBER	BUILDING NUMBER	BASELINE ENERGY (MBTU)	ECO ENERGY (MBTU)	ENERGY SAVINGS (MBTU)	1ST YEAR SAVINGS	INVESTMENT COST	NON-ENERGY ANNUAL RECURRING	TOTAL NON-ENERGY NON-RECURRING	SPB (YR)	SIR
2	5297	2,618	2,217	401	$1,855	$8,973	$0	$0	4.74	4.42
2	6591	2,650	2,249	401	$1,855	$8,973	$0	$0	4.74	4.42
2	FEMP PROJECT 5	5,269	4,466	803	$3,710	$17,946	$0	$0	4.74	4.42

TABLE 6.1
PROJECT SUMMARY:
WINDOW INSULATION - FEMP PROJECT 5

ECO NUMBER	BUILDING NUMBER	BASELINE ENERGY (MJ)	ECO ENERGY (MJ)	ENERGY SAVINGS (MJ)	1ST YEAR SAVINGS	INVESTMENT COST	NON-ENERGY ANNUAL RECURRING	TOTAL NON-ENERGY NON-RECURRING	SPB (YR)	SIR
2	5297	2,762,401	2,338,893	423,509	$1,855	$8,973	$0	$0	4.74	4.42
2	6591	2,795,908	2,372,400	423,509	$1,855	$8,973	$0	$0	4.74	4.42
2	FEMP PROJECT 5	5,558,310	4,711,292	847,017	$3,710	$17,946	$0	$0	4.74	4.42

LIFE CYCLE COST ANALYSIS SUMMARY STUDY: ECO2
ENERGY CONSERVATION INVESTMENT PROGRAM (ECIP) LCCID 1.080
INSTALLATION & LOCATION: FORT KNOX REGION NOS. 4 CENSUS: 3
PROJECT NO. & TITLE: ECO2 FEMP PROJECT 5 - WINDOW/WALL INSULATION
FISCAL YEAR 95 DISCRETE PORTION NAME: INFRARED
ANALYSIS DATE: 10-19-94 ECONOMIC LIFE 20 YEARS PREPARED BY: JAH

1. INVESTMENT

A. CONSTRUCTION COST	$ 15988.	
B. SIOH	$ 799.	
C. DESIGN COST	$ 799.	
D. TOTAL COST (1A+1B+1C)	$ 17587.	
E. SALVAGE VALUE OF EXISTING EQUIPMENT	$ 0.	
F. PUBLIC UTILITY COMPANY REBATE	$ 0.	
G. TOTAL INVESTMENT (1D - 1E - 1F)		$ 17587.

2. ENERGY SAVINGS (+) / COST (-)
DATE OF NISTIR 85-3273-X USED FOR DISCOUNT FACTORS OCT 1993

FUEL	UNIT COST $/MBTU(1)	SAVINGS MBTU/YR(2)	ANNUAL $ SAVINGS(3)	DISCOUNT FACTOR(4)	DISCOUNTED SAVINGS(5)
A. ELECT	$ .00	0.	$ 0.	15.61	$ 0.
B. DIST	$ 6.60	0.	$ 0.	17.56	$ 0.
C. RESID	$ .00	0.	$ 0.	19.97	$ 0.
D. NAT G	$ 4.62	803.	$ 3709.	20.96	$ 77745.
E. COAL	$ .00	0.	$ 0.	17.58	$ 0.
F. LPG	$ .00	0.	$ 0.	16.12	$ 0.
M. DEMAND SAVINGS			$ 0.	14.74	$ 0.
N. TOTAL		803.	$ 3709.		$ 77745.

3. NON ENERGY SAVINGS(+) / COST(-)

A. ANNUAL RECURRING (+/-) $ 0.
(1) DISCOUNT FACTOR (TABLE A) 14.74
(2) DISCOUNTED SAVING/COST (3A X 3A1) $ 0.

B. NON RECURRING SAVINGS(+) / COSTS(-)

ITEM	SAVINGS(+) COST(-) (1)	YR OC (2)	DISCNT FACTR (3)	DISCOUNTED SAVINGS(+)/ COST(-)(4)
d. TOTAL	$ 0.			0.

C. TOTAL NON ENERGY DISCOUNTED SAVINGS(+)/COST(-)(3A2+3Bd4) $ 0.

4. FIRST YEAR DOLLAR SAVINGS 2N3+3A+(3Bd1/(YRS ECONOMIC LIFE)) $ 3709.

5. SIMPLE PAYBACK PERIOD (1G/4) 4.74 YEARS

6. TOTAL NET DISCOUNTED SAVINGS (2N5+3C) $ 77745.

7. SAVINGS TO INVESTMENT RATIO (SIR)=(6 / 1G)= 4.42
(IF < 1 PROJECT DOES NOT QUALIFY)

8. ADJUSTED INTERNAL RATE OF RETURN (AIRR): 11.05 %

LIFE CYCLE COST ANALYSIS SUMMARY STUDY: 5297ECO2
ENERGY CONSERVATION INVESTMENT PROGRAM (ECIP) LCCID 1.080
INSTALLATION & LOCATION: FORT KNOX REGION NOS. 4 CENSUS: 3
PROJECT NO. & TITLE: 5297ECO2 ECO-2 GLASS IMPROVEMENT
FISCAL YEAR 95 DISCRETE PORTION NAME: INFRARED
ANALYSIS DATE: 10-18-94 ECONOMIC LIFE 20 YEARS PREPARED BY: JAH

1. INVESTMENT

A. CONSTRUCTION COST	$ 7994.			
B. SIOH	$ 400.			
C. DESIGN COST	$ 400.			
D. TOTAL COST (1A+1B+1C)	$ 8793.			
E. SALVAGE VALUE OF EXISTING EQUIPMENT		$ 0.		
F. PUBLIC UTILITY COMPANY REBATE		$ 0.		
G. TOTAL INVESTMENT (1D - 1E - 1F)			$	8793.

2. ENERGY SAVINGS (+) / COST (-)
DATE OF NISTIR 85-3273-X USED FOR DISCOUNT FACTORS OCT 1993

FUEL	UNIT COST $/MBTU(1)	SAVINGS MBTU/YR(2)	ANNUAL $ SAVINGS(3)	DISCOUNT FACTOR(4)	DISCOUNTED SAVINGS(5)
A. ELECT	$ .00	0.	$ 0.	15.61	$ 0.
B. DIST	$ 6.60	0.	$ 0.	17.56	$ 0.
C. RESID	$ .00	0.	$ 0.	19.97	$ 0.
D. NAT G	$ 4.62	401.	$ 1855.	20.96	$ 38873.
E. COAL	$ .00	0.	$ 0.	17.58	$ 0.
F. LPG	$ .00	0.	$ 0.	16.12	$ 0.
M. DEMAND SAVINGS			$ 0.	14.74	$ 0.
N. TOTAL		401.	$ 1855.		$ 38873.

3. NON ENERGY SAVINGS(+) / COST(-)

A. ANNUAL RECURRING (+/-) $ 0.
(1) DISCOUNT FACTOR (TABLE A) 14.74
(2) DISCOUNTED SAVING/COST (3A X 3A1) $ 0.

B. NON RECURRING SAVINGS(+) / COSTS(-)

ITEM	SAVINGS(+) COST(-) (1)	YR OC (2)	DISCNT FACTR (3)	DISCOUNTED SAVINGS(+)/ COST(-) (4)
d. TOTAL	$ 0.			0.

C. TOTAL NON ENERGY DISCOUNTED SAVINGS(+)/COST(-)(3A2+3Bd4) $ 0.

4. FIRST YEAR DOLLAR SAVINGS 2N3+3A+(3Bd1/(YRS ECONOMIC LIFE)) $ 1855.

5. SIMPLE PAYBACK PERIOD (1G/4) 4.74 YEARS

6. TOTAL NET DISCOUNTED SAVINGS (2N5+3C) $ 38873.

7. SAVINGS TO INVESTMENT RATIO (SIR)=(6 / 1G)= 4.42
(IF < 1 PROJECT DOES NOT QUALIFY)

8. ADJUSTED INTERNAL RATE OF RETURN (AIRR): 11.05 %

Estimate:	BLDG 5297	Date:	06-Aug-94
Description:	COST ESTIMATE		
Project:	LIMITED EEAP(GLASS	Bid Date:	
Location:	FORT KNOX, KY	Job #:	94013.02
Sq. footage:	********	City indx:	Louisville, KY

Line #	Description	Manhours	Matl	Labor	Equipment	Sub	Total
0873022200	ASTRAGALS, ALUM.,FLAT,1/8" X 2", "L" EXTRUSION,MAGNETIC					363.00 L.F.	
Unit values		0.11	6.65	1.92	0.00	0.00	8.57
Totals		38.84	$2,413	$697	$0	$0	$3,110
0884040010	GLS & GLZG:PLXGLS,CLR,1/8"T, CUT SHEETS					764.00 S.F.	
Unit values		0.09	2.96	1.69	0.00	0.00	4.65
Totals		71.82	$2,258	$1,294	$0	$0	$3,552
U08 DOORS/WNDW		111	$4,671	$1,991	$0	$0	$6,662

Line #	Description					
	Manhours	Matl	Labor	Equipment	Sub	Total
ESTIMATE TOTAL	111	$4,671	$1,991	$0	$0	$6,662
SALES TAX	0.00%	$0				
MATL MARKUP	0.00%	$0				
LABOR MARKUP	0.00%		$0			
EQUIPT MARKUP	0.00%			$0		
SUB MARKUP	0.00%				$0	
TOTAL BEFORE CONTINGENC		$4,671	$1,991	$0	$0	$6,662
CONTINGENCY	10.00%					$666
BOND	0.00%					$0
PROFIT	10.00%					$666
JOB TOTAL						$7,994

Estimate:	BLDG 5297	Date:	06-Aug-94
Description:	COST ESTIMATE		
Project:	LIMITED EEAP(GLASS	Bid Date:	
Location:	FORT KNOX, KY	Job #:	94013.02
Sq. footage:	********	City indx:	Louisville, KY

SUMMARY

	Manhours	Matl	Labor	Equipment	Sub	Total
U08 DOORS/WNDW	111	$4,671	$1,991	$0	$0	$6,662
TOTAL	111	$4,671	$1,991	$0	$0	$6,662
SALES TAX	0.00%	$0				
MATL MARKUP	0.00%	$0				
LABOR MARKUP	0.00%		$0			
EQUIPT MARKUP	0.00%			$0		
SUB MARKUP	0.00%				$0	
TOTAL BEFORE CONTINGENC		$4,671	$1,991	$0	$0	$6,662
CONTINGENCY	10.00%					$666
BOND	0.00%					$0
PROFIT	10.00%					$666
JOB TOTAL						$7,994

FT KNOX LIMITED EEAP (GLASS)

ECO - 2: WINDOW/ WALL INSULATION

BUILDING NUMBER: 5297

BUILDING HEATING TEMPERATURE SETPOINT: 70 F
OUTSIDE DESIGN TEMPERATURE 1 F
TEMPERATURE DIFFERENCE 69 F

INFILTRATION LOSSES =	1	AIR CHGS	X	447990	VOL (CU FT)	X	69	F TEMP DIFF	X 0.019	=	0.59	MBTU / HR
FLOOR LOSSES =	466	LINEAR FEET OF PERIMETER				X	69	F TEMP DIFF	X 0.81	=	0.03	MBTU / HR

SURFACE HEAT LOSSES

MTL DECK, FLAT ROOF =	14933	AREA (SF)	X	0.105	U VALUE (BTU/ HR - SF - F)	X	69	F TEMPERATURE DIFFERENCE		=	0.11	MBTU / HR
4" FACE BK/ CMU BLK WALL =	10810	AREA (SF)	X	0.176	U VALUE (BTU/ HR - SF - F)	X	69	F TEMPERATURE DIFFERENCE		=	0.13	MBTU / HR
CORR MTL PNL WALL =	3654	AREA (SF)	X	0.17	U VALUE (BTU/ HR - SF - F)	X	69	F TEMPERATURE DIFFERENCE		=	0.04	MBTU / HR
TINTED DBL PANE DOORS =	294	AREA (SF)	X	0.65	U VALUE (BTU/ HR - SF - F)	X	69	F TEMPERATURE DIFFERENCE		=	0.01	MBTU / HR
CLR SINGLE PANE WIN'WS (GYM) =	764	AREA (SF)	X	1.235	U VALUE (BTU/ HR - SF - F)	X	69	F TEMPERATURE DIFFERENCE		=	0.07	MBTU / HR
CLR SGL PANE WINDOWS IN LOCKER ROOMS=	53	AREA (SF)	X	1.235	U VALUE (BTU/ HR - SF - F)	X	69	F TEMPERATURE DIFFERENCE		=	0.00	MBTU / HR
MTL OVERHEAD DOORS =		AREA (SF)	X	0.56	U VALUE (BTU/ HR - SF - F)	X	69	F TEMPERATURE DIFFERENCE		=	0.00	MBTU / HR
WOOD GLAZED O'HEAD DR =		AREA (SF)	X	0.583	U VALUE (BTU/ HR - SF - F)	X	69	F TEMPERATURE DIFFERENCE		=	0.00	MBTU / HR
LG MTL SLIDING DOOR =		AREA (SF)	X	0.56	U VALUE (BTU/ HR - SF - F)	X	69	F TEMPERATURE DIFFERENCE		=	0.00	MBTU / HR
METAL PERSONNEL DR=		AREA (SF)	X	0.56	U VALUE (BTU/ HR - SF - F)	X	69	F TEMPERATURE DIFFERENCE		=	0.00	MBTU / HR
WOOD/GLAZED PERSONNEL=		AREA (SF)	X	0.615	U VALUE (BTU/ HR - SF - F)	X	69	F TEMPERATURE DIFFERENCE		=	0.00	MBTU / HR

TOTAL BASELINE HEAT LOSSES = **0.98** **MBTU / HR**
= **1,032.31** **MJ/HR**

FT KNOX LIMITED EEAP (GLASS)

ECO - 2: WINDOW/ WALL INSULATION

BUILDING NUMBER: 5297

BUILDING HEATING TEMPERATURE SETPOINT: 70 F
OUTSIDE DESIGN TEMPERATURE 1 F
TEMPERATURE DIFFERENCE 69 F

INFILTRATION LOSSES =	0.8	AIR CHGS	X	447990	VOL (CU FT)	X	69	F TEMP DIFF	X 0.019	=	0.47 MBTU / HR
FLOOR LOSSES =	466	LINEAR FEET OF PERIMETER				X	69	F TEMP DIFF	X 0.81	=	0.03 MBTU / HR
SURFACE HEAT LOSSES											
MTL DECK, FLAT ROOF =	14933	AREA (SF)	X	0.105	U VALUE (BTU/ HR - SF - F)	X	69	F TEMPERATURE DIFFERENCE		=	0.11 MBTU / HR
4" FACE BK/ CMU BLK WALL =	10810	AREA (SF)	X	0.176	U VALUE (BTU/ HR - SF - F)	X	69	F TEMPERATURE DIFFERENCE		=	0.13 MBTU / HR
CORR MTL PNL WALL =	3654	AREA (SF)	X	0.17	U VALUE (BTU/ HR - SF - F)	X	69	F TEMPERATURE DIFFERENCE		=	0.04 MBTU / HR
TINTED DBL PANE DOORS =	294	AREA (SF)	X	0.65	U VALUE (BTU/ HR - SF - F)	X	69	F TEMPERATURE DIFFERENCE		=	0.01 MBTU / HR
CLR SGL PANE WIN'WS W/ SEALMASTER INSUL WIN'W =	764	AREA (SF)	X	0.6175	U VALUE (BTU/ HR - SF - F)	X	69	F TEMPERATURE DIFFERENCE		=	0.03 MBTU / HR
CLR SGL PANE WINDOWS IN LOCKER ROOMS=	53	AREA (SF)	X	1.235	U VALUE (BTU/ HR - SF - F)	X	69	F TEMPERATURE DIFFERENCE		=	0.00 MBTU / HR
METAL ROLL UP DOORS =	0	AREA (SF)	X	0.56	U VALUE (BTU/ HR - SF - F)	X	69	F TEMPERATURE DIFFERENCE		=	0.00 MBTU / HR
MTL OVERHEAD DOORS =	0	AREA (SF)	X	0.583	U VALUE (BTU/ HR - SF - F)	X	69	F TEMPERATURE DIFFERENCE		=	0.00 MBTU / HR
WOOD GLAZED O'HEAD DR =	0	AREA (SF)	X	0.56	U VALUE (BTU/ HR - SF - F)	X	69	F TEMPERATURE DIFFERENCE		=	0.00 MBTU / HR
LG MTL SLIDING DOOR =	0	AREA (SF)	X	0.56	U VALUE (BTU/ HR - SF - F)	X	69	F TEMPERATURE DIFFERENCE		=	0.00 MBTU / HR
METAL PERSONNEL DR=	0	AREA (SF)	X	0.615	U VALUE (BTU/ HR - SF - F)	X	69	F TEMPERATURE DIFFERENCE		=	0.00 MBTU / HR
					TOTAL ECO HEAT LOSSES					=	**0.83 MBTU / HR**
										=	**874.05 MJ/HR**

FT KNOX LIMITED EEAP (GLASS)

ECO - 2: WINDOW/ WALL INSULATION

	BASELINE	ECO - 2
SYSTEM EFFICIENCY	60%	60%
OUTSIDE DESIGN TEMP (F)	1	1
HTG TEMP SETPOINT (F)	70	70
HEATING DEGREE DAYS	4616	4616
TOTAL HEAT LOSSES (MBTU / HR)	0.98	0.83
$ /MBTU -FUEL OIL	$6.60	$6.60
$ /MBTU -NATURAL GAS	$4.62	$4.62
$ /MBTU -PPG	$10.84	$10.84

BUILDING NUMBER 5297

GLOSSARY OF TERMS

1 MBTU = 1055 MJ
0.019=CONSTANT
.81 = CONSTANT FOR SLAB PERIMETER UNINSULATED FROM ASHRAE
CORR FACTOR = EMPIRICAL CORRECTION FACTOR FOR HEATING EFFECT VS 65 F DEGREE-DAYS FROM ASHRAE FUNDAMENTALS 1989 PG28.2

ANNUAL HEATING ENERGY CONSUMPTION (DEGREE DAY METHOD)

BASELINE =	0.98 / 0.6	MBTU / HR / SYS EFF	X	4616 / 69	DEGREE DAYS / TEMP DIFFERENCE	X 24 HRS/DAY	=	2,618.39	MBTU/YR
	2,618.39	MBTU/YR	X	CORR FACTOR	1		=	2,618.39	MBTU/YR
ECO - 2 =	0.83 / 0.6	MBTU / HR / SYS EFF	X	4616 / 69	DEGREE DAYS / TEMP DIFFERENCE	X 24 HRS/DAY	=	2,216.96	MBTU/YR
	2,216.96	MBTU/YR	X	CORR FACTOR	1		=	2,216.96	MBTU/YR
	ECO - 2 ANNUAL HEATING ENERGY CONSUMPTION SAVINGS						=	**401.43**	**MBTU/YR**
							=	**423,510.48**	**MJ/YR**

ANNUAL HEATING ENERGY COST

BASELINE =	2,618.39	MBTU / YR	X	6.6	$ /MBTU	=	17,281.39	$ /YR
ECO - 2 =	2,216.96	MBTU / YR	X	6.6	$ /MBTU	=	14,631.94	$ /YR
	ECO - 2 ANNUAL HEATING ENERGY COST SAVINGS					=	**2,649.45**	**$ /YR**

LIFE CYCLE COST ANALYSIS SUMMARY STUDY: 6591ECO2
ENERGY CONSERVATION INVESTMENT PROGRAM (ECIP) LCCID 1.080
INSTALLATION & LOCATION: FORT KNOX REGION NOS. 4 CENSUS: 3
PROJECT NO. & TITLE: 6591ECO2 ECO-2 GLASS IMPROVEMENT
FISCAL YEAR 95 DISCRETE PORTION NAME: INFRARED
ANALYSIS DATE: 10-18-94 ECONOMIC LIFE 20 YEARS PREPARED BY: JAH

1. INVESTMENT

A. CONSTRUCTION COST	$	7994.
B. SIOH	$	400.
C. DESIGN COST	$	400.
D. TOTAL COST (1A+1B+1C)	$	8793.
E. SALVAGE VALUE OF EXISTING EQUIPMENT	$	0.
F. PUBLIC UTILITY COMPANY REBATE	$	0.
G. TOTAL INVESTMENT (1D - 1E - 1F)	$	8793.

2. ENERGY SAVINGS (+) / COST (-)
DATE OF NISTIR 85-3273-X USED FOR DISCOUNT FACTORS OCT 1993

FUEL	UNIT COST $/MBTU(1)	SAVINGS MBTU/YR(2)	ANNUAL $ SAVINGS(3)	DISCOUNT FACTOR(4)	DISCOUNTED SAVINGS(5)
A. ELECT	$ .00	0.	$ 0.	15.61	$ 0.
B. DIST	$ 6.60	0.	$ 0.	17.56	$ 0.
C. RESID	$ .00	0.	$ 0.	19.97	$ 0.
D. NAT G	$ 4.62	401.	$ 1855.	20.96	$ 38873.
E. COAL	$ .00	0.	$ 0.	17.58	$ 0.
F. LPG	$ .00	0.	$ 0.	16.12	$ 0.
M. DEMAND SAVINGS			$ 0.	14.74	$ 0.
N. TOTAL		401.	$ 1855.		$ 38873.

3. NON ENERGY SAVINGS(+) / COST(-)

A. ANNUAL RECURRING (+/-) $ 0.
(1) DISCOUNT FACTOR (TABLE A) 14.74
(2) DISCOUNTED SAVING/COST (3A X 3A1) $ 0.

B. NON RECURRING SAVINGS(+) / COSTS(-)

ITEM	SAVINGS(+) COST(-) (1)	YR OC (2)	DISCNT FACTR (3)	DISCOUNTED SAVINGS(+)/ COST(-)(4)
d. TOTAL	$ 0.			0.

C. TOTAL NON ENERGY DISCOUNTED SAVINGS(+)/COST(-)(3A2+3Bd4) $ 0.

4. FIRST YEAR DOLLAR SAVINGS 2N3+3A+(3Bd1/(YRS ECONOMIC LIFE)) $ 1855.

5. SIMPLE PAYBACK PERIOD (1G/4) 4.74 YEARS

6. TOTAL NET DISCOUNTED SAVINGS (2N5+3C) $ 38873.

7. SAVINGS TO INVESTMENT RATIO (SIR)=(6 / 1G)= 4.42
(IF < 1 PROJECT DOES NOT QUALIFY)

8. ADJUSTED INTERNAL RATE OF RETURN (AIRR): 11.05 %

Estimate:	BLDG 6591	Date:	06-Aug-94
Description:	COST ESTIMATE		
Project:	LIMITED EEAP(GLASS	Bid Date:	
Location:	FORT KNOX, KY	Job #:	94013.02
Sq. footage:	********	City indx:	Louisville, KY

Line #	Description					
	Manhours	Matl	Labor	Equipment	Sub	Total
0873022200	ASTRAGALS, ALUM.,FLAT,1/8" X 2", "L" EXTRUSION,MAGNETIC				363.00 L.F.	
Unit values	0.11	6.65	1.92	0.00	0.00	8.57
Totals	38.84	$2,413	$697	$0	$0	$3,110
0884040010	GLS & GLZG:PLXGLS,CLR,1/8"T, CUT SHEETS				764.00 S.F.	
Unit values	0.09	2.96	1.69	0.00	0.00	4.65
Totals	71.82	$2,258	$1,294	$0	$0	$3,552
U08 DOORS/WNDW	111	$4,671	$1,991	$0	$0	$6,662

Line #	Description					
	Manhours	Matl	Labor	Equipment	Sub	Total
ESTIMATE TOTAL	111	$4,671	$1,991	$0	$0	$6,662
SALES TAX	0.00%	$0				
MATL MARKUP	0.00%	$0				
LABOR MARKUP	0.00%		$0			
EQUIPT MARKUP	0.00%			$0		
SUB MARKUP	0.00%				$0	
TOTAL BEFORE CONTINGENC		$4,671	$1,991	$0	$0	$6,662
CONTINGENCY	10.00%					$666
BOND	0.00%					$0
PROFIT	10.00%					$666
JOB TOTAL						$7,994

Estimate:	BLDG 6591	Date:	06-Aug-94
Description:	COST ESTIMATE		
Project:	LIMITED EEAP(GLASS	Bid Date:	
Location:	FORT KNOX, KY	Job #:	94013.02
Sq. footage:	********	City indx:	Louisville, KY

SUMMARY

	Manhours	Matl	Labor	Equipment	Sub	Total
U08 DOORS/WNDW	111	$4,671	$1,991	$0	$0	$6,662
TOTAL	111	$4,671	$1,991	$0	$0	$6,662
SALES TAX	0.00%	$0				
MATL MARKUP	0.00%	$0				
LABOR MARKUP	0.00%		$0			
EQUIPT MARKUP	0.00%			$0		
SUB MARKUP	0.00%				$0	
TOTAL BEFORE CONTINGENC		$4,671	$1,991	$0	$0	$6,662
CONTINGENCY	10.00%					$666
BOND	0.00%					$0
PROFIT	10.00%					$666
JOB TOTAL						$7,994

FT KNOX LIMITED EEAP (GLASS)

ECO - 2: WINDOW/ WALL INSULATION

BUILDING NUMBER: 6591

BUILDING HEATING TEMPERATURE SETPOINT: 70 F
OUTSIDE DESIGN TEMPERATURE 1 F
TEMPERATURE DIFFERENCE 69 F

INFILTRATION LOSSES =	1	AIR CHGS	X	447990	VOL (CU FT)	X	69	F TEMP DIFF	X 0.019	=	0.59	MBTU / HR
FLOOR LOSSES =	466	LINEAR FEET OF PERIMETER				X	69	F TEMP DIFF	X 0.81	=	0.03	MBTU / HR

SURFACE HEAT LOSSES

MTL DECK, FLAT ROOF =	14933	AREA (SF)	X	0.105	U VALUE (BTU/ HR - SF - F)	X	69	F TEMPERATURE DIFFERENCE		=	0.11	MBTU / HR
4" FACE BK/ CMU BLK WALL =	10810	AREA (SF)	X	0.176	U VALUE (BTU/ HR - SF - F)	X	69	F TEMPERATURE DIFFERENCE		=	0.13	MBTU / HR
CORR MTL PNL WALL =	3654	AREA (SF)	X	0.17	U VALUE (BTU/ HR - SF - F)	X	69	F TEMPERATURE DIFFERENCE		=	0.04	MBTU / HR
CLR SINGLE PANE GLASS DOORS W/ SIDELITES =	294	AREA (SF)	X	1.235	U VALUE (BTU/ HR - SF - F)	X	69	F TEMPERATURE DIFFERENCE		=	0.03	MBTU / HR
CLR SGL PANE WIN'W (GYM) =	764	AREA (SF)	X	1.235	U VALUE (BTU/ HR - SF - F)	X	69	F TEMPERATURE DIFFERENCE		=	0.07	MBTU / HR
CLR SGL PANE WINDOWS IN LOCKER ROOMS=	53	AREA (SF)	X	1.235	U VALUE (BTU/ HR - SF - F)	X	69	F TEMPERATURE DIFFERENCE		=	0.00	MBTU / HR
MTL OVERHEAD DOORS =		AREA (SF)	X	0.56	U VALUE (BTU/ HR - SF - F)	X	69	F TEMPERATURE DIFFERENCE		=	0.00	MBTU / HR
WOOD GLAZED O'HEAD DR =		AREA (SF)	X	0.583	U VALUE (BTU/ HR - SF - F)	X	69	F TEMPERATURE DIFFERENCE		=	0.00	MBTU / HR
LG MTL SLIDING DOOR =		AREA (SF)	X	0.56	U VALUE (BTU/ HR - SF - F)	X	69	F TEMPERATURE DIFFERENCE		=	0.00	MBTU / HR
METAL PERSONNEL DR=		AREA (SF)	X	0.56	U VALUE (BTU/ HR - SF - F)	X	69	F TEMPERATURE DIFFERENCE		=	0.00	MBTU / HR
WOOD/GLAZED PERSONNEL=		AREA (SF)	X	0.615	U VALUE (BTU/ HR - SF - F)	X	69	F TEMPERATURE DIFFERENCE		=	0.00	MBTU / HR

TOTAL BASELINE HEAT LOSSES = **0.99** **MBTU / HR**
= **1,044.83** **MJ/HR**

FT KNOX LIMITED EEAP (GLASS)

ECO - 2: WINDOW/ WALL INSULATION

BUILDING NUMBER: 6591

BUILDING HEATING TEMPERATURE SETPOINT: 70 F
OUTSIDE DESIGN TEMPERATURE 1 F
TEMPERATURE DIFFERENCE 69 F

INFILTRATION LOSSES =	0.8	AIR CHGS	X	447990	VOL (CU FT)	X	69	F TEMP DIFF	X 0.019	=	0.47	MBTU / HR
FLOOR LOSSES =	466	LINEAR FEET OF PERIMETER				X	69	F TEMP DIFF	X 0.81	=	0.03	MBTU / HR
SURFACE HEAT LOSSES												
MTL DECK, FLAT ROOF =	14933	AREA (SF)	X	0.105	U VALUE (BTU/ HR - SF - F)	X	69	F TEMPERATURE DIFFERENCE		=	0.11	MBTU / HR
4" FACE BK/ CMU BLK WALL =	10810	AREA (SF)	X	0.176	U VALUE (BTU/ HR - SF - F)	X	69	F TEMPERATURE DIFFERENCE		=	0.13	MBTU / HR
CORR MTL PNL WALL =	3654	AREA (SF)	X	0.17	U VALUE (BTU/ HR - SF - F)	X	69	F TEMPERATURE DIFFERENCE		=	0.04	MBTU / HR
CLR SINGLE PANE GLASS DOORS W/ SIDELITES =	294	AREA (SF)	X	1.235	U VALUE (BTU/ HR - SF - F)	X	69	F TEMPERATURE DIFFERENCE		=	0.03	MBTU / HR
CLR SGL PANE WIN'W W/ SEALMASTER INSUL WIN'W(GYM) =	764	AREA (SF)	X	0.6175	U VALUE (BTU/ HR - SF - F)	X	69	F TEMPERATURE DIFFERENCE		=	0.03	MBTU / HR
CLR SGL PANE WINDOWS IN LOCKER ROOMS=	53	AREA (SF)	X	1.235	U VALUE (BTU/ HR - SF - F)	X	69	F TEMPERATURE DIFFERENCE		=	0.00	MBTU / HR
MTL OVERHEAD DOORS =	0	AREA (SF)	X	0.56	U VALUE (BTU/ HR - SF - F)	X	69	F TEMPERATURE DIFFERENCE		=	0.00	MBTU / HR
WOOD GLAZED O'HEAD DR =	0	AREA (SF)	X	0.583	U VALUE (BTU/ HR - SF - F)	X	69	F TEMPERATURE DIFFERENCE		=	0.00	MBTU / HR
LG MTL SLIDING DOOR =	0	AREA (SF)	X	0.56	U VALUE (BTU/ HR - SF - F)	X	69	F TEMPERATURE DIFFERENCE		=	0.00	MBTU / HR
METAL PERSONNEL DR=	0	AREA (SF)	X	0.56	U VALUE (BTU/ HR - SF - F)	X	69	F TEMPERATURE DIFFERENCE		=	0.00	MBTU / HR
WOOD/GLAZED PERSONNEL=	0	AREA (SF)	X	0.615	U VALUE (BTU/ HR - SF - F)	X	69	F TEMPERATURE DIFFERENCE		=	0.00	MBTU / HR
					TOTAL ECO HEAT LOSSES					=	**0.84**	**MBTU / HR**
										=	**886.57**	**MJ/HR**

FT KNOX LIMITED EEAP (GLASS)

ECO - 2: WINDOW/ WALL INSULATION

	BASELINE	ECO - 2
SYSTEM EFFICIENCY	60%	60%
OUTSIDE DESIGN TEMP (F)	1	1
HTG TEMP SETPOINT (F)	70	70
HEATING DEGREE DAYS	4616	4616
TOTAL HEAT LOSSES (MBTU / HR)	0.99	0.84
$ /MBTU -FUEL OIL	$6.60	$6.60
$ /MBTU -NATURAL GAS	$4.62	$4.62
$ /MBTU -PPG	$10.84	$10.84

BUILDING NUMBER **6591**

GLOSSARY OF TERMS

1 MBTU = 1055 MJ
0.019=CONSTANT
.81 = CONSTANT FOR SLAB PERIMETER UNINSULATED FROM ASHRAE
CORR FACTOR = EMPIRICAL CORRECTION FACTOR FOR HEATING EFFECT VS 65 F DEGREE-DAYS FROM ASHRAE FUNDAMENTALS 1989 PG28.2

ANNUAL HEATING ENERGY CONSUMPTION (DEGREE DAY METHOD)

BASELINE =	0.99	MBTU / HR	X	4616	DEGREE DAYS	X	24	HRS/DAY		
	0.6	SYS EFF	X	69	TEMP DIFFERENCE				= 2,650.15	MBTU/YR
	2,650.15	MBTU/YR		X	CORR FACTOR		1		=	2,650.15 MBTU/YR
ECO - 2 =	0.84	MBTU / HR	X	4616	DEGREE DAYS	X	24	HRS/DAY		
	0.6	SYS EFF	X	69	TEMP DIFFERENCE				= 2,248.72	MBTU/YR
	2,248.72	MBTU/YR		X	CORR FACTOR		1		=	2,248.72 MBTU/YR
	ECO - 2 ANNUAL HEATING ENERGY CONSUMPTION SAVINGS								=	**401.43 MBTU/YR**
									=	**423,510.48 MJ/YR**

ANNUAL HEATING ENERGY COST

BASELINE =	2,650.15	MBTU / YR	X	6.6	$ /MBTU	=	17,490.98 $ /YR
ECO - 2 =	2,248.72	MBTU / YR	X	6.6	$ /MBTU	=	14,841.53 $ /YR
	ECO - 2 ANNUAL HEATING ENERGY COST SAVINGS					=	**2,649.45 $ /YR**

OUTSULATION®

An Exterior Wall Insulation
and Finish System

dryvit®

DS118

Outsulation System **Specifications**

Date of Issuance: July 9, 1991

dryvit

INTRODUCTION

This document contains the Manufacturer's Specification for the Outsulation System. These specifications follow the popular Construction Specification Institute 3-part format.

PROPRIETARY VERSUS NONPROPRIETARY

These specifications, as written, are proprietary, referring to Dryvit Systems, Inc. and its products, by name. They can easily be converted to the nonproprietary specifications by eliminating the proprietary names and substituting the nonproprietary words or phrases:

Proprietary	Nonproprietary
Dryvit Systems, Inc.	the Manufacturer
The Dryvit Outsulation® System	the System
Primus/Adhesive®, Primus/Adhesive Mixture, ADEPS®	Adhesive, Adhesive Mixture, Ready-Mixed Adhesive
Insulation Board	Insulation Board
Dryvit Reinforcing Mesh	Reinforcing Mesh
Dryvit Detail® Short Rolls Reinforcing Mesh	Detail Short Rolls Reinforcing Mesh
Dryvit Standard™ Reinforcing Mesh	Standard Reinforcing Mesh
Dryvit Standard Plus™ Reinforcing Mesh	Standard Plus Reinforcing Mesh
Dryvit Intermediate® Reinforcing Mesh	Intermediate Reinforcing Mesh
Panzer® 20 Mesh	Heavy Reinforcing Mesh
Dryvit Finish	Finish
Quarzputz®, Sandblast®, Freestyle®, Carrara™, Bed-Rok®, Sandpebble®, Stone Mist®, Quarzite™	Describe texture or give designation
Prep™	Precoat
Demandit®	Coating
Revyvit®	Coating
Prymit®	Primer
Color Prime™	Primer

TAILORING THE DRYVIT MANUFACTURER'S SPECIFICATIONS TO YOUR PROJECT

These specifications cover all the common ways of using the Outsulation System. Most projects use only a few of the possible combinations of these materials and methods. To tailor the Specifications to your project, simply use those sections which apply. Also, it may be prudent to place certain parts of the Dryvit Specification in other parts of the project's total specification, such as sealants and metal framing. For assistance in preparing your specification, contact your Dryvit Distributor or Dryvit Systems, Inc.

METRIC EQUIVALENTS

Metric equivalents are included after the U.S. customary units (English System) in parentheses, thus:

1/2" (13mm) 1.0 pcf (16Kg/m3)

Please note that the U.S. customary units govern, i.e., the metric equivalents may not be exact but rather represent commonly used equivalents.

WARNING

The Outsulation System is designed as a barrier wall system, which means that it is detailed to prevent water from entering the system. If specifications are not followed and proper detail not adhered to, water may intrude the system, resulting in possible damage to the system and other building elements in the wall.

DISCLAIMER

Information contained in this specification conforms to standard detail and product recommendations for the installation of Dryvit Systems, Inc. products as of the date of publication of this document and is presented in good faith. Dryvit Systems, Inc. assumes no liability, expressed or implied, as to the architecture, engineering or workmanship of any project. To insure that you are using the latest, most complete information, contact Dryvit Systems, Inc.

For Further Information, Contact Us At
One Energy Way
P.O. Box 1014
West Warwick, RI 02893
(401) 822-4100
FAX: (401) 823-8820

©Dryvit Systems, Inc. 1983, 1987, 1990

Date of Issuance: July 9, 1991

DRYVIT SYSTEMS, INC.
MANUFACTURER'S SPECIFICATIONS

SECTION 07240
OUTSULATION EXTERIOR INSULATION AND FINISH SYSTEM

PART I - GENERAL

1.01 SECTION INCLUDES

A. Exterior Insulation and Finish System - Type PB as defined by the Exterior Insulation Manufacturers Association (EIMA).

B. Molded Expanded Polystyrene (MEPS) Insulation Board.

1.02 RELATED SECTIONS

A. Unit Masonry 04200.

B. Concrete 03300.

C. Sheathing 06100.

D. Light Gauge Cold-Formed Steel Framing 05400.

E. Sealants 07900.

1.03 REFERENCES

ASTM B 117 (Federal Test Standard 141A Method 6061) Method of Salt Spray (Fog) Testing

ASTM C 79 Test Method for Gypsum Sheathing Board

ASTM C 150 Specification for Portland Cement

ASTM D 897 Test Method for Tensile Properties of Adhesive Bonds

ASTM D 968 (Federal Test Standard 141A Method 6191) Test Method for Abrasion Resistance of Organic Coatings by the Falling Abrasive Tester

ASTM D 2247 (Federal Test Standard 141A Method 6201) Method of Testing Coated Metal Specimens at 100 Percent Relative Humidity

ASTM E 84 Test Method for Surface Burning Characteristics of Building Materials

ASTM E 96 Tests for Water Vapor Transmission of Materials

ASTM E 108 (Modified) Method of Fire Tests of Roof Coverings

ASTM E 119 Method for Fire Tests of Building Construction and Materials

ASTM E 330 Test Method for Structural Performance of Exterior Windows, Curtain Walls, and Doors by Uniform Static Air Pressure Difference

ASTM E 547 Test Method for Water Penetration of Exterior Windows, Curtain Walls, and Doors by Cyclic Static Air Pressure Differential

ASTM G 23 (Federal Test Standard 141A Method 6151) Recommended Practice for Operating Light and Water Exposure Apparatus (Carbon-Arc Type) for Exposure of Non-metallic Materials

AP81-2 Dryvit's Application Bulletin #81-2

DS131 Standard Specifications for Molded Expanded Polystyrene Insulation Boards for Use in Dryvit Systems, Inc.

DS140 Carrara Application Instructions

DS141 Bed-Rok Application Instructions

DS143 ADEPS Application Instructions

DS153 Expansion Joints and Sealants

DS156 Substrates

DS201 The Outsulation System

DS204 Outsulation System Pocket Guide

DS402 NCB (Base Coat)

DS407 ADEPS (Adhesive for EPS)

DS414 Primus/Adhesive

DS416 Finishes

DS428 Sandpebble

DS429 Quarzite

EIMA Std 101.86 Method for Resistance of Exterior Insulation Finish Systems to the Effects of Rapid Deformation (Impact)

MIL Std E5272 Environmental Testing

MIL Std 810B Environmental Test Methods

ULC S101 Standard Methods of Fire Endurance Tests of Building Construction Materials

1.04 DEFINITIONS

A. ADEPS: A ready-to-use, factory-mixed, fully formulated water-based acrylic copolymer adhesive.

B. Applicator: The contractor that applies the Outsulation System.

C. Backwrapping: Covering the exposed edge and minimum 2 1/2" on each face of the MEPS board with the reinforced base coat.

© Dryvit Systems, Inc. 1983 1987 1990

D. Base Coat: The layer consisting of one or more layers of Reinforcing Mesh fully embedded in the Base Coat Mixture applied to the outside surface of the MEPS.
E. Building Expansion Joint: A joint through the entire building structure designed to accommodate structural movement.
F. Color Prime: Pigmented acrylic primer for Dryvit finishes.
G. Designer: The person responsible for the creation and/or execution of plans and specifications for a project or structure.
H. Insulation Board: Molded expanded polystyrene board (MEPS) meeting the specifications of Dryvit Systems, Inc. and produced by a manufacturer acceptable to Dryvit Systems, Inc.
I. Reinforcing Mesh: Glass fiber mesh(es) supplied by and meeting the specifications of Dryvit Systems, Inc. used to reinforce the base coat and to provide impact resistance.
J. Dryvit: Dryvit Systems, Inc., a Rhode Island corporation.
K. Expansion Joint: A designed interruption in the continuity of a material, assembly, or system, which facilitates movement.
L. Finish: A factory-mixed, acrylic coating with integral color, available in a variety of texture types, applied to the outside surface of the base coat.
M. Lamina: The Dryvit Base Coat layer combined with the Dryvit Finish layer.
N. Panel Fabricator: The contractor who fabricates the panelized Outsulation System.
O. Panel Erector: The contractor who installs the panelized Outsulation System.
P. Prep: A specially formulated acrylic latex precoat designed to be used with Carrara Finish.
Q. Primus/Adhesive: A factory-mixed acrylic-based product.
R. Base Coat Mixture: A field-mixed blend of Base Coat material and Portland cement.
S. Prymit: A water-based primer which ensures adhesion to previously painted substrates.
T. Sheathing: A substrate in sheet form.
U. Substrate: The material to which the Outsulation System is affixed.
V. Substrate System: The total wall assembly including the attached substrate to which the Outsulation System is affixed.

1.05 SYSTEM DESCRIPTION

A. The Dryvit Outsulation System is an externally reinforced exterior insulation and finish system consisting of an adhesive, insulation board, fiberglass reinforcing mesh fully embedded in a base coat mixture, and an aesthetic finish.
   1. The sealant system and the substrate are not considered part of the Dryvit system. In addition, expansion joint design and location is the responsibility of the Designer.
B. Methods of Installation:
   1. Field Applied: The Outsulation System applied to the substrate system in place.
   2. Panelized: The Outsulation System is shop-applied to prefabricated wall panels.
C. Design Requirements:
   1. Dryvit Systems, Inc.'s current published information shall be followed for suggested detail treatments.
      a. At all termination locations, the MEPS shall be completely encapsulated by the base coat.
      b. The length and slope of inclined surfaces shall follow the guidelines listed below: 1) Minimum slope: 6" (152mm) of rise in 12" (305mm) of horizontal projection. 2) Maximum length of slope: 10" (254mm). 3) Inclined surfaces shall not be used for areas defined as roofs by building codes.
   2. Corners shall be reinforced by wrapping with Reinforcing Mesh or installing Corner Mesh.
   3. Openings shall be reinforced using a 9 1/2" (241mm) wide strip of Detail Reinforcing Mesh laid at a 45° angle.
   4. Dimensional Tolerances:
      a. All substrates shall be flat within 1/4" (6.4mm) within a 4' (1.2m) radius.
   5. Substrate/Substrate Systems:
      a. Shall be engineered by others which includes but is not limited to connections.
      b. The maximum deflection under full flexural design loads of the substrate system shall not exceed L/240.
      c. It is the Applicator's responsibility to ensure the substrate is acceptable for application of the Outsulation System.
      d. Application of the Outsulation System shall be to the following recommended substrates only:
         1) Unit masonry, unglazed brick, concrete, concrete block or stucco, all of which must be sound and unpainted.
            a) Painted substrates shall have the paint removed using materials and methods which result in no more than 10% of the remaining surface having paint or may alternatively be prepared by coating with Prymit and tested for adhesion.

©Dryvit Systems, Inc. 1983, 1987, 1990

2) Exterior grade gypsum sheathing with regular or Type X core meeting ASTM C 79 requirements at the time of application of the actual system.
3) Exterior cement board.
4) Silicone-treated gypsum core sheathing surfaced with inorganic fiberglass mats coated with Dryvit Color Prime or factory-applied alkali-resistant coating.
5) Fiber-reinforced calcium silicate panel coated with Dryvit Color Prime.
6) Unpainted wood fiber board; sound, unpainted minimum APA Exposure 1 grade plywood; and other non-veneer boards: using ADEPS adhesive only.
   a) Plywood and Oriented Strand Board (OSB) shall be minimum 1/2" (12mm) thick and follow APA recommendations for installation.
   b) Plywood and OSB shall be minimum 4 ply, APA Exposure 1 or Exterior Grade C-D or better, installed best side facing out.
7) Galvanized steel lath (2.5 or 3.4 lbs./sq.yd.) for use over masonry substrates, gypsum sheathing or adhesively bonded wood fiber board.

6. Sealants/Sealant Systems:
   a. Sealant System: The sealant, closed-cell backer rod, bond breaker tape, primer and accessories manufactured and installed by others.
   b. Sealants:
      1) Shall be compatible with the Outsulation System. Refer to Dryvit publication DS153 for current listing.
      2) Outsulation System materials shall be fully dry prior to sealant system installation (typically 24-48 hours).
7. Expansion Joints:
   a. Expansion and contraction of the Outsulation System and adjacent materials shall be taken into account in the design of expansion joints. Expansion joint design and location is the responsibility of the Designer.
   b. Continuous expansion joints in the Outsulation System shall be installed but not limited to the following locations:
      1) Where expansion joints occur in the substrate system.
      2) Where building expansion joints occur.
      3) Where Outsulation panels abut one another for a panelized installation.
      4) At floor lines in wood frame construction.
      5) Where the Outsulation System abuts dissimilar materials.
      6) Where the substrate changes.
      7) Where significant structural movement occurs such as long continuous elevations, changes in roof line, and changes in building shape and structural system.
   c. In addition to expansion joint requirements, control joints are required with Bed-Rok finish so that no area exceeds 400 square feet (37.2 sq.m) (20 feet [6.1m] maximum in any direction and the length-to-width ratio does not exceed 2.5).

D. Performance Requirements: The Outsulation System is designed to meet or exceed the following:
1. Physical Tests:
   a. Abrasion Resistance: Federal Test Standard 141A Method 6191 (ASTM D 968); no deleterious effects after 114 gallons (500 liters).
   b. Absorption Freeze: 60 cycles soak at 68°F (20°C) for four days, then 14°F (-10°C) for two hours, then 68°F (20°C) for two hours; no checking, cracking, or splitting.
   c. Accelerated Weathering: Federal Test Standard 141A Method 6151 (ASTM G 23); 2,000 hours. No deterioration.
   d. Impact Resistance: In accordance with EIMA STD 101.86
      Standard Mesh — 25-49 in.-lbs.
      Standard Plus Mesh — 50-89 in.-lbs.
      Intermediate Mesh — 90-150 in.-lbs.
      Panzer 20 Mesh — over 150 in.-lbs.
   e. Mildew Resistance: MIL Std 810B; passes.
   f. Moisture Resistance: Federal Test Standard 141A Method 6201 (ASTM D 2247); no deleterious effects after 14 days.
   g. Salt Spray Resistance: Federal Test Standard 141A Method 6061 (ASTM B 117); 5% concentration for 300 hours. No deleterious effects.
   h. Water Penetration: ASTM E 331; no water penetration to the innermost surface of the test specimen.
   i. Water Vapor Transmission (ASTM E 96 Water Method Procedure B): Standard lamina — 14 grains/hour/ft.

2. Structural Tests:
   a. Full Scale Structural Tests: ASTM E 330; minimum failure load under suction force of 90 psf unless otherwise specified.
3. Fire Tests:
   a. ASTM E 84 on Coatings and Insulation Board. Results: flame spread rating less than or equal to 20, smoke developed rating less than or equal to 10 for coatings; flame spread rating of not more than 25, smoke developed rating of not more than 450 for Insulation Board.
   b. Modified ASTM E 108 Method (Diversified Fire Test). Results:
      1) Significant flame propagation outside immediate area of flame impingement should not occur over the exterior surface. Flames should not reach the top of the test specimen.
      2) Damage to the Insulation Board should not extend to the outer edges of the test specimen.
   c. ASTM E 119 Standard Methods of Fire Tests of Building Construction and Materials. Results: the fire resistance rating of a wall assembly shall not be reduced by the addition of the Outsulation System.
   d. Multi-Story Fire Test (Full Scale, End Use Configuration Test) UBC 17-6. Results: assembly shall resist major vertical flame spread, major flame spread on surface and lateral flame spread.
   e. ULC-S101 Type Exposure (Diversified Fire Test). Results: Outsulation System shall remain in place for 15 minutes. No through openings or tears occurred in the exposed surface.
   f. Factory Mutual Corner Test (Full Scale, End Use Configuration Test). Results: flame propagation limited to immediate fire exposure area. Maximum propagation at ceiling of 12' from corner.

1.06 SUBMITTALS

A. Samples:
1. The Applicator shall submit to the Designer two 2' (610mm) x 4' (1220mm) samples of the Outsulation System for each finish, texture, and color to be used on the project. The same tools and techniques proposed for the actual installation shall be used. The MEPS shall be mounted on the appropriate substrate using the appropriate adhesive. If the substrate is masonry or brick, the samples may be mounted on gypsum sheathing.
2. For panelized installation, an additional sample, per (1) above, shall be retained by the panel fabricator.
3. One of the Designer's samples shall remain at the job site for use in comparing the approved appearance to that being applied.

B. Shop Drawings: Complete drawings prepared by the Panel Fabricator showing wall layout, all details, connections, expansion joints, the Outsulation System and installation sequence shall be submitted to the Designer for the panelized Outsulation System.

C. Reports: Copies of selected test reports by independent laboratories verifying the performance of the Outsulation System shall be submitted to the Designer by the Applicator when requested.

1.07 QUALITY ASSURANCE

A. Qualifications:
1. System Manufacturer: Shall have manufactured exterior insulation and finish systems in the United States for at least 10 years, shall have completed at least 20,000 projects utilizing this exterior insulation and finish system, and shall be a member of EIMA (Exterior Insulation Manufacturers Association).
2. Applicator: Shall be knowledgeable in the proper installation of the Dryvit Outsulation System and shall be experienced and competent in the installation of exterior insulation and finish systems generally.
3. Panel Fabricator: Shall be an Applicator experienced and competent in the fabrication of architectural wall panels and shall employ the proper equipment and manpower to fabricate such panels.
4. Panel Erector: Shall be the panel fabricator, or approved by and under the direct supervision of the panel fabricator and shall be experienced and competent in the installation of architectural wall panel systems and shall employ the proper equipment and manpower to install such panels.
5. Insulation Board Manufacturer: Shall be accepted by Dryvit as capable of producing the MEPS in accordance with current Dryvit specifications (DS131) and shall subscribe to the Dryvit Third Party Certification and Quality Assurance Program.
6. Sealant Contractor: Shall be experienced and competent in the installation of high performance industrial and commercial sealants.

B. Regulatory Requirements:
1. The MEPS shall be separated from the interior of the building by a minimum 15-minute thermal barrier.
2. The use of and maximum thickness of MEPS shall be in accordance with the applicable building codes.

C. Approvals, Listings and Classifications:
1. The surface burning characteristics of the MEPS shall be classified by Underwriters Laboratories and be listed in the U.L. Building Materials Directory as having a flame spread and smoke development rating of not greater than 25 and 450 respectively. These numerical flame spread and smoke develop-

©Dryvit Systems, Inc. 1983, 1987, 1990

ment ratings do not necessarily reflect the performance of this or any other material under actual fire conditions.

2. The Outsulation System shall be recognized by the following Model Building Code Organizations as described in the current versions of the documents:
   a. BOCA Research Report No. 89-63.
   b. ICBO Research Committee Report No. 2728.
   c. SBCCI Compliance Report No. 8912.
3. The Outsulation System shall have been issued an approval as described in the current applicable HUD Materials Release.
4. The Outsulation System shall meet the criteria set forth in the Health and Human Services Technical Bulletin No. 30.
5. The Outsulation System shall be approved for use on this project by the applicable state and/or building code authorities.
6. The Outsulation System shall be approved by Factory Mutual Research Corporation and listed in the FM Approval Guide.

1.08 DELIVERY, STORAGE AND HANDLING

A. All Dryvit materials shall be delivered to the job site in the original, unopened packages with labels intact. Upon arrival, materials shall be inspected for physical damage, freezing, or overheating and Dryvit informed of any discrepancies. Questionable materials shall not be used.

B. All Dryvit materials at the job site shall be stored in a cool, dry location, out of direct sunlight, protected from weather and other damage. Refer to Dryvit Product Sheets for storage temperature requirements.

1.09 JOB CONDITIONS

A. Existing Conditions: The Applicator shall have access to electric power, clean water, and a clean work area at the location where the Dryvit materials are to be installed.

B. Environmental Conditions:
   1. The ambient air and wall temperature on both sides of the wall shall be minimum 40°F (4°C) or 45°F (7°C) as applicable at the time of installation of the Dryvit materials. Refer to Dryvit Product Sheets for specific product temperature requirements. The temperature shall remain so for at least 24 hours thereafter or longer if necessary for the material to be sufficiently dried.

C. Protection:
   1. Adjacent areas/materials shall be protected from damage, drops, and spills during the application of the Dryvit materials.
   2. The Dryvit materials shall be protected by permanent or temporary means from weather and other damage prior to, during, and immediately after application. Care must be taken to prevent condensation and/or heat buildup when using tarp or plastic to prevent damage to the Outsulation System or products.

D. Sequencing and Scheduling:
   1. Installation of the Outsulation System shall be coordinated with the other construction trades.
   2. Sufficient manpower and equipment shall be employed to ensure a continuous operation, free of cold joints, scaffold lines, texture variations, etc.

1.10 LIMITED MATERIALS WARRANTY

A. Dryvit shall offer a written Limited Materials Warranty upon receipt of a properly executed Warranty Request and Completed Project Form.

1.11 DESIGN RESPONSIBILITY

A. It is the responsibility of both the specifier and the purchaser to determine if a product is suitable for their intended use. The Designer selected by the purchaser shall be responsible for all decisions pertaining to design, detail, structural capability, attachment details, shop drawings, and the like. Dryvit has prepared guidelines in the form of specifications, application details, and product sheets to facilitate the design process only. Dryvit is not liable for any errors or omissions in design, detail, structural capability, attachment details, shop drawings, or the like, whether based upon the information prepared by Dryvit or otherwise, or for any changes which purchasers, specifiers, Designers, or their appointed representatives may make to Dryvit's published comments.

1.12 MAINTENANCE

A. Maintenance and repair shall follow the procedures noted in Dryvit publication DS204.

B. All Dryvit products are designed to be virtually maintenance free. However, as with all building products, depending on location, some cleaning may be required. See Dryvit publication DS152 on Cleaning & Recoating.

PART II - PRODUCTS

2.01 GENERAL

A. All components of the Outsulation System shall be supplied by and obtained from Dryvit or its authorized distributors. Substitutions or additions of other materials will void the warranty.

©Dryvit Systems, Inc. 1983, 1987, 1990

2.02 COMPONENTS

A. Adhesives:

1. Primus/Adhesive: An acrylic base, field-mixed one-to-one by weight with Portland cement for use on substrates as outlined in Section 1.05 C.5.d.
2. ADEPS Adhesive: A fully formulated water-based acrylic copolymer.
3. Mechanical Fasteners: Refer to Dryvit publication DS135 for specifications and application instructions.

B. Insulation Board: Aged, molded expanded polystyrene board with a nominal density of1.0 pcf meeting the current published specifications of Dryvit's DS131.

C. Dryvit Reinforcing Meshes:

1. Standard Mesh: Glass fiber mesh used to reinforce wall areas, special shapes and irregular details. Shall weigh a minimum of 4.3 oz./sq. yd. and have a minimum tensile strength of 150 lbs./inch of width. Shall provide a relative impact resistance of 1.0.
2. Standard Plus Mesh: Mesh used for normal impact resistance. Shall weigh a minimum of 6 oz./sq. yd. and have a minimum tensile strength of 200 lbs./inch of width. Shall provide a relative impact of 2.5.
3. Intermediate Mesh: Used for moderate impact resistance. Shall weigh a minimum of 12 oz./sq. yd. and have a minimum tensile strength of 300 lbs./inch of width. Shall provide a relative impact of 5.
4. Panzer 20 Mesh: Used where high impact resistance is needed. Shall weigh a minimum of 20.5 oz./sq. yd. and have a minimum tensile strength of 550 lbs./inch of width. Shall provide a relative impact resistance of 15 with Standard and 25 with Standard Plus.
5. Corner Mesh: Used for additional impact resistance at corners. Shall weigh a minimum of 7.2 oz./sq.yd. and have a minimum tensile strength of 540 lbs./inch of width.

D. Finish:

1. Shall be a factory-mixed, water-based acrylic coating with integral color and texture.
   a. Quarzputz: Coarse texture.
   b. Sandblast: Medium texture.
   c. Freestyle: Fine texture.
   d. Metallic: Quarzputz, Sandblast, Freestyle with a metallic sheen.
   e. Sandpebble: Pebble stucco texture.
2. Shall be a factory-mixed, water-based acrylic coating utilizing a colored stone aggregate.
   a. Carrara: Natural color marble aggregate.
   b. Bed-Rok: Natural stone exposed aggregate.
   c. Stone Mist: Ceramically colored, quartz aggregate.
   d. Quarzite: Ceramically colored, quartz aggregate.

E. Primers and Sealers:

1. Color Prime: A water-based, pigmented, acrylic primer.
2. Prymit: A water-based acrylic primer/adhesion promoter.

F. Coatings:

1. Demandit: A non-textured water-based acrylic coating.
2. Revyvit: A fine textured water-based acrylic coating.

2.03 MATERIALS

A. Portland Cement: Type I, I-II or II, meeting ASTM C 150, white or gray in color, fresh and free of lumps.

B. Water: Clean and free of foreign matter.

2.04 EQUIPMENT

A. All mixing shall be done with a CLEAN Goldblatt Jiffler Mixer #15311H7 or equivalent, powered by a 1/2" (13mm) drill or equivalent at 400-500 rpm.

B. A high-speed wood router and proper bit(s).

C. Hand tools associated with the plastering trade.

D. For panelized installations, such equipment as necessary for construction and attachment of prefabricated wall panels.

PART III - EXECUTION

3.01 INSPECTION

A. Examination of Substrate:

1. Prior to installation of the Outsulation System, it is the Applicator's responsibility to ensure the substrate:
   a. Is of a type listed in Section 1.05 C.5.d.
   b. Meets dimensional tolerances per Section 1.05 C.4.
   c. Surface is free of foreign materials such as oil, dust, dirt, form-release agents, paint, wax, water repellents, moisture, frost, etc.
   d. Is sound, connections are tight, there are no surface voids or projections, etc.
   e. Is in compliance with other Contract Documents.
2. The Designer and general contractor shall be advised of all discrepancies in writing. Work shall not proceed until unsatisfactory conditions are corrected.

3.02 SYSTEM INSTALLATION

A. General:

1. Refer to DS204 for detailed application instructions.

B. Mixing and Preparation:

1. Primus/Adhesive:
   a. Shall be stirred to a homogeneous consistency before mixing. Refer to Dryvit publication DS414 for specific instructions.
   b. In a clean container, thoroughly mix the Primus/Adhesive with Portland cement at a 1-to-1 ratio by weight. Allow the Mixture to set for 5 minutes. Re-temper, adding a small amount of water to achieve desired workability. The Mixture shall be used immediately after tempering.
   c. No additives shall be added under any circumstances.
2. ADEPS Adhesive: Use directly from the pail without mixing. No additives, including water, shall be added. Refer to Dryvit publication DS407 for specific instructions.

C. Insulation Board:

1. General:
   a. Shall be applied to the substrate starting from the bottom of the wall with its long edge oriented horizontally, in a running bond pattern with joints offset with respect to substrate joints.
   b. Shall be supported by temporary means.
   c. Shall be staggered and interlocked at corners.
   d. Shall be precut to fit openings, corners and projections prior to application of the adhesive. NOTE: Board edges shall not align with corners of wall openings.
   e. The "Ribbon and Dab" or the "Notched Trowel" method of adhesive application may be used. Refer to local building codes and national evaluation reports.
   f. Refer to Dryvit publication DS204 for further instructions.
2. Adhesive Application:
   a. Primus/Adhesive Mixture:
      1) Ribbon and Dab Method: Ribbons of adhesive shall be applied to the perimeter of one face of the MEPS. The adhesive shall not be applied to the edges of the MEPS. Eight dabs of adhesive shall be applied to the area within the ribbon. A minimum of 32% of the MEPS face shall be in contact with the adhesive.
      2) Notched Trowel Method: Adhesive shall be applied to one face of the MEPS using a notched trowel. Ribbons of adhesive shall be applied to the perimeter of the MEPS. Adhesive shall not be applied to the edges of the MEPS.
      3) Push Box Method: Application by this method shall be in accordance with Dryvit's Application Bulletin No. 81-2.
   b. ADEPS Adhesive: The adhesive shall be applied directly to one face of the MEPS using a notched trowel. Refer to Dryvit publication DS143 for further instructions.
3. The prepared MEPS shall be immediately applied to the substrate as follows:
   a. Lightly affix the MEPS to the substrate with the lower horizontal edge and adjacent vertical edge 1/2" (13mm) from adjacent boards or its final position on the substrate.
   b. Press down and slide diagonally into place or until it tightly abuts the edges of adjacent boards. Continue for all MEPS boards.
   c. The entire outside face of the MEPS shall be tamped with even pressure to ensure complete contact of the adhesive to the substrate and that all boards are in the same plane. A straight edge at least 6' (1.8m) long shall be used for this purpose.
   d. If gaps occur, slivers of MEPS shall be cut and shaped to fit the gaps and shall be inserted without using adhesive.
   e. A minimum of 24 hours shall be allowed for the adhesive to form a positive bond. The MEPS shall not be moved while the adhesive is curing. Low temperatures and/or high humidity conditions may require longer curing time for ADEPS. Refer to Dryvit publication DS407.

D. Base Coat Systems:

1. Inspection Before Application:
   a. The face of the MEPS shall be inspected as follows:
      1) For flatness, using a minimum 6' straight edge, high areas and out-of-plane board joints shall be sanded flat; low areas shall <u>not</u> be built up with Primus/Adhesive Mixture to form a flat surface.
      2) For damage and foreign materials, deficiencies shall be corrected.
      3) For deterioration due to weathering or U/V, visible as discoloration, affected areas shall be sanded to remove deterioration while maintaining the flatness of the surface.
   b. The minimum remaining thickness of MEPS at any point behind a reveal (groove) or other feature shall be 3/4" (19mm).
   c. Foam shapes, if used, shall be applied directly to the substrate or face of the MEPS.

2. Base Coat System: For Standard Mesh, Standard Plus Mesh; or Intermediate Mesh.
   a. Using a stainless steel trowel, the Primus/Adhesive Mixture shall be applied to the surface of the MEPS to a uniform thickness of approximately 1/16" (1.6mm).
   b. The Mesh shall be immediately embedded into the wet Primus/Adhesive Mixture with its concave surface to the wall to reduce its tendency to curl. The surface shall then be smoothed with a trowel, working from the center toward the edges, until the bare Mesh is fully covered and not visible. NOTE: The final approximate thickness of the base coat shall be sufficient to fully embed the Mesh but shall not exceed 3/32" (2.4mm). A slight mesh pattern may be visible upon drying.
   c. The Mesh shall be lapped a minimum of 2 1/2" (64mm) on all sides.
   d. A minimum of 24 hours shall be allowed for the base coat to cure. The base coat shall be protected from damage and weather while curing.
   e. All MEPS edges at openings, penetrations, or other termination points, shall be backwrapped.
3. Double Mesh Base Coat System:
   a. Double layers of Standard Plus Mesh may be used for local reinforcing only. The first Mesh layer shall be installed per Section 3.02 D.2.
   b. The surface of the first Mesh layer shall be examined after curing for projections, loose strands, etc. and corrected to produce a flat face.
   c. The second Mesh layer shall be applied in the same manner as the first layer. The lapped edges of the Mesh in the two layers shall be offset.
4. Panzer 20 Mesh Base Coat System:
   a. Sufficient Primus/Adhesive Mixture shall be applied to the face of the MEPS to a uniform thickness. Final thickness is not to exceed 1/8" (3.2mm).
   b. The Panzer 20 Mesh shall be immediately embedded into the wet Primus/Adhesive Mixture, working from the center toward the edges. The surface shall then be smoothed until the Mesh is fully covered and not visible. The approximate thickness of the base coat shall not be excessive but sufficient to fully cover the Mesh.
   c. Edges of adjacent Panzer 20 Mesh pieces shall be tightly butted. Panzer 20 mesh pieces shall not be lapped.
   d. A minimum of 24 hours shall be allowed for this layer of the base coat to cure. The base coat shall be protected from damage and weather while curing.
   e. The surface of the Panzer 20 layer shall be examined after curing for projections, loose strands, etc. and corrected to produce a flat surface.
   f. A second layer consisting of Primus/Adhesive Mixture and Standard or Standard Plus Mesh shall be applied over the Panzer 20 Mesh layer per Section 3.02 D.2 above.
   g. Details of the Panzer 20 Mesh base coat system at the ends of the walls, windows, panel edges, corners, etc. shall be in accordance with Dryvit's current published Pocket Guide, DS204.

E. Dryvit Finish Application:
1. General:
   a. After stirring to a homogeneous consistency, the Finish shall be applied to the entire wall surface in a continuous application.
   b. Finish shall be trowel or spray-applied per manufacturer's application instructions.
   c. Finish shall be protected from airborne contamination such as dust, soot, etc. and from weather and other damage until fully dried.
   d. No additives shall be added under any circumstances. Refer to the appropriate Dryvit finish publication for further application instructions.
2. Quartzputz, Sandblast, Metallic, Sandpebble:
   a. A tight coat shall be applied to the base coat. When trowel-applied, leveling and texturing shall take place in one operation.
   b. The maximum thickness shall be no greater than that of the largest aggregate for Quarzputz and Sandpebble. The thickness shall be approximately 1 to 1 1/2 times the thickness of the largest aggregate for Sandblast.
3. Freestyle:
   a. Shall be applied to the Base Coat and leveled, then textured in one operation.
   b. The texture shall match the approved sample.
   c. The maximum thickness shall be 1/4" (6.4mm).
   d. The minimum thickness shall be 1/16" (1.6mm).
4. Carrara:
   a. Color Prime shall be brushed, rolled, or spray-applied to the approved substrate and allowed to dry prior to application of Carrara.
   b. Prep shall be rolled or trowel-applied to the substrate immediately prior to application of Carrara.
   c. Refer to Dryvit publication DS140 for mixing and application instructions.

©Dryvit Systems, Inc. 1983, 1987, 1990

5. Bed-Rok:
   a. Refer to Dryvit publication DS141 for mixing and application instructions.
6. Stone Mist:
   a. Two coats shall be spray-applied to the Base Coat. Allow one hour drying time between coats.
   b. Refer to Dryvit publication DS420 for mixing and complete application instructions.
7. Quarzite:
   a. Color Prime shall be brushed, rolled or spray-applied to the approved substrate and allowed to dry prior to the application of Quarzite.
   b. Apply and level Quarzite to a thickness of approximately 1 1/2 times the size of the aggregate (1/16" to 3/32").
   c. Refer to Dryvit publication DS429 for mixing and application instructions.

3.03 FIELD QUALITY CONTROL

A. Dryvit assumes no responsibility for on-site inspections. Dryvit Systems, Inc. and/or its distributors will provide field service support if reasonably requested by the Applicator. The Designer, general contractor, or their appointed representative and/or the Dryvit distributor should make periodic on-site inspections to ensure that the Dryvit materials are being installed in strict accordance with Dryvit's specifications. The Applicator shall be responsible for the proper application of the Dryvit materials.

B. If requested, the Applicator shall certify in writing the quality of work performed relative to the substrate system, details, installation procedures and workmanship.

C. If requested, the MEPS supplier shall certify in writing that the MEPS meets Dryvit's specifications.

D. If requested, the sealant applicator shall certify in writing that the sealant application is in accordance with the sealant manufacturer's and Dryvit's recommendations.

3.04 CLEAN-UP

A. Materials left over by the Applicator and/or Panel Erector at the job site shall be removed by either the Applicator or the Panel Erector.

B. The Panel Erector and/or the Applicator shall clean adjacent materials and surfaces and the work area of foreign materials resulting from their work.

©Dryvit Systems, Inc. 1983, 1987, 1990

OUTSULATION®

AN EXTERIOR WALL INSULATION
AND FINISH SYSTEM

dryvit®

DS107

Outsulation Details

DESIGN NOTES: REFER TO DRYVIT SYSTEMS, INC. PUBLICATION DST18

Printed in U.S.A. 10-92-10M R3:7-3-91
© 1991 Dryvit Systems, Inc.

OUTSULATION®

dryvit®

Installation Details

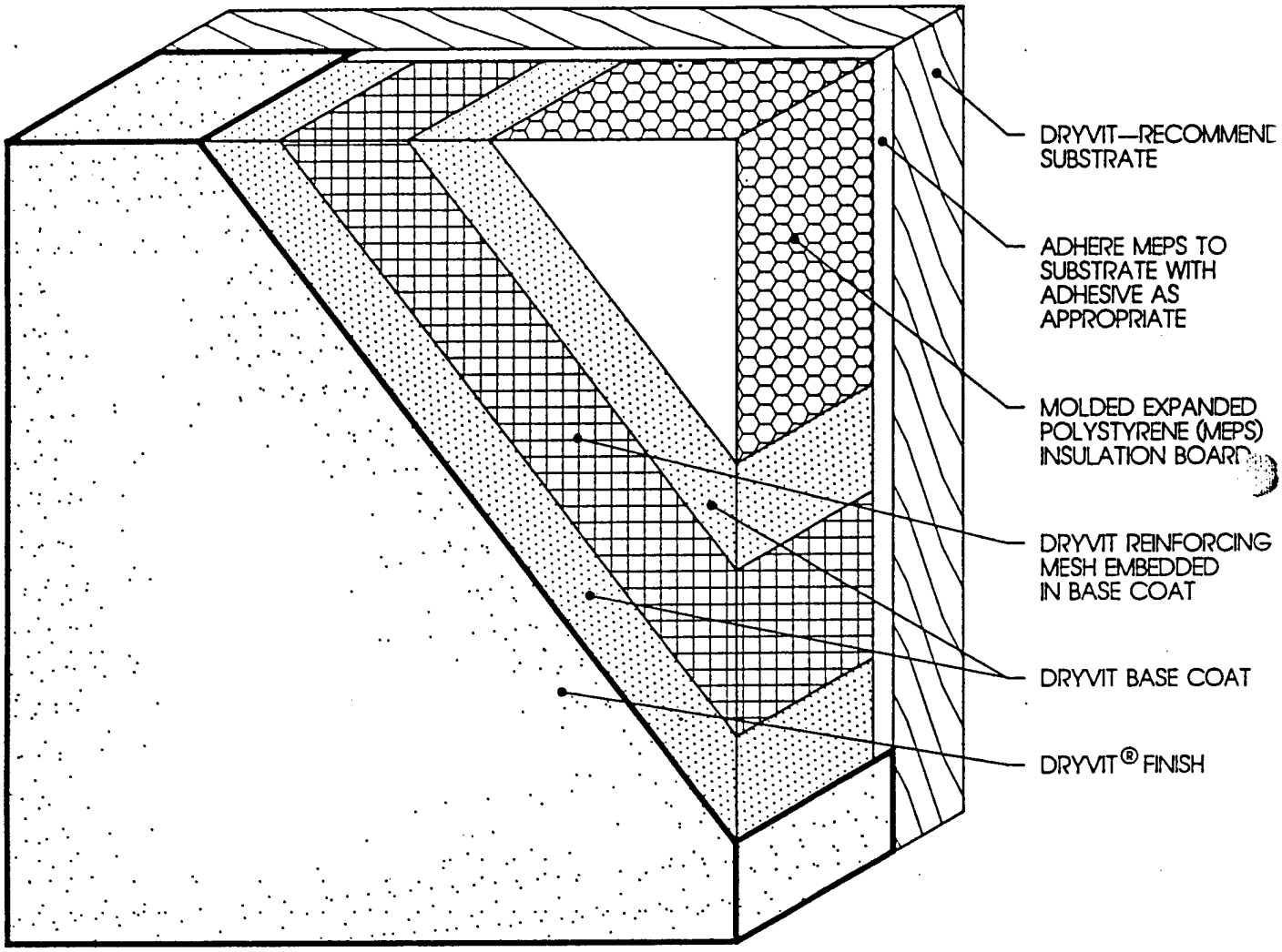

OUTSULATION SYSTEM

DRYVIT SYSTEMS, INC.
HEADQUARTERS
ONE ENERGY WAY
WEST WARWICK, RI 02893

OUTSULATION®

dryvit®

Installation Details

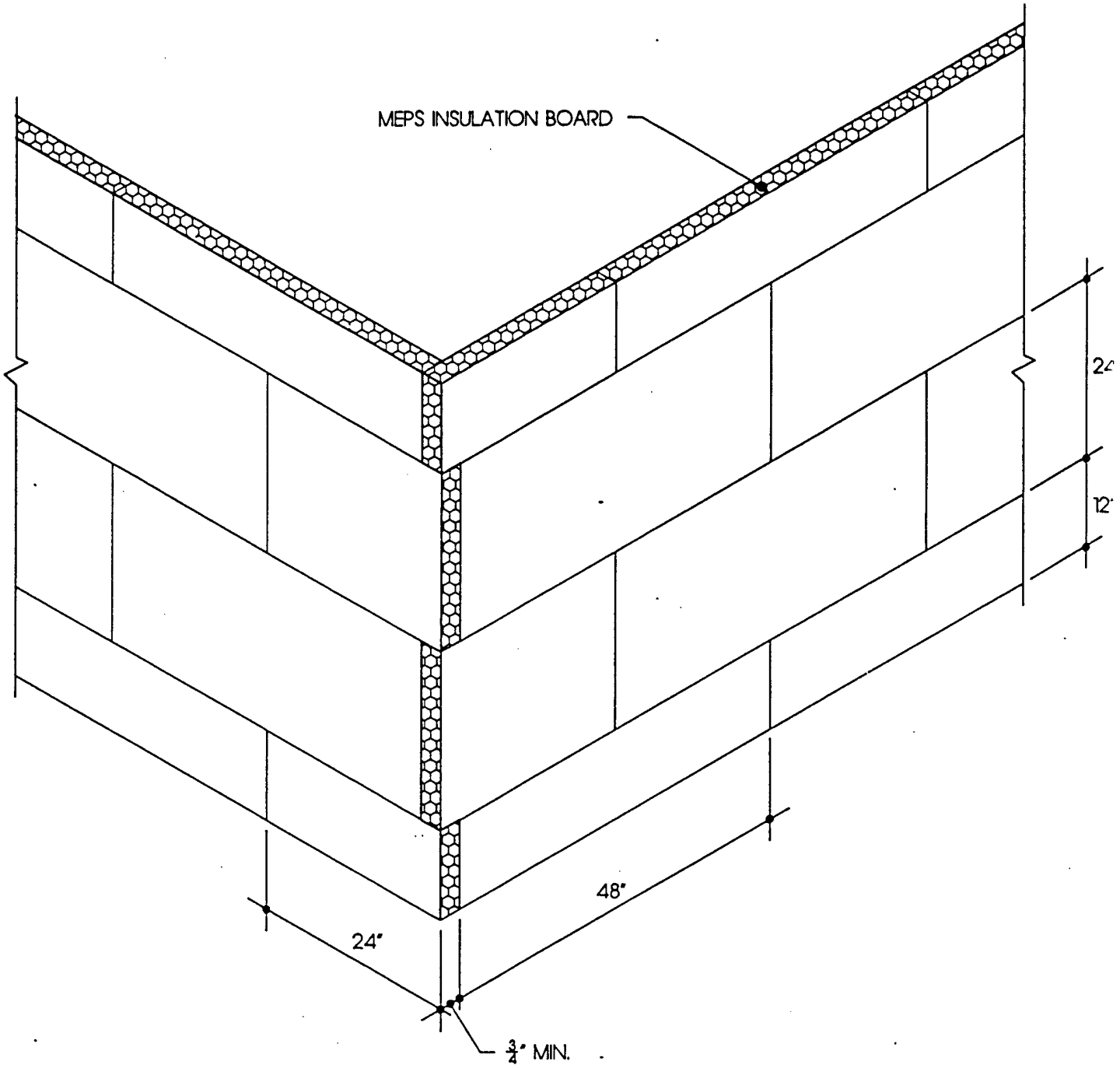

INSULATION BOARD/LAYOUT

DRYVIT SYSTEMS, INC.
HEADQUARTERS
ONE ENERGY WAY
WEST WARWICK, RI 02893
800-556-7752

OUTSULATION®

dryvit®

Installation Details

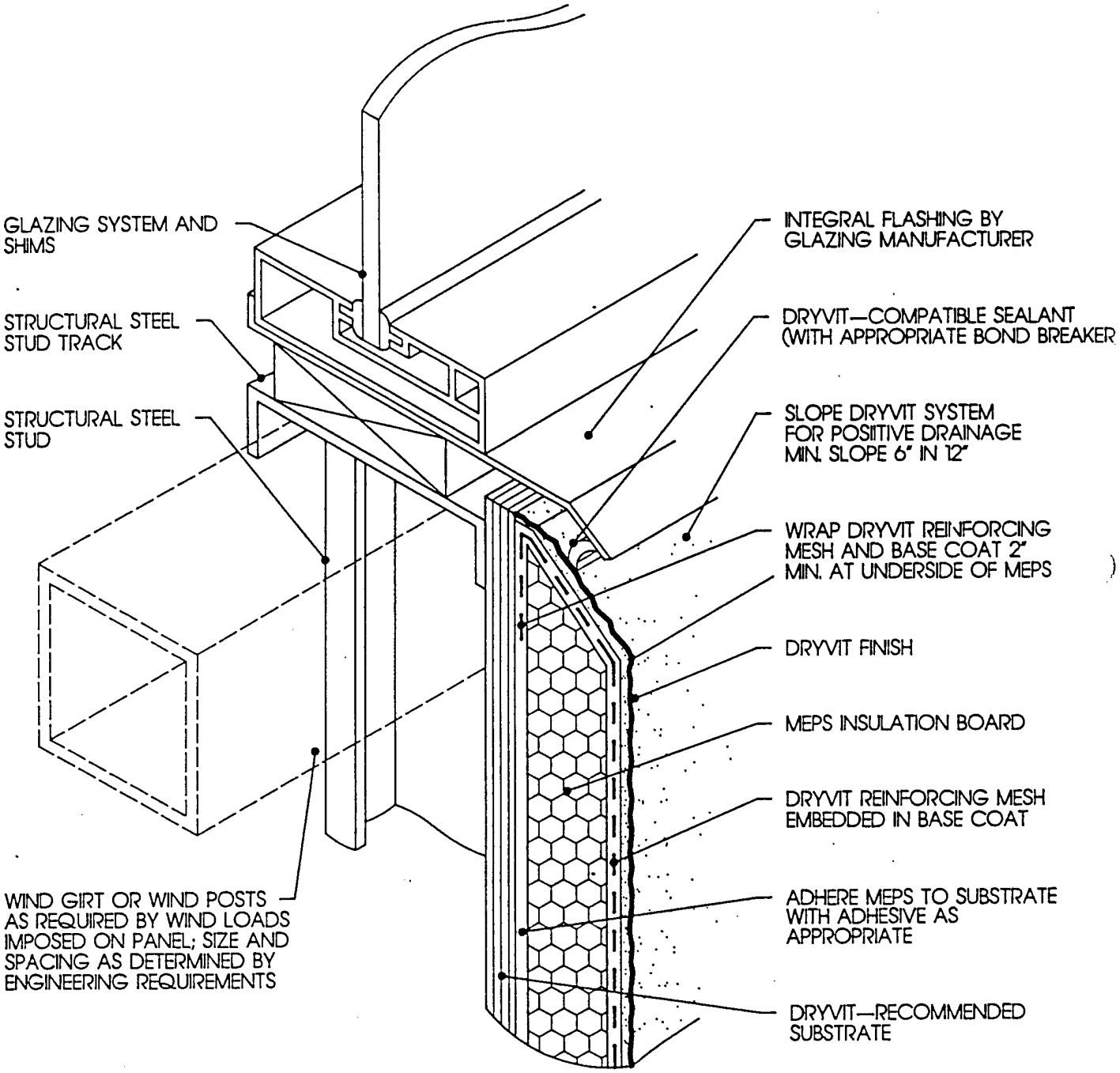

WINDOW SILL/ALUMINUM FRAME WITH INTEGRAL FLASHING

DRYVIT SYSTEMS, INC.
HEADQUARTERS
ONE ENERGY WAY
WEST WARWICK, RI 02893

OUTSULATION®

dryvit®

Installation Details

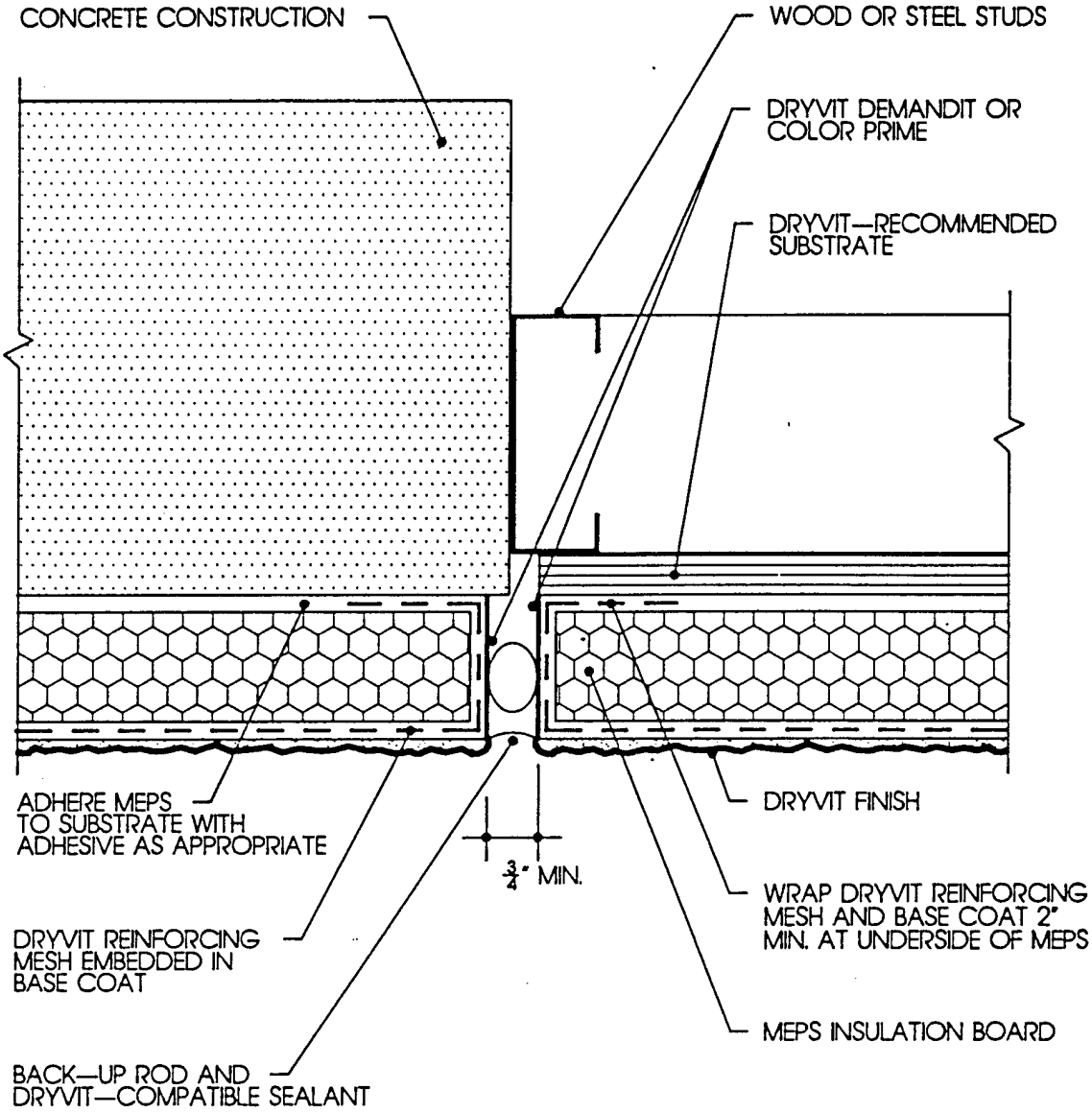

DRYVIT SYSTEM/EXPANSION JOINT DISSIMILAR MATERIALS

DRYVIT SYSTEMS, INC.
HEADQUARTERS
ONE ENERGY WAY
WEST WARWICK, RI 02893
800--556--7752

OUTSULATION®

dryvit®

Installation Details

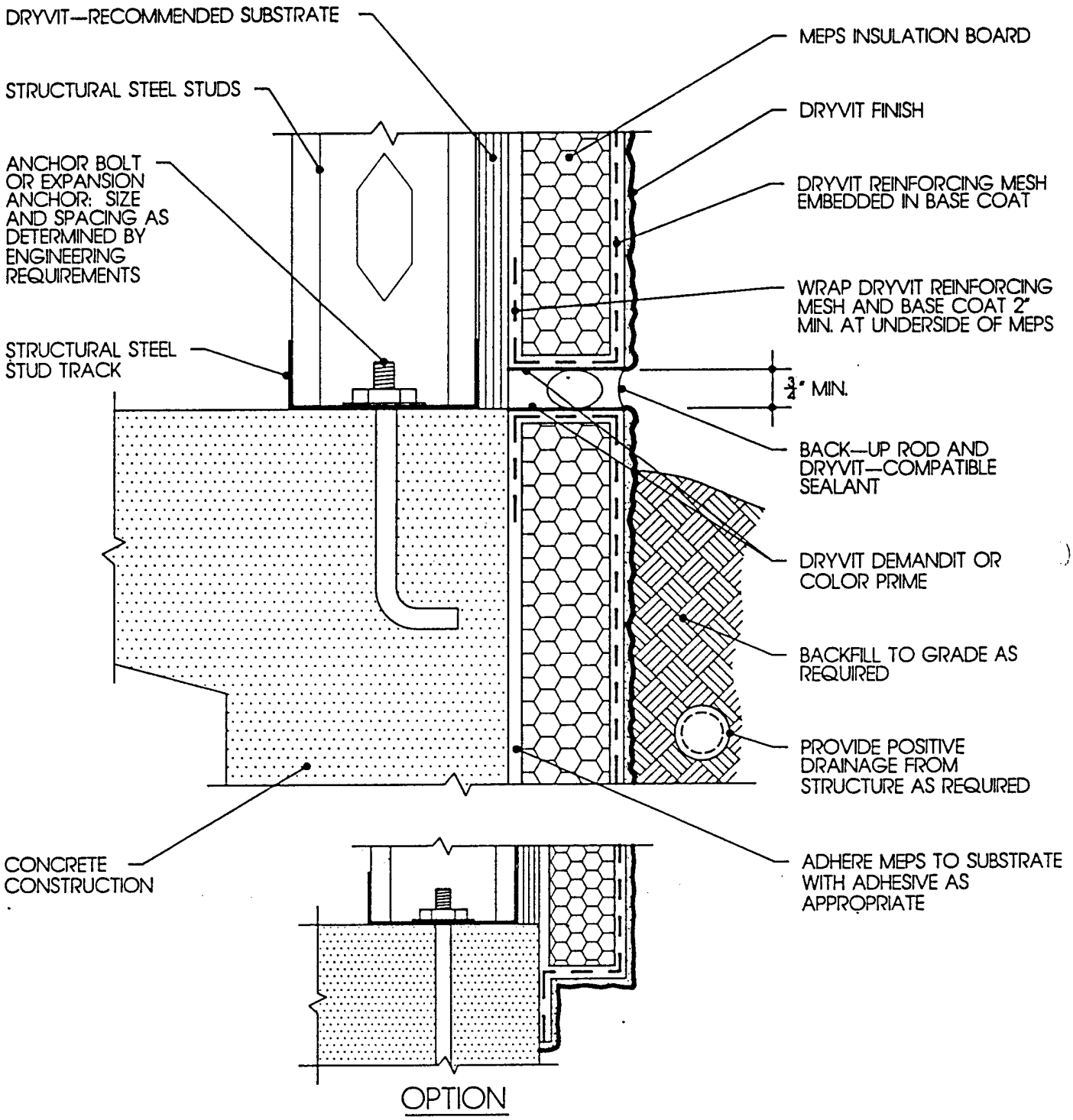

GRADE LEVEL/LIGHT GAUGE EXPANSION JOINT FRAMING AT CONCRETE SLAB

DRYVIT SYSTEMS, INC.
HEADQUARTERS
ONE ENERGY WAY
WEST WARWICK, RI 02893
800—556—7752

OUTSULATION®

dryvit

Installation Details

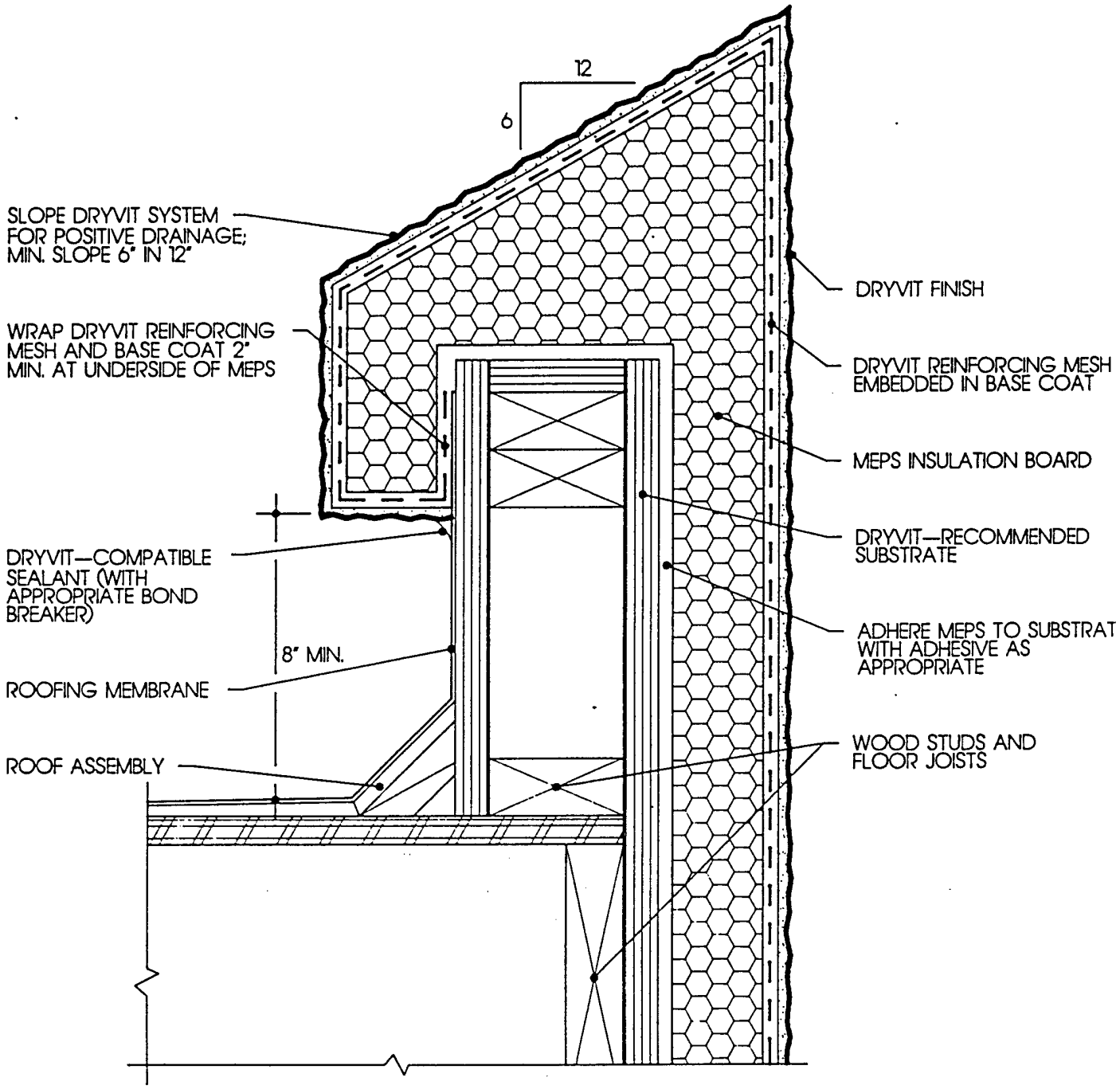

ROOF LEVEL/WOOD FRAMING
MEPS PARAPET CAP

DRYVIT SYSTEMS, INC.
HEADQUARTERS
ONE ENERGY WAY
WEST WARWICK, RI 02893
800- 556-7752

OUTSULATION®

dryvit®

Installation Details

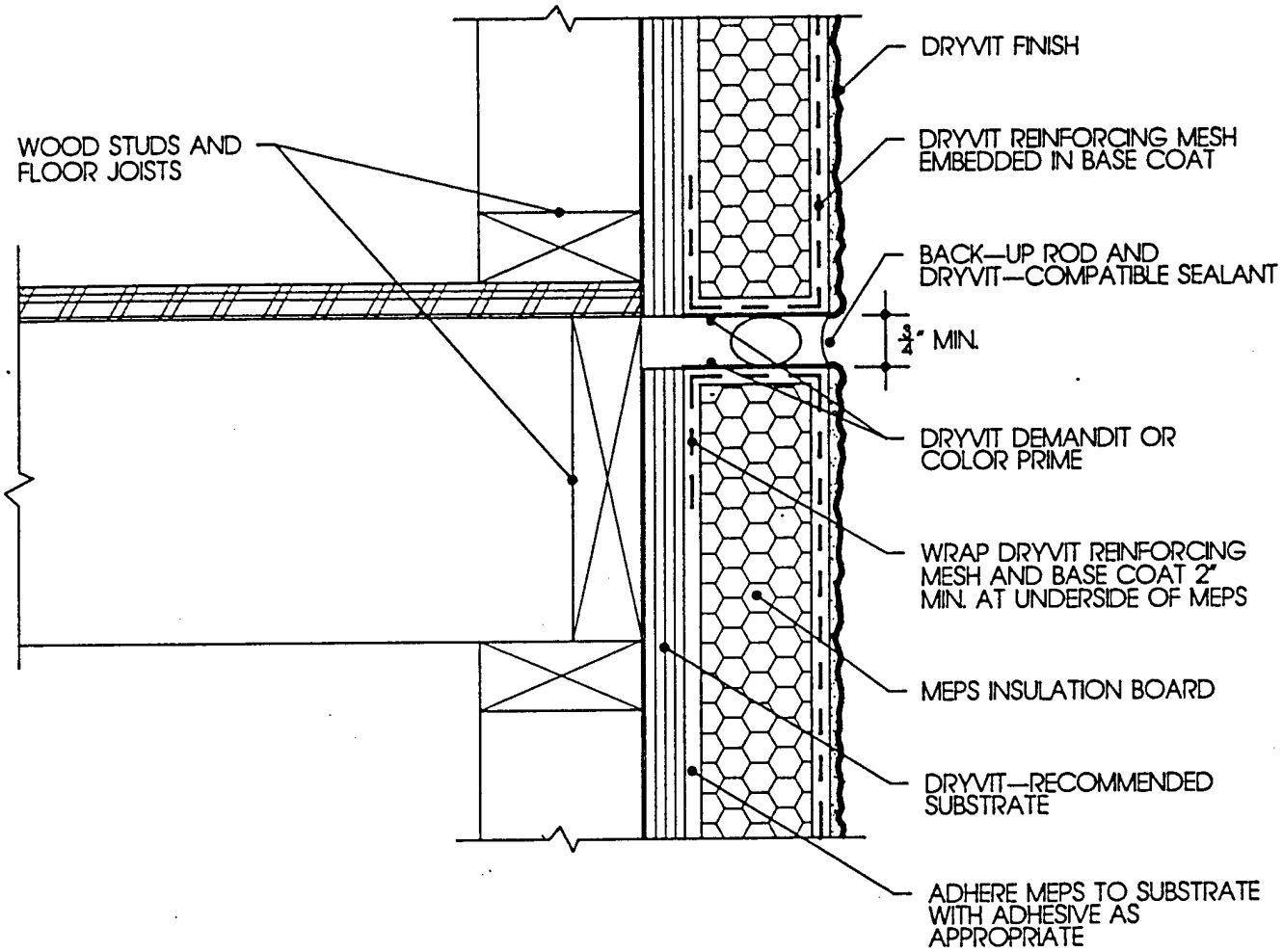

INTERMEDIATE LEVEL/WOOD FRAMING EXPANSION JOINT AT FLOOR LEVEL

DRYVIT SYSTEMS, INC.
HEADQUARTERS
ONE ENERGY WAY
P.O. BOX 1777
WEST WARWICK, RI 02893
800—556—7752

OUTSULATION®

dryvit®

Installation Details

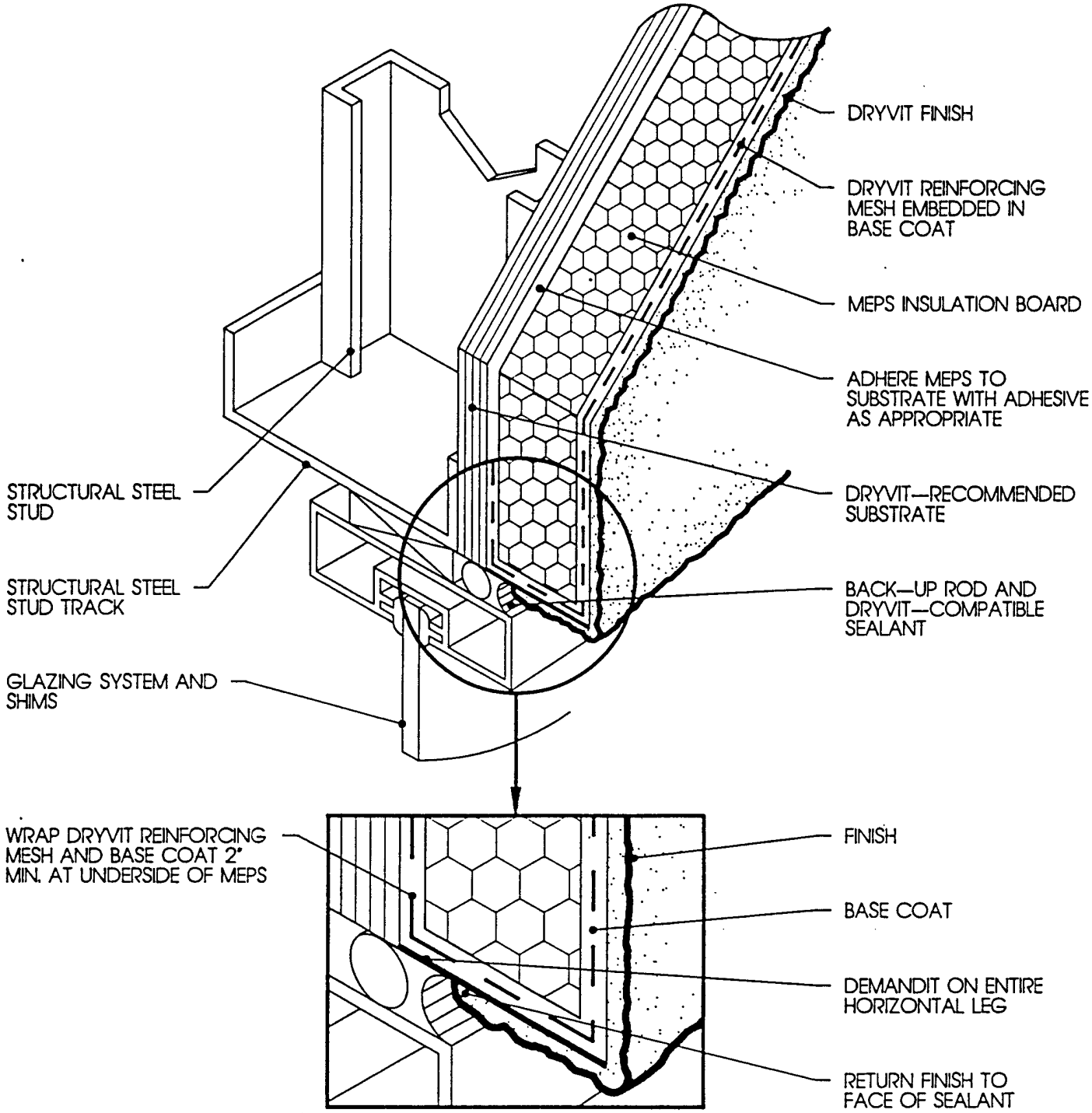

WINDOW HEAD/ALUMINUM FRAME

DRYVIT SYSTEMS, INC.
HEADQUARTERS
ONE ENERGY WAY
WEST WARWICK, RI 02893
800—556—7752

OUTSULATION®

dryvit®

Installation Details

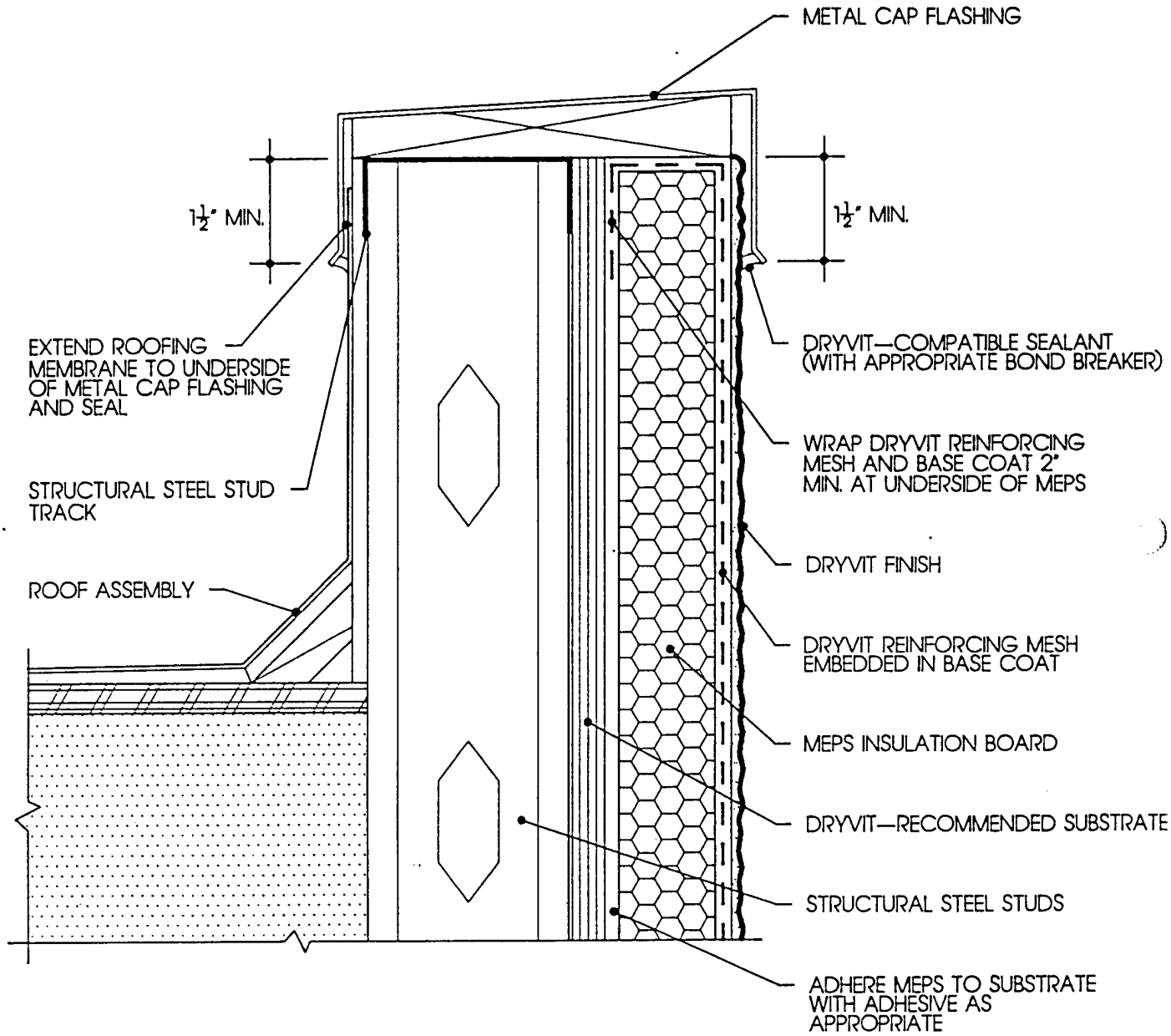

ROOF LEVEL/LIGHT GAUGE FRAMING METAL PARAPET CAP FLASHING

DRYVIT SYSTEMS, INC.
HEADQUARTERS
ONE ENERGY WAY
WEST WARWICK, RI 02893

OUTSULATION®

dryvit®

Installation Details

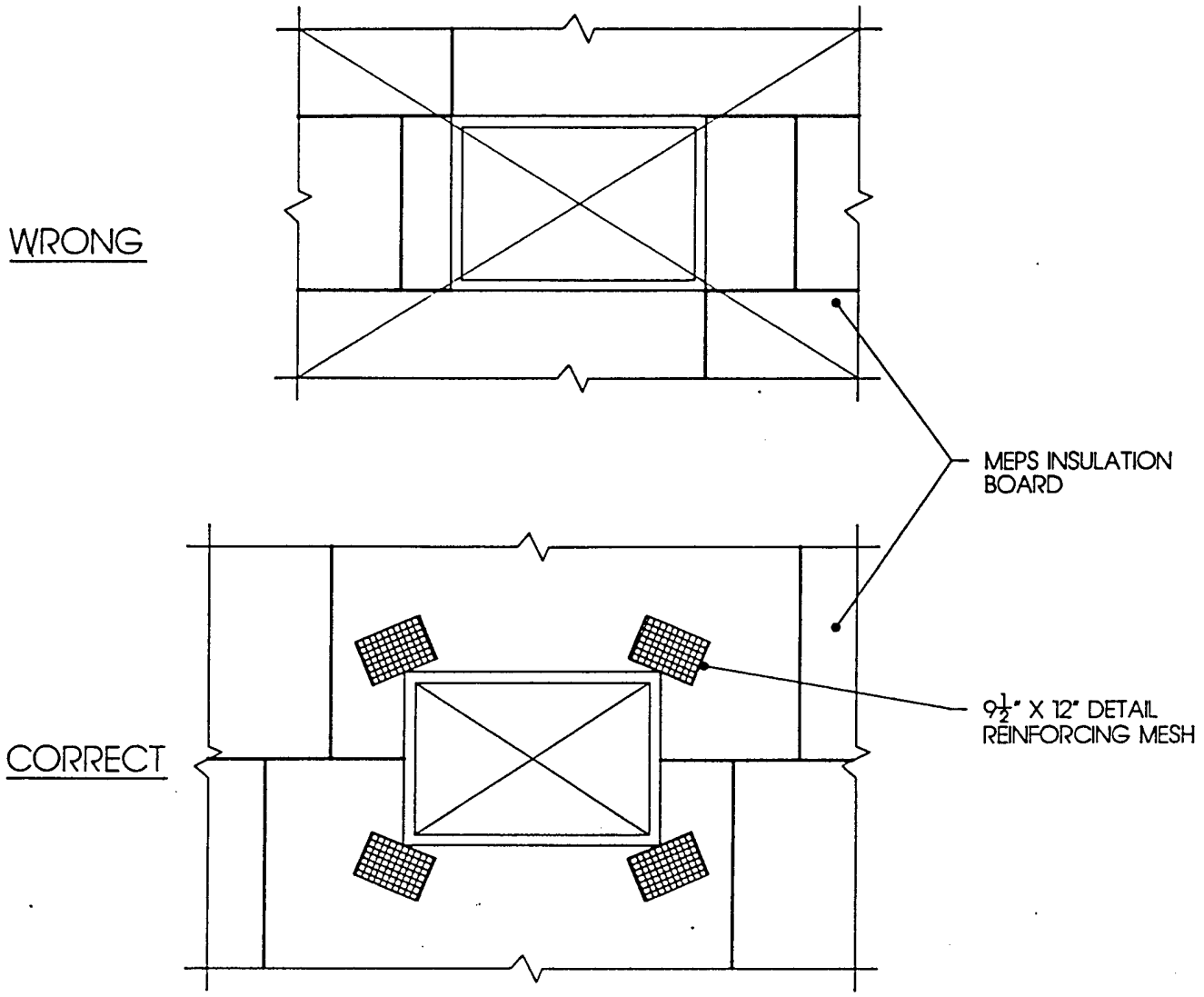

NOTES:
1. LOCATE INSULATION BOARDS SUCH THAT EDGES DO NOT ALIGN WITH CORNERS OF PENETRATION.
2. APPLY A PIECE OF 9½" X 12" DETAIL REINFORCING MESH DIAGONALLY AT EACH CORNER.

WALL PENETRATIONS

DRYVIT SYSTEMS, INC.
HEADQUARTERS
ONE ENERGY WAY
WEST WARWICK, RI 02893
800-556-7752

OUTSULATION®

dryvit®

Installation Details

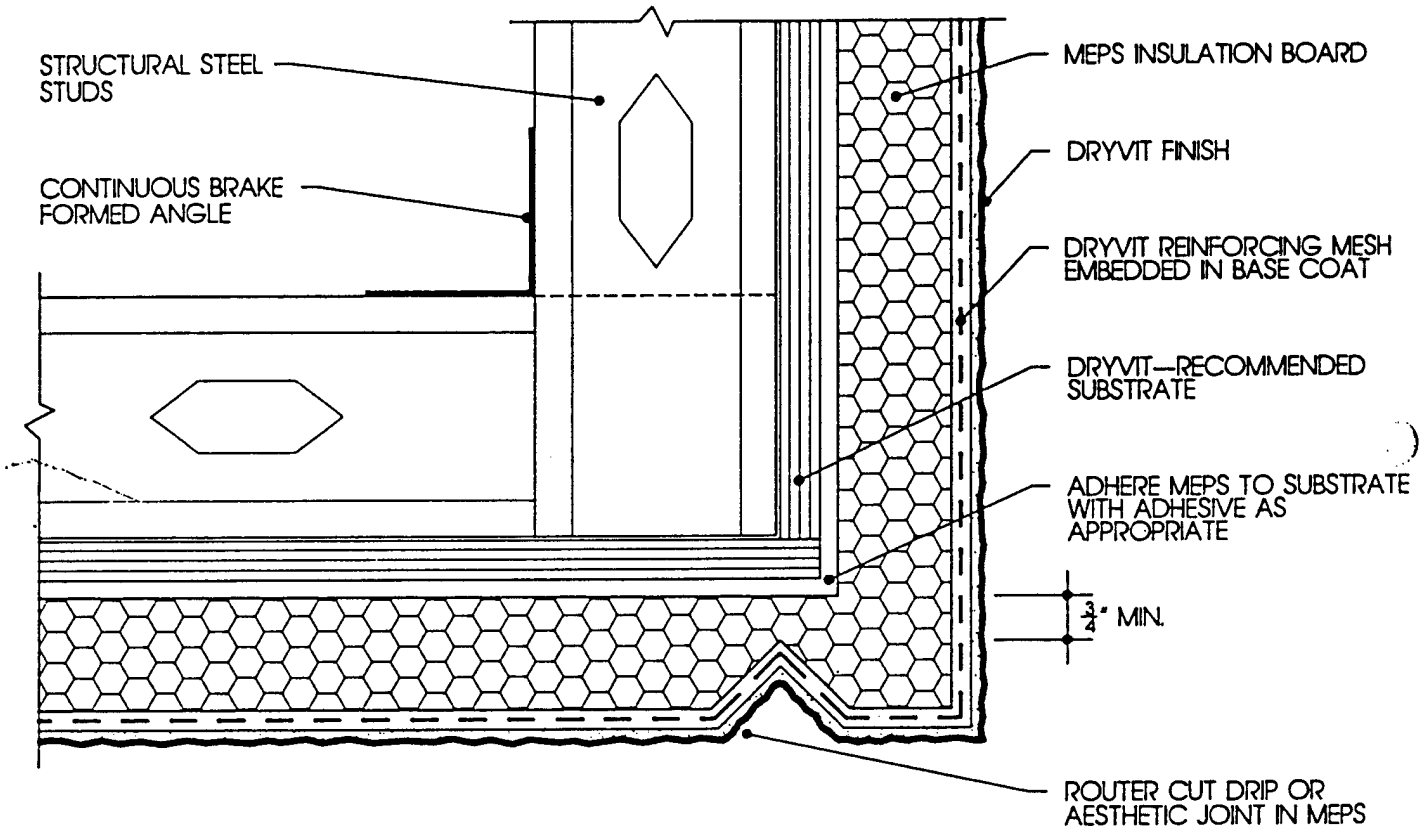

MEPS SOFFIT/LIGHT GAUGE FRAMING ROUTER CUT DRIP REGLET

DRYVIT SYSTEMS, INC.
HEADQUARTERS
ONE ENERGY WAY
WEST WARWICK, RI 02893
800—556—7752

OUTSULATION®

dryvit®

Installation Details

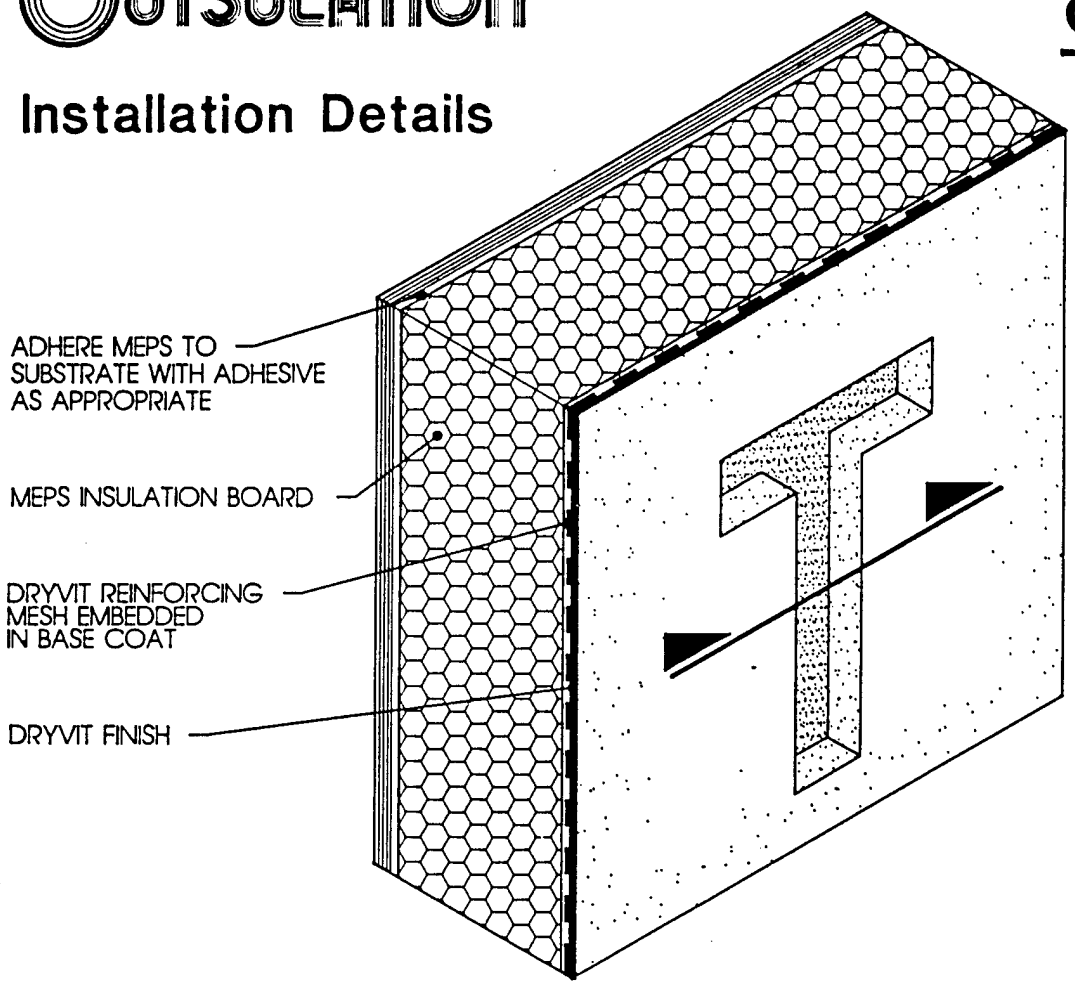

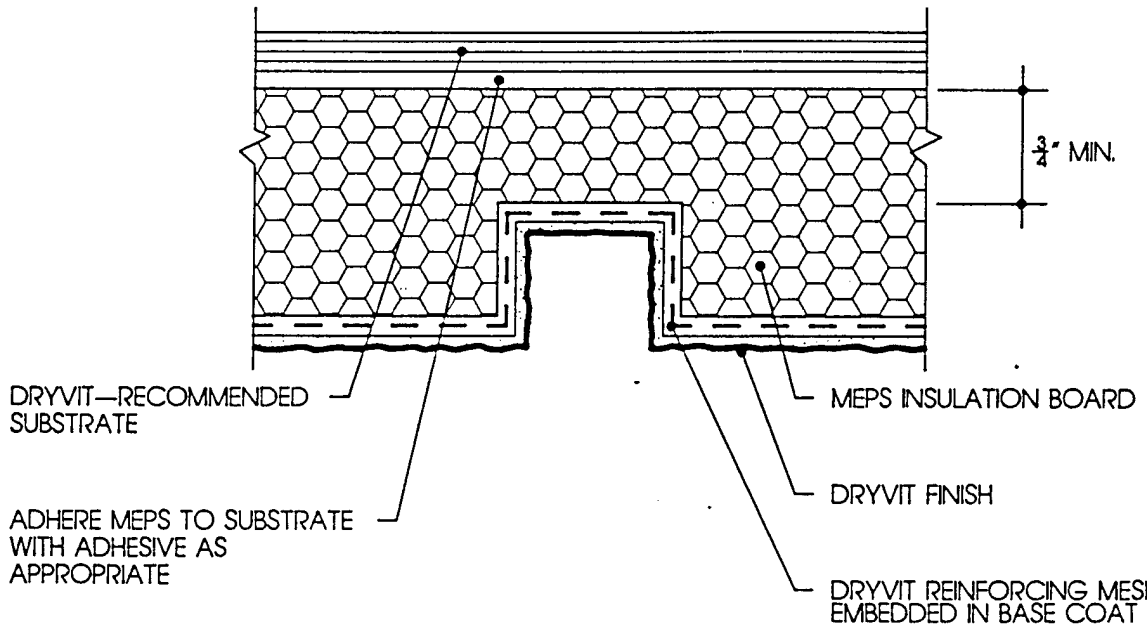

GRAPHICS RECESSED IN OUTSULATION SYSTEM

DRYVIT SYSTEMS, INC.
HEADQUARTERS
ONE ENERGY WAY
WEST WARWICK, RI 02893

OUTSULATION®

dryvit®

Installation Details

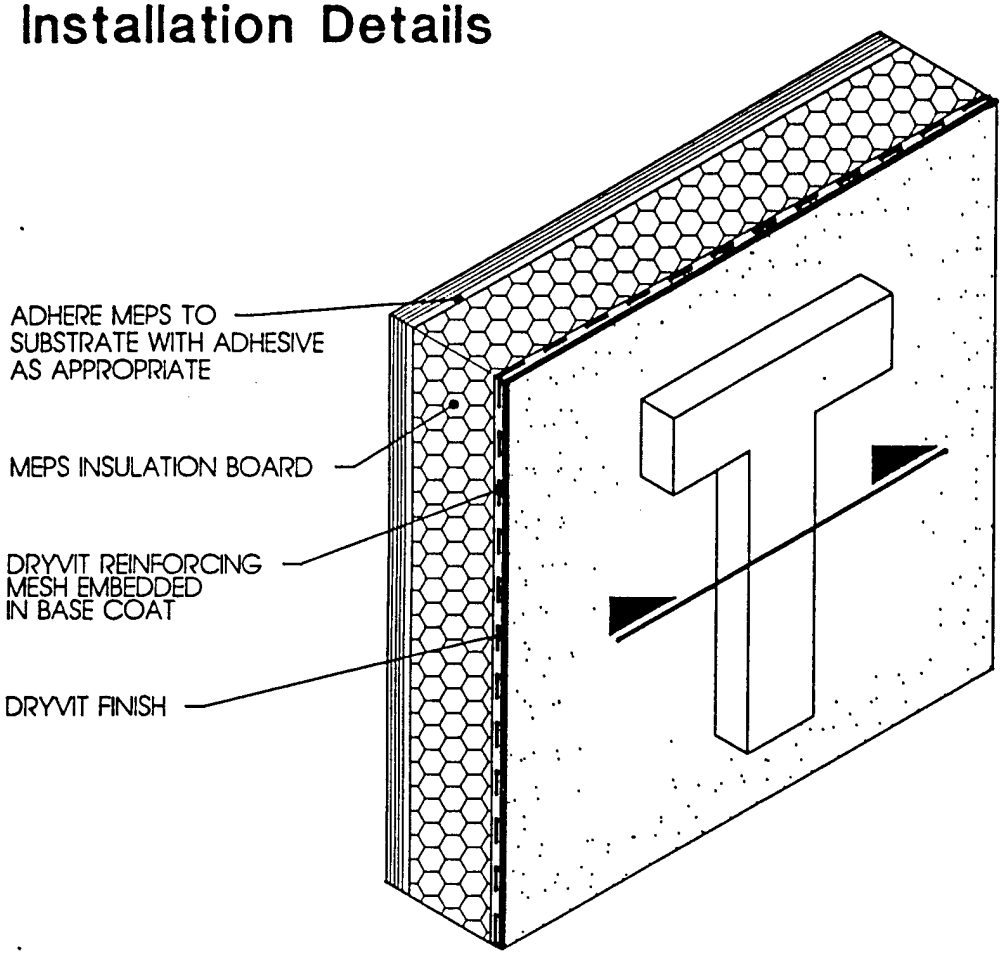

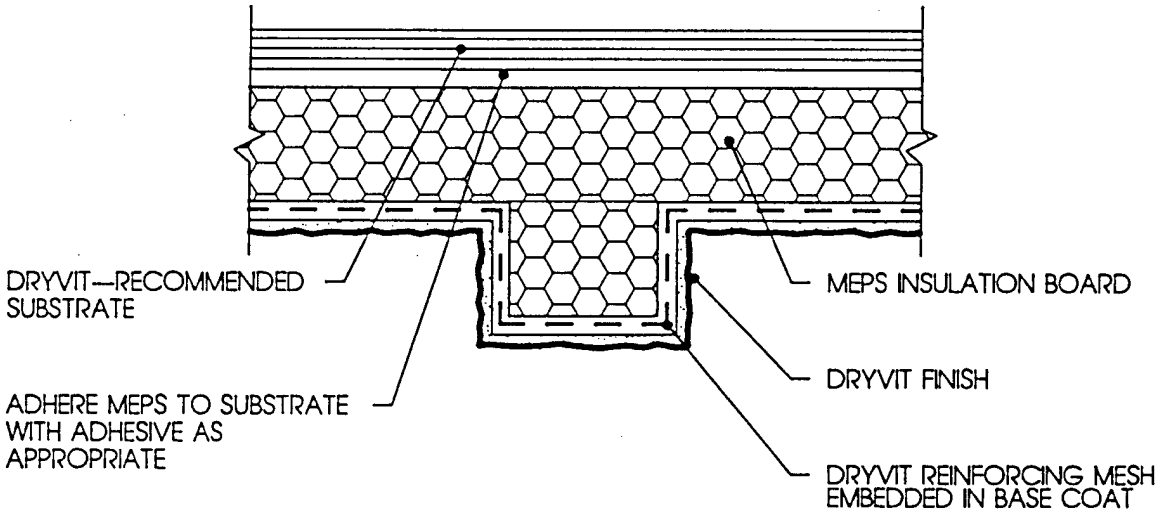

GRAPHICS APPLIED TO OUTSULATION SYSTEM

DRYVIT SYSTEMS, INC.
HEADQUARTERS
ONE ENERGY WAY
WEST WARWICK, RI 02893
800 556 7752

OUTSULATION®

dryvit®

Installation Details

METAL OR WOOD STUDS

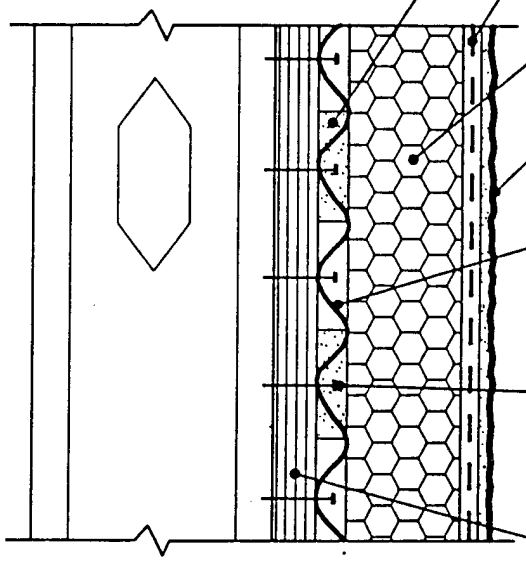

- ADHERE MEPS TO METAL LATH WITH ADHESIVE
- DRYVIT REINFORCING MESH EMBEDDED IN BASE COAT
- MEPS INSULATION BOARD
- DRYVIT FINISH
- 2.5 OR 3.4 LBS./SQ.YD. SELF—FURRING, GALVANIZED EXPANDED METAL LATH
- ATTACH METAL LATH TO STRUCTURAL FRAMING USING APPROPRIATE FASTENERS
- APPROVED SUBSTRATE

BRICK, MASONRY OR CONCRETE CONSTRUCTION

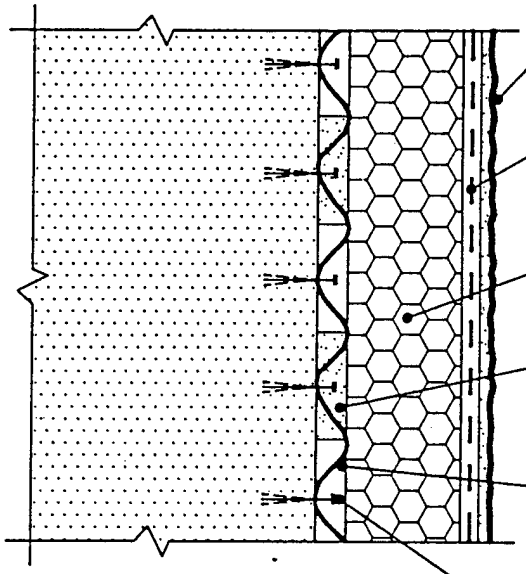

- DRYVIT FINISH
- DRYVIT REINFORCING MESH EMBEDDED IN BASE COAT
- MEPS INSULATION BOARD
- ADHERE MEPS TO METAL LATH WITH ADHESIVE
- 2.5 OR 3.4 LBS./SQ.YD. SELF—FURRING, GALVANIZED EXPANDED METAL LATH
- ATTACH METAL LATH TO MASONRY WALL USING APPROPRIATE FASTENERS OR ANCHORS

METAL LATH AS A SUBSTRATE

DRYVIT SYSTEMS, INC.
HEADQUARTERS
ONE ENERGY WAY
WEST WARWICK, RI 02893
800—556—7752

OUTSULATION®

dryvit®

Installation Details

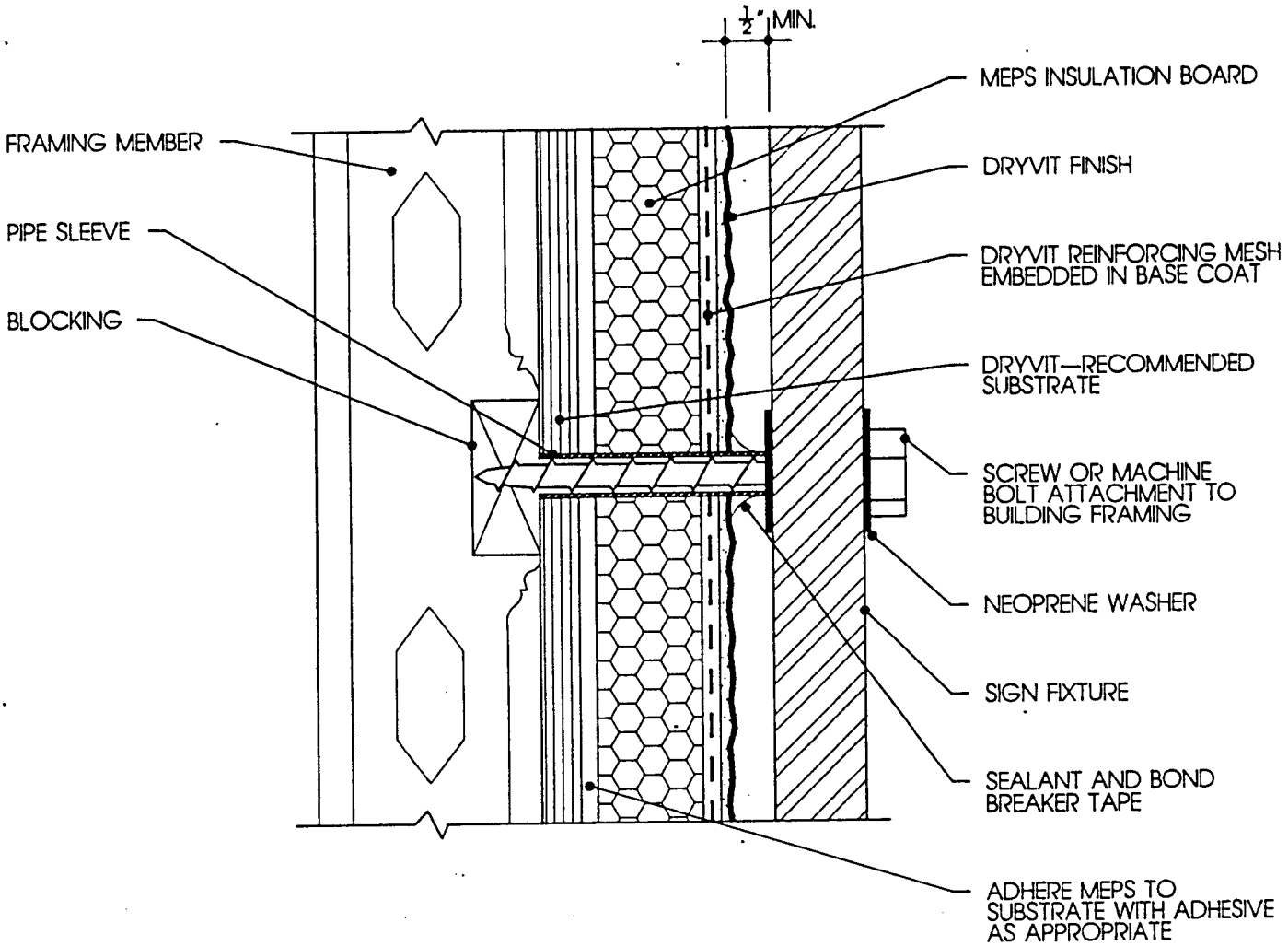

NOTE: ENTIRE PERIMETER OF PIPE SLEEVE IS CAULKED TO PREVENT WATER ENTRY INTO WALL.

SIGN ATTACHMENT

DRYVIT SYSTEMS, INC.
HEADQUARTERS
ONE ENERGY WAY
WEST WARWICK, RI 02893
800 556 7752

OUTSULATION®

THE FACTS: Testing

As the pioneer and acknowledged leader of the EIFS industry, Dryvit Systems, Inc. has always considered stringent testing of key importance to quality performance. Outsulation has been subjected to testing well beyond code minimums at national testing laboratories as well as at Dryvit's own research, technology and manufacturing facilities — unparalleled in the industry. The data provided on the following pages will convince you that Dryvit Systems demonstrates a full commitment to excellence in both product and performance. Such a commitment offers extraordinary peace of mind to the architect and developer specifying Outsulation. And only Dryvit Outsulation can show over 20 years of proven application results in North America — a total of 95,000 buildings, both new and retrofit construction. Dryvit products are designed to minimize upkeep. However, as with all building products, normal maintenance and cleaning are required.

TEST	METHOD	RESULTS
STRUCTURAL TESTING		
☐ Positive and Negative Windloads	ASTM E-330	Tested to pressures in excess of 180 psf without loss of bond to the substrate.
MIL STANDARDS		
☐ Mildew/Fungus Resistance	810B	Passes.
ASTM		
☐ Salt Spray Resistance	B-117	300 hours. No deleterious effects.
☐ Water Vapor Transmission	E-96 Water Method Procedure "B"	Not more than 15 grains an hour per square foot.
☐ Abrasion Resistance	D-968	500 liters. No deleterious effects.
☐ Accelerated Weathering	G-53	2000 hours. No deterioration.
☐ Impact Resistance	E-695	Panzer® 20 Mesh 6"-0" drop height. No surface cracking.
	EIMA Test Standard 101.86	Standard™ Mesh > 25 in.-lbs. Standard Plus™ Mesh > 50 in.-lbs. Intermediate® Mesh > 90 in.-lbs. Panzer & Standard Mesh > 150 in.-lbs.

dryvit®

TEST	METHOD	RESULTS
FEDERAL TEST METHOD STANDARD 141A		
☐ Absorption — Freeze/Thaw	Panels soaked in water @ 20°C for 4 days, then placed at -10°C for 2 hours and +20°C for 2 hours.	60 cycles. Total weight gain of 7.9 grams. No checking, cracking or splitting.
INSULATION BOARD		
☐ Thermal Conductivity	ASTM C-177	"K" Factor — 0.26 maximum at 40°F 0.28 maximum at 75°F
☐ Average Density	ASTM D-1622	1.0 lb./cu. ft. average
☐ Compressive Strength	ASTM D-1621	10 psi at 10% offset
☐ Coefficient of Expansion	ASTM D-696	3.5×10^{-5} in./in./Degree F
☐ Water Vapor Transmission	ASTM E-96	1.6 perm — inch minimum
☐ Water Absorption	ASTM C-272	By volume — 2.5% maximum
☐ Fire Hazard Classification	ASTM E-84	Flame spread ≤ 25* Smoke developed ≤ 450*
☐ Oxygen Index	ASTM D-2863	24.0 minimum
FIRE TESTING* — SUMMARY (See further details on pages 4 and 5)		
☐ "Tunnel Test" (Underwriter's Laboratories, Inc.)	UL-723 (ASTM E-84)	Flame Spread ≤ 25* Smoke Developed ≤ 450*
☐ Fire Endurance Test	ULC-S 101-1977	System remained in place during a 15-minute fire exposure test.
☐ Diversified Fire Test	Modified ASTM E-108	Zero Fire Hazard
☐ Standard Fire Exposure Test	ASTM E-119	Fire resistance rating of one-hour and two-hour wall assemblies was not reduced by the addition of the Dryvit Outsulation System.
☐ Full Scale Multi-Story Fire Test	UBC 17-6 1250# crib — Independent Research Laboratory San Antonio, Texas	No lateral spread of flame from compartment of fire origin to adjacent spaces.

*These numerical Flame Spread and Smoke Development ratings do not necessarily reflect the performance of this or any other material under actual fire conditions.

OUTSULATION®

THE FACTS: Fire Testing

TEST	DESCRIPTION	
TUNNEL TEST ASTM E-84	The Outsulation coating system has been tested by National Laboratory in accordance with UL-723 (ASTM E-84) test procedure. The coating system demonstrated resistance to flame spread, achieving a flame spread of less than 25*. Further, the expanded	polystyrene insulation used within the Outsulation System has a flame spread rating of less than 25* when tested in accordance with the ASTM E-84 procedure.
FIRE ENDURANCE TEST ULC-S 101-1977	The Dryvit Outsulation exterior wall insulation and finish system remained in place during a 15-minute fire exposure test conducted in conformance with ULC-S 101-1977 (ASTM E-119)	"Standard Methods of Fire Endurance Tests of Building Construction and Materials."
DIVERSIFIED FIRE TEST UNIVERSITY OF CALIFORNIA MODIFIED ASTM E-108	A series of fire tests involving a modified ASTM E-108 procedure have been conducted at the University of California. The tests were conducted on Outsulation panels having expanded polystyrene insulation ranging from 2½" to 8" thickness. The tests were conducted to simulate the exposure delivered to the exterior face of a building resulting from a fully developed room fire which "vents" to the outside through a window.	In Paragraph 7.4 of the Analysis and Conclusions of the report, it is noted "there was very little evidence to indicate that any significant burning or flaming had occurred beneath the protective coating." Subsequent to test, Dr. Robert Brady Williamson offered additional observations in a letter dated September 16, 1976. The letter indicates smoke production during tests of Outsulation panels was limited.
STANDARD FIRE EXPOSURE TEST ASTM E-119	The Dryvit Outsulation System has been evaluated by ASTM E-119 testing with one-hour and two-hour wall assemblies. The test exposes a test specimen to a standard fire exposure controlled to achieve specified temperatures throughout a specified time period and measures its response to the exposure in terms of the transmission of temperature and hot gases	through the assembly. The fire resistance rating, as determined by ASTM E-119 of listed one-hour and two-hour wall assemblies, was not reduced by the addition of the Dryvit exterior wall insulation system. The wall assembly was tested with both the exterior and interior face exposed to the fire.

*These numerical Flame Spread and Smoke Development ratings do not necessarily reflect the performance of this or any other material under actual fire conditions.

dryvit

TEST	DESCRIPTION
UBC 17-6 FULL SCALE MULTI-STORY FIRE TEST 1250 POUND CRIB	The flammability characteristics of Outsulation panels using 4" of expanded polystyrene were evaluated in a full scale fire test involving a two-story structure. The test was conducted at an independent research laboratory in San Antonio, Texas. The panels were subjected to a fire exposure from a 1250 pound crib which was designed to simulate the ASTM E-119 standard time/temperature curve for a minimum of 30 minutes. The crib was allowed to burn freely for approximately 40 minutes. Temperatures exceeded 900°F on the face of the panels for the majority of the test. In spite of this severe fire exposure, the Outsulation panels demonstrated significant resistance to flame propagation. Test conclusions show that there was no flame penetration into the second floor area during the test. There was no significant flame propagation over the exterior face of the panels. There was no lateral spread of flame from the compartment of fire origin to adjacent spaces during the test exposure.

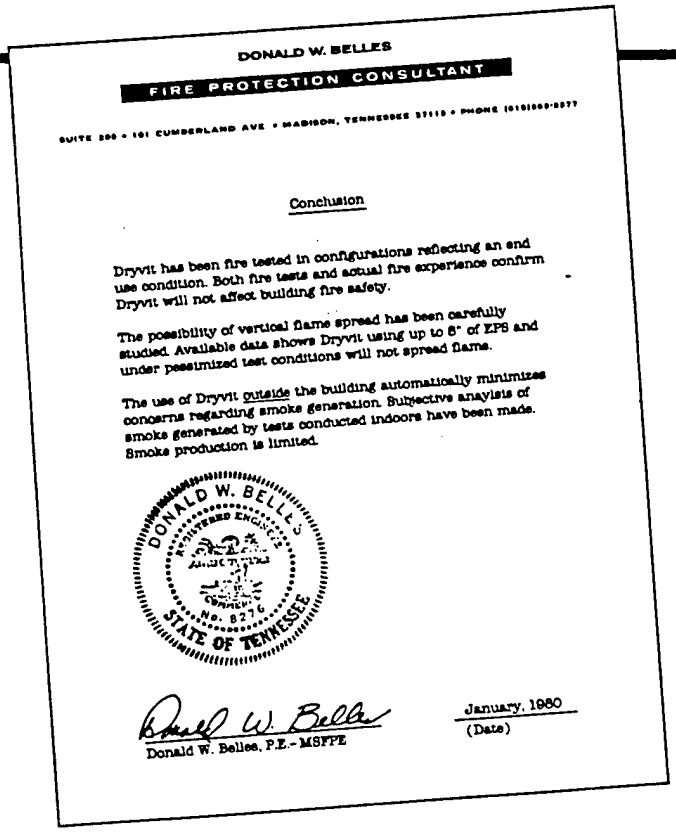

DONALD W. BELLES

FIRE PROTECTION CONSULTANT

SUITE 300 • 101 CUMBERLAND AVE • MADISON, TENNESSEE 37115 • PHONE (615)865-5577

Conclusion

Dryvit has been fire tested in configurations reflecting an end use condition. Both fire tests and actual fire experience confirm Dryvit will not affect building fire safety.

The possibility of vertical flame spread has been carefully studied. Available data shows Dryvit using up to 8" of EPS and under pessimized test conditions will not spread flame.

The use of Dryvit outside the building automatically minimizes concerns regarding smoke generation. Subjective anaylsis of smoke generated by tests conducted indoors have been made. Smoke production is limited.

DONALD W. BELLES REGISTERED ENGINEER No. 8276 STATE OF TENNESSEE

Donald W. Belles

Donald W. Belles, P.E.-MSFPE

January, 1980
(Date)

CONCLUSION

"Outsulation has been fire tested in configurations reflecting an end use condition. Both fire tests and actual fire experience confirm Outsulation will not affect building fire safety.

"The possibility of vertical flame spread has been carefully studied. Available data shows Outsulation using up to 8" of EPS and under pessimized test conditions will not spread flame.

"The use of Outsulation outside the building automatically minimizes concerns regarding smoke generation. Subjective analysis of smoke generated by tests conducted indoors have been made. Smoke production is limited."

OUTSULATION®

THE FACTS: Codes and Approvals

CODES

ICBO
UNIFORM BUILDING CODE

Evaluation Report 2728

THE BOCA
BASIC/NATIONAL
BUILDING CODE

Research Report 87-12

SBCCI
STANDARD BUILDING CODE

Compliance Report 8912

Building code authorities are charged with developing and administering guidelines for systems and products to insure the protection of public health, safety and welfare.

Regulations affecting the Dryvit Outsulation System are found in various sections referencing building usage, type of construction, structural loads and fire performance. The insulation component of Outsulation is addressed specifically by each code as noted in the listing.

APPROVALS

- Metropolitan Dade County, Florida
- California State Fire Marshal's Office
- New York State
- City and County of San Francisco
- HUD — U.S. Dept. of Housing and Urban Development
- Dept. of Health and Human Services
- City of Phoenix, Arizona
- City of Mobile, Alabama
- City and County of Denver, Colorado
- State of Connecticut
- Zoning Code of the City of Coral Gables, Florida
- City of Jacksonville, Florida
- City of Baltimore, Maryland
- State of Rhode Island
- Texas State Board of Insurance
- State of Wisconsin
- Canada Mortgage and Housing Corporation #11421
- City of New York, MEA #67-87-M
- City of Los Angeles

dryvit

NATIONAL ACCOUNT LISTING (PARTIAL)

HOTEL/MOTEL
Chalet Susse International
Doubletree Inns
Hilton Hotels
Hilton Inns
Holiday Inns
Howard Johnsons
Hyatt Hotels
Marriott Corporation
Promus Companies
Quality International
Ramada Inns
Sheraton Hotels
Westin Hotels

RESTAURANT & RETAIL
Arby's Inc.
Dayton Hudson Corporation
Dillards
Hardee's Food Systems
Kentucky Fried Chicken
K-Mart
McDonalds
Montgomery Ward
Nordstroms
Sears Roebuck & Co.
Shoney's Inc.
Taco John's
Walgreens

INSURANCE & FINANCIAL
AETNA
All-State
Equitable Assurance Co.
Mass Mutual
Prudential Insurance Co.
Security Pacific Bank
State Farm
Teachers Insurance Co.
Travelers Insurance Co.

GENERAL CONTRACTORS GROUP
Gilbane Building Co.
Inland Construction Co.
McDevitt & Street
Morrison-Knudsen
Pepper Construction
Tishman Realty and Construction Co.
Turner Construction Co.

MEDICAL & CORPORATE
American Medical International
Boeing Aerospace
Charter Medical Corporation
Coca-Cola
Ford Motor Co.
Hospital Corporation of America
Humana
IBM
Kaiser Medical
Toyota/Lexus

REAL ESTATE DEVELOPERS
Edward J. DeBartolo Co.
Homart Development Corp.
Kravco Co.
Melvin Simon Corp.
Opus Corp.
Pyramid Companies
The Rouse Co.
Trammell Crow

GOVERNMENT
Army Corp. of Engineers
Federal Bureau of Prisons
HUD & FHA
U.S. Armed Forces

CESAM-EN-CM
CEORL-ED-M-S

January 1993
July 1, 1994

GENERAL SCOPE OF WORK

FOR A

~~a. WATER CONSERVATION STUDY (Water and Energy), and~~
b. LIMITED ENERGY STUDY (Glass)

FORT KNOX, KY

Performed as part of the

ENERGY ENGINEERING ANALYSIS PROGRAM (EEAP) FY94S

FORT KNOX, KY
SCOPE OF WORK
FOR A
~~a. WATER CONSERVATION STUDY (Water and Energy), and~~
b. LIMITED ENERGY STUDY (Glass)

TABLE OF CONTENTS

1. BRIEF DESCRIPTION OF WORK

2. GENERAL

3. PROJECT MANAGEMENT

4. SERVICES AND MATERIALS

5. PROJECT DOCUMENTATION

5.1 ECIP Projects
5.2 Non-ECIP Projects
5.3 Nonfeasible ECOs

6. DETAILED SCOPE OF WORK

7. WORK TO BE ACCOMPLISHED

7.1 Review Previous Studies
7.2 Perform ~~a. Water Conservation Study and b~~. Limited Energy Study (Glass).
7.3 Reevaluate Selected Projects
7.4 Evaluate Selected ECOs
7.5 Combine ECOs into Recommended Projects
7.6 Submittals, Presentations and Reviews

ANNEXES

A - DETAILED SCOPE OF WORK

B - EXECUTIVE SUMMARY GUIDELINE

C - REQUIRED DD FORM 1391 DATA

GLOSSARY OF ACCRONYMS

1. BRIEF DESCRIPTION OF WORK: The Architect-Engineer (A/E) shall:

1.1 Review previously completed Energy Engineering Analysis Program (EEAP) study which applies to the specific building, and/or systems, or energy conservation opportunity (ECO) covered by this study, if any had been done.

1.2 Perform a Limited Energy survey (glass), and Water Conservation Study of specific buildings or areas to collect all data required to evaluate the specific ECOs included in this study.

1.3 Reevaluate the specific project or ECO from the previous study, if any were done, to determine its economic feasibility based on revised criteria, current site conditions and technical applicability.

1.4 Evaluate specific ECOs to determine their energy savings potential and economic feasibility.

1.5 Provide project documentation for recommended ECOs as detailed herein.

1.6 Prepare a comprehensive report to document all work performed, the results and all recommendations.

2. GENERAL

2.1 This study is limited to the evaluation of the specific buildings, systems, or ECOs listed in Annex A, DETAILED SCOPE OF WORK.

2.2 The information and analysis outlined herein are considered to be minimum requirements for adequate performance of this study.

2.3 For the buildings, and/or systems or ECOs listed in Annex A, all methods of energy conservation which are reasonable and practical shall be considered, including improvements of operational methods and procedures as well as the physical facilities. All energy conservation opportunities which produce energy or dollar savings shall be documented in this report. Any energy conservation opportunity considered infeasible shall also be documented in the report with reasons for elimination.

2.4 The study shall consider the use of all energy sources applicable to each building, system, or ECO.

2.5 The "Energy Conservation Investment Program (ECIP) Guidance", described in letter from AFPI-ENO, dated 20 JAN 1994 and the latest revision from CEHSC-FU establishes criteria for ECIP

projects and shall be used for performing the economic analyses of all ECOs and projects. The program, Life Cycle Cost In Design (LCCID), has been developed for performing life cycle cost calculations in accordance with ECIP guidelines and is referenced in the ECIP Guidance. If any program other than LCCID is proposed for life cycle cost analysis (LCCA), it must use the mode of calculation specified in the ECIP Guidance. The output must be in the format of the ECIP LCCA summary sheet, and it must be submitted for approval to the Contracting Officer.

2.6 Energy conservation opportunities (ECO) determined to be technically and economically feasible shall be developed into projects acceptable to installation personnel. This may involve combining similar ECOs into larger packages which will qualify for ECIP, MCA, or PCIP funding, and determining in coordination with installation personnel the appropriate packaging and implementation approach for all feasible ECOs.

2.6.1 Projects which qualify for ECIP funding shall be identified, separately listed, and prioritized by the Savings to Investment Ratio (SIR).

2.6.2 All feasible non-ECIP projects shall be ranked in order of highest to lowest SIR.

2.6.3 At some installations Energy Conservation and Management (ECAM) funding will be used instead of ECIP funding. The criteria for each program is the same. The Director of Engineering and Housing will indicate which program is used at this installation. This Scope of Work mentions only ECIP, however, ECAM is also meant.

3. PROJECT MANAGEMENT

3.1 Project Managers. The A/E shall designate a project manager to serve as a point of contact and liaison for work required under this contract. Upon award of this contract, the individual shall be immediately designated in writing. The A/E's designated project manager shall be approved by the Contracting Officer prior to commencement of work. This designated individual shall be responsible for coordination of work required under this contract. The Contracting Officer will designate a project manager to serve as the Government's point of contact and liaison for all work required under this contract.

3.2 Installation Assistance. The Commanding Officer or authorized representative at the installation will designate an individual to assist the A/E in obtaining information and establishing contacts necessary to accomplish the work required under this contract. This individual will be the installation representative.

3.3 Public Disclosures. The A/E shall make no public announcements or disclosures relative to information contained or developed in this contract, except as authorized by the Contracting Officer.

3.4 Meetings. Meetings will be scheduled whenever requested by the AE or the Contracting Officer for the resolution of questions or problems encountered in the performance of the work. The A/E's project manager and the Government's representative shall be required to attend and participate in all meetings pertinent to the work required under this contract as directed by the Contracting Officer. These meetings, if necessary, are in addition to the presentation and review conferences.

3.5 Site Visits, Inspections, and Investigations. The A/E shall visit and inspect/investigate the site of the project as necessary and required during the preparation and accomplishment of the work.

3.6 Records

3.6.1 The A/E shall provide a record of all significant conferences, meetings, discussions, verbal directions, telephone conversations, etc., with Government representative(s) relative to this contract in which the A/E and/or designated representative(s) thereof participated. These records shall be dated and shall identify the contract number, and modification number if applicable, participating personnel, subject discussed and conclusions reached. The A/E shall forward to the Contracting Officer within ten calendar days, a reproducible copy of the records.

3.6.2 The A/E shall provide a record of requests for and/or receipt of Government-furnished material, data, documents, information, etc., which if not furnished in a timely manner, would significantly impair the normal progression of the work under this contract. The records shall be dated and shall identify the contract number and modification number, if applicable. The A/E shall forward to the Contracting Officer within ten calendar days, a reproducible copy of the record of request or receipt of material.

3.7 Interviews. The A/E and the Government's representative shall conduct entry and exit interviews with the Department of Public Works (DPW) before starting work at the installation and after completion of the field work. The Government's representative shall schedule the interviews at least one week in advance.

3.7.1 Entry. The entry interview shall describe the intended procedures for the survey and shall be conducted prior to commencing work at the facility. As a minimum, the interview

shall cover the following points:

a. Schedules.

b. Names of energy analysts who will be conducting the site survey.

c. Proposed working hours.

d. Support requirements from the Department of Public Works.

3.7.2 Exit. The exit interview shall briefly describe the items surveyed and probable areas of energy conservation. The interview shall also solicit input and advice from the DPW.

4. SERVICES AND MATERIALS. All services, materials (except those specifically enumerated to be furnished by the Government), plant, labor, supervision and travel necessary to perform the work and render the data required under this contract are included in the lump sum price of the contract.

5. PROJECT DOCUMENTATION. All ECOs which the A/E has considered shall be included in one of the following categories and presented in the report as such:

5.1 ECIP Projects. To qualify as an ECIP project, an ECO, or several ECOs which have been combined, must have a construction cost estimate greater than $300,000, a Savings to Investment Ratio (SIR) greater than one and a simple payback period of less than ten years. For ECAM projects, the $300,000 limitation may not apply; in such cases, the AE shall check with the installation for guidance. The overall project and each discrete part of the project shall have an SIR greater than one. All projects meeting the above criteria shall be arranged as specified in paragraph 2.7.1 and shall be provided with programming documentation. Programming documentation shall consist of a DD Form 1391, life cycle cost analysis (LCCA) summary sheet(s) (with necessary backup data to verify the numbers presented), and a Project Development Brochure (PDB). A LCCA summary sheet shall be developed for each ECO and for the overall project when more than one ECO are combined. The energy savings for projects consisting of multiple ECOs must take into account the synergistic effects of the individual ECOs. For projects and ECOs reevaluated from previous studies, the backup data shall consist of copies of the original calculations and analysis, with new pages revising the original calculations and analysis. In addition, the backup data shall include as much of the following as is available: the increment of work under which the project or ECO was developed in the previous study, title(s) of the project(s), the energy to cost (E/C) ratio, the benefit to cost (B/C) ratio, the current working estimate (CWE), and the payback period. The purpose of this information is to provide a

means to prevent duplication of projects in any future reports.

5.2 Non-ECIP Projects. Projects which do not meet ECIP criteria with regard to cost estimate or payback period, but which have an SIR greater than one shall be documented. Projects or ECOs in this category shall be arranged as specified in paragraph 2.6.2 and shall be provided with the following documentation: the LCCA summary sheet completely filled out, a description of the work to be accomplished, backup data for the LCCA, ie, energy savings calculations and cost estimate(s), and the simple payback period. The energy savings for projects consisting of multiple ECOs must take into account the synergistic effects of the individual ECOs. In addition these projects shall have the necessary documentation prepared, as required by the Government's representative, for one of the following categories:

a. Quick Return on Investment Program (QRIP). This program is for projects which have a total cost greater than $3,000 but less than $100,000 and a simple payback period of two years or less.

b. Productivity Enhancing Capital Investment Program (PE-CIP). This program is for projects which have a total cost of greater than $3,000 but lees than $100,000 and a simple payback period of four years or less.

c. OSD Productivity Investment Funding (OSD PIF). This program is for projects which have a total cost of more than $100,000 and a simple payback period of four years or less.

The above programs and the required documentation forms are all described in detail in AR 5-4, Change No. 1.

d. Regular Military Construction Army (MCA) Program. This program is for projects which have a total cost greater than $300,000 and a simple payback period of four to twenty-five years. Documentation shall consist of DD Form 1391 and a PDB.

e. Low Cost/No Cost Projects. These are projects which the DEH can perform using his resources. Documentation shall be as required by the DEH.

5.3 Nonfeasible ECOs. All ECOs which the AE has considered but which are not feasible, shall be documented in the report with reasons and justifications showing why they were rejected.

6. DETAILED SCOPE OF WORK. The Detailed Scope of Work is contained in Annex A.

7. WORK TO BE ACCOMPLISHED.

7.1 Review Previous Studies. Review the previous EEAP study which applies to the specific building, system, or ECO covered by this study. This review should acquaint the AE with the work that has been performed previously. Much of the information the AE may need to develop the ECOs in this study may be contained in the previous study.

7.2 Perform Site Surveys. The A/E shall obtain all necessary data to evaluate the ECOs or projects by conducting a site survey. However, the A/E is encouraged to use any data that may have been documented in any previous study. The A/E shall document his site survey on forms developed for the survey, or standard forms, and submit these completed forms as part of the report. All test and/or measurement equipment shall be properly calibrated prior to its use.

7.3 Reevaluate Selected Projects. The A/E shall reevaluate the projects and ECOs listed in Annex A. These are projects and ECOs that the previous study has identified but that have not been accomplished or only parts have been accomplished. If the project or ECO is acceptable as is, that is, there are no changes to the basic project or ECO, the energy savings shown in the previous project may be accepted as accurate but the energy cost and construction cost estimates shall be updated based on the most current data available. With the above information the project shall then be analyzed based on current ECIP criteria. If the project or ECO is basically acceptable but some of the buildings in the original project have been deleted or new buildings can be added, the necessary changes shall be made to the energy savings, the energy costs and construction costs shall be updated, and the revised project or ECO shall then be analyzed using current ECIP guidance. If the original project or ECO has had numerous changes made to it so that all of the numbers are suspected of being inaccurate, but the project or ECO is still considered feasible, the AE shall develop the project from the beginning and analyze it with the current ECIP guidance. These projects shall be separately listed in the report.

7.4 Evaluate Selected ECOs. The A/E shall analyze the ECOs listed in Annex A. These ECOs shall be analyzed in detail to determine their feasibility. SIRs shall be determined using current ECIP guidance. The A/E shall provide all data and calculations needed to support the recommended ECO. All assumptions and engineering equations shall be clearly stated. Calculations shall be prepared showing how all numbers in the ECO were figured. Calculations shall be an orderly step-by-step progression from the first assumption to the final number. Descriptions of the products, manufacturers catalog cuts, pertinent drawings and sketches shall also be included. A LCCA summary sheet shall be prepared for each ECO and included as part of the supporting data.

7.5 Combine ECOs Into Recommended Projects. During the Interim Review Conference, as outlined in paragraph 7.6.1, the A/E will be advised of the DPW's preferred packaging of recommended ECOs into projects for implementation. Some projects may be a combination of several ECOs, and others may contain only one. These projects will be evaluated and arranged as outlined in paragraphs 5.1, 5.2, and 5.3. Energy savings calculations shall take into account the synergistic effects of multiple ECOs within a project and the effects of one project upon another. The results of this effort will be reported in the Final Submittal per paragraph 7.6.2.

7.6 Submittals, Presentations and Reviews. The work accomplished shall be fully documented by a comprehensive report. The report shall have a table of contents and shall be indexed. Tabs and dividers shall clearly and distinctly divide sections, subsections, and appendices. All pages shall be numbered. Names of the persons primarily responsible for the project shall be included. The A/E shall give a formal presentation of the interim submittal to installation, command, and other Government personnel. Slides or view graphs showing the results of the study to date shall be used during the presentation. During the presentation, the personnel in attendance shall be given ample opportunity to ask questions and discuss any changes deemed necessary to the study. A review conference will be conducted the same day, following the presentation. Each comment presented at the review conference will be discussed and resolved or action items assigned. It is anticipated that the presentation and review conference will require approximately one working day. The presentation and review conference will be at the installation on the date agreeable to the DPW, the A/E and the Government's representative. The Contracting Officer may require a resubmittal of any document(s), if such document(s) are not approved because they are determined by the Contracting Officer to be inadequate for the intended purpose.

7.6.1 Interim Submittal. An interim report shall be submitted for review after the field survey has been completed and an analysis has been performed on all of the ECOs. The report shall indicate the work which has been accomplished to date, illustrate the methods and justifications of the approaches taken and contain a plan of the work remaining to complete the study. Calculations showing energy and dollar savings, SIR, and simple payback period of all the ECOs shall be included. The results of the ECO analyses shall be summarized by lists as follows:

a. All ECOs eliminated from consideration shall be grouped into one listing with reasons for their elimination as discussed in par 5.3.

b. All ECOs which were analyzed shall be grouped into two listings, recommended and non-recommended, each arranged in

dessending order SIR. These lists may be subdivided by building or area as appropriate for the study.

The A/E shall submit the Scope of Work and any modifications to the Scope of Work as an appendix to the report. A narrative summary describing the work and results to date shall be a part of this submittal. At the Interim Submittal and Review Conference, the Government's and A/E's representatives shall coordinate with the DPW to provide the A/E with direction for packaging or combining ECOs for programming purposes and also indicate the fiscal year for which the programming or implementation documentation shall be prepared. The survey forms completed during this audit shall be submitted with this report. The survey forms only may be submitted in final form with this submittal. They should be clearly marked at the time of submission that they are to be retained. They shall be bound in a standard three-ring binder which will allow repeated disassembly and reassembly of the material contained within.

7.6.2 Final Submittal. The A/E shall prepare and submit the final report when all sections of the report are 100% complete and all comments from the interim submittal have been resolved. The A/E shall submit the Scope of Work for the study and any modifications to the Scope of Work as an appendix to the submittal. The report shall contain a narrative summary of conclusions and recommendations, together with all raw and supporting data, methods used, and sources of information. The report shall integrate all aspects of the study. The recommended projects, as determined in accordance with paragraph 5, shall be presented in order of priority by SIR. The lists of ECOs specified in paragraph 7.6.1 shall also be included for continuity. The final report and all appendices shall be bound in standard three-ring binders which will allow repeated disassembly and reassembly. The final report shall be arranged to include:

a. An Executive Summary to give a brief overview of what was accomplished and the results of this study using graphs, tables and charts as much as possible (see Annex B for minimum requirements).

b. The narrative report describing the problem to be studied, the approach to be used, and the results of this study.

c. Documentation for the recommended projects (includes LCCA Summary Sheets).

d. Appendices to include as a minimum:

1) Energy cost development and backup data

2) Detailed calculations

3) Cost estimates

4) Computer printouts (where applicable)

5) Scope of Work

LOUISVILLE DISTRICT CORPS OF ENGINEERS
ENGINEERING DIVISION, A/E MANAGEMENT SECTION (CEORL-ED-M-S)

ANNEX A, b.
DETAILED SCOPE OF WORK
FORT KNOX, KY
July 1, 1994

1. PROJECT NAME & LOCATION: This is a FY94S Fort Knox EEAP b. Limited Energy Study (Glass). The study will investigate the feasibility of reducing glass area in high bay buildings by identifying and evaluate strategies for glass reduction, insulate, and infrared heat for the operation of those structures. The study includes a survey in the various permanent buildings and structural systems which are summarized below as three separate ECOs, as listed below and are located in Figure A-1.1, and listed in Figure A-1.2:

- Glass reduction in high bay buildings.
- Insulation of superstructure including glass (blown on) in high bay buildings.
- Infrared heat in high bay buildings.
- Other ECOs that are additional for high bay buildings to reduce energy consumed from that type structure are to be considered as identified by the A/E while conducting the field investigations.

2. GENERAL SOW vs. DETAILED SOW: The General Scope of Work (GSOW) will apply to contract efforts as modified by the Detailed SOW. Should conflicts occur between the GSOW and the Detailed SOW, the Detailed SOW shall govern.

3. RESPECTIVE POC's for this study:
Louisville District COE-Charles(Chuck) Lockman/CEORL-ED-M-S
(502) 582-6041, fax# 6763, or 5281

Fort Knox, KY DPW- Gary Meridith/DPW, Energy Officer, or Kevin Addison
(502) 624-6828, fax#3679

Architect//Engineer(A/E)- DACA01-94-D-0034
Ned W.(Chuck) Belt/ or Keith Derrington
Systems Corp.,Suite 306,Cherokee Pl
2200 Sutherland Avenue
Knoxville, TN 37919
(615) 521-6536, or FAX# 524-7514

4. SCOPE:
4.1 The A/E shall provide all work necessary to complete the Limited Energy Study (Glass) as defined by the GSOW including the annexes. Information and instructions contained within the SOW are provided as a means for the A/E Project Manager to expand or modify the GSOW as may be needed to suit the study for the ECOs project areas listed in par. 1. above. This study is much more flexible than the standard EEAP ESOS type study, and is meant to address specific opportunities, buildings and/or systems that the installation feels

have high and low potential for energy or dollar savings.

4.2 The study will analyze all Limited Energy Study (Glass) ECOs as listed in par. 1. above and as listed in Figure A-1.2.

4.3 The study will consider new designs, for energy saver trenders in equipmnet that make these facilities more cost effective, heat savings, and energy saving.

4.4 If metering of a facility is required, the A/E shall assist the DPW in arranging for the installation of electrical, however, existing data is available at the installation, and by other studies/ surveys.

5. DETAILED REQUIREMENTS: All detail requirements selected at Fort Knox for the purpose of this study, shall specifically include the specific facilities listed in par, 1. above and projects identified by the DPW staff.

In general, the facilities and projects, when investigated relative to the ECO's provided as follows:

The contractor will review existing building drawings, existing conditions maps, survey and monitor existing conditions, and analyze the listed ECO's, and analyze additional ECO's readily discoverable during the field survey.

6. PERFORMANCE: The total time required for completion of the study and the performance of all work shall not be more than 180 calendar days from the Notice to Proceed (NTP) on the contract. If the study takes the A/E less time than scheduled to achieve, a shortened schedule for submittal and coordination of review and interim review meeting at the installation may be coordinated by the A/E with all parties involved in the review process. Figure A-6.1. Schedule of pertinent events and milestone dates for acceptable performance of the study at Fort Knox. Changes or adjustments made to the SOW during the term of the project study shall be make by the COE.

7. SUBMITTAL: The A/E's Project Manager shall provide direct distribution of all required submittal and documents in the numbers as listed in Figure A-7.1.

8. GOVERNMENT-FURNISHED INFORMATION: The following list of reference documents will be furnished to the A/E:

a. Energy Conservation Investment Program (ECIP) Guidance, dated 20 Jan 1994,

b. TM 5-785, Engineering Weather Data.

c. AR 5-4, Change No. 1, Department of the Army Productivity Improvement Program.

d. AR 415-15, 1 Jan 84, Military Construction, Army (MCA) Program Development.

e. The latest MCP Index.

f. Drawings at the DPW of each facility, if available.

9. LCCID FROM BLAST: A computer program titled Life Cycle Costing in Design (LCCID) will be used and is available from the BLAST Support Office in Urbana, Illinois for a nominal fee. This computer program will be used for performing the economic calculations for ECIP and non-ECIP ECOs. The A/E is encouraged to obtain and use this computer program. The BLAST Support Office can be contacted at 144 Mechanical Engineering Building, 1206 West Green Street, Urbana, Illinois 61801. The telephone number is (217) 333-3977, or (800) 842-5478.

10. If it is possible that the buildings in this study will be subject to the computer modeling requirements of paragraph 2.6 of the GSOW, then the simulation programs acceptable to the office doing the technical review should be listed in the detailed scope of work. Some acceptable simulation programs follow:

a. Building Loads and System Thermodynamics (BLAST) *

b. DOE 2.1B *

c. Carrier E20 or Hourly Analysis Program (HAP) **

d. Trane Air-Conditioning Economics (TRACE) **

* Very accurate, but requires a lot of time for input; therefore it is rather expensive for straightforward projects.
** Adequate for load determination, equipment selection, and energy performance for most projects.

FIGURE A-1.2 BUILDING AND/OR SYSTEMS LIST:

ENERGY ENGINEERING ANALYSIS PROGRAM (EEAP) FY94:
FY94S EEAP FORT KNOX
b. LIMITED ENERGY STUDY (GLASS)

BUILDINGS/SYSTEMS LIST

Reduce Glass Area/Insulate/Infared Heat:

Bldg. No.	Bldg. No.
17	5213
18	5220
86	5222
94	5253
98	5927
101	5943
158	6113
1530	6114
2647	6115
2754	6116
2755	6117
2756	6118
2757	6142
2763	6143
2764	6144
2765	6145
2766	6146
2767	6147
2770	6560
2778	6561
2780	6562
2942	6563
2943	6564
2944	6576
2955	6577
2959	6591
2960	6592
2961	482
483	484
485	486
487	852

FIGURE A-6.1. SCHEDULE for ~~a. Water Conservation Study, and~~ b. Limited Energy Study (Glass) FY94S EEAP, Fort Knox, KY are as follows if awarded together:

Item	Calendar		ActualDate
a. COE SOW meeting w/Energy Officer	TBD		Jun 14, 94
b. COE finishes DSOW for FK review	TBD		Jul 01, 94
c. FK review ends and meets w/COE	TBD		Jul 15, 94
d. COE visits FK to collect Scope changes/adds			Jul 18, 94
e. COE Revises SOW	TBD		Jul 21, 94
1. RFP LETTER TO A/E	TBD	..	Jul 25, 94
2. RFP LETTER RECEIVED BY A/E (COE, DPW, and A/E coordinates date)	TBD	..	Jul 25, 94
3.a. A/E Submits Proposal FAX'd/Neg'ns begin	TBD	..	Jul 28, 94
b. SOW formal mtg. @ FK, or Tel. conf.call	TBD	..	Jul 28, 94
4. Award of Contract-Start Up/NTP (SAF)	1	..	Aug 01, 94
5. ENTRY INTERVIEW @ Fort Knox, KY	1	..	Aug 01, 94
6. INTERIM SUBMITTAL @ 60% (all field work completed/ECO's analyzed)	100	..	Nov 01, 94
7. REVIEW PERIOD OF THE INTERIM SUBMITTAL (COE gathers comments from IN-HOUSE/DPW/MACOM)	120	..	Nov 20, 94
8. INTERIM REVIEW MEETING @ FK (COE, DPW, A/E, & others)	130	..	Nov 30, 94
9. EXIT INTERVIEW MTG. @ FK	130	..	Nov 30, 94
10. FINAL SUBMITTAL (A/E sends directly to as listed, herein)	160	..	Dec 30. 94
11. DPW may require to have input on the DD Form 1391 from A/E	180	..	Jan 01, 94
12. DPW SUBMITS DD Form 1391's	TBD		

FIGURE A-7.1. Distribution of Submittals: The A/E shall make direct submittal and responses to comments as indicated by the following schedule:

Organization	Correspondence	Executive Summary	Reports	Fieldnotes
COMMANDER,US Army Engineer District,Louisville ATTN: CEORL-ED-M-S/Charles Lockman P.O. Box 59 (express-600 Dr.Martin King Place) Louisville, KY 40201-0059 tel. (502) 582-6041, or fax# 6763, or 5281	1	1	1	1*
COMMANDER,US Army Armor Center & Fort Knox ATTN: ATZK-EH-PS/Gary Meredith, Energy Officer Building 77 Fort Knox, KY 40121-5000 tel. (502) 624-8358 or fax# 3679	1	1	1	1*
HQ TRADOC (MACOM) ATTN: ATBO-GFE/Al Betcher Fort Monroe, VA 23651-5000 tel. (804) 727-2453, or fax# 2362	1	1	1	1*
COMMANDER, US Army Engineer District,Mobile ATTN: CESAM-EN-CC/Tony Battaglia (EEAP TCX) P.O. Box 2288 Mobile, AL 36628-0001 tel. 205-690-2618, or fax# 2424	0	1**	1 ~~0~~	1 ~~0~~
COMMANDER, US Army Engineer Div.,Ohio River ATTN: CEORD-DL-M/Joe Semrad P.O. Box 1159 Cincinnati, OH 45201-1159 tel. 513-684-3975	0	1**	0	0
COMMANDER, US Army Corps of Engineers ATTN: CEMP-ET/Dan Gentil (EEAP Mgr.) 20 Massachusetts Avenue Washington, D.C. 20314-1000 tel. 202-272-8622	0	1**	0	0
COMMANDER, US Army Logistics Evaluation Agency ATTN: LOEA-PL/Mr. Keath New Cumberland Army Depot New Cumberland, Pa. 17070-5006	0	1**	0	0

* Field Notes submitted in final at Interim submittal.
** Submit copies of the final Executive Summary Only

ANNEX B

EXECUTIVE SUMMARY GUIDELINE

1. Introduction.

2. Building Data (types, number of similar buildings, sizes, etc.)

3. Present Energy Consumption of Buildings or Systems Studied.

   - o Total Annual Energy Used.

   - o Source Energy Consumption.
     Electricity - KWH, Dollars, BTU
     Fuel Oil - GALS, Dollars, BTU
     Natural Gas - THERMS, Dollars, BTU
     Propane - GALS, Dollars, BTU
     Other - QTY, Dollars, BTU

4. Reevaluated Projects Results.

5. Energy Conservation Analysis.

   - o ECOs Investigated.

   - o ECOs Recommended.

   - o ECOs Rejected. (Provide economics or reasons)

   - o ECIP Projects Developed. (Provide list)*

   - o Non-ECIP Projects Developed. (Provide list)*

   - o Operational or Policy Change Recommendations.

   * Include the following data from the life cycle cost analysis summary sheet: the cost (construction plus SIOH), the annual energy savings (type and amount), the annual dollar savings, the SIR, the simple payback period and the analysis date.

6. Energy and Cost Savings.

   - o Total Potential Energy and Cost Savings.

   - o Percentage of Energy Conserved.

   - o Energy Use and Cost Before and After the Energy Conservation Opportunities are Implemented.

ANNEX C

REQUIRED DD FORM 1391 DATA

To facilitate ECIP project approval, the following supplemental data shall be provided:

a. In title block clearly identify projects as "ECIP."

b. Complete description of each item of work to be accomplished including quantity, square footage, etc.

c. A comprehensive list of buildings, zones, or areas including building numbers, square foot floor area, designated temporary or permanent, and usage (administration, patient treatment, etc.).

d. List references, and assumptions, and provide calculations to support dollar and energy savings, and indicate any added costs.

(1) If a specific building, zone, or area is used for sample calculations, identify building, zone or area, category, orientation, square footage, floor area, window and wall area for each exposure.

(2) Identify weather data source.

(3) Identify infiltration assumptions before and after improvements.

(4) Include source of expertise and demonstrate savings claimed. Identify any special or critical environmental conditions such as pressure relationships, exhaust or outside air quantities, temperatures, humidity, etc.

e. Claims for boiler efficiency improvements must identify data to support present properly adjusted boiler operation and future expected efficiency. If full replacement of boilers is indicated, explain rejection of alternatives such as replace burners, nonfunctioning controls, etc. Assessment of the complete existing installation is required to make accurate determinations of required retrofit actions.

f. Lighting retrofit projects must identify number and type of fixtures, and wattage of each fixture being deleted and installed. New lighting shall be only of the level to meet current criteria. Lamp changes in existing fixtures is not considered an ECIP type project.

g. An ECIP life cycle cost analysis summary sheet as shown in the ECIP Guidance shall be provided for the complete project and for each discrete part included in the project. The SIR is applicable to all segments of the project. Supporting documentation consisting of basic engineering and economic calculations showing how savings were

determined shall be included.

h. The DD Form 1391 face sheet shall include, for the complete project, the annual dollar and MBTU savings, SIR, simple amortization period and a statement attesting that all buildings and retrofit actions will be in active use throughout the amortization period.

i. The calendar year in which the cost was calculated shall be clearly shown on the DD Form 1391.

j. For each temporary building included in a project, separate documentation is required showing (1) a minimum 10-year continuing need, based on the installation's annual real property utilization survey, for active building retention after retrofit, (2) the specific retrofit action applicable and (3) an economic analysis supporting the specific retrofit.

k. Nonappropriated funded facilities will not be included in an ECIP project without an accompanying statement certifying that utility costs are not reimbursable.

l. Any requirements required by ECIP guidance dated 4 Nov 1992 and any revisions thereto. Note that unescalated costs/savings are to be used in the economic analyses.

m. The five digit category number for all ECIP projects except for Family Housing is 80000. The category code number for Family Housing projects is 71100.

GLOSSARY OF ACRONYMS

A/E	Architect Engineer
AR	Army Regulation
B/C	Benefit to Cost
COE	Corps of Engineers
CWE	Current Working Estimate
DPW	Director of Public Works
DOD	Department of Defense
DSOW	Detailed Scope of Work
E/C	Energy to Cost
ECAM	Energy Conservation and Management
ECIP	Energy Conservation Investment Program
ECO	Energy Conservation Opportunity
EEAP	Energy Engineering Analysis Program
EHSC	Engineering and Housing Support
EMCS	Energy Monitoring Analysis Program
ESOS	Energy Savings Opportunity Survey
GSOW	General Scope of Work
HQUSACE	Headquarters US Army Corps of Engineers
LCCA	Life Cycle Cost Analysis
LCCID	Life Cycle Cost In Design
MACOM	Major Army Command
MCA	Military Construction Army
NECPA	National Energy Conservation Policy Act
OSD PIF	OSD Productivity Capital Investment Funding
PCIP	Productivity Capital Investment Program
PDB	Project Document Brochure
PECIP	Productivity Enhancing Capital Investment Program
POC	Point of Contact
QRIP	Quick Return on Investment Program
SIR	Savings Investment Ratios
TCX	Technical Center of Expertise

SYSTEMScorp
SYSTEMS ENGINEERING AND MANAGEMENT CORPORATION

October 12, 1994

Commander, US Army Engineer District, Louisville
ATTN: CEORL-ED-M/Charles Lockman
P. O. Box 59
Louisville, KY 40201-0059

Dear Mr. Lockman:

RE: FY94 Fort Knox EEAP Limited Energy Study (Glass) Interim Review Meeting
Contract No. DACA01-94-0034

The Fort Knox Glass Study Interim Review Meeting was held on 11 October 1994 at Fort Knox. The following are additional comments and decisions reached during the meeting:

Tuesday, 11 October 1994
Persons Present:

Kevin Addison	Ft. Knox DPW Energy Officer
Gary Meredith	Ft. Knox DPW Energy Officer
Charles Lockman	Louisville COE Representative
Julie Hollensbe	Systems Corp Program Manager

- To help reduce the investment cost for Building 2647, the premium finish and 95% of the heavy duty reinforcement will be removed from the cost estimate.
- The projects will be grouped for both ECIP and FEMP projects. There will be two (2) ECIP projects developed. The Airfield hangars will not be included in the ECIP projects. The FEMP projects will be grouped so the projects are less than $1,000,000 invested. There will be five (5) or six (6) FEMP projects depending on the investment costs.
- The Final Report projects will include the environmental savings to not replace the fuel tanks in 1998. These savings are from a report supplied to Systems Corp from the Fort Knox Environmental Group. The cost estimates included in the Final Report will not include any costs to remove the fuel tanks. All removal and testing of the fuel tanks will be performed in 1998 as scheduled by the Fort Knox Environmental Group.
- The Final Report will include an updated summary table. This table will be similar to Table 7.4.1 in the Interim Report.

Cherokee Place • Suite 306 • 2200 Sutherland Avenue • Knoxville, Tennessee 37919
Telephone (615) 521-6536 Fax (615) 524-7514

- Kevin Addison supplied Systems Corp with a sample ECIP packet the installation developed for an ECIP project. Systems Corp will follow this sample for this report.

If you have any questions or comments regarding this material, please do not hesitate to contact me at (708) 462-9150.

Sincerely,

SYSTEMS CORP

Julie Hollensbe, E.I.T.

Project Review Comments	Interim O Project: EEAP-Limited Energy Study Pre-Final O Location: Fort Knox, KY Final O Year: P.N.	Reviewer: Fort Knox DPW Name: Kevin Addison Organization: DPW, EP & S	Pg 1 of 1 09/27/94

Comment No.	Vol.	Section	Page	COMMENTS	Action Code	RESOLUTIONS (include location of documents)	Ref.
1	1	3	5	Energy costs are wrong. Should be: Gas - $4.7662/MCF Fuel Oil - $0.9214/Gal This will change all the life cycle cost analyses.	A	This will be incorporated into the Final Report: Natural Gas - $4.62/Mbtu Fuel Oil - $6.60/Mbtu	
2	1	7	6	In the Final Report, put totals at bottom for all projects in list.	A	The summary table for all ECOs will be included in the FInal Report.	
3	1	9		Air Field - impact on central plant? Do all buildings at the airfield need to be studied. Can we do away with central plant at the airfield?	A	There are several other hangars not included in this study still using the central plant.	
4	-	-	-	Computer disk with life cycle cost analyses summaries, cost estimates and heating calculations.	A	This will be included with the Final Report.	
5	-	-	-	Infra-red heat - will the occupants in all of these buildings be comfortable if working inside/under vehicles? Fort Campbell had bad example where infra-red heat was installed and people don't like it.	A	The occupants will be no less comfortable working under/inside the vehicle than with the forced air heating system as long as the infra-red heating system is sized properly. All cost estimates were developed in cooperation with infra-red heating vendors, which ensures the proper sizing of the systems.	
6	1	6	6-4	Revarify the cost estimate for Bldg 2647? The prices seem high.	A	The premium final and heavy reinforcement (5%) will be removed for the Final Report.	

ACTION CODES: A - Accepted/Concur D - Action Deferred N - Non-concur W - withdraw

Project Review Comments	Interim O Project: EEAP-Limited Energy Study Pre-Final O Location: Fort Knox, KY Final O Year: P.N.	Reviewer: Louisville COE Name: Charles Lockman Organization: CEORL-ED-MS	Pg 1 of 1 10/04/94

Comment No.	Vol.	Section	Page	COMMENTS	Action Code	RESOLUTIONS (include location of documents)	Ref.
1	1	T of C	iii	Figure 3.4.1.1 page 3.6 - was this listed out of order on purpose or will it be included in the FInal Report as 3.6 in order? Was it added later in the Interim Report?	A	This is in the proper order. The Table of Contents lists the text sections, the tables then the figures in order.	
2	-	-	-	MJ/YR - Meaning of this would not be clear to the non-electrical person trying to understand the study. Provide an explanation in report.	A	MJ/YR = megajoules/year. New specifications requires EEAPs to be in metric units. This will be explained in the Final Report.	
3	1	2	2-1	Does the number of buildings surveyed add up correctly? 1. says 72. Adding up 2.1.1 and 2.1.2 seems to be 73 buildings surveyed.	A	Systems Corp considered 486B and 486HB as one buildings. Bldg 486HB is a high bay add-on to 486B. Counting this as one building brings the total number of buildings surveyed to 72.	
4	1	7	7-1	7.1 last sentence - refernces Section 10 for a list of substitute buildings. There is no Section 10	A	The sentence should reference Section 9. This section includes correspondence summarizing the Field Survey.	
5	-	-	-	Will Systems's Corp provide catalog cuts of examples for Infra-red high and low temperature units and etc. systems designed/study is based on?	A	The catalog cut sheets will be included in the program documents in the final report.	
6	1	3	3-1	If other ECOs were considered by Systems Corp as scoped, I think the report should say no other ECOs are known or if there are new ones then point them out in 3.1	A	No other ECOs are known in the facilities included in the scope of work. Many of these facilties were included in the last study evaluating lighting improvements.	

ACTION CODES: A - Accepted/Concur D - Action Deferred N - Non-concur W - withdraw

Project Review Comments	Interim O Project: EEAP-Limited Energy Study Pre-Final O Location: Fort Knox, KY Final O Year: P.N.	Reviewer: Louisville COE Name: John Trinkle Organization: CEORL-ED-MA	Pg 1 of 1 10/05/94

Comment No.	Vol.	Section	Page	COMMENTS	Action Code	RESOLUTIONS (include location of documents)	Ref.
1	-	-	-	Check with Gary Meredith since John Trinkle has furnished JOC drawings for infra-red heat in the hangars.	A	Fort Knox wanted varification of the projected savings for the hangars.	
2	-	-	-	Without demolition and removal of the existing radiant heat in the hangars, infra-red probably is not a cost savings.	A	Both projects will not be implemented.	
3	-	-	-	Use caution in re-heating maintenance shops at St. John's since many buildings do not have gas service.	A	The cost estimates include the price to add natural gas service in areas where gas service is not currently available.	
4	-	-	-	Trinkle has been upgrading heaters, blocking in windows and sealing doors and windows at various tank maintenance buildings. Make sure none are repeated.	A	Systems Corp evaluated window upgrades in gymnasiums and a print shop. This was not evaluated in any tank maintenance shops.	
5	-	-	-	Make sure any magnetic seal will be durable and useable under the weather conditions at Fort Knox.	A	The produst cut sheets included in the Final Report will reflect products that can be used in the Fort Knox climate.	
6	-	-	-	Text after page 2-5 is missing.	A	The text following page 2-5 should continue on page 2-14. On pages 2-6 through 2-13 are tables.	

ACTION CODES: A - Accepted/Concur D - Action Deferred N - Non-concur W - withdraw

Project Review Comments	Interim O Project: EEAP-Limited Energy Study Pre-Final O Location: Fort Knox, KY Final O Year: P.N.	Reviewer: Mobile COE Name: WesTurner Organization: CESAM-EN-DM	Pg 1 of 1 10/06/94

Comment No.	Vol.	Section	Page	COMMENTS	Action Code	RESOLUTIONS (include location of documents)	Ref.
1	1	5	-	All ECO-1 estimates show a lump sum figure for Infra-red units. This figure needs to be broken out to detail items such as unit type, unit size, unit quantity, electrical service requirements, piping requirements and etc.	A	This will be corrected in the Final Report. The main estimate will reference a detailed estimate for the infra-red heaters. This will allow you to clearly see the contents of the infra-red systems.	
2	1	5	-	From cost estimate data, it appears all steam/hot water unit heaters will be removed from offices, latrines and other low ceiling areas and replaced with infra-red heaters. Provide data to support this application of infra-red heaters.	A	This is correct. The vendors who supplied Systems Corp with quotes have systems applicable for offices. This will be included in the cut sheets enclosed in the Final Report. Also, please note the offices in the shops are not a typical office: ceilings are a minimal of 10'.	
3	1	5	-	Cost estimates contain line items with no quantities indicated - complete quantities or remove line items.	A	These will be removed in the Final Report's cost estimates.	
4	-	-	-	The unit "MBTU/HR" used in this study is confusing, it should be replaced with a more conventional unit such as "MBH"	N	MBH is conventional useage to mean thousand BTU per hour. MBTU/HR means million BTU per hour. The Industry standard is currently moving towards using MBTU/HR as Systems Corp has used it in this report.	
5	-	-	-	Furnish catalog cuts of proposed infra-red heaters and acrylic window systems which include items such as system performance.	A	These cut sheets will be included in the Final Report.	

ACTION CODES: A - Accepted/Concur D - Action Deferred N - Non-concur W - withdraw

Energy Engineering Analysis Program (EEAP)

Limited Energy Study (Glass)

Fort Knox, Kentucky

Interim Review

Louisville District-
US Army Corp
of Engineers

SYSTEMS corp

SYSTEMS ENGINEERING AND MANAGEMENT CORPORATION

Fort Knox Energy Consumption

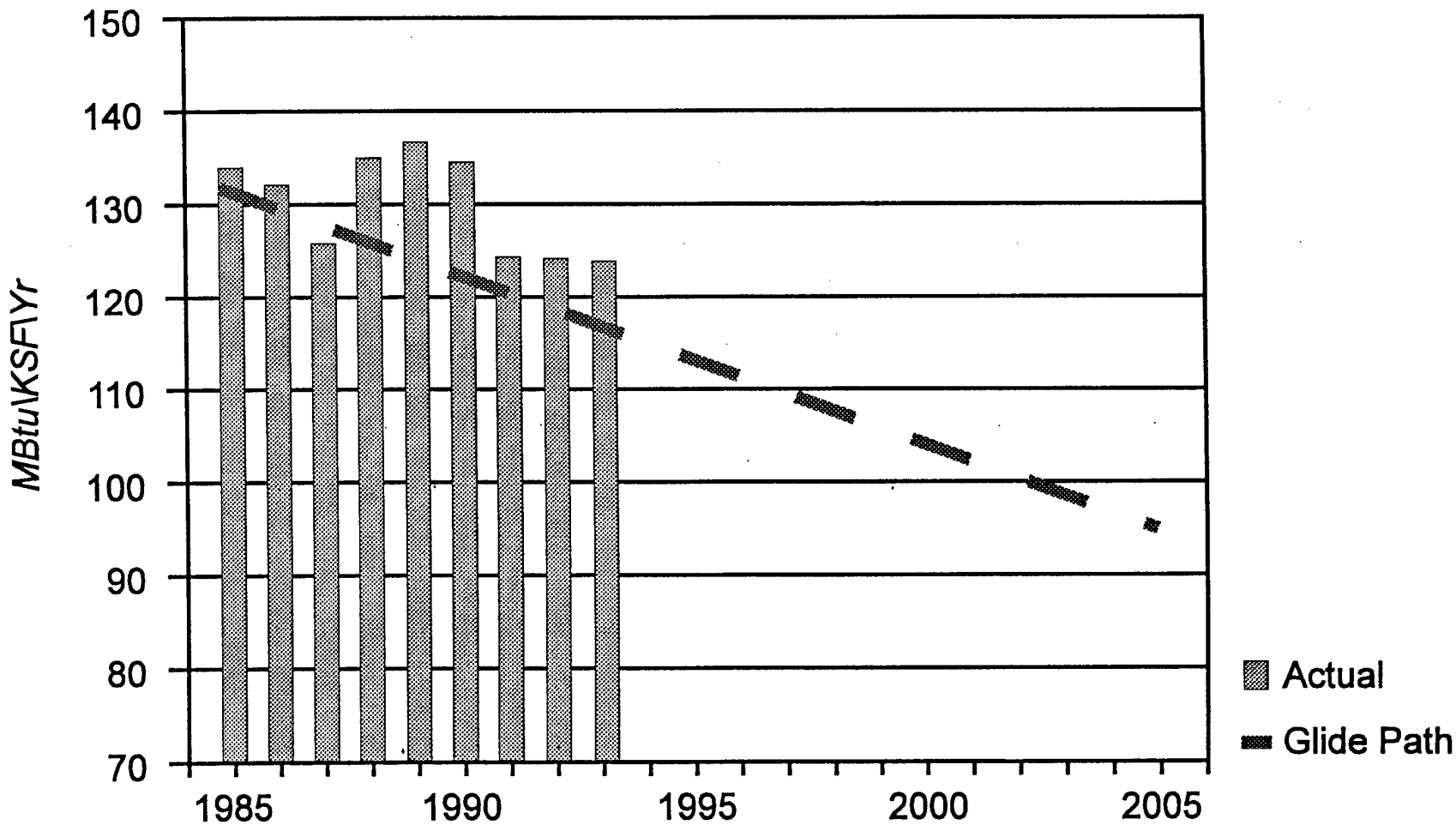

Fort Knox Energy Consumption

FY93

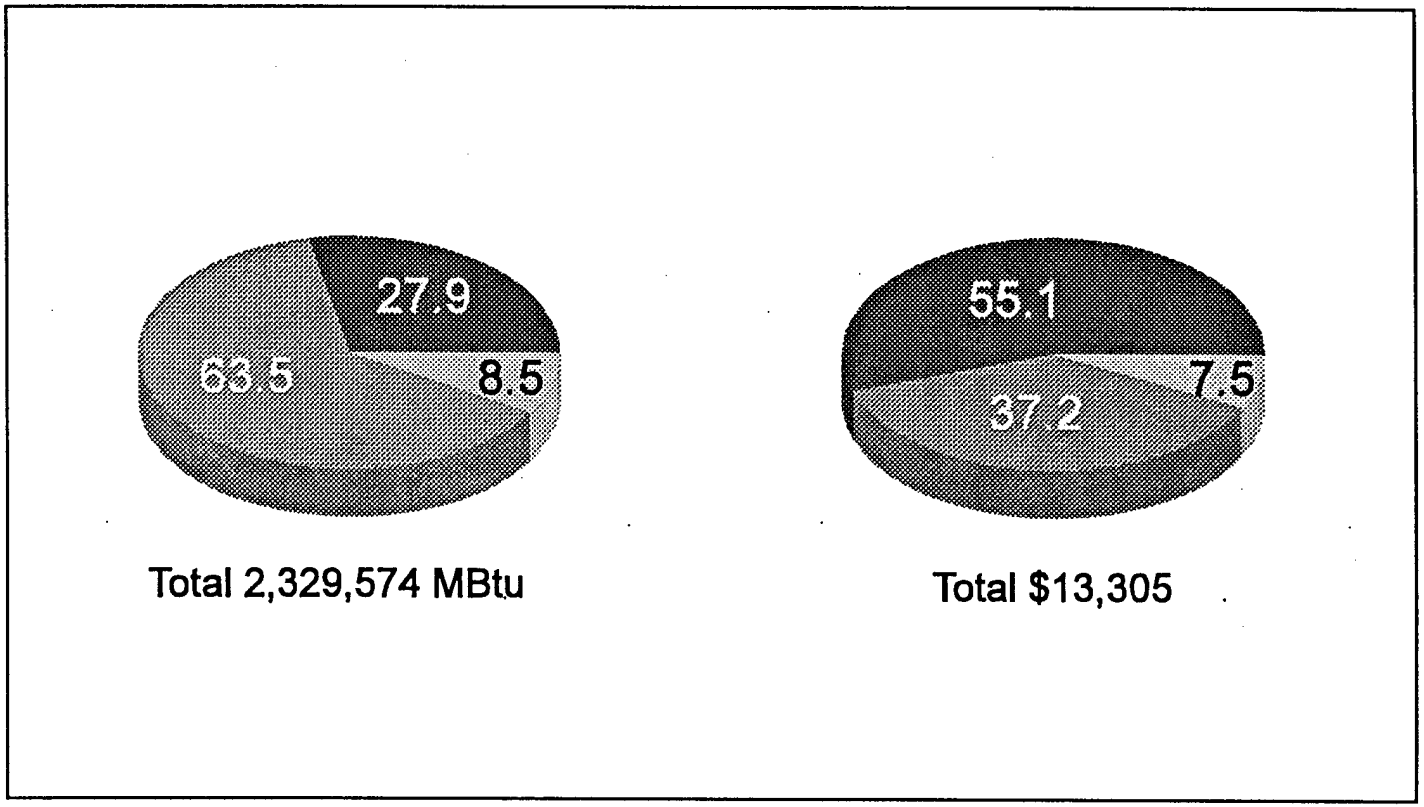

Electric | Natural Gas | Oil

Fort Knox Limited Energy Study (Glass)

Energy Charges

Natural Gas	*$3.34/MBtu*
Fuel Oil	*$5.05/MBtu*

Fort Knox Limited Energy Study (Glass)

Work Accomplished to Date

- Field Survey for 72 Buildings
- Evaluation of 72 Energy Conservation Opportunities
- Preparation and Completion of all Field Notes
- Completion of Interim Report

Fort Knox Limited Energy Study (Glass)

Energy Conservation Opportunities Evaluated

- ECO-1: Infra-Red Heat
- ECO-2: Window/Wall Insulation

Fort Knox Limited Energy Study (Glass)

ECO-1

Equipment Evaluated

- Natural Gas Infra-Red Unit Heaters w/Electric Ignition

Fort Knox Limited Energy Study (Glass)

ECO-1

Buildings Evaluated

- Warehouse/Storage
- Aircraft Hangar
- Maintenance Shops
- Vehicle and Tank Maintenance Shops

Fort Knox Limited Energy Study (Glass)

ECO-1

Maintenance and Replacement Costs

- Boiler Preventive Maintenance - Annually
- Boiler Repair - every 7 Yrs (Year 7 and 14)
- Unit Heater Repair - every 10 Yrs (Year 5 and 10)
- Steam Trap Replacement - every 10 Yrs (Year 5 and 10)

Fort Knox Limited Energy Study (Glass)

Maintenance and Replacement Costs for ECO-1

Description of Work	*Material Costs*	*Labor Costs*	*Labor Costs*
Preventive Maintenance on Hot Water Boiler, Over 1 MBtu/h Performed Annually	$90	$700	$790
Preventive Maintenance on Steam Boiler, Over 1 MBtu/h Performed Annually	$170	$820	$990
Preventive Maintenance on Unit Heaters Performed Annually	$120	$275	$395
Repair of Natural Gas Boiler, Between 1 MBtu/h and 10 MBtu/h, Performed every 7 Yrs	$2,295.50	$915.85	$3.211.35
Repair of Oil Boiler, Between 1 MBtu/h and 10 MBtu/h, Performed every 7 Yrs	$477.70	$431.40	$909.10
Repair of Unit Heaters, Performed every 10 Yrs	$150	$124.15	$274.15
Replace Steam Traps, 1" Threaded Performed every 10 Yrs	$120	$49.40	$169.40

Fort Knox Limited Energy Study (Glass)

ECO - 1: Infra-Red Heat

Total Investment	*First Year Savings*	*Simple Payback*	*SIR*	*AIRR*
$3,717,049	$385,411	9.64	1.88	6.41%

Fort Knox Limited Energy Study (Glass)

ECO -1: Final Project Grouping

Area	*Bldg Number*	*Total Investment*
DPW, Armor Motor Pool	86, 92, 94, 98, 100, 101, 482-486	$807,929
St John's Tank Motor Park	2754-2757, 2786-2789, 2955, 2958 2959-2964, 2973, 2974, 2979, 2980, 2969-2972	$969,629
Hurley Tank Motor Park, Boatwright 194th Armored Equipment Shop	2762-2767, 2770, 2778, 2781 2942-2944	$857,148
Airfield Hangars	5220, 5253	$132,303
Richardson, Potts and Farmer Motor Tank Park	6113-6118, 6142-6147, 6560-6564, 6576, 6577, 6592	$950,046

Fort Knox Limited Energy Study (Glass)

ECO-2

Material Evaluated

- Plexiglass Sheets
- Dryvit Exterior Insulation

Fort Knox Limited Energy Study (Glass)

ECO-2

Buildings Evaluated

- Gymnasiums
- Print Shop

Fort Knox Limited Energy Study (Glass)

ECO - 2: Window/Wall Insulation

Area	*Total Investment*	*First Year Savings*	*Simple Payback*	*SIR*	*AIRR*
Gymnasiums	$17,586	$2,682	6.56	3.20	9.27%
Print Shop	$181,590	$6,404	28.35	.74	1.55%
Total	*$199,177*	*$9,081*	*21.93*	*.96*	*2.87%*

Fort Knox Limited Energy Study (Glass)

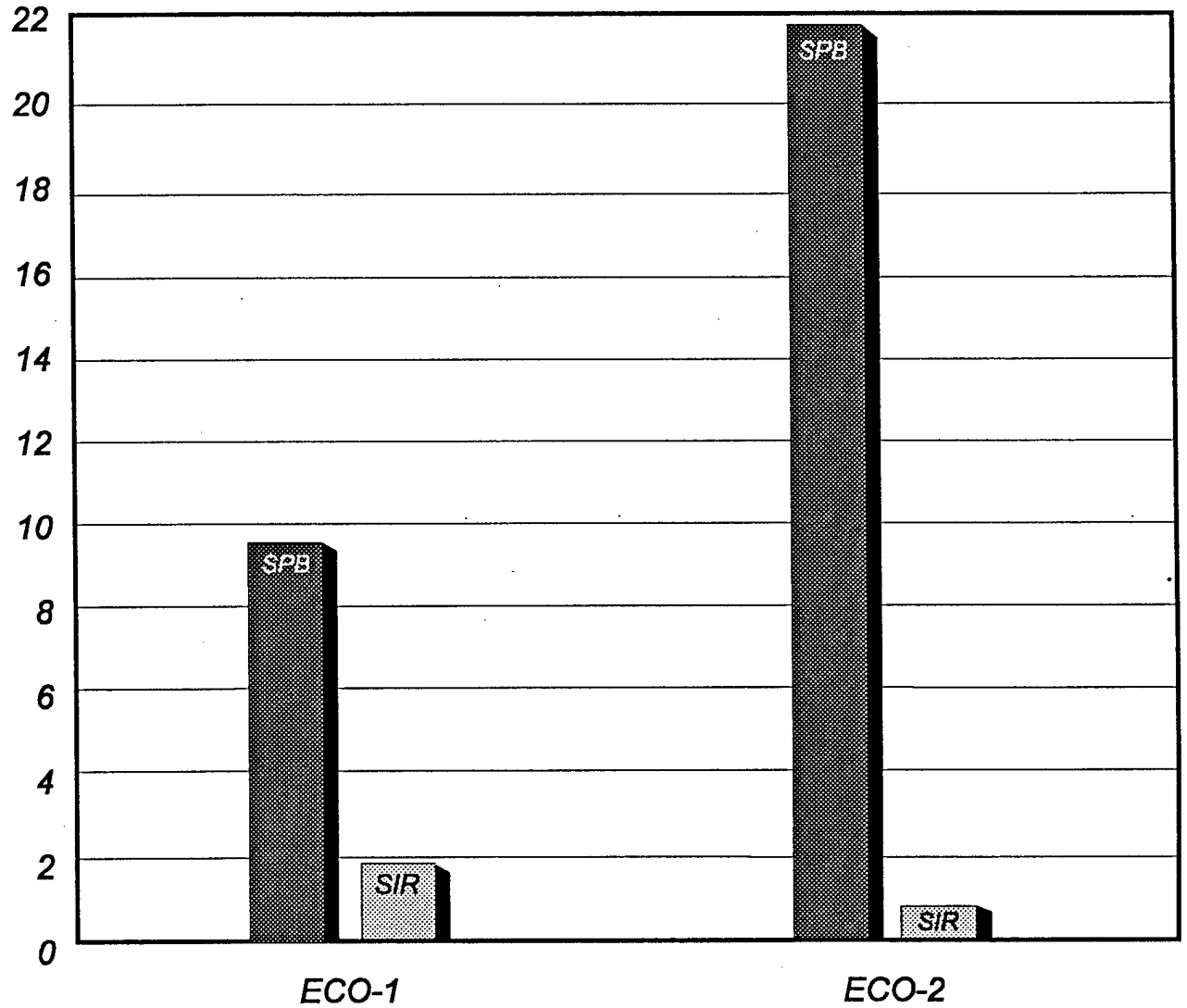

Fort Knox Limited Energy Study (Glass)

Project Results

ECO	*Total Investment*	*First Year Savings*	*Simple Payback*	*SIR*	*AIRR*
ECO-1	$3,717,049	$385,411	9.64	1.88	6.41%
ECO-2	$199,177	$9,081	21.93	.96	2.87%
Total	*$3,916,226*	*$394,492*	*9.93*	*1.84*	*5.90%*

Fort Knox Limited Energy Study (Glass)

Remaining Phases

- Response to Interim Review Comments
- Incorporation of Environmental Impact
- Preparation of Programming and Implementation Documents
- Final Report - October 28,1994

LIFE CYCLE COST ANALYSIS SUMMARY STUDY: 2647ECO2
ENERGY CONSERVATION INVESTMENT PROGRAM (ECIP) LCCID 1.080
INSTALLATION & LOCATION: FORT KNOX REGION NOS. 4 CENSUS: 3
PROJECT NO. & TITLE: 2647ECO2 ECO-2 WINDOW/WALL INSULATION
FISCAL YEAR 95 DISCRETE PORTION NAME: INFRARED
ANALYSIS DATE: 10-18-94 ECONOMIC LIFE 20 YEARS PREPARED BY: JAH

1. INVESTMENT

A. CONSTRUCTION COST	$ 97274.		
B. SIOH	$ 4864.		
C. DESIGN COST	$ 4864.		
D. TOTAL COST (1A+1B+1C)	$ 107001.		
E. SALVAGE VALUE OF EXISTING EQUIPMENT	$	0.	
F. PUBLIC UTILITY COMPANY REBATE	$	0.	
G. TOTAL INVESTMENT (1D - 1E - 1F)			$ 107001.

2. ENERGY SAVINGS (+) / COST (-)
DATE OF NISTIR 85-3273-X USED FOR DISCOUNT FACTORS OCT 1993

FUEL	UNIT COST $/MBTU(1)	SAVINGS MBTU/YR(2)	ANNUAL $ SAVINGS(3)	DISCOUNT FACTOR(4)	DISCOUNTED SAVINGS(5)
A. ELECT	$ .00	0.	$ 0.	15.61	$ 0.
B. DIST	$ 6.60	0.	$ 0.	17.56	$ 0.
C. RESID	$ .00	0.	$ 0.	19.97	$ 0.
D. NAT G	$ 4.62	1917.	$ 8859.	20.96	$ 185675.
E. COAL	$ .00	0.	$ 0.	17.58	$ 0.
F. LPG	$ .00	0.	$ 0.	16.12	$ 0.
M. DEMAND SAVINGS			$ 0.	14.74	$ 0.
N. TOTAL		1917.	$ 8859.		$ 185675.

3. NON ENERGY SAVINGS(+) / COST(-)

A. ANNUAL RECURRING (+/-) $ 0.
(1) DISCOUNT FACTOR (TABLE A) 14.74
(2) DISCOUNTED SAVING/COST (3A X 3A1) $ 0.

B. NON RECURRING SAVINGS(+) / COSTS(-)

ITEM	SAVINGS(+) COST(-) (1)	YR OC (2)	DISCNT FACTR (3)	DISCOUNTED SAVINGS(+)/ COST(-) (4)
d. TOTAL	$ 0.			0.

C. TOTAL NON ENERGY DISCOUNTED SAVINGS(+)/COST(-)(3A2+3Bd4) $ 0.

4. FIRST YEAR DOLLAR SAVINGS 2N3+3A+(3Bd1/(YRS ECONOMIC LIFE)) $ 8859.

5. SIMPLE PAYBACK PERIOD (1G/4) 12.08 YEARS

6. TOTAL NET DISCOUNTED SAVINGS (2N5+3C) $ 185675.

7. SAVINGS TO INVESTMENT RATIO (SIR)=(6 / 1G)= 1.74
(IF < 1 PROJECT DOES NOT QUALIFY)

8. ADJUSTED INTERNAL RATE OF RETURN (AIRR): 5.98 %

Estimate:	BLDG 2647	Date:	12-Oct-94
Description:	WINDOW/ WALL INSULATION ECO-2		
Project:	LIMITED EEAP(GLASS	Bid Date:	
Location:	FORT KNOX, KY	Job #:	94013.02
Sq. footage:	********	City indx:	Louisville, KY

Line #	Description					
	Manhours	Matl	Labor	Equipment	Sub	Total
0724020100	EXTERIOR INSULATION FINISH SYSTEM, FIELD APPLIED, 1" EPS INSULATION				20962.00 S.F.	
Unit values	0.14	1.33	2.34	0.10	0.00	3.77
Totals	2850.83	$27,789	$48,996	$2,145	$0	$78,930
0724020150	EIFS, FIELD APPLIED, HEAVY DUTY REINFORCEMENT ADD				1050.00 S.F.	
Unit values.	0.04	1.24	0.76	0.03	0.00	2.03
Totals	46.20	$1,306	$793	$33	$0	$2,132
U07 MOIST PROT	2898	$29,095	$49,789	$2,178	$0	$81,062

Line #	Description					
	Manhours	Matl	Labor	Equipment	Sub	Total
ESTIMATE TOTAL	2898	$29,095	$49,789	$2,178	$0	$81,062
SALES TAX	0.00%	$0				
MATL MARKUP	0.00%	$0				
LABOR MARKUP	0.00%		$0			
EQUIPT MARKUP	0.00%			$0		
SUB MARKUP	0.00%				$0	
TOTAL BEFORE CONTINGENC		$29,095	$49,789	$2,178	$0	$81,062
CONTINGENCY	10.00%					$8,106
BOND	0.00%					$0
PROFIT	10.00%					$8,106
JOB TOTAL						$97,274

Estimate:	BLDG 2647	Date:	12-Oct-94
Description:	WINDOW/ WALL INSULATION ECO-2		
Project:	LIMITED EEAP(GLASS	Bid Date:	
Location:	FORT KNOX, KY	Job #:	94013.02
Sq. footage:	********	City indx:	Louisville, KY

SUMMARY

	Manhours	Matl	Labor	Equipment	Sub	Total
U07 MOIST PROT	2898	$29,095	$49,789	$2,178	$0	$81,062
TOTAL	2898	$29,095	$49,789	$2,178	$0	$81,062
SALES TAX	0.00%	$0				
MATL MARKUP	0.00%	$0				
LABOR MARKUP	0.00%		$0			
EQUIPT MARKUP	0.00%			$0		
SUB MARKUP	0.00%				$0	
TOTAL BEFORE CONTINGENC		$29,095	$49,789	$2,178	$0	$81,062
CONTINGENCY	10.00%					$8,106
BOND	0.00%					$0
PROFIT	10.00%					$8,106
JOB TOTAL						$97,274

FT KNOX LIMITED EEAP (GLASS)

ECO - 2: WINDOW/ WALL INSULATION

BUILDING NUMBER: 2647

BUILDING HEATING TEMPERATURE SETPOINT:	70 F
OUTSIDE DESIGN TEMPERATURE	1 F
TEMPERATURE DIFFERENCE	69 F

INFILTRATION LOSSES =	1	AIR CHGS	X	473022	VOL (CU FT)	X	69	F TEMP DIFF	X 0.019	=	0.62	MBTU / HR
FLOOR LOSSES =	722	LINEAR FEET OF PERIMETER				X	69	F TEMP DIFF	X 0.81	=	0.04	MBTU / HR

SURFACE HEAT LOSSES

WOOD SLOPED ROOF =	26807	AREA (SF)	X	0.433	U VALUE (BTU/ HR - SF - F)	X	69	F TEMPERATURE DIFFERENCE		=	0.80	MBTU / HR
WOOD SIDING/STUD WALL =	12418	AREA (SF)	X	0.2017	U VALUE (BTU/ HR - SF - F)	X	69	F TEMPERATURE DIFFERENCE		=	0.17	MBTU / HR
8" CINDER BLOCK WALL =		AREA (SF)	X	0.426	U VALUE (BTU/ HR - SF - F)	X	69	F TEMPERATURE DIFFERENCE		=	0.00	MBTU / HR
CORR MTL PNL WALL =		AREA (SF)	X	0.17	U VALUE (BTU/ HR - SF - F)	X	69	F TEMPERATURE DIFFERENCE		=	0.00	MBTU / HR
PAINTED SGL PANE CLERESTORY WINDOWS =	8544	AREA (SF)	X	1.235	U VALUE (BTU/ HR - SF - F)	X	69	F TEMPERATURE DIFFERENCE		=	0.73	MBTU / HR
CLR SGL PANE WINDOWS =	2528	AREA (SF)	X	1.235	U VALUE (BTU/ HR - SF - F)	X	69	F TEMPERATURE DIFFERENCE		=	0.22	MBTU / HR
MTL OVERHEAD DOORS =		AREA (SF)	X	0.56	U VALUE (BTU/ HR - SF - F)	X	69	F TEMPERATURE DIFFERENCE		=	0.00	MBTU / HR
WOOD GLAZED O'HEAD DR =		AREA (SF)	X	0.583	U VALUE (BTU/ HR - SF - F)	X	69	F TEMPERATURE DIFFERENCE		=	0.00	MBTU / HR
LG MTL SLIDING DOOR =	110	AREA (SF)	X	0.56	U VALUE (BTU/ HR - SF - F)	X	69	F TEMPERATURE DIFFERENCE		=	0.00	MBTU / HR
METAL PERSONNEL DR=		AREA (SF)	X	0.56	U VALUE (BTU/ HR - SF - F)	X	69	F TEMPERATURE DIFFERENCE		=	0.00	MBTU / HR
WOOD/GLAZED PERSONNEL=	193	AREA (SF)	X	0.615	U VALUE (BTU/ HR - SF - F)	X	69	F TEMPERATURE DIFFERENCE		=	0.01	MBTU / HR

TOTAL BASELINE HEAT LOSSES	=	**2.59**	**MBTU / HR**
	=	**2,732.62**	**MJ/HR**

FT KNOX LIMITED EEAP (GLASS)

ECO - 2: WINDOW/ WALL INSULATION

BUILDING NUMBER: 2647

BUILDING HEATING TEMPERATURE SETPOINT: 70 F
OUTSIDE DESIGN TEMPERATURE 1 F
TEMPERATURE DIFFERENCE 69 F

INFILTRATION LOSSES =	1	AIR CHGS	X	473022	VOL (CU FT)	X	69	F TEMP DIFF	X	0.019	=	0.62 MBTU / HR
FLOOR LOSSES =	722	LINEAR FEET OF PERIMETER				X	69	F TEMP DIFF	X	0.81	=	0.04 MBTU / HR
SURFACE HEAT LOSSES												
WOOD SLOPED ROOF =	26807	AREA (SF)	X	0.433	U VALUE (BTU/ HR - SF - F)	X	69	F TEMPERATURE DIFFERENCE			=	0.80 MBTU / HR
WOOD SIDING/STUD WALL =	12418	AREA (SF)	X	0.0984	U VALUE (BTU/ HR - SF - F)	X	69	F TEMPERATURE DIFFERENCE			=	0.08 MBTU / HR
8" CINDER BLOCK WALL =	0	AREA (SF)	X	0.426	U VALUE (BTU/ HR - SF - F)	X	69	F TEMPERATURE DIFFERENCE			=	0.00 MBTU / HR
CORR MTL PNL WALL =	0	AREA (SF)	X	0.17	U VALUE (BTU/ HR - SF - F)	X	69	F TEMPERATURE DIFFERENCE			=	0.00 MBTU / HR
PAINTED SGL PANE CLERESTORY WINDOWS =	8544	AREA (SF)	X	0.1697	U VALUE (BTU/ HR - SF - F)	X	69	F TEMPERATURE DIFFERENCE			=	0.10 MBTU / HR
CLR SGL PANE WINDOWS =	2528	AREA (SF)	X	1.235	U VALUE (BTU/ HR - SF - F)	X	69	F TEMPERATURE DIFFERENCE			=	0.22 MBTU / HR
MTL OVERHEAD DOORS =	0	AREA (SF)	X	0.56	U VALUE (BTU/ HR - SF - F)	X	69	F TEMPERATURE DIFFERENCE			=	0.00 MBTU / HR
WOOD GLAZED O'HEAD DR =	0	AREA (SF)	X	0.583	U VALUE (BTU/ HR - SF - F)	X	69	F TEMPERATURE DIFFERENCE			=	0.00 MBTU / HR
LG MTL SLIDING DOOR =	110	AREA (SF)	X	0.56	U VALUE (BTU/ HR - SF - F)	X	69	F TEMPERATURE DIFFERENCE			=	0.00 MBTU / HR
METAL PERSONNEL DR=	0	AREA (SF)	X	0.56	U VALUE (BTU/ HR - SF - F)	X	69	F TEMPERATURE DIFFERENCE			=	0.00 MBTU / HR
WOOD/GLAZED PERSONNEL=	193	AREA (SF)	X	0.615	U VALUE (BTU/ HR - SF - F)	X	69	F TEMPERATURE DIFFERENCE			=	0.01 MBTU / HR

TOTAL ECO HEAT LOSSES = **1.87 MBTU / HR**
= **1,976.67 MJ/HR**

FT KNOX LIMITED EEAP (GLASS)

ECO - 2: WINDOW/ WALL INSULATION

	BASELINE	ECO - 2
SYSTEM EFFICIENCY	60%	60%
OUTSIDE DESIGN TEMP (F)	1	1
HTG TEMP SETPOINT (F)	70	70
HEATING DEGREE DAYS	4616	4616
TOTAL HEAT LOSSES (MBTU / HR)	2.59	1.87
$ /MBTU -FUEL OIL	$6.60	$6.60
$ /MBTU -NATURAL GAS	$4.62	$4.62
$ /MBTU -PPG	$10.84	$10.84

BUILDING NUMBER **2647**

GLOSSARY OF TERMS

1 MBTU = 1055 MJ
0.019=CONSTANT
.81 = CONSTANT FOR SLAB PERIMETER UNINSULATED FROM ASHRAE
CORR FACTOR = EMPIRICAL CORRECTION FACTOR FOR HEATING EFFECT VS 65 F DEGREE-DAYS FROM ASHRAE FUNDAMENTALS 1989 PG28.2

ANNUAL HEATING ENERGY CONSUMPTION (DEGREE DAY METHOD)

BASELINE =	2.59	MBTU / HR	X	4616	DEGREE DAYS	X 24	HRS/DAY		
	0.6	SYS EFF	X	69	TEMP DIFFERENCE		=	6,931.13	MBTU/YR
	6,931.13	MBTU/YR	X		CORR FACTOR	1	=	6,931.13	MBTU/YR
ECO - 2 =	1.87	MBTU / HR	X	4616	DEGREE DAYS	X 24	HRS/DAY		
	0.6	SYS EFF	X	69	TEMP DIFFERENCE		=	5,013.69	MBTU/YR
	5,013.69	MBTU/YR	X		CORR FACTOR	1	=	5,013.69	MBTU/YR
	ECO - 2 ANNUAL HEATING ENERGY CONSUMPTION SAVINGS						=	**1,917.43**	**MBTU/YR**
							=	**2,022,890.22**	**MJ/YR**

ANNUAL HEATING ENERGY COST

BASELINE =	6,931.13	MBTU / YR	X 4.62	$ /MBTU	=	32,021.80	$ /YR
ECO - 2 =	5,013.69	MBTU / YR	X 4.62	$ /MBTU	=	23,163.27	$ /YR
	ECO - 2 ANNUAL HEATING ENERGY COST SAVINGS				=	**8,858.53**	**$ /YR**