AFCTN Test Report 93-026

AFCTB-ID 91-059

19960822 026

Technical Publication Transfer Test

Using:

General Dynamics' Land Systems Division Data

MIL-M-28001 (SGML)
MIL-R-28002 (Raster)

Quick Short Test Report

16 October 1991

Prepared for

Electronic Systems Center

DISTRIBUTION STATEMENT A
Approved for public release;
Distribution Unlimited

Technical Publication Transfer Test
Using:
General Dynamics, Land Systems Division Data

MIL-M-28001 (SGML)
MIL-R-28002 (Raster)

Quick Short Test Report

16 October 1991

Prepared By
Air Force CALS Test Bed
Wright-Patterson AFB, OH 45433

AFCTB Contact
Gary Lammers
(513) 257-3085

AFCTN Contact
Mel Lammers
(513) 257-3085

DTIC QUALITY INSPECTED 3

DISTRIBUTION STATEMENT A
Approved for public release;
Distribution Unlimited

Disclaimer

This document was prepared as an account of the work sponsored by the Air Force. Neither the United States Government, the Air Force, nor any of their employees, makes any warranty, express or implied, or assumes any legal liability or responsibility for the accuracy, completeness, or usefulness of any information, apparatus, product, or process disclosed, nor represents that its use would not infringe on privately owned rights. Reference herein to any specific commercial products, process, or service by trade name, trademark, manufacturer, or otherwise, does not necessarily constitute or imply its endorsement, recommendation, or favoring by the United States Government or the Air Force. The views and opinions of authors expressed herein do not necessarily state or reflect those of the United States Government or the Air Force, and shall not be used for advertising or product endorsement purposes.

Available to the public from the
National Technical Information Service
U. S. Department of Commerce
5285 Port Royal Road
Springfield, VA 22161

This report and those involved in its preparation do not endorse any product, process, or company stated herein. Use of these means by anyone does not imply certification by the Air Force CALS Test Network (AFCTN).

Contents

1. Introduction....1
1.1. Background....1
1.2. Purpose....2
2 Test Parameters....3
3. 1840A Analysis....5
3.1. External Packaging....5
3.2. Transmission Envelope....5
3.2.1. Tape Formats....5
3.2.2. Declaration and Header Fields....6
4. IGES Analysis....6
5. SGML Analysis....6
6. Raster Analysis....7
7. CGM Analysis....7
8. Conclusions and Recommendations....8
9. Appendix A - Tapetool Report Logs....9
9.1. Tape Catalog....9
9.2. Tape Evaluation Log....10
9.3. Tape File Set Validation Log....16
10. Appendix B - SGML Parser Logs....19
10.1. XGML Parser Log....19
11. Appendix C - Raster Detailed Analysis....20
11.1. D001R004 - Preview....20

11.2. D001R004 - Harvard Graphics.....21

11.3. D001R014 - Preview.....22

11.4. D001R014 - Harvard Graphics.....23

11.5. D001R024 - Preview.....24

11.6. D001R024 - Harvard Graphics.....25

11.7. D001R034 - Preview.....26

11.8. D001R034 - Harvard Graphics.....27

11.9. D001R044 - Preview.....28

11.10. D001R044/D001R045 - Harvard Graphics.....29

1. Introduction

1.1 Background

The Department of Defense (DoD) Air Force Continuous Acquisition and Life-Cycle Support (CALS) Test Network (AFCTN) is conducting tests of the military standard for the Automated Interchange of Technical Information, MIL-STD-1840A, and its companion suite of military specifications. The AFCTN is a DoD sponsored confederation of voluntary participants from industry and government managed by the Electronic Systems Center (ESC).

The primary objective of the AFCTN is to evaluate the effectiveness of the CALS standards for technical data interchange and to demonstrate the technical capabilities and operational suitability of those standards. Two general categories of tests are performed to evaluate the standards; formal and informal.

Formal tests are large and comprehensive, which follow a written test plan, require specific authorization from the DoD, and may take months to prepare, execute, and report.

Informal tests are quick and short, used by the AFCTN technical staff, to broaden the testing base. They include representative samples of the many systems and applications used by AFCTN participants. They also allow the AFCTN staff to gain feedback from many industry and government interpretations of the standards, to increase the base of participation in the CALS initiative, and respond to the many requests for help that come from participants. Participants take part voluntarily, benefit by receiving an evaluation of their latest implementation (interpretation) of the standards, interact with the AFCTN technical staff, gain experience using the standards, and develop increased confidence in them. The results of informal tests are reported in Quick Short Test Reports (QSTRs) that briefly summarize the standard(s) tested, the hardware and software used, the nature of the test, and the results.

1.2 Purpose

The purpose of the informal test, reported in this QSTR, was to analyze General Dynamics, Land Systems Division's interpretation and use of the CALS standards in transferring technical publications data. General Dynamics used its CALS Technical Data Interchange System to produce data, in accordance with the standards, and delivered it to the AFCTN technical staff on a 9-track magnetic tape.

2. Test Parameters

Test Plan: AFCTB 91-059

Date of Evaluation: 16 October 1991

Evaluator:
George Elwood
Air Force CALS Test Bed
HQ ESC/ENCP
4027 Colonel Glenn Hwy.
Suite 200
Dayton OH 45431-1672

Data Originator:
General Dynamics
Land Systems Division
Attn: Claire McClary
P.O. Box 527
Warren, MI 48090

Data Description:
Technical Manual Test
1 Document Declaration file
1 Document Type Definitions (DTD)
1 Text file
45 Raster files

Data Source System:

Text/Standard Generalized Markup Language (SGML)

HARDWARE
Unknown

SOFTWARE
Unknown

Raster

HARDWARE
Unknown

SOFTWARE
Unknown

Evaluation Tools Used:

MIL-STD-1840A (TAPE)
- SUN 3/280
  - AFCTN *Tapetool v1.2.8 UNIX*
  - AGFA Compugraphics *CALS v40.4*
- Cheetah Gold 486
  - USLynx *1840A Tape Handler*
  - AFCTN *Tapetool v1.2.8 DOS*

MIL-M-28001 (SGML)
- SUN 3/60
  - AGFA Compugraphics *CALS*
- Cheetah Gold 486
  - Exoterica *XGML Normalizer v1.2e3.2*

MIL-R-28002 (Raster)
- SUN 3/60
  - Rosetta Technologies *Preview v3.1*
- Cheetah
  - Inset Systems *HiJaak v2.02*
  - Software Publishing Corporation (SPC) *Harvard Graphics v3.0*

Standards Tested:
- MIL-STD-1840A
- MIL-M-28001
- MIL-R-28002

3. 1840A Analysis

3.1 External Packaging

The tape arrived at the Air Force CALS Test Bed (AFCTB) enclosed in a box in accordance with ASTM D 3951. The exterior of the box was marked with a magnetic tape warning. This label was not the one defined in MIL-STD-1840A para. 5.3.1.3 but contained the same information.

The tape was enclosed in a barrier bag or barrier sheet material as required by MIL-STD-1840A, para. 5.3.1.2. Inspection of the tape reel showed the label indicating the recording density, as required by MIL-STD-1840A, para. 5.3.1. Enclosed in the box was a packing list showing all files that were recorded on the tape.

3.2 Transmission Envelope

The 9-track tape received by the AFCTB contained MIL-STD-1840A files. The files were named per the standard conventions.

3.2.1 Tape Formats

The 1840A tape was run through the AFCTN *Tapetool v1.2.8 UNIX* utility. No errors and one note were reported during the evaluation of the tape. Part of the tape log is shown in Appendix A, Section Two, Tape Import Log.

The reported note relates to the use of ANSI Standard Level Three. MIL-STD-1840A permits the use of both level three and four ANSI standards but the most current level should be used and addressed.

Label Standard Version: 3

***** NOTE (ANSI X3.27; 8.3.1.8) - The Label Standard Version should be 4 to represent the current level of ANSI X3.27.**

The AGFA *CALS read1840A* tape utility read the tape without a problem. No errors were reported.

The tape was read using the AFCTN *Tapetool V1.2.8 Dos* with the same results as reported on the UNIX system.

3.2.2 Declaration and Header Fields

No errors were reported in the Document Declaration file header or any of the data headers.

4. IGES Analysis

No Initial Graphics Exchange Specification (IGES) files were included on tape.

5. SGML Analysis

The Text files from this document were tested using the Exoterica *XGML Normalizer* parser. The DTD parsed without an error. The Text parsed with one reported error. The error occurred on line 2174 in the text. The para0 tag required a title and an end title tag. When this was inserted, the file parsed without an error. Shown below is the DTD with the title entity, the text as it appeared on the tape and the corrected text.

```
<!-- MRM June 1991: %titles; now required because %sect; content  -->
<!--                  model was amibiquous with it as optional.    -->
<!-- ENTITY % titles "(title%shortitle;)?" -->
<!ENTITY % titles "(title%shortitle;)">


<para0 tocentry='0'>
<table tabstyle='ESUPP'>
<title></title>


<para0 tocentry='0'><title></title>
<table tabstyle='ESUPP'>
<title></title>
```

6. Raster Analysis

All 45 Raster files were checked using the AFCTN *validg4* utility. This utility reported no errors with any of the files. A copy of the *validg4* log for file D001R004 is shown below.

```
density      = 300
path length  = 1045
scan lines   = 929
bit format   = MSB
lines read   = 929
total bytes  = 11181
decode time  = 2 secs
```

Five files were tested using Rosetta Technologies' *Preview*. The selected files were converted and displayed without a problem. Hard copies of the files are included in the Appendix to this report. The files were printed at high quality on a postscript printer.

The same five files were moved to the Cheetah 486 PC. Inset Systems' *HiJaak* was used to convert the CALS Raster files to PCX format. This was accomplished without any reported errors. The five PCX formated files were read into SPC's *Harvard Graphics v3.0* and printed without a problem. The hard copies of these files are included in the Appendix to this report. These images were printed at high quality on a HP IIIsi.

The only comment on the Raster images is quality. Some of the images would be at minimum acceptability. This comment is based on the enlarged images generated during the evaluation of the Raster files. If the files were output in the size used in the document the images would be of acceptable quality. The enlargement of the images, by the AFCTB, resulted in some degradation in quality.

7. CGM Analysis

No Computer Graphics Metafile (CGM) files were included on the tape.

8. Conclusions and Recommendations

In summary, the MIL-STD-1840A tape from General Dynamics, Land Systems Division was basically correct. The tape was read by all of the tape reading utilities, available in the AFCTB, with no reported errors.

The SGML file contained one error. The DTD had been modified to require title tags with a para0 tag. One of the title tags was missing in the file.

All Raster images were valid files. They could be read, displayed, and printed without any problems.

9. Appendix A - Tapetool Report Logs

9.1 Tape Catalog

```
Air Force CALS Test Network Catalog Evaluation - Version 1.2; Release Number 8

  Standards referenced:
    MIL-STD-1840A (1987) - Automated Interchange of Technical Information
    MIL-R-28003 (1988) - Digital Representation For Communication Of
                         Illustration Data; CGM Application Profile
    ANSI X3.27 (1987) - File Structure and Labeling of Magnetic Tapes
                        for Information Interchange
    ANSI X3.4 (1986) - Coded Character Sets - 7 Bit ASCII

Tue Oct 15 16:18:25 1991

MIL-STD-1840A File Catalog

File Set Directory: /cals/tapetool8/Set043

                                                                    Page: 1

                                                Record
                                                Format/    Block      Selected/
File Name                File Type              Length  Length/Total  Extracted
-----------------------------------------------------------------------------
D001                     Document Declaration   D/00260 02048/000001  Extracted
D001R002                 Raster                 F/00128 02048/000010  Extracted
D001R003                 Raster                 F/00128 02048/000006  Extracted

                    <<<<< PART OF LOG REMOVED HERE >>>>>

D001R046                 Raster                 F/00128 02048/000005  Extracted
D001T001                 Text                   D/00260 02048/000053  Extracted
D001G047                 DTD                    D/00260 02048/000020  Extracted

Catalog Process terminated normally.
```

9.2 Tape Evaluation Log

```
Air Force CALS Test Network Tape Evaluation - Version 1.2; Release Number 8
  Standards referenced:
    ANSI X3.27 (1987) - File Structure and Labeling of Magnetic Tapes
                        for Information Interchange
    ANSI X3.4 (1986) - Coded Character Sets - 7 Bit ASCII

Tue Oct 15 16:17:53 1991

ANSI Tape Import Log

Allocating tape drive /dev/rmt0...

/dev/rmt0 allocated.

VOL1GDLS01                                                              3

  Label Identifier: VOL1
  Volume Identifier: GDLS01
  Volume Accessibility:
  Owner Identifier:
  Label Standard Version: 3

*** NOTE  (ANSI X3.27; 8.3.1.8) - The Label Standard Version
    should be 4 to represent the current level of ANSI X3.27.

HDR1D001             GDLS0100010001000100 91283 91283 000000DECFILE11A

  Label Identifier: HDR1
  File Identifier: D001
  File Set Identifier: GDLS01
  File Section Number: 0001
  File Sequence Number: 0001
  Generation Number: 0001
  Generation Version Number: 00
  Creation Date:  91283
  Expiration Date:  91283
  File Accessibility:
  Block Count: 000000
  Implementation Identifier: DECFILE11A

HDR2D0204800260                                    00

  Label Identifier: HDR2
  Recording Format: D
  Block Length: 02048
```

```
  Record Length: 00260
  Offset Length: 00

************ Tape Mark ***************

  Actual Block Size Found = 2048 Bytes.

  Number of data blocks read = 1.

************ Tape Mark ***************

EOF1D001            GDLS0100010001000100 91283 91283 000001DECFILE11A

  Label Identifier: EOF1
  File Identifier: D001
  File Set Identifier: GDLS01
  File Section Number: 0001
  File Sequence Number: 0001
  Generation Number: 0001
  Generation Version Number: 00
  Creation Date:  91283
  Expiration Date:  91283
  File Accessibility:
  Block Count: 000001
  Implementation Identifier: DECFILE11A

EOF2D0204800260                                    00

  Label Identifier: EOF2
  Recording Format: D
  Block Length: 02048
  Record Length: 00260
  Offset Length: 00

************ Tape Mark ***************

HDR1D001R002        GDLS0100010002000100 91283 91283 000000DECFILE11A

  Label Identifier: HDR1
  File Identifier: D001R002
  File Set Identifier: GDLS01
  File Section Number: 0001
  File Sequence Number: 0002
  Generation Number: 0001
  Generation Version Number: 00
  Creation Date:  91283
  Expiration Date:  91283
  File Accessibility:
```

```
  Block Count: 000000
  Implementation Identifier: DECFILE11A

HDR2F0204800128                                    00

  Label Identifier: HDR2
  Recording Format: F
  Block Length: 02048
  Record Length: 00128
  Offset Length: 00

************ Tape Mark ***************

  Actual Block Size Found = 2048 Bytes.

  Number of data blocks read = 10.

************ Tape Mark ***************

EOF1D001R002          GDLS0100010002000100 91283 91283 000010DECFILE11A

  Label Identifier: EOF1
  File Identifier: D001R002
  File Set Identifier: GDLS01
  File Section Number: 0001
  File Sequence Number: 0002
  Generation Number: 0001
  Generation Version Number: 00
  Creation Date:  91283
  Expiration Date:  91283
  File Accessibility:
  Block Count: 000010
  Implementation Identifier: DECFILE11A

EOF2F0204800128                                    00

  Label Identifier: EOF2
  Recording Format: F
  Block Length: 02048
  Record Length: 00128
  Offset Length: 00

************ Tape Mark ***************

                    <<<<< PART OF LOG REMOVED HERE >>>>>

HDR1D001T001          GDLS0100010047000100 91283 91283 000000DECFILE11A
```

```
  Label Identifier: HDR1
  File Identifier: D001T001
  File Set Identifier: GDLS01
  File Section Number: 0001
  File Sequence Number: 0047
  Generation Number: 0001
  Generation Version Number: 00
  Creation Date:  91283
  Expiration Date:  91283
  File Accessibility:
  Block Count: 000000
  Implementation Identifier: DECFILE11A

HDR2D0204800260                                    00

  Label Identifier: HDR2
  Recording Format: D
  Block Length: 02048
  Record Length: 00260
  Offset Length: 00

************ Tape Mark ***************

  Actual Block Size Found = 2048 Bytes.

  Number of data blocks read = 53.

************ Tape Mark ***************

EOF1D001T001         GDLS0100010047000100 91283 91283 000053DECFILE11A

  Label Identifier: EOF1
  File Identifier: D001T001
  File Set Identifier: GDLS01
  File Section Number: 0001
  File Sequence Number: 0047
  Generation Number: 0001
  Generation Version Number: 00
  Creation Date:  91283
  Expiration Date:  91283
  File Accessibility:
  Block Count: 000053
  Implementation Identifier: DECFILE11A

EOF2D0204800260                                    00

  Label Identifier: EOF2
  Recording Format: D
```

```
  Block Length: 02048
  Record Length: 00260
  Offset Length: 00

************ Tape Mark ***************

HDR1D001G047         GDLS0100010048000100 91283 91283 000000DECFILE11A

  Label Identifier: HDR1
  File Identifier: D001G047
  File Set Identifier: GDLS01
  File Section Number: 0001
  File Sequence Number: 0048
  Generation Number: 0001
  Generation Version Number: 00
  Creation Date:  91283
  Expiration Date:  91283
  File Accessibility:
  Block Count: 000000
  Implementation Identifier: DECFILE11A

HDR2D0204800260                                    00

  Label Identifier: HDR2
  Recording Format: D
  Block Length: 02048
  Record Length: 00260
  Offset Length: 00

************ Tape Mark ***************

  Actual Block Size Found = 2048 Bytes.

  Number of data blocks read = 20.

************ Tape Mark ***************

EOF1D001G047         GDLS0100010048000100 91283 91283 000020DECFILE11A

  Label Identifier: EOF1
  File Identifier: D001G047
  File Set Identifier: GDLS01
  File Section Number: 0001
  File Sequence Number: 0048
  Generation Number: 0001
  Generation Version Number: 00
  Creation Date:  91283
  Expiration Date:  91283
```

```
  File Accessibility:
  Block Count: 000020
  Implementation Identifier: DECFILE11A

EOF2D0204800260                                    00

  Label Identifier: EOF2
  Recording Format: D
  Block Length: 02048
  Record Length: 00260
  Offset Length: 00

********** Tape Mark **********

********** Tape Mark **********

########## End of Volume GDLS01 ##########

########## End Of Tape File Set ##########

Deallocating /dev/rmt0...

Tape Import Process terminated with 0 error(s), 0 warning(s),
and 1 note(s).
```

9.3 Tape File Set Validation Log

```
Air Force CALS Test Network File Set Evaluation - Version 1.2; Release Number
  8 Standards referenced: MIL-STD-1840A (1987) - Automated Interchange of
    Technical Information MIL-R-28002 (1989) - Raster Graphics Representation
    In Binary Format, Requirements For
Tue Oct 15 16:18:25 1991

MIL-STD-1840A File Set Evaluation Log

File Set: Set043

Found file: D001
Extracting Document Declaration Header Records...
Evaluating Document Declaration Header Records...

srcsys: General Dynamics Land Systems Division
srcdocid: TM 9-235
srcrelid: NONE
chglvl: ORIGINAL
dteisu: 19901030
dstsys: AMCCOM
dstdocid: TM 9-2350-25
dstrelid: NONE
dtetrn: 19910314
dlvacc: Per J. Seward Request
filcnt: T1, R45, G1
ttlcls: UC
doccls: UC
doctyp: Technical Manual
docttl: DS/GS Maintenance Manual


Found file: D001R002
Extracting Raster Header Records...
Evaluating Raster Header Records...

srcdocid: TM 9-235
dstdocid: TM 9-2350-25
txtfilid: W
figid: 45
srcgph: V1M-001979
doccls: NONE
rtype: 1
rorient: 000,270
rpelcnt: 001045,002266
rdensty: 0300
```

```
notes: NONE

Saving Raster Header File: D001R002_HDR
Saving Raster Data File: D001R002_GR4

                    <<<<< PART OF LOG REMOVED HERE >>>>>


Found file: D001R046
Renaming file from => /cals/tapetool8/Set043/D001R046
            to => /cals/tapetool8/Set043/D001/D001R046
Extracting Raster Header Records...
Evaluating Raster Header Records...

srcdocid: TM 9-235
dstdocid: TM 9-2350-25
txtfilid: W
figid: 1
srcgph: V1TST0000-000077
doccls: UC
rtype: 1
rorient: 000,270
rpelcnt: 001020,000597
rdensty: 0300
notes: NONE

Saving Raster Header File: D001R046_HDR
Saving Raster Data File: D001R046_GR4

Found file: D001T001
Renaming file from => /cals/tapetool8/Set043/D001T001
            to => /cals/tapetool8/Set043/D001/D001T001
Extracting Text Header Records...
Evaluating Text Header Records...

srcdocid: TM 9-235
dstdocid: TM 9-2350-25
txtfilid: W
doccls: UC
notes: NONE

Saving Text Header File: D001T001_HDR
Saving Text Data File: D001T001_TXT

Found file: D001G047
Renaming file from => /cals/tapetool8/Set043/D001G047
            to => /cals/tapetool8/Set043/D001/D001G047
Extracting DTD Header Records...
```

```
Evaluating DTD Header Records...

srcdocid: TM 9-235
dstdocid: TM 9-2350-25
notes: NONE

Saving DTD Header File: D001G047_HDR
Saving DTD Data File: D001G047_DTD

Evaluating numbering scheme...
No errors were encountered during numbering scheme evaluation.
Numbering scheme evaluation complete.

Checking file count...
No errors were encountered during file count verification.
File Count verification complete.

No errors were encountered in Document D001.

No errors were encountered in this File Set.

MIL-STD-1840A File Set Evaluation Complete.
```

10. Appendix B - SGML Parser Logs

10.1 XGML Parser Log

NOTE: XGML reported the error on the wrong line. This bug has been fixed in current releases of the software.

```
C:\XGML\XGMLNORM.EXE --
Error on line 2591 in file \tapetool\set004\d001\d001t001.txt:
A start tag is missing that must not be omitted.
The element is 'TITLE'.

C:\XGML\XGMLNORM.EXE --
Error on line 2591 in file \tapetool\set004\d001\d001t001.txt:
An end tag is missing that must not be omitted.
The element is 'TITLE'.
```

11. Appendix C - Raster Detailed Analysis

11.1 D001R004 - Preview

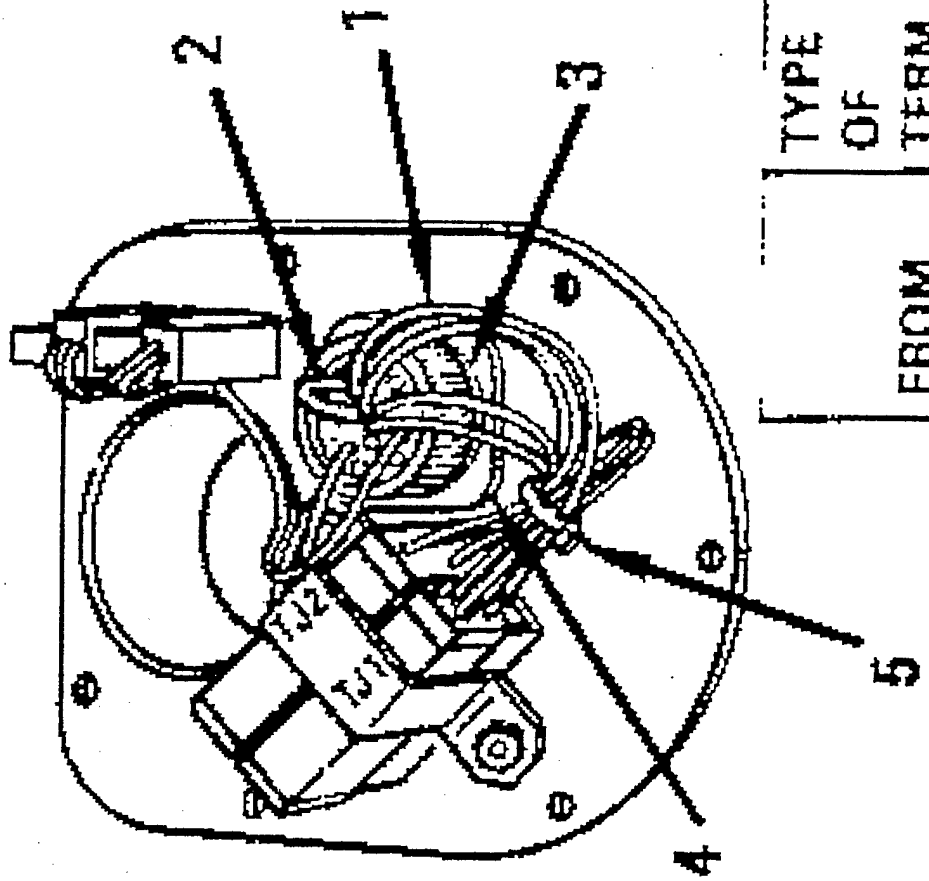

FROM	TYPE OF TERM	TO	TYPE OF TERM
TJ1-E	CONTACT	J1-A	CONTACT
TJ2-K	CONTACT	J1-B	CONTACT
TJ2-F	CONTACT	J1-G	CONTACT
TJ2-G	CONTACT	J1-T	CONTACT
TJ2-H	CONTACT	J1-R	CONTACT
TJ2-J	CONTACT	J1-P	CONTACT
J1-L	CONTACT	J1-S	CONTACT

11.2 D001R004 - Harvard Graphics

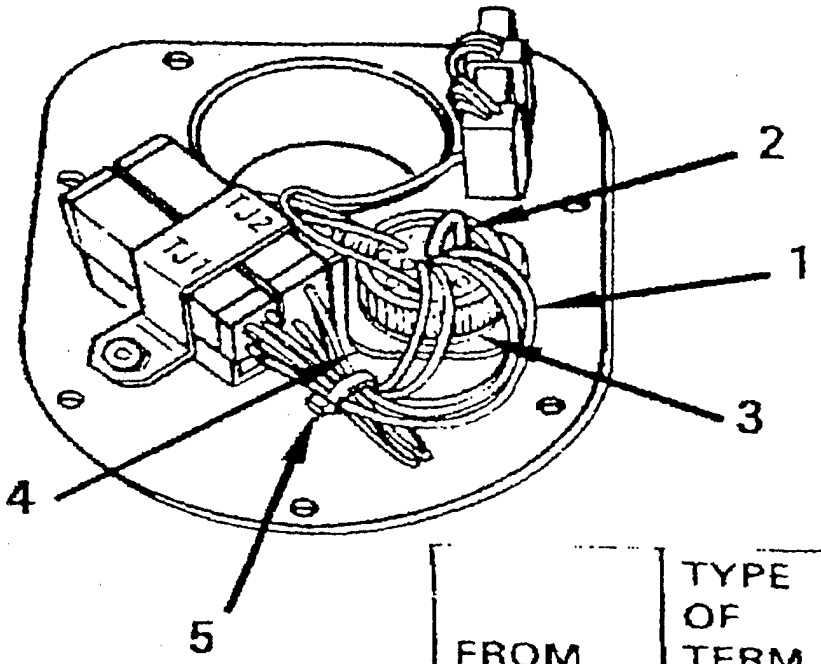

FROM	TYPE OF TERM	TO	TYPE OF TERM
TJ1-E	CONTACT	J1-A	CONTACT
TJ2-K	CONTACT	J1-B	CONTACT
TJ2-F	CONTACT	J1-G	CONTACT
TJ2-G	CONTACT	J1-T	CONTACT
TJ2-H	CONTACT	J1-R	CONTACT
TJ2-J	CONTACT	J1-P	CONTACT
J1-L	CONTACT	J1-S	CONTACT

11.3 D001R014 - Preview

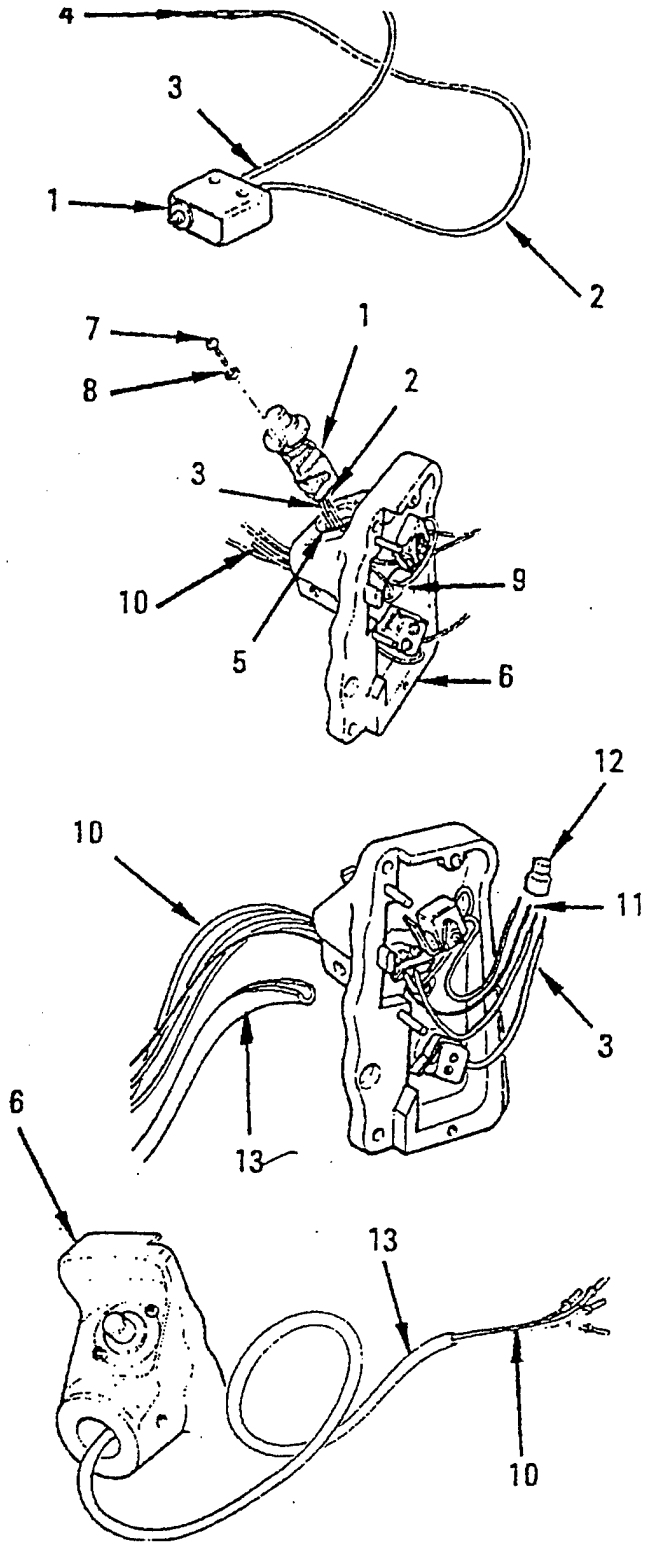

11.4 D001R014 - Harvard Graphics

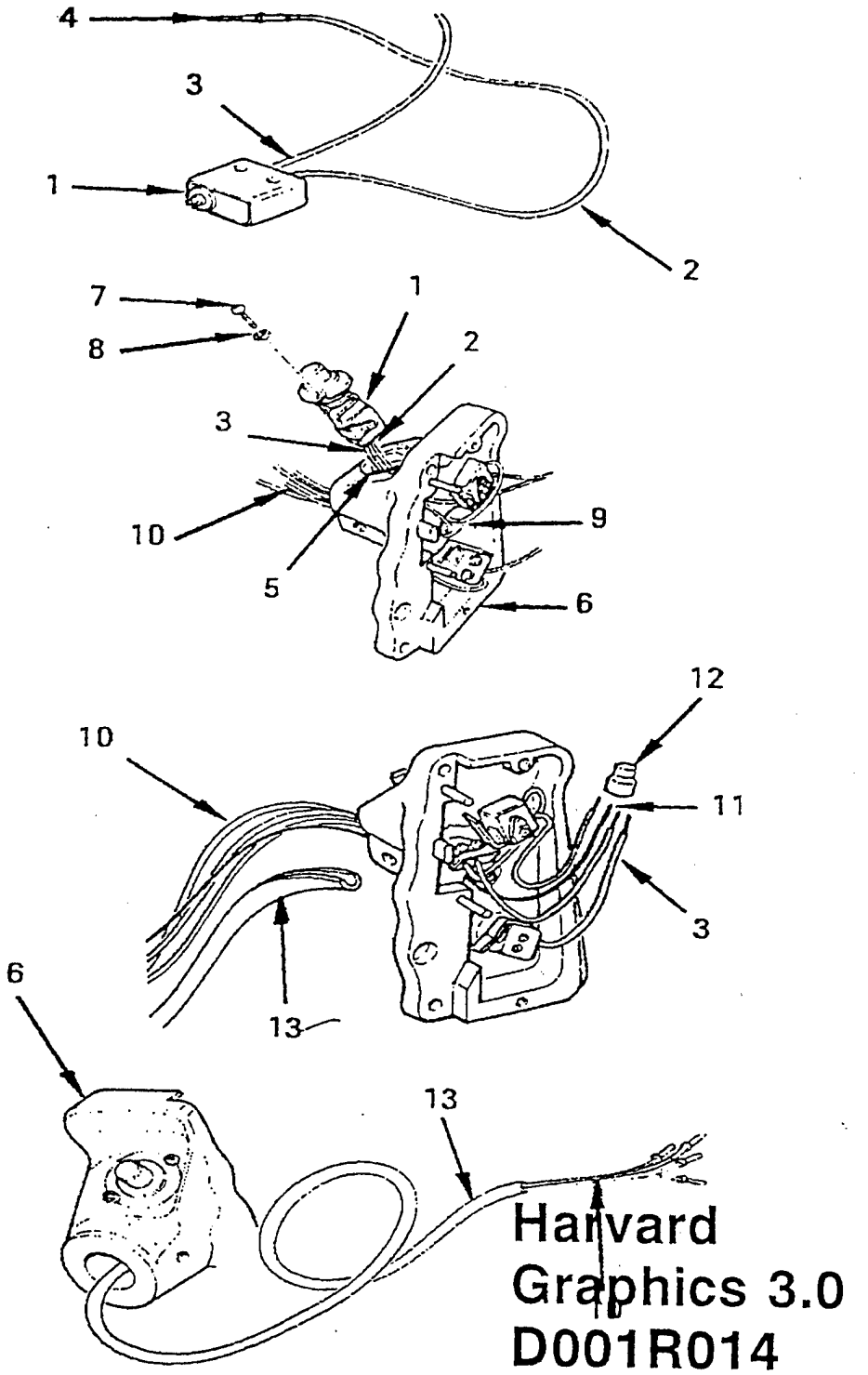

11.5 D001R024 - Preview

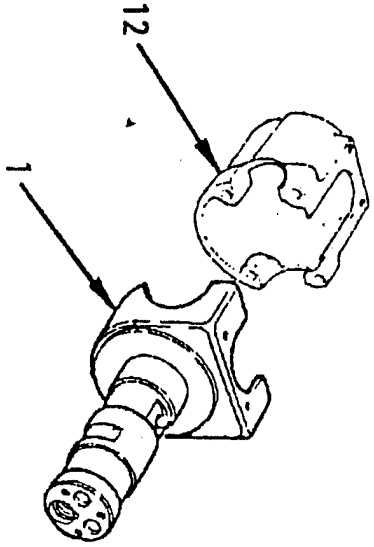

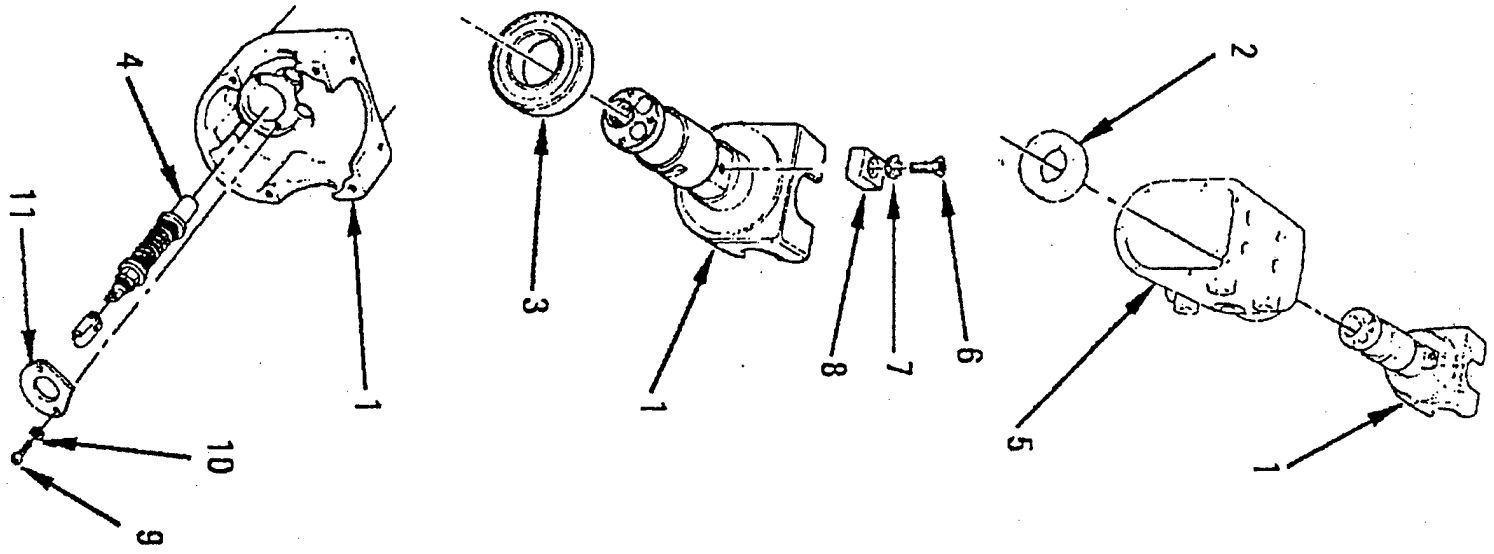

11.6 D001R024 - Harvard Graphics

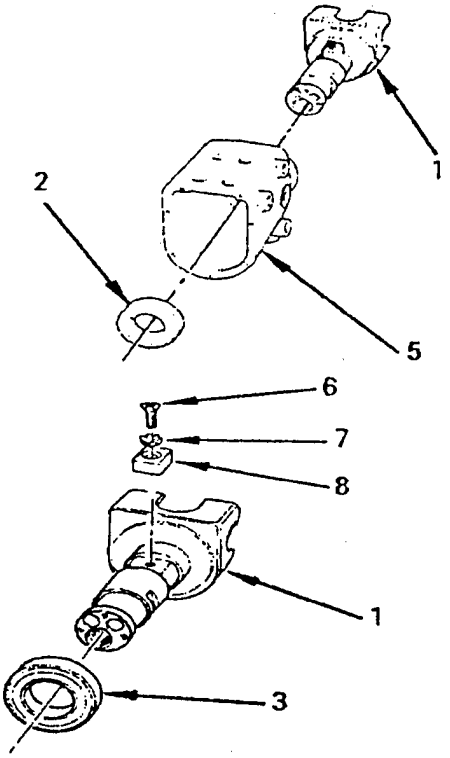

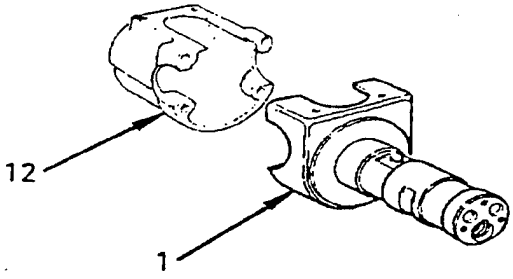

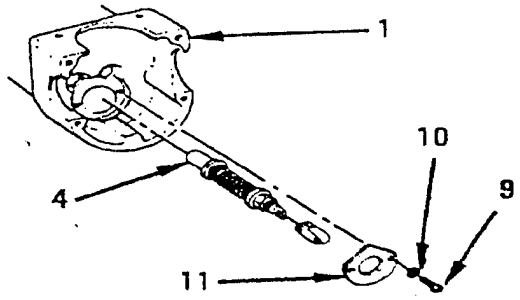

Harvard Graphics D001R024

11.7 D001R034 - Preview

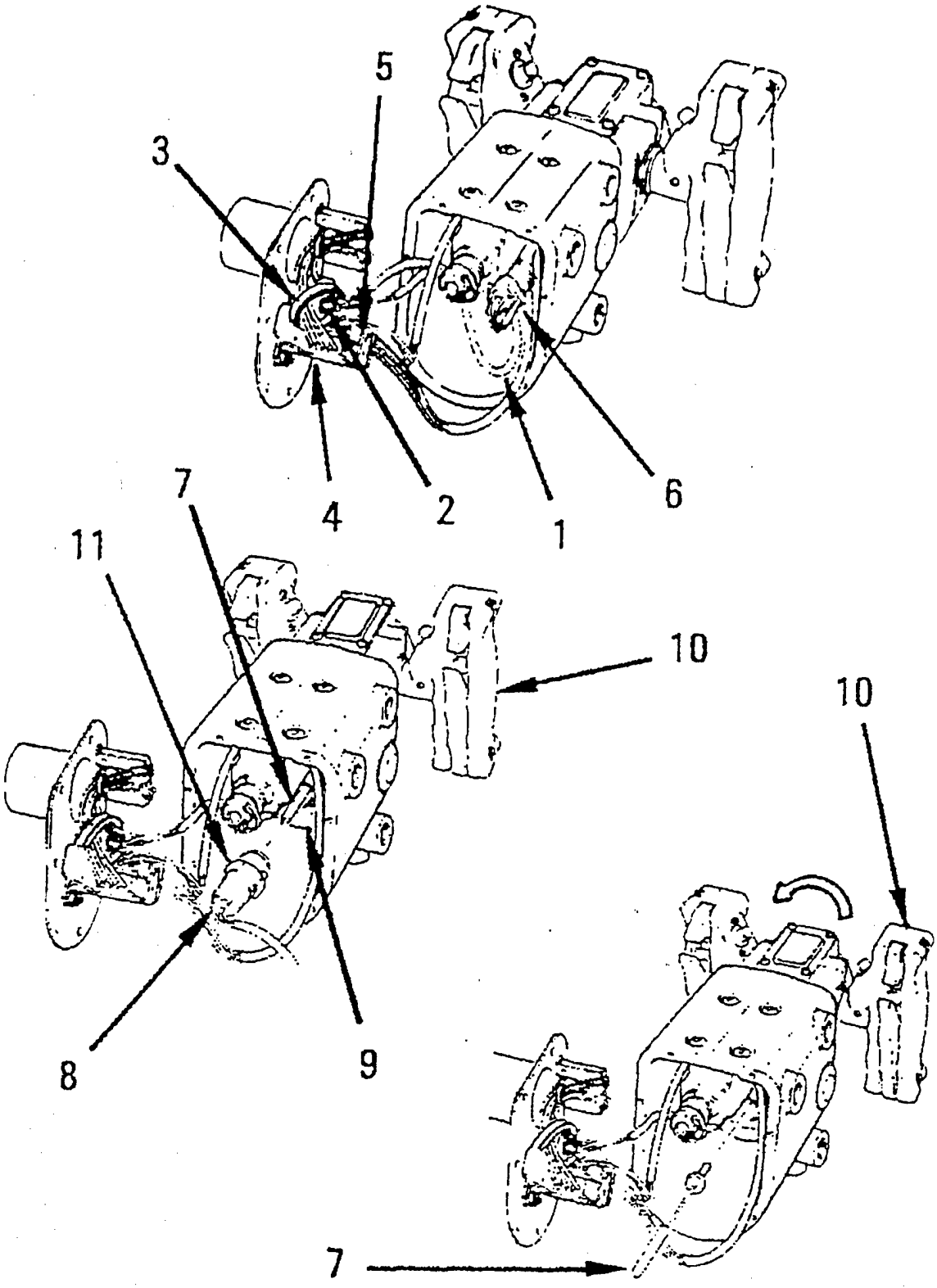

11.8 D001R034 - Harvard Graphics

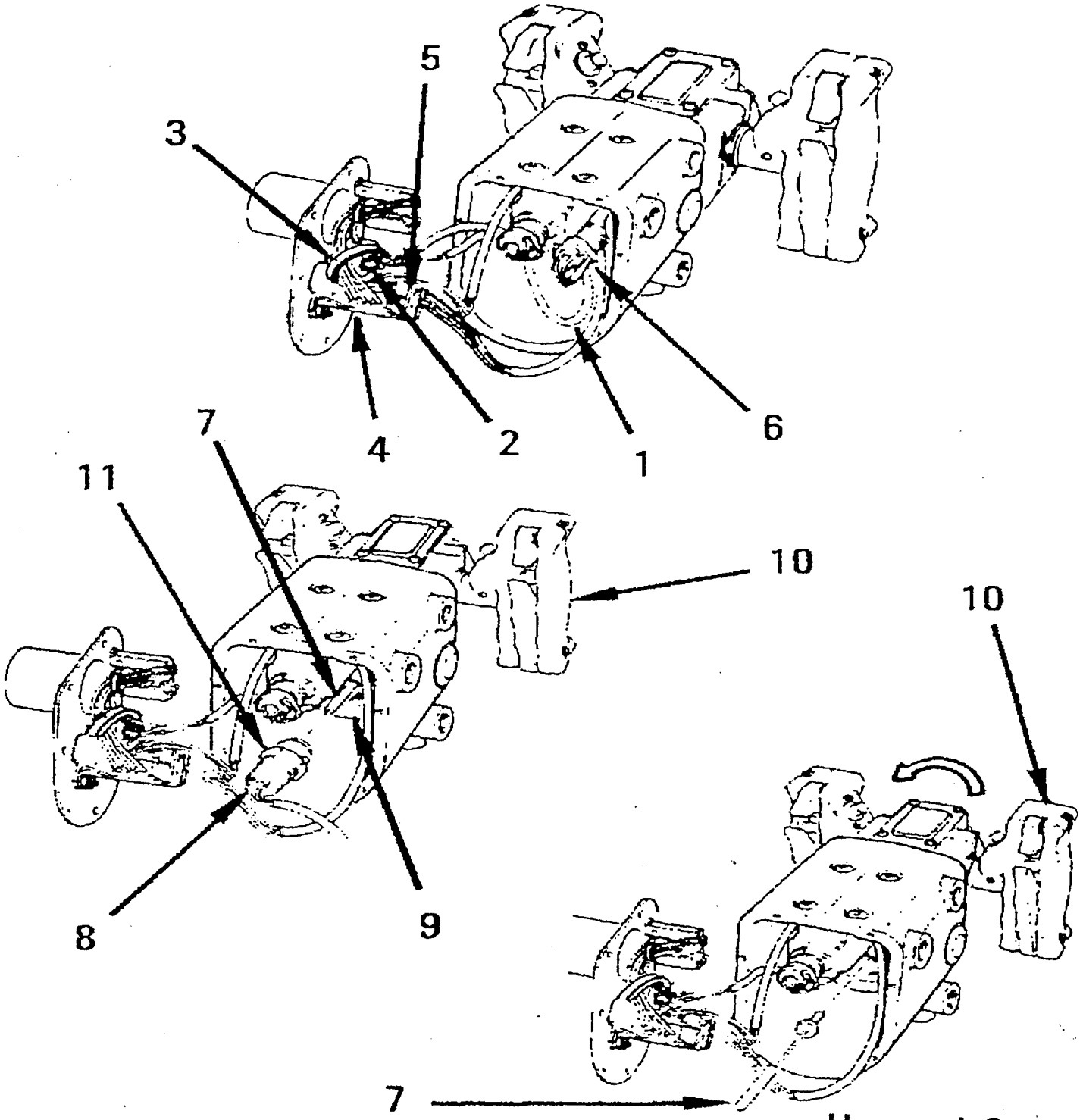

Harvard Graphics
D001R034

11.9 D001R044 - Preview

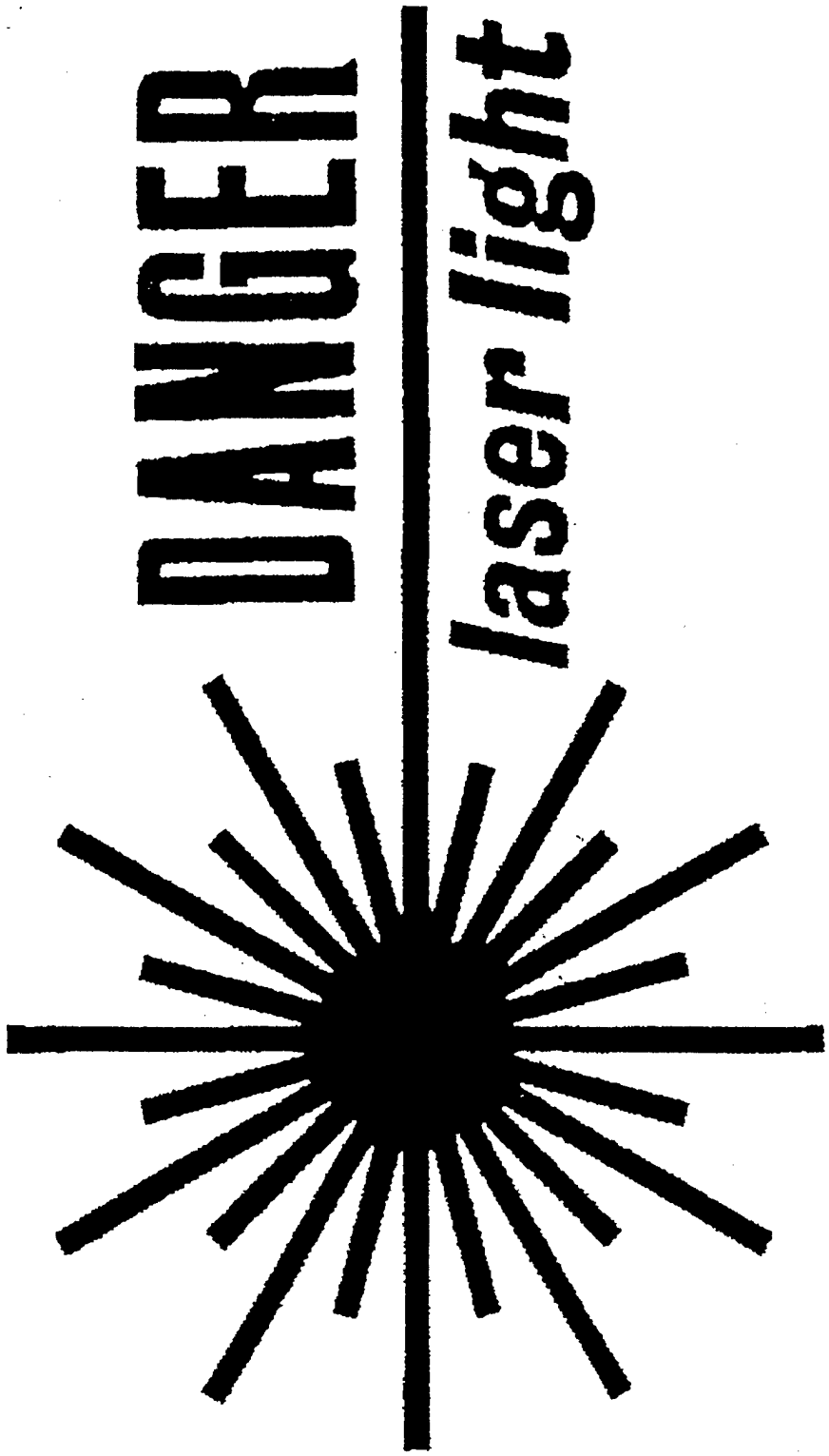

11.10 D001R044/D001R045 - Harvard Graphics

Harvard Graphics - D001R044

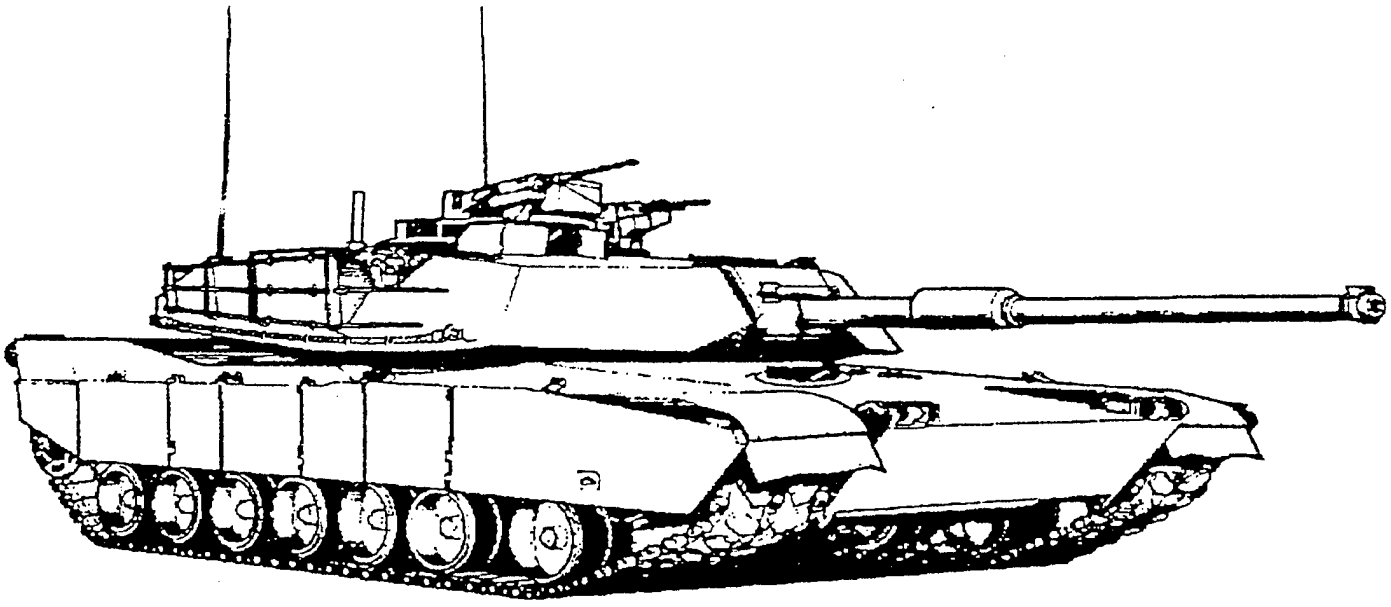

Harvard Graphics - D001R045