REPORT DOCUMENTATION PAGE

Form Approved
OMB No. 0704-0188

Public reporting burden for this collection of information is estimated to average 1 hour per response, including the time for reviewing instructions, searching existing data sources, gathering and maintaining the data needed, and completing and reviewing the collection of information. Send comments regarding this burden estimate or any other aspect of this collection of information, including suggestions for reducing this burden, to Washington Headquarters Services, Directorate for Information Operations and Reports, 1215 Jefferson Davis Highway, Suite 1204, Arlington, VA 22202-4302, and to the Office of Management and Budget, Paperwork Reduction Project (0704-0188), Washington, DC 20503.

1. AGENCY USE ONLY *(Leave blank)*

2. REPORT DATE

3. REPORT TYPE AND DATES COVERED

4. TITLE AND SUBTITLE

175Hp CONTAROTATING HOMOPOLAR MOTOR DESIGN REPORT

5. FUNDING NUMBERS

Program Element No.
PEO 602121N
Project No. RH21E41
ERH21E42
Work Unit Accession No.
1-8000-240

6. AUTHOR(S) Michal J. Cannell, John L. Drake, Richard A. McConnell, William R. Martino

7. PERFORMING ORGANIZATION NAME(S) AND ADDRESS(ES)

Naval Surface Warfare Center, Carderock Division
Code 811, Annapolis Lab
3A Leggette Circle
Annapolis, Maryland 21402-5067

8. PERFORMING ORGANIZATION REPORT NUMBER

CARDIVNSWC-TR-81-94/25

9. SPONSORING / MONITORING AGENCY NAME(S) AND ADDRESS(ES)

Office of Naval Research, ONR 4524
Ballston Center Tower #1
800 N. Quincy Street
Arlington, VA 22217-5660

10. SPONSORING / MONITORING AGENCY REPORT NUMBER

11. SUPPLEMENTARY NOTES

12a. DISTRIBUTION / AVAILABILITY STATEMENT

12b. DISTRIBUTION CODE

13. ABSTRACT *(Maximum 200 words)*

A normally conducting contrarotating homopolar motor has been designed and constructed. The reaction torque, in the outer rotor, from the inner rotor is utilized to produce true contrarotation. The machine utilizes liquid cooled conductors, high performance liquid metal current collectors, and ferrous conductors in the active region. The basic machine output is 175 hp at ± 1,200 rpm with an input of 4 volts and 35,000 amps.

14. SUBJECT TERMS

15. NUMBER OF PAGES

16. PRICE CODE

17. SECURITY CLASSIFICATION OF REPORT

18. SECURITY CLASSIFICATION OF THIS PAGE

19. SECURITY CLASSIFICATION OF ABSTRACT

20. LIMITATION OF ABSTRACT

Carderock Division
Naval Surface Warfare Center

Bethesda, Maryland 20084-5000

CARDIVNSWC-TR-81-94/25 June 1994

Machinery Research & Development Directorate
Research and Development Report

175 Hp CONTAROTATING HOMOPOLAR MOTOR DESIGN REPORT

by
Michael J. Cannell
John L. Drake
Richard A. McConnell
William R. Martino

DTIC
S ELECTE D
FEB 14 1995
B

Approved for public release; distribution is unlimited.

19950206 078

CARDIVNSWC- TR-81-94/25 175 Hp Contrarotating Homopolar Motor Design Report

MAJOR CARDIVNSWC TECHNICAL COMPONENTS

CODE	10	LOGISTICS & MACHINERY SYSTEMS/PROGRAM DIRECTORATE
	20	SHIP SYSTEMS/PROGRAM DIRECTORATE
	50	HYDROMECHANICS DIRECTORATE
	60	SURVIVABILITY, STRUCTURES & MATERIALS DIRECTORATE
	70	SIGNATURES DIRECTORATE
	80	MACHINERY RESEARCH & DEVELOPMENT DIRECTORATE
	90	MACHINERY IN-SERVICE ENGINEERING DIRECTORATE

CARDIVNSWC ISSUES THREE TYPES OF REPORTS:

1. CARDIVNSWC **reports, a formal series,** contain information of permanent technical value. They carry a consecutive numerical identification regardless of their classification or the originating department.

2. **Departmental reports, a semiformal series,** contain information of a preliminary, temporary, or proprietary nature or of limited interest or significance. They carry a departmental alphanumerical identification.

3. **Technical memoranda, an informal series,** contain technical documentation of limited use and interest. They are primarily working papers intended for internal use. They carry an identifying number which indicates their type and the numerical code of theoriginating department. Any distribution outside CARDIVNSWC must be approved by the head of the originating department on a case-by-case basis.

NDW-DTNSRDC 5602/50 (REV 2-93)

CONTENTS

PAGE

ABSTRACT 1
ADMINISTRATIVE INFORMATION 1
ACKNOWLEDGMENTS 1
INTRODUCTION 1
BASIC PRINCIPLES 2
DESIGN APPROACH 5
MAJOR DESIGN DECISIONS AND RATIONALE 6
    MACHINE TYPE 6
        Disk 6
        Drum 6
    MACHINE SIZE 6
    ASSEMBLY METHOD 7
    EXCITATION 7
GENERAL MACHINE DESCRIPTION 8
    OVERALL MACHINE LAYOUT 8
    MAGNETIC CIRCUIT 8
    ELECTRICAL CIRCUIT 9
    BEARINGS AND COVER GAS SEALS 11
    SERVICE MODULE 11
    SLIP RINGS 11
DETAILED MACHINE DESIGN 12
    MAGNETIC CIRCUIT 12
        Ferrous Conductors 12
        Flux–Load Current Interactions 12
        Shielding 13
        Finite Element Models 13
    FIELD COILS 19
        Conductor 19
        Insulation 19
        Lead Configuration 19
    ELECTRICAL CIRCUIT 20
        Inner Rotor 20
        Outer Rotor 21
        Terminals 21
    CURRENT COLLECTORS 21
    COOLING SYSTEM DESIGN AND ANALYSIS 21
        Inner Rotor 21
            Selecting cooling hole diameter and number of parallel paths 22
        Outer Rotor 22
        Terminals 29
        Field coils 29
            Fluids 29

Geometry 29
STRUCTURAL DESIGN 36
BEARINGS AND GAS SEALS 37
Bearings 37
Drive end 37
Service end 37
Seal Assembly 37
Gas seal 37
Exclusion seal 38
SERVICE MODULE 38
SLIP RINGS 38
COOLANT SEALS 38
ROTARY UNION 38
INSTRUMENTATION 38
Sensors 38
Telemetry 39
COVER GAS SYSTEM 39
ASSEMBLY PROCEDURES 39
PREDICTED MACHINE PERFORMANCE 39
CONCLUSIONS 40
REFERENCES 42

TABLES

Table 1. BH Curves for 1010 Steel With Air Voids 17
Table 2. Predicted Motor Performance at 35,000 amperes 40
Table 3. Predicted Motor Performance at 100,000 amperes 41

FIGURES

Fig. 1. Single Turn Disk Homopolar Motor 3
Fig. 2. Single Turn Drum Homopolar Motor 3
Fig. 3. Single Turn Contrarotating Drum Homopolar Motor 5
Fig. 4 Electrical Circuit Showing Current Path 10
Fig. 5. Finite Element Model Dimensions 15
Fig. 6. Permeability Regions Used in Finite Element Model 16
Fig. 7. Magnetic Circuit With Superimposed Flux Plot 18
Fig. 8. ΔT Vs. Diameter, N= 1, 40 psi 24
Fig. 9. ΔT Vs. Diameter, N= 1, 80 psi 24
Fig. 10. ΔT Vs. Diameter, N= 2, 40 psi 25
Fig. 11. ΔT Vs. Diameter, N= 2, 80 psi 25
Fig. 12. ΔT Vs. Diameter, N= 4, 40 psi 26
Fig. 13. ΔT Vs. Diameter, N= 4, 80 psi 26
Fig. 14. Inner Rotor Film Drop Vs. Diameter (32 Bars) 27

Fig. 15. Inner Rotor Film Drop ΔT Vs. Flow. Rate 28
Fig. 16. Outer Rotor Film Drop ΔT Vs. Flow Rate 28
Fig. 17. Fluid ΔT Vs. Hole Dia. for Coolanol 20 and 40 at 20 psi 31
Fig. 18. Fluid ΔT Vs. Hole Dia. for Coolanol 20 and 40 at 60 psi 31
Fig. 19. Fluid ΔT Vs. Coolant Hole Area at 20 psi 32
Fig. 20. Fluid ΔT Vs. Coolant Hole Area at 60 psi 32
Fig. 21. Fluid ΔT Vs. Coolant Hole Diameter 33
Fig. 22. Film Drop ΔT Vs. Diameter at 20, 40, 60, and 80 psi 34
Fig. 23. Fluid ΔT Vs. Flow Rate 34
Fig. 24. Fluid ΔT Vs. Pressure 35
Fig. 25. Flow Rate Vs. Pressure 35

APPENDIX A
INNER ROTOR THERMAL DESIGN
APPENDIX B
OUTER ROTOR THERMAL DESIGN
APPENDIX C
FIELD COIL THERMAL DESIGN
APPENDIX D
DETAILS OF STRUCTURAL ANALYSIS
APPENDIX E
MOTOR DETAIL DRAWINGS
APPENDIX F
SERVICE MODULE DETAIL DRAWINGS

Accession For
NTIS GRA&I ☑
DTIC TAB ☐
Unannounced ☐
Justification
By
Distribution/
Availability Codes
Dist | Avail and/or Special
A-1

ABSTRACT

A normally conducting contrarotating homopolar motor has been designed and constructed. The reaction torque, in the outer rotor, from the inner rotor is utilized to produce true contrarotation. The machine utilizes liquid cooled conductors, high performance liquid metal current collectors, and ferrous conductors in the active region. The basic machine output is 175 hp at ± 1,200 rpm with an input of 4 volts and 35,000 amps.

ADMINISTRATIVE INFORMATION

The motor design effort described herein was initiated under the Independent Research and Independent Exploratory Development Program at this center under Work Unit 1-2711-100 and subsequently supported by the Office of Naval Research under Program Element 62121N Projects RH21E41 and RH21E42. This project milestone report is submitted in partial fulfillment of Milestone 1 Task 1 of the Advanced Electrical Systems Project (RH21E41) of the Surface Ship Technology Program (SC1A/PE0602121N). The work described herein was sponsored by ONR 334 and was performed by personnel of the Carderock Division, Naval Surface Warfare Center (CDNSWC 811), Annapolis, Maryland.

ACKNOWLEDGMENTS

The authors wish to acknowledge the valuable assistance of the following individuals: Mr. Charles Bielitz, Mr. Lawrence Foster, Mr. Thomas Hane, Mr. Dwight Lavinder, Mr. Peter McGraw, Mr. Kenneth Sabel, Mr. John Stevens, Mr. Harold Surosky, Mr. Jerry Webster, Mr. Ditmar Weiss, and Mr. Kevin Wilson

INTRODUCTION

As a result of numerous ship impact studies relating technology to performance and other attributes, contrarotating propulsion trains have been identified as viable candidates for future surface combatants[1]. In addition, the homopolar DC. motor has been identified as an attractive long term electric drive option for both surface ships[2] and submarines[3]. Since the homopolar motor concept is well adapted to contrarotation we have an opportunity to provide the advantages of both advanced electric drive and contrarotation at the same time. In order to establish the feasibility of this approach, a development program to demonstrate direct drive contrarotation on a small scale was undertaken.

This report documents the basic design, design decisions, and philosophy that have gone into the development and detailed design of this 175 hp model contrarotating homopolar motor. This motor is being constructed as a demonstration both of contrarotation and of normally conducting homopolar motor technology. In addition, a variety of design and analysis techniques have been developed which will be applicable to other machines, both single and contrarotating, and with normal or superconductive excitation.

BASIC PRINCIPLES

This motor operates on the same basic principles as a single-rotating homopolar motor[4]. Torque is produced by the direct interaction of current in a conductor with a separately produced magnetic induction. The two basic types of homopolar motors are the disc machine, Fig. 1, and the drum machine, Fig. 2. In a disc machine, conducting discs, with radial current, are placed in an axial magnetic induction. The drum machine consists of conducting drums, with axial current, in a radial magnetic induction. Both machine types are fitted with current collectors to provide electrical contact between the rotating discs or drums and the stationary current return path that completes the electrical circuit and allows connection to the power source. This return path most commonly takes the same general form as the rotor current path. A disc machine has stationary discs that make up the return path while a drum machine is fitted with stationary drums that make up the return path.

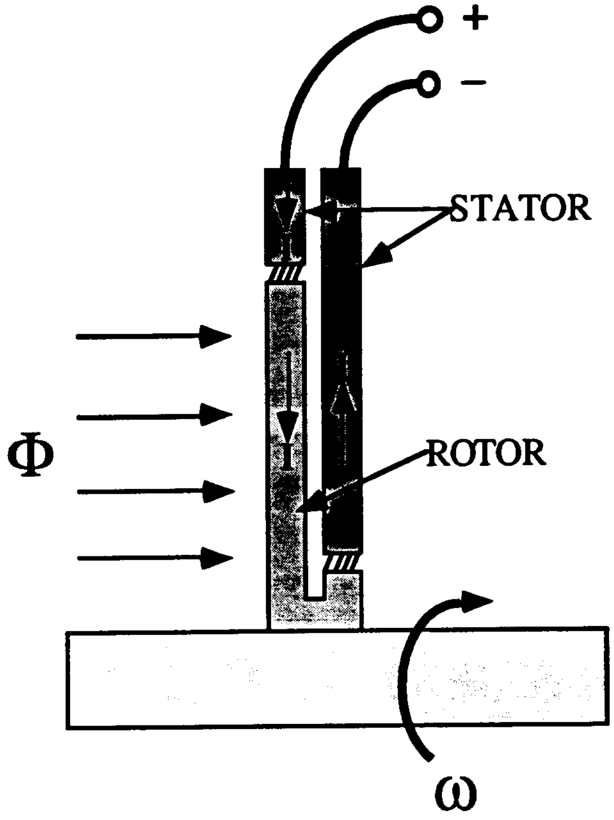
+
–
STATOR
ROTOR
Φ
ω

Fig. 1. Single Turn Disk Homopolar Motor

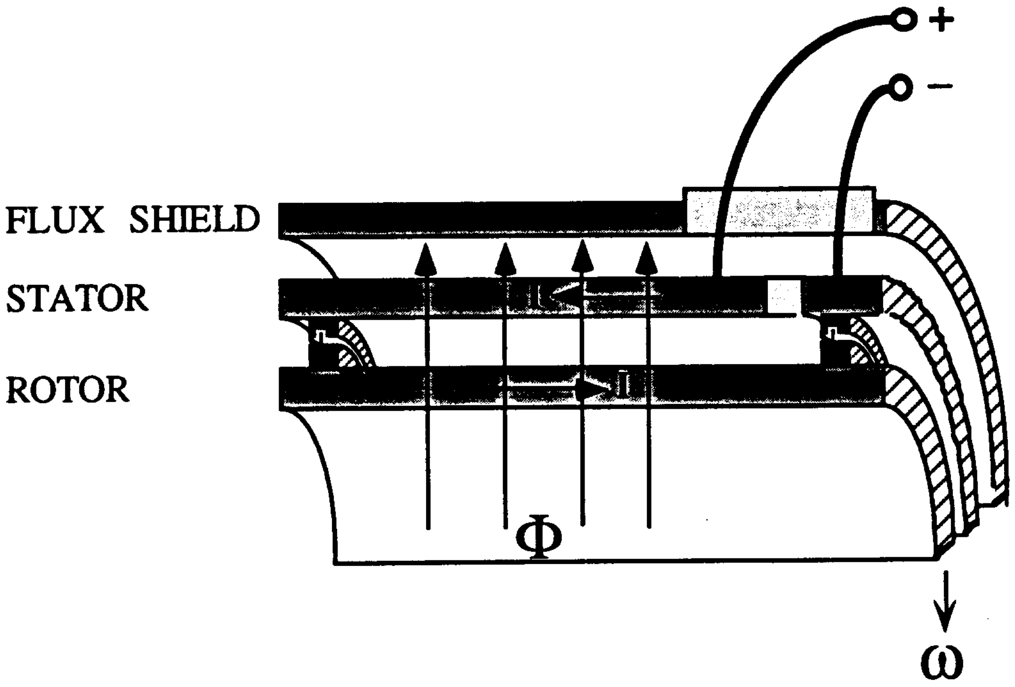
+
–
FLUX SHIELD
STATOR
ROTOR
Φ
ω

Fig. 2. Single Turn Drum Homopolar Motor

In both types of machines the current and magnetic induction interact, by means of a vector cross product, to produce a force that is at right angles to both the current and magnetic induction vectors. Due to the symmetry of both the magnetic induction and the current carrying elements of the machine, the summation of these forces results in a torque on the rotor elements and an equal but opposite reaction torque on the stator elements that make up the stationary current return path.

In a single-rotating motor, the reaction torque produced in the stationary elements can produce no power. In the case of a contrarotating motor, Fig. 3, the normally stationary current return path, now called the outer rotor, is allowed to rotate and thus can also produce power. The rotor, now called the inner rotor, continues to produce the same torque and power as before. Due to the fact that outer rotor torque is the reaction torque from the inner rotor, the torque on the two rotors must be equal in magnitude but opposite in direction. If the applied loads are equal, then the rotors will rotate at the same speed, but in opposite directions, and will both produce the same power, effectively doubling the output power of the motor. Of course this increased output power is not available for free. The electrical input power is also doubled. Since the differential speed between the inner and outer rotors is now twice as high, the motor will produce twice the back EMF, effectively doubling the terminal voltage of the machine. Two additional current collectors, called terminal collectors, are required to make electrical contact with the outer rotor. The outer rotor must additionally be fitted with bearings, seals, rotating instrumentation hookups, etc., to accommodate rotation. A stationary housing surrounds the outer rotor providing a mounting point for the bearing housings and also functions as a flux shield.

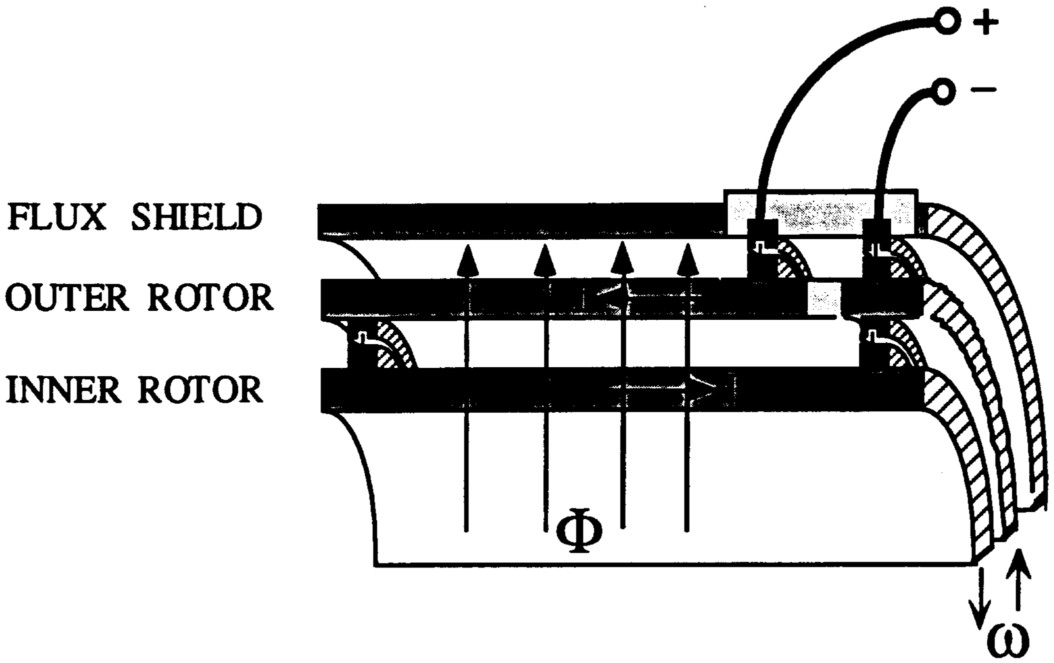

Fig. 3. Single Turn Contrarotating Drum Homopolar Motor

DESIGN APPROACH

This motor is intended to be a basic proof of principle and demonstration machine. It is not intended to demonstrate full scale machine parameters, such as power density or rotational speed, as this would compromise the design of a small motor, resulting in excessive risk and increased cost. The basic approach was to design a machine that was large enough to allow meaningful evaluation of motor design and operation yet small enough to be constructed in-house. In keeping with the basic intent of the machine, we also tried to keep the motor simple to operate even if it meant giving up some power density. One area that was not compromised, however, is the thermal design. The machine could have been considerably simplified if it was not fully cooled, since most of the current carrying conductors are rotating and thus require seals and a complex manifold arrangement for coolant. However an un-cooled motor would have been difficult to evaluate since steady state operation would be impossible to achieve. An un-cooled design also would have been too large a deviation from a full scale machine design approach, reducing the usefulness of this model in demonstrating and evaluating the required technologies.

MAJOR DESIGN DECISIONS AND RATIONALE

MACHINE TYPE

The homopolar concept was chosen for this design because of its many recognized advantages as a direct drive propulsion motor[2,3] and its adaptability to direct contrarotation. The relatively straightforward magnetic and armature circuits simplify the outer rotor. This allows for the design of a true contrarotating motor where the outer rotor is driven by inner rotor reaction torque.

Disk

Disk type homopolar machines have been built but they are more difficult to cool. They also present some unique problems for liquid metal current collectors which must operate at two different radii. As a result of the geometry, liquid metal transfer between collectors has been a problem requiring elaborate recirculation systems which have always been problematic.

Drum

The drum type homopolar has been the most successful design to date for several reasons. The liquid metal current collectors are all at one radius and liquid metal migration can easily be controlled. A subset of the drum type machine is the bar type. In this arrangement, the drum set is replaced by bars evenly spaced around the rotor. This construction is particularly good from a cooling standpoint. Each bar can be provided with one or more cooling holes connected to coolant manifolds at each end of the rotor. Electrical interconnection is also facilitated with the bar arrangement. Since the bars are run the entire length of the rotor, for ease of cooling, any collector disk can be connected to the appropriate bar. In a motor with normally conducting excitation the bar construction has the added advantage of lower reluctance in the active region. This is accomplished either by placing copper bars in slots cut in a ferrous rotor or by using ferrous conductors in the active region. For these reasons bar type construction was chosen for the model contrarotating motor.

MACHINE SIZE

Since this is a demonstration machine and not a scale model, the size and power are somewhat arbitrary. Therefore the size was based on more practical considerations rather than on some particular set of parameters derived from a scale down. Based on prior experience with the DTRC 400 hp motor[4] we felt that a machine of approximately the same overall physical dimensions would be desirable. This machine was large enough to allow meaningful evaluation but not so large as to be difficult to construct in-house. Rough calculations indicated that a machine with a magnetic circuit that produced between 0.1 and 0.2 Webers of flux in the active region would be in the desired size range. A more detailed magnetic design was done for both the 0.1 and 0.2 Weber cases. The 0.1 Weber design yielded a machine of the desired physical size and with reasonable electrical parameters. The 0.1 Weber design was therefore selected for continuation to detailed design.

ASSEMBLY METHOD

There are two basic assembly options for single-rotating homopolar machines.

The first consists of splitting the stator clam-shell fashion. This allows the complete rotor to be placed into the lower stator. Split line seals are applied to the lower stator half. The upper stator half is then placed over the lower stator-rotor combination and secured to the lower stator half. This assembly is then placed in the flux shield and fitted with the bearings and seals.

The second method is the axial stackup. With this assembly method the stator need not be split. The machine is generally assembled with the shaft oriented vertically. The rotor and stator components are alternately placed onto the assembly, generally around the shaft. This assembly can then be placed in the flux shield, returned to the horizontal, and fitted with bearings and seals.

A non split assembly method was chosen for this contrarotating motor for several reasons. In a contrarotating motor, what would normally be the stator in a single rotating motor is now the outer rotor. Thus, it must handle rotational forces as well as reaction torque. There was concern that this combination of forces might result in geometric distortion of the outer rotor. A full scale machine would have much lower centrifugal loading since it would operate at relatively lower speeds. In addition, for a one turn machine, this design offers construction simplicity, although assembly difficulty is increased somewhat. The assembly / disassembly procedure will be somewhat time consuming and require care and precision. Vertical assembly fixtures will be required to aid the process.

EXCITATION

The choices for excitation of a homopolar motor are superconductive field coils or conventional air or liquid cooled coils. Since this is a demonstration machine we felt that the simplicity of operation provided by a conventional liquid cooled field was more important than the higher power density a superconductive design could provide. A machine based on a conventional field will still address many technologies that are common to both types of contrarotating homopolars, i.e. current collectors, basic design and analysis, construction and assembly techniques. In addition, this design addressed the unique aspects of non-superconductive designs, i.e. ferrous flux path, rotating field coils, and the use of ferrous conductors in the active regions.

GENERAL MACHINE DESCRIPTION

OVERALL MACHINE LAYOUT

All detail drawings are included in appendix E. An assembly section of the complete motor is shown on drawing A27-19992-4. Assembly sections of the inner rotor, outer rotor, and housing are shown on drawings A27-19992-7, A27-19992-8, and A27-19992-64 respectively. Section views at various axial positions are shown on A27-19992-2, A27-19992-3, A27-19992-5, and A27-19992-6. A27-19992-1 is a detailed parts and drawing list showing the detail drawing for each piece. All piece numbers refer to one or more of these drawings and are consistent among these drawings. Drawings of the rough forgings are not included.

This machine is a single turn, normal conducting, contrarotating homopolar motor. The motor will produce 175 hp at ± 1200 r/min. with a nominal input of 4 volts and 35,000 amperes. Contrarotation is accomplished by fitting the normally stationary current return path (stator) with bearings, seals, and an additional pair of current collectors which allow it to rotate opposite to the inner rotor. Magnetic flux is generated by a pair of liquid cooled coils, in a quadrapole configuration, that rotate with the inner rotor. The motor has a complete ferrous path for the magnetic flux. Included in the ferrous path are iron conductors in the active regions of both inner and outer rotors. Current transfer between inner and outer rotors and between the outer rotor and terminals is accomplished with close clearance liquid metal current collectors. Both rotors are fitted with rolling element bearings and high performance cover gas seals. All electrically active elements are directly cooled by forced flow liquid coolant.

MAGNETIC CIRCUIT

The magnetic circuit is made up of the two field coils, piece 2, the iron bar sets of the inner and outer rotors, pieces 8 and 16, and the various other ferrous members that shape and direct the magnetic flux through the active regions of the inner and outer rotors. Because of the limited ampere turns available from a conventional coil, ferrous material must be provided around the complete flux path to lower its reluctance, thereby increasing the flux generated by a given number of ampere turns in the field coils. The iron bars in the active regions of both the inner and outer rotor are a unique aspect of this design. A more conventional approach in a non superconductive homopolar machine is to place conducting bars in slots cut in a solid ferrous rotor. The axial current is then carried by the conducting bars and the radial flux is carried by the iron between the slots.

ELECTRICAL CIRCUIT

The electrical circuit includes all those components required to transport the axial current through the active regions of both the inner and outer rotors. It is comprised of the two single rotating terminal current collectors, pieces 15, 18, 26, and 27, two contrarotating current collectors, pieces 9, 12, 14, and 19, a set of 32 inner rotor bars, piece 8, a set of 36 outer rotor bars, piece 16. Both the inner and outer rotor bar sets are brazed to continuous copper rings, pieces 10 and 11, at both ends. This braze joint provides the electrical connection to the iron bars as well as connecting the bars electrically in parallel. All of these components are connected electrically in series. It is the interaction of the axial current with the radial magnetic field in the active region that produces the torque on the inner rotor and the reaction torque on the outer rotor. The basic electrical circuit with the current path is shown in Fig. 4.

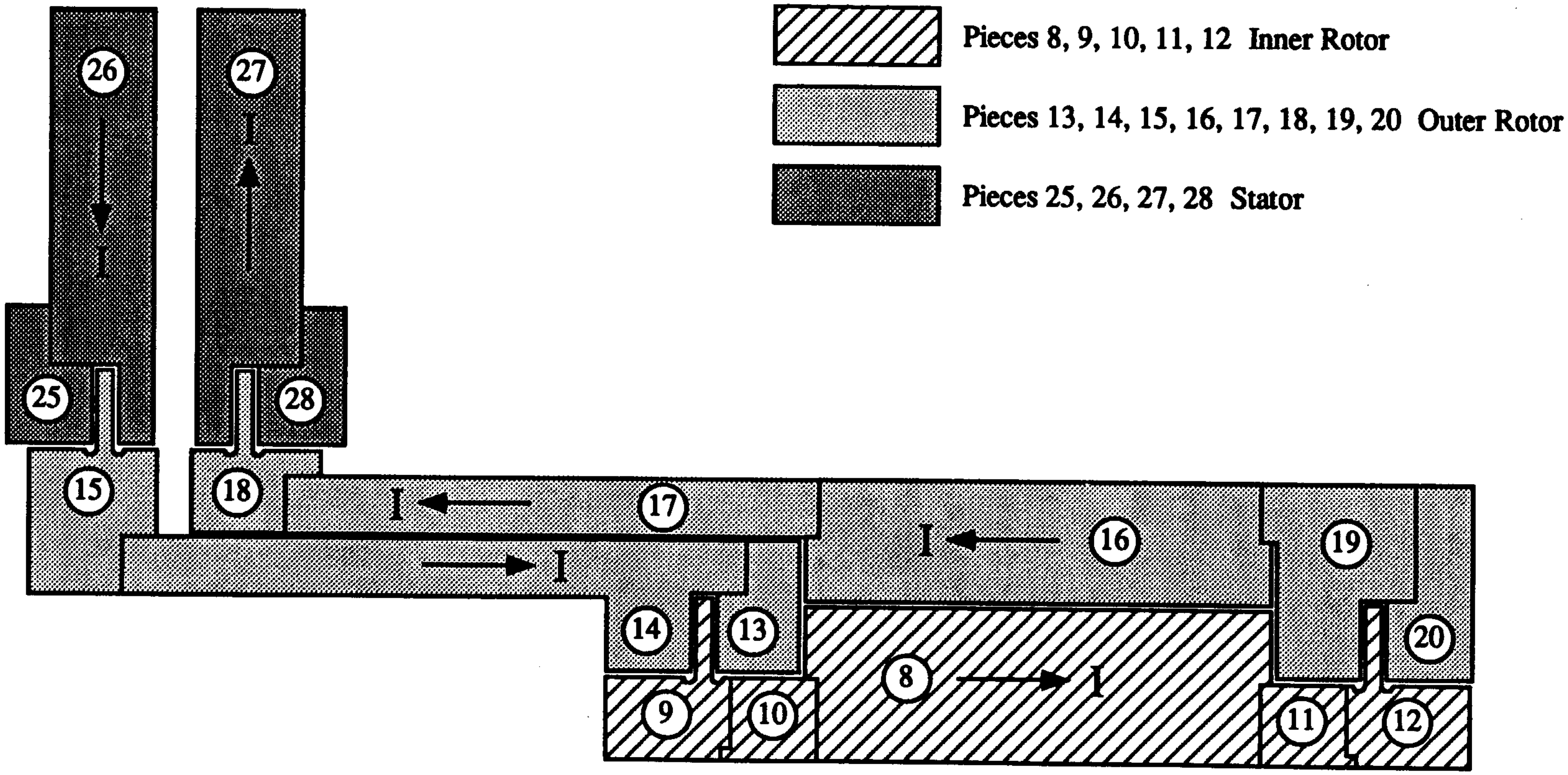
Pieces 8, 9, 10, 11, 12 Inner Rotor
Pieces 13, 14, 15, 16, 17, 18, 19, 20 Outer Rotor
Pieces 25, 26, 27, 28 Stator
26
27
I
I
25
28
15
18
17
16
19
I
I
I
14
13
8
I
20
9
10
11
12

Fig. 4. Electrical Circuit Showing Current Path

COOLING SYSTEM

The motor design features liquid cooling in both the inner and outer rotors, including the bars in the active regions, the current collectors, and the field coils. Baseline design requirements stipulated an armature current of 35,000 amperes at full load, with an overload requirement of 100,000 amperes. In accordance with the decision to design the motor to the overload conditions wherever practicable, the thermal analysis was performed at the 100,000 ampere operating condition.

BEARINGS AND COVER GAS SEALS

The inner rotor is supported by rolling element bearings, pieces 46 and 50, which are mounted internal to the outer rotor stub shafts, pieces 33 and 35. These bearings operate in a contrarotating mode with the outer and inner races rotating in opposite directions. The outer rotor is in turn supported by bearings, pieces 45 and 49, mounted in carriers, pieces 24 and 40, which are mounted in the stationary housings, pieces 39 and 41. These bearings are operated in a single rotating mode with a stationary outer race.

Mechanical face seals with carbon faces running on Al_2O_3 coated runners are required at both ends of the machine to seal the high purity cover gas in the motor. Contrarotating seals, pieces 44 and 48, are fitted between the inner rotor and the outer rotor stub shafts. Single rotating seals, pieces 43 and 47, are also fitted between the outer rotor stub shafts and the bearing housings. Self lubricating lip seals, pieces 103, 104, and 105, are located between the cover gas seals and the bearings to insure that no bearing lubricant contaminates the dry gas seals

SERVICE MODULE

To reduce the risk that a failure in any of the ancillary systems (e.g. cooling system, instrumentation, etc.) could cause damage to or require disassembly of the motor itself, a removable service module contains all required field coil slip rings, instrumentation connections, and cooling fluid seals and unions. The module is a totally separate assembly bolted to the shafts and the bearing housing. Detailed drawings of the service module are included in appendix F.

SLIP RINGS

A slip ring assembly, to provide excitation current to the rotating field coils, is located on the service end of the machine. It is of conventional design using copper slip rings and metal graphite brushes.

DETAILED MACHINE DESIGN

MAGNETIC CIRCUIT

Normally the required electrical characteristics of the motor, along with the desired number of turns, determines the required flux. In this case, the desired overall physical size of the motor dictated the desired flux. With a requirement for 0.1 Webers total flux we could proceed with the magnetic design. Since this is a single turn machine, a quadrapole configuration was chosen, as it provides a symmetric geometry. Each half of the magnetic circuit needed to produce 0.05 Webers of flux. Using the required flux and a flux density of 1.8 Tesla, a magnetic circuit that provided a constant cross sectional area was designed. The required ampere turns in the coil was calculated using the total path length in iron and in air. This rough design was modeled in two dimensions with finite element software. Based on the finite element results, the coil size and iron geometry were adjusted to provide a relatively constant field in the iron while preventing saturation in the highest field areas. Details of the finite element modeling are covered in a later section of this report

Ferrous Conductors

In this machine, iron bars are used to carry the radial magnetic flux as well as the axial load current in both the inner and outer rotor active regions. The advantage of this approach is that the entire volume of the active region is available for both flux and current transport, since the conductors are ferrous. In a slotted design, the functions of current and flux transport are separate with approximately one half of the active region volume available for each function. Because of this combination of functions, the active region of the iron bar design is smaller, thereby reducing the overall machine size. The higher resistivity of iron is mostly compensated for by the increased cross sectional area available for conductor and by the fact that the active region is approximately one half the length of the active region in a slotted design.

Flux–Load Current Interactions

There are interactions between the load current and radial magnetic induction that must be analyzed and accounted for in this design. The axial load current in the bars generates a circumferential as well as an internal magnetic field intensity that effectively reduces the permeability of the iron bars. This occurs because the magnetic field intensity in the material is the vector sum of the radial field intensity from the coils and the internal and circumferential field intensities generated by the load current. The bars are separated from each other by G–10 (glass-epoxy laminate) insulators. These provide a non ferrous break which reduces the circumferential field produced by the load current. This combination of fields proved to be difficult to model in two dimensions. Due to the geometry of the active region and direction of the fields, unique boundary conditions are required in the finite element model. The modeling was finally done using an in-house developed finite element program, that could utilize the required boundary conditions, interactively with a commercial finite element package. This approach allowed us to accurately model the field interactions in the iron bars. This is described in detail in Ref. 5

Shielding

In a normally conducting design such as this, the shielding serves several functions. First is the minimization of the external stray field. The second is providing a low reluctance path for the main working flux. The low reluctance path is required because of the limited number of ampere turns available from normally conducting field coils. Providing a large enough coil to drive the flux through a large air gap would have significant negative impacts on both machine size and efficiency. The flux shield also serves as the motor's outer housing.

Finite Element Models

Finite element models were used to determine the overall iron dimensions and to verify the final magnetic design. PE2D, a two dimensional nonlinear finite element package from Vector Fields was used for the final analysis. A three dimensional finite element package was available in-house, but the added time and expense of deriving three dimensional models were beyond the scope of this project. The basic iron dimensions were determined by running many models and iterating the dimensions so that the iron would be equally loaded throughout the magnetic circuit. Once the overall dimensions were determined, a more detailed final model was derived to verify that 0.1 Weber of flux would cross the active region of the bars. The dimensions used in the final magnetic model are shown in Fig. 5.

Although the geometry of the motor is basically axisymmetric, there are some localized three dimensional effects such as the flux-load current interaction in the iron bars and voids in the iron due to construction necessities such as screw holes and service holes. Since the finite element package was only two dimensional, these three dimensional effects were accounted for by modifying the iron BH curves at the places were these irregularities occurred. Modifying the BH curves to account for the flux-load interaction was a complex process and is described in detail in Ref. 5. The BH curves for the voids in the iron were more simply derived by estimating the percentage of void in the iron material for specific regions and then modifying the BH curve for solid 1010 steel for those regions. The formula for deriving a BH point for iron is given by:

$$B' = (\mu\, s + \mu_0 (1 - s))\, H \tag{1}$$

were

B = B point for solid 1010 steel
H = H point for solid 1010 steel
B' = Modified B point with void in material
s = Iron fraction of material
$\mu_0 = 1.2566 \times 10^{-6}$ (B = Tesla, H = At / m)
$\mu_0 = 1.0$ (B = Gauss, H = Oersted)

Noting that $\mu = B / H$ equation (Eq.1) can be rewritten as

$$B' = (B\, s + H\, (1 - s)\, \mu_0) \tag{2}$$

Six regions were identified as having a lower permeability due to voids in the steel, and are shown in Fig. 6.

They are:

1: (Mate 4, 96%) The area of the inner rotor core just inside the field coil which has slots for the field coil leads.
2: (Mate 8, 95%) The screw holes above the outer rotor bars and inside the inner rotor bars that attach the rotor bars to the steel rotor cylinders.
3: (Mate 7, 75%) The area around the screw heads of 2.
4: (Mate 10, 65.4%) The area above the screw heads in the outer rotor cylinder.
5: (Mate 6, 55%) The outer rotor flux return ring which has cutouts for the copper of the outer rotor to carry the load current to the outer rotor collectors
6: (Mate 9, 27.3%) The area below the screw heads in the inner rotor cylinder.

The BH curves used for these regions are tabulated in table 1, and a flux plot from the model solution is shown in Fig. 7. The three dimensional effects did not reduce the total flux as much as was expected. The total reduction was only about 5% from the runs assuming solid steel. The final finite element solution predicted a total flux of 0.104 Weber.

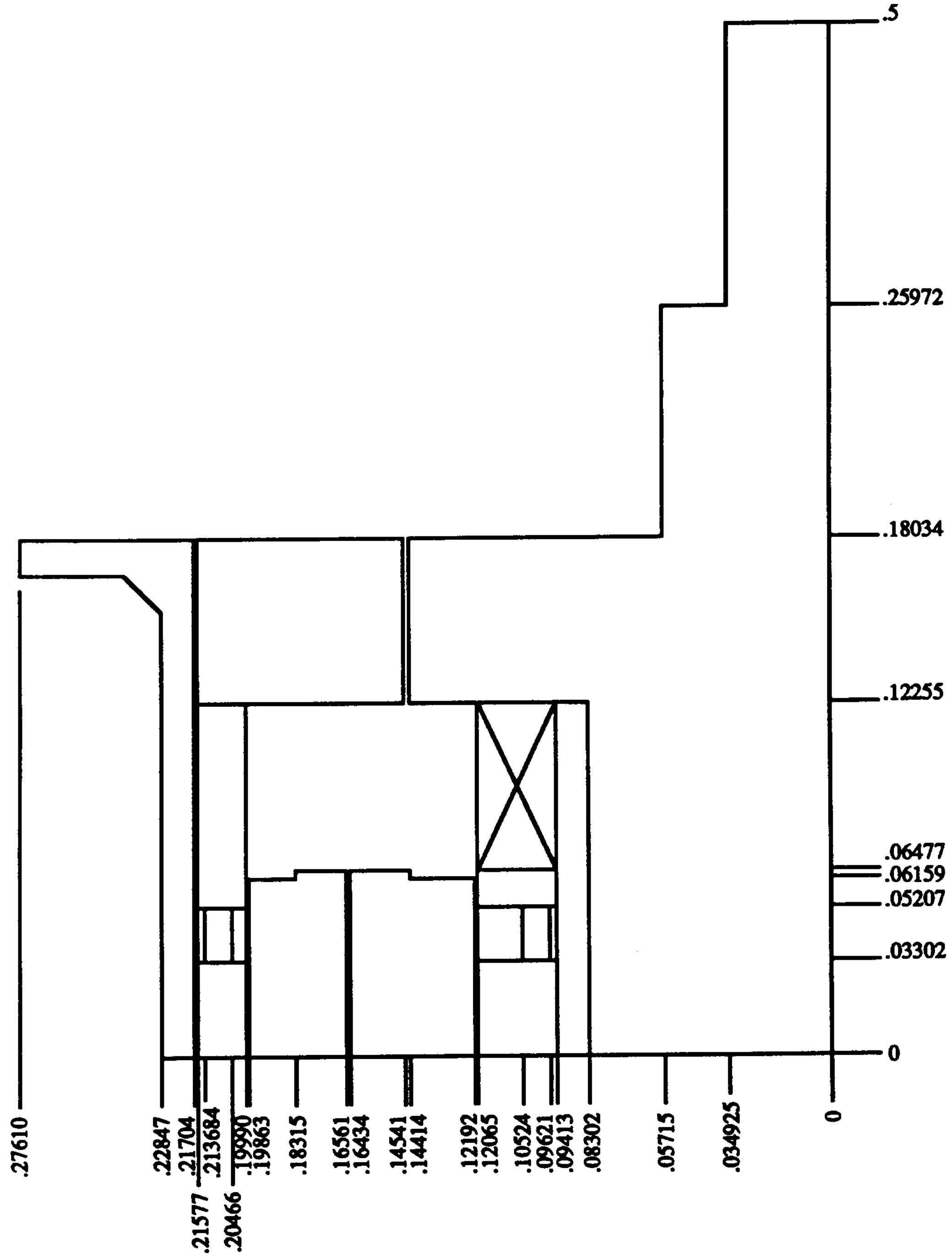
.5
.25972
.18034
.12255
.06477
.06159
.05207
.03302
0
.27610
.22847
.21704
.21577
.213684
.20466
.19990
.19863
.18315
.16561
.16434
.14541
.14414
.12192
.12065
.10524
.09621
.09413
.08302
.05715
.034925
0

Fig. 5. Finite Element Model Dimensions

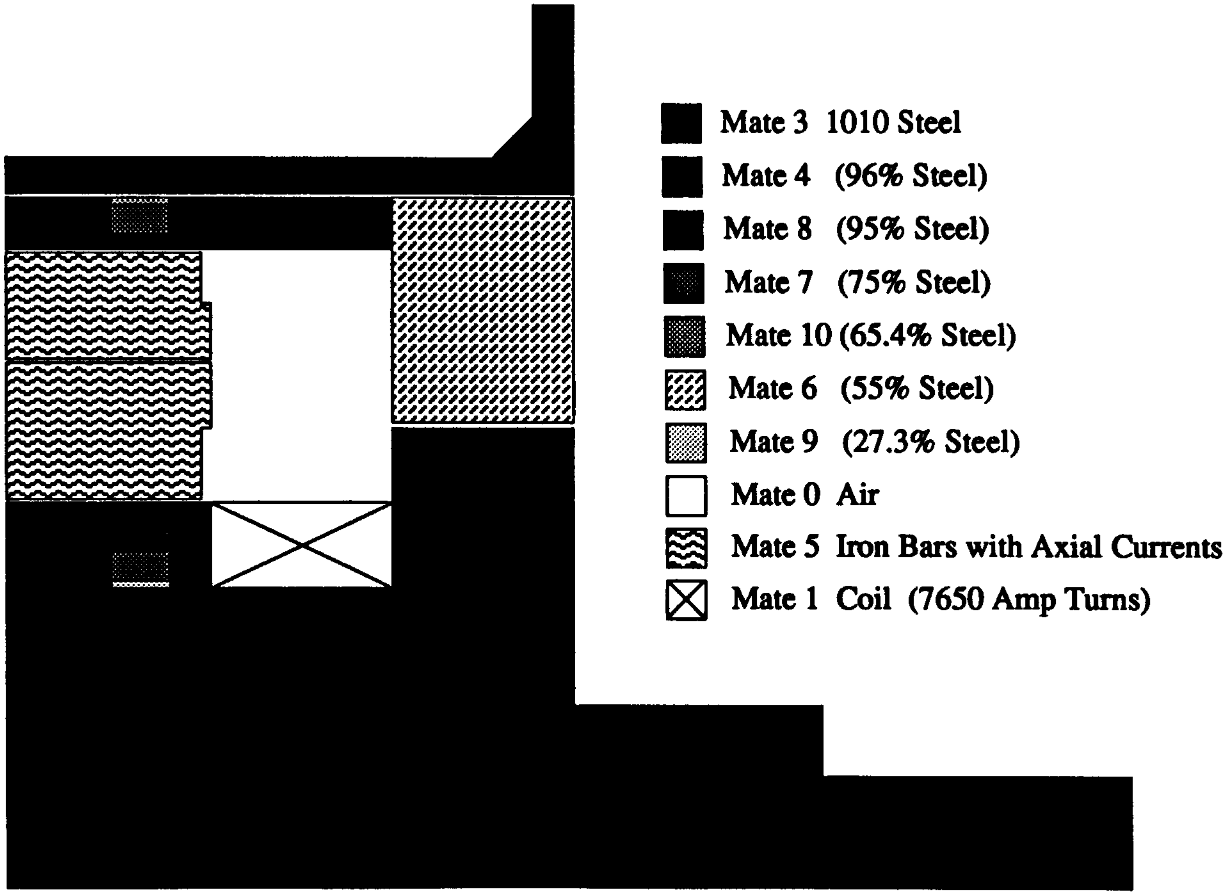
Mate 3 1010 Steel
Mate 4 (96% Steel)
Mate 8 (95% Steel)
Mate 7 (75% Steel)
Mate 10 (65.4% Steel)
Mate 6 (55% Steel)
Mate 9 (27.3% Steel)
Mate 0 Air
Mate 5 Iron Bars with Axial Currents
Mate 1 Coil (7650 Amp Turns)

Fig. 6. Permeability Regions

Table 1. BH Curves for 1010 Steel With Air Voids

Field in Oersted	Magnetic induction in Gauss (100% is all Iron and no Air)						
	MATE=3	MATE=4	MATE=8	MATE=7	MATE=10	MATE=6	MATE=9
	100%	96%	95%	75%	65.4%	55%	27.3%
0.00	0	0	0	0	0	0	0
2.24	8944	8587	8497	6709	5850	4920	2443
3.70	12000	11520	11400	9001	7849	6602	3279
6.30	14000	13440	13300	10502	9158	7703	3827
10.01	15000	14400	14251	11253	9813	8255	4102
22.56	16000	15361	15201	12006	10472	8810	4384
35.97	16500	15841	15677	12384	10803	9091	4531
55.08	17000	16322	16153	12764	11137	9375	4681
75.95	17500	16803	16629	13144	11471	9659	4833
102.06	18000	17284	17105	13526	11807	9946	4988
133.01	18500	17765	17582	13908	12145	10235	5147
171.00	19000	18247	18059	14293	12485	10527	5311
216.45	19500	18729	18536	14679	12828	10822	5481
266.00	20000	19211	19013	15067	13172	11120	5653
336.20	20500	19693	19492	15459	13523	11426	5841
424.20	21000	20177	19971	15856	13881	11741	6041
480.25	21250	20419	20212	16058	14064	11904	6150
550.40	21500	20662	20453	16263	14251	12073	6270
659.02	21750	20906	20695	16477	14453	12259	6417
829.40	22000	21153	20941	16707	14675	12473	6609
1250.00	22500	21650	21438	17188	15148	12938	7051
1774.50	23069	22217	22004	17745	15701	13486	7588
2666.20	23996	23143	22930	18664	16616	14398	8489
5341.20	26706	25851	25638	21365	19314	17092	11174
10690.00	32070	31215	31001	26725	24673	22449	16527
26741.00	48134	47278	47064	42786	40732	38507	32581
42790.00	64186	63330	63116	58837	56783	54558	48631

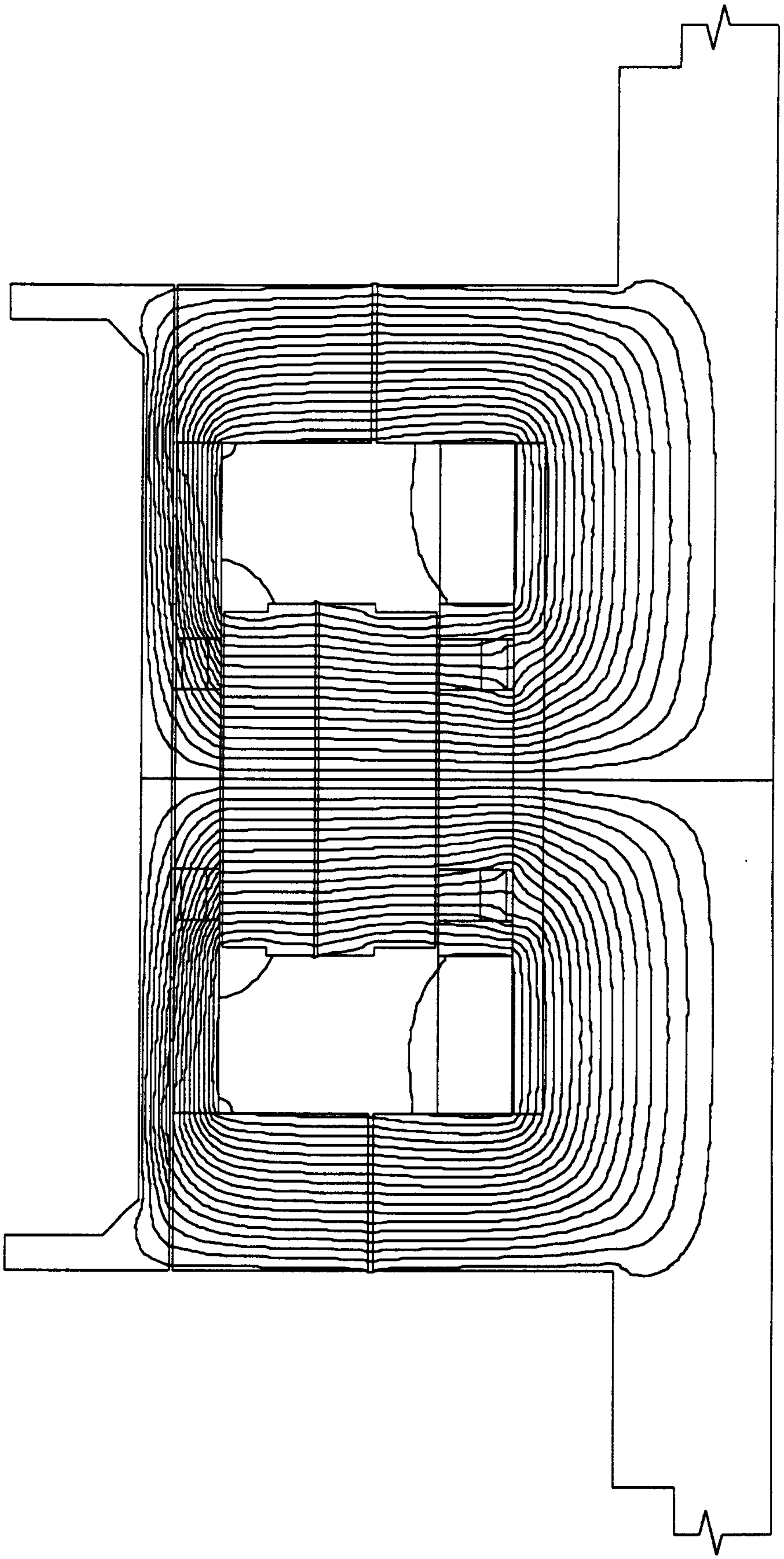

Fig. 7. Magnetic Circuit with Superimposed Flux Plot

FIELD COILS

Each coil consists of 34.5 turns of hollow copper conductor wound in the form of a solenoid, producing 7650 ampere turns. The total effective magnetic flux produced is 0.104 Webers. The coils have a calculated DC resistance of 0.0267 Ω and a calculated free air inductance of 253 µh. At the operating current of 222 amps, each coil will have a terminal voltage of 5.93 volts and dissipate 1.3 kW. Coolant flows through the hollow conductors to remove the generated heat. The coils are connected electrically in series to minimize the current carried by the slip rings. The cooling circuits are in parallel to minimize the required coolant supply pressure. The coils were manufactured by Mohler Technologies Inc. of Boonville, Indiana. The detail design of the coils can be found on drawing A27-19992-13 in appendix E.

Conductor

The conductor used for the coils is square copper, OFHC 102 alloy, 0.218 in. on a side. It has a round hole 0.174 in. in diameter for coolant flow and is custom extruded. Due to the small size of the coils and limited number of turns, one continuous length of conductor could be used for each coil, thereby eliminating joints within the coils.

Insulation

The individual conductors are wrapped with half lap turns of .007 in mica paper/glass tape impregnated with B-staged epoxy resin. The final conductor insulation thickness is .014 in. on a side. The coil ID, OD, and both ends have ground wall insulation consisting of cross ply glass and B-staged epoxy resin per MIL-P-25421, Rev B. After winding, the conductor and ground wall insulation is oven cured. During curing, the B-staged epoxies flow together forming a solid composite. Both the conductor insulation and the ground wall insulation are class F with a test voltage rating of 1,500 volts.

Lead Configuration

Two coil leads, consisting of extended conductor, are provided 180° apart. Both leads are bent inward so that they are at the same radius and can clear the bore of the other coil. An adapter is soft soldered to the ends of the leads. This adapter provides a round surface for the terminal clamps to attach to as well as a barbed end for the coolant hose connections. The terminal clamps are bolted to, but insulated from, the inner rotor. This provides mechanical support for the coil leads.

ELECTRICAL CIRCUIT

With a known flux, the electrical parameters of the machine can be determined. The terminal voltage of single turn homopolar motor is given by:

$$V = \frac{\Phi N}{60} \tag{3}$$

Where Φ is the flux cut by the rotor per revolution and N is the differential rotor speed in revs/min. For this motor the flux is 0.104 webers; therefore the terminal voltage is:

$$V = \frac{0.104N}{60} \tag{4}$$

At the nominal design speed of ± 1,200 RPM this results in a open circuit terminal voltage of 4.16 volts.

Inner Rotor

The electrical circuit of the inner rotor consists of 32 iron bars, piece 8, two copper transition rings, pieces 10 and 11, and two current collector rings, pieces 9 and 12. The iron bars conduct the current through the active region of the machine. The bars, which are trapezoidal in cross section, are fastened to the inner rotor cylinder, piece 3. The bars are separated from each other by G–10 (glass-epoxy laminate) insulators. In a multi–turn motor these would provide the electrical isolation between circuits. They also provide a non–ferrous break as previously described. The outer surface of the inner rotor cylinder is plasma sprayed with a 0.015 in thick coating consisting of a mixture of aluminum oxide and titanium dioxide (Al_2O_3 and TiO_2) for electrical isolation. Bolts with insulated shanks and insulating washers, pieces 60 and 63, are used to secure the bars to the inner rotor cylinder. The copper inner rotor transition rings are brazed to the ends of the bar assembly. These rings have pockets machined in the inner face to accommodate the cooling tube U-bends, piece 57 and have tapped holes on the outer faces to which the current collector disk bolt. The mating faces of the transition ring and the collector disk are gold plated to minimize contact resistance. The cross sectional area of the bars is 50.8 square inches. This results in a current density of 688 amps/square inch at 35,000 amps and 1967 amps/square inch at 100,000 amps.

Outer Rotor

The electrical circuit of the outer rotor consists of 36 iron bars, piece 16, two copper current collector channels, pieces 14 and 19, the copper outer rotor outer drum, piece 17, and two terminal collector disks, pieces 15 and 18. The bar assembly has a copper current collector, piece 19, brazed on one end and the outer rotor outer drum, piece 17, brazed to the other end. This assembly is insulated with glass-epoxy on its OD and is bolted to the ID of the outer rotor cylinder, piece 22, with insulated bolts and washers, pieces 59 and 63. The service end terminal collector disk, piece 15, is bolted to the end of the outer rotor service end collector, piece 14, and the drive end terminal collector disk is bolted to the end of the outer rotor outer drum, piece 17. The mating faces are gold plated as on the inner rotor.

Terminals

Two terminal collectors , pieces 26 and 27 are fitted between the motor housing, piece 37, and the service end, end plate housing, piece 39. The collectors are insulated from each other and from the housing with bonded on G-10 (Glass-epoxy laminate). Each collector has 4 input terminal ears, that protrude through the terminal housing, piece 38, that are the motor's input terminals.

CURRENT COLLECTORS

The collectors used in this machine are close clearance liquid metal braid type collectors. These collectors have only been used in single rotating applications at CDNSWC in the past. There are some fluid flow and stability questions concerning operation of these collectors in a contrarotating mode that were addressed as part of this project. The collector development is being approached both theoretically and by test rig evaluations of candidate current collectors. The results of these evaluations will be used to select the final current collector configuration for both the single and contrarotating collectors in this design. Details of these studies can be found in Ref. 6

COOLING SYSTEM DESIGN AND ANALYSIS

Inner Rotor

The inner rotor bar set is the critical portion of the inner rotor from a thermal perspective. Appendix A documents the detailed thermal analysis performed on the inner rotor bars.

Selecting cooling hole diameter and number of parallel paths

The criterion for selecting the diameter for the cooling hole was to choose the minimum cooling hole size that would adequately cool the bars while preserving the maximum iron cross section to carry the current. This also minimizes the power loss in the armature circuit. Figs. 8–13 display how the film drop and fluid changes in temperature are affected by varying the diameter of the cooling passage. The figures show the results for 40 and 80 psi pressures as well as different numbers of parallel paths. Increasing the diameter decreases the fluid temperature change at a higher rate than the film drop temperature, because the film drop varies linearly with diameter (surface area) and the change in fluid temperature varies with the square of the diameter (cooling hole cross sectional area).

The graphs also shows how the temperature changes are affected by the number of parallel paths in the system. For one parallel path, the coolant must make a series run through all the bars before returning to the heat exchanger. By increasing the number of cooling paths, the change in fluid temperature (less heat to be removed per cooling loop) declines more than the film drop (less heat to be removed per cooling loop but surface area is also decreased). Fig. 14 shows how the film drop temperature varies with diameter and pressure.

Based on the above information, a diameter of .25" with 2 parallel paths was chosen to cool the rotor bars. This diameter size provided a good flow rate, used minimum iron bar area, and had the proper U bend radius for construction purposes. Fig. 15 displays the film drop temperature verses pressure and flow for 2 parallel paths and .25" diameter. The film drop is the driving parameter in determining rotor bar temperature.

Outer Rotor

The outer rotor bar cooling analysis is very similar to the inner rotor bar analysis. The only relevant difference is that the outer rotor has 36 bars each of a smaller cross section resulting in a greater cooling passage length. This results in increased pressure drop as well as increased surface area. However, the heat generation in the outer rotor is the same as the inner rotor since the total current, area, and active length for both rotors are the same. Appendix B shows the differences between the inner and outer rotor calculations.

Fig. 16 shows the film drop of the outer bars for various flow rates at 2 parallel passes and a diameter of .25". The film drop for the outer rotor is a few degrees lower than for the inner rotor under the same conditions. Although the pressure drop is higher due to the greater number of bars, the surface area also increases, and it has a larger effect on the film drop than does the pressure drop. The change in bulk fluid temperature increases for the outer rotor compared the inner rotor results, but it is still small in magnitude when compared to the film drop.

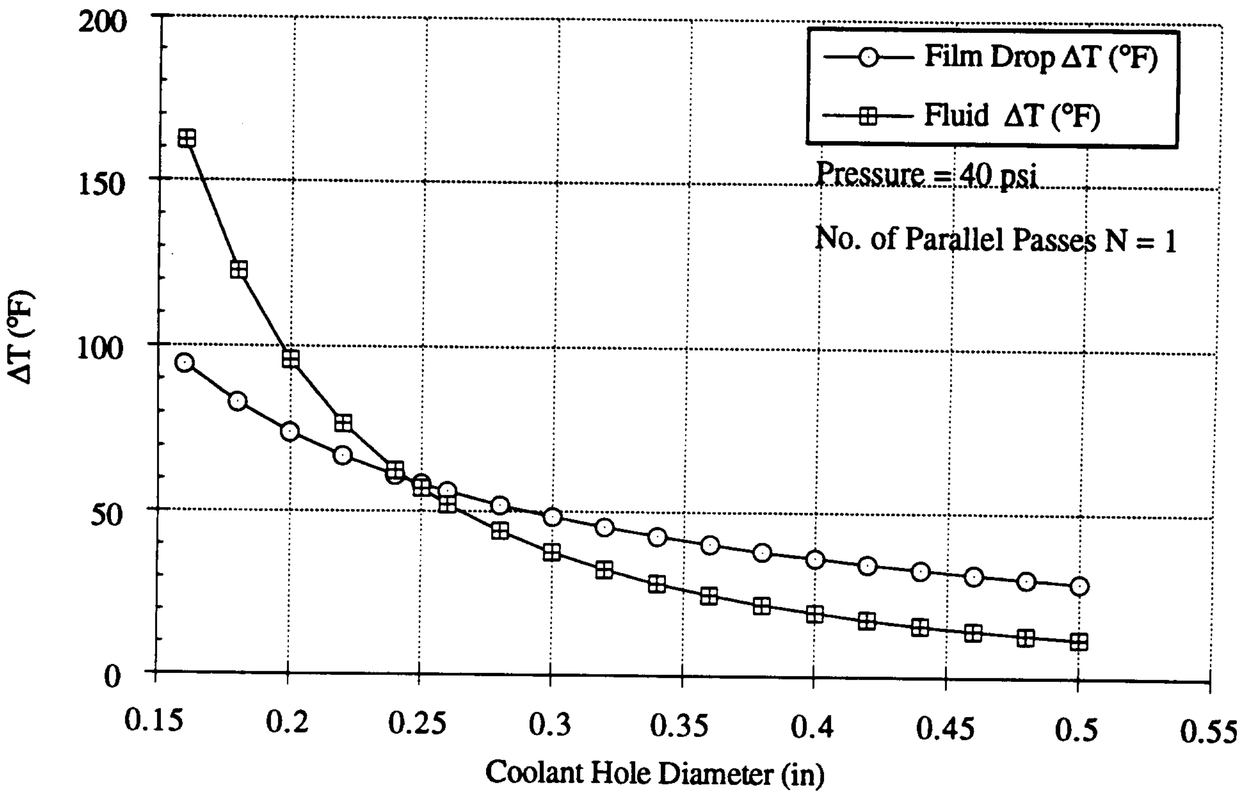

Fig. 8. ΔT Vs. Diameter, N= 1, 40 psi

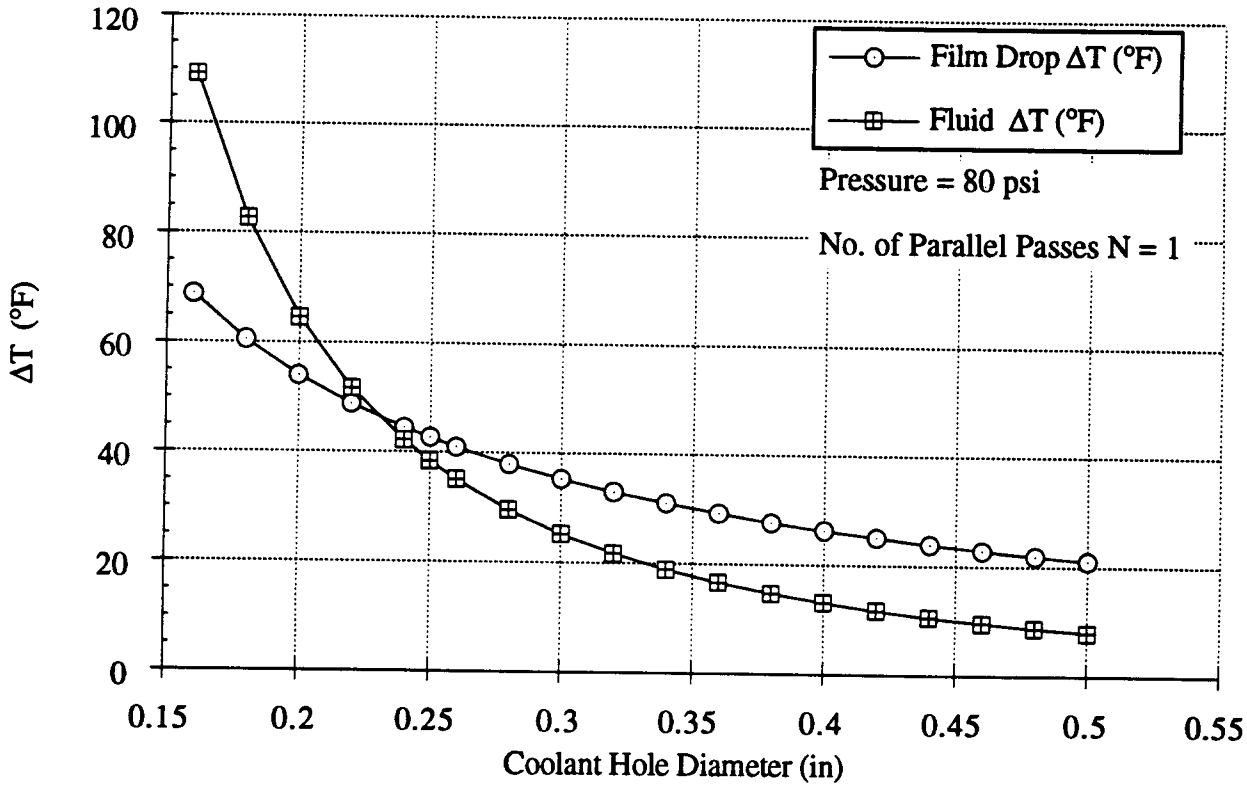

Fig. 9. ΔT Vs. Diameter, N= 1, 80 psi

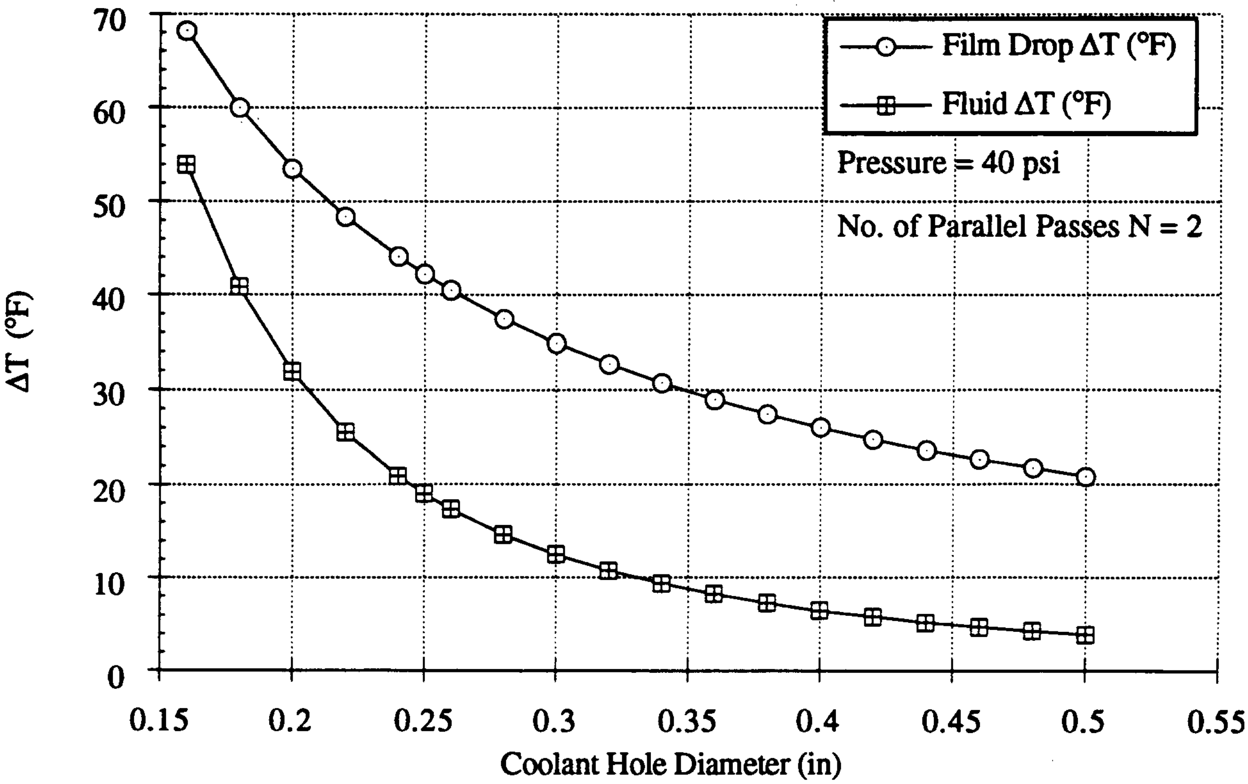

Fig. 10. ΔT Vs. Diameter, N= 2, 40 psi

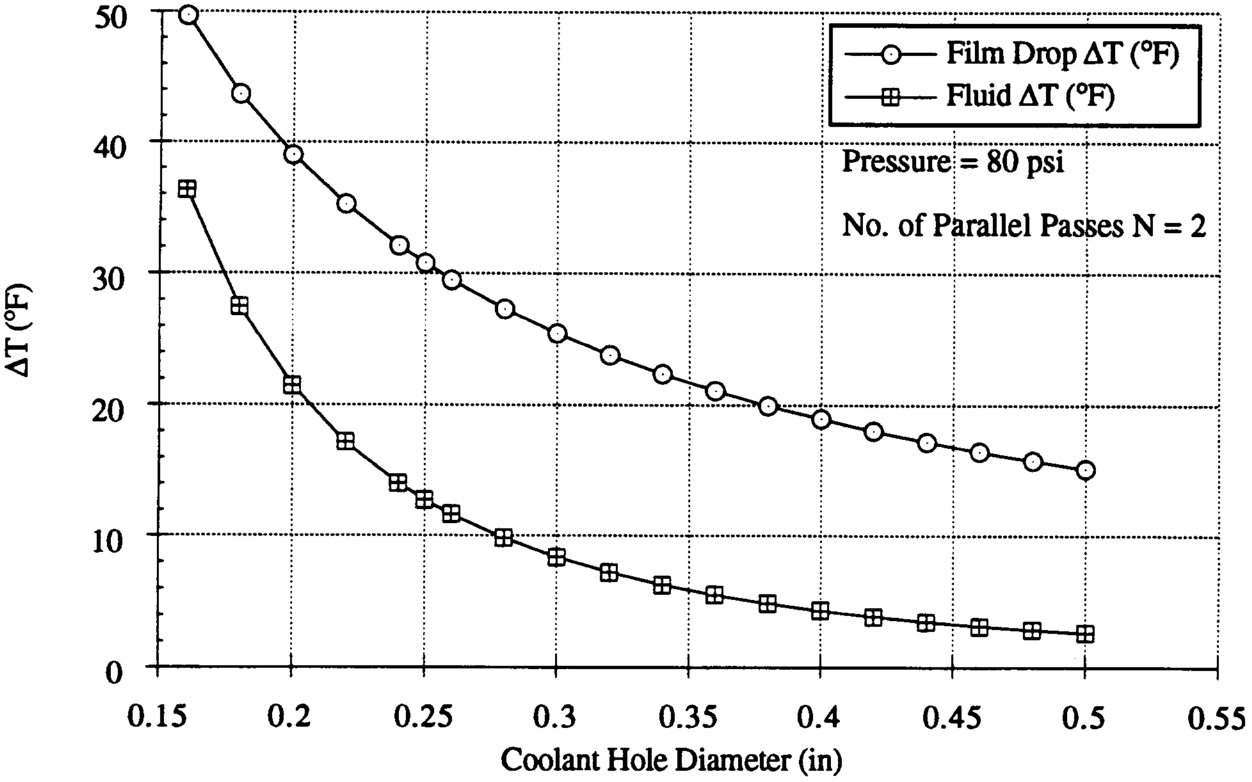

Fig. 11. ΔT Vs. Diameter, N= 2, 80 psi

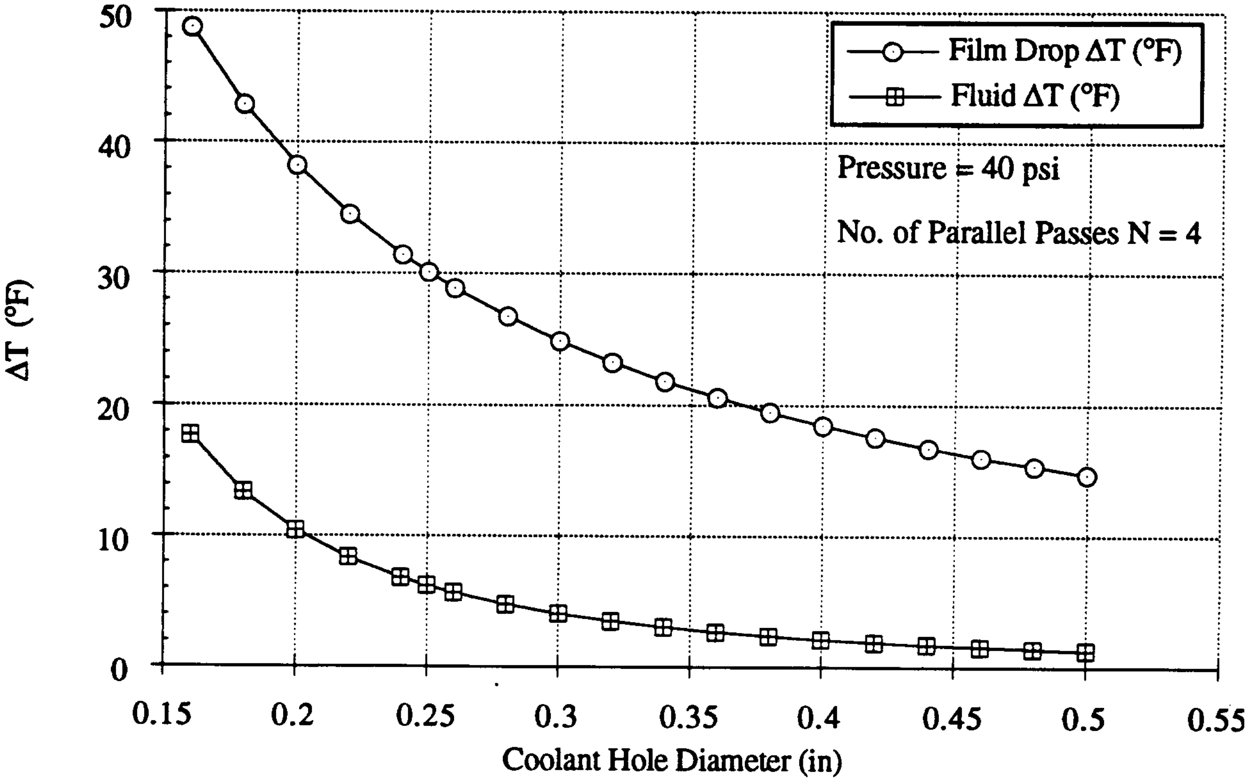

Fig. 12. ΔT Vs. Diameter, N= 4, 40 psi

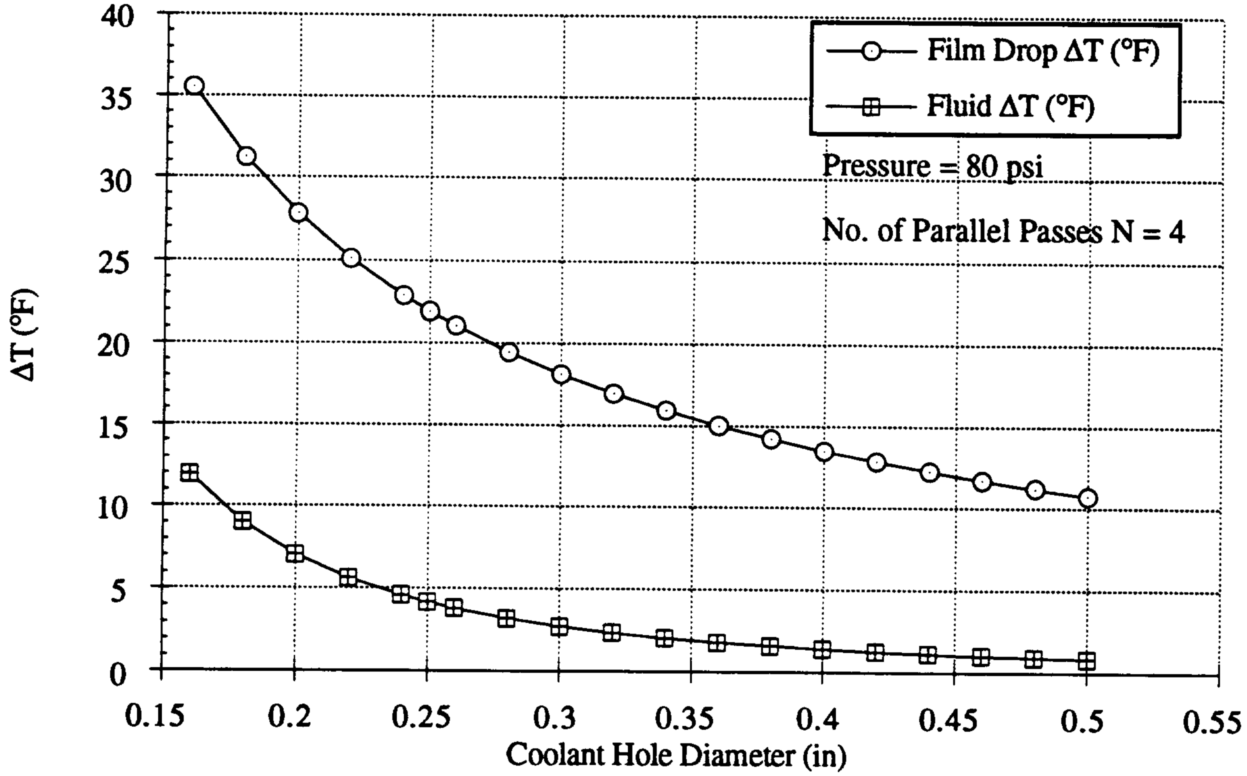

Fig. 13. ΔT Vs. Diameter, N= 4, 80 psi

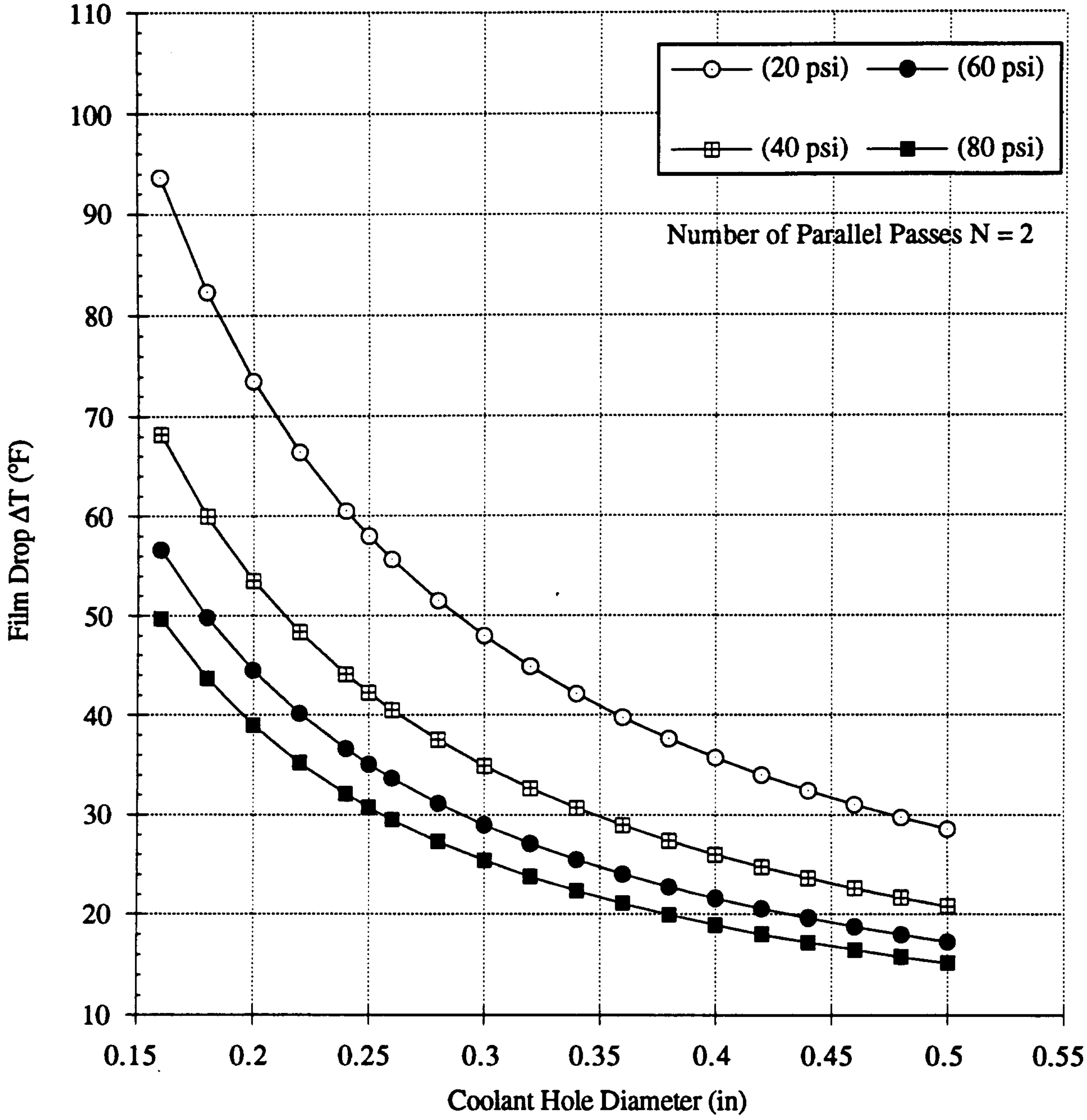

Fig. 14. Inner Rotor Film Drop Vs. Diameter (32 Bars)

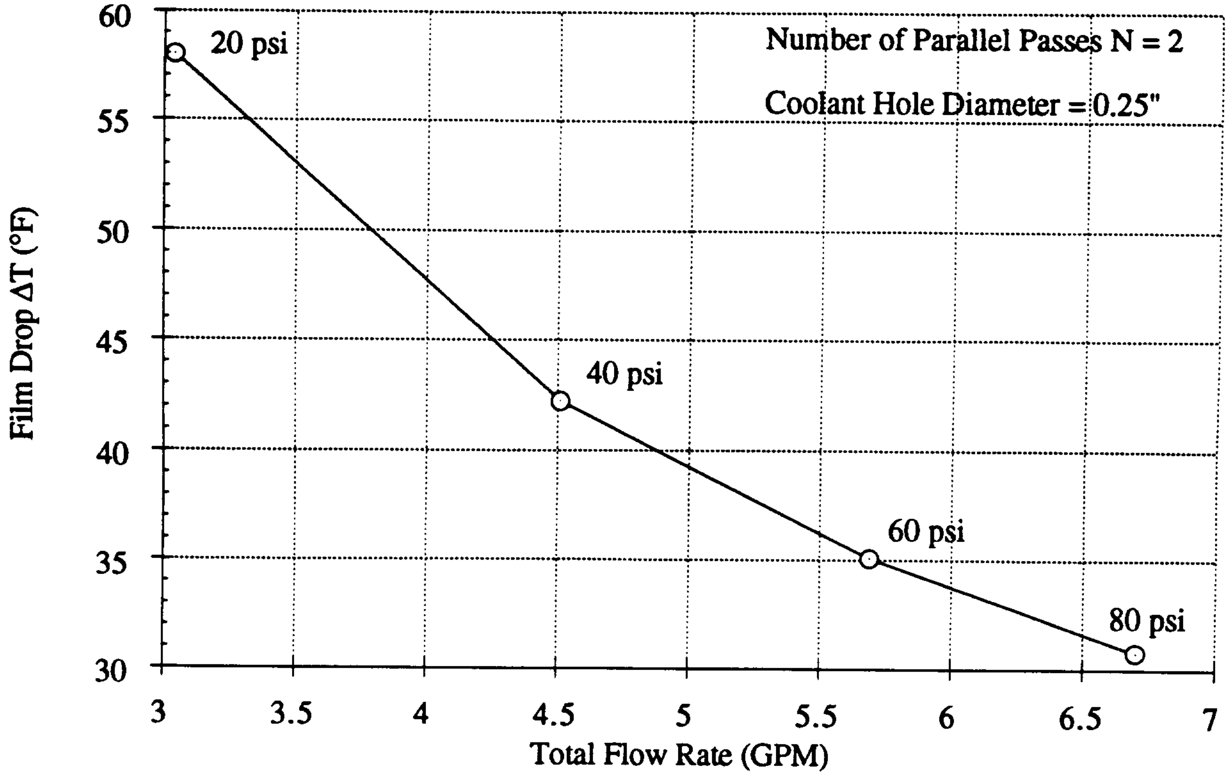

Fig. 15. Inner Rotor Film Drop ΔT Vs. Flow Rate

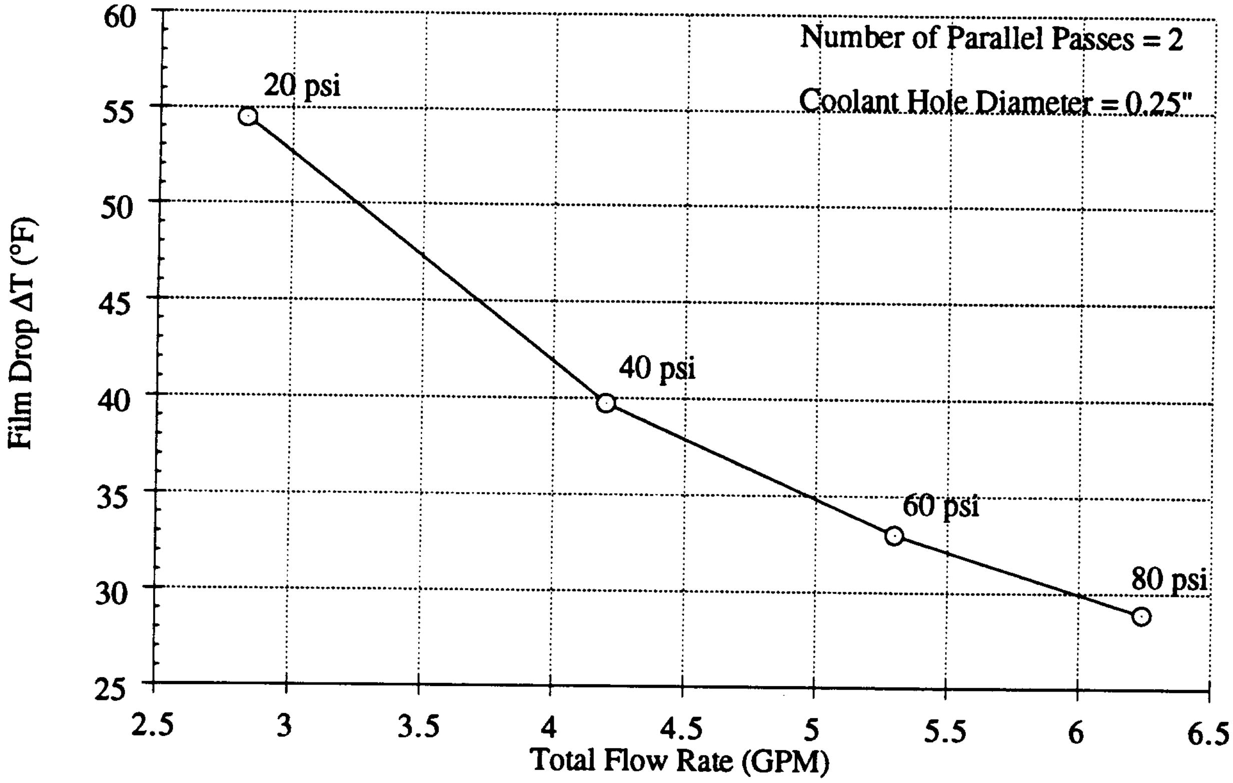

Fig. 16. Outer Rotor Film Drop ΔT Vs. Flow Rate

Terminals

Each of the terminal collector rings are cooled by four soldered–in 5/16 in copper tubes. Since these are completely outside the cover gas region of the motor, water will be used as the coolant. The tubing provides 70 in^2 of surface area per ring which, when water cooled, should be more than adequate for the anticipated heat load. No detailed thermal analysis of the terminal cooling was performed.

Field coils

Appendix C documents the thermal analysis procedure used in designing the field coils.

Equations 1a through 7b of Appendix C were analyzed to determine which combination of parameters resulted in the lowest change in temperature for the cooling fluid. The change in fluid temperature was the driving parameter in determining the cooling hole size and flow rates.

Fluids

Figs. 17 and 18 show the differences in thermal performance (ΔT_{fl}) between Coolanol™ 20 and Coolanol™ 40 heat transfer fluids at 20 and 60 psi of pressure. Since the Coolanol™ 20 produces approximately 25 °F less temperature change of the fluid than the Coolanol™ 40 (due to its lower viscosity), it is the fluid chosen to cool the coils.

Geometry

Both the square and round cooling holes were evaluated over a range of cross sectional areas for 20 and 60 psi pressures as shown in Figs. 19 and 20. For a fixed current, the electrical losses are dependent on the cross sectional area of conductor, but the cooling capacity is dependent on the flow rate, which in turn is dependent on the hole area. When the area of the hole is small compared to the area of the conductor, incremental increases of the hole dimension yield a large percentage increase in flow area and a small percentage decrease in conductor area. As hole dimension becomes significant compared to the overall dimensions of the conductor, incremental increases of the hole dimension result in small percentage increases in the coolant flow area but large percentage decreases in the conductor area. Since the round hole offers better thermal performance due to the higher flow rate (9.4%) it provides for the same cross sectional area and pressure drop, the round hole was chosen for the geometric shape of the cooling hole. The optimum diameter for the round hole (based on lowest temperature change of the fluid) is found to be d = 0.185" as shown in Fig. 21. For reasons of wall thickness and availability of tubing a hole size of 0.174" was chosen. The difference in performance is not significant as can be seen in Fig. 21. The analysis also revealed that the optimum diameter is only a function of geometric parameters, and is not dependent on fluid properties or the magnitude of the heat load. A diameter smaller than optimum results in a higher temperature rise due to the low flow rate for a given pressure drop. Conversely, a larger than optimum hole will produce a higher temperature rise of the fluid since the reduction in copper area increases the I^2R losses more rapidly than the increase in coolant flow rate can compensate for.

The change in fluid temperature (ΔT_{fl}) is dependent on the hole area, while the film drop (ΔT_{fd}) is dependent on the surface area of the cooling hole. Fig. 22 shows the film drop temperature difference (round hole) versus diameter for various pressures. For a diameter of d = .174" the largest film drop is 8.5 °F at 20 psi (lowest pressure considered). Since the film drop is small in magnitude compared to ΔT_{fl} there is no need to be concerned about this parameter.

Based on equations 8 through 12 of Appendix C Figs. 23–25 show the relationship between pressure and flow rate and how they affect the change in temperature of the fluid.

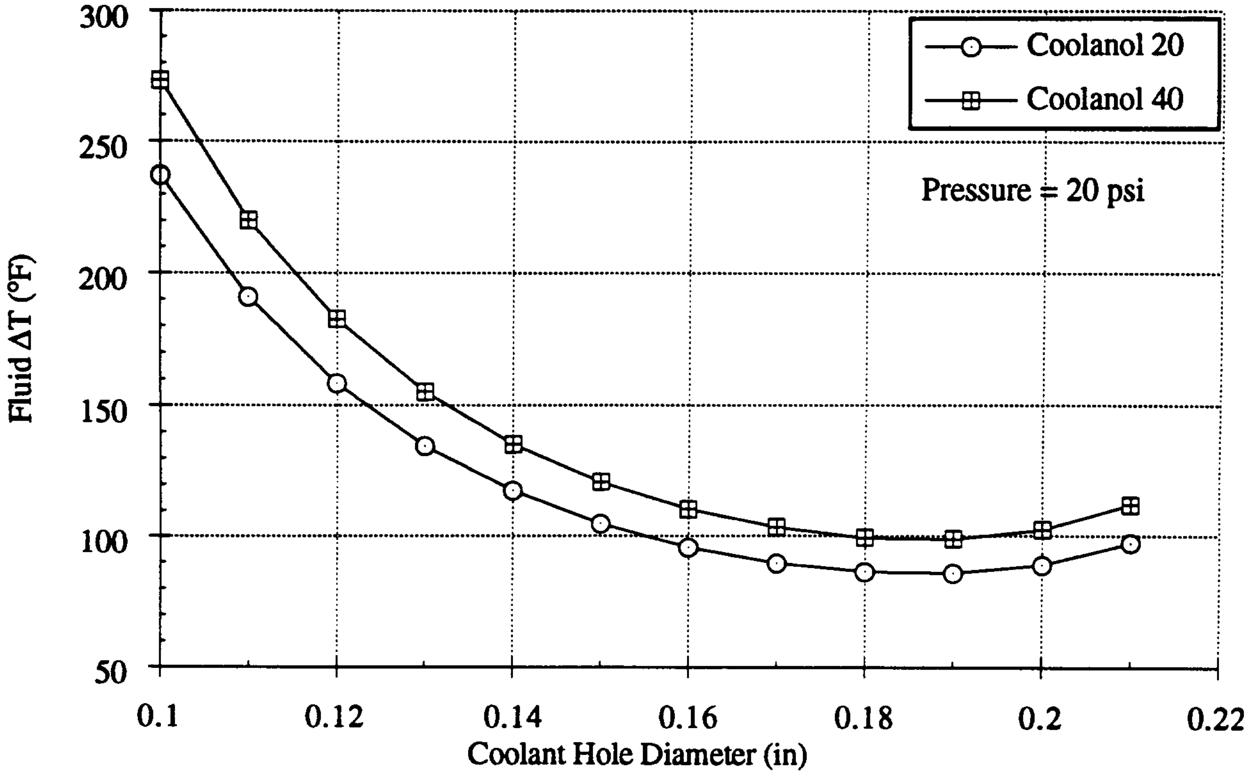

Fig. 17. Fluid ΔT Vs. Hole Dia. for Coolanol 20 and 40 at 20 psi

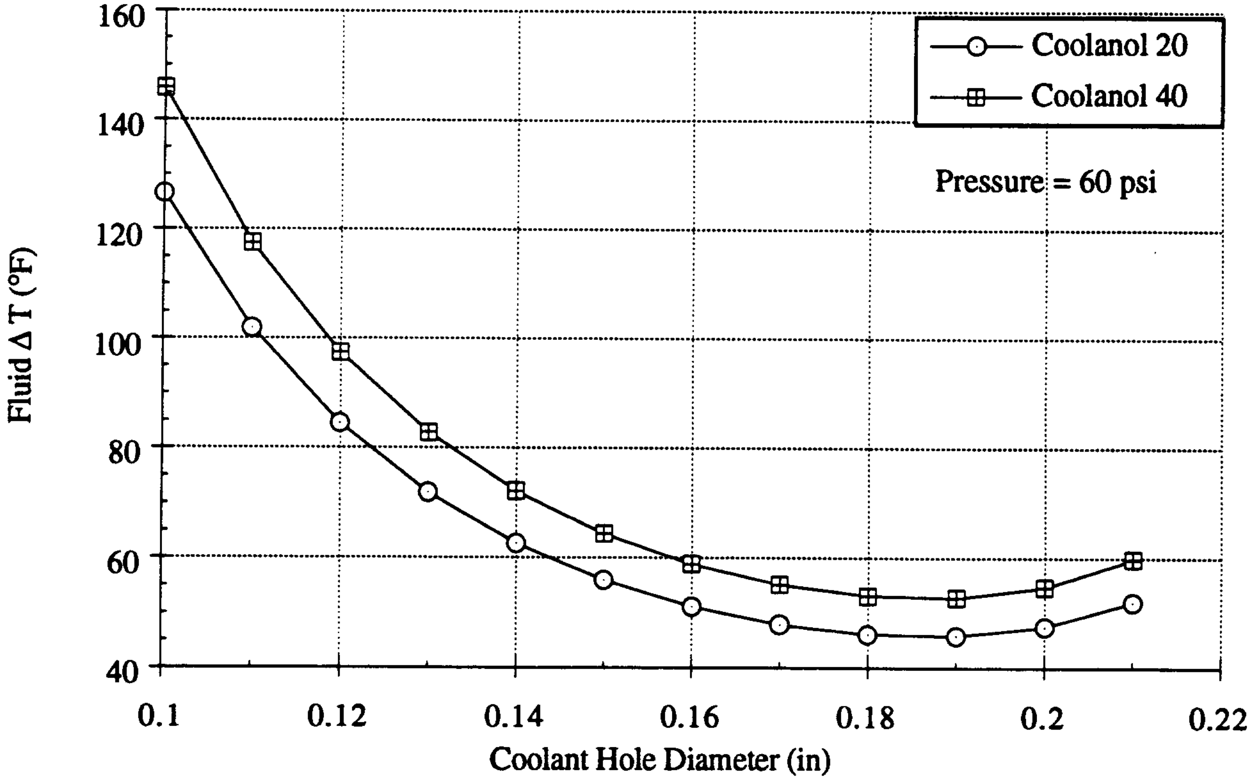

FIg. 18. Fluid Δ T Vs. Hole Dia. for Coolanol 20 and 40 at 60 psi

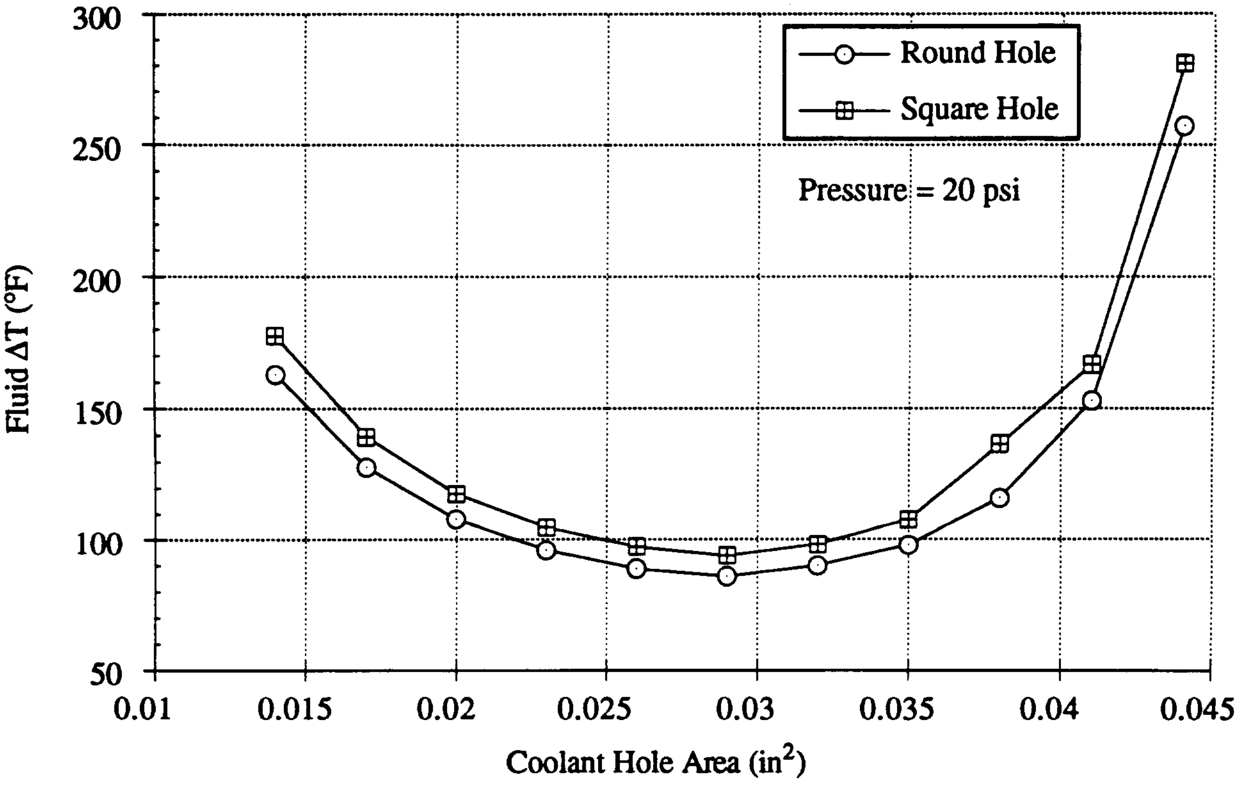

Fig. 19. Fluid ΔT Vs. Coolant Hole Area at 20 psi

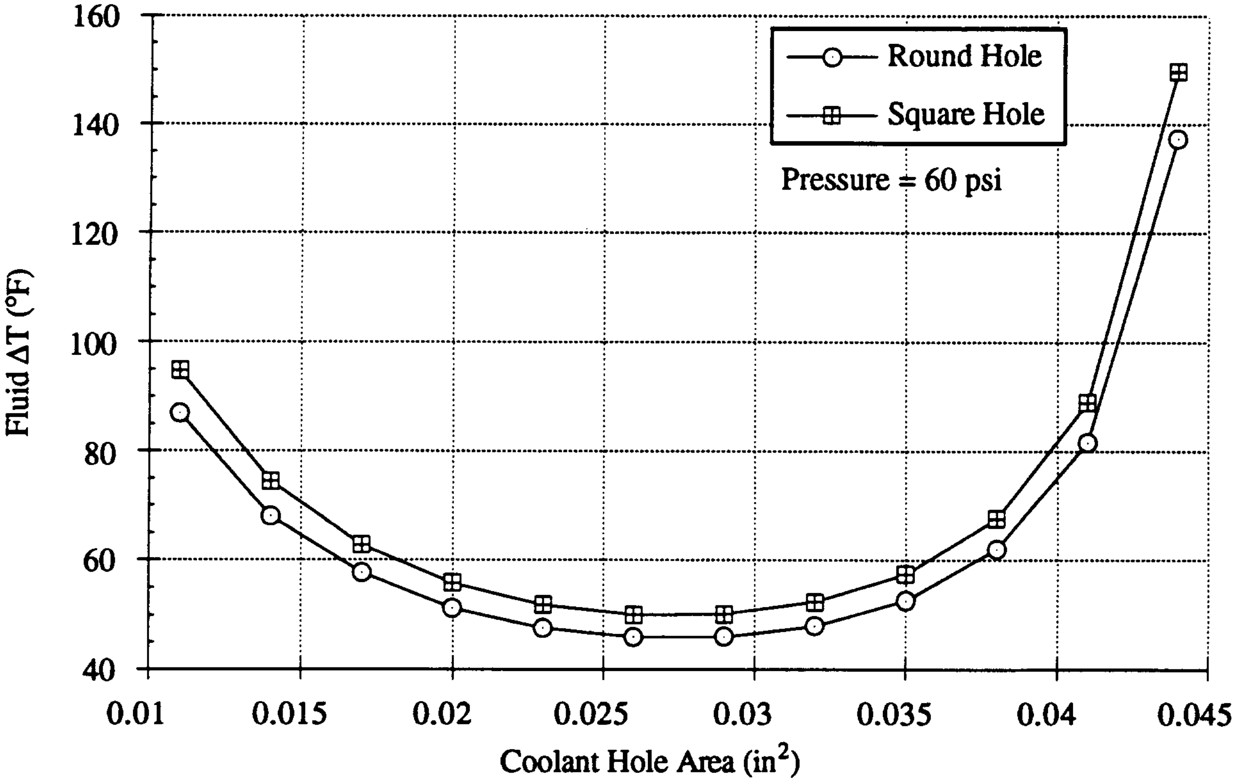

Fig. 20. Fluid ΔT Vs. Coolant Hole Area at 60 psi

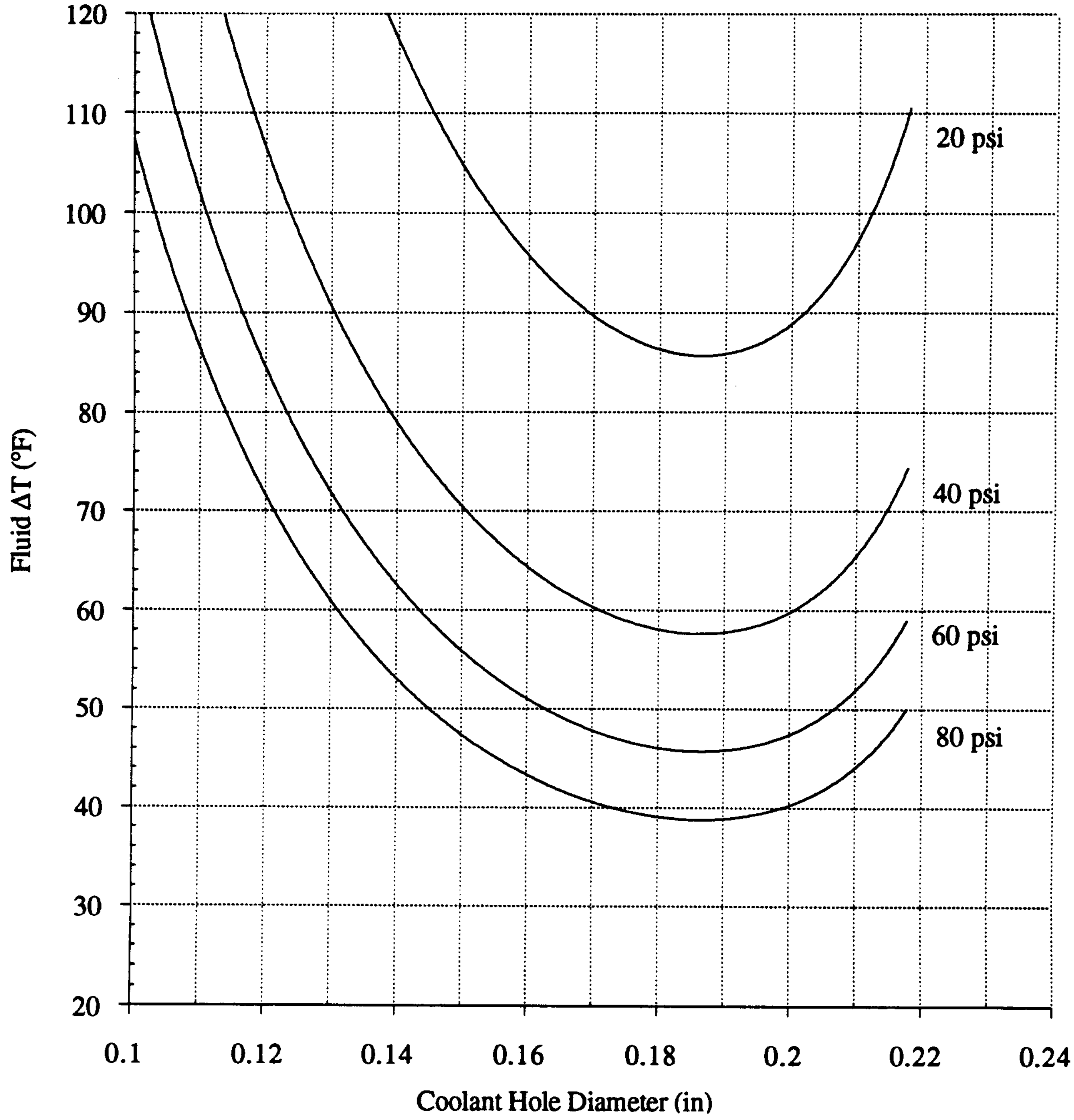

Fig. 21. Fluid ΔT Vs. Coolant Hole Diameter

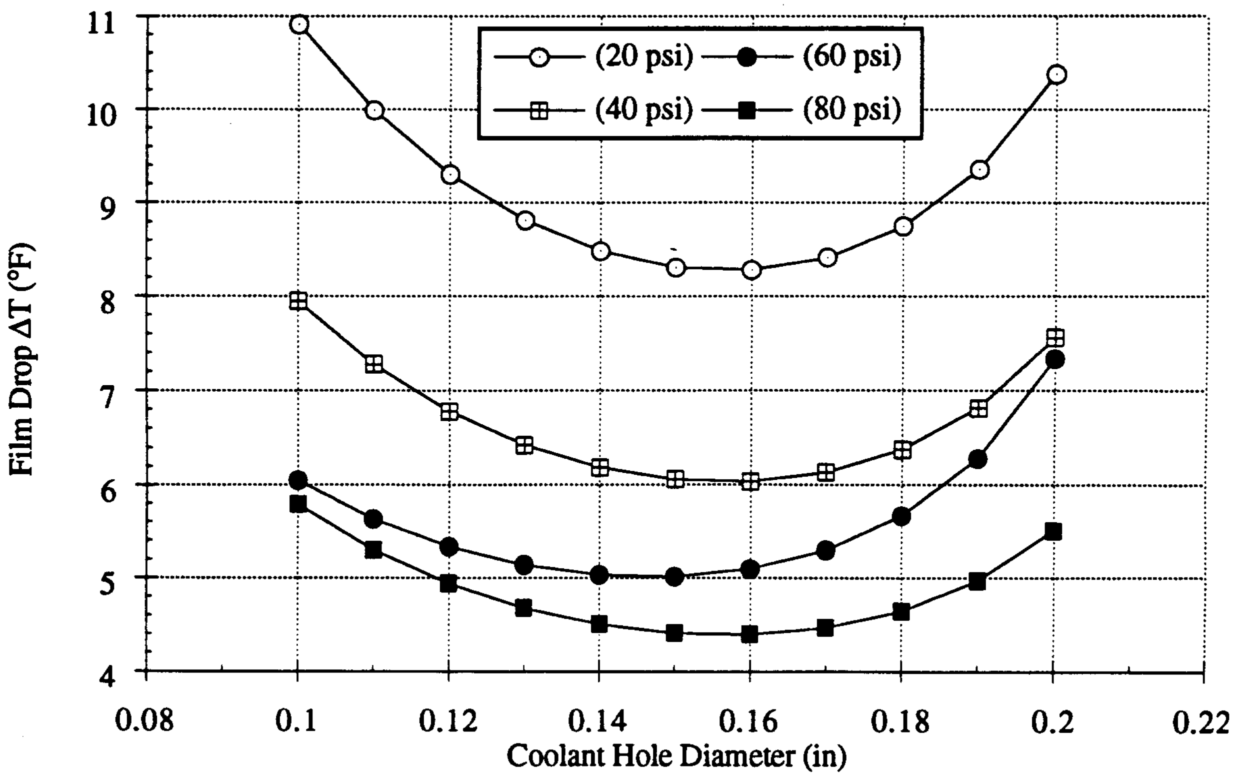

Fig. 22. Film Drop ΔT Vs. Diameter at 20, 40, 60, and 80 psi

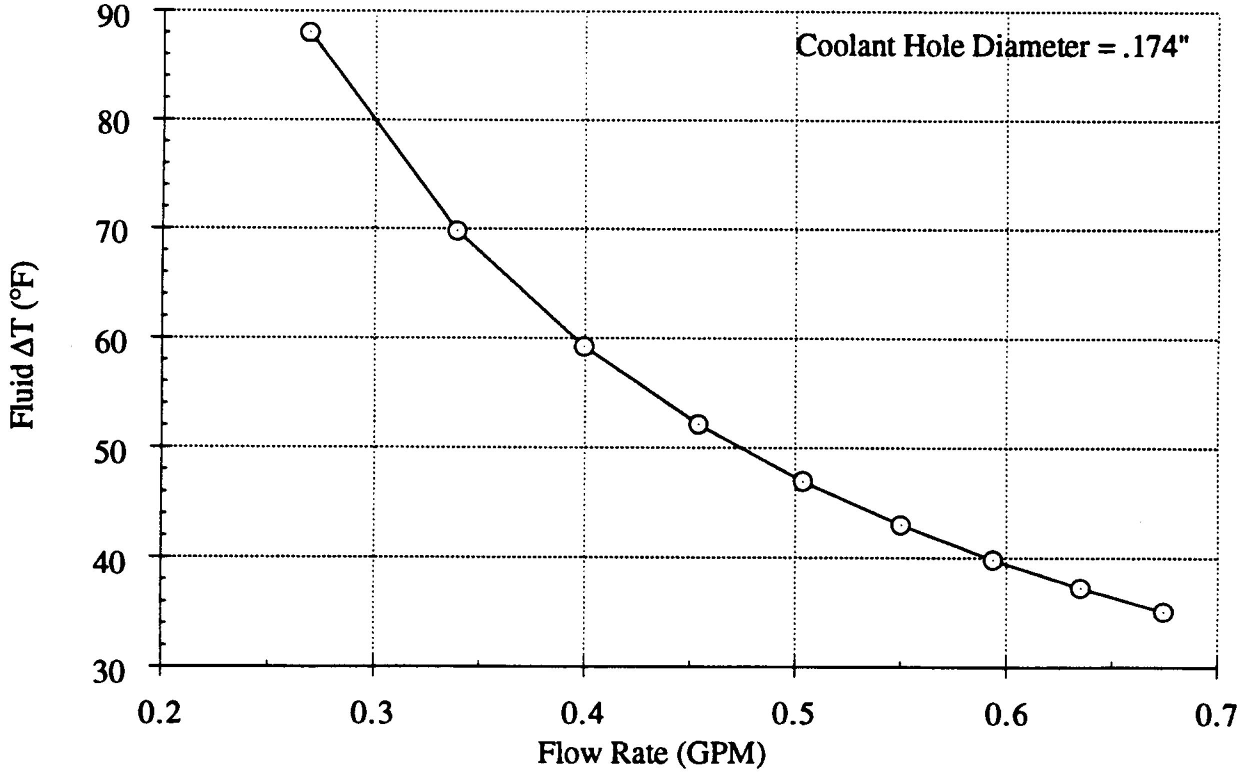

Fig. 23. Fluid ΔT Vs. Flow Rate

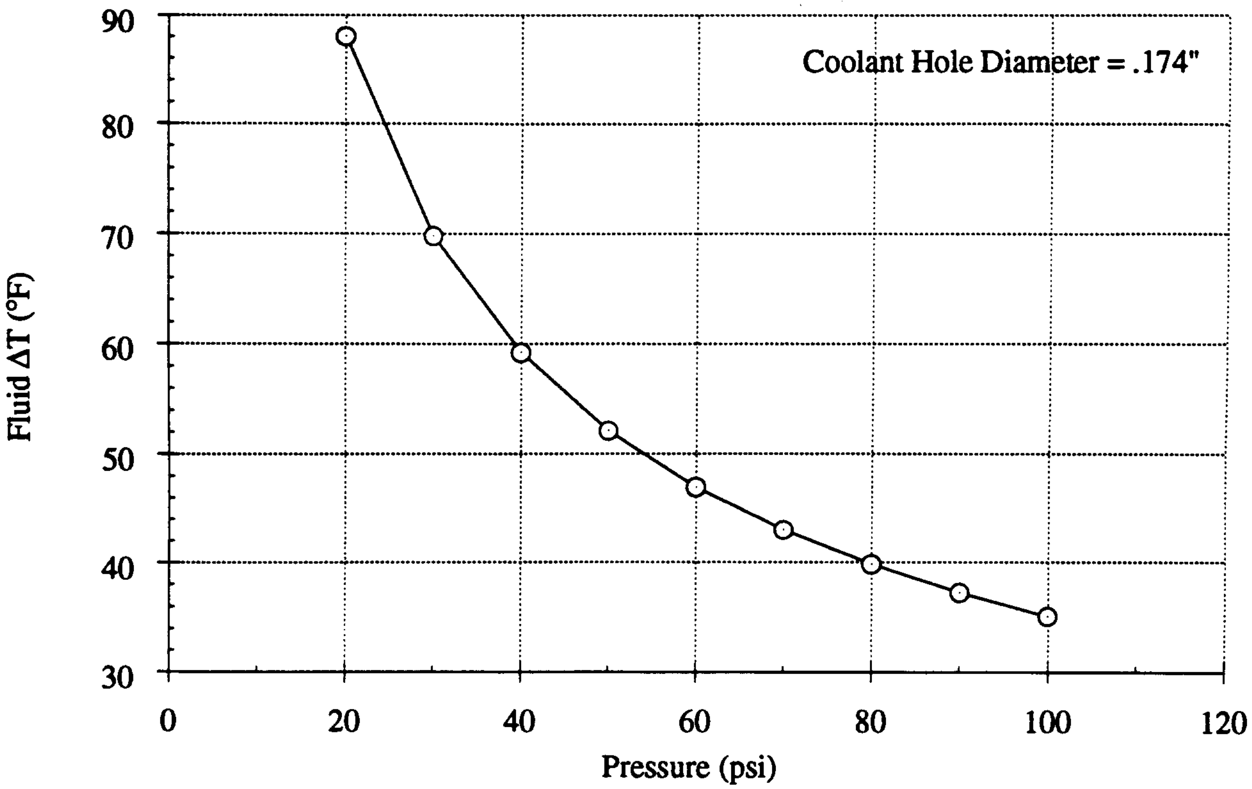

Fig. 24. Fluid ΔT Vs. Pressure

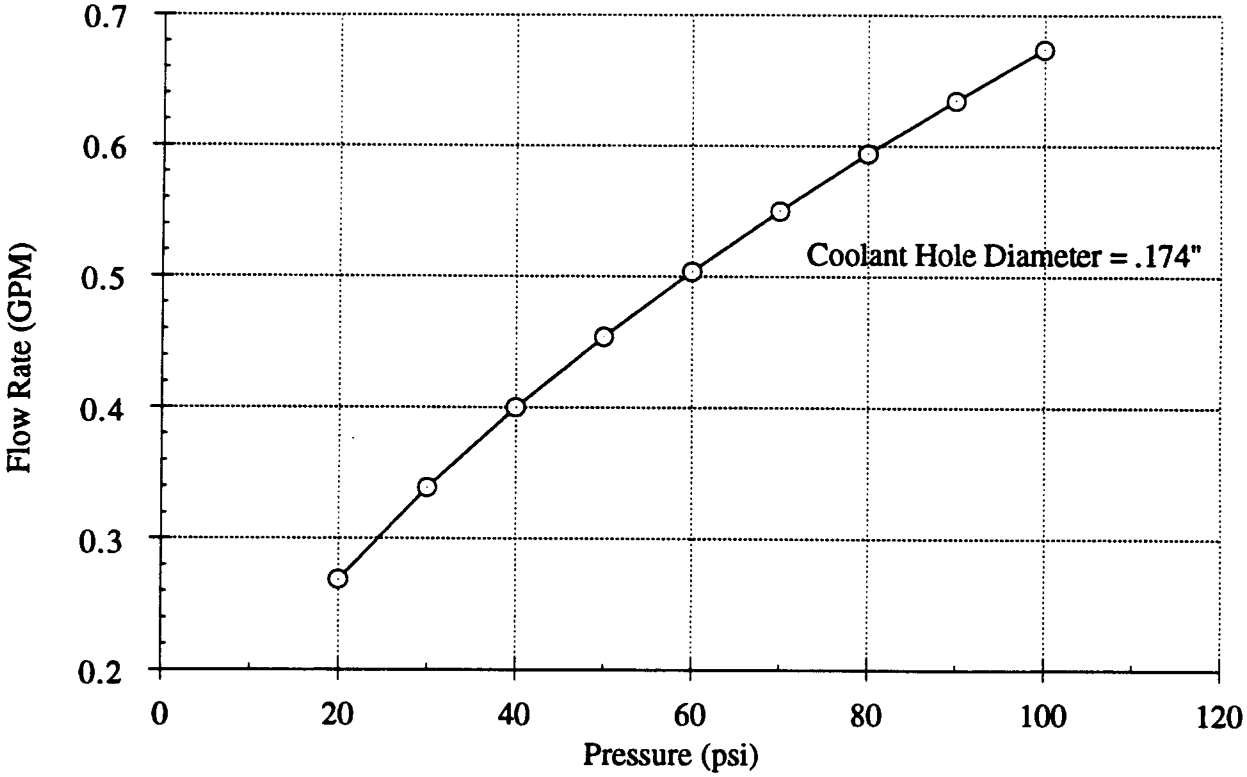

Fig. 25. Flow Rate Vs. Pressure

STRUCTURAL DESIGN

Stress and deflection analyses were performed on the rotating elements of the motor. This included: (1) manual calculations using traditional "textbook" methods to provide an adequate design starting point and (2) a finite element analysis during the detail design stage when the final geometry was more firmly established. The following summarizes the assumptions and results of the first analysis while appendix D presents the results of the second analysis which determined the final detail design.

While the motor has a nominal rating of 175 hp at ± 1200 rpm (87.5 hp per shaft), the overload rating of 600 hp was used (300 hp per shaft) for the analysis. As the method for loading the motor was unknown at the time of the analysis, a Browning "Poly-V" multi-rib V-belt drive was selected as a worst case (largest overhung load) method for transfer of power to the load device. Combining sheave weight and belt tension forces, an overhung load of 400 lb with an assumed moment arm of 24 inches was used for the analysis. Rotor weights were conservatively estimated based on the weight of solid copper resulting in inner and outer rotor weights of 526 lb and 739 lb, respectively. The analysis was conducted using the smallest diameter portion (2.953 inch O.D.) of the inner shaft as the structural member. All analyses were performed using 304 stainless steel shafting with a yield strength of 35,000 psi and a fully modified endurance limit of 18,100 psi.

The stress analysis was performed using three methods. The first method was for static loading conditions and resulted in a maximum shear stress of 3650 psi and a factor of safety of 4.8. The second method was for reversed bending and steady torsion and resulted in an alternating stress of 3790 psi and a factor of safety of 4.8. The third method was the Soderberg approach, which is very conservative and appears to be the basis for the Navy propulsion shafting design data sheet. The Soderberg approach resulted in a required minimum shaft diameter of 1.91 inches and a factor of safety of 3.6. Applying a stress concentration factor of 1.5 for the shaft step reduced the three factors of safety to 3.2, 3.2, and 2.4, respectively.

The deflection analysis predicted radial deflections of 0.0021 and 0.0026 inches for the inner rotor service end and drive end, respectively. Using the ratio of inner to outer rotor loads and moments of inertia, an outer rotor maximum deflection of less than 0.0006 inches is predicted. Thus, an inner rotor to outer rotor maximum net deflection of approx. 0.002 inches is anticipated. The predicted outer rotor to motor casing maximum net deflection is 0.0006 inches.

These initial stress and deflection analyses utilize conservative assumptions in regards to loading and structural stiffness. The outer shaft is much stronger than the inner shaft and the center portion of the inner and outer rotor are much stronger than the necked down shaft sections. Therefore, general stresses are not considered to be a problem. Similarly, while maximum net radial deflections of 0.002 inches were calculated, the actual deflection will probably be less than 0.001 inches.

BEARINGS AND GAS SEALS

Bearings

Due to the necessity of placing bearings between the inner and outer rotors and the desire to keep the machine as compact as possible, bearings of the smallest cross section that had an adequate load rating were selected. To prevent eddy currents through the bearings, the surface of the shafts are coated with a plasma deposited ceramic under the inner race of the bearings.

Drive end

The bearings selected for the drive end are deep grove ball bearings which are grease prelubricated and shielded, pieces 49 and 50. These bearings provide both axial and radial support and location for the rotors. The pairs of bearings will be shimmed to minimize play.

Service end

For the service end, double row, cylindrical roller bearings were chosen to provide radial support as well as to accommodate axial thermal growth, and are of JIS Class 4 precision, grease prelubricated and shielded, pieces 45 and 46.

Seal Assembly

Gas seal

Due to the reactive nature of NaK a dry, oxygen free cover gas must be maintained in the machine at a pressure several PSI above atmosphere. This necessitates the use of high performance gas seals on both shafts, pieces 43, 44, 47, and 48. Mechanical face seals provide both the required performance and low leakage rate. A carbon face running on a Al_2O_3 coating on the shoulder has worked well in similar applications in the past and will be utilized here. The AL_2O_3 coating provides an insulating break to prevent eddy currents through the seals. Most carbons depend on atmospheric moisture to form a lubricating film. Since these seals operate in a very dry environment a special grade of carbon (Pure Carbon P5N) is used to prevent rapid wear.

Exclusion seal

To prevent contamination of the face seals with bearing lubricant, exclusion seals, pieces 103, 104, and 105, are located between the face seals and the bearings. These seals are of a simple lip design. They utilize a self lubricating plastic sealing element, in a metal housing, running on hardened steel sleeves, pieces 71, 72, 77, and 79, on the shafts.

SERVICE MODULE

SLIP RINGS

A slip ring assembly, to supply current to the field coils, is attached to the service module. This is of conventional design consisting of copper slip rings and silver graphite brushes. The copper terminal rods of the inner rotor extend through the slip ring assembly so that connections to the slip rings can be made. The slip ring assembly is a commercial unit produced by Fabricast Inc., So. El Monte, CA 91733

COOLANT SEALS

The service module contains a combination of mechanical face seals and lip seals to provide coolant flow paths to and from the inner and outer rotor. The face seals provide both the required performance and low leakage rate. A carbon face running on a Al_2O_3 coating on the shoulder is utilized. The lip seals utilize a self lubricating plastic sealing element, in a metal housing, running on a hardened steel sleeve on the shaft. The lip seals are used in the less critical locations in the service module where some leakage can be tolerated.

ROTARY UNION

A rotary union is fitted on the end of the service module, outboard of the slip ring assembly, to supply coolant to the machine.

INSTRUMENTATION

Sensors

Thermocouples are fitted to measure the temperature of coolant, inner and outer rotor bars, inner and outer rotor bearings, and current collectors.

Telemetry

Provisions were made in the design to allow both inner and outer rotor to be fitted with telemetry systems in the future. They will consist of a multiplexing unit and a transmitter on each rotor which will transmit the thermocouple data to a fixed receiver.

COVER GAS SYSTEM

The space between the inner and outer rotor and between the outer rotor and housing is supplied with high purity nitrogen cover gas to prevent reaction of the sodium-potassium used in the current collectors with oxygen or water vapor. A pre–purified grade of nitrogen is generally supplied from K cylinders and is regulated to several psig. The cover gas is supplied to both ends of the motor to minimize flow through the motor which would increase the reaction with the liquid metal.

ASSEMBLY PROCEDURES

Assembly will begin with the inner rotor which will be fitted with the bar set and the field coils. Coolant connections will be made with flexible hose to the passages in the shaft. Coil electrical connections will be made with split clamps and rigid copper rods interconnecting with the terminal rods in the shaft. The outer rotor bar set is semi-permanently mounted internal to the outer rotor cylinder. Both inner and outer rotor current collector rings and disks will be bolted in place sequentially as the outer rotor assembly in built up around the inner rotor. The flux return rings will then be bolted in place. Bearings and seals will be installed in the outer rotor stub shafts which will then be bolted to the outer rotor assembly. Bearings and seals will be fitted in the outer rotor bearing carriers which will then be installed over the outer rotor shafts. These bearings and seals need not be disturbed to accomplish the level of disassembly required for cleaning or other minor maintenance. The assembly will be inserted in the housing and the various terminal collector components installed. The coolant connections for the outer rotor components will be made with flexible hose to the passages in the stub shafts. Installation of the two outer rotor bearing housings completes the basic machine assembly.

PREDICTED MACHINE PERFORMANCE

Output power calculations for a homopolar motor are rather straight forward. The open circuit terminal voltage is only a function of machine flux and rotor speed. The internally generated torque is a function of motor flux and load current. The actual terminal voltage and output torque, however, are affected by the motor's internal losses. These losses can be divided into three basic categories.

Resistive voltage drops in the internal conductors, joints, and current collectors add to the generated back EMF thereby increasing the terminal voltage of the motor. The increase in terminal voltage is linear with load current. The power loss due to the motor's internal resistance is proportional to the square of the load current. Both are primarily independent of motor speed and flux.

Frictional drag subtracts from the actual internally generated torque and reduces the output torque produced by the machine. Frictional drag from the rolling element bearings and seals is relatively constant and does not change with motor speed or load. Windage drag is a function of motor speed and geometry and is completely independent of load.

The losses in the liquid metal current collectors consist of resistive, frictional, fluid shear, eddy current, and magneto hydrodynamic type losses. These losses are a complicated function of collector speed, load current, geometry, magnetic field, and the fluid properties of the liquid metal.

Tables 3 and 4 detail the predicted performance of the motor at 35,000 and 100,000 amperes load current respectively.

Table 2. Predicted Motor Performance at 35,000 amperes

Output power (both shafts)	185 hp
Shaft speed	± 1,200 RPM
Torque (per shaft)	405 lb-ft
Effective magnetic flux	.104 Webers
Back EMF (at ± 1,200 RPM)	4.16 volts
Terminal voltage (at 35,000 amps)	4.28 volts
Input current	35,000 amps
Estimated efficiency	92%

Table 3. Predicted Motor Performance at 100,000 amperes

Output power (both shafts)	545 hp
Shaft speed	± 1,200 RPM
Torque (per shaft)	1,192 lb-ft
Effective magnetic flux	.104 Webers
Back EMF (at ± 1,200 RPM)	4.16 volts
Terminal voltage (at 100,000 amps)	4.50 volts
Input current	100,000 amps
Estimated efficiency	90%

CONCLUSIONS

From a basic point of view a contrarotating homopolar motor is simply one in which the stator is allowed to rotate and produce power. From the outset we realized that this would be a difficult design challenge. It turned out to be much more difficult than we anticipated. Providing the required magnetic flux, adequate cross-section for the current, sufficient coolant flow, and providing the structure required to transmit the torque did not turn out to be the most difficult part of the design. The real complexity turned out to be the multitude of details. All the rotating members must be supplied with coolant. This required a number of connections, passages, seals, and temperature sensors for both the inner and outer rotor. Both rotors must be fitted with bearings and seals. The sizes of suitable, available bearings had a significant impact on shaft sizes. A great deal of effort also went into the assembly / disassembly procedures since this machine does not have a split outer rotor or outer housing. Although simple in concept, the contrarotating homopolar design is not simple to execute. Although it took considerable time in the design phase, we were able to come up with a design that provided for the many unique requirements of this motor. At this time, motor construction is complete and assembly is underway. Based on our experience in construction and assembly of this motor the basic design appears viable and, with some changes, suitable for larger motors. In fact, a larger motor presents fewer difficulties because it removes the volume constraints of a small motor.

References

1. Levedahl, W. J., Shank, S. R., O'Reagan, W. P., "DD21A- A Capable, Affordable, Modular 21 st Century Destroyer, "CARDIVNSWC-TR-93/013 (Dec. 1993

2. Doyle, T. J., Levedahl, W. J., and Adams, L. G., "Superconductive Machinery for Naval Applications," NSRDC Report 7-645 (Jan. 1972)

3. "Advanced Submarine Electric Drive (ASED) Phase 1 Concept Study" Final Report, April 1990 by Westinghouse Electric Corporation Marine Division. Prepared for Defense Advanced Research Project Agency under Newport News Shipbuilding Purchase Order Number P2277T-0-Y2

4. Doyle, T. J. and Cannell, M. J., "Development of the Shaped Field Superconductive Motor," NSRDC Report # 4178 (Jan. 1974)

5. Cannell M. J. and McConnell R. A. "Flux-Load Current Interactions in Iron Conductors," CDNSWC PAS-92-27 (Jun. 1992)

6 Fernandez, A., Really, P., Whetstone R., Sondergaard, N. "Studies of Liquid Metal Contrarotating Current Collectors," CDNSWC-PAS-92-11 (Jun. 1992)

7. Fox, R., W., and McDonald, A., T., "Introduction to Fluid Mechanics," NY., (1985).

8. Incropera, F., P. and Dewitt, D., P., "Fundamentals of Heat and Mass Transfer," NY., (1985).

9. "Coolanol", (Dielectric Heat Transfer Fluids for Electronic Equipment), Monsanto, St. Louis, Mo., (1987).

10. Miller, D.S., "Internal Flow Systems," p-205-222, Cranfield, Bedford, UK, (1990).

11. Shigley, J., "Design for Fatigue Strength," in: Mechanical Engineering Design, Ch. 7, pp. 270-342, McGraw-Hill Co., New York (1983)

APPENDIX A

APPENDIX A
INNER ROTOR THERMAL DESIGN

The inner rotor bar set is the critical portion of the inner rotor from a thermal perspective. This section documents the thermal analysis performed on the inner rotor bars. The thermal analysis is presented in three sections that include design constraints, assumptions, and the results.

DESIGN CONSTRAINTS

The geometry of the inner rotor's bars was determined by magnetic, electrical, and space considerations. The length of the bar was driven mainly by magnetics. Height of the bar was driven by space in the machine. Width and number of bars were determined by electrical, cooling, and insulation characteristics. There are 32 bars on the inner rotor that each have a length of 5 inches, and liquid coolant is passed axially through the center of each iron bar.

ASSUMPTIONS

Based on the thermal analysis accomplished on the machine's field coils, the thermal analysis performed on the rotor will also use a round cooling hole, assume constant properties over the machine's temperature range, and use Coolanol™ 20 as the cooling fluid. Coolanol™ 20 displays good thermal characteristics, has low electrical conductivity, and does not react with liquid metal (NaK). Since this motor rotates at low speeds and has a small rotor radius, it was assumed that the centrifugal forces acting on the cooling fluid would have no significant effect on its performance.

RESULTS

The results consist of 5 sections of calculations consisting of evaluating geometry, heat generation of the bars, head loss and flow rates, convection coefficient, and film drop and fluid change in temperature. The overall objective was to determine the differences between the input and output temperatures of the fluid (ΔT_{fl}) and the differences between the average temperatures of the copper and fluid (ΔT_{fd} - film drop), verses the required flow rate and pressure drop.

LIST OF ABBREVIATIONS

A_{cool} = total cooling area - (in^2)

A_s = surface area of cooling hole ft^2

C_p = specific heat Btu/lbm -°F
d = dimension of the cooling hole (in)
f = friction factor across the coils inner surface (dimensionless number)
g_c = gravitational constant 32.2 lbm ft/lbf sec^2
h = convection coefficient Btu/hr-ft-°F
k = thermal conductivity Btu/hr.- ft -°F
L = length of the conductor ft
L_e = equivalent length ft
m = mass flow rate lbm/min
N = number of parallel paths
Nu = Nusset number (dimensionless number)
q = flow rate gpm
Q = heat generation Btu/min
P = wetted perimeter in
P_r = Prandtl number (dimensionless number)
r = resistivity of copper ohm-in
R_e= Reynolds number (dimensionless number)
s = height and width of conductor - in
α thermal diffusivity ft^2/hr
ΔP = pressure drop (psi)
ΔT_{fd} = film drop (($\Delta T_{fd} = T_s - T_m$)
ΔT_{fl} = temperature change of fluid °F ($\Delta T_{fl} = T_{output} - T_{input}$ of fluid)
T_s = surface temperature of the conducting metal
T_m = mean temperature of the fluid at a cross section in the flow
ρ = density lbm/ ft^3
μ = dynamic viscosity lbm/ft-sec

TABLE A–1. Fluid Properties of Coolanol™ 20 at 100°F

Properties	Units	Coolanol™ 20
density	lbm/ ft^3	55.2
dynamic viscosity	lbm/ft-sec	.0011886
specific heat	Btu/lbm -°F	.47
thermal conductivity	Btu/hr.- ft -°F	.067

ROUND HOLE GEOMETRY

Inner rotor - 32 bars

d = dimension of the cooling hole (in)

L = actual length of the bars in a parallel path - $5/12' * 32/N = 13.33/N$ (ft)

(bar length = 5 inches)

$32/N$ = number of bars / parallel path

$32/N - 1$ = number of U - bends / per parallel path

Equivalent length of head loss to that of a straight pipe for U - bends

L_e (180° U - bends) = $50d/12$

Equivalent length of head loss to that of a straight pipe - total

L_e (U - bends + bars) = $32/N(5/12) + 50d/12(32/N - 1)$

Cross sectional area of the cooling hole

A_{cool} = cooling cross sectional area - $\pi d^2/4(144)$ (1)

$= .00545d^2 \text{ ft}^2$ (1.1)

Surface area of the cooling hole (length times perimeter)

$A_s = \pi \, dL/12N = \pi d/12 \, (32\,(5/12))/N$

$= 3.49d/N \; (\text{ft}^2)$ (1.2)

HEAD LOSS AND FLOW RATES

Flow was assumed to be fully turbulent, smooth tubing, and incompressible fluid.

f = friction factor across the coils inner surface

(a) $R_e = \rho V d/\mu$

R_e= Ratio of the inertia and viscous forces (Reynolds number)

(b) $f = .32/Re^{.25} = .32\mu^{.25}/(V^{.25} d^{.25} \rho^{.25})$ for $Re < 10^5$ - Blasius correlation

ΔP = pressure drop

(c) $\Delta P = f\,(L_e/d)\,(\rho V^2/2g_c)$ (straight pipe assumption)

substituting (b) into (c)

$\Delta P = .16 L_e V^{1.75} \mu^{.25} \rho^{.75}/(d^{1.25} g_c)$ (psi) (2)

substituting for the fluid's properties into (2)

$\Delta P = .00287 L_e V^{1.75}/d^{1.25}$ (psi) (2.1)

therefore the velocity is

$V = (349 \Delta P \, d^{1.25}/L_e)^{.57143}$ (ft/s) (2.2)

where:

L_e = ft , V = ft/sec , d = in , ρ = lbm/ft^3 , ΔP = psi , μ = .0011886 ft^2 /sec ,

g_c = 32.2 lbm ft/lbf sec^2

(d) $m = \rho V A$ mass flow rate

$m = 1084d^2V$ lbm/hr (3)

flow rate = $q = VA$

Flow rate per parallel path on the inner rotor section

$q = 2.45d^2V$ (gpm/parallel path) (4)

Total flow rate over the inner rotor

Nq = total gpm

CONVECTION COEFFICIENT

Nusset number, and colburn equation

(a) $Nu = .0223\ Re^{.8}\ Pr^{.333}$ - colburn equation where assumptions ($.7<Pr<160$, $L/D > 10$)

(b) $P_r = \nu/\alpha$ (Prandtl number)

P_r = Ratio of momentum and thermal diffusivities

(c) $\alpha = K/\rho C_p$ (thermal diffusivity ($Re > 2300$)

(d) $h = NuK/d$ (convection coefficient)

substituting (a), (b), and (c) into (d)

$h = .0223\rho^{.8}V^{.8}C_p^{.333}K^{.667}/(\mu^{.467}d^{.2})$ (5)

substituting for the fluid's properties into (5)

$h = 42.57\ V^{.8}/d^{.2}$ (Btu/hr.- ft^2 -°F) (5.1)

where:

V = ft/sec , d = in , ρ = lbm/ft^3 , μ = .0011886 ft^2/sec , C_p = Btu/lbm -°F ,
K = Btu/hr.- ft -°F , h = Btu/hr.- ft^2 -°F

FILM DROP AND FLUID CHANGE IN TEMPERATURE

Film drop:

$Q = hA_s\Delta T_{fd}$ ($\Delta T_{fd} = T_s - T_m$) (mean difference between the mean temperature of the fluid and the iron bar)

(a) $\Delta T_{fd} = Q/A_sNh$

substituting (5.1) & (1.2) & Q = 17,802 Btu/hr into (a)

$\Delta T_{fd} = 119.8/V^{.8}d^{.8}$ (°F) (6)

where:

h = Btu/hr.- ft^2 -°F , d = in , Q = Btu/min , ΔT_{fd} = °F

Fluid change in temperature:

$Q = mC_p\Delta T_{fl}$ ($\Delta T_{fl} = T_{output} - T_{input}$ of fluid)

(b) $\Delta T_{fl} = Q/(mC_p)$

substituting (3) & $C_p = .47$ Btu/lbm -°F & Q = 17,802 Btu/hr into (b)

$$\Delta T_{fl} = 34.94/Nd^2V \quad (°F) \tag{7}$$

where:

V = ft/sec, C_p = Btu/lbm -°F , d = in , Q = Btu/min , ΔT_{fl} = °F

The above equations were analyzed for determining the cooling hole diameter, number of parallel cooling paths, and pressures needed to adequately cool the rotor bars. Unlike the field coil analysis (selecting optimum parameters), the objective here was to chose the minimum parameters required to adequately cool the bars. A minimum number of parallel paths is desirable in order to reduce the mechanical difficulty of rotating seals and balancing the system.

APPENDIX B

APPENDIX B
OUTER ROTOR THERMAL DESIGN

The only changes in the calculations from the inner rotor are noted below:

ROUND HOLE GEOMETRY

Outer rotor - 36 bars

d = dimension of the cooling hole (in)

L = actual length of the bars in a parallel path - 5/12' * 36/N = 15/N (ft)

36/N = number of bars / parallel path

36/N - 1 = number of U - bends / per parallel path

Equivalent length of head loss to that of a straight pipe - total

L_e (U - bends + bars) = 36/N(5/12) + 50d/12(36/N - 1)

Surface area of the cooling hole (length times perimeter)

$A_s = \pi$ dL/12N $= \pi$d/12 (36 (5/12))/N

= 3.93d/N (ft^2)

APPENDIX C

APPENDIX C
FIELD COIL THERMAL DESIGN

The objective of this section is to document the thermal analysis procedure used in designing the field coils. The procedure for the thermal analysis is broken up into four sections which include, design constraints, assumptions, design variables, and the results.

DESIGN CONSTRAINTS

The coil's geometry was dictated by magnetic, electrical, and space considerations. The only unknowns were the size and shape of the cooling hole needed to adequately remove the heat generated by the field current. A cross sectional view for a single turn of the coil is shown below:

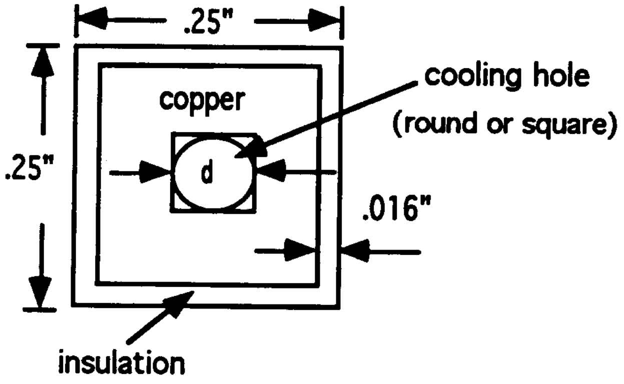

There are 34.5 turns per coil, giving a total length of 80 ft of tubing per coil. The coils have inner and outer diameters of 7.42" and 9.6" respectively and are 2.275" long.

The coil produces 7650 ampere turns, with a winding cross sectional area of 2.25 in^2, thus yielding a overall current density of 3400 amps per square inch.

Removing the heat generated by the current will be accomplished by liquid cooling. The fluids considered were Coolanol™ 20 and Coolanol™ 40 (silicate ester), because they exhibit low electrical conductance and relatively good thermal characteristics (dielectric heat transfer fluid).

ASSUMPTIONS

During the thermal analysis, two assumptions were made in order to simplify the assessment. The first assumption established the fluid's properties and copper resistivity for the cooling system. It was assumed that the properties (which are temperature dependent) would not change enough to affect the final calculations. All the properties were taken at 100 °F (estimated average temp of the fluid), and remain constant through the system. The second assumption relates to the pressure drop or head loss along the length of the coil. The head loss was assumed to be equivalent to a straight pipe analysis; that is, the coil's curvature was not taken into account.

DESIGN VARIABLES

In the thermal analysis of the field coils, there were two different variables that needed to be analyzed for the purpose of determining the best thermal performance. They were the geometry of the cooling hole (square or round) and the type of fluid (Coolanol™ 20 or 40). Each of the two fluids were analyzed, based on their thermal properties, to determine which fluid produced the better cooling characteristics. In the case of the geometry of the cooling hole, the square hole and the round hole were compared to each other to determine which one would produce the better flow rate for the same area.

RESULTS

The results consist of 6 sections of calculations that are comprised of evaluating the fluids' properties, geometry, heat generation of the coil, head loss and flow rates, convection coefficient, and film drop and fluid change in temperature. The overall objective was to determine the differences between the input and output temperatures of the fluid (ΔT_{fl}) and the differences between the average temperatures of the copper and fluid (ΔT_{fd} - film drop), verses the required flow rate and pressure drop. At the conclusion of the calculations, the above assumptions were compared to a more realistic approach to determine their validity.

LIST OF ABBREVIATIONS

A_{cool} = total cooling area - (in^2)
A_{cu} = conductor cross section - (in^2)
A_t = total cross sectional area - (in^2)
A_s = surface area of cooling hole ft^2
C_p = specific heat Btu/lbm -°F
d = dimension of the cooling hole (in)
D = average diameter of the coil (in)
$D_h = 4A_{cool}/P$=hydraulic diameter
f = friction factor across the coils inner surface (dimensionless number)
g_c = gravitational constant 32.2 lbm ft/lbf sec^2
h = convection coefficient Btu/hr-ft-°F
k = thermal conductivity Btu/hr.- ft -°F

J_c = current density over the copper amps/in^2
J_t = current density of the entire coil amps/in^2
L = length of the conductor ft
m = mass flow rate lbm/min
Nu = Nusset number (dimensionless number)
q = flow rate gpm
Q = heat generation Btu/min
P = wetted perimeter in
P_f = packing factor
P_r = Prandtl number (dimensionless number)
r = resistivity of copper ohm-in
R_e = Reynolds number (dimensionless number)
s = height and width of conductor - in
t = thickness of the insulation - in
v_c = volume of conductor in^3
v_t = total volume of coil in^3
α = thermal diffusivity ft^2/hr
ΔP = pressure drop (psi)
ΔT_{fd} = film drop (($\Delta T_{fd} = T_c - T_f$)
ΔT_{fl} = temperature change of fluid °F($\Delta T_{fl} = T_{output} - T_{input}$ of fluid)
ρ = density lbm/ ft^3
μ = dynamic viscosity lbm/ft-sec

TABLE C–1. Fluid Properties of Coolanol™ 20 and 40 at 100°F

Properties	Units	Coolanol™ 20	Coolanol™40
density	lbm/ ft^3	55.2	54.91
dynamic viscosity	lbm/ft-sec	.0011886	.00402
specific heat	Btu/lbm -°F	.47	.48
thermal conductivity	Btu/hr.- ft -°F	.067	.078

GEOMETRY

Round hole:

s = height and width of conductor - .25 (in)
d = dimension of the cooling hole (in)

t = thickness of the insulation - .016 (in)

A_t = total cross sectional area - s^2 (in^2) = .0625 (in^2)

A_{cu} = conductor cross section - $(s-2t)^2 - \pi d^2/4$ (in^2)

A_{cool} = total cooling area - $\pi d^2/4$

P_f = packing factor - $A_{cu}/A_t = [(s-2t)^2 - \pi d^2/4]/s^2 - .7604 - 12.56d^2$

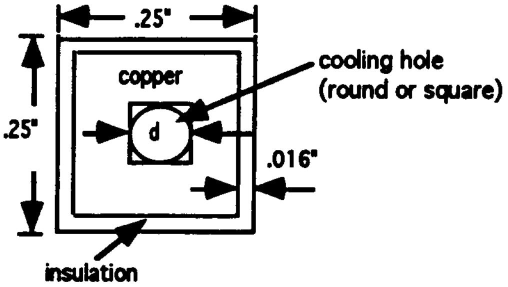

Square hole:

A_t = total cross sectional area - s^2 (in^2)

A_{cu} = conductor cross section - $(s-2t)^2 - d^2$ (in^2)

A_{cool} = total cooling area - d^2

P_f = packing factor - $A_{cu}/A_t = ([(s-2t)^2 - d^2]/s^2) - .7604 - 16d^2$

$D_h = 4A_{cool}/P$=hydraulic diameter used for correlating turbulent pipe flow for use with non circular geometry's. For a square $D_h = 4d^2/4d = d$ (P = wetted perimeter).

v_C= volume of conductor (in^3) $= A_{cu}L = A_t P_f L$

L = length of the conductor

HEAT GENERATION

(a) $Q = J^2{}_c\, r\ v_c$ (Watts) (heat generation across the conductor)

(b) $J_c = J_t/P_f$ current density over the conductor

J_t = current density of the entire coil

(c) $v_t = A_tL$ total volume of coil

(d) $v_c = v_tP_f$ volume of conductor

substituting (c) into (d):

(e) $v_c = A_tLP_f$

substituting (b) and (e) into (a):

$$Q = (J_t/P_f)^2\, r\ (A_tLP_f) = J_t^2 r\, A_tL/P_f$$

converting to English units:

(f) $Q = 6826\, J_t^2\, r\ \ s^4L/[(s-2t)^2 - \pi d^2/4]$ Btu/min (round hole)

r = 7.87e-7 ohm-in (resistivity of copper at 100 °F) substituting $J_t = 3400$ amps/in^2, $s = .25"$, $t = .016"$, and $L = 80'$ into (f)

$Q = 1.941/(.047524 - .785d^2)$ Btu/min (round hole) (1a)

$Q = 6826\ Jt^2\ r\ \ s^4L/[(s-2t)^2 - \ d^2]$ Btu/min (square hole)

$Q = 1.941/(.047524 - d^2)$ Btu/min (square hole) (1b)

where:

L = ft , s = in , t = in , Q = Btu/min , d = in , r = ohm-in , J = Amp/in^2

HEAD LOSS AND FLOW RATES

Flow was assumed to be fully turbulent, smooth tubing, and incompressible fluid.

f = friction factor across the coils inner surface

(a) $R_e = \rho Vd/\mu$

R_e= Ratio of the inertia and viscous forces (Reynolds number)

(b) $f = .32/Re^{.25} = .32\mu^{.25}/(V^{.25}\ d^{.25}\rho^{.25})$ (RH & SH) for $Re < 10^5$ - Blasius correlation

ΔP = pressure drop

(c) $\Delta P = f\ (L/d)\ (\rho V^2/2g_c)$ (Horizontal pipe assumption)

substituting (b) into (c)

$\Delta P = 1.9856\ V^{1.75}\mu^{.25}\rho^{.75}/(d^{1.25}g_c)$ (psi) (RH & SH) (2)

where:

L = ft , V = ft/sec , d = in , ρ = lbm/ft^3 , ΔP = psi , $\mu = .0011886$ ft^2 /sec ,
$g_c = 32.2$ lbm ft/lbf sec^2

(d) $m \doteq \rho VA$ mass flow rate

$m = .326\rho d^2V$ lbm/min (round hole) (3a)

$m = .415d^2V$ lbm/min (square hole) (3b)

flow rate = q = VA

$q = 2.45d^2V$ (round hole) (gpm) (4a)

$q = 3.12d^2V$ (square hole) (gpm) (4b)

Convection coefficient

Nusset number, and colburn equation

(a) $Nu = .0223\ Re^{.8}\ Pr^{.333}$ - colburn equation where assumptions ($.7<Pr<160$, $L/D > 10$)

(b) $P_r = \nu/\alpha$ (Prandtl number)

Pr = Ratio of momentum and thermal diffusivities

(c) $\alpha \doteq K/\rho C_p$ (thermal diffusivity ($Re > 2300$)

(d) $h = NuK/d$ (convection coefficient) substituting (a), (b), and (c) into (d)

$$h = .0223\rho^{.8}V^{.8}C_p^{.333}K^{.667}/(\mu^{.467}d^{.2}) \text{ (RH \& SH)} \qquad (5)$$

where:

V = ft/sec , d = in , ρ = lbm/ft^3 , μ = .0011886 ft^2 /sec , C_p = Btu/lbm -°F ,
K = Btu/hr.- ft -°F , h = Btu/hr.- ft^2 -°F

FILM DROP AND FLUID CHANGE IN TEMPERATURE

Film drop:

(a) $Q = hA_s\Delta T_{fd}$ ($\Delta T_{fd} = T_s - T_m$) (temperature difference between the fluid and the copper)

(b) $A_s = \pi dL$ (surface area of hole) (round hole)

substituting (b) into (a)

$$\Delta T_{fd} = 2.865Q/(hd) \text{ (round hole)} \qquad (6a)$$

(c) $A_s = 4dL$ (surface area of hole) (square hole)

substituting (c) into (a)

$$\Delta T_{fd} = 2.25Q/(hd) \text{ (square hole)} \qquad (6b)$$

where:

h = Btu/hr.- ft^2 -°F , d = in , Q = Btu/min , ΔT_{fd} = °F

Fluid change in temperature:

(a) $Q = mC_p\Delta T_{fl}$ ($\Delta T_{fl} = T_{output} - T_{input}$ of fluid)

$$\Delta T_{fl} = Q/(.326\rho d^2VC_p) \text{ (round hole)} \qquad (7a)$$

$$\Delta T_{fl} = Q/(.415\rho d^2VC_p) \text{ (square hole)} \qquad (7b)$$

where:

V = ft/sec, C_p = Btu/lbm -°F , d = in , Q = Btu/min , ΔT_{fl} = °F

SOLUTION FOR THE FINAL SELECTED GEOMETRY

Geometry of the cooling hole (round), type of fluid (Coolanol™ 20), and the optimum diameter (d = .174") have been established based on thermal performance and practical mechanical considerations. Also, it has been established that the fluid's change in temperature (ΔT_{fl}) is the dominating force in the thermal analysis, and the film drop has less of an impact. The above equations can be solved in terms of pressure and ΔT_{fl}, since the geometry, diameter, and fluid properties (100 °F) have been determined.

Geometric factors

A_{cu} = conductor cross section = $(s-2t)^2 - \pi d^2/4 = .02376$ (in^2)

$A_{cool} = \pi d^2/4 = .0238\ (in^2)$

P_f = packing factor - $A_{cu}/A_t = .7604 - 12.56d^2 = .3801$

Heat generation

from equation (1a)

$Q = 1.941/(.047524 - .785d^2)$ Btu/min (8)

substituting d = .174" into equation (1)

$Q = 81.7$ Btu/min

Head loss and flow rates

from equation (2)

$\Delta P = 1.9856\ V^{1.75}\mu^{.25}\rho^{.75}/(d^{1.25}g_c)$ (psi) (9)

substituting d = .174", $\rho = 55.2$ lbm/ ft^3, $\mu = .0011886$ lbm/ft-sec into (2)

$\Delta P = 2.09V^{1.75}$ (psi)

from equation (3a)

$m = .326\rho d^2V$ lbm/min (10)

substituting d = .174", $\rho = 55.2$ lbm/ ft^3 into (3)

$m = .545V$ lbm/min

from equation (4a)

$Q = 2.45d^2V$ (gpm)

substituting d = .174" into (4a)

$Q = .0742V$ (gpm) (11)

Fluid change in temperature:

from equation (7a)

$\Delta T_{fl} = Q/(.326\rho d^2VC_p)$ (°F)

substituting d = .174", $\rho = 55.2$ lbm/ ft^3, $C_p = .47$ Btu/lbm -°F into (7a)

$\Delta T_{fl} = 319.16/V$ (°F) (12)

The first of two assumptions that were applied in order to simplify the calculations, was that the fluid properties and copper resistivity (taken at 100 °F) would have a negligible affect on ΔT_{fl} as the temperature changes through the coil. Fig. C–1. summarizes the change in temperature of the fluid (ΔT_{fl}) varying over a range of average temperatures. Since the increased copper loses at higher temperatures (as a result of higher resistivity) are almost equally offset by lower coolant viscosity (and thus higher flow at a given pressure differential), ΔT_{fl} is relativity insensitive to fluid temperature. The assumption is valid. The second assumption involved the pressure drop across the coil. The pressure drop was calculated to be a straight pipe unaffected by the coil's curvature. Fig. C–2. displays how the change in temperature of the fluid is affected by the increased pressure drop due to the curvature of the coil. There is a 5 °F difference in the change in temperature of the fluid between the straight pipe assumption and the actual curved pipe conduction.

Pressure drop across a coil (including the curvature)

$\Delta P = [.32/Re^{.25} + .048(d/D)^{.5}]\,(L/d)\,(\rho V^2/2g_c)$ (for $R_e = 1.5\times10^4$) (13)

D = average diameter of the coil = 8.51"

substituting D = 8.51", d = .174", $\rho = 55.2$ lbm/ ft^3, $\mu = .0011886$ lbm/ft-sec, L = 80' into Eq. 5

$\Delta P = [.3614V^{1.75} + .226V^2]$ (14)

where:

L = ft , V= ft/sec , d = in , ρ = lbm/ft^3 , ΔP = psi , $\mu = .0011886$ ft^2 /sec , D = in

$g_c = 32.2$ lbm ft/lbf sec^2

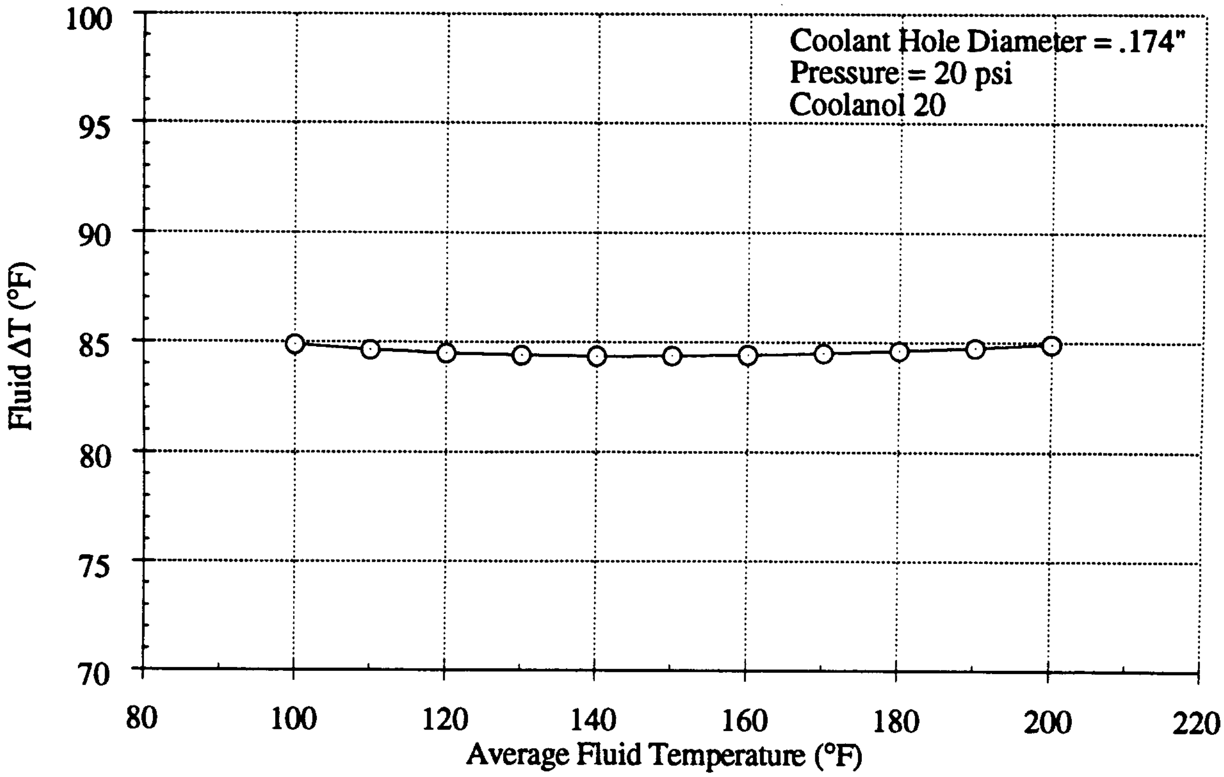

Fig. C–1. Fluid ΔT Vs. Average Fluid Temperature

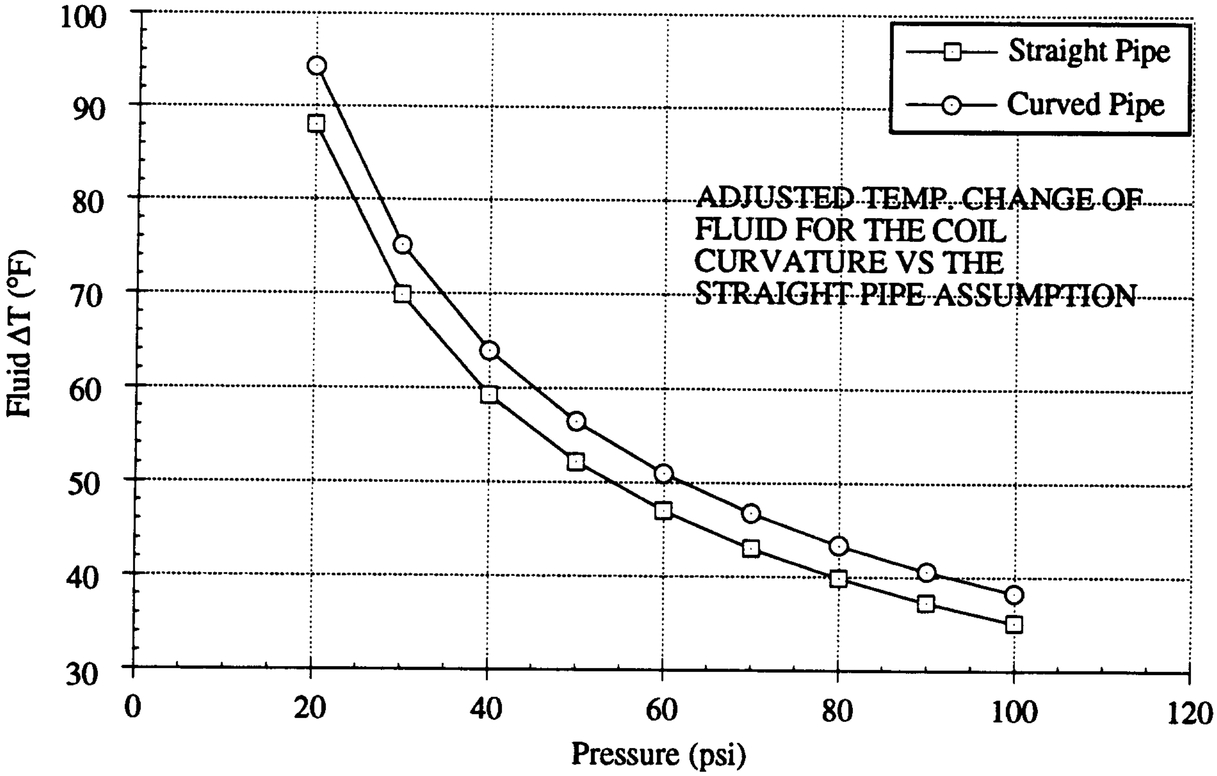

Fig. C–2. Effect of Tubing Curvature on Fluid ΔT

APPENDIX D

APPENDIX D
DETAILS OF STRUCTURAL ANALYSIS.

A section view of the motor is shown in Fig. D–1. The inner shaft is supported by two pairs of bearings 23.8 inches apart. These bearings transmit the weight of the inner shaft to the outer shaft. The outer shaft is also supported by two pairs of bearings just outboard of the inner shaft bearings. The outer shaft bearings support the total weight of both shafts in the housing. The housing is assumed to be held at the bolted flange connections of the service and drive end plates.

The inner shaft material is 1018 hot rolled steel. The outer shaft material is 304 stainless steel, with iron bars and copper coils adding weight but not structural stiffness. The housing is composed of 316 stainless steel, A36 steel and A53 steel pipe. Table D–1 contains the material properties for the components. The nomenclature of the variables referred to is also listed. The endurance strength for each material has been calculated.

TABLE D–1. Material Properties:

Material	S_y (psi)	S_t (psi)	μ	E (psi)	δ (lb/in^3)
1018 Steel, Rod	32,000	58,000	.3	29E6	.29
304 Stainless Steel, Pipe	30,000	75,000	.3	28E6	.29
316 Stainless Steel, Pipe	35,000	85,000	.3	28E6	.29
A53 Steel, Pipe	35,000	60,000	.3	29E6	.29
A36 Steel, Plate	36,000	58,000	.3	29E6	.29
Iron, Bar	for the iron and copper only the density was used in the model				.26
Copper, Plate					.32

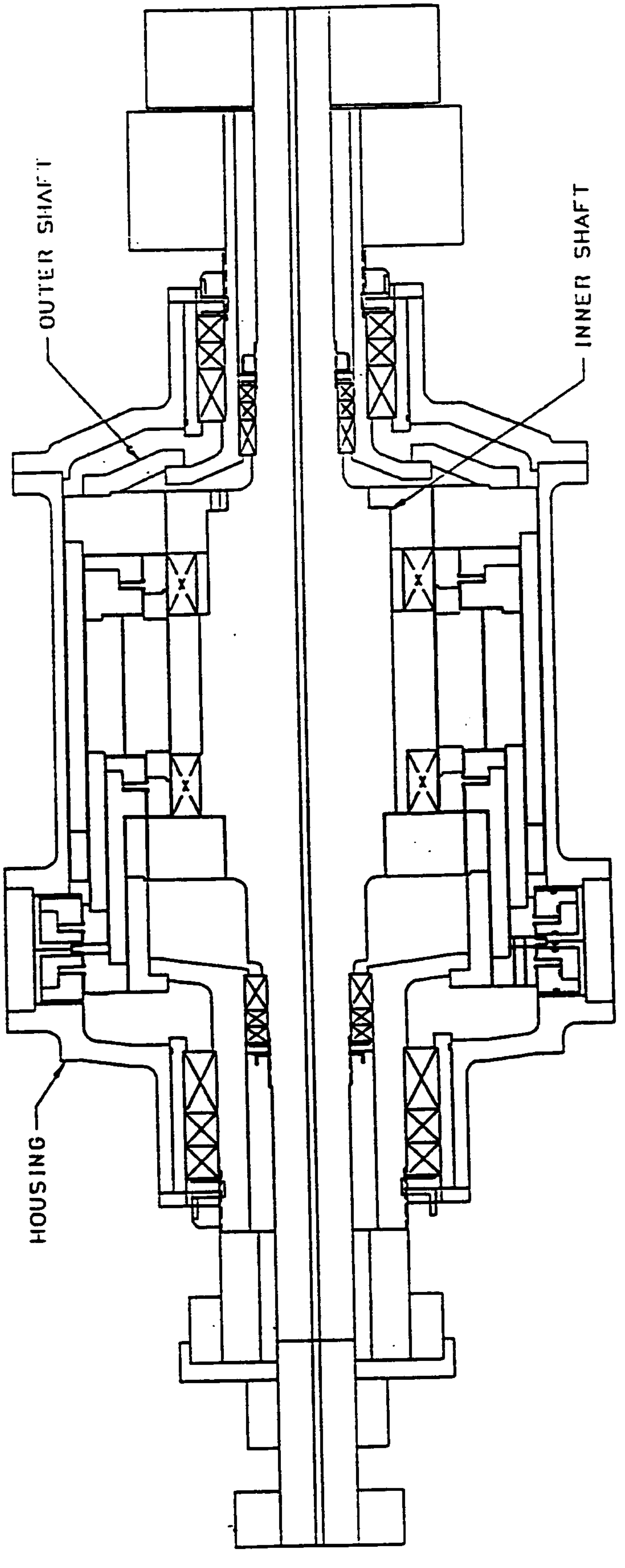
OUTER SHAFT
INNER SHAFT
HOUSING

Fig. D–1. Section View

NOMENCLATURE:

A_s = Shear Area, sq in.

A_t = Tensile Area, sq in.

D = Outer Diameter, in.

p = Inner Diameter, in.

F = Belt Tension, lb

F_{bn} = Axial Force of Bolt due to Moment, M_{bn}, lb

K = Endurance Modification Factors

K_b = Bending Stress Concentration Factor

K_c = Combined Stress Concentration Factor

K_L = Load Connection Factor

K_t = Torque Stress Concentration Factor

L = Distance from restraint to load, in.

M = Total Moment, in-lb

M_{bn} = Moment of Bolt, in-lb

M' = Corrected Moment, in-lb

N = Rotational Speed, rpm

P = Power, hp

p = axial force on bolt, lb

r = Radius, in.

S_a = Alternating Strength, psi

S_e = Fully Corrected Endurance Strength, psi

S_e' = Endurance Strength, psi

S_m = Mean Strength, psi

S_{se} = Shear Endurance Strength, Psi

S_{sy} = Shear Yield Strength, psi

S_t = Tensile Strength, psi

S_y = Yield Strength, psi

s = Shear force on bolt, lb

T = Torque, in-lb

wt = weight, lb

z_n = Height of Bolt to center, in.

z_n' = Corrected Height, in.

α = Angle, degrees

μ = Poission's Ratio

δ = Density, lb/cu in.

σ = Principle Stress, psi

σ' = Von Mises Stress, psi

σ_a = Alternating Stress, psi

Σ = Summation

σ_m = Mean Stress, psi

τ = Shear Stress, psi

ENDURANCE STRENGTH CALCULATIONS

Endurance Strength

S_e = K1*K2*K3*S_e' (REF. 11)

K1 = Surface Factor

K2 = Size Factor, .869 $d^{-.097}$ (select largest diameter)

K3 = Reliability Factor

Inner Shaft, 1018 Steel

K1 = Surface Factor, hot rolled, = .7

K2 = Size Factor, .869 $7.4^{-.097}$, = .72

K3 = Reliability Factor, .999, = .75

S_e' = $1/2S_t$ = 29,000 psi S_e = 10,962 psi

Outer Shaft, 304 Stainless Steel

K1 = Surface Factor, hot rolled, = .7

K2 = Size Factor, .869 $17^{-.097}$, = .66

K2 = Size Factor, .869 $5.1^{-.097}$, = .74 @ node 46

K3 = Reliability Factor, .999, = .75

S_e' = 1/2 S_t = 42,5000 psi S_e = 14,726 psi

S_e = 16,511 psi @ node 46

Housing, 316 Stainless Steel

K1 = Surface Factor, hot rolled, = .7

K2 = Size Factor, .869 $11^{-.097}$, = .69

K3 = Reliability Factor, .999, = .75

S_e' = 1/2 S_t = 42,5000 psi S_e = 15,396 psi

Housing, A53 Steel

K1 = Surface Factor, hot rolled, = .7

K2 = Size Factor, .869 $18^{-.097}$, = .66

K3 = Reliability Factor, .999 = .75

S_e' = 1/2 S_t = 30,000 psi S_e = 10,395 psi

Housing, A36 Steel

K1 = Surface Factor, hot rolled, = .7
K2 = Size Factor, .869 $21.6^{-.097}$, = .65
K3 = Reliability Factor, .999 = .75

S_e' = 1/2 S_t = 29,000 psi S_e = 9,896 psi

The two shafts and the housing were modeled using a PC based finite element package, MSC\PAL2. The finite element model comprised of circular beams represented the geometry of the three components were used. The flanged connections were modeled as rigid connections. The modeling of the inner shaft with circular beams is very accurate. However, the analogy is flawed when modeling the outer shaft and the housing for pieces such as the stub shaft or transition flange. Those pieces are disks, not cylinders. To properly model those shapes would require detailed modeling of them as 3-D brick elements.

The shafts were subject to two types of loads. The mean loads are due to the torque from the motor. The alternating loads are from the shaft bending under its weight or a side force. The stress results were separated into mean and alternating cases. Three load cases were used;

a) The steady torque from the 300 hp at 1200 rpm, 15,756 in-lb.
b) The weight of the components plus side forces (e.g. from belt force on outer shaft)
c) Load case a and b combined.

The bearings were modeled as very stiff springs connecting the components in translations but not in rotation. The torque, 15,756 in-lb due to 300 hp at 1200 rpm, was placed at the middle of the iron bars between the bearings on each shaft. The rotations for the housing and the shafts were fixed along their centerline, x-axis. All water boxes, bearings, carriers and pulleys were modeled as cylinders with estimated weights and dimensions. See Figs. D–2, D–3, and D–4 for individual finite element (FE) models showing the inner shaft, outer shaft and housing, respectively.

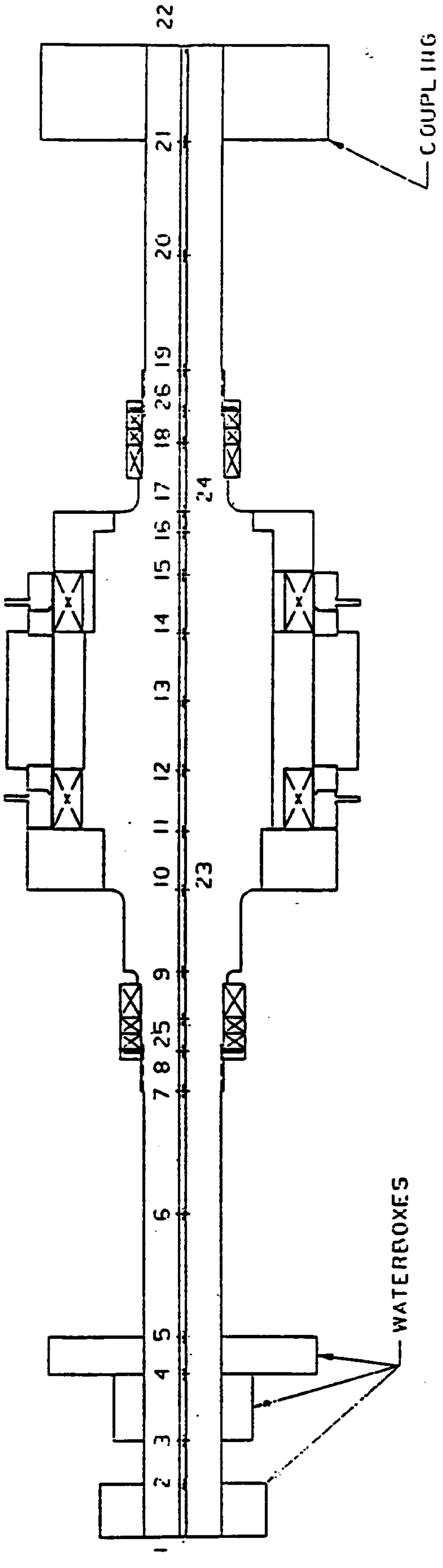
1
2
3
4
5
6
7
8
25
9
10
23
11
12
13
14
15
16
17
24
18
26
19
20
21
22
WATERBOXES
COUPLING

Fig. D–2. Inner Shaft

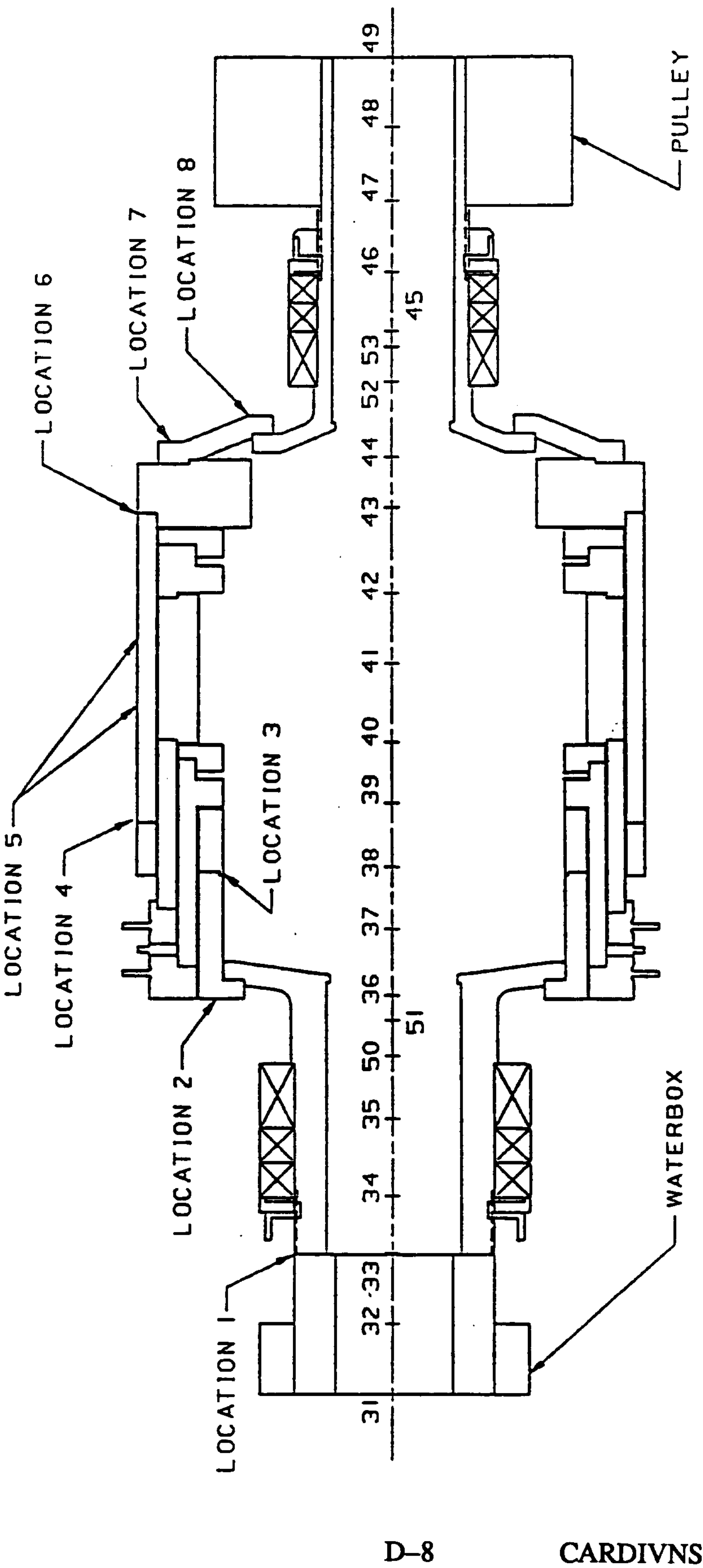
LOCATION 1
LOCATION 2
LOCATION 3
LOCATION 4
LOCATION 5
LOCATION 6
LOCATION 7
LOCATION 8
WATERBOX
PULLEY
31
32
33
34
35
50
51
36
37
38
39
40
41
42
43
44
52
53
45
46
47
48
49

Fig. D-3. Outer Shaft

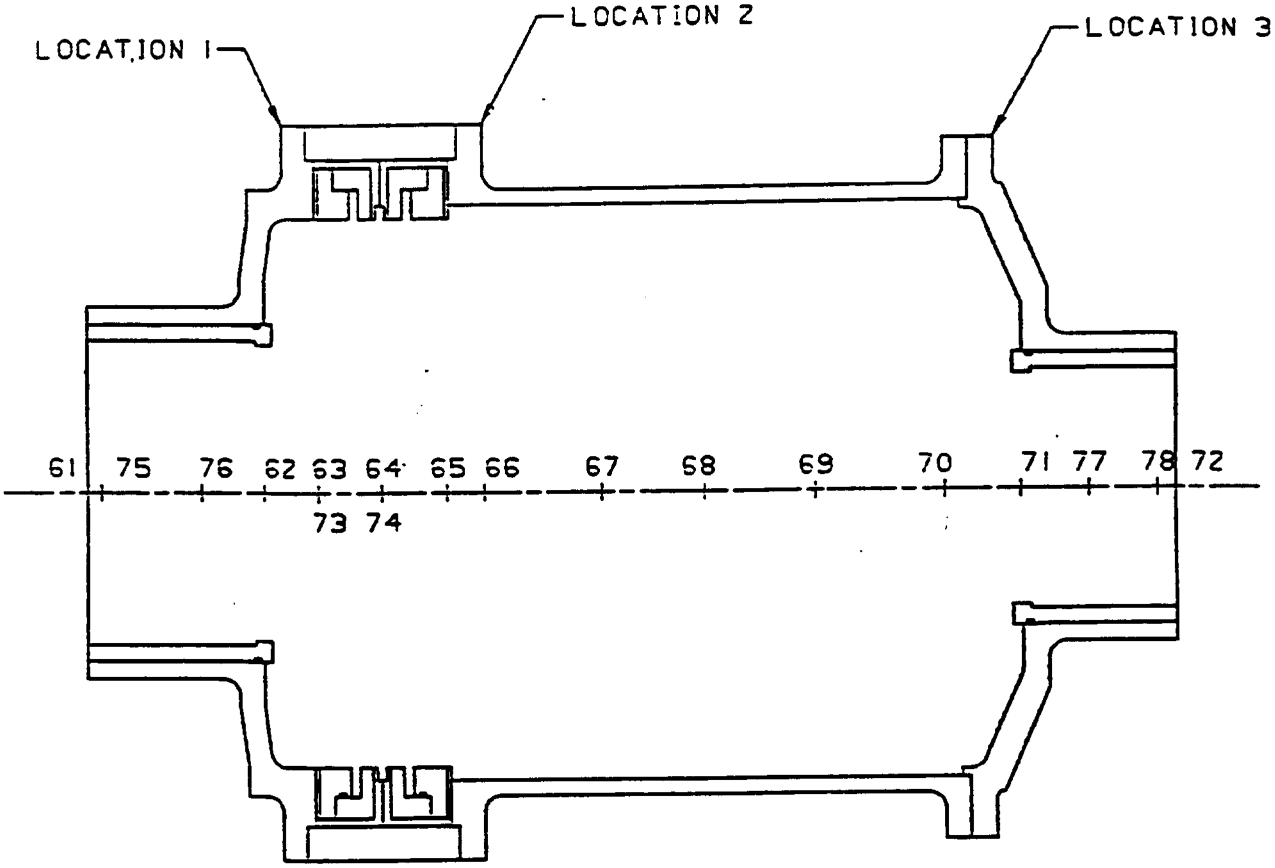
LOCATION 1
LOCATION 2
LOCATION 3
61
75
76
62
63
64
65
66
67
68
69
70
71
77
78
72
73
74

Fig. D–4. Housing

For the dynamic cases, the FE model was held from translations and was held from rotating in all directions as the drive end so as to have a stable model. A satisfactory result would have the lowest natural frequency well above the maximum operating speed.

The lowest natural frequency of the assembly was at 69 Hz or 4140 rpm, which is more than three times higher than the maximum operating speed. The shafts and housing supported as described should be acceptable.

At locations where changes in diameter occur, the stresses were multiplied by stress concentrations factors, torsion or bending, respectively for the first two cases. For the combined case, the larger of the two factors was used. To calculate the actual combined stress concentration factor, Kc, is very involved and assuming the larger of the two separate cases is to err conservatively. See tables D–2 through D–4 for the stress concentration factors applied to the three load cases.

TABLE D–2. Inner Shaft Stress Concentration Factors

NODE	D/d	r/d	Kt	Kb	Kc
8	1.07	.01*	1.8	2.58	2.58
9	1.10	.01*	1.8	2.7	2.7
10	1.35	.06	1.65	1.9	1.9
11	1.30	.01*	2.15	2.8	2.8
12	1.02	0*	1.8	2.3	2.3
14	1.11	0	1.9	2.7	2.7
16	1.29	.01	2.15	2.8	2.8
17	1.59	.08	1.55	1.7	1.7
18	1.10	.01*	1.8	2.7	2.7
26	1.07	.01*	1.8	2.58	2.58

TABLE D–3. Outer Shaft Stress Concentration Factors

NODE	D/d	r/d	Kt	Kb	Kc
50	1.04	.01	1.8	2.6	2.6
36	1.65	.14	1.3	1.5	1.5
44	1.77	.19*	1.25	1.4	1.4
52	1.05	.01*	1.8	2.6	2.6

TABLE D–4. Housing Stress Concentration Factors

NODE	D/d	r/d	Kt	Kb	Kc
62	1.6	.09	1.45	1.7	1.7
63	1.2	.06	1.55	1.9	1.9
66	1.1	.05	1.3	1.85	1.85
70	1.1	.05	1.3	1.85	1.85
71	1.5	.13	1.4	1.6	1.6

* - Radius is determined by bearing company specs.
assumed 1/32" radius

These values were calculated from diagrams from Ref. 11.

The results from the first two load cases generated mean Von Mises stresses and alternating Von Mises stresses, respectively. The alternating and mean stresses were multiplied by the appropriate stress concentration factors and then plotted on the stress axes of a Soderberg diagram. The fatigue safety factor was calculated by dividing the alternating strength by the alternating stress (of the mean strength by the mean stress). The alternating and mean strengths are derived from a line drawn from the origin through the plotted stress point and intersecting the Soderberg line. The results from the third load case generated maximum Von Mises stresses for the static load condition. These stresses, after being multiplied by Kc, were compared to the yield strength for the static factor of safety per reference 11.

It was assumed that direct drive coupling would be used to transmit power from the motors inner shaft to a dynamometer since calculations proved that the inner shaft could not support the side loads imposed by a belt type drive.

To transmit power from the motor to a dynamometer, the outer shaft was assumed to have a belt-pulley type connection. For this application a custom pulley will be required. A Browning type pulley (12" diameter, 104 lb) provided a weight estimate. A belt force of 3939 pounds was applied at the drive end of the shaft.

The stress and safety factors for the three components are displayed in Table D–5. The deflections are in Table D–6. The Soderberg graphs for the three components are shown in Figs. D–5, D–6, and D–7. Hand calculations verifying stress levels for the inner and outer shafts are also presented.

TABLE D–5. Stress And Safety Factors

COMPONENT	CASE	NODE	VON MISES STRESS	K	MOD. STRESS	SAFETY FACTOR
INNER SHAFT	a	18	5399	1.8	9718	-
	b	18	580	2.7	1566	2.4
	c	18	5430	2.7	14661	2.2
OUTER SHAFT	a	52	1796	1.8	3233	-
	b	52	2810	2.6	7306	1.9
	c	52	3131	2.6	8141	3.7
HOUSING	a	-	-	-	-	-
	b	70	182	1.9	337	46
	c	70	182	1.9	337	104

TABLE D–6. Deflections

COMPONENT	NODE	MAX. DEFL	NODE	DEFLECT. BETWEEN BEARINGS
INNER SHAFT	1	1.1E-3	17	1.6E-4
OUTER SHAFT	49	3.6E-3	44	6.4E-5
HOUSING	72	2.0E-4	68	8.2E-6

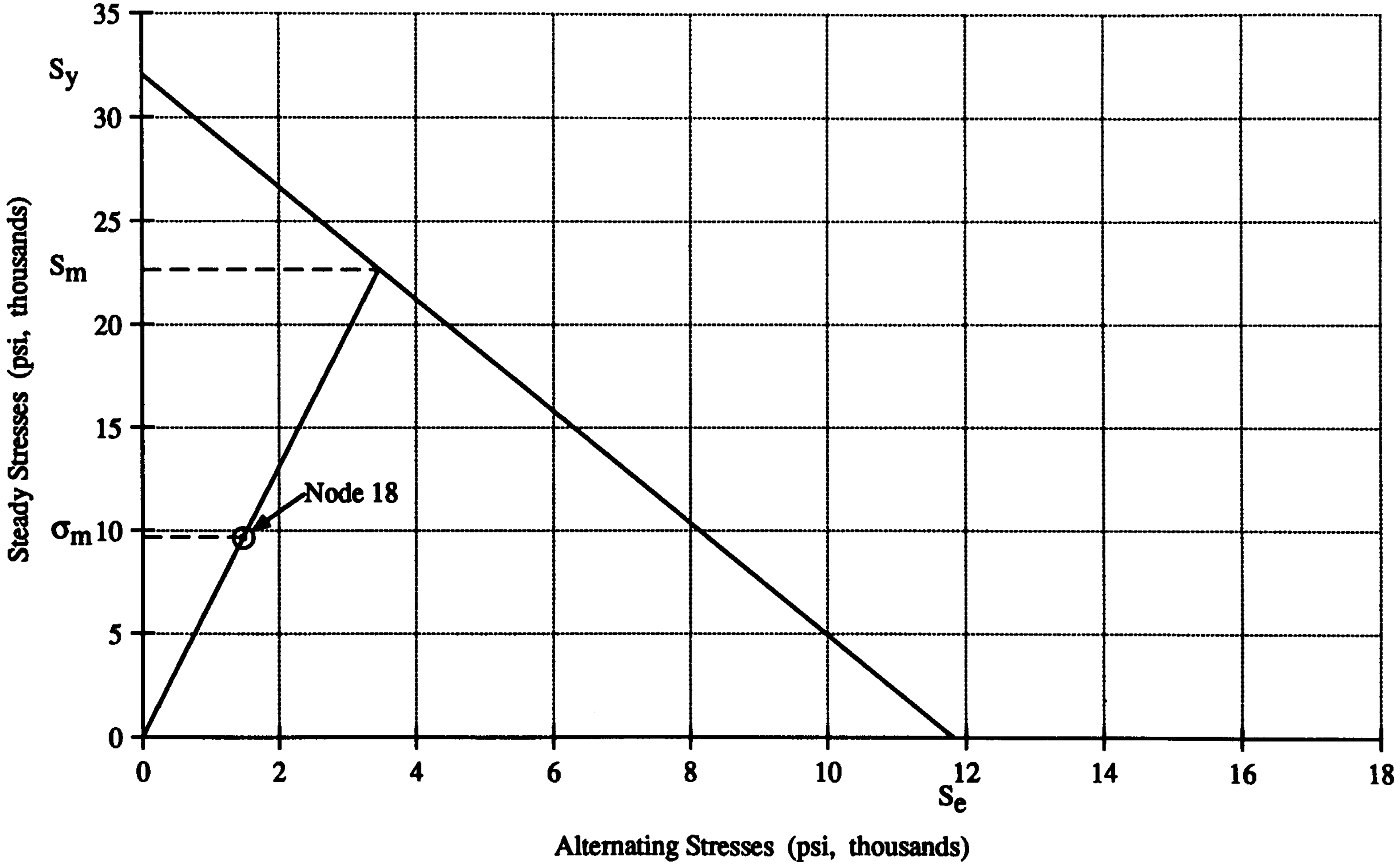

Fig. D–5. Inner Shaft Fatigue Stress

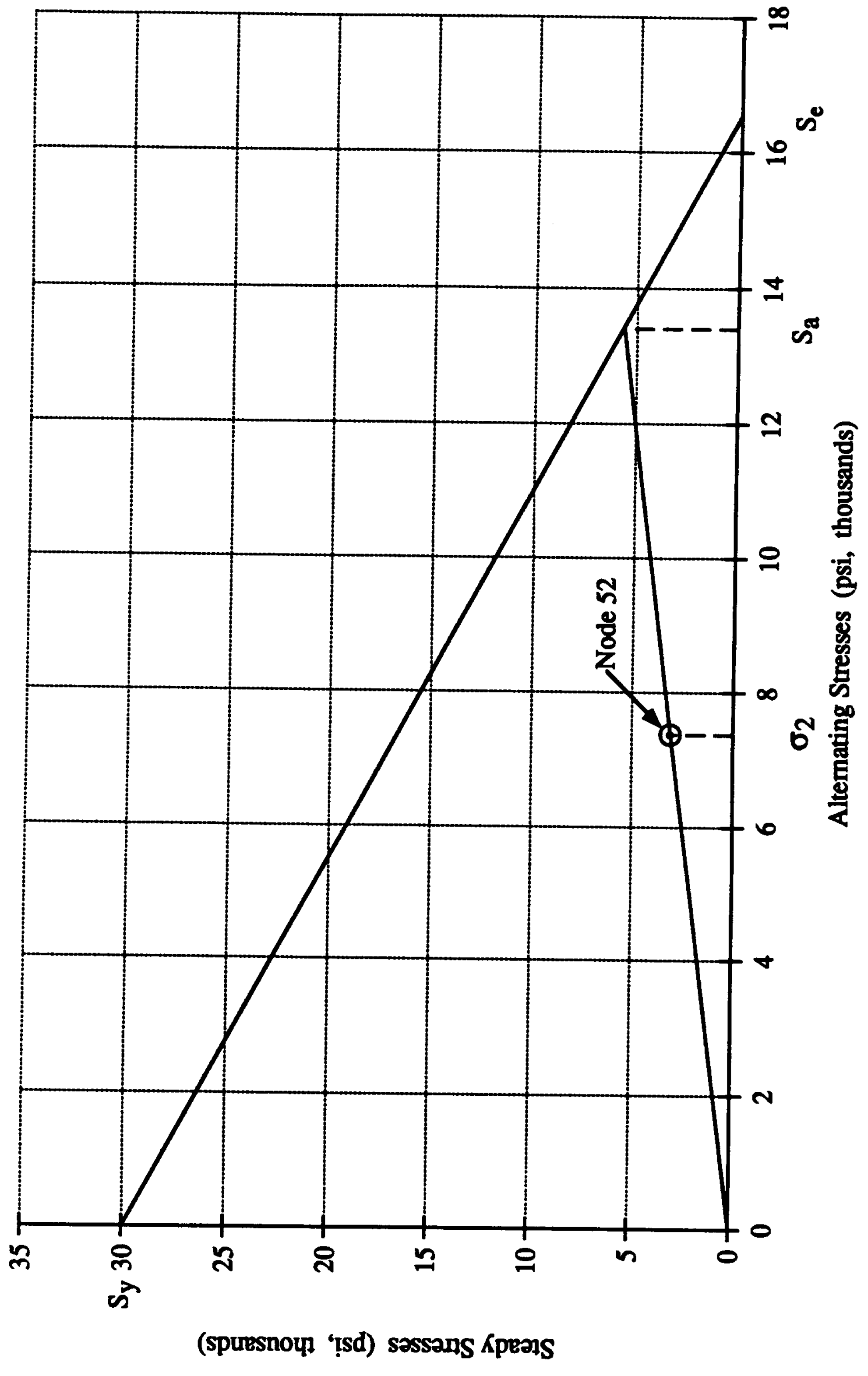

Fig. D–6. Outer Shaft Fatigue Stress

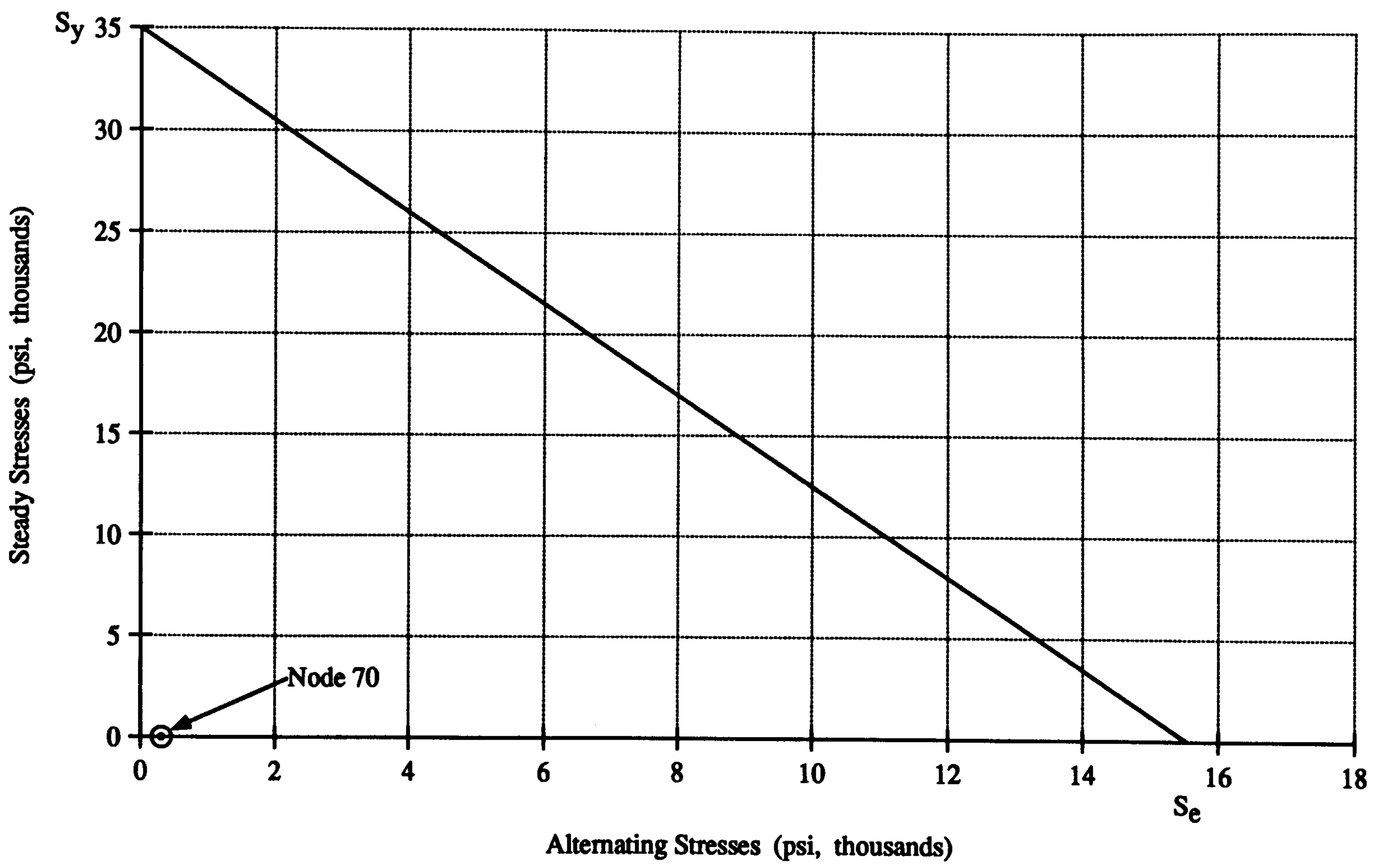

Fig. D–7. Housing Fatigue Stress

PRELIMINARY CALCULATION OF HOMOPOLAR MOTOR INNER SHAFT

Assumptions:

Power to be transmitted is 300 hp.
Shaft material is 1018, hot rolled steel.

A pulley was found from the Browning Catalog to transmit 300 hp on a 2 3/4" diameter shaft, a Poly V drive with 15" diameter. The weight of the pulley and half the belt is 113 lb.

Calculations:

$T = 63026\ P / N = 63025 * 300/1200 = 15{,}756$ in-lb

$F = 2\ T\ K_L = 1.5$ for pulley connection

$= 2 * 15756 * 1.5/15 = 113 = 3264$ lb

Reverse Bending

this calculation is based on belt tension acting at the right end of shaft, the longest unsupported span. The calculation is simplified by assuming a constant diameter of 2 3/4" from right bearing to end of shaft.

$M = F\ L = 3264 * 12 = 39{,}168$ in-lb

$$s_a = \frac{32\ M\ D^4}{\pi (D^4 - d^4)} = \underline{19{,}190\ \text{psi}}$$ (REF 11)

$Se = 10{,}962$ psi

$s_a > Se$ therefore shaft is too small
for overhung load

STRESS CALCULATION VERIFICATION

Assumptions:

Power to be transmitted is 300 hp.
The weight of half the coupling is 15 lb.

The weight of the pulley and half the belt is 102 lb.
Shaft is cantilever beam, double bearings act as fixed end condition, with uniform load due to weight and a concentrated load due to weight of pulley or coupling.

INNER SHAFT

Calculations:

$I = \pi\ (D^4 - d^4) / 64 = \pi\ (2.953^4 - .375^4) / 64 = 3.7\ in^4$

$J = \pi\ (D^4 - d^4) / 32 = \pi\ (2.953^4 - .375^4) / 32 = 7.5\ in^4$

$w = d\ \pi\ (D^2 - d^2) / 4 = .28\ \pi\ (2.953^2 - .375^2) / 4 = 1.9$ lb/in

Steady Stress

$t_m = T\ r\ /\ J = 15756(1.48) / 7.5 = \underline{3120\ psi}$

$\underline{3117\ psi}$ from MSC/PAL2

Alternating Stress

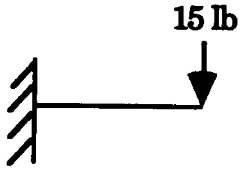

$M = F\,l$
$= 15\,(13.4)$
$= 201$ in-lb

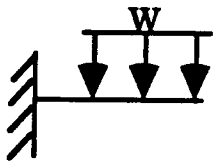

$M = w\,l^2 / 2$
$= 1.9\,(13.4^2) / 2$
$= 171$ in-lb

$s = M\,c\ /\ I = (201+171)1.48 / 3.7 = 147$ psi

Maximum Von Mises Stress

$s' = (s^2 + 3t_m^2)^2 = (147^2 + 3(3120^2))^2$

$s' = \underline{5406\ psi}$

$\underline{5400\ psi}$ from MSC/PAL2

OUTER SHAFT

Calculations:

$I = \pi\ (D^4 - d^4)/64 = \pi\ (5.12^4 - 4.13^4)/64 = 19.5\ in^4$

$J = \pi\ (D^4 - d^4)/32 = \pi\ (5.12^4 - 4.13^4)/32 = 38.9\ in^4$

$w = d\ \pi\ (D^2 - d^2)/4 = .28\ \pi\ (5.12^2 - 4.13^2)/4 = 2.0\ lb/in$

Steady Stress

$t_m = T\ r\ /\ J = 15756(2.56)/38.9 =$ 1037 psi

1037 psi from MSC/PAL2

Alternating Stress

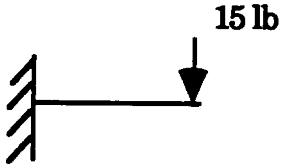

$M = F\,l$
$= 102\ (4.9)$
$= 499.8$ in-lb

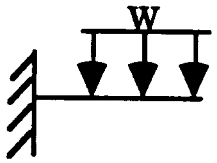

$M = w\,^{2}l\ /\ 2$

$= 2\,(7.4^2)/2$

$= 54.8$ in-lb

$s = M\,c\ /\ I = (500+55)2.56/\ 19.5 = 72.8$ psi

Maximum Von Mises Stress

$s' = (s^2 + 3t_m^2)^2 = (73^2 + 3(1037^2))^2$

s' = 1798 psi

1796 psi from MSC/PAL2

BOLT LOADING, STRESSES AND SAFETY FACTORS

The bolt loads for the major connections of the outer shaft and the housing were calculated for shear and axial stresses. All the bolts are assumed to be preloaded so that none will be subject to cyclic loading. A high preload improves the fatigue resistance of a bolted connection. The bolt connection locations are shown in Figs D–3 and D–4. Note, this model was developed to determine the stress and deflections of large components, which was accomplished by using coarse circular beam elements. It was not intended to be used to solve areas of local stress on a small scale. These results for the bolts are only useful as a rough guide for sizing and numbers required. See tables D–7 through D–12 for the results of the calculations of the bolt loading, stresses and safety factors.

Shear Stress

$$t = \frac{(s + T/d)}{As}$$

Axial Stress

$$s = \frac{(p + Fb)}{At}$$

$Ssy = .577 * Sy$ (REF. 11)

$tmax = ((s/2)^2 + t^2)^{1/2}$

$smax = tmax + s/2$

Assume all bolts are preloaded so that there will be no cyclic loading on any bolts.

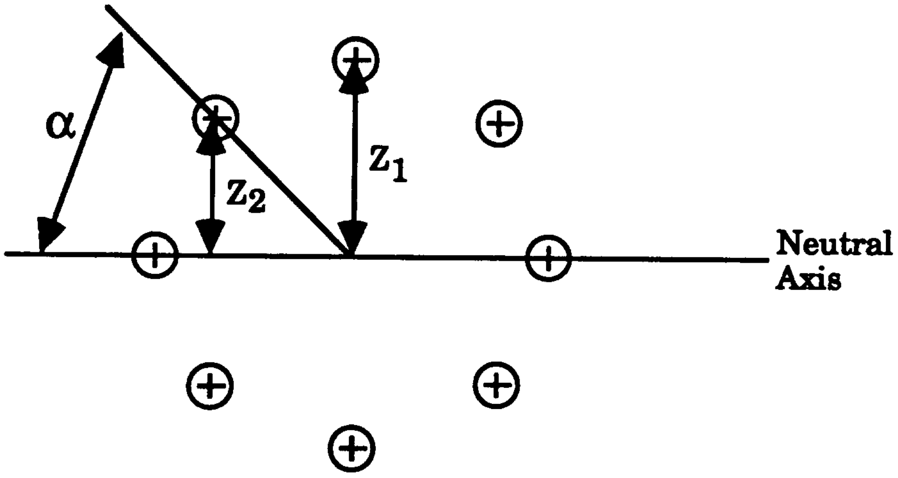

Calculation of Axial Bolt Load from a Moment

The force on each bolt is proportional to the distance from the neutral axis. It is assumed that the ration of force on each bolt was a quadratic of the distance.

For an 8 bolt connection:

$z_1 = r \quad z_2 = r \sin a \qquad \sum z = 2 * z_1' + 4 * z_2$

$z_n' = z_n^2 / z_1^2 \qquad z_1' = 1 \qquad z_2' = .5$, for any radius

Therefore $\sum z = 2*1 + 4*.5 = 4$

$M' = M / \sum z \qquad M_{bn} = M' * z_n' \qquad Fb_n = M_{bn} / z_n$

In table D–7 axial bolt load was only calculated for the bolt farthest away from the center, Fb_1, the worst case; $Fb_1 = M_{bl} / z_1$

For any insulated bolts, it is assumed that only the shank is turned down and insulated and that the shank diameter is not less than the minor diameter.

BOLT LOADING, STRESSES AND SAFETY FACTORS OUTER SHAFT

Group 1

Assume 1/4-20 UNC bolts, 8 per connection

Sy = 55,000 psi	Ssy = 31,735 psi Grade 2 Steel
A_s = .027 sq in	A_t = .032 sq in

TABLE D–7. Total Forces At Connection

Bolt	Axial	Shear	Torsion	Moment
	p	s	T	M
Location	LB	LB	IN-LB	IN-LB
1	0	65	0	177
2	0	904	0	2170
3	0	962	0	6181
4	0	1140	0	8491
5	0	0	15760	0

TABLE D–8. Stresses Per Bolt

	AXIAL Fb	t PSI	s PSI	tmax PSI	smax PSI	FS t	FS s
1	22	301	691	458	804	69	68
2	103	4185	3229	4486	6100	7	9
3	252	4454	3229	5948	9890	5	6
4	260	5278	8139	6665	10734	5	5
5	0	9728	0	9728	9728	3	6

Group 2

Sy = 170,000 psi   Ssy = 98,090 psi Unbrako Series 1960

TABLE D–9. Total Forces At Connection

BOLT LOCATION	AXIAL p LB	SHEAR s LB	TORSION T IN-LB	MOMENT M IN-LB
6	0	1356	15760	21100
7	0	1451	15760	23580
8	0	1494	15760	23590

TABLE D–10. Stresses Per Bolt

BOLT	AXIAL Fb	t PSI	s PSI	tmax PSI	smax PSI	FS t	FS s
6	649	15258	20288	18322	28467	5	6
7	813	16781	25409	21048	33753	5	6
8	1311	23131	40955	30893	51370	3	3

BOLT LOADING, STRESSES AND SAFETY FACTORS HOUSING

Assume 1/4-20 UNC bolts, 8 per connection

$S_y = 55{,}000$ psi $S_{sy} = 31{,}735$ psi Grad 2 Steel

$A_s = .027$ sq in A_t - .032 sq in

TABLE D–11. Total Forces At Connection

BOLT LOCATION	AXIAL p LB	SHEAR s LB	TORSION T IN-LB	MOMENT M IN-LB
1	0	392	0	399
2	0	1132	0	4938
3	0	1232	0	21290

TABLE D–12. Stresses Per Bolt

	AXIAL Fb	t PSI	s PSI	tmax PSI	smax PSI	FS t	FS s
1	10	1815	300	18322	1971	17	28
2	119	5241	3718	21048	7420	6	7
3	374	5704	11672	30893	13996	4	4

APPENDIX E

DRAWING LIST

A27-19992-1	PARTS LIST
A27-19992-2	MOTOR ASSEMBLY
A27-19992-3	MOTOR ASSEMBLY, SECTION
A27-19992-4	MOTOR ASSEMBLY, SECTION
A27-19992-5	MOTOR ASSEMBLY, SECTION
A27-19992-6	MOTOR ASSEMBLY, SECTION
A27-19992-7	INNER ROTOR ASSEMBLY, SECTION
A27-19992-8	OUTER ROTOR ASSEMBLY, SECTION
A27-19992-9	OUTER ROTOR SUBASSEMBLY
A27-19992-10	INNER ROTOR SUBASSEMBLY
A27-19992-11	INNER ROTOR SHAFT DETAILS
A27-19992-12	INNER ROTOR SHAFT DETAILS
A27-19992-13	FIELD COIL ASSEMBLY
A27-19992-14	INNER ROTOR CYLINDER DETAILS
A27-19992-15	DRIVE END INNER ROTOR RETURN RING DETAILS
A27-19992-16	SERVICE END INNER ROTOR RETURN RING DETAILS
A27-19992-17	INNER ROTOR BAR DETAILS
A27-19992-18	SERVICE END INNER ROTOR COLLECTOR DISK DETAILS
A27-19992-19	SERVICE END INNER ROTOR TRANSITION RING DETAILS
A27-19992-20	DRIVE END INNER ROTOR TRANSITION RING DETAILS
A27-19992-21	DRIVE END ROTOR COLLECTOR DISK DETAILS
A27-19992-22	SERVICE END OUTER ROTOR CURRENT COLLECTOR RING DETAILS
A27-19992-23	SERVICE END OUTER ROTOR CURRENT COLLECTOR DETAILS
A27-19992-24	SERVICE END TERMINAL COLLECTOR DISK DETAILS
A27-19992-25	OUTER ROTOR BAR DETAILS
A27-19992-26	OUTER ROTOR OUTER DRUM DETAILS
A27-19992-27	DRIVE END TERMINAL COLLECTOR DISK DETAILS
A27-19992-28	DRIVE END OUTER ROTOR CURRENT COLLECTOR DETAILS
A27-19992-29	DRIVE END OUTER ROTOR CURRENT COLLECTOR RING DETAILS
A27-19992-30	SERVICE END OUTER ROTOR RETURN RING DETAILS
A27-19992-31	OUTER ROTOR CYLINDER DETAILS
A27-19992-32	DRIVE END OUTER ROTOR RETURN RING, AND TRANSITION FLANGE DETAILS
A27-19992-33	SERVICE END OUTER ROTOR RETURN RING PAD DETAILS
A27-19992-34	TERMINAL COLLECTOR RING DETAILS
A27-19992-35	SERVICE END, AND DRIVE END TERMINAL COLLECTOR DETAILS
A27-19992-36	ELECTRICAL INSULATOR DETAILS
A27-19992-37	SERVICE END STUB SHAFT DETAILS
A27-19992-38	TRANSITION CYLINDER DETAILS
A27-19992-39	DRIVE END STUB SHAFT DEAILS
A27-19992-40	MOTOR HOUSING DETAILS
A27-19992-41	TERMINAL HOUSING DETAILS
A27-19992-42	SERVICE END END PLATE HOUSING DETAILS
A27-19992-43	DRIVE END END PLATE HOUSING DETAILS
A27-19992-44	INSULATED BOLTS DETAILS
A27-19992-45	180° TUBE BEND DETAILS
A27-19992-46	CONDUCTOR DETAILS
A27-19992-47	BEARING RETAINER DETAILS
A27-19992-48	INNER ROTOR BAR FORGING
A27-19992-49	INNER ROTOR COLLECTOR DISKS FORGINGS
A27-19992-50	SERVICE END OUTER ROTOR CURRENT COLLECTORS FORGINGS
A27-19992-51	TERMINAL COLLECTOR DISKS FORGING
A27-19992-52	OUTER ROTOR BAR FORGING
A27-19992-53	OUTER ROTOR OUTER DRUM FORGING
A27-19992-54	DRIVE END OUTER ROTOR CURRENT COLLECTORS FORGING
A27-19992-55	TERMINAL COLLECTORS FORGING
A27-19992-56	ROTOR, AND TERMINAL CURRENT COLLECTOR DETAILS
A27-19992-57	SERVICE MODULE ASSEMBLY
A27-19992-58	SERVICE MODULE INNER ROTOR MATING RINGS HOUSING DETAILS
A27-19992-59	SERVICE MODULE SEAL RINGS HOUSING DETAILS
A27-19992-60	SERVICE MODULE OUTER ROTOR MATING RINGS HOUSING DETAILS
A27-19992-61	SERVICE MODULE STUB SHAFT DETAILS
A27-19992-62	MOTOR HOUSING FORGING
A27-19992-63	OUTER ROTOR CYLINDER FORGING
A27-19992-64	MOTOR HOUSING ASSEMBLY

NOTES:

1. DETAILS OF INLET/OUTLET TUBES, PC NO 88 AND 89, TO BE SPECIFIED BY CODE 2711.
2. USE ACRYLIC ADHESIVE TO BOND INSULATORS TO METAL RINGS. LOCTITE OUTPUT 383 HIGH STRENGTH THERMALLY CONDUCTIVE ADHESIVE, OR EQUAL, IS RECOMMENDED.
3. USE THREAD LOCKING ADHESIVE ON THREADS OF FASTENERS. LOCTITE THREADLOCKER 242 REMOVABLE MEDIUM STRENGTH ADHESIVE, OR EQUAL, IS RECOMMENDED.
4. LEGS OF MOLDED RUBBER HOSE ELBOWS TO BE TRIMMED TO SUIT INSTALLATION.
5. TUBE FITTING TO BE USED AS A PART OF NAK INJECTION ARRANGEMENT. MODIFICATIONS TO ID OF FITTING TO BE SPECIFIED BY CODE 2711.
6. ONE TUBE FITTING TO BE USED AS A PART OF NAK INJECTION ARRANGEMENT. MODIFICATIONS TO ID OF FITTING TO BE SPECIFIED BY CODE 2711. THREAD LENGTH TO BE SHORTENED TO .30 LONG. REMAINDER OF TUBE FITTINGS TO BE USED FOR MOUNTING THERMOCOUPLES. ID OF TUBE FITTINGS TO BE MODIFIED. ID MUST BE .255+.005/-.000.
7. NYLON FRONT AND BACK FERRULES TO BE USED TO MOUNT THERMOCOUPLES IN TUBE FITTINGS MODIFIED WITH .255 ID.
8. ID OF TUBE FITTING TO BE MODIFIED TO PROVIDE MOUNTING FOR INSULATED LOCK PIN. DETAILS OF TUBE FITTING MODIFICATION, AND DETAILS OF INSULATED LOCK PIN TO BE SPECIFIED BY CODE 2711.
9. THREAD LENGTH OF ADAPTER FITTING TO BE SHORTENED TO .39 LONG.
10. DETAILS OF BARBED HOSE FITTING TO BE SPECIFIED BY CODE 2711.
11. TUBE FITTING TO BE USED FOR NAK INJECTION. DETAILS OF TUBE FITTING TO BE SPECIFIED BY CODE 2711.
12. REF MEMORANDUM TITLED "CONTRA-ROTATING HOMOPOLAR MOTOR SHAFT THERMOCOUPLE LOCATION" BY THOMAS HANE CODE 1413, FOR INFORMATION REGARDING THERMOCOUPLE SELECTION, AND INSTALLATION.

SHOPWORK REQUEST NO.	PRINT RECORD

STRESS ENG'R CODE	STRESS ENG'R NAME	STRESS ENG'R DATE	REVIEWED BY CODE	REVIEWED BY NAME	REVIEWED BY DATE	PROJECT NUMBER
			2711			1-2700-206-12
			2711			

LIST OF MATERIAL

PC. NO.	NAME OF PIECE	NO. REQD.	MATERIAL OR SOURCE
1	INNER ROTOR SHAFT	1	REF DTRC DWG A27-19992-11, -12
2	FIELD COIL ASSEMBLY	2	REF DTRC DWG A27-19992-13
3	INNER ROTOR CYLINDER	1	REF DTRC DWG A27-19992-14
4	KEY, 1/4 X 1/4 X 2 3/4 LONG	2	KEYSTOCK, STEEL
5	FIELD COIL ASSEMBLY SHAFT SLEEVE	1	REF DTRC DWG A27-19992-15
6	SERVICE END INNER ROTOR RETURN RING	1	REF DTRC DWG A27-19992-16
7	DRIVE END INNER ROTOR RETURN RING	1	REF DTRC DWG A27-19992-15
8	INNER ROTOR BAR	32	REF DTRC DWG A27-19992-17
9	SERVICE END INNER ROTOR COLLECTOR DISK	1	REF DTRC DWG A27-19992-18
10	SERVICE END INNER ROTOR TRANSITION RING	1	REF DTRC DWG A27-19992-19
11	DRIVE END INNER ROTOR TRANSITION RING	1	REF DTRC DWG A27-19992-20
12	DRIVE END INNER ROTOR COLLECTOR DISK	1	REF DTRC DWG A27-19992-21
13	SERVICE END OUTER ROTOR CURRENT COLLECTOR RING	1	REF DTRC DWG A27-19992-22
14	SERVICE END OUTER ROTOR CURRENT COLLECTOR	1	REF DTRC DWG A27-19992-23
15	SERVICE END TERMINAL COLLECTOR DISK	1	REF DTRC DWG A27-19992-24
16	OUTER ROTOR BAR	36	REF DTRC DWG A27-19992-25
17	OUTER ROTOR OUTER DRUM	1	REF DTRC DWG A27-19992-26
18	DRIVE END TERMINAL COLLECTOR DISK	1	REF DTRC DWG A27-19992-27
19	DRIVE END OUTER ROTOR CURRENT COLLECTOR	1	REF DTRC DWG A27-19992-28
20	DRIVE END OUTER ROTOR CURRENT COLLECTOR RING	1	REF DTRC DWG A27-19992-29
21	SERVICE END OUTER ROTOR RETURN RING	1	REF DTRC DWG A27-19992-30
22	OUTER ROTOR CYLINDER	1	REF DTRC DWG A27-19992-31
23	DRIVE END OUTER ROTOR RETURN RING	1	REF DTRC DWG A27-19992-32
24	DRIVE END BEARING CARRIER RETAINER	1	REF DTRC DWG A27-19992-43
25	SERVICE END TERMINAL COLLECTOR RING	1	REF DTRC DWG A27-19992-34
26	SERVICE END TERMINAL COLLECTOR	1	REF DTRC DWG A27-19992-35
27	DRIVE END TERMINAL COLLECTOR	1	REF DTRC DWG A27-19992-35
28	DRIVE END TERMINAL COLLECTOR RING	1	REF DTRC DWG A27-19992-34
29	ELECTRICAL INSULATOR	1	REF DTRC DWG A27-19992-36
30	O-RING, 17.992 ±.085 ID, .139 ±.004 WIDE, 18.270 OD REF	3	NITRILE, 70 DUROMETER, COMPOUND NO N674-70, PARKER GROUND-SPLICED O-RING
31	O-RING, 17.451 ±.080 ID, .139 ±.004 WIDE, 18.270 OD REF	3	NITRILE, 70 DUROMETER, COMPOUND NO N674-70, PARKER GROUND-SPLICED O-RING
32	O-RING, .426 ±.005 ID, .070 ±.003 WIDE, .566 OD REF	12	NITRILE, 70 DUROMETER, COMPOUND NO N674-70, PARKER 2-013
33	SERVICE END STUB SHAFT	1	REF DTRC DWG A27-19992-37
34	TRANSITION CYLINDER	1	REF DTRC DWG A27-19992-38
35	DRIVE END STUB SHAFT	1	REF DTRC DWG A27-19992-39
36	TRANSITION FLANGE	1	REF DTRC DWG A27-19992-32
37	MOTOR HOUSING	1	REF DTRC DWG A27-19992-40
38	TERMINAL HOUSING	1	REF DTRC DWG A27-19992-41
39	SERVICE END, END PLATE HOUSING	1	REF DTRC DWG A27-19992-42
40	SERVICE END BEARING CARRIER	1	REF DTRC DWG A27-19992-42
41	DRIVE END, END PLATE HOUSING	1	REF DTRC DWG A27-19992-43
42	DRIVE END BEARING CARRIER	1	RED DTRC DWG A27-19992-43
43	SERVICE END OUTER ROTOR MECHANICAL SEAL, 8.66 OD 6.69 ID, 1.74 LONG	1	KAYDON
44	SERVICE END INNER ROTOR MECHANICAL SEAL, 4.50 OD, 2.95 ID, 1.27 LONG	1	KAYDON
45	DOUBLE ROW CYLINDRICAL ROLLER BEARING, 170 MM BORE, 230 MM OD, 60 MM WIDE	1	SKF NNU 4934 B/W33
46	DOUBLE ROW CYLINDRICAL ROLLER BEARING, 75 MM BORE, 115 MM OD, 30 MM WIDE	1	SKF NN 3015/W33
47	DRIVE END OUTER ROTOR MECHANICAL SEAL, 7.48 OD, 5.51 ID, 1.89 LONG	1	KAYDON
48	DRIVE END INNER ROTOR MECHANICAL SEAL, 4.50 OD, 2.95 ID, 1.27 LONG	1	KAYDON
49	SINGLE ROW DEEP GROOVE BALL BEARING, 140 MM BORE, 175 MM OD, 18 MM WIDE	2	SKF 61828
50	SINGLE ROW DEEP GROOVE BALL BEARING, 75 MM BORE, 105 MM OD, 16 MM WIDE	2	SKF 61915
51	O-RING, 9.887 ±.055 ID, .139 ±.004 WIDE, 10.165 OD REF	1	NITRILE, 70 DUROMETER, COMPOUND NO N674-70, PARKER GROUND-SPLICED O-RING
52	O-RING, 7.814 ±.045 ID, .139 ±.004 WIDE, 8.092 OD REF	1	NITRILE, 70 DUROMETER, COMPOUND NO N674-70, PARKER GROUND-SPLICED O-RING
53	O-RING, .612 ±.009 ID, .103 ±.003 WIDE, .818 OD REF	1	NITRILE, 70 DUROMETER, COMPOUND NO N674-70, PARKER 2-114
54	O-RING, .364 ±.005 ID, .070 ±.003 WIDE, .504 OD REF	4	NITRILE, 70 DUROMETER, COMPOUND NO N674-70, PARKER 2-012
55	SERVICE END OUTER ROTOR RETURN RING LEFT PAD	2	REF DTRC DWG A27-19992-33
56	SERVICE END OUTER ROTOR RETURN RING RIGHT PAD	2	REF DTRC DWG A27-19992-33
57	INNER ROTOR 180° TUBE BEND-SHORT	28	REF DTRC DWG A27-19992-45
58	OUTER ROTOR 180° TUBE BEND	12	REF DTRC DWG A27-19992-45
59	INSULATED BOLT, 1/4-20UNC-3A X 1 LONG	78	REF DTRC DWG A27-19992-44
60	INSULATED BOLT, 1/4-20UNC-3A X 1 3/8 LONG	84	REF DTRC DWG A27-19992-44
61	INSULATED BOLT, 1/4-20UNC-3A X 2 1/2 LONG	12	REF DTRC DWG A27-19992-44
62	INSULATED BOLT, 1/4-20UNC-3A X 2 3/4 LONG	12	REF DTRC DWG A27-19992-44
63	INSULATED WASHER, 1/4 BOLT SIZE	186	REF DTRC DWG A27-19992-44
64	SOCKET HEAD CAP SCREW, 1/4-20UNC-3A X 1 3/4 LONG	2	ALLOY STEEL, UNBRAKO, P/N 20097-4C-28, SEE NOTE 3
65	GLASS LAMINATE SHEET, 1.620 X 5.100 X .094 THK	32	REF DTRC DWG A27-19992-17
66	GLASS LAMINATE SHEET, 1.300 X 5.100 X .094 THK	36	REF DTRC DWG A27-19992-25
67	SERVICE END INNER ROTOR INNER RACE BEARING NUT	1	REF DTRC DWG A27-19992-47
68	SERVICE END INNER ROTOR OUTER RACE BEARING NUT	1	REF DTRC DWG A27-19992-47
69	SERVICE END OUTER ROTOR INNER RACE BEARING NUT	1	REF DTRC DWG A27-19992-47
70	SERVICE END OUTER ROTOR OUTER RACE BEARING NUT	1	REF DTRC DWG A27-19992-47
71	SERVICE END INNER ROTOR INNER RACE BEARING SLEEVE	1	REF DTRC DWG A27-19992-47
72	SERVICE END OUTER ROTOR INNER RACE BEARING SLEEVE	1	REF DTRC DWG A27-19992-47
73	DRIVE END INNER ROTOR INNER RACE BEARING NUT	1	REF DTRC DWG A27-19992-47
74	DRIVE END INNER ROTOR OUTER RACE BEARING NUT	1	REF DTRC DWG A27-19992-47
75	DRIVE END OUTER ROTOR INNER RACE BEARING NUT	1	REF DTRC DWG A27-19992-47
76	DRIVE END OUTER ROTOR OUTER RACE BEARING NUT	1	REF DTRC DWG A27-19992-47
77	DRIVE END INNER ROTOR INNER RACE BEARING SLEEVE	1	REF DTRC DWG A27-19992-47
78	DRIVE END INNER ROTOR OUTER RACE BEARING SLEEVE	1	REF DTRC DWG A27-19992-47
79	DRIVE END OUTER ROTOR INNER RACE BEARING SLEEVE	1	REF DTRC DWG A27-19992-47
80	RIGHT SIDE COIL CONNECTOR	1	REF DTRC DWG A27-19992-46
81	LEFT SIDE COIL CONNECTOR	1	REF DTRC DWG A27-19992-46
82	COIL INTERCONNECT	1	REF DTRC DWG A27-19992-46
83	COIL/HOSE ADAPTER	4	REF DTRC DWG A27-19992-46
84	ELECTRICAL CONDUCTOR TERMINAL	2	REF DTRC DWG A27-19992-46
85	ELECTRICAL CONDUCTOR	2	REF DTRC DWG A27-19992-46
86	TUBE, 5/16 OD, .028 WALL, 53/64 LONG	8	COPPER, ALLOY 122 PER ASTM B75, TYPE DHP
87	TUBE, 5/16 OD, .028 WALL, 61/64 LONG	48	COPPER, ALLOY 122 PER ASTM B75, TYPE DHP
88	INLET/OUTLET TUBE, 4 7/8 LONG, 3/8 OD, .065 WALL	20	BASS, SEE NOTE 1
89	INLET/OUTLET TUBE, 2 5/16 LONG, 3/8 OD, .065 WALL	12	BASS, SEE NOTE 1
90	INSULATOR, .406 ID, .531 OD, 1.438 LONG (GLASS LAMINATE)	12	G-10, BRONZE AND PLASTIC SPECIALTIES, SEE NOTE 2
91	INSULATOR, .406 ID, .531 OD, 2.275 LONG (GLASS LAMINATE)	8	G-10, BRONZE AND PLASTIC SPECIALTIES, SEE NOTE 2
92	WASHER, FLAT, .438 OD, .266 ID .084 THICK	12	STAINLESS STEEL, PER AISI TYPE 304
93	SOCKET HEAD CAP SCREW, 1/4-20UNC-3A X 3/4 LONG	56	ALLOY STEEL, UNBRAKO, P/N 200097-4C-12, SEE NOTE 3
94	SOCKET HEAD CAP SCREW, 1/4-20UNC-3A X 1 LONG	40	ALLOY STEEL, UNBRAKO, P/N 200097-4C-16, SEE NOTE 3
95	SOCKET HEAD CAP SCREW, 1/4-20UNC-3A X 1 1/4 LONG	24	ALLOY STEEL, UNBRAKO, P/N 200097-4C-20, SEE NOTE 3
96	SOCKET HEAD CAP SCREW, 1/4-20UNC-3A X 1 1/2 LONG	48	ALLOY STEEL, UNBRAKO, P/N 200097-4C-24, SEE NOTE 3
97	SOCKET HEAD CAP SCREW, 1/4-20UNC-3A X 1 5/8 LONG	12	ALLOY STEEL, UNBRAKO, P/N 200097-4C-26, SEE NOTE 3
98	SOCKET HEAD CAP SCREW, 1/4-20UNC-3A X 2 1/4 LONG	24	ALLOY STEEL, UNBRAKO, P/N 200097-4C-36, SEE NOTE 3
99	SOCKET HEAD CAP SCREW, 1/4-20UNC-3A X 2 1/2 LONG	12	ALLOY STEEL, UNBRAKO, P/N 200097-4C-40, SEE NOTE 3
100	SOCKET HEAD CAP SCREW, 3/8-16UNC-3A X 1 1/2 LONG	36	ALLOY STEEL, UNBRAKO, P/N 20097-6C-24, SEE NOTE 3
101	SOCKET HEAD CAP SCREW, 3/8-16UNC-3A X 4 7/8 LONG	14	ALLOY STEEL, UNBRAKO, P/N 20097-6C-78, SEE NOTE 3
102	O-RING, 13.178 ±.065 ID, .139 ±.004 WIDE, 13.456 OD REF	2	NITRILE, 70 DUROMETER, COMPOUND NO N674-70, PARKER GROUND-SPLICED O-RING
103	LIP SEAL, 4.000 DIA BORE, 3.250 DIA SHAFT, .220 WIDTH	2	AMERICAN VARISEAL, VARILIP TYPE 1, P/N SI-S-S-652-E-52
104	LIP SEAL, 6.750 DIA BORE, 6.000 DIA SHAFT, .255 WIDTH	1	AMERICAN VARISEAL, VARILIP TYPE 1, P/N SI-S-S-696-E-52
105	LIP SEAL, 8.000 DIA BORE, 7.25 DIA SHAFT, .255 WIDTH	1	AMERICAN VARISEAL, VARILIP TYPE 1, P/N SI-S-S-F-07250-E-52
106	RETAINING RING, INTERNAL, 4.500 HOUSING DIA, 4.940 FREE DIA, .109 THK, TAPERED	2	WALDES TRUARC, INTERNAL SERIES, CARBON SPRING STEEL, N5002-450
107	RETAINING RING, EXTERNAL, 4.750 SHAFT DIA, 4.458 FREE DIA, .109 THK, TAPERED	1	WALDES TRUARC, EXTERNAL SERIES, CARBON SPRING STEEL, N5102-475
108	RETAINING RING, INTERNAL, 7.500 HOUSING DIA, 8.270 FREE DIA, .187 THK, TAPERED	1	WALDES TRUARC, INTERNAL SERIES, CARBON SPRING STEEL, N5002-750
109	RETAINING RING, INTERNAL, 8.750 HOUSING DIA, 9.558 FREE DIA, .187 THK, TAPERED	1	WALDES TRUARC, INTERNAL SERIES, CARBON SPRING STEEL, N5002-875
110	HOSE, MOLDED, 90° ELBOW, 1/2 OD, 1/4 ID, 1 1/2 X 1 1/2 LONG	4	RUBBER, HOSE REQUIREMENTS SPECIFIED BY CODE 2711, SEE NOTE 4
111	HOSE, MOLDED, 90° ELBOW, 9/16 OD, 5/16 ID, 4 X 4 LONG	28	RUBBER, HOSE REQUIREMENTS SPECIFIED BY CODE 2711, SEE NOTE 4
112	HOSE CLAMP, 2 EAR, 5/8 NOM SIZE, .315 WIDTH, .047 THK	8	CARBON STEEL, OETIKER, P/N 1518
113	HOSE CLAMP, 2 EAR, 3/4 NOM SIZE, .335 WIDTH, .047 THK	60	CARBON STEEL, OETIKER, P/N 1720
114	TUBE FITTING, MALE CONNECTOR, 1/4 TUBE X 3/4 NPT	2	STAINLESS STEEL, TYPE 316, SWAGELOK, P/N SS-400-1-12
115	TUBE FITTING, MALE CONNECTOR, 5/16 TUBE X 1/4 NPT	1	STAINLESS STEEL, TYPE 316, SWAGELOK, P/N SS-500-1-4, SEE NOTE 5
116	TUBE FITTNG, SAE MALE CONNECTOR, 1/4 TUBE X 7/16-14UNF SAE	9	STAINLESS STEEL, TYPE 316, SWAGELOK, P/N SS-400-1-4ST, SEE NOTE 6
117	BACK FERRULE, 1/4 TUBE OD	8	NYLON, SWAGELOK, P/N NY-404-1 SEE NOTE 7
118	FRONT FERRULE, 1/4 TUBE OD	8	NYLON, SWAGELOK, P/N NY-403-1 SEE NOTE 7
119	TUBE FITTING, SAE MALE CONNECTOR, 3/8 TUBE X 9/16-18UNF SAE	1	STAINLESS STEEL, TYPE 316, SWAGELOK, P/N SS-600-1-6ST SEE NOTE 8
120	ADAPTER FITTING, SAE MALE/FEMALE NPT, 1 1/16-12UNF SAE X 3/4 NPT	2	STAINLESS STEEL, TYPE 316, CAJON, P/N SS-12-SAE-7-12, SEE NOTE 9
121	PIPE PLUG, 1/8 NPT	3	STAINLESS STEEL, TYPE 316, CAJON, P/N SS-2-P
122	PIPE PLUG, 1/4 NPT	4	STAINLESS STEEL, TYPE 316, CAJON, P/N SS-4-P
123	HOSE FITTING, BARBED CONNECTOR X MALE PIPE, 5/16 ID HOSE X 1/4 NPT	28	STAINLESS STEEL, TYPE 316, PARKER CPI, P/N 5-4-B2HF-SS
124	HOSE FITTING, BARBED CONNNECTOR X MALE PIPE, 1/4 ID HOSE X 1/4 NPT	4	STAINLESS STEEL, TYPE 316, SEE NOTE 10
125	TUBE FITTING, MALE CONNECTOR, 3/8 TUBE X 1/4 NPT	2	STAINLESS STEEL, TYPE 316, SEE NOTE 11
126	HOSE, 9/16 OD, 5/16 ID, 11 3/8 LONG	2	RUBBER, HOSE REQUIREMENTS SPECIFIED BY CODE 2711
127	OUTER ROOR 180° TUBE BEND-LONG	18	REF DRTC DWG A27-19992-45

REV.	ZONE	DESCRIPTION	BY	APP'D	DATE

REVISIONS

CAEDOS PART NAME
AN.2711.DLL.175HPMTR.PARTSLIST
REFERENCES
SHEET1
SESD NO.

DATE 4/3/91
DRAWN DMM
CHECKED
DESIGNED
REVIEWED
APPROVED
DATE

NORMAL CONDUCTIVE, HOMOPOLAR, CONTRAROTATING, 175 HP MOTOR

PARTS LIST

SCALE: NONE

DEPARTMENT OF NAVY
DAVID TAYLOR
RESEARCH CENTER

DTRC NUMBER A27-19992-1
REVISION -

SHOPWORK REQUEST NO.		PRINT RECORD					

STRESS ENG'R			REVIEWED BY			PROJECT NUMBER
						1-2700-211-12
			2711			
			2711			

LIST OF MATERIAL

PC. NO.	NAME OF PIECE	NO. REQD	MATERIAL OR SOURCE

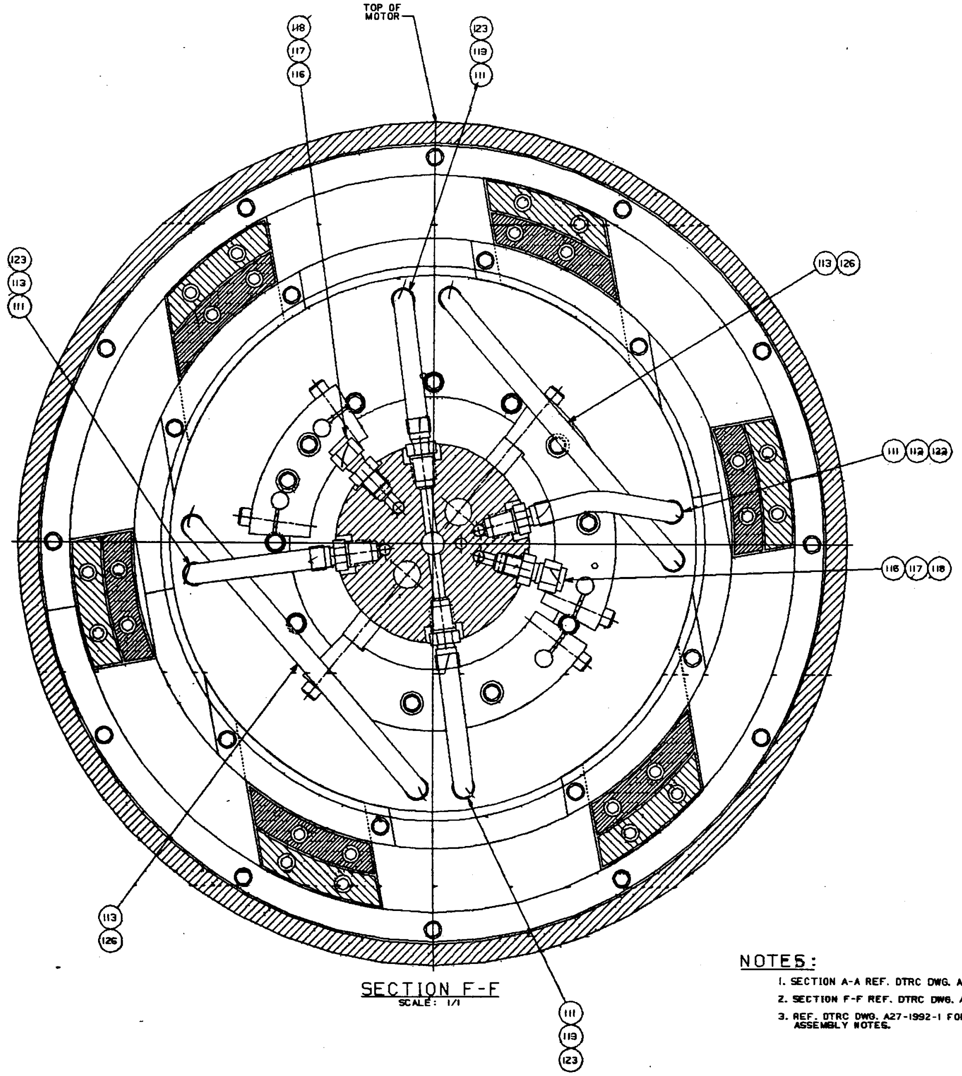
TOP OF MOTOR
118
117
116
123
119
111
123
113
111
113
126
111
112
122
116
117
118
113
126
111
119
123

SECTION F-F

SCALE: 1/1

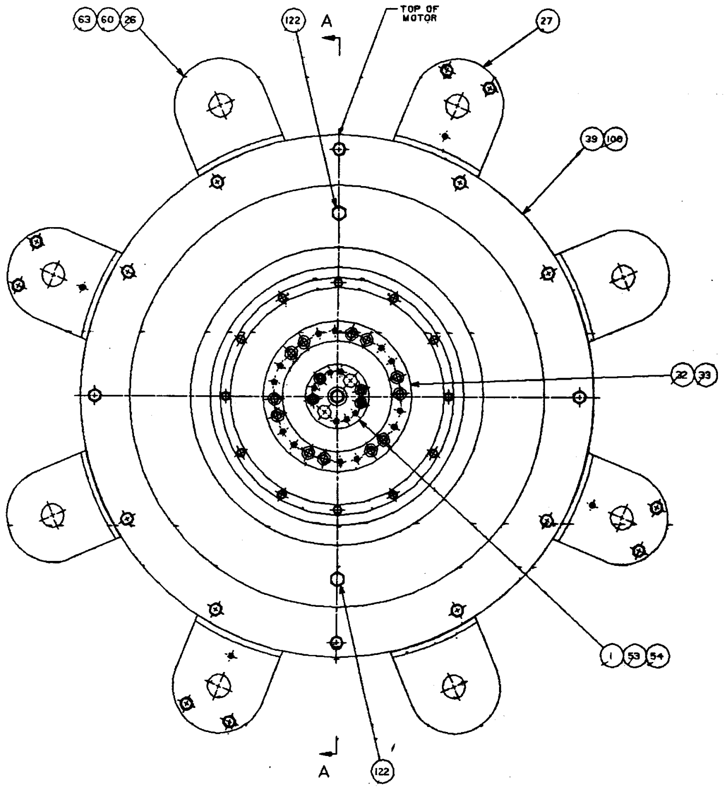
63
60
26
122
A
TOP OF MOTOR
27
39
100
22
33
1
53
54
A
122

ELEVATION

SCALE : 1/2
(AS VIEWED FROM SERVICE END)
(SERVICE MODULE, SLIP RING AND ROTARY UNION NOT SHOWN)

NOTES:

1. SECTION A-A REF. DTRC DWG. A27-19992-4.
2. SECTION F-F REF. DTRC DWG. A27-19992-4 FOR LOCATION.
3. REF. DTRC DWG. A27-1992-1 FOR LIST OF MATERIAL, AND ASSEMBLY NOTES.

REV.	ZONE	DESCRIPTION	BY	APP'D	DATE

REVISIONS

CAEDOS PART NAME
AN.2711.DLL.175HPMTR.MASSY
REFERENCES
SHEET2
A27-19992-1, -4
SESD NO.

DATE 4-1-91	NORMAL CONDUCTIVE, HOMOPOLAR, CONTRAROTATING, 175 HP MOTOR	DEPARTMENT OF NAVY DAVID TAYLOR RESEARCH CENTER	
DRAWN JOW			
CHECKED	ASSEMBLY		
DESIGNED			
REVIEWED		DTRC NUMBER	REVISION
APPROVED		A27-19992-2	-
DATE	SCALE: AS NOTED		

SHOPWORK REQUEST NO.		PRINT RECORD					

STRESS ENG'R			REVIEWED BY			PROJECT NUMBER
CODE	NAME	DATE	CODE	NAME	DATE	1-2700-211-12
			2711			
			2711			

LIST OF MATERIAL

PC. NO.	NAME OF PIECE	NO. REQD.	MATERIAL OR SOURCE

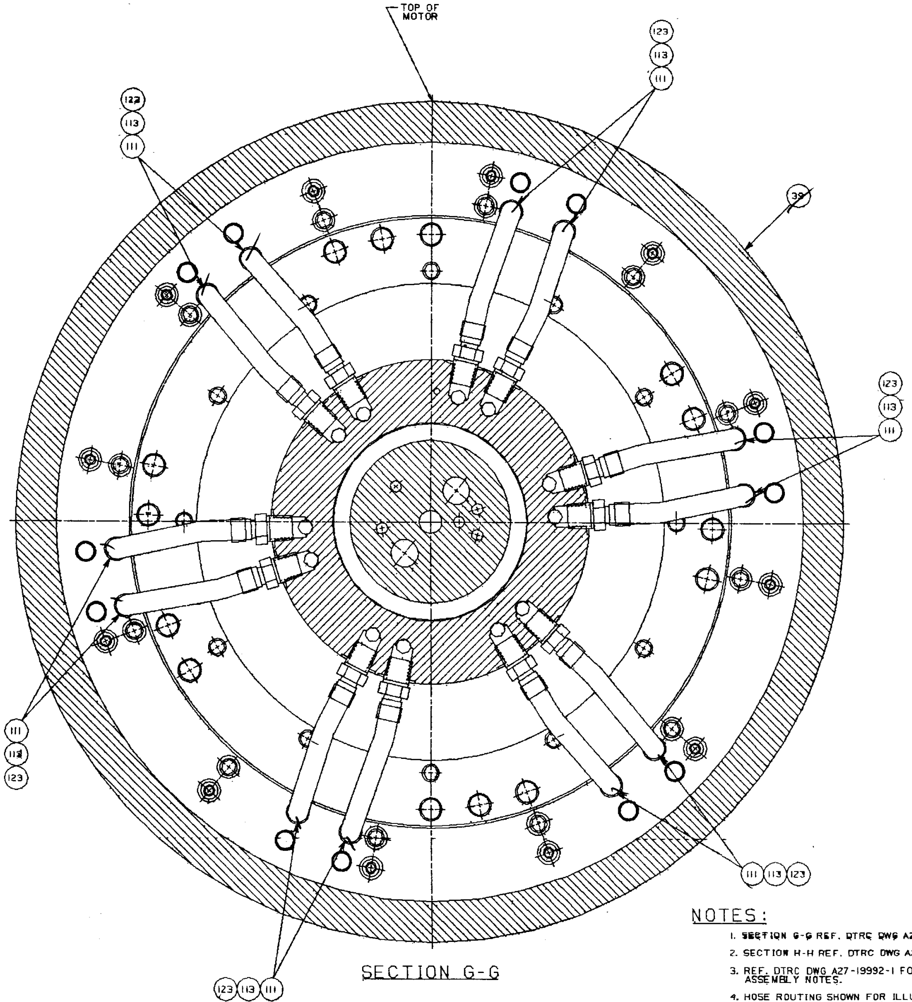
TOP OF MOTOR
122
113
111
123
113
111
39
123
113
111
111
113
123
111
113
123
123
113
111

SECTION G-G

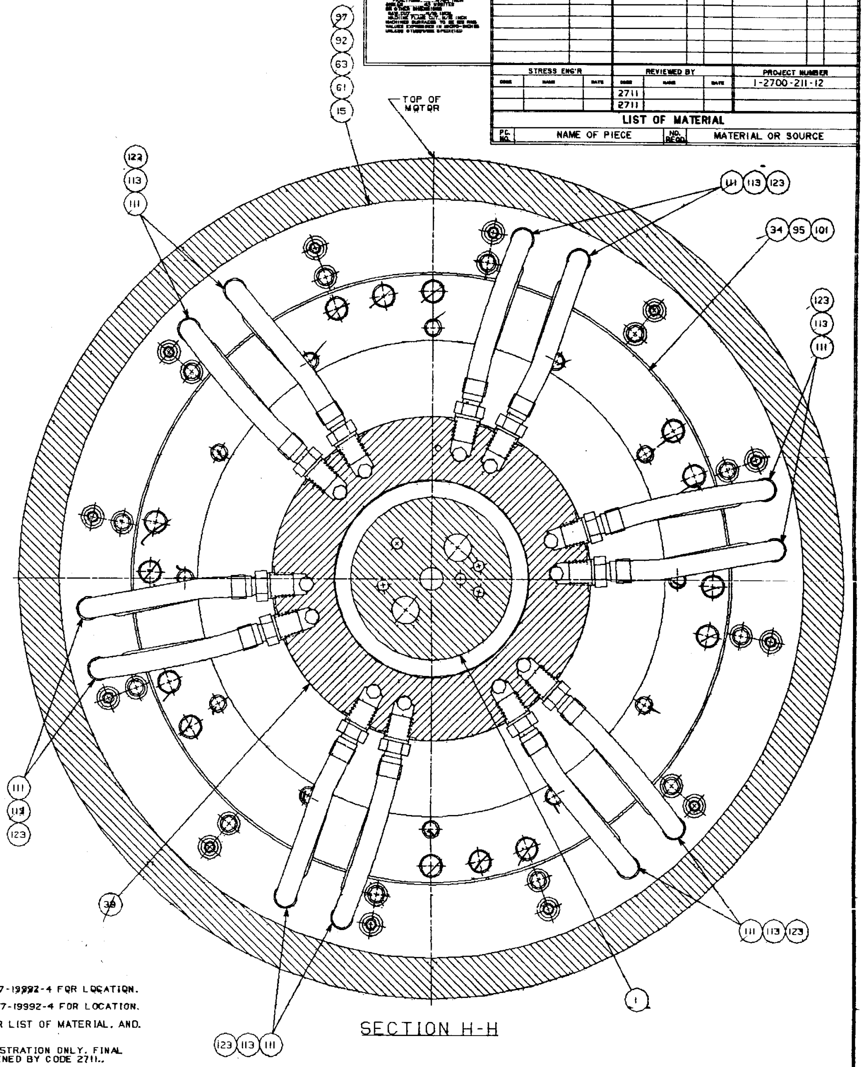
97
92
63
61
15
TOP OF MOTOR
122
113
111
111
113
123
34
95
101
123
113
111
111
113
123
39
1
111
113
123
123
113
111

SECTION H-H

NOTES:

1. SECTION G-G REF. DTRC DWG A27-19992-4 FOR LOCATION.
2. SECTION H-H REF. DTRC DWG A27-19992-4 FOR LOCATION.
3. REF. DTRC DWG A27-19992-1 FOR LIST OF MATERIAL, AND. ASSEMBLY NOTES.
4. HOSE ROUTING SHOWN FOR ILLUSTRATION ONLY. FINAL CONFIGURATION TO BE DETERMINED BY CODE 2711..

REV.	ZONE	DESCRIPTION	BY	APP'D	DATE

REVISIONS

CAEDOS PART NAME
AN.2711.DLL.175HPMTR.SASSY
REFERENCES
SHEET3
A27-19992-1, -4
SESD NO.

DATE	3-27-91
DRAWN	JGW
CHECKED	
DESIGNED	
REVIEWED	
APPROVED	
DATE	

NORMAL CONDUCTIVE, HOMOPOLAR, CONTRAROTATING, 175 HP MOTOR

ASSEMBLY
SECTION

SCALE: 1/1

DEPARTMENT OF NAVY
DAVID TAYLOR
RESEARCH CENTER

DTRC NUMBER	REVISION
A27-19992-3	-

SHOPWORK REQUEST NO.		PRINT RECORD					

STRESS ENG'R			REVIEWED BY			PROJECT NUMBER
						1-2700-211-12
			2711			
			2711			

LIST OF MATERIAL

PC. NO.	NAME OF PIECE	NO. REQD.	MATERIAL OR SOURCE

NOTES:

1. SECTION B-B REF. DTRC DWG. A27-19992-5.
2. SECTION C-C REF. DTRC DWG. A27-19992-6.
3. SECTION D-D REF. DTRC DWG. A27-19992-5.
4. SECTION E-E REF. DTRC DWG. A27-19992-6.
5. SECTION F-F REF. DTRC DWG. A27-19992-2.
6. SECTION G-G REF. DTRC DWG. A27-19992-3.
7. SECTION H-H REF. DTRC DWG. A27-19992-2.
8. REF. DTRC DWG. A27-19992-1 FOR LIST OF MATERIAL, AND ASSEMBLY NOTES.
9. REF DTRC DWG A27-19992-7 FOR INNER ROTOR ASSEMBLY.
10. REF DTRC DWG A27-19992-8 FOR OUTER ROTOR ASSEMBLY.

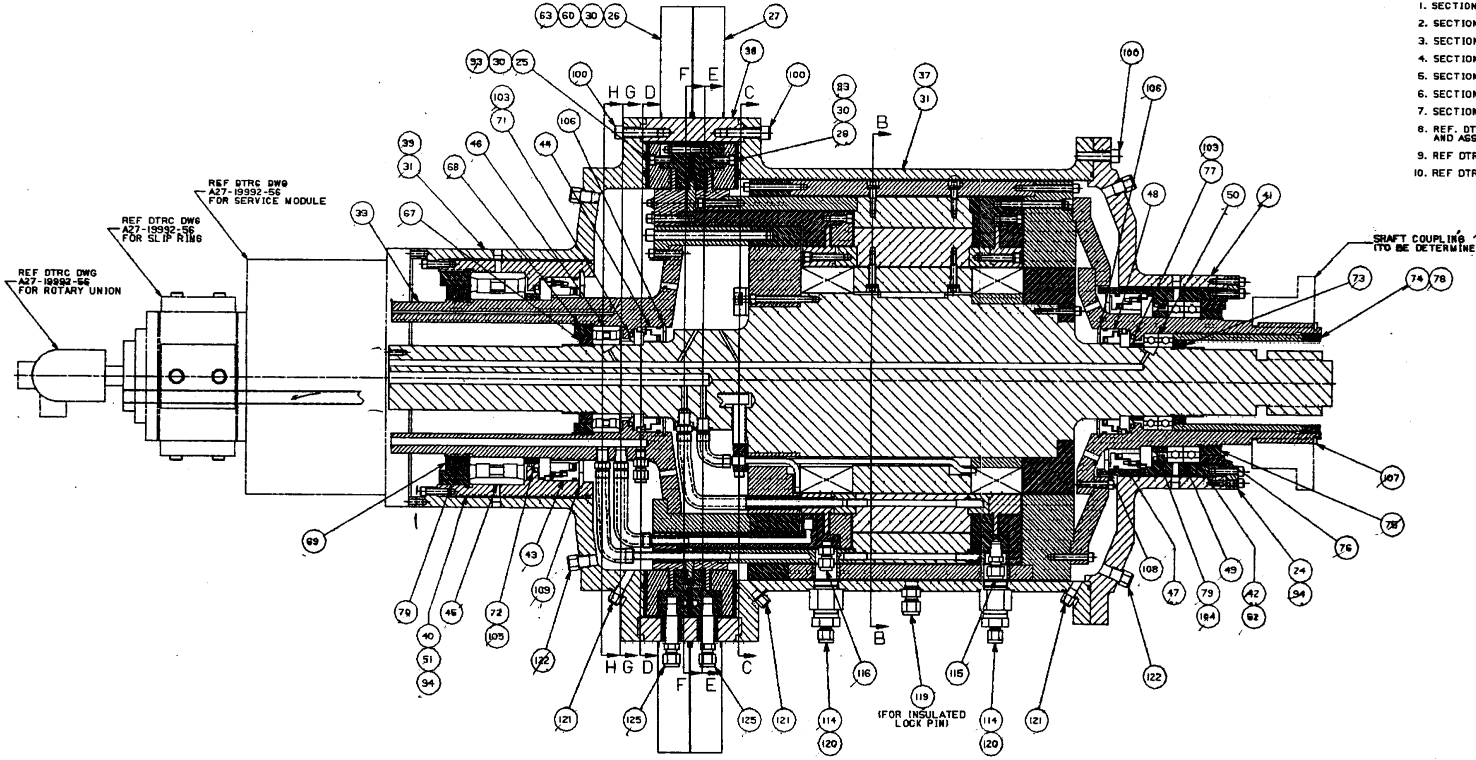
REF DTRC DWG
A27-19992-56
FOR SERVICE MODULE
REF DTRC DWG
A27-19992-56
FOR SLIP RING
REF DTRC DWG
A27-19992-56
FOR ROTARY UNION
SHAFT COUPLING
(TO BE DETERMINED)
(FOR INSULATED
LOCK PIN)
H G D F E C B
63 60 30 26 27 38 100 93 30 25 103 71 106 44 46 68 39 31 33 67 37 31 83 30 28 106 106 103 77 48 50 41 73 74 78 107 76 78 24 94 42 62 49 79 104 47 108 122 121 114 120 119 115 116 125 121 109 43 72 105 122 45 40 51 94 70 69

SECTION A-A

CASDOS PART NAME
AN.2711.DLL.175HPMTR.ASSY
REFERENCES
SHEET4
A27-19992-1, -2, -3, -5, -6 -7, -8
SESD NO.

REV.	ZONE	DESCRIPTION	BY	APP'D	DATE

REVISIONS

DATE 3-28-91
DRAWN JGW
CHECKED
DESIGNED
REVIEWED
APPROVED
DATE

NORMAL CONDUCTIVE, HOMOPOLAR, CONTRAROTATING, 175 HP MOTOR

ASSEMBLY SECTION

SCALE: 1/2

DEPARTMENT OF NAVY
DAVID TAYLOR
RESEARCH CENTER

DTRC NUMBER A27-19992-4
REVISION -

SHOPWORK REQUEST NO.		PRINT RECORD					

STRESS ENG'R			REVIEWED BY			PROJECT NUMBER
CODE	NAME	DATE	CODE	NAME	DATE	1-2700-211-12
			2711			
			2711			

LIST OF MATERIAL

PC. NO.	NAME OF PIECE	NO. REQD.	MATERIAL OR SOURCE

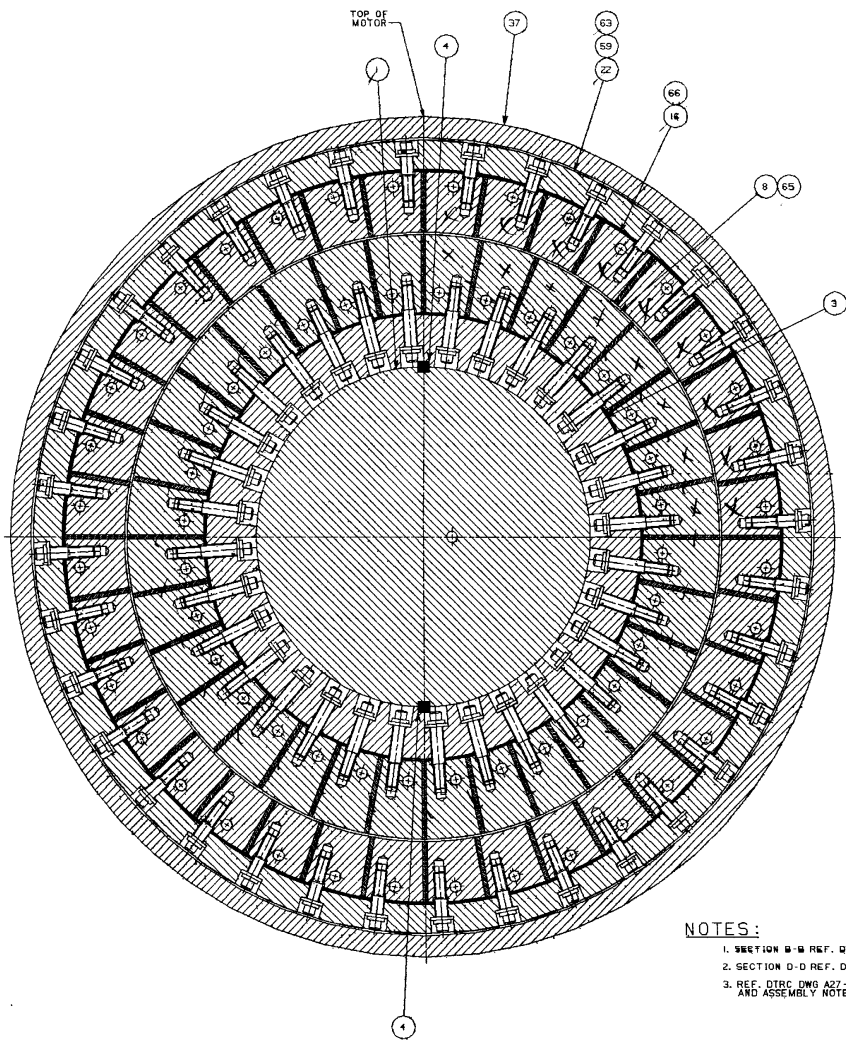
TOP OF MOTOR
1
4
37
63
59
22
66
16
8
65
3
60
63
4

SECTION B-B

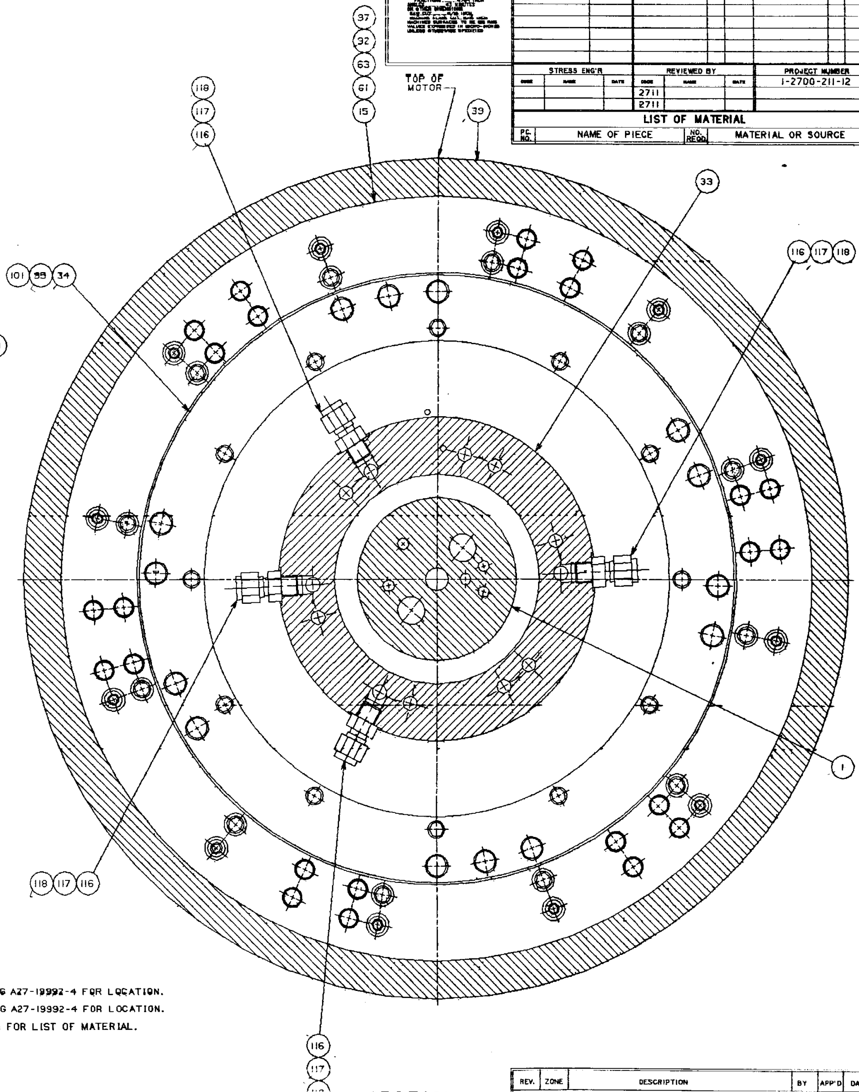
37
32
63
61
15
TOP OF MOTOR
39
118
117
116
33
116
117
118
101
35
34
1
118
117
116
116
117
118

SECTION D-D

NOTES:

1. SECTION B-B REF. DTRC DWG A27-19992-4 FOR LOCATION.
2. SECTION D-D REF. DTRC DWG A27-19992-4 FOR LOCATION.
3. REF. DTRC DWG A27-19992-1 FOR LIST OF MATERIAL. AND ASSEMBLY NOTES.

REV.	ZONE	DESCRIPTION	BY	APP'D	DATE
		REVISIONS			

CAGDOS PART NAME	
AN.2711.DLL.175HPMTR.SECTASSY	
REFERENCES	
SHEETS	
A27-19992-1, -4	
SESD NO.	

DATE 3-28-91	NORMAL CONDUCTIVE, HOMOPOLAR, CONTRAROTATING, 175 HP MOTOR	DEPARTMENT OF NAVY DAVID TAYLOR RESEARCH CENTER	
DRAWN JGW	ASSEMBLY SECTION		
CHECKED			
DESIGNED			
REVIEWED		DTRC NUMBER	REVISION
APPROVED		A27-19992-5	-
DATE	SCALE: 1/1		

SHOPWORK REQUEST NO.	PRINT NUMBER		

STRESS CHK'D	REVIEWED BY	PROJECT NUMBER
	2711	1-2700-211-12
	2711	

LIST OF MATERIAL

NO.	NAME OF PIECE	NO. REQ'D	MATERIAL OR SOURCE

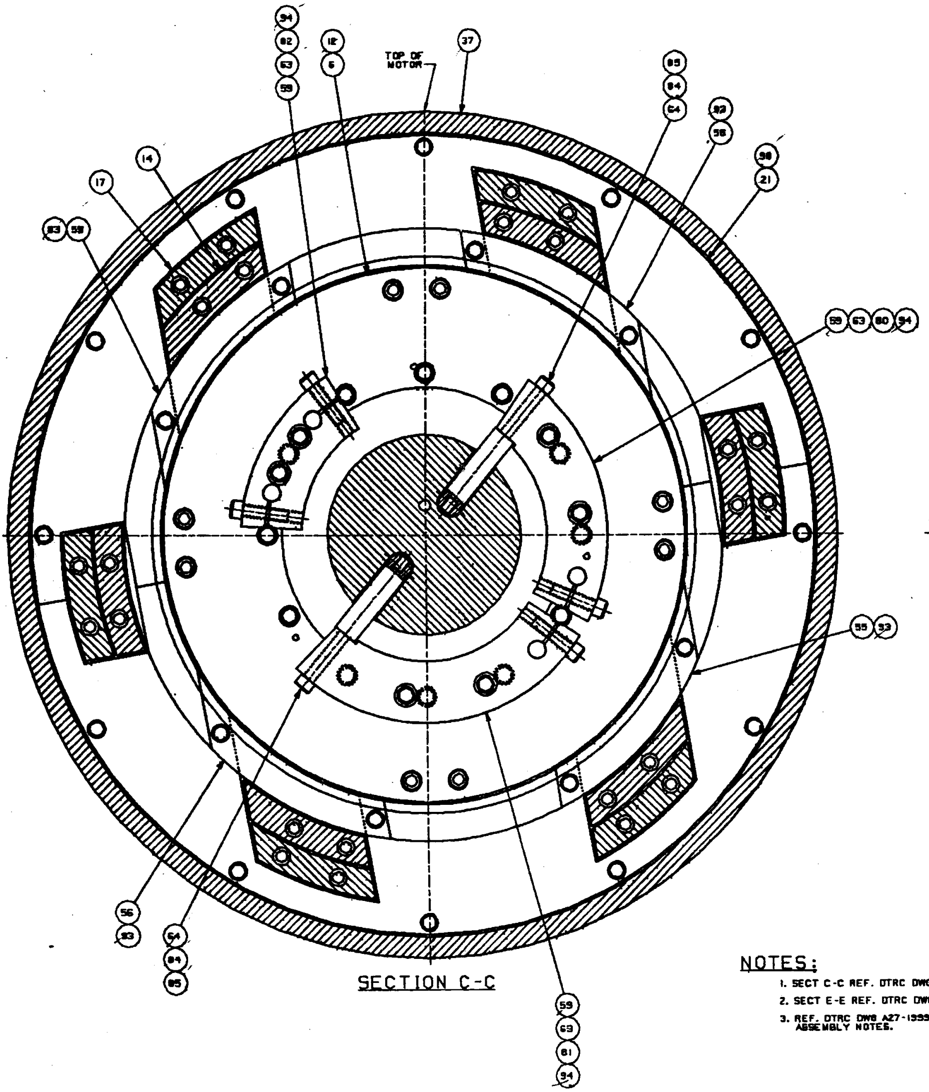
94
82
63
59
12
6
TOP OF MOTOR
37
85
84
64
82
58
98
21
14
17
63
59
59
63
80
94
55
33
56
93
64
84
85
59
63
81
94

SECTION C-C

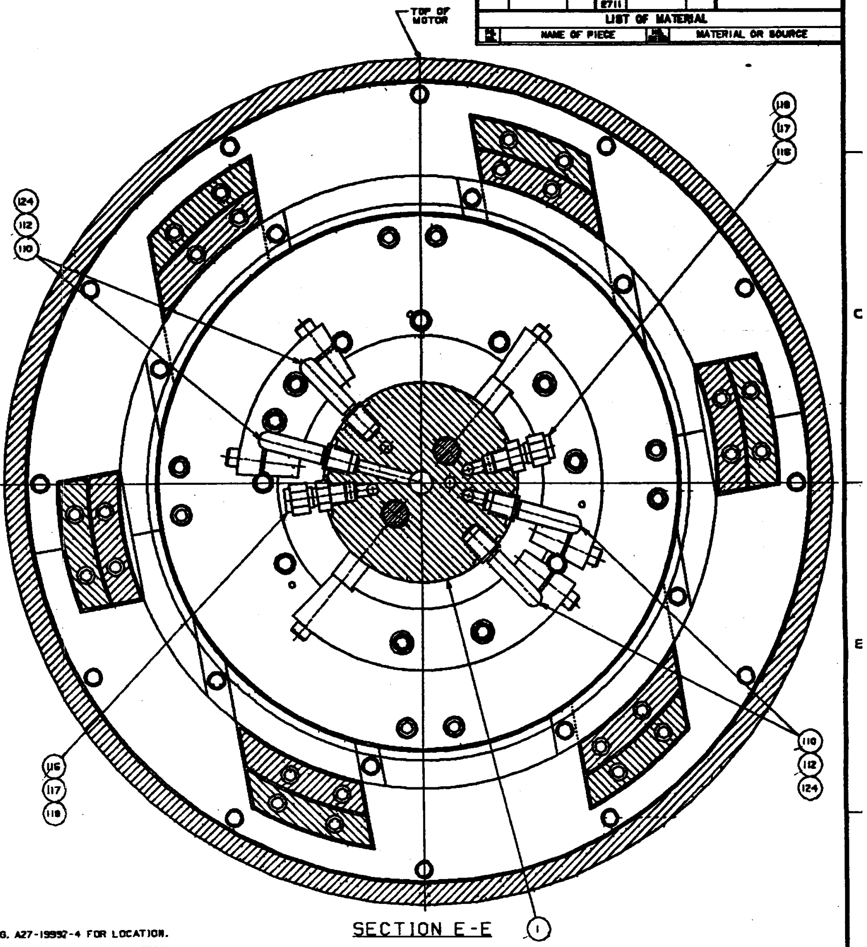
TOP OF MOTOR
118
117
116
124
112
110
116
117
118
110
112
124

SECTION E-E ①

NOTES:

1. SECT C-C REF. DTRC DWG. A27-19992-4 FOR LOCATION.
2. SECT E-E REF. DTRC DWG. A27-19992-4 FOR LOCATION.
3. REF. DTRC DWG A27-19992-1 FOR LIST OF MATERIAL, AND ASSEMBLY NOTES.

REV.	ZONE	DESCRIPTION	BY	APP'D	DATE

REVISIONS

DASCOS PART NAME
AN.2711.D.L.L.175HPMTR.SECT.ASSY
REFERENCES
SHEETS
SERQ NO.

DATE 3/25/91
DRAWN JGW
CHECKED
DESIGNED
REVIEWED
APPROVED
DATE

NORMAL CONDUCTIVE, HOMOPOLAR, CONTRAROTATING, 175 HP MOTOR

ASSEMBLY SECTION

SCALE: 1/1

DEPARTMENT OF NAVY
DAVID TAYLOR RESEARCH CENTER

DTRC NUMBER A27-19992-6
REVISION -

SHOPWORK REQUEST NO. | PRINT RECORD

STRESS ENG'R			REVIEWED BY			PROJECT NUMBER
CODE	NAME	DATE	CODE	NAME	DATE	1-2700-211-12
			2711			
			2711			

LIST OF MATERIAL

PC. NO.	NAME OF PIECE	NO. REQD.	MATERIAL OR SOURCE
1	INNER ROTOR SHAFT	-	REF DTRC DWG A27-19992-11, -12
2	FIELD COIL ASSEMBLY	-	REF DTRC DWG A27-19992-13
3	INNER ROTOR CYLINDER	-	REF DTRC DWG A27-19992-14
4	KEY, 1/4 X 1/4 X 2 3/4 LG	-	REF DTRC DWG A27-19992-1
5	FIELD COIL ASSEMBLY SHAFT SLEEVE	-	REF DTRC DWG A27-19992-15
6	SERVICE END INNER ROTOR RETURN RING	-	REF DTRC DWG A27-19992-16
7	DRIVE END INNER ROTOR RETURN RING	-	REF DTRC DWG A27-19992-15
8	INNER ROTOR BAR	-	REF DTRC DWG A27-19992-17
9	SERVICE END INNER ROTOR COLLECTOR DISK	-	REF DTRC DWG A27-19992-18
10	SERVICE END INNER ROTOR TRANSITION RING	-	REF DTRC DWG A27-19992-19
11	DRIVE END INNER ROTOR TRANSITION RING	-	REF DTRC DWG A27-19992-20
12	DRIVE END INNER ROTOR COLLECTOR DISK	-	REF DTRC DWG A27-19992-21
57	INNER ROTOR 180° TUBE BEND	-	REF DTRC DWG A27-19992-45
60	INSULATED BOLT, 1/4-20UNC-3A X 1 3/8 LG	-	REF DTRC DWG A27-19992-44
63	INSULATED WASHER, 1/4 BOLT SIZE	-	REF DTRC DWG A27-19992-44
65	GLASS LAMINATE SHEET, .094 THK	-	REF DTRC DWG A27-19992-17
83	COIL/HOSE ADAPTER	-	REF DTRC DWG A27-19992-46
86	TUBE, 5/16 OD, .028 WALL, 53/64 LONG	-	REF DTRC DWG A27-19992-1
88	INLET/OUTLET TUBE, 4 7/8 LONG	-	REF DTRC DWG A27-19992-1
91	INSULATOR, .406 ID, .531 OD, 2.275 LONG, (GLASS LAMINATE)	-	REF DTRC DWG A27-19992-1
96	SOCKET HEAD CAP SCREW, 1/4-20UNC-3A X 1 1/2 LG	-	REF DTRC DWG A27-19992-1
99	SOCKET HEAD CAP SCREW, 1/4-20UNC-3A X 2 1/2 LG	-	REF DTRC DWG A27-19992-1

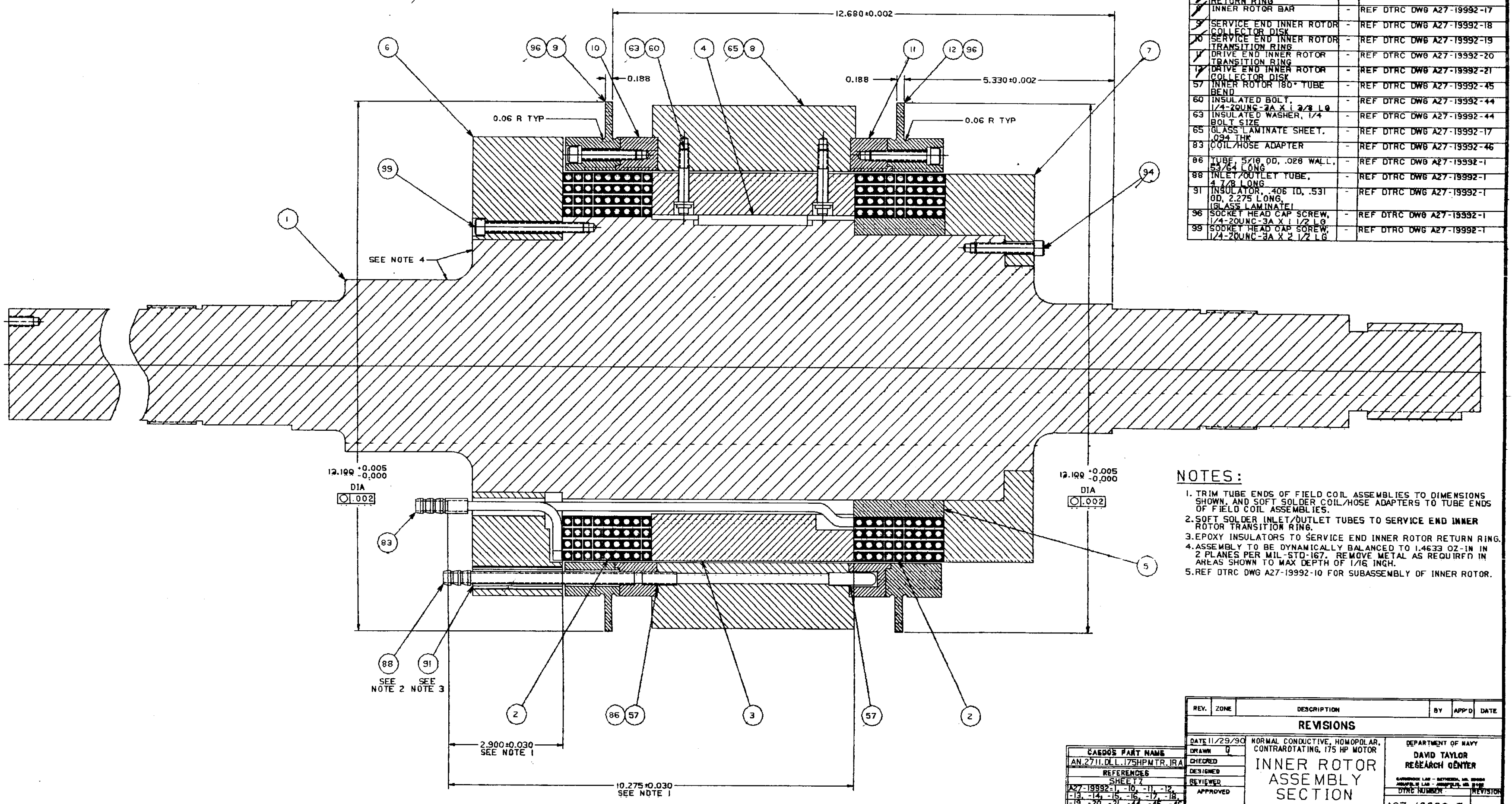

NOTES:

1. TRIM TUBE ENDS OF FIELD COIL ASSEMBLIES TO DIMENSIONS SHOWN, AND SOFT SOLDER COIL/HOSE ADAPTERS TO TUBE ENDS OF FIELD COIL ASSEMBLIES.
2. SOFT SOLDER INLET/OUTLET TUBES TO SERVICE END INNER ROTOR TRANSITION RING.
3. EPOXY INSULATORS TO SERVICE END INNER ROTOR RETURN RING.
4. ASSEMBLY TO BE DYNAMICALLY BALANCED TO 1.4633 OZ-IN IN 2 PLANES PER MIL-STD-167. REMOVE METAL AS REQUIRED IN AREAS SHOWN TO MAX DEPTH OF 1/16 INCH.
5. REF DTRC DWG A27-19992-10 FOR SUBASSEMBLY OF INNER ROTOR.

REV.	ZONE	DESCRIPTION	BY	APP'D	DATE
		REVISIONS			

CAEDOS PART NAME
AN.2711.DLL.175HPMTR.IRA
REFERENCES
SHEET7
A27-19992-1, -10, -11, -12,
-13, -14, -15, -16, -17, -18,
-19, -20, -21, -44, -45, -46
SESD NO.

DATE 11/29/90
DRAWN
CHECKED
DESIGNED
REVIEWED
APPROVED
DATE

NORMAL CONDUCTIVE, HOMOPOLAR, CONTRAROTATING, 175 HP MOTOR

INNER ROTOR ASSEMBLY SECTION

SCALE: 1/1

DEPARTMENT OF NAVY
DAVID TAYLOR RESEARCH CENTER
CARDEROCK LAB - BETHESDA, MD. 20084
ANNAPOLIS LAB - ANNAPOLIS, MD. 21402

DTRC NUMBER: A27-19992-7
REVISION: -

NOTES:

1. SOFT SOLDER INLET/OUTLET TUBES TO OUTER ROTOR OUTER DRUM.
2. EPOXY INSULATORS TO SERVICE END TERMINAL COLLECTOR DISK.
3. APPLY GLASS/EPOXY, AS AN INSULATION, TO OD OF CURRENT COLLECTOR, AND COLLECTOR RING. ALSO, APPLY GLASS/EPOXY TO SIDES OF CUTOUTS IN CURRENT COLLECTOR. MACHINE INSULATION TO DIMENSIONS SHOWN ON THIS SHEET.
4. ASSEMBLY TO BE DYNAMICALLY BALANCED TO 2.2693 OZ-IN IN 2 PLANES PER MIL-STD-167. REMOVE METAL AS REQUIRED IN AREAS SHOWN TO MAX DEPTH OF 1/16 INCH.
5. REF DTRC DWG A27-19992-9 FOR SUBASSEMBLY OF OUTER ROTOR.
6. A PRESS FIT IS REQUIRED TO ASSEMBLE THE PIECES LISTED BELOW.

PC. NO. 21 TO PC. NO. 22
PC. NO. 23 TO PC. NO. 22
PC. NO. 24 TO PC. NO. 21
PC. NO. 33 TO PC. NO. 34
PC. NO. 36 TO PC. NO. 23
PC. NO. 35 TO PC. NO. 36

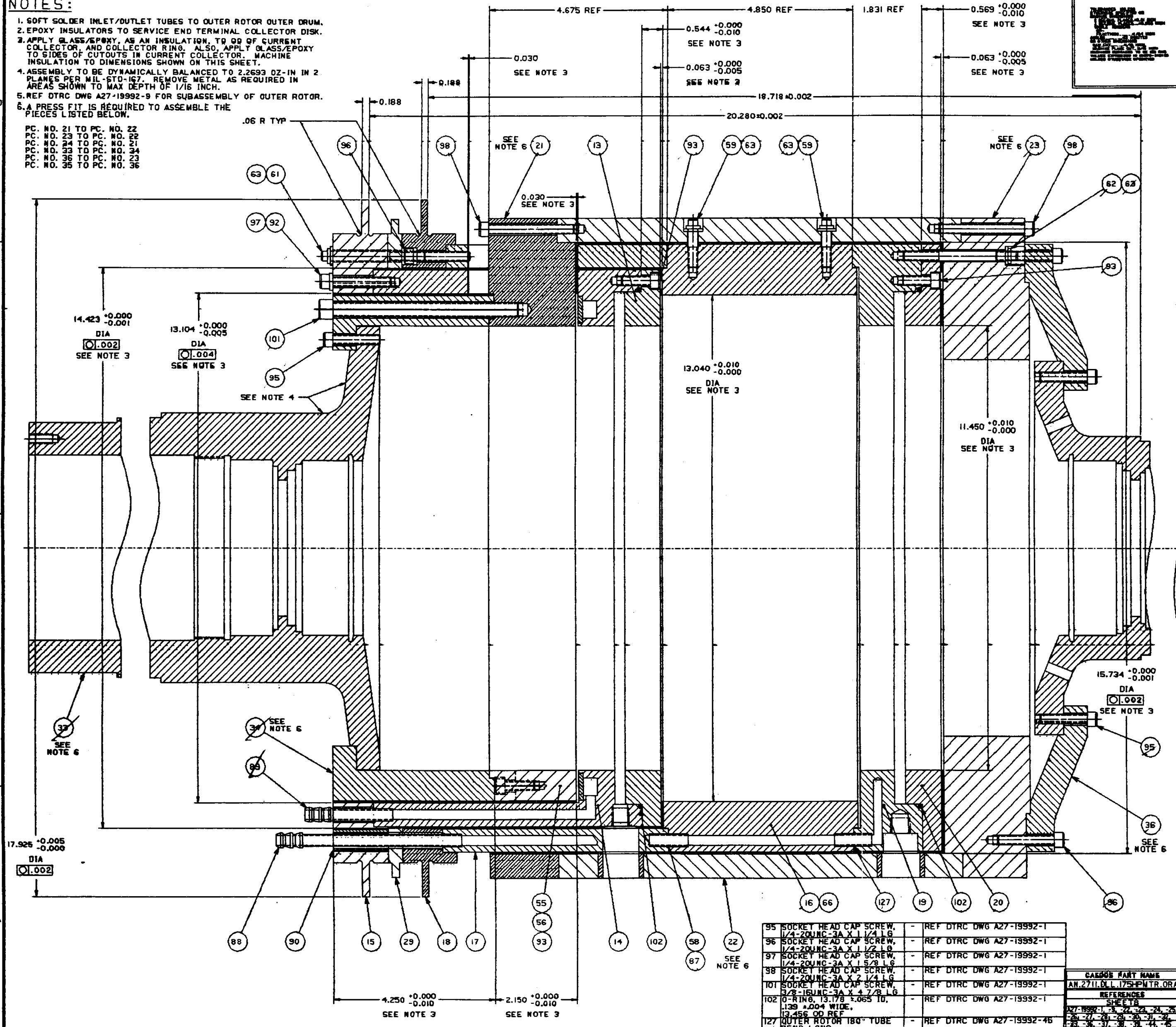
4.675 REF
4.850 REF
1.831 REF
0.569 +0.000 -0.010 SEE NOTE 3
0.544 +0.000 -0.010 SEE NOTE 3
0.063 +0.000 -0.005 SEE NOTE 2
0.063 +0.000 -0.005 SEE NOTE 3
0.030 SEE NOTE 3
0.030 SEE NOTE 3
0.188
0.188
18.718±0.002
20.280±0.002
.06 R TYP
14.423 +0.000 -0.001 DIA .002 SEE NOTE 3
13.104 +0.000 -0.005 DIA .004 SEE NOTE 3
13.040 +0.010 -0.000 DIA SEE NOTE 3
11.450 +0.010 -0.000 DIA SEE NOTE 3
15.734 +0.000 -0.001 DIA .002 SEE NOTE 3
17.926 +0.005 -0.000 DIA .002
4.250 +0.000 -0.010 SEE NOTE 3
2.150 +0.000 -0.010 SEE NOTE 3
SEE NOTE 4
SEE NOTE 6
96
63 61
97 92
98
21
13
93
59 63
63 59
23
98
62 63
93
101
95
35
37
34
89
95
36
86
88
90
15
29
18
17
55
56
93
14
102
58
87
22
16 66
127
19
102
20

	STRESS ENG'R			REVIEWED BY			PROJECT NUMBER
				2711			1-2700-211-12
				2711			

LIST OF MATERIAL

PC. NO.	NAME OF PIECE	NO. REQD	MATERIAL OR SOURCE
13	SERVICE END OUTER ROTOR CURRENT COLLECTOR RING	-	REF DTRC DWG A27-19992-22
14	SERVICE END OUTER ROTOR CURRENT COLLECTOR	-	REF DTRC DWG A27-19992-23
15	SERVICE END TERMINAL COLLECTOR DISK	-	REF DTRC DWG A27-19992-24
16	OUTER ROTOR BAR	-	REF DTRC DWG A27-19992-25
17	OUTER ROTOR OUTER DRUM	-	REF DTRC DWG A27-19992-26
18	DRIVE END TERMINAL COLLECTOR DISK	-	REF DTRC DWG A27-19992-27
19	DRIVE END OUTER ROTOR CURRENT COLLECTOR	-	REF DTRC DWG A27-19992-28
20	DRIVE END OUTER ROTOR CURRENT COLLECTOR RING	-	REF DTRC DWG A27-19992-29
21	SERVICE END OUTER ROTOR RETURN RING	-	REF DTRC DWG A27-19992-30
22	OUTER ROTOR CYLINDER	-	REF DTRC DWG A27-19992-31
23	DRIVE END OUTER ROTOR RETURN RING	-	REF DTRC DWG A27-19992-32
29	ELECTRICAL INSULATOR	-	REF DTRC DWG A27-19992-36
33	SERVICE END STUB SHAFT	-	REF DTRC DWG A27-19992-37
34	TRANSITION CYLINDER	-	REF DTRC DWG A27-19992-38
35	DRIVE END STUB SHAFT	-	REF DTRC DWG A27-19992-39
36	TRANSITION FLANGE	-	REF DTRC DWG A27-19992-32
55	SERVICE END OUTER ROTOR RETURN RING LEFT PAD	-	REF DTRC DWG A27-19992-33
56	SERVICE END OUTER ROTOR RETURN RING RIGHT PAD	-	REF DTRC DWG A27-19992-33
58	OUTER ROTOR 180° TUBE BEND-SHORT	-	REF DTRC DWG A27-19992-46
59	INSULATED BOLT, 1/4-20UNC-3A X 1 LONG	-	REF DTRC DWG A27-19992-44
61	INSULATED BOLT, 1/4-20UNC-3A X 2 1/2 LONG	-	REF DTRC DWG A27-19992-44
62	INSULATED BOLT, 1/4-20UNC-3A X 2 3/4 LONG	-	REF DTRC DWG A27-19992-44
63	INSULATED WASHER, 1/4 BOLT SIZE	-	REF DTRC DWG A27-19992-44
66	HAYSITE POLYESTER GLASS LAMINATE SHEET, .084 THK	-	REF DTRC DWG A27-19992-25
87	TUBE, 5/16 OD, .028 WALL, 61/64 LONG	-	REF DTRC DWG A27-19992-1
88	INLET/OUTLET TUBE, 4 7/8 LONG	-	REF DTRC DWG A27-19992-1
89	INLET/OUTLET TUBE, 2 5/16 LONG	-	REF DTRC DWG A27-19992-1
90	INSULATOR, .406 ID, .531 OD, 1.438 LONG, (GLASS LAMINATE)	-	REF DTRC DWG A27-19992-1
92	WASHER, FLAT, .438 OD, .266 ID, .094 THK	-	REF DTRC DWG A27-19992-1
93	SOCKET HEAD CAP SCREW, 1/4-20UNC-3A X 3/4 LG	-	REF DTRC DWG A27-19992-1
95	SOCKET HEAD CAP SCREW, 1/4-20UNC-3A X 1 1/4 LG	-	REF DTRC DWG A27-19992-1
96	SOCKET HEAD CAP SCREW, 1/4-20UNC-3A X 1 1/2 LG	-	REF DTRC DWG A27-19992-1
97	SOCKET HEAD CAP SCREW, 1/4-20UNC-3A X 1 5/8 LG	-	REF DTRC DWG A27-19992-1
98	SOCKET HEAD CAP SCREW, 1/4-20UNC-3A X 2 1/4 LG	-	REF DTRC DWG A27-19992-1
101	SOCKET HEAD CAP SCREW, 3/8-16UNC-3A X 4 7/8 LG	-	REF DTRC DWG A27-19992-1
102	O-RING, 13.178 ±.065 ID, .139 ±.004 WIDE, 13.456 OD REF	-	REF DTRC DWG A27-19992-1
127	OUTER ROTOR 180° TUBE BEND-LONG	-	REF DTRC DWG A27-19992-46

CADDS PART NAME
AN.2711.DLL.175HPMTR.ORA
REFERENCES
SHEETS
A27-19992-1, -9, -22, -23, -24, -25, -26, -27, -28, -29, -30, -31, -32, -33, -36, -37, -38, -39, -44, -45
SESD NO.

REV.	ZONE	DESCRIPTION	BY	APP'D	DATE

REVISIONS

DATE 12/7/90
DRAWN
CHECKED
DESIGNED
REVIEWED
APPROVED
DATE

NORMAL CONDUCTIVE, HOMOPOLAR, CONTRAROTATING, 175 HP MOTOR

OUTER ROTOR ASSEMBLY SECTION

SCALE: 1/1

DEPARTMENT OF NAVY
DAVID TAYLOR RESEARCH CENTER

DTRC NUMBER: A27-19992-8
REVISION: -

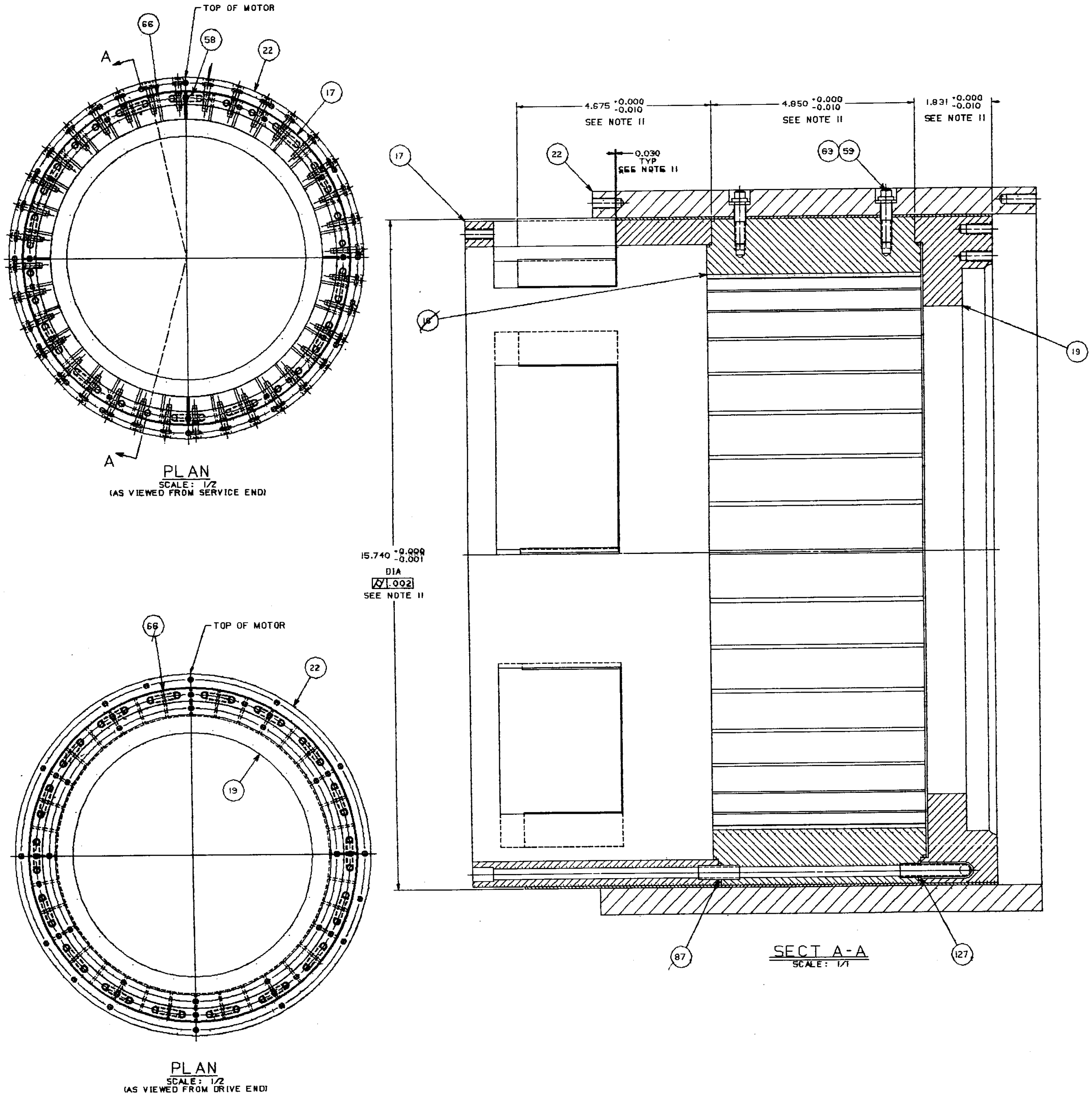
TOP OF MOTOR
66
58
22
17
A
A
PLAN
SCALE: 1/2
(AS VIEWED FROM SERVICE END)
4.675 +0.000 -0.010
SEE NOTE 11
4.850 +0.000 -0.010
SEE NOTE 11
1.831 +0.000 -0.010
SEE NOTE 11
0.030 TYP
SEE NOTE 11
17
22
63
59
16
19
15.740 +0.000 -0.001
DIA
⌭ .002
SEE NOTE 11
87
127
SECT A-A
SCALE: 1/1
TOP OF MOTOR
66
22
19
PLAN
SCALE: 1/2
(AS VIEWED FROM DRIVE END)

SHOPWORK REQUEST NO.	PRINT RECORD

STRESS ENG'R			REVIEWED BY			PROJECT NUMBER
			2711			1-2700-211-12
			2711			

LIST OF MATERIAL

PC. NO.	NAME OF PIECE	NO. REQD.	MATERIAL OR SOURCE
16	OUTER ROTOR BAR	-	REF DTRC DWG A27-19992-25
17	OUTER ROTOR OUTER DRUM	-	REF DTRC DWG A27-19992-26
19	DRIVE END OUTER ROTOR CURRENT COLLECTOR	-	REF DTRC DWG A27-19992-28
22	OUTER ROTOR CYLINDER	-	REF DTRC DWG A27-19992-31
58	OUTER ROTOR 180° TUBE BEND-SHORT	-	REF DTRC DWG A27-19992-45
59	INSULATED BOLT, 1/4-20UNC-3A X 1 LONG	-	REF DTRC DWG A27-19992-44
63	INSULATED WASHER, 1/4 BOLT SIZE	-	REF DTRC DWG A27-19992-44
66	GLASS LAMINATE SHEET, .094 THK	-	REF DTRC DWG A27-19992-25
87	TUBE, 5/16 OD, .028 WALL, 61/64 LONG	-	REF DTRC DWG A27-19992-1
127	OUTER ROTOR 180° TUBE BEND-LONG	-	REF DTRC DWG A27-19992-45

OUTER ROTOR FABRICATION PROCEDURES

1. FINISH MACHINE SIDES, AND ROUGH MACHINE ID, AND OD OF BARS, START WITH A LONG ENOUGH PIECE TO MAKE 2 OR 3 BARS, HAVE ENOUGH EXTRA MATERIAL ON INSIDE OF BARS TO ALLOW BOLTING TO A FIXTURE RING.
2. DRILL, AND TAP MOUNTING HOLES ON INSIDE SURFACE OF BARS (IN EXTRA MATERIAL).
3. BOLT BARS TO THE OUTSIDE OF A STAINLESS STEEL FIXTURE RING.
4. DRILL COOLANT HOLES USING AN INDEXING HEAD FOR ACCURACY, AND MACHINE ENDS OF BARS FOR BRAZE JOINT.
5. BRAZE TUBE BENDS TO END OF BARS WITH HIGH TEMPERATURE BRAZE.
6. LEAK TEST COOLING CIRCUIT.
7. BRAZE COPPER COLLECTOR, AND COPPER DRUM IN PLACE, USE SHORT TUBES FOR INLET, AND OUTLET CONNECTIONS (LONG INLET, AND OUTLET TUBES WILL BE SOFT SOLDERED INTO THE COPPER DRUM AT A LATER TIME).
8. LEAK TEST COOLING CIRCUIT.
9. MACHINE OD OF IRON BARS, COPPER COLLECTOR, AND COPPER DRUM.
10. DRILL AND TAP OUTSIDE OF BARS FOR 72 MOUNTING BOLTS.
11. APPLY GLASS/EPOXY, AS AN INSULATION, TO OD OF IRON BARS, COPPER COLLECTOR, AND COPPER DRUM. ALSO, APPLY GLASS/EPOXY TO SIDES OF CUTOUTS IN COPPER DRUM. MACHINE INSULATION TO DIMENSIONS SHOWN ON THIS SHEET.
12. MOUNT ASSEMBLY IN OUTER ROTOR CYLINDER, AND REMOVE STAINLESS STEEL RING.
13. MACHINE OFF EXTRA METAL ON INSIDE OF BARS, AND FINISH MACHINE ALL INSIDE SURFACES OF IRON, AND COPPER ASSEMBLY.
14. EPOXY GLASS LAMINATE FLUSH WITH ID, AND ENDS OF SEPARATE BARS.
15. REF DTRC DWG A27-19992-8 FOR ADDITIONAL MACHINING, AND FINAL ASSEMBLY OF OUTER ROTOR.

REV.	ZONE	DESCRIPTION	BY	APP'D	DATE

REVISIONS

CAEDOS PART NAME
AN.2711.DLL.175HPMTR.ORSA
REFERENCES
SHEETS
A27-19992-1, -8, -25,
-26, -28, -31, -44, -45
SESD NO.

DATE 11/21/90
DRAWN
CHECKED
DESIGNED
REVIEWED
APPROVED
DATE

NORMAL CONDUCTIVE, HOMOPOLAR, CONTRAROTATING, 175 HP MOTOR

OUTER ROTOR
SUBASSEMBLY

SCALE: AS NOTED

DEPARTMENT OF NAVY
DAVID TAYLOR
RESEARCH CENTER

DTRC NUMBER	REVISION
A27-19992-9	-

INNER ROTOR FABRICATION PROCEDURES

1. FINISH MACHINE SIDES, AND ROUGH MACHINE ID OF BARS. START WITH A LONG ENOUGH PIECE TO MAKE 2 OR 3 BARS.
2. DRILL, AND TAP MOUNTING HOLES ON INSIDE SURFACE OF BARS.
3. BOLT BARS TO THE OUTSIDE OF A STAINLESS STEEL FIXTURE RING.
4. DRILL COOLANT HOLES, USING AN INDEXING HEAD FOR ACCURACY, AND MACHINE ENDS OF BARS FOR BRAZE JOINT.
5. BRAZE TUBE BENDS TO END OF BARS WITH HIGH TEMPERATURE BRAZE.
6. LEAK TEST COOLING CIRCUIT.
7. BRAZE COPPER TRANSITION RINGS IN PLACE, USE SHORT TUBES FOR INLET, AND OUTLET CONNECTIONS (LONG INLET, AND OUTLET TUBES WILL BE SOFT SOLDERED INTO THE COPPER RING AT A LATER TIME).
8. LEAK TEST COOLING CIRCUIT
9. MACHINE OD, AND ENDS OF IRON BARS.
10. INSTALL ASSEMBLY IN OD FIXTURE, AND REMOVE STAINLESS STEEL RING.
11. FINISH MACHINE ID OF BARS
12. INSTALL BAR ASSEMBLY ON THE INSULATED STEEL INNER ROTOR CYLINDER, AND MOUNT ON A MANDREL.
13. FINISH MACHINE OD, AND ENDS OF IRON BARS, AND COPPER TRANSITION RINGS.
14. EPOXY GLASS LAMINATE FLUSH WITH OD, AND ENDS OF SEPARATE BARS.
15. REF DTRC DWG A27-19992-7 FOR ADDITIONAL MACHINING, AND FINAL ASSEMBLY OF INNER ROTOR.

STRESS ENG'R			REVIEWED BY			PROJECT NUMBER
						1-2700-211-12
			2711			
			2711			

LIST OF MATERIAL

PC. NO.	NAME OF PIECE	NO. REQD.	MATERIAL OR SOURCE
3	INNER ROTOR CYLINDER	-	REF DTRC DWG A27-19992-14
8	INNER ROTOR BAR	-	REF DTRC DWG A27-19992-17
10	SERVICE END INNER ROTOR TRANSITION RING	-	REF DTRC DWG A27-19992-19
11	DRIVE END INNER ROTOR TRANSITION RING	-	REF DTRC DWG A27-19992-20
57	INNER ROTOR 180° TUBE BEND	-	REF DTRC DWG A27-19992-45
60	INSULATED BOLT, 1/4-20UNC-3A X 1 3/8 LG	-	REF DTRC DWG A27-19992-44
63	INSULATED WASHER, 1/4 BOLT SIZE	-	REF DTRC DWG A27-19992-44
65	GLASS LAMINATE SHEET, .094 THK	-	REF DTRC DWG A27-19992-17
86	TUBE, 5/16 OD, .028 WALL, 53/64 LONG	-	REF DTRC DWG A27-19992-1

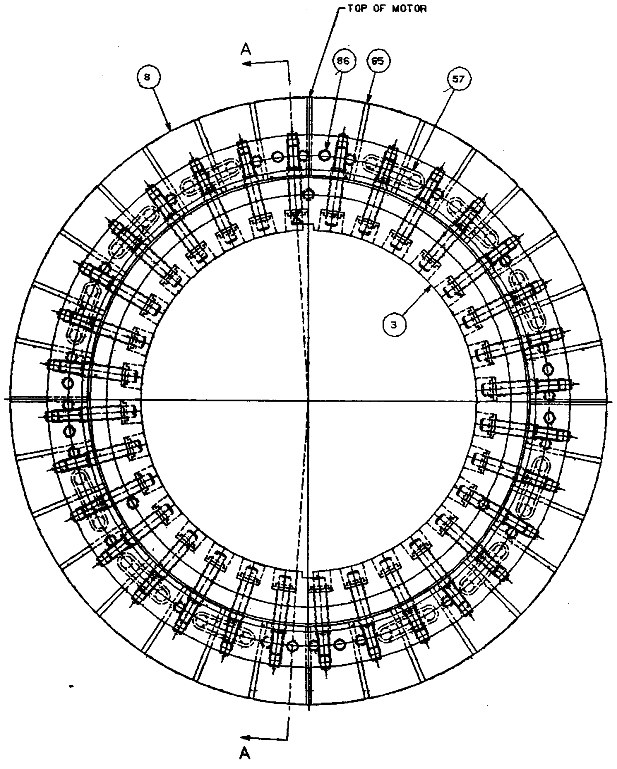

PLAN
(AS VIEWED FROM ~~SERVICE~~ END)

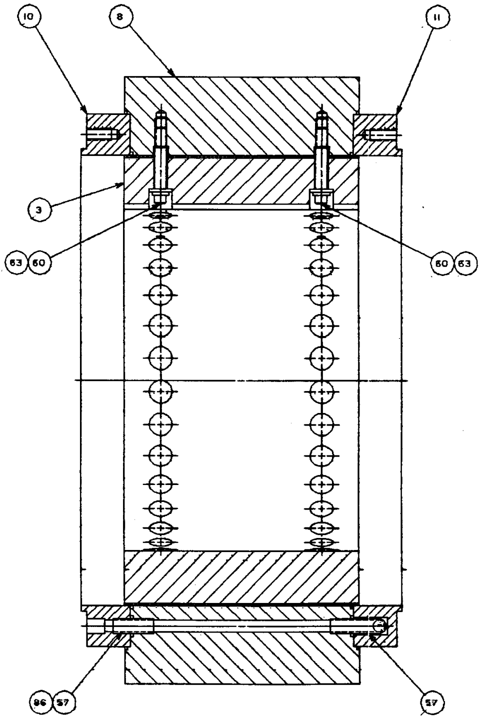

SECT A-A

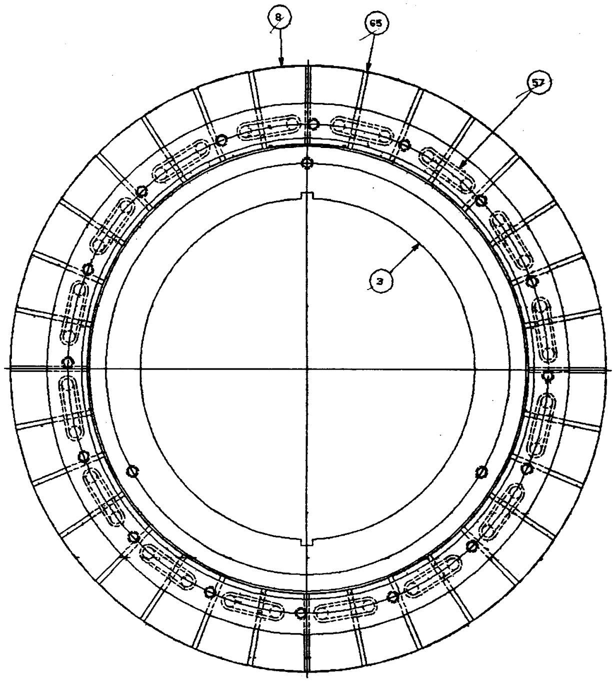

PLAN
(AS VIEWED FROM DRIVE END)

REV.	ZONE	DESCRIPTION	BY	APP'D	DATE

REVISIONS

CAEDOS PART NAME
AN.2711.DLL.175HPMTR.IRSA
REFERENCES
SHEET10
A27-19992-1, -7, -14, -17, -19, -20, -44, -45
SESD NO.

DATE 11/14/90
DRAWN
CHECKED
DESIGNED
REVIEWED
APPROVED
DATE

NORMAL CONDUCTIVE, HOMOPOLAR, CONTRAROTATING 175 HP MOTOR

INNER ROTOR SUBASSEMBLY

SCALE: 1/1

DEPARTMENT OF NAVY
DAVID TAYLOR RESEARCH CENTER

DTRC NUMBER A27-19992-10
REVISION -

SHOPWORK REQUEST NO.		PRINT RECORD					

STRESS ENG'R			REVIEWED BY			PROJECT NUMBER
CODE	NAME	DATE	CODE	NAME	DATE	1-2700-206-12
			2711			
			2711			

LIST OF MATERIAL

PC. NO.	NAME OF PIECE	NO. REQD.	MATERIAL OR SOURCE
1	INNER ROTOR SHAFT	-	CARBON STEEL, PER AISI GRADE 1018

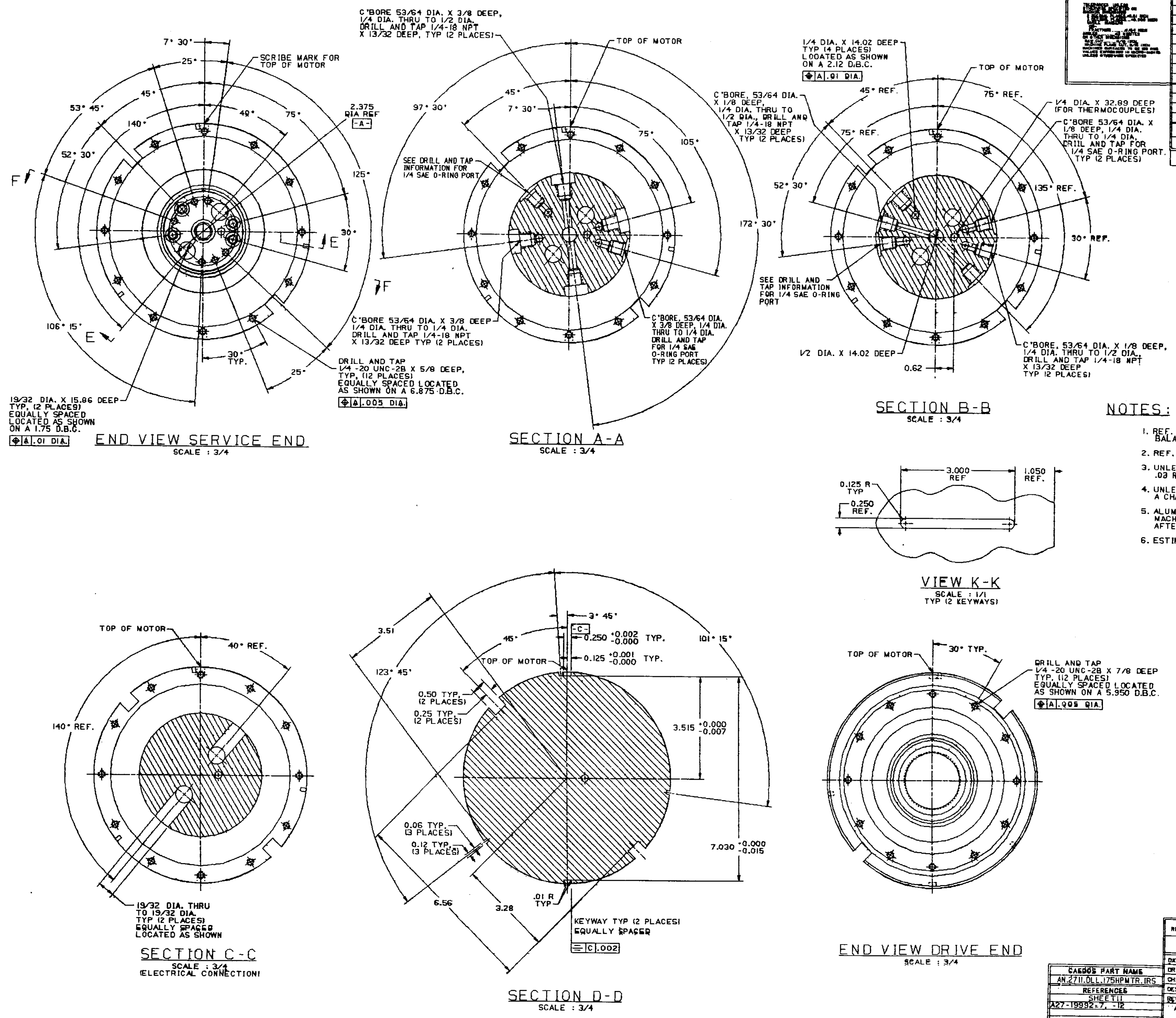

7° 30'
25°
SCRIBE MARK FOR TOP OF MOTOR
53° 45'
45°
140°
49°
75°
2.375 DIA REF
-A-
52° 30'
125°
F
30°
E
106° 15'
E
30° TYP.
25°
19/32 DIA. X 15.86 DEEP TYP. (2 PLACES) EQUALLY SPACED LOCATED AS SHOWN ON A 1.75 D.B.C.
⌖ A .01 DIA.
END VIEW SERVICE END
SCALE : 3/4
C'BORE 53/64 DIA. X 3/8 DEEP, 1/4 DIA. THRU TO 1/2 DIA. DRILL AND TAP 1/4-18 NPT X 13/32 DEEP, TYP (2 PLACES)
TOP OF MOTOR
97° 30'
45°
7° 30'
75°
105°
SEE DRILL AND TAP INFORMATION FOR 1/4 SAE O-RING PORT
172° 30'
F
C'BORE 53/64 DIA. X 3/8 DEEP 1/4 DIA. THRU TO 1/4 DIA. DRILL AND TAP 1/4-18 NPT X 13/32 DEEP TYP (2 PLACES)
C'BORE, 53/64 DIA. X 3/8 DEEP, 1/4 DIA. THRU TO 1/4 DIA. DRILL AND TAP FOR 1/4 SAE O-RING PORT TYP (2 PLACES)
DRILL AND TAP 1/4-20 UNC-2B X 5/8 DEEP, TYP. (12 PLACES) EQUALLY SPACED LOCATED AS SHOWN ON A 6.875 D.B.C.
⌖ A .005 DIA.
SECTION A-A
SCALE : 3/4
1/4 DIA. X 14.02 DEEP TYP (4 PLACES) LOCATED AS SHOWN ON A 2.12 D.B.C.
⌖ A .01 DIA.
TOP OF MOTOR
C'BORE, 53/64 DIA. X 1/8 DEEP, 1/4 DIA. THRU TO 1/2 DIA., DRILL AND TAP 1/4-18 NPT X 13/32 DEEP TYP (2 PLACES)
45° REF.
75° REF.
75° REF.
1/4 DIA. X 32.89 DEEP (FOR THERMOCOUPLES)
C'BORE 53/64 DIA. X 1/8 DEEP, 1/4 DIA. THRU TO 1/4 DIA. DRILL AND TAP FOR 1/4 SAE O-RING PORT. TYP (2 PLACES)
52° 30'
135° REF.
30° REF.
SEE DRILL AND TAP INFORMATION FOR 1/4 SAE O-RING PORT
1/2 DIA. X 14.02 DEEP
0.62
C'BORE, 53/64 DIA. X 1/8 DEEP, 1/4 DIA. THRU TO 1/2 DIA. DRILL AND TAP 1/4-18 NPT X 13/32 DEEP TYP (2 PLACES)
SECTION B-B
SCALE : 3/4
0.125 R TYP
0.250 REF.
3.000 REF
1.050 REF.
VIEW K-K
SCALE : 1/1
TYP (2 KEYWAYS)
TOP OF MOTOR
40° REF.
140° REF.
19/32 DIA. THRU TO 19/32 DIA. TYP (2 PLACES) EQUALLY SPACED LOCATED AS SHOWN
SECTION C-C
SCALE : 3/4
(ELECTRICAL CONNECTION)
3.51
123° 45'
45°
TOP OF MOTOR
3° 45'
-C-
0.250 +0.002 -0.000 TYP.
0.125 +0.001 -0.000 TYP.
101° 15'
0.50 TYP. (2 PLACES)
0.25 TYP. (2 PLACES)
3.515 +0.000 -0.007
0.06 TYP. (3 PLACES)
0.12 TYP. (3 PLACES)
7.030 +0.000 -0.015
6.56
3.28
.01 R TYP
KEYWAY TYP (2 PLACES) EQUALLY SPACED
≡ C .002
SECTION D-D
SCALE : 3/4
TOP OF MOTOR
30° TYP.
DRILL AND TAP 1/4-20 UNC-2B X 7/8 DEEP TYP. (12 PLACES) EQUALLY SPACED LOCATED AS SHOWN ON A 5.950 D.B.C.
⌖ A .005 DIA.
END VIEW DRIVE END
SCALE : 3/4

NOTES:

1. REF. DTRC DWG. A27-19992-7 FOR ASSEMBLY AND DYNAMIC BALANCING.
2. REF. DTRC DWG. A27-19992-12 FOR ADDITIONAL SHAFT DETAILS.
3. UNLESS OTHERWISE SPECIFIED, MACHINED FILLETS TO BE .03 R.
4. UNLESS OTHERWISE SPECIFIED, BREAK SHARP CORNERS WITH A CHAMFER, .03 X 45°.
5. ALUMINUM OXIDE COATING TO BE APPLIED PRIOR TO FINAL MACHINING. DIMENSIONS SHOWN FOR ALUMINUM OXIDE ARE AFTER FINAL MACHINING.
6. ESTIMATED WEIGHT OF PC. NO. 1 IS 202.7 LB.

REV.	ZONE	DESCRIPTION	BY	APP'D	DATE
		REVISIONS			

CAEDOS PART NAME
AN.2711.DLL.175HPMTR.IRS
REFERENCES
SHEET11
A27-19992-7, -12
SESD NO.

DATE 3-29-90
DRAWN JGW
CHECKED
DESIGNED
REVIEWED
APPROVED
DATE

NORMAL CONDUCTIVE, HOMOPOLAR, CONTRAROTATING, 175 HP MOTOR

INNER ROTOR SHAFT DETAILS

SCALE: AS NOTED

DEPARTMENT OF NAVY
DAVID TAYLOR RESEARCH CENTER
CARDEROCK LAB - BETHESDA, MD 20084
ANNAPOLIS LAB - ANNAPOLIS, MD 21402

DTRC NUMBER	REVISION
A27-19992-11	-

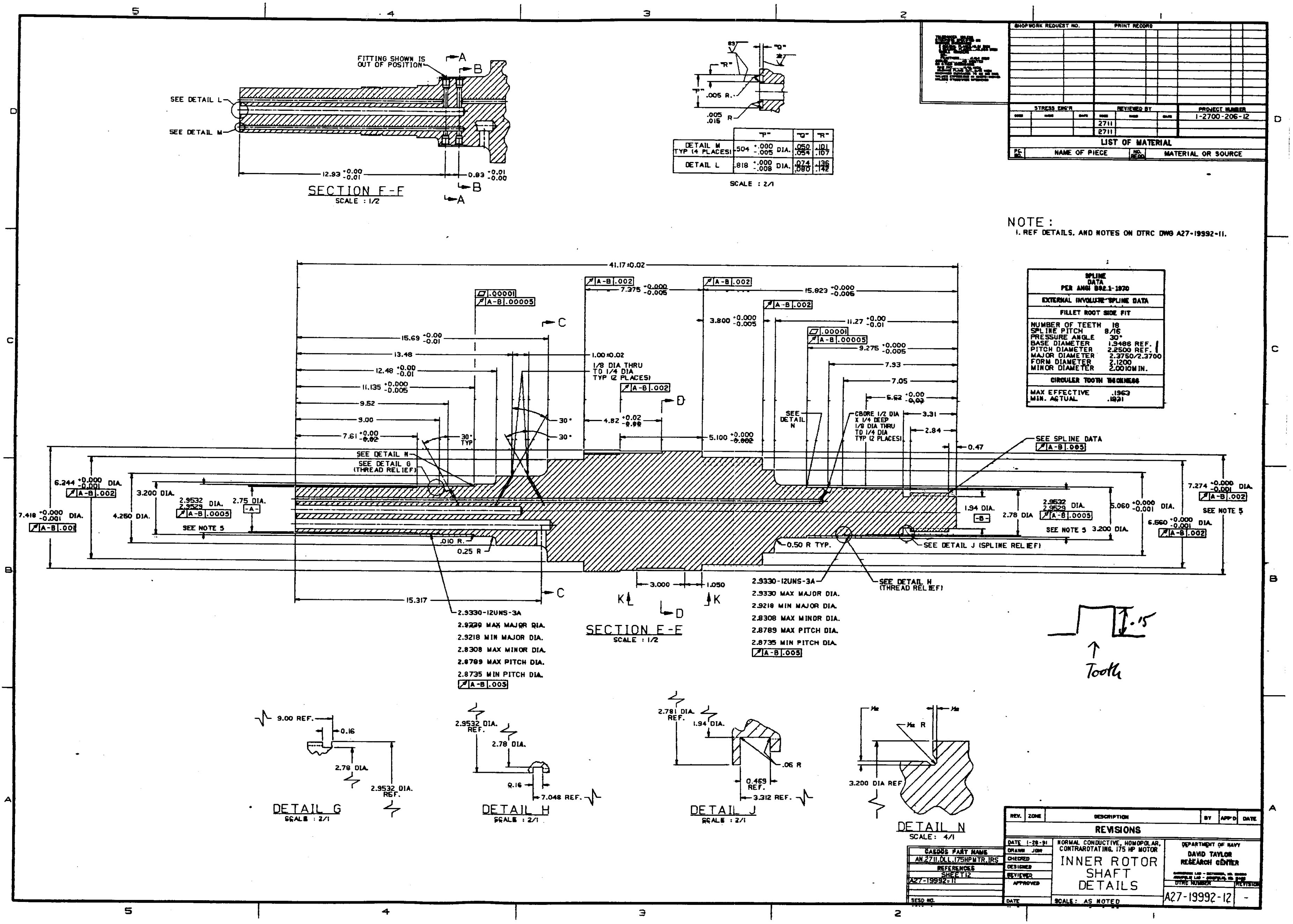
FITTING SHOWN IS OUT OF POSITION
SEE DETAIL L
SEE DETAIL M
A
B
12.93 +0.00 -0.01
0.93 +0.01 -0.00
SECTION F-F
SCALE : 1/2
"Q"
"R"
"P"
.005 R.
.005 .015 R
SCALE : 2/1
41.17±0.02
7.375 +0.000 -0.005
15.823 +0.000 -0.005
3.800 +0.000 -0.005
11.27 +0.00 -0.01
9.275 +0.000 -0.005
7.93
7.05
5.62 +0.00 -0.02
3.31
2.84
0.47
15.69 +0.00 -0.01
13.48
12.48 +0.00 -0.01
11.135 +0.000 -0.005
9.52
9.00
7.61 +0.00 -0.02
1.00±0.02
1/8 DIA THRU TO 1/4 DIA TYP (2 PLACES)
4.82 +0.02 -0.00
5.100 +0.000 -0.002
30°
30° TYP
CBORE 1/2 DIA X 1/4 DEEP 1/8 DIA THRU TO 1/4 DIA TYP (2 PLACES)
SEE DETAIL N
SEE DETAIL G (THREAD RELIEF)
SEE SPLINE DATA
A-B .005
A-B .002
A-B .0005
A-B .00005
.00001
6.244 +0.000 -0.001 DIA.
7.418 +0.000 -0.001 DIA.
A-B .002
3.200 DIA.
4.250 DIA.
2.9532 2.9529 DIA.
2.75 DIA.
-A-
SEE NOTE 5
.010 R.
0.25 R
15.317
1.94 DIA.
-B-
2.78 DIA
2.9532 2.9529 DIA.
SEE NOTE 5
3.200 DIA.
5.060 +0.000 -0.001 DIA.
6.560 +0.000 -0.001 DIA.
7.274 +0.000 -0.001 DIA.
SEE NOTE 5
0.50 R TYP.
SEE DETAIL J (SPLINE RELIEF)
SEE DETAIL H (THREAD RELIEF)
C
D
K
3.000
1.050
SECTION E-E
SCALE : 1/2
2.9330-12UNS-3A
2.9330 MAX MAJOR DIA.
2.9218 MIN MAJOR DIA.
2.8308 MAX MINOR DIA.
2.8789 MAX PITCH DIA.
2.8735 MIN PITCH DIA.
A-B .003
9.00 REF.
0.16
2.78 DIA.
2.9532 DIA. REF.
DETAIL G
SCALE : 2/1
2.9532 DIA. REF.
2.78 DIA.
0.16
7.048 REF.
DETAIL H
SCALE : 2/1
2.781 DIA. REF.
1.94 DIA.
.06 R
0.469 REF.
3.312 REF.
DETAIL J
SCALE : 2/1
1/32
1/32 R
3.200 DIA REF
DETAIL N
SCALE: 4/1
.15
Tooth
5
4
3
2
1
A
B
C
D

	"P"	"Q"	"R"
DETAIL M TYP (4 PLACES)	.504 +.000 -.005 DIA.	.050 .054	.101 .107
DETAIL L	.818 +.000 -.008 DIA.	.074 .080	.136 .142

NOTE:
1. REF DETAILS, AND NOTES ON DTRC DWG A27-19992-11.

SPLINE
DATA
PER ANSI B92.1-1970

EXTERNAL INVOLUTE SPLINE DATA

FILLET ROOT SIDE FIT

NUMBER OF TEETH	18
SPLINE PITCH	8/16
PRESSURE ANGLE	30°
BASE DIAMETER	1.9486 REF.
PITCH DIAMETER	2.2500 REF.
MAJOR DIAMETER	2.3750/2.3700
FORM DIAMETER	2.1200
MINOR DIAMETER	2.0010 MIN.

CIRCULER TOOTH THICKNESS

MAX EFFECTIVE	.1963
MIN. ACTUAL	.1921

SHOPWORK REQUEST NO. | PRINT RECORD

STRESS ENG'R	REVIEWED BY	PROJECT NUMBER
	2711	1-2700-206-12
	2711	

LIST OF MATERIAL

PC. NO.	NAME OF PIECE	NO. REQD	MATERIAL OR SOURCE

REV.	ZONE	DESCRIPTION	BY	APP'D	DATE

REVISIONS

CAEDOS PART NAME
AN2711.DLL.175HPMTR.IRS
REFERENCES
SHEET12
A27-19992-11
SESD NO.

DATE 1-28-91
DRAWN JGW
CHECKED
DESIGNED
REVIEWED
APPROVED
DATE

NORMAL CONDUCTIVE, HOMOPOLAR, CONTRAROTATING, 175 HP MOTOR

INNER ROTOR
SHAFT
DETAILS

SCALE: AS NOTED

DEPARTMENT OF NAVY
DAVID TAYLOR
RESEARCH CENTER

DTRC NUMBER A27-19992-12
REVISION -

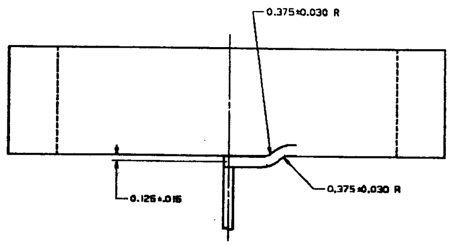
0.375±0.030 R
0.375±0.030 R
0.125±.015

TOP

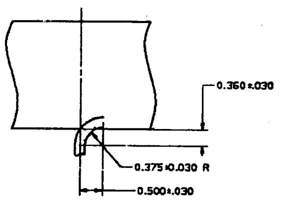
0.360±.030
0.375±0.030 R
0.500±.030

SECT B-B

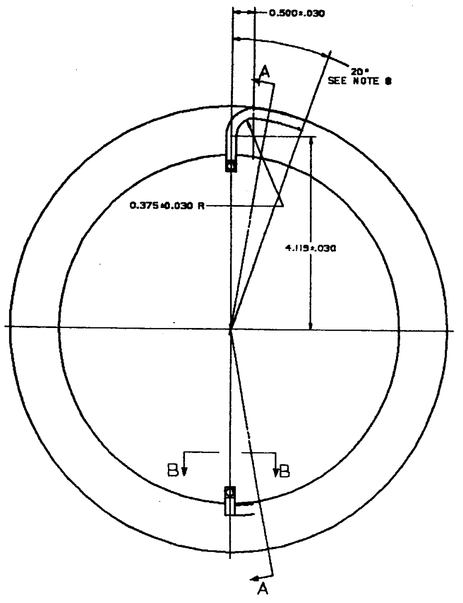
0.500±.030
20°
SEE NOTE 8
A
0.375±0.030 R
4.119±.030
B
B
A

FRONT

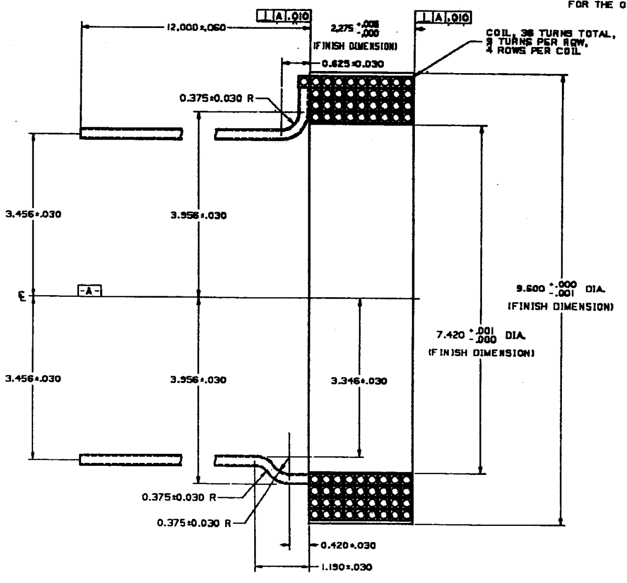
12.000±.060
⊥ A .010
2.275 +.005 -.000
(FINISH DIMENSION)
⊥ A .010
COIL, 36 TURNS TOTAL, 9 TURNS PER ROW, 4 ROWS PER COIL
0.625±0.030
0.375±0.030 R
3.456±.030
3.956±.030
℄
-A-
3.456±.030
3.956±.030
3.346±.030
7.420 +.001 -.000 DIA.
(FINISH DIMENSION)
9.600 +.000 -.001 DIA.
(FINISH DIMENSION)
0.375±0.030 R
0.375±0.030 R
0.420±.030
1.190±.030

SECT A-A

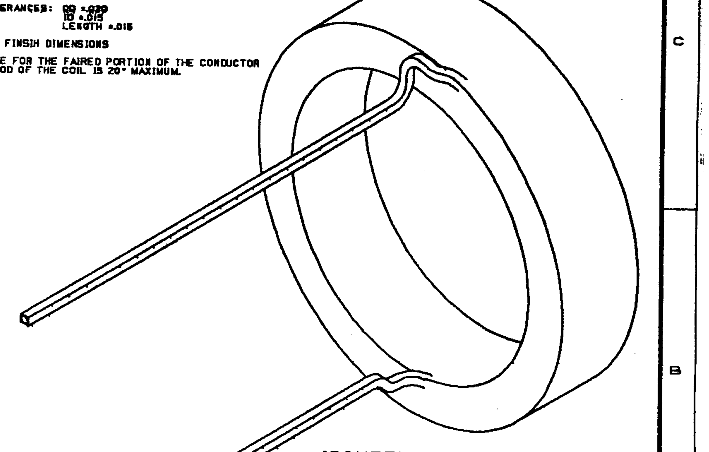

ISOMETRIC VIEW

NOTES:

1. TUBE MATERIAL: COPPER OFHC 102, .218 X .218 TUBE WITH .174 DIAMETER HOLE, CONTINUOUS LENGTH. HOLLOW CONDUCTOR SHALL BE LEAK TESTED BEFORE AND AFTER WINDING AS FOLLOWS:

   PRESSURIZE HOLLOW CONDUCTOR TO 100 PSIG WITH CLEAN DRY SHOP AIR.

   VALVE OFF FROM AIR SOURCE AND MONITOR PRESSURE FOR 24 HOURS.

   OBSERVED PRESSURE DECREASE AFTER 24 HOURS SHALL NOT EXCEED 1 PSIG.

2. CONDUCTOR INSULATION: .007 MICA PAPER/GLASS TAPE/B-STAGED EPOXY RESIN WITH HALF LAP WRAPPING ON TUBE FOR .014 INSULATION THICKNESS.
3. COIL INSULATION: ID, OD, AND ENDS SHALL HAVE A GROUND WALL INSULATION COMPRISED OF CROSS PLY GLASS, AND B-STAGED EPOXY RESIN BUILT TO A THICKNESS OF .010-.015 ACCORDING TO MIL-P-25421, REV B.
4. FOLLOWING WINDING AND INSULATING, ALL RESINS TO BE CURED TO FORM A SOLID ASSEMBLY.
5. ALL INSULATION MATERIALS TO BE CLASS F OR BETTER, INSULATION TEST RATING=1500 VOLTS.
6. CONDUCTOR TUBE BEND RADIUS: 3/8 TO INSIDE OF BEND.
7. COIL TOLERANCES: OD ±.030
   ID ±.015
   LENGTH ±.015

   PRIOR TO FINSIH DIMENSIONS

8. THE ANGLE FOR THE FAIRED PORTION OF THE CONDUCTOR FOR THE OD OF THE COIL IS 20° MAXIMUM.

SHOPWORK REQUEST NO.	PRINT RECORD

STRESS ENG'R	REVIEWED BY	PROJECT NUMBER
	2711	1-2700-206-12
	2711	

LIST OF MATERIAL

PC. NO.	NAME OF PIECE	NO. REQD.	MATERIAL OR SOURCE
2	FIELD COIL ASSEMBLY	-	SEE NOTES 1 THRU 5

REV.	ZONE	DESCRIPTION	BY	APP'D	DATE
A	VAR	CHANGED DWG NUMBER FROM A27-19992-20 TO A27-19992-13. CHANGE TOLERANCE FROM ±.015 TO +.005/-.000 ON 2.275 DIMENSION. CHANGED TOLERANCE FROM ±.030 TO +.000/-.001 OR 9.600 DIMENSION. CHANGED DIMENSION ON I.D. OF COIL FROM 7.412 ±.015 DIA. TO 7.420 +.001/-.000 DIA.	JGW		

REVISIONS

DAEDOS PART NAME
AN.2711.DLL.175HPMTR.COIL
REFERENCES
SHEET13
SEQ NO.

DATE 9/9/89
DRAWN
CHECKED
DESIGNED
REVIEWED
APPROVED
S/J DRAKE
DATE 9/28/89

NORMAL CONDUCTIVE, HOMOPOLAR CONTRAROTATING, 175 HP MOTOR

FIELD COIL ASSEMBLY

SCALE: 1/1

DEPARTMENT OF NAVY
DAVID TAYLOR
RESEARCH CENTER

DTRC NUMBER: A27-19992-13
REVISION: A

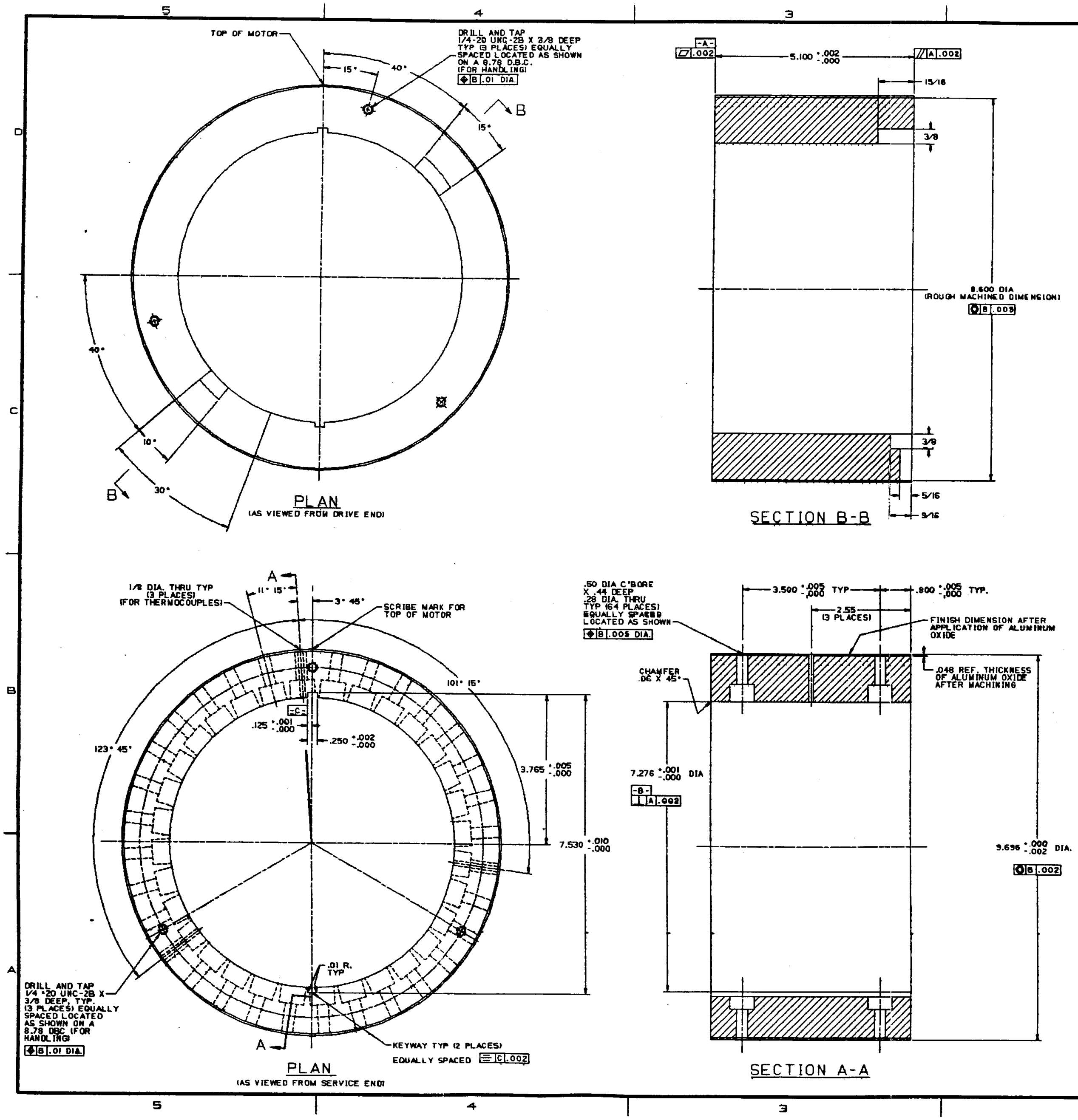
TOP OF MOTOR
DRILL AND TAP 1/4-20 UNC-2B X 3/8 DEEP TYP (3 PLACES) EQUALLY SPACED LOCATED AS SHOWN ON A 8.78 D.B.C. (FOR HANDLING)
⌖ B .01 DIA.
15°
40°
15°
B
40°
10°
30°
B
PLAN
(AS VIEWED FROM DRIVE END)
-A-
▱ .002
5.100 +.002 -.000
// A .002
15/16
3/8
8.600 DIA (ROUGH MACHINED DIMENSION)
◎ B .009
3/8
5/16
9/16
SECTION B-B
1/8 DIA. THRU TYP (3 PLACES) (FOR THERMOCOUPLES)
A
11° 15°
3° 45°
SCRIBE MARK FOR TOP OF MOTOR
101° 15°
-C-
.125 +.001 -.000
.250 +.002 -.000
123° 45°
3.765 +.005 -.000
7.530 +.010 -.000
.01 R. TYP
DRILL AND TAP 1/4-20 UNC-2B X 3/8 DEEP, TYP. (3 PLACES) EQUALLY SPACED LOCATED AS SHOWN ON A 8.78 DBC (FOR HANDLING)
⌖ B .01 DIA.
A
KEYWAY TYP (2 PLACES) EQUALLY SPACED ⌯ C .002
PLAN
(AS VIEWED FROM SERVICE END)
.50 DIA C'BORE X .44 DEEP .28 DIA. THRU TYP (64 PLACES) EQUALLY SPACED LOCATED AS SHOWN
⌖ B .005 DIA.
3.500 +.005 -.000 TYP
.800 +.005 -.000 TYP.
2.55 (3 PLACES)
FINISH DIMENSION AFTER APPLICATION OF ALUMINUM OXIDE
CHAMFER .06 X 45°
.048 REF. THICKNESS OF ALUMINUM OXIDE AFTER MACHINING
7.276 +.001 -.000 DIA
-B-
⊥ A .002
9.696 +.000 -.002 DIA.
◎ B .002
SECTION A-A

SHOPWORK REQUEST NO.		PRINT RECORD					

STRESS ENG'R	REVIEWED BY	PROJECT NUMBER
	2711	1-2700-206-12
	2711	

LIST OF MATERIAL

PC. NO.	NAME OF PIECE	NO. REQ'D	MATERIAL OR SOURCE
3	INNER ROTOR CYLINDER	-	CARBON STEEL, PER AISI GRADE 1018

NOTES:

1. UNLESS OTHERWISE SPECIFIED, BREAK SHARP CORNERS WITH A CHAMFER, .03 X 45°.
2. UNLESS OTHERWISE SPECIFIED, MACHINED FILLETS TO BE .03 R.
3. ESTIMATED WEIGHT OF PC. NO. 3 IS 46.5 LB.

REV.	ZONE	DESCRIPTION	BY	APP'D	DATE

REVISIONS

CADDS PART NAME	AN.2711.DLL.175HPMTR.IRC
REFERENCES	SHEET14
SESD NO.	

DATE 10/17/89
DRAWN RLS
CHECKED
DESIGNED
REVIEWED
APPROVED
DATE

NORMAL CONDUCTIVE, HOMOPOLAR, CONTRAROTATING, 175 HP MOTOR

INNER ROTOR CYLINDER DETAILS

SCALE: 1/1

DEPARTMENT OF NAVY
DAVID TAYLOR RESEARCH CENTER

DTRC NUMBER A27-19992-14
REVISION -

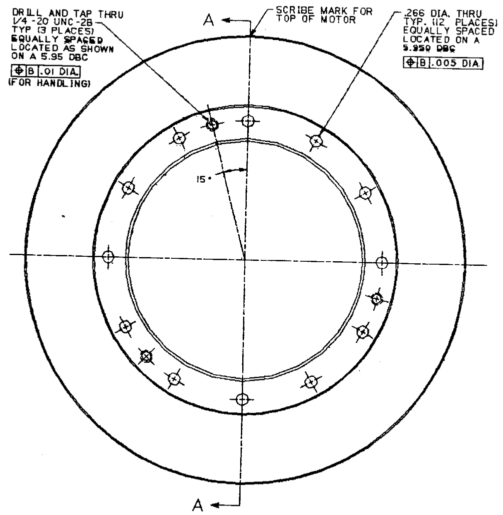
DRILL AND TAP THRU
1/4-20 UNC-2B
TYP (3 PLACES)
EQUALLY SPACED
LOCATED AS SHOWN
ON A 5.95 DBC
⌖ B .01 DIA.
(FOR HANDLING)
A
SCRIBE MARK FOR
TOP OF MOTOR
.266 DIA. THRU
TYP. (12 PLACES)
EQUALLY SPACED
LOCATED ON A
5.950 DBC
⌖ B .005 DIA.
15°
A

⑦ PLAN
(AS VIEWED FROM SERVICE END)

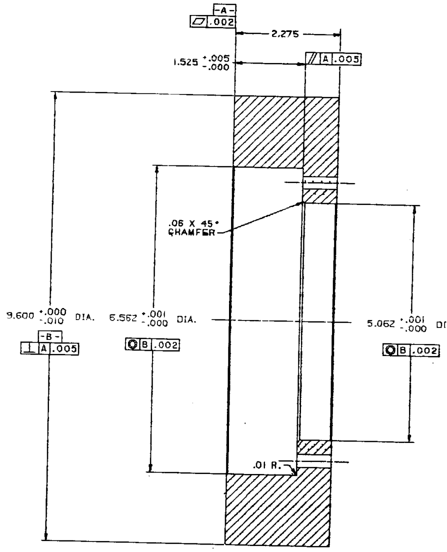
-A-
▱ .002
2.275
1.525 +.005 -.000
// A .005
9.600 +.000 -.010 DIA.
-B-
⊥ A .005
6.562 +.001 -.000 DIA.
◎ B .002
.06 X 45° CHAMFER
.01 R.
5.062 +.001 -.000 DIA.
◎ B .002

SECTION A-A

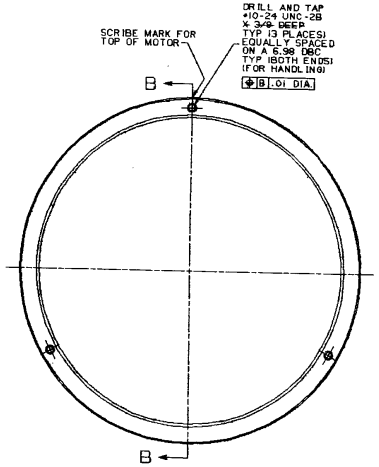
SCRIBE MARK FOR
TOP OF MOTOR
DRILL AND TAP
#10-24 UNC-2B
X 3/8 DEEP
TYP (3 PLACES)
EQUALLY SPACED
ON A 6.98 DBC
TYP (BOTH ENDS)
(FOR HANDLING)
⌖ B .01 DIA.
B
B

⑤ PLAN
(AS VIEWED FROM SERVICE END)

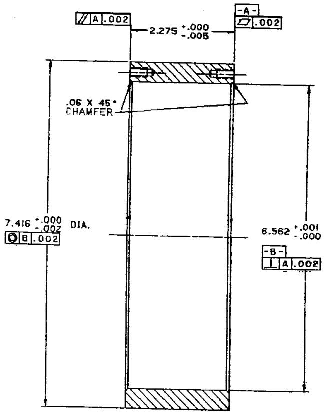
// A .002
2.275 +.000 -.005
-A-
▱ .002
.06 X 45° CHAMFER
7.416 +.000 -.002 DIA.
◎ B .002
6.562 +.001 -.000 DIA.
-B-
⊥ A .002

SECTION B-B

SHOPWORK REQUEST NO.	PRINT RECORD

STRESS ENG'R	REVIEWED BY	PROJECT NUMBER
	2711	1-2700-206-12
	2711	

LIST OF MATERIAL

PC. NO.	NAME OF PIECE	NO. REQ'D	MATERIAL OR SOURCE
5	FIELD COIL ASSEMBLY SHAFT SLEEVE	-	CARBON STEEL, PER AISI GRADE 1018
7	DRIVE END, INNER ROTOR, RETURN RING	-	CARBON STEEL, PER ASTM A36

NOTES:

1. UNLESS OTHERWISE SPECIFIED, BREAK SHARP CORNERS WITH A CHAMFER. .03 X 45°.
2. UNLESS OTHERWISE SPECIFIED, MACHINED FILLETS TO BE .03 R.
3. ESTIMATED WEIGHT OF PC. NO. 5 IS 6.0 LB.
4. ESTIMATED WEIGHT OF PC. NO. 7 IS 27.7 LB.

REV.	ZONE	DESCRIPTION	BY	APP'D	DATE

REVISIONS

CAEDOS PART NAME	AN.2711.DLL.175HPMTR.DE(RRR
REFERENCES	SHEET15
SESD NO.	

DATE 10/16/89
DRAWN RLS
CHECKED
DESIGNED
REVIEWED
APPROVED
DATE

NORMAL CONDUCTIVE, HOMOPOLAR, CONTRAROTATING 175 HP MOTOR

DRIVE END, INNER ROTOR, RETURN RING DETAILS

SCALE: 1/1

DEPARTMENT OF NAVY
DAVID TAYLOR RESEARCH CENTER

DTRC NUMBER A27-19992-15
REVISION -

SHOPWORK REQUEST NO.		PRINT RECORD					

STRESS ENG'R			REVIEWED BY			PROJECT NUMBER
						1-2700-206-12
			2711			
			2711			

LIST OF MATERIAL

PC. NO.	NAME OF PIECE	NO. REQD.	MATERIAL OR SOURCE
6	SERVICE END, INNER ROTOR, RETURN RING	-	CARBON STEEL, PER ASTM A36

NOTES:

1. UNLESS OTHERWISE SPECIFIED, BREAK SHARP CORNERS WITH A CHAMFER, .03 X 45°.
2. UNLESS OTHERWISE SPECIFIED, MACHINED FILLETS TO BE .03 R.
3. ESTIMATED WEIGHT OF PC. NO. 6 IS 46.4 LB.

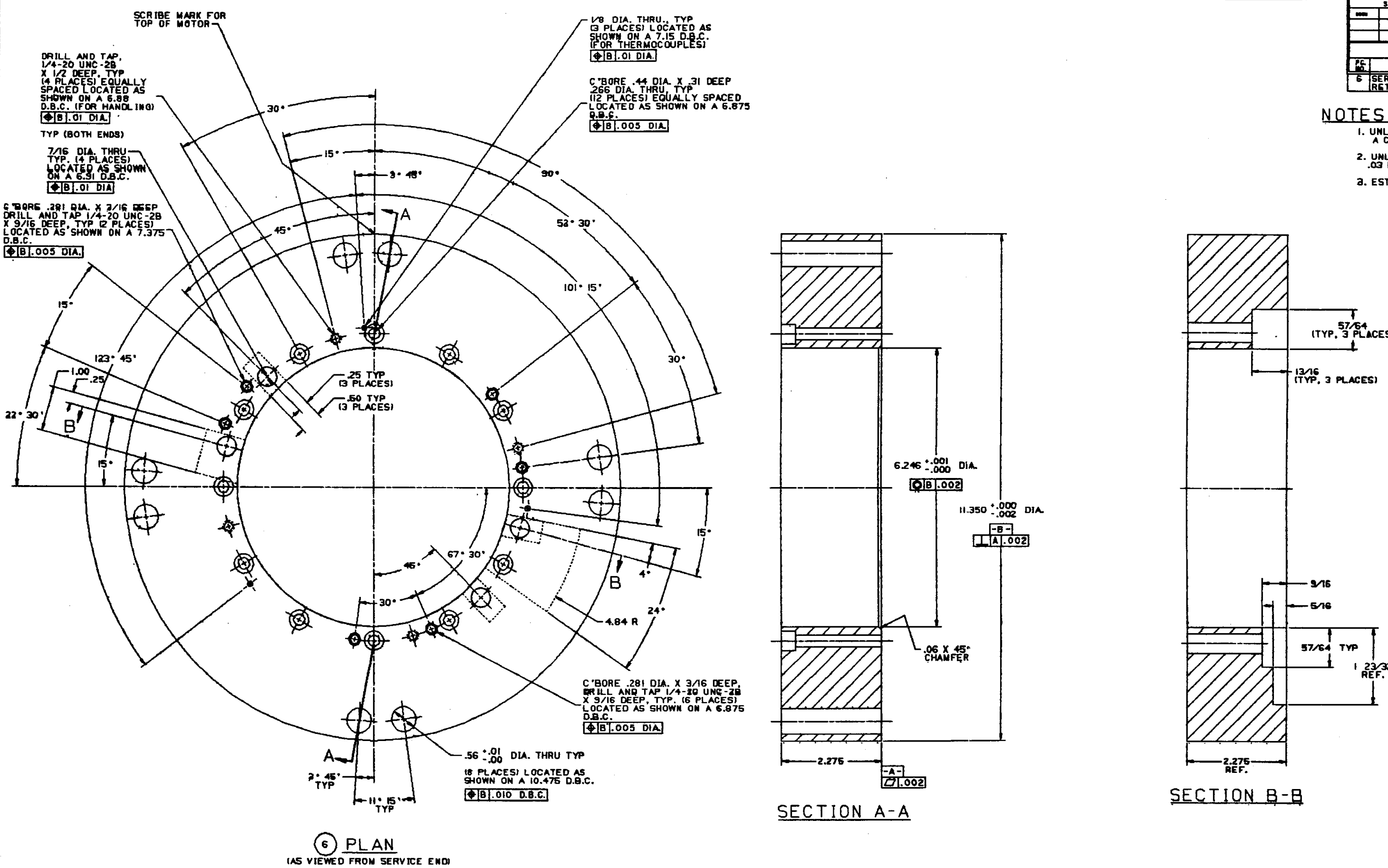
SCRIBE MARK FOR TOP OF MOTOR
DRILL AND TAP, 1/4-20 UNC-2B X 1/2 DEEP, TYP (4 PLACES) EQUALLY SPACED LOCATED AS SHOWN ON A 6.88 D.B.C. (FOR HANDLING)
⌖ B .01 DIA.
TYP (BOTH ENDS)
7/16 DIA. THRU TYP. (4 PLACES) LOCATED AS SHOWN ON A 6.91 D.B.C.
⌖ B .01 DIA
C'BORE .281 DIA. X 3/16 DEEP DRILL AND TAP 1/4-20 UNC-2B X 9/16 DEEP, TYP (2 PLACES) LOCATED AS SHOWN ON A 7.375 D.B.C.
⌖ B .005 DIA.
1/8 DIA. THRU., TYP (3 PLACES) LOCATED AS SHOWN ON A 7.15 D.B.C. (FOR THERMOCOUPLES)
⌖ B .01 DIA.
C'BORE .44 DIA. X .31 DEEP .266 DIA. THRU, TYP (12 PLACES) EQUALLY SPACED LOCATED AS SHOWN ON A 6.875 D.B.C.
⌖ B .005 DIA.
C'BORE .281 DIA. X 3/16 DEEP, DRILL AND TAP 1/4-20 UNC-2B X 9/16 DEEP, TYP. (6 PLACES) LOCATED AS SHOWN ON A 6.875 D.B.C.
⌖ B .005 DIA.
.56 +.01 -.00 DIA. THRU TYP (8 PLACES) LOCATED AS SHOWN ON A 10.475 D.B.C.
⌖ B .010 D.B.C.
30°
15°
3° 45'
90°
52° 30'
101° 15'
45°
30°
15°
123° 45'
1.00
.25
22° 30'
15°
.25 TYP (3 PLACES)
.50 TYP (3 PLACES)
15°
4°
24°
4.84 R
67° 30'
45°
30°
2° 45' TYP
11° 15' TYP
A
B
6.246 +.001 -.000 DIA.
⌖ B .002
11.350 +.000 -.002 DIA.
-B-
⊥ A .002
.06 X 45° CHAMFER
2.275
-A-
⏥ .002
57/64 (TYP, 3 PLACES)
13/16 (TYP, 3 PLACES)
3/16
5/16
57/64 TYP
1 23/32 REF.
2.275 REF.

⑥ PLAN
(AS VIEWED FROM SERVICE END)

SECTION A-A

SECTION B-B

CADDOS PART NAME
AN.2711.DLL.175HPMTR.SEIRRR
REFERENCES
SHEET16
SESD NO.

REV.	ZONE	DESCRIPTION	BY	APP'D	DATE

REVISIONS

DATE 10/17/89	NORMAL CONDUCTIVE, HOMOPOLAR, CONTRAROTATING, 175 HP MOTOR	DEPARTMENT OF NAVY DAVID TAYLOR RESEARCH CENTER
DRAWN RLS	SERVICE END, INNER ROTOR, RETURN RING DETAILS	
CHECKED		
DESIGNED		
REVIEWED		DTRC NUMBER: A27-19992-16
APPROVED		REVISION: -
DATE	SCALE: 1/1	

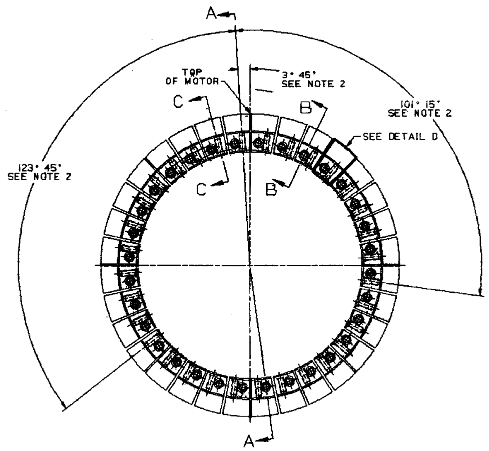
A
TOP OF MOTOR
3° 45' SEE NOTE 2
101° 15' SEE NOTE 2
SEE DETAIL D
123° 45' SEE NOTE 2
B
C
A

PLAN VIEW

SCALE: 1/2
(AS VIEWED FROM SERVICE END)

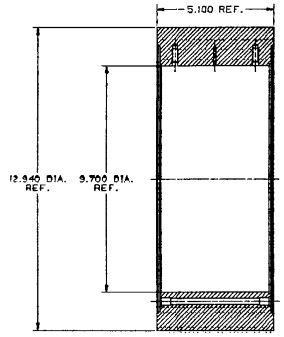
5.100 REF.
12.940 DIA. REF.
9.700 DIA. REF.

SECTION A-A

SCALE: 1/2

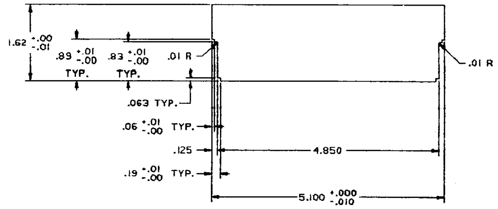
1.62 +.00 -.01
.89 +.01 -.00 TYP.
.83 +.01 -.00 TYP.
.01 R
.01 R
.063 TYP.
.06 +.01 -.00 TYP.
.125
4.850
.19 +.01 -.00 TYP.
5.100 +.000 -.010

(65) GLASS LAMINATE

SCALE: FULL

PC. NO.	NAME OF PIECE	NO. REQD	MATERIAL OR SOURCE
8	INNER ROTOR BAR	-	REF DTRC DWG A27-19992-48, SEE NOTE 1
65	GLASS LAMINATE SHEET, 1.620 X 5.100 X .094 THK	-	G-10, BRONZE AND PLASTIC SPECIALTIES, SEE NOTE 1

NOTES:

1. REF DTRC DWG A27-19992-10 FOR FABRICATION PROCEDURE.
2. ANGLES SHOW LOCATIONS OF BARS WITH HOLES FOR THERMOCOUPLES.
3. UNLESS OTHERWISE SPECIFIED, BREAK SHARP CORNERS WITH A CHAMFER, .03 X 45°.
4. UNLESS OTHERWISE SPECIFIED, MACHINED FILLETS TO BE .03 R.
5. ESTIMATED WEIGHT OF PC. NO. 8 (ONE BAR) IS 1.9 LB.

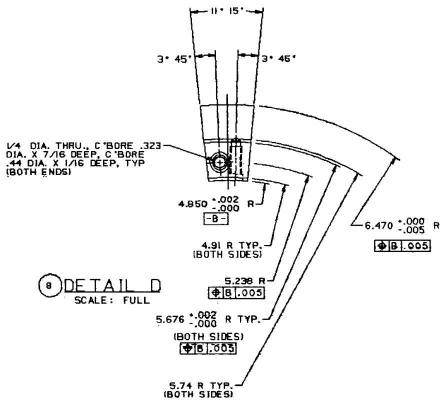
11° 15'
3° 45'
3° 45'
1/4 DIA. THRU., C'BORE .323 DIA. X 7/16 DEEP, C'BORE .44 DIA. X 1/16 DEEP, TYP (BOTH ENDS)
4.850 +.002 -.000 R
-B-
4.91 R TYP. (BOTH SIDES)
5.238 R
⌖ B .005
5.676 +.002 -.000 R TYP. (BOTH SIDES)
⌖ B .003
5.74 R TYP. (BOTH SIDES)
6.470 +.000 -.005 R
⌖ B .005

(8) DETAIL D

SCALE: FULL

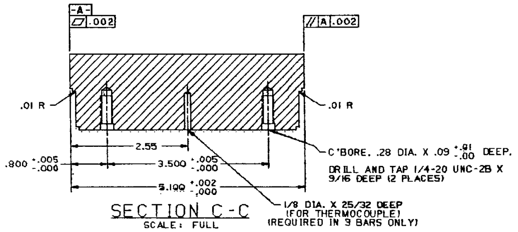
-A-
▱ .002
// A .002
.01 R
.01 R
2.55
3.500 +.005 -.000
.800 +.005 -.000
5.100 +.002 -.000
C'BORE. .28 DIA. X .09 +.01 -.00 DEEP.
DRILL AND TAP 1/4-20 UNC-2B X 9/16 DEEP (2 PLACES)
1/8 DIA. X 25/32 DEEP (FOR THERMOCOUPLE) (REQUIRED IN 3 BARS ONLY)

SECTION C-C

SCALE: FULL

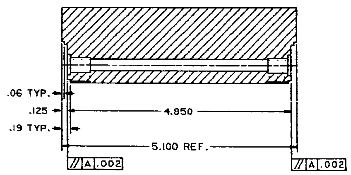
.06 TYP.
.125
.19 TYP.
4.850
5.100 REF.
// A .002
// A .002

SECTION B-B

SCALE: FULL

SHOPWORK REQUEST NO.	PRINT RECORD

STRESS ENG'R CODE	NAME	DATE	REVIEWED BY CODE	NAME	DATE	PROJECT NUMBER
						1-2700-206-12
			2711			
			2711			

REV.	ZONE	DESCRIPTION	BY	APP'D	DATE

REVISIONS

CAEDOS PART NAME
AN.2711.DLL.175HPMTR.IRB
REFERENCES
SHEET17
A27-19992-10, -48
SESD NO.

DATE 6/21/90
DRAWN JGW
CHECKED
DESIGNED
REVIEWED
APPROVED
DATE

NORMAL CONDUCTIVE, HOMOPOLAR CONTRAROTATING, 175 HP MOTOR

INNER ROTOR BAR DETAILS

SCALE: AS NOTED

DEPARTMENT OF NAVY
DAVID TAYLOR RESEARCH CENTER

DTRC NUMBER A27-19992-17
REVISION -

SHOPWORK REQUEST NO.	PRINT RECORD

STRESS ENG'R	REVIEWED BY	PROJECT NUMBER
	2711	1-2700-206-12
	2711	

LIST OF MATERIAL

PC. NO.	NAME OF PIECE	NO. REQ'D.	MATERIAL OR SOURCE
9	SERVICE END INNER ROTOR COLLECTOR DISK	-	
9-1	SERVICE END INNER ROTOR COLLECTOR DISK FORGING	1	REF DTRC DWG A27-19992-49
9-2	WASHER, FLAT, .438 OD, .266 ID, .094 THICK	12	STAINLESS STEEL PER AISI TYPE 304

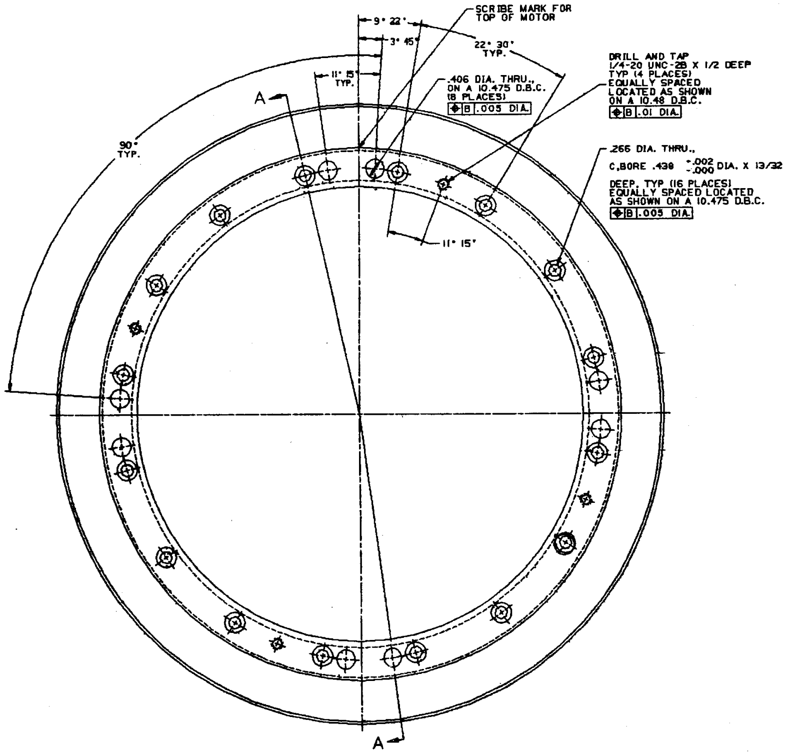

SCRIBE MARK FOR TOP OF MOTOR
9° 22'
3° 45'
22° 30' TYP.
11° 15' TYP.
.406 DIA. THRU., ON A 10.475 D.B.C. (8 PLACES)
⌖ B .005 DIA.
DRILL AND TAP 1/4-20 UNC-2B X 1/2 DEEP TYP (4 PLACES) EQUALLY SPACED LOCATED AS SHOWN ON A 10.48 D.B.C.
⌖ B .01 DIA.
.266 DIA. THRU., C.BORE .438 +.002 -.000 DIA. X 13/32 DEEP, TYP (16 PLACES) EQUALLY SPACED LOCATED AS SHOWN ON A 10.475 D.B.C.
⌖ B .005 DIA.
11° 15'
90° TYP.
A
A

⑨ PLAN
SCALE: FULL
(AS VIEWED FROM SERVICE END)

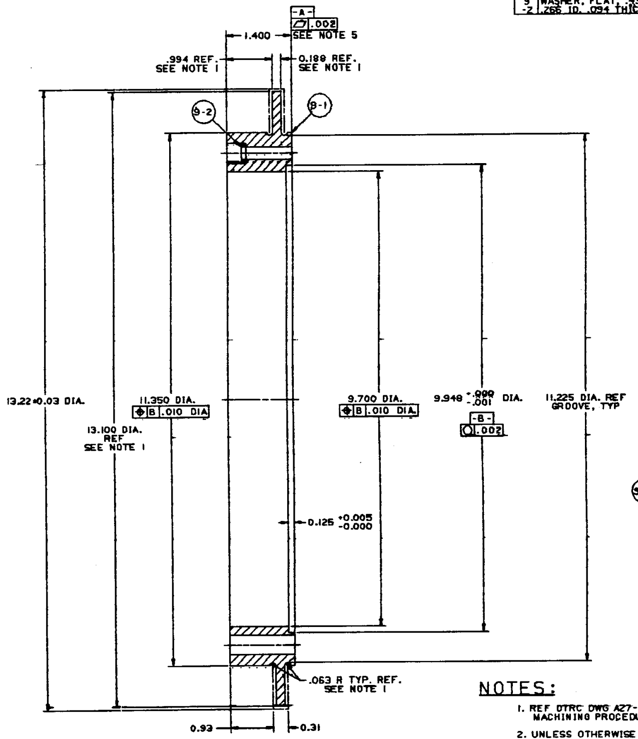

-A-
⏥ .002
1.400
SEE NOTE 5
.994 REF. SEE NOTE 1
0.189 REF. SEE NOTE 1
9-2
9-1
13.22±0.03 DIA.
13.100 DIA. REF SEE NOTE 1
11.350 DIA.
⌖ B .010 DIA
9.700 DIA.
⌖ B .010 DIA.
9.948 +.000 -.001 DIA.
-B-
○ .002
11.225 DIA. REF GROOVE, TYP
0.125 +0.005 -0.000
.063 R TYP. REF. SEE NOTE 1
0.93
0.31

SECTION A-A
SCALE: FULL

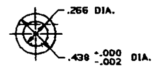

.266 DIA.
.438 +.000 -.002 DIA.

⑨-2 PLAN
SCALE: 2/1

NOTES:

1. REF DTRC DWG A27-19992-7 FOR ASSEMBLY AND FINAL MACHINING PROCEDURE.
2. UNLESS OTHERWISE SPECIFIED, BREAK SHARP CORNERS WITH A CHAMFER, .03 X 45°.
3. UNLESS OTHERWISE SPECIFIED, MACHINED FILLETS TO BE .03 R.
4. ESTIMATED WEIGHT OF PC. NO. 9 IS 14.1 LB.
5. SURFACE TO BE PLATED PER CODE 2711 SPECIFICATIONS.

REV.	ZONE	DESCRIPTION	BY	APP'D	DATE

REVISIONS

CAEDOS PART NAME
AN.2711.OLL.175HPMTR.SEIRCD
REFERENCES
SHEET 18
A27-19992-7, -49
SESD NO.

DATE 5/18/90
DRAWN LMF
CHECKED
DESIGNED
REVIEWED
APPROVED
DATE

NORMAL CONDUCTIVE, HOMOPOLAR CONTRAROTATING, 175 HP MOTOR

SERVICE END INNER ROTOR COLLECTOR DISK DETAILS

SCALE: AS NOTED

DEPARTMENT OF NAVY
DAVID TAYLOR RESEARCH CENTER

DTRC NUMBER A27-19992-18
REVISION -

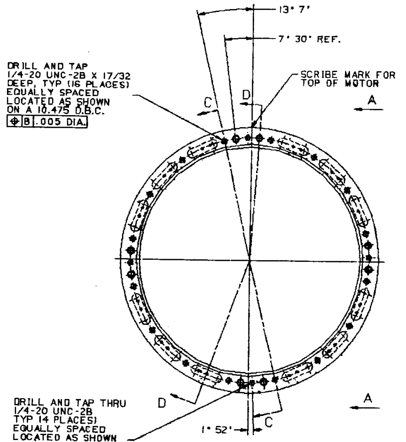
13° 7'
7° 30' REF.
DRILL AND TAP
1/4-20 UNC-2B X 17/32
DEEP, TYP (16 PLACES)
EQUALLY SPACED
LOCATED AS SHOWN
ON A 10.475 D.B.C.
⌖ B .005 DIA.
SCRIBE MARK FOR
TOP OF MOTOR
A
C
D
DRILL AND TAP THRU
1/4-20 UNC-2B
TYP 14 PLACES)
EQUALLY SPACED
LOCATED AS SHOWN
ON A 10.48 D.B.C.
⌖ B .01 DIA.
(FOR HANDLING)
1° 52'
D
C
A

PLAN
SCALE: 1/2
(AS VIEWED FROM SERVICE END)

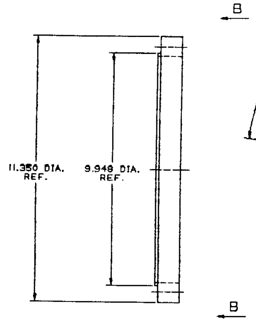
11.350 DIA.
REF.
9.948 DIA.
REF.
B
B

VIEW A-A
SCALE: 1/2

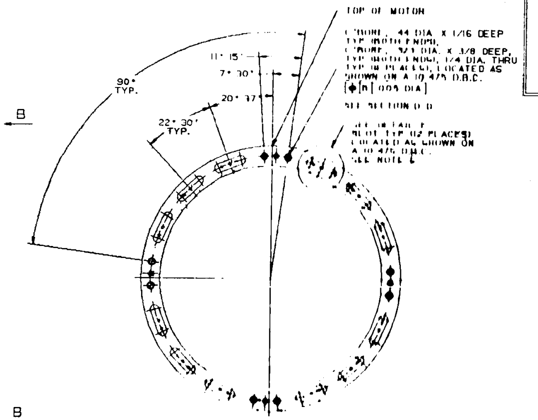
TOP OF MOTOR
C'BORE, .44 DIA X 1/16 DEEP
TYP (MOTOR END),
C'BORE, .3/1 DIA. X 3/8 DEEP,
TYP (MOTOR END), 1/4 DIA. THRU
TYP (8 PLACES), LOCATED AS
SHOWN ON A 10.475 D.B.C.
⌖ B .005 DIA
SEE SECTION D-D
SEE DETAIL E
SLOT TYP (12 PLACES)
LOCATED AS SHOWN ON
A 10.475 D.B.C.
SEE NOTE 6
11° 15'
7° 30'
20° 37'
22° 30'
TYP.
90°
TYP.
B

VIEW B-B
SCALE: 1/2

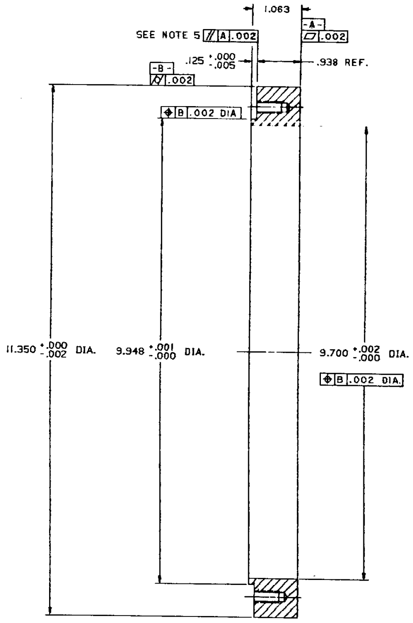
1.063
SEE NOTE 5 // A .002
-A-
⏥ .002
.125 +.000 -.005
.938 REF.
-B-
⌭ .002
⌖ B .002 DIA
11.350 +.000 -.002 DIA.
9.948 +.001 -.000 DIA.
9.700 +.002 -.000 DIA.
⌖ B .002 DIA.

SECTION C-C
SCALE: 1/1

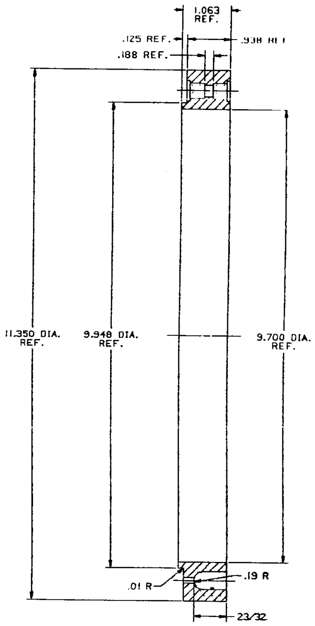
1.063
REF.
.125 REF.
.188 REF.
.938 REF
11.350 DIA.
REF.
9.948 DIA.
REF.
9.700 DIA.
REF.
.01 R
.19 R
23/32

SECTION D-D
SCALE: 1/1

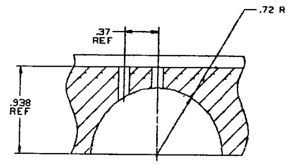
.37
REF
.72 R
.938
REF

SECTION F-F
SCALE: 2/1
SEE NOTE 6

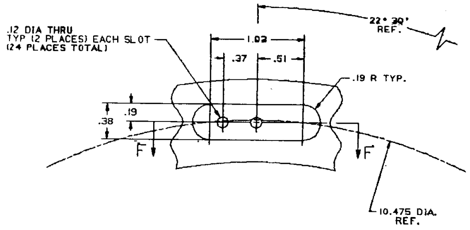
.12 DIA THRU
TYP (2 PLACES) EACH SLOT
(24 PLACES TOTAL)
1.02
.37
.51
22° 30'
REF.
.19 R TYP.
.19
.38
F
F
10.475 DIA.
REF.

DETAIL E
SCALE: 2/1
SEE NOTE 6

NOTES:

1. REF DTRC DWG A27-19992-10 FOR FABRICATION PROCEDURE.
2. UNLESS OTHERWISE SPECIFIED, BREAK SHARP CORNERS WITH A CHAMFER, .03 X 45°.
3. UNLESS OTHERWISE SPECIFIED, MACHINED FILLETS TO BE .03 R.
4. ESTIMATED WEIGHT OF PC. NO. 10 IS 8.4 LB.
5. SURFACE TO BE PLATED PER CODE 2711 SPECIFICATIONS.
6. PC NO 57, DWG A27-19992-45, TO BE FABRICATED PRIOR TO MACHINING SLOTS.

SHOPWORK REQUEST NO		PRINT RECORD

STRESS ENG'R	REVIEWED BY	PROJECT NUMBER
	2711 2711	1-2700-206-12

LIST OF MATERIAL

PC. NO.	NAME OF PIECE	NO. REQD.	MATERIAL OR SOURCE
10	SERVICE END INNER ROTOR TRANSITION RING	-	REF DTRC DWG A27-19992-49

REV.	ZONE	DESCRIPTION	BY	APP'D	DATE

REVISIONS

CAEDOS PART NAME
AN.2711.DLL.175HPMTR.IRB
REFERENCES
SHEET19
A27-19992-10, -45, -49
SESD NO.

DATE 5/16/90
DRAWN LMF
CHECKED
DESIGNED
REVIEWED
APPROVED
DATE

NORMAL CONDUCTIVE, HOMOPOLAR
CONTRAROTATING, 175 HP MOTOR

SERVICE END
INNER ROTOR
TRANSITION RING
DETAILS

SCALE: AS NOTED

DEPARTMENT OF NAVY
DAVID TAYLOR
RESEARCH CENTER

DTRC NUMBER	REVISION
A27-19992-19	-

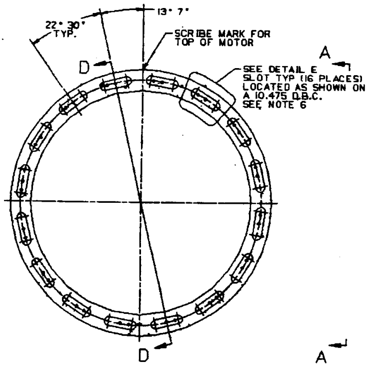
22° 30'
TYP.
13° 7'
SCRIBE MARK FOR TOP OF MOTOR
D
A
SEE DETAIL E
SLOT TYP (16 PLACES)
LOCATED AS SHOWN ON
A 10.475 D.B.C.
SEE NOTE 6
D
A

PLAN
SCALE: 1/2
(AS VIEWED FROM SERVICE END)

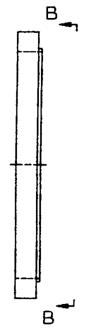

VIEW A-A
SCALE: 1/2

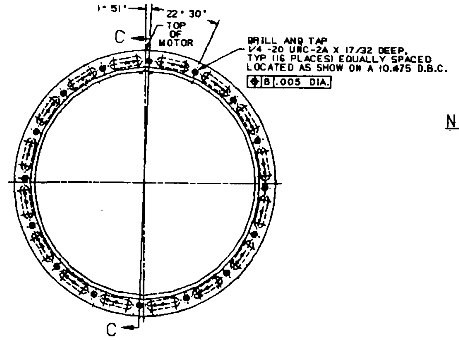
1° 51'
22° 30'
C
TOP OF MOTOR
DRILL AND TAP
1/4 -20 UNC-2A X 17/32 DEEP,
TYP (16 PLACES) EQUALLY SPACED
LOCATED AS SHOW ON A 10.475 D.B.C.
⌖ B .005 DIA.
C

VIEW B-B
SCALE: 1/2

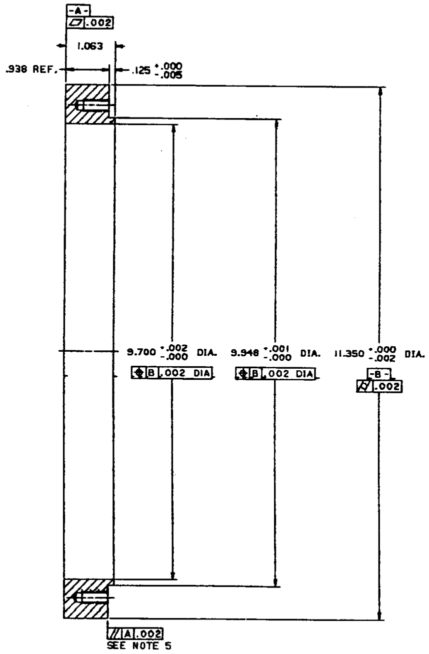
-A-
⏥ .002
1.063
.938 REF.
.125 +.000 -.005
9.700 +.002 -.000 DIA.
⌖ B .002 DIA
9.948 +.001 -.000 DIA.
⌖ B .002 DIA
11.350 +.000 -.002 DIA.
-B-
⌭ .002
// A .002
SEE NOTE 5

SECTION C-C
SCALE: 1/1

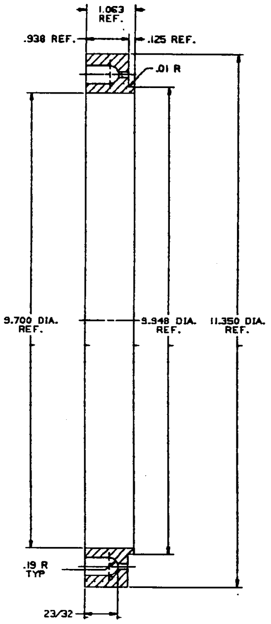
1.063
REF.
.938 REF.
.125 REF.
.01 R
9.700 DIA.
REF.
9.948 DIA.
REF.
11.350 DIA.
REF.
.19 R
TYP
23/32

SECTION D-D
SCALE: 1/1

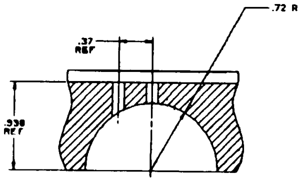
.72 R
.37
REF
.938
REF

SECTION F-F
SCALE: 2/1

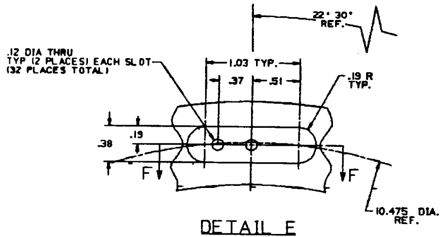
22° 30'
REF.
.12 DIA THRU
TYP (2 PLACES) EACH SLOT
(32 PLACES TOTAL)
1.03 TYP.
.37
.51
.19 R
TYP.
.19
.38
F
F
10.475 DIA.
REF.

DETAIL E
SCALE: 2/1

SHOPWORK REQUEST NO.	PRINT RECORD

STRESS ENG'R			REVIEWED BY			PROJECT NUMBER
						1-2700-206-12
			2711			
			2711			

LIST OF MATERIAL

PC. NO.	NAME OF PIECE	NO. REQD.	MATERIAL OR SOURCE
11	DRIVE END INNER ROTOR TRANSITION RING	-	REF DTRC DWG A27-19992-45

NOTES:

1. REF. DTRC DWG A27-19992-10 FOR FABRICATION PROCEDURE.
2. UNLESS OTHERWISE SPECIFIED, BREAK SHARP CORNERS WITH A CHAMFER, .03 X 45°.
3. UNLESS OTHERWISE SPECIFIED, MACHINED FILLETS TO BE .03 R.
4. ESTIMATED WEIGHT OF PC. NO. 11 IS 8.4 LB.
5. SURFACE TO BE PLATED PER CODE 2711 SPECIFICATIONS.
6. PC NO 57, DWG A27-19992-45, TO BE FABRICATED PRIOR TO MACHINING SLOTS.

REV.	ZONE	DESCRIPTION	BY	APP'D	DATE

REVISIONS

CAEDOS PART NAME
AN.2711.DLL.175HPMTR.IRB
REFERENCES
SHEET20
A27-19992-10, -45, -49
SESD NO.

DATE 5/17/90
DRAWN LMF
CHECKED
DESIGNED
REVIEWED
APPROVED
DATE

NORMAL CONDUCTIVE, HOMOPOLAR, CONTRAROTATING, 175 HP MOTOR
DRIVE END
INNER ROTOR
TRANSITION RING
DETAILS
SCALE: AS NOTED

DEPARTMENT OF NAVY
DAVID TAYLOR
RESEARCH CENTER

DTRC NUMBER	REVISION
A27-19992-20	-

NOTES:

1. REF DTRC DWG A27-19992-7 FOR ASSEMBLY AND FINAL MACHINING PROCEDURE.
2. UNLESS OTHERWISE SPECIFIED, BREAK SHARP CORNERS WITH A CHAMFER, .02 X 45°.
3. UNLESS OTHERWISE SPECIFIED, MACHINED FILLETS TO BE .03 R.
4. ESTIMATED WEIGHT OF PC. NO. 12 IS 14.1 LB.
5. SURFACE TO BE PLATED PER CODE 2711 SPECIFICATIONS.

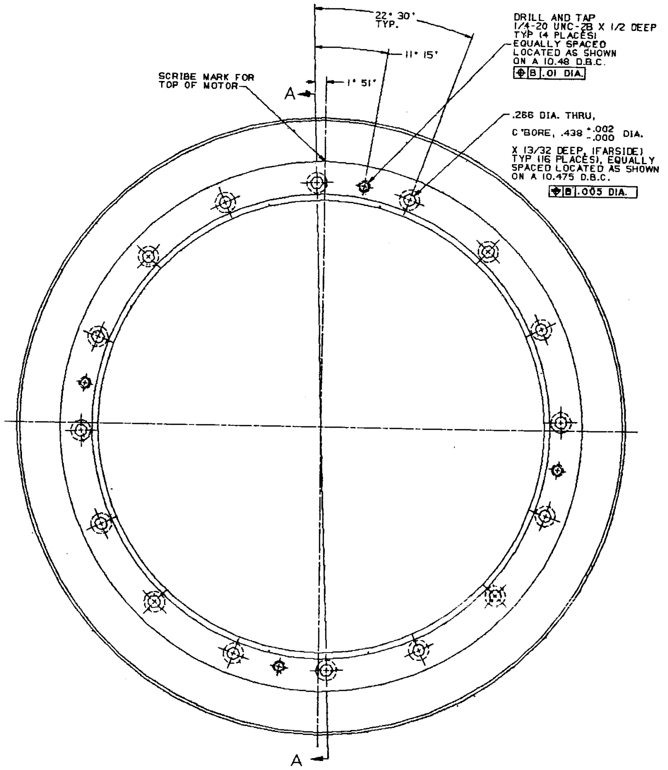
22° 30' TYP.
11° 15'
1° 51'
A
A
SCRIBE MARK FOR TOP OF MOTOR
DRILL AND TAP 1/4-20 UNC-2B X 1/2 DEEP TYP (4 PLACES) EQUALLY SPACED LOCATED AS SHOWN ON A 10.48 D.B.C.
⌖ B .01 DIA.
.266 DIA. THRU,
C'BORE, .438 +.002 -.000 DIA.
X 13/32 DEEP, (FARSIDE) TYP (16 PLACES), EQUALLY SPACED LOCATED AS SHOWN ON A 10.475 D.B.C.
⌖ B .005 DIA.

⑫ PLAN
SCALE : 1/1
(AS VIEWED FROM SERVICE END)

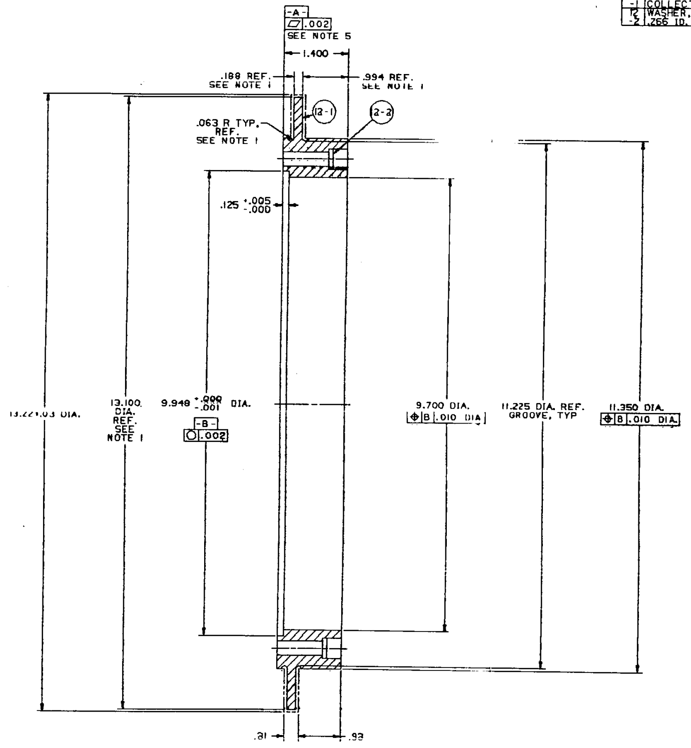
-A-
▱ .002
SEE NOTE 5
1.400
.188 REF. SEE NOTE 1
.994 REF. SEE NOTE 1
12-1
12-2
.063 R TYP. REF. SEE NOTE 1
.125 +.005 -.000
13.22±.03 DIA.
13.100 DIA. REF. SEE NOTE 1
9.948 +.000 -.001 DIA.
-B-
○ .002
9.700 DIA.
⌖ B .010 DIA
11.225 DIA. REF. GROOVE, TYP
11.350 DIA.
⌖ B .010 DIA.
.31
.93

SECTION A-A
SCALE : 1/1

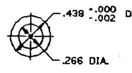
.438 +.000 -.002 DIA.
.266 DIA.

(12-2) PLAN
SCALE : 2/1

STRESS ENG'R			REVIEWED BY			PROJECT NUMBER
CODE	NAME	DATE	CODE	NAME	DATE	1-2700-206-12
			2711			
			2711			

LIST OF MATERIAL

PC. NO.	NAME OF PIECE	NO. REQD.	MATERIAL OR SOURCE
12	DRIVE END INNER ROTOR COLLECTOR DISK	-	
12-1	DRIVE END INNER ROTOR COLLECTOR DISK FORGING	1	REF DTRC DWG A27-19992-49
12-2	WASHER, FLAT, .438 OD, .266 ID, .094 THICK	12	STAINLESS STEEL PER AISI TYPE 304

SHOPWORK REQUEST NO.
PRINT RECORD

REV.	ZONE	DESCRIPTION	BY	APP'D	DATE

REVISIONS

CAEDOS PART NAME
AN.2711.DLL.175HPMTR.DEIRCD
REFERENCES
SHEET21
A27-19992-7, -49
SESD NO.

DATE 5/21/90
DRAWN LMF
CHECKED
DESIGNED
REVIEWED
APPROVED
DATE

NORMAL CONDUCTIVE, HOMOPOLAR CONTRAROTATING, 175 HP MOTOR

DRIVE END INNER ROTOR COLLECTOR DISK DETAILS

SCALE: AS NOTED

DEPARTMENT OF NAVY
DAVID TAYLOR RESEARCH CENTER
CARDEROCK LAB - BETHESDA, MD. 20084
ANNAPOLIS LAB - ANNAPOLIS, MD. 21402

DTRC NUMBER A27-19992-21
REVISION -

			2711			1 2700 209 12
			2711			

LIST OF MATERIAL

PC NO.	NAME OF PIECE	NO. REQ'D	MATERIAL OR SOURCE
13	SERVICE END OUTER ROTOR CURRENT COLLECTOR RING	-	REF DTRC DWG A27-19992-50

NOTES:

1. REF DTRC DWG A27-19992-9 FOR FABRICATION PROCEDURE.
2. UNLESS OTHERWISE SPECIFIED, BREAK SHARP CORNERS WITH A CHAMFER, .03 X 45°.
3. UNLESS OTHERWISE SPECIFIED, MACHINED FILLETS TO BE .03 R.
4. ESTIMATED WEIGHT OF PC. NO 13 IS 13.8 LB.

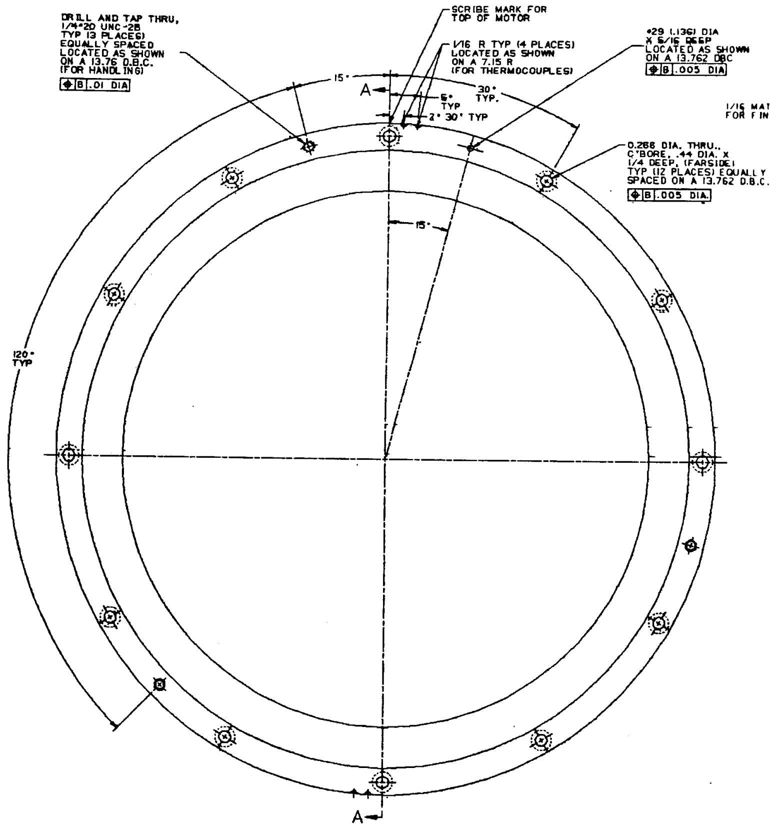
DRILL AND TAP THRU, 1/4"20 UNC-2B TYP 13 PLACES) EQUALLY SPACED LOCATED AS SHOWN ON A 13.76 D.B.C. (FOR HANDLING)
⌖ B .01 DIA
SCRIBE MARK FOR TOP OF MOTOR
1/16 R TYP (4 PLACES) LOCATED AS SHOWN ON A 7.15 R (FOR THERMOCOUPLES)
#29 (.136) DIA X 5/16 DEEP LOCATED AS SHOWN ON A 13.762 DBC
⌖ B .005 DIA
15°
A
5° TYP
2° 30' TYP
30° TYP.
0.266 DIA. THRU., C'BORE, .44 DIA. X 1/4 DEEP, (FARSIDE) TYP (12 PLACES) EQUALLY SPACED ON A 13.762 D.B.C.
⌖ B .005 DIA.
15°
120° TYP
A

PLAN VIEW
SCALE : FULL
(AS VIEWED FROM SERVICE END)

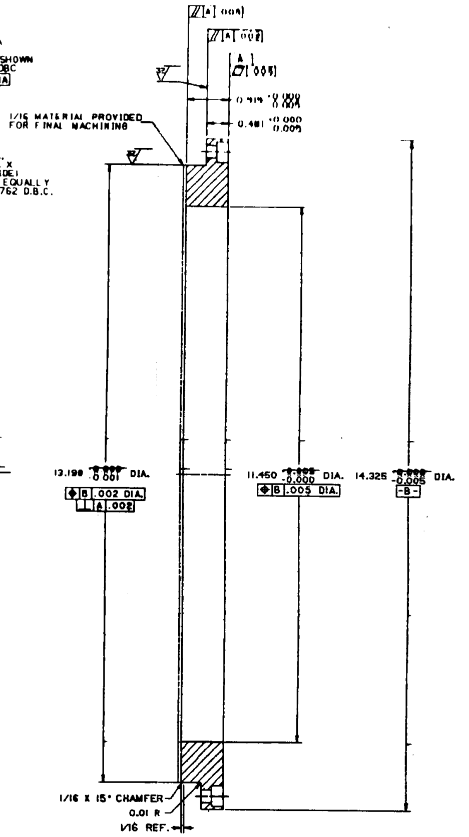
// A .004
// A .002
A
▱ .005
32
0.919 +0.000 -0.005
0.481 +0.000 -0.005
1/16 MATERIAL PROVIDED FOR FINAL MACHINING
32
13.198 -0.001 DIA.
⌖ B .002 DIA.
⊥ A .002
11.450 -0.000 DIA.
⌖ B .005 DIA.
14.325 -0.005 DIA.
-B-
1/16 X 15° CHAMFER
0.01 R
1/16 REF.

SECTION A-A
SCALE : FULL

REV.	ZONE	DESCRIPTION	BY	APP'D	DATE

REVISIONS

CAEDOS PART NAME
AN.2711.DLL.175HPMTR.SEORCCR
REFERENCES
SHEET22
A27-19992-9, -50
SESD NO.

DATE 7/2/90
DRAWN JBW
CHECKED
DESIGNED
REVIEWED
APPROVED
DATE

NORMAL CONDUCTIVE, HOMOPOLAR, CONTRAROTATING, 175 HP MOTOR
SERVICE END OUTER ROTOR CURRENT COLLECTOR RING DETAILS
SCALE: AS NOTED

DEPARTMENT OF NAVY
DAVID TAYLOR RESEARCH CENTER

DTRC NUMBER: A27-19992-22
REVISION: -

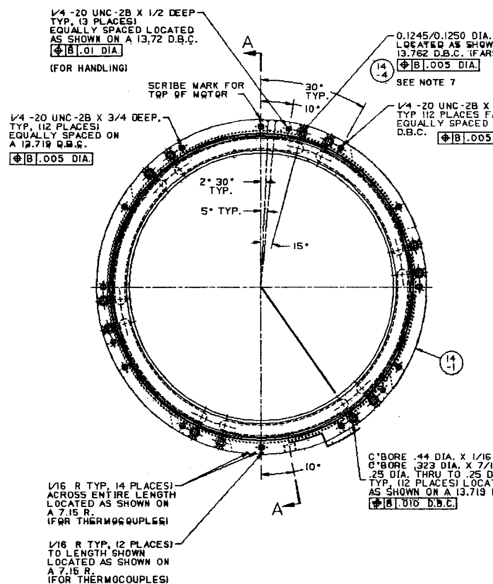
1/4 -20 UNC-2B X 1/2 DEEP
TYP, (3 PLACES)
EQUALLY SPACED LOCATED
AS SHOWN ON A 13.72 D.B.C.
⊕ B .01 DIA.
(FOR HANDLING)
SCRIBE MARK FOR
TOP OF MOTOR
A
30° TYP.
10°
0.1245/0.1250 DIA. X 1/4 DEEP
LOCATED AS SHOWN ON A
13.762 D.B.C. (FARSIDE)
⊕ B .005 DIA.
14 -4
SEE NOTE 7
1/4 -20 UNC-2B X 3/4 DEEP.
TYP (12 PLACES FARSIDE)
EQUALLY SPACED ON A 13.762
D.B.C. ⊕ B .005 DIA.
1/4 -20 UNC-2B X 3/4 DEEP.
TYP, (12 PLACES)
EQUALLY SPACED ON
A 13.719 D.B.C.
⊕ B .005 DIA.
2° 30' TYP.
5° TYP.
15°
14 -1
C'BORE .44 DIA. X 1/16 DEEP,
C'BORE .323 DIA. X 7/16 DEEP,
.25 DIA. THRU TO .25 DIA.
TYP, (12 PLACES) LOCATED
AS SHOWN ON A 13.719 D.B.C.
⊕ B .010 D.B.C.
10°
A
1/16 R TYP, 14 PLACES)
ACROSS ENTIRE LENGTH
LOCATED AS SHOWN ON
A 7.15 R.
(FOR THERMOCOUPLES)
1/16 R TYP, (2 PLACES)
TO LENGTH SHOWN
LOCATED AS SHOWN ON
A 7.15 R.
(FOR THERMOCOUPLES)

14 FRONT VIEW
SCALE : 1/2
(AS VIEWED FROM SERVICE)

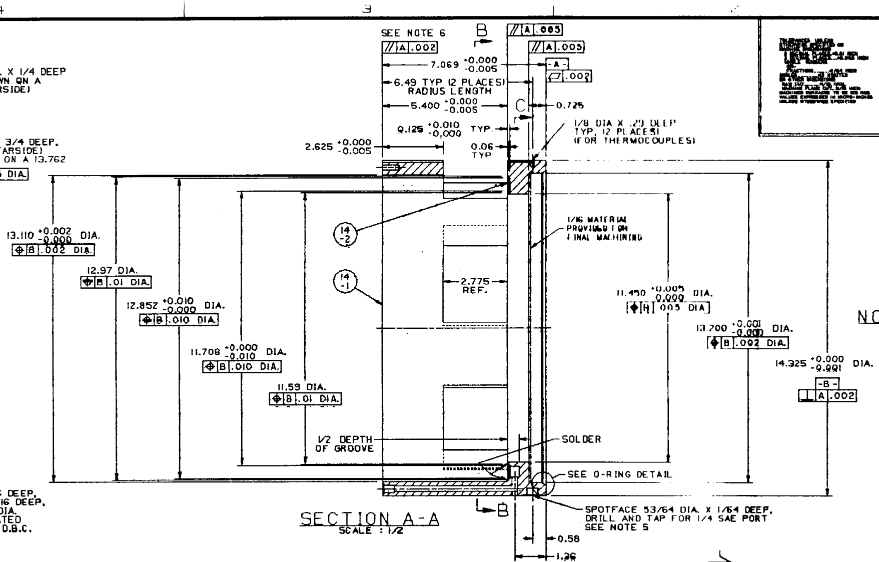
SEE NOTE 6
// A .002
B
// A .003
// A .005
7.069 +0.000 -0.005
-A-
⌭ .002
6.49 TYP (2 PLACES)
RADIUS LENGTH
5.400 +0.000 -0.005
C
0.725
9.125 +0.010 -0.000 TYP.
2.625 +0.000 -0.005
0.06 TYP
1/8 DIA X .29 DEEP
TYP, 12 PLACES)
(FOR THERMOCOUPLES)
13.110 +0.002 -0.000 DIA.
⊕ B .002 DIA.
12.97 DIA.
⊕ B .01 DIA.
12.852 +0.010 -0.000 DIA.
⊕ B .010 DIA.
11.708 +0.000 -0.010 DIA.
⊕ B .010 DIA.
11.59 DIA.
⊕ B .01 DIA.
14 -2
14 -1
1/16 MATERIAL
PROVIDED FOR
FINAL MACHINING
2.775 REF.
11.450 +0.005 -0.000 DIA.
⊕ B .005 DIA.
13.700 +0.001 -0.000 DIA.
⊕ B .002 DIA.
14.325 +0.000 -0.001 DIA.
-B-
⊥ A .002
1/2 DEPTH
OF GROOVE
SOLDER
SEE O-RING DETAIL
B
SPOTFACE 53/64 DIA. X 1/64 DEEP,
DRILL AND TAP FOR 1/4 SAE PORT
SEE NOTE 5
0.58
1.36
C

SECTION A-A
SCALE : 1/2

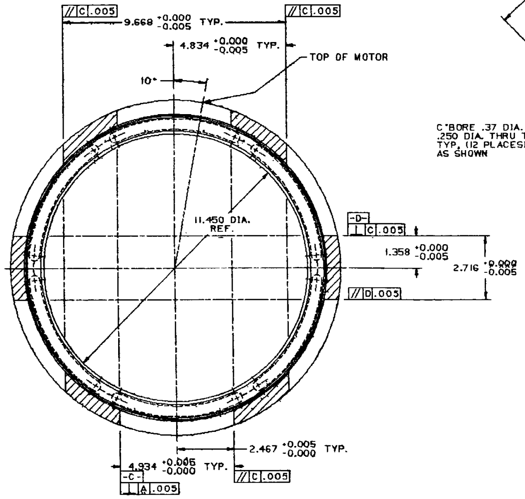
// C .005
9.668 +0.000 -0.005 TYP.
// C .005
4.834 +0.000 -0.005 TYP.
TOP OF MOTOR
10°
11.450 DIA. REF.
-D-
⊥ C .005
1.358 +0.000 -0.005
2.716 +0.000 -0.005
// D .003
2.467 +0.005 -0.000 TYP.
4.934 +0.005 -0.000 TYP.
-C-
⊥ A .005
// C .005

SECTION B-B
SCALE : 1/2

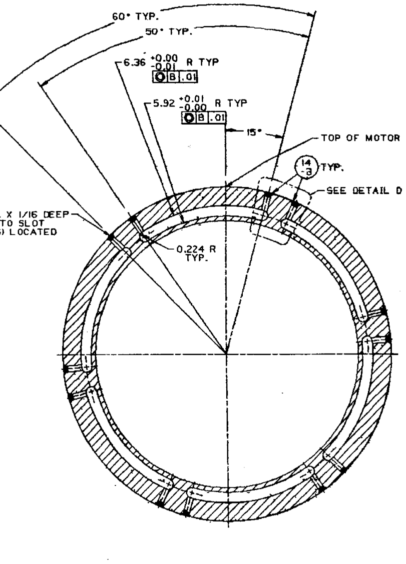
60° TYP.
50° TYP.
6.36 +0.00 -0.01 R TYP
○ B .01
5.92 +0.01 -0.00 R TYP
○ B .01
15°
TOP OF MOTOR
14 -3 TYP.
SEE DETAIL D
C'BORE .37 DIA. X 1/16 DEEP
.250 DIA. THRU TO SLOT
TYP, (12 PLACES) LOCATED
AS SHOWN
0.224 R TYP.

SECTION C-C
SCALE : 1/2

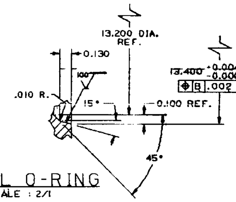
13.200 DIA. REF.
0.130
100°
.010 R.
15°
13.400 +0.004 -0.000 DIA.
⊕ B .002 DIA.
0.100 REF.
45°

DETAIL O-RING
SCALE : 2/1

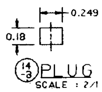
0.249 DIA.
0.18

14 -3 PLUG
SCALE : 2/1

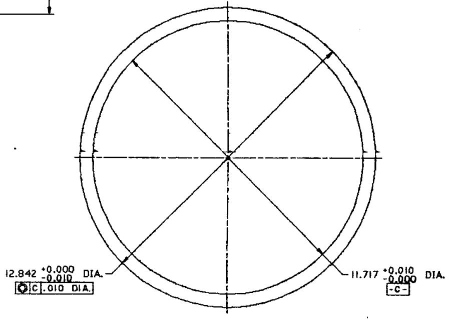
12.842 +0.000 -0.010 DIA.
○ C .010 DIA.
11.717 +0.010 -0.000 DIA.
-C-

14 -2 SHEET
SCALE : 1/2

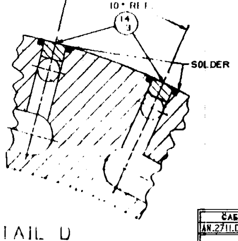
10° REF
14 -3
SOLDER

DETAIL D
SCALE

SHOPWORK REQUEST NO.	PRINT RECORD

STRESS ENG'R			REVIEWED BY			PROJECT NUMBER
CODE	NAME	DATE	CODE	NAME	DATE	1-2700 206 12
			2711			
			2711			

LIST OF MATERIAL

PC. NO.	NAME OF PIECE	NO. REQD.	MATERIAL OR SOURCE
14	SERVICE END OUTER ROTOR CURRENT COLLECTOR	-	
14 -1	SERVICE END OUTER ROTOR CURRENT COLLECTOR FORGING	1	REF DTRC DWG A27-19992-50
14 -2	SHEET, 12.842 OD, 11.718 ID, .125 THICK	1	COPPER, ALLOY 110, PER ASTM B152, TYPE ETP
14 -3	BAR, .249 DIA, .18 LONG	12	COPPER, ALLOY 110, PER ASTM B133
14 -4	DOWEL PIN, .1251/.1253 DIA 1/2 LONG	1	ALLOY STEEL, PER ANSI B18.3, UNBRAKO P/N 28420-125A-8

NOTES:

1. REF DTRC DWG A27-19992-9 FOR ASSEMBLY AND FINAL MACHINING.
2. UNLESS OTHERWISE SPECIFIED, BREAK SHARP CORNERS WITH A CHAMFER, .03 X 45°.
3. UNLESS OTHERWISE SPECIFIED, MACHINED FILLETS TO BE .03 R.
4. ESTIMATED WEIGHT OF PC. NO. 14 IS 53.4 LB.
5. SIZE AND SHAPE OF GROOVE FOR BRAIDED CURRENT COLLECTORS TO BE DETERMINED BY CODE 2711.
6. SURFACE TO BE PLATED PER CODE 2711 SPECIFICATIONS.
7. A LIGHT PRESS FIT IS REQUIRED TO INSTALL PC. NO. 14-4 INTO PC. NO. 14-1. PC. NO. 14-4 SHOULD BE INSTALLED SO THAT 1/4 INCH OF THE DOWEL PIN PROTRUDES FROM PC. NO. 14-1.

REV.	ZONE	DESCRIPTION	BY	APP'D	DATE

REVISIONS

CAEDOS PART NAME
AN.2711.DLL.175HPMTR.SEORCC
REFERENCES
SHEET23
A27-19992-9, -50
ESD NO.

DATE 3-13-90
DRAWN JGW
CHECKED
DESIGNED
REVIEWED
APPROVED
DATE

NORMAL CONDUCTIVE, HOMOPOLAR, CONTRAROTATING, 175 HP MOTOR

SERVICE END OUTER
ROTOR CURRENT
COLLECTOR
DETAILS

SCALE: AS NOTED

DEPARTMENT OF NAVY
DAVID TAYLOR
RESEARCH CENTER

DTRC NUMBER	REVISION
A27-19992-23	-

NOTES:

1. REF DTRC DWG A27-19992-8 FOR ASSEMBLY AND FINAL MACHINING.
2. UNLESS OTHERWISE SPECIFIED, BREAK SHARP CORNERS WITH A CHAMFER, .03 X 45°.
3. UNLESS OTHERWISE SPECIFIED, MACHINED FILLETS TO BE .03 R.
4. ESTIMATED WEIGHT OF PC. NO 15 IS [illegible] LB.
5. SURFACE TO BE PLATED PER CODE 2711 SPECIFICATIONS.

STRESS ENG'R			REVIEWED BY			PROJECT NUMBER
CODE	NAME	DATE	CODE	NAME	DATE	1-2700-206-12
			2711			
			2711			

LIST OF MATERIAL

PC. NO.	NAME OF PIECE	NO. REQD.	MATERIAL OR SOURCE
15	SERVICE END TERMINAL COLLECTOR DISK	-	REF DTRC DWG A27-19992-51

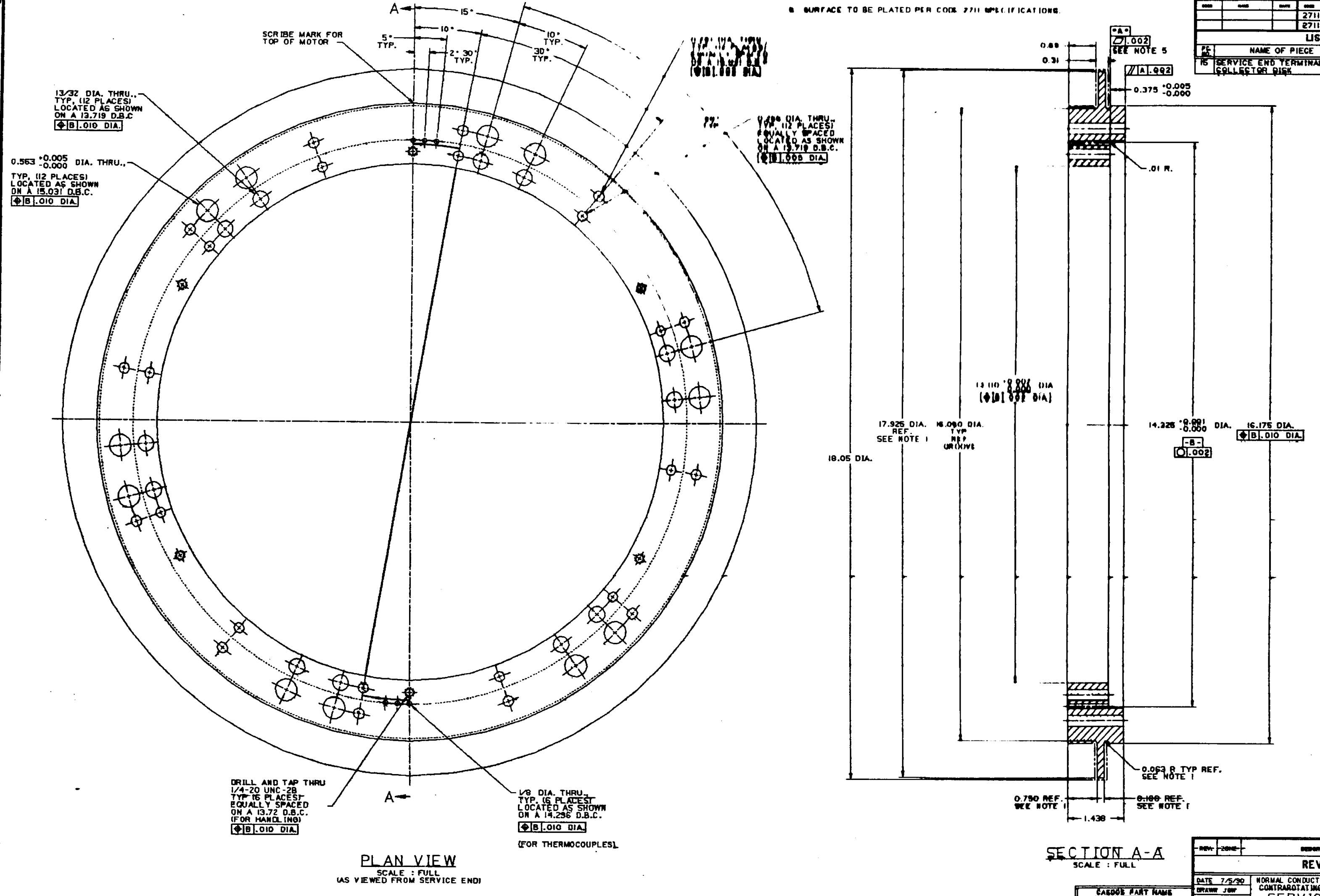
A
15°
10°
5° TYP.
2° 30' TYP.
10° TYP.
30° TYP.
SCRIBE MARK FOR TOP OF MOTOR
13/32 DIA. THRU., TYP. (12 PLACES) LOCATED AS SHOWN ON A 13.719 D.B.C
⌖ B .010 DIA.
0.563 +0.005 -0.000 DIA. THRU., TYP. (12 PLACES) LOCATED AS SHOWN ON A 15.031 D.B.C.
⌖ B .010 DIA.
0.406 DIA. THRU., TYP. (12 PLACES) EQUALLY SPACED LOCATED AS SHOWN ON A 13.719 D.B.C.
⌖ B .005 DIA.
DRILL AND TAP THRU 1/4-20 UNC-2B TYP (6 PLACES) EQUALLY SPACED ON A 13.72 D.B.C. (FOR HANDLING)
⌖ B .010 DIA.
1/8 DIA. THRU., TYP. (6 PLACES) LOCATED AS SHOWN ON A 14.296 D.B.C.
⌖ B .010 DIA.
(FOR THERMOCOUPLES)
A
-A-
.002
SEE NOTE 5
// A .002
0.80
0.31
0.375 +0.005 -0.000
.01 R.
13.110 DIA.
18.05 DIA.
17.925 DIA. REF. SEE NOTE 1
16.060 DIA. TYP REF
14.326 +0.001 -0.000 DIA.
-B-
○ .002
16.175 DIA.
⌖ B .010 DIA.
0.063 R TYP REF. SEE NOTE 1
0.750 REF. SEE NOTE 1
0.100 REF. SEE NOTE 1
1.438

PLAN VIEW
SCALE : FULL
(AS VIEWED FROM SERVICE END)

SECTION A-A
SCALE : FULL

REV.	ZONE	DESCRIPTION	BY	APP'D	DATE

REVISIONS

CASDOS PART NAME
AN.2711.DLL.175HPMTR.SETCD
REFERENCES
SHEET24
A27-19992-8, -51
SESD NO.

DATE 7/5/90
DRAWN JGW
CHECKED
DESIGNED
REVIEWED
APPROVED
DATE

NORMAL CONDUCTIVE, HOMOPOLAR, CONTRAROTATING, 175 HP MOTOR

SERVICE END TERMINAL COLLECTOR DISK DETAILS

SCALE: AS NOTED

DEPARTMENT OF NAVY
DAVID TAYLOR RESEARCH CENTER

DTRC NUMBER A27-19992-24
REVISION -

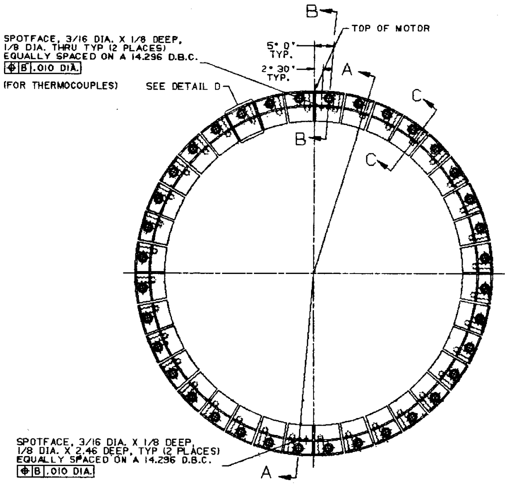
SPOTFACE, 3/16 DIA. X 1/8 DEEP,
1/8 DIA. THRU TYP (2 PLACES)
EQUALLY SPACED ON A 14.296 D.B.C.
⌖ B .010 DIA.
(FOR THERMOCOUPLES)
SEE DETAIL D
B
TOP OF MOTOR
5° 0' TYP.
2° 30' TYP.
A
C
B
C
SPOTFACE, 3/16 DIA. X 1/8 DEEP,
1/8 DIA. X 2.46 DEEP, TYP (2 PLACES)
EQUALLY SPACED ON A 14.296 D.B.C.
⌖ B .010 DIA.
(FOR THERMOCOUPLES)
A

FRONT VIEW
SCALE : 1/2
(AS VIEWED FROM SERVICE END)

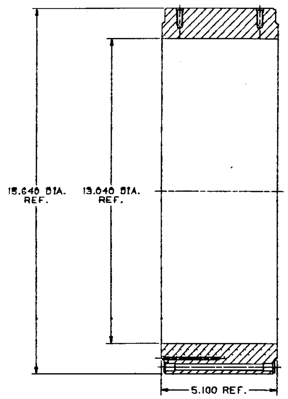
15.640 DIA. REF.
13.640 DIA. REF.
5.100 REF.

SECTION A-A
SCALE : 1/2

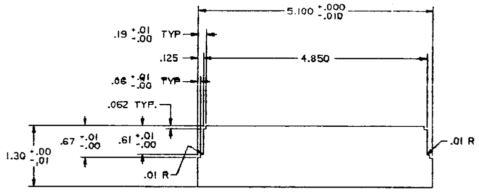
5.100 +.000 -.010
.19 +.01 -.00 TYP
.125
4.850
.06 +.01 -.00 TYP
.062 TYP.
.67 +.01 -.00
.61 +.01 -.00
1.30 +.00 -.01
.01 R
.01 R

(66) GLASS LAMINATE
SCALE : FULL

PC. NO.	NAME OF PIECE	NO. REQD.	MATERIAL OR SOURCE
16	OUTER ROTOR BAR	-	REF DTRC DWG A27-19992-52
66	GLASS LAMINATE SHEET, .094 THK, 1.300 X 5.100	-	G-10, BRONZE AND PLASTIC SPECIALTIES

LIST OF MATERIAL

STRESS ENG'R			REVIEWED BY			PROJECT NUMBER
CODE	NAME	DATE	CODE	NAME	DATE	1-2700-206-12
			2711			
			2711			

SHOPWORK REQUEST NO.

PRINT RECORD

NOTES:

1. REF DTRC DWG A27-19992-9 FOR FABRICATION PROCEDURE.
2. UNLESS OTHERWISE SPECIFIED, BREAK SHARP CORNERS WITH A CHAMFER, .03 X 45°.
3. UNLESS OTHERWISE SPECIFIED, MACHINED FILLETS TO BE .03 R.
4. ESTIMATED WEIGHT OF PC. NO. 16 IS 63.1 LB.

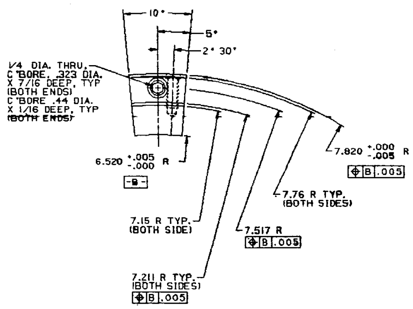
10°
5°
2° 30'
1/4 DIA. THRU,
C'BORE, .323 DIA.
X 7/16 DEEP, TYP
(BOTH ENDS)
C'BORE .44 DIA.
X 1/16 DEEP, TYP
(BOTH ENDS)
6.520 +.005 -.000 R
-B-
7.820 +.000 -.005 R
⌖ B .005
7.76 R TYP.
(BOTH SIDES)
7.15 R TYP.
(BOTH SIDE)
7.517 R
⌖ B .005
7.211 R TYP.
(BOTH SIDES)
⌖ B .005

(16) DETAIL D
SCALE : FULL

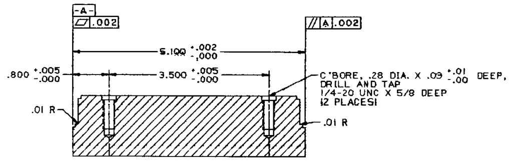
-A-
▱ .002
// A .002
5.100 +.002 -.000
.800 +.005 -.000
3.500 +.005 -.000
C'BORE, .28 DIA. X .09 +.01 -.00 DEEP,
DRILL AND TAP
1/4-20 UNC X 5/8 DEEP
(2 PLACES)
.01 R
.01 R

SECTION C-C
SCALE : FULL

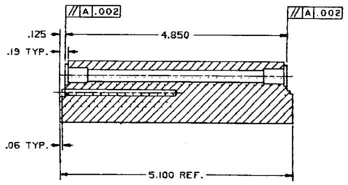
// A .002
// A .002
.125
4.850
.19 TYP.
.06 TYP.
5.100 REF.

SECTION B-B
SCALE : FULL

CAEDOS PART NAME
AN.2711.DLL.175HPMTR.ORB
REFERENCES
SHEET25
A27-19992-9, -52
SESD NO.

REV.	ZONE	DESCRIPTION	BY	APP'D	DATE

REVISIONS

DATE 07-13-90
DRAWN JBW
CHECKED
DESIGNED
REVIEWED
APPROVED
DATE

NORMAL CONDUCTIVE, HOMOPOLAR, CONTRAROTATING, 175 HP MOTOR

OUTER ROTOR BAR DETAILS

SCALE: AS NOTED

DEPARTMENT OF NAVY
DAVID TAYLOR RESEARCH CENTER
CARDEROCK LAB – BETHESDA, MD. 20084
ANNAPOLIS LAB – ANNAPOLIS, MD. 21402

DTRC NUMBER	REVISION
A27-19992-25	-

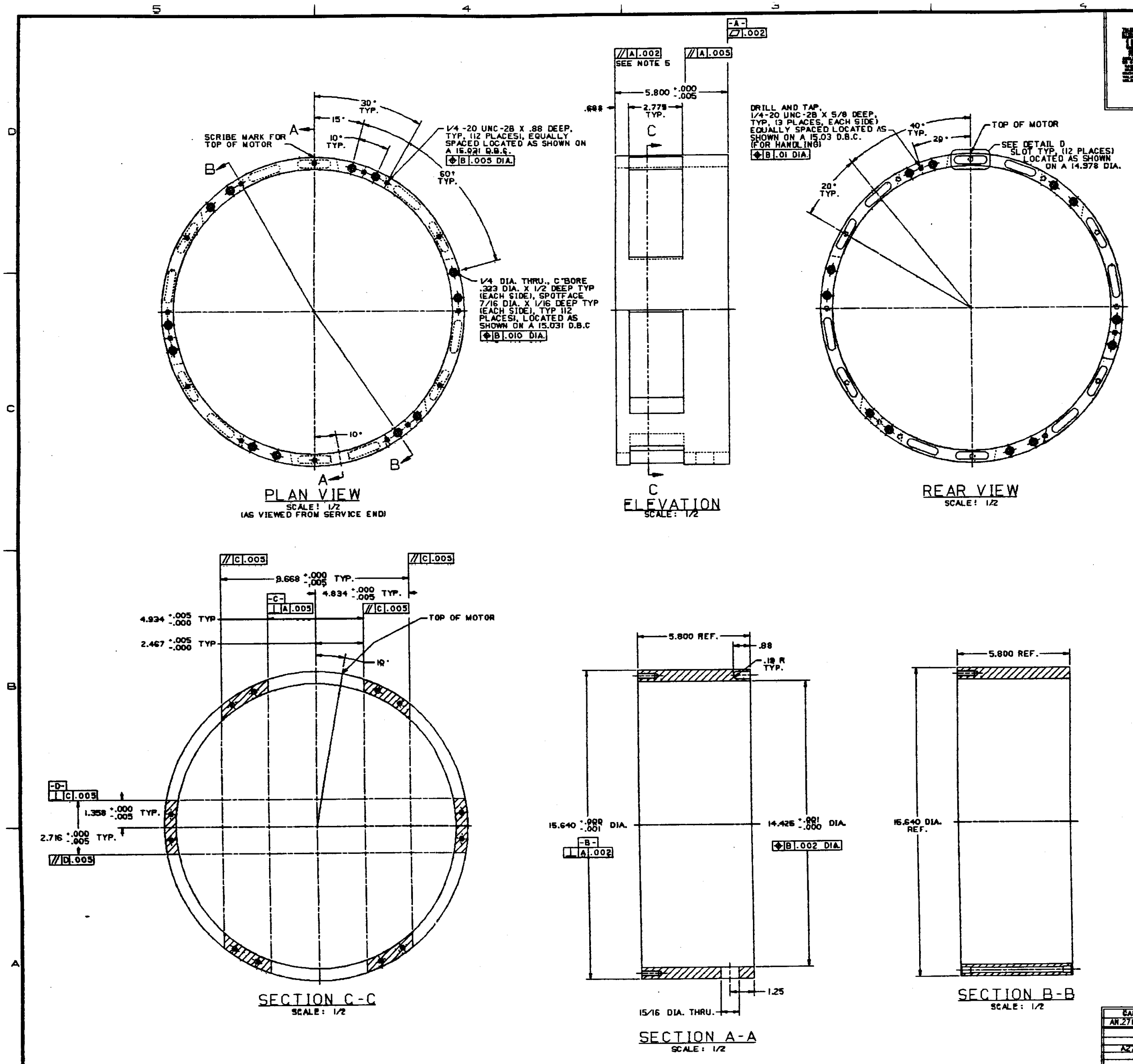
-A-
▱ .002
// A .002
SEE NOTE 5
// A .005
5.800 +.000 -.005
.688
2.775 TYP.
C
C
ELEVATION
SCALE: 1/2
30° TYP.
15°
10° TYP.
A
B
SCRIBE MARK FOR TOP OF MOTOR
1/4 -20 UNC-2B X .88 DEEP, TYP, (12 PLACES), EQUALLY SPACED LOCATED AS SHOWN ON A 15.031 D.B.C.
⌖ B .005 DIA.
60° TYP.
1/4 DIA. THRU., C'BORE .323 DIA. X 1/2 DEEP TYP (EACH SIDE), SPOTFACE 7/16 DIA. X 1/16 DEEP TYP (EACH SIDE), TYP (12 PLACES), LOCATED AS SHOWN ON A 15.031 D.B.C
⌖ B .010 DIA.
10°
A
B
PLAN VIEW
SCALE: 1/2
(AS VIEWED FROM SERVICE END)
DRILL AND TAP, 1/4-20 UNC-2B X 5/8 DEEP, TYP, (3 PLACES, EACH SIDE) EQUALLY SPACED LOCATED AS SHOWN ON A 15.03 D.B.C. (FOR HANDLING)
⌖ B .01 DIA.
40° TYP.
20°
TOP OF MOTOR
SEE DETAIL D
SLOT TYP, (12 PLACES) LOCATED AS SHOWN ON A 14.978 DIA.
20° TYP.
REAR VIEW
SCALE: 1/2
// C .005
9.668 +.000 -.005 TYP.
4.834 +.000 -.005 TYP.
-C-
⊥ A .005
// C .005
TOP OF MOTOR
4.934 +.005 -.000 TYP
2.467 +.005 -.000 TYP
10°
-D-
⊥ C .005
1.358 +.000 -.005 TYP.
2.716 +.000 -.005 TYP.
// D .005
SECTION C-C
SCALE: 1/2
5.800 REF.
.88
.19 R TYP.
15.640 +.000 -.001 DIA.
-B-
⊥ A .002
14.426 +.001 -.000 DIA.
⌖ B .002 DIA.
1.25
15/16 DIA. THRU.
SECTION A-A
SCALE: 1/2
5.800 REF.
15.640 DIA. REF.
SECTION B-B
SCALE: 1/2

PC. NO.	NAME OF PIECE	NO. REQD.	MATERIAL OR SOURCE
17	OUTER ROTOR OUTER DRUM FORGING	-	REF DTRC DWG A27-19992-53

LIST OF MATERIAL

SHOPWORK REQUEST NO.
PRINT RECORD
STRESS ENG'R
REVIEWED BY
2711
2711
PROJECT NUMBER
1-2700-206-12

NOTES:

1. REF DTRC DWG A27-19992-9 FOR FABRICATION PROCEDURE.
2. UNLESS OTHERWISE SPECIFIED, BREAK SHARP CORNERS WITH A CHAMFER, .03 X 45°.
3. UNLESS OTHERWISE SPECIFIED, MACHINED FILLETS TO BE .03 R.
4. ESTIMATED WEIGHT OF PC. NO. 17 IS 38.8 LB.
5. SURFACE TO BE PLATED PER CODE 2711 SPECIFICATIONS.

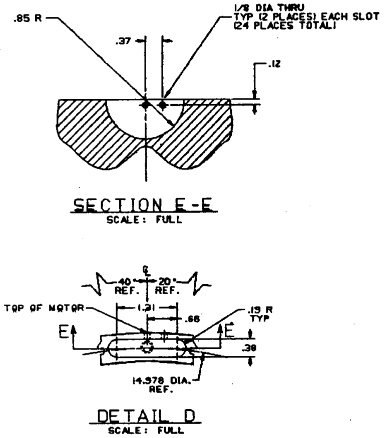
.85 R
1/8 DIA THRU TYP (2 PLACES) EACH SLOT (24 PLACES TOTAL)
.37
.12
SECTION E-E
SCALE: FULL
℄
40° REF.
20° REF.
TOP OF MOTOR
1.31
.66
.19 R TYP
E
E
.38
14.978 DIA. REF.
DETAIL D
SCALE: FULL

REV.	ZONE	DESCRIPTION	BY	APP'D	DATE

REVISIONS

CAEDOS PART NAME
AN.2711.DLL.175HPMTR.ORB
REFERENCES
SHEET26
A27-19992-9, -53
SESD NO.

DATE 7/16/90
DRAWN JGW
CHECKED
DESIGNED
REVIEWED
APPROVED
DATE

NORMAL CONDUCTIVE, HOMOPOLAR, CONTRAROTATING, 175 HP MOTOR

OUTER ROTOR
OUTER DRUM
DETAILS

SCALE: AS NOTED

DEPARTMENT OF NAVY
DAVID TAYLOR
RESEARCH CENTER
DTRC NUMBER A27-19992-26
REVISION -

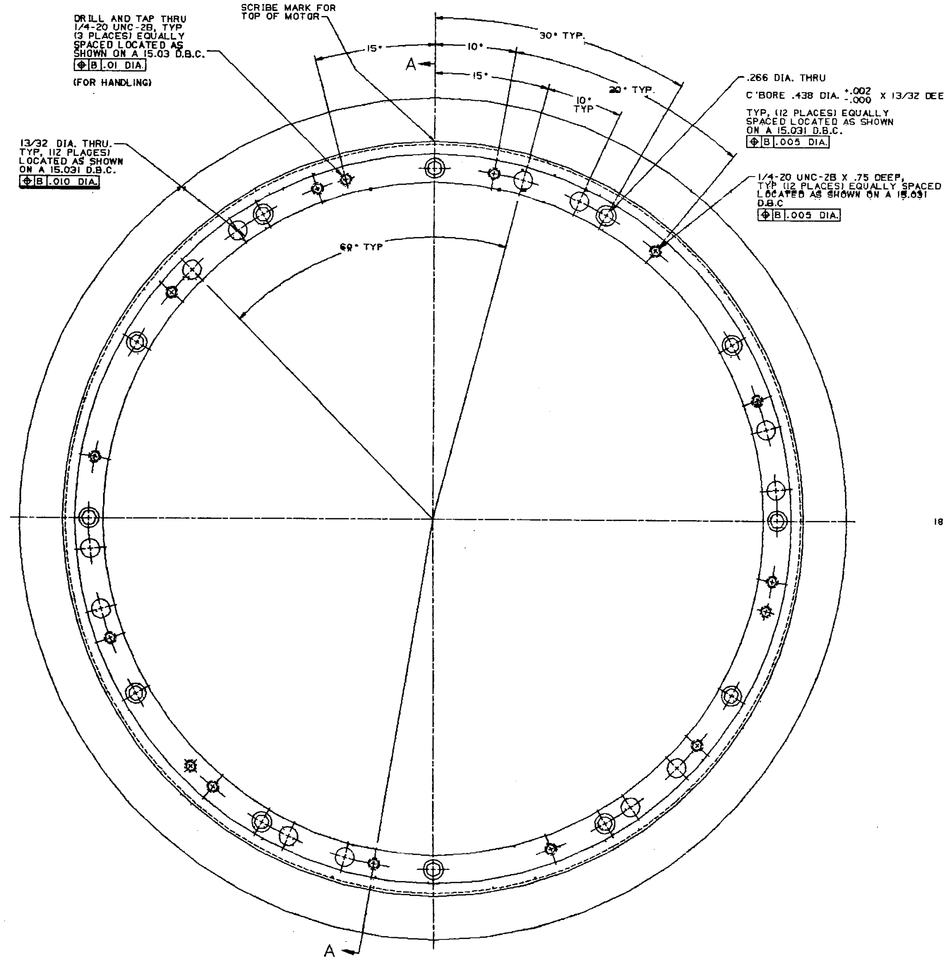
DRILL AND TAP THRU 1/4-20 UNC-2B, TYP (3 PLACES) EQUALLY SPACED LOCATED AS SHOWN ON A 15.03 D.B.C.
⌖ B .01 DIA.
(FOR HANDLING)
SCRIBE MARK FOR TOP OF MOTOR
13/32 DIA. THRU. TYP, (12 PLACES) LOCATED AS SHOWN ON A 15.031 D.B.C.
⌖ B .010 DIA.
15°
10°
A
15°
30° TYP.
20° TYP.
10° TYP
.266 DIA. THRU
C'BORE .438 DIA. +.002 -.000 X 13/32 DEEP
TYP, (12 PLACES) EQUALLY SPACED LOCATED AS SHOWN ON A 15.031 D.B.C.
⌖ B .005 DIA.
1/4-20 UNC-2B X .75 DEEP, TYP (12 PLACES) EQUALLY SPACED LOCATED AS SHOWN ON A 15.031 D.B.C
⌖ B .005 DIA.
60° TYP
A

⑱ FRONT VIEW
SCALE: FULL
(AS VIEWED FROM SERVICE END)

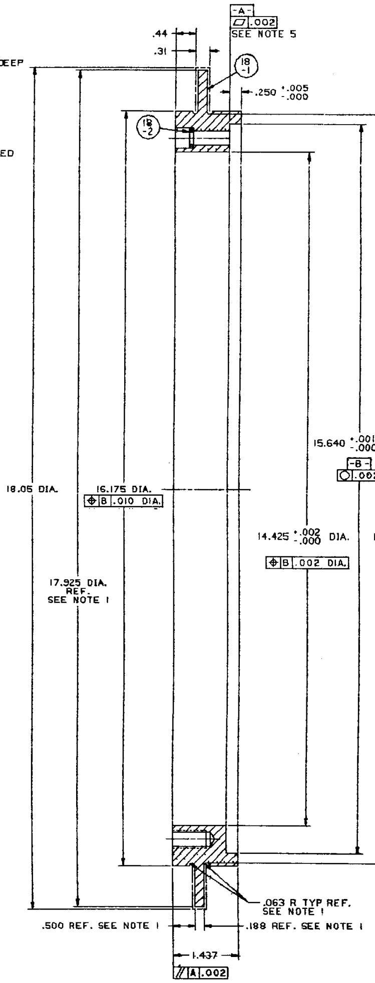
-A-
⏥ .002
SEE NOTE 5
.44
.31
18 -1
.250 +.005 -.000
18 -2
18.05 DIA.
16.175 DIA.
⌖ B .010 DIA.
17.925 DIA. REF. SEE NOTE 1
15.640 +.001 -.000 DIA.
-B-
○ .002
14.425 +.002 -.000 DIA.
⌖ B .002 DIA.
16.050 DIA. REF. GROOVE TYP
.063 R TYP REF. SEE NOTE 1
.500 REF. SEE NOTE 1
.188 REF. SEE NOTE 1
1.437
// A .002

SECTION A-A
SCALE: FULL

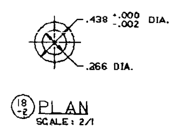
.438 +.000 -.002 DIA.
.266 DIA.

(18 -2) PLAN
SCALE: 2/1

SHOPWORK REQUEST NO.	PRINT RECORD

STRESS ENG'R			REVIEWED BY			PROJECT NUMBER
CODE	NAME	DATE	CODE	NAME	DATE	1-2700-206-12
			2711			
			2711			

LIST OF MATERIAL

PC. NO.	NAME OF PIECE	NO. REQD.	MATERIAL OR SOURCE
18	DRIVE END TERMINAL COLLECTOR DISK	-	
18 -1	DRIVE END TERMINAL COLLECTOR DISK FORGING	1	REF DTRC DWG A27-19992-51
18 -2	WASHER, FLAT, .438 O.D. .266 I.D., .094 THICK	12	STAINLESS STEEL PER AISI TYPE 304

NOTES:

1. REF DTRC DWG A27-19992-8 FOR ASSEMBLY AND FINAL MACHINING.
2. UNLESS OTHERWISE SPECIFIED. BREAK SHARP CORNERS WITH A CHAMFER, .03 X 45°.
3. UNLESS OTHERWISE SPECIFIED, MACHINED FILLETS TO BE .03 R.
4. ESTIMATED WEIGHT OF PC. NO. 18 IS 20 LB.
5. SURFACE TO BE PLATED PER CODE 2711 SPECIFICATIONS.

REV.	ZONE	DESCRIPTION	BY	APP'D	DATE

REVISIONS

CAEDOS PART NAME
AN.2711.DLL.175HPMTR.ORB
REFERENCES
SHEET27
A27-19992-8, -51
SESD NO.

DATE 7/17/90
DRAWN JBW
CHECKED
DESIGNED
REVIEWED
APPROVED
DATE

NORMAL CONDUCTIVE, HOMOPOLAR, CONTRAROTATING, 175 HP MOTOR

DRIVE END TERMINAL COLLECTOR DISK DETAILS

SCALE: AS NOTED

DEPARTMENT OF NAVY
DAVID TAYLOR RESEARCH CENTER
CARDEROCK LAB - BETHESDA, MD. 20084
ANNAPOLIS LAB - ANNAPOLIS, MD. 21402

DTRC NUMBER	REVISION
A27-19992-27	-

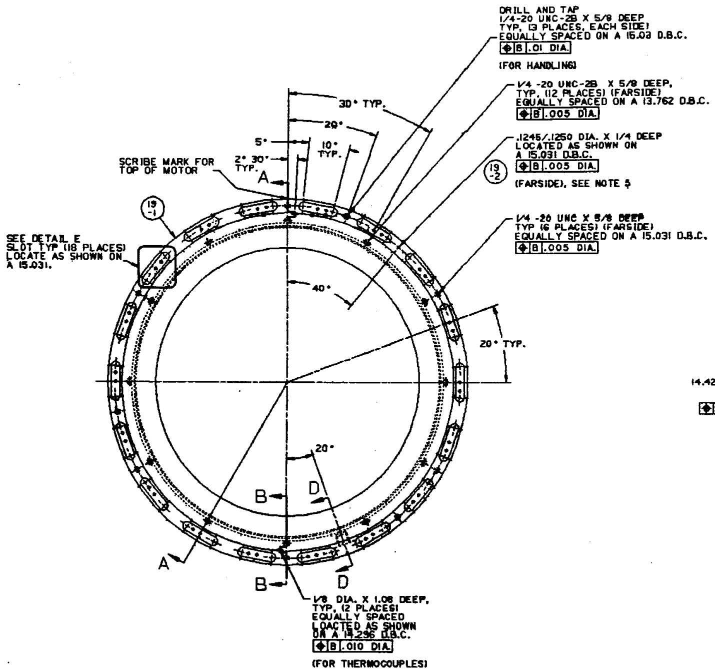
DRILL AND TAP
1/4-20 UNC-2B X 5/8 DEEP
TYP, (3 PLACES, EACH SIDE)
EQUALLY SPACED ON A 15.03 D.B.C.
⌖ B .01 DIA.
(FOR HANDLING)
1/4 -20 UNC-2B X 5/8 DEEP,
TYP, (12 PLACES) (FARSIDE)
EQUALLY SPACED ON A 13.762 D.B.C.
⌖ B .005 DIA.
.1245/.1250 DIA. X 1/4 DEEP
LOCATED AS SHOWN ON
A 15.031 D.B.C.
⌖ B .005 DIA.
19
-2
(FARSIDE), SEE NOTE 5
1/4 -20 UNC X 5/8 DEEP
TYP (6 PLACES) (FARSIDE)
EQUALLY SPACED ON A 15.031 D.B.C.
⌖ B .005 DIA.
30° TYP.
20°
10°
TYP.
5°
2° 30'
TYP.
A
SCRIBE MARK FOR
TOP OF MOTOR
19
-1
SEE DETAIL E
SLOT TYP (18 PLACES)
LOCATE AS SHOWN ON
A 15.031.
40°
20° TYP.
20°
B
D
A
B
D
1/8 DIA. X 1.08 DEEP,
TYP, (2 PLACES)
EQUALLY SPACED
LOACTED AS SHOWN
ON A 14.296 D.B.C.
⌖ B .010 DIA.
(FOR THERMOCOUPLES)

⑲ FRONT VIEW
SCALE : 1/2
(AS VIEWED FROM SERVICE END)

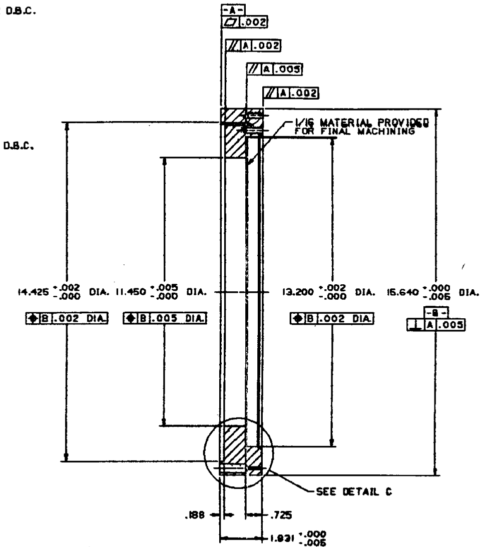
-A-
⏥ .002
// A .002
// A .005
// A .002
1/16 MATERIAL PROVIDED
FOR FINAL MACHINING
14.425 +.002 -.000 DIA.
⌖ B .002 DIA.
11.450 +.005 -.000 DIA.
⌖ B .005 DIA.
13.200 +.002 -.000 DIA.
⌖ B .002 DIA.
15.640 +.000 -.006 DIA.
-B-
⊥ A .005
SEE DETAIL C
.188
.725
1.831 +.000 -.005

SECTION A-A
SCALE : 1/2

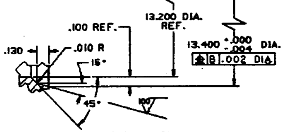
13.200 DIA.
REF.
13.400 +.000 -.004 DIA.
⌖ B .002 DIA.
.100 REF.
.130
.010 R
15°
45°
100

O-RING DETAIL
SCALE : 2/1

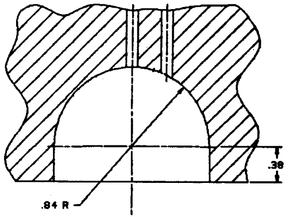

SECTION F-F
SCALE : 2/1

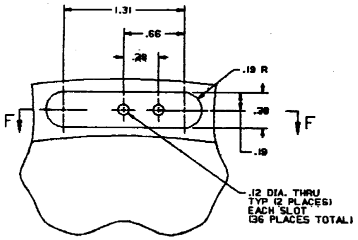
1.31
.66
.28
.19 R
.38
.19
F
F
.12 DIA. THRU
TYP (2 PLACES)
EACH SLOT
(36 PLACES TOTAL)

DETAIL E
SCALE : 2/1

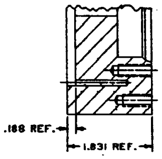
.188 REF.
1.831 REF.

SECTION B-B
SCALE : FULL

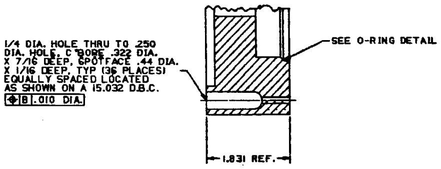
1/4 DIA. HOLE THRU TO .250
DIA. HOLE, C'BORE .322 DIA.
X 7/16 DEEP, SPOTFACE .44 DIA.
X 1/16 DEEP, TYP (36 PLACES)
EQUALLY SPACED LOCATED
AS SHOWN ON A 15.032 D.B.C.
⌖ B .010 DIA.
SEE O-RING DETAIL
1.831 REF.

DETAIL "C"
SCALE : FULL

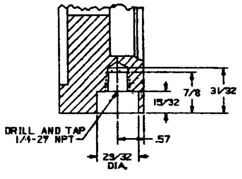
DRILL AND TAP
1/4-27 NPT
7/8
31/32
15/32
.57
29/32
DIA.

SECTION D-D
SCALE : FULL

SHOPWORK REQUEST NO.	PRINT RECORD

STRESS ENG'R			REVIEWED BY			PROJECT NUMBER
						1-2700-206-12
			2711			
			2711			

LIST OF MATERIAL

PC. NO.	NAME OF PIECE	NO. REQD	MATERIAL OR SOURCE
19	OUTER ROTOR DRIVE END CURRENT COLLECTOR	-	
19 -1	OUTER ROTOR DRIVE END CURRENT COLLECTOR FORGING	1	REF DTRC DWG A27-19992-54
19 -2	DOWEL PIN, .1251/.1253 DIA., 1/2 LONG	1	ALLOY STEEL, PER ANSI B18.3 UNBRAKO P/N 28420-125A-8

NOTES:

1. REF DTRC DWG A27-19992-9 FOR FABRICATION PROCEDURE.
2. UNLESS OTHERWISE SPECIFIED, BREAK SHARP CORNERS WITH A CHAMFER, .03 X 45°.
3. UNLESS OTHERWISE SPECIFIED, MACHINED FILLETS TO BE .03 R.
4. ESTIMATED WEIGHT OF PC. NO 19 IS 41.0 LB.
5. [illegible] PC. NO. 19-2 [illegible] INSTALLED SO THAT 1/4 INCH OF THE LENGTH OF THE DOWEL PIN PROTRUDES FROM PC. NO. 37-1.

REV.	ZONE	DESCRIPTION	BY	APP'D	DATE

REVISIONS

CAEDOS PART NAME	AN.2711.DLL.175HPMTR.ORB
REFERENCES	SHEET28 A27-19992-9, -54
SESD NO.	

DATE 6/4/90	NORMAL CONDUCTIVE, HOMOPOLAR, CONTRAROTATING, 175 HP MOTOR	DEPARTMENT OF NAVY
DRAWN JGW	DRIVE END OUTER ROTOR CURRENT COLLECTOR DETAILS	DAVID TAYLOR RESEARCH CENTER
CHECKED		
DESIGNED		
REVIEWED		
APPROVED		DTRC NUMBER A27-19992-28
DATE	SCALE: AS NOTED	REVISION -

SHOPWORK REQUEST NO.		PRINT RECORD				

STRESS ENG'R			REVIEWED BY			PROJECT NUMBER
CODE	NAME	DATE	CODE	NAME	DATE	1-2700-206-12
			2711			
			2711			

LIST OF MATERIAL

PC. NO.	NAME OF PIECE	NO. REQD.	MATERIAL OR SOURCE
20	DRIVE END OUTER ROTOR CURRENT COLLECTOR RING	-	REF DTRC DWG A27-19992-54

NOTES:

1. REF DTRC DWG A27-19992-9 FOR FABRICATION PROCEDURE.
2. UNLESS OTHERWISE SPECIFIED, BREAK SHARP CORNERS WITH A CHAMFER, .03 X 45°.
3. UNLESS OTHERWISE SPECIFIED, MACHINED FILLETS TO BE .03 R.
4. ESTIMATED WEIGHT OF PC. NO. 20 IS 19.3 LB.

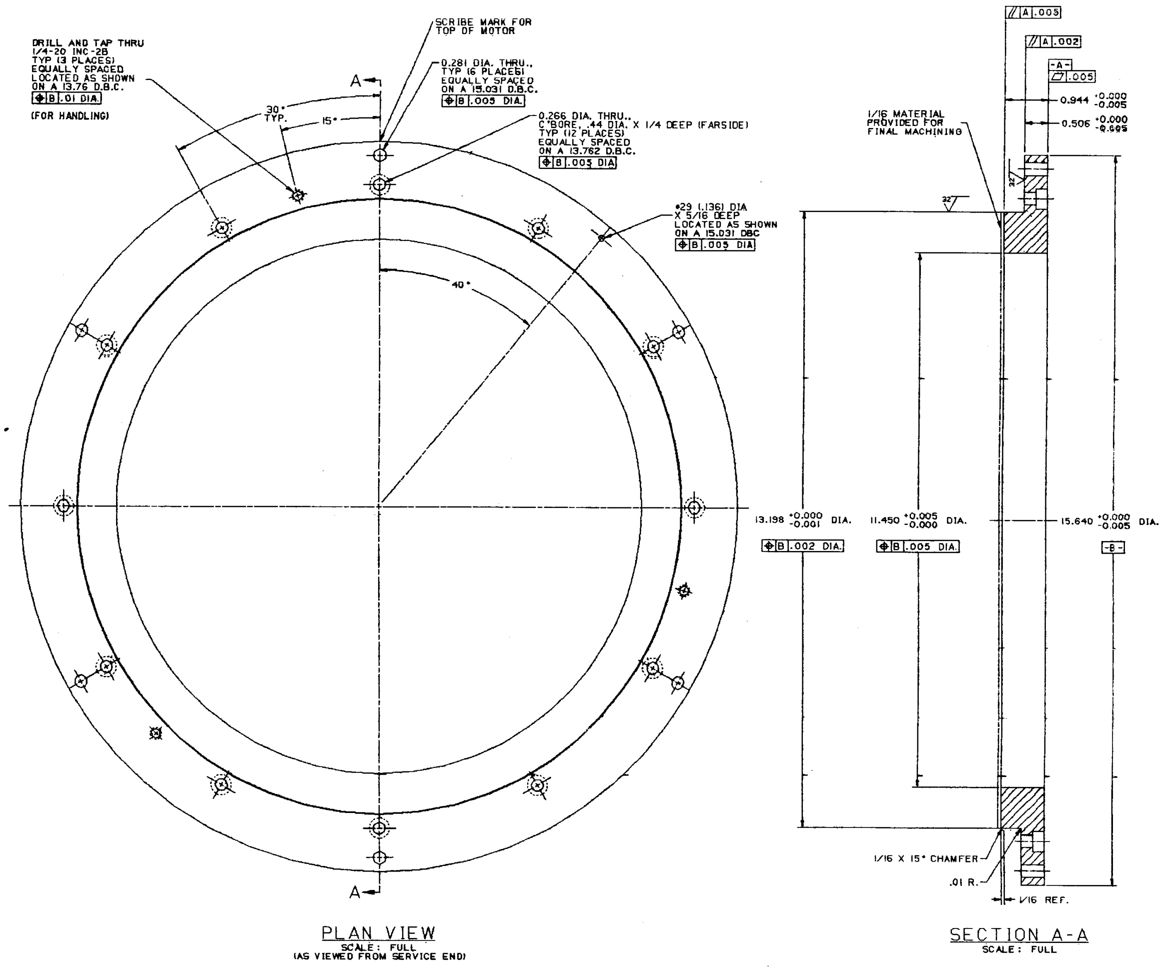
DRILL AND TAP THRU 1/4-20 INC-2B TYP (3 PLACES) EQUALLY SPACED LOCATED AS SHOWN ON A 13.76 D.B.C.
⌖ B .01 DIA.
(FOR HANDLING)
SCRIBE MARK FOR TOP OF MOTOR
0.281 DIA. THRU., TYP (6 PLACES) EQUALLY SPACED ON A 15.031 D.B.C.
⌖ B .005 DIA.
0.266 DIA. THRU., C'BORE .44 DIA. X 1/4 DEEP (FARSIDE) TYP (12 PLACES) EQUALLY SPACED ON A 13.762 D.B.C.
⌖ B .005 DIA
#29 (.136) DIA X 5/16 DEEP LOCATED AS SHOWN ON A 15.031 DBC
⌖ B .005 DIA
30° TYP.
15°
40°
A
A
13.198 +0.000 -0.001 DIA.
⌖ B .002 DIA.
11.450 +0.005 -0.000 DIA.
⌖ B .005 DIA
15.640 +0.000 -0.005 DIA.
-B-
// A .003
// A .002
-A-
▱ .005
0.944 +0.000 -0.005
0.506 +0.000 -0.005
1/16 MATERIAL PROVIDED FOR FINAL MACHINING
32
32
1/16 X 15° CHAMFER
.01 R.
1/16 REF.

PLAN VIEW
SCALE: FULL
(AS VIEWED FROM SERVICE END)

SECTION A-A
SCALE: FULL

REV.	ZONE	DESCRIPTION	BY	APP'D	DATE
		REVISIONS			

CASDOS PART NAME
AN.2711.DLL.175HPMTR.SE0RCCR
REFERENCES
SHEET29
A27-19992-9, -54
SESD NO.

DATE 7/3/90
DRAWN JGW
CHECKED
DESIGNED
REVIEWED
APPROVED
DATE

NORMAL CONDUCTIVE, HOMOPOLAR, CONTRAROTATING 175 HP MOTOR
DRIVE END OUTER ROTOR CURRENT COLLECTOR RING DETAILS
SCALE: AS NOTED

DEPARTMENT OF NAVY
DAVID TAYLOR RESEARCH CENTER
CARDEROCK LAB - BETHESDA, MD. 20084
ANNAPOLIS LAB - ANNAPOLIS, MD. 21402

DTRC NUMBER: A27-19992-29
REVISION: -

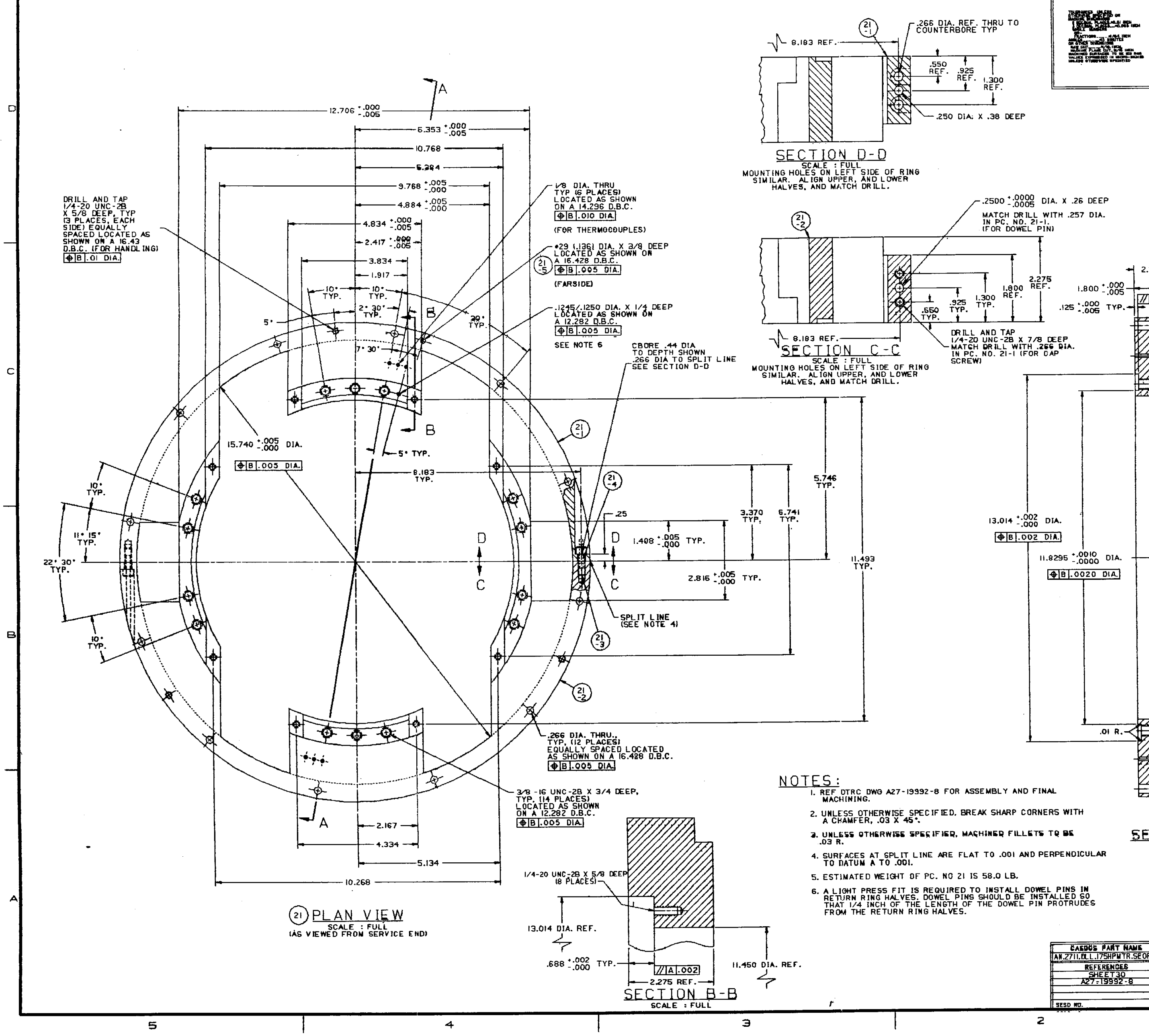
12.706 +.000 -.005
6.353 +.000 -.005
10.768
5.384
3.768 +.005 -.000
4.884 +.005 -.000
4.834 +.000 -.005
2.417 +.000 -.005
3.834
1.917
10° TYP.
10° TYP.
2° 30' TYP.
7° 30'
5°
20° TYP.
5° TYP.
A
B
B
A
D
C
D
C
15.740 +.005 -.000 DIA.
⌖ B .005 DIA.
8.183 TYP.
10° TYP.
11° 15' TYP.
22° 30' TYP.
10° TYP.
.25
1.408 +.005 -.000 TYP.
2.816 +.005 -.000 TYP.
3.370 TYP.
6.741 TYP.
5.746 TYP.
11.493 TYP.
2.167
4.334
5.134
10.268
21 -1
21 -2
21 -3
21 -4
21 -5
SPLIT LINE (SEE NOTE 4)
DRILL AND TAP 1/4-20 UNC-2B X 5/8 DEEP, TYP (3 PLACES, EACH SIDE) EQUALLY SPACED LOCATED AS SHOWN ON A 16.43 D.B.C. (FOR HANDLING) ⌖ B .01 DIA.
1/8 DIA. THRU TYP (6 PLACES) LOCATED AS SHOWN ON A 14.296 D.B.C. ⌖ B .010 DIA. (FOR THERMOCOUPLES)
#29 (.1361) DIA. X 3/8 DEEP LOCATED AS SHOWN ON A 16.428 D.B.C. ⌖ B .005 DIA. (FARSIDE)
.1245/.1250 DIA. X 1/4 DEEP LOCATED AS SHOWN ON A 12.282 D.B.C. ⌖ B .005 DIA.
SEE NOTE 6
CBORE .44 DIA TO DEPTH SHOWN .266 DIA TO SPLIT LINE SEE SECTION D-D
.266 DIA. THRU., TYP. (12 PLACES) EQUALLY SPACED LOCATED AS SHOWN ON A 16.428 D.B.C. ⌖ B .005 DIA.
3/8 -16 UNC-2B X 3/4 DEEP, TYP. (14 PLACES) LOCATED AS SHOWN ON A 12.282 D.B.C. ⌖ B .005 DIA.
(21) PLAN VIEW
SCALE : FULL
(AS VIEWED FROM SERVICE END)
8.183 REF.
.266 DIA. REF. THRU TO COUNTERBORE TYP
.550 REF.
.925 REF.
1.300 REF.
.250 DIA. X .38 DEEP
SECTION D-D
SCALE : FULL
MOUNTING HOLES ON LEFT SIDE OF RING SIMILAR. ALIGN UPPER, AND LOWER HALVES, AND MATCH DRILL.
.2500 +.0000 -.0005 DIA. X .26 DEEP
MATCH DRILL WITH .257 DIA. IN PC. NO. 21-1. (FOR DOWEL PIN)
2.275 REF.
1.800 REF.
1.300 TYP.
.925 TYP.
.550 TYP.
DRILL AND TAP 1/4-20 UNC-2B X 7/8 DEEP MATCH DRILL WITH .266 DIA. IN PC. NO. 21-1 (FOR CAP SCREW)
SECTION C-C
SCALE : FULL
MOUNTING HOLES ON LEFT SIDE OF RING SIMILAR. ALIGN UPPER, AND LOWER HALVES, AND MATCH DRILL.
1/4-20 UNC-2B X 5/8 DEEP (8 PLACES)
13.014 DIA. REF.
.688 +.002 -.000 TYP.
// A .002
2.275 REF.
11.450 DIA. REF.
SECTION B-B
SCALE : FULL
// A .002
2.275 +.005 -.000
1.800 +.000 -.005
.125 +.000 -.005 TYP.
// A .002
-A-
▱ .002
13.014 +.002 -.000 DIA.
⌖ B .002 DIA.
11.8295 +.0010 -.0000 DIA.
⌖ B .0020 DIA.
11.450 +.005 -.000 DIA.
⌖ B .005 DIA.
15.736 +.000 -.002 DIA.
⌖ B .002 DIA.
16.990 DIA.
-B-
⊥ A .002 DIA.
.01 R.
.01 R
SECTION A-A
SCALE : 3/4

SHOPWORK REQUEST NO.			PRINT RECORD				
STRESS ENG'R			REVIEWED BY			PROJECT NUMBER	
CODE	NAME	DATE	CODE	NAME	DATE	1-2700-206-12	
			2711				
			2711				

LIST OF MATERIAL

PC. NO.	NAME OF PIECE	NO. REQD.	MATERIAL OR SOURCE
21	SERVICE END OUTER ROTOR RETURN RING	-	
21 -1	SERVICE END OUTER ROTOR RETURN RING, UPPER HALF	1	CARBON STEEL, PER ASTM A36
21 -2	SERVICE END OUTER ROTOR RETURN RING, LOWER HALF	1	CARBON STEEL, PER ASTM A36
21 -3	CAP SCREW, SOCKET HEAD, 1/4-20UNC-3A X 3/4 LONG	4	ALLOY STEEL, PER ANSI B18.8.2, UNBRAKO, 20097-4C-12
21 -4	DOWEL PIN, .2501/.2503 DIA, 1/2 LONG	2	ALLOY STEEL, PER ANSI B18.3, UNBRAKO, 28420-250A-8. SEE NOTE 6
21 -5	DOWEL PIN, .1251/.1253 DIA, 1/2 LONG	1	ALLOY STEEL, PER ANSI B18.3, UNBRAKO, 28480-125A-8

NOTES:

1. REF DTRC DWG A27-19992-8 FOR ASSEMBLY AND FINAL MACHINING.
2. UNLESS OTHERWISE SPECIFIED, BREAK SHARP CORNERS WITH A CHAMFER, .03 X 45°.
3. UNLESS OTHERWISE SPECIFIED, MACHINED FILLETS TO BE .03 R.
4. SURFACES AT SPLIT LINE ARE FLAT TO .001 AND PERPENDICULAR TO DATUM A TO .001.
5. ESTIMATED WEIGHT OF PC. NO 21 IS 58.0 LB.
6. A LIGHT PRESS FIT IS REQUIRED TO INSTALL DOWEL PINS IN RETURN RING HALVES. DOWEL PINS SHOULD BE INSTALLED SO THAT 1/4 INCH OF THE LENGTH OF THE DOWEL PIN PROTRUDES FROM THE RETURN RING HALVES.

REV.	ZONE	DESCRIPTION	BY	APP'D	DATE
		REVISIONS			

CAEDOS PART NAME	AN.2711.DLL.175HPMTR.SEORRR
REFERENCES	SHEET30 A27-19992-8
SESD NO.	

DATE 7/17/90	NORMAL CONDUCTIVE, HOMOPOLAR, CONTRAROTATING, 175 HP MOTOR	DEPARTMENT OF NAVY
DRAWN JBW		DAVID TAYLOR RESEARCH CENTER
CHECKED	SERVICE END OUTER ROTOR RETURN RING DETAILS	
DESIGNED		DTRC NUMBER: A27-19992-30
REVIEWED		REVISION: -
APPROVED		
DATE	SCALE: AS NOTED	

SHOPWORK REQUEST NO. PRINT RECORD

STRESS ENG'R			REVIEWED BY			PROJECT NUMBER
CODE	NAME	DATE	CODE	NAME	DATE	1-2700-206-12
			2711			
			2711			

LIST OF MATERIAL

PC. NO.	NAME OF PIECE	NO. REQD.	MATERIAL OR SOURCE
22	OUTER ROTOR CYLINDER	-	
22-1	OUTER ROTER CYLINDER FORGING	1	REF DTRC DWG A27-19992-63
22-2	GLASS LAMINATE TUBE, .625 THK, 1.24 OD, 1 ID	2	G-10 BRONZE AND PLASTIC SPECIALTIES, SEE NOTE 1
22-3	DOWEL PIN, .1251/.1253 DIA, 1/2 LONG	2	ALLOY STEEL, PER ANSI B18.3 UNBRAKO P/N 28420-125A-8

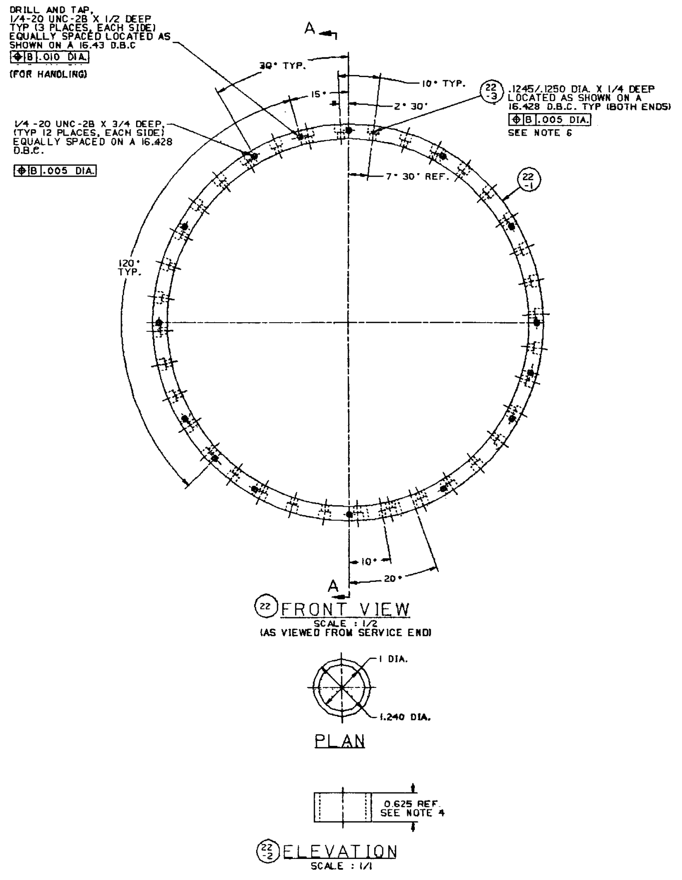

DRILL AND TAP, 1/4-20 UNC-2B X 1/2 DEEP TYP (3 PLACES, EACH SIDE) EQUALLY SPACED LOCATED AS SHOWN ON A 16.43 D.B.C
⌖ B .010 DIA.
(FOR HANDLING)
A
30° TYP.
15°
10° TYP.
2° 30'
22-3 .1245/.1250 DIA. X 1/4 DEEP LOCATED AS SHOWN ON A 16.428 D.B.C. TYP (BOTH ENDS)
⌖ B .005 DIA.
SEE NOTE 6
1/4-20 UNC-2B X 3/4 DEEP, (TYP 12 PLACES, EACH SIDE) EQUALLY SPACED ON A 16.428 D.B.C.
⌖ B .005 DIA.
7° 30' REF.
22-1
120° TYP.
10°
20°
A
22 FRONT VIEW
SCALE : 1/2
(AS VIEWED FROM SERVICE END)
1 DIA.
1.240 DIA.
PLAN
0.625 REF SEE NOTE 4
22-2 ELEVATION
SCALE : 1/1

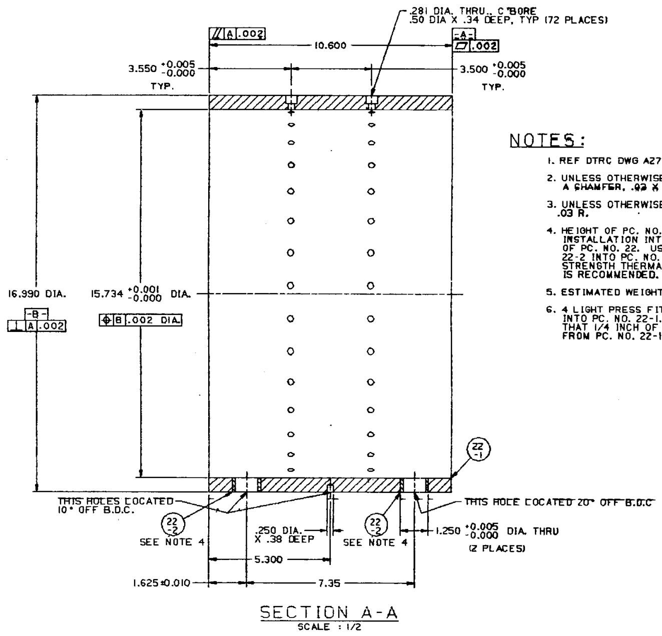

.281 DIA. THRU., C'BORE .50 DIA X .34 DEEP, TYP (72 PLACES)
// A .002
10.600
-A-
▱ .002
3.550 +0.005 -0.000 TYP.
3.500 +0.005 -0.000 TYP.
16.990 DIA.
-B-
⊥ A .002
15.734 +0.001 -0.000 DIA.
⌖ B .002 DIA.
22-1
THIS HOLES LOCATED 10° OFF B.D.C.
22-2 SEE NOTE 4
.250 DIA. X .38 DEEP
22-2 SEE NOTE 4
THIS HOLE LOCATED 20° OFF B.D.C
1.250 +0.005 -0.000 DIA. THRU (2 PLACES)
5.300
1.625±0.010
7.35
SECTION A-A
SCALE : 1/2

NOTES:

1. REF DTRC DWG A27-19992-9 FOR FABRICATION PROCEDURE.
2. UNLESS OTHERWISE SPECIFIED, BREAK SHARP CORNERS WITH A CHAMFER, .03 X 45°.
3. UNLESS OTHERWISE SPECIFIED, MACHINED FILLETS TO BE .03 R.
4. HEIGHT OF PC. NO. 22-2 TO BE ACCOMPLISHED AFTER INSTALLATION INTO PC. NO. 22-1, AND AT FINAL MACHINING OF PC. NO. 22. USE ACRYLIC ADHESIVE TO INSTALL PC. NO. 22-2 INTO PC. NO. 22-1. LOCTITE OUTPUT 383 HIGH STRENGTH THERMALLY CONDUCTIVE ADHESIVE, OR EQUAL, IS RECOMMENDED.
5. ESTIMATED WEIGHT OF PC. NO. 22 IS 36.4 LB.
6. 4 LIGHT PRESS FIT IS REQUIRED TO INSTALL PC. NO. 22-3 INTO PC. NO. 22-1. PC. NO. 22-3 SHOULD BE INSTALLED SO THAT 1/4 INCH OF THE LENGTH OF THE DOWEL PIN PROTRUDES FROM PC. NO. 22-1.

REV.	ZONE	DESCRIPTION	BY	APP'D	DATE

REVISIONS

CAEDOS PART NAME
AN.2711.DLL.175HPMTR.ORC
REFERENCES
SHEET31
A27-19992-9, -63
SESD NO.

DATE 8/24/90
DRAWN JGW
CHECKED
DESIGNED
REVIEWED
APPROVED
DATE

NORMAL CONDUCTIVE, HOMOPOLAR, CONTRAROTATING, 175 HP MOTOR

OUTER ROTOR CYLINDER DETAILS

SCALE: AS NOTED

DEPARTMENT OF NAVY
DAVID TAYLOR RESEARCH CENTER
CARDEROCK LAB - BETHESDA, MD 20084
ANNAPOLIS LAB - ANNAPOLIS, MD 21402

DTRC NUMBER	REVISION
A27-19992-31	-

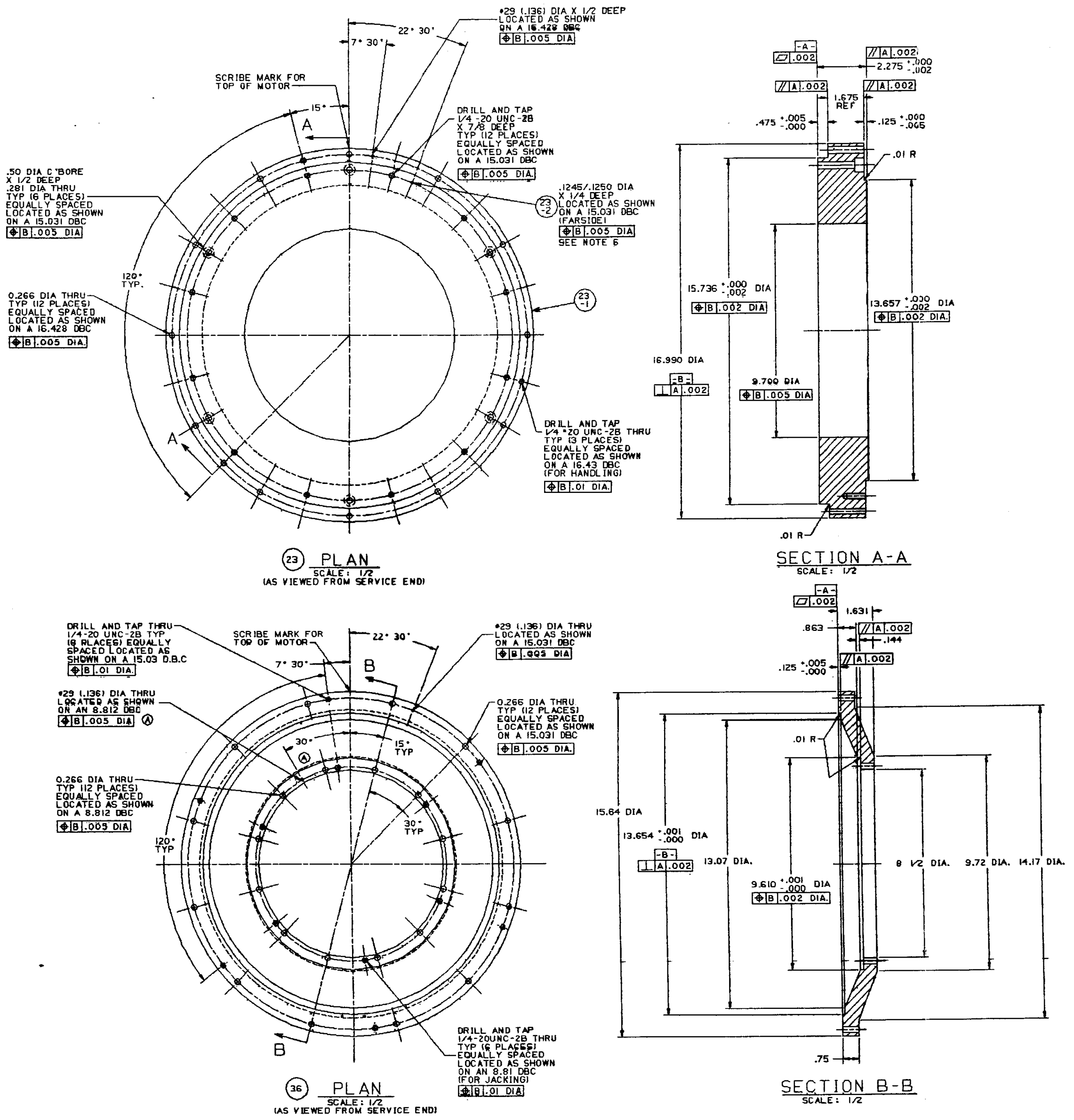
#29 (.136) DIA X 1/2 DEEP LOCATED AS SHOWN ON A 16.428 DBC
B .005 DIA
22° 30'
7° 30'
SCRIBE MARK FOR TOP OF MOTOR
15°
A
DRILL AND TAP 1/4 -20 UNC-2B X 7/8 DEEP TYP (12 PLACES) EQUALLY SPACED LOCATED AS SHOWN ON A 15.031 DBC
B .005 DIA.
.50 DIA C'BORE X 1/2 DEEP .281 DIA THRU TYP (6 PLACES) EQUALLY SPACED LOCATED AS SHOWN ON A 15.031 DBC
B .005 DIA
23 -2
.1245/.1250 DIA X 1/4 DEEP LOCATED AS SHOWN ON A 15.031 DBC (FARSIDE)
B .005 DIA
SEE NOTE 6
120° TYP.
0.266 DIA THRU TYP (12 PLACES) EQUALLY SPACED LOCATED AS SHOWN ON A 16.428 DBC
B .005 DIA.
23 -1
DRILL AND TAP 1/4 *20 UNC-2B THRU TYP (3 PLACES) EQUALLY SPACED LOCATED AS SHOWN ON A 16.43 DBC (FOR HANDLING)
B .01 DIA.
23 PLAN
SCALE: 1/2
(AS VIEWED FROM SERVICE END)
-A-
.002
A .002
2.275 +.000 -.002
A .002
A .002
1.675 REF
.475 +.005 -.000
.125 +.000 -.005
.01 R
15.736 +.000 -.002 DIA
B .002 DIA
13.657 +.000 -.002 DIA
B .002 DIA.
16.990 DIA
-B-
A .002
9.700 DIA
B .005 DIA
.01 R
SECTION A-A
SCALE: 1/2
DRILL AND TAP THRU 1/4-20 UNC-2B TYP (8 PLACES) EQUALLY SPACED LOCATED AS SHOWN ON A 15.03 D.B.C
B .01 DIA.
SCRIBE MARK FOR TOP OF MOTOR
22° 30'
7° 30'
B
#29 (.136) DIA THRU LOCATED AS SHOWN ON A 15.031 DBC
B .005 DIA
#29 (.136) DIA THRU LOCATED AS SHOWN ON AN 8.812 DBC
B .005 DIA
A
30°
15° TYP
0.266 DIA THRU TYP (12 PLACES) EQUALLY SPACED LOCATED AS SHOWN ON A 15.031 DBC
B .005 DIA.
0.266 DIA THRU TYP (12 PLACES) EQUALLY SPACED LOCATED AS SHOWN ON A 8.812 DBC
B .005 DIA
30° TYP
120° TYP
B
DRILL AND TAP 1/4-20UNC-2B THRU TYP (6 PLACES) EQUALLY SPACED LOCATED AS SHOWN ON AN 8.81 DBC (FOR JACKING)
B .01 DIA
36 PLAN
SCALE: 1/2
(AS VIEWED FROM SERVICE END)
-A-
.002
1.631
.863
A .002
.144
A .002
.125 +.005 -.000
.01 R
15.64 DIA
13.654 +.001 -.000 DIA
-B-
A .002
13.07 DIA.
9.610 +.001 -.000 DIA
B .002 DIA.
8 1/2 DIA.
9.72 DIA.
14.17 DIA.
.75
SECTION B-B
SCALE: 1/2

SHOPWORK REQUEST NO.		PRINT RECORD					

STRESS ENG'R			REVIEWED BY			PROJECT NUMBER
CODE	NAME	DATE	CODE	NAME	DATE	1-2700-206-12
			2711			
			2711			

LIST OF MATERIAL

PC. NO.	NAME OF PIECE	NO. REQD.	MATERIAL OR SOURCE
23	DRIVE END, OUTER ROTOR, RETURN RING	-	
23 -1	DRIVE END, OUTER ROTOR, RETURN RING	1	CARBON STEEL, PER ASTM A36
23 -2	DOWEL PIN, .1251/.1253 DIA, 1/2 LONG	1	ALLOY STEEL, PER ANSI B18.3, UNBRAKO P/N 28420-125A-8
36	TRANSITION FLANGE	-	STAINLESS STEEL, PER AISI TYPE 304

NOTES:

1. REF DTRC DWG A27-19992-8 FOR FABRICATION PROCEDURE.
2. UNLESS OTHERWISE SPECIFIED, BREAK SHARP CORNERS WITH A CHAMFER, .03 X 45°.
3. UNLESS OTHERWISE SPECIFIED, MACHINED FILLETS TO BE .03 R.
4. ESTIMATED WEIGHT OF PC. NO 23 IS 91.2 LB.
5. ESTIMATED WEIGHT OF PC. NO 36 IS 29.6 LB.
6. A LIGHT PRESS FIT IS REQUIRED TO INSTALL PC NO 23-2 INTO PC NO 23-1. PC NO 23-2 SHOULD BE INSTALLED SO THAT 1/4 INCH OF THE LENGTH OF THE DOWEL PIN PROTRUDES FROM PC NO 23-1.

REVISIONS

REV.	ZONE	DESCRIPTION	BY	APP'D	DATE
A	B-5	ADDED CLEARANCE HOLE FOR DOWEL PIN ALIGNMENT	JGW		

CAEDOS PART NAME
AN.2711.DLL.175HPMTR.DEORRR
REFERENCES
SHEET32
A27-19992-8
SESD NO.

DATE 10/23/89
DRAWN RLS
CHECKED
DESIGNED
REVIEWED
APPROVED S/JOHN DRAKE
DATE 8/15/91

NORMAL CONDUCTIVE, HOMOPOLAR, CONTRAROTATING, 175 HP MOTOR
DRIVE END OUTER ROTOR RETURN RING, AND TRANSITION FLANGE DETAILS
SCALE: 1/2

DEPARTMENT OF NAVY
DAVID TAYLOR RESEARCH CENTER

DTRC NUMBER A27-19992-32
REVISION A

SHOPWORK REQUEST NO.	PRINT RECORD

STRESS ENG'R			REVIEWED BY			PROJECT NUMBER
						1-2700-206-12
			2711			
			2711			

LIST OF MATERIAL

PC. NO.	NAME OF PIECE	NO. REQD.	MATERIAL OR SOURCE
55	SERVICE END OUTER ROTOR RETURN RING LEFT PAD	-	CARBON STEEL, PER ASTM A36
56	SERVICE END OUTER ROTOR RETURN RING RIGHT PAD	-	CARBON STEEL, PER ASTM A36

NOTES:

1. REF DTRC DWG A27-19992-8 FOR FABRICATION PROCEDURE.
2. UNLESS OTHERWISE SPECIFIED, BREAK SHARP CORNERS WITH A CHAMFER, .03 X 45°.
3. UNLESS OTHERWISE SPECIFIED, MACHINED FILLETS TO BE .03 R.
4. ESTIMATED WEIGHT OF PC. NO 55 IS 1.7 LB.
5. ESTIMATED WEIGHT OF PC. NO 56 IS 1.7 LB.
6. MATCH MARK WITH LETTERS AT ASSEMBLY FOR PC. NO. 55, AND 56 WITH PC. NO. 21.

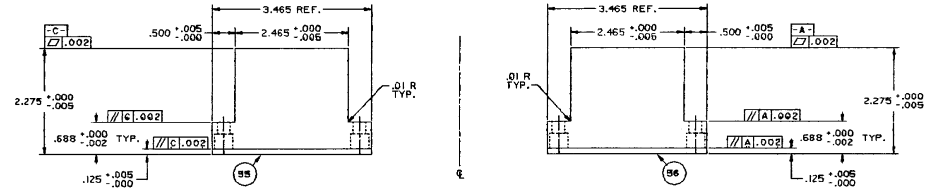
-C-
⏥ .002
.500 +.005 -.000
3.465 REF.
2.465 +.000 -.005
2.275 +.000 -.005
// C .002
.688 +.000 -.002 TYP.
.125 +.005 -.000
.01 R TYP.
55
℄
-A-
⏥ .002
// A .002
56

PLAN VIEW
SCALE: 1/1

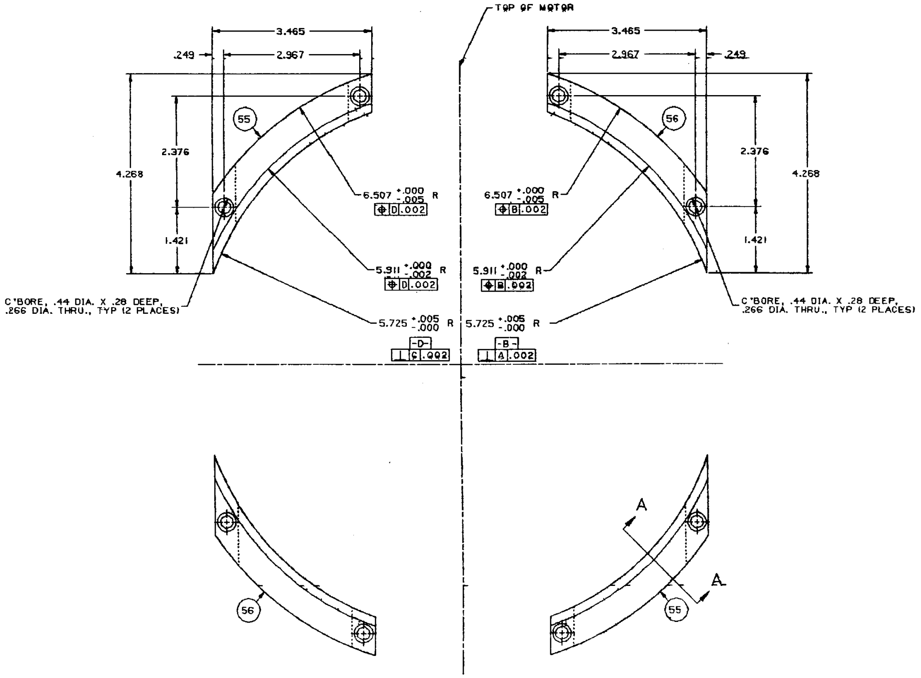
TOP OF MOTOR
3.465
2.967
.249
55
56
2.376
4.268
1.421
6.507 +.000 -.005 R
⌖ D .002
⌖ B .002
5.911 +.000 -.002 R
5.725 +.005 -.000 R
-D-
⊥ C .002
-B-
⊥ A .002
C'BORE, .44 DIA. X .28 DEEP, .266 DIA. THRU., TYP (2 PLACES)
A
A

ELEVATION
SCALE: 1/1
(AS VIEWED FROM SERVICE END)

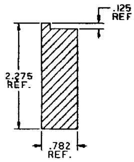
.125 REF.
2.275 REF.
.782 REF.

SECTION A-A
SCALE : 1/1

CAEDOS PART NAME
AN.2711.DLL.175HPMTR.SEORRR
REFERENCES
SHEET33
A27-19992-8
SESD NO.

REV.	ZONE	DESCRIPTION	BY	APP'D	DATE

REVISIONS

DATE 7/9/90
DRAWN JGW
CHECKED
DESIGNED
REVIEWED
APPROVED
DATE

NORMAL CONDUCTIVE, HOMOPOLAR, CONTRAROTATING 175 HP MOTOR

SERVICE END OUTER ROTOR RETURN RING PAD DETAILS

SCALE: AS NOTED

DEPARTMENT OF NAVY
DAVID TAYLOR RESEARCH CENTER
CARDEROCK LAB - BETHESDA, MD 20084
ANNAPOLIS LAB - ANNAPOLIS, MD 21402

DTRC NUMBER	REVISION
A27-19992-33	-

SHOPWORK REQUEST NO.	PRINT RECORD

STRESS ENG'R			REVIEWED BY			PROJECT NUMBER
						1-2700-206-12
			2711			
			2711			

LIST OF MATERIAL

PC. NO.	NAME OF PIECE	NO. REQD.	MATERIAL OR SOURCE
55	SERVICE END OUTER ROTOR RETURN RING LEFT PAD	-	CARBON STEEL, PER ASTM A36
56	SERVICE END OUTER ROTOR RETURN RING RIGHT PAD	-	CARBON STEEL, PER ASTM A36

NOTES:

1. REF DTRC DWG A27-19992-8 FOR FABRICATION PROCEDURE.
2. UNLESS OTHERWISE SPECIFIED, BREAK SHARP CORNERS WITH A CHAMFER, .03 X 45°.
3. UNLESS OTHERWISE SPECIFIED, MACHINED FILLETS TO BE .03 R.
4. ESTIMATED WEIGHT OF PC. NO 55 IS 1.7 LB.
5. ESTIMATED WEIGHT OF PC. NO 56 IS 1.7 LB.
6. MATCH MARK WITH LETTERS AT ASSEMBLY FOR PC. NO. 55. AND 56 WITH PC. NO. 21.

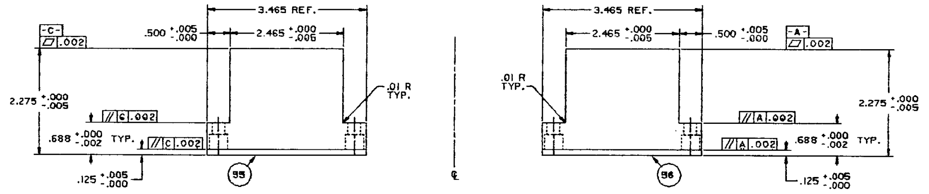

-C-
▱ .002
.500 +.005 -.000
3.465 REF.
2.465 +.000 -.006
.01 R TYP.
2.275 +.000 -.005
// C .002
.688 +.000 -.002 TYP.
// C .002
.125 +.005 -.000
55
℄
-A-
▱ .002
// A .002
// A .002
56

PLAN VIEW
SCALE: 1/1

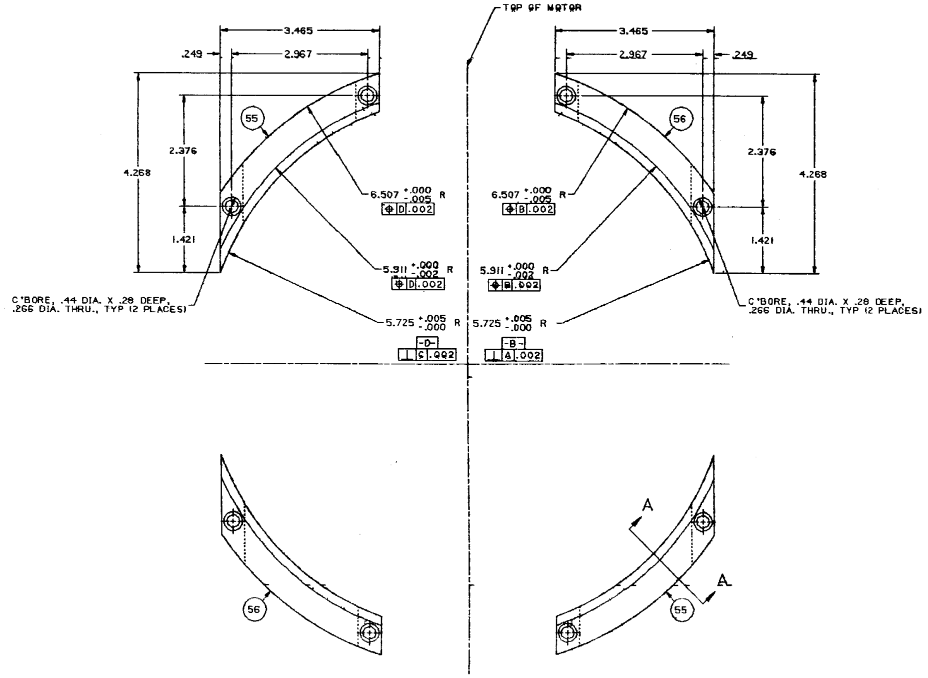

TOP OF MOTOR
3.465
.249
2.967
55
56
2.376
4.268
1.421
6.507 +.000 -.005 R
⊕ D .002
⊕ B .002
5.911 +.000 -.002 R
5.725 +.005 -.000 R
-D-
⊥ C .002
-B-
⊥ A .002
C'BORE, .44 DIA. X .28 DEEP, .266 DIA. THRU., TYP (2 PLACES)
A
A

ELEVATION
SCALE: 1/1
(AS VIEWED FROM SERVICE END)

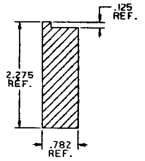

.125 REF.
2.275 REF.
.782 REF.

SECTION A-A
SCALE : 1/1

			CAEDOS PART NAME
			AN.2711.DLL.175HPMTR.SEORRR
			REFERENCES
			SHEET33
			A27-19992-8
			SESD NO.

REV.	ZONE	DESCRIPTION	BY	APP'D	DATE

REVISIONS

DATE 7/9/90
DRAWN JBW
CHECKED
DESIGNED
REVIEWED
APPROVED
DATE

NORMAL CONDUCTIVE, HOMOPOLAR, CONTRAROTATING 175 HP MOTOR
SERVICE END
OUTER ROTOR
RETURN RING PAD
DETAILS

SCALE: AS NOTED

DEPARTMENT OF NAVY
DAVID TAYLOR RESEARCH CENTER

DTRC NUMBER	REVISION
A27-19992-33	-

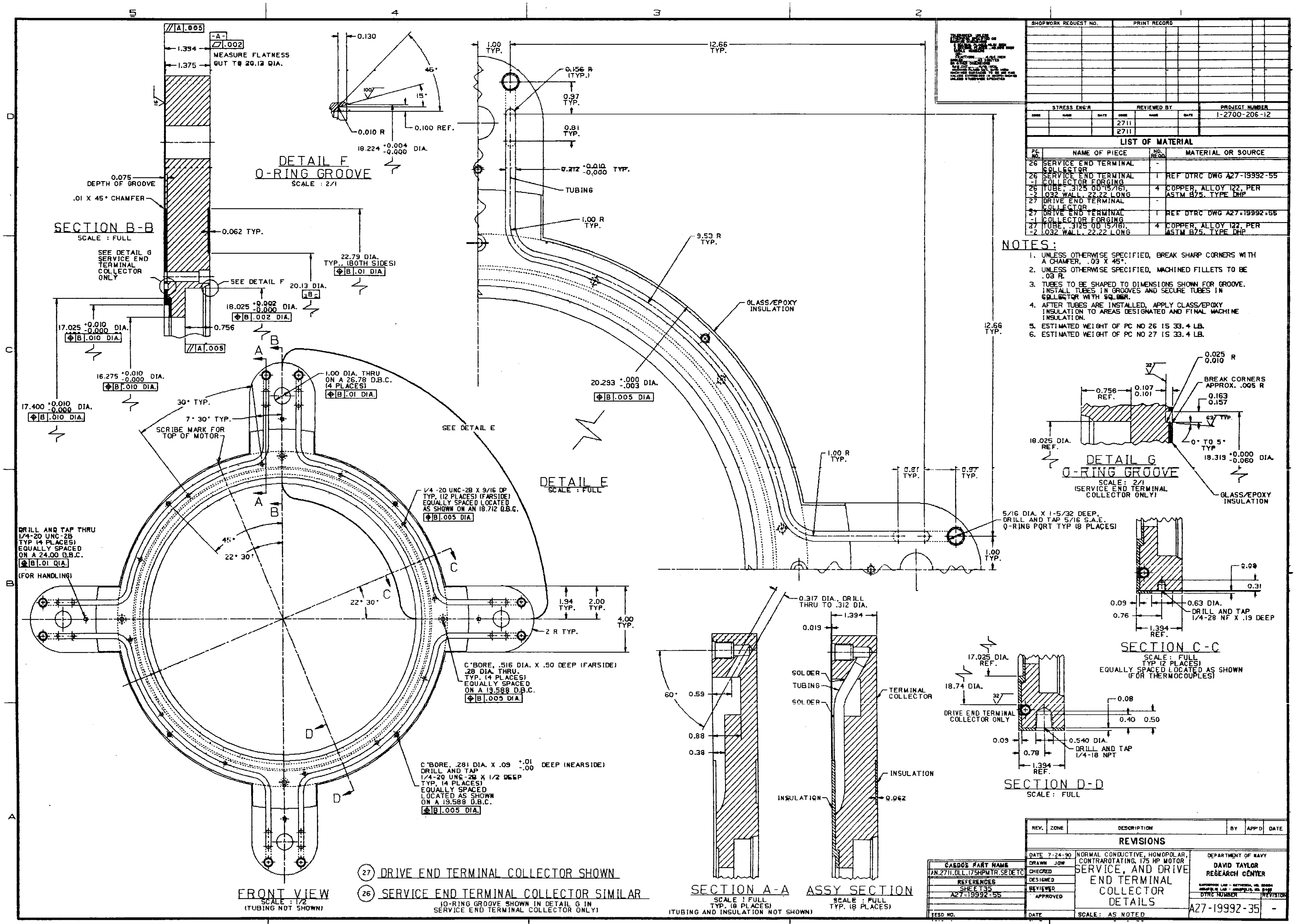
FRONT VIEW
SCALE : 1/2
(TUBING NOT SHOWN)
DETAIL E
SCALE : FULL
SEE DETAIL E
DETAIL F
O-RING GROOVE
SCALE : 2/1
SECTION B-B
SCALE : FULL
DETAIL G
O-RING GROOVE
SCALE: 2/1
(SERVICE END TERMINAL COLLECTOR ONLY)
SECTION A-A
SCALE : FULL
TYP. (8 PLACES)
(TUBING AND INSULATION NOT SHOWN)
ASSY SECTION
SCALE : FULL
TYP. (8 PLACES)
SECTION C-C
SCALE: FULL
TYP (2 PLACES)
EQUALLY SPACED LOCATED AS SHOWN
(FOR THERMOCOUPLES)
SECTION D-D
SCALE: FULL
DRIVE END TERMINAL COLLECTOR ONLY
SCRIBE MARK FOR TOP OF MOTOR
1.00 DIA. THRU ON A 26.78 D.B.C. (4 PLACES)
1/4-20 UNC-2B X 9/16 DP TYP. (12 PLACES) (FARSIDE) EQUALLY SPACED LOCATED AS SHOWN ON AN 18.712 D.B.C.
C'BORE, .516 DIA. X .50 DEEP (FARSIDE) .28 DIA. THRU. TYP. (4 PLACES) EQUALLY SPACED ON A 19.588 D.B.C.
C'BORE, .281 DIA. X .09 +.01 -.00 DEEP (NEARSIDE) DRILL AND TAP 1/4-20 UNC-2B X 1/2 DEEP TYP. (4 PLACES) EQUALLY SPACED LOCATED AS SHOWN ON A 19.588 D.B.C.
DRILL AND TAP THRU 1/4-20 UNC-2B TYP (4 PLACES) EQUALLY SPACED ON A 24.00 D.B.C. (FOR HANDLING)
5/16 DIA. X 1-5/32 DEEP, DRILL AND TAP 5/16 S.A.E. O-RING PORT TYP (8 PLACES)
0.317 DIA., DRILL THRU TO .312 DIA.
MEASURE FLATNESS OUT TO 20.13 DIA.
GLASS/EPOXY INSULATION
TUBING
SOLDER
TERMINAL COLLECTOR
INSULATION
BREAK CORNERS APPROX. .005 R
0.63 DIA. DRILL AND TAP 1/4-28 NF X .19 DEEP
0.540 DIA. DRILL AND TAP 1/4-18 NPT
20.293 +.000 -.003 DIA.
18.224 +0.004 -0.000 DIA.
18.025 +0.002 -0.000 DIA.
17.025 +0.010 -0.000 DIA.
16.275 +0.010 -0.000 DIA.
17.400 +0.010 -0.000 DIA.
22.79 DIA. TYP., (BOTH SIDES)
18.319 +0.000 -0.060 DIA.
12.66 TYP.
9.53 R TYP.

PC. NO.	NAME OF PIECE	NO. REQD.	MATERIAL OR SOURCE
26	SERVICE END TERMINAL COLLECTOR	-	
26 -1	SERVICE END TERMINAL COLLECTOR FORGING	1	REF DTRC DWG A27-19992-55
26 -2	TUBE, .3125 OD (5/16), .032 WALL, 22.22 LONG	4	COPPER, ALLOY 122, PER ASTM B75, TYPE DHP
27	DRIVE END TERMINAL COLLECTOR	-	
27 -1	DRIVE END TERMINAL COLLECTOR FORGING	1	REF DTRC DWG A27-19992-55
27 -2	TUBE, .3125 OD (5/16), .032 WALL, 22.22 LONG	4	COPPER, ALLOY 122, PER ASTM B75, TYPE DHP

LIST OF MATERIAL

STRESS ENG'R			REVIEWED BY			PROJECT NUMBER
CODE	NAME	DATE	CODE	NAME	DATE	1-2700-206-12
			2711			
			2711			

SHOPWORK REQUEST NO.
PRINT RECORD

NOTES:

1. UNLESS OTHERWISE SPECIFIED, BREAK SHARP CORNERS WITH A CHAMFER, .03 X 45°.
2. UNLESS OTHERWISE SPECIFIED, MACHINED FILLETS TO BE .03 R.
3. TUBES TO BE SHAPED TO DIMENSIONS SHOWN FOR GROOVE. INSTALL TUBES IN GROOVES AND SECURE TUBES IN COLLECTOR WITH SOLDER.
4. AFTER TUBES ARE INSTALLED, APPLY CLASS/EPOXY INSULATION TO AREAS DESIGNATED AND FINAL MACHINE INSULATION.
5. ESTIMATED WEIGHT OF PC NO 26 IS 33.4 LB.
6. ESTIMATED WEIGHT OF PC NO 27 IS 33.4 LB.

(27) DRIVE END TERMINAL COLLECTOR SHOWN

(26) SERVICE END TERMINAL COLLECTOR SIMILAR

(O-RING GROOVE SHOWN IN DETAIL G IN SERVICE END TERMINAL COLLECTOR ONLY)

REV.	ZONE	DESCRIPTION	BY	APP'D	DATE

REVISIONS

CADDOS PART NAME
AN.2711.DLL.175HPMTR.SEDETC
REFERENCES
SHEET35
A27-19992-55
ESD NO.

DATE 7-24-90
DRAWN JGW
CHECKED
DESIGNED
REVIEWED
APPROVED
DATE

NORMAL CONDUCTIVE, HOMOPOLAR, CONTRAROTATING, 175 HP MOTOR
SERVICE, AND DRIVE END TERMINAL COLLECTOR DETAILS
SCALE: AS NOTED

DEPARTMENT OF NAVY
DAVID TAYLOR RESEARCH CENTER
CARDEROCK LAB - BETHESDA, MD. 20084
ANNAPOLIS LAB - ANNAPOLIS, MD. 21402

DTRC NUMBER	REVISION
A27-19992-35	-

SHOPWORK REQUEST NO.		PRINT RECORD					

STRESS ENG'R			REVIEWED BY			PROJECT NUMBER
CODE	NAME	DATE	CODE	NAME	DATE	1-2700-206-12
			2711			
			2711			

LIST OF MATERIAL

PC. NO.	NAME OF PIECE	NO. REQD	MATERIAL OR SOURCE
29	OUTER ROTOR INSULATOR, (GLASS LAMINATE SHEET, .375 THK, 16.926 OD,14.356 ID)	-	G-10, BRONZE AND PLASTIC SPECIALTIES

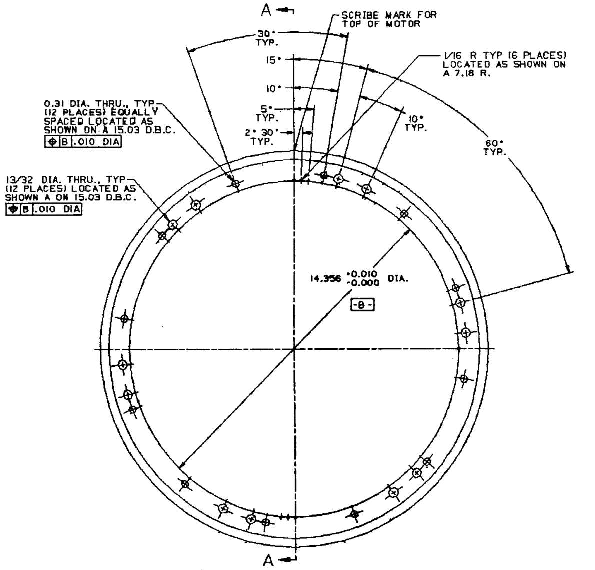
A
SCRIBE MARK FOR TOP OF MOTOR
30° TYP.
15°
10°
5° TYP.
2° 30' TYP.
1/16 R TYP (6 PLACES) LOCATED AS SHOWN ON A 7.18 R.
10° TYP.
60° TYP.
0.31 DIA. THRU., TYP. (12 PLACES) EQUALLY SPACED LOCATED AS SHOWN ON A 15.03 D.B.C.
⊕ B .010 DIA
13/32 DIA. THRU., TYP. (12 PLACES) LOCATED AS SHOWN A ON 15.03 D.B.C.
⊕ B .010 DIA
14.356 +0.010 -0.000 DIA.
-B-
A

FRONT VIEW

SCALE : 1/2
(AS VIEWED FROM SERVICE END)

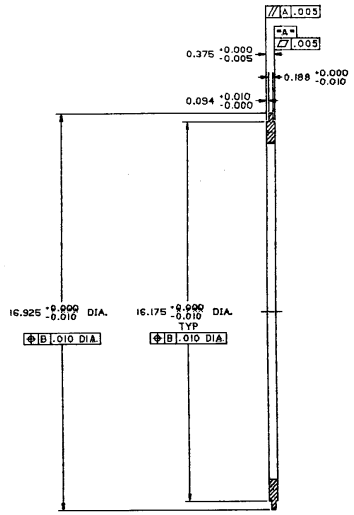
∥ A .003
-A-
▱ .005
0.375 +0.000 -0.005
0.188 +0.000 -0.010
0.094 +0.010 -0.000
16.925 +0.000 -0.010 DIA.
⊕ B .010 DIA.
16.175 +0.000 -0.010 DIA. TYP
⊕ B .010 DIA.

SECTION A-A

SCALE : 1/2

NOTES:

1. REF DTRC DWG A27-19992-7 FOR ASSEMBLY AND FINAL MACHINING.
2. UNLESS OTHERWISE SPECIFIED, BREAK SHARP CORNERS WITH A CHAMFER, .03 X 45°.
3. UNLESS OTHERWISE SPECIFIED, MACHINED FILLETS TO BE .03 R.
4. ESTIMATED WEIGHT OF PC. NO. 29 IS 1.3 LB.

REV.	ZONE	DESCRIPTION	BY	APP'D	DATE

REVISIONS

CAEDOS PART NAME
AN.2711.DLL.175HPMTR.EI
REFERENCES
SHEET36
SESD NO.

DATE 08/01/90
DRAWN JGW
CHECKED
DESIGNED
REVIEWED
APPROVED
DATE

NORMAL CONDUCTIVE, HOMOPOLAR, CONTRAROTATING, 175 HP MOTOR

ELECTRICAL INSULATOR DETAILS

SCALE: AS NOTED

DEPARTMENT OF NAVY
DAVID TAYLOR RESEARCH CENTER

DTRC NUMBER: A27-19992-36
REVISION: -

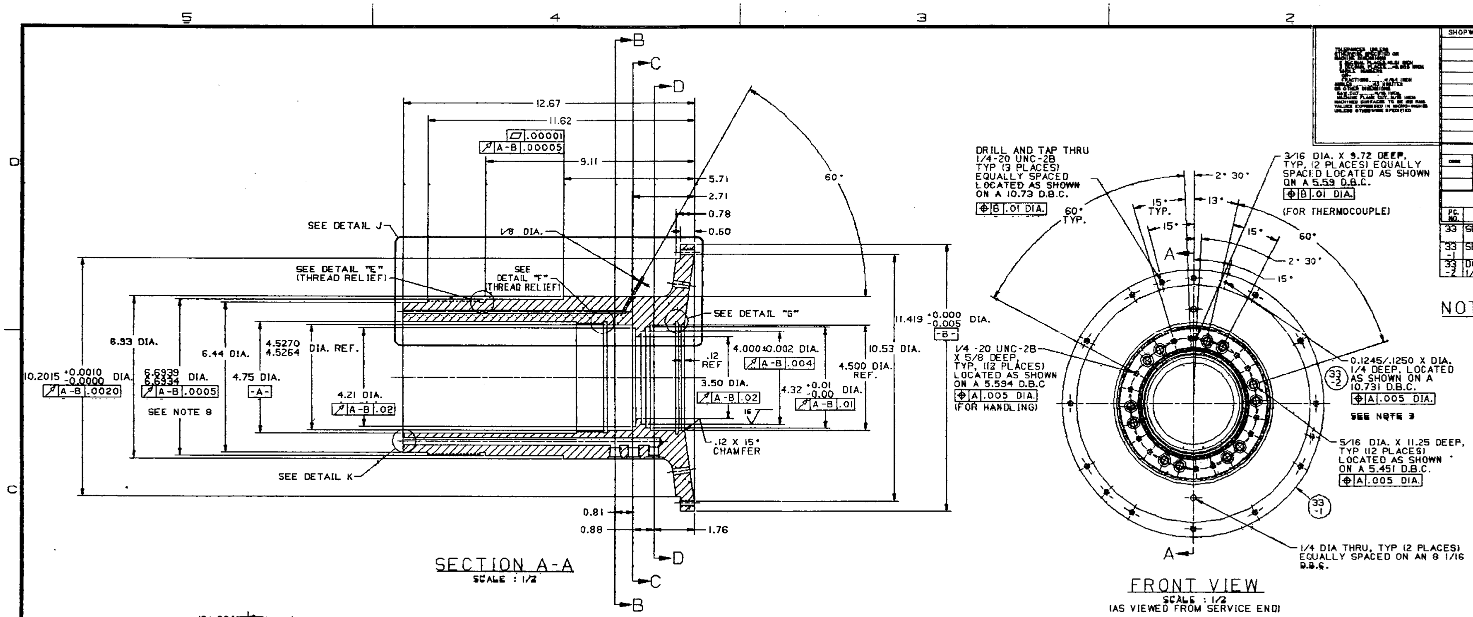
SECTION A-A
SCALE : 1/2
12.67
11.62
.00001
A-B .00005
9.11
5.71
2.71
0.78
0.60
60°
SEE DETAIL J
1/8 DIA.
SEE DETAIL "E" (THREAD RELIEF)
SEE DETAIL "F" (THREAD RELIEF)
SEE DETAIL "G"
SEE DETAIL K
8.93 DIA.
10.2015 +0.0010 -0.0000 DIA.
A-B .0020
6.6939 6.6934 DIA.
A-B .0005
SEE NOTE 8
6.44 DIA.
4.5270 4.5264 DIA. REF.
4.75 DIA.
-A-
4.21 DIA.
A-B .02
.12 REF
4.000±0.002 DIA.
A-B .004
3.50 DIA.
A-B .02
4.32 +0.01 -0.00 DIA.
A-B .01
4.500 DIA. REF.
10.53 DIA.
11.419 +0.000 -0.005 DIA.
-B-
.12 X 15° CHAMFER
0.81
0.88
1.76
B
C
D
FRONT VIEW
SCALE : 1/2
(AS VIEWED FROM SERVICE END)
DRILL AND TAP THRU 1/4-20 UNC-2B TYP (3 PLACES) EQUALLY SPACED LOCATED AS SHOWN ON A 10.73 D.B.C.
B .01 DIA.
60° TYP.
15° TYP.
15°
2° 30'
13°
15°
60°
2° 30'
15°
3/16 DIA. X 9.72 DEEP, TYP. (2 PLACES) EQUALLY SPACED LOCATED AS SHOWN ON A 5.59 D.B.C.
B .01 DIA.
(FOR THERMOCOUPLE)
1/4 -20 UNC-2B X 5/8 DEEP, TYP, (12 PLACES) LOCATED AS SHOWN ON A 5.594 D.B.C
A .005 DIA.
(FOR HANDLING)
0.1245/.1250 X DIA. 1/4 DEEP, LOCATED AS SHOWN ON A 10.731 D.B.C.
A .005 DIA.
SEE NOTE 3
33 -2
5/16 DIA. X 11.25 DEEP, TYP (12 PLACES) LOCATED AS SHOWN ON A 5.451 D.B.C.
A .005 DIA.
33 -1
1/4 DIA THRU, TYP (2 PLACES) EQUALLY SPACED ON AN 8 1/16 D.B.C.
A

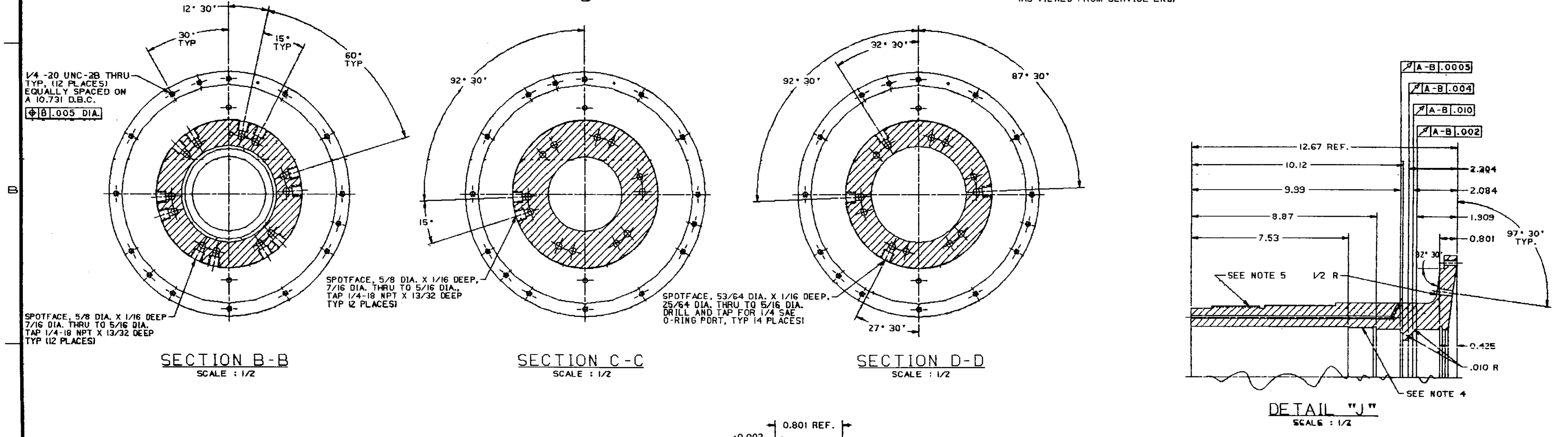
SECTION B-B
SCALE : 1/2
12° 30'
30° TYP
15° TYP
60° TYP
1/4 -20 UNC-2B THRU TYP, (12 PLACES) EQUALLY SPACED ON A 10.731 D.B.C.
B .005 DIA.
SPOTFACE, 5/8 DIA. X 1/16 DEEP 7/16 DIA. THRU TO 5/16 DIA. TAP 1/4-18 NPT X 13/32 DEEP TYP (12 PLACES)
SECTION C-C
SCALE : 1/2
92° 30'
15°
SPOTFACE, 5/8 DIA. X 1/16 DEEP, 7/16 DIA. THRU TO 5/16 DIA., TAP 1/4-18 NPT X 13/32 DEEP TYP (2 PLACES)
SECTION D-D
SCALE : 1/2
92° 30'
32° 30'
87° 30'
27° 30'
SPOTFACE, 53/64 DIA. X 1/16 DEEP, 25/64 DIA. THRU TO 5/16 DIA. DRILL AND TAP FOR 1/4 SAE O-RING PORT, TYP (4 PLACES)
DETAIL "J"
SCALE : 1/2
A-B .0005
A-B .004
A-B .010
A-B .002
12.67 REF.
10.12
9.99
8.87
7.53
2.394
2.084
1.909
0.801
97° 30' TYP.
32° 30'
SEE NOTE 5
1/2 R
0.425
.010 R
SEE NOTE 4

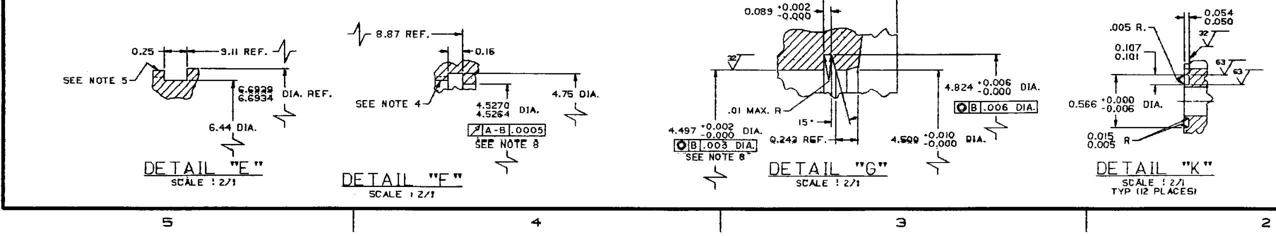
DETAIL "E"
SCALE : 2/1
0.25
9.11 REF.
SEE NOTE 5
6.6939 6.6934 DIA. REF.
6.44 DIA.
DETAIL "F"
SCALE : 2/1
8.87 REF.
0.16
SEE NOTE 4
4.5270 4.5264 DIA.
A-B .0005
SEE NOTE 8
4.75 DIA.
DETAIL "G"
SCALE : 2/1
0.801 REF.
0.089 +0.002 -0.000
32
.01 MAX. R
15°
0.243 REF.
4.497 +0.002 -0.000 DIA.
B .003 DIA.
SEE NOTE 8
4.824 +0.006 -0.000 DIA.
B .006 DIA.
4.500 +0.010 -0.000 DIA.
DETAIL "K"
SCALE : 2/1
TYP (12 PLACES)
.005 R.
0.107 0.101
0.054 0.050
32
63
0.566 +0.000 -0.006 DIA.
0.015 0.005 R

STRESS ENG'R CODE	STRESS ENG'R NAME	STRESS ENG'R DATE	REVIEWED BY CODE	REVIEWED BY NAME	REVIEWED BY DATE	PROJECT NUMBER
						1-2700-002-11
			2711			
			2711			

LIST OF MATERIAL

PC. NO.	NAME OF PIECE	NO. REQD	MATERIAL OR SOURCE
33	SERVICE END STUB SHAFT	-	
33 -1	SERVICE END STUB SHAFT	1	STAINLESS STEEL, PER AISI TYPE 304
33 -2	DOWEL PIN, .1251/.1253 DIA 1/2 LONG	1	ALLOY STEEL, PER AISI B18.3 UNBRAKO P/N 28240-125A-8

NOTES:

1. UNLESS OTHERWISE SPECIFIED, BREAK SHARP CORNERS WITH A CHAMFER, .03 X 45°.
2. UNLESS OTHERWISE SPECIFIED, MACHINED FILLETS TO BE .03 R.
3. A LIGHT PRESS FIT IS REQUIRED TO INSTALL PC. NO. 33-2 INTO PC. NO. 33-1. PC. NO. 33-2 SHOULD BE INSTALLED SO THAT 1/4 INCH OF THE LENGTH OF THE DOWEL PIN PROTRUDES FROM PC. NO. 33-1.
4. 4.6875-12UNS-3B
   4.6875 MIN MAJOR DIA.
   4.5973 MIN MINOR DIA.
   4.6063 MAX MINOR DIA.
   4.6334 MIN PITCH DIA.
   4.6461 MAX PITCH DIA.
5. 6.6590-8UNS-3A
   6.6590 MAX MAJOR DIA.
   6.6438 MIN MAJOR DIA.
   6.5056 MAX MINOR DIA.
   6.5779 MAX PITCH DIA.
   6.5687 MIN PITCH DIA.
6. ESTIMATED WEIGHT OF PC. NO 33 IS 78.6 LB.
7. REF DTRC DWG A27-19992-8 FOR ASSEMBLY AND DYNAMIC BALANCING.
8. FINAL GRINDING OF THIS DIA. TO BE DONE AFTER SUB-ASSY BOLT-UP PER DWG A27-19992-8.

REV.	ZONE	DESCRIPTION	BY	APP'D	DATE

REVISIONS

CAEDOS PART NAME
AN.2711.DLL.175HPMTR.SESS
REFERENCES
SHEET37
A27-19992-8
SESD NO.

DATE 3-29-90
DRAWN JGW
CHECKED
DESIGNED
REVIEWED
APPROVED
DATE

NORMAL CONDUCTIVE, HOMOPOLAR, CONTRAROTATING, 175 HP MOTOR

SERVICE END STUB SHAFT DETAILS

SCALE: AS NOTED

DEPARTMENT OF NAVY
DAVID TAYLOR RESEARCH CENTER

DTRC NUMBER A27-19992-37
REVISION -

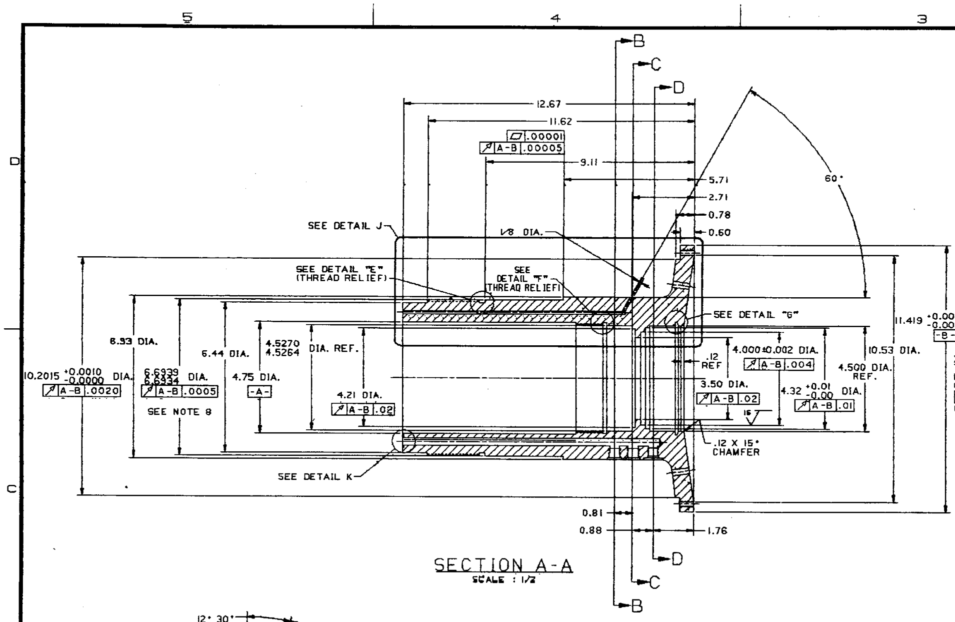
12.67
11.62
.00001
A-B .00005
9.11
5.71
2.71
0.78
0.60
60°
SEE DETAIL J
1/8 DIA.
SEE DETAIL "E" (THREAD RELIEF)
SEE DETAIL "F" THREAD RELIEF
SEE DETAIL "G"
8.93 DIA.
10.2015 +0.0010 -0.0000 DIA.
A-B .0020
6.6939 6.6934 DIA.
A-B .0005
SEE NOTE 8
6.44 DIA.
4.75 DIA.
-A-
4.5270 4.5264 DIA. REF.
4.21 DIA.
A-B .02
.12 REF
3.50 DIA.
A-B .02
4.000±0.002 DIA.
A-B .004
4.32 +0.01 -0.00 DIA.
A-B .01
4.500 DIA. REF.
10.53 DIA.
11.419 +0.000 -0.005 DIA.
-B-
.12 X 15° CHAMFER
SEE DETAIL K
0.81
0.88
1.76
B
C
D

SECTION A-A
SCALE : 1/2

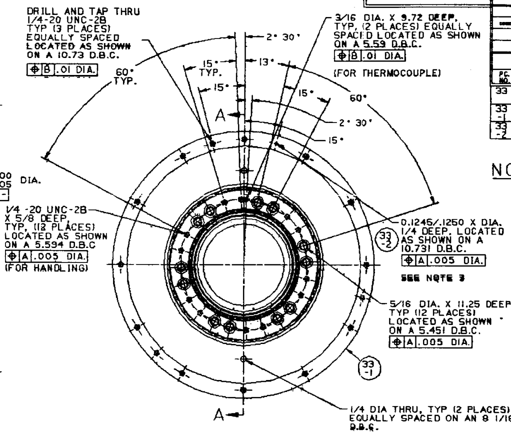
DRILL AND TAP THRU 1/4-20 UNC-2B TYP (3 PLACES) EQUALLY SPACED LOCATED AS SHOWN ON A 10.73 D.B.C.
B .01 DIA.
60° TYP.
15° TYP.
15°
13°
2° 30'
15°
60°
2° 30'
15°
3/16 DIA. X 9.72 DEEP, TYP. (2 PLACES) EQUALLY SPACED LOCATED AS SHOWN ON A 5.53 D.B.C.
B .01 DIA.
(FOR THERMOCOUPLE)
1/4 -20 UNC-2B X 5/8 DEEP TYP. (12 PLACES) LOCATED AS SHOWN ON A 5.594 D.B.C
A .005 DIA.
(FOR HANDLING)
0.1245/.1250 X DIA. 1/4 DEEP, LOCATED AS SHOWN ON A 10.731 D.B.C.
A .005 DIA.
SEE NOTE 3
33 -2
5/16 DIA. X 11.25 DEEP, TYP (12 PLACES) LOCATED AS SHOWN ON A 5.451 D.B.C.
A .005 DIA.
33 -1
1/4 DIA THRU, TYP (2 PLACES) EQUALLY SPACED ON AN 8 1/16 D.B.C.
A
A

FRONT VIEW
SCALE : 1/2
(AS VIEWED FROM SERVICE END)

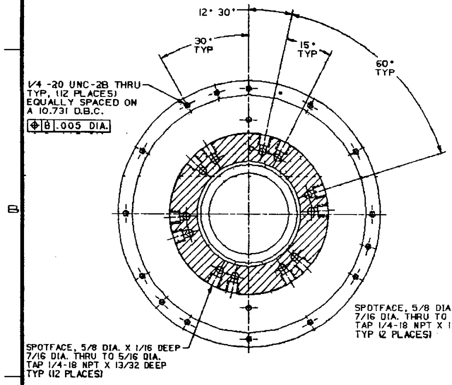
12° 30'
30° TYP
15° TYP
60° TYP
1/4 -20 UNC-2B THRU TYP, (12 PLACES) EQUALLY SPACED ON A 10.731 D.B.C.
B .005 DIA.
SPOTFACE, 5/8 DIA. X 1/16 DEEP 7/16 DIA. THRU TO 5/16 DIA. TAP 1/4-18 NPT X 13/32 DEEP TYP (12 PLACES)

SECTION B-B
SCALE : 1/2

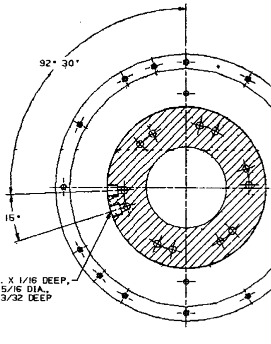
92° 30'
15°
SPOTFACE, 5/8 DIA. X 1/16 DEEP, 7/16 DIA. THRU TO 5/16 DIA. TAP 1/4-18 NPT X 13/32 DEEP TYP (2 PLACES)

SECTION C-C
SCALE : 1/2

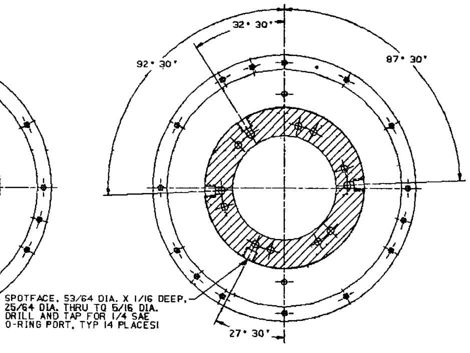
32° 30'
92° 30'
87° 30'
27° 30'
SPOTFACE, 53/64 DIA. X 1/16 DEEP, 25/64 DIA. THRU TO 5/16 DIA. DRILL AND TAP FOR 1/4 SAE O-RING PORT, TYP (4 PLACES)

SECTION D-D
SCALE : 1/2

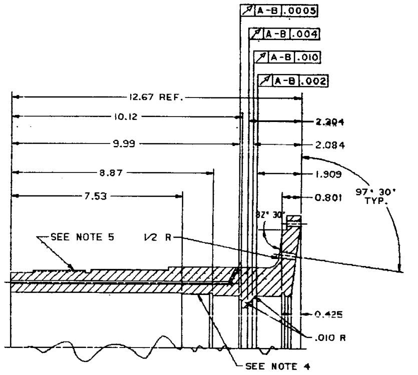
A-B .0005
A-B .004
A-B .010
A-B .002
12.67 REF.
10.12
9.99
8.87
7.53
2.304
2.084
1.909
0.801
97° 30' TYP.
32° 30'
SEE NOTE 5
1/2 R
0.425
.010 R
SEE NOTE 4

DETAIL "J"
SCALE : 1/2

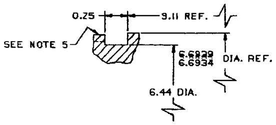
0.25
9.11 REF.
SEE NOTE 5
6.6939 6.6934 DIA. REF.
6.44 DIA.

DETAIL "E"
SCALE : 2/1

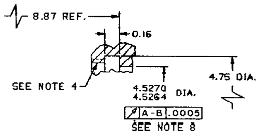
8.87 REF.
0.16
SEE NOTE 4
4.75 DIA.
4.5270 4.5264 DIA.
A-B .0005
SEE NOTE 8

DETAIL "F"
SCALE : 2/1

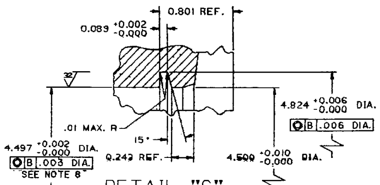
0.801 REF.
0.089 +0.002 -0.000
32
.01 MAX. R
15°
4.497 +0.002 -0.000 DIA.
B .003 DIA.
SEE NOTE 8
0.249 REF.
4.824 +0.006 -0.000 DIA.
B .006 DIA.
4.500 +0.010 -0.000 DIA.

DETAIL "G"
SCALE : 2/1

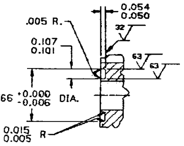
.005 R.
0.054 0.050
32
0.107 0.101
63
0.566 +0.000 -0.006 DIA.
0.015 0.005 R

DETAIL "K"
SCALE : 2/1
TYP (12 PLACES)

SHOPWORK REQUEST NO.	PRINT RECORD

STRESS ENG'R			REVIEWED BY			PROJECT NUMBER
CODE	NAME	DATE	CODE	NAME	DATE	1-2700-002-11
			2711			
			2711			

LIST OF MATERIAL

PC. NO.	NAME OF PIECE	NO. REQD.	MATERIAL OR SOURCE
33	SERVICE END STUB SHAFT	-	
33 -1	SERVICE END STUB SHAFT	1	STAINLESS STEEL, PER AISI TYPE 304
33 -2	DOWEL PIN, .1251/.1253 DIA 1/2 LONG	1	ALLOY STEEL, PER AISI B18.3 UNBRAKO P/N 28240-125A-8

NOTES:

1. UNLESS OTHERWISE SPECIFIED, BREAK SHARP CORNERS WITH A CHAMFER, .03 X 45°.
2. UNLESS OTHERWISE SPECIFIED, MACHINED FILLETS TO BE .03 R.
3. A LIGHT PRESS FIT IS REQUIRED TO INSTALL PC. NO. 33-2 INTO PC. NO. 33-1. PC. NO. 33-2 SHOULD BE INSTALLED SO THAT 1/4 INCH OF THE LENGTH OF THE DOWEL PIN PROTRUDES FROM PC. NO. 33-1.
4. 4.6875-12UNS-3B
   4.6875 MIN MAJOR DIA.
   4.5973 MIN MINOR DIA.
   4.6063 MAX MINOR DIA.
   4.6334 MIN PITCH DIA.
   4.6461 MAX PITCH DIA.
5. 6.6590-8UNS-3A
   6.6590 MAX MAJOR DIA.
   6.6438 MIN MAJOR DIA.
   6.5056 MAX MINOR DIA.
   6.5778 MAX PITCH DIA.
   6.5687 MIN PITCH DIA.
6. ESTIMATED WEIGHT OF PC. NO 33 IS 78.6 LB.
7. REF DTRC DWG A27-19992-8 FOR ASSEMBLY AND DYNAMIC BALANCING.
8. FINAL GRINDING OF THIS DIA. TO BE DONE AFTER SUB-ASSY BOLT-UP PER DWG A27-19992-8.

REV.	ZONE	DESCRIPTION	BY	APP'D	DATE

REVISIONS

CAEDOS PART NAME
AN.2711.DLL.175HPMTR.SESS
REFERENCES
SHEET37
A27-19992-8
SESD NO.

DATE 3-29-90
DRAWN JGW
CHECKED
DESIGNED
REVIEWED
APPROVED
DATE

NORMAL CONDUCTIVE, HOMOPOLAR, CONTRAROTATING, 175 HP MOTOR

SERVICE END STUB SHAFT DETAILS

SCALE: AS NOTED

DEPARTMENT OF NAVY
DAVID TAYLOR RESEARCH CENTER

DTRC NUMBER	REVISION
A27-19992-37	-

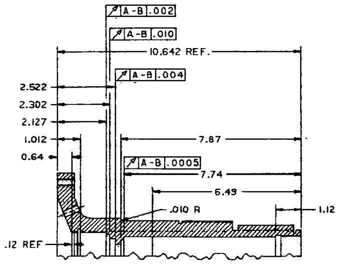
↗ A-B .002
↗ A-B .010
10.642 REF.
↗ A-B .004
2.522
2.302
2.127
1.012
0.64
7.87
↗ A-B .0005
7.74
6.49
.010 R
1.12
.12 REF

DETAIL F
SCALE : 1/2

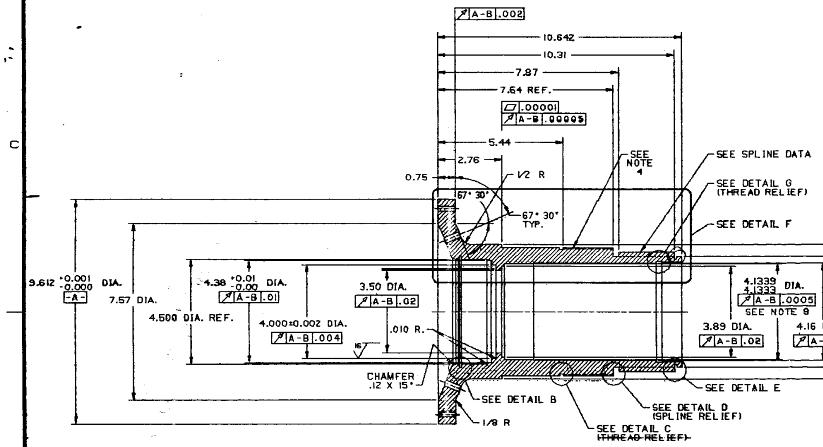
↗ A-B .002
10.642
10.31
7.87
7.64 REF.
▱ .00001
↗ A-B .00005
5.44
2.76
0.75
1/2 R
67° 30'
67° 30' TYP.
SEE NOTE 4
SEE SPLINE DATA
SEE DETAIL G (THREAD RELIEF)
SEE DETAIL F
9.612 +0.001 -0.000 DIA.
-A-
7.57 DIA.
4.500 DIA. REF.
4.38 +0.01 -0.00 DIA.
↗ A-B .01
3.50 DIA.
↗ A-B .02
4.000±0.002 DIA.
↗ A-B .004
.010 R.
16
CHAMFER .12 X 15°
SEE DETAIL B
1/8 R
SEE DETAIL C ~~(THREAD RELIEF)~~
SEE DETAIL D (SPLINE RELIEF)
SEE DETAIL E
4.1339 4.1333 DIA.
↗ A-B .0005
SEE NOTE 8
3.89 DIA.
↗ A-B .02
4.16 DIA.
↗ A-B .01
4.745 +0.000 -0.010 DIA.
-B-
5.75 DIA.

SECTION A-A
SCALE : 1/2

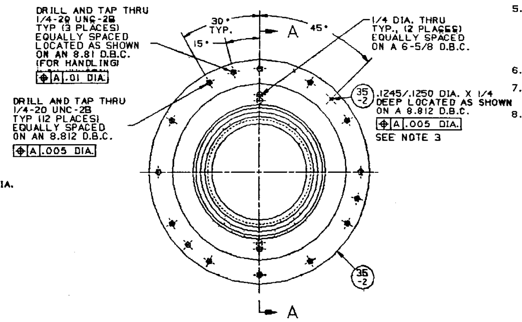
DRILL AND TAP THRU 1/4-20 UNC-2B TYP (3 PLACES) EQUALLY SPACED LOCATED AS SHOWN ON AN 8.81 D.B.C. (FOR HANDLING)
⊕ A .01 DIA.
DRILL AND TAP THRU 1/4-20 UNC-2B TYP (12 PLACES) EQUALLY SPACED ON AN 8.812 D.B.C.
⊕ A .005 DIA.
30° TYP.
15°
A
45°
1/4 DIA. THRU TYP., (2 PLACES) EQUALLY SPACED ON A 6-5/8 D.B.C.
35 -2
.1245/.1250 DIA. X 1/4 DEEP LOCATED AS SHOWN ON A 8.812 D.B.C.
⊕ A .005 DIA.
SEE NOTE 3
35 -2
A

PLAN VIEW
SCALE : 1/2
(AS VIEWED FROM DRIVE END)

SPLINE DATA PER ANSI B92.1-1970	
EXTERNAL INVOLUTE SPLINE DATA	
FILLET ROOT SIDE FIT	
NUMBER OF TEETH	40
SPLINE PITCH	8/16
PRESSURE ANGLE	30°
BASE DIAMETER	4.3301 REF.
PITCH DIAMETER	5.0000 REF.
MAJOR DIAMETER	5.1250/5.1200
FORM DIAMETER	4.8650
MINOR DIAMETER	4.749 MIN.
CIRCULER TOOTH THICKNESS	
MAX EFFECTIVE	.1963
MIN. ACTUAL	.1923

TOLERANCES UNLESS OTHERWISE SPECIFIED ON MACHINE DIMENSIONS [illegible] DECIMAL PLACES ±0.01 INCH [illegible] DECIMAL PLACES ±0.005 INCH [illegible] OR FRACTIONS [illegible] ANGLES [illegible] ON OTHER DIMENSIONS SAW CUT [illegible] MACHINE FLAME CUT [illegible] MACHINED SURFACES TO BE 125 RMS VALUES EXPRESSED IN MICRO-INCHES UNLESS OTHERWISE SPECIFIED

SHOPWORK REQUEST NO.		PRINT RECORD					

STRESS ENG'R			REVIEWED BY			PROJECT NUMBER
						1-2700-206-12
			2711			
			2711			

LIST OF MATERIAL

PC. NO.	NAME OF PIECE	NO. REQD.	MATERIAL OR SOURCE
35	DRIVE END STUB SHAFT	—	
35 -1	DRIVE END STUB SHAFT	1	STAINLESS STEEL, PER AISI TYPE 304
35 -2	DOWEL PIN, .1251/.1253 DIA, 1/2 LONG	1	ALLOY STEEL PER ANSI B18.3, UNBRAKO P/N 28240-125A-8

NOTES:

1. UNLESS OTHERWISE SPECIFIED, BREAK SHARP CORNERS WITH A CHAMFER, .03 X 45°.
2. UNLESS OTHERWISE SPECIFIED, MACHINED FILLETS TO BE TO FINAL MACHINING.
3. A LIGHT PRESS FIT IS REQUIRED TO INSTALL PC. NO. 35-2 INTI PC. NO. 35-1. PC. NO. 35-2 SHOULD BE INSTALLED SO THAT 1/4 INCH OF LENGTH OF THE DOWEL PIN PROTRUDES FROM PC. NO. 35-1.
4. 5.4970-12UNS-3A
   5.4970 MAX MAJOR DIA.
   5.4858 MIN MAJOR DIA.
   5.3948 MAX MINOR DIA.
   5.4429 MAX PITCH DIA.
   5.4346 MIN PITCH DIA.
5. 4.2500-12UNS-3B
   4.2500 MIN MAJOR DIA.
   4.1598 MIN MINOR DIA.
   4.1688 MAX MINOR DIA.
   4.1959 MIN PITCH DIA.
   4.2086 MAX PITCH DIA.
6. ESTIMATED WEIGHT OF PC. NO. 35 IS 37.3 LB.
7. REF DTRC DWG A27-19992-8 FOR ASSEMBLY AND DYNAMIC BALANCING.
8. FINAL GRINDING OF THIS DIA. TO BE DONE AFTER SUB-ASSY BOLT-UP PER DWG A27-19992-8.

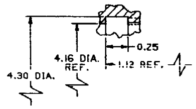
0.25
4.16 DIA. REF.
1.12 REF.
4.30 DIA.

DETAIL G
SCALE : 2/1

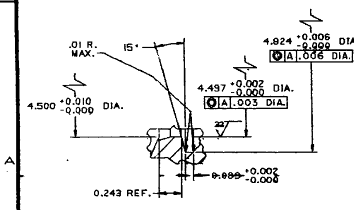
.01 R. MAX.
15°
4.500 +0.010 -0.000 DIA.
4.497 +0.002 -0.000 DIA.
◎ A .003 DIA.
4.824 +0.006 -0.000 DIA.
◎ A .006 DIA.
32
0.243 REF.
~~0.089~~ +0.002 -0.000

DETAIL B
SCALE : 2/1

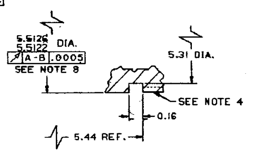
5.5126 5.5122 DIA.
↗ A-B .0005
SEE NOTE 8
5.31 DIA.
SEE NOTE 4
0.16
5.44 REF.

DETAIL C
SCALE : 2/1

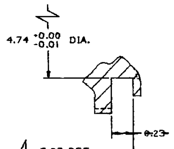
4.74 +0.00 -0.01 DIA.
0.23
7.87 REF.

DETAIL D
SCALE : 2/1

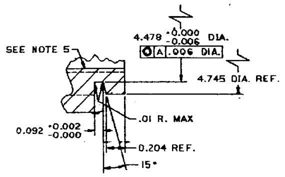
SEE NOTE 5
4.478 +0.000 -0.006 DIA.
◎ A .006 DIA.
4.745 DIA. REF.
.01 R. MAX
0.092 +0.002 -0.000
0.204 REF.
15°

DETAIL E
SCALE : 2/1

CAEDOS PART NAME
AN.2711.DLL.175HPMTR.DESS
REFERENCES
SHEET39
A27-19992-8
SESD NO.

~~REV.~~	~~ZONE~~	~~DESCRIPTION~~	~~BY~~	APP'D	~~DATE~~

REVISIONS

DATE 3-29-90 DRAWN JGW CHECKED DESIGNED REVIEWED APPROVED DATE	NORMAL CONDUCTIVE, HOMOPOLAR, CONTRAROTATING, 175 HP MOTOR DRIVE END STUB SHAFT DETAILS SCALE: AS NOTED	DEPARTMENT OF NAVY DAVID TAYLOR RESEARCH CENTER CARDEROCK LAB - BETHESDA, MD 20084 ANNAPOLIS LAB - ANNAPOLIS, MD 21402 DTRC NUMBER: A27-19992-39 REVISION: -

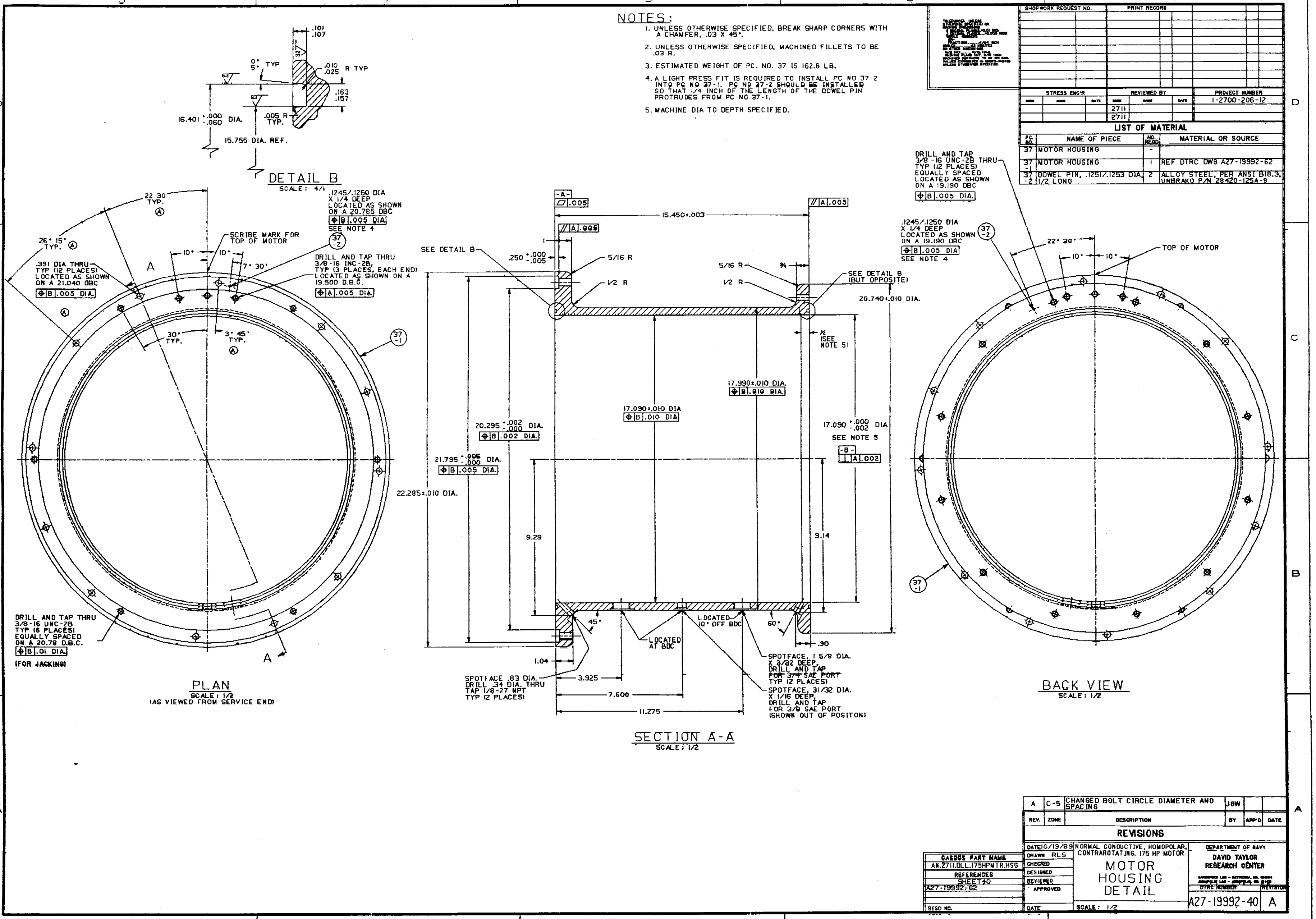
DETAIL B
SCALE: 4/1
.101
.107
.010
.025 R TYP
.163
.157
0°
5° TYP
16.401 +.000 -.060 DIA.
.005 R TYP.
15.755 DIA. REF.
PLAN
SCALE: 1/2
(AS VIEWED FROM SERVICE END)
22 30' TYP.
26° 15' TYP.
.391 DIA THRU TYP (12 PLACES) LOCATED AS SHOWN ON A 21.040 DBC
⊕ B .005 DIA.
SCRIBE MARK FOR TOP OF MOTOR
10°
7° 30'
30° TYP.
3° 45' TYP.
.1245/.1250 DIA X 1/4 DEEP LOCATED AS SHOWN ON A 20.785 DBC
⊕ B .005 DIA
SEE NOTE 4
DRILL AND TAP THRU 3/8-16 UNC-2B, TYP (3 PLACES, EACH END) LOCATED AS SHOWN ON A 19.500 D.B.C.
⊕ A .005 DIA.
DRILL AND TAP THRU 3/8-16 UNC-2B TYP (6 PLACES) EQUALLY SPACED ON A 20.78 D.B.C.
⊕ B .01 DIA.
(FOR JACKING)
A
SECTION A-A
SCALE: 1/2
-A-
▱ .005
// A .005
15.450±.003
SEE DETAIL B
.250 +.000 -.005
5/16 R
1/2 R
3/4
SEE DETAIL B (BUT OPPOSITE)
20.740±.010 DIA.
1/2 (SEE NOTE 5)
17.990±.010 DIA.
⊕ B .010 DIA.
17.090±.010 DIA
⊕ B .010 DIA
20.295 +.002 -.000 DIA.
⊕ B .002 DIA.
21.795 +.005 -.000 DIA.
⊕ B .005 DIA.
22.285±.010 DIA.
17.090 +.000 -.002 DIA
SEE NOTE 5
-B-
⊥ A .002
9.29
9.14
45°
60°
1.04
.90
LOCATED AT BDC
LOCATED 10° OFF BDC
SPOTFACE .83 DIA. DRILL .34 DIA. THRU TAP 1/8-27 NPT TYP (2 PLACES)
3.925
7.600
11.275
SPOTFACE, 1 5/8 DIA. X 3/32 DEEP, DRILL AND TAP FOR 3/4 SAE PORT TYP (2 PLACES)
SPOTFACE, 31/32 DIA. X 1/16 DEEP, DRILL AND TAP FOR 3/8 SAE PORT (SHOWN OUT OF POSITON)
BACK VIEW
SCALE: 1/2
DRILL AND TAP 3/8-16 UNC-2B THRU TYP (12 PLACES) EQUALLY SPACED LOCATED AS SHOWN ON A 19.190 DBC
⊕ B .005 DIA.
.1245/.1250 DIA X 1/4 DEEP LOCATED AS SHOWN ON A 19.190 DBC
⊕ B .005 DIA
SEE NOTE 4
22° 30'
10°
TOP OF MOTOR
37 -1
37 -2

NOTES:

1. UNLESS OTHERWISE SPECIFIED, BREAK SHARP CORNERS WITH A CHAMFER, .03 X 45°.
2. UNLESS OTHERWISE SPECIFIED, MACHINED FILLETS TO BE .03 R.
3. ESTIMATED WEIGHT OF PC. NO. 37 IS 162.8 LB.
4. A LIGHT PRESS FIT IS REQUIRED TO INSTALL PC NO 37-2 INTO PC NO 37-1. PC NO 37-2 SHOULD BE INSTALLED SO THAT 1/4 INCH OF THE LENGTH OF THE DOWEL PIN PROTRUDES FROM PC NO 37-1.
5. MACHINE DIA TO DEPTH SPECIFIED.

SHOPWORK REQUEST NO.	PRINT RECORD

STRESS ENG'R			REVIEWED BY			PROJECT NUMBER
CODE	NAME	DATE	CODE	NAME	DATE	1-2700-206-12
			2711			
			2711			

LIST OF MATERIAL

PC. NO.	NAME OF PIECE	NO. REQD.	MATERIAL OR SOURCE
37	MOTOR HOUSING	-	
37 -1	MOTOR HOUSING	1	REF DTRC DWG A27-19992-62
37 -2	DOWEL PIN, .1251/.1253 DIA, 1/2 LONG	2	ALLOY STEEL, PER ANSI B18.3, UNBRAKO P/N 28420-125A-8

REV.	ZONE	DESCRIPTION	BY	APP'D	DATE
A	C-5	CHANGED BOLT CIRCLE DIAMETER AND SPACING	JGW		

REVISIONS

CADDS PART NAME
AN.2711.DLL.175HPMTR.HSG
REFERENCES
SHEET40
A27-19992-62
SESD NO.

DATE 10/19/89
DRAWN RLS
CHECKED
DESIGNED
REVIEWED
APPROVED
DATE

NORMAL CONDUCTIVE, HOMOPOLAR, CONTRAROTATING, 175 HP MOTOR

MOTOR HOUSING DETAIL

SCALE: 1/2

DEPARTMENT OF NAVY
DAVID TAYLOR RESEARCH CENTER

DTRC NUMBER A27-19992-40
REVISION A

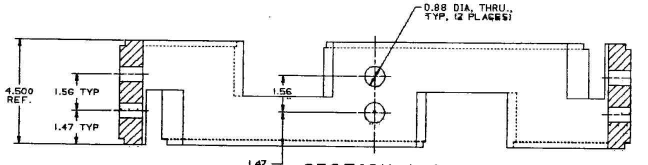
0.88 DIA. THRU., TYP. (2 PLACES)
4.500 REF.
1.56 TYP
1.47 TYP
1.56
1.47

SECTION A-A
SCALE : 1/2

NOTES:

1. TERMINAL HOUSING MAY BE FABRICATED FROM ROLLED AND WELDED MATERIAL OR A CONTINUOUS RING OF MATERIAL.
2. UNLESS OTHERWISE SPECIFIED, BREAK SHARP CORNERS WITH A CHAMFER, .03 X 45°.
3. UNLESS OTHERWISE SPECIFIED, MACHINED FILLETS TO BE .03 R.
4. ESTIMATED WEIGHT OF PC. NO 38 IS 56.5 LB.

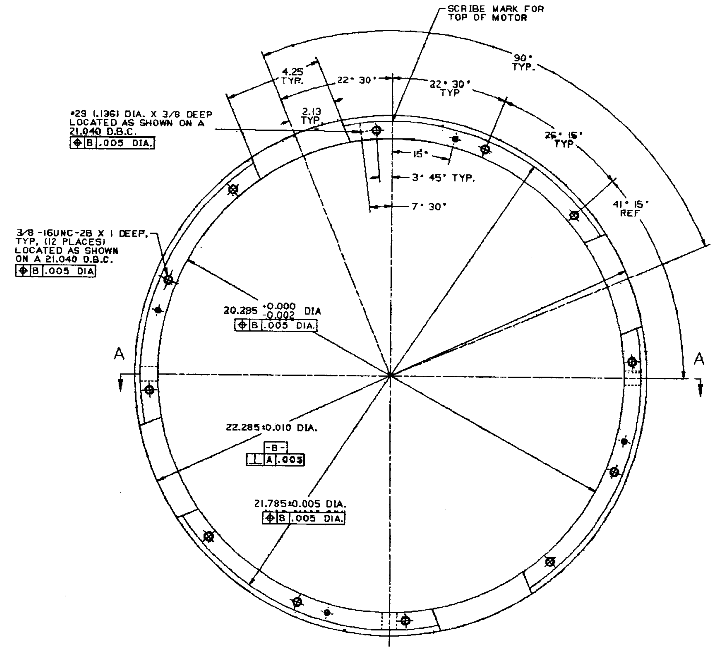
SCRIBE MARK FOR TOP OF MOTOR
90° TYP.
4.25 TYP.
22° 30'
22° 30' TYP
2.13 TYP.
26° 15' TYP
15°
3° 45' TYP.
7° 30'
41° 15' REF
#29 (.136) DIA. X 3/8 DEEP LOCATED AS SHOWN ON A 21.040 D.B.C.
⌖ B .005 DIA.
3/8 -16UNC-2B X 1 DEEP, TYP. (12 PLACES) LOCATED AS SHOWN ON A 21.040 D.B.C.
⌖ B .005 DIA
20.295 +0.000 -0.002 DIA
⌖ B .005 DIA.
A
A
22.285±0.010 DIA.
-B-
⊥ A .003
21.785±0.005 DIA.
⌖ B .005 DIA.

FRONT VIEW
SCALE : 1/2
(AS VIEWED FROM SERVICE END)

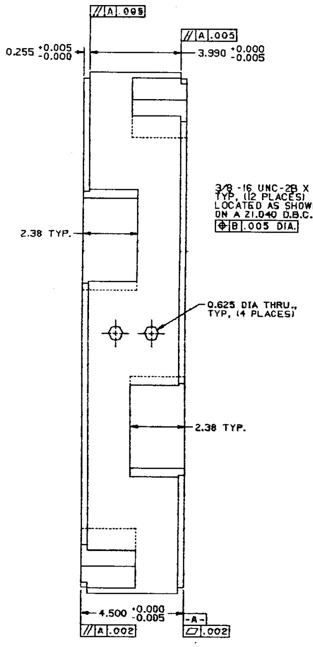
// A .005
// A .005
0.255 +0.005 -0.000
3.990 +0.000 -0.005
3/8 -16 UNC-2B X 1 DEEP. TYP. (12 PLACES) LOCATED AS SHOWN ON A 21.040 D.B.C.
⌖ B .005 DIA.
2.38 TYP.
0.625 DIA THRU., TYP. (4 PLACES)
2.38 TYP.
4.500 +0.000 -0.005
// A .002
-A-
▱ .002

RIGHT VIEW
SCALE : 1/2

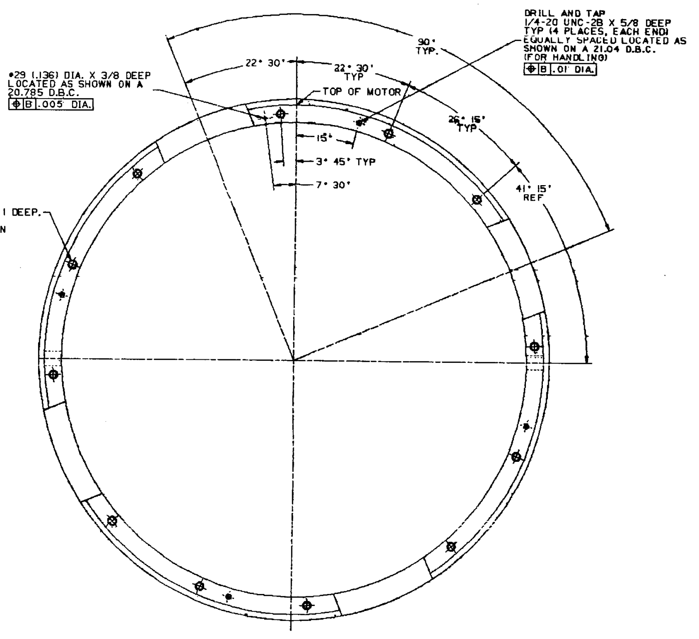
DRILL AND TAP 1/4-20 UNC-2B X 5/8 DEEP TYP (4 PLACES, EACH END) EQUALLY SPACED LOCATED AS SHOWN ON A 21.04 D.B.C. (FOR HANDLING)
⌖ B .01 DIA.
#29 (.136) DIA. X 3/8 DEEP LOCATED AS SHOWN ON A 20.785 D.B.C.
⌖ B .005 DIA.
90° TYP.
22° 30'
22° 30' TYP
TOP OF MOTOR
26° 15' TYP
15°
3° 45' TYP
7° 30'
41° 15' REF

REAR VIEW
SCALE : 1/2

SHOPWORK REQUEST NO.		PRINT RECORD					

STRESS ENG'R			REVIEWED BY			PROJECT NUMBER
			2711			1-2700-206-12
			2711			

LIST OF MATERIAL

PC. NO.	NAME OF PIECE	NO. REQD.	MATERIAL OR SOURCE
38	TERMINAL HOUSING	-	STAINLESS STEEL STEEL, PER AISI TYPE 304

CAEDOS PART NAME
AN.2711.DLL.175HPMTR.TH
REFERENCES
SHEET41
SESD NO.

REV.	ZONE	DESCRIPTION	BY	APP'D	DATE

REVISIONS

DATE 7/23/90
DRAWN JGW
CHECKED
DESIGNED
REVIEWED
APPROVED
DATE

NORMAL CONDUCTIVE, HOMOPOLAR, CONTRAROTATING, 175 HP MOTOR

TERMINAL HOUSING DETAILS

SCALE: AS NOTED

DEPARTMENT OF NAVY
DAVID TAYLOR RESEARCH CENTER

DTRC NUMBER	REVISION
A27-19992-41	-

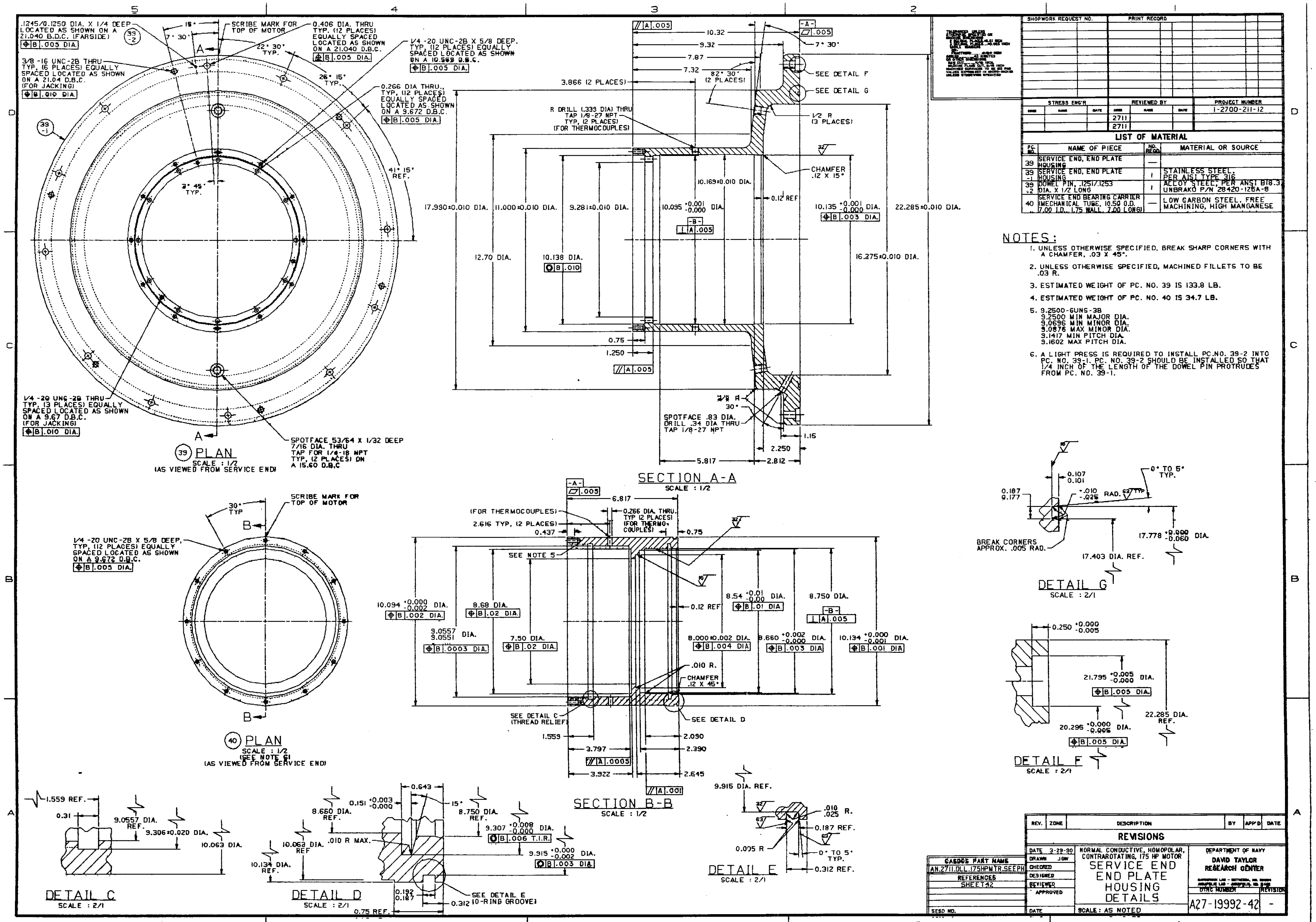
39 PLAN
SCALE : 1/2
(AS VIEWED FROM SERVICE END)
.1245/0.1250 DIA. X 1/4 DEEP LOCATED AS SHOWN ON A 21.040 B.D.C. (FARSIDE) ⌖ B .005 DIA.
3/8 -16 UNC-2B THRU TYP. (6 PLACES) EQUALLY SPACED LOCATED AS SHOWN ON A 21.04 D.B.C. (FOR JACKING) ⌖ B .010 DIA.
SCRIBE MARK FOR TOP OF MOTOR
0.406 DIA. THRU TYP. (12 PLACES) EQUALLY SPACED LOCATED AS SHOWN ON A 21.040 D.B.C. ⌖ B .005 DIA.
1/4 -20 UNC-2B X 5/8 DEEP. TYP. (12 PLACES) EQUALLY SPACED LOCATED AS SHOWN ON A 10.569 D.B.C. ⌖ B .005 DIA.
0.266 DIA THRU., TYP. (12 PLACES) EQUALLY SPACED LOCATED AS SHOWN ON A 9.672 D.B.C. ⌖ B .005 DIA.
1/4 -20 UNC-2B THRU TYP. (3 PLACES) EQUALLY SPACED LOCATED AS SHOWN ON A 9.67 D.B.C. (FOR JACKING) ⌖ B .010 DIA.
SPOTFACE 53/64 X 1/32 DEEP 7/16 DIA. THRU TAP FOR 1/4-18 NPT TYP. (2 PLACES) ON A 15.60 D.B.C
15°
7° 30'
22° 30' TYP.
26° 15' TYP.
41° 15' REF.
2° 45' TYP.
SECTION A-A
SCALE : 1/2
SEE DETAIL F
SEE DETAIL G
1/2 R (3 PLACES)
CHAMFER .12 X 15°
R DRILL (.339 DIA) THRU TAP 1/8-27 NPT TYP. (2 PLACES) (FOR THERMOCOUPLES)
SPOTFACE .83 DIA. DRILL .34 DIA THRU TAP 1/8-27 NPT
3.866 (2 PLACES)
82° 30' (2 PLACES)
10.32
9.32
7.87
7.32
17.990±0.010 DIA.
11.000±0.010 DIA.
9.281±0.010 DIA.
10.095 +0.001 -0.000 DIA.
10.169±0.010 DIA.
10.135 +0.001 -0.000 DIA. ⌖ B .003 DIA.
22.285±0.010 DIA.
16.275±0.010 DIA.
12.70 DIA.
10.138 DIA. ◎ B .010
0.12 REF
0.75
1.250
5.817
2.812
2.250
1.15
30°
40 PLAN
SCALE : 1/2
(SEE NOTE 6)
(AS VIEWED FROM SERVICE END)
SCRIBE MARK FOR TOP OF MOTOR
30° TYP
1/4 -20 UNC-2B X 5/8 DEEP, TYP. (12 PLACES) EQUALLY SPACED LOCATED AS SHOWN ON A 9.672 D.B.C. ⌖ B .005 DIA.
SECTION B-B
SCALE : 1/2
(FOR THERMOCOUPLES)
2.616 TYP. (2 PLACES)
0.437
0.266 DIA. THRU. TYP (2 PLACES) (FOR THERMO-COUPLES)
6.817
0.75
SEE NOTE 5
10.094 +0.000 -0.002 DIA. ⌖ B .002 DIA.
8.68 DIA. ⌖ B .02 DIA.
9.0557 9.0551 DIA. ⌖ B .0003 DIA.
7.50 DIA. ⌖ B .02 DIA.
8.54 +0.01 -0.00 DIA. ⌖ B .01 DIA
8.000±0.002 DIA. ⌖ B .004 DIA
8.660 +0.002 -0.000 DIA. ⌖ B .003 DIA
8.750 DIA.
10.134 +0.000 -0.001 DIA. ⌖ B .001 DIA
.010 R.
CHAMFER .12 X 45°
SEE DETAIL C (THREAD RELIEF)
SEE DETAIL D
1.559
3.797
3.922
2.090
2.390
2.645
DETAIL C
SCALE : 2/1
1.559 REF.
0.31
9.0557 DIA. REF.
9.306±0.020 DIA.
10.063 DIA.
DETAIL D
SCALE : 2/1
8.660 DIA. REF.
0.151 +0.003 -0.000
0.643
15°
8.750 DIA. REF.
9.307 +0.008 -0.000 DIA. ◎ B .006 T.I.R.
9.915 +0.000 -0.002 DIA. ◎ B .003 DIA.
10.063 DIA. REF
.010 R MAX.
10.134 DIA. REF.
0.192 0.187
0.75 REF.
0.312
SEE DETAIL E (O-RING GROOVE)
DETAIL E
SCALE : 2/1
9.915 DIA. REF.
.010 .025 R.
0.187 REF.
0° TO 5° TYP.
0.312 REF.
0.005 R
DETAIL G
SCALE : 2/1
0.107 0.101
0.187 0.177
+.010 -.025 RAD.
0° TO 5° TYP.
17.778 +0.000 -0.060 DIA.
17.403 DIA. REF.
BREAK CORNERS APPROX. .005 RAD.
DETAIL F
SCALE : 2/1
0.250 +0.000 -0.005
21.795 +0.005 -0.000 DIA. ⌖ B .005 DIA.
22.285 DIA. REF.
20.295 +0.000 -0.005 DIA. ⌖ B .005 DIA.

SHOPWORK REQUEST NO.	PRINT RECORD

STRESS ENG'R			REVIEWED BY			PROJECT NUMBER
CODE	NAME	DATE	CODE	NAME	DATE	1-2700-211-12
			2711			
			2711			

LIST OF MATERIAL

PC. NO.	NAME OF PIECE	NO. REQD.	MATERIAL OR SOURCE
39	SERVICE END, END PLATE HOUSING	—	
39 -1	SERVICE END, END PLATE HOUSING	1	STAINLESS STEEL, PER AISI TYPE 316
39 -2	DOWEL PIN, .1251/.1253 DIA. X 1/2 LONG	1	ALLOY STEEL, PER ANSI B18.3, UNBRAKO P/N 28420-125A-8
40	SERVICE END BEARING CARRIER (MECHANICAL TUBE, 10.50 O.D. 7.00 I.D., 1.75 WALL, 7.00 LONG)	—	LOW CARBON STEEL, FREE MACHINING, HIGH MANGANESE

NOTES:

1. UNLESS OTHERWISE SPECIFIED, BREAK SHARP CORNERS WITH A CHAMFER, .03 X 45°.
2. UNLESS OTHERWISE SPECIFIED, MACHINED FILLETS TO BE .03 R.
3. ESTIMATED WEIGHT OF PC. NO. 39 IS 133.8 LB.
4. ESTIMATED WEIGHT OF PC. NO. 40 IS 34.7 LB.
5. 9.2500-6UNS-3B
   9.2500 MIN MAJOR DIA.
   9.0696 MIN MINOR DIA.
   9.0876 MAX MINOR DIA.
   9.1417 MIN PITCH DIA.
   9.1602 MAX PITCH DIA.
6. A LIGHT PRESS IS REQUIRED TO INSTALL PC.NO. 39-2 INTO PC. NO. 39-1. PC. NO. 39-2 SHOULD BE INSTALLED SO THAT 1/4 INCH OF THE LENGTH OF THE DOWEL PIN PROTRUDES FROM PC. NO. 39-1.

REV.	ZONE	DESCRIPTION	BY	APP'D	DATE

REVISIONS

CADDS PART NAME
AN.2711.DLL.175HPMTR.SEEPH
REFERENCES
SHEET42
SESD NO.

DATE 3-29-90
DRAWN JGW
CHECKED
DESIGNED
REVIEWED
APPROVED
DATE

NORMAL CONDUCTIVE, HOMOPOLAR, CONTRAROTATING, 175 HP MOTOR

SERVICE END END PLATE HOUSING DETAILS

SCALE : AS NOTED

DEPARTMENT OF NAVY
DAVID TAYLOR RESEARCH CENTER

DTRC NUMBER A27-19992-42
REVISION -

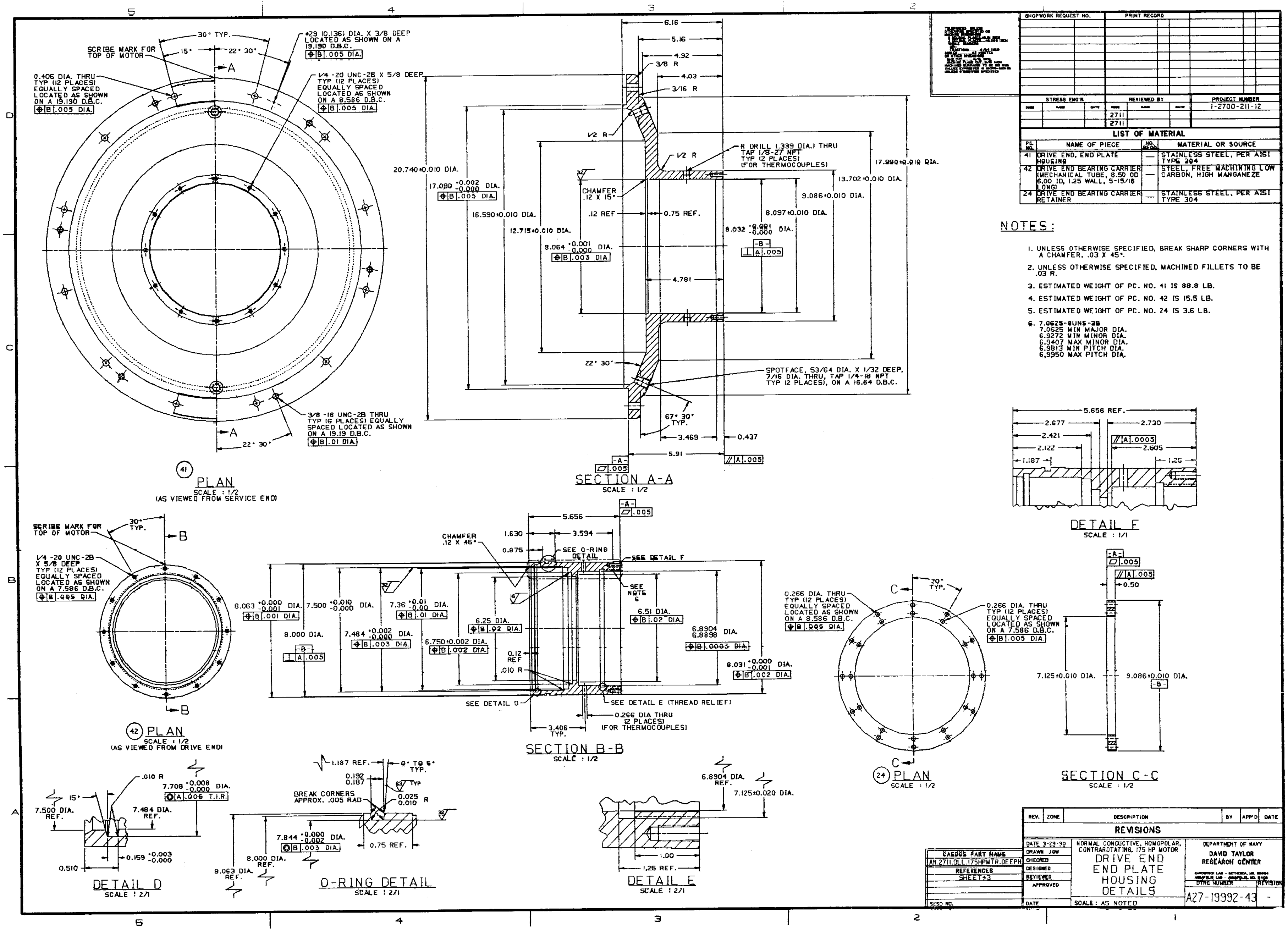
SCRIBE MARK FOR TOP OF MOTOR
30° TYP.
15°
22° 30'
#29 (0.136) DIA. X 3/8 DEEP LOCATED AS SHOWN ON A 19.190 D.B.C.
⌖ B .005 DIA.
0.406 DIA. THRU TYP (12 PLACES) EQUALLY SPACED LOCATED AS SHOWN ON A 19.190 D.B.C.
1/4 -20 UNC-2B X 5/8 DEEP TYP (12 PLACES) EQUALLY SPACED LOCATED AS SHOWN ON A 8.586 D.B.C.
3/8 -16 UNC-2B THRU TYP (6 PLACES) EQUALLY SPACED LOCATED AS SHOWN ON A 19.19 D.B.C.
⌖ B .01 DIA.
A
41
PLAN
SCALE : 1/2
(AS VIEWED FROM SERVICE END)
6.16
5.16
4.92
3/8 R
4.03
3/16 R
1/2 R
1/2 R
R DRILL (.339 DIA.) THRU TAP 1/8-27 NPT TYP (2 PLACES) (FOR THERMOCOUPLES)
20.740±0.010 DIA.
17.090 +0.002 -0.000 DIA.
⌖ B .005 DIA.
16.590±0.010 DIA.
12.715±0.010 DIA.
8.064 +0.001 -0.000 DIA.
⌖ B .003 DIA.
CHAMFER .12 X 15°
.12 REF
0.75 REF.
4.781
8.032 +0.001 -0.000 DIA.
-B-
⊥ A .005
8.097±0.010 DIA.
9.086±0.010 DIA.
13.702±0.010 DIA.
17.990±0.010 DIA.
22° 30'
SPOTFACE, 53/64 DIA. X 1/32 DEEP, 7/16 DIA. THRU, TAP 1/4-18 NPT TYP (2 PLACES), ON A 16.64 D.B.C.
67° 30' TYP.
3.469
0.437
5.91
// A .005
-A-
▱ .005
SECTION A-A
SCALE : 1/2
SCRIBE MARK FOR TOP OF MOTOR
30° TYP.
1/4 -20 UNC-2B X 5/8 DEEP TYP (12 PLACES) EQUALLY SPACED LOCATED AS SHOWN ON A 7.586 D.B.C.
⌖ B .005 DIA.
42
PLAN
SCALE : 1/2
(AS VIEWED FROM DRIVE END)
CHAMFER .12 X 45°
1.630
0.875
5.656
3.594
SEE O-RING DETAIL
SEE DETAIL F
SEE NOTE 6
8.063 +0.000 -0.001 DIA.
⌖ B .001 DIA.
7.500 +0.010 -0.000 DIA.
8.000 DIA.
-B-
⊥ A .005
7.484 +0.002 -0.000 DIA.
⌖ B .003 DIA.
7.36 +0.01 -0.00 DIA.
⌖ B .01 DIA.
6.25 DIA.
⌖ B .02 DIA.
6.750±0.002 DIA.
⌖ B .002 DIA.
0.12 REF
.010 R
6.51 DIA.
⌖ B .02 DIA.
6.8904 6.8898 DIA.
⌖ B .0003 DIA.
8.031 +0.000 -0.001 DIA.
⌖ B .002 DIA.
SEE DETAIL D
SEE DETAIL E (THREAD RELIEF)
0.266 DIA THRU (2 PLACES) (FOR THERMOCOUPLES)
3.406 TYP.
SECTION B-B
SCALE : 1/2
.010 R
15°
7.500 DIA. REF.
7.708 +0.008 -0.000 DIA.
◎ A .006 T.I.R.
7.484 DIA. REF.
0.510
0.159 +0.003 -0.000
DETAIL D
SCALE : 2/1
1.187 REF.
0° TO 5° TYP.
0.192 0.187
TYP
BREAK CORNERS APPROX. .005 RAD
0.025 0.010 R
7.844 +0.000 -0.002 DIA.
◎ B .003 DIA.
0.75 REF.
8.000 DIA. REF.
8.063 DIA. REF.
O-RING DETAIL
SCALE : 2/1
6.8904 DIA. REF.
7.125±0.020 DIA.
1.00
1.25 REF.
DETAIL E
SCALE : 2/1
0.266 DIA. THRU TYP (12 PLACES) EQUALLY SPACED LOCATED AS SHOWN ON A 8.586 D.B.C.
⌖ B .005 DIA.
30° TYP.
0.266 DIA. THRU TYP (12 PLACES) EQUALLY SPACED LOCATED AS SHOWN ON A 7.586 D.B.C.
⌖ B .005 DIA.
C
24
PLAN
SCALE : 1/2
5.656 REF.
2.677
2.730
2.421
2.122
1.187
// A .0005
2.605
1.25
DETAIL F
SCALE : 1/1
-A-
▱ .005
// A .005
0.50
7.125±0.010 DIA.
9.086±0.010 DIA.
-B-
SECTION C-C
SCALE : 1/2
5
4
3
2
1
D
C
B
A

SHOPWORK REQUEST NO.	PRINT RECORD

STRESS ENG'R			REVIEWED BY			PROJECT NUMBER
						1-2700-211-12
			2711			
			2711			

LIST OF MATERIAL

PC. NO.	NAME OF PIECE	NO. REQD.	MATERIAL OR SOURCE
41	DRIVE END, END PLATE HOUSING	—	STAINLESS STEEL, PER AISI TYPE 304
42	DRIVE END BEARING CARRIER (MECHANICAL TUBE, 8.50 OD 6.00 ID, 1.25 WALL, 5-15/16 LONG)	—	STEEL, FREE MACHINING LOW CARBON, HIGH MANGANESE
24	DRIVE END BEARING CARRIER RETAINER	—	STAINLESS STEEL, PER AISI TYPE 304

NOTES:

1. UNLESS OTHERWISE SPECIFIED, BREAK SHARP CORNERS WITH A CHAMFER, .03 X 45°.
2. UNLESS OTHERWISE SPECIFIED, MACHINED FILLETS TO BE .03 R.
3. ESTIMATED WEIGHT OF PC. NO. 41 IS 88.8 LB.
4. ESTIMATED WEIGHT OF PC. NO. 42 IS 15.5 LB.
5. ESTIMATED WEIGHT OF PC. NO. 24 IS 3.6 LB.
6. 7.0625-8UNS-2B
   7.0625 MIN MAJOR DIA.
   6.9272 MIN MINOR DIA.
   6.9407 MAX MINOR DIA.
   6.9813 MIN PITCH DIA.
   6.9950 MAX PITCH DIA.

REV.	ZONE	DESCRIPTION	BY	APP'D	DATE

REVISIONS

CAEDOS PART NAME
AN.2711.DLL.175HPMTR.DEEPH
REFERENCES
SHEET43
SESD NO.

DATE 3-29-90
DRAWN JGW
CHECKED
DESIGNED
REVIEWED
APPROVED
DATE

NORMAL CONDUCTIVE, HOMOPOLAR, CONTRAROTATING, 175 HP MOTOR

DRIVE END END PLATE HOUSING DETAILS

SCALE : AS NOTED

DEPARTMENT OF NAVY
DAVID TAYLOR RESEARCH CENTER

DTRC NUMBER	REVISION
A27-19992-43	-

SHOPWORK REQUEST NO.	PRINT RECORD

STRESS ENG'R	REVIEWED BY	PROJECT NUMBER
	2711	1-2700-206-12
	2711	

LIST OF MATERIAL

PC. NO.	NAME OF PIECE	NO. REQD.	MATERIAL OR SOURCE
59	INSULATED BOLT, 1/4 - 20UNC - 2A 1 LONG	-	SEE NOTE 1
60	INSULATED BOLT, 1/4 - 20UNC - 2A 1 3/8 LONG	-	SEE NOTE 1
61	INSULATED BOLT, 1/4 - 20UNC - 3A 2 1/2 LONG	-	SEE NOTE 1
62	INSULATED BOLT, 1/4 - 20UNC - 3A 2 3/4 LONG	-	SEE NOTE 1
63	INSULATED WASHER, 1/4 BOLT SIZE	-	SEE NOTE 2

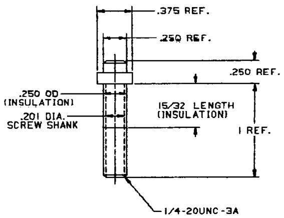
.375 REF.
.250 REF.
.250 REF.
.250 OD (INSULATION)
.201 DIA. SCREW SHANK
15/32 LENGTH (INSULATION)
1 REF.
1/4-20UNC-3A

(59)

SCALE: 2/1

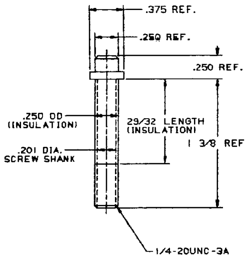
.375 REF.
.250 REF.
.250 REF.
.250 OD (INSULATION)
.201 DIA. SCREW SHANK
23/32 LENGTH (INSULATION)
1 3/8 REF.
1/4-20UNC-3A

(60)

SCALE: 2/1

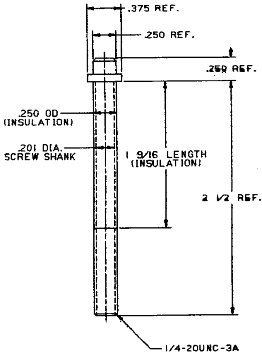
.375 REF.
.250 REF.
.250 REF.
.250 OD (INSULATION)
.201 DIA. SCREW SHANK
1 9/16 LENGTH (INSULATION)
2 1/2 REF.
1/4-20UNC-3A

(61)

SCALE: 2/1

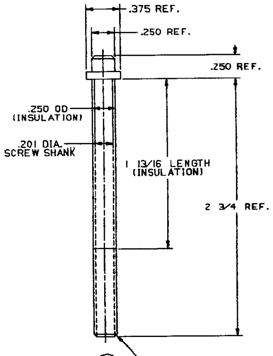
.375 REF.
.250 REF.
.250 REF.
.250 OD (INSULATION)
.201 DIA. SCREW SHANK
1 13/16 LENGTH (INSULATION)
2 3/4 REF.
1/4-20UNC-3A

(62)

SCALE: 2/1

NOTES:

1. CAP SCREW, 12 POINT HEAD, 1/4-20UNC-3A.
   1960 SERIES, FERRY CAP AND SET SCREW CO.
   ALLOY STEEL.
   ELECTRICAL INSULATION, MEDIUM TEMPERATURE,
   INSUL-BOLT MANUFACTURING, INC.
2. ELECTRICAL INSULATING WASHER, INSUL-BOLT
   MANUFACTURING INC., MATERIAL COMPARABLE TO
   INSULATION APPLIED TO SCREW.

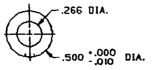
.266 DIA.
.500 +.000 -.010 DIA.

THICKNESS: 1/16

(63)

SCALE: 2/1

REV.	ZONE	DESCRIPTION	BY	APP'D	DATE

REVISIONS

CAEDOS PART NAME	AN.2711.DLL.175HPMTR.18
REFERENCES	SHEET44
SESD NO.	

DATE 5/10/90	NORMAL CONDUCTIVE, HOMOPOLAR, CONTRAROTATING, 175 HP MOTOR	DEPARTMENT OF NAVY DAVID TAYLOR RESEARCH CENTER CARDEROCK LAB - BETHESDA, MD. 20084 ANNAPOLIS LAB - ANNAPOLIS, MD. 21402
DRAWN LMF	INSULATED BOLTS DETAILS	DTRC NUMBER: A27-19992-44
CHECKED		REVISION: -
DESIGNED		
REVIEWED		
APPROVED		
DATE	SCALE: 2/1	

SHOPWORK REQUEST NO.	PRINT RECORD

STRESS ENG'R			REVIEWED BY			PROJECT NUMBER
CODE	NAME	DATE	CODE	NAME	DATE	1-2700-206-12
			2711			
			2711			

LIST OF MATERIAL

PC. NO.	NAME OF PIECE	NO. REQD.	MATERIAL OR SOURCE
57	INNER ROTOR 180° TUBE BEND	-	MCMASTER-CARR PART #5176K4
58	OUTER ROTOR 180° TUBE BEND, SHORT	-	MCMASTER-CARR PART #5176K4
127	OUTER ROTOR 180° TUBE BEND, LONG	-	MCMASTER-CARR PART #5176K4

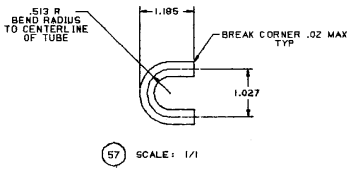
.513 R
BEND RADIUS
TO CENTERLINE
OF TUBE
1.185
BREAK CORNER .02 MAX
TYP
1.027

(57) SCALE: 1/1

- TUBE OD: .3125 (5/16)
- TUBE WALL THICKNESS: .028
- TUBE MATERIAL: COPPER ARMOR STEEL, TIN COATED OD
- TUBE TO BE STRESS RELIEVED AFTER BENDING.
- QUANTITY: 30

NOTE: DIMENSIONS ARE NOMINAL, AND MUST BE MAINTAINED AFTER STRESS RELIEVING. VENDOR TO INDICATE TOLERANCES, AND PART TO PART REPEATABILITY WHICH CAN BE MAINTAINED. EACH TUBE BEND SHOULD BE ADJUSTED TO FIT GAGE BLOCK.

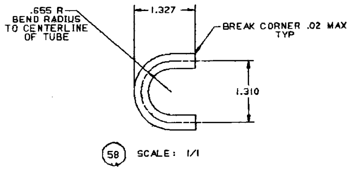
.655 R
BEND RADIUS
TO CENTERLINE
OF TUBE
1.327
BREAK CORNER .02 MAX
TYP
1.310

(58) SCALE: 1/1

- TUBE OD: .3125 (5/16)
- TUBE WALL THICKNESS: .028
- TUBE MATERIAL: COPPER ARMOR STEEL, TIN COATED OD
- TUBE TO BE STRESS RELIEVED AFTER BENDING.
- QUANTITY: 12

NOTE: DIMENSIONS ARE NOMINAL, AND MUST BE MAINTAINED AFTER STRESS RELIEVING. VENDOR TO INDICATE TOLERANCES, AND PART TO PART REPEATABILITY WHICH CAN BE MAINTAINED. EACH TUBE BEND SHOULD BE ADJUSTED TO FIT GAGE BLOCK.

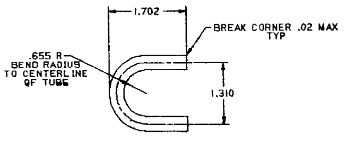
1.702
BREAK CORNER .02 MAX
TYP
.655 R
BEND RADIUS
TO CENTERLINE
OF TUBE
1.310

(127) SCALE: 1/1

- TUBE OD: .3125 (5/16)
- TUBE WALL THICKNESS: .028
- TUBE MATERIAL: COPPER ARMOR STEEL, TIN COATED OD
- TUBE TO BE STRESS RELIEVED AFTER BENDING.
- QUANTITY: 18

NOTE: DIMENSIONS ARE NOMINAL, AND MUST BE MAINTAINED AFTER STRESS RELIEVING. VENDOR TO INDICATE TOLERANCES, AND PART TO PART REPEATABILITY WHICH CAN BE MAINTAINED. EACH TUBE BEND SHOULD BE ADJUSTED TO FIT GAGE BLOCK.

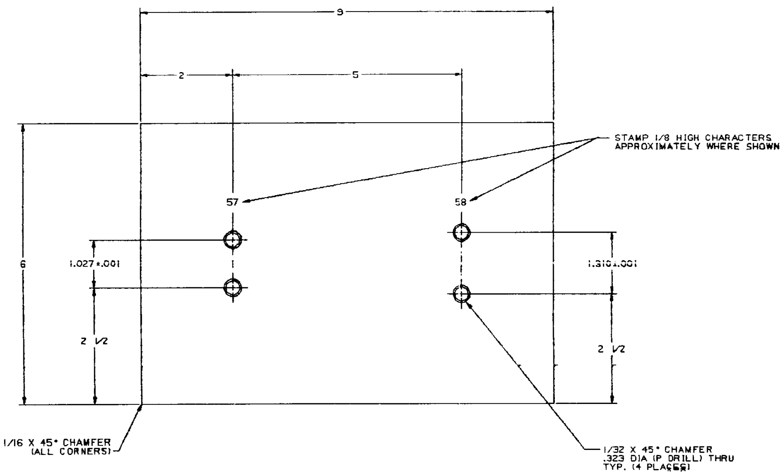
9
2
5
STAMP 1/8 HIGH CHARACTERS
APPROXIMATELY WHERE SHOWN
57
58
6
1.027±.001
1.310±.001
2 1/2
2 1/2
1/16 X 45° CHAMFER
(ALL CORNERS)
1/32 X 45° CHAMFER
.323 DIA (P DRILL) THRU
TYP. (4 PLACES)

GAGE BLOCK

SCALE: 1/1
QUANTITY 1

MATERIAL: STEEL, LOW CARBON
1/2 THICK PLATE

REV.	ZONE	DESCRIPTION	BY	APP'D	DATE

REVISIONS

CAEDOS PART NAME
AN.2711.DLL.175HPMTR.TB
REFERENCES
SHEET45
SESD NO.

DATE 5-9-90
DRAWN LMF
CHECKED
DESIGNED
REVIEWED
APPROVED
DATE

NORMAL CONDUCTIVE, HOMOPOLAR, CONTRAROTATING, 175 HP MOTOR

180° TUBE
BENDS DETAILS

SCALE: 1/1

DEPARTMENT OF NAVY
DAVID TAYLOR
RESEARCH CENTER

DTRC NUMBER A27-19992-45
REVISION -

SHOPWORK REQUEST NO.	PRINT RECORD

STRESS ENG'R	REVIEWED BY	PROJECT NUMBER
	2711 2711	1-2700-211-12

LIST OF MATERIAL

PC. NO.	NAME OF PIECE	NO. REQ'D	MATERIAL OR SOURCE
80	RIGHT SIDE COIL CONNECTOR	-	COPPER OFHC 102
81	LEFT SIDE COIL CONNECTOR	-	COPPER OFHC 102
82	COIL INTERCONNECT	-	COPPER OFHC 102
83	COIL/HOSE ADAPTER	-	BRASS
84	ELECTRICAL CONDUCTOR TERMINAL	-	COPPER C-183
85	ELECTRICAL CONDUCTOR	-	COPPER C-183

NOTES:

1. ESTIMATED WEIGHT OF PC. NO. 80 IS .99 LB.
2. ESTIMATED WEIGHT OF PC. NO. 81 IS 1.24 LB.
3. ESTIMATED WEIGHT OF PC. NO. 82 IS .63 LB.
4. ESTIMATED WEIGHT OF PC. NO. 85 IS 1.62 LB.
5. SURFACE TO BE PLATED PER CODE 2711 SPECIFICATIONS.

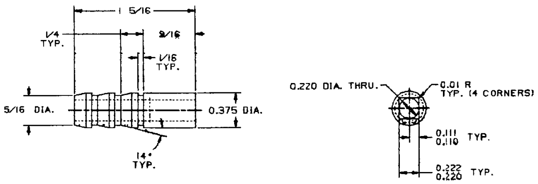
1 5/16
1/4 TYP.
9/16
1/16 TYP.
5/16 DIA.
0.375 DIA.
14° TYP.
0.220 DIA. THRU.
0.01 R TYP. (4 CORNERS)
0.111 / 0.110 TYP.
0.222 / 0.220 TYP.

(83) COIL/HOSE ADAPTER
SCALE : 2/1

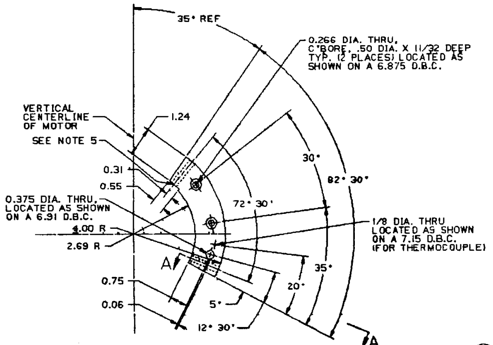
35° REF
0.266 DIA. THRU, C'BORE .50 DIA. X 11/32 DEEP TYP. (2 PLACES) LOCATED AS SHOWN ON A 6.875 D.B.C.
VERTICAL CENTERLINE OF MOTOR
SEE NOTE 5
1.24
0.31
0.55
0.375 DIA. THRU, LOCATED AS SHOWN ON A 6.91 D.B.C.
4.00 R
2.69 R
0.75
0.06
30°
82° 30°
72° 30'
1/8 DIA. THRU LOCATED AS SHOWN ON A 7.15 D.B.C. (FOR THERMOCOUPLE)
35°
20°
5°
12° 30'
A
A

(80) RIGHT SIDE COIL CONNECTOR
SCALE : 1/2

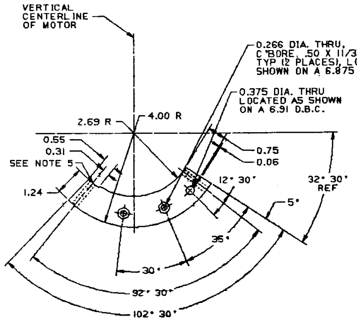
VERTICAL CENTERLINE OF MOTOR
0.266 DIA. THRU, C'BORE .50 X 11/32 DEEP, TYP (2 PLACES), LOCATED AS SHOWN ON A 6.875 D.B.C.
0.375 DIA. THRU LOCATED AS SHOWN ON A 6.91 D.B.C.
2.69 R
4.00 R
0.55
0.31
SEE NOTE 5
1.24
0.75
0.06
12° 30'
32° 30' REF
5°
35°
30°
92° 30°
102° 30°

(81) LEFT SIDE COIL CONNECTOR
SCALE : 1/2

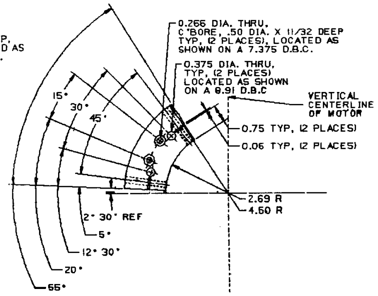
0.266 DIA. THRU, C'BORE .50 DIA. X 11/32 DEEP TYP. (2 PLACES), LOCATED AS SHOWN ON A 7.375 D.B.C.
0.375 DIA. THRU, TYP. (2 PLACES) LOCATED AS SHOWN ON A 8.91 D.B.C.
VERTICAL CENTERLINE OF MOTOR
0.75 TYP. (2 PLACES)
0.06 TYP. (2 PLACES)
15°
30°
45°
2.69 R
4.60 R
2° 30' REF
5°
12° 30'
20°
65°

(82) COIL INTERCONNECT
SCALE : 1/2

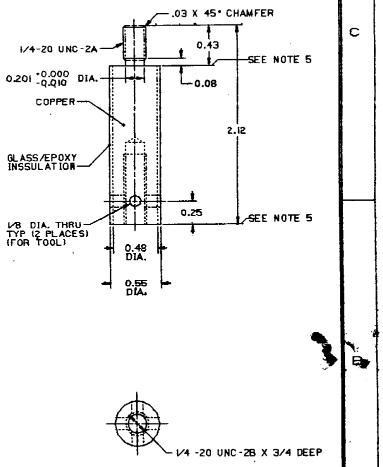
.03 X 45° CHAMFER
1/4-20 UNC-2A
0.43
SEE NOTE 5
0.201 +0.000 -0.010 DIA.
0.08
COPPER
2.12
GLASS/EPOXY INSSULATION
1/8 DIA. THRU TYP (2 PLACES) (FOR TOOL)
0.25
SEE NOTE 5
0.48 DIA.
0.55 DIA.
1/4 -20 UNC-2B X 3/4 DEEP

(84) ELECTRICAL CONDUCTOR TERMINAL
SCALE : 2/1

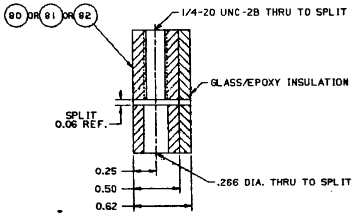
(80) OR (81) OR (82)
1/4-20 UNC-2B THRU TO SPLIT
GLASS/EPOXY INSULATION
SPLIT 0.06 REF.
0.25
0.50
0.62
.266 DIA. THRU TO SPLIT

SECTION A-A
SCALE : 2/1
(TYP 3 PLACES)

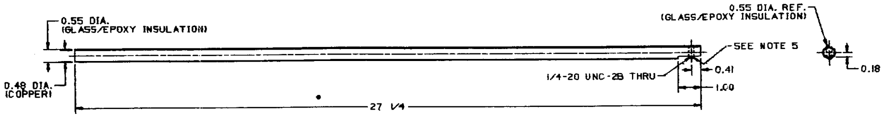
0.55 DIA. (GLASS/EPOXY INSULATION)
0.48 DIA. (COPPER)
27 1/4
1/4-20 UNC-2B THRU
SEE NOTE 5
0.41
1.00
0.55 DIA. REF. (GLASS/EPOXY INSULATION)
0.18

(85) ELECTRICAL CONDUCTOR
SCALE : 1/2

REV.	ZONE	DESCRIPTION	BY	APP'D	DATE
		REVISIONS			

CADDOS PART NAME
AN.2711.DLL.175HPMTR.RC
REFERENCES
SHEET46
SESD NO.

DATE 3-29-90
DRAWN JBW
CHECKED
DESIGNED
REVIEWED
APPROVED
DATE

NORMAL CONDUCTIVE, HOMOPOLAR, CONTRAROTATING, 175 HP MOTOR

CONDUCTOR
DETAILS

SCALE: AS NOTED

DEPARTMENT OF NAVY
DAVID TAYLOR
RESEARCH CENTER

DTRC NUMBER A27-19992-46
REVISION -

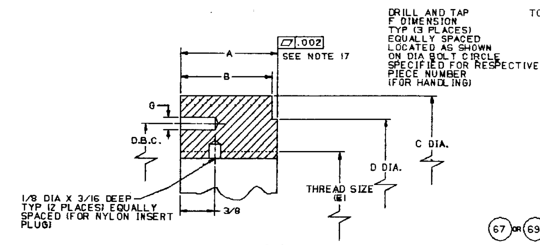

DRILL AND TAP
F DIMENSION
TYP (3 PLACES)
EQUALLY SPACED
LOCATED AS SHOWN
ON DIA BOLT CIRCLE
SPECIFIED FOR RESPECTIVE
PIECE NUMBER
(FOR HANDLING)
.002
SEE NOTE 17
A
B
G
D.B.C.
C DIA.
D DIA.
THREAD SIZE (E)
1/8 DIA X 3/16 DEEP
TYP (2 PLACES) EQUALLY
SPACED (FOR NYLON INSERT
PLUG)
3/8

SECTION A-A
SCALE : 2/1

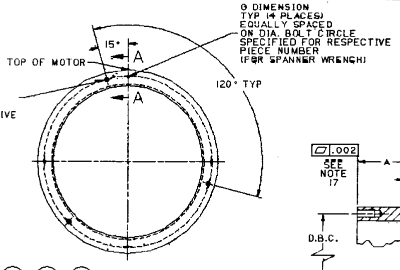

G DIMENSION
TYP (4 PLACES)
EQUALLY SPACED
ON DIA. BOLT CIRCLE
SPECIFIED FOR RESPECTIVE
PIECE NUMBER
(FOR SPANNER WRENCH)
TOP OF MOTOR
15°
A
A
120° TYP

67 OR 69 OR 73 OR 75 PLAN
SCALE : 1/2

PC. NO.	A	B	C	D	D.B.C	THREAD SIZE (E)
67	.59	.53	3.740	3.40	3.34	2.9330-12UNS-3B 2.9330 MIN MAJOR DIA. 2.8428 MIN MINOR DIA. 2.8518 MAX MINOR DIA. 2.8789 MIN PITCH DIA. 2.8901 MAX PITCH DIA.

THREAD SIZE (F)
#10-24 UNC-2B X 3/8 DEEP

DRILL SIZE (G)
#11 DIA. X 3/8 DEEP (.1915 DIA.)

PC. NO.	A	B	C	D	D.B.C.	THREAD SIZE (E)
73	.59	.53	3.531	3.31	3.23	2.9330-12UNS-3B 2.9330 MIN MAJOR DIA. 2.8428 MIN MINOR DIA. 2.8518 MAX MINOR DIA. 2.8789 MIN PITCH DIA. 2.8901 MAX PITCH DIA.

THREAD SIZE (F)
#6-30 UNC-2B X 1/4 DEEP

DRILL SIZE (G)
#11 DIA. X 3/8 DEEP (.1915 DIA.)

PC. NO.	A	B	C	D	D.B.C	THREAD SIZE (E)
69	1.06	1.00	7.858	7.36	7.26	6.6590-8UNS-3B 6.6590 MIN MAJOR DIA. 6.5237 MIN MINOR DIA. 6.5372 MAX MINOR DIA. 6.5778 MIN PITCH DIA. 6.5915 MAX PITCH DIA.

THREAD SIZE (F)
#10-24 UNC-2B X 3/8 DEEP

DRILL SIZE (G)
#11 DIA. X 3/8 DEEP (.1916 DIA.)

PC. NO.	A	B	C	D	D.B.C.	THREAD SIZE (E)
75	.94	.88	6.183	5.94	5.84	5.4970-12UNS-3B 5.4970 MIN MAJOR DIA. 5.4068 MIN MINOR DIA. 5.4158 MAX MINOR DIA. 5.4429 MIN PITCH DIA. 5.4556 MAX PITCH DIA.

THREAD SIZE (F)
#10-24 UNC-2B X 3/8 DEEP

DRILL SIZE (G)
#11 DIA. X 1/2 DEEP (.1916 DIA.)

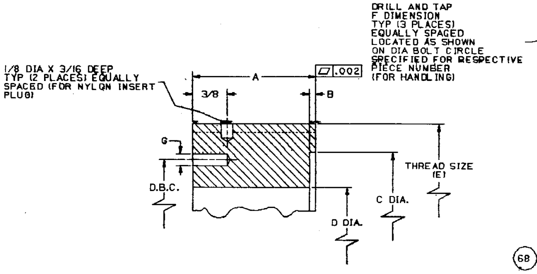

1/8 DIA X 3/16 DEEP
TYP (2 PLACES) EQUALLY
SPACED (FOR NYLON INSERT
PLUG)
DRILL AND TAP
F DIMENSION
TYP (3 PLACES)
EQUALLY SPACED
LOCATED AS SHOWN
ON DIA BOLT CIRCLE
SPECIFIED FOR RESPECTIVE
PIECE NUMBER
(FOR HANDLING)
.002
A
3/8
B
G
D.B.C.
THREAD SIZE (E)
C DIA.
D DIA.

SECTION B-B
SCALE : 2/1

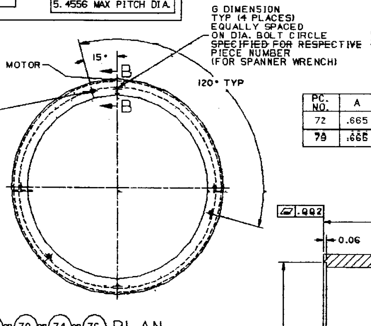

G DIMENSION
TYP (4 PLACES)
EQUALLY SPACED
ON DIA. BOLT CIRCLE
SPECIFIED FOR RESPECTIVE
PIECE NUMBER
(FOR SPANNER WRENCH)
TOP OF MOTOR
15°
B
B
120° TYP

68 OR 70 OR 74 OR 76 PLAN
SCALE : 1/2

PC. NO.	A	B	C	D	D.B.C	THREAD SIZE
68	.81	.06	4.12	3.771	4.23	4.6875-12UNS-3A 4.6875 MAX MAJOR DIA. 4.6763 MIN MAJOR DIA. 4.5853 MAX MINOR DIA. 4.6334 MAX PITCH DIA. 4.6207 MIN PITCH DIA.

THREAD SIZE (F)
#10-24 UNC-2B X 3/8 DEEP

DRILL SIZE (G)
#11 DIA. X 3/8 DEEP (.1915 DIA.)

PC. NO.	A	B	C	D	D.B.C.	THREAD SIZE
74	1.09	-	-	3.562	3.87	4.2500-12UNS-3A 4.2500 MAX MAJOR DIA. 4.2388 MIN MAJOR DIA. 4.1478 MAX MINOR DIA. 4.1959 MAX PITCH DIA. 4.1832 MIN PITCH DIA.

THREAD SIZE (F)
#10-24 UNC-2B X 3/8 DEEP

DRILL SIZE (G)
#11 DIA. X 3/8 DEEP (.1915 DIA.)

PC. NO.	A	B	C	D	D.B.C	THREAD SIZE
70	1.34	.06	8.64	7.890	8.48	9.2500-6UNS-3A 9.2500 MAX MAJOR DIA. 9.2298 MIN MAJOR DIA. 9.0455 MAX MINOR DIA. 9.1417 MAX PITCH DIA. 9.1232 MIN PITCH DIA.

THREAD SIZE (F)
#10-24 UNC-2B X 3/8 DEEP

DRILL SIZE (G)
#11 DIA. X 3/8 DEEP (.1915 DIA.)

PC. NO.	A	B	C	D	D.B.C.	THREAD SIZE
76	1.09	.06	6.44	6.216	6.57	7.0625-8UNS-3A 7.0625 MAX MAJOR DIA. 7.0473 MIN MAJOR DIA. 6.9091 MAX MINOR DIA. 6.9813 MAX PITCH DIA. 6.9676 MIN PITCH DIA.

THREAD SIZE (F)
#10-24 UNC-2B X 3/8 DEEP

DRILL SIZE (G)
#11 DIA. X 1/2 DEEP (.1915 DIA.)

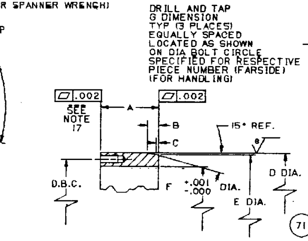

DRILL AND TAP
G DIMENSION
TYP (3 PLACES)
EQUALLY SPACED
LOCATED AS SHOWN
ON DIA BOLT CIRCLE
SPECIFIED FOR RESPECTIVE
PIECE NUMBER (FARSIDE)
(FOR HANDLING)
.002
SEE NOTE 17
.002
A
B
C
15° REF.
θ
D DIA.
D.B.C.
F +.001 -.000 DIA.
E DIA.

SECTION C-C
SCALE : 2/1

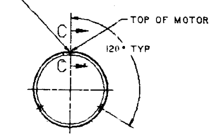

TOP OF MOTOR
C
C
120° TYP

71 AND 77 PLAN
SCALE : 1/2

PC. NO.	A	B	C	D	E	F	D.B.C	THREAD SIZE (G)
71 AND 77	.630	.13	.03	3.250	3.20	2.955	3.105	#2-56 UNC-2B X 3/16 DEEP

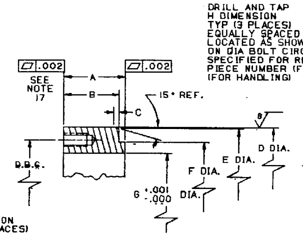

DRILL AND TAP
H DIMENSION
TYP (3 PLACES)
EQUALLY SPACED
LOCATED AS SHOWN
ON DIA BOLT CIRCLE
SPECIFIED FOR RESPECTIVE
PIECE NUMBER (FARSIDE)
(FOR HANDLING)
.002
SEE NOTE 17
.002
A
B
C
15° REF.
θ
D DIA.
E DIA.
F DIA.
G +.001 -.000 DIA.
D.B.C.

SECTION D-D
SCALE : 2/1

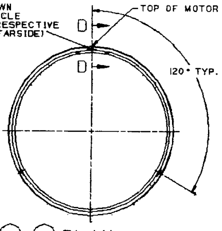

TOP OF MOTOR
D
D
120° TYP.

72 OR 79 PLAN
SCALE : 1/2

PC. NO.	A	B	C	D	E	F	G	D.B.C	THREAD SIZE (H)
72	.665	.60	.06	7.250	7.22	6.93	6.697	6.972	#6-32 UNC-2B X 1/4 DEEP
79	.665	.60	.06	6.000	5.97	5.76	5.616	5.758	#6-32 UNC-2B X 1/4 DEEP

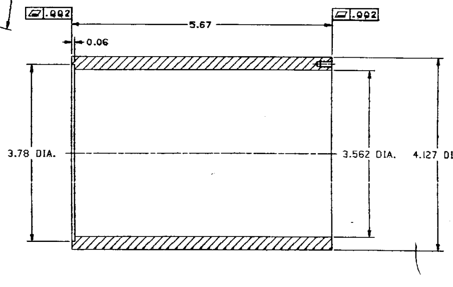

.002
.002
5.67
0.06
3.78 DIA.
3.562 DIA.
4.127 DIA.

SECTION E-E
SCALE : 2/1

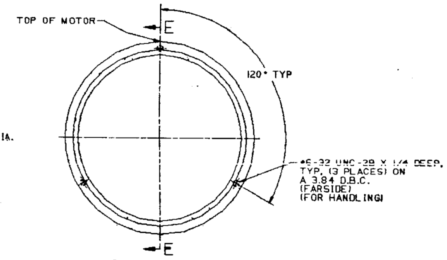

TOP OF MOTOR
E
E
120° TYP
#6-32 UNC-2B X 1/4 DEEP,
TYP. (3 PLACES) ON
A 3.84 D.B.C.
(FARSIDE)
(FOR HANDLING)

78 PLAN
SCALE : 1/2

TOLERANCES UNLESS OTHERWISE SPECIFIED ON MACHINE DIMENSIONS [illegible]

SHOPWORK REQUEST NO.		PRINT RECORD					

STRESS ENG'R			REVIEWED BY			PROJECT NUMBER
CODE	NAME	DATE	CODE	NAME	DATE	1-2700-002-11
			2711			
			2711			

LIST OF MATERIAL

PC. NO.	NAME OF PIECE	NO. REQD.	MATERIAL OR SOURCE
67	SERVICE END INNER ROTOR INNER RACE BEARING NUT	-	STEEL, FREE MACHINING, LOW CARBON, HIGH MANGANESE
68	SERVICE END INNER ROTOR OUTER RACE BEARING NUT	-	STEEL, FREE MACHINING, LOW CARBON, HIGH MANGANESE
69	SERVICE END OUTER ROTOR INNER RACE BEARING NUT	-	STEEL, FREE MACHINING, LOW CARBON, HIGH MANGANESE
70	SERVICE END OUTER ROTOR OUTER RACE BEARING NUT	-	STEEL, FREE MACHINING, LOW CARBON, HIGH MANGANESE
71	SERVICE END INNER ROTOR INNER RACE BEARING SLEEVE	-	STEEL, FREE MACHINING, HIGH CARBON
72	SERVICE END OUTER ROTOR INNER RACE BEARING SLEEVE	-	STEEL, FREE MACHINING, HIGH CARBON
73	DRIVE END INNER ROTOR INNER RACE BEARING NUT	-	STEEL, FREE MACHINING, LOW CARBON, HIGH MANGANESE
74	DRIVE END INNER ROTOR OUTER RACE BEARING NUT	-	STEEL, FREE MACHINING, LOW CARBON, HIGH MANGANESE
75	DRIVE END OUTER ROTOR INNER RACE BEARING NUT	-	STEEL, FREE MACHINING, LOW CARBON, HIGH MANGANESE
76	DRIVE END OUTER ROTOR OUTER RACE BEARING NUT	-	STEEL, FREE MACHINING, LOW CARBON, HIGH MANGANESE
77	DRIVE END INNER ROTOR INNER RACE BEARING SLEEVE	-	STEEL, FREE MACHINING, HIGH CARBON
78	DRIVE END INNER ROTOR OUTER RACE BEARING SLEEVE	-	STEEL, FREE MACHINING, LOW CARBON, HIGH MANGANESE
79	DRIVE END OUTER ROTOR INNER RACE BEARING SLEEVE	-	STEEL, FREE MACHINING, HIGH CARBON

NOTES:

1. ESTIMATED WEIGHT OF PC. NO. 67 IS 0.75 LB.
2. ESTIMATED WEIGHT OF PC. NO. 68 IS 1.36 LB.
3. ESTIMATED WEIGHT OF PC. NO. 69 IS 4.43 LB.
4. ESTIMATED WEIGHT OF PC. NO. 70 IS 6.79 LB.
5. ESTIMATED WEIGHT OF PC. NO. 71 IS 0.25 LB.
6. ESTIMATED WEIGHT OF PC. NO. 72 IS 1.08 LB.
7. ESTIMATED WEIGHT OF PC. NO. 73 IS 0.56 LB.
8. ESTIMATED WEIGHT OF PC. NO. 74 IS 0.96 LB.
9. ESTIMATED WEIGHT OF PC. NO. 75 IS 1.86 LB.
10. ESTIMATED WEIGHT OF PC. NO. 76 IS 2.69 LB.
11. ESTIMATED WEIGHT OF PC. NO. 77 IS 0.25 LB.
12. ESTIMATED WEIGHT OF PC. NO. 78 IS 5.4 LB.
13. ESTIMATED WEIGHT OF PC. NO. 79 IS 0.78 LB.
14. UNLESS OTHERWISE SPECIFIED, BREAK SHARP CORNERS WITH A CHAMFER, .03 X 45°.
15. UNLESS OTHERWISE SPECIFIED, MACHINED FILLETS TO BE .03 R.
16. PRIOR TO FINAL MACHINING CASE HARDEN PC. NO. 71, 72, 77, AND 79 TO RC58-RC63 TO A DEPTH OF .06.
17. ALUMINUM OXIDE COAT THIS SURFACE PER CODE 2711 SPECIFICATIONS. DIMENSIONS SHOWN ARE AFTER FINAL MACHINING.

REV.	ZONE	DESCRIPTION	BY	APP'D	DATE
		REVISIONS			

CADDS PART NAME
AN.2711.DLL.175HPMTR.BR
REFERENCES
SHEET47
SESD NO.

DATE 3-29-90	NORMAL CONDUCTIVE, HOMOPOLAR, CONTRAROTATING, 175 HP MOTOR	DEPARTMENT OF NAVY DAVID TAYLOR RESEARCH CENTER
DRAWN JGW	BEARING RETAINER DETAILS	
CHECKED		
DESIGNED		
REVIEWED		DTRC NUMBER: A27-19992-47
APPROVED		REVISION: -
DATE	SCALE: AS NOTED	

NOTES:

1. REF. DTRC DWG. A27-19992-1 FOR LIST OF MATERIAL, AND ASSEMBLY NOTES.
2. USE THREAD LOCKING ADHESIVE ON THREADS OF FASTENERS. LOCTITE THREADLOCKER 242 REMOVABLE MEDIUM STRENGTH ADHESIVE, OR EQUAL, IS RECOMMENDED.
3. ID OF TUBE FITTING TO BE MODIFIED TO PROVIDE MOUNTING FOR INSULATED LOCK PIN. DETAILS OF TUBE FITTING MODIFICATION, AND DETAILS OF INSULATED LOCK PIN TO BE SPECIFIED BY CODE 2711.
4. THREAD LENGTH OF ADAPTER FITTING TO BE SHORTENED TO .39 LONG.
5. TUBE FITTING TO BE USED FOR NAK INJECTION. DETAILS OF TUBE FITTING TO BE SPECIFIED BY CODE 2711.

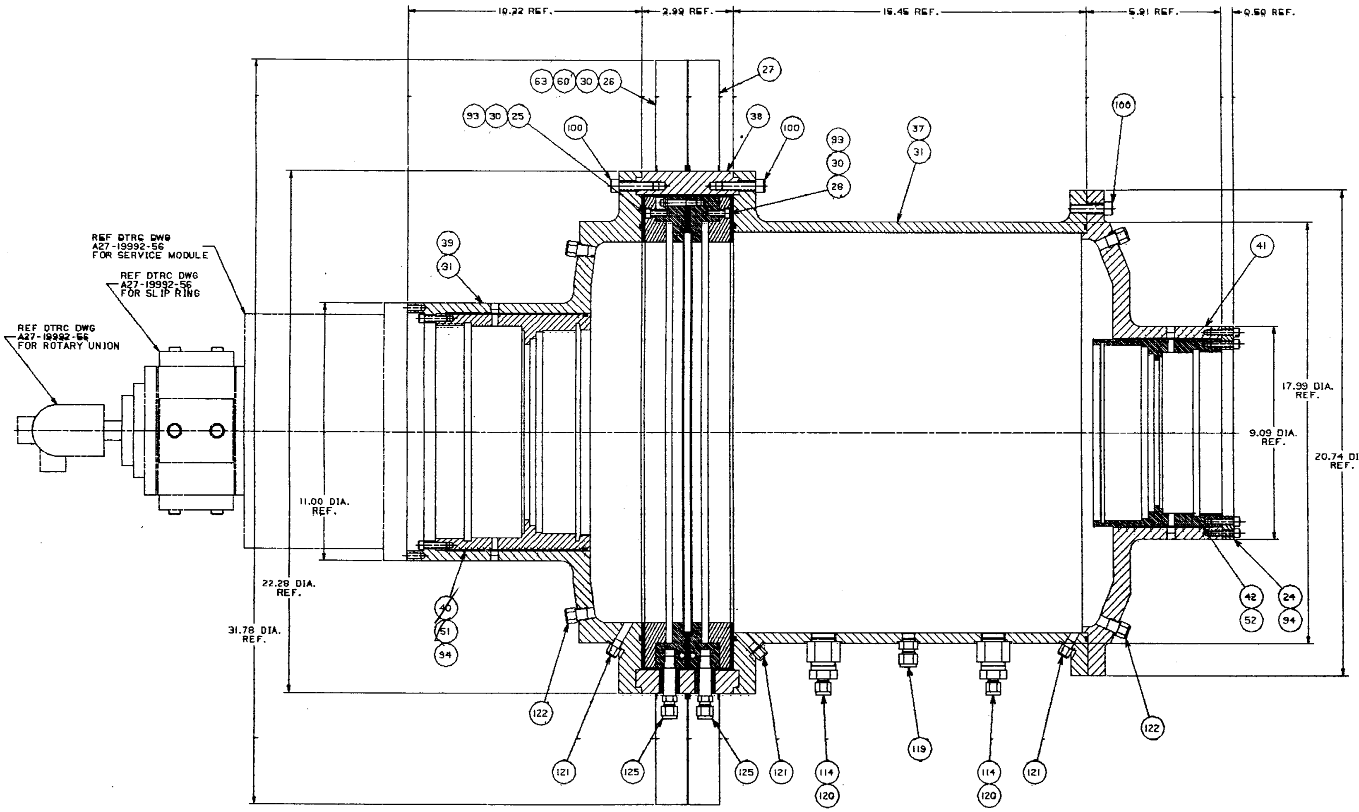
10.22 REF.
2.99 REF.
16.46 REF.
5.91 REF.
0.50 REF.
REF DTRC DWG A27-19992-56 FOR SERVICE MODULE
REF DTRC DWG A27-19992-56 FOR SLIP RING
REF DTRC DWG A27-19992-56 FOR ROTARY UNION
11.00 DIA. REF.
22.28 DIA. REF.
31.78 DIA. REF.
17.99 DIA. REF.
9.09 DIA. REF.
20.74 DIA. REF.
63
60
30
26
27
93
30
25
100
38
100
93
30
28
37
31
100
39
31
41
40
51
94
42
52
24
94
122
121
125
125
121
114
120
119
114
120
121
122

SHOPWORK REQUEST NO.	PRINT RECORD

STRESS ENG'R			REVIEWED BY			PROJECT NUMBER
CODE	NAME	DATE	CODE	NAME	DATE	1-2700-211-12
			2711			
			2711			

LIST OF MATERIAL

PC. NO.	NAME OF PIECE	NO. REQD.	MATERIAL OR SOURCE
24	DRIVE END BEARING CARRIER RETAINER	-	REF DTRC DWG A27-19992-43
25	SERVICE END TERMINAL COLLECTOR RING	-	REF DTRC DWG A27-19992-34
26	SERVICE END TERMINAL COLLECTOR	-	REF DTRC DWG A27-19992-35
27	DRIVE END TERMINAL COLLECTOR	-	REF DTRC DWG A27-19992-35
28	DRIVE END TERMINAL COLLECTOR RING	-	REF DTRC DWG A27-19992-34
~~30~~	~~O-RING, 17.982 ±.086 ID,~~ .139 ±.004 WIDE, 18.270 OD REF	~~-~~	~~REF DTRC DWG A27-19992-1~~
31	O-RING, 17.451 ±.080 ID, .139 ±.004 WIDE, 18.270 OD REF	-	REF DTRC DWG A27-19992-1
37	MOTOR HOUSING	-	REF DTRC DWG A27-19992-40
38	TERMINAL HOUSING	-	REF DTRC DWG A27-19992-41
39	SERVICE END, END PLATE HOUSING	-	REF DTRC DWG A27-19992-42
40	SERVICE END BEARING CARRIER	-	REF DTRC DWG A27-19992-42
41	DRIVE END, END PLATE HOUSING	-	REF DTRC DWG A27-19992-43
42	DRIVE END BEARING CARRIER	-	REF DTRC DWG A27-19992-43
51	O-RING, 9.887 ± .055 ID, .139 ± .004 WIDE, 10.165 OD REF	-	REF DTRC DWG A27-19992-1
52	O-RING, 7.814 ±.045 ID, .139 ±.004 WIDE, 8.092 OD REF	-	REF DTRC DWG A27-19992-1
60	INSULATED BOLT, 1/4-20UNC-3A X 1 3/8 LONG	-	REF DTRC DWG A27-19992-44
63	INSULATED WASHER, 1/4 BOLT SIZE	-	REF DTRC DWG A27-19992-44
93	SOCKET HEAD CAP SCREW, 1/4-20UNC-3A X 3/4 LONG	-	REF DTRC DWG A27-19992-1, SEE NOTE 2
94	SOCKET HEAD CAP SCREW, 1/4-20UNC-3A X 1 LONG	-	REF DTRC DWG A27-19992-1, SEE NOTE 2
100	SOCKET HEAD CAP SCREW, 3/8-16UNC-3A X 1 1/2 LONG	-	REF DTRC DWG A27-19992-1, SEE NOTE 2
114	TUBE FITTING, MALE CONNECTOR, 1/4 TUBE X 3/4 NPT	-	REF DTRC DWG A27-19992-1
119	TUBE FITTING, SAE MALE CONNECTOR, 3/8 TUBE X 9/16-18UNF SAE	-	REF DTRC DWG A27-19992-1, SEE NOTE 3
120	ADAPTER FITTING, SAE MALE/FEMALE NPT, 1 1/16-12UNF SAE X 3/4 NPT	-	REF DTRC DWG A27-19992-1, SEE NOTE 4.
121	PIPE PLUG, 1/8 NPT	-	REF DTRC DWG A27-19992-1
122	PIPE PLUG, 1/4 NPT	-	REF DTRC DWG A27-19992-1
125	TUBE FITTING, MALE CONNECTOR, 3/8 TUBE X	-	REF DTRC DWG A27-19992-1, SEE NOTE 5

REV.	ZONE	DESCRIPTION	BY	APP'D	DATE

REVISIONS

CADDS PART NAME
AN.2711.DLL.175HPMTR.MHA
REFERENCES
SHEET4
A27-19992-1, -34, -35, -40, -41, -42, -43, -44, -47
SESD NO.

DATE 9-4-91
DRAWN JGW
CHECKED
DESIGNED
REVIEWED
APPROVED
DATE

NORMAL CONDUCTIVE, HOMOPOLAR, CONTRAROTATING, 175 HP MOTOR

MOTOR HOUSING ASSEMBLY SECTION

SCALE: 1/2

DEPARTMENT OF NAVY
DAVID TAYLOR RESEARCH CENTER

DTRC NUMBER A27-19992-64
REVISION -

APPENDIX F

INITIAL DISTRIBUTION

Copies		
4 ONR		
2	334	Volgelsong
2	334	Gagorik
5 NAVSEA		
1	03Z	Krolick
1	08K	Levin
1	03E	Yee
1	03R	Tobin
1	PEOSUB-RD3	Sofia
12 DTIC		

CENTER DISTRIBUTION

Copies	Code	Name
1	0113	Winegrad
1	0114	Martin
1	802	Levedahl
1	804	Quandt
1	808	Cox
1	808	Robey
1	81	Stevens
1	811	Bagley
5	811	Cannell
5	811	McConnell
5	811	Martino
15	811	Smith
1	812	Superczynski
5	823	Drake
1	3421	TIC (C)
1	3422	TIC (A)
1	3431	Office Services

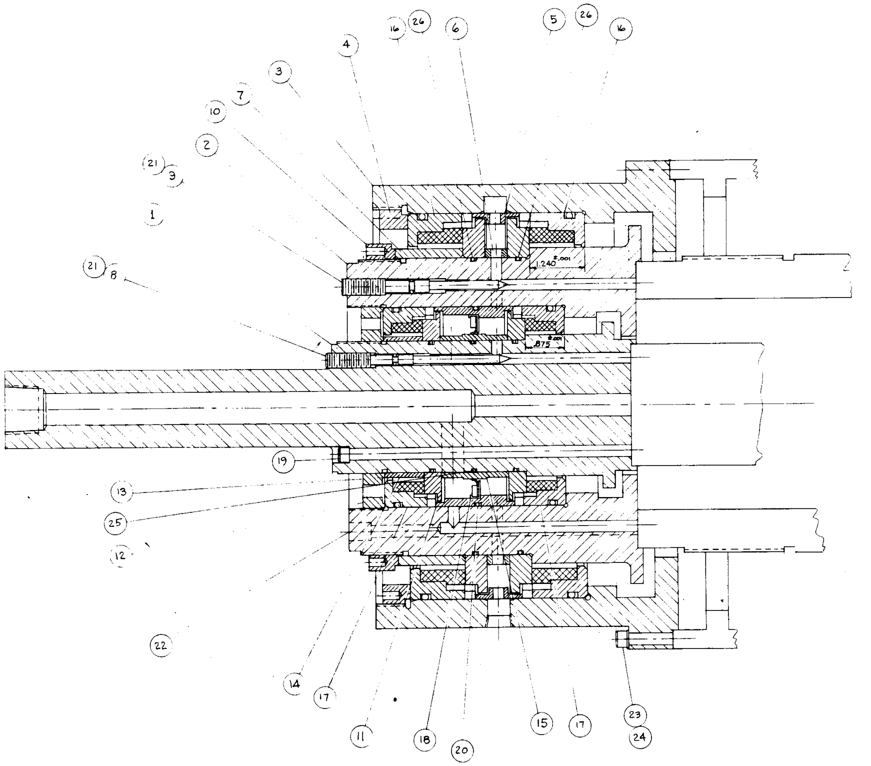

PARTS LIST

PC. No.	DESCRIPTION	QTY.	MATL.	
1	INNER SHAFT EXTENSION	1	SST	(SH. 2, DET. 3-A)
2	OUTER SHAFT EXTENSION	1	SST	(SH. 3, SECT. 3-A)
3	HOUSING EXTENSION	1	AL	(SH. 4, SECT. 2-B)
4	LOCK RING, 9.00-8UNS-3A	1	SST	(SH. 4, DET. 2-D)
5	SPACER, 8.658 O.D.	1	SST	(SH. 2, DET. 2-B)
6	SPACER, 6.697 I.D. × .5 LG	1	SST	(SH. 3, DET. 2-D)
7	SPACER, 6.697 I.D. × 1.5 LG	1	SST	(SH. 4, DET. 5-D)
8	NEEDLE VALVE, 3.93 LG.	4	SST	(SH. 2, DET. 5-C)
9	NEEDLE VALVE, 3.53 LG.	6	SST	(SH. 2, DET. 5-C)
10	LOCK RING, 6.659-8UNS-3-B	1	SST	(SH. 4, DET. 3-D)
11	SPACER, 4.494 O.D.	1	SST	(SH. 3, DET. 5-D)
12	LOCK RING, 4.625-12UN-3A	1	SST	(SH. 3, DET. 3-D)
13	LOCK RING, 2.933-12UNS-3B	1	SST	(SH. 2, DET. 4-C)
14	SPACER, 2.954 I.D. × .875 LG	1	SST	(SH. 2, DET. 3-C)
15	SPACER, 2.953 I.D. × 1.5 LG	1	SST	(SH. 2, DET. 2-C)
16	OUTER FACE SEAL, 8.658 O.D.	2	COML.	KAYDON 7.718 DIA
17	INNER FACE SEAL, 4.495 O.D	2	COML.	KAYDON 3.787 DIA
18	LIP SEAL, 3.25 I.D.	1	COML.	AMER. VARISEAL
19	SCREW, SOC. HD., $\frac{1}{4}$-20 × 6.89 LG.	5	STL.	
20	O-RING, 4.237 I.D., $\frac{3}{32}''$ CROSS SECT.	1	BUNA-N	PARKER # 2-156
21	O-RING, .176 I.D., $\frac{1}{16}''$ CROSS SECT.	10	BUNA-N	PARKER # 2-008
22	SCREW, SOC HD, $\frac{1}{4}$-20 × 6.5 LG.	12	STL.	
23	SCREW, SOC HD, $\frac{1}{4}$-20 × 1.5 LG	12	STL.	
24	WASHER, $\frac{1}{4}''$, REG.	12	STL.	
25	O-RING, 2.864 I.D., $\frac{1}{16}$ CROSS SECT.	1	BUNA-N	PARKER # 2-040
26	O-RING, 6.487 I.D., $\frac{3}{32}$ CROSS SECT	2	BUNA-N	PARKER # 2-165

REV.	DATE	APPD.	DESCRIPTION	BY

DRAWN JWS

DEPARTMENT OF THE NAVY
DAVID W. TAYLOR NAVAL SHIP R & D CENTER
ANNAPOLIS, LABORATORY

SERVICE MODULE
ASSEMBLY VIEW

APPROVED ________ DATE ________

SATISFACTORY TO ________

DATE ________

SCALE

SHEET 1 OF 4

DATE ________

DRAWING NO. ________

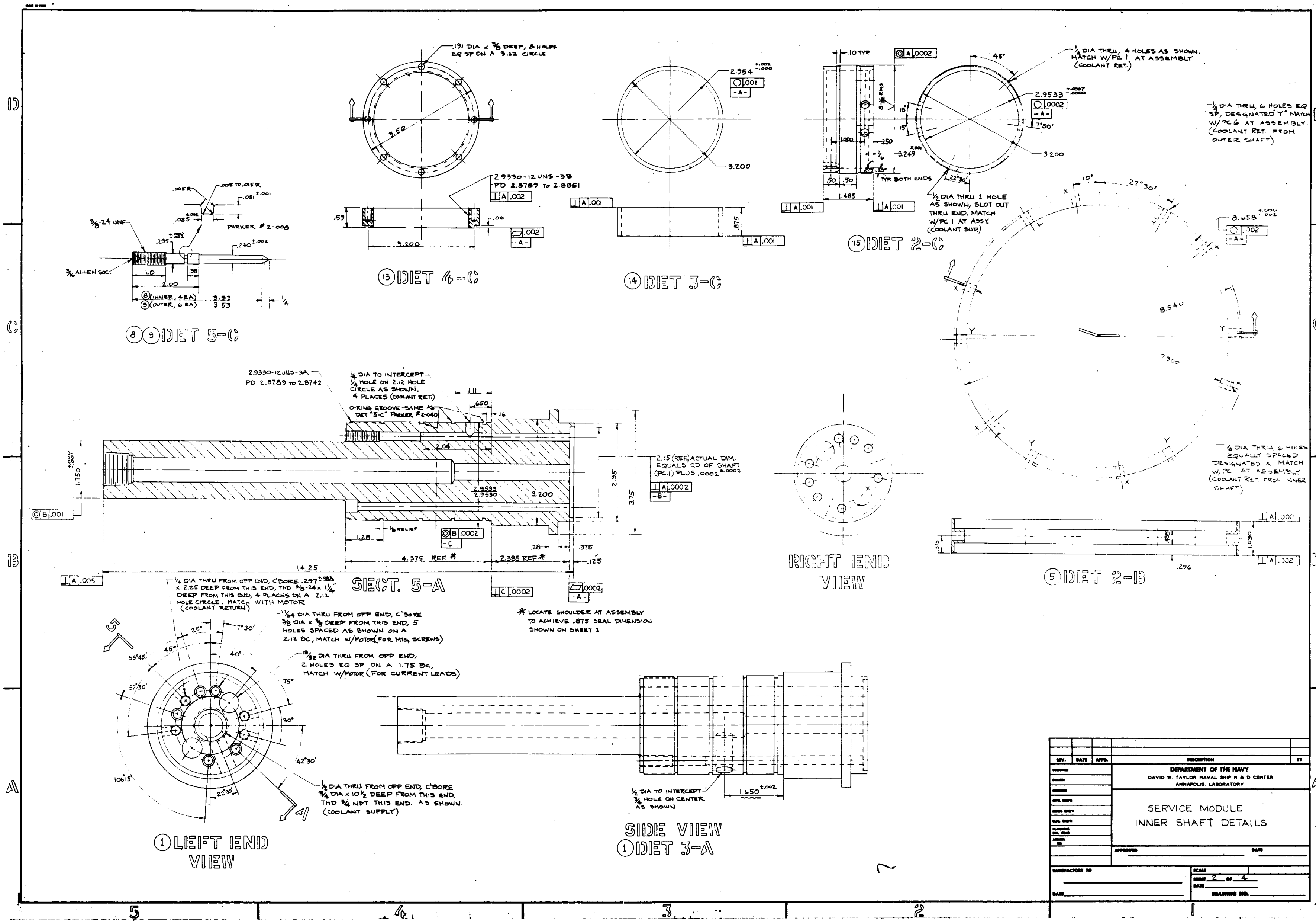

.191 DIA x 3/8 DEEP, 8 HOLES EQ SP ON A 3.22 CIRCLE
3.50
2.9330-12 UNS-3B
PD 2.8789 TO 2.8851
⊥ A .002
.59
.06
3.200
▱ .002
-A-
⑬ DET 4-C
2.954 +.002 -.000
○ .001
-A-
3.200
⊥ A .001
.875
⊥ A .001
⑭ DET 3-C
.10 TYP
◎ A .0002
8-1/16 RMS
15°
15°
1.000
.250
1/16
3.249 ±.001
20°
TYP. BOTH ENDS
.50
.50
1.485
⊥ A .001
⊥ A .001
45°
1/4 DIA THRU, 4 HOLES AS SHOWN. MATCH W/PC 1 AT ASSEMBLY (COOLANT RET.)
2.9533 +.0007 -.0000
○ .0002
-A-
7°30'
3.200
22°30'
1/2 DIA THRU 1 HOLE AS SHOWN, SLOT OUT THRU END. MATCH W/PC 1 AT ASSY. (COOLANT SUP.)
⑮ DET 2-C
1/4 DIA THRU, 6 HOLES EQ SP, DESIGNATED "Y" MATCH W/PC 6 AT ASSEMBLY. (COOLANT RET. FROM OUTER SHAFT)
10°
27°30'
8.658 +.000 -.002
○ .002
-A-
X
Y
8.540
7.900
1/4 DIA THRU 6 HOLES EQUALLY SPACED DESIGNATED X MATCH W/PC AT ASSEMBLY (COOLANT RET. FROM INNER SHAFT)
⊥ A .002
.515
1.030
.296
⊥ A .002
⑤ DET 2-B
.005R
.005 TO .015R
.051 ±.001
.085 ±.002
PARKER # 2-008
3/8-24 UNF
.295 +.000 -.002
.230 ±.002
3/16 ALLEN SOC.
1.0
.38
2.00
⑧ (INNER, 4 EA) 3.93
⑨ (OUTER, 6 EA) 3.53
1/4
⑧⑨ DET 5-C
2.9330-12UNS-3A
PD 2.8789 TO 2.8742
1/4 DIA TO INTERCEPT 1/4 HOLE ON 2.12 HOLE CIRCLE AS SHOWN. 4 PLACES (COOLANT RET.)
O-RING GROOVE-SAME AS DET "5-C" PARKER #2-040
1.11
.650
.16
2.04
1.750 +.000 -.001
◎ B .001
2.9533
2.9530
3.200
2.95
3.75
2.75 (REF.) ACTUAL DIM. EQUALS O.D. OF SHAFT (PC.1) PLUS .0002 ±.0002
⊥ A .0002
-B-
1/8 RELIEF
1.28
◎ B .0002
-C-
.28
.375
4.375 REF. *
2.385 REF. *
.125
14.25
⊥ A .005
SECT. 5-A
⊥ C .0002
▱ .0002
-A-
* LOCATE SHOULDER AT ASSEMBLY TO ACHIEVE .875 SEAL DIMENSION SHOWN ON SHEET 1
RIGHT END VIEW
1/4 DIA THRU FROM OPP END, C'BORE .297 +.002 -.000 x 2.25 DEEP FROM THIS END, THD 3/8-24 x 1 1/4" DEEP FROM THIS END, 4 PLACES ON A 2.12 HOLE CIRCLE. MATCH WITH MOTOR (COOLANT RETURN)
17/64 DIA THRU FROM OPP END, C'BORE 3/8 DIA x 3/8 DEEP FROM THIS END, 5 HOLES SPACED AS SHOWN ON A 2.12 BC, MATCH W/MOTOR (FOR MTG. SCREWS)
19/32 DIA THRU FROM OPP END, 2 HOLES EQ SP ON A 1.75 BC, MATCH W/MOTOR (FOR CURRENT LEADS)
5
25°
7°30'
45°
40°
53°45'
75°
52°30'
30°
42°30'
106°15'
22°30'
A
1/2 DIA THRU FROM OPP END, C'BORE 3/4 DIA x 10 1/2 DEEP FROM THIS END, THD 3/4 NPT THIS END. AS SHOWN. (COOLANT SUPPLY)
① LEFT END VIEW
1/4 DIA TO INTERCEPT 3/4 HOLE ON CENTER AS SHOWN
1.650 ±.002
SIDE VIEW
① DET 3-A
D
C
B
A
5
4
3
2
1

REV.	DATE	APPD.	DESCRIPTION	BY

DESIGNED
DRAWN
CHECKED
CIVIL ENG'G
MECH. ENG'G
ELEC. ENG'G
PLANNING DIV. HEAD
ASSOC. NO.

DEPARTMENT OF THE NAVY
DAVID W. TAYLOR NAVAL SHIP R & D CENTER
ANNAPOLIS. LABORATORY

SERVICE MODULE
INNER SHAFT DETAILS

APPROVED ______ DATE ______

SATISFACTORY TO ______
DATE ______

SCALE
SHEET 2 OF 4
DATE ______
DRAWING NO. ______

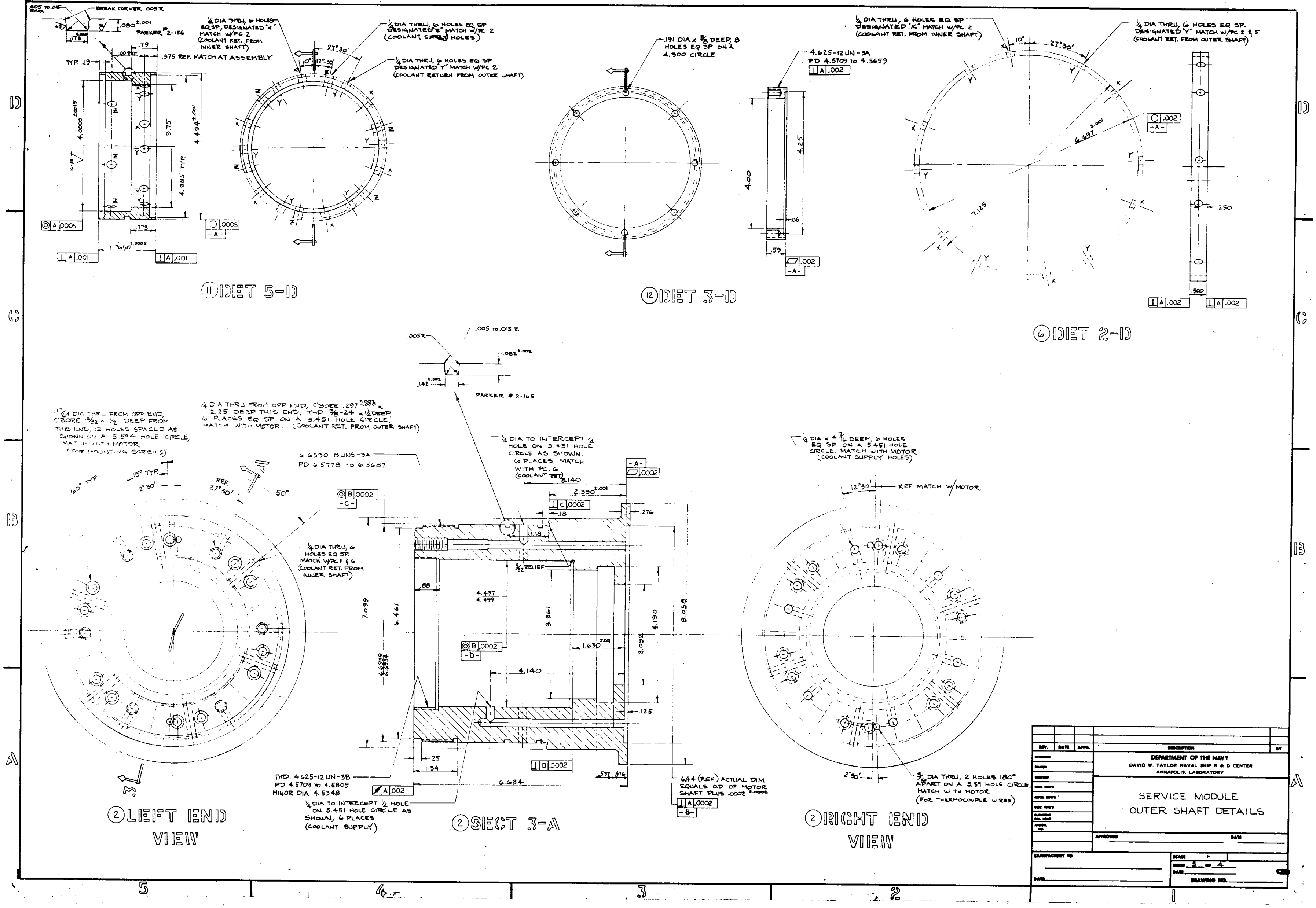
.005 TO .015 RAD.
BREAK CORNER .005 R
.080 ±.001
.173 ±.002
PARKER # 2-156
.79
1.00 REF.
.375 REF. MATCH AT ASSEMBLY
TYP. .19
4.0000 ±.0015
3.75
4.494 ±.001
4.385 TYP
16-32
.773
1.7650 ±.0002
A .0005
.0005 -A-
A .001
A .001
1/4 DIA THRU, 6 HOLES EQ SP, DESIGNATED "X" MATCH W/PC 2 (COOLANT RET. FROM INNER SHAFT)
1/4 DIA THRU, 6 HOLES EQ SP DESIGNATED "Z" MATCH W/PC 2 (COOLANT SUPPLY HOLES)
1/4 DIA THRU, 6 HOLES EQ SP DESIGNATED "Y" MATCH W/PC 2 (COOLANT RETURN FROM OUTER SHAFT)
27°30'
10°
12°-30'
X
Y
Z
⑪ DET 5-D
.191 DIA x 3/8 DEEP, 8 HOLES EQ SP ON A 4.300 CIRCLE
4.625-12 UN-3A
PD 4.5709 TO 4.5659
A .002
4.25
4.00
.06
.59
.002 -A-
⑫ DET 3-D
1/4 DIA THRU, 6 HOLES EQ SP DESIGNATED "X" MATCH W/PC 2 (COOLANT RET. FROM INNER SHAFT)
1/4 DIA THRU, 6 HOLES EQ SP. DESIGNATED "Y" MATCH W/PC 2 & 5 (COOLANT RET. FROM OUTER SHAFT)
10°
27°30'
6.697 ±.001
7.125
.002 -A-
.250
.500
A .002
A .002
⑥ DET 2-D
.005R
.005 TO .015 R.
.082 ±.002
.142 ±.002
PARKER # 2-165
17/64 DIA THRU FROM OPP END, C'BORE 13/32 x 1/2 DEEP FROM THIS END, 12 HOLES SPACED AS SHOWN ON A 5.594 HOLE CIRCLE, MATCH WITH MOTOR (FOR MOUNTING SCREWS)
1/4 DIA THRU FROM OPP END, C'BORE .297 ±.003 x 2.25 DEEP THIS END, THD 3/8-24 x 1/4 DEEP 6 PLACES EQ SP ON A 5.451 HOLE CIRCLE, MATCH WITH MOTOR. (COOLANT RET. FROM OUTER SHAFT)
6.6590-8 UNS-3A
PD 6.5778 TO 6.5687
1/4 DIA TO INTERCEPT 1/4 HOLE ON 5.451 HOLE CIRCLE AS SHOWN. 6 PLACES, MATCH WITH PC. 6 (COOLANT RET.)
1/4 DIA THRU, 6 HOLES EQ SP. MATCH W/PC 11 & 6 (COOLANT RET. FROM INNER SHAFT)
60° TYP
15° TYP.
2°30'
REF. 27°30'
50°
B .0002 -C-
-A- .0002
3.140
2.390 ±.001
C .0002
.18
.276
1.18
3/32 RELIEF
.88
4.497
4.499
7.099
6.441
6.6590
6.6532
3.961
B .0002 -D-
1.630 ±.001
4.190
3.092
8.058
4.140
.125
.25
1.34
D .0002
.537
.476
6.634
THD. 4.625-12 UN-3B
PD 4.5709 TO 4.5809
MINOR DIA 4.5348
A .002
1/4 DIA TO INTERCEPT 1/4 HOLE ON 5.451 HOLE CIRCLE AS SHOWN, 6 PLACES (COOLANT SUPPLY)
6.44 (REF) ACTUAL DIM EQUALS O.D. OF MOTOR SHAFT PLUS .0002 ±.0002
A .0002 -B-
② LEFT END VIEW
② SECT 3-A
1/4 DIA x 4 7/16 DEEP, 6 HOLES EQ SP ON A 5.451 HOLE CIRCLE. MATCH WITH MOTOR (COOLANT SUPPLY HOLES)
12°30'
REF. MATCH W/MOTOR
2°30'
3/16 DIA THRU, 2 HOLES 180° APART ON A 5.59 HOLE CIRCLE, MATCH WITH MOTOR (FOR THERMOCOUPLE WIRES)
② RIGHT END VIEW
D
C
B
A
5
4
3
2
1

REV.	DATE	APPD.	DESCRIPTION	BY

DEPARTMENT OF THE NAVY
DAVID W. TAYLOR NAVAL SHIP R & D CENTER
ANNAPOLIS, LABORATORY

SERVICE MODULE
OUTER SHAFT DETAILS

APPROVED ______ DATE ______

SATISFACTORY TO ______
DATE ______

SCALE
SHEET 3 OF 4
DATE ______
DRAWING NO. ______

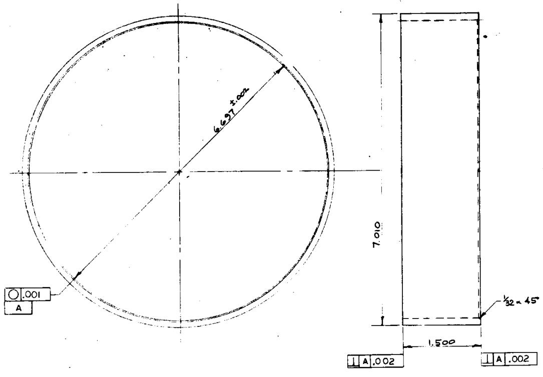
6.697 ±.002
○ .001
A
7.010
1/32 × 45°
1.500
⊥ A .002
⊥ A .002

⑦ DET 5-D

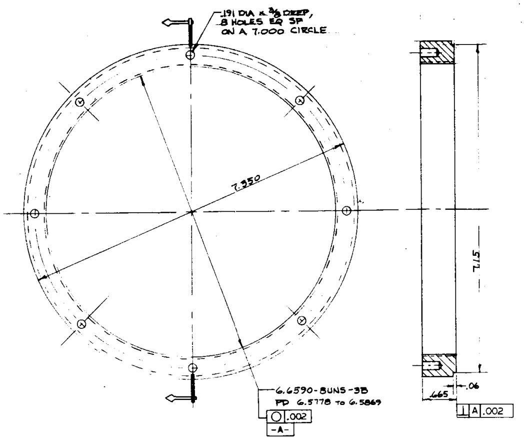
.191 DIA × 3/8 DEEP, 8 HOLES EQ SP ON A 7.000 CIRCLE
7.350
6.6590-8UNS-3B
PD 6.5778 TO 6.5869
○ .002
-A-
7.15
.665
.06
⊥ A .002

⑩ DET 3-D

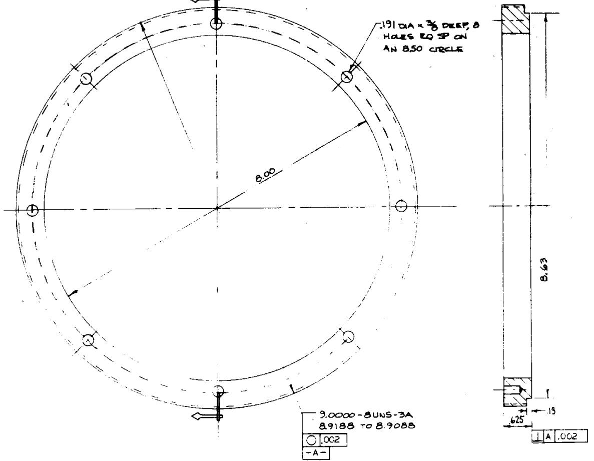
.191 DIA × 3/8 DEEP, 8 HOLES EQ SP ON AN 8.50 CIRCLE
8.00
9.0000-8UNS-3A
8.9188 TO 8.9088
○ .002
-A-
8.63
.13
.625
⊥ A .002

④ DET 2-D

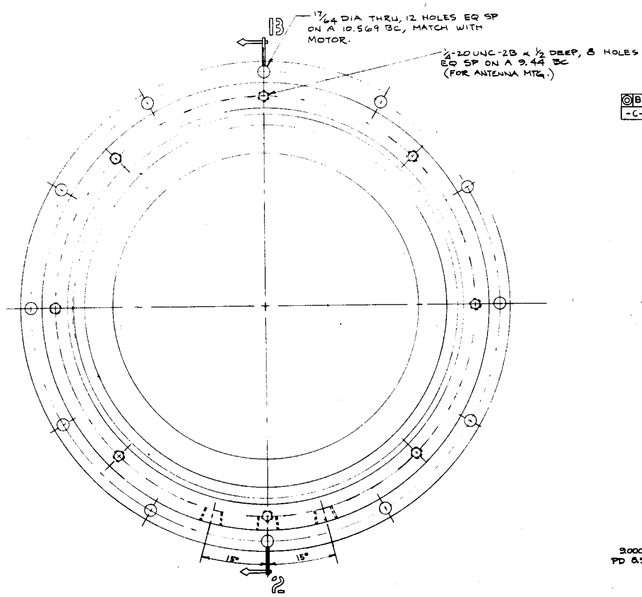
B
17/64 DIA THRU, 12 HOLES EQ SP ON A 10.569 BC, MATCH WITH MOTOR.
1/4-20UNC-2B × 1/2 DEEP, 8 HOLES EQ SP ON A 9.44 BC (FOR ANTENNA MTG.)
15°
15°
2

③ LEFT END VIEW

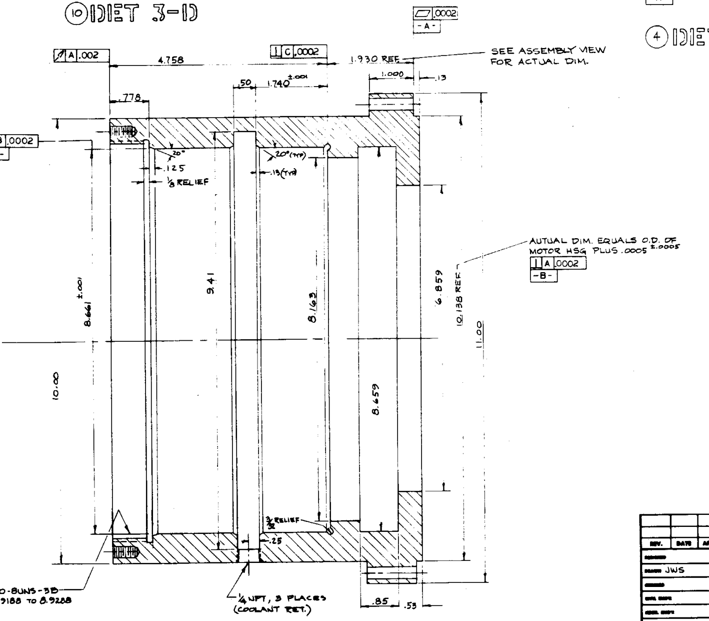
▱ .0002
-A-
↗ A .002
4.758
⊥ C .0002
1.930 REF
SEE ASSEMBLY VIEW FOR ACTUAL DIM.
1.000
.13
.50
1.740 ±.001
.778
◎ B .0002
-C-
20°
.125
1/8 RELIEF
20° (TYP)
.13 (TYP)
ACTUAL DIM. EQUALS O.D. OF MOTOR HSG PLUS .0005 ±.0005
⊥ A .0002
-B-
8.661 ±.001
10.00
9.41
8.163
8.659
6.859
10.138 REF
11.00
3/32 RELIEF
.25
9.000-8UNS-3B
PD 8.9188 TO 8.9288
1/4 NPT, 3 PLACES (COOLANT RET.)
.85
.53

③ SECT 2-B

REV.	DATE	APPD.	DESCRIPTION	BY

DRAWN JWS

DEPARTMENT OF THE NAVY
DAVID W. TAYLOR NAVAL SHIP R & D CENTER
ANNAPOLIS, LABORATORY

SERVICE MODULE
OUTER STATIONARY HSG.

APPROVED ______ DATE ______

SATISFACTORY TO ______
DATE ______

SCALE
SHEET 4 OF 4
DATE ______
DRAWING NO. ______