4643

U.S. Army Environmental Center

USAEC
TECH INFO CTR
DO NOT REMOVE
FROM FACILITY

US ARMY ENVIRONMENTAL CENTER
ABERDEEN PROVING GROUND MD 21010-5401

AD-A280 437

REMEDIAL INVESTIGATION
BADGER ARMY AMMUNITION PLANT
BARABOO, WISCONSIN

FINAL
REMEDIAL INVESTIGATION REPORT
APPENDIX
DATA ITEM A009

DTIC
ELECTE
JUN 1 3 1994
S G D

APPENDICES D.2 THROUGH F
VOLUME 2 OF 7

94-18015

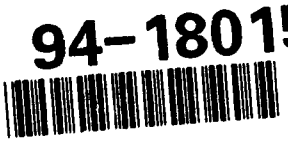

9408

CONTRACT DAAA15-91-D-0008

Unlimited Distribution
Approved for Public Relcase

UNITED STATES ARMY
TOXIC AND HAZARDOUS MATERIALS AGENCY
ABERDEEN PROVING GROUND, MARYLAND

Printed on Recycled Paper

94 6 10 113

DISCLAIMER NOTICE

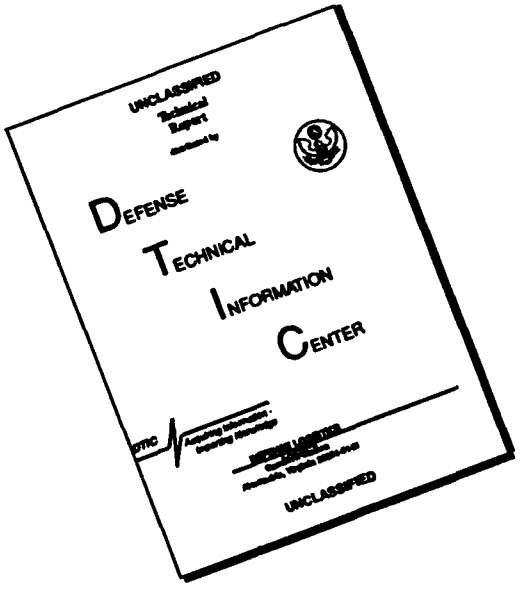

THIS DOCUMENT IS BEST QUALITY AVAILABLE. THE COPY FURNISHED TO DTIC CONTAINED A SIGNIFICANT NUMBER OF PAGES WHICH DO NOT REPRODUCE LEGIBLY.

REMEDIAL INVESTIGATION
BADGER ARMY AMMUNITION PLANT

APPENDICES

APPENDIX A -	LOCATION-SPECIFIC AND CHEMICAL-SPECIFIC APPLICABLE OR RELEVANT AND APPROPRIATE REQUIREMENTS	Vol. 1
APPENDIX B -	SOIL VAPOR SURVEY	Vol. 1
APPENDIX C -	SURFACE GEOPHYSICAL SURVEY	Vol. 1
APPENDIX D -	DRILLING AND SOIL SAMPLING PROGRAM	Vol. 1
	D.1 Test Pit, Soil Boring, and Monitoring Wells Boring Logs	Vol. 1
	D.2 Field Data Records - Soil, Sediments, and Surface Water	**Vol. 2**
	D.3 Monitoring Well Construction Diagrams	**Vol. 2**
	D.4 Well Development Records	**Vol. 2**
	D.5 Regional Water Supply Well Logs	**Vol. 2**
APPENDIX E -	**BOREHOLE GEOPHYSICAL SURVEY**	**Vol. 2**
APPENDIX F -	**HORIZONTAL AND VERTICAL SURVEY**	**Vol. 2**
APPENDIX G -	GROUNDWATER ELEVATIONS AND FIELD DATA RECORDS	Vol. 3
	G.1 Groundwater Elevation Data	Vol. 3
	G.2 Field Data Records - Round I and II	Vol. 3
	G.3 Field Data Records - Round One	Vol. 3
	G.4 Field Data Records - Round Two	Vol. 3
	G.5 Field Data Records - BAAP Production Well No. 2	Vol. 3
APPENDIX H -	HYDROGEOLOGIC DATA	Vol. 3
	H.1 Recharge Estimates	Vol. 3
	H.2 Gradient Calculations	Vol. 3
	H.3 Velocity Calculations	Vol. 3
	H.4 Preliminary Aquifer Test Results IRM	Vol. 3
	H.5 High Capacity Well Survey	Vol. 3
	H.6 Production Well No. 4 Zone-of-Influence	Vol. 3
APPENDIX I -	HYDRAULIC CONDUCTIVITY TEST RESULTS	Vol. 3
APPENDIX J -	AQUIFER TESTING AND MODELING	Vol. 3
	J.1 Aquifer Pumping Test	Vol. 3
	J.2 Regional Groundwater Flow Model	Vol. 3
	J.3 Propellant Burning Ground Groundwater Flow Model	Vol. 3

Accesion For
NTIS CRA&I [X]
DTIC TAB [ ]
Unannounced [ ]
Justification .....
By .....
Distribution /
Availability Codes
Dist | Avail and / or Special
A-1

REMEDIAL INVESTIGATION
BADGER ARMY AMMUNITION PLANT

APPENDICES

(continued)

APPENDIX K -	CHEMICAL DATA TABLES	Vol. 4
	K.1 Flagging Codes for Chemical Data Tables	Vol. 4
	K.2 Soil Data - Surface, Subsurface, and Sediment	Vol. 4
	K.3 Surface Water Data	Vol. 4
	K.4 Groundwater Data - Round I (September 1990) and Round II (October 1990)	Vol. 4
	K.5 Groundwater Data - Round One (November/ December 1991) and Round Two (April/May 1992)	Vol. 5
APPENDIX L -	DATA QUALITY REPORT	Vol. 6
	L.1 BAAP Production Well No. 2 Water Quality Assessment	Vol. 6
	L.2 USATHAMA-certified Analytical Methods	Vol. 6
	L.3 Laboratory Quality Control Data	Vol. 6
	L.4 Summary of Nontarget, Library Searched Compounds Detected in RI Analytical Program	Vol. 6
	L.5 USATHAMA-approved Laboratory Control Charts	Vol. 6
	L.6 ABB-ES Groundwater Screening Results	Vol. 6
	L.7 Selection of Analytical Results In the Case of More Than One Analytical Method	Vol. 6
	L.8 USATHAMA/USEPA Split Groundwater Samples	Vol. 6
APPENDIX M -	CALCULATIONS FOR PARAMETERS USED IN RISK ASSESSMENT	Vol. 7
APPENDIX N -	IRIS FILES FOR COMPOUNDS OF POTENTIAL CONCERN	Vol. 7
APPENDIX O -	HUMAN HEALTH RISK CALCULATIONS	Vol. 7
APPENDIX P -	INVENTORY OF SITE SPECIES	Vol. 7
APPENDIX Q -	EXPOSURE PARAMETERS OF SITE SPECIES	Vol. 7
APPENDIX R -	ECOLOGICAL RISK CALCULATIONS	Vol. 7

Appendix D.2

Field Data Records - Soil, Sediments, and Surface Water

This Page Intentionally Left Blank.

ABB ENVIRONMENTAL SERVICES, INC

PAGE 2 OF 8

FIELD DATA RECORD – SEDIMENT

FIELD SAMPLING NUMBER: B91O1C00

PROJECT: USATHAMA-BAAP

SITE ID: BPS-91-01

SITE TYPE: POND

JOB NUMBER: 6853-04

PROGRAM: C

SAMPLING DATE: 10.2.91

FILE NAME: CSO

WEATHER: overcast °60's rain

LOCATION ACTIVITY: START: 0935 END: 0950

SEDIMENT DATA

DEPTH OF SEDIMENT SAMPLE: 0-3± IN

TYPE OF SAMPLE COLLECTED: ☑ DISCRETE ☐ COMPOSITE

TYPE OF SEDIMENT:
- ☐ CLAY
- ☑ SAND
- ☑ ORGANIC (trace)
- ☑ SILT
- ☐ GRAVEL
- ☐ OTHER

EQUIPMENT USED FOR COLLECTION:
- ☑ GRAVITY CORER
- ☐ TULIP BULB PLANTER
- ☑ S.S. HAND SPOON
- ☑ ALUMINUM PAN
- ☐ PLASTIC SCOOP
- ☐ OTHER

DECONTAMINATION FLUIDS USED
- ☑ POTABLE WATER
- ☐ POTABLE WATER WITH HIGH PRESSURE
- ☐ OTHER

SAMPLE OBSERVATIONS: ☐ ODOR ☐ COLORED

AMBIENT AIR: 0.0 PPM

SAMPLE LOCATION: 1.0 PPM

pH: NA UNITS

ANALYTICAL PARAMETERS

	METHOD NUMBER	PRESERVATION METHOD	VOLUME REQUIRED	SAMPLE COLLECTED	SAMPLE BOTTLE ID NUMBERS
☐ PP METALS (SPECIFIED BELOW)		4 DEG C			
☑ AL	JS12	4 DEG C			1165
☐ CA		4 DEG C			
☐ NA		4 DEG C			
☐ CD		4 DEG C		DC	
☐ CR		4 DEG C			
☐ HG	Y9	4 DEG C			
☑ PB	JD21	4 DEG C			1165
☐ TCLP METALS (SPECIFIED BELOW)		4 DEG C			
☑ NIT	KF17	4 DEG C		DC	1166
☑ SO4	KT07	4 DEG C			1166
☑ NH3N2	USEPA 350.2	4 DEG C			1167
☑ TOC	USEPA CE-81-1	4 DEG C		EA	
☑ pH	SW846 METHOD 9045	4 DEG C			
☑ * VOC	LM23	4 DEG C		DC	1168 1173
☑ * BN/A	LM25	4 DEG C			1169
☐ NG	LW27	4 DEG C			
☐ NAM	LN08	4 DEG C			
☐ DNT	LW23	4 DEG C			

NOTES (LOCATION SKETCH)

* THESE ARE DATACHEM METHODS. EA METHODS: VOC LM17, LM26; B/NA LM20

PP METALS (PRIORITY POLLUTANT): AG, AS, BE, CD, CR, CU, PB, HG, NI, SB, SE, TL, ZN. JS12, B9, JD21, JD20, Y9.

TCLP METALS: CD, CR, HG, PB. JS12, 40 CFR 261.24

DC: 5 bottles

EA: 1 bottle

See data sheet BPW.91.01 for diagram.

SIGNATURE: VM/MR

RECEIVED BY: Nancy E. Rotta

ABB ENVIRONMENTAL SERVICES, INC

FIELD DATA RECORD – SEDIMENT

FIELD SAMPLING NUMBER: B91020000

PROJECT: USATHAMA-BAAP
SITE ID: BPS-91-02
LOCATION ACTIVITY: START: 1100 END: 1130
SITE TYPE: POND
JOB NUMBER: 6853-04
PROGRAM: C
SAMPLING DATE: 10.2.91
FILE NAME: CSO
WEATHER: prt. Sunny, 60's

SEDIMENT DATA

DEPTH OF SEDIMENT SAMPLE: 0 - 1 FT

TYPE OF SAMPLE COLLECTED: [x] DISCRETE [ ] COMPOSITE

TYPE OF SEDIMENT:
- [ ] CLAY
- [x] SAND (fine)
- [ ] ORGANIC
- [x] SILT
- [ ] GRAVEL
- [ ] OTHER

EQUIPMENT USED FOR COLLECTION:
- [ ] GRAVITY CORER
- [ ] TULIP BULB PLANTER
- [x] S.S. HAND SPOON
- [x] ALUMINUM PAN
- [ ] PLASTIC SCOOP
- [ ] OTHER

DECONTAMINATION FLUIDS USED:
- [x] POTABLE WATER
- [ ] POTABLE WATER WITH HIGH PRESSURE
- [ ] OTHER

SAMPLE OBSERVATIONS: [ ] ODOR [x] COLORED dk. green/black tarn

AMBIENT AIR: 0.0 PPM
SAMPLE LOCATION: 0.0 PPM
pH: NA UNITS

ANALYTICAL PARAMETERS

	METHOD NUMBER	PRESERVATION METHOD	VOLUME REQUIRED	SAMPLE COLLECTED
[ ] PP METALS (SPECIFIED BELOW)		4 DEG C		
[x] AL	JS12	4 DEG C		DC
[ ] CA		4 DEG C		
[ ] NA		4 DEG C		
[ ] CD		4 DEG C		
[ ] CR		4 DEG C		
[x] HG	Y9	4 DEG C		
[x] PB	JD21	4 DEG C		
[ ] TCLP METALS (SPECIFIED BELOW)		4 DEG C		
[x] NIT	KF17	4 DEG C		DC
[x] SO4	KT07	4 DEG C		
[x] NH3N2	USEPA 350.2	4 DEG C		EA
[x] TOC	USEPA CE-81-1	4 DEG C		
[x] pH	SW846 METHOD 9045	4 DEG C		
[x] * VOC	LM23	4 DEG C		DC
[x] * BN/A	LM25	4 DEG C		
[x] NG	LW27	4 DEG C		
[x] NAM	LN08	4 DEG C		
[x] DNT	LW23	4 DEG C		

SAMPLE BOTTLE ID NUMBERS: 1180, 1180, 1181, 1182, 1183, 1184, 1188

NOTES
(LOCATION SKETCH)

* THESE ARE DATACHEM METHODS. EA METHODS: VOC LM17, LM26
B/NA LM20

PP METALS (PRIORITY POLLUTANT): AG, AS, BE, CD, CR, CU, PB, HG, NI, SB, SE, TL, ZN.
JS12, B9, JD21, JD20, Y9.

TCLP METALS: CD, CR, HG, PB.
JS12, 40 CFR 261.24

DC: 5 bottles
EA: 1 bottle

See data sheet BPW.91.02 for diagram

SIGNATURE: VM/MK

RECEIVED BY: Nancy E. Roka

ABB ENVIRONMENTAL SERVICES, INC

PAGE 5 OF 8

D DATA RECORD – SEDIMENT

FIELD SAMPLING NUMBER: B91030000

PROJECT: USATHAMA-BAAP

SITE TYPE: POND

SAMPLING DATE: 10.2.91

SITE ID: BPS-9i-03

JOB NUMBER: 6853-04

FILE NAME: CSO

LOCATION ACTIVITY: START: 1200 END: 1230

PROGRAM: C

WEATHER: cloudy, 60's

SEDIMENT DATA

DEPTH OF SEDIMENT SAMPLE: 0-4 IN

TYPE OF SAMPLE COLLECTED: [x] DISCRETE [ ] COMPOSITE

TYPE OF SEDIMENT:
- [ ] CLAY
- [x] SAND (med. fine)
- [ ] ORGANIC
- [x] SILT (same)
- [ ] GRAVEL
- [ ] OTHER

EQUIPMENT USED FOR COLLECTION:
- [x] GRAVITY CORER
- [ ] TULIP BULB PLANTER
- [x] S.S. HAND SPOON
- [x] ALUMINUM PAN
- [ ] PLASTIC SCOOP
- [ ] OTHER

DECONTAMINATION FLUIDS USED:
- [x] POTABLE WATER
- [ ] POTABLE WATER WITH HIGH PRESSURE
- [ ] OTHER

SAMPLE OBSERVATIONS: [ ] ODOR [x] COLORED dk. green/black + tan

AMBIENT AIR: 0.0 PPM

SAMPLE LOCATION: 0.0 PPM

pH: NA UNITS

ANALYTICAL PARAMETERS

	METHOD NUMBER	PRESERVATION METHOD	VOLUME REQUIRED	SAMPLE COLLECTED
[x] PP METALS (SPECIFIED BELOW)		4 DEG C		DC
[x] AL	JS12	4 DEG C		
[ ] CA		4 DEG C		
[ ] NA		4 DEG C		
[ ] CD		4 DEG C		
[ ] CR		4 DEG C		
[ ] HG	Y9	4 DEG C		
[x] PB	JD21	4 DEG C		DC
[ ] TCLP METALS (SPECIFIED BELOW)		4 DEG C		
[ ] IT	KF17	4 DEG C		EA
[ ] 04	KT07	4 DEG C		
[ ] H3N2	USEPA 350.2	4 DEG C		DC
[ ] TOC	USEPA CE-81-1	4 DEG C		
[ ] pH	SW846 METHOD 9045	4 DEG C		
[x] VOC	LM23	4 DEG C		
[ ] BN/A	LM25	4 DEG C		
[ ] NG	LW27	4 DEG C		
[ ] NAM	LN08	4 DEG C		
[ ] DNT	LW23	4 DEG C		

SAMPLE BOTTLE ID NUMBERS: 1195, 1195, 1196, 1197, 1198, 1203, 1199

NOTES

LOCATION SKETCH)

* THESE ARE DATACHEM METHODS. EA METHODS: VOC LM17, LM26; B/NA LM20

PP METALS (PRIORITY POLLUTANT): AG, AS, BE, CD, CR, CU, PB, HG, NI, SB, SE, TL, ZN. JS12, B9, JD21, JD20, Y9.

TCLP METALS: CD, CR, HG, PB. JS12, 40 CFR 261.24

DC: 5 bottles

EA: 1 bottle

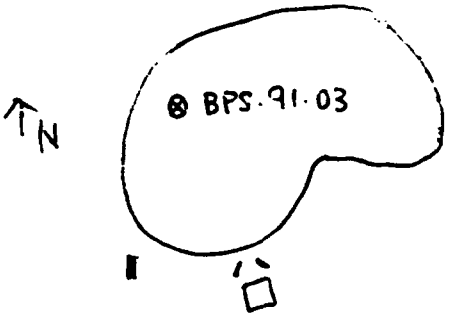

SIGNATURE: VM/MR

RECEIVED BY: Nancy E. Rotta

ABB ENVIRONMENTAL SERVICES, INC

FIELD DATA RECORD – SEDIMENT

FIELD SAMPLING NUMBER: B91040000

PROJECT: USATHAMA-BAAP

SITE TYPE: ~~DUCK~~ POND

SITE ID: BPS-91-04

JOB NUMBER: 6853-04

SAMPLING DATE: 10.2.91

FILE NAME: CSO

WEATHER: cloudy, °60's

LOCATION ACTIVITY: START: 1235 END: 1300

PROGRAM: C

SEDIMENT DATA

DEPTH OF SEDIMENT SAMPLE: 0-6 IN

TYPE OF SAMPLE COLLECTED: [x] DISCRETE [ ] COMPOSITE

TYPE OF SEDIMENT: [ ] CLAY [ ] SAND [ ] ORGANIC [x] SILT [ ] GRAVEL [ ] OTHER

EQUIPMENT USED FOR COLLECTION: [x] GRAVITY CORER [ ] TULIP BULB PLANTER [x] S.S. HAND SPOON [x] ALUMINUM PAN [ ] PLASTIC SCOOP [ ] OTHER

DECONTAMINATION FLUIDS USED: [x] POTABLE WATER [ ] POTABLE WATER WITH HIGH PRESSURE [ ] OTHER

SAMPLE OBSERVATIONS: [ ] ODOR [ ] COLORED

AMBIENT AIR: 0.0 PPM

SAMPLE LOCATION: 0.0 PPM

pH: NA UNITS

ANALYTICAL PARAMETERS

	METHOD NUMBER	PRESERVATION METHOD	VOLUME REQUIRED	SAMPLE COLLECTED
[ ] PP METALS (SPECIFIED BELOW)		4 DEG C		
[x] AL	JS12	4 DEG C		
[ ] CA		4 DEG C		
[ ] NA		4 DEG C		
[ ] CD		4 DEG C		
[ ] CR		4 DEG C		
[ ] HG	Y9	4 DEG C		
[x] PB	JD21	4 DEG C		
[ ] TCLP METALS (SPECIFIED BELOW)		4 DEG C		
[x] NIT	KF17	4 DEG C		
[x] SO4	KT07	4 DEG C		
[x] NH3N2	USEPA 350.2	4 DEG C		
[x] TOC	USEPA CE-81-1	4 DEG C		
[x] pH	SW846 METHOD 9045	4 DEG C		
[x] * VOC	LM23	4 DEG C		DC
[x] * BN/A	LM25	4 DEG C		DC
[ ] NG	LW27	4 DEG C		EA
[ ] NAM	LN08	4 DEG C		DC
[ ] DNT	LW23	4 DEG C		

SAMPLE BOTTLE ID NUMBERS: 1210, 1210, 1211, 1212, 1213, 1218, 1214

NOTES (LOCATION SKETCH)

* THESE ARE DATACHEM METHODS. EA METHODS: VOC LM17, LM26
8/NA LM20

PP METALS (PRIORITY POLLUTANT): AG, AS, BE, CD, CR, CU, PB, HG, NI, SB, SE, TL, ZN.
JS12, B9, JD21, JD20, Y9.

TCLP METALS: CD, CR, HG, PB.
JS12, 40 CFR 261.24

EA: 1 bottle
DC: 5 bottles

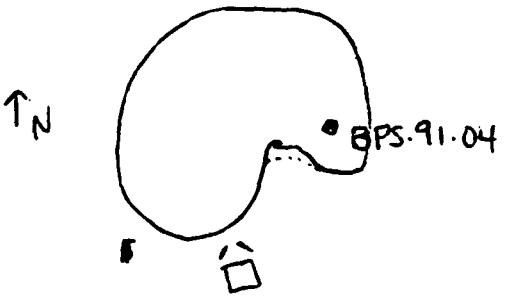

SIGNATURE: VM/NR

RECEIVED BY: Nancy E. Rokia

ABB ENVIRONMENTAL SERVICES, INC.

FIELD DATA RECORD – SURFACE WATER

FIELD SAMPLING NUMBER: B91010000

PROJECT: USATHAMA-BAAP
SITE ID: BPW-91-01
LOCATION ACTIVITY: START: 0930 END: 0935

SITE TYPE: POND
JOB NUMBER: 6853-04
PROGRAM: C

SAMPLING DATE: 10.2.91
FILE NAME: CSW
WEATHER: overcast, °60's rain

SURFACE WATER DATA

WATER DEPTH @ SAMPLE LOCATION: ~ 2 FT
DEPTH OF SAMPLE FROM TOP OF WATER: @ Surface
EQUIPMENT USED FOR COLLECTION: [x] NONE, GRAB INTO BOTTLE [ ] BOMB SAMPLER [ ] PUMP _____

TEMPERATURE: 14.1 (VM) DEG C.
pH ..... 7.3 UNITS
SPEC. COND. 206 umhos/cm

SAMPLE LOCATION SKETCH BELOW? [x] YES [ ] NO

AMBIENT AIR SAMPLE LOCATION: 0.0 PPM / 0.0 PPM

TYPE OF SURFACE WATER: [ ] STREAM [ ] RIVER [x] POND/LAKE [ ] SEEP

DECONTAMINATION FLUIDS USED: [x] POTABLE WATER [x] NONE

ANALYTICAL PARAMETERS

	METHOD NUMBER	PRESERVATION METHOD	VOLUME REQUIRED	SAMPLE COLLECTED
[x] TAL METALS (SPECIFIED BELOW)		HNO3 TO pH<2	1000 ml P	[x]
[x] NIT	LL8	H2SO4 TO pH<2	500 ml P	[x]
[x] SO4	TT09	4 DEG C	1000 ml P	[x]
[x] CL	TT09	4 DEG C		[x]
[ ] NH3N2	TF30	H2SO4 TO pH<2		[ ]
[ ] TKN	USEPA 351.1	~~H2SO4~~		[ ]
[x] ALK	USEPA 310.1	4 DEG C	500 ml P	[x]
[x] HARD	USEPA 130.2	HNO3 TO pH<2	500 ml P	[x]
* [x] VOC	UM21	[redacted] 4 DEG C	(2) 40 ml	[x]
* [x] B/NA	UM25	4 DEG C	(2) 1 L AG	[x]
[ ] NG	UW27	4 DEG C		[ ]
[ ] DNT	UW25	4 DEG C		[ ]

SAMPLE BOTTLE ID NUMBERS

			Lab
1			DC
2			DC
4			DC
3			DC
5			EA
6			EA
7	55		EA
8	~~56~~ (VM)	56	DC

NOTES (LOCATION SKETCH?)

* THESE ARE DATACHEM METHODS. EA METHODS: VOC UM19, UM26
B/NA UM24
TAL METALS (TOXIC ANALYTE LIST): AL, SB, AS, BA, BE, CD, CA, CR, CO, CU, FE, PB, MG, MN, HG, NI, K, SE, AG, NA, TL, V, ZN.
SS12, AX8, CC8, SD25, SD29, SD18
**METHOD NUMBER FOR TL PENDING CERTIFICATION

DC: 5 (MR) bottles
EA: 4 bottles

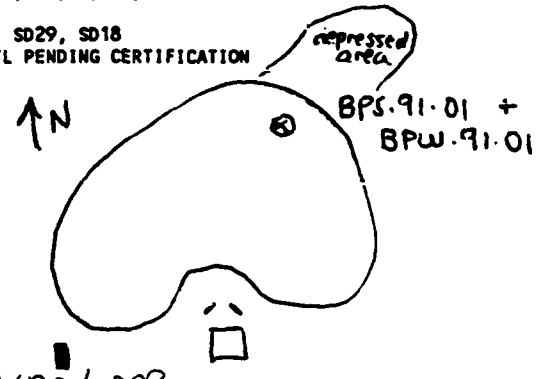

SIGNATURE: VM/MR
RECEIVED BY: Nancy E. Roka

ABB ENVIRONMENTAL SERVICES, INC.

FIELD DATA RECORD – SURFACE WATER

FIELD SAMPLING NUMBER: B91020000

PROJECT	USATHAMA-BAAP	SITE TYPE	POND
SITE ID	BPW-91-02	JOB NUMBER	6853-04
LOCATION ACTIVITY	START: 1055 END: 1100	PROGRAM	C
SAMPLING DATE	10·2·91	FILE NAME	CSW
WEATHER	prt. sunny, °60s		

SURFACE WATER DATA

WATER DEPTH @ SAMPLE LOCATION: > 10 (~20') FT

DEPTH OF SAMPLE FROM TOP OF WATER: @ Surface FT

EQUIPMENT USED FOR COLLECTION: [✓] NONE, GRAB INTO BOTTLE; [ ] BOMB SAMPLER; [ ] PUMP

TEMPERATURE: 15.0 DEG C.

pH ..... 7.8 UNITS

SPEC. COND. 304 umhos/cm

SAMPLE LOCATION SKETCH BELOW? [✓] YES [ ] NO

AMBIENT AIR SAMPLE LOCATION: 0.0 PPM; 0.0 PPM

TYPE OF SURFACE WATER: [ ] STREAM; [ ] RIVER; [•] POND/LAKE; [ ] SEEP

DECONTAMINATION FLUIDS USED: [ ] POTABLE WATER; [✓] NONE

ANALYTICAL PARAMETERS

	METHOD NUMBER	PRESERVATION METHOD	VOLUME REQUIRED	SAMPLE COLLECTED
[✓] TAL METALS (SPECIFIED BELOW)		HNO3 TO pH<2	1 L poly	[✓]
[✓] NIT	LL8	H2SO4 TO pH<2	500 ml p	[✓]
[✓] SO4	TT09	4 DEG C	1 L poly	[✓]
[✓] CL	TT09	4 DEG C		[✓]
[ ] NH3N2	TF30	H2SO4 TO pH<2		[ ]
[✓] TKN	USEPA 351.1	~~H2SO4~~ H2SO4 to pH<2		[ ]
[✓] ALK	USEPA 310.1	4 DEG C	500 ml p	[✓]
[✓] HARD	USEPA 130.2	HNO3 TO pH<2	500 ml p	[✓]
* [✓] VOC	UM21	[redacted] 4 DEG C	(2) 40 ml	[✓]
* [✓] B/NA	UM25	4 DEG C	(2) 1 L AG	[✓]
[ ] NG	UW27	4 DEG C		[ ]
[ ] DNT	UW25	4 DEG C		[ ]

SAMPLE BOTTLE ID NUMBERS

		Lab
MR 8	9	DC
10		DC
12		DC
11		DC
13		EA
14		EA
15	63	EA
16	64	DC

NOTES (LOCATION SKETCH?)

* THESE ARE DATACHEM METHODS. EA METHODS: VOC UM19, UM26
B/NA UM24

TAL METALS (TOXIC ANALYTE LIST): AL, SB, AS, BA, BE, CD, CA, CR, CO, CU, FE, PB, MG, MN, HG, NI, K, SE, AG, NA, TL, V, ZN.
SS12, AX8, CC8, SD25, SD29, SD18
**METHOD NUMBER FOR TL PENDING CERTIFICATION

DC: 5 bottles
EA: 4 bottles

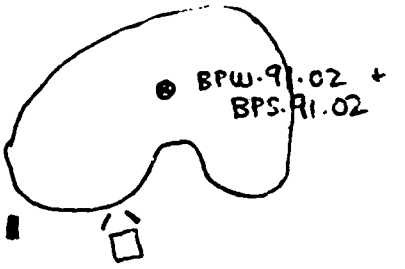

SIGNATURE: VM/NR

RECEIVED BY: Nancy E. Roka

MD 8/9/89

ABB ENVIRONMENTAL SERVICES, INC

FIELD DATA RECORD - SEDIMENT

FIELD SAMPLING NUMBER: B91050000

PROJECT: USATHAMA-BAAP

SITE ID: BPS-91--05

SITE TYPE: POND

JOB NUMBER: 6853-04

PROGRAM: C

SAMPLING DATE: 10.2.91

FILE NAME: CSO

WEATHER: prt. Sunny, 80's

LOCATION ACTIVITY: START: 1305 END: 1330

SEDIMENT DATA

DEPTH OF SEDIMENT SAMPLE: 0 - >12" IN

TYPE OF SAMPLE COLLECTED: [x] DISCRETE [ ] COMPOSITE

TYPE OF SEDIMENT: [ ] CLAY [ ] SAND [ ] ORGANIC [x] SILT [ ] GRAVEL [ ] OTHER

EQUIPMENT USED FOR COLLECTION: [x] GRAVITY CORER [ ] TULIP BULB PLANTER [x] S.S. HAND SPOON [x] ALUMINUM PAN [ ] PLASTIC SCOOP [ ] OTHER

DECONTAMINATION FLUIDS USED: [x] POTABLE WATER [ ] POTABLE WATER WITH HIGH PRESSURE [ ] OTHER

SAMPLE OBSERVATIONS: [ ] ODOR [x] COLORED tan, dk. green black

AMBIENT AIR: 0.0 PPM

SAMPLE LOCATION: 0.0 PPM

pH: NA UNITS

ANALYTICAL PARAMETERS

	METHOD NUMBER	PRESERVATION METHOD	VOLUME REQUIRED	SAMPLE COLLECTED	SAMPLE BOTTLE ID NUMBERS
[ ] PP METALS (SPECIFIED BELOW)		4 DEG C			
[x] AL	JS12	4 DEG C		DC	1225
[ ] CA		4 DEG C			
[ ] NA		4 DEG C			
[ ] CD		4 DEG C			
[ ] CR		4 DEG C			
[ ] HG	Y9	4 DEG C			
[x] PB	JD21	4 DEG C			1225
[ ] TCLP METALS (SPECIFIED BELOW)		4 DEG C			
[ ] NIT	KF17	4 DEG C		DC	1226
[ ] SO4	KT07	4 DEG C			1227
[ ] NH3N2	USEPA 350.2	4 DEG C		EA	
[ ] TOC	USEPA CE-81-1	4 DEG C			
[x] pH	SW846 METHOD 9045	4 DEG C		DC	1228 1293
[x] * VOC	LM23	4 DEG C			1229
[x] * BN/A	LM25	4 DEG C			
[ ] NG	LW27	4 DEG C			
[ ] NAM	LN08	4 DEG C			
[ ] DNT	LW23	4 DEG C			

NOTES

(LOCATION SKETCH)

* THESE ARE DATACHEM METHODS. EA METHODS: VOC LM17, LM26
B/NA LM20

PP METALS (PRIORITY POLLUTANT): AG, AS, BE, CD, CR, CU, PB, HG, NI, SB, SE, TL, ZN.
JS12, 89. JD21, JD20, Y9.

TCLP METALS: CD, CR, HG, PB.
JS12, 40 CFR 261.24

DC: 5 bottles
EA: 1 bottles

Sediment sample extremely soft- corer would sink in bottom completely.

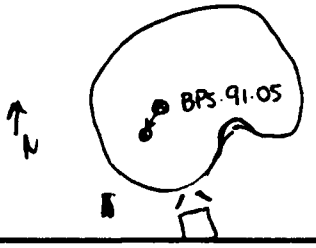

SIGNATURE: vm/NR

RECEIVED BY: Nancy E. Roka

ABB ENVIRONMENTAL SERVICES, INC

PAGE 8 OF 8

FIELD DATA RECORD – SEDIMENT

FIELD SAMPLING NUMBER: B91060000

PROJECT: USATHAMA-BAAP

SITE ID: BPS-91-06

SITE TYPE: POND

JOB NUMBER: 6853-04

PROGRAM: C

SAMPLING DATE: 10.2.91

FILE NAME: CSO

WEATHER: prt. sunny, 60's

LOCATION ACTIVITY: START: 1335 END: 1400

SEDIMENT DATA

DEPTH OF SEDIMENT SAMPLE: 0 - 10 IN

TYPE OF SAMPLE COLLECTED: [x] DISCRETE [ ] COMPOSITE

TYPE OF SEDIMENT: [ ] CLAY [x] SAND [ ] ORGANIC [x] SILT [ ] GRAVEL [ ] OTHER

EQUIPMENT USED FOR COLLECTION: [x] GRAVITY CORER [ ] TULIP BULB PLANTER [x] S.S. HAND SPOON [ ] ALUMINUM PAN [ ] PLASTIC SCOOP [ ] OTHER

DECONTAMINATION FLUIDS USED: [x] POTABLE WATER [ ] POTABLE WATER WITH HIGH PRESSURE [ ] OTHER

SAMPLE OBSERVATIONS: [ ] ODOR [x] COLORED grey, black, tan

AMBIENT AIR: 0.0 PPM

SAMPLE LOCATION: 0.0 PPM

pH: NA UNITS

ANALYTICAL PARAMETERS

	METHOD NUMBER	PRESERVATION METHOD	VOLUME REQUIRED	SAMPLE COLLECTED
[x] PP METALS (SPECIFIED BELOW)		4 DEG C		DC
[x] AL	JS12	4 DEG C		
[ ] CA		4 DEG C		
[ ] NA		4 DEG C		
[ ] CD		4 DEG C		
[ ] CR		4 DEG C		
[ ] HG	Y9	4 DEG C		
[x] PB	JD21	4 DEG C		
[ ] TCLP METALS (SPECIFIED BELOW)		4 DEG C		DC
[x] NIT	KF17	4 DEG C		
[x] SO4	KT07	4 DEG C		
[x] NH3N2	USEPA 350.2	4 DEG C		EA
[x] TOC	USEPA CE-81-1	4 DEG C		
[x] PH	SW846 METHOD 9045	4 DEG C		DC
* [x] VOC	LM23	4 DEG C		
* [x] BN/A	LM25	4 DEG C		
[ ] NG	LW27	4 DEG C		
[ ] NAM	LW08	4 DEG C		
[ ] DNT	LW23	4 DEG C		

SAMPLE BOTTLE ID NUMBERS: 1240, 1240, 1241, 1242, 1243, 1248, 1244

NOTES (LOCATION SKETCH)

* THESE ARE DATACHEM METHODS. EA METHODS: VOC LM17, LM26; B/NA LM20

PP METALS (PRIORITY POLLUTANT): AG, AS, BE, CD, CR, CU, PB, HG, NI, SB, SE, TL, ZN. JS12, B9, JD21, JD20, Y9.

TCLP METALS: CD, CR, HG, PB. JS12, 40 CFR 261.24

DC: 5 bottles
EA: 1 bottle

SIGNATURE: VM/MR

RECEIVED BY: Nancy E. Roba

C. JORDAN
FIELD DATA RECORD - SURFACE WATER

PROGRAM: Q05
PROJECT: USATHAMA - BAAP
TO:

FIELD SAMPLING NO.: BPW96C111
SITE TYPE: SURFACE WATER
JOB NUMBER: 6298-07

WEATHER: Sunny/75°
FILE NAME: CSO
SAMPLING DATE: 27SEP90

SITE ID: BPW96C-C11

LOCATION ACTIVITY: START: 1130 END: 1200

SURFACE WATER DATA

WATER DEPTH @ SAMPLE LOCATION: 4 FT
DEPTH OF SAMPLE FROM TOP OF WATER: 1 FT
EQUIPMENT USED FOR COLLECTION: [ ] NONE, GRAB INTO BOTTLE [X] OTHER Packs Bomb

TEMPERATURE: 16.0 DEG. C
pH.....: 8.6 UNITS
SPEC. COND.: 76 umhos

TYPE OF SURFACE WATER: [ ] STREAM [X] POND/LAKE [ ] RIVER [ ] OTHER
DECONTAMINATION FLUIDS USED: [ ] NONE [X] POTABLE WATER
SAMPLE LOCATION SKETCH BELOW: [X] YES [ ] NO

AMBIENT AIR VOA: 0 PPM
SAMPLE LOCATION AIR VOA: — PPM

TEMPERATURE PROFILE

DEPTH OF MEASUREMENT	TEMPERATURE
1 FT.	16 DEG. C
4 FT.	16 DEG. C
FT.	DEG. C

([X] IF REQUIRED AT THIS LOCATION) ANALYTICAL PARAMETER/METHOD	MATRIX	PRESERVATION METHOD	Bottle Size	SAMPLE COLLECTED	SAMPLE BOTTLE ID'S
[X] CALCIUM	SW	HNO3 <2	500ml	[ ]	
[X] ALUMINUM		HNO3 <2		[ ]	
[X] IRON		HNO3 <2		[ ]	
[X] LEAD		HNO3 <2		[X]	
[X] MAGNESIUM		HNO3 <2		[ ]	
[X] SODIUM		HNO3 <2		[ ]	
[X] HARDNESS		HNO3 <2		[ ]	
[ ] CHLORIDE DD		4 DEG. C PD		[ ]	
[X] ALKALINITY		4 DEG. C	500ml	[X]	10
[X] SULFATE, Chloride		4 DEG. C	125ml	[X]	2
[X] NITRATE & NITRITE	SW	H2SO4	125ml	[X]	3

NOTES / SKETCH: Was not given method #'s for the analyses. Call Joanne Hale at (207) 775-5401 for them.

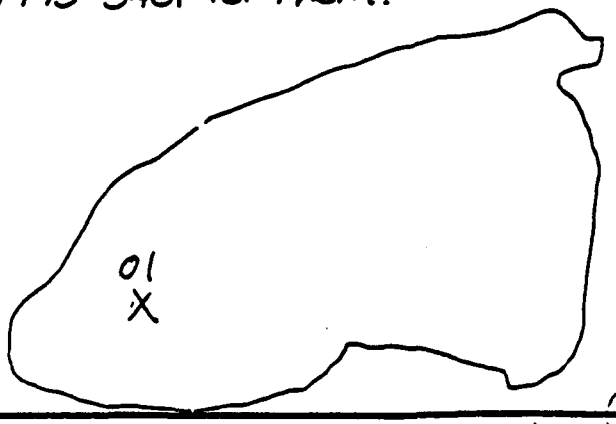

10-08-89

SIGNATURE OF SAMPLER: [illegible]

E. C. JORDAN
FIELD DATA RECORD - SURFACE WATER

PROGRAM: QO5
PROJECT: USATHAMA - BAAP
TO:

FIELD SAMPLING NO.: BPW91CC212
SITE TYPE: SURFACE WATER
JOB NUMBER: 6298-07

WEATHER:
FILE NAME: CSO
SAMPLING DATE: 27 SEP 90

SITE ID: BPW-19C-C2
LOCATION ACTIVITY: START: 1215 END: 1300

SURFACE WATER DATA

WATER DEPTH @ SAMPLE LOCATION: 10 FT
DEPTH OF SAMPLE FROM TOP OF WATER: 7 FT
EQUIPMENT USED FOR COLLECTION: [ ] NONE, GRAB INTO BOTTLE [X] OTHER Pace Bomb

TEMPERATURE: 14 DEG. C
pH.....: 9.0 UNITS
SPEC. COND.: 68 umhos

TYPE OF SURFACE WATER: [ ] STREAM [X] POND/LAKE [ ] RIVER [ ] OTHER
DECONTAMINATION FLUIDS USED: [ ] NONE [X] POTABLE WATER
SAMPLE LOCATION SKETCH BELOW: [X] YES [ ] NO

AMBIENT AIR VOA: — PPM
SAMPLE LOCATION AIR VOA: — PPM

TEMPERATURE PROFILE

DEPTH OF MEASUREMENT	TEMPERATURE
1 FT.	19 DEG. C
5 FT.	15 DEG. C
10 FT.	14 DEG. C

[X] IF REQUIRED AT THIS LOCATION) ANALYTICAL PARAMETER/METHOD	MATRIX	PRESERVATION METHOD	Bottle Size	SAMPLE COLLECTED	SAMPLE BOTTLE ID'S
[X] CALCIUM	SW	HNO3 <2	500 ml	[ ]	/
[X] ALUMINUM		HNO3 <2		[ ]	/
[X] IRON		HNO3 <2		[ ]	/
[X] LEAD		HNO3 <2		[X]	4 /
[X] MAGNESIUM		HNO3 <2		[ ]	/
[X] SODIUM		HNO3 <2		[ ]	/
[X] HARDNESS		HNO3 <2		[ ]	/
[ ] ~~CHLORIDE~~ DO		~~4 DEG. C~~ DO		[ ]	/
[X] ALKALINITY		4 DEG. C	500 ml	[X]	11 /
[X] SULFATE, Chloride		4 DEG. C	125 ml	[X]	5 /
[X] NITRATE & NITRITE	SW	H2SO4	125 ml	[X]	6 /

NOTES / SKETCH: Was not given method #'s for the analyses. Call Joanne Hale at (207) 775-5401 for them. Last digit of field sampling no. designates that sample was taken near bottom. (2)

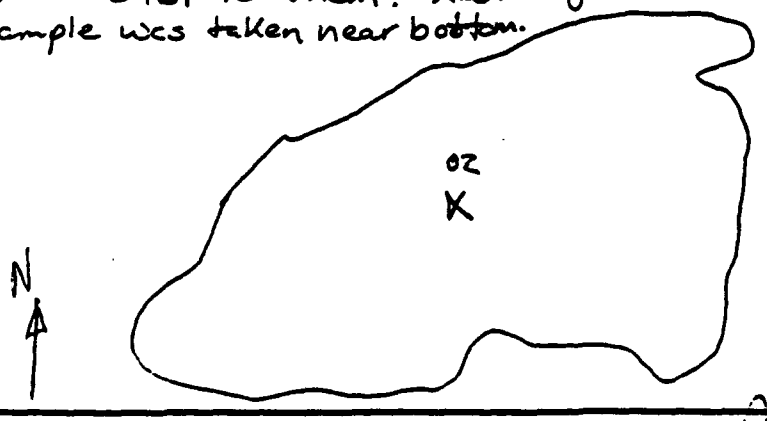

SJS 10-08-89

SIGNATURE OF SAMPLER: L. M. [illegible]

ABB ENVIRONMENTAL SERVICES, INC

PAGE 1 OF 20

FIELD DATA RECORD – SEDIMENT

FIELD SAMPLING NUMBER: P91740000

PROJECT: USATHAMA-BAAP

SITE ID: PBS-91-74

SITE TYPE: BUGR

JOB NUMBER: 6853-04

PROGRAM: C

SAMPLING DATE: 9.30.91

FILE NAME: CSO

WEATHER: overcast, 60's breezy

LOCATION ACTIVITY START: 1315 END: 1320

SEDIMENT DATA

DEPTH OF SEDIMENT SAMPLE: 1-3 IN

TYPE OF SAMPLE COLLECTED: [x] DISCRETE [ ] COMPOSITE

TYPE OF SEDIMENT:
- [x] CLAY
- [x] SAND
- [x] ORGANIC
- [x] SILT
- [x] GRAVEL
- [ ] OTHER

EQUIPMENT USED FOR COLLECTION:
- [x] GRAVITY CORER
- [x] TULIP BULB PLANTER
- [x] S.S. HAND SPOON
- [x] ALUMINUM PAN
- [ ] PLASTIC SCOOP
- [ ] OTHER

DECONTAMINATION FLUIDS USED:
- [x] POTABLE WATER
- [ ] POTABLE WATER WITH HIGH PRESSURE
- [ ] OTHER

SAMPLE OBSERVATIONS: [ ] ODOR [ ] COLORED

AMBIENT AIR: — PPM

SAMPLE LOCATION: — PPM

pH: — UNITS

ANALYTICAL PARAMETERS

	METHOD NUMBER	PRESERVATION METHOD	VOLUME REQUIRED	SAMPLE COLLECTED	SAMPLE BOTTLE ID NUMBERS
[x] PP METALS (SPECIFIED BELOW)		4 DEG C		DC [x]	967
[ ] AL	JS12	4 DEG C			
[ ] CA	|	4 DEG C			
[ ] NA	|	4 DEG C			
[ ] CD	|	4 DEG C			
[ ] CR	|	4 DEG C			
[ ] HG	Y9	4 DEG C			
[ ] PB	JD21	4 DEG C			
[ ] TCLP METALS (SPECIFIED BELOW)		4 DEG C			
[ ] NIT	KF17	4 DEG C			
[ ] SO4	KT07	4 DEG C			
[ ] NH3N2	USEPA 350.2	4 DEG C			
[ ] TOC	USEPA CE-81-1	4 DEG C			
[ ] pH	SW846 METHOD 9045	4 DEG C			
[x] VOC	LM23	4 DEG C		EA ~~DC~~ [x]	968 971
[ ] BN/A	LM25	4 DEG C			
[ ] NG	LW27	4 DEG C			
[ ] NAM	LN08	4 DEG C			
[x] DNT	LW23	4 DEG C		DC [x]	969

NOTES

LOCATION SKETCH)

* THESE ARE DATACHEM METHODS. EA METHODS: VOC LM17, LM26
B/NA LM20

PP METALS (PRIORITY POLLUTANT): AG, AS, BE, CD, CR, CU, PB, HG, NI, SB, SE, TL, ZN. JS12, B9, JD21, JD20, Y9.

TCLP METALS: CD, CR, HG, PB. JS12, 40 CFR 261.24

~~EA: 2 bottles~~ (MR)
~~DC: 4 bottles~~

EA: 2 bottles
DC: 2 bottles

* No tip available

SIGNATURE: VM/NR

RECEIVED BY: Nancy E. Rotea

ABB ENVIRONMENTAL SERVICES, INC

FIELD DATA RECORD - SEDIMENT

FIELD SAMPLING NUMBER: P91750006

PROJECT: USATHAMA-BAAP

SITE ID: PBS-91-75

LOCATION ACTIVITY: START: 1325 END: 1330

SITE TYPE: BUGR

JOB NUMBER: 6853-04

PROGRAM: C

SAMPLING DATE: 9.30 91

FILE NAME: CSO

WEATHER: overcast, cool, breezy

SEDIMENT DATA

DEPTH OF SEDIMENT SAMPLE: 1-4 IN

TYPE OF SAMPLE COLLECTED: [x] DISCRETE [ ] COMPOSITE

TYPE OF SEDIMENT:
- [ ] CLAY
- [x] SAND
- [x] ORGANIC
- [ ] SILT
- [ ] GRAVEL
- [x] OTHER coal

EQUIPMENT USED FOR COLLECTION:
- [x] GRAVITY CORER
- [x] TULIP BULB PLANTER
- [ ] S.S. HAND SPOON
- [x] ALUMINUM PAN
- [ ] PLASTIC SCOOP
- [ ] OTHER

DECONTAMINATION FLUIDS USED:
- [x] POTABLE WATER
- [ ] POTABLE WATER WITH HIGH PRESSURE
- [ ] OTHER

SAMPLE OBSERVATIONS:
- [ ] ODOR
- [ ] COLORED

AMBIENT AIR: — PPM

SAMPLE LOCATION: — PPM

pH: — UNITS

ANALYTICAL PARAMETERS

	METHOD NUMBER	PRESERVATION METHOD	VOLUME REQUIRED	SAMPLE COLLECTED	SAMPLE BOTTLE ID NUMBERS
[x] PP METALS (SPECIFIED BELOW)		4 DEG C		[x]	337
[ ] AL	JS12	4 DEG C			
[ ] CA		4 DEG C			
[ ] NA		4 DEG C			
[ ] CD		4 DEG C			
[ ] CR		4 DEG C		DC	
[ ] HG	Y9	4 DEG C			
[ ] PB	JD21	4 DEG C			
[x] TCLP METALS (SPECIFIED BELOW)		4 DEG C		[x]	340
[ ] NIT	KF17	4 DEG C			
[ ] SO4	KT07	4 DEG C			
[ ] NH3N2	USEPA 350.2	4 DEG C			
[ ] TOC	USEPA CE-81-1	4 DEG C			
[ ] pH	SW846 METHOD 9045	4 DEG C			
[x] * VOC	LM23	4 DEG C		EA [x]	343 344
[x] * BN/A	LM25	4 DEG C		[x]	529
[ ] NG	LW27	4 DEG C			
[ ] NAM	LN08	4 DEG C		DC	
[x] DNT	LW23	4 DEG C		[x]	346

NOTES (LOCATION SKETCH)

* THESE ARE DATACHEM METHODS. EA METHODS: VOC LM17, LM26; B/NA LM20

PP METALS (PRIORITY POLLUTANT): AG, AS, BE, CD, CR, CU, PB, HG, NI, SB, SE, TL, ZN. JS12, B9, JD21, JD20, Y9.

TCLP METALS: CD, CR, HG, PB. JS12, 40 CFR 261.24

DC: 2 bottles
EA: 2 bottles

SIGNATURE: VM/MR

RECEIVED BY: Nancy E. Rofer

ABB ENVIRONMENTAL SERVICES, INC

FIELD DATA RECORD – SEDIMENT

FIELD SAMPLING NUMBER: P91760000

PROJECT: USATHAMA-BAAP

SITE ID: PBS-91-76

LOCATION ACTIVITY: START: 1335 END: 1340

SITE TYPE: BUGR

JOB NUMBER: 6853-04

PROGRAM: C

SAMPLING DATE: 9.30.91

FILE NAME: CSO

WEATHER: overcast 60's breezy, rain

SEDIMENT DATA

DEPTH OF SEDIMENT SAMPLE: 1-4 IN

TYPE OF SAMPLE COLLECTED: [x] DISCRETE [ ] COMPOSITE

TYPE OF SEDIMENT:
- [ ] CLAY
- [x] SAND
- [x] ORGANIC
- [x] SILT some
- [x] GRAVEL
- [ ] OTHER

EQUIPMENT USED FOR COLLECTION:
- [ ] GRAVITY CORER
- [x] TULIP BULB PLANTER
- [ ] S.S. HAND SPOON
- [x] ALUMINUM PAN
- [ ] PLASTIC SCOOP
- [ ] OTHER

DECONTAMINATION FLUIDS USED:
- [x] POTABLE WATER
- [ ] POTABLE WATER WITH HIGH PRESSURE
- [ ] OTHER

SAMPLE OBSERVATIONS: [ ] ODOR [ ] COLORED

AMBIENT AIR: — PPM

SAMPLE LOCATION: — PPM

pH: — UNITS

ANALYTICAL PARAMETERS

	METHOD NUMBER	PRESERVATION METHOD	VOLUME REQUIRED	SAMPLE COLLECTED	SAMPLE BOTTLE ID NUMBERS
[x] PP METALS (SPECIFIED BELOW)		4 DEG C		DC [x]	976
[ ] AL	JS12	4 DEG C			
[ ] CA	|	4 DEG C			
[ ] NA	|	4 DEG C			
[ ] CD	|	4 DEG C			
[ ] CR	|	4 DEG C			
[ ] HG	Y9	4 DEG C			
[ ] PB	JD21	4 DEG C			
[ ] TCLP METALS (SPECIFIED BELOW)		4 DEG C			
[ ] NIT	KF17	4 DEG C			
[ ] SO4	KT07	4 DEG C			
[ ] NH3N2	USEPA 350.2	4 DEG C			
[ ] TOC	USEPA CE-81-1	4 DEG C			
[ ] pH	SW846 METHOD 9045	4 DEG C			
* [x] VOC	LM23	4 DEG C		EA [x]	977 980
* [ ] BN/A	LM25	4 DEG C			
[ ] NG	LW27	4 DEG C			
[ ] NAM	LN08	4 DEG C			
[x] DNT	LW23	4 DEG C		DC [x]	978

NOTES (LOCATION SKETCH)

* THESE ARE DATACHEM METHODS. EA METHODS: VOC LM17, LM26; B/NA LM20

PP METALS (PRIORITY POLLUTANT): AG, AS, BE, CD, CR, CU, PB, HG, NI, SB, SE, TL, ZN. JS12, B9, JD21, JD20, Y9.

TCLP METALS: CD, CR, HG, PB. JS12, 40 CFR 261.24

DC: 2 bottles

EA: 2 bottles

SIGNATURE: VM/MR

RECEIVED BY: Nancy E. Roka

ABB ENVIRONMENTAL SERVICES, INC

FIELD DATA RECORD – SEDIMENT

FIELD SAMPLING NUMBER: P91770000

PROJECT: USATHAMA-BAAP

SITE ID: PBS-91-77

SITE TYPE: BUGR

JOB NUMBER: 6853-04

PROGRAM: C

LOCATION ACTIVITY: START: 1355 END: 1400

SAMPLING DATE: 9.30.91

FILE NAME: CSO

WEATHER: overcast/rain 80's, breezy

SEDIMENT DATA

DEPTH OF SEDIMENT SAMPLE: 0-3 IN

TYPE OF SAMPLE COLLECTED: [x] DISCRETE [ ] COMPOSITE

TYPE OF SEDIMENT: [ ] CLAY [ ] SAND [x] ORGANIC [x] SILT [ ] GRAVEL [ ] OTHER

EQUIPMENT USED FOR COLLECTION: [ ] GRAVITY CORER [x] TULIP BULB PLANTER [ ] S.S. HAND SPOON [x] ALUMINUM PAN [ ] PLASTIC SCOOP [ ] OTHER

DECONTAMINATION FLUIDS USED: [x] POTABLE WATER [ ] POTABLE WATER WITH HIGH PRESSURE [ ] OTHER

SAMPLE OBSERVATIONS: [ ] ODOR [ ] COLORED

AMBIENT AIR: 0 PPM

SAMPLE LOCATION: 0 PPM

pH: NA UNITS

ANALYTICAL PARAMETERS

	METHOD NUMBER	PRESERVATION METHOD	VOLUME REQUIRED	SAMPLE COLLECTED	SAMPLE BOTTLE ID NUMBERS
[x] PP METALS (SPECIFIED BELOW)		4 DEG C		DC	985
[ ] AL	JS12	4 DEG C			
[ ] CA		4 DEG C			
[ ] NA		4 DEG C			
[ ] CD		4 DEG C			
[ ] CR		4 DEG C			
[ ] HG	Y9	4 DEG C			
[ ] PB	JD21	4 DEG C			
[ ] TCLP METALS (SPECIFIED BELOW)		4 DEG C			
[ ] NIT	KF17	4 DEG C			
[ ] SO4	KT07	4 DEG C			
[ ] NH3N2	USEPA 350.2	4 DEG C			
[ ] TOC	USEPA CE-81-1	4 DEG C			
[ ] OH	SW846 METHOD 9045	4 DEG C			
*[x] VOC	LM23	4 DEG C		EA	986 989
*[ ] BN/A	LM25	4 DEG C			
[ ] NG	LW27	4 DEG C			
[ ] NAM	LN08	4 DEG C			
[x] DNT	LW23	4 DEG C		DC	987

NOTES (LOCATION SKETCH)

* THESE ARE DATACHEM METHODS. EA METHODS: VOC LM17, LM26; B/NA LM20

PP METALS (PRIORITY POLLUTANT): AG, AS, BE, CD, CR, CU, PB, HG, NI, SB, SE, TL, ZN. JS12, B9, JD21, JD20, Y9.

TCLP METALS: CD, CR, HG, PB. JS12, 40 CFR 261.24

EA: 2 bottles

DC: 2 bottles

SIGNATURE: VM/NR

RECEIVED BY: Nancy E. Roza

ABB ENVIRONMENTAL SERVICES, INC

D DATA RECORD – SEDIMENT

FIELD SAMPLING NUMBER: P91780000

PROJECT: USATHAMA-BAAP
SITE ID: PBS-91-78
LOCATION ACTIVITY: START: 1410 END: 1415
SITE TYPE: BUGR
JOB NUMBER: 6853-04
PROGRAM: C
SAMPLING DATE: 9.30.91
FILE NAME: CSO
WEATHER: overcast ~60's breezy

SEDIMENT DATA

DEPTH OF SEDIMENT SAMPLE: 1-5 IN

TYPE OF SAMPLE COLLECTED: [x] DISCRETE [ ] COMPOSITE

TYPE OF SEDIMENT:
- [x] CLAY
- [x] SAND Some
- [x] ORGANIC
- [x] SILT
- [ ] GRAVEL
- [ ] OTHER

EQUIPMENT USED FOR COLLECTION:
- [x] GRAVITY CORER
- [x] TULIP BULB PLANTER
- [x] S.S. HAND SPOON
- [x] ALUMINUM PAN
- [ ] PLASTIC SCOOP
- [ ] OTHER

DECONTAMINATION FLUIDS USED:
- [x] POTABLE WATER
- [ ] POTABLE WATER WITH HIGH PRESSURE
- [ ] OTHER

SAMPLE OBSERVATIONS: [ ] ODOR [ ] COLORED

AMBIENT AIR: 0.0 PPM
SAMPLE LOCATION: 0.0 PPM
pH: — UNITS

ANALYTICAL PARAMETERS

	METHOD NUMBER	PRESERVATION METHOD	VOLUME REQUIRED	SAMPLE COLLECTED	SAMPLE BOTTLE ID NUMBERS
[x] PP METALS (SPECIFIED BELOW)		4 DEG C		DC [x]	994
[ ] AL	JS12	4 DEG C			
[ ] CA	|	4 DEG C			
[ ] NA	|	4 DEG C			
[ ] CD	|	4 DEG C			
[ ] CR	|	4 DEG C			
[ ] HG	Y9	4 DEG C			
[ ] PB	JD21	4 DEG C			
[ ] TCLP METALS (SPECIFIED BELOW)		4 DEG C			
[ ] NIT	KF17	4 DEG C			
[ ] O4	KT07	4 DEG C			
[ ] 3N2	USEPA 350.2	4 DEG C			
[ ] OC	USEPA CE-81-1	4 DEG C			
[ ] H	SW846 METHOD 9045	4 DEG C			
[x] VOC	LM23	4 DEG C		EA [x]	995 998
[ ] BN/A	LM25	4 DEG C			
[ ] NG	LW27	4 DEG C			
[ ] NAM	LN08	4 DEG C			
[x] DNT	LW23	4 DEG C		DC [x]	996

NOTES
LOCATION SKETCH)

* THESE ARE DATACHEM METHODS. EA METHODS: VOC LM17, LM26
B/NA LM20
PP METALS (PRIORITY POLLUTANT): AG, AS, BE, CD, CR, CU, PB, HG, NI, SB, SE, TL, ZN.
JS12, B9, JD21, JD20, Y9.
TCLP METALS: CD, CR, HG, PB.
JS12, 40 CFR 261.24

DC: 2 bottles
EA: 2 bottles

SIGNATURE: VM/MK
RECEIVED BY: Nancy E. Rotta

ABB ENVIRONMENTAL SERVICES, INC

FIELD DATA RECORD - SEDIMENT

FIELD SAMPLING NUMBER: P91790600

PROJECT: USATHAMA-BAAP

SITE ID: PBS-91-79

SITE TYPE: BUGR

JOB NUMBER: 6853-04

PROGRAM: C

LOCATION ACTIVITY START: 1420 END: 1425

SAMPLING DATE: 9.30.91

FILE NAME: CSO

WEATHER: overcast, 60's breezy

SEDIMENT DATA

DEPTH OF SEDIMENT SAMPLE: 1-4 IN

TYPE OF SAMPLE COLLECTED: [x] DISCRETE [ ] COMPOSITE

TYPE OF SEDIMENT: [ ] CLAY [x] SAND trace [x] ORGANIC [x] SILT [ ] GRAVEL [ ] OTHER

EQUIPMENT USED FOR COLLECTION: [x] GRAVITY CORER [x] TULIP BULB PLANTER [x] S.S. HAND SPOON [x] ALUMINUM PAN [ ] PLASTIC SCOOP [ ] OTHER

DECONTAMINATION FLUIDS USED: [x] POTABLE WATER [ ] POTABLE WATER WITH HIGH PRESSURE [ ] OTHER

SAMPLE OBSERVATIONS: [ ] ODOR [ ] COLORED

AMBIENT AIR: 0.0 PPM

SAMPLE LOCATION: 0.0 PPM

pH: — UNITS

ANALYTICAL PARAMETERS

	METHOD NUMBER	PRESERVATION METHOD	VOLUME REQUIRED	SAMPLE COLLECTED	SAMPLE BOTTLE ID NUMBERS
[x] PP METALS (SPECIFIED BELOW)		4 DEG C			349
[x] AL	JS12	4 DEG C			
[x] CA		4 DEG C			
[x] NA		4 DEG C			
[x] CD		4 DEG C			
[x] CR		4 DEG C			
[x] HG	Y9	4 DEG C			
[x] PB	JD21	4 DEG C			
[x] TCLP METALS (SPECIFIED BELOW)		4 DEG C			352
[x] NIT	KF17	4 DEG C			
[x] SO4	KT07	4 DEG C			
[x] NH3N2	USEPA 350.2	4 DEG C			
[x] TOC	USEPA CE-81-1	4 DEG C			
[x] pH	SW846 METHOD 9045	4 DEG C			
[x] * VOC	LM23	4 DEG C	DC		
[x] * BN/A	LM25	4 DEG C		EA	355 356
[x] HG	LW27	4 DEG C			
[x] NAM	LM08	4 DEG C			
[x] DNT	LW23	4 DEG C		DC	358

NOTES (LOCATION SKETCH)

* THESE ARE DATACHEM METHODS. EA METHODS: VOC LM17, LM26; B/NA LM20

PP METALS (PRIORITY POLLUTANT): AG, AS, BE, CD, CR, CU, PB, HG, NI, SB, SE, TL, ZN. JS12, B9, JD21, JD20, Y9.

TCLP METALS: CD, CR, HG, PB. JS12, 40 CFR 261.24

DC: 2 bottles
EA: 2 bottles

SIGNATURE: VM/NR

RECEIVED BY: Nancy E. Roka

ABB ENVIRONMENTAL SERVICES, INC

LD DATA RECORD – SEDIMENT

FIELD SAMPLING NUMBER: P91200000

PROJECT: USATHAMA-BAAP

SITE TYPE: BUGR

SAMPLING DATE: 9.30.91

SITE ID: PBS-91--80

JOB NUMBER: 6853-04

FILE NAME: CSO

WEATHER: overcast, °40's breezy

LOCATION ACTIVITY: START: 1425 END: 1430

PROGRAM: C

SEDIMENT DATA

DEPTH OF SEDIMENT SAMPLE: 1-5 IN

TYPE OF SAMPLE COLLECTED: [X] DISCRETE [ ] COMPOSITE

TYPE OF SEDIMENT:
- [ ] CLAY
- [X] SAND some
- [X] ORGANIC
- [X] SILT
- [ ] GRAVEL
- [ ] OTHER

EQUIPMENT USED FOR COLLECTION:
- [X] GRAVITY CORER
- [ ] TULIP BULB PLANTER
- [X] S.S. HAND SPOON
- [ ] ALUMINUM PAN
- [ ] PLASTIC SCOOP
- [ ] OTHER

DECONTAMINATION FLUIDS USED:
- [X] POTABLE WATER
- [ ] POTABLE WATER WITH HIGH PRESSURE
- [ ] OTHER

SAMPLE OBSERVATIONS: [ ] ODOR [ ] COLORED

AMBIENT AIR: 0.0 PPM

SAMPLE LOCATION: 0.0 PPM

pH: — UNITS

ANALYTICAL PARAMETERS

		METHOD NUMBER	PRESERVATION METHOD	VOLUME REQUIRED	SAMPLE COLLECTED	SAMPLE BOTTLE ID NUMBERS
[X]	PP METALS (SPECIFIED BELOW)		4 DEG C		DC [X]	1003
[ ]	AL	JS12	4 DEG C			
[ ]	CA		4 DEG C			
[ ]	NA		4 DEG C			
[ ]	CD		4 DEG C			
[ ]	CR		4 DEG C			
[ ]	HG	Y9	4 DEG C			
[ ]	PB	JD21	4 DEG C			
[ ]	TCLP METALS (SPECIFIED BELOW)		4 DEG C			
[ ]	NIT	KF17	4 DEG C			
[ ]	SO4	KT07	4 DEG C			
[ ]	NH3N2	USEPA 350.2	4 DEG C			
[ ]	TOC	USEPA CE-81-1	4 DEG C			
[ ]	pH	SW846 METHOD 9045	4 DEG C			
* [X]	VOC	LM23	4 DEG C		DC ~~EA~~ (NR) [X]	1004 1007
* [ ]	BN/A	LM25	4 DEG C			
[ ]	NG	LW27	4 DEG C			
[ ]	NAM	LW08	4 DEG C			
[X]	DNT	LW23	4 DEG C		DC [X]	1005

NOTES (LOCATION SKETCH)

* THESE ARE DATACHEM METHODS. EA METHODS: VOC LM17, LM26
B/NA LM20

PP METALS (PRIORITY POLLUTANT): AG, AS, BE, CD, CR, CU, PB, HG, NI, SB, SE, TL, ZN.
JS12, B9, JD21, JD20, Y9.

TCLP METALS: CD, CR, HG, PB.
JS12, 40 CFR 261.24

(NR) DC: 24 bottles
~~EA: 2 bottles~~

SIGNATURE: VM/NR

RECEIVED BY: Nancy E. Rona

ABB ENVIRONMENTAL SERVICES, INC

FIELD DATA RECORD – SEDIMENT

FIELD SAMPLING NUMBER: P91210000

PROJECT: USATHAMA-BAAP

SITE ID: PBS-9i-81

LOCATION ACTIVITY: START: 1440 END: 1445

SITE TYPE: BUGR

JOB NUMBER: 6853-04

PROGRAM: C

SAMPLING DATE: 9.30 91

FILE NAME: CSO

WEATHER: cloudy, ~60's breezy

SEDIMENT DATA

DEPTH OF SEDIMENT SAMPLE: 1-3 IN

TYPE OF SAMPLE COLLECTED: [x] DISCRETE [ ] COMPOSITE

TYPE OF SEDIMENT:
- [x] CLAY
- [x] SAND
- [x] ORGANIC
- [ ] SILT
- [x] GRAVEL
- [ ] OTHER

EQUIPMENT USED FOR COLLECTION:
- [x] GRAVITY CORER
- [x] TULIP BULB PLANTER
- [x] S.S. HAND SPOON
- [x] ALUMINUM PAN
- [ ] PLASTIC SCOOP
- [ ] OTHER

DECONTAMINATION FLUIDS USED:
- [x] POTABLE WATER
- [ ] POTABLE WATER WITH HIGH PRESSURE
- [ ] OTHER

SAMPLE OBSERVATIONS: [ ] ODOR [ ] COLORED

AMBIENT AIR: 0.0 PPM

SAMPLE LOCATION: 0.0 PPM

pH: — UNITS

ANALYTICAL PARAMETERS

	METHOD NUMBER	PRESERVATION METHOD	VOLUME REQUIRED	SAMPLE COLLECTED	SAMPLE BOTTLE ID NUMBERS
[x] PP METALS (SPECIFIED BELOW)		4 DEG C		DC [x]	1012
[ ] AL	JS12	4 DEG C			
[ ] CA		4 DEG C			
[ ] NA		4 DEG C			
[ ] CD		4 DEG C			
[ ] CR		4 DEG C			
[ ] HG	Y9	4 DEG C			
[ ] PB	JD21	4 DEG C			
[ ] TCLP METALS (SPECIFIED BELOW)		4 DEG C			
[ ] NIT	KF17	4 DEG C			
[ ] SO4	KT07	4 DEG C			
[ ] NH3N2	USEPA 350.2	4 DEG C			
[ ] TOC	USEPA CE-81-1	4 DEG C			
[ ] pH	SW846 METHOD 9045	4 DEG C			
* [x] VOC	LM23	4 DEG C		DC (NR) [x]	1013 1016
* [ ] BN/A	LM25	4 DEG C			
[ ] NG	LW27	4 DEG C			
[ ] NAM	LN08	4 DEG C			
[x] DNT	LW23	4 DEG C		DC [x]	1014

NOTES (LOCATION SKETCH)

* THESE ARE DATACHEM METHODS. EA METHODS: VOC LM17, LM26
B/NA LM20

PP METALS (PRIORITY POLLUTANT): AG, AS, BE, CD, CR, CU, PB, HG, NI, SB, SE, TL, ZN.
JS12, B9, JD21, JD20, Y9.

TCLP METALS: CD, CR, HG, PB.
JS12, 40 CFR 261.24

(NR) DC: ~~24~~ 4 bottles
~~EA: 2 bottles~~

SIGNATURE: VM/MC

RECEIVED BY: Nancy E. Rotta

ABB ENVIRONMENTAL SERVICES, INC

FIELD DATA RECORD – SEDIMENT

FIELD SAMPLING NUMBER: P91820000

PROJECT: USATHAMA-BAAP
SITE ID: PBS-91-82
LOCATION ACTIVITY: START: 1450 END: 1455
SITE TYPE: BUGR
JOB NUMBER: 6853-04
PROGRAM: C
SAMPLING DATE: 9.30.91
FILE NAME: CSO
WEATHER: cloudy, °60's breezy

SEDIMENT DATA

DEPTH OF SEDIMENT SAMPLE: 1-3 IN

TYPE OF SAMPLE COLLECTED: [x] DISCRETE [ ] COMPOSITE

TYPE OF SEDIMENT:
- [x] CLAY
- [x] SAND
- [x] ORGANIC
- [x] SILT
- [ ] GRAVEL
- [ ] OTHER

EQUIPMENT USED FOR COLLECTION:
- [x] GRAVITY CORER
- [x] TULIP BULB PLANTER
- [x] S.S. HAND SPOON
- [x] ALUMINUM PAN
- [ ] PLASTIC SCOOP
- [ ] OTHER

DECONTAMINATION FLUIDS USED:
- [x] POTABLE WATER
- [ ] POTABLE WATER WITH HIGH PRESSURE
- [ ] OTHER

SAMPLE OBSERVATIONS: [ ] ODOR [ ] COLORED

AMBIENT AIR: 0.0 PPM
SAMPLE LOCATION: 0.0 PPM
pH: — UNITS

ANALYTICAL PARAMETERS

	METHOD NUMBER	PRESERVATION METHOD	VOLUME REQUIRED	SAMPLE COLLECTED
[x] PP METALS (SPECIFIED BELOW)		4 DEG C		[x]
[ ] AL	JS12	4 DEG C		
[ ] CA		4 DEG C		
[ ] NA		4 DEG C		
[ ] CD		4 DEG C		
[ ] CR		4 DEG C		
[ ] HG	Y9	4 DEG C		
[ ] PB	JD21	4 DEG C		
[x] TCLP METALS (SPECIFIED BELOW)		4 DEG C		[x]
[ ] NIT	KF17	4 DEG C		
[ ] SO4	KT07	4 DEG C		
[ ] NH3N2	USEPA 350.2	4 DEG C		
[ ] TOC	USEPA CE-81-1	4 DEG C		
[ ] pH	SW846 METHOD 9045	4 DEG C		
* [x] VOC	LM23	4 DEG C	DC	[x]
* [ ] BN/A	LM25	4 DEG C	~~EA~~ (NR)	
[ ] NG	LW27	4 DEG C		
[ ] NAM	LN08	4 DEG C		
[x] DNT	LW23	4 DEG C	DC	[x]

SAMPLE BOTTLE ID NUMBERS: 361, 364, 367, 368, 370

NOTES (LOCATION SKETCH)

* THESE ARE DATACHEM METHODS. EA METHODS: VOC LM17, LM26
B/NA LM20

PP METALS (PRIORITY POLLUTANT): AG, AS, BE, CD, CR, CU, PB, HG, NI, SB, SE, TL, ZN.
JS12, B9, JD21, JD20, Y9.

TCLP METALS: CD, CR, HG, PB.
JS12, 40 CFR 261.24

DC: 4 bottles
~~EA: 2 bottles~~ (NR)

SIGNATURE: VM/MC

RECEIVED BY: Nancy E. Rocha

ABB ENVIRONMENTAL SERVICES, INC

FIELD DATA RECORD - SEDIMENT

FIELD SAMPLING NUMBER: P91 83 000

PROJECT: USATHAMA-BAAP

SITE ID: PBS-91-83

LOCATION ACTIVITY START: 1500 END: 1505

SITE TYPE: BUGR

JOB NUMBER: 6853-04

PROGRAM: C

SAMPLING DATE: 9.30.91

FILE NAME: CSO

WEATHER: cloudy, °60's breezy

SEDIMENT DATA

DEPTH OF SEDIMENT SAMPLE: 0-3 IN

TYPE OF SAMPLE COLLECTED: [V] DISCRETE [ ] COMPOSITE

TYPE OF SEDIMENT: [ ] CLAY [V] SAND [V] ORGANIC [ ] SILT [ ] GRAVEL [ ] OTHER

EQUIPMENT USED FOR COLLECTION: [ ] GRAVITY CORER [V] TULIP BULB PLANTER [V] S.S. HAND SPOON [V] ALUMINUM PAN [ ] PLASTIC SCOOP [ ] OTHER

DECONTAMINATION FLUIDS USED: [V] POTABLE WATER [ ] POTABLE WATER WITH HIGH PRESSURE [ ] OTHER

SAMPLE OBSERVATIONS: [ ] ODOR [ ] COLORED

AMBIENT AIR: 0.0 PPM

SAMPLE LOCATION: 0.0 PPM

pH: — UNITS

ANALYTICAL PARAMETERS

	METHOD NUMBER	PRESERVATION METHOD	VOLUME REQUIRED	SAMPLE COLLECTED	SAMPLE BOTTLE ID NUMBERS
[V] PP METALS (SPECIFIED BELOW)		4 DEG C		DC [V]	1021
[ ] AL	JS12	4 DEG C			
[ ] CA		4 DEG C			
[ ] NA		4 DEG C			
[ ] CD		4 DEG C			
[ ] CR		4 DEG C			
[ ] HG	Y9	4 DEG C			
[ ] PB	JD21	4 DEG C			
[ ] TCLP METALS (SPECIFIED BELOW)		4 DEG C			
[ ] NIT	KF17	4 DEG C			
[ ] SO4	KT07	4 DEG C			
[ ] NH3N2	USEPA 350.2	4 DEG C			
[ ] TOC	USEPA CE-81-1	4 DEG C			
[ ] pH	SW846 METHOD 9045	4 DEG C			
*[V] VOC	LM23	4 DEG C		DC (MR) EA [V]	1022 1025
*[ ] BN/A	LM25	4 DEG C			
[ ] NG	LW27	4 DEG C			
[ ] NAM	LN08	4 DEG C			
[V] DNT	LW23	4 DEG C		DC [V]	1023

NOTES (LOCATION SKETCH)

* THESE ARE DATACHEM METHODS. EA METHODS: VOC LM17, LM26; B/NA LM20

PP METALS (PRIORITY POLLUTANT): AG, AS, BE, CD, CR, CU, PB, HG, NI, SB, SE, TL, ZN. JS12, B9, JD21, JD20, Y9.

TCLP METALS: CD, CR, HG, PB. JS12, 40 CFR 261.24

DC: 24 bottles

~~EA: 2 bottles~~ (MR)

SIGNATURE: VM/MR

RECEIVED BY: Nancy E. Roka

ABB ENVIRONMENTAL SERVICES, INC

FIELD DATA RECORD - SEDIMENT

FIELD SAMPLING NUMBER: P9184000

PROJECT: USATHAMA-BAAP

SITE TYPE: BUGR

SITE ID: PBS-91-84

JOB NUMBER: 6853-04

LOCATION ACTIVITY: START: 1510 END: 1515

PROGRAM: C

SAMPLING DATE: 9.30.91

FILE NAME: CSO

WEATHER: cloudy, 60's breezy

SEDIMENT DATA

DEPTH OF SEDIMENT SAMPLE: 1-4 IN

TYPE OF SAMPLE COLLECTED: [x] DISCRETE [ ] COMPOSITE

TYPE OF SEDIMENT:
- [ ] CLAY
- [x] SAND
- [x] ORGANIC
- [x] SILT
- [ ] GRAVEL
- [ ] OTHER

EQUIPMENT USED FOR COLLECTION:
- [ ] GRAVITY CORER
- [x] TULIP BULB PLANTER
- [ ] S.S. HAND SPOON
- [x] ALUMINUM PAN
- [ ] PLASTIC SCOOP
- [ ] OTHER

DECONTAMINATION FLUIDS USED
- [x] POTABLE WATER
- [ ] POTABLE WATER WITH HIGH PRESSURE
- [ ] OTHER

SAMPLE OBSERVATIONS: [ ] ODOR [ ] COLORED

AMBIENT AIR: 0.0 PPM

SAMPLE LOCATION: 0.0 PPM

pH: — UNITS

ANALYTICAL PARAMETERS

	METHOD NUMBER	PRESERVATION METHOD	VOLUME REQUIRED	SAMPLE COLLECTED	SAMPLE BOTTLE ID NUMBERS
[x] PP METALS (SPECIFIED BELOW)		4 DEG C		DC [x]	1033
[ ] AL	JS12	4 DEG C		[ ]	
[ ] CA		4 DEG C		[ ]	
[ ] NA		4 DEG C		[ ]	
[ ] CD		4 DEG C		[ ]	
[ ] CR		4 DEG C		[ ]	
[ ] HG	Y9	4 DEG C		[ ]	
[ ] PB	JD21	4 DEG C		[ ]	
[ ] TCLP METALS (SPECIFIED BELOW)		4 DEG C		[ ]	
[ ] NIT	KF17	4 DEG C		[ ]	
[ ] SO4	KT07	4 DEG C		[ ]	
[ ] NH3N2	USEPA 350.2	4 DEG C		[ ]	
[ ] TOC	USEPA CE-81-1	4 DEG C		[ ]	
[ ] pH	SW846 METHOD 9045	4 DEG C		[ ]	
[x] VOC	LM23	4 DEG C		DC ~~EA~~ MR [x]	1034 / 1037
[ ] BN/A	LM25	4 DEG C		[ ]	
[ ] NG	LW27	4 DEG C		[ ]	
[ ] NAM	LN08	4 DEG C		[ ]	
[x] DNT	LW23	4 DEG C		DC [x]	1035

NOTES (LOCATION SKETCH)

* THESE ARE DATACHEM METHODS. EA METHODS: VOC LM17, LM26
B/NA LM20

PP METALS (PRIORITY POLLUTANT): AG, AS, BE, CD, CR, CU, PB, HG, NI, SB, SE, TL, ZN.
JS12, B9, JD21, JD20, Y9.

TCLP METALS: CD, CR, HG, PB.
JS12, 40 CFR 261.24

DC: ~~2~~4 bottles MR
~~EA: 2 bottles~~

SIGNATURE: VM / MR

RECEIVED BY: Vancy E Roka

ABB ENVIRONMENTAL SERVICES, INC

FIELD DATA RECORD – SEDIMENT

FIELD SAMPLING NUMBER: P91850000

PROJECT: USATHAMA-BAAP

SITE ID: PBS-91-85

SITE TYPE: BUGR

JOB NUMBER: 6853-04

PROGRAM: C

LOCATION ACTIVITY: START: 1535 END: 1540

SAMPLING DATE: 9.30.91

FILE NAME: CSO

WEATHER: cloudy, °60s breezy

SEDIMENT DATA

DEPTH OF SEDIMENT SAMPLE: 1-4 IN

TYPE OF SAMPLE COLLECTED: [x] DISCRETE [ ] COMPOSITE

TYPE OF SEDIMENT:
- [ ] CLAY
- [x] SAND
- [x] ORGANIC
- [ ] SILT
- [ ] GRAVEL
- [ ] OTHER

EQUIPMENT USED FOR COLLECTION:
- [x] GRAVITY CORER
- [x] TULIP BULB PLANTER
- [x] S.S. HAND SPOON
- [x] ALUMINUM PAN
- [ ] PLASTIC SCOOP
- [ ] OTHER

DECONTAMINATION FLUIDS USED
- [x] POTABLE WATER
- [ ] POTABLE WATER WITH HIGH PRESSURE
- [ ] OTHER

SAMPLE OBSERVATIONS: [ ] ODOR [ ] COLORED

AMBIENT AIR: 0.0 PPM

SAMPLE LOCATION: 0.0 PPM

pH: — UNITS

ANALYTICAL PARAMETERS

	METHOD NUMBER	PRESERVATION METHOD	VOLUME REQUIRED	SAMPLE COLLECTED
[x] PP METALS (SPECIFIED BELOW)		4 DEG C	DC	[x]
[ ] AL	JS12	4 DEG C		
[ ] CA		4 DEG C		
[ ] NA		4 DEG C		
[ ] CD		4 DEG C		
[ ] CR		4 DEG C		
[ ] HG	Y9	4 DEG C		
[ ] PB	JD21	4 DEG C		
[x] TCLP METALS (SPECIFIED BELOW)		4 DEG C		[x]
[ ] NIT	KF17	4 DEG C		
[ ] SO4	KT07	4 DEG C		
[ ] NH3N2	USEPA 350.2	4 DEG C		
[ ] TOC	USEPA CE-81-1	4 DEG C		
[ ] pH	SW846 METHOD 9045	4 DEG C		
*[x] VOC	LM23	4 DEG C	DC (MR)	[x]
*[x] BN/A	LM25	4 DEG C		[x]
[ ] NG	LW27	4 DEG C		
[ ] NAM	LM08	4 DEG C	DC	[x]
[x] DNT	LW23	4 DEG C		[x]

SAMPLE BOTTLE ID NUMBERS: 373, 376, 379, 380, 532, 382

NOTES (LOCATION SKETCH)

* THESE ARE DATACHEM METHODS. EA METHODS: VOC LM17, LM26; B/NA LM20

PP METALS (PRIORITY POLLUTANT): AG, AS, BE, CD, CR, CU, PB, HG, NI, SB, SE, TL, ZN. JS12, B9, JD21, JD20, Y9.

TCLP METALS: CD, CR, HG, PB. JS12, 40 CFR 261.24

DC: ~~24~~ bottles (MR)

~~EA: 2 bottles~~

SIGNATURE: VM/MR

RECEIVED BY: Nancy E. Rokra

ABB ENVIRONMENTAL SERVICES, INC

FIELD DATA RECORD – SEDIMENT

FIELD SAMPLING NUMBER: P91860090

PROJECT: USATHAMA-BAAP

SITE ID: PBS-91-86

LOCATION ACTIVITY: START: 1545 END: 1550

SITE TYPE: BUGR

JOB NUMBER: 6853-04

PROGRAM: C

SAMPLING DATE: 9.30.91

FILE NAME: CSO

WEATHER: cloudy, 60's breezy

SEDIMENT DATA

DEPTH OF SEDIMENT SAMPLE: 1-3 IN

TYPE OF SAMPLE COLLECTED: [✓] DISCRETE [ ] COMPOSITE

TYPE OF SEDIMENT:
- [ ] CLAY
- [✓] SAND
- [✓] ORGANIC
- [✓] SILT
- [ ] GRAVEL
- [ ] OTHER

EQUIPMENT USED FOR COLLECTION:
- [✓] GRAVITY CORER
- [ ] TULIP BULB PLANTER
- [✓] S.S. HAND SPOON
- [✓] ALUMINUM PAN
- [ ] PLASTIC SCOOP
- [ ] OTHER

DECONTAMINATION FLUIDS USED:
- [✓] POTABLE WATER
- [ ] POTABLE WATER WITH HIGH PRESSURE
- [ ] OTHER

SAMPLE OBSERVATIONS: [ ] ODOR [ ] COLORED

AMBIENT AIR: 0.0 PPM

SAMPLE LOCATION: 0.0 PPM

pH: — UNITS

ANALYTICAL PARAMETERS

	METHOD NUMBER	PRESERVATION METHOD	VOLUME REQUIRED	SAMPLE COLLECTED	SAMPLE BOTTLE ID NUMBERS
[✓] PP METALS (SPECIFIED BELOW)		4 DEG C		DC [✓]	1039
[ ] AL	JS12	4 DEG C			
[ ] CA		4 DEG C			
[ ] NA		4 DEG C			
[ ] CD		4 DEG C			
[ ] CR		4 DEG C			
[✓] HG	Y9	4 DEG C			
[ ] PB	JD21	4 DEG C			
[ ] TCLP METALS (SPECIFIED BELOW)		4 DEG C			
[ ] NIT	KF17	4 DEG C			
[ ] SO4	KT07	4 DEG C			
[ ] NH3N2	USEPA 350.2	4 DEG C			
[ ] TOC	USEPA CE-81-1	4 DEG C			
[ ] pH	SW846 METHOD 9045	4 DEG C			
[✓] VOC	LM23	4 DEG C		DC EA [✓] (MR)	1040 1043
[ ] BN/A	LM25	4 DEG C			
[ ] PEST	LW27	4 DEG C			
[ ] HERB	LN08	4 DEG C			
[✓] DNT	LW23	4 DEG C		DC [✓]	1041

NOTES (LOCATION SKETCH)

* THESE ARE DATACHEM METHODS. EA METHODS: VOC LM17, LM26
B/NA LM20

PP METALS (PRIORITY POLLUTANT): AG, AS, BE, CD, CR, CU, PB, HG, NI, SB, SE, TL, ZN.
JS12, B9, JD21, JD20, Y9.

TCLP METALS: CD, CR, HG, PB.
JS12, 40 CFR 261.24

DC: ~~24~~ bottles (MR)
~~EA: 2 bottles~~

SIGNATURE: VM/MR

RECEIVED BY: VNancy E. Rotka

ABB ENVIRONMENTAL SERVICES, INC

FIELD DATA RECORD – SEDIMENT

FIELD SAMPLING NUMBER: FT187000

PROJECT: USATHAMA-BAAP

SITE ID: PBS-91-87

LOCATION ACTIVITY: START: 1555 END: 1600

SITE TYPE: BUGR

JOB NUMBER: 6853-04

PROGRAM: C

SAMPLING DATE: 9.30.91

FILE NAME: CSO

WEATHER: cloudy, 60's breezy

SEDIMENT DATA

DEPTH OF SEDIMENT SAMPLE: 1-4 IN

TYPE OF SAMPLE COLLECTED: [x] DISCRETE [ ] COMPOSITE

TYPE OF SEDIMENT:
- [ ] CLAY
- [x] SAND
- [x] ORGANIC
- [x] SILT
- [ ] GRAVEL
- [x] OTHER coal + debris (wire, ...)

EQUIPMENT USED FOR COLLECTION:
- [x] GRAVITY CORER
- [x] TULIP BULB PLANTER
- [ ] S.S. HAND SPOON
- [x] ALUMINUM PAN
- [ ] PLASTIC SCOOP
- [ ] OTHER

DECONTAMINATION FLUIDS USED:
- [x] POTABLE WATER
- [ ] POTABLE WATER WITH HIGH PRESSURE
- [ ] OTHER

SAMPLE OBSERVATIONS: [ ] ODOR [ ] COLORED

AMBIENT AIR: 0.0 PPM

SAMPLE LOCATION: 0.0 PPM

pH: — UNITS

ANALYTICAL PARAMETERS

	METHOD NUMBER	PRESERVATION METHOD	VOLUME REQUIRED	SAMPLE COLLECTED	SAMPLE BOTTLE ID NUMBERS
[x] PP METALS (SPECIFIED BELOW)		4 DEG C		DC [x]	1042
[ ] AL	JS12	4 DEG C			
[ ] CA	|	4 DEG C			
[ ] NA	|	4 DEG C			
[ ] CD	|	4 DEG C			
[ ] CR	|	4 DEG C			
[ ] HG	Y9	4 DEG C			
[ ] PB	JD21	4 DEG C			
[ ] TCLP METALS (SPECIFIED BELOW)		4 DEG C			
[ ] NIT	KF17	4 DEG C			
[ ] SO4	KT07	4 DEG C			
[ ] NH3N2	USEPA 350.2	4 DEG C			
[ ] TOC	USEPA CE-81-1	4 DEG C			
[ ] OH	SW846 METHOD 9045	4 DEG C			
* [x] VOC	LM23	4 DEG C		DC ~~EA~~ (MR) [x]	1049 1052
* [ ] BN/A	LM25	4 DEG C			
[ ] NG	LW27	4 DEG C			
[ ] NAM	LN08	4 DEG C			
[x] DNT	LW23	4 DEG C		DC [x]	1050

NOTES (LOCATION SKETCH)

* THESE ARE DATACHEM METHODS. EA METHODS: VOC LM17, LM26
B/NA LM20

PP METALS (PRIORITY POLLUTANT): AG, AS, BE, CD, CR, CU, PB, HG, NI, SB, SE, TL, ZN.
JS12, B9, JD21, JD20, Y9.

TCLP METALS: CD, CR, HG, PB.
JS12, 40 CFR 261.24

DC: 24 bottles (MR)
~~EA: 2 bottles~~

SIGNATURE: VM/MR

RECEIVED BY: Nancy E. Rota

ABB ENVIRONMENTAL SERVICES, INC

P9188000

PAGE 16 OF 20

FIELD DATA RECORD - SEDIMENT

FIELD SAMPLING NUMBER: ~~PBS-91~~ (MR)

PROJECT: USATHAMA-BAAP

SITE TYPE: BUGR

SAMPLING DATE: 9.30.91

SITE ID: PBS-91-88

JOB NUMBER: 6853-04

FILE NAME: CSO

LOCATION ACTIVITY: START: 1600 END: 1605

PROGRAM: C

WEATHER: cloudy, °60's breezy

SEDIMENT DATA

DEPTH OF SEDIMENT SAMPLE: 1-4 IN

TYPE OF SAMPLE COLLECTED: ☑ DISCRETE ☐ COMPOSITE

TYPE OF SEDIMENT:
- ☐ CLAY
- ☑ SAND some
- ☑ ORGANIC
- ☑ SILT
- ☐ GRAVEL
- ☐ OTHER

EQUIPMENT USED FOR COLLECTION:
- ☑ GRAVITY CORER
- ☑ TULIP BULB PLANTER
- ☑ S.S. HAND SPOON
- ☑ ALUMINUM PAN
- ☐ PLASTIC SCOOP
- ☐ OTHER

DECONTAMINATION FLUIDS USED
- ☑ POTABLE WATER
- ☐ POTABLE WATER WITH HIGH PRESSURE
- ☐ OTHER

SAMPLE OBSERVATIONS: ☐ ODOR ☐ COLORED ☐

AMBIENT AIR: 0.0 PPM

SAMPLE LOCATION: 0.0 PPM

pH: — UNITS

ANALYTICAL PARAMETERS

	METHOD NUMBER	PRESERVATION METHOD	VOLUME REQUIRED	SAMPLE COLLECTED	SAMPLE BOTTLE ID NUMBERS
☑ PP METALS (SPECIFIED BELOW)		4 DEG C		☑	385
☐ AL	JS12	4 DEG C		☐	
☐ CA		4 DEG C		☐	
☐ NA		4 DEG C		☐	
☐ CD		4 DEG C		☐	
☐ CR		4 DEG C		☐	
☐ HG	Y9	4 DEG C		☐	
☐ PB	JD21	4 DEG C		☐	
☑ TCLP METALS (SPECIFIED BELOW)		4 DEG C		☑	388
☐ NIT	KF17	4 DEG C		☐	
☐ SO4	KT07	4 DEG C		☐	
☐ NH3N2	USEPA 350.2	4 DEG C		☐	
☐ TOC	USEPA CE-81-1	4 DEG C		☐	
☐ pH	SW846 METHOD 9045	4 DEG C		☐	
☑ VOC	LM23	4 DEG C		☑	391 / 392
☐ BN/A	LM25	4 DEG C		☐	
☐ NG	LW27	4 DEG C		☐	
☐ NAM	LN08	4 DEG C		☐	
☑ DNT	LW23	4 DEG C		☑	394
☐				☐	
☐				☐	

DC

DC ~~EA~~ (MR)

DC

NOTES (LOCATION SKETCH)

* THESE ARE DATACHEM METHODS. EA METHODS: VOC LM17, LM26
B/NA LM20

PP METALS (PRIORITY POLLUTANT): AG, AS, BE, CD, CR, CU, PB, HG, NI, SB, SE, TL, ZN.
JS12, B9, JD21, JD20, Y9.

TCLP METALS: CD, CR, HG, PB.
JS12, 40 CFR 261.24

DC: ~~2~~ 4 bottles
~~EA: 2 bottles~~ (MR)

SIGNATURE: VM/MR

RECEIVED BY: Nancy E. Rofka

ABB ENVIRONMENTAL SERVICES, INC

FIELD DATA RECORD – SEDIMENT

FIELD SAMPLING NUMBER: P9129000

PROJECT: USATHAMA-BAAP

SITE ID: PBS-91-89

LOCATION ACTIVITY: START: 1520 END: 1525

SITE TYPE: BUGR

JOB NUMBER: 6853-04

PROGRAM: C

SAMPLING DATE: 9.30 91

FILE NAME: CSO

WEATHER: cloudy, °60s breezy

SEDIMENT DATA

DEPTH OF SEDIMENT SAMPLE: 1-4 IN

TYPE OF SAMPLE COLLECTED: [x] DISCRETE [ ] COMPOSITE

TYPE OF SEDIMENT:
- [ ] CLAY
- [x] SAND
- [x] ORGANIC
- [ ] SILT
- [ ] GRAVEL
- [ ] OTHER

EQUIPMENT USED FOR COLLECTION:
- [x] GRAVITY CORER
- [ ] TULIP BULB PLANTER
- [ ] S.S. HAND SPOON
- [x] ALUMINUM PAN
- [ ] PLASTIC SCOOP
- [ ] OTHER

DECONTAMINATION FLUIDS USED:
- [x] POTABLE WATER
- [ ] POTABLE WATER WITH HIGH PRESSURE
- [ ] OTHER

SAMPLE OBSERVATIONS: [ ] ODOR [ ] COLORED

AMBIENT AIR: 0.0 PPM

SAMPLE LOCATION: 0.0 PPM

pH: — UNITS

ANALYTICAL PARAMETERS

	METHOD NUMBER	PRESERVATION METHOD	VOLUME REQUIRED	SAMPLE COLLECTED	SAMPLE BOTTLE ID NUMBERS
[x] PP METALS (SPECIFIED BELOW)		4 DEG C	DC	[x]	1057
[ ] AL	JS12	4 DEG C		[ ]	
[ ] CA		4 DEG C		[ ]	
[ ] NA		4 DEG C		[ ]	
[ ] CD		4 DEG C		[ ]	
[ ] CR		4 DEG C		[ ]	
[ ] HG	Y9	4 DEG C		[ ]	
[ ] PB	JD21	4 DEG C		[ ]	
[ ] TCLP METALS (SPECIFIED BELOW)		4 DEG C		[ ]	
[ ] NIT	KF17	4 DEG C		[ ]	
[ ] SO4	KT07	4 DEG C		[ ]	
[ ] NH3N2	USEPA 350.2	4 DEG C		[ ]	
[ ] TOC	USEPA CE-81-1	4 DEG C		[ ]	
[ ] PH	SW846 METHOD 9045	4 DEG C		[ ]	
[x] * VOC	LM23	4 DEG C	DC (MR)	[x]	1058 1061
[ ] * BN/A	LM25	4 DEG C		[ ]	
[ ] PG	LW27	4 DEG C		[ ]	
[ ] PAM	LN08	4 DEG C		[ ]	
[x] DNT	LW23	4 DEG C	DC	[x]	1059

NOTES (LOCATION SKETCH)

* THESE ARE DATACHEM METHODS. EA METHODS: VOC LM17, LM26
B/NA LM20

PP METALS (PRIORITY POLLUTANT): AG, AS, BE, CD, CR, CU, PB, HG, NI, SB, SE, TL, ZN.
JS12, B9, JD21, JD20, Y9.

TCLP METALS: CD, CR, HG, PB.
JS12, 40 CFR 261.24

DC: 24 bottles (MR)
~~EA: 2 bottles~~

SIGNATURE: VM/MR

RECEIVED BY: Nancy E. Roka

ABB ENVIRONMENTAL SERVICES, INC

PAGE 1 OF 6

DATA RECORD – SEDIMENT

FIELD SAMPLING NUMBER: R913300dd

PROJECT: USATHAMA-BAAP

SITE TYPE: DTCH

SAMPLING DATE: 10.3.91

TE ID: RFS-91-33

JOB NUMBER: 6853-04

FILE NAME: CSO

LOCATION / ACTIVITY: START: 1555 END: 1600

PROGRAM: C

WEATHER: cloudy, 60s rain

SEDIMENT DATA

DEPTH OF SEDIMENT SAMPLE: 0-3 IN

TYPE OF SAMPLE COLLECTED: [X] DISCRETE [ ] COMPOSITE

TYPE OF SEDIMENT: [ ] CLAY [X] SAND [X] ORGANIC [X] SILT [ ] GRAVEL [ ] OTHER

EQUIPMENT USED FOR COLLECTION: [ ] GRAVITY CORER [X] TULIP BULB PLANTER [ ] S.S. HAND SPOON [X] ALUMINUM PAN [ ] PLASTIC SCOOP [ ] OTHER

DECONTAMINATION FLUIDS USED: [X] POTABLE WATER [ ] POTABLE WATER WITH HIGH PRESSURE [ ] OTHER

SAMPLE OBSERVATIONS: [ ] ODOR [ ] COLORED

AMBIENT AIR: — PPM

SAMPLE LOCATION: — PPM

pH: — UNITS

ANALYTICAL PARAMETERS

	METHOD NUMBER	PRESERVATION METHOD	VOLUME REQUIRED	SAMPLE COLLECTED	SAMPLE BOTTLE ID NUMBERS
[ ] PP METALS (SPECIFIED BELOW)		4 DEG C			
[ ] AL	JS12	4 DEG C			
[ ] CA		4 DEG C			
[ ] NA		4 DEG C			
[ ] CD		4 DEG C			
[ ] CR		4 DEG C			
[ ] HG	Y9	4 DEG C			
[ ] PB	JD21	4 DEG C			
[ ] TCLP METALS (SPECIFIED BELOW)		4 DEG C			
[ ] NIT	KF17	4 DEG C			
	KT07	4 DEG C			
	USEPA 350.2	4 DEG C			
	USEPA CE-81-1	4 DEG C			
[ ] pH	SW846 METHOD 9045	4 DEG C			
[ ] VOC	LM23	4 DEG C			
[ ] BN/A	LM25	4 DEG C		DC [X]	2031
[ ] NG	LW27	4 DEG C			
[ ] NAM	LN08	4 DEG C			
[ ] DNT	LW23	4 DEG C			

NOTES

LOCATION SKETCH)

* THESE ARE DATACHEM METHODS. EA METHODS: VOC LM17, LM26
B/NA LM20

PP METALS (PRIORITY POLLUTANT): AG, AS, BE, CD, CR, CU, PB, HG, NI, SB, SE, TL, ZN.
JS12, B9, JD21, JD20, Y9.

TCLP METALS: CD, CR, HG, PB.
JS12, 40 CFR 261.24

No TIF available

DC: 1 bottle

* Resampled for missed hold time

SIGNATURE: [illegible]

RECEIVED BY: [illegible]

ABB ENVIRONMENTAL SERVICES, INC

FIELD DATA RECORD - SEDIMENT

FIELD SAMPLING NUMBER: R91340000

PROJECT: USATHAMA-BAP

SITE ID: RPS-91-34

SITE TYPE: DTCH

JOB NUMBER: 6853-04

PROGRAM: C

LOCATION ACTIVITY: START: 1430 END: 1435

SAMPLING DATE: 9.18.91

FILE NAME: CSO

WEATHER: prt. Sunny, °40's Windy

SEDIMENT DATA

DEPTH OF SEDIMENT SAMPLE: 0-4 IN

TYPE OF SAMPLE COLLECTED: [x] DISCRETE [ ] COMPOSITE

TYPE OF SEDIMENT:
- [x] CLAY
- [x] SAND little
- [x] ORGANIC
- [x] SILT
- [x] GRAVEL trace
- [ ] OTHER

EQUIPMENT USED FOR COLLECTION:
- [x] GRAVITY CORER
- [x] TULIP BULB PLANTER
- [x] S.S. HAND SPOON
- [x] ALUMINUM PAN
- [ ] PLASTIC SCOOP
- [ ] OTHER

DECONTAMINATION FLUIDS USED:
- [x] POTABLE WATER
- [ ] POTABLE WATER WITH HIGH PRESSURE
- [ ] OTHER

SAMPLE OBSERVATIONS: [ ] ODOR [ ] COLORED

AMBIENT AIR: 0.0 PPM

SAMPLE LOCATION: 0.0 PPM

pH: — UNITS

ANALYTICAL PARAMETERS

		METHOD NUMBER	PRESERVATION METHOD	VOLUME REQUIRED	SAMPLE COLLECTED	SAMPLE BOTTLE ID NUMBERS
[ ]	PP METALS (SPECIFIED BELOW)		4 DEG C			
[ ]	AL	JS12	4 DEG C			
[ ]	CA		4 DEG C			
[ ]	NA		4 DEG C			
[x]	CD		4 DEG C		DC	2026
[x]	CR		4 DEG C			
[x]	HG	Y9	4 DEG C			
[x]	PB	JD21	4 DEG C			2028
[x]	TCLP METALS (SPECIFIED BELOW)		4 DEG C			2027
[x]	NIT	KF17	4 DEG C			2027
[x]	SO4	KT07	4 DEG C			
[ ]	NH3N2	USEPA 350.2	4 DEG C			
[ ]	TOC	USEPA CE-81-1	4 DEG C			
[ ]	PH	SW846 METHOD 9045	4 DEG C			
* [ ]	VOC	LM23	4 DEG C		EA	2029
* [x]	BN/A	LM25	4 DEG C			2030
[x]	NG	LW27	4 DEG C		DC	2031
[x]	NAM	LW08	4 DEG C			2032
[x]	DNT	LW23	4 DEG C			

NOTES (LOCATION SKETCH)

* THESE ARE DATACHEM METHODS. EA METHODS: VOC LM17, LM26; B/NA LM20

PP METALS (PRIORITY POLLUTANT): AG, AS, BE, CD, CR, CU, PB, HG, NI, SB, SE, TL, ZN. JS12, B9, JD21, JD20, Y9.

TCLP METALS: CD, CR, HG, PB. JS12, 40 CFR 261.24

DC: 3 bottles
EA: 1 bottle

SIGNATURE: VM/NR

RECEIVED BY: Nancy E. Rotta

ABB ENVIRONMENTAL SERVICES, INC

PAGE 5 OF 6

DATA RECORD - SEDIMENT

FIELD SAMPLING NUMBER: R9134C00

PROJECT: USATHAMA-BAAP

SITE TYPE: DITCH

SAMPLING DATE: 10.3.91

TE ID: RFS-91-34

JOB NUMBER: 6853-04

FILE NAME: CSO

LOCATION TIVITY

START: 1615 END: 1620

PROGRAM: C

WEATHER: cloudy 50's

SEDIMENT DATA

DEPTH OF EDIMENT SAMPLE: 1-5 IN

TYPE OF SAMPLE OLLECTED: [x] DISCRETE [ ] COMPOSITE

TYPE OF SEDIMENT:
- [ ] CLAY
- [x] SAND
- [x] ORGANIC
- [ ] SILT
- [ ] GRAVEL
- [ ] OTHER

EQUIPMENT USED FOR COLLECTION:
- [ ] GRAVITY CORER
- [x] TULIP BULB PLANTER
- [ ] S.S. HAND SPOON
- [x] ALUMINUM PAN
- [ ] PLASTIC SCOOP
- [ ] OTHER

DECONTAMINATION FLUIDS USED
- [x] POTABLE WATER
- [ ] POTABLE WATER WITH HIGH PRESSURE
- [ ] OTHER

SAMPLE OBSERVATIONS: [ ] ODOR [ ] COLORED [ ]

AMBIENT AIR: — PPM

SAMPLE LOCATION: — PPM

pH: — UNITS

ANALYTICAL PARAMETERS

	METHOD NUMBER	PRESERVATION W	VOLUME REQUIRED	SAMPLE COLLECTED	SAMPLE BOTTLE ID NUMBERS
[ ] PP METALS (SPECIFIED BELOW)		4 F			
[ ] AL	JS12	4 DE			
[ ] CA		4 DEG C			
[ ] NA		4 DEG C			
[ ] CD		4 DEG C			
[ ] CR		4 DEG C			
[ ] HG	Y9	4 DEG C			
[ ] PB	JD21	4 DEG C			
[ ] TCLP METALS (SPECIFIED BELOW)		4 DEG C			
[ ] NIT	KF17	4 DEG C			
[ ]	KT07	4 DEG C			
[ ]	USEPA 350.2	4 DEG C			
[ ]	USEPA CE-81-1	4 DEG C			
[ ] pH	SW846 METHOD 9045	4 DEG C			
[ ] VOC	LM23	4 DEG C		DC [x]	J822
[ ] BN/A	LM25	4 DEG C			
[ ] NG	LW27	4 DEG C			
[ ] NAM	LN08	4 DEG C			
[ ] DNT	LW23	4 DEG C			

NOTES
OCATION SKETCH)

* THESE ARE DATACHEM METHODS. EA METHODS: VOC LM17, LM26
B/NA LM20

PP METALS (PRIORITY POLLUTANT): AG, AS, BE, CD, CR, CU, PB, HG, NI, SB, SE, TL, ZN.
JS12, B9, JD21, JD20, Y9.

TCLP METALS: CD, CR, HG, PB.
JS12, 40 CFR 261.24

*Resampled for missed hold time

DC: 1 bottle

SIGNATURE: [illegible]

RECEIVED BY: [illegible]

ABB ENVIRONMENTAL SERVICES, INC

FIELD DATA RECORD – SEDIMENT

FIELD SAMPLING NUMBER: R91350000

PROJECT: USATHAMA-BAAP

SITE ID: RPS-91-35

SITE TYPE: DTCH

JOB NUMBER: 6853-04

PROGRAM: C

LOCATION ACTIVITY: START: 1425 END: 1430

SAMPLING DATE: 9.18.91

FILE NAME: CSO

WEATHER: prt. sunny, °40s windy

SEDIMENT DATA

DEPTH OF SEDIMENT SAMPLE: 0-6 IN

TYPE OF SAMPLE COLLECTED: [x] DISCRETE [ ] COMPOSITE

TYPE OF SEDIMENT: [x] CLAY [x] SAND [x] ORGANIC [x] SILT [ ] GRAVEL [ ] OTHER

EQUIPMENT USED FOR COLLECTION: [x] GRAVITY CORER [x] TULIP BULB PLANTER [x] S.S. HAND SPOON [x] ALUMINUM PAN [ ] PLASTIC SCOOP [ ] OTHER

DECONTAMINATION FLUIDS USED: [x] POTABLE WATER [ ] POTABLE WATER WITH HIGH PRESSURE [ ] OTHER

SAMPLE OBSERVATIONS: [ ] ODOR [ ] COLORED

AMBIENT AIR: 0.0 PPM

SAMPLE LOCATION: 0.0 PPM

pH: – UNITS

ANALYTICAL PARAMETERS

	METHOD NUMBER	PRESERVATION METHOD	VOLUME REQUIRED	SAMPLE COLLECTED
[x] PP METALS (SPECIFIED BELOW)		4 DEG C		
[x] AL	JS12	4 DEG C		
[x] CA		4 DEG C		
[x] NA		4 DEG C		
[x] CD		4 DEG C		
[x] CR		4 DEG C		
[x] HG	Y9	4 DEG C		
[x] PB	JD21	4 DEG C		DC
[x] TCLP METALS (SPECIFIED BELOW)		4 DEG C		
[x] NIT	KF17	4 DEG C		
[x] SO4	KT07	4 DEG C		
[x] NH3N2	USEPA 350.2	4 DEG C		
[x] TOC	USEPA-CE-81-1	4 DEG C		
[x] pH	SW846 METHOD 9045	4 DEG C		
[x] * VOC	LM23	4 DEG C		EA
[x] BN/A	LM25	4 DEG C		DC
[x] HG	LW27	4 DEG C		
[x] NAM	LN08	4 DEG C		
[x] DNT	LW23	4 DEG C		

SAMPLE BOTTLE ID NUMBERS: 2047, 2049, 2048, 2050, 2051, 2052, 2053

NOTES (LOCATION SKETCH)

* THESE ARE DATACHEM METHODS. EA METHODS: VOC LM17, LM26; B/NA LM20

PP METALS (PRIORITY POLLUTANT): AG, AS, BE, CD, CR, CU, PB, HG, NI, SB, SE, TL, ZN. JS12, B9, JD21, JD20, Y9.

TCLP METALS: CD, CR, HG, PB. JS12, 40 CFR 261.24

DC: 3 bottles
EA: 1 bottle

SIGNATURE: VM/MK

RECEIVED BY: Nancy E. Rolla

ABB ENVIRONMENTAL SERVICES, INC

PAGE 4 OF 6

[illegible]ATA RECORD - SEDIMENT

FIELD SAMPLING NUMBER: R9135000

PROJECT: USATHAMA-BAAP

SITE TYPE: DTCH

SAMPLING DATE: 10.3.91

FILE NAME: CSO

[illegible]TE ID: RPS-91-35

JOB NUMBER: 6853-04

WEATHER: Cloudy, 60's

LOCATION [illegible]TIVITY: START: 1610 END: 1615

PROGRAM: C

SEDIMENT DATA

DEPTH OF [illegible]EDIMENT SAMPLE: 1-5 IN

TYPE OF SAMPLE [illegible]OLLECTED: [x] DISCRETE [ ] COMPOSITE

TYPE OF SEDIMENT:
- [ ] CLAY
- [x] SAND
- [x] ORGANIC
- [ ] SILT
- [ ] GRAVEL
- [ ] OTHER

EQUIPMENT USED FOR COLLECTION:
- [ ] GRAVITY CORER
- [x] TULIP BULB PLANTER
- [ ] S.S. HAND SPOON
- [x] ALUMINUM PAN
- [ ] PLASTIC SCOOP
- [ ] OTHER

DECONTAMINATION FLUIDS USED
- [x] POTABLE WATER
- [ ] POTABLE WATER WITH HIGH PRESSURE
- [ ] OTHER

SAMPLE OBSERVATIONS: [ ] ODOR [ ] COLORED

AMBIENT AIR: — PPM

SAMPLE LOCATION: — PPM

pH: — UNITS

[illegible]NALYTICAL PARAMETERS

	METHOD NUMBER	PRESERVATION METHOD	VOLUME REQUIRED	SAMPLE COLLECTED	SAMPLE BOTTLE ID NUMBERS
PP METALS (SPECIFIED BELOW).		4 DEG C			
AL	JS12	4 DEG C			
CA		4 DEG C			
NA		4 DEG C			
CD		4 DEG C			
CR		4 DEG C			
HG	Y9	4 DEG C			
PB	JD21	4 DEG C			
TCLP METALS (SPECIFIED BELOW)		4 DEG C			
NI[illegible]	KF17	4 DEG C			
[illegible]	KT07	4 DEG C			
[illegible]	USEPA 350.2	4 DEG C			
[illegible]	USEPA CE-81-1	4 DEG C			
pH	SW846 METHOD 9045	4 DEG C			
VOC	LM23	4 DEG C			
BN/A	LM25	4 DEG C		DC ✓	2853
NG	LW27	4 DEG C			
NAM	LN08	4 DEG C			
DNT	LW23	4 DEG C			

NOTES
[illegible]CATION SKETCH)

* THESE ARE DATACHEM METHODS. EA METHODS: VOC LM17, LM26
B/NA LM20

PP METALS (PRIORITY POLLUTANT): AG, AS, BE, CD, CR, CU, PB, HG, NI, SB, SE, TL, ZN.
JS12, B9, JD21, JD20, Y9.

TCLP METALS: CD, CR, HG, PB.
JS12, 40 CFR 261.24

DC: 1 bottle

* Resampled for missed hold time

SIGNATURE: [illegible]

RECEIVED BY: [illegible] E Rofra

ABB ENVIRONMENTAL SERVICES, INC

FIELD DATA RECORD - SEDIMENT

FIELD SAMPLING NUMBER: R91360000

PROJECT: USATHAMA-BAAP

SITE ID: RPS-91-36

SITE TYPE: DTCH

JOB NUMBER: 6853-04

PROGRAM: C

LOCATION ACTIVITY: START: 1445 END: 1455

SAMPLING DATE: 9.18.91

FILE NAME: CSO

WEATHER: Sunny, °40's windy

SEDIMENT DATA

DEPTH OF SEDIMENT SAMPLE: 0-6 IN

TYPE OF SAMPLE COLLECTED: [x] DISCRETE [ ] COMPOSITE

TYPE OF SEDIMENT:
- [x] CLAY
- [x] SAND
- [x] ORGANIC
- [ ] SILT
- [ ] GRAVEL
- [ ] OTHER

EQUIPMENT USED FOR COLLECTION:
- [ ] GRAVITY CORER
- [x] TULIP BULB PLANTER
- [ ] S.S. HAND SPOON
- [x] ALUMINUM PAN
- [ ] PLASTIC SCOOP
- [ ] OTHER

DECONTAMINATION FLUIDS USED:
- [x] POTABLE WATER
- [ ] POTABLE WATER WITH HIGH PRESSURE
- [ ] OTHER

SAMPLE OBSERVATIONS: [ ] ODOR [ ] COLORED

AMBIENT AIR: 0.0 PPM

SAMPLE LOCATION: 0.0 PPM

pH: — UNITS

ANALYTICAL PARAMETERS

	METHOD NUMBER	PRESERVATION METHOD	VOLUME REQUIRED	SAMPLE COLLECTED	SAMPLE BOTTLE ID NUMBERS
[ ] PP METALS (SPECIFIED BELOW)		4 DEG C			
[ ] AL	JS12	4 DEG C			
[ ] CA		4 DEG C			
[ ] NA		4 DEG C			
[x] CD		4 DEG C			2068
[ ] CR		4 DEG C			
[ ] MG	Y9	4 DEG C			
[ ] PB	JD21	4 DEG C		DC	2070
[ ] TCLP METALS (SPECIFIED BELOW)		4 DEG C			2069
[ ] NIT	XF17	4 DEG C			
[ ] SO4	KT07	4 DEG C			
[ ] NH3N2	USEPA 350.2	4 DEG C			
[ ] TOC	USEPA CE-81-1	4 DEG C			
[ ] pH	SW846 METHOD 9045	4 DEG C			
* [ ] VOC	LM23	4 DEG C		EA	2071
* [ ] BN/A	LM25	4 DEG C			2072
[ ] NG	LW27	4 DEG C		DC	2073
[ ] NAM	LM08	4 DEG C			2074
[ ] DNT	LW23	4 DEG C			

NOTES (LOCATION SKETCH)

* THESE ARE DATACHEM METHODS. EA METHODS: VOC LM17, LM26; B/NA LM20

PP METALS (PRIORITY POLLUTANT): AG, AS, BE, CD, CR, CU, PB, HG, NI, SB, SE, TL, ZN. JS12, B9, JD21, JD20, Y9.

TCLP METALS: CD, CR, HG, PB. JS12, 40 CFR 261.24

DC: 3 bottles
EA: 1 bottle

SIGNATURE: MR/VM

RECEIVED BY: Nancy E. Rolla

ABB ENVIRONMENTAL SERVICES, INC

PAGE 6 OF 5

DATA RECORD – SEDIMENT

FIELD SAMPLING NUMBER: R91360000

PROJECT: USATHAMA-BAAP

SITE TYPE: DTCL

SAMPLING DATE: 10.3.91

STATION ID: RPS-91-36

JOB NUMBER: 6853-04

FILE NAME: CSO

LOCATION ACTIVITY: START: 1620 END: 1625

PROGRAM: C

WEATHER: cloudy. 60's

SEDIMENT DATA

DEPTH OF SEDIMENT SAMPLE: 1-5 IN

TYPE OF SAMPLE COLLECTED: [x] DISCRETE [ ] COMPOSITE

TYPE OF SEDIMENT: [x] CLAY [x] SAND [x] ORGANIC [ ] SILT [ ] GRAVEL [ ] OTHER

EQUIPMENT USED FOR COLLECTION: [ ] GRAVITY CORER [x] TULIP BULB PLANTER [ ] S.S. HAND SPOON [x] ALUMINUM PAN [ ] PLASTIC SCOOP [ ] OTHER

DECONTAMINATION FLUIDS USED: [x] POTABLE WATER [ ] POTABLE WATER WITH HIGH PRESSURE [ ] OTHER

SAMPLE OBSERVATIONS: [ ] ODOR [ ] COLORED [ ]

AMBIENT AIR: — PPM

SAMPLE LOCATION: — PPM

pH: — UNITS

ANALYTICAL PARAMETERS

	METHOD NUMBER	PRESERVATION METHOD	VOLUME REQUIRED	SAMPLE COLLECTED	SAMPLE BOTTLE ID NUMBERS
[ ] PP METALS (SPECIFIED BELOW)		4 DEG C			
[ ] AL	JS12	4 DEG C			
[ ] CA	|	4 DEG C			
[ ] NA	|	4 DEG C			
[ ] CD	|	4 DEG C			
[ ] CR	|	4 DEG C			
[ ] HG	Y9	4 DEG C			
[ ] PB	JD21	4 DEG C			
[ ] TCLP METALS (SPECIFIED BELOW)		4 DEG C			
[ ] NIT	KF17	4 DEG C			
[ ] [redacted]	KT07	4 DEG C			
[ ] [redacted]	USEPA 350.2	4 DEG C			
[ ] [redacted]	USEPA CE-81-1	4 DEG C			
[ ] pH	SW846 METHOD 9045	4 DEG C			
[ ] VOC	LM23	4 DEG C		DC	8541
[ ] BN/A	LM25	4 DEG C			
[ ] NG	LW27	4 DEG C			
[ ] NAM	LM08	4 DEG C			
[ ] DNT	LW23	4 DEG C			

NOTES

(LOCATION SKETCH)

* THESE ARE DATACHEM METHODS. EA METHODS: VOC LM17, LM26
B/NA LM20

PP METALS (PRIORITY POLLUTANT): AG, AS, BE, CD, CR, CU, PB, HG, NI, SB, SE, TL, ZN.
JS12, B9, JD21, JD20, Y9.

TCLP METALS: CD, CR, HG, PB.
JS12, 40 CFR 261.24

DC: 1 bottles

* Resampled for missed hold time

SIGNATURE: [signature]

RECEIVED BY: [illegible] E Potts

ABB ENVIRONMENTAL SERVICES, INC

PAGE 1 OF 20

FIELD DATA RECORD - SEDIMENT

FIELD SAMPLING NUMBER: R91370000

PROJECT: USATHAMA-BAAP

SITE ID: RFS-91-37

SITE TYPE: DTCH

JOB NUMBER: 6853-04

PROGRAM: C

LOCATION ACTIVITY: START: 0820 END: 0830

SAMPLING DATE: 9.19.91

FILE NAME: CSO

WEATHER: Sunny, 40's breezy

SEDIMENT DATA

DEPTH OF SEDIMENT SAMPLE: 1 - 5 IN

TYPE OF SAMPLE COLLECTED: [x] DISCRETE [ ] COMPOSITE

TYPE OF SEDIMENT:
- [ ] CLAY
- [x] SAND
- [x] ORGANIC
- [ ] SILT
- [ ] GRAVEL
- [ ] OTHER

EQUIPMENT USED FOR COLLECTION:
- [ ] GRAVITY CORER
- [x] TULIP BULB PLANTER
- [ ] S.S. HAND SPOON
- [x] ALUMINUM PAN
- [ ] PLASTIC SCOOP
- [ ] OTHER

DECONTAMINATION FLUIDS USED
- [x] POTABLE WATER
- [ ] POTABLE WATER WITH HIGH PRESSURE
- [ ] OTHER

SAMPLE OBSERVATIONS: [ ] ODOR [ ] COLORED

AMBIENT AIR: 0.0 PPM

SAMPLE LOCATION: 0.0 PPM

pH: NA UNITS

ANALYTICAL PARAMETERS

	METHOD NUMBER	PRESERVATION METHOD	VOLUME REQUIRED	SAMPLE COLLECTED
[ ] PP METALS (SPECIFIED BELOW)		4 DEG C		
[ ] AL	JS12	4 DEG C		
[ ] CA		4 DEG C		
[ ] NA		4 DEG C		
[x] CD		4 DEG C		DC
[x] CR		4 DEG C		DC
[x] HG	Y9	4 DEG C		DC
[x] PB	JD21	4 DEG C		DC
[ ] TCLP METALS (SPECIFIED BELOW)		4 DEG C		
[x] NIT	KF17	4 DEG C		DC
[x] SO4	KT07	4 DEG C		DC
[ ] NH3N2	USEPA 350.2	4 DEG C		
[ ] TOC	USEPA CE-81-1	4 DEG C		
[ ] pH	SW846 METHOD 9045	4 DEG C		
* [ ] VOC	LM23	4 DEG C		EA
* [x] BN/A	LM25	4 DEG C		EA
[x] NG	LW27	4 DEG C		EA
[x] NAM	LN08	4 DEG C		EA
[x] DNT	LW23	4 DEG C		EA

SAMPLE BOTTLE ID NUMBERS: 2089, 2091, 2090, 2092, 2093, 2094, 2095

NOTES (LOCATION SKETCH)

* THESE ARE DATACHEM METHODS. EA METHODS: VOC LM17, LM26
B/NA LM20

PP METALS (PRIORITY POLLUTANT): AG, AS, BE, CD, CR, CU, PB, HG, NI, SB, SE, TL, ZN.
JS12, B9, JD21, JD20, Y9.

TCLP METALS: CD, CR, HG, PB.
JS12, 40 CFR 261.24

DC: 3 bottles
EA: 1 bottle

SIGNATURE: VM/NR

RECEIVED BY: Nancy E. Rotta

ABB ENVIRONMENTAL SERVICES, INC

[redacted] DATA RECORD – SEDIMENT

FIELD SAMPLING NUMBER: R913800 00

PROJECT: USATHAMA-BAAP

SITE ID: RPS-91-38

LOCATION ACTIVITY: START: 0835 END: 0840

SITE TYPE: DTCH

JOB NUMBER: 6853-04

PROGRAM: C

SAMPLING DATE: 9.19.91

FILE NAME: CSO

WEATHER: sunny, ~~40~~ 80's

SEDIMENT DATA

DEPTH OF SEDIMENT SAMPLE: 0-6 IN

TYPE OF SAMPLE COLLECTED: ☑ DISCRETE ☐ COMPOSITE

TYPE OF SEDIMENT:
- ☐ CLAY
- ☑ SAND
- ☐ ORGANIC
- ☐ SILT
- ☐ GRAVEL
- ☐ OTHER

EQUIPMENT USED FOR COLLECTION:
- ☐ GRAVITY CORER
- ☑ TULIP BULB PLANTER
- ☐ S.S. HAND SPOON
- ☑ ALUMINUM PAN
- ☐ PLASTIC SCOOP
- ☐ OTHER

DECONTAMINATION FLUIDS USED:
- ☑ POTABLE WATER
- ☐ POTABLE WATER WITH HIGH PRESSURE
- ☐ OTHER

SAMPLE OBSERVATIONS: ☐ ODOR ☐ COLORED

AMBIENT AIR: 0.6 PPM

SAMPLE LOCATION: 0.0 PPM

pH: — UNITS

ANALYTICAL PARAMETERS

	METHOD NUMBER	PRESERVATION METHOD	VOLUME REQUIRED	SAMPLE COLLECTED
☐ PP METALS (SPECIFIED BELOW)		4 DEG C		
☑ AL	JS12	4 DEG C		
☑ CA		4 DEG C		
☑ NA		4 DEG C		
☑ CD		4 DEG C		
☑ CR		4 DEG C		
☑ HG	Y9	4 DEG C		
☑ PB	JD21	4 DEG C		
☐ TCLP METALS (SPECIFIED BELOW)		4 DEG C		
☐ NIT	KF17	4 DEG C		
☐ [redacted]	KT07	4 DEG C		
	USEPA 350.2	4 DEG C		
	USEPA CE-81-1	4 DEG C		
☐ pH	SW846 METHOD 9045	4 DEG C		
☐ VOC	LM23	4 DEG C		EA
☑ BN/A	LM25	4 DEG C		DC
☑ HG	LW27	4 DEG C		
☑ NAM	LN08	4 DEG C		
☑ DNT	LW23	4 DEG C		

SAMPLE BOTTLE ID NUMBERS

DC: 2110, 2112, 2114

EA: 2113, 2115, 2116

NOTES (LOCATION SKETCH)

* THESE ARE DATACHEM METHODS. EA METHODS: VOC LM17, LM26
B/NA LM20

PP METALS (PRIORITY POLLUTANT): AG, AS, BE, CD, CR, CU, PB, HG, NI, SB, SE, TL, ZN. JS12, B9, JD21, JD20, Y9.

TCLP METALS: CD, CR, HG, PB. JS12, 40 CFR 261.24

DC: 3 bottles

EA: 1 bottle

SIGNATURE: VM/NR

RECEIVED BY: Nancy E. Rotka

ABB ENVIRONMENTAL SERVICES, INC

FIELD DATA RECORD – SEDIMENT

FIELD SAMPLING NUMBER: R91390000

PROJECT: USATHAMA-BAAP

SITE ID: RPS-91-39

LOCATION ACTIVITY: START: 0845 END: 0850

SITE TYPE: DTCH

JOB NUMBER: 6853-04

PROGRAM: C

SAMPLING DATE: 9.19.91

FILE NAME: CSO

WEATHER: Sunny, °40's breezy

SEDIMENT DATA

DEPTH OF SEDIMENT SAMPLE: 0-5 IN

TYPE OF SAMPLE COLLECTED: [x] DISCRETE [ ] COMPOSITE

TYPE OF SEDIMENT:
- [ ] CLAY
- [ ] SAND
- [x] ORGANIC
- [x] SILT trace
- [ ] GRAVEL
- [ ] OTHER

EQUIPMENT USED FOR COLLECTION:
- [x] GRAVITY CORER
- [ ] TULIP BULB PLANTER
- [x] S.S. HAND SPOON
- [ ] ALUMINUM PAN
- [ ] PLASTIC SCOOP
- [ ] OTHER

DECONTAMINATION FLUIDS USED:
- [x] POTABLE WATER
- [ ] POTABLE WATER WITH HIGH PRESSURE
- [ ] OTHER

SAMPLE OBSERVATIONS: [ ] ODOR [ ] COLORED

AMBIENT AIR: 0.0 PPM

SAMPLE LOCATION: 0.0 PPM

pH: — UNITS

ANALYTICAL PARAMETERS

	METHOD NUMBER	PRESERVATION METHOD	VOLUME REQUIRED	SAMPLE COLLECTED
[ ] PP METALS (SPECIFIED BELOW)		4 DEG C		
[ ] AL	JS12	4 DEG C		
[ ] CA		4 DEG C		
[ ] NA		4 DEG C		
[x] CD		4 DEG C		DC
[x] CR		4 DEG C		DC
[x] HG	Y9	4 DEG C		DC
[x] PB	JD21	4 DEG C		DC
[ ] TCLP METALS (SPECIFIED BELOW)		4 DEG C		
[x] NIT	KF17	4 DEG C		DC
[x] SO4	KT07	4 DEG C		DC
[ ] NH3N2	USEPA 350.2	4 DEG C		
[ ] TOC	USEPA CE-81-1	4 DEG C		
[ ] pH	SW846 METHOD 9045	4 DEG C		
* [ ] VOC	LM23	4 DEG C		EA
* [ ] BN/A	LM25	4 DEG C		EA
[x] NG	LW27	4 DEG C		DC
[x] NAM	LN08	4 DEG C		DC
[x] DNT	LW23	4 DEG C		DC

SAMPLE BOTTLE ID NUMBERS: 2131, 2133, 2132, 2134, 2135, 2136, 2137

NOTES (LOCATION SKETCH)

* THESE ARE DATACHEM METHODS. EA METHODS: VOC LM17, LM26; B/NA LM20

PP METALS (PRIORITY POLLUTANT): AG, AS, BE, CD, CR, CU, PB, HG, NI, SB, SE, TL, ZN. JS12, B9, JD21, JD20, Y9.

TCLP METALS: CD, CR, HG, PB. JS12, 40 CFR 261.24

DC: 3 bottles

EA: 1 bottle

SIGNATURE: VM/ME

RECEIVED BY: Nancy E. Rotsa

ABB ENVIRONMENTAL SERVICES, INC

[illegible] DATA RECORD – SEDIMENT

FIELD SAMPLING NUMBER: R9140000

PROJECT: USATHAMA-BAAP

SITE TYPE: DTCH

SAMPLING DATE: 9.19.91

SITE ID: RPS-91-40

JOB NUMBER: 6853-04

FILE NAME: CSO

WEATHER: Sunny, 40's breezy

LOCATION ACTIVITY: START: 0855 END: 0900

PROGRAM: C

SEDIMENT DATA

DEPTH OF SEDIMENT SAMPLE: 0-6 IN

TYPE OF SAMPLE COLLECTED: [x] DISCRETE [ ] COMPOSITE

TYPE OF SEDIMENT:
- [ ] CLAY
- [x] SAND
- [ ] ORGANIC
- [x] SILT
- [ ] GRAVEL
- [ ] OTHER

EQUIPMENT USED FOR COLLECTION:
- [ ] GRAVITY CORER
- [x] TULIP BULB PLANTER
- [ ] S.S. HAND SPOON
- [x] ALUMINUM PAN
- [ ] PLASTIC SCOOP
- [ ] OTHER

DECONTAMINATION FLUIDS USED
- [x] POTABLE WATER
- [ ] POTABLE WATER WITH HIGH PRESSURE
- [ ] OTHER

SAMPLE OBSERVATIONS: [ ] ODOR [ ] COLORED [ ]

AMBIENT AIR: 0.0 PPM

SAMPLE LOCATION: 0.0 PPM

pH: — UNITS

ANALYTICAL PARAMETERS

	METHOD NUMBER	PRESERVATION METHOD	VOLUME REQUIRED	SAMPLE COLLECTED	SAMPLE BOTTLE ID NUMBERS
[ ] PP METALS (SPECIFIED BELOW)		4 DEG C		[ ]	
[ ] AL	JS12	4 DEG C		[ ]	
[ ] CA		4 DEG C		[ ]	
[ ] NA		4 DEG C		[ ]	
[x] CD		4 DEG C		[x]	2152
[x] CR		4 DEG C		[x]	
[x] HG	Y9	4 DEG C		[x]	
[x] PB	JD21	4 DEG C		[x]	
[x] TCLP METALS (SPECIFIED BELOW)		4 DEG C		[x]	2154
[x] NIT	KF17	4 DEG C		[x]	2153
[illegible]	KT07	4 DEG C		[x]	
[illegible]	USEPA 350.2	4 DEG C		[ ]	
[illegible]	USEPA CE-81-1	4 DEG C		[ ]	
[ ] pH	SW846 METHOD 9045	4 DEG C		[ ]	
[ ] VOC	LM23	4 DEG C		[ ]	
[x] BN/A	LM25	4 DEG C		[x]	2155
[x] NG	LW27	4 DEG C		[x]	2156
[x] NAM	LN08	4 DEG C		[x]	2157
[x] DNT	LW23	4 DEG C		[x]	2158
[ ]				[ ]	
[ ]				[ ]	

DC

EA

DC

NOTES

LOCATION SKETCH)

* THESE ARE DATACHEM METHODS. EA METHODS: VOC LM17, LM26
B/NA LM20

PP METALS (PRIORITY POLLUTANT): AG, AS, BE, CD, CR, CU, PB, HG, NI, SB, SE, TL, ZN.
JS12, B9, JD21, JD20, Y9.

TCLP METALS: CD, CR, HG, PB.
JS12, 40 CFR 261.24

DC: 3 bottles
EA: 1 bottle

SIGNATURE: VM/MR

RECEIVED BY: Nancy E Rofra

ABB ENVIRONMENTAL SERVICES, INC

FIELD DATA RECORD – SEDIMENT

FIELD SAMPLING NUMBER: RA14-000

PROJECT: USATHAMA-BAAP

SITE ID: RPS-91-41

LOCATION ACTIVITY: START: 0905 END: 0910

SITE TYPE: DITCH

JOB NUMBER: 6853-04

PROGRAM: C

SAMPLING DATE: 9.19.91

FILE NAME: CSO

WEATHER: Sunny, °40's Breezy

SEDIMENT DATA

DEPTH OF SEDIMENT SAMPLE: 1-5 IN

TYPE OF SAMPLE COLLECTED: ☑ DISCRETE ☐ COMPOSITE

TYPE OF SEDIMENT:
- ☑ CLAY
- ☑ SAND
- ☑ ORGANIC
- ☑ SILT
- ☐ GRAVEL
- ☐ OTHER

EQUIPMENT USED FOR COLLECTION:
- ☐ GRAVITY CORER
- ☐ TULIP BULB PLANTER
- ☑ S.S. HAND SPOON
- ☐ ALUMINUM PAN
- ☐ PLASTIC SCOOP
- ☐ OTHER

DECONTAMINATION FLUIDS USED:
- ☑ POTABLE WATER
- ☐ POTABLE WATER WITH HIGH PRESSURE
- ☐ OTHER

SAMPLE OBSERVATIONS: ☐ ODOR ☐ COLORED

AMBIENT AIR: 0.0 PPM

SAMPLE LOCATION: 0.0 PPM

pH: — UNITS

ANALYTICAL PARAMETERS

	METHOD NUMBER	PRESERVATION METHOD	VOLUME REQUIRED	SAMPLE COLLECTED
☐ PP METALS (SPECIFIED BELOW)		4 DEG C		
☑ AL	JS12	4 DEG C		
☐ CA		4 DEG C		
☐ NA		4 DEG C		
☑ CD		4 DEG C		
☑ CR		4 DEG C		
☑ HG	Y9	4 DEG C		
☑ PB	JD21	4 DEG C		
☑ TCLP METALS (SPECIFIED BELOW)		4 DEG C		
☑ NIT	KF17	4 DEG C		
☑ SO4	KT07	4 DEG C		
☐ NH3N2	USEPA 350.2	4 DEG C		
☐ TOC	USEPA CE-81-1	4 DEG C		
☐ pH	SW846 METHOD 9045	4 DEG C		
* ☐ VOC	LM23	4 DEG C		
* ☐ BN/A	LM25	4 DEG C		
☑ NG	LW27	4 DEG C		
☑ NAM	LN08	4 DEG C		
☑ DNT	LW23	4 DEG C		

DC

EA

DC

SAMPLE BOTTLE ID NUMBERS: 2175, 2175, 2179, 2176, 2177, 2174

NOTES (LOCATION SKETCH)

* THESE ARE DATACHEM METHODS. EA METHODS: VOC LM17, LM26
B/NA LM20

PP METALS (PRIORITY POLLUTANT): AG, AS, BE, CD, CR, CU, PB, HG, NI, SB, SE, TL, ZN.
JS12, B9, JD21, JD20, Y9.

TCLP METALS: CD, CR, HG, PB.
JS12, 40 CFR 261.24

DC: 3 bottles
EA: 1 bottle

SIGNATURE: VM/MC

RECEIVED BY: Nancy E Rota

BB ENVIRONMENTAL SERVICES, INC

PAGE 6 OF 20

FIELD DATA RECORD – SEDIMENT

FIELD SAMPLING NUMBER: R91-4-2000

PROJECT: USATHAMA-BAAP

SITE ID: RPS-91-4-2

SITE TYPE: DTCH

JOB NUMBER: 6853-04

PROGRAM: C

SAMPLING DATE: 9.19.91

FILE NAME: CSO

WEATHER: Sunny, 70's breezy

LOCATION ACTIVITY: START: 0915 END: 0920

SEDIMENT DATA

DEPTH OF SEDIMENT SAMPLE: 1-4 IN

TYPE OF SAMPLE COLLECTED: [x] DISCRETE [ ] COMPOSITE

TYPE OF SEDIMENT:
- [x] CLAY
- [x] SAND
- [x] ORGANIC
- [ ] SILT
- [ ] GRAVEL
- [ ] OTHER

EQUIPMENT USED FOR COLLECTION:
- [x] GRAVITY CORER
- [ ] TULIP BULB PLANTER
- [x] S.S. HAND SPOON
- [x] ALUMINUM PAN
- [ ] PLASTIC SCOOP
- [ ] OTHER

DECONTAMINATION FLUIDS USED:
- [x] POTABLE WATER
- [ ] POTABLE WATER WITH HIGH PRESSURE
- [ ] OTHER

SAMPLE OBSERVATIONS: [ ] ODOR [ ] COLORED

AMBIENT AIR: 0.0 PPM

SAMPLE LOCATION: 0.0 PPM

pH: — UNITS

ANALYTICAL PARAMETERS

	METHOD NUMBER	PRESERVATION METHOD	VOLUME REQUIRED	SAMPLE COLLECTED
[ ] PP METALS (SPECIFIED BELOW)		4 DEG C		
[ ] AL	JS12	4 DEG C		
[ ] CA		4 DEG C		
[x] NA		4 DEG C		
[x] CD		4 DEG C		
[x] CR		4 DEG C		
[x] HG	Y9	4 DEG C		
[x] PB	JD21	4 DEG C		
[x] TCLP METALS (SPECIFIED BELOW)		4 DEG C		DC
[ ] NIT	KF17	4 DEG C		
[ ] SO4	KT07	4 DEG C		
[ ] NH3N2	USEPA 350.2	4 DEG C		
[ ] TOC	USEPA CE-81-1	4 DEG C		
[ ] pH	SW846 METHOD 9045	4 DEG C		
[ ] VOC	LM23	4 DEG C		
[x] BN/A	LM25	4 DEG C		EA
[x] NG	LW27	4 DEG C		DC
[x] NAM	LN08	4 DEG C		
[x] DNT	LW23	4 DEG C		

SAMPLE BOTTLE ID NUMBERS: 2194, 2196, 2195, 2197, 2198, 2199, 2200

NOTES (LOCATION SKETCH)

* THESE ARE DATACHEM METHODS. EA METHODS: VOC LM17, LM26; B/NA LM20

PP METALS (PRIORITY POLLUTANT): AG, AS, BE, CD, CR, CU, PB, HG, NI, SB, SE, TL, ZN. JS12, B9, JD21, JD20, Y9.

TCLP METALS: CD, CR, HG, PB. JS12, 40 CFR 261.24

DC: 3 bottles
EA: 1 bottles

SIGNATURE: VM / NR

RECEIVED BY: Nancy E. Rofka

ABB ENVIRONMENTAL SERVICES, INC

PAGE 7 OF

FIELD DATA RECORD – SEDIMENT

FIELD SAMPLING NUMBER: RFS-91-4500

PROJECT: USATHAMA-BAAP

SITE ID: RFS-91-43

LOCATION ACTIVITY: START: 0925 END: 0930

SITE TYPE: DTCH

JOB NUMBER: 6853-04

PROGRAM: C

SAMPLING DATE: 9.19.91

FILE NAME: CSO

WEATHER: Sunny, hot & muggy

SEDIMENT DATA

DEPTH OF SEDIMENT SAMPLE: 0-3 IN

TYPE OF SAMPLE COLLECTED: [x] DISCRETE [ ] COMPOSITE

TYPE OF SEDIMENT: [ ] CLAY [x] SAND [ ] ORGANIC [ ] SILT [ ] GRAVEL [ ] OTHER

EQUIPMENT USED FOR COLLECTION: [x] GRAVITY CORER [ ] TULIP BULB PLANTER [x] S.S. HAND SPOON [ ] ALUMINUM PAN [ ] PLASTIC SCOOP [ ] OTHER

DECONTAMINATION FLUIDS USED: [x] POTABLE WATER [ ] POTABLE WATER WITH HIGH PRESSURE [ ] OTHER

SAMPLE OBSERVATIONS: [ ] ODOR [ ] COLORED [x] very rocky in sample after

AMBIENT AIR: 0.0 PPM

SAMPLE LOCATION: 0.0 PPM

pH: — UNITS

ANALYTICAL PARAMETERS

	METHOD NUMBER	PRESERVATION METHOD	VOLUME REQUIRED	SAMPLE COLLECTED	SAMPLE BOTTLE ID NUMBERS
[ ] PP METALS (SPECIFIED BELOW)		4 DEG C			
[ ] AL	JS12	4 DEG C			
[ ] CA		4 DEG C			
[ ] NA		4 DEG C			
[x] CD		4 DEG C			2215
[x] CR		4 DEG C			
[x] HG	Y9	4 DEG C			
[x] PB	JD21	4 DEG C		DC	2217
[x] TCLP METALS (SPECIFIED BELOW)		4 DEG C			2216
[x] NIT	KF17	4 DEG C			
[x] SO4	KT07	4 DEG C			
[ ] NH3N2	USEPA 350.2	4 DEG C			
[ ] TOC	USEPA CE-81-1	4 DEG C			
[ ] pH	SW846 METHOD 9045	4 DEG C			
* [ ] VOC	LM23	4 DEG C		EA	2218
* [x] SVOC/NA	LM25	4 DEG C			2219
[x] NG	LW27	4 DEG C		DC	2220
[x] NAM	LN08	4 DEG C			2221
[x] DNT	LW23	4 DEG C			
[ ]					

NOTES (LOCATION SKETCH)

* THESE ARE DATACHEM METHODS. EA METHODS: VOC LM17, LM26; B/NA LM20

PP METALS (PRIORITY POLLUTANT): AG, AS, BE, CD, CR, CU, PB, HG, NI, SB, SE, TL, ZN. JS12, B9, JD21, JD20, Y9.

TCLP METALS: CD, CR, HG, PB. JS12, 40 CFR 261.24

DC: 3 bottles
EA: 1 bottle

SIGNATURE: VM/MC

RECEIVED BY: Nancy E Rapa

BB ENVIRONMENTAL SERVICES, INC

PAGE 3 OF 20

FIELD DATA RECORD – SEDIMENT

FIELD SAMPLING NUMBER: RP1-44000

PROJECT: USATHAMA-BAAP

SITE ID: RPS-91-44

SITE TYPE: OTCH

JOB NUMBER: 6853-04

PROGRAM: C

SAMPLING DATE: 9/17/91

FILE NAME: CSO

WEATHER: Sunny, 70's Breezy

LOCATION ACTIVITY: START: 0940 END: 0945

SEDIMENT DATA

DEPTH OF SEDIMENT SAMPLE: 0-5 IN

TYPE OF SAMPLE COLLECTED: [x] DISCRETE [ ] COMPOSITE

TYPE OF SEDIMENT:
- [ ] CLAY
- [x] SAND
- [x] ORGANIC
- [ ] SILT
- [ ] GRAVEL
- [ ] OTHER

EQUIPMENT USED FOR COLLECTION:
- [x] GRAVITY CORER
- [x] TULIP BULB PLANTER
- [ ] S.S. HAND SPOON
- [x] ALUMINUM PAN
- [ ] PLASTIC SCOOP
- [ ] OTHER

DECONTAMINATION FLUIDS USED:
- [x] POTABLE WATER
- [ ] POTABLE WATER WITH HIGH PRESSURE
- [ ] OTHER

SAMPLE OBSERVATIONS: [ ] ODOR [ ] COLORED

AMBIENT AIR: 0.0 PPM

SAMPLE LOCATION: 0.0 PPM

pH: — UNITS

ANALYTICAL PARAMETERS

	METHOD NUMBER	PRESERVATION METHOD	VOLUME REQUIRED	SAMPLE COLLECTED	SAMPLE BOTTLE ID NUMBERS
[ ] PP METALS (SPECIFIED BELOW)		4 DEG C			
[x] AL	JS12	4 DEG C			
[x] CA		4 DEG C			
[x] NA		4 DEG C			
[x] CD		4 DEG C			2235
[x] CR		4 DEG C			
[x] MG	Y9	4 DEG C		DC	
[x] PB	JD21	4 DEG C			2238
[ ] TCLP METALS (SPECIFIED BELOW)		4 DEG C			2237
[ ] NIT	KF17	4 DEG C			
[ ] SO4	KT07	4 DEG C			
[ ] NH3N2	USEPA 350.2	4 DEG C			
[ ] TOC	USEPA CE-81-1	4 DEG C			
[ ] pH	SW846 METHOD 9045	4 DEG C			
[ ] VOC	LM23	4 DEG C		EA	2239
[ ] BN/A	LM25	4 DEG C			2240
[ ] PEST	LW27	4 DEG C		DC	
[ ] NAM	LM08	4 DEG C			
[ ] DNT	LW23	4 DEG C			

NOTES

LOCATION SKETCH)

* THESE ARE DATACHEM METHODS. EA METHODS: VOC LM17, LM26
B/NA LM20

PP METALS (PRIORITY POLLUTANT): AG, AS, BE, CD, CR, CU, PB, HG, NI, SB, SE, TL, ZN.
JS12, B9, JD21, JD20, Y9.

TCLP METALS: CD, CR, HG, PB.
JS12, 40 CFR 261.24

DC: 3 bottles
EA: 1 bottle

SIGNATURE: VM/NE

RECEIVED BY: Nancy E Rohr

ABB ENVIRONMENTAL SERVICES, INC

PAGE 9 OF

FIELD DATA RECORD – SEDIMENT

FIELD SAMPLING NUMBER: RP145000

PROJECT: USATHAMA-BAAP

SITE ID: RPS-9-45

SITE TYPE: DTCH

JOB NUMBER: 6853-04

PROGRAM: C

LOCATION ACTIVITY: START: 0955 END: 1000

SAMPLING DATE: 9.19.91

FILE NAME: CSO

WEATHER: Sunn. 90's breezy

SEDIMENT DATA

DEPTH OF SEDIMENT SAMPLE: 0-6 IN

TYPE OF SAMPLE COLLECTED: [x] DISCRETE [ ] COMPOSITE

TYPE OF SEDIMENT:
- [x] CLAY
- [x] SAND
- [ ] ORGANIC
- [ ] SILT
- [ ] GRAVEL
- [ ] OTHER

EQUIPMENT USED FOR COLLECTION:
- [x] GRAVITY CORER
- [x] TULIP BULB PLANTER
- [ ] S.S. HAND SPOON
- [x] ALUMINUM PAN
- [ ] PLASTIC SCOOP
- [ ] OTHER

DECONTAMINATION FLUIDS USED:
- [x] POTABLE WATER
- [ ] POTABLE WATER WITH HIGH PRESSURE
- [ ] OTHER

SAMPLE OBSERVATIONS: [ ] ODOR [x] COLORED light brown

AMBIENT AIR: 0.0 PPM

SAMPLE LOCATION: 0.0 PPM

pH: — UNITS

ANALYTICAL PARAMETERS

		METHOD NUMBER	PRESERVATION METHOD	VOLUME REQUIRED	SAMPLE COLLECTED
[ ]	PP METALS (SPECIFIED BELOW)		4 DEG C		
[ ]	AL	JS12	4 DEG C		
[ ]	CA		4 DEG C		
[ ]	NA		4 DEG C		
[x]	CD		4 DEG C		
[ ]	CR		4 DEG C		
[x]	HG	Y9	4 DEG C		
[x]	PB	JD21	4 DEG C		DC
[ ]	TCLP METALS (SPECIFIED BELOW)		4 DEG C		
[x]	NIT	KF17	4 DEG C		
[x]	SO4	KT07	4 DEG C		
[ ]	NH3N2	USEPA 350.2	4 DEG C		
[ ]	TOC	USEPA CE-81-1	4 DEG C		
[ ]	pH	SW846 METHOD 9045	4 DEG C		
* [ ]	VOC	LM23	4 DEG C		EA
* [ ]	BN/A	LM25	4 DEG C		EA
[x]	NG	LW27	4 DEG C		DC
[x]	NAM	LN08	4 DEG C		DC
[ ]	DNT	LW23	4 DEG C		

SAMPLE BOTTLE ID NUMBERS: 2257, 2259, 2258, 2260, 2261, 2262, 2263

NOTES (LOCATION SKETCH)

* THESE ARE DATACHEM METHODS. EA METHODS: VOC LM17, LM26; B/NA LM20

PP METALS (PRIORITY POLLUTANT): AG, AS, BE, CD, CR, CU, PB, HG, NI, SB, SE, TL, ZN. JS12, B9, JD21, JD20, Y9.

TCLP METALS: CD, CR, HG, PB. JS12, 40 CFR 261.24

DC: 3 bottles

EA: 1 bottle

SIGNATURE: VM/MR

RECEIVED BY: Nancy E Kotka

ABB ENVIRONMENTAL SERVICES, INC

PAGE 10 OF 20

FIELD DATA RECORD – SEDIMENT

FIELD SAMPLING NUMBER: R9146000

PROJECT: USATHAMA-BAAP

SITE TYPE: DTCH

SAMPLING DATE: 9-9-91

SITE ID: RPS-91-46

JOB NUMBER: 6853-04

FILE NAME: CSO

WEATHER: Sunny 90s breezy

LOCATION ACTIVITY: START: 1005 END: 1010

PROGRAM: C

SEDIMENT DATA

DEPTH OF SEDIMENT SAMPLE: 1-5 IN

TYPE OF SAMPLE COLLECTED: ☑ DISCRETE ☐ COMPOSITE

TYPE OF SEDIMENT:
- ☐ CLAY
- ☑ SAND fine
- ☐ ORGANIC
- ☑ SILT little
- ☐ GRAVEL
- ☐ OTHER

EQUIPMENT USED FOR COLLECTION:
- ☐ GRAVITY CORER
- ☑ TULIP BULB PLANTER
- ☐ S.S. HAND SPOON
- ☑ ALUMINUM PAN
- ☐ PLASTIC SCOOP
- ☐ OTHER

DECONTAMINATION FLUIDS USED
- ☑ POTABLE WATER
- ☐ POTABLE WATER WITH HIGH PRESSURE
- ☐ OTHER

SAMPLE OBSERVATIONS: ☐ ODOR ☐ COLORED ☐

AMBIENT AIR: 0.0 PPM

SAMPLE LOCATION: 0.0 PPM

pH: — UNITS

ANALYTICAL PARAMETERS

	METHOD NUMBER	PRESERVATION METHOD	VOLUME REQUIRED	SAMPLE COLLECTED	SAMPLE BOTTLE ID NUMBERS
☐ PP METALS (SPECIFIED BELOW)		4 DEG C		☐	
☐ AL	JS12	4 DEG C		☐	
☐ CA		4 DEG C		☐	
☐ NA		4 DEG C		☐	
☑ CD		4 DEG C		☑	2278
☑ CR		4 DEG C		☑	
☑ HG	Y9	4 DEG C		☑	
☑ PB	JD21	4 DEG C		☑	
☑ TCLP METALS (SPECIFIED BELOW)		4 DEG C		☑	2280
☑ NIT	KF17	4 DEG C		☑	2279
☑ SO4	KT07	4 DEG C		☑	
☐ NH3N2	USEPA 350.2	4 DEG C		☐	
☐ TOC	USEPA CE-81-1	4 DEG C		☐	
☐ pH	SW846 METHOD 9045	4 DEG C		☐	
☐ VOC	LM23	4 DEG C		☐	
☑ BN/A	LM25	4 DEG C		EA ☑	2281
☑ NG	LW27	4 DEG C		☑	2282
☑ NAM	LN08	4 DEG C		DC ☑	2283
☑ DNT	LW23	4 DEG C		☑	2284
☐				☐	
☐				☐	

NOTES (LOCATION SKETCH)

* THESE ARE DATACHEM METHODS. EA METHODS: VOC LM17, LM26
B/NA LM20

PP METALS (PRIORITY POLLUTANT): AG, AS, BE, CD, CR ,CU, PB, HG, NI, SB, SE, TL, ZN.
JS12, B9, JD21, JD20, Y9.

TCLP METALS: CD, CR, HG, PB.
JS12, 40 CFR 261.24

DC: 3 bottles
EA: 1 bottle

SIGNATURE: VM/MK

RECEIVED BY: Nancy E. Roka

ABB ENVIRONMENTAL SERVICES, INC

PAGE 11 OF

FIELD DATA RECORD – SEDIMENT

FIELD SAMPLING NUMBER: RPS-91-47-000

PROJECT: USATHAMA-BAAP

SITE ID: RPS-91-47

SITE TYPE: DTCH

JOB NUMBER: 6853-04

PROGRAM: C

SAMPLING DATE: 9.10.91

FILE NAME: CSO

WEATHER: sunny 70's breezy

LOCATION ACTIVITY: START: 1315 END: 1020

SEDIMENT DATA

DEPTH OF SEDIMENT SAMPLE: 0-4 IN

TYPE OF SAMPLE COLLECTED: ☑ DISCRETE ☐ COMPOSITE

TYPE OF SEDIMENT:
- ☐ CLAY
- ☑ SAND
- ☑ ORGANIC
- ☑ SILT
- ☐ GRAVEL
- ☐ OTHER

EQUIPMENT USED FOR COLLECTION:
- ☑ GRAVITY CORER
- ☐ TULIP BULB PLANTER
- ☑ S.S. HAND SPOON
- ☑ ALUMINUM PAN
- ☐ PLASTIC SCOOP
- ☐ OTHER

DECONTAMINATION FLUIDS USED
- ☑ POTABLE WATER
- ☐ POTABLE WATER WITH HIGH PRESSURE
- ☐ OTHER

SAMPLE OBSERVATIONS: ☐ ODOR ☐ COLORED

AMBIENT AIR: 0.0 PPM

SAMPLE LOCATION: 0.0 PPM

pH: — UNITS

ANALYTICAL PARAMETERS

	METHOD NUMBER	PRESERVATION METHOD	VOLUME REQUIRED	SAMPLE COLLECTED	SAMPLE BOTTLE ID NUMBERS
☐ PP METALS (SPECIFIED BELOW)		4 DEG C			
☐ AL	JS12	4 DEG C			
☐ CA		4 DEG C			
☐ NA		4 DEG C			
☑ CD		4 DEG C			
☑ CR		4 DEG C			
☑ HG	Y9	4 DEG C			
☑ PB	JD21	4 DEG C		DC	2299
☑ TCLP METALS (SPECIFIED BELOW)		4 DEG C			2301
☑ NIT	KF17	4 DEG C			2300
☑ SO4	KT07	4 DEG C			
☐ NH3N2	USEPA 350.2	4 DEG C			
☐ TOC	USEPA CE-81-1	4 DEG C			
☐ pH	SW846 METHOD 9045	4 DEG C			
* ☐ VOC	LM23	4 DEG C		EA	2302
* ☑ BN/A	LM25	4 DEG C			2303
☑ HG	LW27	4 DEG C		DC	2304
☑ NAM	LN08	4 DEG C			2305
☑ DNT	LW23	4 DEG C			

NOTES (LOCATION SKETCH)

* THESE ARE DATACHEM METHODS. EA METHODS: VOC LM17, LM26
B/NA LM20

PP METALS (PRIORITY POLLUTANT): AG, AS, BE, CD, CR, CU, PB, HG, NI, SB, SE, TL, ZN. JS12, B9, JD21, JD20, Y9.

TCLP METALS: CD, CR, HG, PB. JS12, 40 CFR 261.24

DC: 3 bottles
EA: 1 bottle

SIGNATURE: VTC

RECEIVED BY: VTC

BB ENVIRONMENTAL SERVICES, INC

FIELD DATA RECORD – SEDIMENT

FIELD SAMPLING NUMBER: RFS-91-4800

PROJECT: USATHAMA-BAAP

SITE ID: RFS-91-48

SITE TYPE: DTCH

JOB NUMBER: 6853-04

PROGRAM: C

SAMPLING DATE: 7.17.91

FILE NAME: CSO

WEATHER: cloudy, 70's

LOCATION ACTIVITY START: 1145 END: 1230

other:

SEDIMENT DATA

DEPTH OF SEDIMENT SAMPLE: 1-5 IN

TYPE OF SAMPLE COLLECTED: [X] DISCRETE [ ] COMPOSITE

TYPE OF SEDIMENT:
- [ ] CLAY
- [X] SAND some
- [X] ORGANIC
- [ ] SILT
- [ ] GRAVEL
- [ ] OTHER

EQUIPMENT USED FOR COLLECTION:
- [X] GRAVITY CORER
- [ ] TULIP BULB PLANTER
- [ ] S.S. HAND SPOON
- [X] ALUMINUM PAN
- [ ] PLASTIC SCOOP
- [ ] OTHER

DECONTAMINATION FLUIDS USED:
- [X] POTABLE WATER
- [ ] POTABLE WATER WITH HIGH PRESSURE
- [ ] OTHER

SAMPLE OBSERVATIONS: [ ] ODOR [ ] COLORED

AMBIENT AIR: 0.6 PPM

SAMPLE LOCATION: 0.0 PPM

pH: — UNITS

ANALYTICAL PARAMETERS

	METHOD NUMBER	PRESERVATION METHOD	VOLUME REQUIRED	SAMPLE COLLECTED	SAMPLE BOTTLE ID NUMBERS
[ ] PP METALS (SPECIFIED BELOW)		4 DEG C			
[ ] AL	JS12	4 DEG C			
[ ] CA		4 DEG C			
[ ] NA		4 DEG C			
[X] CD		4 DEG C		DC	2320
[X] CR		4 DEG C			
[X] HG	Y9	4 DEG C			
[X] PB	JD21	4 DEG C			2322
[ ] TCLP METALS (SPECIFIED BELOW)		4 DEG C			2321
[ ] NIT	KF17	4 DEG C			
[ ] SO4	KT07	4 DEG C			
[ ] NH3N2	USEPA 350.2	4 DEG C			
[ ] TOC	USEPA CE-81-1	4 DEG C			
[ ] pH	SW846 METHOD 9045	4 DEG C			
[ ] VOC	LM23	4 DEG C			
[X] BN/A	LM25	4 DEG C		EA	2323
[X] NG	LW27	4 DEG C			2324
[X] NAM	LN08	4 DEG C		DC	2325
[X] DNT	LW23	4 DEG C			2326

NOTES

LOCATION SKETCH)

* THESE ARE DATACHEM METHODS. EA METHODS: VOC LM17, LM26
B/NA LM20

PP METALS (PRIORITY POLLUTANT): AG, AS, BE, CD, CR, CU, PB, HG, NI, SB, SE, TL, ZN.
JS12, B9, JD21, JD20, Y9.

TCLP METALS: CD, CR, HG, PB.
JS12, 40 CFR 261.24

DC: 3 bottles
EA: 1 bottle

plastic scoop not very effective at getting through grass + roots.

SIGNATURE: VM/MK

RECEIVED BY: Nancy E Rota

ABB ENVIRONMENTAL SERVICES, INC

PAGE 13 OF

FIELD DATA RECORD - SEDIMENT

FIELD SAMPLING NUMBER: R9149000

PROJECT: USATHAMA-BAAP

SITE TYPE: DTCH

SAMPLING DATE: 9.12.91

SITE ID: RPS-91-49

JOB NUMBER: 6853-04

FILE NAME: CSO

WEATHER: cloudy, [illegible] breezy

LOCATION ACTIVITY: START: 1155 END: 1200

PROGRAM: C

SEDIMENT DATA

DEPTH OF SEDIMENT SAMPLE: 0-4 IN

TYPE OF SAMPLE COLLECTED: [x] DISCRETE [ ] COMPOSITE

TYPE OF SEDIMENT:
- [ ] CLAY
- [ ] SAND
- [x] ORGANIC
- [x] SILT
- [ ] GRAVEL
- [ ] OTHER

EQUIPMENT USED FOR COLLECTION:
- [ ] GRAVITY CORER
- [x] TULIP BULB PLANTER
- [ ] S.S. HAND SPOON
- [x] ALUMINUM PAN
- [x] PLASTIC SCOOP
- [ ] OTHER

DECONTAMINATION FLUIDS USED
- [x] POTABLE WATER
- [ ] POTABLE WATER WITH HIGH PRESSURE
- [ ] OTHER

SAMPLE OBSERVATIONS
- [ ] ODOR
- [ ] COLORED
- [x] compact

AMBIENT AIR: 0.0 PPM

SAMPLE LOCATION: 0.0 PPM

pH: — UNITS

ANALYTICAL PARAMETERS

	METHOD NUMBER	PRESERVATION METHOD	VOLUME REQUIRED	SAMPLE COLLECTED	SAMPLE BOTTLE ID NUMBERS
[ ] PP METALS (SPECIFIED BELOW)		4 DEG C		[ ]	
[ ] AL	JS12	4 DEG C		[ ]	
[ ] CA		4 DEG C		[ ]	
[ ] NA		4 DEG C		[ ]	
[x] CD		4 DEG C		[x]	2341
[x] CR		4 DEG C		[x]	
[x] HG	Y9	4 DEG C		[x]	
[x] PB	JD21	4 DEG C		[x]	
[x] TCLP METALS (SPECIFIED BELOW)		4 DEG C		DC [x]	2343
[x] NIT	KF17	4 DEG C		[x]	2342
[x] SO4	KT07	4 DEG C		[x]	
[ ] NH3N2	USEPA 350.2	4 DEG C		[ ]	
[ ] TOC	USEPA CE-81-1	4 DEG C		[ ]	
[ ] pH	SW846 METHOD 9045	4 DEG C		[ ]	
*[ ] VOC	LM23	4 DEG C		[ ]	
*[x] BN/A	LM25	4 DEG C		EA [x]	2344
[x] NG	LW27	4 DEG C		[x]	2345
[x] NAM	LN08	4 DEG C		DC [x]	2346
[x] DNT	LW23	4 DEG C		[x]	2347
[ ]				[ ]	
[ ]				[ ]	

NOTES (LOCATION SKETCH)

* THESE ARE DATACHEM METHODS. EA METHODS: VOC LM17, LM26
B/NA LM20

PP METALS (PRIORITY POLLUTANT): AG, AS, BE, CD, CR, CU, PB, HG, NI, SB, SE, TL, ZN.
JS12, B9, JD21, JD20, Y9.

TCLP METALS: CD, CR, HG, PB.
JS12, 40 CFR 261.24

DC 3 bottles
EA. 1 bottles

plastic scoop still not very effective Will continue to use tulip bulb planter.

SIGNATURE: VM/ [illegible]

RECEIVED BY: Nancy E Rotia

ABB ENVIRONMENTAL SERVICES, INC

DATA RECORD – SEDIMENT

FIELD SAMPLING NUMBER: R9150000

PROJECT: USATHAMA-BAAP

SITE TYPE: DTCH

SITE ID: RAS-91-50

JOB NUMBER: 6853-04

PROGRAM: C

LOCATION ACTIVITY: START: 1210 END: 1215

SAMPLING DATE: 9.19.91

FILE NAME: CSO

WEATHER: Cloudy 84°F breezy

SEDIMENT DATA

DEPTH OF SEDIMENT SAMPLE: 1-5 IN

TYPE OF SAMPLE COLLECTED: ☑ DISCRETE ☐ COMPOSITE

TYPE OF SEDIMENT:
- ☐ CLAY
- ☑ SAND trace
- ☐ ORGANIC
- ☑ SILT
- ☐ GRAVEL
- ☐ OTHER

EQUIPMENT USED FOR COLLECTION:
- ☐ GRAVITY CORER
- ☑ TULIP BULB PLANTER
- ☐ S.S. HAND SPOON
- ☑ ALUMINUM PAN
- ☐ PLASTIC SCOOP
- ☐ OTHER

DECONTAMINATION FLUIDS USED
- ☑ POTABLE WATER
- ☐ POTABLE WATER WITH HIGH PRESSURE
- ☐ OTHER

SAMPLE OBSERVATIONS: ☐ ODOR ☐ COLORED ☐

AMBIENT AIR: 0.0 PPM

SAMPLE LOCATION: 0.0 PPM

pH: — UNITS

ANALYTICAL PARAMETERS

	METHOD NUMBER	PRESERVATION METHOD	VOLUME REQUIRED	SAMPLE COLLECTED	SAMPLE BOTTLE ID NUMBERS
☐ PP METALS (SPECIFIED BELOW)		4 DEG C		☐	
☐ AL	JS12	4 DEG C		☐	
☐ CA		4 DEG C		☐	
☐ NA		4 DEG C		☐	
☑ CD		4 DEG C		☑	2363
☑ CR		4 DEG C		☑	
☑ HG	Y9	4 DEG C		☑	
☑ PB	JD21	4 DEG C		☑	
☐ TCLP METALS (SPECIFIED BELOW)		4 DEG C		DC ☑	2364
☑ NIT	KF17	4 DEG C		☑	2365
[illegible]	KT07	4 DEG C		☑	
[illegible]	USEPA 350.2	4 DEG C		☐	
[illegible]	USEPA CE-81-1	4 DEG C		☐	
☐ pH	SW846 METHOD 9045	4 DEG C		☐	
* ☐ VOC	LM23	4 DEG C		☐	
* ☑ BN/A	LM25	4 DEG C		EA ☑	2365
☑ NG	LW27	4 DEG C		☑	2366
☑ NAM	LN08	4 DEG C		DC ☑	2367
☑ DNT	LW23	4 DEG C		☑	2368
☐				☐	
☐				☐	

NOTES (LOCATION SKETCH)

* THESE ARE DATACHEM METHODS. EA METHODS: VOC LM17, LM26
B/NA LM20

PP METALS (PRIORITY POLLUTANT): AG, AS, BE, CD, CR, CU, PB, HG, NI, SB, SE, TL, ZN.
JS12, B9, JD21, JD20, Y9.

TCLP METALS: CD, CR, HG, PB.
JS12, 40 CFR 261.24

DC 3 bottles
EA: 1 bottles

SIGNATURE: [illegible]

RECEIVED BY: Nancy E Rotta

ABB ENVIRONMENTAL SERVICES, INC

FIELD DATA RECORD – SEDIMENT

FIELD SAMPLING NUMBER: RFS1000

PROJECT: USATHAMA-BAAP

SITE ID: RFS-91-S1

LOCATION ACTIVITY: START: 1220 END: 1225

SITE TYPE: DTCH

JOB NUMBER: 6853-04

PROGRAM: C

SAMPLING DATE: 9.19.91

FILE NAME: CSO

WEATHER: cloudy ~40's drizzly

SEDIMENT DATA

DEPTH OF SEDIMENT SAMPLE: 1-4 IN

TYPE OF SAMPLE COLLECTED: [x] DISCRETE [ ] COMPOSITE

TYPE OF SEDIMENT:
- [ ] CLAY
- [x] SAND
- [x] ORGANIC
- [ ] SILT
- [ ] GRAVEL
- [ ] OTHER

EQUIPMENT USED FOR COLLECTION:
- [x] GRAVITY CORER
- [x] TULIP BULB PLANTER
- [x] S.S. HAND SPOON
- [x] ALUMINUM PAN
- [ ] PLASTIC SCOOP
- [ ] OTHER

DECONTAMINATION FLUIDS USED:
- [x] POTABLE WATER
- [ ] POTABLE WATER WITH HIGH PRESSURE
- [ ] OTHER

SAMPLE OBSERVATIONS: [ ] ODOR [ ] COLORED

AMBIENT AIR: 00 PPM

SAMPLE LOCATION: 00 PPM

pH: — UNITS

ANALYTICAL PARAMETERS

	METHOD NUMBER	PRESERVATION METHOD	VOLUME REQUIRED	SAMPLE COLLECTED	SAMPLE BOTTLE ID NUMBERS
[ ] PP METALS (SPECIFIED BELOW)		4 DEG C			
[x] AL	JS12	4 DEG C			
[x] CA		4 DEG C			
[x] MA		4 DEG C			
[x] CD		4 DEG C			2383
[x] CR		4 DEG C			
[x] HG	Y9	4 DEG C			
[x] PB	JD21	4 DEG C		DC	
[x] TCLP METALS (SPECIFIED BELOW)		4 DEG C			2385
[x] NIT	KF17	4 DEG C			2384
[x] SO4	KT07	4 DEG C			
[x] NH3N2	USEPA 350.2	4 DEG C			
[x] TOC	USEPA CE-81-1	4 DEG C			
[x] pH	SW846 METHOD 9045	4 DEG C			
[x] * VOC	LM23	4 DEG C		EA	2386
[x] * BN/A	LM25	4 DEG C			2387
[x] NG	LW27	4 DEG C		DC	2388
[x] NAM	LN08	4 DEG C			2389
[x] DNT	LW23	4 DEG C			

NOTES (LOCATION SKETCH)

* THESE ARE DATACHEM METHODS. EA METHODS: VOC LM17, LM26
B/NA LM20

PP METALS (PRIORITY POLLUTANT): AG, AS, BE, CD, CR, CU, PB, HG, NI, SB, SE, TL, ZN.
JS12, B9, JD21, JD20, Y9.

TCLP METALS: CD, CR, HG, PB.
JS12, 40 CFR 261.24

DC: 3 bottles
EA: 1 bottle

SIGNATURE: VM/NR

RECEIVED BY: /Nancy E. Rotta

ABB ENVIRONMENTAL SERVICES, INC

F[redacted] DATA RECORD – SEDIMENT

FIELD SAMPLING NUMBER: R9152300

PROJECT: USATHAMA-BAAP

SITE ID: RPS-9-52

SITE TYPE: DTCH

JOB NUMBER: 6853-04

PROGRAM: C

SAMPLING DATE: 9.19.91

FILE NAME: CSO

WEATHER: Cloudy, 70's breezy

LOCATION ACTIVITY: START: 1230 END: 1235

SEDIMENT DATA

DEPTH OF SEDIMENT SAMPLE: 0-3 IN

TYPE OF SAMPLE COLLECTED: [x] DISCRETE [ ] COMPOSITE

TYPE OF SEDIMENT:
- [x] CLAY
- [x] SAND
- [x] ORGANIC
- [x] SILT
- [ ] GRAVEL
- [ ] OTHER

EQUIPMENT USED FOR COLLECTION:
- [ ] GRAVITY CORER
- [x] TULIP BULB PLANTER
- [ ] S.S. HAND SPOON
- [x] ALUMINUM PAN
- [ ] PLASTIC SCOOP
- [ ] OTHER

DECONTAMINATION FLUIDS USED:
- [x] POTABLE WATER
- [ ] POTABLE WATER WITH HIGH PRESSURE
- [ ] OTHER

SAMPLE OBSERVATIONS: [ ] ODOR [ ] COLORED

AMBIENT AIR: 0.0 PPM

SAMPLE LOCATION: 0.0 PPM

pH: — UNITS

ANALYTICAL PARAMETERS

	METHOD NUMBER	PRESERVATION METHOD	VOLUME REQUIRED	SAMPLE COLLECTED	SAMPLE BOTTLE ID NUMBERS
[ ] PP METALS (SPECIFIED BELOW)		4 DEG C			
[ ] AL	JS12	4 DEG C			
[ ] CA		4 DEG C			
[ ] NA		4 DEG C			
[ ] CD		4 DEG C			2404
[ ] CR		4 DEG C			
[ ] HG	Y9	4 DEG C		DC	
[ ] PB	JD21	4 DEG C			2406
[ ] TCLP METALS (SPECIFIED BELOW)		4 DEG C			2405
[ ] NIT	KF17	4 DEG C			
[ ]	KT07	4 DEG C			
	USEPA 350.2	4 DEG C			
	USEPA CE-81-1	4 DEG C			
[ ] PH	SW846 METHOD 9045	4 DEG C			
[ ] VOC	LM23	4 DEG C		EA	2407
[ ] BN/A	LM25	4 DEG C			2408
[ ] NG	LW27	4 DEG C		DC	2409
[ ] NAM	LN08	4 DEG C			2410
[ ] DNT	LW23	4 DEG C			

NOTES
LOCATION SKETCH)

* THESE ARE DATACHEM METHODS. EA METHODS: VOC LM17, LM26
B/NA LM20

PP METALS (PRIORITY POLLUTANT): AG, AS, BE, CD, CR, CU, PB, HG, NI, SB, SE, TL, ZN.
JS12, B9, JD21, JD20, Y9.

TCLP METALS: CD, CR, HG, PB.
JS12, 40 CFR 261.24

DC 3 bottles
EA: 1 bottle

SIGNATURE: VM/NC

RECEIVED BY: Nancy E. Rotta

ABB ENVIRONMENTAL SERVICES, INC

FIELD DATA RECORD – SEDIMENT

FIELD SAMPLING NUMBER: RF1S3000

PROJECT: USATHAMA-BAAP

SITE ID: RFS-91-53

LOCATION ACTIVITY: START: 1245 END: 1250

SITE TYPE: DITCH

JOB NUMBER: 6853-04

PROGRAM: C

SAMPLING DATE: 9.19.91

FILE NAME: CSO

WEATHER: cloudy, 70's breezy

SEDIMENT DATA

DEPTH OF SEDIMENT SAMPLE: 1-5 IN

TYPE OF SAMPLE COLLECTED: [x] DISCRETE [ ] COMPOSITE

TYPE OF SEDIMENT:
- [x] CLAY
- [x] SAND
- [x] ORGANIC
- [x] SILT little
- [ ] GRAVEL
- [ ] OTHER

EQUIPMENT USED FOR COLLECTION:
- [x] GRAVITY CORER
- [x] TULIP BULB PLANTER
- [x] S.S. HAND SPOON
- [x] ALUMINUM PAN
- [ ] PLASTIC SCOOP
- [ ] OTHER

DECONTAMINATION FLUIDS USED:
- [x] POTABLE WATER
- [ ] POTABLE WATER WITH HIGH PRESSURE
- [ ] OTHER

SAMPLE OBSERVATIONS: [ ] ODOR [ ] COLORED

AMBIENT AIR: 0.0 PPM

SAMPLE LOCATION: 0.2 PPM

pH: — UNITS

ANALYTICAL PARAMETERS

	METHOD NUMBER	PRESERVATION METHOD	VOLUME REQUIRED	SAMPLE COLLECTED
[ ] PP METALS (SPECIFIED BELOW)		4 DEG C		
[x] AL	JS12	4 DEG C		
[x] CA		4 DEG C		
[x] NA		4 DEG C		
[x] CD		4 DEG C		
[x] CR		4 DEG C		
[x] HG	Y9	4 DEG C		
[x] PB	JD21	4 DEG C		
[x] TCLP METALS (SPECIFIED BELOW)		4 DEG C		
[x] NIT	KF17	4 DEG C		
[x] SO4	KT07	4 DEG C		
[ ] NH3N2	USEPA 350.2	4 DEG C		
[ ] TOC	USEPA CE-81-1	4 DEG C		
[ ] pH	SW846 METHOD 9045	4 DEG C		
[ ] * VOC	LM23	4 DEG C		
[ ] * BN/A	LM25	4 DEG C		
[x] NG	LW27	4 DEG C		
[x] NAM	LW08	4 DEG C		
[x] DNT	LW23	4 DEG C		

SAMPLE BOTTLE ID NUMBERS

DC: 2425, 2427, 2426

EA: 2428

DC: 2429, 2430, 2431

NOTES (LOCATION SKETCH)

* THESE ARE DATACHEM METHODS. EA METHODS: VOC LM17, LM26; B/NA LM20

PP METALS (PRIORITY POLLUTANT): AG, AS, BE, CD, CR, CU, PB, HG, NI, SB, SE, TL, ZN. JS12, B9, JD21, JD20, Y9.

TCLP METALS: CD, CR, HG, PB. JS12, 40 CFR 261.24

DC: 3 bottles
EA: 1 bottle

SIGNATURE: VM/ VR

RECEIVED BY: Nancy E. Rota

BB ENVIRONMENTAL SERVICES, INC

PAGE 18 OF 20

FIELD DATA RECORD – SEDIMENT

FIELD SAMPLING NUMBER: R9154000

PROJECT: USATHAMA-BAAP

SITE TYPE: DTCH

SITE ID: RPS-91-54

JOB NUMBER: 6853-04

LOCATION ACTIVITY: START: 1300 END: 1305

PROGRAM: C

SAMPLING DATE: 7.19.91

FILE NAME: CSO

WEATHER: cloudy, 240's breezy

SEDIMENT DATA

DEPTH OF SEDIMENT SAMPLE: 1-3 IN

TYPE OF SAMPLE COLLECTED: ☑ DISCRETE ☐ COMPOSITE

TYPE OF SEDIMENT:
- ☐ CLAY
- ☑ SAND
- ☑ ORGANIC
- ☑ SILT
- ☐ GRAVEL
- ☐ OTHER

EQUIPMENT USED FOR COLLECTION:
- ☐ GRAVITY CORER
- ☑ TULIP BULB PLANTER
- ☐ S.S. HAND SPOON
- ☑ ALUMINUM PAN
- ☐ PLASTIC SCOOP
- ☐ OTHER

DECONTAMINATION FLUIDS USED
- ☑ POTABLE WATER
- ☐ POTABLE WATER WITH HIGH PRESSURE
- ☐ OTHER

SAMPLE OBSERVATIONS
- ☐ ODOR
- ☐ COLORED
- ☑ rocky location

AMBIENT AIR: 0.0 PPM

SAMPLE LOCATION: 0.0 PPM

pH: — UNITS

ANALYTICAL PARAMETERS

	METHOD NUMBER	PRESERVATION METHOD	VOLUME REQUIRED	SAMPLE COLLECTED	SAMPLE BOTTLE ID NUMBERS
☐ PP METALS (SPECIFIED BELOW)		4 DEG C		☐	
☐ AL	JS12	4 DEG C		☐	
☐ CA		4 DEG C		☐	
☐ NA		4 DEG C		☐	
☑ CD		4 DEG C		☑	2446
☑ CR		4 DEG C		☑	
☑ HG	Y9	4 DEG C		☑	
☑ PB	JD21	4 DEG C		☑	
☑ TCLP METALS (SPECIFIED BELOW)		4 DEG C		☑ DC	2448
☐ BIT	KF17	4 DEG C		☑	2447
☐ SO4	KT07	4 DEG C		☑	
☐ NH3N2	USEPA 350.2	4 DEG C		☐	
☐ TOC	USEPA CE-81-1	4 DEG C		☐	
☐ pH	SW846 METHOD 9045	4 DEG C		☐	
☐ VOC	LM23	4 DEG C		☐	
☑ BN/A	LM25	4 DEG C		☑ EA	2449
☑ NG	LW27	4 DEG C		☑	2450
☑ NAM	LN08	4 DEG C		☑ DC	2451
☑ DNT	LW23	4 DEG C		☑	2452
☐				☐	
☐				☐	
☐				☐	

NOTES (LOCATION SKETCH)

* THESE ARE DATACHEM METHODS. EA METHODS: VOC LM17, LM26
B/NA LM20

PP METALS (PRIORITY POLLUTANT): AG, AS, BE, CD, CR, CU, PB, HG, NI, SB, SE, TL, ZN.
JS12, B9, JD21, JD20, Y9.

TCLP METALS: CD, CR, HG, PB.
JS12, 40 CFR 261.24

DC: 3 bottles
EA: 1 bottles

SIGNATURE: VM / MR

RECEIVED BY: Nancy E. Rofia

ABB ENVIRONMENTAL SERVICES, INC

PAGE 19 OF 2[illegible]

FIELD DATA RECORD - SEDIMENT

FIELD SAMPLING NUMBER: R9155000

PROJECT: USATHAMA-BAAP

SITE TYPE: DT[illegible]

SITE ID: RPS-91-55

JOB NUMBER: 6853-04

PROGRAM: C

LOCATION ACTIVITY: START: 1315 END: 1320

SAMPLING DATE: [illegible]

FILE NAME: CSO

WEATHER: cloudy, [illegible] breezy

SEDIMENT DATA

DEPTH OF SEDIMENT SAMPLE: 1-5 IN

TYPE OF SAMPLE COLLECTED: [x] DISCRETE [ ] COMPOSITE

TYPE OF SEDIMENT:
- [ ] CLAY
- [x] SAND Same
- [x] ORGANIC
- [x] SILT
- [ ] GRAVEL
- [ ] OTHER

EQUIPMENT USED FOR COLLECTION:
- [ ] GRAVITY CORER
- [x] TULIP BULB PLANTER
- [ ] S.S. HAND SPOON
- [x] ALUMINUM PAN
- [ ] PLASTIC SCOOP
- [ ] OTHER

DECONTAMINATION FLUIDS USED
- [x] POTABLE WATER
- [ ] POTABLE WATER WITH HIGH PRESSURE
- [ ] OTHER

SAMPLE OBSERVATIONS: [ ] ODOR [ ] COLORED [ ]

AMBIENT AIR: 0.0 PPM

SAMPLE LOCATION: 0.0 PPM

pH: — UNITS

ANALYTICAL PARAMETERS

	METHOD NUMBER	PRESERVATION METHOD	VOLUME REQUIRED	SAMPLE COLLECTED	SAMPLE BOTTLE ID NUMBERS
[ ] PP METALS (SPECIFIED BELOW)		4 DEG C		[ ]	
[ ] AL	JS12	4 DEG C		[ ]	
[ ] CA		4 DEG C		[ ]	
[ ] NA		4 DEG C		[ ]	
[x] CD		4 DEG C		[x]	2467
[x] CR		4 DEG C		[x]	
[x] HG	Y9	4 DEG C		[x]	
[x] PB	JD21	4 DEG C		[x]	
[x] TCLP METALS (SPECIFIED BELOW)		4 DEG C		[x]	2469
[x] NIT	KF17	4 DEG C		[x]	2468
[x] SO4	KT07	4 DEG C		[x]	
[ ] NH3N2	USEPA 350.2	4 DEG C		[ ]	
[ ] TOC	USEPA CE-81-1	4 DEG C		[ ]	
[ ] pH	SW846 METHOD 9045	4 DEG C		[ ]	
*[ ] VOC	LM23	4 DEG C		[ ]	
*[x] BN/A	LM25	4 DEG C		EA [x]	2470
[x] NG	LW27	4 DEG C		[x]	2471
[x] NAM	LN08	4 DEG C		DC [x]	2472
[x] DNT	LW23	4 DEG C		[x]	2473
[ ]				[ ]	
[ ]				[ ]	

NOTES (LOCATION SKETCH)

* THESE ARE DATACHEM METHODS. EA METHODS: VOC LM17, LM26
B/NA LM20

PP METALS (PRIORITY POLLUTANT): AG, AS, BE, CD, CR, CU, PB, HG, NI, SB, SE, TL, ZN.
JS12, B9, JD21, JD20, Y9.

TCLP METALS: CD, CR, HG, PB.
JS12, 40 CFR 261.24

DC: 3 bottles
EA: 1 bottles

SIGNATURE: VM/[illegible]

RECEIVED BY: Nancy E Rofia

BB ENVIRONMENTAL SERVICES, INC

FIELD DATA RECORD – SEDIMENT

FIELD SAMPLING NUMBER: RP1-56000

PROJECT: USATHAMA-BAAP

SITE ID: RPS-91-56

SITE TYPE: DTCH

JOB NUMBER: 6853-04

PROGRAM: C

SAMPLING DATE: 9.17.9

FILE NAME: CSO

WEATHER: cloudy, calm, breezy

LOCATION ACTIVITY: START: 1320 END: 1330

SEDIMENT DATA

DEPTH OF SEDIMENT SAMPLE: 1-4 IN

TYPE OF SAMPLE COLLECTED: [x] DISCRETE [ ] COMPOSITE

TYPE OF SEDIMENT:
- [x] CLAY
- [x] SAND
- [x] ORGANIC
- [ ] SILT
- [ ] GRAVEL
- [ ] OTHER

EQUIPMENT USED FOR COLLECTION:
- [x] GRAVITY CORER
- [ ] TULIP BULB PLANTER
- [x] S.S. HAND SPOON
- [x] ALUMINUM PAN
- [ ] PLASTIC SCOOP
- [ ] OTHER

DECONTAMINATION FLUIDS USED:
- [x] POTABLE WATER
- [ ] POTABLE WATER WITH HIGH PRESSURE
- [ ] OTHER

SAMPLE OBSERVATIONS: [ ] ODOR [ ] COLORED

AMBIENT AIR: 0.0 PPM

SAMPLE LOCATION: 0.0 PPM

pH: — UNITS

ANALYTICAL PARAMETERS

	METHOD NUMBER	PRESERVATION METHOD	VOLUME REQUIRED	SAMPLE COLLECTED	SAMPLE BOTTLE ID NUMBERS
[ ] PP METALS (SPECIFIED BELOW)		4 DEG C			
[x] AL	JS12	4 DEG C			
[x] CA		4 DEG C			
[x] NA		4 DEG C			
[x] CD		4 DEG C		DC	2492
[x] CR		4 DEG C			
[x] HG	Y9	4 DEG C			
[x] PB	JD21	4 DEG C			2490
[ ] TCLP METALS (SPECIFIED BELOW)		4 DEG C			2489
[ ] NIT	KF17	4 DEG C			
[ ] SO4	KT07	4 DEG C			
[ ] NH3N2	USEPA 350.2	4 DEG C			
[ ] TOC	USEPA CE-81-1	4 DEG C			
[ ] pH	SW846 METHOD 9045	4 DEG C			
[ ] VOC	LM23	4 DEG C		EA	2491
[ ] BN/A	LM25	4 DEG C			2493
[x] NG	LW27	4 DEG C		DC	2495
[x] NAM	LN08	4 DEG C			2494
[x] DNT	LW23	4 DEG C			

NOTES (LOCATION SKETCH)

* THESE ARE DATACHEM METHODS. EA METHODS: VOC LM17, LM26
B/NA LM20

PP METALS (PRIORITY POLLUTANT): AG, AS, BE, CD, CR, CU, PB, HG, NI, SB, SE, TL, ZN.
JS12, B9, JD21, JD20, Y9.

TCLP METALS: CD, CR, HG, PB.
JS12, 40 CFR 261.24

DC: 3 bottles
EA: 1 bottle

SIGNATURE: VM/NR

RECEIVED BY: Nancy E Roth

ABB ENVIRONMENTAL SERVICES, INC

PAGE 1 OF 2

FIELD DATA RECORD – SEDIMENT

FIELD SAMPLING NUMBER: R91S7000

PROJECT: USATHAMA-BAAP

SITE ID: RPS-91-57

LOCATION ACTIVITY: START: 0825 END: 0835

SITE TYPE: DTCH

JOB NUMBER: 6853-04

PROGRAM: C

SAMPLING DATE: 7 20 91

FILE NAME: CSO

WEATHER: Sunny, 90's

SEDIMENT DATA

DEPTH OF SEDIMENT SAMPLE: 0-4 IN

TYPE OF SAMPLE COLLECTED: [x] DISCRETE [ ] COMPOSITE

TYPE OF SEDIMENT:
- [ ] CLAY
- [x] SAND
- [x] ORGANIC
- [ ] SILT
- [ ] GRAVEL
- [ ] OTHER

EQUIPMENT USED FOR COLLECTION:
- [ ] GRAVITY CORER
- [x] TULIP BULB PLANTER
- [x] S.S. HAND SPOON
- [x] ALUMINUM PAN
- [ ] PLASTIC SCOOP
- [ ] OTHER

DECONTAMINATION FLUIDS USED:
- [x] POTABLE WATER
- [ ] POTABLE WATER WITH HIGH PRESSURE
- [ ] OTHER

SAMPLE OBSERVATIONS: [ ] ODOR [ ] COLORED

AMBIENT AIR: 0.0 PPM

SAMPLE LOCATION: 0.0 PPM

pH: — UNITS

ANALYTICAL PARAMETERS

	METHOD NUMBER	PRESERVATION METHOD	VOLUME REQUIRED	SAMPLE COLLECTED
[ ] PP METALS (SPECIFIED BELOW)		4 DEG C		
[x] AL	JS12	4 DEG C		
[x] CA		4 DEG C		
[x] NA		4 DEG C		
[x] CD		4 DEG C		
[x] CR		4 DEG C		
[x] HG	Y9	4 DEG C		
[x] PB	JD21	4 DEG C		DC
[x] TCLP METALS (SPECIFIED BELOW)		4 DEG C		
[x] NIT	KF17	4 DEG C		
[x] SO4	KT07	4 DEG C		
[ ] NH3N2	USEPA 350.2	4 DEG C		
[ ] TOC	USEPA CE-81-1	4 DEG C		
[ ] pH	SW846 METHOD 9045	4 DEG C		
* [x] VOC	LM23	4 DEG C		EA
* [x] BN/A	LM25	4 DEG C		DC
[x] NG	LW27	4 DEG C		
[x] NAM	LN08	4 DEG C		
[x] DNT	LW23	4 DEG C		

SAMPLE BOTTLE ID NUMBERS: 2509, 2511, 2510, 2512, 2513, 2514, 2515

NOTES (LOCATION SKETCH)

* THESE ARE DATACHEM METHODS. EA METHODS: VOC LM17, LM26
B/NA LM20

PP METALS (PRIORITY POLLUTANT): AG, AS, BE, CD, CR, CU, PB, HG, NI, SB, SE, TL, ZN.
JS12, B9, JD21, JD20, Y9.

TCLP METALS: CD, CR, HG, PB.
JS12, 40 CFR 261.24

DC: 3 bottles
EA: 1 bottle

SIGNATURE: vm/ nk

RECEIVED BY: Nancy E. Rotka

BB ENVIRONMENTAL SERVICES, INC

FIELD DATA RECORD - SEDIMENT

FIELD SAMPLING NUMBER: RP91580DC

PROJECT: USATHAMA-BAAP

SITE ID: RPS-91-58

SITE TYPE: DITCH

JOB NUMBER: 6853-04

PROGRAM: C

SAMPLING DATE: 9.20.91

FILE NAME: CSO

WEATHER: Sunny, ~80's

LOCATION ACTIVITY: START: 0840 END: 0845

SEDIMENT DATA

DEPTH OF SEDIMENT SAMPLE: 1-5 IN

TYPE OF SAMPLE COLLECTED: [x] DISCRETE [ ] COMPOSITE

TYPE OF SEDIMENT: [x] CLAY [x] SAND [ ] ORGANIC [ ] SILT [ ] GRAVEL [ ] OTHER

EQUIPMENT USED FOR COLLECTION: [ ] GRAVITY CORER [x] TULIP BULB PLANTER [x] S.S. HAND SPOON [x] ALUMINUM PAN [ ] PLASTIC SCOOP [ ] OTHER

DECONTAMINATION FLUIDS USED: [ ] POTABLE WATER [ ] POTABLE WATER WITH HIGH PRESSURE [ ] OTHER

SAMPLE OBSERVATIONS: [ ] ODOR [ ] COLORED

AMBIENT AIR: 0.0 PPM

SAMPLE LOCATION: 0.0 PPM

pH: — UNITS

ANALYTICAL PARAMETERS

	METHOD NUMBER	PRESERVATION METHOD	VOLUME REQUIRED	SAMPLE COLLECTED	SAMPLE BOTTLE ID NUMBERS
[x] PP METALS (SPECIFIED BELOW)		4 DEG C			
[x] AL	JS12	4 DEG C			
[x] CA		4 DEG C			
[x] NA		4 DEG C			
[x] CD		4 DEG C			2530
[x] CR		4 DEG C			
[x] HG	Y9	4 DEG C			
[x] PB	JD21	4 DEG C		DC	2532
[x] TCLP METALS (SPECIFIED BELOW)		4 DEG C			2531
[x] FIT	KF17	4 DEG C			
[x] SO4	KT07	4 DEG C			
[x] NH3N2	USEPA 350.2	4 DEG C			
[x] TOC	USEPA CE-81-1	4 DEG C			
[x] pH	SW846 METHOD 9045	4 DEG C			
[x] VOC	LM23	4 DEG C		EA	2533
[x] BN/A	LM25	4 DEG C			2534
[x] AG	LW27	4 DEG C		DC	2535
[x] NAM	LN08	4 DEG C			2536
[x] DNT	LW23	4 DEG C			

NOTES (LOCATION SKETCH)

* THESE ARE DATACHEM METHODS. EA METHODS: VOC LM17, LM26
B/NA LM20

PP METALS (PRIORITY POLLUTANT): AG, AS, BE, CD, CR, CU, PB, HG, NI, SB, SE, TL, ZN.
JS12, B9, JD21, JD20, Y9.

TCLP METALS: CD, CR, HG, PB.
JS12, 40 CFR 261.24

DC: 3 bottles
EA: 1 bottle

SIGNATURE: VM/MR

RECEIVED BY: Nancy E. Ferrara

ABB ENVIRONMENTAL SERVICES, INC

FIELD DATA RECORD - SEDIMENT

FIELD SAMPLING NUMBER: RP1-57009

PROJECT: USATHAMA-BAAP

SITE ID: RPS-9-1-59

SITE TYPE: DITCH

JOB NUMBER: 6853-04

PROGRAM: C

SAMPLING DATE: 9.20.91

FILE NAME: CSO

WEATHER: sunny, 70's

LOCATION ACTIVITY: START: 0900 END: 0905

SEDIMENT DATA

DEPTH OF SEDIMENT SAMPLE: 1-4 IN

TYPE OF SAMPLE COLLECTED: [x] DISCRETE [ ] COMPOSITE

TYPE OF SEDIMENT: [x] CLAY [x] SAND [x] ORGANIC [x] SILT [ ] GRAVEL [ ] OTHER

EQUIPMENT USED FOR COLLECTION: [x] GRAVITY CORER [x] TULIP BULB PLANTER [x] S.S. HAND SPOON [x] ALUMINUM PAN [ ] PLASTIC SCOOP [ ] OTHER

DECONTAMINATION FLUIDS USED: [x] POTABLE WATER [ ] POTABLE WATER WITH HIGH PRESSURE [ ] OTHER

SAMPLE OBSERVATIONS: [ ] ODOR [ ] COLORED

AMBIENT AIR: 0.0 PPM

SAMPLE LOCATION: 00 PPM

pH: ___ UNITS

ANALYTICAL PARAMETERS

	METHOD NUMBER	PRESERVATION METHOD	VOLUME REQUIRED	SAMPLE COLLECTED
[ ] PP METALS (SPECIFIED BELOW)		4 DEG C		
[ ] AL	JS12	4 DEG C		
[ ] CA		4 DEG C		
[ ] NA		4 DEG C		
[x] CD		4 DEG C		
[x] CR		4 DEG C		
[x] HG	Y9	4 DEG C		
[x] PB	JD21	4 DEG C		DC
[x] TCLP METALS (SPECIFIED BELOW)		4 DEG C		
[x] NIT	KF17	4 DEG C		
[x] SO4	KT07	4 DEG C		
[ ] NH3N2	USEPA 350.2	4 DEG C		
[ ] TOC	USEPA CE-81-1	4 DEG C		
[ ] pH	SW846 METHOD 9045	4 DEG C		
* [ ] VOC	LM23	4 DEG C		EA
* [x] BN/A	LM25	4 DEG C		
[x] NG	LW27	4 DEG C		DC
[x] NAM	LN08	4 DEG C		
[x] DNT	LW23 •	4 DEG C		

SAMPLE BOTTLE ID NUMBERS: 2551, 2553, 2552, 2554, 2555, 2556, 2557

NOTES (LOCATION SKETCH)

* THESE ARE DATACHEM METHODS. EA METHODS: VOC LM17, LM26; B/NA LM20

PP METALS (PRIORITY POLLUTANT): AG, AS, BE, CD, CR, CU, PB, HG, NI, SB, SE, TL, ZN. JS12, B9, JD21, JD20, Y9.

TCLP METALS: CD, CR, HG, PB. JS12, 40 CFR 261.24

DC: 3 bottles
EA: 1 bottles

SIGNATURE: VM / NK

RECEIVED BY: Nancy E. Cotton

BB ENVIRONMENTAL SERVICES, INC

FIELD DATA RECORD – SEDIMENT

FIELD SAMPLING NUMBER: RP1500000

PROJECT: USATHAMA-BAAP

SITE ID: RPS-91-60

LOCATION ACTIVITY: START: 0915 END: 0920

SITE TYPE: DTCH

JOB NUMBER: 6853-04

PROGRAM: C

SAMPLING DATE: 9.20.91

FILE NAME: CSO

WEATHER: Sunny, °50's

SEDIMENT DATA

DEPTH OF SEDIMENT SAMPLE: 1-5 IN

TYPE OF SAMPLE COLLECTED: [x] DISCRETE [ ] COMPOSITE

TYPE OF SEDIMENT:
- [ ] CLAY
- [x] SAND
- [x] ORGANIC
- [ ] SILT
- [ ] GRAVEL
- [ ] OTHER

EQUIPMENT USED FOR COLLECTION:
- [ ] GRAVITY CORER
- [x] TULIP BULB PLANTER
- [x] S.S. HAND SPOON
- [x] ALUMINUM PAN
- [ ] PLASTIC SCOOP
- [ ] OTHER

DECONTAMINATION FLUIDS USED:
- [x] POTABLE WATER
- [ ] POTABLE WATER WITH HIGH PRESSURE
- [ ] OTHER

SAMPLE OBSERVATIONS: [ ] ODOR [ ] COLORED

AMBIENT AIR: 0.0 PPM

SAMPLE LOCATION: 0.0 PPM

pH: — UNITS

ANALYTICAL PARAMETERS

	METHOD NUMBER	PRESERVATION METHOD	VOLUME REQUIRED	SAMPLE COLLECTED
[ ] PP METALS (SPECIFIED BELOW)		4 DEG C		
[ ] AL	JS12	4 DEG C		
[ ] CA		4 DEG C		
[ ] NA		4 DEG C		
[x] CD		4 DEG C		
[x] CR		4 DEG C		
[x] HG	Y9	4 DEG C		
[x] PB	JD21	4 DEG C		
[ ] TCLP METALS (SPECIFIED BELOW)		4 DEG C		
[ ] FE	KF17	4 DEG C		
[ ] SO4	KF07	4 DEG C		
[ ] NH3N2	USEPA 350.2	4 DEG C		
[ ] TOC	USEPA CE-81-1	4 DEG C		
[ ] pH	SW846 METHOD 9045	4 DEG C		
[ ] VOC	LM23	4 DEG C		EA
[x] BN/A	LM25	4 DEG C		DC
[x] NG	LW27	4 DEG C		
[x] NAM	LN08	4 DEG C		
[x] DNT	LW23	4 DEG C		

SAMPLE BOTTLE ID NUMBERS

DC: 2572, 2574, 2573

EA: 2575, 2576, 2577, 2576

NOTES (LOCATION SKETCH)

* THESE ARE DATACHEM METHODS. EA METHODS: VOC LM17, LM26; B/NA LM20

PP METALS (PRIORITY POLLUTANT): AG, AS, BE, CD, CR, CU, PB, HG, NI, SB, SE, TL, ZN. JS12, B9, JD21, JD20, Y9.

TCLP METALS: CD, CR, HG, PB. JS12, 40 CFR 261.24

DC: 3 bottles
EA: 1 bottle

SIGNATURE: VRO/NR

RECEIVED BY: Virginia E. Rofa

ABB ENVIRONMENTAL SERVICES, INC

FIELD DATA RECORD – SEDIMENT

FIELD SAMPLING NUMBER: RP16000

PROJECT: USATHAMA-BAAP

SITE ID: RPS-9--6

LOCATION ACTIVITY: START: 0925 END: 0930

SITE TYPE: DTCH

JOB NUMBER: 6853-04

PROGRAM: C

SAMPLING DATE: 9.20.91

FILE NAME: CSO

WEATHER: Sunny, '50's

SEDIMENT DATA

DEPTH OF SEDIMENT SAMPLE: 1-5 IN

TYPE OF SAMPLE COLLECTED: [x] DISCRETE [ ] COMPOSITE

TYPE OF SEDIMENT:
- [ ] CLAY
- [x] SAND
- [ ] ORGANIC
- [x] SILT some
- [ ] GRAVEL
- [ ] OTHER

EQUIPMENT USED FOR COLLECTION:
- [x] GRAVITY CORER
- [x] TULIP BULB PLANTER
- [x] S.S. HAND SPOON
- [x] ALUMINUM PAN
- [ ] PLASTIC SCOOP
- [ ] OTHER

DECONTAMINATION FLUIDS USED:
- [x] POTABLE WATER
- [ ] POTABLE WATER WITH HIGH PRESSURE
- [ ] OTHER

SAMPLE OBSERVATIONS: [ ] ODOR [ ] COLORED

AMBIENT AIR: 0.0 PPM

SAMPLE LOCATION: 0.0 PPM

pH: — UNITS

ANALYTICAL PARAMETERS

		METHOD NUMBER	PRESERVATION METHOD	VOLUME REQUIRED	SAMPLE COLLECTED
[ ]	PP METALS (SPECIFIED BELOW)		4 DEG C		
[ ]	AL	JS12	4 DEG C		
[ ]	CA		4 DEG C		
[ ]	NA		4 DEG C		
[ ]	CD		4 DEG C		
[ ]	CR		4 DEG C		
[ ]	HG	Y9	4 DEG C		
[ ]	PB	JD21	4 DEG C		
[ ]	TCLP METALS (SPECIFIED BELOW)		4 DEG C		
[ ]	NIT	KF17	4 DEG C		
[ ]	SO4	KT07	4 DEG C		
[ ]	NH3N2	USEPA 350.2	4 DEG C		
[ ]	TOC	USEPA CE-81-1	4 DEG C		
[ ]	pH	SW846 METHOD 9045	4 DEG C		
* [ ]	VOC	LM23	4 DEG C		EA
* [ ]	BN/A	LM25	4 DEG C		DC
[ ]	NG	LW27	4 DEG C		
[ ]	NAM	LN08	4 DEG C		
[ ]	DNT	LW23	4 DEG C		

SAMPLE BOTTLE ID NUMBERS: 2593, 2595, 2594, 2596, 2597, 2596, 2599

NOTES (LOCATION SKETCH)

* THESE ARE DATACHEM METHODS. EA METHODS: VOC LM17, LM26
B/NA LM20

PP METALS (PRIORITY POLLUTANT): AG, AS, BE, CD, CR, CU, PB, HG, NI, SB, SE, TL, ZN.
JS12, B9, JD21, JD20, Y9.

TCLP METALS: CD, CR, HG, PB.
JS12, 40 CFR 261.24

DC: 3 bottles
EA: 1 bottle

SIGNATURE: VM/NR

RECEIVED BY: Nancy E Rotea

BB ENVIRONMENTAL SERVICES, INC

FIELD DATA RECORD – SEDIMENT

FIELD SAMPLING NUMBER: RP16200D

PROJECT: USATHAMA-BAAP

SITE ID: RPS-91-62

SITE TYPE: DTCH

JOB NUMBER: 6853-04

PROGRAM: C

LOCATION ACTIVITY: START: 0940 END: 0945

SAMPLING DATE: 9.20.91

FILE NAME: CSO

WEATHER: Sunny, 70's

SEDIMENT DATA

DEPTH OF SEDIMENT SAMPLE: 1-4 IN

TYPE OF SAMPLE COLLECTED: [x] DISCRETE [ ] COMPOSITE

TYPE OF SEDIMENT:
- [ ] CLAY
- [x] SAND
- [x] ORGANIC
- [x] SILT
- [ ] GRAVEL
- [ ] OTHER

EQUIPMENT USED FOR COLLECTION:
- [x] GRAVITY CORER
- [x] TULIP BULB PLANTER
- [x] S.S. HAND SPOON
- [x] ALUMINUM PAN
- [ ] PLASTIC SCOOP
- [ ] OTHER

DECONTAMINATION FLUIDS USED:
- [x] POTABLE WATER
- [ ] POTABLE WATER WITH HIGH PRESSURE
- [ ] OTHER

SAMPLE OBSERVATIONS: [ ] ODOR [ ] COLORED

AMBIENT AIR: 0.0 PPM

SAMPLE LOCATION: 0.0 PPM

pH: — UNITS

ANALYTICAL PARAMETERS

	METHOD NUMBER	PRESERVATION METHOD	VOLUME REQUIRED	SAMPLE COLLECTED
[ ] PP METALS (SPECIFIED BELOW)		4 DEG C		
[ ] AL	JS12	4 DEG C		
[ ] CA	|	4 DEG C		
[ ] NA	|	4 DEG C		
[x] CD	|	4 DEG C		
[x] CR	|	4 DEG C		
[x] HG	Y9	4 DEG C		
[x] PB	JD21	4 DEG C		DC
[ ] TCLP METALS (SPECIFIED BELOW)		4 DEG C		
[ ] NIT	KF17	4 DEG C		
[ ] SO4	KT07	4 DEG C		
[ ] NH3N2	USEPA 350.2	4 DEG C		
[ ] TOC	USEPA CE-81-1	4 DEG C		
[ ] pH	SW846 METHOD 9045	4 DEG C		
[ ] VOC	LM23	4 DEG C		
[x] BN/A	LM25	4 DEG C		EA
[x] NG	LW27	4 DEG C		
[x] NAM	LN08	4 DEG C		DC
[x] DNT	LW23	4 DEG C		

SAMPLE BOTTLE ID NUMBERS: 2614, 2616, 2615, 2617, 2618, 2619, 2620

NOTES
LOCATION SKETCH)

* THESE ARE DATACHEM METHODS. EA METHODS: VOC LM17, LM26
B/NA LM20

PP METALS (PRIORITY POLLUTANT): AG, AS, BE, CD, CR, CU, PB, HG, NI, SB, SE, TL, ZN.
JS12, B9, JD21, JD20, Y9.

TCLP METALS: CD, CR, HG, PB.
JS12, 40 CFR 261.24

DC: 3 bottles
EA: 1 bottle

SIGNATURE: VM/NR

RECEIVED BY: Nancy E Rotia

ABB ENVIRONMENTAL SERVICES, INC

PAGE 7 OF 2

FIELD DATA RECORD - SEDIMENT

FIELD SAMPLING NUMBER: RP1-63000

PROJECT: USATHAMA-BAAP

SITE ID: RPS-91-63

SITE TYPE: DTCH

JOB NUMBER: 6853-04

PROGRAM: C

LOCATION ACTIVITY: START: 0950 END: 0955

SAMPLING DATE: 9.20.9[illegible]

FILE NAME: CSO

WEATHER: sunny, 75[illegible]

SEDIMENT DATA

DEPTH OF SEDIMENT SAMPLE: 1-4 IN

TYPE OF SAMPLE COLLECTED: [x] DISCRETE [ ] COMPOSITE

TYPE OF SEDIMENT:
- [x] CLAY
- [x] SAND
- [x] ORGANIC
- [x] SILT
- [ ] GRAVEL
- [ ] OTHER

EQUIPMENT USED FOR COLLECTION:
- [ ] GRAVITY CORER
- [x] TULIP BULB PLANTER
- [ ] S.S. HAND SPOON
- [x] ALUMINUM PAN
- [ ] PLASTIC SCOOP
- [ ] OTHER

DECONTAMINATION FLUIDS USED
- [x] POTABLE WATER
- [ ] POTABLE WATER WITH HIGH PRESSURE
- [ ] OTHER

SAMPLE OBSERVATIONS: [ ] ODOR [ ] COLORED

AMBIENT AIR: 0.0 PPM

SAMPLE LOCATION: 0.0 PPM

pH: — UNITS

ANALYTICAL PARAMETERS

	METHOD NUMBER	PRESERVATION METHOD	VOLUME REQUIRED	SAMPLE COLLECTED
[x] PP METALS (SPECIFIED BELOW)		4 DEG C		
[x] AL	JS12	4 DEG C		
[x] CA		4 DEG C		
[x] NA		4 DEG C		
[x] CD		4 DEG C		
[x] CR		4 DEG C		
[x] MG	Y9	4 DEG C		
[x] PB	JD21	4 DEG C		DC
[x] TCLP METALS (SPECIFIED BELOW)		4 DEG C		
[x] NIT	KF17	4 DEG C		
[x] SO4	KT07	4 DEG C		
[ ] NH3N2	USEPA 350.2	4 DEG C		
[ ] TOC	USEPA CE-81-1	4 DEG C		
[ ] PH	SW846 METHOD 9045	4 DEG C		
[x] * VOC	LM23	4 DEG C		EA
[x] * BN/A	LM25	4 DEG C		
[x] MG	LM27	4 DEG C		DC
[x] NAM	LN08	4 DEG C		
[x] DNT	LW23	4 DEG C		

SAMPLE BOTTLE ID NUMBERS: 2635, 2637, 2636, 2638, 2639, 2640, 2641

NOTES

(LOCATION SKETCH)

* THESE ARE DATACHEM METHODS. EA METHODS: VOC LM17, LM26; B/NA LM20

PP METALS (PRIORITY POLLUTANT): AG, AS, BE, CD, CR, CU, PB, HG, NI, SB, SE, TL, ZN. JS12, B9, JD21, JD20, Y9.

TCLP METALS: CD, CR, HG, PB. JS12, 40 CFR 261.24

DC: 3 bottles

EA: 1 bottle

SIGNATURE: VM/ERR

RECEIVED BY: Nancy E Rotea

BB ENVIRONMENTAL SERVICES, INC

FIELD DATA RECORD – SEDIMENT

FIELD SAMPLING NUMBER: R91S4000

PROJECT: USATHAMA-BAAP

SITE ID: RPS-91-S4

SITE TYPE: DTCH

JOB NUMBER: 6853-04

PROGRAM: C

SAMPLING DATE: 9.20.91

FILE NAME: CSO

WEATHER: Sunny 70's

LOCATION ACTIVITY: START: 1020 END: 1025

SEDIMENT DATA

DEPTH OF SEDIMENT SAMPLE: 1-5 IN

TYPE OF SAMPLE COLLECTED: [x] DISCRETE [ ] COMPOSITE

TYPE OF SEDIMENT:
- [x] CLAY
- [x] SAND trace
- [x] ORGANIC
- [x] SILT
- [ ] GRAVEL
- [ ] OTHER

EQUIPMENT USED FOR COLLECTION:
- [x] GRAVITY CORER
- [ ] TULIP BULB PLANTER
- [x] S.S. HAND SPOON
- [x] ALUMINUM PAN
- [ ] PLASTIC SCOOP
- [ ] OTHER

DECONTAMINATION FLUIDS USED:
- [x] POTABLE WATER
- [ ] POTABLE WATER WITH HIGH PRESSURE
- [ ] OTHER

SAMPLE OBSERVATIONS: [ ] ODOR [ ] COLORED

AMBIENT AIR: 0.0 PPM

SAMPLE LOCATION: 0.0 PPM

pH: – UNITS

ANALYTICAL PARAMETERS

	METHOD NUMBER	PRESERVATION METHOD	VOLUME REQUIRED	SAMPLE COLLECTED
[ ] PP METALS (SPECIFIED BELOW)		4 DEG C		
[ ] AL	JS12	4 DEG C		
[ ] CA		4 DEG C		
[ ] NA		4 DEG C		
[x] CD		4 DEG C		
[x] CR		4 DEG C		
[x] HG	Y9	4 DEG C		
[x] PB	JD21	4 DEG C		DC
[x] TCLP METALS (SPECIFIED BELOW)		4 DEG C		
[ ] NIT	KF17	4 DEG C		
[ ] SO4	KT07	4 DEG C		
[ ] NH3N2	USEPA 350.2	4 DEG C		
[ ] TOC	USEPA CE-81-1	4 DEG C		
[ ] pH	SW846 METHOD 9045	4 DEG C		
[x] VOC	LM23	4 DEG C		EA
[x] BN/A	LM25	4 DEG C		DC
[x] NG	LW27	4 DEG C		
[x] NAM	LN08	4 DEG C		
[x] DNT	LW23	4 DEG C		

SAMPLE BOTTLE ID NUMBERS: 2656, 2658, 2657, 2659, 2660, 2661, 2662

NOTES (LOCATION SKETCH)

* THESE ARE DATACHEM METHODS. EA METHODS: VOC LM17, LM26
B/NA LM20

PP METALS (PRIORITY POLLUTANT): AG, AS, BE, CD, CR, CU, PB, HG, NI, SB, SE, TL, ZN.
JS12, B9, JD21, JD20, Y9.

TCLP METALS: CD, CR, HG, PB.
JS12, 40 CFR 261.24

DC: 3 bottles
EA: 1 bottles

SIGNATURE: VM/MR

RECEIVED BY: Nancy E. Rofea

ABB ENVIRONMENTAL SERVICES, INC

PAGE 9 OF 20

FIELD DATA RECORD - SEDIMENT

FIELD SAMPLING NUMBER: A9165000

PROJECT: USATHAMA-BAAP

SITE TYPE: DTCH

SAMPLING DATE: 9 20 91

SITE ID: RPS-91-65

JOB NUMBER: 6853-04

FILE NAME: CSO

WEATHER: Sunny, 85°F

LOCATION ACTIVITY: START: 1025 END: 1030

PROGRAM: C

SEDIMENT DATA

DEPTH OF SEDIMENT SAMPLE: 0 - 6 IN

TYPE OF SAMPLE COLLECTED: [x] DISCRETE [ ] COMPOSITE

TYPE OF SEDIMENT:
- [x] CLAY
- [x] SAND
- [x] ORGANIC
- [x] SILT
- [ ] GRAVEL
- [ ] OTHER

EQUIPMENT USED FOR COLLECTION:
- [ ] GRAVITY CORER
- [x] TULIP BULB PLANTER
- [ ] S.S. HAND SPOON
- [x] ALUMINUM PAN
- [ ] PLASTIC SCOOP
- [ ] OTHER

DECONTAMINATION FLUIDS USED
- [x] POTABLE WATER
- [ ] POTABLE WATER WITH HIGH PRESSURE
- [ ] OTHER

SAMPLE OBSERVATIONS
- [ ] ODOR
- [ ] COLORED
- [x] moist

AMBIENT AIR: 0.0 PPM

SAMPLE LOCATION: 0.0 PPM

pH: NA UNITS

ANALYTICAL PARAMETERS

	METHOD NUMBER	PRESERVATION METHOD	VOLUME REQUIRED	SAMPLE COLLECTED	SAMPLE BOTTLE ID NUMBERS
[ ] PP METALS (SPECIFIED BELOW)		4 DEG C		[ ]	
[ ] AL	JS12	4 DEG C		[ ]	
[ ] CA		4 DEG C		[ ]	
[ ] NA		4 DEG C		[ ]	
[x] CD		4 DEG C		[x]	2677
[x] CR		4 DEG C		[x]	
[x] HG	Y9	4 DEG C		[x]	
[x] PB	JD21	4 DEG C		[x]	
[x] TCLP METALS (SPECIFIED BELOW)		4 DEG C		[x]	2679
[x] NIT	KF17	4 DEG C		[x]	2678
[x] SO4	KT07	4 DEG C		[x]	
[ ] NH3N2	USEPA 350.2	4 DEG C		[ ]	
[ ] TOC	USEPA CE-81-1	4 DEG C		[ ]	
[ ] pH	SW846 METHOD 9045	4 DEG C		[ ]	
* [ ] VOC	LM23	4 DEG C		[ ]	
* [x] BN/A	LM25	4 DEG C		[x]	2680
[x] NG	LW27	4 DEG C		[x]	2681
[x] NAM	LN08	4 DEG C		[x]	2682
[x] DNT	LW23	4 DEG C		[x]	2683
[ ]				[ ]	
[ ]				[ ]	

DC

EA

DC

NOTES (LOCATION SKETCH)

* THESE ARE DATACHEM METHODS. EA METHODS: VOC LM17, LM26
B/NA LM20

PP METALS (PRIORITY POLLUTANT): AG, AS, BE, CD, CR ,CU, PB, HG, NI, SB, SE, TL, ZN.
JS12, B9, JD21, JD20, Y9.

TCLP METALS: CD, CR, HG, PB.
JS12, 40 CFR 261.24

DC: 3 bottles
EA: 1 bottle

SIGNATURE: VM/MC

RECEIVED BY: Nancy E Rotia

BB ENVIRONMENTAL SERVICES, INC

FIELD DATA RECORD – SEDIMENT

FIELD SAMPLING NUMBER: RP1660DP

PROJECT: USATHAMA-BAAP

SITE ID: RPS-91-66

SITE TYPE: DTCH

JOB NUMBER: 6853-04

PROGRAM: C

SAMPLING DATE: 9.20.91

FILE NAME: CSO

WEATHER: Sunny 50's

LOCATION ACTIVITY: START: 1045 END: 1050

SEDIMENT DATA

DEPTH OF SEDIMENT SAMPLE: 1-4 IN

TYPE OF SAMPLE COLLECTED: [x] DISCRETE [ ] COMPOSITE

TYPE OF SEDIMENT:
- [ ] CLAY
- [x] SAND
- [x] ORGANIC trace
- [x] SILT
- [ ] GRAVEL
- [ ] OTHER

EQUIPMENT USED FOR COLLECTION:
- [ ] GRAVITY CORER
- [x] TULIP BULB PLANTER
- [x] S.S. HAND SPOON
- [x] ALUMINUM PAN
- [ ] PLASTIC SCOOP
- [ ] OTHER

DECONTAMINATION FLUIDS USED:
- [x] POTABLE WATER
- [ ] POTABLE WATER WITH HIGH PRESSURE
- [ ] OTHER

SAMPLE OBSERVATIONS: [ ] ODOR [ ] COLORED

AMBIENT AIR: PPM

SAMPLE LOCATION: PPM

pH: — UNITS

ANALYTICAL PARAMETERS

	METHOD NUMBER	PRESERVATION METHOD	VOLUME REQUIRED	SAMPLE COLLECTED
[ ] PP METALS (SPECIFIED BELOW)		4 DEG C		
[x] AL	JS12	4 DEG C		
[x] CA		4 DEG C		
[x] NA		4 DEG C		
[x] CD		4 DEG C		
[x] CR		4 DEG C		
[x] HG	Y9	4 DEG C		
[x] PB	JD21	4 DEG C		
[ ] TCLP METALS (SPECIFIED BELOW)		4 DEG C		
[ ] NIT	KF17	4 DEG C		
[ ] SO4	KT07	4 DEG C		
[ ] NH3N2	USEPA 350.2	4 DEG C		
[ ] TOC	USEPA CE-81-1	4 DEG C		
[ ] pH	SW846 METHOD 9045	4 DEG C		
[ ] VOC	LM23	4 DEG C		
[ ] BN/A	LM25	4 DEG C		
[ ] NG	LW27	4 DEG C		
[ ] NAM	LN08	4 DEG C		
[ ] DNT	LW23	4 DEG C		

SAMPLE BOTTLE ID NUMBERS

DC: 2698, 2700, 2699

EA: 2701

DC: 2702, 2703, 2704

NOTES (LOCATION SKETCH)

* THESE ARE DATACHEM METHODS. EA METHODS: VOC LM17, LM26
B/NA LM20

PP METALS (PRIORITY POLLUTANT): AG, AS, BE, CD, CR, CU, PB, HG, NI, SB, SE, TL, ZN.
JS12, B9, JD21, JD20, Y9.

TCLP METALS: CD, CR, HG, PB.
JS12, 40 CFR 261.24

DC: 3 bottles
EA: 1 bottles

SIGNATURE: VM / NK

RECEIVED BY: Nancy E. Rotta

ABB ENVIRONMENTAL SERVICES, INC

FIELD DATA RECORD – SEDIMENT

FIELD SAMPLING NUMBER: R91670000

PROJECT: USATHAMA-BAAP

SITE ID: RPS-91-67 1

SITE TYPE: DTCH

JOB NUMBER: 6853-04

PROGRAM: C

LOCATION ACTIVITY: START: 1055 END: 1100

SAMPLING DATE: 9.20.91

FILE NAME: CSO

WEATHER: Sunny '50's

SEDIMENT DATA

DEPTH OF SEDIMENT SAMPLE: 1-4 IN

TYPE OF SAMPLE COLLECTED: [x] DISCRETE [ ] COMPOSITE

TYPE OF SEDIMENT:
- [ ] CLAY
- [x] SAND
- [x] ORGANIC
- [x] SILT some
- [ ] GRAVEL
- [ ] OTHER

EQUIPMENT USED FOR COLLECTION:
- [ ] GRAVITY CORER
- [x] TULIP BULB PLANTER
- [x] S.S. HAND SPOON
- [x] ALUMINUM PAN
- [ ] PLASTIC SCOOP
- [ ] OTHER

DECONTAMINATION FLUIDS USED
- [x] POTABLE WATER
- [ ] POTABLE WATER WITH HIGH PRESSURE
- [ ] OTHER

SAMPLE OBSERVATIONS
- [ ] ODOR
- [ ] COLORED

AMBIENT AIR: 0.0 PPM

SAMPLE LOCATION: 0.0 PPM

pH: — UNITS

ANALYTICAL PARAMETERS

		METHOD NUMBER	PRESERVATION METHOD	VOLUME REQUIRED	SAMPLE COLLECTED
[ ]	PP METALS (SPECIFIED BELOW)		4 DEG C		
[x]	AL	JS12	4 DEG C		
[x]	CA		4 DEG C		
[x]	NA		4 DEG C		
[x]	CD		4 DEG C		
[x]	CR		4 DEG C		
[x]	HG	Y9	4 DEG C		
[x]	PB	JD21	4 DEG C		DC
[ ]	TCLP METALS (SPECIFIED BELOW)		4 DEG C		
[x]	NIT	KF17	4 DEG C		
[x]	SO4	KT07	4 DEG C		
[ ]	NH3N2	USEPA 350.2	4 DEG C		
[ ]	TOC	USEPA CE-81-1	4 DEG C		
[ ]	pH	SW846 METHOD 9045	4 DEG C		
* [ ]	VOC	LM23	4 DEG C		EA
* [x]	BN/A	LM25	4 DEG C		DC
[x]	NG	LW27	4 DEG C		
[x]	NAM	LN08	4 DEG C		
[x]	DNT	LW23	4 DEG C		

SAMPLE BOTTLE ID NUMBERS: 2719, 2721, 2720, 2722, 2723, 2724, 2725

NOTES (LOCATION SKETCH)

* THESE ARE DATACHEM METHODS. EA METHODS: VOC LM17, LM26; B/NA LM20

PP METALS (PRIORITY POLLUTANT): AG, AS, BE, CD, CR, CU, PB, HG, NI, SB, SE, TL, ZN. JS12, B9, JD21, JD20, Y9.

TCLP METALS: CD, CR, HG, PB. JS12, 40 CFR 261.24

DC: 3 bottles
EA: 1 bottles

SIGNATURE: VM/MR

RECEIVED BY: Nancy E. Rotia

BB ENVIRONMENTAL SERVICES, INC

FIELD DATA RECORD – SEDIMENT

FIELD SAMPLING NUMBER: R9 1 68 0 0 0 (MR)

PROJECT	USATHAMA-BAAP	SITE TYPE	DTCH
SITE ID	RPS-91-68	JOB NUMBER	6853-04
LOCATION ACTIVITY	START: 1105 END: 1110	PROGRAM	C

SAMPLING DATE	9.20.91
FILE NAME	CSO
WEATHER	sunny, 850's

SEDIMENT DATA

DEPTH OF SEDIMENT SAMPLE: 1-4 IN

TYPE OF SAMPLE COLLECTED: [x] DISCRETE [ ] COMPOSITE

TYPE OF SEDIMENT:
- [ ] CLAY
- [x] SAND
- [x] ORGANIC little
- [x] SILT
- [ ] GRAVEL
- [ ] OTHER

EQUIPMENT USED FOR COLLECTION:
- [ ] GRAVITY CORER
- [x] TULIP BULB PLANTER
- [ ] S.S. HAND SPOON
- [x] ALUMINUM PAN
- [ ] PLASTIC SCOOP
- [ ] OTHER

DECONTAMINATION FLUIDS USED:
- [x] POTABLE WATER
- [ ] POTABLE WATER WITH HIGH PRESSURE
- [ ] OTHER

SAMPLE OBSERVATIONS: [ ] ODOR [ ] COLORED

AMBIENT AIR: 0.0 PPM

SAMPLE LOCATION: 0.0 PPM

pH: — UNITS

ANALYTICAL PARAMETERS

	METHOD NUMBER	PRESERVATION METHOD	VOLUME REQUIRED	SAMPLE COLLECTED	SAMPLE BOTTLE ID NUMBERS
[ ] PP METALS (SPECIFIED BELOW)		4 DEG C		[ ]	
[ ] AL	JS12	4 DEG C		[ ]	
[ ] CA		4 DEG C		[ ]	
[ ] NA		4 DEG C		[ ]	
[x] CD		4 DEG C		[x]	2740
[x] CR		4 DEG C		[x]	
[x] HG	Y9	4 DEG C		[x]	
[x] PB	JD21	4 DEG C		[x]	
[ ] TCLP METALS (SPECIFIED BELOW)		4 DEG C		[x]	2742
[ ] NIT	KF17	4 DEG C		[x]	2741
[ ] SO4	KT07	4 DEG C		[x]	
[ ] NH3N2	USEPA 350.2	4 DEG C		[ ]	
[ ] TOC	USEPA CE-81-1	4 DEG C		[ ]	
[ ] pH	SW846 METHOD 9045	4 DEG C		[ ]	
* [ ] VOC	LM23	4 DEG C		[ ]	
* [x] BN/A	LM25	4 DEG C		EA [x]	2743
[x] NG	LW27	4 DEG C		[x]	2744
[x] NAM	LN08	4 DEG C		DC [x]	2745
[x] DNT	LW23	4 DEG C		[x]	2746
[ ]				[ ]	
[ ]				[ ]	

NOTES (LOCATION SKETCH)

* THESE ARE DATACHEM METHODS. EA METHODS: VOC LM17, LM26
B/NA LM20

PP METALS (PRIORITY POLLUTANT): AG, AS, BE, CD, CR, CU, PB, HG, NI, SB, SE, TL, ZN.
JS12, B9, JD21, JD20, Y9.

TCLP METALS: CD, CR, HG, PB.
JS12, 40 CFR 261.24

DC: 3 bottles
EA: 1 bottle

SIGNATURE: VM/MR

RECEIVED BY: Nancy E. Roka

15

ABB ENVIRONMENTAL SERVICES, INC.

PAGE 4 OF 7

FIELD DATA RECORD – SURFACE WATER

FIELD SAMPLING NUMBER: RFW-91-0000

PROJECT	USATHAMA-BAAP	SITE TYPE	POND
SITE ID	RFW-91-01	JOB NUMBER	6853-04
LOCATION ACTIVITY	START: 1300 END: 1305	PROGRAM	C
SAMPLING DATE	9 20 91		
FILE NAME	CSW		
WEATHER	sunny, 60's		

SURFACE WATER DATA

WATER DEPTH @ SAMPLE LOCATION	1-2"	TEMPERATURE	22 DEG C.
DEPTH OF SAMPLE FROM TOP OF WATER	@ Surface FT	pH	8.5 UNITS
EQUIPMENT USED FOR COLLECTION	☑ NONE, GRAB INTO BOTTLE ☐ BOMB SAMPLER ☐ PUMP	SPEC. COND.	374 umhos/cm

SAMPLE LOCATION SKETCH BELOW? ☑ YES ☐ NO

AMBIENT AIR SAMPLE LOCATION: ——— PPM; ——— PPM

TYPE OF SURFACE WATER: ☐ STREAM ☐ RIVER ☑ POND/LAKE ☐ SEEP

DECONTAMINATION FLUIDS USED: ☐ POTABLE WATER ☑ NONE

ANALYTICAL PARAMETERS

	METHOD NUMBER	PRESERVATION METHOD	VOLUME REQUIRED	SAMPLE COLLECTED
☑ TAL METALS (SPECIFIED BELOW)		HNO3 TO pH<2	1 L poly	☑
☑ NIT	LL8	H2SO4 TO pH<2	50c ml	☑
☑ SO4	TT09	4 DEG C		☑
☑ CL	TT09	4 DEG C	1 L poly	☑
☑ NH3N2	TF30	H2SO4 TO pH<2	1 L poly	☑
☑ TKN	USEPA 351.1	[redacted] H_2SO_4		☑
☑ ALK	USEPA 310.1	4 DEG C	500 ml	☑
☑ HARD	USEPA 130.2	HNO3 TO pH<2	(3) 40 ml	☑
* ☑ VOC	UM21	[redacted] 4 DEG C	(2) 1 L AG	☑
* ☑ B/NA	UM25	4 DEG C	(3) 1 L AG	☑
☑ NG	UW27	4 DEG C	(3) 1 L AG	☑
☑ DNT	UW25	4 DEG C		☑

SAMPLE BOTTLE ID NUMBERS			LAB
33			DC
34			DC
36			DC
35			DC
MS 150	177		EA
MSD 151	176		EA
37			DC
38			DC
39	37		EA
40	38		EA
155	177	171	DC
156	178	172	DC

NOTES

(LOCATION SKETCH?)

* THESE ARE DATACHEM METHODS. EA METHODS: VOC UM19, UM26; B/NA UM24

TAL METALS (TOXIC ANALYTE LIST): AL, SB, AS, BA, BE, CD, CA, CR, CO, CU, FE, PB, MG, MN, HG, NI, K, SE, AG, NA, TL, V, ZN.
SS12, AX8, CC8, SD25, SD29, SD18
**METHOD NUMBER FOR TL PENDING CERTIFICATION

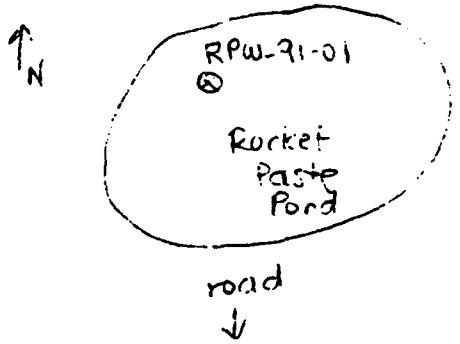

SIGNATURE: VM/MC

RECEIVED BY: Nancy E. Rostea

MD 8/9/89

ABB ENVIRONMENTAL SERVICES, INC.

FIELD DATA RECORD – SURFACE WATER

FIELD SAMPLING NUMBER: RFW191Z000

PROJECT	USATHAMA-BAAP	SITE TYPE	POND
SITE ID	RFW-91-02	JOB NUMBER	6853-04
LOCATION ACTIVITY	START: 1310 END: 1315	PROGRAM	C
SAMPLING DATE	9.20.9	FILE NAME	CSW
WEATHER	Sunny, 60's		

SURFACE WATER DATA

WATER DEPTH @ SAMPLE LOCATION: 1-2" FT

DEPTH OF SAMPLE FROM TOP OF WATER: @ Surface FT

EQUIPMENT USED FOR COLLECTION: [x] NONE, GRAB INTO BOTTLE; [ ] BOMB SAMPLER; [ ] PUMP

TEMPERATURE: 18.8 DEG C.

pH ..... 7.9 UNITS

SPEC. COND. 366 umhos/cm

SAMPLE LOCATION SKETCH BELOW? [x] YES [ ] NO

AMBIENT AIR SAMPLE LOCATION: — PPM; — PPM

TYPE OF SURFACE WATER: [ ] STREAM; [ ] RIVER; [x] POND/LAKE; [ ] SEEP

DECONTAMINATION FLUIDS USED: [ ] POTABLE WATER; [x] NONE

ANALYTICAL PARAMETERS

	METHOD NUMBER	PRESERVATION METHOD	VOLUME REQUIRED	SAMPLE COLLECTED
[x] TAL METALS (SPECIFIED BELOW)		HNO3 TO pH<2	1 L P	[x]
[x] NIT	LL8	H2SO4 TO pH<2	500ml P	[x]
[x] SO4	TT09	4 DEG C		[x]
[x] CL	TT09	4 DEG C	1 L P	[x]
[x] NH3N2	TF30	H2SO4 TO pH<2	1 L P	[x]
[x] TKN	USEPA 351.1	4 [redacted] H2SO4		[x]
[x] ALK	USEPA 310.1	4 DEG C		[x]
[x] HARD	USEPA 130.2	HNO3 TO pH<2	500ml P	[x]
[x] * VOC	UM21	[redacted] 4 DEG C	(2) 40 ml	[x]
[x] * B/NA	UM25	4 DEG C	(2) 1 L AG	[x]
[x] PNG	UW27	4 DEG C	(2) 1 L AG	[x]
[x] DNT	UW25	4 DEG C	(2) 1 L AG	[x]

SAMPLE BOTTLE ID NUMBERS

			LAB
41			EA
42			EA
44			EA
45			EA
157			EA
158			EA
45			DC
46			DC
47	95		EA
[redacted]	96	144	EA
159	175		DC
160	176		DC

NOTES (LOCATION SKETCH?)

* THESE ARE DATACHEM METHODS. EA METHODS: VOC UM19, UM26; B/NA UM24

TAL METALS (TOXIC ANALYTE LIST): AL, SB, AS, BA, BE, CD, CA, CR, CO, CU, FE, PB, MG, MN, HG, NI, K, SE, AG, NA, TL, V, ZN.
SS12, AX8, CC8, SD25, SD29, SD18
**METHOD NUMBER FOR TL PENDING CERTIFICATION

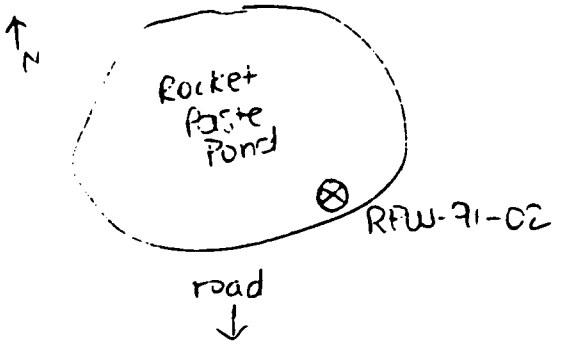

SIGNATURE: NR/tm

RECEIVED BY: Nancy E. Testa

ABB ENVIRONMENTAL SERVICES, INC

PAGE 10 OF

FIELD DATA RECORD – SEDIMENT

FIELD SAMPLING NUMBER: NF13-9-1-CSD

PROJECT: USATHAMA-BAAP

SITE ID: NF13-9-1-01

LOCATION ACTIVITY: START: 1520 END: 1525

SITE TYPE: INTERIOR

JOB NUMBER: 6853-04

PROGRAM: C

SAMPLING DATE: 9 20 91

FILE NAME: CSO

WEATHER: Sunny 70's

SEDIMENT DATA

DEPTH OF SEDIMENT SAMPLE: 0 – 4 IN

TYPE OF SAMPLE COLLECTED: [x] DISCRETE [ ] COMPOSITE

TYPE OF SEDIMENT:
- [ ] CLAY
- [x] SAND
- [ ] ORGANIC
- [x] SILT
- [ ] GRAVEL
- [ ] OTHER

EQUIPMENT USED FOR COLLECTION:
- [ ] GRAVITY CORER
- [ ] TULIP BULB PLANTER
- [ ] S.S. HAND SPOON
- [x] ALUMINUM PAN
- [ ] PLASTIC SCOOP
- [ ] OTHER

DECONTAMINATION FLUIDS USED:
- [x] POTABLE WATER
- [ ] POTABLE WATER WITH HIGH PRESSURE
- [ ] OTHER

SAMPLE OBSERVATIONS: [ ] ODOR [ ] COLORED

AMBIENT AIR: 0.0 PPM

SAMPLE LOCATION: 0.0 PPM

pH: — UNITS

ANALYTICAL PARAMETERS

		METHOD NUMBER	PRESERVATION METHOD	VOLUME REQUIRED	SAMPLE COLLECTED	SAMPLE BOTTLE ID NUMBERS
[ ]	PP METALS (SPECIFIED BELOW)		4 DEG C			
[ ]	AL	JS12	4 DEG C			
[ ]	CA		4 DEG C			
[x]	NA		4 DEG C			
[x]	CD		4 DEG C			1291
[x]	CR		4 DEG C		DC	
[x]	HG	Y9	4 DEG C			V
[x]	PB	JD21	4 DEG C			
[ ]	TCLP METALS (SPECIFIED BELOW)		4 DEG C			
[ ]	NIT	KF17	4 DEG C			
[ ]	SO4	KT07	4 DEG C			
[x]	NH3N2	USEPA 350.2	4 DEG C			
[ ]	TOC	USEPA CE-81-1	4 DEG C		EA	1292
[ ]	pH	SW846 METHOD 9045	4 DEG C			
[*]	VOC	LM23	4 DEG C			
[*]	BN/A	LM25	4 DEG C			
[x]	NG	LW27	4 DEG C			
[ ]	NAM	LN08	4 DEG C			
[ ]	DNT	LW23	4 DEG C		DC	1293

NOTES (LOCATION SKETCH)

* THESE ARE DATACHEM METHODS. EA METHODS: VOC LM17, LM26; B/NA LM20

PP METALS (PRIORITY POLLUTANT): AG, AS, BE, CD, CR, CU, PB, HG, NI, SB, SE, TL, ZN. JS12, B9, JD21, JD20, Y9.

TCLP METALS: CD, CR, HG, PB. JS12, 40 CFR 261.24

DC 2 bottles

EA 1 bottle

SIGNATURE: [signature]

RECEIVED BY: [signature]

ABB ENVIRONMENTAL SERVICES, INC

FIELD DATA RECORD – SEDIMENT

FIELD SAMPLING NUMBER: N 9 1 1 0 0 0 0

PROJECT	USATHAMA-BAAP	SITE TYPE	DTCH
SITE ID	NPS-91-1C	JOB NUMBER	6853-04
LOCATION ACTIVITY	START: 1430 END: 1440	PROGRAM	C

SAMPLING DATE	9 20 91
FILE NAME	CSO
WEATHER	Sunny. 60s

SEDIMENT DATA

DEPTH OF SEDIMENT SAMPLE: 0-3 IN

TYPE OF SAMPLE COLLECTED: [x] DISCRETE [ ] COMPOSITE

TYPE OF SEDIMENT:
- [ ] CLAY
- [ ] SAND
- [x] ORGANIC trace
- [x] SILT
- [ ] GRAVEL
- [ ] OTHER

EQUIPMENT USED FOR COLLECTION:
- [ ] GRAVITY CORER
- [x] TULIP BULB PLANTER
- [ ] S.S. HAND SPOON
- [x] ALUMINUM PAN
- [ ] PLASTIC SCOOP
- [ ] OTHER

DECONTAMINATION FLUIDS USED
- [x] POTABLE WATER
- [ ] POTABLE WATER WITH HIGH PRESSURE
- [ ] OTHER

SAMPLE OBSERVATIONS: [ ] ODOR [ ] COLORED

AMBIENT AIR: 0.0 PPM

SAMPLE LOCATION: 0.0 PPM

pH: — UNITS

ANALYTICAL PARAMETERS

	METHOD NUMBER	PRESERVATION METHOD	VOLUME REQUIRED	SAMPLE COLLECTED	SAMPLE BOTTLE ID NUMBERS
[ ] PP METALS (SPECIFIED BELOW)		4 DEG C		[ ]	
[ ] AL	JS12	4 DEG C		[ ]	
[ ] CA		4 DEG C		[ ]	
[ ] NA		4 DEG C		[ ]	
[x] CD		4 DEG C		DC [x]	1372
[x] CR		4 DEG C		DC [x]	
[x] HG	Y9	4 DEG C		DC [x]	
[x] PB	JD21	4 DEG C		DC [x]	
[ ] TCLP METALS (SPECIFIED BELOW)		4 DEG C		[ ]	
[ ] NIT	KF17	4 DEG C		[ ]	
[ ] [illegible]	KT07	4 DEG C		[ ]	
[x] [illegible]	USEPA 350.2	4 DEG C		EA [x]	1373
[ ] [illegible]	USEPA CE-81-1	4 DEG C		[ ]	
[ ] pH	SW846 METHOD 9045	4 DEG C		[ ]	
[ ] VOC	LM23	4 DEG C		[ ]	
[ ] BN/A	LM25	4 DEG C		[ ]	
[x] NG	LW27	4 DEG C		DC [x]	1374
[ ] NAM	LN08	4 DEG C		[ ]	
[ ] DNT	LW23	4 DEG C		[ ]	

NOTES (LOCATION SKETCH)

* THESE ARE DATACHEM METHODS. EA METHODS: VOC LM17, LM26
B/NA LM20

PP METALS (PRIORITY POLLUTANT): AG, AS, BE, CD, CR, CU, PB, HG, NI, SB, SE, TL, ZN.
JS12, B9, JD21, JD20, Y9.

TCLP METALS: CD, CR, HG, PB.
JS12, 40 CFR 261.24

DC. 2 bottles
EA 1 bottle

SIGNATURE: VM/MR

RECEIVED BY: Nancy E. Rafa

E. C. JORDAN
FIELD DATA RECORD - SEDIMENT

PROGRAM: QOS

PROJECT: USATHAMA - BAAP

FIELD SAMPLING NO.: NOS89C11

SITE TYPE: SEDIMENT

JOB NUMBER: 6298-12

WEATHER: Sunny/75

FILE NAME: CS0

SAMPLING DATE: 27SEP90

SITE ID: NPS-89-C11

LOCATION ACTIVITY: START: 1155 END: 1200

SEDIMENT DATA

DEPTH OF SEDIMENT SAMPLE: .1 - .5 ft

SAMPLE OBSERVATIONS: _____

TYPE OF SEDIMENT
- [ ] CLAY
- [ ] SAND
- [ ] SILT
- [ ] ORGANIC
- [ ] GRAVEL
- [ ] OTHER _____

EQUIPMENT USED FOR COLLECTION
- [X] CORING DEVICE
- [ ] S.S. SPLIT SPOON
- [X] S.S. HAND SPOON
- [X] ALUMINUM PANS
- [ ] S.S. BUCKET
- [ ] OTHER _____

DECONTAMINATION FLUIDS USED
- [X] POTABLE WATER
- [ ] POTABLE WATER W/HIGH PRESS.

TYPE OF SAMPLE
- [X] DISCRETE
- [ ] COMPOSITE / NO. _____

AMBIENT AIR VOA: _____ PPM

SAMPLE LOCATION AIR VOA: _____ PPM

([X] IF REQUIRED AT THIS LOCATION) ANALYTICAL PARAMETER/METHOD	MATRIX	PRESERVATION METHOD	Bottle Size	SAMPLE COLLECTED	SAMPLE BOTTLE ID'S
[ ] NI / JS05	SD	4 DEG. C		[ ]	_____ / _____
[ ] FE / JS05		4 DEG. C		[ ]	_____ / _____
[X] CD / JS05		4 DEG. C	120ml (4oz)	[X]	_____ / _____
[X] CR / JS05		4 DEG. C		[X]	10 / _____
[X] HG / JB09		4 DEG. C		[X]	_____ / _____
[X] PB / JS05		4 DEG. C		[X]	_____ / _____
[ ] CA / JS05		4 DEG. C		[ ]	_____ / _____
[ ] NA / JS05		4 DEG. C		[ ]	_____ / _____
[ ] AL / JS05		4 DEG. C		[ ]	_____ / _____
[ ] NIT / KT03		4 DEG. C		[ ]	_____ / _____
[ ] SO4 / KT03		4 DEG. C		[ ]	_____ / _____
[ ] VOC / LM12		4 DEG. C		[ ]	_____ / _____
[ ] BN/A / LM11		4 DEG. C		[ ]	_____ / _____
[ ] NAM / LN02		4 DEG. C		[ ]	_____ / _____
[ ] PHTHL / LM11		4 DEG. C		[ ]	_____ / _____
[ ] DNT / LW07		4 DEG. C		[ ]	_____ / _____
[ ] NG / LW10		4 DEG. C		[ ]	_____ / _____
[ ] NH4 / USEPA 350.2		4 DEG. C		[ ]	_____ / _____
[ ] TOC / USEPA CE-81-1		4 DEG. C		[ ]	_____ / _____
[ ] pH / USEPA (SOP GW001)	SD	4 DEG. C		[ ]	_____ / _____

NOTES / SKETCH

No stake at location. Took sample in middle of overflow Cd, Cr, Hg, Pb samples all in 1 jar.

Pond.

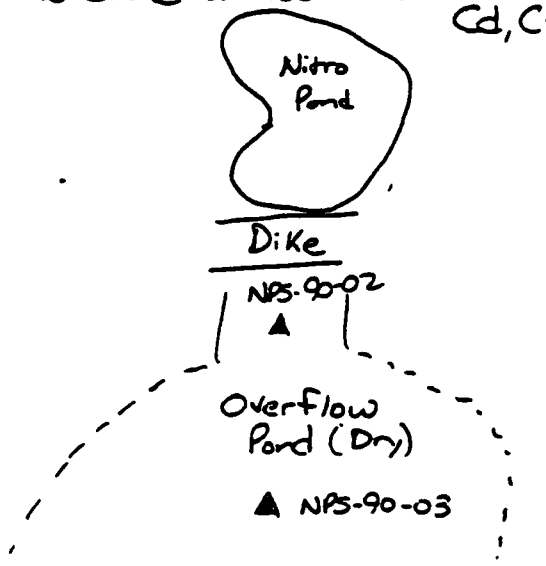

BJS 10-08-89

SIGNATURE OF SAMPLER: R. David Crismore

ABB ENVIRONMENTAL SERVICES, INC

DATA RECORD – SEDIMENT

FIELD SAMPLING NUMBER: N9102C00

PROJECT: USATHAMA-BAAP

SITE ID: NPS-91-02

SITE TYPE: DTCH

JOB NUMBER: 6853-04

PROGRAM: C

SAMPLING DATE: 7.28.7

FILE NAME: CSO

WEATHER: sunny 90's

LOCATION ACTIVITY START: 1510 END: 1515

SEDIMENT DATA

DEPTH OF SEDIMENT SAMPLE: 1-4 IN

TYPE OF SAMPLE COLLECTED: [x] DISCRETE [ ] COMPOSITE

TYPE OF SEDIMENT:
- [ ] CLAY
- [x] SAND light brown
- [ ] ORGANIC
- [x] SILT dk. brown
- [ ] GRAVEL
- [ ] OTHER

EQUIPMENT USED FOR COLLECTION:
- [x] GRAVITY CORER
- [x] TULIP BULB PLANTER
- [ ] S.S. HAND SPOON
- [x] ALUMINUM PAN
- [ ] PLASTIC SCOOP
- [ ] OTHER

DECONTAMINATION FLUIDS USED:
- [x] POTABLE WATER
- [ ] POTABLE WATER WITH HIGH PRESSURE
- [ ] OTHER

SAMPLE OBSERVATIONS: [ ] ODOR [ ] COLORED

AMBIENT AIR: 0.0 PPM

SAMPLE LOCATION: 0.0 PPM

pH: — UNITS

ANALYTICAL PARAMETERS

	METHOD NUMBER	PRESERVATION METHOD	VOLUME REQUIRED	SAMPLE COLLECTED	SAMPLE BOTTLE ID NUMBERS
[ ] PP METALS (SPECIFIED BELOW)		4 DEG C			
[ ] AL	JS12	4 DEG C			
[ ] CA		4 DEG C			
[ ] NA		4 DEG C			
[x] CD		4 DEG C		DC	1300
[x] CR		4 DEG C			
[x] HG	Y9	4 DEG C			Y
[x] PB	JD21	4 DEG C			
[ ] TCLP METALS (SPECIFIED BELOW)		4 DEG C			
[ ] NIT	KF17	4 DEG C			
[ ]	KT07	4 DEG C		EA	1301
	USEPA 350.2	4 DEG C			
	USEPA CE-81-1	4 DEG C			
[ ] pH	SW846 METHOD 9045	4 DEG C			
[ ] VOC	LM23	4 DEG C			
[ ] BN/A	LM25	4 DEG C			
[x] NG	LW27	4 DEG C		DC	1302
[ ] NAM	LN08	4 DEG C			
[ ] DNT	LW23	4 DEG C			

NOTES

LOCATION SKETCH)

* THESE ARE DATACHEM METHODS. EA METHODS: VOC LM17, LM26
B/NA LM20

PP METALS (PRIORITY POLLUTANT): AG, AS, BE, CD, CR, CU, PB, HG, NI, SB, SE, TL, ZN.
JS12, B9, JD21, JD20, Y9.

TCLP METALS: CD, CR, HG, PB.
JS12, 40 CFR 261.24

DC: 2 bottles

EA: 1 bottle

SIGNATURE: [illegible]

RECEIVED BY: [illegible]

ABB ENVIRONMENTAL SERVICES, INC

FIELD DATA RECORD – SEDIMENT

FIELD SAMPLING NUMBER: N91030000

PROJECT: USATHAMA-BAAP

SITE ID: NPS-91-03

LOCATION ACTIVITY: START: 1130 END: 1135

SITE TYPE: POND

JOB NUMBER: 6853-04

PROGRAM: C

SAMPLING DATE: 9.22.91

FILE NAME: CSO

WEATHER: cloudy, °50's breezy

SEDIMENT DATA

DEPTH OF SEDIMENT SAMPLE: 0-6 IN

TYPE OF SAMPLE COLLECTED: [x] DISCRETE [ ] COMPOSITE

TYPE OF SEDIMENT: [ ] CLAY [x] SAND [x] ORGANIC [x] SILT [ ] GRAVEL [ ] OTHER

EQUIPMENT USED FOR COLLECTION: [x] GRAVITY CORER [x] TULIP BULB PLANTER [x] S.S. HAND SPOON [x] ALUMINUM PAN [ ] PLASTIC SCOOP [ ] OTHER

DECONTAMINATION FLUIDS USED: [x] POTABLE WATER [ ] POTABLE WATER WITH HIGH PRESSURE [ ] OTHER

SAMPLE OBSERVATIONS: [ ] ODOR [ ] COLORED

AMBIENT AIR: 0.0 PPM

SAMPLE LOCATION: 0.0 PPM

pH: — UNITS

ANALYTICAL PARAMETERS

	METHOD NUMBER	PRESERVATION METHOD	VOLUME REQUIRED	SAMPLE COLLECTED
[x] PP METALS (SPECIFIED BELOW)		4 DEG C		
[x] AL	JS12	4 DEG C		
[x] CA		4 DEG C		
[x] NA		4 DEG C		
[x] CD		4 DEG C		DC
[x] CR		4 DEG C		
[x] HG	Y9	4 DEG C		
[x] PB	JD21	4 DEG C		
[ ] TCLP METALS (SPECIFIED BELOW)		4 DEG C		
[ ] NIT	KF17	4 DEG C		
[x] SO4	KT07	4 DEG C		EA
[x] NH3N2	USEPA 350.2	4 DEG C		
[x] TOC	USEPA CE-81-1	4 DEG C		
[x] pH	SW846 METHOD 9045	4 DEG C		
* [x] VOC	LM23	4 DEG C		
* [x] BN/A	LM25	4 DEG C		DC
[x] NG	LW27	4 DEG C		
[x] NAM	LN08	4 DEG C		
[x] DNT	LW23	4 DEG C		

SAMPLE BOTTLE ID NUMBERS: 1309, 1310, 1311

NOTES

(LOCATION SKETCH)

* THESE ARE DATACHEM METHODS. EA METHODS: VOC LM17, LM26; B/NA LM20

PP METALS (PRIORITY POLLUTANT): AG, AS, BE, CD, CR, CU, PB, HG, NI, SB, SE, TL, ZN. JS12, B9, JD21, JD20, Y9.

TCLP METALS: CD, CR, HG, PB. JS12, 40 CFR 261.24

DC: 2 bottles
EA: 1 bottle

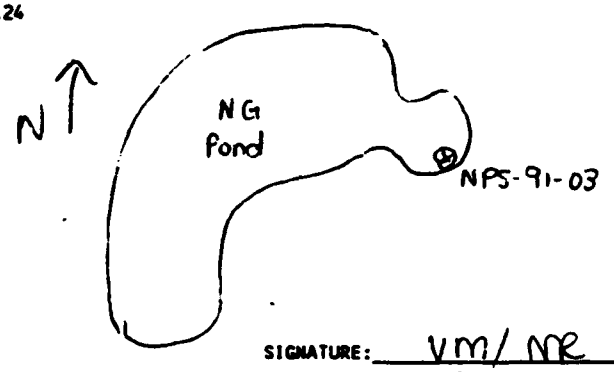

SIGNATURE: VM/NR

RECEIVED BY: Nancy E. Rapa

BB ENVIRONMENTAL SERVICES, INC

FIELD DATA RECORD - SEDIMENT

FIELD SAMPLING NUMBER: N91040006

PROJECT: USATHAMA-BAAP

SITE ID: NPS-91-04

SITE TYPE: POND

JOB NUMBER: 6853-04

PROGRAM: C

SAMPLING DATE: 9.22.91

FILE NAME: CSO

WEATHER: cloudy, 50's breezy

LOCATION ACTIVITY: START: 1045 END: 1050

SEDIMENT DATA

DEPTH OF SEDIMENT SAMPLE: 0-3 IN

TYPE OF SAMPLE COLLECTED: [x] DISCRETE [ ] COMPOSITE

TYPE OF SEDIMENT: [ ] CLAY [x] SAND [ ] ORGANIC [x] SILT [ ] GRAVEL [ ] OTHER

EQUIPMENT USED FOR COLLECTION: [ ] GRAVITY CORER [ ] TULIP BULB PLANTER [x] S.S. HAND SPOON [x] ALUMINUM PAN [ ] PLASTIC SCOOP [ ] OTHER

DECONTAMINATION FLUIDS USED: [ ] POTABLE WATER [ ] POTABLE WATER WITH HIGH PRESSURE [ ] OTHER NA

SAMPLE OBSERVATIONS: [ ] ODOR [ ] COLORED

AMBIENT AIR: 0 PPM

SAMPLE LOCATION: 0 PPM

pH: NA UNITS

ANALYTICAL PARAMETERS

	METHOD NUMBER	PRESERVATION METHOD	VOLUME REQUIRED	SAMPLE COLLECTED
[ ] PP METALS (SPECIFIED BELOW)		4 DEG C		
[ ] AL	JS12	4 DEG C		
[ ] CA		4 DEG C		
[ ] NA		4 DEG C		
[x] CD		4 DEG C		DC
[x] CR		4 DEG C		DC
[x] HG	Y9	4 DEG C		DC
[x] PB	JD21	4 DEG C		DC
[ ] TCLP METALS (SPECIFIED BELOW)		4 DEG C		
[ ] NIT	KF17	4 DEG C		
[ ] SO4	KT07	4 DEG C		
[ ] NH3N2	USEPA 350.2	4 DEG C		
[ ] TOC	USEPA CE-81-1	4 DEG C		
[ ] pH	SW846 METHOD 9045	4 DEG C		
[ ] VOC	LM23	4 DEG C		EA
[ ] BN/A	LM25	4 DEG C		
[ ] NG	LW27	4 DEG C		
[ ] NAM	LN08	4 DEG C		
[ ] DNT	LW23	4 DEG C		DC

SAMPLE BOTTLE ID NUMBERS: 1318, 1319, 1320

NOTES (LOCATION SKETCH)

* THESE ARE DATACHEM METHODS. EA METHODS: VOC LM17, LM26; B/NA LM20

PP METALS (PRIORITY POLLUTANT): AG, AS, BE, CD, CR, CU, PB, HG, NI, SB, SE, TL, ZN. JS12, B9, JD21, JD20, Y9.

TCLP METALS: CD, CR, HG, PB. JS12, 40 CFR 261.24

DC: 2 bottles

EA: 1 bottle

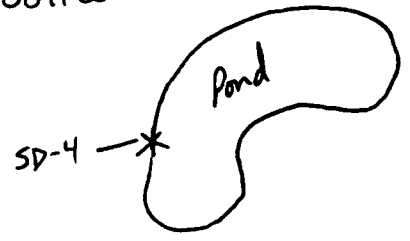

SIGNATURE: VM/MR

RECEIVED BY: Nancy E. Rotta

ABB ENVIRONMENTAL SERVICES, INC

FIELD DATA RECORD – SEDIMENT

FIELD SAMPLING NUMBER: N91050000

PROJECT: USATHAMA-BAAP

SITE ID: NPS-91-05

SITE TYPE: POND

JOB NUMBER: 6853-04

PROGRAM: C

LOCATION ACTIVITY START: 1100 END: 1105

SAMPLING DATE: 9.22.91

FILE NAME: CSO

WEATHER: cloudy, 50's breezy

SEDIMENT DATA

DEPTH OF SEDIMENT SAMPLE: 0-5 IN

TYPE OF SAMPLE COLLECTED: [x] DISCRETE [ ] COMPOSITE

TYPE OF SEDIMENT:
- [x] CLAY
- [x] SAND
- [ ] ORGANIC
- [x] SILT
- [x] GRAVEL
- [ ] OTHER

EQUIPMENT USED FOR COLLECTION:
- [x] GRAVITY CORER
- [x] TULIP BULB PLANTER
- [x] S.S. HAND SPOON
- [x] ALUMINUM PAN
- [ ] PLASTIC SCOOP
- [ ] OTHER

DECONTAMINATION FLUIDS USED:
- [x] POTABLE WATER
- [ ] POTABLE WATER WITH HIGH PRESSURE
- [ ] OTHER

SAMPLE OBSERVATIONS: [ ] ODOR [ ] COLORED

AMBIENT AIR: 0.0 PPM

SAMPLE LOCATION: 0.0 PPM

pH: — UNITS

ANALYTICAL PARAMETERS

	METHOD NUMBER	PRESERVATION METHOD	VOLUME REQUIRED	SAMPLE COLLECTED
[ ] PP METALS (SPECIFIED BELOW)		4 DEG C		
[ ] AL	JS12	4 DEG C		
[ ] CA		4 DEG C		
[ ] NA		4 DEG C		
[x] CD		4 DEG C		DC
[x] CR		4 DEG C		DC
[x] HG	Y9	4 DEG C		DC
[x] PB	JD21	4 DEG C		DC
[ ] TCLP METALS (SPECIFIED BELOW)		4 DEG C		
[ ] NIT	KF17	4 DEG C		
[ ] SO4	KT07	4 DEG C		
[x] NH3N2	USEPA 350.2	4 DEG C		EA
[ ] TOC	USEPA CE-81-1	4 DEG C		
[ ] pH	SW846 METHOD 9045	4 DEG C		
* [ ] VOC	LM23	4 DEG C		
* [ ] BN/A	LM25	4 DEG C		
[x] NG	LW27	4 DEG C		DC
[ ] NAM	LN08	4 DEG C		
[ ] DNT	LW23	4 DEG C		

SAMPLE BOTTLE ID NUMBERS: 1327, 1328, 1329

NOTES (LOCATION SKETCH)

* THESE ARE DATACHEM METHODS. EA METHODS: VOC LM17, LM26; B/NA LM20

PP METALS (PRIORITY POLLUTANT): AG, AS, BE, CD, CR, CU, PB, HG, NI, SB, SE, TL, ZN. JS12, B9, JD21, JD20, Y9.

TCLP METALS: CD, CR, HG, PB. JS12, 40 CFR 261.24

DC: 2 bottles
EA: 1 bottle

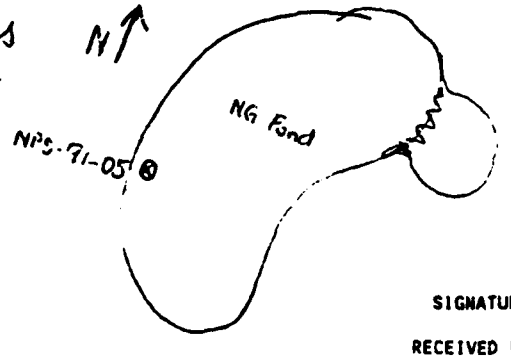

SIGNATURE: VM/NR

RECEIVED BY: Nancy E. Rota

BB ENVIRONMENTAL SERVICES, INC

FIELD DATA RECORD - SEDIMENT

FIELD SAMPLING NUMBER: N91060000

PROJECT: USATHAMA-BAAP
SITE ID: NPS-91-06
LOCATION ACTIVITY: START: 1115 END: 1120

SITE TYPE: POND
JOB NUMBER: 6853-04
PROGRAM: C

SAMPLING DATE: 9.22.91
FILE NAME: CSO
WEATHER: cloudy, 50's breezy

SEDIMENT DATA

DEPTH OF SEDIMENT SAMPLE: 0-6 IN

TYPE OF SAMPLE COLLECTED: [x] DISCRETE [ ] COMPOSITE

TYPE OF SEDIMENT: [ ] CLAY [ ] SAND [x] ORGANIC [x] SILT [ ] GRAVEL [ ] OTHER

EQUIPMENT USED FOR COLLECTION: [ ] GRAVITY CORER [x] TULIP BULB PLANTER [x] S.S. HAND SPOON [x] ALUMINUM PAN [ ] PLASTIC SCOOP [ ] OTHER

DECONTAMINATION FLUIDS USED: [x] POTABLE WATER [ ] POTABLE WATER WITH HIGH PRESSURE [ ] OTHER

SAMP' OBSERVATIONS: [ ] ODOR [ ] COLORED

AMBIENT AIR: 0.0 PPM

SAMPLE LOCATION: 0.0 PPM

pH: — UNITS

ANALYTICAL PARAMETERS

	METHOD NUMBER	PRESERVATION METHOD	VOLUME REQUIRED	SAMPLE COLLECTED
[ ] PP METALS (SPECIFIED BELOW)		4 DEG C		
[ ] AL	JS12	4 DEG C		
[ ] CA		4 DEG C		
[ ] NA		4 DEG C		
[x] CD		4 DEG C		DC
[x] CR		4 DEG C		DC
[x] HG	Y9	4 DEG C		DC
[x] PB	JD21	4 DEG C		DC
[ ] TCLP METALS (SPECIFIED BELOW)		4 DEG C		
[ ] NIT	KF17	4 DEG C		
[ ] SO4	KT07	4 DEG C		
[ ] NH3N2	USEPA 350.2	4 DEG C		
[ ] TOC	USEPA CE-81-1	4 DEG C		
[ ] pH	SW846 METHOD 9045	4 DEG C		
[ ] VOC	LM23	4 DEG C		
[ ] BN/A	LM25	4 DEG C		
[x] NG	LW27	4 DEG C		EA
[ ] NAM	LN08	4 DEG C		
[ ] DNT	LW23	4 DEG C		

SAMPLE BOTTLE ID NUMBERS: 1336, 1337, 1338

NOTES
(LOCATION SKETCH)

* THESE ARE DATACHEM METHODS. EA METHODS: VOC LM17, LM26; B/NA LM20

PP METALS (PRIORITY POLLUTANT): AG, AS, BE, CD, CR, CU, PB, HG, NI, SB, SE, TL, ZN. JS12, B9, JD21, JD20, Y9.

TCLP METALS: CD, CR, HG, PB. JS12, 40 CFR 261.24

DC: 2 bottles
EA: 1 bottle

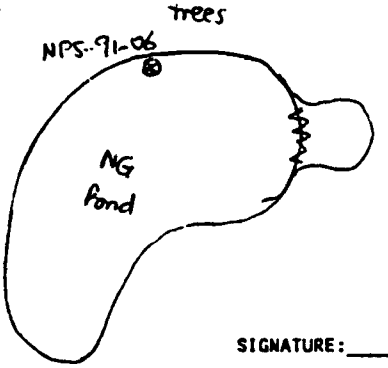

SIGNATURE: VM/NR

RECEIVED BY: Nancy E. Rotta

ABB ENVIRONMENTAL SERVICES, INC

PAGE 3 OF 7

FIELD DATA RECORD - SEDIMENT

FIELD SAMPLING NUMBER: NP91070000

PROJECT: USATHAMA-BAAP

SITE ID: NPS-91-07

SITE TYPE: POND

JOB NUMBER: 6853-04

PROGRAM: C

SAMPLING DATE: 9.22.91

FILE NAME: CSO

WEATHER: cloudy, 50's breezy

LOCATION ACTIVITY: START: 1015 END: 1020

SEDIMENT DATA

DEPTH OF SEDIMENT SAMPLE: 0-3 IN

TYPE OF SAMPLE COLLECTED: [x] DISCRETE [ ] COMPOSITE

TYPE OF SEDIMENT: [x] CLAY [x] SAND [x] ORGANIC [x] SILT [ ] GRAVEL [ ] OTHER

EQUIPMENT USED FOR COLLECTION: [ ] GRAVITY CORER [ ] TULIP BULB PLANTER [x] S.S. HAND SPOON [x] ALUMINUM PAN [ ] PLASTIC SCOOP [ ] OTHER

DECONTAMINATION FLUIDS USED: [ ] POTABLE WATER [ ] POTABLE WATER WITH HIGH PRESSURE [ ] OTHER NA

SAMPLE OBSERVATIONS: [ ] ODOR [ ] COLORED [ ]

AMBIENT AIR: 0 PPM

SAMPLE LOCATION: 0 PPM

pH: NA UNITS

ANALYTICAL PARAMETERS

	METHOD NUMBER	PRESERVATION METHOD	VOLUME REQUIRED	SAMPLE COLLECTED
[x] PP METALS (SPECIFIED BELOW)		4 DEG C		DC
[x] AL	JS12	4 DEG C		
[x] CA		4 DEG C		
[x] NA		4 DEG C		
[x] CD		4 DEG C		
[x] CR		4 DEG C		
[x] MG	Y9	4 DEG C		
[x] PB	JD21	4 DEG C		
[ ] TCLP METALS (SPECIFIED BELOW)		4 DEG C		
[ ] NIT	KF17	4 DEG C		
[ ] SO4	KT07	4 DEG C		
[ ] NH3N2	USEPA 350.2	4 DEG C		EA
[ ] TOC	USEPA CE-81-1	4 DEG C		
[ ] pH	SW846 METHOD 9045	4 DEG C		
[ ] * VOC	LM23	4 DEG C		
[ ] * BN/A	LM25	4 DEG C		
[ ] NG	LW27	4 DEG C		DC
[ ] NAM	LW08	4 DEG C		
[ ] DNT	LW23	4 DEG C		

SAMPLE BOTTLE ID NUMBERS: 1345, 1346, 1347

NOTES

(LOCATION SKETCH)

* THESE ARE DATACHEM METHODS. EA METHODS: VOC LM17, LM26; B/NA LM20

PP METALS (PRIORITY POLLUTANT): AG, AS, BE, CD, CR, CU, PB, HG, NI, SB, SE, TL, ZN. JS12, B9, JD21, JD20, Y9.

TCLP METALS: CD, CR, HG, PB. JS12, 40 CFR 261.24

DC: 2 bottles

EA: 1 3 bottles NR

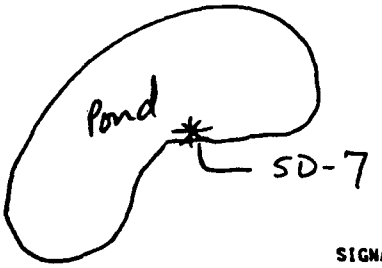

SIGNATURE: VM/NR

RECEIVED BY: Nancy E. Bora

BB ENVIRONMENTAL SERVICES, INC

FIELD DATA RECORD – SEDIMENT

FIELD SAMPLING NUMBER: N91080000

PROJECT: USATHAMA-BAAP

SITE TYPE: POND

SITE ID: NPS-91-08

JOB NUMBER: 6853-04

LOCATION ACTIVITY: START: 1030 END: 1035

PROGRAM: C

SAMPLING DATE: 9.22.91

FILE NAME: CSO

WEATHER: cloudy, 50's breezy

SEDIMENT DATA

DEPTH OF SEDIMENT SAMPLE: 0-2 IN

TYPE OF SAMPLE COLLECTED: [x] DISCRETE [ ] COMPOSITE

TYPE OF SEDIMENT: [ ] CLAY [x] SAND [x] ORGANIC [x] SILT [ ] GRAVEL [ ] OTHER

EQUIPMENT USED FOR COLLECTION: [ ] GRAVITY CORER [ ] TULIP BULB PLANTER [x] S.S. HAND SPOON [x] ALUMINUM PAN [ ] PLASTIC SCOOP [ ] OTHER

DECONTAMINATION FLUIDS USED: [ ] POTABLE WATER [ ] POTABLE WATER WITH HIGH PRESSURE [ ] OTHER N/A

SAMPLE OBSERVATIONS: [ ] ODOR [ ] COLORED

AMBIENT AIR: 0 PPM

SAMPLE LOCATION: 0 PPM

pH: NA UNITS

ANALYTICAL PARAMETERS

	METHOD NUMBER	PRESERVATION METHOD	VOLUME REQUIRED	SAMPLE COLLECTED
[ ] PP METALS (SPECIFIED BELOW)		4 DEG C		
[ ] AL	JS12	4 DEG C		
[ ] CA		4 DEG C		
[ ] NA		4 DEG C		
[x] CD		4 DEG C		DC
[x] CR		4 DEG C		DC
[x] HG	Y9	4 DEG C		DC
[x] PB	JD21	4 DEG C		DC
[ ] TCLP METALS (SPECIFIED BELOW)		4 DEG C		
[ ] NIT	KF17	4 DEG C		
[ ] SO4	KT07	4 DEG C		
[ ] NH3N2	USEPA 350.2	4 DEG C		EA
[ ] TOC	USEPA CE-81-1	4 DEG C		
[ ] pH	SW846 METHOD 9045	4 DEG C		
[ ] VOC	LM23	4 DEG C		
[ ] BN/A	LM25	4 DEG C		
[ ] NG	LW27	4 DEG C		DC
[ ] NAM	LN08	4 DEG C		
[ ] DNT	LW23	4 DEG C		

SAMPLE BOTTLE ID NUMBERS: 1354, 1355, 1356

NOTES (LOCATION SKETCH)

* THESE ARE DATACHEM METHODS. EA METHODS: VOC LM17, LM26
B/NA LM20

PP METALS (PRIORITY POLLUTANT): AG, AS, BE, CD, CR, CU, PB, HG, NI, SB, SE, TL, ZN.
JS12, B9, JD21, JD20, Y9.

TCLP METALS: CD, CR, HG, PB.
JS12, 40 CFR 261.24

DC: 2 bottles
EA: 1 bottle

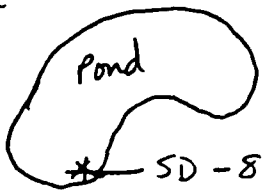

SIGNATURE: VM/NR

RECEIVED BY: Nancy E. Rotta

12

ABB ENVIRONMENTAL SERVICES, INC

PAGE 15 OF

FIELD DATA RECORD - SEDIMENT

FIELD SAMPLING NUMBER: N91-09U00

PROJECT: USATHAMA-BAAP

SITE TYPE: DTCH

SAMPLING DATE: 9 20 91

SITE ID: NPS-91-09

JOB NUMBER: 6853-04

FILE NAME: CSO

WEATHER: Sunny Cloudy

LOCATION ACTIVITY: START: 0145S END: 1500

PROGRAM: C

SEDIMENT DATA

DEPTH OF SEDIMENT SAMPLE: 1-3 IN

TYPE OF SAMPLE COLLECTED: ☑ DISCRETE ☐ COMPOSITE

TYPE OF SEDIMENT:
- ☐ CLAY
- ☑ SAND
- ☑ ORGANIC
- ☑ SILT
- ☐ GRAVEL
- ☐ OTHER

EQUIPMENT USED FOR COLLECTION:
- ☐ GRAVITY CORER
- ☑ TULIP BULB PLANTER
- ☐ S.S. HAND SPOON
- ☑ ALUMINUM PAN
- ☐ PLASTIC SCOOP
- ☐ OTHER

DECONTAMINATION FLUIDS USED
- ☑ POTABLE WATER
- ☐ POTABLE WATER WITH HIGH PRESSURE
- ☐ OTHER

SAMPLE OBSERVATIONS: ☐ ODOR ☐ COLORED ☐

AMBIENT AIR: 0.0 PPM

SAMPLE LOCATION: 0.0 PPM

pH: — UNITS

ANALYTICAL PARAMETERS

	METHOD NUMBER	PRESERVATION METHOD	VOLUME REQUIRED	SAMPLE COLLECTED	SAMPLE BOTTLE ID NUMBERS
☐ PP METALS (SPECIFIED BELOW)		4 DEG C		☐	
☐ AL	JS12	4 DEG C		☐	
☐ CA		4 DEG C		☐	
☐ NA		4 DEG C		☐	
☑ CD		4 DEG C		☑	1363
☑ CR		4 DEG C		☑	
☑ HG	Y9	4 DEG C		☑	
☑ PB	JD21	4 DEG C		☑	
☐ TCLP METALS (SPECIFIED BELOW)		4 DEG C		☐	
☐ NIT	KF17	4 DEG C		☐	
☐ SO4	KT07	4 DEG C		☐	
☑ NH3N2	USEPA 350.2	4 DEG C		☑	1364
☐ TOC	USEPA CE-81-1	4 DEG C		☐	
☐ pH	SW846 METHOD 9045	4 DEG C		☐	
*☐ VOC	LM23	4 DEG C		☐	
*☐ BN/A	LM25	4 DEG C		☐	
☑ NG	LW27	4 DEG C		☑	1365
☐ NAM	LN08	4 DEG C		☐	
☐ DNT	LW23	4 DEG C		☐	
☐				☐	
☐				☐	
				☐	

DC

EA

DC

NOTES (LOCATION SKETCH)

* THESE ARE DATACHEM METHODS. EA METHODS: VOC LM17, LM26
B/NA LM20

PP METALS (PRIORITY POLLUTANT): AG, AS, BE, CD, CR, CU, PB, HG, NI, SB, SE, TL, ZN.
JS12, B9, JD21, JD20, Y9.

TCLP METALS: CD, CR, HG, PB.
JS12, 40 CFR 261.24

DC: 2 bottles
EA: 1 bottle

SIGNATURE: VM/NR

RECEIVED BY: Nancy E. Rotka

ABB ENVIRONMENTAL SERVICES, INC

FIELD DATA RECORD - SEDIMENT

FIELD SAMPLING NUMBER: FP1900000

PROJECT: USATHAMA-BAAP

SITE TYPE: BUGR

SITE ID: PBS-9[illegible]-90

JOB NUMBER: 6853-04

SAMPLING DATE: 9.30.91

FILE NAME: CSO

WEATHER: cloudy, 60's breezy

PROGRAM: C

LOCATION ACTIVITY START: 1610 END: 1615

SEDIMENT DATA

DEPTH OF SEDIMENT SAMPLE: 1-3 IN

TYPE OF SAMPLE COLLECTED: [x] DISCRETE [ ] COMPOSITE

TYPE OF SEDIMENT:
- [x] CLAY
- [x] SAND
- [x] ORGANIC
- [x] SILT some
- [ ] GRAVEL
- [ ] OTHER

EQUIPMENT USED FOR COLLECTION:
- [x] GRAVITY CORER
- [x] TULIP BULB PLANTER
- [x] S.S. HAND SPOON
- [x] ALUMINUM PAN
- [ ] PLASTIC SCOOP
- [ ] OTHER

DECONTAMINATION FLUIDS USED:
- [x] POTABLE WATER
- [ ] POTABLE WATER WITH HIGH PRESSURE
- [ ] OTHER

SAMPLE OBSERVATIONS: [ ] ODOR [ ] COLORED

AMBIENT AIR: 0.0 PPM

SAMPLE LOCATION: 0.0 PPM

pH: — UNITS

ANALYTICAL PARAMETERS

	METHOD NUMBER	PRESERVATION METHOD	VOLUME REQUIRED	SAMPLE COLLECTED	SAMPLE BOTTLE ID NUMBERS
[x] PP METALS (SPECIFIED BELOW)		4 DEG C		DC [x]	1066
[ ] AL	JS12	4 DEG C			
[ ] CA		4 DEG C			
[ ] NA		4 DEG C			
[ ] CD		4 DEG C			
[ ] CR		4 DEG C			
[ ] HG	Y9	4 DEG C			
[ ] PB	JD21	4 DEG C			
[ ] TCLP METALS (SPECIFIED BELOW)		4 DEG C			
[ ] NIT	KF17	4 DEG C			
[ ] SO4	KT07	4 DEG C			
[ ] NH3N2	USEPA 350.2	4 DEG C			
[ ] TOC	USEPA CE-81-1	4 DEG C			
[ ] pH	SW846 METHOD 9045	4 DEG C			
[x] VOC	LM23	4 DEG C		DC [x] (NR)	1067 1070
[ ] BN/A	LM25	4 DEG C			
[ ] PEST	LW27	4 DEG C			
[ ] HERB	LN08	4 DEG C			
[x] DNT	LW23	4 DEG C		DC [x]	1062

NOTES (LOCATION SKETCH)

* THESE ARE DATACHEM METHODS. EA METHODS: VOC LM17, LM26
B/NA LM20

PP METALS (PRIORITY POLLUTANT): AG, AS, BE, CD, CR, CU, PB, HG, NI, SB, SE, TL, ZN.
JS12, B9, JD21, JD20, Y9.

TCLP METALS: CD, CR, HG, PB.
JS12, 40 CFR 261.24

DC: ~~2~~ 4 bottles (NR)
~~EA: 2 bottles~~

SIGNATURE: VM/NR

RECEIVED BY: Nancy E. Rokka

ABB ENVIRONMENTAL SERVICES, INC

FIELD DATA RECORD - SEDIMENT

FIELD SAMPLING NUMBER: P9191000

PROJECT: USATHAMA-BAAP

SITE ID: PBS-91-91

SITE TYPE: BUGR

JOB NUMBER: 6853-04

PROGRAM: C

LOCATION ACTIVITY: START: 1620 END: 1625

SAMPLING DATE: 9.30.91

FILE NAME: CSO

WEATHER: cloudy, °60s breezy

SEDIMENT DATA

DEPTH OF SEDIMENT SAMPLE: 1-4 IN

TYPE OF SAMPLE COLLECTED: [x] DISCRETE [ ] COMPOSITE

TYPE OF SEDIMENT:
- [x] CLAY
- [x] SAND
- [x] ORGANIC
- [x] SILT some
- [x] GRAVEL
- [ ] OTHER_____

EQUIPMENT USED FOR COLLECTION:
- [ ] GRAVITY CORER
- [x] TULIP BULB PLANTER
- [x] S.S. HAND SPOON
- [x] ALUMINUM PAN
- [ ] PLASTIC SCOOP
- [ ] OTHER_____

DECONTAMINATION FLUIDS USED
- [x] POTABLE WATER
- [ ] POTABLE WATER WITH HIGH PRESSURE
- [ ] OTHER_____

SAMPLE OBSERVATIONS: [ ] ODOR_____ [ ] COLORED_____

AMBIENT AIR: 0.0 PPM

SAMPLE LOCATION: 0.0 PPM

pH: — UNITS

ANALYTICAL PARAMETERS

	METHOD NUMBER	PRESERVATION METHOD	VOLUME REQUIRED	SAMPLE COLLECTED
[x] PP METALS (SPECIFIED BELOW)		4 DEG C		[x]
[ ] AL	JS12	4 DEG C		
[ ] CA		4 DEG C		
[ ] NA		4 DEG C		
[ ] CD		4 DEG C		
[ ] CR		4 DEG C		
[ ] HG	Y9	4 DEG C		
[ ] PB	JD21	4 DEG C		
[x] TCLP METALS (SPECIFIED BELOW)		4 DEG C		[x]
[ ] NIT	KF17	4 DEG C		
[ ] SO4	KT07	4 DEG C		
[ ] NH3N2	USEPA 350.2	4 DEG C		
[ ] TOC	USEPA CE-81-1	4 DEG C		
[ ] pH	SW846 METHOD 9045	4 DEG C		
*[x] VOC	LM23	4 DEG C	DC	[x]
*[ ] BN/A	LM25	4 DEG C		
[ ] NG	LW27	4 DEG C		
[ ] NAM	LN08	4 DEG C		
[x] DNT	LW23	4 DEG C	DC	[x]

SAMPLE BOTTLE ID NUMBERS: 397, 400, 403, 404, 406

NOTES (LOCATION SKETCH)

* THESE ARE DATACHEM METHODS. EA METHODS: VOC LM17, LM26; B/NA LM20

PP METALS (PRIORITY POLLUTANT): AG, AS, BE, CD, CR, CU, PB, HG, NI, SB, SE, TL, ZN. JS12, 89, JD21, JD20, Y9.

TCLP METALS: CD, CR, HG, PB. JS12, 40 CFR 261.24

DC: 2 bottles

~~EA: 2 bottles~~ (NR)

SIGNATURE: VM/NR

RECEIVED BY: Nancy E. Rotta

ABB ENVIRONMENTAL SERVICES, INC

FIELD DATA RECORD – SEDIMENT

FIELD SAMPLING NUMBER: P91192000

PROJECT: USATHAMA-BAAP
SITE ID: PBS-91-92
LOCATION ACTIVITY: START: 1630 END: 1635
SITE TYPE: BUGR
JOB NUMBER: 6853-04
PROGRAM: C
SAMPLING DATE: 9.30.91
FILE NAME: CSO
WEATHER: cloudy, °60's breezy

SEDIMENT DATA

DEPTH OF SEDIMENT SAMPLE: 0-3 IN

TYPE OF SAMPLE COLLECTED: [x] DISCRETE [ ] COMPOSITE

TYPE OF SEDIMENT:
- [x] CLAY
- [x] SAND little
- [x] ORGANIC some
- [x] SILT
- [ ] GRAVEL
- [ ] OTHER

EQUIPMENT USED FOR COLLECTION:
- [x] GRAVITY CORER
- [x] TULIP BULB PLANTER
- [x] S.S. HAND SPOON
- [x] ALUMINUM PAN
- [ ] PLASTIC SCOOP
- [ ] OTHER

DECONTAMINATION FLUIDS USED:
- [x] POTABLE WATER
- [ ] POTABLE WATER WITH HIGH PRESSURE
- [ ] OTHER

SAMPLE OBSERVATIONS: [ ] ODOR [ ] COLORED

AMBIENT AIR: 0.0 PPM

SAMPLE LOCATION: 0.0 PPM

pH: — UNITS

ANALYTICAL PARAMETERS

	METHOD NUMBER	PRESERVATION METHOD	VOLUME REQUIRED	SAMPLE COLLECTED	SAMPLE BOTTLE ID NUMBERS
[x] PP METALS (SPECIFIED BELOW)		4 DEG C		DC [x]	1075
[ ] AL	JS12	4 DEG C			
[ ] CA	|	4 DEG C			
[ ] NA	|	4 DEG C			
[ ] CD	|	4 DEG C			
[ ] CR	|	4 DEG C			
[ ] HG	Y9	4 DEG C			
[ ] PB	JD21	4 DEG C			
[ ] TCLP METALS (SPECIFIED BELOW)		4 DEG C			
[ ] NIT	KF17	4 DEG C			
[ ] SO4	KT07	4 DEG C			
[ ] NH3N2	USEPA 350.2	4 DEG C			
[ ] TOC	USEPA CE-81-1	4 DEG C			
[ ] pH	SW846 METHOD 9045	4 DEG C			
[x] * VOC	LM23	4 DEG C		DC ~~EA~~ (MR) [x]	1076 / 1079
[ ] * BN/A	LM25	4 DEG C			
[ ] NG	LW27	4 DEG C			
[ ] NAM	LN08	4 DEG C			
[x] DNT	LW23	4 DEG C		DC [x]	1077

NOTES (LOCATION SKETCH)

* THESE ARE DATACHEM METHODS. EA METHODS: VOC LM17, LM26
B/NA LM20

PP METALS (PRIORITY POLLUTANT): AG, AS, BE, CD, CR, CU, PB, HG, NI, SB, SE, TL, ZN.
JS12, B9, JD21, JD20, Y9.

TCLP METALS: CD, CR, HG, PB.
JS12, 40 CFR 261.24

DC: ~~24~~ bottles (MR)
~~EA: 2 bottles~~

SIGNATURE: VM/MR

RECEIVED BY: Nancy E. Roka

ABB ENVIRONMENTAL SERVICES, INC

FIELD DATA RECORD - SEDIMENT

FIELD SAMPLING NUMBER: P91930KC

PROJECT: USATHAMA-BAAP

SITE ID: PBS-91-93

LOCATION ACTIVITY: START: 1640 END: 1645

SITE TYPE: BUGR

JOB NUMBER: 6853-04

PROGRAM: C

SAMPLING DATE: 9.30 91

FILE NAME: CSO

WEATHER: cloudy, °60's breezy

SEDIMENT DATA

DEPTH OF SEDIMENT SAMPLE: 1-4 IN

TYPE OF SAMPLE COLLECTED: [x] DISCRETE [ ] COMPOSITE

TYPE OF SEDIMENT:
- [ ] CLAY
- [x] SAND
- [x] ORGANIC
- [ ] SILT
- [ ] GRAVEL
- [ ] OTHER

EQUIPMENT USED FOR COLLECTION:
- [ ] GRAVITY CORER
- [x] TULIP BULB PLANTER
- [ ] S.S. HAND SPOON
- [x] ALUMINUM PAN
- [ ] PLASTIC SCOOP
- [ ] OTHER

DECONTAMINATION FLUIDS USED:
- [x] POTABLE WATER
- [ ] POTABLE WATER WITH HIGH PRESSURE
- [ ] OTHER

SAMPLE OBSERVATIONS: [ ] ODOR [ ] COLORED

AMBIENT AIR: 0.0 PPM

SAMPLE LOCATION: 0.0 PPM

pH: — UNITS

ANALYTICAL PARAMETERS

		METHOD NUMBER	PRESERVATION METHOD	VOLUME REQUIRED	SAMPLE COLLECTED	SAMPLE BOTTLE ID NUMBERS
[x]	PP METALS (SPECIFIED BELOW)		4 DEG C		DC [x]	1084
[ ]	AL	JS12	4 DEG C			
[ ]	CA	|	4 DEG C			
[ ]	NA	|	4 DEG C			
[ ]	CD	|	4 DEG C			
[ ]	CR	|	4 DEG C			
[ ]	HG	Y9	4 DEG C			
[ ]	PB	JD21	4 DEG C			
[ ]	TCLP METALS (SPECIFIED BELOW)		4 DEG C			
[ ]	NIT	KF17	4 DEG C			
[ ]	SO4	KT07	4 DEG C			
[ ]	NH3N2	USEPA 350.2	4 DEG C			
[ ]	TOC	USEPA CE-81-1	4 DEG C			
[ ]	pH	SW846 METHOD 9045	4 DEG C		(MR)	
* [x]	VOC	LM23	4 DEG C		DC EA [x]	1085 1088
* [ ]	BN/A	LM25	4 DEG C			
[ ]	NG	LW27	4 DEG C			
[ ]	NAM	LN08	4 DEG C			
[x]	DNT	LW23	4 DEG C		DC [x]	1086

NOTES (LOCATION SKETCH)

* THESE ARE DATACHEM METHODS. EA METHODS: VOC LM17, LM26
B/NA LM20

PP METALS (PRIORITY POLLUTANT): AG, AS, BE, CD, CR, CU, PB, HG, NI, SB, SE, TL, ZN.
JS12, 89, JD21, JD20, Y9.

TCLP METALS: CD, CR, HG, PB.
JS12, 40 CFR 261.24

DC: ~~24~~ 4 bottles
~~EA: 2 bottles~~ (MR)

SIGNATURE: VM / MR

RECEIVED BY: Nancy E. Roka

ABB ENVIRONMENTAL SERVICES, INC

LD DATA RECORD – SEDIMENT

FIELD SAMPLING NUMBER: P91940000

PROJECT: USATHAMA-BAAP

SITE ID: PBS-91-94

LOCATION ACTIVITY START: 0840 END: 0845

SITE TYPE: BUGR

JOB NUMBER: 6853-04

PROGRAM: C

SAMPLING DATE: 10 1.91

FILE NAME: CSO

WEATHER: cloudy, °50's

SEDIMENT DATA

DEPTH OF SEDIMENT SAMPLE: 1-4 IN

TYPE OF SAMPLE COLLECTED: [x] DISCRETE [ ] COMPOSITE

TYPE OF SEDIMENT:
- [ ] CLAY
- [x] SAND trace
- [x] ORGANIC
- [ ] SILT
- [ ] GRAVEL
- [ ] OTHER

EQUIPMENT USED FOR COLLECTION:
- [ ] GRAVITY CORER
- [x] TULIP BULB PLANTER
- [ ] S.S. HAND SPOON
- [x] ALUMINUM PAN
- [ ] PLASTIC SCOOP
- [ ] OTHER

DECONTAMINATION FLUIDS USED
- [x] POTABLE WATER
- [ ] POTABLE WATER WITH HIGH PRESSURE
- [ ] OTHER

SAMPLE OBSERVATIONS: [ ] ODOR [ ] COLORED

AMBIENT AIR: 0.0 PPM

SAMPLE LOCATION: 0.0 PPM

pH: — UNITS

ANALYTICAL PARAMETERS

		METHOD NUMBER	PRESERVATION METHOD	VOLUME REQUIRED	SAMPLE COLLECTED	SAMPLE BOTTLE ID NUMBERS
[x]	PP METALS (SPECIFIED BELOW)		4 DEG C		DC [x]	1093
[ ]	AL	JS12	4 DEG C			
[ ]	CA		4 DEG C			
[ ]	NA		4 DEG C			
[ ]	CD		4 DEG C			
[ ]	CR		4 DEG C			
[ ]	HG	Y9	4 DEG C			
[ ]	PB	JD21	4 DEG C			
[ ]	TCLP METALS (SPECIFIED BELOW)		4 DEG C			
[ ]	NIT	KF17	4 DEG C			
[ ]	SO4	KT07	4 DEG C			
[ ]	NH3N2	USEPA 350.2	4 DEG C			
[ ]	TOC	USEPA CE-81-1	4 DEG C			
[ ]	PH	SW846 METHOD 9045	4 DEG C			
*[x]	VOC	LM23	4 DEG C		DC [x]	1094 1097
*[ ]	BN/A	LM25	4 DEG C			
[ ]	NG	LW27	4 DEG C			
[ ]	NAM	LN08	4 DEG C			
[x]	DNT	LW23	4 DEG C		DC [x]	1095

NOTES (LOCATION SKETCH)

* THESE ARE DATACHEM METHODS. EA METHODS: VOC LM17, LM26
B/NA LM20

PP METALS (PRIORITY POLLUTANT): AG, AS, BE, CD, CR, CU, PB, HG, NI, SB, SE, TL, ZN.
JS12, B9, JD21, JD20, Y9.

TCLP METALS: CD, CR, HG, PB.
JS12, 40 CFR 261.24

DC: 4 bottles

SIGNATURE: VM/MR

RECEIVED BY: Nancy E. Roka

ABB ENVIRONMENTAL SERVICES, INC

FIELD DATA RECORD – SEDIMENT

FIELD SAMPLING NUMBER: P9195000

PROJECT: USATHAMA-BAAP

SITE ID: PBS-91-95

LOCATION ACTIVITY: START: 0850 END: 0855

SITE TYPE: BUGR

JOB NUMBER: 6853-04

PROGRAM: C

SAMPLING DATE: 10 1.91

FILE NAME: CSO

WEATHER: cloudy, °50's

SEDIMENT DATA

DEPTH OF SEDIMENT SAMPLE: 1-4 IN

TYPE OF SAMPLE COLLECTED: [x] DISCRETE [ ] COMPOSITE

TYPE OF SEDIMENT: [ ] CLAY [x] SAND [x] ORGANIC [x] SILT [ ] GRAVEL [ ] OTHER

EQUIPMENT USED FOR COLLECTION: [ ] GRAVITY CORER [x] TULIP BULB PLANTER [ ] S.S. HAND SPOON [x] ALUMINUM PAN [ ] PLASTIC SCOOP [ ] OTHER

DECONTAMINATION FLUIDS USED: [x] POTABLE WATER [ ] POTABLE WATER WITH HIGH PRESSURE [ ] OTHER

SAMPLE OBSERVATIONS: [ ] ODOR [ ] COLORED

AMBIENT AIR: 0.0 PPM

SAMPLE LOCATION: 0.0 PPM

pH: — UNITS

ANALYTICAL PARAMETERS

	METHOD NUMBER	PRESERVATION METHOD	VOLUME REQUIRED	SAMPLE COLLECTED	SAMPLE BOTTLE ID NUMBERS
[x] PP METALS (SPECIFIED BELOW)		4 DEG C		DC	409
[ ] AL	JS12	4 DEG C			
[ ] CA		4 DEG C			
[ ] NA		4 DEG C			
[ ] CD		4 DEG C			
[ ] CR		4 DEG C			
[ ] HG	Y9	4 DEG C			
[ ] PB	JD21	4 DEG C			
[x] TCLP METALS (SPECIFIED BELOW)		4 DEG C		DC	412
[ ] NIT	KF17	4 DEG C			
[ ] SO4	KT07	4 DEG C			
[ ] NH3N2	USEPA 350.2	4 DEG C			
[ ] TOC	USEPA CE-81-1	4 DEG C			
[ ] pH	SW846 METHOD 9045	4 DEG C			
*[x] VOC	LM23	4 DEG C		DC	415 416
*[x] BN/A	LM25	4 DEG C			535
[ ] NG	LW27	4 DEG C			
[ ] NAM	LN08	4 DEG C		DC	
[x] DNT	LW23	4 DEG C			418

NOTES (LOCATION SKETCH)

* THESE ARE DATACHEM METHODS. EA METHODS: VOC LM17, LM26; B/NA LM20

PP METALS (PRIORITY POLLUTANT): AG, AS, BE, CD, CR, CU, PB, HG, NI, SB, SE, TL, ZN. JS12, B9, JD21, JD20, Y9.

TCLP METALS: CD, CR, HG, PB. JS12, 40 CFR 261.24

DC: 4 bottles

SIGNATURE: VM/MB

RECEIVED BY: Nancy E. Rotta

ABB ENVIRONMENTAL SERVICES, INC

FIELD DATA RECORD – SEDIMENT

FIELD SAMPLING NUMBER: P91960000

PROJECT: USATHAMA-BAAP

SITE ID: PBS-91-96

LOCATION ACTIVITY START: 0900 END: 0905

SITE TYPE: BUGR

JOB NUMBER: 6853-04

PROGRAM: C

SAMPLING DATE: 10.1.91

FILE NAME: CSO

WEATHER: cloudy, 50's

SEDIMENT DATA

DEPTH OF SEDIMENT SAMPLE: 1-3 IN

TYPE OF SAMPLE COLLECTED: [x] DISCRETE [ ] COMPOSITE

TYPE OF SEDIMENT:
- [ ] CLAY
- [x] SAND
- [x] ORGANIC
- [ ] SILT
- [ ] GRAVEL
- [ ] OTHER

EQUIPMENT USED FOR COLLECTION:
- [ ] GRAVITY CORER
- [x] TULIP BULB PLANTER
- [ ] S.S. HAND SPOON
- [x] ALUMINUM PAN
- [ ] PLASTIC SCOOP
- [ ] OTHER

DECONTAMINATION FLUIDS USED:
- [x] POTABLE WATER
- [ ] POTABLE WATER WITH HIGH PRESSURE
- [ ] OTHER

SAMPLE OBSERVATIONS: [ ] ODOR [ ] COLORED

AMBIENT AIR: 0.0 PPM

SAMPLE LOCATION: 0.0 PPM

pH: — UNITS

ANALYTICAL PARAMETERS

	METHOD NUMBER	PRESERVATION METHOD	VOLUME REQUIRED	SAMPLE COLLECTED	SAMPLE BOTTLE ID NUMBERS
[x] PP METALS (SPECIFIED BELOW)		4 DEG C		DC [x]	421
[ ] AL	JS12	4 DEG C			
[ ] CA		4 DEG C			
[ ] NA		4 DEG C			
[ ] CD		4 DEG C			
[ ] CR		4 DEG C			
[ ] HG	Y9	4 DEG C			
[ ] PB	JD21	4 DEG C			
[x] TCLP METALS (SPECIFIED BELOW)		4 DEG C		DC [x]	424
[ ] NIT	KF17	4 DEG C			
[ ] SO4	KT07	4 DEG C			
[ ] NH3N2	USEPA 350.2	4 DEG C			
[ ] TOC	USEPA CE-81-1	4 DEG C			
[ ] pH	SW846 METHOD 9045	4 DEG C			
[x] VOC	LM23	4 DEG C		DC [x]	427 428
[ ] BN/A	LM25	4 DEG C			
[ ] NG	LW27	4 DEG C			
[ ] NAM	LN08	4 DEG C			
[x] DNT	LW23	4 DEG C		DC [x]	430

NOTES (LOCATION SKETCH)

* THESE ARE DATACHEM METHODS. EA METHODS: VOC LM17, LM26
B/NA LM20

PP METALS (PRIORITY POLLUTANT): AG, AS, BE, CD, CR, CU, PB, HG, NI, SB, SE, TL, ZN.
JS12, B9, JD21, JD20, Y9.

TCLP METALS: CD, CR, HG, PB.
JS12, 40 CFR 261.24

DC: 4 bottles

SIGNATURE: VM/NR

RECEIVED BY: Nancy E. Rotka

ABB ENVIRONMENTAL SERVICES, INC

FIELD DATA RECORD – SEDIMENT

FIELD SAMPLING NUMBER: P91970000

PROJECT: USATHAMA-BAAP

SITE ID: PBS-91-97

LOCATION ACTIVITY: START: 0910 END: 0915

SITE TYPE: BUGR

JOB NUMBER: 6853-04

PROGRAM: C

SAMPLING DATE: 10.1.91

FILE NAME: CSO

WEATHER: cloudy, 50's

SEDIMENT DATA

DEPTH OF SEDIMENT SAMPLE: 1-3 IN

TYPE OF SAMPLE COLLECTED: [x] DISCRETE [ ] COMPOSITE

TYPE OF SEDIMENT:
- [x] CLAY
- [x] SAND
- [x] ORGANIC
- [x] SILT
- [x] GRAVEL
- [x] OTHER dry

EQUIPMENT USED FOR COLLECTION:
- [x] GRAVITY CORER
- [x] TULIP BULB PLANTER
- [x] S.S. HAND SPOON
- [x] ALUMINUM PAN
- [ ] PLASTIC SCOOP
- [ ] OTHER

DECONTAMINATION FLUIDS USED:
- [x] POTABLE WATER
- [ ] POTABLE WATER WITH HIGH PRESSURE
- [ ] OTHER

SAMPLE OBSERVATIONS: [ ] ODOR [ ] COLORED

AMBIENT AIR: 0.0 PPM

SAMPLE LOCATION: 0.0 PPM

pH: — UNITS

ANALYTICAL PARAMETERS

		METHOD NUMBER	PRESERVATION METHOD	VOLUME REQUIRED	SAMPLE COLLECTED	SAMPLE BOTTLE ID NUMBERS
[x]	PP METALS (SPECIFIED BELOW)		4 DEG C		DC [x]	1102
[ ]	AL	JS12	4 DEG C			
[ ]	CA		4 DEG C			
[ ]	NA		4 DEG C			
[ ]	CD		4 DEG C			
[ ]	CR		4 DEG C			
[ ]	HG	Y9	4 DEG C			
[ ]	PB	JD21	4 DEG C			
[ ]	TCLP METALS (SPECIFIED BELOW)		4 DEG C			
[ ]	NIT	KF17	4 DEG C			
[ ]	SO4	KT07	4 DEG C			
[ ]	NH3N2	USEPA 350.2	4 DEG C			
[ ]	TOC	USEPA CE-81-1	4 DEG C			
[ ]	pH	SW846 METHOD 9045	4 DEG C			
* [x]	VOC	LM23	4 DEG C		DC [x]	1103 1106
* [ ]	BN/A	LM25	4 DEG C			
[ ]	NG	LW27	4 DEG C			
[ ]	NAM	LN08	4 DEG C			
[x]	DNT	LW23	4 DEG C		DC [x]	1104

NOTES (LOCATION SKETCH)

* THESE ARE DATACHEM METHODS. EA METHODS: VOC LM17, LM26
B/NA LM20

PP METALS (PRIORITY POLLUTANT): AG, AS, BE, CD, CR, CU, PB, HG, NI, SB, SE, TL, ZN.
JS12, B9, JD21, JD20, Y9.

TCLP METALS: CD, CR, HG, PB.
JS12, 40 CFR 261.24

DC: 4 bottles

SIGNATURE: VM/NR

RECEIVED BY: Nancy E. Rokra

ABB ENVIRONMENTAL SERVICES, INC

FIELD DATA RECORD – SEDIMENT

FIELD SAMPLING NUMBER: P9198000

PROJECT: USATHAMA-BAAP

SITE TYPE: BUGR

SITE ID: PBS-91-98

JOB NUMBER: 6853-04

SAMPLING DATE: 10.1.91

FILE NAME: CSO

WEATHER: cloudy. °50's

LOCATION ACTIVITY — START: 0920 END: 0925

PROGRAM: C

SEDIMENT DATA

DEPTH OF SEDIMENT SAMPLE: 1-3 IN

TYPE OF SAMPLE COLLECTED: [x] DISCRETE [ ] COMPOSITE

TYPE OF SEDIMENT:
- [x] CLAY
- [x] SAND some
- [x] ORGANIC
- [ ] SILT
- [ ] GRAVEL
- [ ] OTHER

EQUIPMENT USED FOR COLLECTION:
- [x] GRAVITY CORER
- [x] TULIP BULB PLANTER
- [x] S.S. HAND SPOON
- [x] ALUMINUM PAN
- [ ] PLASTIC SCOOP
- [ ] OTHER

DECONTAMINATION FLUIDS USED:
- [x] POTABLE WATER
- [ ] POTABLE WATER WITH HIGH PRESSURE
- [ ] OTHER

SAMPLE OBSERVATIONS: [ ] ODOR [ ] COLORED

AMBIENT AIR: 0.0 PPM

SAMPLE LOCATION: 0.0 PPM

pH: — UNITS

ANALYTICAL PARAMETERS

	METHOD NUMBER	PRESERVATION METHOD	VOLUME REQUIRED	SAMPLE COLLECTED	SAMPLE BOTTLE ID NUMBERS
[x] PP METALS (SPECIFIED BELOW)		4 DEG C		DC [x]	1111
[ ] AL	JS12	4 DEG C			
[ ] CA		4 DEG C			
[ ] NA		4 DEG C			
[ ] CD		4 DEG C			
[ ] CR		4 DEG C			
[ ] HG	Y9	4 DEG C			
[ ] PB	JD21	4 DEG C			
[ ] TCLP METALS (SPECIFIED BELOW)		4 DEG C			
[ ] NIT	KF17	4 DEG C			
[ ] SO4	KT07	4 DEG C			
[ ] NH3N2	USEPA 350.2	4 DEG C			
[ ] TOC	USEPA CE-81-1	4 DEG C			
[ ] PH	SW846 METHOD 9045	4 DEG C			
[x] VOC	LM23	4 DEG C		DC [x]	1112 1115
[ ] BN/A	LM25	4 DEG C			
[ ] PEST/PCB	LW27	4 DEG C			
[ ] HERBICIDES	LW08	4 DEG C			
[x] DIOXIN	LW23	4 DEG C		DC [x]	1113

NOTES

LOCATION SKETCH)

* THESE ARE DATACHEM METHODS. EA METHODS: VOC LM17, LM26
B/NA LM20

PP METALS (PRIORITY POLLUTANT): AG, AS, BE, CD, CR, CU, PB, HG, NI, SB, SE, TL, ZN.
JS12, B9, JD21, JD20, Y9.

TCLP METALS: CD, CR, HG, PB.
JS12, 40 CFR 261.24

DC: 4 bottles

SIGNATURE: VM/NR

RECEIVED BY: Nancy E Rotka

ABB ENVIRONMENTAL SERVICES, INC

FIELD DATA RECORD – SEDIMENT

FIELD SAMPLING NUMBER: P911990000

PROJECT: USATHAMA-BAAP

SITE ID: PBS-911-99

LOCATION ACTIVITY START: 0930 END: 0935

SITE TYPE: BUGR

JOB NUMBER: 6853-04

PROGRAM: C

SAMPLING DATE: 10.1.91

FILE NAME: CSO

WEATHER: cloudy, 50's

SEDIMENT DATA

DEPTH OF SEDIMENT SAMPLE: 1-4 IN

TYPE OF SAMPLE COLLECTED: [x] DISCRETE [ ] COMPOSITE

TYPE OF SEDIMENT:
- [x] CLAY
- [x] SAND
- [x] ORGANIC
- [ ] SILT
- [ ] GRAVEL
- [ ] OTHER

EQUIPMENT USED FOR COLLECTION:
- [ ] GRAVITY CORER
- [x] TULIP BULB PLANTER
- [x] S.S. HAND SPOON
- [ ] ALUMINUM PAN
- [ ] PLASTIC SCOOP
- [ ] OTHER

DECONTAMINATION FLUIDS USED:
- [x] POTABLE WATER
- [ ] POTABLE WATER WITH HIGH PRESSURE
- [ ] OTHER

SAMPLE OBSERVATIONS: [ ] ODOR [ ] COLORED

AMBIENT AIR: 0.0 PPM

SAMPLE LOCATION: 0.0 PPM

pH: — UNITS

ANALYTICAL PARAMETERS

	METHOD NUMBER	PRESERVATION METHOD	VOLUME REQUIRED	SAMPLE COLLECTED
[x] PP METALS (SPECIFIED BELOW)		4 DEG C		[x]
[ ] AL	JS12	4 DEG C		
[ ] CA	|	4 DEG C		
[ ] NA	|	4 DEG C		
[ ] CD	|	4 DEG C		
[ ] CR	|	4 DEG C		
[ ] HG	Y9	4 DEG C		
[ ] PB	JD21	4 DEG C		
[x] TCLP METALS (SPECIFIED BELOW)		4 DEG C		[x]
[ ] NIT	KF17	4 DEG C		
[ ] SO4	KT07	4 DEG C		
[ ] NH3N2	USEPA 350.2	4 DEG C		
[ ] TOC	USEPA CE-81-1	4 DEG C		
[ ] pH	SW846 METHOD 9045	4 DEG C		
* [x] VOC	LM23	4 DEG C	DC	[x]
* [ ] BN/A	LM25	4 DEG C		
[ ] NG	LW27	4 DEG C		
[x] NAM	LN08	4 DEG C		
[x] DNT	LW23	4 DEG C	DC	[x]

SAMPLE BOTTLE ID NUMBERS: 433, 436, 439, 440, 442

NOTES (LOCATION SKETCH)

* THESE ARE DATACHEM METHODS. EA METHODS: VOC LM17, LM26; B/NA LM20

PP METALS (PRIORITY POLLUTANT): AG, AS, BE, CD, CR, CU, PB, HG, NI, SB, SE, TL, ZN. JS12, B9, JD21, JD20, Y9.

TCLP METALS: CD, CR, HG, PB. JS12, 40 CFR 261.24

DC: 4 bottles

SIGNATURE: VM/MR

RECEIVED BY: Nancy E. Roka

ABB ENVIRONMENTAL SERVICES, INC

FIELD DATA RECORD – SEDIMENT

FIELD SAMPLING NUMBER: P91i0000

PROJECT: USATHAMA-BAAP

SITE ID: PBS-91i-P00

SITE TYPE: BUGR

JOB NUMBER: 6853-04

PROGRAM: C

SAMPLING DATE: 10 1.91

FILE NAME: CSO

WEATHER: cloudy, °50's

LOCATION ACTIVITY: START: 0935 END: 0940

SEDIMENT DATA

DEPTH OF SEDIMENT SAMPLE: 1 - 4 IN (NP)

TYPE OF SAMPLE COLLECTED: [x] DISCRETE [ ] COMPOSITE

TYPE OF SEDIMENT: [ ] CLAY [x] SAND [x] ORGANIC [x] SILT [ ] GRAVEL [ ] OTHER

EQUIPMENT USED FOR COLLECTION: [ ] GRAVITY CORER [x] TULIP BULB PLANTER [x] S.S. HAND SPOON [x] ALUMINUM PAN [ ] PLASTIC SCOOP [ ] OTHER

DECONTAMINATION FLUIDS USED: [x] POTABLE WATER [ ] POTABLE WATER WITH HIGH PRESSURE [ ] OTHER

SAMPLE OBSERVATIONS: [ ] ODOR [ ] COLORED

AMBIENT AIR: 0.0 PPM

SAMPLE LOCATION: 0.0 PPM

pH: — UNITS

ANALYTICAL PARAMETERS

	METHOD NUMBER	PRESERVATION METHOD	VOLUME REQUIRED	SAMPLE COLLECTED	SAMPLE BOTTLE ID NUMBERS
[x] PP METALS (SPECIFIED BELOW)		4 DEG C		DC [x]	1123
[ ] AL	JS12	4 DEG C			
[ ] CA		4 DEG C			
[ ] NA		4 DEG C			
[ ] CD		4 DEG C			
[ ] CR		4 DEG C			
[ ] HG	Y9	4 DEG C			
[ ] PB	JD21	4 DEG C			
[ ] TCLP METALS (SPECIFIED BELOW)		4 DEG C			
[ ] NIT	KF17	4 DEG C			
[ ] SO4	KT07	4 DEG C			
[ ] NH3N2	USEPA 350.2	4 DEG C			
[ ] TOC	USEPA CE-81-1	4 DEG C			
[ ] pH	SW846 METHOD 9045	4 DEG C			
[x] VOC	LM23	4 DEG C		EA [x]	1124 1127
[ ] BN/A	LM25	4 DEG C			
[ ] PEST/PCB	LW27	4 DEG C			
[ ] HERB	LN08	4 DEG C			
[x] DNT	LW23	4 DEG C		DC [x]	1125

NOTES (LOCATION SKETCH)

* THESE ARE DATACHEM METHODS. EA METHODS: VOC LM1*, LM26
B/NA LM20

PP METALS (PRIORITY POLLUTANT): AG, AS, BE, CD, CR, CU, PB, HG, NI, SB, SE, TL, ZN.
JS12, B9, JD21, JD20, Y9.

TCLP METALS: CD, CR, HG, PB.
JS12, 40 CFR 261.24

DC: 2 bottles
EA: 2 bottles

SIGNATURE: VM/NR

RECEIVED BY: Nancy E. Roka

ABB ENVIRONMENTAL SERVICES, INC

FIELL DATA RECORD – SEDIMENT

FIELD SAMPLING NUMBER: P911010100

PROJECT: USATHAMA-BAAP

SITE ID: PBS-91-101

LOCATION ACTIVITY: START: 1025 END: 1030

SITE TYPE: BUGR

JOB NUMBER: 6853-04

PROGRAM: C

SAMPLING DATE: 10.1.91

FILE NAME: CSO

WEATHER: rain, °50's

SEDIMENT DATA

DEPTH OF SEDIMENT SAMPLE: 0-3 IN

TYPE OF SAMPLE COLLECTED: ☑ DISCRETE ☐ COMPOSITE

TYPE OF SEDIMENT:
- ☐ CLAY
- ☑ SAND
- ☑ ORGANIC
- ☑ SILT
- ☐ GRAVEL
- ☐ OTHER

EQUIPMENT USED FOR COLLECTION:
- ☐ GRAVITY CORER
- ☐ TULIP BULB PLANTER
- ☐ S.S. HAND SPOON
- ☐ ALUMINUM PAN
- ☐ PLASTIC SCOOP
- ☐ OTHER

DECONTAMINATION FLUIDS USED:
- ☑ POTABLE WATER
- ☐ POTABLE WATER WITH HIGH PRESSURE
- ☐ OTHER

SAMPLE OBSERVATIONS: ☐ ODOR ☐ COLORED

AMBIENT AIR: — PPM

SAMPLE LOCATION: — PPM

pH: — UNITS

ANALYTICAL PARAMETERS

		METHOD NUMBER	PRESERVATION METHOD	VOLUME REQUIRED	SAMPLE COLLECTED	SAMPLE BOTTLE ID NUMBERS
☑	PP METALS (SPECIFIED BELOW)		4 DEG C		DC ☑	1129
☐	AL	JS12	4 DEG C			
☐	CA		4 DEG C			
☐	NA		4 DEG C			
☐	CD		4 DEG C			
☐	CR		4 DEG C			
☐	HG	Y9	4 DEG C			
☐	PB	JD21	4 DEG C			
☐	TCLP METALS (SPECIFIED BELOW)		4 DEG C			
☐	NIT	KF17	4 DEG C			
☐	SO4	KT07	4 DEG C			
☐	NH3N2	USEPA 350.2	4 DEG C			
☐	TOC	USEPA CE-81-1	4 DEG C			
☐	pH	SW846 METHOD 9045	4 DEG C			
* ☑	VOC	LM23	4 DEG C		EA ☑	1130 1133
* ☐	BN/A	LM25	4 DEG C			
☐	NG	LW27	4 DEG C			
☐	NAM	LN08	4 DEG C			
☑	DNT	LW23	4 DEG C		DC ☑	1131

NOTES
(LOCATION SKETCH)

* THESE ARE DATACHEM METHODS. EA METHODS: VOC LM17, LM26
B/NA LM20

PP METALS (PRIORITY POLLUTANT): AG, AS, BE, CD, CR, CU, PB, HG, NI, SB, SE, TL, ZN.
JS12, B9, JD21, JD20, Y9.

TCLP METALS: CD, CR, HG, PB.
JS12, 40 CFR 261.24

DC: 2 bottles
EA: 2 bottles

* No TIP available

SIGNATURE: VM/MR

RECEIVED BY: Nancy E. Rotta

ABB ENVIRONMENTAL SERVICES, INC

FIELD DATA RECORD - SEDIMENT

FIELD SAMPLING NUMBER: P911020000

PROJECT: USATHAMA-BAAP

SITE TYPE: BUGR

SAMPLING DATE: 10 1.91

SITE ID: PBS-91-102

JOB NUMBER: 6853-04

FILE NAME: CSO

LOCATION ACTIVITY START: 1035 END: 1049

PROGRAM: C

WEATHER: cloudy, 50's

SEDIMENT DATA

DEPTH OF SEDIMENT SAMPLE: 1-4 IN

TYPE OF SAMPLE COLLECTED: [x] DISCRETE [ ] COMPOSITE

TYPE OF SEDIMENT:
- [x] CLAY
- [x] SAND
- [x] ORGANIC
- [x] SILT
- [ ] GRAVEL
- [ ] OTHER

EQUIPMENT USED FOR COLLECTION:
- [ ] GRAVITY CORER
- [x] TULIP BULB PLANTER
- [x] S.S. HAND SPOON
- [x] ALUMINUM PAN
- [ ] PLASTIC SCOOP
- [ ] OTHER

DECONTAMINATION FLUIDS USED:
- [x] POTABLE WATER
- [ ] POTABLE WATER WITH HIGH PRESSURE
- [ ] OTHER

SAMPLE OBSERVATIONS: [ ] ODOR [ ] COLORED

AMBIENT AIR: — PPM

SAMPLE LOCATION: — PPM

pH: — UNITS

ANALYTICAL PARAMETERS

	METHOD NUMBER	PRESERVATION METHOD	VOLUME REQUIRED	SAMPLE COLLECTED
[x] PP METALS (SPECIFIED BELOW)		4 DEG C		DC
[ ] AL	JS12	4 DEG C		
[ ] CA		4 DEG C		
[ ] NA		4 DEG C		
[ ] CD		4 DEG C		
[ ] CR		4 DEG C		
[ ] HG	Y9	4 DEG C		
[ ] PB	JD21	4 DEG C		
[x] TCLP METALS (SPECIFIED BELOW)		4 DEG C		DC
[ ] NIT	KF17	4 DEG C		
[ ] SO4	KT07	4 DEG C		
[ ] H3N2	USEPA 350.2	4 DEG C		
[ ] TOC	USEPA CE-81-1	4 DEG C		
[ ] pH	SW846 METHOD 9045	4 DEG C		
[x] VOC	LM23	4 DEG C		EA
[ ] BN/A	LM25	4 DEG C		
[ ] NG	LW27	4 DEG C		
[ ] NAM	LN08	4 DEG C		
[x] DNT	LW23	4 DEG C		DC

SAMPLE BOTTLE ID NUMBERS: 445, 448, 451, 452, 454

NOTES (LOCATION SKETCH)

* THESE ARE DATACHEM METHODS. EA METHODS: VOC LM17, LM26; B/NA LM20

PP METALS (PRIORITY POLLUTANT): AG, AS, BE, CD, CR, CU, PB, HG, NI, SB, SE, TL, ZN. JS12, B9, JD21, JD20, Y9.

TCLP METALS: CD, CR, HG, PB. JS12, 40 CFR 261.24

DC: 2 bottles

EA: 2 bottles

SIGNATURE: VM/MR

RECEIVED BY: Nancy E. Roka

ABB ENVIRONMENTAL SERVICES, INC

FIELD DATA RECORD - SEDIMENT

FIELD SAMPLING NUMBER: P911030O

PROJECT: USATHAMA-BAAP

SITE ID: PBS--91-103

SITE TYPE: BUGR

JOB NUMBER: 6853-04

PROGRAM: C

SAMPLING DATE: 10.1.91

FILE NAME: CSO

WEATHER: cloudy, °50's

LOCATION ACTIVITY START: 1040 END: 1045

SEDIMENT DATA

DEPTH OF SEDIMENT SAMPLE: 1-4 IN

TYPE OF SAMPLE COLLECTED: [x] DISCRETE [ ] COMPOSITE

TYPE OF SEDIMENT:
- [x] CLAY
- [x] SAND
- [x] ORGANIC
- [ ] SILT
- [ ] GRAVEL
- [ ] OTHER

EQUIPMENT USED FOR COLLECTION:
- [ ] GRAVITY CORER
- [x] TULIP BULB PLANTER
- [ ] S.S. HAND SPOON
- [x] ALUMINUM PAN
- [ ] PLASTIC SCOOP
- [ ] OTHER

DECONTAMINATION FLUIDS USED:
- [x] POTABLE WATER
- [ ] POTABLE WATER WITH HIGH PRESSURE
- [ ] OTHER

SAMPLE OBSERVATIONS: [ ] ODOR [ ] COLORED

AMBIENT AIR: — PPM

SAMPLE LOCATION: — PPM

pH: — UNITS

ANALYTICAL PARAMETERS

		METHOD NUMBER	PRESERVATION METHOD	VOLUME REQUIRED	SAMPLE COLLECTED	SAMPLE BOTTLE ID NUMBERS
[x]	PP METALS (SPECIFIED BELOW)		4 DEG C		DC [x]	1138
[ ]	AL	JS12	4 DEG C		[ ]	
[ ]	CA		4 DEG C		[ ]	
[ ]	NA		4 DEG C		[ ]	
[ ]	CD		4 DEG C		[ ]	
[ ]	CR		4 DEG C		[ ]	
[ ]	HG	Y9	4 DEG C		[ ]	
[ ]	PB	JD21	4 DEG C		[ ]	
[ ]	TCLP METALS (SPECIFIED BELOW)		4 DEG C		[ ]	
[ ]	NIT	KF17	4 DEG C		[ ]	
[ ]	SO4	KT07	4 DEG C		[ ]	
[ ]	NH3N2	USEPA 350.2	4 DEG C		[ ]	
[ ]	TOC	USEPA CE-81-1	4 DEG C		[ ]	
[ ]	pH	SW846 METHOD 9045	4 DEG C		[ ]	
* [x]	VOC	LM23	4 DEG C		EA [x]	1139 1142
* [ ]	BN/A	LM25	4 DEG C		[ ]	
[ ]	NG	LW27	4 DEG C		[ ]	
[ ]	NAM	LN08	4 DEG C		[ ]	
[x]	DNT	LW23	4 DEG C		DC [x]	1143
[ ]					[ ]	

NOTES (LOCATION SKETCH)

* THESE ARE DATACHEM METHODS. EA METHODS: VOC LM17, LM26
B/NA LM20

PP METALS (PRIORITY POLLUTANT): AG, AS, BE, CD, CR, CU, PB, HG, NI, SB, SE, TL, ZN.
JS12, B9, JD21, JD20, Y9.

TCLP METALS: CD, CR, HG, PB.
JS12, 40 CFR 261.24

DC: 2 bottles
EA: 2 bottles

SIGNATURE: VM/ME

RECEIVED BY: Nancy E Rospa

ABB ENVIRONMENTAL SERVICES, INC

LD DATA RECORD – SEDIMENT

FIELD SAMPLING NUMBER: P91104 00

PROJECT: USATHAMA-BAAP

SITE TYPE: BUGR

SAMPLING DATE: 10.1.91

SITE ID: PBS-91-104

JOB NUMBER: 6853-04

FILE NAME: CSO

LOCATION ACTIVITY: START: 1110 END: 1115

PROGRAM: C

WEATHER: cloudy, °50's

SEDIMENT DATA

DEPTH OF SEDIMENT SAMPLE: 1-4 IN

TYPE OF SAMPLE COLLECTED: [x] DISCRETE [ ] COMPOSITE

TYPE OF SEDIMENT:
- [ ] CLAY
- [x] SAND
- [x] ORGANIC
- [x] SILT Some
- [ ] GRAVEL
- [ ] OTHER

EQUIPMENT USED FOR COLLECTION:
- [x] GRAVITY CORER
- [x] TULIP BULB PLANTER
- [x] S.S. HAND SPOON
- [ ] ALUMINUM PAN
- [ ] PLASTIC SCOOP
- [ ] OTHER

DECONTAMINATION FLUIDS USED:
- [x] POTABLE WATER
- [ ] POTABLE WATER WITH HIGH PRESSURE
- [ ] OTHER

SAMPLE OBSERVATIONS: [ ] ODOR [ ] COLORED

AMBIENT AIR: 0.0 PPM

SAMPLE LOCATION: 0.0 PPM

pH: — UNITS

ANALYTICAL PARAMETERS

	METHOD NUMBER	PRESERVATION METHOD	VOLUME REQUIRED	SAMPLE COLLECTED	SAMPLE BOTTLE ID NUMBERS
[x] PP METALS (SPECIFIED BELOW)		4 DEG C		DC [x]	1147
[ ] AL	JS12	4 DEG C			
[ ] CA		4 DEG C			
[ ] NA		4 DEG C			
[ ] CD		4 DEG C			
[ ] CR		4 DEG C			
[ ] HG	Y9	4 DEG C			
[ ] PB	JD21	4 DEG C			
[ ] TCLP METALS (SPECIFIED BELOW)		4 DEG C			
[ ] NIT	KF17	4 DEG C			
[ ] SO4	KT07	4 DEG C			
[ ] NH3N2	USEPA 350.2	4 DEG C			
[ ] TOC	USEPA CE-81-1	4 DEG C			
[ ] PH	SW846 METHOD 9045	4 DEG C			
[x] VOC	LM23	4 DEG C		EA [x]	1148 1151
[ ] BN/A	LM25	4 DEG C			
[ ] PEST	LW27	4 DEG C			
[ ] HERB	LN08	4 DEG C			
[x] DNT	LW23	4 DEG C		DC [x]	1149

NOTES

LOCATION SKETCH)

* THESE ARE DATACHEM METHODS. EA METHODS: VOC LM17, LM26
B/NA LM20

PP METALS (PRIORITY POLLUTANT): AG, AS, BE, CD, CR, CU, PB, HG, NI, SB, SE, TL, ZN.
JS12, B9, JD21, JD20, Y9.

TCLP METALS: CD, CR, HG, PB.
JS12, 40 CFR 261.24

DC: 2 bottles
EA: 2 bottles

* TIP brought out to us. Calibrated in the field w/ ambient air and 119 ppm isobut.

SIGNATURE: VM/MC

RECEIVED BY: Nancy E. Rora

ABB ENVIRONMENTAL SERVICES, INC

FIELD DATA RECORD – SEDIMENT

FIELD SAMPLING NUMBER: P911050O

PROJECT: USATHAMA-BAAP

SITE ID: PBS-91-105

LOCATION ACTIVITY: START: 1050 END: 1055

SITE TYPE: BUGR

JOB NUMBER: 6853-04

PROGRAM: C

SAMPLING DATE: 10.1.91

FILE NAME: CSO

WEATHER: cloudy, °50's

SEDIMENT DATA

DEPTH OF SEDIMENT SAMPLE: 0-3 IN

TYPE OF SAMPLE COLLECTED: ☑ DISCRETE ☐ COMPOSITE

TYPE OF SEDIMENT:
- ☐ CLAY
- ☑ SAND
- ☑ ORGANIC
- ☐ SILT
- ☐ GRAVEL
- ☐ OTHER

EQUIPMENT USED FOR COLLECTION:
- ☐ GRAVITY CORER
- ☑ TULIP BULB PLANTER
- ☐ S.S. HAND SPOON
- ☑ ALUMINUM PAN
- ☐ PLASTIC SCOOP
- ☐ OTHER

DECONTAMINATION FLUIDS USED:
- ☑ POTABLE WATER
- ☐ POTABLE WATER WITH HIGH PRESSURE
- ☐ OTHER

SAMPLE OBSERVATIONS: ☐ ODOR ☐ COLORED ☐

AMBIENT AIR: — PPM

SAMPLE LOCATION: — PPM

pH: — UNITS

ANALYTICAL PARAMETERS

	METHOD NUMBER	PRESERVATION METHOD	VOLUME REQUIRED	SAMPLE COLLECTED	SAMPLE BOTTLE ID NUMBERS
☑ PP METALS (SPECIFIED BELOW)		4 DEG C			457
☐ AL	JS12	4 DEG C			
☐ CA		4 DEG C			
☐ NA		4 DEG C			
☐ CD		4 DEG C			
☐ CR		4 DEG C		DC	
☐ HG	Y9	4 DEG C			
☐ PB	JD21	4 DEG C			
☑ TCLP METALS (SPECIFIED BELOW)		4 DEG C		☑	460
☐ NIT	KF17	4 DEG C			
☐ SO4	KT07	4 DEG C			
☐ NH3N2	USEPA 350.2	4 DEG C			
☐ TOC	USEPA CE-81-1	4 DEG C			
☐ pH	SW846 METHOD 9045	4 DEG C			
*☑ VOC	LM23	4 DEG C		EA ☑	463 464
*☑ BN/A	LM25	4 DEG C		☑	532
☐ NG	LW27	4 DEG C			
☐ NAM	LN08	4 DEG C		DC	
☑ DNT	LW23	4 DEG C		☑	466
☐					

NOTES (LOCATION SKETCH)

* THESE ARE DATACHEM METHODS. EA METHODS: VOC LM17, LM26
B/NA LM20

PP METALS (PRIORITY POLLUTANT): AG, AS, BE, CD, CR, CU, PB, HG, NI, SB, SE, TL, ZN.
JS12, B9, JD21, JD20, Y9.

TCLP METALS: CD, CR, HG, PB.
JS12, 40 CFR 261.24

DC: 2 bottles
EA: 2 bottles

SIGNATURE: VM/MR

RECEIVED BY: Nancy E. Rofka

ABB ENVIRONMENTAL SERVICES, INC

FIELD DATA RECORD – SEDIMENT

FIELD SAMPLING NUMBER: PB91060600

PROJECT: USATHAMA-BAAP

SITE ID: PBS-91-106

SITE TYPE: BUGR

JOB NUMBER: 6853-04

PROGRAM: C

SAMPLING DATE: 10.1.91

FILE NAME: CSO

WEATHER: cloudy, 50's

LOCATION ACTIVITY: START: 1100 END: 1105

SEDIMENT DATA

DEPTH OF SEDIMENT SAMPLE: 1-3 IN

TYPE OF SAMPLE COLLECTED: [x] DISCRETE [ ] COMPOSITE

TYPE OF SEDIMENT:
- [x] CLAY
- [x] SAND
- [x] ORGANIC
- [x] SILT
- [ ] GRAVEL
- [ ] OTHER

EQUIPMENT USED FOR COLLECTION:
- [ ] GRAVITY CORER
- [x] TULIP BULB PLANTER
- [ ] S.S. HAND SPOON
- [x] ALUMINUM PAN
- [ ] PLASTIC SCOOP
- [ ] OTHER

DECONTAMINATION FLUIDS USED:
- [x] POTABLE WATER
- [ ] POTABLE WATER WITH HIGH PRESSURE
- [ ] OTHER

SAMPLE OBSERVATIONS: [ ] ODOR [ ] COLORED

AMBIENT AIR: — PPM

SAMPLE LOCATION: — PPM

pH: — UNITS

ANALYTICAL PARAMETERS

	METHOD NUMBER	PRESERVATION METHOD	VOLUME REQUIRED	SAMPLE COLLECTED	SAMPLE BOTTLE ID NUMBERS
[x] PP METALS (SPECIFIED BELOW)		4 DEG C		DC [x]	1156
[ ] AL	JS12	4 DEG C			
[ ] CA		4 DEG C			
[ ] NA		4 DEG C			
[ ] CD		4 DEG C			
[ ] CR		4 DEG C			
[ ] HG	Y9	4 DEG C			
[ ] PB	JD21	4 DEG C			
[ ] TCLP METALS (SPECIFIED BELOW)		4 DEG C			
[ ] NIT	KF17	4 DEG C			
[ ] SO4	KT07	4 DEG C			
[ ] NH3N2	USEPA 350.2	4 DEG C			
[ ] TOC	USEPA CE-81-1	4 DEG C			
[ ] OH	SW846 METHOD 9045	4 DEG C			
[x] VOC	LM23	4 DEG C		EA [x]	1157 1160
[ ] BN/A	LM25	4 DEG C			
[ ] NG	LW27	4 DEG C			
[ ] NAM	LN08	4 DEG C			
[x] DNT	LW23	4 DEG C		DC [x]	1158
[ ]					

NOTES (LOCATION SKETCH)

* THESE ARE DATACHEM METHODS. EA METHODS: VOC LM17, LM26
B/NA LM20

PP METALS (PRIORITY POLLUTANT): AG, AS, BE, CD, CR, CU, PB, HG, NI, SB, SE, TL, ZN.
JS12, B9, JD21, JD20, Y9.

TCLP METALS: CD, CR, HG, PB.
JS12, 40 CFR 261.24

DC: 2 bottles

EA: 2 bottles

SIGNATURE: VM/MR

RECEIVED BY: Nancy E. Roza

ABB ENVIRONMENTAL SERVICES, INC

FIELD DATA RECORD - SEDIMENT

FIELD SAMPLING NUMBER: F911070D

PROJECT: USATHAMA-BAAP

SITE ID: PBS-91-107

LOCATION ACTIVITY: START: 1545 END: 1550

SITE TYPE: BUGR

JOB NUMBER: 6853-04

PROGRAM: C

SAMPLING DATE: 9.22.91

FILE NAME: CSO

WEATHER: cloudy, rainy 50's

SEDIMENT DATA

DEPTH OF SEDIMENT SAMPLE: 1-5 IN

TYPE OF SAMPLE COLLECTED: [x] DISCRETE [ ] COMPOSITE

TYPE OF SEDIMENT:
- [ ] CLAY
- [x] SAND little
- [x] ORGANIC
- [ ] SILT
- [ ] GRAVEL
- [ ] OTHER

EQUIPMENT USED FOR COLLECTION:
- [x] GRAVITY CORER
- [x] TULIP BULB PLANTER
- [ ] S.S. HAND SPOON
- [x] ALUMINUM PAN
- [ ] PLASTIC SCOOP
- [ ] OTHER

DECONTAMINATION FLUIDS USED:
- [x] POTABLE WATER
- [ ] POTABLE WATER WITH HIGH PRESSURE
- [ ] OTHER

SAMPLE OBSERVATIONS: [ ] ODOR [ ] COLORED

AMBIENT AIR: — PPM

SAMPLE LOCATION: — PPM

pH: — UNITS

ANALYTICAL PARAMETERS

		METHOD NUMBER	PRESERVATION METHOD	VOLUME REQUIRED	SAMPLE COLLECTED	SAMPLE BOTTLE ID NUMBERS
[x]	PP METALS (SPECIFIED BELOW)		4 DEG C		[x]	645
[ ]	AL	JS12	4 DEG C		[ ]	
[ ]	CA		4 DEG C		[ ]	
[ ]	NA		4 DEG C		[ ]	
[ ]	CD		4 DEG C		[ ]	
[ ]	CR		4 DEG C		[ ]	
[ ]	HG	Y9	4 DEG C		[ ]	
[ ]	PB	JD21	4 DEG C		[ ]	
[ ]	TCLP METALS (SPECIFIED BELOW)		4 DEG C		[ ]	
[ ]	NIT	KF17	4 DEG C		[ ]	
[ ]	SO4	KT07	4 DEG C		[ ]	
[ ]	NH3N2	USEPA 350.2	4 DEG C		[ ]	
[ ]	TOC	USEPA CE-81-1	4 DEG C		[ ]	
[ ]	pH	SW846 METHOD 9045	4 DEG C		[ ]	
* [x]	VOC	LM23	4 DEG C	DC	[x]	647 647
* [ ]	BN/A	LM25	4 DEG C		[ ]	
[ ]	NG	LW27	4 DEG C		[ ]	
[ ]	NAM	LN08	4 DEG C		[ ]	
[x]	DNT	LW23	4 DEG C		[x]	645

NOTES (LOCATION SKETCH)

* THESE ARE DATACHEM METHODS. EA METHODS: VOC LM17, LM26; B/NA LM20

PP METALS (PRIORITY POLLUTANT): AG, AS, BE, CD, CR, CU, PB, HG, NI, SB, SE, TL, ZN. JS12, B9, JD21, JD20, Y9.

TCLP METALS: CD, CR, HG, PB. JS12, 40 CFR 261.24

DC: 4 bottles

Tip failed

SIGNATURE: VM/NR

RECEIVED BY: Nancy E. Rotta

ABB ENVIRONMENTAL SERVICES, INC

FIELD DATA RECORD - SEDIMENT

FIELD SAMPLING NUMBER: P91116 03

PROJECT: USATHAMA-BAAP

SITE ID: PBS-911-116

LOCATION ACTIVITY: START: 1130 END: 1140

SITE TYPE: BUGR

JOB NUMBER: 6853-04

PROGRAM: C

SAMPLING DATE: 10.1.91

FILE NAME: CSO

WEATHER: cloudy, 50's

SEDIMENT DATA

DEPTH OF SEDIMENT SAMPLE: 3-3.5' BGS

TYPE OF SAMPLE COLLECTED: [x] DISCRETE [ ] COMPOSITE

TYPE OF SEDIMENT:
- [ ] CLAY
- [x] SAND med-fine (NR)
- [x] ORGANIC trace
- [ ] SILT
- [ ] GRAVEL
- [ ] OTHER

EQUIPMENT USED FOR COLLECTION:
- [ ] GRAVITY CORER
- [x] TULIP BULB PLANTER
- [x] S.S. HAND SPOON
- [x] ALUMINUM PAN
- [ ] PLASTIC SCOOP
- [x] OTHER hand auger

DECONTAMINATION FLUIDS USED:
- [x] POTABLE WATER
- [ ] POTABLE WATER WITH HIGH PRESSURE
- [ ] OTHER

SAMPLE OBSERVATIONS: [ ] ODOR [x] COLORED light brown to tan

AMBIENT AIR: 0.0 PPM

SAMPLE LOCATION: 00 PPM

pH: ___ UNITS

ANALYTICAL PARAMETERS

	METHOD NUMBER	PRESERVATION METHOD	VOLUME REQUIRED	SAMPLE COLLECTED
[x] PP METALS (SPECIFIED BELOW)		4 DEG C		DC
[ ] AL	JS12	4 DEG C		
[ ] CA		4 DEG C		
[ ] NA		4 DEG C		
[ ] CD		4 DEG C		
[ ] CR		4 DEG C		
[ ] HG	Y9	4 DEG C		
[ ] PB	JD21	4 DEG C		
[x] TCLP METALS (SPECIFIED BELOW)		4 DEG C		DC
[ ] NIT	KF17	4 DEG C		
[ ] SO4	KT07	4 DEG C		
[ ] NH3N2	USEPA 350.2	4 DEG C		
[ ] TOC	USEPA CE-81-1	4 DEG C		
[ ] pH	SW846 METHOD 9045	4 DEG C		
[x] * VOC	LM23	4 DEG C		EA
[x] * BN/A	LM25	4 DEG C		
[ ] NG	LW27	4 DEG C		
[ ] NAM	LM08	4 DEG C		
[x] DNT	LW23	4 DEG C		DC

SAMPLE BOTTLE ID NUMBERS: 469; 472; 475, 476; 541; 478

NOTES (LOCATION SKETCH)

* THESE ARE DATACHEM METHODS. EA METHODS: VOC LM17, LM26; B/NA LM20

PP METALS (PRIORITY POLLUTANT): AG, AS, BE, CD, CR, CU, PB, HG, NI, SB, SE, TL, ZN. JS12, B9, JD21, JD20, Y9.

TCLP METALS: CD, CR, HG, PB. JS12, 40 CFR 261.24

DC: 2 bottles
EA: 2 bottles

SIGNATURE: VM/NR

RECEIVED BY: Nancy E. Rotta

ABB ENVIRONMENTAL SERVICES, INC

FIELD DATA RECORD - SEDIMENT

FIELD SAMPLING NUMBER: P9111703

PROJECT: USATHAMA-BAAP

SITE TYPE: BUGR

SAMPLING DATE: 10.1.91

SITE ID: PBS-91-117

JOB NUMBER: 6853-04

FILE NAME: CSO

WEATHER: cloudy, °50's

LOCATION ACTIVITY: START: 1145 END: 1155

PROGRAM: C

SEDIMENT DATA

DEPTH OF SEDIMENT SAMPLE: 2.5-3' ft

TYPE OF SAMPLE COLLECTED: [x] DISCRETE [ ] COMPOSITE

TYPE OF SEDIMENT:
- [ ] CLAY
- [x] SAND
- [x] ORGANIC trace
- [ ] SILT
- [x] GRAVEL
- [ ] OTHER

EQUIPMENT USED FOR COLLECTION:
- [ ] GRAVITY CORER
- [ ] TULIP BULB PLANTER
- [x] S.S. HAND SPOON
- [x] ALUMINUM PAN
- [ ] PLASTIC SCOOP
- [x] OTHER hand auger

DECONTAMINATION FLUIDS USED
- [x] POTABLE WATER
- [ ] POTABLE WATER WITH HIGH PRESSURE
- [ ] OTHER

SAMPLE OBSERVATIONS: [ ] ODOR [ ] COLORED [ ]

AMBIENT AIR: 0.0 PPM

SAMPLE LOCATION: 0.0 PPM

pH: — UNITS

ANALYTICAL PARAMETERS

	METHOD NUMBER	PRESERVATION METHOD	VOLUME REQUIRED	SAMPLE COLLECTED	SAMPLE BOTTLE ID NUMBERS
[x] PP METALS (SPECIFIED BELOW)		4 DEG C		DC [x]	481
[ ] AL	JS12	4 DEG C		[ ]	
[ ] CA		4 DEG C		[ ]	
[ ] NA		4 DEG C		[ ]	
[ ] CD		4 DEG C		[ ]	
[ ] CR		4 DEG C		[ ]	
[ ] HG	Y9	4 DEG C		[ ]	
[ ] PB	JD21	4 DEG C		[ ]	
[x] TCLP METALS (SPECIFIED BELOW)		4 DEG C		DC [x]	484
[ ] NIT	KF17	4 DEG C		[ ]	
[ ] SO4	KT07	4 DEG C		[ ]	
[ ] NH3N2	USEPA 350.2	4 DEG C		[ ]	
[ ] TOC	USEPA CE-81-1	4 DEG C		[ ]	
[ ] pH	SW846 METHOD 9045	4 DEG C		[ ]	
*[x] VOC	LM23	4 DEG C		EA [x]	487 / 488
*[x] BN/A	LM25	4 DEG C		[x]	544
[ ] NG	LW27	4 DEG C		DC [ ]	
[ ] NAM	LN08	4 DEG C		[ ]	
[x] DNT	LW23	4 DEG C		[x]	490
[ ]				[ ]	
[ ]				[ ]	

NOTES (LOCATION SKETCH)

* THESE ARE DATACHEM METHODS. EA METHODS: VOC LM17, LM26
B/NA LM20

PP METALS (PRIORITY POLLUTANT): AG, AS, BE, CD, CR, CU, PB, HG, NI, SB, SE, TL, ZN.
JS12, B9, JD21, JD20, Y9.

TCLP METALS: CD, CR, HG, PB.
JS12, 40 CFR 261.24

DC: 2 bottles
EA: 2 bottles

- Rock at 3' prevented collecting deeper, we Angled the hand auger to collect dirt around near top of rock.

SIGNATURE: Vm/NR

RECEIVED BY: Nancy E. Roka

PBS ENVIRONMENTAL SERVICES, INC

FIELD DATA RECORD – SEDIMENT

FIELD SAMPLING NUMBER: P91420000

PROJECT: USATHAMA-BAAP
SITE ID: PBS-91-42
LOCATION ACTIVITY: START: 1235 END: 1240

SITE TYPE: BUGR
JOB NUMBER: 6853-04
PROGRAM: C

SAMPLING DATE: 10.1.91
FILE NAME: CSO
WEATHER: cloudy, 50's breezy

SEDIMENT DATA

DEPTH OF SEDIMENT SAMPLE: 0-3 IN

TYPE OF SAMPLE COLLECTED: [x] DISCRETE [ ] COMPOSITE

TYPE OF SEDIMENT:
- [ ] CLAY
- [x] SAND
- [x] ORGANIC
- [ ] SILT
- [x] GRAVEL
- [ ] OTHER

EQUIPMENT USED FOR COLLECTION:
- [x] GRAVITY CORER
- [ ] TULIP BULB PLANTER
- [x] S.S. HAND SPOON
- [x] ALUMINUM PAN
- [ ] PLASTIC SCOOP
- [ ] OTHER

DECONTAMINATION FLUIDS USED
- [x] POTABLE WATER
- [ ] POTABLE WATER WITH HIGH PRESSURE
- [ ] OTHER

SAMPLE OBSERVATIONS: [ ] ODOR [ ] COLORED

AMBIENT AIR: 0.0 PPM

SAMPLE LOCATION: 0.0 PPM

pH: ___ UNITS

ANALYTICAL PARAMETERS

	METHOD NUMBER	PRESERVATION METHOD	VOLUME REQUIRED	SAMPLE COLLECTED	SAMPLE BOTTLE ID NUMBERS
[x] PP METALS (SPECIFIED BELOW)		4 DEG C		DC [x]	2776
[ ] AL	JS12	4 DEG C			
[ ] CA		4 DEG C			
[ ] NA		4 DEG C			
[ ] CD		4 DEG C			
[ ] CR		4 DEG C			
[ ] HG	Y9	4 DEG C			
[ ] PB	JD21	4 DEG C			
[ ] TCLP METALS (SPECIFIED BELOW)		4 DEG C			
[ ] NIT	KF17	4 DEG C			
[ ] SO4	KT07	4 DEG C			
[ ] NH3N2	USEPA 350.2	4 DEG C			
[ ] TOC	USEPA CE-81-1	4 DEG C			
[ ] pH	SW846 METHOD 9045	4 DEG C			
[x] VOC	LM23	4 DEG C		EA [x]	2782 2723
[ ] BN/A	LM25	4 DEG C			
[ ] NG	LW27	4 DEG C			
[ ] NAM	LN08	4 DEG C			
[x] DNT	LW23	4 DEG C		DC [x]	2788

NOTES
LOCATION SKETCH)

* THESE ARE DATACHEM METHODS. EA METHODS: VOC LM17, LM26
B/NA LM20
PP METALS (PRIORITY POLLUTANT): AG, AS, BE, CD, CR, CU, PB, HG, NI, SB, SE, TL, ZN.
JS12, B9, JD21, JD20, Y9.
TCLP METALS: CD, CR, HG, PB.
JS12, 40 CFR 261.24

DC: 2 bottles
EA: 2 bottles

SIGNATURE: VM/MR
RECEIVED BY: Nancy E. Roka

ABB ENVIRONMENTAL SERVICES, INC

FIELD DATA RECORD - SEDIMENT

FIELD SAMPLING NUMBER: P914300D

PROJECT: USATHAMA-BAAP

SITE ID: PBS-91-43

LOCATION ACTIVITY: START: 1240 END: 1245

SITE TYPE: BUGR

JOB NUMBER: 6853-04

PROGRAM: C

SAMPLING DATE: 10.1.91

FILE NAME: CSO

WEATHER: cloudy, °50's breezy

SEDIMENT DATA

DEPTH OF SEDIMENT SAMPLE: 1-3 IN

TYPE OF SAMPLE COLLECTED: [x] DISCRETE [ ] COMPOSITE

TYPE OF SEDIMENT:
- [ ] CLAY
- [x] SAND
- [x] ORGANIC
- [x] SILT trace
- [x] GRAVEL
- [x] OTHER coal

EQUIPMENT USED FOR COLLECTION:
- [ ] GRAVITY CORER
- [x] TULIP BULB PLANTER
- [ ] S.S. HAND SPOON
- [x] ALUMINUM PAN
- [ ] PLASTIC SCOOP
- [ ] OTHER

DECONTAMINATION FLUIDS USED:
- [x] POTABLE WATER
- [ ] POTABLE WATER WITH HIGH PRESSURE
- [ ] OTHER

SAMPLE OBSERVATIONS: [ ] ODOR [ ] COLORED

AMBIENT AIR: 0.0 PPM

SAMPLE LOCATION: 0.0 PPM

pH: — UNITS

ANALYTICAL PARAMETERS

	METHOD NUMBER	PRESERVATION METHOD	VOLUME REQUIRED	SAMPLE COLLECTED
[x] PP METALS (SPECIFIED BELOW)		4 DEG C		DC
[ ] AL	JS12	4 DEG C		
[ ] CA		4 DEG C		
[ ] NA		4 DEG C		
[ ] CD		4 DEG C		
[ ] CR		4 DEG C		
[ ] HG	Y9	4 DEG C		
[ ] PB	JD21	4 DEG C		
[x] TCLP METALS (SPECIFIED BELOW)		4 DEG C		
[ ] NIT	KF17	4 DEG C		
[ ] SO4	KT07	4 DEG C		
[ ] NH3N2	USEPA 350.2	4 DEG C		
[ ] TOC	USEPA CE-81-1	4 DEG C		
[ ] pH	SW846 METHOD 9045	4 DEG C		
* [x] VOC	LM23	4 DEG C		EA
* [ ] BN/A	LM25	4 DEG C		
[ ] NG	LW27	4 DEG C		
[ ] NAM	LN08	4 DEG C		
[x] DNT	LW23	4 DEG C		DC

SAMPLE BOTTLE ID NUMBERS: 2791 / 2794 / 2797 2798 / 2803

NOTES (LOCATION SKETCH)

* THESE ARE DATACHEM METHODS. EA METHODS: VOC LM17, LM26; B/NA LM20

PP METALS (PRIORITY POLLUTANT): AG, AS, BE, CD, CR, CU, PB, HG, NI, SB, SE, TL, ZN. JS12, B9, JD21, JD20, Y9.

TCLP METALS: CD, CR, HG, PB. JS12, 40 CFR 261.24

DC: 2 bottles
EA: 2 bottles

SIGNATURE: VM/DMR

RECEIVED BY: Nancy E. Roka

ABB ENVIRONMENTAL SERVICES, INC

FIELD DATA RECORD – SEDIMENT

FIELD SAMPLING NUMBER: PB14400

PROJECT: USATHAMA-BAAP
SITE ID: PBS-91-44
LOCATION ACTIVITY START: 1245 END: 1250
SITE TYPE: BUGR
JOB NUMBER: 6853-04
PROGRAM: C
SAMPLING DATE: 10.1.91
FILE NAME: CSO
WEATHER: cloudy, 50's breezy

SEDIMENT DATA

DEPTH OF SEDIMENT SAMPLE: 1-3 IN

TYPE OF SAMPLE COLLECTED: [x] DISCRETE [ ] COMPOSITE

TYPE OF SEDIMENT:
- [x] CLAY
- [x] SAND
- [x] ORGANIC some
- [x] SILT trace
- [ ] GRAVEL
- [ ] OTHER

EQUIPMENT USED FOR COLLECTION:
- [x] GRAVITY CORER
- [x] TULIP BULB PLANTER
- [x] S.S. HAND SPOON
- [x] ALUMINUM PAN
- [ ] PLASTIC SCOOP
- [ ] OTHER

DECONTAMINATION FLUIDS USED:
- [x] POTABLE WATER
- [ ] POTABLE WATER WITH HIGH PRESSURE
- [ ] OTHER

SAMPLE OBSERVATIONS: [ ] ODOR [x] COLORED tan

AMBIENT AIR: 0.0 PPM
SAMPLE LOCATION: 0.0 PPM
pH: — UNITS

ANALYTICAL PARAMETERS

	METHOD NUMBER	PRESERVATION METHOD	VOLUME REQUIRED	SAMPLE COLLECTED
[x] PP METALS (SPECIFIED BELOW)		4 DEG C		DC
[ ] AL	JS12	4 DEG C		
[ ] CA		4 DEG C		
[ ] NA		4 DEG C		
[ ] CD		4 DEG C		
[ ] CR		4 DEG C		
[ ] HG	Y9	4 DEG C		
[ ] PB	JD21	4 DEG C		
[x] TCLP METALS (SPECIFIED BELOW)		4 DEG C		DC
[ ] NIT	KF17	4 DEG C		
[ ] SO4	KT07	4 DEG C		
[ ] NH3N2	USEPA 350.2	4 DEG C		
[ ] TOC	USEPA CE-81-1	4 DEG C		
[ ] pH	SW846 METHOD 9045	4 DEG C		
[x] * VOC	LM23	4 DEG C		EA
[ ] * BN/A	LM25	4 DEG C		
[ ] NG	LW27	4 DEG C		
[ ] NAM	LN08	4 DEG C		
[x] DNT	LW23	4 DEG C		DC

SAMPLE BOTTLE ID NUMBERS: 2806; 2809; 2812, 2813; 2816

NOTES (LOCATION SKETCH)

* THESE ARE DATACHEM METHODS. EA METHODS: VOC LM17, LM26
B/NA LM20
PP METALS (PRIORITY POLLUTANT): AG, AS, BE, CD, CR, CU, PB, HG, NI, SB, SE, TL, ZN.
JS12, 89, JD21, JD20, Y9.
TCLP METALS: CD, CR, HG, PB.
JS12, 40 CFR 261.24

DC: 2 bottles
EA: 2 bottles

SIGNATURE: VM/MR
RECEIVED BY: Nancy E. Rota

ABB ENVIRONMENTAL SERVICES, INC

FIELD DATA RECORD – SEDIMENT

FIELD SAMPLING NUMBER: P91450000

PROJECT: USATHAMA-BAAP

SITE ID: PBS-91-45

SITE TYPE: BUGR

JOB NUMBER: 6853-04

PROGRAM: C

LOCATION ACTIVITY: START: 1255 END: 1300

SAMPLING DATE: 10.1.91

FILE NAME: CSO

WEATHER: cloudy 50's breezy

SEDIMENT DATA

DEPTH OF SEDIMENT SAMPLE: 1-2 IN

TYPE OF SAMPLE COLLECTED: [x] DISCRETE [ ] COMPOSITE

TYPE OF SEDIMENT: [ ] CLAY [x] SAND [ ] ORGANIC [ ] SILT [x] GRAVEL [ ] OTHER

EQUIPMENT USED FOR COLLECTION: [ ] GRAVITY CORER [x] TULIP BULB PLANTER [ ] S.S. HAND SPOON [x] ALUMINUM PAN [ ] PLASTIC SCOOP [ ] OTHER

DECONTAMINATION FLUIDS USED: [x] POTABLE WATER [ ] POTABLE WATER WITH HIGH PRESSURE [ ] OTHER

SAMPLE OBSERVATIONS: [ ] ODOR [ ] COLORED [ ]

AMBIENT AIR: 0.0 PPM

SAMPLE LOCATION: 0.0 PPM

pH: — UNITS

ANALYTICAL PARAMETERS

	METHOD NUMBER	PRESERVATION METHOD	VOLUME REQUIRED	SAMPLE COLLECTED
[x] PP METALS (SPECIFIED BELOW)		4 DEG C		[x]
[ ] AL	JS12	4 DEG C		
[ ] CA	|	4 DEG C		
[ ] NA	|	4 DEG C		
[ ] CD	|	4 DEG C		
[ ] CR	|	4 DEG C	DC	
[ ] HG	Y9	4 DEG C		
[ ] PB	JD21	4 DEG C		
[x] TCLP METALS (SPECIFIED BELOW)		4 DEG C		[x]
[ ] NIT	KF17	4 DEG C		
[ ] SO4	KT07	4 DEG C		
[ ] NH3N2	USEPA 350.2	4 DEG C		
[ ] TOC	USEPA CE-81-1	4 DEG C		
[ ] pH	SW846 METHOD 9045	4 DEG C		
* [x] VOC	LM23	4 DEG C	EA	[x]
* [x] BN/A	LM25	4 DEG C		
[ ] NG	LW27	4 DEG C		
[ ] NAM	LN08	4 DEG C		
[x] DNT	LW23	4 DEG C	DC	[x]

SAMPLE BOTTLE ID NUMBERS: 2821, 2824, 2827, 2828, 2833

NOTES (LOCATION SKETCH)

* THESE ARE DATACHEM METHODS. EA METHODS: VOC LM17, LM26; B/NA LM20

PP METALS (PRIORITY POLLUTANT): AG, AS, BE, CD, CR, CU, PB, HG, NI, SB, SE, TL, ZN. JS12, B9, JD21, JD20, Y9.

TCLP METALS: CD, CR, HG, PB. JS12, 40 CFR 261.24

DC: 2 bottles

EA: 2 bottles

SIGNATURE: VM/MR

RECEIVED BY: VNancy E. Rohr

BB ENVIRONMENTAL SERVICES, INC

FIELD DATA RECORD – SEDIMENT

FIELD SAMPLING NUMBER: P91460000

PROJECT: USATHAMA-BAAP

SITE ID: PBS-91-46

LOCATION ACTIVITY: START: 1305 END: 1310

SITE TYPE: BUGR

JOB NUMBER: 6853-04

PROGRAM: C

SAMPLING DATE: 10.1.91

FILE NAME: CSO

WEATHER: cloudy, 50's breezy

SEDIMENT DATA

DEPTH OF SEDIMENT SAMPLE: 1-3 IN

TYPE OF SAMPLE COLLECTED: [x] DISCRETE [ ] COMPOSITE

TYPE OF SEDIMENT: [ ] CLAY [x] SAND [x] ORGANIC some [x] SILT [x] GRAVEL [ ] OTHER

EQUIPMENT USED FOR COLLECTION: [x] GRAVITY CORER [ ] TULIP BULB PLANTER [x] S.S. HAND SPOON [x] ALUMINUM PAN [ ] PLASTIC SCOOP [ ] OTHER

DECONTAMINATION FLUIDS USED: [x] POTABLE WATER [ ] POTABLE WATER WITH HIGH PRESSURE [ ] OTHER

SAMPLE OBSERVATIONS: [ ] ODOR [x] COLORED dark brown/tan/rust

AMBIENT AIR: 0.0 PPM

SAMPLE LOCATION: 0.0 PPM

pH: — UNITS

ANALYTICAL PARAMETERS

	METHOD NUMBER	PRESERVATION METHOD	VOLUME REQUIRED	SAMPLE COLLECTED	SAMPLE BOTTLE ID NUMBERS
[x] PP METALS (SPECIFIED BELOW)		4 DEG C		DC [x]	2836
[ ] AL	JS12	4 DEG C			
[ ] CA		4 DEG C			
[ ] NA		4 DEG C			
[ ] CD		4 DEG C			
[ ] CR		4 DEG C			
[ ] HG	Y9	4 DEG C			
[ ] PB	JD21	4 DEG C			
[ ] TCLP METALS (SPECIFIED BELOW)		4 DEG C			
[ ] NIT	KF17	4 DEG C			
[ ] SO4	KT07	4 DEG C			
[ ] NH3N2	USEPA 350.2	4 DEG C			
[ ] TOC	USEPA CE-81-1	4 DEG C			
[ ] pH	SW846 METHOD 9045	4 DEG C			
[x] VOC	LM23	4 DEG C		EA [x]	2842 / 2843
[ ] BN/A	LM25	4 DEG C			
[ ] NG	LW27	4 DEG C			
[ ] NAM	LN08	4 DEG C			
[x] DNT	LW23	4 DEG C		DC [x]	[illegible] / 2848

NOTES (LOCATION SKETCH)

* THESE ARE DATACHEM METHODS. EA METHODS: VOC LM17, LM26; B/NA LM20

PP METALS (PRIORITY POLLUTANT): AG, AS, BE, CD, CR, CU, PB, HG, NI, SB, SE, TL, ZN. JS12, B9, JD21, JD20, Y9.

TCLP METALS: CD, CR, HG, PB. JS12, 40 CFR 261.24

DC: 2 bottles

EA: 2 bottles

SIGNATURE: VM/MR

RECEIVED BY: Nancy E. Roka

ABB ENVIRONMENTAL SERVICES, INC

FIELD DATA RECORD – SEDIMENT

FIELD SAMPLING NUMBER: P91470000

PROJECT: USATHAMA-BAAP

SITE ID: PBS-91-47

SITE TYPE: BUGR

JOB NUMBER: 6853-04

PROGRAM: C

LOCATION ACTIVITY: START: 1315 END: 1320

SAMPLING DATE: 10.1.91

FILE NAME: CSO

WEATHER: cloudy, °50's breezy

SEDIMENT DATA

DEPTH OF SEDIMENT SAMPLE: 1-3 IN

TYPE OF SAMPLE COLLECTED: [X] DISCRETE [ ] COMPOSITE

TYPE OF SEDIMENT:
- [X] CLAY
- [X] SAND
- [X] ORGANIC
- [X] SILT
- [ ] GRAVEL
- [ ] OTHER

EQUIPMENT USED FOR COLLECTION:
- [X] GRAVITY CORER
- [X] TULIP BULB PLANTER
- [X] S.S. HAND SPOON
- [X] ALUMINUM PAN
- [ ] PLASTIC SCOOP
- [ ] OTHER

DECONTAMINATION FLUIDS USED:
- [X] POTABLE WATER
- [ ] POTABLE WATER WITH HIGH PRESSURE
- [ ] OTHER

SAMPLE OBSERVATIONS: [ ] ODOR [ ] COLORED

AMBIENT AIR: 0.0 PPM

SAMPLE LOCATION: 0.0 PPM

pH: — UNITS

ANALYTICAL PARAMETERS

		METHOD NUMBER	PRESERVATION METHOD	VOLUME REQUIRED	SAMPLE COLLECTED	SAMPLE BOTTLE ID NUMBERS
[X]	PP METALS (SPECIFIED BELOW)		4 DEG C		DC [X]	2851
[ ]	AL	JS12	4 DEG C			
[ ]	CA	|	4 DEG C			
[ ]	NA	|	4 DEG C			
[ ]	CD	|	4 DEG C			
[ ]	CR	|	4 DEG C			
[ ]	HG	Y9	4 DEG C			
[ ]	PB	JD21	4 DEG C			
[ ]	TCLP METALS (SPECIFIED BELOW)		4 DEG C			
[ ]	NIT	KF17	4 DEG C			
[ ]	SO4	KT07	4 DEG C			
[ ]	NH3N2	USEPA 350.2	4 DEG C			
[ ]	TOC	USEPA CE-81-1	4 DEG C			
[ ]	pH	SW846 METHOD 9045	4 DEG C			
*[X]	VOC	LM23	4 DEG C		EA [X]	2857 2858
*[ ]	BN/A	LM25	4 DEG C			
[ ]	NG	LW27	4 DEG C			
[ ]	NAM	LN08	4 DEG C			
[X]	DNT	LW23	4 DEG C		DC [X]	2865

NOTES (LOCATION SKETCH)

* THESE ARE DATACHEM METHODS. EA METHODS: VOC LM17, LM26
B/NA LM20

PP METALS (PRIORITY POLLUTANT): AG, AS, BE, CD, CR, CU, PB, HG, NI, SB, SE, TL, ZN.
JS12, B9, JD21, JD20, Y9.

TCLP METALS: CD, CR, HG, PB.
JS12, 40 CFR 261.24

DC: 2 bottles
EA: 2 bottles

SIGNATURE: VM/MR

RECEIVED BY: Nancy E. Roña

PBB ENVIRONMENTAL SERVICES, INC

FIELD DATA RECORD – SEDIMENT

FIELD SAMPLING NUMBER: P91480000

PROJECT: USATHAMA-BAAP

SITE ID: PBS-191-48

SITE TYPE: BUGR

JOB NUMBER: 6853-04

PROGRAM: C

SAMPLING DATE: 10.1.91

FILE NAME: CSO

WEATHER: cloudy, °50's breezy

LOCATION ACTIVITY: START: 1325 END: 1330

SEDIMENT DATA

DEPTH OF SEDIMENT SAMPLE: 1-4 IN

TYPE OF SAMPLE COLLECTED: [x] DISCRETE [ ] COMPOSITE

TYPE OF SEDIMENT:
- [ ] CLAY
- [x] SAND fine
- [ ] ORGANIC
- [x] SILT
- [ ] GRAVEL
- [ ] OTHER

EQUIPMENT USED FOR COLLECTION:
- [x] GRAVITY CORER
- [x] TULIP BULB PLANTER
- [x] S.S. HAND SPOON
- [x] ALUMINUM PAN
- [ ] PLASTIC SCOOP
- [ ] OTHER

DECONTAMINATION FLUIDS USED
- [x] POTABLE WATER
- [ ] POTABLE WATER WITH HIGH PRESSURE
- [ ] OTHER

SAMPLE OBSERVATIONS: [ ] ODOR [ ] COLORED

AMBIENT AIR: 0.0 PPM

SAMPLE LOCATION: 0.0 PPM

pH: — UNITS

ANALYTICAL PARAMETERS

		METHOD NUMBER	PRESERVATION METHOD	VOLUME REQUIRED	SAMPLE COLLECTED
[x]	PP METALS (SPECIFIED BELOW)		4 DEG C		
[ ]	AL	JS12	4 DEG C		
[ ]	CA		4 DEG C		
[ ]	NA		4 DEG C		
[ ]	CD		4 DEG C		
[ ]	CR		4 DEG C		
[ ]	HG	Y9	4 DEG C		
[ ]	PB	JD21	4 DEG C		
[x]	TCLP METALS (SPECIFIED BELOW)		4 DEG C		
[ ]	NIT	KF17	4 DEG C		
[ ]	SO4	KT07	4 DEG C		
[ ]	NH3N2	USEPA 350.2	4 DEG C		
[ ]	TOC	USEPA CE-81-1	4 DEG C		
[ ]	pH	SW846 METHOD 9045	4 DEG C		
*[x]	VOC	LM23	4 DEG C	EA	[x]
*[x]	BN/A	LM25	4 DEG C	EA	[x]
[ ]	NG	LW27	4 DEG C		
[ ]	NAM	LN08	4 DEG C		
[x]	DNT	LW23	4 DEG C	DC	[x]

DC

EA

DC

SAMPLE BOTTLE ID NUMBERS

2866

2869

2872 2873

2875

2878

NOTES (LOCATION SKETCH)

* THESE ARE DATACHEM METHODS. EA METHODS: VOC LM17, LM26
B/NA LM20

PP METALS (PRIORITY POLLUTANT): AG, AS, BE, CD, CR, CU, PB, HG, NI, SB, SE, TL, ZN.
JS12, B9, JD21, JD20, Y9.

TCLP METALS: CD, CR, HG, PB.
JS12, 40 CFR 261.24

DC: 2 bottles
EA: 2 bottles

SIGNATURE: VRM/MR

RECEIVED BY: Nancy E. Rokra

ABB ENVIRONMENTAL SERVICES, INC

PAGE 18 OF

FIELD DATA RECORD – SEDIMENT

FIELD SAMPLING NUMBER: FP1491000

PROJECT: USATHAMA-BAAP

SITE ID: PBS-91-49

LOCATION ACTIVITY: START: 1000 END: 1005

SITE TYPE: BUGR

JOB NUMBER: 6853-04

PROGRAM: C

SAMPLING DATE: 9.24.91

FILE NAME: CSO

WEATHER: rain, 50s

SEDIMENT DATA

DEPTH OF SEDIMENT SAMPLE: 1-4 IN

TYPE OF SAMPLE COLLECTED: [x] DISCRETE [ ] COMPOSITE

TYPE OF SEDIMENT:
- [x] CLAY
- [x] SAND
- [x] ORGANIC
- [x] SILT
- [ ] GRAVEL
- [ ] OTHER

EQUIPMENT USED FOR COLLECTION:
- [x] GRAVITY CORER
- [x] TULIP BULB PLANTER
- [x] S.S. HAND SPOON
- [x] ALUMINUM PAN
- [ ] PLASTIC SCOOP
- [ ] OTHER

DECONTAMINATION FLUIDS USED:
- [x] POTABLE WATER
- [ ] POTABLE WATER WITH HIGH PRESSURE
- [ ] OTHER

SAMPLE OBSERVATIONS: [ ] ODOR [ ] COLORED

AMBIENT AIR: — PPM

SAMPLE LOCATION: — PPM

pH: — UNITS

ANALYTICAL PARAMETERS

	METHOD NUMBER	PRESERVATION METHOD	VOLUME REQUIRED	SAMPLE COLLECTED	SAMPLE BOTTLE ID NUMBERS
[x] PP METALS (SPECIFIED BELOW)		4 DEG C		[x]	231
[ ] AL	JS12	4 DEG C		[ ]	
[ ] CA		4 DEG C		[ ]	
[ ] NA		4 DEG C		[ ]	
[ ] CD		4 DEG C		[ ]	
[ ] CR		4 DEG C		[ ]	
[ ] HG	Y9	4 DEG C		[ ]	
[ ] PB	JD21	4 DEG C		[ ]	
[x] TCLP METALS (SPECIFIED BELOW)		4 DEG C		[x]	232
[ ] NIT	KF17	4 DEG C		[ ]	
[ ] SO4	KT07	4 DEG C		[ ]	
[ ] NH3N2	USEPA 350.2	4 DEG C		[ ]	
[ ] TOC	USEPA CE-81-1	4 DEG C		[ ]	
[ ] pH	SW846 METHOD 9045	4 DEG C		[ ]	
[x] * VOC	LM23	4 DEG C	DC	[x]	235 236
[ ] * BN/A	LM25	4 DEG C		[ ]	
[ ] NG	LW27	4 DEG C		[ ]	
[ ] NAM	LN08	4 DEG C		[ ]	
[x] DNT	LW23	4 DEG C		[x]	237

NOTES (LOCATION SKETCH)

* THESE ARE DATACHEM METHODS. EA METHODS: VOC LM17, LM26
B/NA LM20

PP METALS (PRIORITY POLLUTANT): AG, AS, BE, CD, CR, CU, PB, HG, NI, SB, SE, TL, ZN.
JS12, B9, JD21, JD20, Y9.

TCLP METALS: CD, CR, HG, PB.
JS12, 40 CFR 261.24

DC: 4 bottles

SIGNATURE: VM/MR

RECEIVED BY: Nancy E. Forbes

ABB ENVIRONMENTAL SERVICES, INC

FIELD DATA RECORD – SEDIMENT

FIELD SAMPLING NUMBER: P91118G3

PROJECT: USATHAMA-BAAP

SITE ID: PBS-91-118

SITE TYPE: BUGR

JOB NUMBER: 6853-04

PROGRAM: C

SAMPLING DATE: 10 3 91

FILE NAME: CSO

WEATHER: Sunny, °50's breezy

LOCATION ACTIVITY: START: 0800 END: 0810

SEDIMENT DATA

DEPTH OF SEDIMENT SAMPLE: 3-3.5'

TYPE OF SAMPLE COLLECTED: [x] DISCRETE [ ] COMPOSITE

TYPE OF SEDIMENT: [x] CLAY little; [x] SAND; [ ] ORGANIC; [x] SILT little; [ ] GRAVEL; [ ] OTHER

EQUIPMENT USED FOR COLLECTION: [ ] GRAVITY CORER; [x] TULIP BULB PLANTER; [x] S.S. HAND SPOON; [x] ALUMINUM PAN; [x] PLASTIC SCOOP; [x] OTHER hand auger

DECONTAMINATION FLUIDS USED: [x] POTABLE WATER; [ ] POTABLE WATER WITH HIGH PRESSURE; [ ] OTHER

SAMPLE OBSERVATIONS: [ ] ODOR; [x] COLORED light brown to brown trace orange

AMBIENT AIR: — PPM

SAMPLE LOCATION: — PPM

pH: — UNITS

ANALYTICAL PARAMETERS

	METHOD NUMBER	PRESERVATION METHOD	VOLUME REQUIRED	SAMPLE COLLECTED
[x] PP METALS (SPECIFIED BELOW)		4 DEG C		DC
[ ] AL	JS12	4 DEG C		
[ ] CA		4 DEG C		
[ ] NA		4 DEG C		
[ ] CD		4 DEG C		
[ ] CR		4 DEG C		
[ ] HG	Y9	4 DEG C		
[ ] PB	JD21	4 DEG C		
[x] TCLP METALS (SPECIFIED BELOW)		4 DEG C		
[ ] NIT	KF17	4 DEG C		
[ ] SO4	KT07	4 DEG C		
[ ] NH3N2	USEPA 350.2	4 DEG C		
[ ] TOC	USEPA CE-81-1	4 DEG C		
[ ] pH	SW846 METHOD 9045	4 DEG C		
*[x] VOC	LM23	4 DEG C		EA
*[x] BN/A	LM25	4 DEG C		
[ ] NG	LW27	4 DEG C		DC
[ ] NAM	LN08	4 DEG C		
[x] DNT	LW23	4 DEG C		

SAMPLE BOTTLE ID NUMBERS: 493, 496, 499, 500, 547, 502

NOTES (LOCATION SKETCH)

* THESE ARE DATACHEM METHODS. EA METHODS: VOC LM17, LM26; B/NA LM20

PP METALS (PRIORITY POLLUTANT): AG, AS, BE, CD, CR, CU, PB, HG, NI, SB, SE, TL, ZN. JS12, B9, JD21, JD20, Y9.

TCLP METALS: CD, CR, HG, PB. JS12, 40 CFR 261.24

* No TIP available for the day

DC: 2 bottles
EA: 2 bottles

SIGNATURE: NR/VM

RECEIVED BY: Nancy E. Roka

ABB ENVIRONMENTAL SERVICES, INC

FIELD DATA RECORD – SEDIMENT

FIELD SAMPLING NUMBER: R9101000

PROJECT: USATHAMA-BAAP

SITE ID: RFS-91-01

LOCATION ACTIVITY: START: 1240 END: 1250

SITE TYPE: POND

JOB NUMBER: 6853-04

PROGRAM: C

SAMPLING DATE: 9.20.91

FILE NAME: CSO

WEATHER: Sunny, 60's

SEDIMENT DATA

DEPTH OF SEDIMENT SAMPLE: 0-3 IN

TYPE OF SAMPLE COLLECTED: [x] DISCRETE [ ] COMPOSITE

TYPE OF SEDIMENT: [x] CLAY [ ] SAND [x] ORGANIC [x] SILT [ ] GRAVEL [ ] OTHER

EQUIPMENT USED FOR COLLECTION: [ ] GRAVITY CORER [ ] TULIP BULB PLANTER [x] S.S. HAND SPOON [x] ALUMINUM PAN [ ] PLASTIC SCOOP [ ] OTHER

DECONTAMINATION FLUIDS USED: [x] POTABLE WATER [ ] POTABLE WATER WITH HIGH PRESSURE [ ] OTHER

SAMPLE OBSERVATIONS: [ ] ODOR [x] COLORED Black

AMBIENT AIR: ——— PPM

SAMPLE LOCATION: ——— PPM

pH: NA UNITS

ANALYTICAL PARAMETERS

	METHOD NUMBER	PRESERVATION METHOD	VOLUME REQUIRED	SAMPLE COLLECTED
[ ] PP METALS (SPECIFIED BELOW)		4 DEG C		
[x] AL	JS12	4 DEG C		[x]
[x] CA		4 DEG C		[x]
[x] NA		4 DEG C		[x]
[x] CD		4 DEG C		[x]
[x] CR		4 DEG C		[x]
[x] HG	Y9	4 DEG C		[x]
[x] PB	JD21	4 DEG C		[x]
[ ] TCLP METALS (SPECIFIED BELOW)		4 DEG C		
[x] NIT	KF17	4 DEG C		[x]
[x] SO4	KT07	4 DEG C		[x]
[x] NH3N2	USEPA 350.2	4 DEG C		[x]
[x] TOC	USEPA CE-81-1	4 DEG C		[x]
[x] pH	SW846 METHOD 9045	4 DEG C		[x]
[x] * VOC	LM23	4 DEG C		[x] DC
[x] * BN/A	LM25	4 DEG C		[x] DC
[x] NG	LW27	4 DEG C		[x] DC
[x] NAM	LN08	4 DEG C		[x] DC
[x] DNT	LW23	4 DEG C		[x] DC

SAMPLE BOTTLE ID NUMBERS: 1381, 1382, 1383, 1384, 1385, 1386

NOTES

* THESE ARE DATACHEM METHODS. EA METHODS: VOC LM17, LM26; B/NA LM20

PP METALS (PRIORITY POLLUTANT): AG, AS, BE, CD, CR, CU, PB, HG, NI, SB, SE, TL, ZN. JS12, B9, JD21, JD20, Y9.

TCLP METALS: CD, CR, HG, PB. JS12, 40 CFR 261.24

(LOCATION SKETCH)

DC: 4 bottles

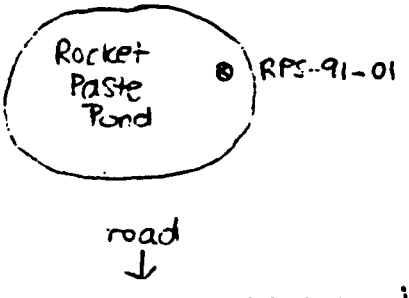

SIGNATURE: VM/MR

RECEIVED BY: Nancy E. Forba

14

BB ENVIRONMENTAL SERVICES, INC

PAGE ~~13~~ (NP) OF 20

FIELD DATA RECORD – SEDIMENT

FIELD SAMPLING NUMBER: R91020009

PROJECT: USATHAMA-BAAP

SITE ID: RPS-91-02

SITE TYPE: POND

JOB NUMBER: 6853-04

PROGRAM: C

SAMPLING DATE: 9/a/91

FILE NAME: CSO

WEATHER: Sunny, 60s

LOCATION ACTIVITY: START: 1250 END: 1300

SEDIMENT DATA

DEPTH OF SEDIMENT SAMPLE: 0 - 3 IN

TYPE OF SAMPLE COLLECTED: [x] DISCRETE [ ] COMPOSITE

TYPE OF SEDIMENT:
- [x] CLAY
- [ ] SAND
- [x] ORGANIC
- [x] SILT
- [ ] GRAVEL
- [ ] OTHER

EQUIPMENT USED FOR COLLECTION:
- [ ] GRAVITY CORER
- [ ] TULIP BULB PLANTER
- [x] S.S. HAND SPOON
- [x] ALUMINUM PAN
- [ ] PLASTIC SCOOP
- [ ] OTHER

DECONTAMINATION FLUIDS USED:
- [x] POTABLE WATER
- [ ] POTABLE WATER WITH HIGH PRESSURE
- [ ] OTHER

SAMPLE OBSERVATIONS: [ ] ODOR [x] COLORED black

AMBIENT AIR: — PPM

SAMPLE LOCATION: — PPM

pH: — UNITS

ANALYTICAL PARAMETERS

	METHOD NUMBER	PRESERVATION METHOD	VOLUME REQUIRED	SAMPLE COLLECTED
[ ] PP METALS (SPECIFIED BELOW)		4 DEG C		
[ ] AL	JS12	4 DEG C		
[ ] CA		4 DEG C		
[ ] NA		4 DEG C		
[x] CD		4 DEG C		
[x] CR		4 DEG C		
[x] HG	Y9	4 DEG C		
[x] PB	JD21	4 DEG C		
[ ] TCLP METALS (SPECIFIED BELOW)		4 DEG C		
[ ] NIT	KF17	4 DEG C		
[ ] SO4	KT07	4 DEG C		
[ ] NH3N2	USEPA 350.2	4 DEG C		
[ ] TOC	USEPA CE-81-1	4 DEG C		
[ ] pH	SW846 METHOD 9045	4 DEG C		
[x] VOC	LM23	4 DEG C	DC	
[x] BN/A	LM25	4 DEG C		
[x] AG	LW27	4 DEG C		
[x] NAM	LM08	4 DEG C		
[x] DNT	LW23	4 DEG C		

SAMPLE BOTTLE ID NUMBERS: 1399, 1400, 1401, 1402, 1403, 1404

NOTES

LOCATION SKETCH)

* THESE ARE DATACHEM METHODS. EA METHODS: VOC LM17, LM26
B/NA LM20

PP METALS (PRIORITY POLLUTANT): AG, AS, BE, CD, CR, CU, PB, HG, NI, SB, SE, TL, ZN.
JS12, B9, JD21, JD20, Y9.

TCLP METALS: CD, CR, HG, PB.
JS12, 40 CFR 261.24

DC: 4 bottles

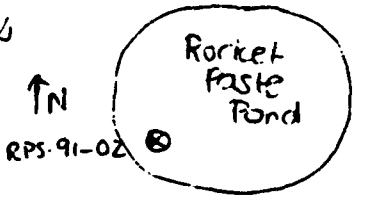

SIGNATURE: VNJ/MC

RECEIVED BY: Nancy E. Rotta

ABB ENVIRONMENTAL SERVICES, INC

PAGE 1 OF 1

FIELD DATA RECORD – SEDIMENT

FIELD SAMPLING NUMBER: R91030000

PROJECT: USATHAMA-BAAP

SITE ID: RPS-91-03

SITE TYPE: DTCH

JOB NUMBER: 6853-04

PROGRAM: C

SAMPLING DATE: 9-17-91

FILE NAME: CSO

WEATHER: Sunny ~ 70°

LOCATION ACTIVITY: START: 1030 END: 1040

SEDIMENT DATA

DEPTH OF SEDIMENT SAMPLE: 0-3 IN

TYPE OF SAMPLE COLLECTED: [x] DISCRETE [ ] COMPOSITE

TYPE OF SEDIMENT:
- [ ] CLAY
- [x] SAND
- [x] ORGANIC (Trace)
- [ ] SILT
- [ ] GRAVEL
- [ ] OTHER

EQUIPMENT USED FOR COLLECTION:
- [ ] GRAVITY CORER
- [x] TULIP BULB PLANTER
- [ ] S.S. HAND SPOON
- [x] ALUMINUM PAN
- [ ] PLASTIC SCOOP
- [ ] OTHER

DECONTAMINATION FLUIDS USED:
- [x] POTABLE WATER
- [ ] POTABLE WATER WITH HIGH PRESSURE
- [ ] OTHER

SAMPLE OBSERVATIONS: [ ] ODOR [x] COLORED Med. Brown

AMBIENT AIR: —— PPM

SAMPLE LOCATION: —— PPM

pH: NA UNITS

ANALYTICAL PARAMETERS

	METHOD NUMBER	PRESERVATION METHOD	VOLUME REQUIRED	SAMPLE COLLECTED	label SAMPLE BOTTLE ID NUMBERS
[ ] PP METALS (SPECIFIED BELOW)		4 DEG C		[ ]	
[ ] AL	JS12	4 DEG C		[ ]	
[ ] CA	|	4 DEG C		[ ]	
[ ] NA	|	4 DEG C		[ ]	
[x] CD	|	4 DEG C		[x]	DC 1417
[x] CR	|	4 DEG C		[x]	DC 1417
[x] HG	Y9	4 DEG C		[x]	DC 1417
[x] PB	JD21	4 DEG C		[x]	DC 1417
[ ] TCLP METALS (SPECIFIED BELOW)		4 DEG C		[ ]	
[x] NIT	KF17	4 DEG C		[x]	1418
[x] SO4	KT07	4 DEG C		[x]	1418
[ ] NH3N2	USEPA 350.2	4 DEG C		[ ]	
[ ] TOC	USEPA CE-81-1	4 DEG C		[ ]	
[ ] pH	SW846 METHOD 9045	4 DEG C		[ ]	
[ ] * VOC	LM23	4 DEG C		[ ]	
[ ] * BN/A	LM25	4 DEG C		[ ]	
[x] NG	LW27	4 DEG C		[x]	DC 1419 1425
[x] NAM	LN08	4 DEG C		[x]	DC 1420
[x] DNT	LW23	4 DEG C		[x]	DC 1421
					EA 1422

NOTES (LOCATION SKETCH)

* THESE ARE DATACHEM METHODS. EA METHODS: VOC LM17, LM26; B/NA LM20

PP METALS (PRIORITY POLLUTANT): AG, AS, BE, CD, CR, CU, PB, HG, NI, SB, SE, TL, ZN. JS12, 89, JD21, JD20, Y9.

TCLP METALS: CD, CR, HG, PB. JS12, 40 CFR 261.24

DC (MS) EA: 3 bottles

EA: 1 bottle

SIGNATURE: VM/NR

RECEIVED BY: Nancy E. Rokea

BB ENVIRONMENTAL SERVICES, INC

FIELD DATA RECORD - SEDIMENT

FIELD SAMPLING NUMBER: R91040000

PROJECT: USATHAMA-BAAP
SITE ID: RPS-91-04
LOCATION ACTIVITY: START: 1100 END: 1115
SITE TYPE: DTCH
JOB NUMBER: 6853-04
PROGRAM: C
SAMPLING DATE: 9-17-91
FILE NAME: CSO
WEATHER: Sunny ~70°

SEDIMENT DATA

DEPTH OF SEDIMENT SAMPLE: 0-3 IN

TYPE OF SAMPLE COLLECTED: [x] DISCRETE [ ] COMPOSITE

TYPE OF SEDIMENT:
- [ ] CLAY
- [x] SAND
- [x] ORGANIC
- [ ] SILT
- [ ] GRAVEL
- [ ] OTHER

EQUIPMENT USED FOR COLLECTION:
- [ ] GRAVITY CORER
- [x] TULIP BULB PLANTER
- [ ] S.S. HAND SPOON
- [x] ALUMINUM PAN
- [ ] PLASTIC SCOOP
- [ ] OTHER

DECONTAMINATION FLUIDS USED:
- [x] POTABLE WATER
- [ ] POTABLE WATER WITH HIGH PRESSURE
- [ ] OTHER

SAMPLE OBSERVATIONS: [ ] ODOR [x] COLORED DK. brown

AMBIENT AIR: — PPM

SAMPLE LOCATION: — PPM

pH: NA UNITS

ANALYTICAL PARAMETERS

	METHOD NUMBER	PRESERVATION METHOD	VOLUME REQUIRED	SAMPLE COLLECTED	label SAMPLE BOTTLE ID NUMBERS
[ ] PP METALS (SPECIFIED BELOW)		4 DEG C			
[ ] AL	JS12	4 DEG C			
[ ] CA		4 DEG C			
[ ] NA		4 DEG C			
[x] CD		4 DEG C		DC	1435
[x] CR		4 DEG C		DC	1435
[x] HG	Y9	4 DEG C		DC	1435
[x] PB	JD21	4 DEG C		DC	1435
[ ] TCLP METALS (SPECIFIED BELOW)		4 DEG C			
[ ] NIT	KF17	4 DEG C			1436
[ ] SO4	KT07	4 DEG C			1436
[ ] NH3N2	USEPA 350.2	4 DEG C			(NR) ~~1436~~
[ ] TOC	USEPA CE-81-1	4 DEG C			
[ ] pH	SW846 METHOD 9045	4 DEG C			
[ ] VOC	LM23	4 DEG C		DC	
[x] BN/A	LM25	4 DEG C		DC	1437
[x] HG	LW27	4 DEG C		DC	1438
[x] NAM	LN08	4 DEG C		DC	1439
[x] DNT	LW23	4 DEG C		EA	1440

NOTES
LOCATION SKETCH)

* THESE ARE DATACHEM METHODS. EA METHODS: VOC LM17, LM26

PP METALS (PRIORITY POLLUTANT): AG, AS, BE, CD, CR, CU, PB, HG, NI, SB, SE, TL, ZN.
JS12, B9, JD21, JD20, Y9.

TCLP METALS: CD, CR, HG, PB.
JS12, 40 CFR 261.24

DC (NR) EA: 3 bottles
EA ~~DC~~ (NR): 1 bottle

SIGNATURE: VM/NR

RECEIVED BY: Nancy E. Roka

ABB ENVIRONMENTAL SERVICES, INC

PAGE 3 OF 14

FIELD DATA RECORD - SEDIMENT

FIELD SAMPLING NUMBER: R910500 00

PROJECT: USATHAMA-BAAP

SITE ID: RPS-91-05

SITE TYPE: DTCH

JOB NUMBER: 6853-04

PROGRAM: C

LOCATION ACTIVITY: START: 1135 END: 1140

SAMPLING DATE: 9.17.91

FILE NAME: CSO

WEATHER: Sunny, °60's

SEDIMENT DATA

DEPTH OF SEDIMENT SAMPLE: 0-5 IN

TYPE OF SAMPLE COLLECTED: [x] DISCRETE [ ] COMPOSITE

TYPE OF SEDIMENT: [ ] CLAY [x] SAND [x] ORGANIC [x] SILT [ ] GRAVEL [ ] OTHER

EQUIPMENT USED FOR COLLECTION: [ ] GRAVITY CORER [x] TULIP BULB PLANTER [x] S.S. HAND SPOON [x] ALUMINUM PAN [ ] PLASTIC SCOOP [ ] OTHER

DECONTAMINATION FLUIDS USED: [x] POTABLE WATER [ ] POTABLE WATER WITH HIGH PRESSURE [ ] OTHER

SAMPLE OBSERVATIONS: [ ] ODOR [x] COLORED

AMBIENT AIR: — PPM

SAMPLE LOCATION: — PPM

pH: — UNITS

ANALYTICAL PARAMETERS

	METHOD NUMBER	PRESERVATION METHOD	VOLUME REQUIRED	SAMPLE COLLECTED	label SAMPLE ~~BOTTLE~~ ID NUMBERS
[ ] PP METALS (SPECIFIED BELOW)		4 DEG C			
[x] AL	JS12	4 DEG C			
[x] CA		4 DEG C			
[x] NA		4 DEG C			
[x] CD		4 DEG C		[x]	1453
[x] CR		4 DEG C		[x]	1453
[x] HG	Y9	4 DEG C		[x]	1453
[x] PB	JD21	4 DEG C		[x]	1453
[x] TCLP METALS (SPECIFIED BELOW)		4 DEG C			
[x] NIT	KF17	4 DEG C		[x]	1454
[x] SO4	KT07	4 DEG C		[x]	1454
[ ] NH3N2	USEPA 350.2	4 DEG C			
[ ] TOC	USEPA CE-81-1	4 DEG C			
[ ] pH	SW846 METHOD 9045	4 DEG C			
* [x] VOC	LM23	4 DEG C		DC	
* [x] BN/A	LM25	4 DEG C		[x]	1455
[x] NG	LW27	4 DEG C		[x]	1456
[x] NAM	LN08	4 DEG C		EA [x]	1457
[x] DNT	LW23	4 DEG C		[x]	1458

NOTES (LOCATION SKETCH)

* THESE ARE DATACHEM METHODS. EA METHODS: VOC LM17, LM26

PP METALS (PRIORITY POLLUTANT): AG, AS, BE, CD, CR, CU, PB, HG, NI, SB, SE, TL, ZN. JS12, B9, JD21, JD20, Y9.

TCLP METALS: CD, CR, HG, PB. JS12, 40 CFR 261.24

DC: 3 bottles

EA: 1 bottle

SIGNATURE: VM/NR

RECEIVED BY: Nancy E. Rotka

BB ENVIRONMENTAL SERVICES, INC

FIELD DATA RECORD – SEDIMENT

FIELD SAMPLING NUMBER: R91060000

PROJECT: USATHAMA-BAAP
SITE ID: RPS-91-06
LOCATION ACTIVITY: START: 1150 END: 1200
SITE TYPE: DTCH
JOB NUMBER: 6853-04
PROGRAM: C
SAMPLING DATE: 9.17.91
FILE NAME: CSO
WEATHER: Sunny, 60's

SEDIMENT DATA

DEPTH OF SEDIMENT SAMPLE: 0-4 IN

TYPE OF SAMPLE COLLECTED: [x] DISCRETE [ ] COMPOSITE

TYPE OF SEDIMENT:
- [x] CLAY trace
- [x] SAND
- [x] ORGANIC
- [ ] SILT
- [ ] GRAVEL
- [ ] OTHER

EQUIPMENT USED FOR COLLECTION:
- [ ] GRAVITY CORER
- [x] TULIP BULB PLANTER
- [x] S.S. HAND SPOON
- [x] ALUMINUM PAN
- [ ] PLASTIC SCOOP
- [ ] OTHER

DECONTAMINATION FLUIDS USED
- [x] POTABLE WATER
- [ ] POTABLE WATER WITH HIGH PRESSURE
- [ ] OTHER

SAMPLE OBSERVATIONS: [ ] ODOR [ ] COLORED

AMBIENT AIR: — PPM

SAMPLE LOCATION: — PPM

pH: — UNITS

ANALYTICAL PARAMETERS

	METHOD NUMBER	PRESERVATION METHOD	VOLUME REQUIRED	SAMPLE COLLECTED	label SAMPLE ~~BOTTLE~~ ID NUMBERS
[ ] PP METALS (SPECIFIED BELOW)		4 DEG C			
[x] AL	JS12	4 DEG C			
[x] CA		4 DEG C			
[x] MA		4 DEG C			
[x] CD		4 DEG C		DC	1471
[x] CR		4 DEG C		DC	1471
[x] HG	Y9	4 DEG C		DC	1471
[x] PB	JD21	4 DEG C		DC	1471
[ ] TCLP METALS (SPECIFIED BELOW)		4 DEG C			
[x] NIT	KF17	4 DEG C		DC	1472
[x] SO4	KT07	4 DEG C		DC	1472
[ ] NH3N2	USEPA 350.2	4 DEG C			
[ ] TOC	USEPA CE-81-1	4 DEG C			
[ ] pH	SW846 METHOD 9045	4 DEG C			
[x] *VOC	LM23	4 DEG C		EA	1473
[x] *BN/A	LM25	4 DEG C		EA	1474
[x] HG	LW27	4 DEG C		EA	1475
[x] AM	LN08	4 DEG C		EA	1476
[x] DNT	LW23	4 DEG C			

NOTES (LOCATION SKETCH)

* THESE ARE DATACHEM METHODS. EA METHODS: VOC LM17, LM26

PP METALS (PRIORITY POLLUTANT): AG, AS, BE, CD, CR, CU, PB, HG, NI, SB, SE, TL, ZN. JS12, B9, JD21, JD20, Y9.

TCLP METALS: CD, CR, HG, PB. JS12, 40 CFR 261.24

DC: 3 bottles
EA: 1 bottle

SIGNATURE: VM/NR

RECEIVED BY: Nancy E. Roska

ABB ENVIRONMENTAL SERVICES, INC

PAGE 5 OF 1

FIELD DATA RECORD – SEDIMENT

FIELD SAMPLING NUMBER: R91070000

PROJECT: USATHAMA-BAAP

SITE ID: RPS-91-07

SITE TYPE: DTCH

JOB NUMBER: 6853-04

PROGRAM: C

SAMPLING DATE: 9.17.91

FILE NAME: CSO

WEATHER: Sunny, 80's

LOCATION ACTIVITY: START: 1215 END: 1220

SEDIMENT DATA

DEPTH OF SEDIMENT SAMPLE: 0-4 IN

TYPE OF SAMPLE COLLECTED: [x] DISCRETE [ ] COMPOSITE

TYPE OF SEDIMENT:
- [x] CLAY
- [x] SAND
- [ ] ORGANIC
- [x] SILT trace
- [ ] GRAVEL
- [ ] OTHER

EQUIPMENT USED FOR COLLECTION:
- [x] GRAVITY CORER
- [x] TULIP BULB PLANTER
- [ ] S.S. HAND SPOON
- [x] ALUMINUM PAN
- [ ] PLASTIC SCOOP
- [ ] OTHER

DECONTAMINATION FLUIDS USED
- [x] POTABLE WATER
- [ ] POTABLE WATER WITH HIGH PRESSURE
- [ ] OTHER

SAMPLE OBSERVATIONS: [ ] ODOR [x] COLORED med. brown

AMBIENT AIR: — PPM

SAMPLE LOCATION: — PPM

pH: — UNITS

ANALYTICAL PARAMETERS

	METHOD NUMBER	PRESERVATION METHOD	VOLUME REQUIRED	SAMPLE COLLECTED	label SAMPLE ~~BOTTLE~~ ID NUMBERS
[ ] PP METALS (SPECIFIED BELOW)		4 DEG C			
[ ] AL	JS12	4 DEG C			
[ ] CA		4 DEG C			
[ ] AR		4 DEG C			
[x] CD		4 DEG C			1489
[x] CR		4 DEG C			1493
[x] HG	Y9	4 DEG C			1492
[x] PB	JD21	4 DEG C			1498
[ ] TCLP METALS (SPECIFIED BELOW)		4 DEG C			
[x] NIT	KF17	4 DEG C			1490
[x] SO4	KT07	4 DEG C			1496
[ ] NH3N2	USEPA 350.2	4 DEG C			
[ ] TOC	USEPA CE-81-1	4 DEG C			
[ ] pH	SW846 METHOD 9045	4 DEG C			
* [ ] VOC	LM23	4 DEG C		DC	
** [x] BN/A	LM25	4 DEG C			1491
[x] NG	LW27	4 DEG C			1492
[x] NAM	LN08	4 DEG C			1493
[x] DNT	LW23	4 DEG C		EA	1494

NOTES (LOCATION SKETCH)

* THESE ARE DATACHEM METHODS. EA METHODS: VOC LM17, LM25

PP METALS (PRIORITY POLLUTANT): AG, AS, BE, CD, CR, CU, PB, HG, NI, SB, SE, TL, ZN. JS12, B9, JD21, JD20, Y9.

TCLP METALS: CD, CR, HG, PB. JS12, 40 CFR 261.24

DC: 3 bottles
EA: 1 bottle

SIGNATURE: VM/NR

RECEIVED BY: Nancy E. Roña

BB ENVIRONMENTAL SERVICES, INC

FIELD DATA RECORD - SEDIMENT

FIELD SAMPLING NUMBER: R9108000

PROJECT: USATHAMA-BAAP

SITE ID: RPS-91-08

LOCATION ACTIVITY: START: 1230 END: 1240

SITE TYPE: DTCH

JOB NUMBER: 6853-04

PROGRAM: C

SAMPLING DATE: 9.17.91

FILE NAME: CSO

WEATHER: Sunny, °60's

SEDIMENT DATA

DEPTH OF SEDIMENT SAMPLE: 0-5 IN

TYPE OF SAMPLE COLLECTED: [x] DISCRETE [ ] COMPOSITE

TYPE OF SEDIMENT:
- [ ] CLAY
- [x] SAND
- [x] ORGANIC some
- [x] SILT
- [ ] GRAVEL
- [ ] OTHER

EQUIPMENT USED FOR COLLECTION:
- [ ] GRAVITY CORER
- [x] TULIP BULB PLANTER
- [x] S.S. HAND SPOON
- [x] ALUMINUM PAN
- [ ] PLASTIC SCOOP
- [ ] OTHER

DECONTAMINATION FLUIDS USED:
- [x] POTABLE WATER
- [ ] POTABLE WATER WITH HIGH PRESSURE
- [ ] OTHER

SAMPLE OBSERVATIONS: [ ] ODOR [x] COLORED dark brown

AMBIENT AIR: — PPM

SAMPLE LOCATION: — PPM

pH: — UNITS

ANALYTICAL PARAMETERS

	METHOD NUMBER	PRESERVATION METHOD	VOLUME REQUIRED	SAMPLE COLLECTED	label SAMPLE ~~BOTTLE~~ ID NUMBERS
[ ] PP METALS (SPECIFIED BELOW)		4 DEG C			
[x] AL	JS12	4 DEG C			
[x] CA		4 DEG C			
[x] NA		4 DEG C			
[x] CD		4 DEG C			1507
[x] CR		4 DEG C			1507
[x] HG	Y9	4 DEG C			1507
[x] PB	JD21	4 DEG C			1507
[ ] TCLP METALS (SPECIFIED BELOW)		4 DEG C			
[ ] MIT	KF17	4 DEG C			1508
[ ] SO4	KT07	4 DEG C		DC	1508
[ ] NH3N2	USEPA 350.2	4 DEG C			
[ ] TOC	USEPA CE-81-1	4 DEG C			
[ ] PH	SW846 METHOD 9045	4 DEG C			
[x] VOC	LM23	4 DEG C			1509
[x] BN/A	LM25	4 DEG C			1510
[x] NG	LW27	4 DEG C			1511
[x] NAM	LN08	4 DEG C		EA	1512
[x] DNT	LW23	4 DEG C			

NOTES
LOCATION SKETCH)

* THESE ARE DATACHEM METHODS. EA METHODS: VOC LM17, LM26

PP METALS (PRIORITY POLLUTANT): AG, AS, BE, CD, CR, CU, PB, HG, NI, SB, SE, TL, ZN.
JS12, B9, JD21, JD20, Y9.

TCLP METALS: CD, CR, HG, PB.
JS12, 40 CFR 261.24

DC: 3 bottles
EA: 1 bottle

SIGNATURE: VM/MR

RECEIVED BY: Nancy E. Roka

ABB ENVIRONMENTAL SERVICES, INC

FIELD DATA RECORD – SEDIMENT

FIELD SAMPLING NUMBER: R9109000

PROJECT: USATHAMA-BAAP

SITE ID: RPS-91-09

SITE TYPE: DTCH

JOB NUMBER: 6853-04

PROGRAM: C

SAMPLING DATE: 9.17.91

FILE NAME: CSO

WEATHER: Sunny, 60's

LOCATION ACTIVITY: START: 1245 END: 1250

SEDIMENT DATA

DEPTH OF SEDIMENT SAMPLE: 0-5 IN

TYPE OF SAMPLE COLLECTED: [X] DISCRETE [ ] COMPOSITE

TYPE OF SEDIMENT:
- [ ] CLAY
- [X] SAND
- [X] ORGANIC
- [X] SILT
- [ ] GRAVEL
- [ ] OTHER

EQUIPMENT USED FOR COLLECTION:
- [X] GRAVITY CORER
- [X] TULIP BULB PLANTER
- [ ] S.S. HAND SPOON
- [X] ALUMINUM PAN
- [ ] PLASTIC SCOOP
- [ ] OTHER

DECONTAMINATION FLUIDS USED:
- [X] POTABLE WATER
- [ ] POTABLE WATER WITH HIGH PRESSURE
- [ ] OTHER

SAMPLE OBSERVATIONS: [ ] ODOR [X] COLORED med/dk. brown

AMBIENT AIR: — PPM

SAMPLE LOCATION: — PPM

pH: — UNITS

ANALYTICAL PARAMETERS

	METHOD NUMBER	PRESERVATION METHOD	VOLUME REQUIRED	SAMPLE COLLECTED
[ ] PP METALS (SPECIFIED BELOW)		4 DEG C		
[ ] AL	JS12	4 DEG C		
[ ] CA		4 DEG C		
[ ] NA		4 DEG C		
[X] CD		4 DEG C		
[X] CR		4 DEG C		
[X] HG	Y9	4 DEG C		
[X] PB	JD21	4 DEG C		
[ ] TCLP METALS (SPECIFIED BELOW)		4 DEG C		
[X] NIT	KF17	4 DEG C		
[X] SO4	KT07	4 DEG C		
[ ] NH3N2	USEPA 350.2	4 DEG C		
[ ] TOC	USEPA CE-81-1	4 DEG C		
[ ] pH	SW846 METHOD 9045	4 DEG C		
* [ ] VOC	LM23	4 DEG C		
* [X] BN/A	LM25	4 DEG C		
[X] HG	LW27	4 DEG C		
[X] NAM	LN08	4 DEG C		
[X] DNT	LW23	4 DEG C		

DC

EA

label SAMPLE ~~BOTTLE~~ ID NUMBERS

1525
1523
1525
1525
1526
1526
1527
1528
1529
1530

NOTES (LOCATION SKETCH)

* THESE ARE DATACHEM METHODS. EA METHODS: VOC LM17, LM26

PP METALS (PRIORITY POLLUTANT): AG, AS, BE, CD, CR, CU, PB, HG, NI, SB, SE, TL, ZN. JS12, B9, JD21, JD20, Y9.

TCLP METALS: CD, CR, HG, PB. JS12, 40 CFR 261.24

DC: 3 bottles

EA: 1 bottle

SIGNATURE: VM/MR

RECEIVED BY: Nancy E. Rofea

ABB ENVIRONMENTAL SERVICES, INC

FIELD DATA RECORD – SEDIMENT

FIELD SAMPLING NUMBER: R91100000

PROJECT: USATHAMA-BAAP

SITE ID: RPS-91-10

SITE TYPE: DTCH

JOB NUMBER: 6853-04

PROGRAM: C

SAMPLING DATE: 9.17 91

FILE NAME: CSO

WEATHER: Sunny, °60's

LOCATION ACTIVITY START: 1255 END: 1300

SEDIMENT DATA

DEPTH OF SEDIMENT SAMPLE: 0-6 IN

TYPE OF SAMPLE COLLECTED: [x] DISCRETE [ ] COMPOSITE

TYPE OF SEDIMENT: [x] CLAY [x] SAND [x] ORGANIC [x] SILT [ ] GRAVEL [ ] OTHER

EQUIPMENT USED FOR COLLECTION: [x] GRAVITY CORER [x] TULIP BULB PLANTER [x] S.S. HAND SPOON [x] ALUMINUM PAN [ ] PLASTIC SCOOP [ ] OTHER

DECONTAMINATION FLUIDS USED: [x] POTABLE WATER [ ] POTABLE WATER WITH HIGH PRESSURE [ ] OTHER

SAMPLE OBSERVATIONS: [ ] ODOR [x] COLORED dark brown

AMBIENT AIR: — PPM

SAMPLE LOCATION: — PPM

pH: — UNITS

ANALYTICAL PARAMETERS

	METHOD NUMBER	PRESERVATION METHOD	VOLUME REQUIRED	SAMPLE COLLECTED
[ ] PP METALS (SPECIFIED BELOW)		4 DEG C		
[x] AL	JS12	4 DEG C		
[x] CA		4 DEG C		
[x] NA		4 DEG C		
[x] CD		4 DEG C		DC
[x] CR		4 DEG C		DC
[x] HG	Y9	4 DEG C		DC
[x] PB	JD21	4 DEG C		DC
[ ] TCLP METALS (SPECIFIED BELOW)		4 DEG C		
[x] NIT	KF17	4 DEG C		DC
[x] SO4	KT07	4 DEG C		DC
[ ] NH3N2	USEPA 350.2	4 DEG C		
[ ] TOC	USEPA CE-81-1	4 DEG C		
[ ] pH	SW846 METHOD 9045	4 DEG C		
[ ] * VOC	LM23	4 DEG C		EA
[ ] * BN/A	LM25	4 DEG C		EA
[x] NG	LW27	4 DEG C		EA
[x] NAM	LN08	4 DEG C		EA
[x] DNT	LW23	4 DEG C		EA

SAMPLE label ~~SOURCE~~ ID NUMBERS: 1543, 1544, 1545, 1546, 1547, 1548

NOTES (LOCATION SKETCH)

* THESE ARE DATACHEM METHODS. EA METHODS: VOC LM17, LM26; B/NA LM20

PP METALS (PRIORITY POLLUTANT): AG, AS, BE, CD, CR, CU, PB, HG, NI, SB, SE, TL, ZN. JS12, B9, JD21, JD20, Y9.

TCLP METALS: CD, CR, HG, PB. JS12, 40 CFR 261.24

DC: 3 bottles
EA: 1 bottle

SIGNATURE: VM/MK

RECEIVED BY: Nancy E. Rosa

ABB ENVIRONMENTAL SERVICES, INC

FIELD DATA RECORD – SEDIMENT

FIELD SAMPLING NUMBER: R911100 0

PROJECT: USATHAMA-BAAP

SITE ID: RPS-91-11

LOCATION ACTIVITY: START: 1310 END: 1320

SITE TYPE: DTCH

JOB NUMBER: 6853-04

PROGRAM: C

SAMPLING DATE: 9.17 91

FILE NAME: CSO

WEATHER: Sunny, 60's

SEDIMENT DATA

DEPTH OF SEDIMENT SAMPLE: 0-4 IN

TYPE OF SAMPLE COLLECTED: [x] DISCRETE [ ] COMPOSITE

TYPE OF SEDIMENT: [x] CLAY [x] SAND [x] ORGANIC [x] SILT [ ] GRAVEL [ ] OTHER

EQUIPMENT USED FOR COLLECTION: [x] GRAVITY CORER [ ] TULIP BULB PLANTER [x] S.S. HAND SPOON [x] ALUMINUM PAN [ ] PLASTIC SCOOP [ ] OTHER

DECONTAMINATION FLUIDS USED: [x] POTABLE WATER [ ] POTABLE WATER WITH HIGH PRESSURE [ ] OTHER

SAMPLE OBSERVATIONS: [ ] ODOR [x] COLORED orange + dk brown

AMBIENT AIR: — PPM

SAMPLE LOCATION: — PPM

pH: — UNITS

ANALYTICAL PARAMETERS

	METHOD NUMBER	PRESERVATION METHOD	VOLUME REQUIRED	SAMPLE COLLECTED
[x] PP METALS (SPECIFIED BELOW)		4 DEG C		
[x] AL	JS12	4 DEG C		
[x] CA		4 DEG C		
[x] NA		4 DEG C		
[x] CD		4 DEG C		
[x] CR		4 DEG C		
[x] MG	Y9	4 DEG C		
[x] PB	JD21	4 DEG C		
[x] TCLP METALS (SPECIFIED BELOW)		4 DEG C		
[x] NIT	KF17	4 DEG C		
[x] SO4	KT07	4 DEG C		
[x] NH3N2	USEPA 350.2	4 DEG C		
[x] TOC	USEPA CE-81-1	4 DEG C		
[x] pH	SW846 METHOD 9045	4 DEG C		
[x] * VOC	LM23	4 DEG C		DC
[x] * BN/A	LM25	4 DEG C		DC
[x] MG	LW27	4 DEG C		DC
[x] NAM	LN08	4 DEG C		DC
[x] DNT	LW23	4 DEG C		EA

SAMPLE ~~BOTTLE~~ (label) ID NUMBERS: 1561, 1562, 1563, 1564, 1565, 1566

NOTES (LOCATION SKETCH)

* THESE ARE DATACHEM METHODS. EA METHODS: VOC LM17, LM26
B/NA LM20

PP METALS (PRIORITY POLLUTANT): AG, AS, BE, CD, CR, CU, PB, HG, NI, SB, SE, TL, ZN. JS12, B9, JD21, JD20, Y9.

TCLP METALS: CD, CR, HG, PB. JS12, 40 CFR 261.24

DC: 3 bottles
EA: 1 bottle

SIGNATURE: NR/VM

RECEIVED BY: Nancy E. Roka

ABB ENVIRONMENTAL SERVICES, INC

FIELD DATA RECORD – SEDIMENT

FIELD SAMPLING NUMBER: R91120000

PROJECT: USATHAMA-BAAP
SITE ID: RFS-91-12
LOCATION ACTIVITY: START: 1325 END: 1335
SITE TYPE: DTCH
JOB NUMBER: 6853-04
PROGRAM: C
SAMPLING DATE: 9.17.91
FILE NAME: CSO
WEATHER: Sunny, 60's

SEDIMENT DATA

DEPTH OF SEDIMENT SAMPLE: 0-5 IN

TYPE OF SAMPLE COLLECTED: [x] DISCRETE [ ] COMPOSITE

TYPE OF SEDIMENT:
- [ ] CLAY
- [x] SAND
- [x] ORGANIC
- [ ] SILT
- [ ] GRAVEL
- [ ] OTHER

EQUIPMENT USED FOR COLLECTION:
- [x] GRAVITY CORER
- [x] TULIP BULB PLANTER
- [x] S.S. HAND SPOON
- [x] ALUMINUM PAN
- [ ] PLASTIC SCOOP
- [ ] OTHER

DECONTAMINATION FLUIDS USED:
- [x] POTABLE WATER
- [ ] POTABLE WATER WITH HIGH PRESSURE
- [ ] OTHER

SAMPLE OBSERVATIONS: [ ] ODOR [x] COLORED light to dark brown

AMBIENT AIR: — PPM

SAMPLE LOCATION: — PPM

pH: — UNITS

ANALYTICAL PARAMETERS

	METHOD NUMBER	PRESERVATION METHOD	VOLUME REQUIRED	SAMPLE COLLECTED
[ ] PP METALS (SPECIFIED BELOW)		4 DEG C		
[x] AL	JS12	4 DEG C		DC
[x] CA		4 DEG C		DC
[x] NA		4 DEG C		DC
[x] CD		4 DEG C		DC
[x] CR		4 DEG C		DC
[x] HG	Y9	4 DEG C		DC
[x] PB	JD21	4 DEG C		DC
[ ] TCLP METALS (SPECIFIED BELOW)		4 DEG C		
[x] NIT	KF17	4 DEG C		DC
[x] SO4	KT07	4 DEG C		DC
[x] NH3N2	USEPA 350.2	4 DEG C		DC
[x] TOC	USEPA CE-81-1	4 DEG C		DC
[x] pH	SW846 METHOD 9045	4 DEG C		DC
[x] VOC	LM23	4 DEG C		EA
[x] BN/A	LM25	4 DEG C		EA
[x] NG	LW27	4 DEG C		EA
[x] NAM	LN08	4 DEG C		EA
[x] DNT	LW23	4 DEG C		EA

label SAMPLE ~~DOCPLE~~ ID NUMBERS: 1579, 1580, 1581, 1582, 1583, 1584

NOTES (LOCATION SKETCH)

* THESE ARE DATACHEM METHODS. EA METHODS: VOC LM17, LM26
B/NA LM20
PP METALS (PRIORITY POLLUTANT): AG, AS, BE, CD, CR, CU, PB, HG, NI, SB, SE, TL, ZN.
JS12, B9, JD21, JD20, Y9.
TCLP METALS: CD, CR, HG, PB.
JS12, 40 CFR 261.24

DC = 3 bottles
EA = 1 bottle

SIGNATURE: VM/NR
RECEIVED BY: Nancy E. Rokra

ABB ENVIRONMENTAL SERVICES, INC

FIELD DATA RECORD – SEDIMENT

FIELD SAMPLING NUMBER: R9i13000

PROJECT: USATHAMA-BAAP

SITE TYPE: DTCH

SAMPLING DATE: 9.17.91

SITE ID: RPS-9i-13

JOB NUMBER: 6853-04

FILE NAME: CSD

LOCATION ACTIVITY START: 1340 END: 1345

PROGRAM: C

WEATHER: Sunny, 60's

SEDIMENT DATA

DEPTH OF SEDIMENT SAMPLE: 0-4 IN

TYPE OF SAMPLE COLLECTED: [x] DISCRETE [ ] COMPOSITE

TYPE OF SEDIMENT: [x] CLAY [x] SAND [x] ORGANIC [x] SILT [ ] GRAVEL [ ] OTHER

EQUIPMENT USED FOR COLLECTION: [x] GRAVITY CORER [x] TULIP BULB PLANTER [ ] S.S. HAND SPOON [x] ALUMINUM PAN [ ] PLASTIC SCOOP [ ] OTHER

DECONTAMINATION FLUIDS USED: [x] POTABLE WATER [ ] POTABLE WATER WITH HIGH PRESSURE [ ] OTHER

SAMPLE OBSERVATIONS: [ ] ODOR [x] COLORED dk. brown

AMBIENT AIR: — PPM

SAMPLE LOCATION: — PPM

pH: — UNITS

ANALYTICAL PARAMETERS

	METHOD NUMBER	PRESERVATION METHOD	VOLUME REQUIRED	SAMPLE COLLECTED
[ ] PP METALS (SPECIFIED BELOW)		4 DEG C		
[ ] AL	JS12	4 DEG C		
[ ] CA	|	4 DEG C		
[ ] NA	|	4 DEG C		
[x] CD	|	4 DEG C		
[x] CR	|	4 DEG C		
[x] HG	Y9	4 DEG C		
[x] PB	JD21	4 DEG C		
[ ] TCLP METALS (SPECIFIED BELOW)		4 DEG C		
[x] NIT	KF17	4 DEG C		
[x] SO4	KT07	4 DEG C		
[ ] NH3N2	USEPA 350.2	4 DEG C		
[ ] TOC	USEPA CE-81-1	4 DEG C		
[ ] pH	SW846 METHOD 9045	4 DEG C		
* [ ] VOC	LM23	4 DEG C		DC
* [x] BN/A	LM25	4 DEG C		DC
[x] ING	LW27	4 DEG C		DC
[x] RAM	LN08	4 DEG C		EA
[x] DNT	LW23	4 DEG C		EA
[ ]				
[ ]				

SAMPLE ~~BOTTLE~~ label ID NUMBERS

1597
1598
1599
1600
1601
1602

NOTES (LOCATION SKETCH)

* THESE ARE DATACHEM METHODS. EA METHODS: VOC LM17, LM26
B/NA LM20

PP METALS (PRIORITY POLLUTANT): AG, AS, BE, CD, CR, CU, PB, HG, NI, SB, SE, TL, ZN.
JS12, B9, JD21, JD20, Y9.

TCLP METALS: CD, CR, HG, PB.
JS12, 40 CFR 261.24

DC = 3 bottles
EA = 1 bottle

SIGNATURE: NR/vm

RECEIVED BY: Nancy E. Roka

ABB ENVIRONMENTAL SERVICES, INC

LD DATA RECORD – SEDIMENT

FIELD SAMPLING NUMBER: R91i4000

PROJECT: USATHAMA-BAAP

SITE ID: RPS-91i-14

SITE TYPE: DTCH

JOB NUMBER: 6853-04

PROGRAM: C

LOCATION ACTIVITY START: 1350 END: 1355

SAMPLING DATE: 9.17.91

FILE NAME: CSO

WEATHER: cloudy, 60's

SEDIMENT DATA

DEPTH OF SEDIMENT SAMPLE: 0-5 IN

TYPE OF SAMPLE COLLECTED: [x] DISCRETE [ ] COMPOSITE

TYPE OF SEDIMENT:
- [x] CLAY
- [x] SAND
- [x] ORGANIC
- [ ] SILT
- [ ] GRAVEL
- [ ] OTHER

EQUIPMENT USED FOR COLLECTION:
- [x] GRAVITY CORER
- [ ] TULIP BULB PLANTER
- [x] S.S. HAND SPOON
- [ ] ALUMINUM PAN
- [ ] PLASTIC SCOOP
- [ ] OTHER

DECONTAMINATION FLUIDS USED:
- [x] POTABLE WATER
- [ ] POTABLE WATER WITH HIGH PRESSURE
- [ ] OTHER

SAMPLE OBSERVATIONS: [ ] ODOR [x] COLORED light to dark brown

AMBIENT AIR: — PPM

SAMPLE LOCATION: — PPM

pH: — UNITS

ANALYTICAL PARAMETERS

	METHOD NUMBER	PRESERVATION METHOD	VOLUME REQUIRED	SAMPLE COLLECTED
[ ] PP METALS (SPECIFIED BELOW)		4 DEG C		
[ ] AL	JS12	4 DEG C		
[ ] CA		4 DEG C		
[x] NA		4 DEG C		
[x] CD		4 DEG C		
[x] CR		4 DEG C		
[x] HG	Y9	4 DEG C		
[x] PB	JD21	4 DEG C		
[ ] TCLP METALS (SPECIFIED BELOW)		4 DEG C		
[ ] NIT	KF17	4 DEG C		
[ ] O4	KT07	4 DEG C		
[ ] NH3N2	USEPA 350.2	4 DEG C		
[ ] TOC	USEPA CE-81-1	4 DEG C		
[ ] pH	SW846 METHOD 9045	4 DEG C		
[ ] VOC	LM23	4 DEG C		DC
[x] BN/A	LM25	4 DEG C		
[x] NG	LW27	4 DEG C		
[x] NAM	LN08	4 DEG C		
[x] DNT	LW23	4 DEG C		EA

label SAMPLE BOTTLE ID NUMBERS: 1615, 1616, 1617, 1618, 1619, 1620

NOTES (LOCATION SKETCH)

* THESE ARE DATACHEM METHODS. EA METHODS: VOC LM17, LM26
B/NA LM20

PP METALS (PRIORITY POLLUTANT): AG, AS, BE, CD, CR, CU, PB, HG, NI, SB, SE, TL, ZN.
JS12, B9, JD21, JD20, Y9.

TCLP METALS: CD, CR, HG, PB.
JS12, 40 CFR 261.24

DC: 3 bottles

EA: 1 bottle

SIGNATURE: VM/NR

RECEIVED BY: Nancy E. Roka

ABB ENVIRONMENTAL SERVICES, INC

FIELD DATA RECORD – SEDIMENT

FIELD SAMPLING NUMBER: R911500O

PROJECT: USATHAMA-BAAP

SITE ID: RPSL-91-15

SITE TYPE: DTCH

JOB NUMBER: 6853-04

PROGRAM: C

LOCATION ACTIVITY: START: 1400 END: 1410

SAMPLING DATE: 9.17.91

FILE NAME: CSO

WEATHER: cloudy, 60's

SEDIMENT DATA

DEPTH OF SEDIMENT SAMPLE: 0-4 IN

TYPE OF SAMPLE COLLECTED: [x] DISCRETE [ ] COMPOSITE

TYPE OF SEDIMENT:
- [ ] CLAY
- [x] SAND
- [x] ORGANIC
- [x] SILT
- [ ] GRAVEL
- [ ] OTHER

EQUIPMENT USED FOR COLLECTION:
- [ ] GRAVITY CORER
- [x] TULIP BULB PLANTER
- [x] S.S. HAND SPOON
- [ ] ALUMINUM PAN
- [ ] PLASTIC SCOOP
- [ ] OTHER

DECONTAMINATION FLUIDS USED:
- [x] POTABLE WATER
- [ ] POTABLE WATER WITH HIGH PRESSURE
- [ ] OTHER

SAMPLE OBSERVATIONS: [ ] ODOR [x] COLORED dk. brown

AMBIENT AIR: — PPM

SAMPLE LOCATION: — PPM

pH: — UNITS

ANALYTICAL PARAMETERS

	METHOD NUMBER	PRESERVATION METHOD	VOLUME REQUIRED	SAMPLE COLLECTED
[ ] PP METALS (SPECIFIED BELOW)		4 DEG C		
[ ] AL	JS12	4 DEG C		
[ ] CA		4 DEG C		
[ ] NA		4 DEG C		
[x] CD		4 DEG C		
[x] CR		4 DEG C		
[x] HG	Y9	4 DEG C		
[x] PB	JD21	4 DEG C		
[ ] TCLP METALS (SPECIFIED BELOW)		4 DEG C		
[x] NIT	KF17	4 DEG C		
[x] SO4	KT07	4 DEG C		
[ ] NH3N2	USEPA 350.2	4 DEG C		
[ ] TOC	USEPA CE-81-1	4 DEG C		
[ ] PH	SW846 METHOD 9045	4 DEG C		
* [x] VOC	LM23	4 DEG C		
* [x] BN/A	LM25	4 DEG C		
[x] NG	LW27	4 DEG C		
[x] MAM	LN08	4 DEG C		
[x] DNT	LW23	4 DEG C		

Label SAMPLE ~~BOTTLE~~ ID NUMBERS

DC: 1633, 1634

EA: 1635, 1636, 1637, 1638

NOTES (LOCATION SKETCH)

* THESE ARE DATACHEM METHODS. EA METHODS: VOC LM17, LM26
B/NA LM20

PP METALS (PRIORITY POLLUTANT): AG, AS, BE, CD, CR, CU, PB, HG, NI, SB, SE, TL, ZN.
JS12, B9, JD21, JD20, Y9.

TCLP METALS: CD, CR, HG, PB.
JS12, 40 CFR 261.24

DC = 3 bottles
EA = 1 bottles

SIGNATURE: VM/NR

RECEIVED BY: Nancy E. Roka

ABB ENVIRONMENTAL SERVICES, INC

[redacted] DATA RECORD – SEDIMENT

FIELD SAMPLING NUMBER: R91220000

PROJECT: USATHAMA-BAAP

SITE TYPE: DTCH

SAMPLING DATE: 9.1891

SITE ID: RPS-91-22

JOB NUMBER: 6853-04

FILE NAME: CSO

LOCATION ACTIVITY START: 0930 END: 0940

PROGRAM: C

WEATHER: prt. Sunny, °50's windy

SEDIMENT DATA

DEPTH OF SEDIMENT SAMPLE: 0-7 IN

TYPE OF SAMPLE COLLECTED: [x] DISCRETE [ ] COMPOSITE

TYPE OF SEDIMENT:
- [x] CLAY
- [x] SAND
- [x] ORGANIC
- [x] SILT trace
- [ ] GRAVEL
- [ ] OTHER

EQUIPMENT USED FOR COLLECTION:
- [x] GRAVITY CORE
- [x] TULIP BULB PLANTER
- [x] S.S. HAND SPOON
- [x] ALUMINUM PAN
- [ ] PLASTIC SCOOP
- [ ] OTHER

DECONTAMINATION FLUIDS USED:
- [x] POTABLE WATER
- [ ] POTABLE WATER WITH HIGH PRESSURE
- [ ] OTHER

SAMPLE OBSERVATIONS: [ ] ODOR [x] COLORED light brown

AMBIENT AIR: 0.0 PPM

SAMPLE LOCATION: 0.0 PPM

pH: — UNITS

ANALYTICAL PARAMETERS

	METHOD NUMBER	PRESERVATION METHOD	VOLUME REQUIRED	SAMPLE COLLECTED
[ ] PP METALS (SPECIFIED BELOW)		4 DEG C		
[x] AL	JS12	4 DEG C		
[x] CA		4 DEG C		
[x] NA		4 DEG C		
[x] CD		4 DEG C		
[x] CR		4 DEG C		
[x] MG	Y9	4 DEG C		
[x] PB	JD21	4 DEG C		
[ ] TCLP METALS (SPECIFIED BELOW)		4 DEG C		
[x] NIT	KF17	4 DEG C		
	KT07	4 DEG C		
	USEPA 350.2	4 DEG C		
	USEPA CE-81-1	4 DEG C		
[redacted]	SW846 METHOD 9045	4 DEG C		
[x] VOC	LM23	4 DEG C		
[x] BN/A	LM25	4 DEG C	DC	
[x] MG	LW27	4 DEG C		
[x] NAM	LM08	4 DEG C		
[x] DNT	LW23	4 DEG C		

label SAMPLE ~~SOURCE~~ ID NUMBERS

1774
1776
1775
1777
1778
1779
1780

NOTES (LOCATION SKETCH)

* THESE ARE DATACHEM METHODS. EA METHODS: VOC LM17, LM26
B/NA LM20

PP METALS (PRIORITY POLLUTANT): AG, AS, BE, CD, CR, CU, PB, HG, NI, SB, SE, TL, ZN. JS12, 89, JD21, JD20, Y9.

TCLP METALS: CD, CR, HG, PB. JS12, 40 CFR 261.24

DC: 4 bottles

~~EB: 1 bottle~~ MR

SIGNATURE: VM/MR

RECEIVED BY: Nancy E. Roka

ABB ENVIRONMENTAL SERVICES, INC

FIELD DATA RECORD – SEDIMENT

FIELD SAMPLING NUMBER: R91230006

PROJECT: USATHAMA-BAAP

SITE ID: RPS-91-23

SITE TYPE: DTCH

JOB NUMBER: 6853-04

PROGRAM: C

LOCATION ACTIVITY: START: 0945 END: 0955

SAMPLING DATE: 9.18.91

FILE NAME: CSO

WEATHER: prt. sunny, °50's windy

SEDIMENT DATA

DEPTH OF SEDIMENT SAMPLE: 0-6 IN

TYPE OF SAMPLE COLLECTED: [x] DISCRETE [ ] COMPOSITE

TYPE OF SEDIMENT:
- [x] CLAY
- [x] SAND
- [x] ORGANIC
- [x] SILT
- [ ] GRAVEL
- [ ] OTHER

EQUIPMENT USED FOR COLLECTION:
- [x] GRAVITY CORER
- [x] TULIP BULB PLANTER
- [x] S.S. HAND SPOON
- [x] ALUMINUM PAN
- [ ] PLASTIC SCOOP
- [ ] OTHER

DECONTAMINATION FLUIDS USED:
- [x] POTABLE WATER
- [ ] POTABLE WATER WITH HIGH PRESSURE
- [ ] OTHER

SAMPLE OBSERVATIONS: [ ] ODOR [ ] COLORED

AMBIENT AIR: 0.0 PPM

SAMPLE LOCATION: 0.0 PPM

pH: — UNITS

ANALYTICAL PARAMETERS

	METHOD NUMBER	PRESERVATION METHOD	VOLUME REQUIRED	SAMPLE COLLECTED
[ ] PP METALS (SPECIFIED BELOW)		4 DEG C		
[ ] AL	JS12	4 DEG C		
[ ] CA		4 DEG C		
[ ] SB		4 DEG C		
[x] CD		4 DEG C		
[x] CR		4 DEG C		
[x] HG	Y9	4 DEG C		
[x] PB	JD21	4 DEG C		DC
[x] TCLP METALS (SPECIFIED BELOW)		4 DEG C		
[x] NIT	KF17	4 DEG C		
[x] SO4	KT07	4 DEG C		
[ ] NH3N2	USEPA 350.2	4 DEG C		
[ ] TOC	USEPA CE-81-1	4 DEG C		
[ ] pH	SW846 METHOD 9045	4 DEG C		
* [ ] VOC	LM23	4 DEG C		
* [ ] BN/A	LM25	4 DEG C		(NR)
[x] NG	LW27	4 DEG C		DC
[x] NAM	LW08	4 DEG C		
[x] DNT	LW23	4 DEG C		

SAMPLE BOTTLE ID NUMBERS: 1795, 1797, 1796, 1798, 1799, 1802, 1801

NOTES (LOCATION SKETCH)

* THESE ARE DATACHEM METHODS. EA METHODS: VOC LM17, LM26; B/NA LM20

PP METALS (PRIORITY POLLUTANT): AG, AS, BE, CD, CR, CU, PB, HG, NI, SB, SE, TL, ZN. JS12, B9, JD21, JD20, Y9.

TCLP METALS: CD, CR, HG, PB. JS12, 40 CFR 261.24

DC: 4 bottles

~~EA: 1 bottle~~ (NR)

SIGNATURE: VM/NR

RECEIVED BY: Nancy E. Roba

ABB ENVIRONMENTAL SERVICES, INC

FIELD DATA RECORD - SEDIMENT

FIELD SAMPLING NUMBER: R91240000

PROJECT: USATHAMA-BAAP

SITE ID: RPS-91-24

LOCATION ACTIVITY: START: 1000 END: 1010

SITE TYPE: DTCH

JOB NUMBER: 6853-04

PROGRAM: C

SAMPLING DATE: 9-18-91

FILE NAME: CSO

WEATHER: prt. sunny, °50's windy

SEDIMENT DATA

DEPTH OF SEDIMENT SAMPLE: 0-4 IN

TYPE OF SAMPLE COLLECTED: [x] DISCRETE [ ] COMPOSITE

TYPE OF SEDIMENT:
- [ ] CLAY
- [x] SAND Some
- [x] ORGANIC
- [ ] SILT
- [ ] GRAVEL
- [ ] OTHER

EQUIPMENT USED FOR COLLECTION:
- [x] GRAVITY CORER
- [x] TULIP BULB PLANTER
- [x] S.S. HAND SPOON
- [ ] ALUMINUM PAN
- [ ] PLASTIC SCOOP
- [ ] OTHER

DECONTAMINATION FLUIDS USED:
- [x] POTABLE WATER
- [ ] POTABLE WATER WITH HIGH PRESSURE
- [ ] OTHER

SAMPLE OBSERVATIONS: [ ] ODOR [ ] COLORED

AMBIENT AIR: 0.0 PPM

SAMPLE LOCATION: 0.0 PPM

pH: — UNITS

ANALYTICAL PARAMETERS

	METHOD NUMBER	PRESERV METH	VOLUME REQUIRED	SAMPLE COLLECTED
[ ] PP METALS (SPECIFIED BELOW)		4 DEG		
[ ] AL	JS12	4 DEG C		
[ ] CA		4 DEG C		
[ ] MA		4 DEG C		
[ ] CD		4 DEG C		
[ ] CR		4 DEG C		
[ ] MG	Y9	4 DEG C		
[ ] PB	JD21	4 DEG C		
[ ] TCLP METALS (SPECIFIED BELOW)		4 DEG C		
[ ] NIT	KF17	4 DEG C		
[ ] SO4	KT07	4 DEG C		
[ ] NH3N2	USEPA 350.2	4 DEG C		
[ ] TOC	USEPA CE-81-1	4 DEG C		
[ ] pH	SW846 METHOD 9045	4 DEG C		
[ ] VOC	LM23	4 DEG C		
[ ] BN/A	LM25	4 DEG C		
[ ] NG	LW27	4 DEG C		
[ ] NAM	LN08	4 DEG C		
[ ] DNT	LW23	4 DEG C		

DC

MR EA

DC

SAMPLE BOTTLE ID NUMBERS

1816
1818
1819
1819
1820
1821
1822

NOTES

LOCATION SKETCH)

* THESE ARE DATACHEM METHODS. EA METHODS: VOC LM17, LM26
B/NA LM20

PP METALS (PRIORITY POLLUTANT): AG, AS, BE, CD, CR, CU, PB, HG, NI, SB, SE, TL, ZN.
JS12, B9, JD21, JD20, Y9.

TCLP METALS: CD, CR, HG, PB.
JS12, 40 CFR 261.24

DC: 4 bottles

~~EA: 1 bottles~~ MR

SIGNATURE: YM/MR

RECEIVED BY: Nancy E. Rotta

ABB ENVIRONMENTAL SERVICES, INC

FIELD DATA RECORD – SEDIMENT

FIELD SAMPLING NUMBER: R9125000

PROJECT: USATHAMA-BAAP

SITE ID: RPS-91-25

SITE TYPE: DTCH

JOB NUMBER: 6853-04

PROGRAM: C

LOCATION ACTIVITY: START: 1240 END: 1250

SAMPLING DATE: 9.18.91

FILE NAME: CSO

WEATHER: cloudy, 40's windy

SEDIMENT DATA

DEPTH OF SEDIMENT SAMPLE: 0-4 IN

TYPE OF SAMPLE COLLECTED: [x] DISCRETE [ ] COMPOSITE

TYPE OF SEDIMENT:
- [ ] CLAY
- [x] SAND
- [x] ORGANIC
- [x] SILT
- [ ] GRAVEL
- [ ] OTHER

EQUIPMENT USED FOR COLLECTION:
- [x] GRAVITY CORER
- [x] TULIP BULB PLANTER
- [ ] S.S. HAND SPOON
- [x] ALUMINUM PAN
- [ ] PLASTIC SCOOP
- [ ] OTHER

DECONTAMINATION FLUIDS USED:
- [x] POTABLE WATER
- [ ] POTABLE WATER WITH HIGH PRESSURE
- [ ] OTHER

SAMPLE OBSERVATIONS: [ ] ODOR [ ] COLORED

AMBIENT AIR: 0.0 PPM

SAMPLE LOCATION: 0.0 PPM

pH: — UNITS

ANALYTICAL PARAMETERS

	METHOD NUMBER	PRESERVATION METHOD	VOLUME REQUIRED	SAMPLE COLLECTED
[ ] PP METALS (SPECIFIED BELOW)		4 DEG C		
[ ] AL	JS12	4 DEG C		
[ ] CA		4 DEG C		
[ ] NA		4 DEG C		
[ ] CD		4 DEG C		
[ ] CR		4 DEG C		
[ ] HG	Y9	4 DEG C		
[ ] PB	JD21	4 DEG C		
[ ] TCLP METALS (SPECIFIED BELOW)		4 DEG C		
[ ] NIT	KF17	4 DEG C		
[x] SO4	KT07	4 DEG C		
[ ] NH3N2	USEPA 350.2	4 DEG C		
[ ] TOC	USEPA CE-81-1	4 DEG C		
[ ] pH	SW846 METHOD 9045	4 DEG C		
* [ ] VOC	LM23	4 DEG C		
* [ ] BN/A	LM25	4 DEG C		
[x] NG	LW27	4 DEG C		
[x] NAM	LM08	4 DEG C		
[x] DNT	LW23	4 DEG C		

DC

SAMPLE BOTTLE ID NUMBERS: 1837, 1838, 1840, 1841, 1842, 1843

NOTES (LOCATION SKETCH)

* THESE ARE DATACHEM METHODS. EA METHODS: VOC LM17, LM26
B/NA LM20

PP METALS (PRIORITY POLLUTANT): AG, AS, BE, CD, CR, CU, PB, HG, NI, SB, SE, TL, ZN.
JS12, B9, JD21, JD20, Y9.

TCLP METALS: CD, CR, HG, PB.
JS12, 40 CFR 261.24

DC: 4 bottles

SIGNATURE: VM/NR

RECEIVED BY: Nancy E. Roka

ABB ENVIRONMENTAL SERVICES, INC

FIELD DATA RECORD – SEDIMENT

FIELD SAMPLING NUMBER: R91260000

PROJECT: USATHAMA-BAAP

SITE TYPE: DTCH

SAMPLING DATE: 9.18.91

SITE ID: RFS-91-26

JOB NUMBER: 6853-04

FILE NAME: CSO

WEATHER: cloudy, °40's windy

LOCATION ACTIVITY: START: 1255 END: 1305

PROGRAM: C

SEDIMENT DATA

DEPTH OF SEDIMENT SAMPLE: 0-4 IN

TYPE OF SAMPLE COLLECTED: [x] DISCRETE [ ] COMPOSITE

TYPE OF SEDIMENT:
- [x] CLAY
- [x] SAND
- [ ] ORGANIC
- [ ] SILT
- [ ] GRAVEL
- [ ] OTHER

EQUIPMENT USED FOR COLLECTION:
- [ ] GRAVITY CORER
- [x] TULIP BULB PLANTER
- [ ] S.S. HAND SPOON
- [x] ALUMINUM PAN
- [ ] PLASTIC SCOOP
- [ ] OTHER

DECONTAMINATION FLUIDS USED:
- [x] POTABLE WATER
- [ ] POTABLE WATER WITH HIGH PRESSURE
- [ ] OTHER

SAMPLE OBSERVATIONS: [ ] ODOR [ ] COLORED

AMBIENT AIR: 0.0 PPM

SAMPLE LOCATION: 0.0 PPM

pH: NA UNITS

ANALYTICAL PARAMETERS

	METHOD NUMBER	PRESERVATION METHOD	VOLUME REQUIRED	SAMPLE COLLECTED	SAMPLE BOTTLE ID NUMBERS
[ ] PP METALS (SPECIFIED BELOW)		4 DEG C			
[ ] AL	JS12	4 DEG C			
[ ] CA		4 DEG C			
[ ] NA		4 DEG C			
[x] CD		4 DEG C			1858
[x] CR		4 DEG C			
[x] HG	Y9	4 DEG C			1860
[x] PB	JD21	4 DEG C			1858
[ ] TCLP METALS (SPECIFIED BELOW)		4 DEG C			1859
[ ] NIT	KF17	4 DEG C			
[ ] SO4	KT07	4 DEG C			
[ ] NH3N2	USEPA 350.2	4 DEG C			
[ ] TOC	USEPA CE-81-1	4 DEG C		DC	
[ ] pH	SW846 METHOD 9045	4 DEG C			
[ ] VOC	LM23	4 DEG C			
[ ] BN/A	LM25	4 DEG C			1861
[ ] PG	LW27	4 DEG C			1862
[ ] PAM	LN08	4 DEG C			1863
[ ] DNT	LW23	4 DEG C			1864

NOTES (LOCATION SKETCH)

* THESE ARE DATACHEM METHODS. EA METHODS: VOC LM17, LM26; B/NA LM20

PP METALS (PRIORITY POLLUTANT): AG, AS, BE, CD, CR, CU, PB, HG, NI, SB, SE, TL, ZN. JS12, B9, JD21, JD20, Y9.

TCLP METALS: CD, CR, HG, PB. JS12, 40 CFR 261.24

DC: 3 bottles

SIGNATURE: VM/NR

RECEIVED BY: Nancy E. Rojas

AEB ENVIRONMENTAL SERVICES, INC

PAGE 11 OF 2

FIELD DATA RECORD – SEDIMENT

FIELD SAMPLING NUMBER: R9127000

PROJECT: USATHAMA-BAAP

SITE ID: RPS-91-27

LOCATION ACTIVITY: START: 1310 END: 1320

SITE TYPE: DTCH

JOB NUMBER: 6853-04

PROGRAM: C

SAMPLING DATE: 9.18.91

FILE NAME: CSO

WEATHER: cloudy, °40's windy

SEDIMENT DATA

DEPTH OF SEDIMENT SAMPLE: 0-6 IN

TYPE OF SAMPLE COLLECTED: [x] DISCRETE [ ] COMPOSITE

TYPE OF SEDIMENT:
- [x] CLAY
- [x] SAND
- [x] ORGANIC
- [ ] SILT
- [ ] GRAVEL
- [ ] OTHER

EQUIPMENT USED FOR COLLECTION:
- [x] GRAVITY CORER
- [x] TULIP BULB PLANTER
- [ ] S.S. HAND SPOON
- [x] ALUMINUM PAN
- [ ] PLASTIC SCOOP
- [ ] OTHER

DECONTAMINATION FLUIDS USED:
- [x] POTABLE WATER
- [ ] POTABLE WATER WITH HIGH PRESSURE
- [ ] OTHER

SAMPLE OBSERVATIONS: [ ] ODOR [ ] COLORED

AMBIENT AIR: 0.0 PPM

SAMPLE LOCATION: 0.0 PPM

pH: - UNITS

ANALYTICAL PARAMETERS

		METHOD NUMBER	PRESERVATION METHOD	VOLUME REQUIRED	SAMPLE COLLECTED
[ ]	PP METALS (SPECIFIED BELOW)		4 DEG C		
[x]	AL	JS12	4 DEG C		
[x]	CA		4 DEG C		
[x]	NA		4 DEG C		
[x]	CD		4 DEG C		
[x]	CR		4 DEG C		
[x]	HG	Y9	4 DEG C		
[x]	PB	JD21	4 DEG C		
[x]	TCLP METALS (SPECIFIED BELOW)		4 DEG C		
[x]	NIT	KF17	4 DEG C		
[x]	SO4	KT07	4 DEG C		
[ ]	NH3N2	USEPA 350.2	4 DEG C		
[ ]	TOC	USEPA CE-81-1	4 DEG C		
[ ]	pH	SW846 METHOD 9045	4 DEG C		
* [ ]	VOC	LM23	4 DEG C		
* [x]	BN/A	LM25	4 DEG C		
[x]	NG	LW27	4 DEG C		
[x]	NAM	LN08	4 DEG C		
[x]	DNT	LW23	4 DEG C		

DC

SAMPLE BOTTLE ID NUMBERS: 1879, 1881, 1880, 1882, 1883, 1884, 1885

NOTES (LOCATION SKETCH)

* THESE ARE DATACHEM METHODS. EA METHODS: VOC LM17, LM26; B/NA LM20

PP METALS (PRIORITY POLLUTANT): AG, AS, BE, CD, CR, CU, PB, HG, NI, SB, SE, TL, ZN. JS12, B9, JD21, JD20, Y9.

TCLP METALS: CD, CR, HG, PB. JS12, 40 CFR 261.24

DC: 3 bottles

SIGNATURE: VM/MR

RECEIVED BY: Nancy E. Roka

BB ENVIRONMENTAL SERVICES, INC

FIELD DATA RECORD – SEDIMENT

FIELD SAMPLING NUMBER: R9i28000

PROJECT: USATHAMA-BAAP

SITE ID: RPS-9i-28

SITE TYPE: DTCH

JOB NUMBER: 6853-04

PROGRAM: C

LOCATION ACTIVITY: START: 1320 END: 1330

SAMPLING DATE: 9.18.91

FILE NAME: CSO

WEATHER: cloudy, °40's windy

SEDIMENT DATA

DEPTH OF SEDIMENT SAMPLE: 0-8 IN

TYPE OF SAMPLE COLLECTED: [x] DISCRETE [ ] COMPOSITE

TYPE OF SEDIMENT:
- [ ] CLAY
- [x] SAND
- [ ] ORGANIC
- [ ] SILT
- [ ] GRAVEL
- [ ] OTHER

EQUIPMENT USED FOR COLLECTION:
- [x] GRAVITY CORER
- [x] TULIP BULB PLANTER
- [x] S.S. HAND SPOON
- [x] ALUMINUM PAN
- [ ] PLASTIC SCOOP
- [ ] OTHER

DECONTAMINATION FLUIDS USED:
- [x] POTABLE WATER
- [ ] POTABLE WATER WITH HIGH PRESSURE
- [ ] OTHER

SAMPLE OBSERVATIONS: [ ] ODOR [x] COLORED 0-3" dk brown 3-3" orange MOIST

AMBIENT AIR: 0.0 PPM

SAMPLE LOCATION: 0.0 PPM

pH: — UNITS

ANALYTICAL PARAMETERS

	METHOD NUMBER	PRESERVATION METHOD	VOLUME REQUIRED	SAMPLE COLLECTED
[ ] PP METALS (SPECIFIED BELOW)		4 DEG C		
[ ] AL	JS12	4 DEG C		
[ ] CA		4 DEG C		
[ ] NA		4 DEG C		
[x] CD		4 DEG C		
[x] CR		4 DEG C		
[x] HG	Y9	4 DEG C		
[x] PB	JD21	4 DEG C		
[x] TCLP METALS (SPECIFIED BELOW)		4 DEG C		
[x] NIT	KF17	4 DEG C		
[ ] SO4	KT07	4 DEG C		
[ ] NH3N2	USEPA 350.2	4 DEG C		
[ ] TOC	USEPA CE-81-1	4 DEG C		
[ ] pH	SW846 METHOD 9045	4 DEG C		
[ ] VOC	LM23	4 DEG C		
[x] BN/A	LM25	4 DEG C		
[x] NG	LW27	4 DEG C		
[x] NAM	LN08	4 DEG C		
[x] DNT	LW23	4 DEG C		

DC

SAMPLE BOTTLE ID NUMBERS: 1900, 1902, 1901, 1903, 1904, 1905, 1906

NOTES (LOCATION SKETCH)

* THESE ARE DATACHEM METHODS. EA METHODS: VOC LM17, LM26; B/NA LM20

PP METALS (PRIORITY POLLUTANT): AG, AS, BE, CD, CR, CU, PB, HG, NI, SB, SE, TL, ZN. JS12, B9, JD21, JD20, Y9.

TCLP METALS: CD, CR, HG, PB. JS12, 40 CFR 261.24

DC: 3 bottles

SIGNATURE: VM/MR

RECEIVED BY: Nancy E. Rotta

ABB ENVIRONMENTAL SERVICES, INC

FIELD DATA RECORD – SEDIMENT

FIELD SAMPLING NUMBER: R91290000

PROJECT: USATHAMA-BAAP

SITE ID: RFS-19-29

SITE TYPE: DITCH

JOB NUMBER: 6853-04

PROGRAM: C

SAMPLING DATE: 9.18.91

FILE NAME: CSO

WEATHER: cloudy, 70's windy

LOCATION ACTIVITY: START: 1330 END: 1335

SEDIMENT DATA

DEPTH OF SEDIMENT SAMPLE: 0-5 IN

TYPE OF SAMPLE COLLECTED: [x] DISCRETE [ ] COMPOSITE

TYPE OF SEDIMENT:
- [x] CLAY
- [x] SAND
- [ ] ORGANIC
- [ ] SILT
- [ ] GRAVEL
- [ ] OTHER

EQUIPMENT USED FOR COLLECTION:
- [x] GRAVITY CORER
- [ ] TULIP BULB PLANTER
- [ ] S.S. HAND SPOON
- [x] ALUMINUM PAN
- [ ] PLASTIC SCOOP
- [ ] OTHER

DECONTAMINATION FLUIDS USED
- [x] POTABLE WATER
- [ ] POTABLE WATER WITH HIGH PRESSURE
- [ ] OTHER

SAMPLE OBSERVATIONS: [ ] ODOR [ ] COLORED

AMBIENT AIR: 0.0 PPM

SAMPLE LOCATION: 0.0 PPM

pH: — UNITS

ANALYTICAL PARAMETERS

	METHOD NUMBER	PRESERVATION METHOD	VOLUME REQUIRED	SAMPLE COLLECTED
[ ] PP METALS (SPECIFIED BELOW)		4 DEG C		
[ ] AL	JS12	4 DEG C		
[ ] CA	|	4 DEG C		
[x] NA	|	4 DEG C		
[x] CD	|	4 DEG C		
[x] CR	|	4 DEG C		
[x] HG	Y9	4 DEG C		
[x] PB	JD21	4 DEG C		
[x] TCLP METALS (SPECIFIED BELOW)		4 DEG C		
[x] NIT	KF17	4 DEG C		
[x] SO4	KT07	4 DEG C		
[ ] NH3N2	USEPA 350.2	4 DEG C		
[ ] TOC	USEPA CE-81-1	4 DEG C		
[ ] pH	SW846 METHOD 9045	4 DEG C		
* [ ] VOC	LM23	4 DEG C		
* [x] BN/A	LM25	4 DEG C		
[x] MG	LW27	4 DEG C		
[x] NAM	LN08	4 DEG C		
[x] ONT	LW23	4 DEG C		

DC

SAMPLE BOTTLE ID NUMBERS: 1921, 1923, 1922, 1924, 1925, 1926, 1927

NOTES (LOCATION SKETCH)

* THESE ARE DATACHEM METHODS. EA METHODS: VOC LM17, LM26; B/NA LM20

PP METALS (PRIORITY POLLUTANT): AG, AS, BE, CD, CR, CU, PB, HG, NI, SB, SE, TL, ZN. JS12, B9, JD21, JD20, Y9.

TCLP METALS: CD, CR, HG, PB. JS12, 40 CFR 261.24

DC: 3 bottles

SIGNATURE: VM/NR

RECEIVED BY: Nancy E. Rota

B ENVIRONMENTAL SERVICES, INC

PAGE 3 OF 6

ELD DATA RECORD - SEDIMENT

FIELD SAMPLING NUMBER: R9131000

PROJECT: USATHAMA-BAAP

SITE TYPE: DTCH

SAMPLING DATE: 10 3 9

FILE NAME: CSO

TE ID: RPS-91-3~~3~~1 NA

JOB NUMBER: 6853-04

WEATHER: cloudy 90's

LOCATION TIVITY: START: 1605 END: 1610

PROGRAM: C

SEDIMENT DATA

DEPTH OF EDIMENT SAMPLE: 1-6 IN

TYPE OF SAMPLE OLLECTED: [x] DISCRETE [ ] COMPOSITE

TYPE OF SEDIMENT:
- [ ] CLAY
- [x] SAND
- [x] ORGANIC
- [x] SILT
- [ ] GRAVEL
- [ ] OTHER

EQUIPMENT USED FOR COLLECTION:
- [ ] GRAVITY CORER
- [x] TULIP BULB PLANTER
- [ ] S.S. HAND SPOON
- [x] ALUMINUM PAN
- [ ] PLASTIC SCOOP
- [ ] OTHER

DECONTAMINATION FLUIDS USED
- [x] POTABLE WATER
- [ ] POTABLE WATER WITH HIGH PRESSURE
- [ ] OTHER

SAMPLE OBSERVATIONS
- [ ] ODOR
- [x] COLORED orange
- [ ]

AMBIENT AIR: — PPM

SAMPLE LOCATION: — PPM

pH: — UNITS

ANALYTICAL PARAMETERS

	METHOD NUMBER	PRESERVATION METHOD	VOLUME REQUIRED	SAMPLE COLLECTED	SAMPLE BOTTLE ID NUMBERS
PP METALS (SPECIFIED BELOW)		4 DEG C			
AL	JS12	4 DEG C			
CA		4 DEG C			
NA		4 DEG C			
CD		4 DEG C			
CR		4 DEG C			
HG	Y9	4 DEG C			
PB	JD21	4 DEG C			
CLP METALS (SPECIFIED BELOW)		4 DEG C			
T	KF17	4 DEG C			
O4	KT07	4 DEG C			
NH3N2	USEPA 350.2	4 DEG C			
TOC	USEPA CE-81-1	4 DEG C			
pH	SW846 METHOD 9045	4 DEG C			
VOC	LM23	4 DEG C			
BN/A	LM25	4 DEG C		DC [x]	2225
NG	LW27	4 DEG C			
NAM	LN08	4 DEG C			
DNT	LW23	4 DEG C			

NOTES
OCATION SKETCH)

* THESE ARE DATACHEM METHODS. EA METHODS: VOC LM17, LM26
B/NA LM20

PP METALS (PRIORITY POLLUTANT): AG, AS, BE, CD, CR ,CU, PB, HG, NI, SB, SE, TL, ZN.
JS12, B9, JD21, JD20, Y9.

TCLP METALS: CD, CR, HG, PB.
JS12, 40 CFR 261.24

DC 1 bottle

* Resampled for missed hold time

SIGNATURE: VM/MK

RECEIVED BY: [illegible] E. [illegible]

ABB ENVIRONMENTAL SERVICES, INC

FIELD DATA RECORD – SEDIMENT

FIELD SAMPLING NUMBER: R913200 0

PROJECT: USATHAMA-BAAP

SITE ID: RPS-91-32

SITE TYPE: DTCH

JOB NUMBER: 6853-04

PROGRAM: C

LOCATION ACTIVITY: START: 1400 END: 1405

SAMPLING DATE: 9.18.91

FILE NAME: CSO

WEATHER: prt. cloudy, °40s windy

SEDIMENT DATA

DEPTH OF SEDIMENT SAMPLE: 0-8 IN

TYPE OF SAMPLE COLLECTED: [x] DISCRETE [ ] COMPOSITE

TYPE OF SEDIMENT: [ ] CLAY [x] SAND [x] ORGANIC [x] SILT [ ] GRAVEL [ ] OTHER

EQUIPMENT USED FOR COLLECTION: [ ] GRAVITY CORER [x] TULIP BULB PLANTER [ ] S.S. HAND SPOON [x] ALUMINUM PAN [ ] PLASTIC SCOOP [ ] OTHER

DECONTAMINATION FLUIDS USED: [x] POTABLE WATER [ ] POTABLE WATER WITH HIGH PRESSURE [ ] OTHER

SAMPLE OBSERVATIONS: [ ] ODOR [ ] COLORED [ ]

AMBIENT AIR: 0.0 PPM

SAMPLE LOCATION: 0.0 PPM

pH: — UNITS

ANALYTICAL PARAMETERS

	METHOD NUMBER	PRESERVATION METHOD	VOLUME REQUIRED	SAMPLE COLLECTED
[ ] PP METALS (SPECIFIED BELOW)		4 DEG C		
[ ] AL	JS12	4 DEG C		
[ ] CA	|	4 DEG C		
[ ] NA	|	4 DEG C		
[x] CD	|	4 DEG C		
[x] CR	|	4 DEG C		
[x] HG	Y9	4 DEG C		
[x] PB	JD21	4 DEG C		
[x] TCLP METALS (SPECIFIED BELOW)		4 DEG C		
[x] MIT	KF17	4 DEG C		
[x] SO4	KT07	4 DEG C		
[ ] NH3N2	USEPA 350.2	4 DEG C		
[ ] TOC	USEPA CE-81-1	4 DEG C		
[ ] pH	SW846 METHOD 9045	4 DEG C		
* [ ] VOC	LM23	4 DEG C		
* [x] BN/A	LM25	4 DEG C		
[x] NG	LW27	4 DEG C		
[x] NAM	LN08	4 DEG C		
[x] DNT	LW23	4 DEG C		

SAMPLE BOTTLE ID NUMBERS

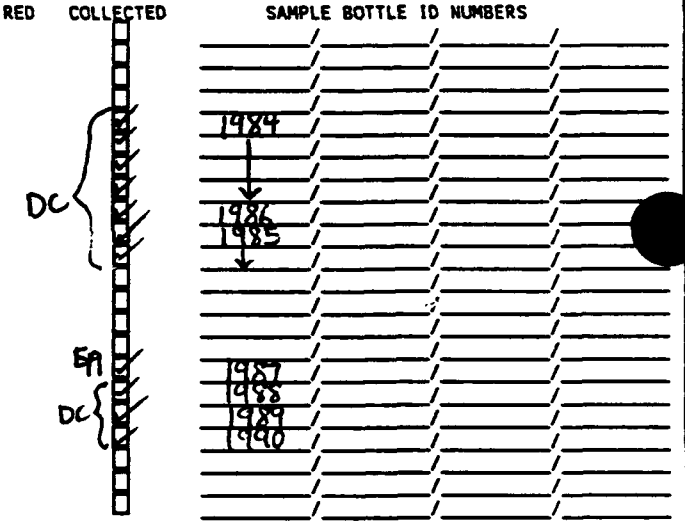

NOTES (LOCATION SKETCH)

* THESE ARE DATACHEM METHODS. EA METHODS: VOC LM17, LM26
B/NA LM20

PP METALS (PRIORITY POLLUTANT): AG, AS, BE, CD, CR, CU, PB, HG, NI, SB, SE, TL, ZN.
JS12, B9, JD21, JD20, Y9.

TCLP METALS: CD, CR, HG, PB.
JS12, 40 CFR 261.24

DC: 3 bottles
EA: 1 bottle

SIGNATURE: VM/MR

RECEIVED BY: Nancy E. Roka

BB ENVIRONMENTAL SERVICES, INC

IELD DATA RECORD - SEDIMENT

FIELD SAMPLING NUMBER: R91300000

PROJECT: USATHAMA-BAAP

SITE ID: RPS-91-30

LOCATION ACTIVITY: START: 1350 END: 1355

SITE TYPE: DTCH

JOB NUMBER: 6853-04

PROGRAM: C

SAMPLING DATE: 9.18.91

FILE NAME: CSO

WEATHER: cloudy, °40's windy

SEDIMENT DATA

DEPTH OF SEDIMENT SAMPLE: 0-5 IN

TYPE OF SAMPLE COLLECTED: [x] DISCRETE [ ] COMPOSITE

TYPE OF SEDIMENT:
- [ ] CLAY
- [x] SAND
- [ ] ORGANIC
- [ ] SILT
- [ ] GRAVEL
- [ ] OTHER

EQUIPMENT USED FOR COLLECTION:
- [ ] GRAVITY CORER
- [x] TULIP BULB PLANTER
- [x] S.S. HAND SPOON
- [x] ALUMINUM PAN
- [ ] PLASTIC SCOOP
- [ ] OTHER

DECONTAMINATION FLUIDS USED:
- [x] POTABLE WATER
- [ ] POTABLE WATER WITH HIGH PRESSURE
- [ ] OTHER

SAMPLE OBSERVATIONS: [ ] ODOR [ ] COLORED

AMBIENT AIR: 0.0 PPM

SAMPLE LOCATION: 0.0 PPM

pH: — UNITS

ANALYTICAL PARAMETERS

	METHOD NUMBER	PRESERVATION METHOD	VOLUME REQUIRED	SAMPLE COLLECTED
[ ] PP METALS (SPECIFIED BELOW)		4 DEG C		
[x] AL	JS12	4 DEG C		
[x] CA	|	4 DEG C		
[x] NA	|	4 DEG C		
[x] CD	|	4 DEG C		
[x] CR	|	4 DEG C		
[x] HG	Y9	4 DEG C		
[x] PB	JD21	4 DEG C		
[ ] TCLP METALS (SPECIFIED BELOW)		4 DEG C		
[ ] NIT	KF17	4 DEG C		
[ ] SO4	KT07	4 DEG C		
[ ] NH3N2	USEPA 350.2	4 DEG C		
[ ] TOC	USEPA CE-81-1	4 DEG C		
[ ] pH	SW846 METHOD 9045	4 DEG C		
[ ] VOC	LM23	4 DEG C		
[ ] BN/A	LM25	4 DEG C		
[ ] PG	LW27	4 DEG C		
[ ] PAM	LN08	4 DEG C		
[ ] DNT	LW23	4 DEG C		

DC

SAMPLE BOTTLE ID NUMBERS: 1942, 1944, 1943, 1945, 1946, 1947, 1948

NOTES (LOCATION SKETCH)

* THESE ARE DATACHEM METHODS. EA METHODS: VOC LM17, LM26; B/NA LM20

PP METALS (PRIORITY POLLUTANT): AG, AS, BE, CD, CR, CU, PB, HG, NI, SB, SE, TL, ZN. JS12, B9, JD21, JD20, Y9.

TCLP METALS: CD, CR, HG, PB. JS12, 40 CFR 261.24

DC: 3 bottles

SIGNATURE: VM/MR

RECEIVED BY: Nancy E. Roha

ABB ENVIRONMENTAL SERVICES, INC

FIELD DATA RECORD – SEDIMENT

FIELD SAMPLING NUMBER: R91310CO

PROJECT: USATHAMA-BAAP

SITE ID: RPS-91-31

SITE TYPE: DITCH

JOB NUMBER: 6853-04

PROGRAM: C

SAMPLING DATE: 9.18.91

FILE NAME: CSO

WEATHER: cloudy, °40's windy

LOCATION ACTIVITY: START: 1345 END: 1340

SEDIMENT DATA

DEPTH OF SEDIMENT SAMPLE: 0-6 IN

TYPE OF SAMPLE COLLECTED: [x] DISCRETE [ ] COMPOSITE

TYPE OF SEDIMENT:
- [x] CLAY
- [x] SAND
- [x] ORGANIC
- [ ] SILT
- [ ] GRAVEL
- [ ] OTHER

EQUIPMENT USED FOR COLLECTION:
- [x] GRAVITY CORER
- [ ] TULIP BULB PLANTER
- [x] S.S. HAND SPOON
- [x] ALUMINUM PAN
- [ ] PLASTIC SCOOP
- [ ] OTHER

DECONTAMINATION FLUIDS USED:
- [x] POTABLE WATER
- [ ] POTABLE WATER WITH HIGH PRESSURE
- [ ] OTHER

SAMPLE OBSERVATIONS: [ ] ODOR [x] COLORED 0-3" dark 3-6" orange/tan

AMBIENT AIR: 0.0 PPM

SAMPLE LOCATION: 0.0 PPM

pH: — UNITS

ANALYTICAL PARAMETERS

	METHOD NUMBER	PRESERVATION METHOD	VOLUME REQUIRED	SAMPLE COLLECTED
[ ] PP METALS (SPECIFIED BELOW)		4 DEG C		
[ ] AL	JS12	4 DEG C		
[ ] CA		4 DEG C		
[ ] NA		4 DEG C		
[x] CD		4 DEG C		DC
[x] CR		4 DEG C		DC
[x] HG	Y9	4 DEG C		DC
[x] PB	JD21	4 DEG C		DC
[x] TCLP METALS (SPECIFIED BELOW)		4 DEG C		
[x] MIT	KF17	4 DEG C		DC
[x] SO4	KT07	4 DEG C		DC
[ ] NH3N2	USEPA 350.2	4 DEG C		
[ ] TOC	USEPA CE-81-1	4 DEG C		
[ ] pH	SW846 METHOD 9045	4 DEG C		
* [x] VOC	LM23	4 DEG C		EA
* [x] BN/A	LM25	4 DEG C		EA
[x] NG	LW27	4 DEG C		DC
[x] NAM	LN08	4 DEG C		DC
[x] DNT	LW23	4 DEG C		DC

SAMPLE BOTTLE ID NUMBERS: 1963, R65, 1967, 1966, 1967, 1962, 1969

NOTES (LOCATION SKETCH)

* THESE ARE DATACHEM METHODS. EA METHODS: VOC LM17, LM26; B/NA LM20

PP METALS (PRIORITY POLLUTANT): AG, AS, BE, CD, CR, CU, PB, HG, NI, SB, SE, TL, ZN. JS12, 89, JD21, JD20, Y9.

TCLP METALS: CD, CR, HG, PB. JS12, 40 CFR 261.24

DC: 3 bottles
EA: 1 bottle

SIGNATURE: VM/MR

RECEIVED BY: Nancy E. Rotka

B ENVIRONMENTAL SERVICES, INC

ELD DATA RECORD - SEDIMENT

FIELD SAMPLING NUMBER: RFS-91-32000

PROJECT: USATHAMA-BAAP

SITE TYPE: DTCH

SAMPLING DATE: 10.3.91

TE ID: RFS-91-32

JOB NUMBER: 6853-04

FILE NAME: CSO

LOCATION TIVITY

START: 1600 END: 1605

PROGRAM: C

WEATHER: cloudy, ~50's rain

SEDIMENT DATA

DEPTH OF EDIMENT SAMPLE: 1-5 IN

TYPE OF SAMPLE LLECTED: [x] DISCRETE [ ] COMPOSITE

TYPE OF SEDIMENT:
- [ ] CLAY
- [ ] SAND
- [x] ORGANIC
- [ ] SILT
- [ ] GRAVEL
- [ ] OTHER

EQUIPMENT USED FOR COLLECTION:
- [ ] GRAVITY CORER
- [x] TULIP BULB PLANTER
- [ ] S.S. HAND SPOON
- [x] ALUMINUM PAN
- [ ] PLASTIC SCOOP
- [ ] OTHER

DECONTAMINATION FLUIDS USED
- [x] POTABLE WATER
- [ ] POTABLE WATER WITH HIGH PRESSURE
- [ ] OTHER

SAMPLE OBSERVATIONS
- [ ] ODOR
- [ ] COLORED

AMBIENT AIR: — PPM

SAMPLE LOCATION: — PPM

pH: — UNITS

NALYTICAL PARAMETERS

	METHOD NUMBER	PRESERVATION METHOD	VOLUME REQUIRED	SAMPLE COLLECTED
[ ] PP METALS (SPECIFIED BELOW)		4 DEG C		
[ ] AL	JS12	4 DEG C		
[ ] CA		4 DEG C		
[ ] NA		4 DEG C		
[ ] CD		4 DEG C		
[ ] CR		4 DEG C		
[ ] HG	Y9	4 DEG C		
[ ] PB	JD21	4 DEG C		
[ ] CLP METALS (SPECIFIED BELOW)		4 DEG C		
[ ] IT	KF17	4 DEG C		
[ ] SO4	KT07	4 DEG C		
[ ] NH3N2	USEPA 350.2	4 DEG C		
[ ] TOC	USEPA CE-81-1	4 DEG C		
[ ] pH	SW846 METHOD 9045	4 DEG C		
[ ] VOC	LM23	4 DEG C		
[ ] BN/A	LM25	4 DEG C		DC [x]
[ ] NG	LW27	4 DEG C		
[ ] NAM	LN08	4 DEG C		
[ ] DNT	LW23	4 DEG C		

SAMPLE BOTTLE ID NUMBERS

NOTES
OCATION SKETCH)

* THESE ARE DATACHEM METHODS. EA METHODS: VOC LM17, LM26
B/NA LM20

PP METALS (PRIORITY POLLUTANT): AG, AS, BE, CD, CR, CU, PB, HG, NI, SB, SE, TL, ZN.
JS12, B9, JD21, JD20, Y9.

TCLP METALS: CD, CR, HG, PB.
JS12, 40 CFR 261.24

DC: 1 bottle

* Resampled for missed hold-time

SIGNATURE: VM/ER

RECEIVED BY: [illegible]

ABB ENVIRONMENTAL SERVICES, INC

FIELD DATA RECORD – SEDIMENT

FIELD SAMPLING NUMBER: R913300 0

PROJECT: USATHAMA-BAAP

SITE ID: RPS-91-33

SITE TYPE: DTCH

JOB NUMBER: 6853-04

PROGRAM: C

LOCATION ACTIVITY: START: 1410 END: 1415

SAMPLING DATE: 9.18.91

FILE NAME: CSO

WEATHER: cloudy, 40's windy

SEDIMENT DATA

DEPTH OF SEDIMENT SAMPLE: 0-5 IN

TYPE OF SAMPLE COLLECTED: [x] DISCRETE [ ] COMPOSITE

TYPE OF SEDIMENT:
- [ ] CLAY
- [x] SAND some
- [x] ORGANIC
- [ ] SILT
- [ ] GRAVEL
- [ ] OTHER

EQUIPMENT USED FOR COLLECTION:
- [ ] GRAVITY CORER
- [x] TULIP BULB PLANTER
- [x] S.S. HAND SPOON
- [ ] ALUMINUM PAN
- [ ] PLASTIC SCOOP
- [ ] OTHER

DECONTAMINATION FLUIDS USED:
- [x] POTABLE WATER
- [ ] POTABLE WATER WITH HIGH PRESSURE
- [ ] OTHER

SAMPLE OBSERVATIONS: [ ] ODOR [ ] COLORED

AMBIENT AIR: 0.0 PPM

SAMPLE LOCATION: 0.0 PPM

pH: — UNITS

ANALYTICAL PARAMETERS

	METHOD NUMBER	PRESERVATION METHOD	VOLUME REQUIRED	SAMPLE COLLECTED
[ ] PP METALS (SPECIFIED BELOW)		4 DEG C		
[ ] AL	JS12	4 DEG C		
[ ] CA		4 DEG C		
[ ] NA		4 DEG C		
[x] CD		4 DEG C		
[x] CR		4 DEG C		
[x] HG	Y9	4 DEG C		
[x] PB	JD21	4 DEG C		
[ ] TCLP METALS (SPECIFIED BELOW)		4 DEG C		
[x] NIT	KF17	4 DEG C		
[x] SO4	KT07	4 DEG C		
[x] NH3N2	USEPA 350.2	4 DEG C		
[ ] TOC	USEPA CE-81-1	4 DEG C		
[ ] pH	SW846 METHOD 9045	4 DEG C		
[ ] * VOC	LM23	4 DEG C		
[ ] * BN/A	LM25	4 DEG C		
[ ] NG	LW27	4 DEG C		
[x] NAM	LN08	4 DEG C		
[ ] DNT	LW23	4 DEG C		

DC

EA

DC

SAMPLE BOTTLE ID NUMBERS

2005
2007
2006
2008
2009
2010
2011

NOTES (LOCATION SKETCH)

* THESE ARE DATACHEM METHODS. EA METHODS: VOC LM17, LM26
B/NA LM20

PP METALS (PRIORITY POLLUTANT): AG, AS, BE, CD, CR, CU, PB, HG, NI, SB, SE, TL, ZN.
JS12, B9, JD21, JD20, Y9.

TCLP METALS: CD, CR, HG, PB.
JS12, 40 CFR 261.24

DC: 3 bottles
EA: 1 bottle

SIGNATURE: NM/MM

RECEIVED BY: Nancy E. Rotea

E. C. JORDAN
FIELD DATA RECORD - SURFACE WATER

FIELD SAMPLING NO. SPW90C32 | WEATHER Sunny 75°

PROGRAM Q05 | SITE TYPE SURFACE WATER | FILE NAME CSO

PROJECT USATHAMA - BAAP | TO | JOB NUMBER 6298-07 | SAMPLING DATE 27 SEP 90

SITE ID BPW-90-03 | LOCATION ACTIVITY START: 1305 END: 1330

SURFACE WATER DATA

WATER DEPTH @ SAMPLE LOCATION: 15

DEPTH OF SAMPLE FROM TOP OF WATER: 12

EQUIPMENT USED FOR COLLECTION: [ ] NONE, GRAB INTO BOTTLE [ ] OTHER

TEMPERATURE: 12 DEG. C

pH..... 9.0. UNITS

SPEC. COND. 75 umhos

TYPE OF SURFACE WATER: [ ] STREAM [✓] POND/LAKE [ ] RIVER [ ] OTHER

DECONTAMINATION FLUIDS USED: [ ] NONE [✓] POTABLE WATER

SAMPLE LOCATION SKETCH BELOW: [✓] YES [ ] NO

AMBIENT AIR VOA — PPM | SAMPLE LOCATION AIR VOA — PPM

TEMPERATURE PROFILE

DEPTH OF MEASUREMENT	1 FT.	TEMPERATURE	18 DEG. C
DEPTH OF MEASUREMENT	7.5 FT.	TEMPERATURE	16 DEG. C
DEPTH OF MEASUREMENT	13 FT.	TEMPERATURE	12 DEG. C

(☒ IF REQUIRED AT THIS LOCATION) ANALYTICAL PARAMETER/METHOD	MATRIX	PRESERVATION METHOD	Bottle Size	SAMPLE COLLECTED	SAMPLE BOTTLE ID'S
[✓] CALCIUM	SW	HNO3 <2	500 ml	[ ]	/
[✓] ALUMINUM		HNO3 <2		[ ]	/
[✓] IRON		HNO3 <2		[ ]	/
[✓] LEAD		HNO3 <2		[✓]	7 /
[✓] MAGNESIUM		HNO3 <2		[ ]	/
[✓] SODIUM		HNO3 <2		[ ]	/
[✓] HARDNESS		HNO3 <2		[ ]	/
[ ] ~~CHLORIDE~~ DD		~~4 DEG. C~~ DD		[ ]	/
[✓] ALKALINITY		4 DEG. C	500 ml	[✓]	12 /
[✓] SULFATE, Chloride		4 DEG. C	125 ml	[✓]	8 /
[✓] NITRATE & NITRITE	SW	H2SO4	125 ml	[✓]	9 /

NOTES / SKETCH Was not given method #'s for analyses. Call Joanne Hale at (207) 775-5401 for them. Last digit of field sampling no. (2) designates that sample was taken near bottom.

BJS 10-08-89

SIGNATURE OF SAMPLER [signature]

ABB ENVIRONMENTAL SERVICES, INC

FIELD DATA RECORD - SEDIMENT

FIELD SAMPLING NUMBER: P9 1 ~~BB~~ 0 1 0 0 0

PROJECT: USATHAMA-BAAP

SITE TYPE: BUGR

SITE ID: BBS-91-01

JOB NUMBER: 6853-04

LOCATION ACTIVITY: START: 1235 END: 1240

PROGRAM: C

SAMPLING DATE: 9.22.91

FILE NAME: CSO

WEATHER: cloudy, ~50s breezy

SEDIMENT DATA

DEPTH OF SEDIMENT SAMPLE: 1-6 IN

TYPE OF SAMPLE COLLECTED: [x] DISCRETE [ ] COMPOSITE

TYPE OF SEDIMENT:
- [ ] CLAY
- [ ] SAND
- [x] ORGANIC
- [x] SILT
- [ ] GRAVEL
- [ ] OTHER

EQUIPMENT USED FOR COLLECTION:
- [ ] GRAVITY CORER
- [x] TULIP BULB PLANTER
- [ ] S.S. HAND SPOON
- [x] ALUMINUM PAN
- [ ] PLASTIC SCOOP
- [ ] OTHER

DECONTAMINATION FLUIDS USED
- [x] POTABLE WATER
- [ ] POTABLE WATER WITH HIGH PRESSURE
- [ ] OTHER

SAMPLE OBSERVATIONS
- [ ] ODOR
- [ ] COLORED dk brown
- [ ]

AMBIENT AIR: 0.0 PPM

SAMPLE LOCATION: 0.0 PPM

pH: — UNITS

ANALYTICAL PARAMETERS

	METHOD NUMBER	PRESERVATION METHOD	VOLUME REQUIRED	SAMPLE COLLECTED	SAMPLE BOTTLE ID NUMBERS
[x] PP METALS (SPECIFIED BELOW)		4 DEG C		[x]	553
[ ] AL	JS12	4 DEG C		[ ]	
[ ] CA		4 DEG C		[ ]	
[ ] NA		4 DEG C		[ ]	
[ ] CD		4 DEG C		[ ]	
[ ] CR		4 DEG C		[ ]	
[ ] HG	Y9	4 DEG C		[ ]	
[ ] PB	JD21	4 DEG C		[ ]	
[ ] TCLP METALS (SPECIFIED BELOW)		4 DEG C		[ ]	
[ ] NIT	KF17	4 DEG C		[ ]	
[ ] SO4	KT07	4 DEG C		[ ]	
[ ] NH3N2	USEPA 350.2	4 DEG C		[ ]	
[ ] TOC	USEPA CE-81-1	4 DEG C		[ ]	
[ ] pH	SW846 METHOD 9045	4 DEG C		[ ]	
*[x] VOC	LM23	4 DEG C		[x]	554 / 557
*[x] BN/A	LM25	4 DEG C		[x]	505
[ ] NG	LW27	4 DEG C		[ ]	
[ ] NAM	LN08	4 DEG C		[ ]	
[x] DNT	LW23	4 DEG C		[x]	555
[ ]				[ ]	
[ ]				[ ]	

DC

NOTES (LOCATION SKETCH)

* THESE ARE DATACHEM METHODS. EA METHODS: VOC LM17, LM26
B/NA LM20

PP METALS (PRIORITY POLLUTANT): AG, AS, BE, CD, CR, CU, PB, HG, NI, SB, SE, TL, ZN.
JS12, B9, JD21, JD20, Y9.

TCLP METALS: CD, CR, HG, PB.
JS12, 40 CFR 261.24

DC: 4 bottles

SIGNATURE: VM/MR

RECEIVED BY: Nancy E. Rofra

ABB ENVIRONMENTAL SERVICES, INC

D DATA RECORD – SEDIMENT

FIELD SAMPLING NUMBER: R9116000

PROJECT: USATHAMA-BAAP

SITE TYPE: DTCH

SAMPLING DATE: 9.17.91

SITE ID: RPS-91-16

JOB NUMBER: 6853-04

FILE NAME: CSO

LOCATION ACTIVITY: START: 1415 END: 1425

PROGRAM: C

WEATHER: cloudy, 60's windy

SEDIMENT DATA

DEPTH OF SEDIMENT SAMPLE: ____ IN

TYPE OF SAMPLE COLLECTED: [x] DISCRETE [ ] COMPOSITE

TYPE OF SEDIMENT:
- [ ] CLAY
- [ ] SAND
- [ ] ORGANIC
- [ ] SILT
- [ ] GRAVEL
- [ ] OTHER____

EQUIPMENT USED FOR COLLECTION:
- [x] GRAVITY CORER
- [x] TULIP BULB PLANTER
- [x] S.S. HAND SPOON
- [x] ALUMINUM PAN
- [ ] PLASTIC SCOOP
- [ ] OTHER____

DECONTAMINATION FLUIDS USED:
- [x] POTABLE WATER
- [ ] POTABLE WATER WITH HIGH PRESSURE
- [ ] OTHER____

SAMPLE OBSERVATIONS:
- [ ] ODOR____
- [ ] COLORED____

AMBIENT AIR: — PPM

SAMPLE LOCATION: — PPM

pH: — UNITS

ANALYTICAL PARAMETERS

	METHOD NUMBER	PRESERVATION METHOD	VOLUME REQUIRED	SAMPLE COLLECTED
[ ] PP METALS (SPECIFIED BELOW)		4 DEG C		
[x] AL	JS12	4 DEG C		
[x] CA	|	4 DEG C		
[x] NA	|	4 DEG C		
[x] CD	|	4 DEG C		
[x] CR	|	4 DEG C		
[x] HG	Y9	4 DEG C		
[x] PB	JD21	4 DEG C		
[ ] TCLP METALS (SPECIFIED BELOW)		4 DEG C		
[x] NIT	KF17	4 DEG C		
[x] O4	KT07	4 DEG C		
[x] H3N2	USEPA 350.2	4 DEG C		
[x] TOC	USEPA CE-81-1	4 DEG C		
[ ] pH	SW846 METHOD 9045	4 DEG C		
[x] VOC	LM23	4 DEG C	DC	
[x] BN/A	LM25	4 DEG C		
[x] NG	LW27	4 DEG C		
[x] RAM	LN08	4 DEG C		
[x] DNT	LW23	4 DEG C	EA	

label SAMPLE ~~BOTTLE~~ ID NUMBERS: 1651, 1652, 1653, 1654, 1655, 1656

NOTES

LOCATION SKETCH)

* THESE ARE DATACHEM METHODS. EA METHODS: VOC LM17, LM26
B/NA LM20

PP METALS (PRIORITY POLLUTANT): AG, AS, BE, CD, CR, CU, PB, HG, NI, SB, SE, TL, ZN.
JS12, B9, JD21, JD20, Y9.

TCLP METALS: CD, CR, HG, PB.
JS12, 40 CFR 261.24

DC = 3 bottles
EA = 1 bottle

SIGNATURE: VM/NR

RECEIVED BY: Nancy E. Rofia

ABB ENVIRONMENTAL SERVICES, INC

FIELD DATA RECORD – SEDIMENT

FIELD SAMPLING NUMBER: RPS191700 (19 over 18)

PROJECT: USATHAMA-BAAP

SITE ID: RPS-91-17

SITE TYPE: DTCH

JOB NUMBER: 6853-04

PROGRAM: C

LOCATION ACTIVITY START: 0825 END: 0835

SAMPLING DATE: 9.18.91 (9.17.91 MR)

FILE NAME: CSO

WEATHER: sunny, 50's windy

SEDIMENT DATA

DEPTH OF SEDIMENT SAMPLE: 0-4 IN

TYPE OF SAMPLE COLLECTED: ☑ DISCRETE ☐ COMPOSITE

TYPE OF SEDIMENT: ☐ CLAY ☑ SAND ☑ ORGANIC ☑ SILT ☐ GRAVEL ☐ OTHER

EQUIPMENT USED FOR COLLECTION: ☑ GRAVITY CORER ☑ TULIP BULB PLANTER ☑ S.S. HAND SPOON ☑ ALUMINUM PAN ☐ PLASTIC SCOOP ☐ OTHER

DECONTAMINATION FLUIDS USED: ☑ POTABLE WATER ☐ POTABLE WATER WITH HIGH PRESSURE ☐ OTHER

SAMPLE OBSERVATIONS: ☐ ODOR ☑ COLORED med brown ☑ moist

AMBIENT AIR: 0.0 PPM

SAMPLE LOCATION: 0.0 PPM

pH: — UNITS

ANALYTICAL PARAMETERS

	METHOD NUMBER	PRESERVATION METHOD	VOLUME REQUIRED	SAMPLE COLLECTED
☐ PP METALS (SPECIFIED BELOW)		4 DEG C		
☐ AL	JS12	4 DEG C		
☐ CA		4 DEG C		
☐ NA		4 DEG C		
☑ CD		4 DEG C		
☑ CR		4 DEG C		
☑ HG	Y9	4 DEG C		
☑ PB	JD21	4 DEG C		DC
☑ TCLP METALS (SPECIFIED BELOW)		4 DEG C		
☑ NIT	KF17	4 DEG C		
☑ SO4	KT07	4 DEG C		
☐ NH3N2	USEPA 350.2	4 DEG C		
☐ TOC	USEPA CE-81-1	4 DEG C		
☐ pH	SW846 METHOD 9045	4 DEG C		
* ☑ VOC	LM23	4 DEG C		(MR) EA
* ☑ BN/A	LM25	4 DEG C		DC
☑ NG	LW27	4 DEG C		
☑ NAM	LN08	4 DEG C		
☑ DNT	LW23	4 DEG C		

label SAMPLE ~~BOTTLE~~ ID NUMBERS: 1669, 1671, 1670, 1670, 1672, 1673, 1674, 1675

NOTES (LOCATION SKETCH)

* THESE ARE DATACHEM METHODS. EA METHODS: VOC LM17, LM26; B/NA LM20

PP METALS (PRIORITY POLLUTANT): AG, AS, BE, CD, CR, CU, PB, HG, NI, SB, SE, TL, ZN. JS12, B9, JD21, JD20, Y9.

TCLP METALS: CD, CR, HG, PB. JS12, 40 CFR 261.24

DC: 4 bottles

~~EA: 1 bottle~~ (MR)

SIGNATURE: VM/MR

RECEIVED BY: Nancy E. Rojas

ABB ENVIRONMENTAL SERVICES, INC

D DATA RECORD – SEDIMENT

FIELD SAMPLING NUMBER: R1918000

PROJECT: USATHAMA-BAAP

SITE ID: RPS-91-18

SITE TYPE: DTCH

JOB NUMBER: 6853-04

PROGRAM: C

SAMPLING DATE: 9.18.91

FILE NAME: CSO

WEATHER: Sunny, °50's windy

LOCATION ACTIVITY: START: 0840 END: 0850

SEDIMENT DATA

DEPTH OF SEDIMENT SAMPLE: 0-5 IN

TYPE OF SAMPLE COLLECTED: [X] DISCRETE [ ] COMPOSITE

TYPE OF SEDIMENT:
- [ ] CLAY
- [X] SAND
- [X] ORGANIC
- [X] SILT
- [ ] GRAVEL
- [ ] OTHER

EQUIPMENT USED FOR COLLECTION:
- [ ] GRAVITY CORER
- [X] TULIP BULB PLANTER
- [ ] S.S. HAND SPOON
- [X] ALUMINUM PAN
- [ ] PLASTIC SCOOP
- [ ] OTHER

DECONTAMINATION FLUIDS USED:
- [X] POTABLE WATER
- [ ] POTABLE WATER WITH HIGH PRESSURE
- [ ] OTHER

SAMPLE OBSERVATIONS: [ ] ODOR [ ] COLORED dk brown

AMBIENT AIR: 0.0 PPM

SAMPLE LOCATION: 0.0 PPM

pH: — UNITS

ANALYTICAL PARAMETERS

	METHOD NUMBER	PRESERVATION METHOD	VOLUME REQUIRED	SAMPLE COLLECTED
[ ] PP METALS (SPECIFIED BELOW)		4 DEG C		
[ ] AL	JS12	4 DEG C		
[ ] CA		4 DEG C		
[ ] NA		4 DEG C		
[X] CD		4 DEG C		
[X] CR		4 DEG C		
[X] HG	Y9	4 DEG C		
[X] PB	JD21	4 DEG C		
[X] TCLP METALS (SPECIFIED BELOW)		4 DEG C		
[ ] [illegible]T	KF17	4 DEG C		
[ ] [illegible]4	KT07	4 DEG C		
[ ] [illegible]3N2	USEPA 350.2	4 DEG C		
[ ] TOC	USEPA CE-81-1	4 DEG C		
[ ] pH	SW846 METHOD 9045	4 DEG C		
* [ ] VOC	LM23	4 DEG C		
* [X] BN/A	LM25	4 DEG C		
[X] NG	LW27	4 DEG C		
[X] NAM	LN08	4 DEG C		
[X] DNT	LW23	4 DEG C		

DC

~~EA~~ (NR)

DC

label SAMPLE ~~BOTTLE~~ ID NUMBERS

1690
1692
1691
1693
1694
1695
1696

NOTES (LOCATION SKETCH)

* THESE ARE DATACHEM METHODS. EA METHODS: VOC LM17, LM26
B/NA LM20

PP METALS (PRIORITY POLLUTANT): AG, AS, BE, CD, CR, CU, PB, HG, NI, SB, SE, TL, ZN.
JS12, B9, JD21, JD20, Y9.

TCLP METALS: CD, CR, HG, PB.
JS12, 40 CFR 261.24

DC: 4 bottles

~~EA: 1 bottle~~ (NR)

SIGNATURE: VM/MR

RECEIVED BY: Nancy E. Roka

ABB ENVIRONMENTAL SERVICES, INC

FIELD DATA RECORD - SEDIMENT

FIELD SAMPLING NUMBER: R9119000

PROJECT: USATHAMA-BAAP

SITE TYPE: DTCH

SITE ID: RPS-91-19

JOB NUMBER: 6853-04

PROGRAM: C

LOCATION ACTIVITY: START: 0855 END: 0905

SAMPLING DATE: 9.18.91

FILE NAME: CSO

WEATHER: sunny, 50's windy

SEDIMENT DATA

DEPTH OF SEDIMENT SAMPLE: 0-5 IN

TYPE OF SAMPLE COLLECTED: [x] DISCRETE [ ] COMPOSITE

TYPE OF SEDIMENT:
- [ ] CLAY
- [x] SAND
- [x] ORGANIC
- [x] SILT mostly
- [ ] GRAVEL
- [ ] OTHER

EQUIPMENT USED FOR COLLECTION:
- [ ] GRAVITY CORER
- [x] TULIP BULB PLANTER
- [ ] S.S. HAND SPOON
- [x] ALUMINUM PAN
- [ ] PLASTIC SCOOP
- [ ] OTHER

DECONTAMINATION FLUIDS USED
- [x] POTABLE WATER
- [ ] POTABLE WATER WITH HIGH PRESSURE
- [ ] OTHER

SAMPLE OBSERVATIONS
- [ ] ODOR
- [ ] COLORED
- [x] wet

AMBIENT AIR: 0.0 PPM

SAMPLE LOCATION: 0.0 PPM

pH: — UNITS

ANALYTICAL PARAMETERS

	METHOD NUMBER	PRESERVATION METHOD	VOLUME REQUIRED	SAMPLE COLLECTED	SAMPLE ~~BOTTLE~~ label ID NUMBERS
[ ] PP METALS (SPECIFIED BELOW)		4 DEG C		[ ]	
[ ] AL	JS12	4 DEG C		[ ]	
[ ] CA		4 DEG C		[ ]	
[ ] NA		4 DEG C		[ ]	
[x] CD		4 DEG C		[x]	1711
[x] CR		4 DEG C		[x]	
[x] HG	Y9	4 DEG C		[x]	
[x] PB	JD21	4 DEG C		[x]	
[x] TCLP METALS (SPECIFIED BELOW)		4 DEG C		[x]	1713
[x] NIT	KF17	4 DEG C		[x]	1712
[x] SO4	KT07	4 DEG C		[x]	
[ ] NH3N2	USEPA 350.2	4 DEG C		[ ]	
[ ] TOC	USEPA CE-81-1	4 DEG C		[ ]	
[ ] pH	SW846 METHOD 9045	4 DEG C		[ ]	
* [ ] VOC	LM23	4 DEG C		[ ]	
* [x] BN/A	LM25	4 DEG C		[x]	1714
[x] NG	LW27	4 DEG C		[x]	1715
[x] NAM	LN08	4 DEG C		[x]	1716
[x] DNT	LW23	4 DEG C		[x]	1717
[ ]				[ ]	
[ ]				[ ]	

DC

DC

NOTES (LOCATION SKETCH)

* THESE ARE DATACHEM METHODS. EA METHODS: VOC LM17, LM26
B/NA LM20

PP METALS (PRIORITY POLLUTANT): AG, AS, BE, CD, CR, CU, PB, HG, NI, SB, SE, TL, ZN.
JS12, B9, JD21, JD20, Y9.

TCLP METALS: CD, CR, HG, PB.
JS12, 40 CFR 261.24

DC: 4 bottles

~~EA: 1 bottle~~ (MR)

SIGNATURE: VM/MR

RECEIVED BY: Nancy E. Roka

ABB ENVIRONMENTAL SERVICES, INC

DATA RECORD – SEDIMENT

FIELD SAMPLING NUMBER: R912000000

PROJECT: USATHAMA-BAAP

SITE TYPE: DTCH

SITE ID: RPS-91-20

JOB NUMBER: 6853-04

PROGRAM: C

LOCATION ACTIVITY: START: 0925 END: 0915

SAMPLING DATE: 9.18.91

FILE NAME: CSO

WEATHER: Sunny, °50's windy

SEDIMENT DATA

DEPTH OF SEDIMENT SAMPLE: 0-6 IN

TYPE OF SAMPLE COLLECTED: [x] DISCRETE [ ] COMPOSITE

TYPE OF SEDIMENT: [x] CLAY [x] SAND [x] ORGANIC [ ] SILT [ ] GRAVEL [ ] OTHER

EQUIPMENT USED FOR COLLECTION: [x] GRAVITY CORER [ ] TULIP BULB PLANTER [x] S.S. HAND SPOON [x] ALUMINUM PAN [ ] PLASTIC SCOOP [ ] OTHER

DECONTAMINATION FLUIDS USED: [x] POTABLE WATER [ ] POTABLE WATER WITH HIGH PRESSURE [ ] OTHER

SAMPLE OBSERVATIONS: [ ] ODOR [ ] COLORED

AMBIENT AIR: 0.0 PPM

SAMPLE LOCATION: 0.0 PPM

pH: — UNITS

ANALYTICAL PARAMETERS

	METHOD NUMBER	PRESERVATION METHOD	VOLUME REQUIRED	SAMPLE COLLECTED
[ ] PP METALS (SPECIFIED BELOW)		4 DEG C		
[x] AL	JS12	4 DEG C		
[x] CA	|	4 DEG C		
[x] NA	|	4 DEG C		
[x] CD	|	4 DEG C		
[x] CR	|	4 DEG C		
[x] HG	Y9	4 DEG C		
[x] PB	JD21	4 DEG C		
[x] TCLP METALS (SPECIFIED BELOW)		4 DEG C		
[x] MIT	KF17	4 DEG C		
[x]	KT07	4 DEG C		
[x] 2	USEPA 350.2	4 DEG C		
[x]	USEPA CE-81-1	4 DEG C		
[x] pH	SW846 METHOD 9045	4 DEG C		
[x] VOC	LM23	4 DEG C		
[x] BN/A	LM25	4 DEG C		
[x] NG	LW27	4 DEG C		
[x] NAM	LN08	4 DEG C		
[x] DNT	LW23	4 DEG C		

DC

(MR) EA

DC

label SAMPLE ~~BOTTLE~~ ID NUMBERS

1732

1734

1733

1735

1736

1737

1738

NOTES (LOCATION SKETCH)

* THESE ARE DATACHEM METHODS. EA METHODS: VOC LM17, LM26
B/NA LM20

PP METALS (PRIORITY POLLUTANT): AG, AS, BE, CD, CR, CU, PB, HG, NI, SB, SE, TL, ZN. JS12, 89, JD21, JD20, Y9.

TCLP METALS: CD, CR, HG, PB. JS12, 40 CFR 261.24

DC: 4 bottles

~~EA: 1 bottles~~ (MR)

SIGNATURE: VM/MR

RECEIVED BY: Nancy E. Roña

ABB ENVIRONMENTAL SERVICES, INC

FIELD DATA RECORD – SEDIMENT

FIELD SAMPLING NUMBER: R91210000

PROJECT: USATHAMA-BAAP

SITE ID: RPS-91-21

SITE TYPE: DITCH

JOB NUMBER: 6853-04

PROGRAM: C

LOCATION ACTIVITY: START: 0920 END: 0930

SAMPLING DATE: 9.18.91

FILE NAME: CSO

WEATHER: prt. Sunny, °50's windy

SEDIMENT DATA

DEPTH OF SEDIMENT SAMPLE: 0-8 IN

TYPE OF SAMPLE COLLECTED: [x] DISCRETE [ ] COMPOSITE

TYPE OF SEDIMENT:
- [x] CLAY
- [x] SAND
- [x] ORGANIC
- [x] SILT
- [ ] GRAVEL
- [ ] OTHER

EQUIPMENT USED FOR COLLECTION:
- [ ] GRAVITY CORER
- [ ] TULIP BULB PLANTER
- [x] S.S. HAND SPOON
- [x] ALUMINUM PAN
- [ ] PLASTIC SCOOP
- [ ] OTHER

DECONTAMINATION FLUIDS USED:
- [x] POTABLE WATER
- [ ] POTABLE WATER WITH HIGH PRESSURE
- [ ] OTHER

SAMPLE OBSERVATIONS: [ ] ODOR [x] COLORED light brown

AMBIENT AIR: 0.0 PPM

SAMPLE LOCATION: 0.0 PPM

pH: — UNITS

ANALYTICAL PARAMETERS

	METHOD NUMBER	PRESERVATION METHOD	VOLUME REQUIRED	SAMPLE COLLECTED
[ ] PP METALS (SPECIFIED BELOW)		4 DEG C		
[ ] AL	JS12	4 DEG C		
[ ] CA		4 DEG C		
[ ] NA		4 DEG C		
[x] CD		4 DEG C		
[x] CR		4 DEG C		
[x] MG	Y9	4 DEG C		
[x] PB	JD21	4 DEG C		
[x] TCLP METALS (SPECIFIED BELOW)		4 DEG C		
[x] NIT	KF17	4 DEG C		
[ ] SO4	KT07	4 DEG C		
[ ] NH3N2	USEPA 350.2	4 DEG C		
[ ] TOC	USEPA CE-81-1	4 DEG C		
[ ] pH	SW846 METHOD 9045	4 DEG C		
[*] VOC	LM23	4 DEG C		
[*] BN/A	LM25	4 DEG C		
[x] NG	LW27	4 DEG C		
[x] NAM	LN08	4 DEG C		
[x] DNT	LW23	4 DEG C		

DC

NR ~~EA~~

DC

label SAMPLE ~~BOTTLE~~ ID NUMBERS

1753
1755
1754
1756
1757
1758
1759

NOTES (LOCATION SKETCH)

* THESE ARE DATACHEM METHODS. EA METHODS: VOC LM17, LM26
B/NA LM20

PP METALS (PRIORITY POLLUTANT): AG, AS, BE, CD, CR, CU, PB, HG, NI, SB, SE, TL, ZN.
JS12, B9, JD21, JD20, Y9.

TCLP METALS: CD, CR, HG, PB.
JS12, 40 CFR 261.24

DC: ~~4~~ 3 bottles

~~EA: 1 bottle~~ (NR)

SIGNATURE: VM/NR

RECEIVED BY: Nancy E. Rotta

ABB ENVIRONMENTAL SERVICES, INC

FIELD DATA RECORD – SEDIMENT

FIELD SAMPLING NUMBER: P9102000

PROJECT: USATHAMA-BAAP

SITE ID: PBS-91-02

SITE TYPE: BUGR

JOB NUMBER: 6853-04

PROGRAM: C

SAMPLING DATE: 9 22 91

FILE NAME: CSO

WEATHER: cloudy, 80s breezy

LOCATION ACTIVITY: START: 1250 END: 1255

SEDIMENT DATA

DEPTH OF SEDIMENT SAMPLE: 1-5 IN

TYPE OF SAMPLE COLLECTED: [x] DISCRETE [ ] COMPOSITE

TYPE OF SEDIMENT:
- [x] CLAY
- [x] SAND trace
- [x] ORGANIC
- [ ] SILT
- [ ] GRAVEL
- [ ] OTHER

EQUIPMENT USED FOR COLLECTION:
- [x] GRAVITY CORER
- [x] TULIP BULB PLANTER
- [x] S.S. HAND SPOON
- [x] ALUMINUM PAN
- [ ] PLASTIC SCOOP
- [ ] OTHER

DECONTAMINATION FLUIDS USED:
- [x] POTABLE WATER
- [ ] POTABLE WATER WITH HIGH PRESSURE
- [ ] OTHER

SAMPLE OBSERVATIONS: [ ] ODOR [ ] COLORED dark brown

AMBIENT AIR: 0.0 PPM

SAMPLE LOCATION: 0.0 PPM

pH: — UNITS

ANALYTICAL PARAMETERS

	METHOD NUMBER	PRESERVATION METHOD	VOLUME REQUIRED	SAMPLE COLLECTED
[x] PP METALS (SPECIFIED BELOW)		4 DEG C		[x]
[ ] AL	JS12	4 DEG C		[ ]
[ ] CA	|	4 DEG C		[ ]
[ ] NA	|	4 DEG C		[ ]
[ ] CD	|	4 DEG C		[ ]
[ ] CR	|	4 DEG C		[ ]
[ ] HG	Y9	4 DEG C		[ ]
[ ] PB	JD21	4 DEG C		[ ]
[ ] TCLP METALS (SPECIFIED BELOW)		4 DEG C		[ ]
[ ] NIT	KF17	4 DEG C	DC	[ ]
[ ] SO4	KT07	4 DEG C		[ ]
[ ] NH3N2	USEPA 350.2	4 DEG C		[ ]
[ ] TOC	USEPA CE-81-1	4 DEG C		[ ]
[ ] pH	SW846 METHOD 9045	4 DEG C		[ ]
[x] VOC	LM23	4 DEG C		[x]
[ ] BN/A	LM25	4 DEG C		[ ]
[ ] NG	LW27	4 DEG C		[ ]
[ ] MAM	LN08	4 DEG C		[ ]
[x] DNT	LW23	4 DEG C		[x]

SAMPLE BOTTLE ID NUMBERS: 562, 563, 566, 564

NOTES (LOCATION SKETCH)

* THESE ARE DATACHEM METHODS. EA METHODS: VOC LM17, LM26; B/NA LM20

PP METALS (PRIORITY POLLUTANT): AG, AS, BE, CD, CR, CU, PB, HG, NI, SB, SE, TL, ZN. JS12, B9, JD21, JD20, Y9.

TCLP METALS: CD, CR, HG, PB. JS12, 40 CFR 261.24

DC: 4 bottles

SIGNATURE: VM/MR

RECEIVED BY: Nancy E. Rotta

ABB ENVIRONMENTAL SERVICES, INC

FIELD DATA RECORD – SEDIMENT

FIELD SAMPLING NUMBER: P91030000

PROJECT: USATHAMA-BAAP

SITE ID: PBS-91-03

LOCATION ACTIVITY START: 1300 END: 1305

SITE TYPE: BUGR

JOB NUMBER: 6853-04

PROGRAM: C

SAMPLING DATE: 9.22.91

FILE NAME: CSO

WEATHER: cloudy, °50's too breezy

SEDIMENT DATA

DEPTH OF SEDIMENT SAMPLE: 1-6 IN

TYPE OF SAMPLE COLLECTED: [x] DISCRETE [ ] COMPOSITE

TYPE OF SEDIMENT:
- [ ] CLAY
- [ ] SAND
- [x] ORGANIC
- [x] SILT
- [ ] GRAVEL
- [ ] OTHER

EQUIPMENT USED FOR COLLECTION:
- [ ] GRAVITY CORER
- [x] TULIP BULB PLANTER
- [ ] S.S. HAND SPOON
- [x] ALUMINUM PAN
- [ ] PLASTIC SCOOP
- [ ] OTHER

DECONTAMINATION FLUIDS USED:
- [x] POTABLE WATER
- [ ] POTABLE WATER WITH HIGH PRESSURE
- [ ] OTHER

SAMPLE OBSERVATIONS: [ ] ODOR [ ] COLORED

AMBIENT AIR: 0.0 PPM

SAMPLE LOCATION: 0.0 PPM

pH: — UNITS

ANALYTICAL PARAMETERS

		METHOD NUMBER	PRESERVATION METHOD	VOLUME REQUIRED	SAMPLE COLLECTED
[x]	PP METALS (SPECIFIED BELOW)		4 DEG C		
[ ]	AL	JS12	4 DEG C		
[ ]	CA		4 DEG C		
[ ]	NA		4 DEG C		
[ ]	CD		4 DEG C		
[ ]	CR		4 DEG C		
[ ]	HG	Y9	4 DEG C		
[ ]	PB	JD21	4 DEG C		
[x]	TCLP METALS (SPECIFIED BELOW)		4 DEG C	DC	
[ ]	NIT	KF17	4 DEG C		
[ ]	SO4	KT07	4 DEG C		
[ ]	NH3N2	USEPA 350.2	4 DEG C		
[ ]	TOC	USEPA CE-81-1	4 DEG C		
[ ]	pH	SW846 METHOD 9045	4 DEG C		
*[x]	VOC	LM23	4 DEG C		
*[ ]	BN/A	LM25	4 DEG C		
[ ]	NG	LW27	4 DEG C		
[ ]	NAM	LN08	4 DEG C		
[x]	DNT	LW23	4 DEG C		

SAMPLE BOTTLE ID NUMBERS: 1, 4, 7, 8, 10

NOTES (LOCATION SKETCH)

* THESE ARE DATACHEM METHODS. EA METHODS: VOC LM17, LM26; B/NA LM20

PP METALS (PRIORITY POLLUTANT): AG, AS, BE, CD, CR, CU, PB, HG, NI, SB, SE, TL, ZN. JS12, B9, JD21, JD20, Y9.

TCLP METALS: CD, CR, HG, PB. JS12, 40 CFR 261.24

DC: 4 bottles

SIGNATURE: VM/NR

RECEIVED BY: Nancy E. Rotta

BB ENVIRONMENTAL SERVICES, INC

FIELD DATA RECORD – SEDIMENT

FIELD SAMPLING NUMBER: P91040000

PROJECT: USATHAMA-BAAP

SITE ID: PBS-91-04

LOCATION ACTIVITY: START: 1310 END: 1315

SITE TYPE: BUGR

JOB NUMBER: 6853-04

PROGRAM: C

SAMPLING DATE: 9.22.91

FILE NAME: CSO

WEATHER: Cloudy, °50's breezy

SEDIMENT DATA

DEPTH OF SEDIMENT SAMPLE: 1-6 IN

TYPE OF SAMPLE COLLECTED: [x] DISCRETE [ ] COMPOSITE

TYPE OF SEDIMENT:
- [x] CLAY
- [x] SAND some
- [x] ORGANIC
- [ ] SILT
- [ ] GRAVEL
- [ ] OTHER

EQUIPMENT USED FOR COLLECTION:
- [x] GRAVITY CORER
- [x] TULIP BULB PLANTER
- [x] S.S. HAND SPOON
- [x] ALUMINUM PAN
- [ ] PLASTIC SCOOP
- [ ] OTHER

DECONTAMINATION FLUIDS USED:
- [x] POTABLE WATER
- [ ] POTABLE WATER WITH HIGH PRESSURE
- [ ] OTHER

SAMPLE OBSERVATIONS: [ ] ODOR [ ] COLORED

AMBIENT AIR: 0.0 PPM

SAMPLE LOCATION: 0.0 PPM

pH: — UNITS

ANALYTICAL PARAMETERS

	METHOD NUMBER	PRESERVATION METHOD	VOLUME REQUIRED	SAMPLE COLLECTED
[x] PP METALS (SPECIFIED BELOW)		4 DEG C		
[ ] AL	JS12	4 DEG C		
[ ] CA		4 DEG C		
[ ] NA		4 DEG C		
[ ] CD		4 DEG C		
[ ] CR		4 DEG C		
[ ] HG	Y9	4 DEG C		
[ ] PB	JD21	4 DEG C		
[ ] TCLP METALS (SPECIFIED BELOW)		4 DEG C		
[ ] NIT	KF17	4 DEG C		
[ ] SO4	KT07	4 DEG C		
[ ] NH3N2	USEPA 350.2	4 DEG C		
[ ] TOC	USEPA CE-81-1	4 DEG C		
[ ] pH	SW846 METHOD 9045	4 DEG C		
[x] VOC	LM23	4 DEG C	DC	[x]
[ ] BN/A	LM25	4 DEG C		
[ ] NG	LW27	4 DEG C		
[ ] NAM	LN08	4 DEG C		
[x] DNT	LW23	4 DEG C		[x]

SAMPLE BOTTLE ID NUMBERS: 571, 572, 575, 575

NOTES (LOCATION SKETCH)

* THESE ARE DATACHEM METHODS. EA METHODS: VOC LM17, LM26; B/NA LM20

PP METALS (PRIORITY POLLUTANT): AG, AS, BE, CD, CR, CU, PB, HG, NI, SB, SE, TL, ZN. JS12, B9, JD21, JD20, Y9.

TCLP METALS: CD, CR, HG, PB. JS12, 40 CFR 261.24

DC: 4 bottles

SIGNATURE: VM / NK

RECEIVED BY: VNancy E. Rotka

ABB ENVIRONMENTAL SERVICES, INC

FIELD DATA RECORD – SEDIMENT

FIELD SAMPLING NUMBER: F91050006

PROJECT: USATHAMA-BAAP

SITE ID: PBS-91-05

SITE TYPE: BUGR

JOB NUMBER: 6853-04

PROGRAM: C

SAMPLING DATE: 9.22.91

FILE NAME: CSO

WEATHER: cloudy, 50s breezy

LOCATION ACTIVITY: START: 1325 END: 1330

SEDIMENT DATA

DEPTH OF SEDIMENT SAMPLE: 1-5 IN

TYPE OF SAMPLE COLLECTED: [x] DISCRETE [ ] COMPOSITE

TYPE OF SEDIMENT:
- [ ] CLAY
- [x] SAND
- [ ] ORGANIC
- [ ] SILT
- [x] GRAVEL
- [x] OTHER fill/debris nail/pottery

EQUIPMENT USED FOR COLLECTION:
- [ ] GRAVITY CORER
- [x] TULIP BULB PLANTER
- [ ] S.S. HAND SPOON
- [x] ALUMINUM PAN
- [ ] PLASTIC SCOOP
- [ ] OTHER

DECONTAMINATION FLUIDS USED
- [x] POTABLE WATER
- [ ] POTABLE WATER WITH HIGH PRESSURE
- [ ] OTHER

SAMPLE OBSERVATIONS
- [ ] ODOR
- [ ] COLORED

AMBIENT AIR: 0.0 PPM

SAMPLE LOCATION: 0.0 PPM

pH: — UNITS

ANALYTICAL PARAMETERS

	METHOD NUMBER	PRESERVATION METHOD	VOLUME REQUIRED	SAMPLE COLLECTED
[x] PP METALS (SPECIFIED BELOW)		4 DEG C		
[ ] AL	JS12	4 DEG C		
[ ] CA		4 DEG C		
[ ] NA		4 DEG C		
[ ] CD		4 DEG C		
[ ] CR		4 DEG C		
[ ] HG	Y9	4 DEG C		
[ ] PB	JD21	4 DEG C		
[ ] TCLP METALS (SPECIFIED BELOW)		4 DEG C		
[ ] NIT	KF17	4 DEG C		
[ ] SO4	KT07	4 DEG C		
[ ] NH3N2	USEPA 350.2	4 DEG C		
[ ] TOC	USEPA CE-81-1	4 DEG C		
[ ] pH	SW846 METHOD 9045	4 DEG C		
*[x] VOC	LM23	4 DEG C		[x]
*[ ] BN/A	LM25	4 DEG C		
[ ] NG	LW27	4 DEG C		
[ ] NAM	LN08	4 DEG C		
[x] DNT	LW23	4 DEG C		[x]
[ ]				
[ ]				

DC

SAMPLE BOTTLE ID NUMBERS: 583; 584 587; 585

NOTES (LOCATION SKETCH)

* THESE ARE DATACHEM METHODS. EA METHODS: VOC LM17, LM26; B/NA LM20

PP METALS (PRIORITY POLLUTANT): AG, AS, BE, CD, CR, CU, PB, HG, NI, SB, SE, TL, ZN. JS12, B9, JD21, JD20, Y9.

TCLP METALS: CD, CR, HG, PB. JS12, 40 CFR 261.24

DC: 4 bottles

SIGNATURE: VM/MR

RECEIVED BY: Nancy E. Rotta

BB ENVIRONMENTAL SERVICES, INC

FIELD DATA RECORD - SEDIMENT

FIELD SAMPLING NUMBER: P91060000

PROJECT: USATHAMA-BAAP

SITE ID: PBS-9i-06

LOCATION ACTIVITY: START: 1340 END: 1345

SITE TYPE: BUGR

JOB NUMBER: 6853-04

PROGRAM: C

SAMPLING DATE: 9.22.91

FILE NAME: CSO

WEATHER: cloudy, 90's breezy

SEDIMENT DATA

DEPTH OF SEDIMENT SAMPLE: 1-3 IN

TYPE OF SAMPLE COLLECTED: [x] DISCRETE [ ] COMPOSITE

TYPE OF SEDIMENT:
- [ ] CLAY
- [x] SAND
- [ ] ORGANIC
- [ ] SILT
- [x] GRAVEL
- [x] OTHER rocky

EQUIPMENT USED FOR COLLECTION:
- [ ] GRAVITY CORER
- [x] TULIP BULB PLANTER
- [x] S.S. HAND SPOON
- [x] ALUMINUM PAN
- [ ] PLASTIC SCOOP
- [ ] OTHER

DECONTAMINATION FLUIDS USED:
- [x] POTABLE WATER
- [ ] POTABLE WATER WITH HIGH PRESSURE
- [ ] OTHER

SAMPLE OBSERVATIONS: [ ] ODOR [ ] COLORED

AMBIENT AIR: 0.0 PPM

SAMPLE LOCATION: 0.3 PPM

pH: ~ UNITS

ANALYTICAL PARAMETERS

	METHOD NUMBER	PRESERVATION METHOD	VOLUME REQUIRED	SAMPLE COLLECTED
[x] PP METALS (SPECIFIED BELOW)		4 DEG C		
[ ] AL	JS12	4 DEG C		
[ ] CA		4 DEG C		
[ ] NA		4 DEG C		
[ ] CD		4 DEG C		
[ ] CR		4 DEG C		
[ ] HG	Y9	4 DEG C		
[ ] PB	JD21	4 DEG C		
[ ] TCLP METALS (SPECIFIED BELOW)		4 DEG C		
[ ] NIT	KF17	4 DEG C		
[ ] SO4	KT07	4 DEG C		
[ ] NH3N2	USEPA 350.2	4 DEG C		
[ ] TOC	USEPA CE-81-1	4 DEG C		
[ ] pH	SW846 METHOD 9045	4 DEG C		
[x] * VOC	LM23	4 DEG C	DC	13, 16, 19, 20, 22
[ ] * BN/A	LM25	4 DEG C		
[ ] NG	LW27	4 DEG C		
[ ] NAM	LN08	4 DEG C		
[x] DNT	LW23	4 DEG C		

SAMPLE BOTTLE ID NUMBERS: 13, 16, 19, 20, 22

NOTES (LOCATION SKETCH)

* THESE ARE DATACHEM METHODS. EA METHODS: VOC LM17, LM26
B/NA LM20

PP METALS (PRIORITY POLLUTANT): AG, AS, BE, CD, CR, CU, PB, HG, NI, SB, SE, TL, ZN.
JS12, B9, JD21, JD20, Y9.

TCLP METALS: CD, CR, HG, PB.
JS12, 40 CFR 261.24

DC: 4 bottles

SIGNATURE: VM/NR

RECEIVED BY: Nancy E. Rapa

ABB ENVIRONMENTAL SERVICES, INC

FIELD DATA RECORD – SEDIMENT

FIELD SAMPLING NUMBER: PA107000

PROJECT: USATHAMA-BAAP

SITE ID: PBS-91-07

SITE TYPE: BUGR

JOB NUMBER: 6853-04

PROGRAM: C

LOCATION ACTIVITY: START: 1350 END: 1355

SAMPLING DATE: 9 22.91

FILE NAME: CSO

WEATHER: cloudy, 80's breezy

SEDIMENT DATA

DEPTH OF SEDIMENT SAMPLE: 1-3 IN

TYPE OF SAMPLE COLLECTED: [x] DISCRETE [ ] COMPOSITE

TYPE OF SEDIMENT:
- [ ] CLAY
- [x] SAND
- [x] ORGANIC
- [ ] SILT
- [x] GRAVEL
- [x] OTHER rocky

EQUIPMENT USED FOR COLLECTION:
- [ ] GRAVITY CORER
- [x] TULIP BULB PLANTER
- [x] S.S. HAND SPOON
- [x] ALUMINUM PAN
- [ ] PLASTIC SCOOP
- [ ] OTHER

DECONTAMINATION FLUIDS USED:
- [x] POTABLE WATER
- [ ] POTABLE WATER WITH HIGH PRESSURE
- [ ] OTHER

SAMPLE OBSERVATIONS:
- [ ] ODOR
- [ ] COLORED

AMBIENT AIR: 0.0 PPM

SAMPLE LOCATION: 0.0 PPM

pH: — UNITS

ANALYTICAL PARAMETERS

		METHOD NUMBER	PRESERVATION METHOD	VOLUME REQUIRED	SAMPLE COLLECTED
[x]	PP METALS (SPECIFIED BELOW)		4 DEG C		[x]
[ ]	AL	JS12	4 DEG C		[ ]
[ ]	CA		4 DEG C		[ ]
[ ]	NA		4 DEG C		[ ]
[ ]	CD		4 DEG C		[ ]
[ ]	CR		4 DEG C		[ ]
[ ]	HG	Y9	4 DEG C		[ ]
[ ]	PB	JD21	4 DEG C		[ ]
[ ]	TCLP METALS (SPECIFIED BELOW)		4 DEG C	DC	[ ]
[ ]	NIT	KF17	4 DEG C		[ ]
[ ]	SO4	KT07	4 DEG C		[ ]
[ ]	NH3N2	USEPA 350.2	4 DEG C		[ ]
[ ]	TOC	USEPA CE-81-1	4 DEG C		[ ]
[ ]	pH	SW846 METHOD 9045	4 DEG C		[ ]
*[x]	VOC	LM23	4 DEG C		[x]
*[ ]	BN/A	LM25	4 DEG C		[ ]
[ ]	NG	LW27	4 DEG C		[ ]
[ ]	NAM	LN08	4 DEG C		[ ]
[x]	DNT	LW23	4 DEG C		[x]
[ ]					[ ]

label

SAMPLE ~~CODE~~ ID NUMBERS

589

590 593

591

NOTES (LOCATION SKETCH)

* THESE ARE DATACHEM METHODS. EA METHODS: VOC LM17, LM26
B/NA LM20

PP METALS (PRIORITY POLLUTANT): AG, AS, BE, CD, CR, CU, PB, HG, NI, SB, SE, TL, ZN.
JS12, B9, JD21, JD20, Y9.

TCLP METALS: CD, CR, HG, PB.
JS12, 40 CFR 261.24

DC: 4 bottles

SIGNATURE: VM/MR

RECEIVED BY: Nancy E. Roka

BB ENVIRONMENTAL SERVICES, INC

FIELD DATA RECORD – SEDIMENT

FIELD SAMPLING NUMBER: F9108008

PROJECT: USATHAMA-BAAP

SITE ID: PBS-91-08

SITE TYPE: BUGR

JOB NUMBER: 6853-04

PROGRAM: C

SAMPLING DATE: 9.22.91

FILE NAME: CSO

WEATHER: cloudy, 50's breezy

LOCATION ACTIVITY: START: (MP) 1400 END: 1405

SEDIMENT DATA

DEPTH OF SEDIMENT SAMPLE: 1-4 IN

TYPE OF SAMPLE COLLECTED: [x] DISCRETE [ ] COMPOSITE

TYPE OF SEDIMENT:
- [ ] CLAY
- [x] SAND
- [x] ORGANIC
- [x] SILT
- [ ] GRAVEL
- [ ] OTHER rocky

EQUIPMENT USED FOR COLLECTION:
- [x] GRAVITY CORER
- [x] TULIP BULB PLANTER
- [ ] S.S. HAND SPOON
- [x] ALUMINUM PAN
- [ ] PLASTIC SCOOP
- [ ] OTHER

DECONTAMINATION FLUIDS USED:
- [x] POTABLE WATER
- [ ] POTABLE WATER WITH HIGH PRESSURE
- [ ] OTHER

SAMPLE OBSERVATIONS:
- [ ] ODOR
- [ ] COLORED
- [x]

AMBIENT AIR: 0.0 PPM

SAMPLE LOCATION: 0.0 PPM

pH: — UNITS

ANALYTICAL PARAMETERS

	METHOD NUMBER	PRESERVATION METHOD	VOLUME REQUIRED	SAMPLE COLLECTED
[x] PP METALS (SPECIFIED BELOW)		4 DEG C		
[ ] AL	JS12	4 DEG C		
[ ] CA		4 DEG C		
[ ] NA		4 DEG C		
[ ] CD		4 DEG C		
[ ] CR		4 DEG C		
[ ] HG	Y9	4 DEG C		
[ ] PB	JD21	4 DEG C		
[ ] TCLP METALS (SPECIFIED BELOW)		4 DEG C		
[ ] NIT	KF17	4 DEG C		
[ ] SO4	KT07	4 DEG C		
[ ] NH3N2	USEPA 350.2	4 DEG C		
[ ] TOC	USEPA CE-81-1	4 DEG C		
[ ] PH	SW846 METHOD 9045	4 DEG C		
[x] VOC	LM23	4 DEG C	DC	[x]
[ ] BN/A	LM25	4 DEG C		
[ ] NG	LW27	4 DEG C		
[ ] NAM	LN08	4 DEG C		
[x] DNT	LW23	4 DEG C		[x]

SAMPLE BOTTLE ID NUMBERS: 598, 599, 600, 602

NOTES (LOCATION SKETCH)

* THESE ARE DATACHEM METHODS. EA METHODS: VOC LM17, LM26; B/NA LM20

PP METALS (PRIORITY POLLUTANT): AG, AS, BE, CD, CR, CU, PB, HG, NI, SB, SE, TL, ZN. JS12, B9, JD21, JD20, Y9.

TCLP METALS: CD, CR, HG, PB. JS12, 40 CFR 261.24

DC: 4 bottles

SIGNATURE: VM/MR

RECEIVED BY: Nancy E. Rofka

ABB ENVIRONMENTAL SERVICES, INC

FIELD DATA RECORD – SEDIMENT

FIELD SAMPLING NUMBER: F91090000

PROJECT: USATHAMA-BAAP

SITE ID: PBS-91-09

SITE TYPE: BUGR

JOB NUMBER: 6853-04

PROGRAM: C

SAMPLING DATE: 9.22.91

FILE NAME: CSO

WEATHER: cloudy, ~50s breezy

LOCATION ACTIVITY: START: 1415 END: 1420

SEDIMENT DATA

DEPTH OF SEDIMENT SAMPLE: 1-5 IN

TYPE OF SAMPLE COLLECTED: [x] DISCRETE [ ] COMPOSITE

TYPE OF SEDIMENT:
- [ ] CLAY
- [x] SAND some
- [ ] ORGANIC
- [x] SILT
- [ ] GRAVEL
- [ ] OTHER

EQUIPMENT USED FOR COLLECTION:
- [x] GRAVITY CORER
- [x] TULIP BULB PLANTER
- [ ] S.S. HAND SPOON
- [x] ALUMINUM PAN
- [ ] PLASTIC SCOOP
- [ ] OTHER

DECONTAMINATION FLUIDS USED:
- [x] POTABLE WATER
- [ ] POTABLE WATER WITH HIGH PRESSURE
- [ ] OTHER

SAMPLE OBSERVATIONS: [ ] ODOR [ ] COLORED

AMBIENT AIR: 0.0 PPM

SAMPLE LOCATION: 0.0 PPM

pH: — UNITS

ANALYTICAL PARAMETERS

		METHOD NUMBER	PRESERVATION METHOD	VOLUME REQUIRED	SAMPLE COLLECTED	SAMPLE BOTTLE ID NUMBERS
[x]	PP METALS (SPECIFIED BELOW)		4 DEG C		[x]	607
[ ]	AL	JS12	4 DEG C		[ ]	
[ ]	CA		4 DEG C		[ ]	
[ ]	NA		4 DEG C		[ ]	
[ ]	CD		4 DEG C		[ ]	
[ ]	CR		4 DEG C		[ ]	
[ ]	HG	Y9	4 DEG C		[ ]	
[ ]	PB	JD21	4 DEG C		[ ]	
[ ]	TCLP METALS (SPECIFIED BELOW)		4 DEG C		[ ]	
[ ]	NIT	KF17	4 DEG C		[ ]	
[ ]	SO4	KT07	4 DEG C		[ ]	
[ ]	NH3N2	USEPA 350.2	4 DEG C		[ ]	
[ ]	TOC	USEPA CE-81-1	4 DEG C		[ ]	
[ ]	pH	SW846 METHOD 9045	4 DEG C		[ ]	
*[x]	VOC	LM23	4 DEG C		[x]	608 611
*[ ]	BN/A	LM25	4 DEG C		[ ]	
[ ]	NG	LW27	4 DEG C		[ ]	
[ ]	NAM	LN08	4 DEG C		[ ]	
[x]	DNT	LW23	4 DEG C		[x]	609
[ ]					[ ]	

DC

NOTES (LOCATION SKETCH)

* THESE ARE DATACHEM METHODS. EA METHODS: VOC LM17, LM26
B/NA LM20

PP METALS (PRIORITY POLLUTANT): AG, AS, BE, CD, CR, CU, PB, HG, NI, SB, SE, TL, ZN.
JS12, B9, JD21, JD20, Y9.

TCLP METALS: CD, CR, HG, PB.
JS12, 40 CFR 261.24

DC: 4 bottles

SIGNATURE: VM/NR

RECEIVED BY: Nancy E. Roka

ABB ENVIRONMENTAL SERVICES, INC

FIELD DATA RECORD – SEDIMENT

FIELD SAMPLING NUMBER: F91:0000

PROJECT: USATHAMA-BAAP

SITE ID: PBS-91-1C

SITE TYPE: BUGR

JOB NUMBER: 6853-04

PROGRAM: C

SAMPLING DATE: 9.22.91

FILE NAME: CSO

WEATHER: cloudy, 50's breezy

LOCATION ACTIVITY: START: 1425 END: 1430

SEDIMENT DATA

DEPTH OF SEDIMENT SAMPLE: 1-3 IN

TYPE OF SAMPLE COLLECTED: [x] DISCRETE [ ] COMPOSITE

TYPE OF SEDIMENT:
- [ ] CLAY
- [x] SAND
- [x] ORGANIC
- [x] SILT
- [ ] GRAVEL
- [x] OTHER rocky debris (nails)

EQUIPMENT USED FOR COLLECTION:
- [ ] GRAVITY CORER
- [x] TULIP BULB PLANTER
- [ ] S.S. HAND SPOON
- [x] ALUMINUM PAN
- [ ] PLASTIC SCOOP
- [ ] OTHER

DECONTAMINATION FLUIDS USED:
- [x] POTABLE WATER
- [ ] POTABLE WATER WITH HIGH PRESSURE
- [ ] OTHER

SAMPLE OBSERVATIONS:
- [ ] ODOR
- [ ] COLORED

AMBIENT AIR: 0.0 PPM

SAMPLE LOCATION: 0.0 PPM

pH: — UNITS

ANALYTICAL PARAMETERS

	METHOD NUMBER	PRESERVATION METHOD	VOLUME REQUIRED	SAMPLE COLLECTED
[x] PP METALS (SPECIFIED BELOW)		4 DEG C		[x]
[ ] AL	JS12	4 DEG C		
[ ] CA	|	4 DEG C		
[ ] NA	|	4 DEG C		
[ ] CD	|	4 DEG C		
[ ] CR	|	4 DEG C		
[ ] HG	Y9	4 DEG C		
[ ] PB	JD21	4 DEG C		
[x] TCLP METALS (SPECIFIED BELOW)		4 DEG C		[x]
[ ] NIT	KF17	4 DEG C		
[ ] SO4	KT07	4 DEG C		
[ ] NH3N2	USEPA 350.2	4 DEG C		
[ ] TOC	USEPA CE-81-1	4 DEG C		
[ ] pH	SW846 METHOD 9045	4 DEG C		
[x] VOC	LM23	4 DEG C	DC	[x]
[x] BN/A	LM25	4 DEG C		[x]
[ ] NG	LW27	4 DEG C		
[ ] NAM	LM08	4 DEG C		
[x] DNT	LW23	4 DEG C		[x]

SAMPLE BOTTLE ID NUMBERS: 25, 28, 31, 32, 502, 34

NOTES

LOCATION SKETCH)

* THESE ARE DATACHEM METHODS. EA METHODS: VOC LM17, LM26; B/NA LM20

PP METALS (PRIORITY POLLUTANT): AG, AS, BE, CD, CR, CU, PB, HG, NI, SB, SE, TL, ZN. JS12, B9, JD21, JD20, Y9.

TCLP METALS: CD, CR, HG, PB. JS12, 40 CFR 261.24

DC: 4 bottles

SIGNATURE: VM/NR

RECEIVED BY: Nancy E. Roña

ABB ENVIRONMENTAL SERVICES, INC

FIELD DATA RECORD – SEDIMENT

FIELD SAMPLING NUMBER: P91100 0

PROJECT: USATHAMA-BAAP

SITE ID: PBS-91-11

LOCATION ACTIVITY: START: 1435 END: 1440

SITE TYPE: BUGR

JOB NUMBER: 6853-04

PROGRAM: C

SAMPLING DATE: 9.22.91

FILE NAME: CSO

WEATHER: cloudy, 50's breezy

SEDIMENT DATA

DEPTH OF SEDIMENT SAMPLE: 1-4 IN

TYPE OF SAMPLE COLLECTED: [x] DISCRETE [ ] COMPOSITE

TYPE OF SEDIMENT: [ ] CLAY [x] SAND [x] ORGANIC [x] SILT [ ] GRAVEL [ ] OTHER

EQUIPMENT USED FOR COLLECTION: [x] GRAVITY CORER [x] TULIP BULB PLANTER [ ] S.S. HAND SPOON [x] ALUMINUM PAN [ ] PLASTIC SCOOP [ ] OTHER

DECONTAMINATION FLUIDS USED: [x] POTABLE WATER [ ] POTABLE WATER WITH HIGH PRESSURE [ ] OTHER

SAMPLE OBSERVATIONS: [ ] ODOR [ ] COLORED [ ]

AMBIENT AIR: — PPM

SAMPLE LOCATION: — PPM

pH: — UNITS

ANALYTICAL PARAMETERS

	METHOD NUMBER	PRESERVATION METHOD	VOLUME REQUIRED	SAMPLE COLLECTED
[x] PP METALS (SPECIFIED BELOW)		4 DEG C		[x]
[ ] AL	JS12	4 DEG C		
[ ] CA		4 DEG C		
[ ] NA		4 DEG C		
[ ] CD		4 DEG C		
[ ] CR		4 DEG C		
[ ] HG	Y9	4 DEG C		
[ ] PB	JD21	4 DEG C		
[ ] TCLP METALS (SPECIFIED BELOW)		4 DEG C		DC
[ ] NIT	KF17	4 DEG C		
[ ] SO4	KT07	4 DEG C		
[ ] NH3N2	USEPA 350.2	4 DEG C		
[ ] TOC	USEPA CE-81-1	4 DEG C		
[ ] pH	SW846 METHOD 9045	4 DEG C		
*[x] VOC	LM23	4 DEG C		[x]
*[ ] BN/A	LM25	4 DEG C		
[ ] NG	LW27	4 DEG C		
[ ] MAM	LN08	4 DEG C		
[x] DNT	LW23	4 DEG C		[x]

SAMPLE BOTTLE ID NUMBERS: 616, 617, 620, 618

NOTES (LOCATION SKETCH)

* THESE ARE DATACHEM METHODS. EA METHODS: VOC LM17, LM26
B/NA LM20

PP METALS (PRIORITY POLLUTANT): AG, AS, BE, CD, CR, CU, PB, HG, NI, SB, SE, TL, ZN.
JS12, B9, JD21, JD20, Y9.

TCLP METALS: CD, CR, HG, PB.
JS12, 40 CFR 261.24

DC: 4 bottles

-TIP failed

SIGNATURE: VM/MR

RECEIVED BY: Nancy E. Roña

ABB ENVIRONMENTAL SERVICES, INC

FIELD DATA RECORD – SEDIMENT

FIELD SAMPLING NUMBER: P91I2000

PROJECT: USATHAMA-BAAP

SITE ID: PBS-91-12

LOCATION ACTIVITY: START: 1440 END: 1445

SITE TYPE: BUGR

JOB NUMBER: 6853-04

PROGRAM: C

SAMPLING DATE: 9.22.91

FILE NAME: CSO

WEATHER: cloudy, °50's breezy

SEDIMENT DATA

DEPTH OF SEDIMENT SAMPLE: 1-6 IN

TYPE OF SAMPLE COLLECTED: ☑ DISCRETE ☐ COMPOSITE

TYPE OF SEDIMENT:
- ☐ CLAY
- ☑ SAND trace
- ☑ ORGANIC
- ☐ SILT
- ☐ GRAVEL
- ☐ OTHER

EQUIPMENT USED FOR COLLECTION:
- ☑ GRAVITY CORER
- ☑ TULIP BULB PLANTER
- ☐ S.S. HAND SPOON
- ☑ ALUMINUM PAN
- ☐ PLASTIC SCOOP
- ☐ OTHER

DECONTAMINATION FLUIDS USED:
- ☑ POTABLE WATER
- ☐ POTABLE WATER WITH HIGH PRESSURE
- ☐ OTHER

SAMPLE OBSERVATIONS: ☐ ODOR ☐ COLORED

AMBIENT AIR: — PPM

SAMPLE LOCATION: — PPM

pH: — UNITS

ANALYTICAL PARAMETERS

	METHOD NUMBER	PRESERVATION METHOD	VOLUME REQUIRED	SAMPLE COLLECTED
☑ PP METALS (SPECIFIED BELOW)		4 DEG C		
☐ AL	JS12	4 DEG C		
☐ CA		4 DEG C		
☐ NA		4 DEG C		
☐ CD		4 DEG C		
☐ CR		4 DEG C		
☐ HG	Y9	4 DEG C		
☐ PB	JD21	4 DEG C		
☑ TCLP METALS (SPECIFIED BELOW)		4 DEG C		
☐ NIT	KF17	4 DEG C		
☐ SO4	KT07	4 DEG C		
☐ NH3N2	USEPA 350.2	4 DEG C		
☐ TOC	USEPA CE-81-1	4 DEG C		
☐ pH	SW846 METHOD 9045	4 DEG C		
☑ VOC	LM23	4 DEG C	DC	☑
☐ BN/A	LM25	4 DEG C		
☐ NG	LW27	4 DEG C		
☐ NAM	LM08	4 DEG C		
☑ DNT	LW23	4 DEG C		☑

SAMPLE BOTTLE ID NUMBERS: 37, 40, 43, 44, 46

NOTES (LOCATION SKETCH)

* THESE ARE DATACHEM METHODS. EA METHODS: VOC LM17, LM26; B/NA LM20

PP METALS (PRIORITY POLLUTANT): AG, AS, BE, CD, CR, CU, PB, HG, NI, SB, SE, TL, ZN. JS12, B9, JD21, JD20, Y9.

TCLP METALS: CD, CR, HG, PB. JS12, 40 CFR 261.24

DC: 4 bottles

Tip failed

SIGNATURE: VM/NR

RECEIVED BY: Nancy E. Rotta

ABB ENVIRONMENTAL SERVICES, INC

PAGE 21 OF

FIELD DATA RECORD - SEDIMENT

FIELD SAMPLING NUMBER: P91130000

PROJECT: USATHAMA-BAAP

SITE ID: PSS-91-13

LOCATION ACTIVITY: START: 1455 END: 1500

SITE TYPE: BUGR

JOB NUMBER: 6853-04

PROGRAM: C

SAMPLING DATE: 9.20.91

FILE NAME: CSO

WEATHER: cloudy, 50's breezy

SEDIMENT DATA

DEPTH OF SEDIMENT SAMPLE: 1-4 IN

TYPE OF SAMPLE COLLECTED: [X] DISCRETE [ ] COMPOSITE

TYPE OF SEDIMENT:
- [X] CLAY
- [X] SAND
- [X] ORGANIC
- [X] SILT
- [X] GRAVEL
- [ ] OTHER

EQUIPMENT USED FOR COLLECTION:
- [X] GRAVITY CORER
- [X] TULIP BULB PLANTER
- [X] S.S. HAND SPOON
- [X] ALUMINUM PAN
- [ ] PLASTIC SCOOP
- [ ] OTHER

DECONTAMINATION FLUIDS USED
- [X] POTABLE WATER
- [ ] POTABLE WATER WITH HIGH PRESSURE
- [ ] OTHER

SAMPLE OBSERVATIONS
- [ ] ODOR
- [ ] COLORED

AMBIENT AIR: — PPM

SAMPLE LOCATION: — PPM

pH: — UNITS

ANALYTICAL PARAMETERS

	METHOD NUMBER	PRESERVATION METHOD	VOLUME REQUIRED	SAMPLE COLLECTED
[X] PP METALS (SPECIFIED BELOW)		4 DEG C		
[ ] AL	JS12	4 DEG C		
[ ] CA		4 DEG C		
[ ] NA		4 DEG C		
[ ] CD		4 DEG C		
[ ] CR		4 DEG C		
[ ] HG	Y9	4 DEG C		
[ ] PB	JD21	4 DEG C		
[ ] TCLP METALS (SPECIFIED BELOW)		4 DEG C		
[ ] NIT	KF17	4 DEG C		
[ ] SO4	KT07	4 DEG C		
[ ] NH3N2	USEPA 350.2	4 DEG C		
[ ] TOC	USEPA CE-81-1	4 DEG C		
[ ] pH	SW846 METHOD 9045	4 DEG C		
*[X] VOC	LM23	4 DEG C	DC	
*[ ] BN/A	LM25	4 DEG C		
[ ] NG	LW27	4 DEG C		
[ ] NAM	LN08	4 DEG C		
[X] DNT	LW23	4 DEG C		

SAMPLE BOTTLE ID NUMBERS: 625, 626, 629, 627

NOTES (LOCATION SKETCH)

* THESE ARE DATACHEM METHODS. EA METHODS: VOC LM17, LM26; B/NA LM20

PP METALS (PRIORITY POLLUTANT): AG, AS, BE, CD, CR, CU, PB, HG, NI, SB, SE, TL, ZN. JS12, B9, JD21, JD20, Y9.

TCLP METALS: CD, CR, HG, PB. JS12, 40 CFR 261.24

DC: 4 bottles

Tip failed

SIGNATURE: VM/NR

RECEIVED BY: Nancy E. Roka

B ENVIRONMENTAL SERVICES, INC

ELD DATA RECORD – SEDIMENT

FIELD SAMPLING NUMBER: P911-0006

PROJECT: USATHAMA-BAAP

ITE ID: PBS-91-1H

LOCATION CTIVITY: START: 1505 END: 1510

SITE TYPE: BUGR

JOB NUMBER: 6853-04

PROGRAM: C

SAMPLING DATE: 9.22.91

FILE NAME: CSO

WEATHER: cloudy, 50's breezy

SEDIMENT DATA

DEPTH OF SEDIMENT SAMPLE: 1-4 IN

TYPE OF SAMPLE COLLECTED: [x] DISCRETE [ ] COMPOSITE

TYPE OF SEDIMENT:
- [ ] CLAY
- [x] SAND
- [x] ORGANIC
- [x] SILT
- [x] GRAVEL trace
- [ ] OTHER

EQUIPMENT USED FOR COLLECTION:
- [x] GRAVITY CORER
- [x] TULIP BULB PLANTER
- [x] S.S. HAND SPOON
- [x] ALUMINUM PAN
- [ ] PLASTIC SCOOP
- [ ] OTHER

DECONTAMINATION FLUIDS USED
- [x] POTABLE WATER
- [ ] POTABLE WATER WITH HIGH PRESSURE
- [ ] OTHER

SAMPLE OBSERVATIONS: [ ] ODOR [ ] COLORED

AMBIENT AIR: — PPM

SAMPLE LOCATION: — PPM

pH: — UNITS

NALYTICAL PARAMETERS

	METHOD NUMBER	PRESERVATION METHOD	VOLUME REQUIRED	SAMPLE COLLECTED
[x] PP METALS (SPECIFIED BELOW)		4 DEG C		
[ ] AL	JS12	4 DEG C		
[ ] CA		4 DEG C		
[ ] NA		4 DEG C		
[ ] CD		4 DEG C		
[ ] CR		4 DEG C		
[ ] HG	Y9	4 DEG C		
[ ] PB	JD21	4 DEG C		
[ ] CLP METALS (SPECIFIED BELOW)		4 DEG C		
[ ] T	KF17	4 DEG C		
[ ] O4	KT07	4 DEG C		
[ ] NH3N2	USEPA 350.2	4 DEG C		
[ ] TOC	USEPA CE-81-1	4 DEG C		
[ ] pH	SW846 METHOD 9045	4 DEG C		
[x] VOC	LM23	4 DEG C	DC	[x]
[ ] BN/A	LM25	4 DEG C		
[ ] NG	LW27	4 DEG C		
[ ] NAM	LN08	4 DEG C		
[x] DNT	LW23	4 DEG C		[x]

SAMPLE BOTTLE ID NUMBERS: 634, 635, 638, 636

NOTES
.OCATION SKETCH)

* THESE ARE DATACHEM METHODS. EA METHODS: VOC LM17, LM26
B/NA LM20

PP METALS (PRIORITY POLLUTANT): AG, AS, BE, CD, CR, CU, PB, HG, NI, SB, SE, TL, ZN.
JS12, B9, JD21, JD20, Y9.

TCLP METALS: CD, CR, HG, PB.
JS12, 40 CFR 261.24

DC: 4 bottles
TIP failed

SIGNATURE: VM/MR

RECEIVED BY: Nancy E. Roka

ABB ENVIRONMENTAL SERVICES, INC

FIELD DATA RECORD – SEDIMENT

FIELD SAMPLING NUMBER: F91150000

PROJECT: USATHAMA-BAAP

SITE ID: FBS-91-15

SITE TYPE: BUGR

JOB NUMBER: 6853-04

PROGRAM: C

SAMPLING DATE: 9.22.91

FILE NAME: CSO

WEATHER: cloudy.

LOCATION ACTIVITY: START: 1515 END: 1520

SEDIMENT DATA

DEPTH OF SEDIMENT SAMPLE: 1-5 IN

TYPE OF SAMPLE COLLECTED: [x] DISCRETE [ ] COMPOSITE

TYPE OF SEDIMENT:
- [ ] CLAY
- [x] SAND
- [x] ORGANIC
- [ ] SILT
- [ ] GRAVEL
- [ ] OTHER

EQUIPMENT USED FOR COLLECTION:
- [ ] GRAVITY CORER
- [x] TULIP BULB PLANTER
- [ ] S.S. HAND SPOON
- [x] ALUMINUM PAN
- [ ] PLASTIC SCOOP
- [ ] OTHER

DECONTAMINATION FLUIDS USED
- [x] POTABLE WATER
- [ ] POTABLE WATER WITH HIGH PRESSURE
- [ ] OTHER

SAMPLE OBSERVATIONS: [ ] ODOR [ ] COLORED

AMBIENT AIR: — PPM

SAMPLE LOCATION: — PPM

pH: — UNITS

ANALYTICAL PARAMETERS

	METHOD NUMBER	PRESERVATION METHOD	VOLUME REQUIRED	SAMPLE COLLECTED
[x] PP METALS (SPECIFIED BELOW)		4 DEG C	DC	[x]
[ ] AL	JS12	4 DEG C		
[ ] CA		4 DEG C		
[ ] NA		4 DEG C		
[ ] CD		4 DEG C		
[ ] CR		4 DEG C		
[ ] HG	Y9	4 DEG C		
[ ] PB	JD21	4 DEG C		
[x] TCLP METALS (SPECIFIED BELOW)		4 DEG C		[x]
[ ] NIT	KF17	4 DEG C		
[ ] SO4	KT07	4 DEG C		
[ ] NH3N2	USEPA 350.2	4 DEG C		
[ ] TOC	USEPA CE-81-1	4 DEG C		
[ ] pH	SW846 METHOD 9045	4 DEG C		
* [x] VOC	LM23	4 DEG C		[x]
* [ ] BN/A	LM25	4 DEG C		
[ ] NG	LW27	4 DEG C		
[ ] NAM	LN08	4 DEG C		
[x] DNT	LW23	4 DEG C		[x]

SAMPLE BOTTLE ID NUMBERS: 49, 52, 55, 56, 58

NOTES (LOCATION SKETCH)

* THESE ARE DATACHEM METHODS. EA METHODS: VOC LM17, LM26; B/NA LM20

PP METALS (PRIORITY POLLUTANT): AG, AS, BE, CD, CR, CU, PB, HG, NI, SB, SE, TL, ZN. JS12, 89, JD21, JD20, Y9.

TCLP METALS: CD, CR, HG, PB. JS12, 40 CFR 261.24

DC: 4 bottles

Tip failed

SIGNATURE: VM/NR

RECEIVED BY: Nancy E. Rotea

ABB ENVIRONMENTAL SERVICES, INC

FIELD DATA RECORD - SEDIMENT

FIELD SAMPLING NUMBER: P91 IC800

PROJECT: USATHAMA-BAAP
SITE ID: PBS-91-108
LOCATION ACTIVITY START: 1550 END: 1600

SITE TYPE: BUGR
JOB NUMBER: 6853-04
PROGRAM: C

SAMPLING DATE: 9.22 91
FILE NAME: CSO
WEATHER: rainy, 50's drizzly

SEDIMENT DATA

DEPTH OF SEDIMENT SAMPLE: 1-5 IN

TYPE OF SAMPLE COLLECTED: [x] DISCRETE [ ] COMPOSITE

TYPE OF SEDIMENT:
- [ ] CLAY
- [x] SAND little
- [x] ORGANIC
- [x] SILT
- [ ] GRAVEL
- [ ] OTHER

EQUIPMENT USED FOR COLLECTION:
- [x] GRAVITY CORER
- [x] TULIP BULB PLANTER
- [ ] S.S. HAND SPOON
- [x] ALUMINUM PAN
- [ ] PLASTIC SCOOP
- [ ] OTHER

DECONTAMINATION FLUIDS USED
- [x] POTABLE WATER
- [ ] POTABLE WATER WITH HIGH PRESSURE
- [ ] OTHER

SAMPLE OBSERVATIONS: [ ] ODOR [ ] COLORED

AMBIENT AIR: — PPM

SAMPLE LOCATION: — PPM

pH: — UNITS

ANALYTICAL PARAMETERS

	METHOD NUMBER	PRESERVATION METHOD	VOLUME REQUIRED	SAMPLE COLLECTED	SAMPLE BOTTLE ID NUMBERS
[x] PP METALS (SPECIFIED BELOW)		4 DEG C		[x]	652
[ ] AL	JS12	4 DEG C		[ ]	
[ ] CA		4 DEG C		[ ]	
[ ] NA		4 DEG C		[ ]	
[ ] CD		4 DEG C		[ ]	
[ ] CR		4 DEG C		[ ]	
[ ] HG	Y9	4 DEG C		[ ]	
[ ] PB	JD21	4 DEG C		[ ]	
[ ] TCLP METALS (SPECIFIED BELOW)		4 DEG C		[ ]	
[ ] NIT	KF17	4 DEG C		[ ]	
[ ] SO4	KT07	4 DEG C		[ ]	
[ ] NH3N2	USEPA 350.2	4 DEG C		[ ]	
[ ] TOC	USEPA CE-81-1	4 DEG C		[ ]	
[ ] pH	SW846 METHOD 9045	4 DEG C		[ ]	
[x] VOC	LM23	4 DEG C	DC	[x]	653 656
[ ] BN/A	LM25	4 DEG C		[ ]	
[ ] NG	LW27	4 DEG C		[ ]	
[ ] NAM	LN08	4 DEG C		[ ]	
[x] DNT	LW23	4 DEG C		[x]	654

NOTES
LOCATION SKETCH)

* THESE ARE DATACHEM METHODS. EA METHODS: VOC LM17, LM26
B/NA LM20

PP METALS (PRIORITY POLLUTANT): AG, AS, BE, CD, CR, CU, PB, HG, NI, SB, SE, TL, ZN.
JS12, B9, JD21, JD20, Y9.

TCLP METALS: CD, CR, HG, PB.
JS12, 40 CFR 261.24

DC: 4 bottles
Tip failed

SIGNATURE: VM/NR

RECEIVED BY: Nancy E. Rotta

ABB ENVIRONMENTAL SERVICES, INC

PAGE 1 OF

FIELD DATA RECORD – SEDIMENT

FIELD SAMPLING NUMBER: P911090B

PROJECT: USATHAMA-BAAP

SITE ID: PBS-91-109

LOCATION ACTIVITY: START: 0820 END: 0830

SITE TYPE: BUGR

JOB NUMBER: 6853-04

PROGRAM: C

SAMPLING DATE: 9.23.91

FILE NAME: CSO

WEATHER: sunny, 70's

SEDIMENT DATA

DEPTH OF SEDIMENT SAMPLE: 3-3.5'

TYPE OF SAMPLE COLLECTED: [x] DISCRETE [ ] COMPOSITE

TYPE OF SEDIMENT: [ ] CLAY [ ] SAND [x] ORGANIC [x] SILT [x] GRAVEL [ ] OTHER

EQUIPMENT USED FOR COLLECTION: [ ] GRAVITY CORER [x] TULIP BULB PLANTER [x] S.S. HAND SPOON [x] ALUMINUM PAN [x] PLASTIC SCOOP [x] OTHER hand auger

DECONTAMINATION FLUIDS USED: [x] POTABLE WATER [ ] POTABLE WATER WITH HIGH PRESSURE [ ] OTHER

SAMPLE OBSERVATIONS: [ ] ODOR [ ] COLORED

AMBIENT AIR: 0.0 PPM

SAMPLE LOCATION: 0.0 PPM

pH: — UNITS

ANALYTICAL PARAMETERS

	METHOD NUMBER	PRESERVATION METHOD	VOLUME REQUIRED	SAMPLE COLLECTED
[x] PP METALS (SPECIFIED BELOW)		4 DEG C		
[ ] AL	JS12	4 DEG C		
[ ] CA		4 DEG C		
[ ] NA		4 DEG C		
[ ] CD		4 DEG C		
[ ] CR		4 DEG C		
[ ] HG	Y9	4 DEG C		
[ ] PB	JD21	4 DEG C		
[x] TCLP METALS (SPECIFIED BELOW)		4 DEG C		DC
[ ] NIT	KF17	4 DEG C		
[ ] SO4	KT07	4 DEG C		
[ ] NH3N2	USEPA 350.2	4 DEG C		
[ ] TOC	USEPA CE-81-1	4 DEG C		
[ ] pH	SW846 METHOD 9045	4 DEG C		
* [x] VOC	LM23	4 DEG C		
* [ ] BN/A	LM25	4 DEG C		
[ ] NG	LW27	4 DEG C		
[ ] NAM	LN08	4 DEG C		
[x] DNT	LW23	4 DEG C		

SAMPLE BOTTLE ID NUMBERS: 61, 64, 67, 68, 70

NOTES (LOCATION SKETCH)

* THESE ARE DATACHEM METHODS. EA METHODS: VOC LM17, LM26; B/NA LM20

PP METALS (PRIORITY POLLUTANT): AG, AS, BE, CD, CR, CU, PB, HG, NI, SB, SE, TL, ZN. JS12, B9, JD21, JD20, Y9.

TCLP METALS: CD, CR, HG, PB. JS12, 40 CFR 261.24

DC: 4 bottles

• - 4TH + final attempt to get through rocks + debris.

SIGNATURE: VM/NK

RECEIVED BY: Nancy E. Rofia

BB ENVIRONMENTAL SERVICES, INC

PAGE 2 OF 15

FIELD DATA RECORD – SEDIMENT

FIELD SAMPLING NUMBER: P9111003

PROJECT: USATHAMA-BAAP

SITE ID: PBS-91-110

LOCATION ACTIVITY: START: 0920 END: 0940

SITE TYPE: BUGB

JOB NUMBER: 6853-04

PROGRAM: C

SAMPLING DATE: 9.23.91

FILE NAME: CSO

WEATHER: Sunny, °40's breezy

SEDIMENT DATA

DEPTH OF SEDIMENT SAMPLE: 3-3.5'

TYPE OF SAMPLE COLLECTED: [x] DISCRETE [ ] COMPOSITE

TYPE OF SEDIMENT:
- [x] CLAY
- [x] SAND
- [x] ORGANIC
- [x] SILT
- [ ] GRAVEL
- [ ] OTHER

EQUIPMENT USED FOR COLLECTION:
- [ ] GRAVITY CORER
- [x] TULIP BULB PLANTER
- [x] S.S. HAND SPOON
- [x] ALUMINUM PAN
- [x] PLASTIC SCOOP
- [x] OTHER hand auger

DECONTAMINATION FLUIDS USED:
- [x] POTABLE WATER
- [ ] POTABLE WATER WITH HIGH PRESSURE
- [ ] OTHER

SAMPLE OBSERVATIONS: [ ] ODOR [ ] COLORED

AMBIENT AIR: 0.0 PPM

SAMPLE LOCATION: 0.0 PPM

pH: – UNITS

ANALYTICAL PARAMETERS

	METHOD NUMBER	PRESERVATION METHOD	VOLUME REQUIRED	SAMPLE COLLECTED
[x] PP METALS (SPECIFIED BELOW)		4 DEG C		[x]
[ ] AL	JS12	4 DEG C		[ ]
[ ] CA	|	4 DEG C		[ ]
[ ] NA	|	4 DEG C		[ ]
[ ] CD	|	4 DEG C		[ ]
[ ] CR	|	4 DEG C		[ ]
[ ] HG	Y9	4 DEG C		[ ]
[ ] PB	JD21	4 DEG C		[ ]
[ ] TCLP METALS (SPECIFIED BELOW)		4 DEG C		[ ]
[ ] SIT	KF17	4 DEG C		[ ]
[ ] SO4	KT07	4 DEG C		[ ]
[ ] NH3N2	USEPA 350.2	4 DEG C		[ ]
[ ] TOC	USEPA CE-81-1	4 DEG C		[ ]
[ ] pH	SW846 METHOD 9045	4 DEG C		[ ]
[x] VOC	LM23	4 DEG C	DC	[x]
[ ] BN/A	LM25	4 DEG C		[ ]
[ ] NG	LW27	4 DEG C		[ ]
[x] NAM	LN08	4 DEG C		[x]
[x] DNT	LW23	4 DEG C		[x]

SAMPLE BOTTLE ID NUMBERS: 661, 662, 665, 663

NOTES (LOCATION SKETCH)

* THESE ARE DATACHEM METHODS. EA METHODS: VOC LM17, LM26; B/NA LM20

PP METALS (PRIORITY POLLUTANT): AG, AS, BE, CD, CR, CU, PB, HG, NI, SB, SE, TL, ZN. JS12, B9, JD21, JD20, Y9.

TCLP METALS: CD, CR, HG, PB. JS12, 40 CFR 261.24

DC: 4 bottles

SIGNATURE: VM/NR

RECEIVED BY: Nancy E. Roka

ABB ENVIRONMENTAL SERVICES, INC

FIELD DATA RECORD – SEDIMENT

FIELD SAMPLING NUMBER: P9111103

PROJECT: USATHAMA-BAAP

SITE ID: PBS-91-111

LOCATION ACTIVITY: START: 0940 END: ~~0940~~ 1010

SITE TYPE: BUGR

JOB NUMBER: 6853-04

PROGRAM: C

SAMPLING DATE: 9.23.91

FILE NAME: CSO

WEATHER: sunny, 050's breezy

SEDIMENT DATA

DEPTH OF SEDIMENT SAMPLE: 3-3.5'

TYPE OF SAMPLE COLLECTED: [x] DISCRETE [ ] COMPOSITE

TYPE OF SEDIMENT:
- [ ] CLAY
- [x] SAND fine
- [ ] ORGANIC
- [x] SILT
- [ ] GRAVEL
- [ ] OTHER

EQUIPMENT USED FOR COLLECTION:
- [ ] GRAVITY CORER
- [ ] TULIP BULB PLANTER
- [x] S.S. HAND SPOON
- [x] ALUMINUM PAN
- [x] PLASTIC SCOOP
- [x] OTHER hand auger

DECONTAMINATION FLUIDS USED
- [x] POTABLE WATER
- [ ] POTABLE WATER WITH HIGH PRESSURE
- [ ] OTHER

SAMPLE OBSERVATIONS: [ ] ODOR [ ] COLORED dk brown w/ trace orange/tan

AMBIENT AIR: 0.0 PPM

SAMPLE LOCATION: 0.0 PPM

pH: — UNITS

ANALYTICAL PARAMETERS

	METHOD NUMBER	PRESERVATION METHOD	VOLUME REQUIRED	SAMPLE COLLECTED	SAMPLE BOTTLE ID NUMBERS
[x] PP METALS (SPECIFIED BELOW)		4 DEG C		[x]	673
[ ] AL	JS12	4 DEG C		[ ]	
[ ] CA	|	4 DEG C		[ ]	
[ ] NA	|	4 DEG C		[ ]	
[ ] CD	|	4 DEG C		[ ]	
[ ] CR	|	4 DEG C		[ ]	
[ ] HG	Y9	4 DEG C		[ ]	
[ ] PB	JD21	4 DEG C		[ ]	
[ ] TCLP METALS (SPECIFIED BELOW)		4 DEG C		[ ]	
[ ] NIT	KF17	4 DEG C		[ ]	
[ ] SO4	KT07	4 DEG C		[ ]	
[ ] NH3N2	USEPA 350.2	4 DEG C		[ ]	
[ ] TOC	USEPA CE-81-1	4 DEG C		[ ]	
[ ] pH	SW846 METHOD 9045	4 DEG C		[ ]	
*[x] VOC	LM23	4 DEG C	DC	[x]	674 677
*[x] BN/A	LM25	4 DEG C		[x]	511
[ ] NG	LW27	4 DEG C		[ ]	
[ ] NAM	LN08	4 DEG C		[ ]	
[x] DNT	LW23	4 DEG C		[x]	675

NOTES (LOCATION SKETCH)

* THESE ARE DATACHEM METHODS. EA METHODS: VOC LM17, LM26; B/NA LM20

PP METALS (PRIORITY POLLUTANT): AG, AS, BE, CD, CR, CU, PB, HG, NI, SB, SE, TL, ZN. JS12, B9, JD21, JD20, Y9.

TCLP METALS: CD, CR, HG, PB. JS12, 40 CFR 261.24

DC: 4 bottles

SIGNATURE: VM/NR

RECEIVED BY: Nancy E. Rapa

ABB ENVIRONMENTAL SERVICES, INC

FIELD DATA RECORD – SEDIMENT

FIELD SAMPLING NUMBER: P9111203

PROJECT: USATHAMA-BAAP

SITE ID: PBS-91-112

SITE TYPE: BVGR

JOB NUMBER: 6853-04

PROGRAM: C

LOCATION ACTIVITY: START: 1010 END: 1020

SAMPLING DATE: 9.23.91

FILE NAME: CSO

WEATHER: sunny, '50's windy

SEDIMENT DATA

DEPTH OF SEDIMENT SAMPLE: 3-3.5'

TYPE OF SAMPLE COLLECTED: [x] DISCRETE [ ] COMPOSITE

TYPE OF SEDIMENT:
- [ ] CLAY
- [x] SAND
- [ ] ORGANIC
- [x] SILT
- [x] GRAVEL
- [x] OTHER boulders ~1'

EQUIPMENT USED FOR COLLECTION:
- [ ] GRAVITY CORER
- [x] TULIP BULB PLANTER
- [x] S.S. HAND SPOON
- [x] ALUMINUM PAN
- [ ] PLASTIC SCOOP
- [x] OTHER hand auger

DECONTAMINATION FLUIDS USED:
- [x] POTABLE WATER
- [ ] POTABLE WATER WITH HIGH PRESSURE
- [ ] OTHER

SAMPLE OBSERVATIONS: [ ] ODOR [x] COLORED light brown [ ]

AMBIENT AIR: 0.0 PPM

SAMPLE LOCATION: 0.0 PPM

pH: — UNITS

ANALYTICAL PARAMETERS

	METHOD NUMBER	PRESERVATION METHOD	VOLUME REQUIRED	SAMPLE COLLECTED
[x] PP METALS (SPECIFIED BELOW)		4 DEG C		[x]
[ ] AL	JS12	4 DEG C		[ ]
[ ] CA		4 DEG C		[ ]
[ ] NA		4 DEG C		[ ]
[ ] CD		4 DEG C		DC [ ]
[ ] CR		4 DEG C		[ ]
[ ] HG	Y9	4 DEG C		[ ]
[ ] PB	JD21	4 DEG C		[ ]
[x] TCLP METALS (SPECIFIED BELOW)		4 DEG C		[x]
[ ] NIT	KF17	4 DEG C		[ ]
[ ] SO4	KT07	4 DEG C		[ ]
[ ] NH3N2	USEPA 350.2	4 DEG C		[ ]
[ ] TOC	USEPA CE-81-1	4 DEG C		[ ]
[ ] pH	SW846 METHOD 9045	4 DEG C		[ ]
* [x] VOC	LM23	4 DEG C		EA [x]
* [ ] BN/A	LM25	4 DEG C		[ ]
[ ] NG	LW27	4 DEG C		[ ]
[ ] NAM	LN08	4 DEG C		[ ]
[x] DNT	LW23	4 DEG C		DC [x]
[ ]				[ ]

SAMPLE BOTTLE ID NUMBERS: 73 / 76 / 80 / 81 / 82

NOTES (LOCATION SKETCH)

* THESE ARE DATACHEM METHODS. EA METHODS: VOC LM17, LM26
B/NA LM20

PP METALS (PRIORITY POLLUTANT): AG, AS, BE, CD, CR, CU, PB, HG, NI, SB, SE, TL, ZN.
JS12, B9, JD21, JD20, Y9.

TCLP METALS: CD, CR, HG, PB.
JS12, 40 CFR 261.24

DC: 2 bottles
EA: 2 bottles

SIGNATURE: VM/MR

RECEIVED BY: Nancy E. Rofka

ABB ENVIRONMENTAL SERVICES, INC

FIELD DATA RECORD – SEDIMENT

FIELD SAMPLING NUMBER: P911303

PROJECT: USATHAMA-BAAP

SITE ID: PBS-91-1i3

LOCATION ACTIVITY: START: 1020 END: 1030

SITE TYPE: BUGR

JOB NUMBER: 6853-04

PROGRAM: C

SAMPLING DATE: 9.23.91

FILE NAME: CSO

WEATHER: sunny, 70's windy

SEDIMENT DATA

DEPTH OF SEDIMENT SAMPLE: 3-3.5'

TYPE OF SAMPLE COLLECTED: [x] DISCRETE [ ] COMPOSITE

TYPE OF SEDIMENT:
- [ ] CLAY
- [x] SAND fine
- [x] ORGANIC (NP)
- [ ] SILT
- [ ] GRAVEL
- [ ] OTHER

EQUIPMENT USED FOR COLLECTION:
- [ ] GRAVITY CORER
- [x] TULIP BULB PLANTER
- [x] S.S. HAND SPOON
- [x] ALUMINUM PAN
- [x] PLASTIC SCOOP
- [x] OTHER hard auger

DECONTAMINATION FLUIDS USED:
- [x] POTABLE WATER
- [ ] POTABLE WATER WITH HIGH PRESSURE
- [ ] OTHER

SAMPLE OBSERVATIONS: [ ] ODOR [x] COLORED light brown

AMBIENT AIR: 0.0 PPM

SAMPLE LOCATION: 0.0 PPM

pH: ___ UNITS

ANALYTICAL PARAMETERS

	METHOD NUMBER	PRESERVATION METHOD	VOLUME REQUIRED	SAMPLE COLLECTED	SAMPLE BOTTLE ID NUMBERS (NP)
[x] PP METALS (SPECIFIED BELOW)		4 DEG C		DC [x]	679
[ ] AL	JS12	4 DEG C			
[ ] CA		4 DEG C			
[ ] NA		4 DEG C			
[ ] CD		4 DEG C			
[ ] CR		4 DEG C			
[ ] HG	Y9	4 DEG C			
[ ] PB	JD21	4 DEG C			
[ ] TCLP METALS (SPECIFIED BELOW)		4 DEG C			
[ ] NIT	KF17	4 DEG C			
[ ] SO4	KT07	4 DEG C			
[ ] NH3N2	USEPA 350.2	4 DEG C			
[ ] TOC	USEPA CE-81-1	4 DEG C			
[ ] pH	SW846 METHOD 9045	4 DEG C			
* [x] VOC	LM23	4 DEG C		EA [x]	680 686
* [ ] BN/A	LM25	4 DEG C			
[ ] NG	LW27	4 DEG C			
[ ] NAM	LN08	4 DEG C			
[x] ONT	LW23	4 DEG C		DC [x]	681

NOTES (LOCATION SKETCH)

* THESE ARE DATACHEM METHODS. EA METHODS: VOC LM17, LM26; B/NA LM20

PP METALS (PRIORITY POLLUTANT): AG, AS, BE, CD, CR, CU, PB, HG, NI, SB, SE, TL, ZN. JS12, 89, JD21, JD20, Y9.

TCLP METALS: CD, CR, HG, PB. JS12, 40 CFR 261.24

DC: 2 bottles

EA: 2 bottles

SIGNATURE: VM/MR

RECEIVED BY: Nancy E. Rafa

BB ENVIRONMENTAL SERVICES, INC

FIELD DATA RECORD – SEDIMENT

FIELD SAMPLING NUMBER: P911H03

PROJECT: USATHAMA-BAAP
SITE ID: PBS-91-114
LOCATION ACTIVITY: START: 1040 END: 1050

SITE TYPE: BUGR
JOB NUMBER: 6853-04
PROGRAM: C

SAMPLING DATE: 9.23.91
FILE NAME: CSO
WEATHER: Sunny, °50's windy

SEDIMENT DATA

DEPTH OF SEDIMENT SAMPLE: 3-3.5'

TYPE OF SAMPLE COLLECTED: [x] DISCRETE [ ] COMPOSITE

TYPE OF SEDIMENT:
- [x] CLAY
- [x] SAND
- [ ] ORGANIC
- [x] SILT
- [ ] GRAVEL
- [ ] OTHER

EQUIPMENT USED FOR COLLECTION:
- [ ] GRAVITY CORER
- [ ] TULIP BULB PLANTER
- [x] S.S. HAND SPOON
- [x] ALUMINUM PAN
- [x] PLASTIC SCOOP
- [x] OTHER hand auger

DECONTAMINATION FLUIDS USED:
- [x] POTABLE WATER
- [ ] POTABLE WATER WITH HIGH PRESSURE
- [ ] OTHER

SAMPLE OBSERVATIONS: [ ] ODOR [x] COLORED dk brown & some tan

AMBIENT AIR: 0.0 PPM

SAMPLE LOCATION: 0.0 PPM

pH: — UNITS

ANALYTICAL PARAMETERS

	METHOD NUMBER	PRESERVATION METHOD	VOLUME REQUIRED	SAMPLE COLLECTED	SAMPLE BOTTLE ID NUMBERS
[x] PP METALS (SPECIFIED BELOW)		4 DEG C		DC [x]	691
[ ] AL	JS12	4 DEG C			
[ ] CA		4 DEG C			
[ ] NA		4 DEG C			
[ ] CD		4 DEG C			
[ ] CR		4 DEG C			
[ ] HG	Y9	4 DEG C			
[ ] PB	JD21	4 DEG C			
[ ] TCLP METALS (SPECIFIED BELOW)		4 DEG C			
[ ] NIT	KF17	4 DEG C			
[ ] SO4	KT07	4 DEG C			
[ ] NH3N2	USEPA 350.2	4 DEG C			
[ ] TOC	USEPA CE-81-1	4 DEG C			
[ ] pH	SW846 METHOD 9045	4 DEG C			
* [x] VOC	LM23	4 DEG C		EA [x]	692 695
* [ ] BN/A	LM25	4 DEG C			
[ ] NG	LW27	4 DEG C			
[ ] NAM	LM08	4 DEG C			
[x] DNT	LW23	4 DEG C		DC [x]	693

NOTES (LOCATION SKETCH)

* THESE ARE DATACHEM METHODS. EA METHODS: VOC LM17, LM26; B/NA LM20

PP METALS (PRIORITY POLLUTANT): AG, AS, BE, CD, CR, CU, PB, HG, NI, SB, SE, TL, ZN. JS12, 89, JD21, JD20, Y9.

TCLP METALS: CD, CR, HG, PB. JS12, 40 CFR 261.24

DC: 2 bottles
EA: 2 bottles

SIGNATURE: VM/NR

RECEIVED BY: Nancy E. Rofka

ABB ENVIRONMENTAL SERVICES, INC

PAGE 1 OF

FIELD DATA RECORD – SEDIMENT

FIELD SAMPLING NUMBER: P91115 03

PROJECT: USATHAMA-BAAP

SITE ID: PBS-91-115

LOCATION ACTIVITY START: 1105 END: 1115

SITE TYPE: BUGR

JOB NUMBER: 6853-04

PROGRAM: C

SAMPLING DATE: 9.23.91

FILE NAME: CSO

WEATHER: Sunny, 050's windy

SEDIMENT DATA

DEPTH OF SEDIMENT SAMPLE: 3-3.5'

TYPE OF SAMPLE COLLECTED: [x] DISCRETE [ ] COMPOSITE

TYPE OF SEDIMENT: [x] CLAY [ ] SAND [x] ORGANIC [x] SILT [ ] GRAVEL [ ] OTHER

EQUIPMENT USED FOR COLLECTION: [ ] GRAVITY CORER [x] TULIP BULB PLANTER [x] S.S. HAND SPOON [x] ALUMINUM PAN [ ] PLASTIC SCOOP [x] OTHER hand auger

DECONTAMINATION FLUIDS USED: [x] POTABLE WATER [ ] POTABLE WATER WITH HIGH PRESSURE [ ] OTHER

SAMPLE OBSERVATIONS: [ ] ODOR [x] COLORED dark brown + tan mottled

AMBIENT AIR: 0.0 PPM

SAMPLE LOCATION: 0.0 PPM

pH: — UNITS

ANALYTICAL PARAMETERS

	METHOD NUMBER	PRESERVATION METHOD	VOLUME REQUIRED	SAMPLE COLLECTED
[x] PP METALS (SPECIFIED BELOW)		4 DEG C		DC
[ ] AL	JS12	4 DEG C		
[ ] CA		4 DEG C		
[ ] NA		4 DEG C		
[ ] CD		4 DEG C		
[ ] CR		4 DEG C		
[ ] HG	Y9	4 DEG C		
[ ] PB	JD21	4 DEG C		
[x] TCLP METALS (SPECIFIED BELOW)		4 DEG C		DC
[ ] NIT	KF17	4 DEG C		
[ ] SO4	KT07	4 DEG C		
[ ] NH3N2	USEPA 350.2	4 DEG C		
[ ] TOC	USEPA CE-81-1	4 DEG C		
[ ] pH	SW846 METHOD 9045	4 DEG C		
* [x] VOC	LM23	4 DEG C		EA
* [x] BN/A	LM25	4 DEG C		EA
[ ] NG	LW27	4 DEG C		
[ ] NAM	LW08	4 DEG C		
[x] DNT	LW23	4 DEG C		DC

SAMPLE BOTTLE ID NUMBERS: 85, 88, 91, 92, 94

NOTES (LOCATION SKETCH)

* THESE ARE DATACHEM METHODS. EA METHODS: VOC LM17, LM26; B/NA LM20

PP METALS (PRIORITY POLLUTANT): AG, AS, BE, CD, CR, CU, PB, HG, NI, SB, SE, TL, ZN. JS12, B9, JD21, JD20, Y9.

TCLP METALS: CD, CR, HG, PB. JS12, 40 CFR 261.24

DC: 2 bottles
EA: 2 bottles

SIGNATURE: VM/MR

RECEIVED BY: Nancy E. Rofka

ESB ENVIRONMENTAL SERVICES, INC

FIELD DATA RECORD – SEDIMENT

FIELD SAMPLING NUMBER: P9116000

PROJECT: USATHAMA-BAAP

SITE ID: PBS-91-16

LOCATION ACTIVITY: START: 1250 END: 1255

SITE TYPE: BUGR

JOB NUMBER: 6853-04

PROGRAM: C

SAMPLING DATE: 9.23.91

FILE NAME: CSO

WEATHER: Sunny. °50s windy

SEDIMENT DATA

DEPTH OF SEDIMENT SAMPLE: 1-3 IN

TYPE OF SAMPLE COLLECTED: [x] DISCRETE [ ] COMPOSITE

TYPE OF SEDIMENT:
- [ ] CLAY
- [x] SAND
- [x] ORGANIC
- [x] SILT
- [ ] GRAVEL
- [ ] OTHER

EQUIPMENT USED FOR COLLECTION:
- [ ] GRAVITY CORER
- [x] TULIP BULB PLANTER
- [x] S.S. HAND SPOON
- [x] ALUMINUM PAN
- [ ] PLASTIC SCOOP
- [ ] OTHER

DECONTAMINATION FLUIDS USED
- [x] POTABLE WATER
- [ ] POTABLE WATER WITH HIGH PRESSURE
- [ ] OTHER

SAMPLE OBSERVATIONS: [ ] ODOR [ ] COLORED

AMBIENT AIR: 0.0 PPM

SAMPLE LOCATION: 0.0 PPM

pH: — UNITS

ANALYTICAL PARAMETERS

	METHOD NUMBER	PRESERVATION METHOD	VOLUME REQUIRED	SAMPLE COLLECTED	SAMPLE BOTTLE ID NUMBERS
[x] PP METALS (SPECIFIED BELOW)		4 DEG C		DC [x]	97
[ ] AL	JS12	4 DEG C			
[ ] CA	|	4 DEG C			
[ ] NA	|	4 DEG C			
[ ] CD	|	4 DEG C			
[ ] CR	|	4 DEG C			
[ ] HG	Y9	4 DEG C			
[ ] PB	JD21	4 DEG C			
[x] TCLP METALS (SPECIFIED BELOW)		4 DEG C		DC [x]	100
[ ] NIT	KF17	4 DEG C			
[ ] SO4	KT07	4 DEG C			
[ ] NH3N2	USEPA 350.2	4 DEG C			
[ ] TOC	USEPA CE-81-1	4 DEG C			
[ ] OH	SW846 METHOD 9045	4 DEG C			
* [x] VOC	LM23	4 DEG C		EA [x]	103 104
* [ ] BN/A	LM25	4 DEG C			
[ ] NG	LW27	4 DEG C			
[ ] NAM	LN08	4 DEG C			
[x] ONT	LW23	4 DEG C		DC [x]	106

NOTES: * THESE ARE DATACHEM METHODS. EA METHODS: VOC LM17, LM26
B/NA LM20

(LOCATION SKETCH)

PP METALS (PRIORITY POLLUTANT): AG, AS, BE, CD, CR, CU, PB, HG, NI, SB, SE, TL, ZN.
JS12, B9, JD21, JD20, Y9.

TCLP METALS: CD, CR, HG, PB.
JS12, 40 CFR 261.24

DC: 2 bottles
EA: 2 bottles

SIGNATURE: VM/MR

RECEIVED BY: Nancy E. Roka

ABB ENVIRONMENTAL SERVICES, INC

PAGE 9 OF

FIELD DATA RECORD – SEDIMENT

FIELD SAMPLING NUMBER: FB91i7000

PROJECT: USATHAMA-BAAP

SITE ID: FBS-91-17

LOCATION ACTIVITY: START: 1300 END: 1305

SITE TYPE: BUGR

JOB NUMBER: 6853-04

PROGRAM: C

SAMPLING DATE: 9.23.91

FILE NAME: CSO

WEATHER: pr- Sunny, 90's windy

SEDIMENT DATA

DEPTH OF SEDIMENT SAMPLE: 1-3 IN

TYPE OF SAMPLE COLLECTED: [x] DISCRETE [ ] COMPOSITE

TYPE OF SEDIMENT:
- [ ] CLAY
- [x] SAND
- [ ] ORGANIC
- [ ] SILT
- [x] GRAVEL
- [ ] OTHER

EQUIPMENT USED FOR COLLECTION:
- [ ] GRAVITY CORER
- [ ] TULIP BULB PLANTER
- [x] S.S. HAND SPOON
- [ ] ALUMINUM PAN
- [ ] PLASTIC SCOOP
- [ ] OTHER

DECONTAMINATION FLUIDS USED
- [x] POTABLE WATER
- [ ] POTABLE WATER WITH HIGH PRESSURE
- [ ] OTHER

SAMPLE OBSERVATIONS: [ ] ODOR [ ] COLORED

AMBIENT AIR: 0.0 PPM

SAMPLE LOCATION: 0.0 PPM

pH: — UNITS

ANALYTICAL PARAMETERS

	METHOD NUMBER	PRESERVATION METHOD	VOLUME REQUIRED	SAMPLE COLLECTED	SAMPLE BOTTLE ID NUMBERS
[x] PP METALS (SPECIFIED BELOW)		4 DEG C		DC [x]	697
[ ] AL	JS12	4 DEG C			
[ ] CA		4 DEG C			
[ ] NA		4 DEG C			
[ ] CD		4 DEG C			
[ ] CR		4 DEG C			
[ ] HG	Y9	4 DEG C			
[ ] PB	JD21	4 DEG C			
[ ] TCLP METALS (SPECIFIED BELOW)		4 DEG C			
[ ] NIT	KF17	4 DEG C			
[ ] SO4	KT07	4 DEG C			
[ ] NH3N2	USEPA 350.2	4 DEG C			
[ ] TOC	USEPA CE-81-1	4 DEG C			
[ ] pH	SW846 METHOD 9045	4 DEG C			
* [x] VOC	LM23	4 DEG C		EA [x]	698 701
* [ ] BN/A	LM25	4 DEG C			
[ ] NG	LW27	4 DEG C			
[ ] NAM	LN08	4 DEG C			
[x] DNT	LW23	4 DEG C		DC [x]	699

NOTES (LOCATION SKETCH)

* THESE ARE DATACHEM METHODS. EA METHODS: VOC LM17, LM26
B/NA LM20

PP METALS (PRIORITY POLLUTANT): AG, AS, BE, CD, CR, CU, PB, HG, NI, SB, SE, TL, ZN.
JS12, B9, JD21, JD20, Y9.

TCLP METALS: CD, CR, HG, PB.
JS12, 40 CFR 261.24

DC: 2 bottles
EA: 2 bottles

SIGNATURE: VM/MK

RECEIVED BY: Nancy E. Rotza

BB ENVIRONMENTAL SERVICES, INC

FIELD DATA RECORD – SEDIMENT

FIELD SAMPLING NUMBER: P911800 0

PROJECT: USATHAMA-BAAP

SITE ID: PBS-91-18

LOCATION ACTIVITY: START: 1310 END: 1315

SITE TYPE: BUGR

JOB NUMBER: 6853-04

PROGRAM: C

SAMPLING DATE: 9.23.91

FILE NAME: CSO

WEATHER: prt. Sunny, °50's windy

SEDIMENT DATA

DEPTH OF SEDIMENT SAMPLE: 1-5 IN

TYPE OF SAMPLE COLLECTED: ☑ DISCRETE ☐ COMPOSITE

TYPE OF SEDIMENT:
- ☐ CLAY
- ☑ SAND
- ☑ ORGANIC
- ☑ SILT
- ☐ GRAVEL
- ☐ OTHER

EQUIPMENT USED FOR COLLECTION:
- ☑ GRAVITY CORER
- ☑ TULIP BULB PLANTER
- ☐ S.S. HAND SPOON
- ☑ ALUMINUM PAN
- ☐ PLASTIC SCOOP
- ☐ OTHER

DECONTAMINATION FLUIDS USED:
- ☑ POTABLE WATER
- ☐ POTABLE WATER WITH HIGH PRESSURE
- ☐ OTHER

SAMPLE OBSERVATIONS: ☐ ODOR ☐ COLORED

AMBIENT AIR: 0.0 PPM

SAMPLE LOCATION: 0.0 PPM

pH: — UNITS

ANALYTICAL PARAMETERS

	METHOD NUMBER	PRESERVATION METHOD	VOLUME REQUIRED	SAMPLE COLLECTED
☑ PP METALS (SPECIFIED BELOW)		4 DEG C		☑
☐ AL	JS12	4 DEG C		
☐ CA	|	4 DEG C		
☐ NA	|	4 DEG C		
☐ CD	|	4 DEG C		
☐ CR	|	4 DEG C		
☐ HG	Y9	4 DEG C		DC
☐ PB	JD21	4 DEG C		
☐ TCLP METALS (SPECIFIED BELOW)		4 DEG C		☑
☐ NIT	KF17	4 DEG C		
☐ SO4	KT07	4 DEG C		
☐ NH3N2	USEPA 350.2	4 DEG C		
☐ TOC	USEPA CE-81-1	4 DEG C		
☐ pH	SW846 METHOD 9045	4 DEG C		
* ☑ VOC	LM23	4 DEG C		EA
* ☑ BN/A	LM25	4 DEG C		
☐ NG	LW27	4 DEG C		
☐ NAM	LN08	4 DEG C		
☑ DNT	LW23	4 DEG C		DC

SAMPLE BOTTLE ID NUMBERS: 109, 112, 115, 116, 118

NOTES (LOCATION SKETCH)

* THESE ARE DATACHEM METHODS. EA METHODS: VOC LM17, LM26; B/NA LM20

PP METALS (PRIORITY POLLUTANT): AG, AS, BE, CD, CR, CU, PB, HG, NI, SB, SE, TL, ZN. JS12, B9, JD21, JD20, Y9.

TCLP METALS: CD, CR, HG, PB. JS12, 40 CFR 261.24

DC: 2 bottles

EA: 2 bottles

SIGNATURE: VM/MZ

RECEIVED BY: Nancy E. Rojas

ABB ENVIRONMENTAL SERVICES, INC

PAGE 11 OF

FIELD DATA RECORD – SEDIMENT

FIELD SAMPLING NUMBER: P 91 19000

PROJECT: USATHAMA-BAAP

SITE TYPE: BUGR

SITE ID: PBS-91-19

JOB NUMBER: 6853-04

PROGRAM: C

LOCATION ACTIVITY: START: 1320 END: 1325

SAMPLING DATE: 9.23.91

FILE NAME: CSO

WEATHER: Prt. Sunny, 50's windy

SEDIMENT DATA

DEPTH OF SEDIMENT SAMPLE: 1-5 IN

TYPE OF SAMPLE COLLECTED: [x] DISCRETE [ ] COMPOSITE

TYPE OF SEDIMENT:
- [ ] CLAY
- [x] SAND little fine
- [x] ORGANIC
- [x] SILT
- [ ] GRAVEL
- [ ] OTHER

EQUIPMENT USED FOR COLLECTION:
- [x] GRAVITY CORER
- [x] TULIP BULB PLANTER
- [ ] S.S. HAND SPOON
- [x] ALUMINUM PAN
- [ ] PLASTIC SCOOP
- [ ] OTHER

DECONTAMINATION FLUIDS USED
- [x] POTABLE WATER
- [ ] POTABLE WATER WITH HIGH PRESSURE
- [ ] OTHER

SAMPLE OBSERVATIONS: [ ] ODOR [ ] COLORED

AMBIENT AIR: 0.0 PPM

SAMPLE LOCATION: 0.0 PPM

pH: — UNITS

ANALYTICAL PARAMETERS

	METHOD NUMBER	PRESERVATION METHOD	VOLUME REQUIRED	SAMPLE COLLECTED	SAMPLE BOTTLE ID NUMBERS
[x] PP METALS (SPECIFIED BELOW)		4 DEG C		DC [x]	706
[ ] AL	JS12	4 DEG C		[ ]	
[ ] CA		4 DEG C		[ ]	
[ ] NA		4 DEG C		[ ]	
[ ] CD		4 DEG C		[ ]	
[ ] CR		4 DEG C		[ ]	
[ ] HG	Y9	4 DEG C		[ ]	
[ ] PB	JD21	4 DEG C		[ ]	
[ ] TCLP METALS (SPECIFIED BELOW)		4 DEG C		[ ]	
[ ] NIT	KF17	4 DEG C		[ ]	
[ ] SO4	KT07	4 DEG C		[ ]	
[ ] NH3N2	USEPA 350.2	4 DEG C		[ ]	
[ ] TOC	USEPA CE-81-1	4 DEG C		[ ]	
[ ] pH	SW846 METHOD 9045	4 DEG C		[ ]	
*[x] VOC	LM23	4 DEG C		EA [x]	707 / 710
*[ ] BN/A	LM25	4 DEG C		[ ]	
[ ] NG	LW27	4 DEG C		[ ]	
[ ] NAM	LN08	4 DEG C		[ ]	
[x] DNT	LW23	4 DEG C		DC [x]	708
[ ]				[ ]	
[ ]				[ ]	

NOTES (LOCATION SKETCH)

* THESE ARE DATACHEM METHODS. EA METHODS: VOC LM17, LM26
B/NA LM20

PP METALS (PRIORITY POLLUTANT): AG, AS, BE, CD, CR, CU, PB, HG, NI, SB, SE, TL, ZN.
JS12, B9, JD21, JD20, Y9.

TCLP METALS: CD, CR, HG, PB.
JS12, 40 CFR 261.24

DC: 2 bottles
EA: 2 bottles

SIGNATURE: Vm/MR

RECEIVED BY: Nancy E. Roka

EBB ENVIRONMENTAL SERVICES, INC

FIELD DATA RECORD – SEDIMENT

FIELD SAMPLING NUMBER: P9120000

PROJECT: USATHAMA-BAAP

SITE ID: PBS-91-20

LOCATION ACTIVITY: START: 1325 END: 1330

SITE TYPE: BUGR

JOB NUMBER: 6853-04

PROGRAM: C

SAMPLING DATE: 9.23.91

FILE NAME: CSO

WEATHER: pr. Sunny, °50's windy

SEDIMENT DATA

DEPTH OF SEDIMENT SAMPLE: 1-5 IN

TYPE OF SAMPLE COLLECTED: ☐ DISCRETE ☐ COMPOSITE

TYPE OF SEDIMENT:
- ☐ CLAY
- ☑ SAND trace
- ☐ ORGANIC
- ☐ SILT
- ☐ GRAVEL
- ☐ OTHER

EQUIPMENT USED FOR COLLECTION:
- ☐ GRAVITY CORER
- ☑ TULIP BULB PLANTER
- ☐ S.S. HAND SPOON
- ☑ ALUMINUM PAN
- ☐ PLASTIC SCOOP
- ☐ OTHER

DECONTAMINATION FLUIDS USED
- ☑ POTABLE WATER
- ☐ POTABLE WATER WITH HIGH PRESSURE
- ☐ OTHER

SAMPLE OBSERVATIONS: ☐ ODOR ☐ COLORED

AMBIENT AIR: 0.0 PPM

SAMPLE LOCATION: 0.0 PPM

pH: — UNITS

ANALYTICAL PARAMETERS

	METHOD NUMBER	PRESERVATION METHOD	VOLUME REQUIRED	SAMPLE COLLECTED
☑ PP METALS (SPECIFIED BELOW)		4 DEG C		DC ☑
☐ AL	JS12	4 DEG C		
☐ CA		4 DEG C		
☐ NA		4 DEG C		
☐ CD		4 DEG C		
☐ CR		4 DEG C		
☐ HG	Y9	4 DEG C		
☐ PB	JD21	4 DEG C		
☐ TCLP METALS (SPECIFIED BELOW)		4 DEG C		
☐ NIT	KF17	4 DEG C		
☐ SO4	KT07	4 DEG C		
☐ NH3N2	USEPA 350.2	4 DEG C		
☐ TOC	USEPA CE-81-1	4 DEG C		
☐ pH	SW846 METHOD 9045	4 DEG C		
☑ * VOC	LM23	4 DEG C		EA ☑
☑ * BN/A	LM25	4 DEG C		DC ☑
☐ NG	LW27	4 DEG C		
☐ NAM	LN08	4 DEG C		
☑ DNT	LW23	4 DEG C		☑

SAMPLE BOTTLE ID NUMBERS: 715; 716, 719; 514; 717

NOTES (LOCATION SKETCH)

* THESE ARE DATACHEM METHODS. EA METHODS: VOC LM17, LM26; B/NA LM20

PP METALS (PRIORITY POLLUTANT): AG, AS, BE, CD, CR, CU, PB, HG, NI, SB, SE, TL, ZN. JS12, B9, JD21, JD20, Y9.

TCLP METALS: CD, CR, HG, PB. JS12, 40 CFR 261.24

DC: 2 bottles
EA: 2 bottles

SIGNATURE: VM/MR

RECEIVED BY: Nancy E. Rotta

ABB ENVIRONMENTAL SERVICES, INC

FIELD DATA RECORD - SEDIMENT

FIELD SAMPLING NUMBER: P912100J

PROJECT: USATHAMA-BAAP

SITE ID: FBS-91-21

LOCATION ACTIVITY: START: 1335 END: 1340

SITE TYPE: BUGR

JOB NUMBER: 6853-04

PROGRAM: C

SAMPLING DATE: 9.23.9

FILE NAME: CSO

WEATHER: prt sunny, 50's windy

SEDIMENT DATA

DEPTH OF SEDIMENT SAMPLE: 1-5 IN

TYPE OF SAMPLE COLLECTED: [✓] DISCRETE [ ] COMPOSITE

TYPE OF SEDIMENT:
- [ ] CLAY
- [✓] SAND trace
- [✓] ORGANIC
- [✓] SILT
- [ ] GRAVEL
- [ ] OTHER

EQUIPMENT USED FOR COLLECTION:
- [ ] GRAVITY CORER
- [✓] TULIP BULB PLANTER
- [✓] S.S. HAND SPOON
- [✓] ALUMINUM PAN
- [ ] PLASTIC SCOOP
- [ ] OTHER

DECONTAMINATION FLUIDS USED:
- [✓] POTABLE WATER
- [ ] POTABLE WATER WITH HIGH PRESSURE
- [ ] OTHER

SAMPLE OBSERVATIONS: [ ] ODOR [ ] COLORED

AMBIENT AIR: 0.0 PPM

SAMPLE LOCATION: 0.0 PPM

pH: — UNITS

ANALYTICAL PARAMETERS

		METHOD NUMBER	PRESERVATION METHOD	VOLUME REQUIRED	SAMPLE COLLECTED	SAMPLE BOTTLE ID NUMBERS
[✓]	PP METALS (SPECIFIED BELOW)		4 DEG C		[✓]	121
[ ]	AL	JS12	4 DEG C		[ ]	
[ ]	CA		4 DEG C		[ ]	
[ ]	NA		4 DEG C		[ ]	
[ ]	CD		4 DEG C		[ ]	
[ ]	CR		4 DEG C	DC	[ ]	
[ ]	HG	Y9	4 DEG C		[ ]	
[ ]	PB	JD21	4 DEG C		[✓]	124
[✓]	TCLP METALS (SPECIFIED BELOW)		4 DEG C		[ ]	
[ ]	NIT	KF17	4 DEG C		[ ]	
[ ]	SO4	KT07	4 DEG C		[ ]	
[ ]	NH3N2	USEPA 350.2	4 DEG C		[ ]	
[ ]	TOC	USEPA CE-81-1	4 DEG C		[ ]	
[ ]	pH	SW846 METHOD 9045	4 DEG C		[ ]	
[✓] *	VOC	LM23	4 DEG C	EA	[✓]	127 128
[ ] *	BN/A	LM25	4 DEG C		[ ]	
[ ]	NG	LW27	4 DEG C		[ ]	
[✓]	NAM	LN08	4 DEG C		[ ]	
[✓]	DNT	LW23	4 DEG C	DC	[✓]	130

NOTES (LOCATION SKETCH)

* THESE ARE DATACHEM METHODS. EA METHODS: VOC LM17, LM26
B/NA LM20

PP METALS (PRIORITY POLLUTANT): AG, AS, BE, CD, CR, CU, PB, HG, NI, SB, SE, TL, ZN.
JS12, 89, JD21, JD20, Y9.

TCLP METALS: CD, CR, HG, PB.
JS12, 40 CFR 261.24

DC: 2 bottles
EA: 2 bottles

SIGNATURE: VM/MR

RECEIVED BY: Nancy E. Rotta

BB ENVIRONMENTAL SERVICES, INC

FIELD DATA RECORD - SEDIMENT

FIELD SAMPLING NUMBER: P91220000

PROJECT: USATHAMA-BAAP

SITE ID: PBS-91-22

LOCATION ACTIVITY: START: 1340 END: 1345

SITE TYPE: BUGR

JOB NUMBER: 6853-04

PROGRAM: C

SAMPLING DATE: 9.23.91

FILE NAME: CSO

WEATHER: Ft sunny, 90's windy

SEDIMENT DATA

DEPTH OF SEDIMENT SAMPLE: 1-6 IN

TYPE OF SAMPLE COLLECTED: [x] DISCRETE [ ] COMPOSITE

TYPE OF SEDIMENT:
- [ ] CLAY
- [x] SAND trace
- [ ] ORGANIC
- [ ] SILT
- [ ] GRAVEL
- [ ] OTHER

EQUIPMENT USED FOR COLLECTION:
- [x] GRAVITY CORER
- [x] TULIP BULB PLANTER
- [ ] S.S. HAND SPOON
- [x] ALUMINUM PAN
- [ ] PLASTIC SCOOP
- [ ] OTHER

DECONTAMINATION FLUIDS USED:
- [x] POTABLE WATER
- [ ] POTABLE WATER WITH HIGH PRESSURE
- [ ] OTHER

SAMPLE OBSERVATIONS: [ ] ODOR [ ] COLORED

AMBIENT AIR: 0.0 PPM

SAMPLE LOCATION: 0.0 PPM

pH: — UNITS

ANALYTICAL PARAMETERS

	METHOD NUMBER	PRESERVATION METHOD	VOLUME REQUIRED	SAMPLE COLLECTED
[x] PP METALS (SPECIFIED BELOW)		4 DEG C		[x]
[x] AL	JS12	4 DEG C		[x]
[x] CA		4 DEG C		[x]
[x] NA		4 DEG C		[x]
[x] CD		4 DEG C		[x]
[x] CR		4 DEG C		[x]
[x] HG	Y9	4 DEG C		[x]
[x] PB	JD21	4 DEG C		[x]
[x] TCLP METALS (SPECIFIED BELOW)		4 DEG C		[x]
[x] NIT	KF17	4 DEG C		[x]
[x] SO4	KT07	4 DEG C		[x]
[x] NH3N2	USEPA 350.2	4 DEG C		[x]
[x] TOC	USEPA CE-81-1	4 DEG C		[x]
[x] pH	SW846 METHOD 9045	4 DEG C		[x]
[x] * VOC	LM23	4 DEG C		[x]
[x] * BN/A	LM25	4 DEG C		[x]
[x] NG	LW27	4 DEG C		[x]
[x] NAM	LN08	4 DEG C		[x]
[x] DNT	LW23	4 DEG C		[x]

DC

EA

DC

SAMPLE BOTTLE ID NUMBERS: 133, 136, 139, 140, 142

NOTES (LOCATION SKETCH)

* THESE ARE DATACHEM METHODS. EA METHODS: VOC LM17, LM26; B/NA LM20

PP METALS (PRIORITY POLLUTANT): AG, AS, BE, CD, CR, CU, PB, HG, NI, SB, SE, TL, ZN. JS12, B9, JD21, JD20, Y9.

TCLP METALS: CD, CR, HG, PB. JS12, 40 CFR 261.24

DC: 2 bottles

EA: 2 bottles

SIGNATURE: VM/MR

RECEIVED BY: Nancy E. Rossa

ABB ENVIRONMENTAL SERVICES, INC

PAGE 15 OF

FIELD DATA RECORD – SEDIMENT

FIELD SAMPLING NUMBER: P91230OC

PROJECT: USATHAMA-BAAP

SITE ID: PBS-91-23

SITE TYPE: BUGR

JOB NUMBER: 6853-04

PROGRAM: C

LOCATION ACTIVITY: START: 1345 END: 1350

SAMPLING DATE: 9.23.91

FILE NAME: CSO

WEATHER: prt. sunny, °50's windy

SEDIMENT DATA

DEPTH OF SEDIMENT SAMPLE: 1-6 IN

TYPE OF SAMPLE COLLECTED: [x] DISCRETE [ ] COMPOSITE

TYPE OF SEDIMENT:
- [ ] CLAY
- [x] SAND little
- [x] ORGANIC
- [ ] SILT
- [ ] GRAVEL
- [ ] OTHER

EQUIPMENT USED FOR COLLECTION:
- [x] GRAVITY CORER
- [x] TULIP BULB PLANTER
- [ ] S.S. HAND SPOON
- [x] ALUMINUM PAN
- [ ] PLASTIC SCOOP
- [ ] OTHER

DECONTAMINATION FLUIDS USE
- [x] POTABLE WATER
- [ ] POTABLE WATER WITH HIGH PRESSURE
- [ ] OTHER

SAMPLE OBSERVATIONS: [ ] ODOR [ ] COLORED

AMBIENT AIR: 0.0 PPM

SAMPLE LOCATION: 0.0 PPM

pH: — UNITS

ANALYTICAL PARAMETERS

		METHOD NUMBER	PRESERVATION METHOD	VOLUME REQUIRED	SAMPLE COLLECTED	SAMPLE BOTTLE ID NUMBERS
[x]	PP METALS (SPECIFIED BELOW)		4 DEG C		DC [x]	724
[ ]	AL	JS12	4 DEG C			
[ ]	CA		4 DEG C			
[ ]	NA		4 DEG C			
[ ]	CD		4 DEG C			
[ ]	CR		4 DEG C			
[ ]	HG	Y9	4 DEG C			
[ ]	PB	JD21	4 DEG C			
[ ]	TCLP METALS (SPECIFIED BELOW)		4 DEG C			
[ ]	NIT	KF17	4 DEG C			
[ ]	SO4	KT07	4 DEG C			
[ ]	NH3N2	USEPA 350.2	4 DEG C			
[ ]	TOC	USEPA CE-81-1	4 DEG C			
[ ]	pH	SW846 METHOD 9045	4 DEG C			
* [x]	VOC	LM23	4 DEG C		EA [x]	725 / 726
* [ ]	BN/A	LM25	4 DEG C			
[ ]	NG	LW27	4 DEG C			
[ ]	NAM	LN08	4 DEG C			
[x]	DNT	LW23	4 DEG C		DC [x]	726

NOTES (LOCATION SKETCH)

* THESE ARE DATACHEM METHODS. EA METHODS: VOC LM17, LM26 ~~LM23~~

PP METALS (PRIORITY POLLUTANT): AG, AS, BE, CD, CR, CU, PB, HG, NI, SB, SE, TL, ZN. JS12, B9, JD21, JD20, Y9.

TCLP METALS: CD, CR, HG, PB. JS12, 40 CFR 261.24

DC: 2 bottles

EA: 2 bottles

SIGNATURE: VM/MR

RECEIVED BY: Nancy E. Roka

BB ENVIRONMENTAL SERVICES, INC

FIELD DATA RECORD - SEDIMENT

FIELD SAMPLING NUMBER: P91240000

PROJECT: USATHAMA-BAAP

SITE ID: PBS-91-24

SITE TYPE: BUGR

JOB NUMBER: 6853-04

PROGRAM: C

LOCATION ACTIVITY: START: 1640 END: 1645

SAMPLING DATE: 9.23.91

FILE NAME: CSO

WEATHER: sunny, '50's breezy

SEDIMENT DATA

DEPTH OF SEDIMENT SAMPLE: 1-5 IN

TYPE OF SAMPLE COLLECTED: [x] DISCRETE [ ] COMPOSITE

TYPE OF SEDIMENT:
- [ ] CLAY
- [x] SAND
- [x] ORGANIC
- [x] SILT
- [ ] GRAVEL
- [ ] OTHER

EQUIPMENT USED FOR COLLECTION:
- [x] GRAVITY CORER
- [x] TULIP BULB PLANTER
- [x] S.S. HAND SPOON
- [x] ALUMINUM PAN
- [ ] PLASTIC SCOOP
- [ ] OTHER

DECONTAMINATION FLUIDS USED:
- [x] POTABLE WATER
- [ ] POTABLE WATER WITH HIGH PRESSURE
- [ ] OTHER

SAMPLE OBSERVATIONS: [ ] ODOR [ ] COLORED

AMBIENT AIR: 0.0 PPM

SAMPLE LOCATION: 0.0 PPM

pH: — UNITS

ANALYTICAL PARAMETERS

	METHOD NUMBER	PRESERVATION METHOD	VOLUME REQUIRED	SAMPLE COLLECTED	SAMPLE BOTTLE ID NUMBERS
[x] PP METALS (SPECIFIED BELOW)		4 DEG C			145
[ ] AL	JS12	4 DEG C			
[ ] CA		4 DEG C			
[ ] NA		4 DEG C			
[ ] CD		4 DEG C		DC	
[ ] CR		4 DEG C			
[ ] HG	Y9	4 DEG C			
[ ] PB	JD21	4 DEG C		[x]	148
[ ] TCLP METALS (SPECIFIED BELOW)		4 DEG C			
[ ] NIT	KF17	4 DEG C			
[ ] SO4	KT07	4 DEG C			
[ ] NH3N2	USEPA 350.2	4 DEG C			
[ ] TOC	USEPA CE-81-1	4 DEG C			
[ ] pH	SW846 METHOD 9045	4 DEG C			
[x] VOC	LM23	4 DEG C		EA [x]	151 / 152
[ ] BN/A	LM25	4 DEG C			
[ ] NG	LW27	4 DEG C			
[ ] NAM	LN08	4 DEG C			
[x] DNT	LW23	4 DEG C		DC [x]	154

NOTES (LOCATION SKETCH)

* THESE ARE DATACHEM METHODS. EA METHODS: VOC LM17, LM26
B/NA LM20

PP METALS (PRIORITY POLLUTANT): AG, AS, BE, CD, CR, CU, PB, HG, NI, SB, SE, TL, ZN.
JS12, B9, JD21, JD20, Y9.

TCLP METALS: CD, CR, HG, PB.
JS12, 40 CFR 261.24

DC: 2 bottles
EA: 2 bottles

SIGNATURE: VM/MR

RECEIVED BY: Nancy E. Rotta

ABB ENVIRONMENTAL SERVICES, INC

PAGE 2 OF

FIELD DATA RECORD – SEDIMENT

FIELD SAMPLING NUMBER: P91250000

PROJECT: USATHAMA-BAAP

SITE ID: PBS-91-25

LOCATION ACTIVITY: START: 1650 END: 1655

SITE TYPE: BUGR

JOB NUMBER: 6853-04

PROGRAM: C

SAMPLING DATE: 9.23.91

FILE NAME: CSO

WEATHER: Sunny, °50's breezy

SEDIMENT DATA

DEPTH OF SEDIMENT SAMPLE: 1-5 IN

TYPE OF SAMPLE COLLECTED: [x] DISCRETE [ ] COMPOSITE

TYPE OF SEDIMENT:
- [ ] CLAY
- [x] SAND
- [x] ORGANIC
- [ ] SILT
- [ ] GRAVEL
- [ ] OTHER

EQUIPMENT USED FOR COLLECTION:
- [ ] GRAVITY CORER
- [x] TULIP BULB PLANTER
- [ ] S.S. HAND SPOON
- [x] ALUMINUM PAN
- [ ] PLASTIC SCOOP
- [ ] OTHER

DECONTAMINATION FLUIDS USED
- [x] POTABLE WATER
- [ ] POTABLE WATER WITH HIGH PRESSURE
- [ ] OTHER

SAMPLE OBSERVATIONS: [ ] ODOR [ ] COLORED

AMBIENT AIR: 0.0 PPM

SAMPLE LOCATION: 0.0 PPM

pH: — UNITS

ANALYTICAL PARAMETERS

	METHOD NUMBER	PRESERVATION METHOD	VOLUME REQUIRED	SAMPLE COLLECTED	SAMPLE BOTTLE ID NUMBERS
[x] PP METALS (SPECIFIED BELOW)		4 DEG C		DC [x]	733
[ ] AL	JS12	4 DEG C			
[ ] CA		4 DEG C			
[ ] NA		4 DEG C			
[ ] CD		4 DEG C			
[ ] CR		4 DEG C			
[ ] HG	Y9	4 DEG C			
[ ] PB	JD21	4 DEG C			
[ ] TCLP METALS (SPECIFIED BELOW)		4 DEG C			
[ ] NIT	KF17	4 DEG C			
[ ] SO4	KT07	4 DEG C			
[ ] NH3N2	USEPA 350.2	4 DEG C			
[ ] TOC	USEPA CE-81-1	4 DEG C			
[ ] pH	SW846 METHOD 9045	4 DEG C			
*[x] VOC	LM23	4 DEG C		EA [x]	734 737
*[ ] BN/A	LM25	4 DEG C			
[ ] NG	LW27	4 DEG C			
[ ] NAM	LN08	4 DEG C			
[x] DNT	LW23	4 DEG C		DC [x]	735
[ ]					
[ ]					

NOTES (LOCATION SKETCH)

* THESE ARE DATACHEM METHODS. EA METHODS: VOC LM17, LM26
B/NA LM20

PP METALS (PRIORITY POLLUTANT): AG, AS, BE, CD, CR, CU, PB, HG, NI, SB, SE, TL, ZN. JS12, B9, JD21, JD20, Y9.

TCLP METALS: CD, CR, HG, PB. JS12, 40 CFR 261.24

DC: 2 bottles
EA: 2 bottles

SIGNATURE: VM/NR

RECEIVED BY: Nancy E. Rofka

BB ENVIRONMENTAL SERVICES, INC

FIELD DATA RECORD – SEDIMENT

FIELD SAMPLING NUMBER: P912500O

PROJECT: USATHAMA-BAAP

SITE ID: PBS-91-26

LOCATION ACTIVITY: START: 1700 END: 1705

SITE TYPE: BUGR

JOB NUMBER: 6853-04

PROGRAM: C

SAMPLING DATE: 9.23.91

FILE NAME: CSO

WEATHER: Sunny, 90's breezy

SEDIMENT DATA

DEPTH OF SEDIMENT SAMPLE: 1-4 IN

TYPE OF SAMPLE COLLECTED: [x] DISCRETE [ ] COMPOSITE

TYPE OF SEDIMENT: [x] CLAY [x] SAND [x] ORGANIC [x] SILT [ ] GRAVEL [ ] OTHER

EQUIPMENT USED FOR COLLECTION: [x] GRAVITY CORER [x] TULIP BULB PLANTER [x] S.S. HAND SPOON [x] ALUMINUM PAN [ ] PLASTIC SCOOP [ ] OTHER

DECONTAMINATION FLUIDS USED: [x] POTABLE WATER [ ] POTABLE WATER WITH HIGH PRESSURE [ ] OTHER

SAMPLE OBSERVATIONS: [ ] ODOR [ ] COLORED

AMBIENT AIR: 0.0 PPM

SAMPLE LOCATION: 0.0 PPM

pH: — UNITS

ANALYTICAL PARAMETERS

	METHOD NUMBER	PRESERVATION METHOD	VOLUME REQUIRED	SAMPLE COLLECTED	SAMPLE BOTTLE ID NUMBERS
[x] PP METALS (SPECIFIED BELOW)		4 DEG C		DC [x]	742
[ ] AL	JS12	4 DEG C			
[ ] CA		4 DEG C			
[ ] NA		4 DEG C			
[ ] CD		4 DEG C			
[ ] CR		4 DEG C			
[ ] HG	Y9	4 DEG C			
[ ] PB	JD21	4 DEG C			
[ ] TCLP METALS (SPECIFIED BELOW)		4 DEG C			
[ ] NIT	KF17	4 DEG C			
[ ] SO4	KT07	4 DEG C			
[ ] NH3N2	USEPA 350.2	4 DEG C			
[ ] TOC	USEPA CE-81-1	4 DEG C			
[ ] pH	SW846 METHOD 9045	4 DEG C			
[x] VOC	LM23	4 DEG C		EA [x]	743 746
[ ] BN/A	LM25	4 DEG C			
[ ] NG	LW27	4 DEG C			
[x] NAM	LN08	4 DEG C			
[x] DNT	LW23	4 DEG C		DC [x]	744

NOTES (LOCATION SKETCH)

* THESE ARE DATACHEM METHODS. EA METHODS: VOC LM17, LM26
B/NA LM20

PP METALS (PRIORITY POLLUTANT): AG, AS, BE, CD, CR, CU, PB, HG, NI, SB, SE, TL, ZN.
JS12, B9, JD21, JD20, Y9.

TCLP METALS: CD, CR, HG, PB.
JS12, 40 CFR 261.24

DC: 2 bottles

EA: 2 bottles

SIGNATURE: VM/MR

RECEIVED BY: Nancy E. Porca

ABB ENVIRONMENTAL SERVICES, INC

PAGE 4 OF

FIELD DATA RECORD – SEDIMENT

FIELD SAMPLING NUMBER: P9127000

PROJECT: USATHAMA-BAAP

SITE TYPE: BUGR

SAMPLING DATE: 9.23.91

SITE ID: PBS-91-27

JOB NUMBER: 6853-04

FILE NAME: CSO

WEATHER: sunny, 50's breezy

LOCATION ACTIVITY: START: ~~1510~~ 1710 END: ~~15~~ 1715

PROGRAM: C

SEDIMENT DATA

DEPTH OF SEDIMENT SAMPLE: 1-6 IN

TYPE OF SAMPLE COLLECTED: [x] DISCRETE [ ] COMPOSITE

TYPE OF SEDIMENT:
- [ ] CLAY
- [x] SAND
- [x] ORGANIC
- [x] SILT
- [x] GRAVEL
- [ ] OTHER

EQUIPMENT USED FOR COLLECTION:
- [ ] GRAVITY CORER
- [x] TULIP BULB PLANTER
- [ ] S.S. HAND SPOON
- [x] ALUMINUM PAN
- [ ] PLASTIC SCOOP
- [ ] OTHER

DECONTAMINATION FLUIDS USED
- [x] POTABLE WATER
- [ ] POTABLE WATER WITH HIGH PRESSURE
- [ ] OTHER

SAMPLE OBSERVATIONS: [ ] ODOR [ ] COLORED [ ]

AMBIENT AIR: 0.0 PPM

SAMPLE LOCATION: 0.0 PPM

pH: — UNITS

ANALYTICAL PARAMETERS

	METHOD NUMBER	PRESERVATION METHOD	VOLUME REQUIRED	SAMPLE COLLECTED	SAMPLE BOTTLE ID NUMBERS
[x] PP METALS (SPECIFIED BELOW)		4 DEG C		DC [x]	157
[ ] AL	JS12	4 DEG C		DC [ ]	
[ ] CA		4 DEG C		DC [ ]	
[ ] NA		4 DEG C		DC [ ]	
[ ] CD		4 DEG C		DC [ ]	
[ ] CR		4 DEG C		DC [ ]	
[ ] HG	Y9	4 DEG C		DC [ ]	
[ ] PB	JD21	4 DEG C		DC [ ]	
[x] TCLP METALS (SPECIFIED BELOW)		4 DEG C		DC [x]	160
[ ] NIT	KF17	4 DEG C		DC [ ]	
[ ] SO4	KT07	4 DEG C		DC [ ]	
[ ] NH3N2	USEPA 350.2	4 DEG C		DC [ ]	
[ ] TOC	USEPA CE-81-1	4 DEG C		DC [ ]	
[ ] pH	SW846 METHOD 9045	4 DEG C		DC [ ]	
*[x] VOC	LM23	4 DEG C		EA [x]	163 / 164
*[ ] BN/A	LM25	4 DEG C		EA [ ]	
[ ] NG	LW27	4 DEG C		EA [ ]	
[ ] NAM	LN08	4 DEG C		EA [ ]	
[x] DNT	LW23	4 DEG C		DC [x]	166
[ ]				[ ]	
[ ]				[ ]	

NOTES (LOCATION SKETCH)

* THESE ARE DATACHEM METHODS. EA METHODS: VOC LM17, LM26
B/NA LM20

PP METALS (PRIORITY POLLUTANT): AG, AS, BE, CD, CR, CU, PB, HG, NI, SB, SE, TL, ZN.
JS12, B9, JD21, JD20, Y9.

TCLP METALS: CD, CR, HG, PB.
JS12, 40 CFR 261.24

DC: 2 bottles
EA: 2 bottles

SIGNATURE: VM/MR

RECEIVED BY: Nancy E. Rofia

BB ENVIRONMENTAL SERVICES, INC

FIELD DATA RECORD - SEDIMENT

FIELD SAMPLING NUMBER: P9128000

PROJECT: USATHAMA-BAAP

SITE TYPE: BUGR

SAMPLING DATE: 9.23.91

SITE ID: PBS-91-28

JOB NUMBER: 6853-04

FILE NAME: CSO

WEATHER: Sunny. 50's breezy

LOCATION ACTIVITY: START: 1725 END: 1730

PROGRAM: C

SEDIMENT DATA

DEPTH OF SEDIMENT SAMPLE: 1-4 IN

TYPE OF SAMPLE COLLECTED: [x] DISCRETE [ ] COMPOSITE

TYPE OF SEDIMENT:
- [ ] CLAY
- [x] SAND
- [x] ORGANIC
- [x] SILT
- [ ] GRAVEL
- [ ] OTHER

EQUIPMENT USED FOR COLLECTION:
- [ ] GRAVITY CORER
- [x] TULIP BULB PLANTER
- [ ] S.S. HAND SPOON
- [x] ALUMINUM PAN
- [ ] PLASTIC SCOOP
- [ ] OTHER

DECONTAMINATION FLUIDS USED
- [x] POTABLE WATER
- [ ] POTABLE WATER WITH HIGH PRESSURE
- [ ] OTHER

SAMPLE OBSERVATIONS: [ ] ODOR [ ] COLORED

AMBIENT AIR: 0.0 PPM

SAMPLE LOCATION: 0.0 PPM

pH: — UNITS

ANALYTICAL PARAMETERS

	METHOD NUMBER	PRESERVATION METHOD	VOLUME REQUIRED	SAMPLE COLLECTED	SAMPLE BOTTLE ID NUMBERS
[x] PP METALS (SPECIFIED BELOW)		4 DEG C		DC [x]	751
[ ] AL	JS12	4 DEG C		[ ]	
[ ] CA		4 DEG C		[ ]	
[ ] NA		4 DEG C		[ ]	
[ ] CD		4 DEG C		[ ]	
[ ] CR		4 DEG C		[ ]	
[ ] HG	Y9	4 DEG C		[ ]	
[ ] PB	JD21	4 DEG C		[ ]	
[ ] TCLP METALS (SPECIFIED BELOW)		4 DEG C		[ ]	
[ ] NIT	KF17	4 DEG C		[ ]	
[ ] SO4	KT07	4 DEG C		[ ]	
[ ] NH3N2	USEPA 350.2	4 DEG C		[ ]	
[ ] TOC	USEPA CE-81-1	4 DEG C		[ ]	
[ ] pH	SW846 METHOD 9045	4 DEG C		[ ]	
[x] VOC	LM23	4 DEG C		EA [x]	752 / 755
[ ] BN/A	LM25	4 DEG C		[ ]	
[ ] NG	LW27	4 DEG C		[ ]	
[ ] NAM	LN08	4 DEG C		[ ]	
[x] DNT	LW23	4 DEG C		DC [x]	753
[ ]				[ ]	
[ ]				[ ]	
[ ]				[ ]	

NOTES (LOCATION SKETCH)

* THESE ARE DATACHEM METHODS. EA METHODS: VOC LM17, LM26
B/NA LM20

PP METALS (PRIORITY POLLUTANT): AG, AS, BE, CD, CR ,CU, PB, HG, NI, SB, SE, TL, ZN.
JS12, B9, JD21, JD20, Y9.

TCLP METALS: CD, CR, HG, PB.
JS12, 40 CFR 261.24

DC: 2 bottles
EA: 2 bottles

SIGNATURE: VM / MR

RECEIVED BY: Nancy E. Roka

ABB ENVIRONMENTAL SERVICES, INC

PAGE 6 OF

FIELD DATA RECORD - SEDIMENT

FIELD SAMPLING NUMBER: P9129000

PROJECT: USATHAMA-BAAP

SITE TYPE: BUGR

SAMPLING DATE: 9.23.91

SITE ID: PBS-91-2~~6~~9 (MR)

JOB NUMBER: 6853-04

FILE NAME: CSO

WEATHER: sunny, 50's breezy

LOCATION ACTIVITY: START: 1735 END: 1740

PROGRAM: C

SEDIMENT DATA

DEPTH OF SEDIMENT SAMPLE: 1-5 IN

TYPE OF SAMPLE COLLECTED: [x] DISCRETE [ ] COMPOSITE

TYPE OF SEDIMENT:
- [ ] CLAY
- [x] SAND
- [x] ORGANIC
- [x] SILT little
- [ ] GRAVEL
- [ ] OTHER

EQUIPMENT USED FOR COLLECTION:
- [ ] GRAVITY CORER
- [x] TULIP BULB PLANTER
- [ ] S.S. HAND SPOON
- [x] ALUMINUM PAN
- [ ] PLASTIC SCOOP
- [ ] OTHER

DECONTAMINATION FLUIDS USED
- [x] POTABLE WATER
- [ ] POTABLE WATER WITH HIGH PRESSURE
- [ ] OTHER

SAMPLE OBSERVATIONS: [ ] ODOR [ ] COLORED [ ]

AMBIENT AIR: 0.0 PPM

SAMPLE LOCATION: 0.0 PPM

pH: — UNITS

ANALYTICAL PARAMETERS

	METHOD NUMBER	PRESERVATION METHOD	VOLUME REQUIRED	SAMPLE COLLECTED	SAMPLE BOTTLE ID NUMBERS
[x] PP METALS (SPECIFIED BELOW)		4 DEG C		[x]	169
[ ] AL	JS12	4 DEG C		[ ]	
[ ] CA		4 DEG C		[ ]	
[ ] NA		4 DEG C		[ ]	
[ ] CD		4 DEG C	DC	[ ]	
[ ] CR		4 DEG C		[ ]	
[ ] HG	Y9	4 DEG C		[ ]	
[ ] PB	JD21	4 DEG C		[ ]	
[x] TCLP METALS (SPECIFIED BELOW)		4 DEG C		[x]	172
[ ] NIT	KF17	4 DEG C		[ ]	
[ ] SO4	KT07	4 DEG C		[ ]	
[ ] NH3N2	USEPA 350.2	4 DEG C		[ ]	
[ ] TOC	USEPA CE-81-1	4 DEG C		[ ]	
[ ] pH	SW846 METHOD 9045	4 DEG C		[ ]	
*[x] VOC	LM23	4 DEG C	EA	[x]	175 / 176
*[ ] BN/A	LM25	4 DEG C		[ ]	
[ ] NG	LW27	4 DEG C		[ ]	
[ ] NAM	LN08	4 DEG C		[ ]	
[x] DNT	LW23	4 DEG C	DC	[x]	178
[ ]				[ ]	
[ ]				[ ]	

NOTES (LOCATION SKETCH)

* THESE ARE DATACHEM METHODS. EA METHODS: VOC LM17, LM26
B/NA LM20

PP METALS (PRIORITY POLLUTANT): AG, AS, BE, CD, CR, CU, PB, HG, NI, SB, SE, TL, ZN.
JS12, B9, JD21, JD20, Y9.

TCLP METALS: CD, CR, HG, PB.
JS12, 40 CFR 261.24

DC: 2 bottles
EA: 2 bottles

SIGNATURE: VRR/MR

RECEIVED BY: Nancy E. Roka

BB ENVIRONMENTAL SERVICES, INC

FIELD DATA RECORD – SEDIMENT

FIELD SAMPLING NUMBER: F913000

PROJECT: USATHAMA-BAAP

SITE TYPE: BUGR

SAMPLING DATE: 9.24.91

SITE ID: PBS-91-30

JOB NUMBER: 6853-04

FILE NAME: CSO

LOCATION ACTIVITY: START: 0800 END: 0805

PROGRAM: C

WEATHER: rainy, ~50s

SEDIMENT DATA

DEPTH OF SEDIMENT SAMPLE: 1-5 IN

TYPE OF SAMPLE COLLECTED: [x] DISCRETE [ ] COMPOSITE

TYPE OF SEDIMENT:
- [x] CLAY
- [x] SAND
- [x] ORGANIC
- [x] SILT
- [ ] GRAVEL
- [ ] OTHER

EQUIPMENT USED FOR COLLECTION:
- [x] GRAVITY CORER
- [ ] TULIP BULB PLANTER
- [ ] S.S. HAND SPOON
- [x] ALUMINUM PAN
- [ ] PLASTIC SCOOP
- [ ] OTHER

DECONTAMINATION FLUIDS USED:
- [x] POTABLE WATER
- [ ] POTABLE WATER WITH HIGH PRESSURE
- [ ] OTHER

SAMPLE OBSERVATIONS: [ ] ODOR [ ] COLORED

AMBIENT AIR: — PPM

SAMPLE LOCATION: — PPM

pH: — UNITS

ANALYTICAL PARAMETERS

	METHOD NUMBER	PRESERVATION METHOD	VOLUME REQUIRED	SAMPLE COLLECTED
[x] PP METALS (SPECIFIED BELOW)		4 DEG C		DC [x]
[ ] AL	JS12	4 DEG C		
[ ] CA	|	4 DEG C		
[ ] NA	|	4 DEG C		
[ ] CD	|	4 DEG C		
[ ] CR	|	4 DEG C		
[ ] HG	Y9	4 DEG C		
[ ] PB	JD21	4 DEG C		
[ ] TCLP METALS (SPECIFIED BELOW)		4 DEG C		
[ ] NIT	KF17	4 DEG C		
[ ] SO4	KT07	4 DEG C		
[ ] NH3N2	USEPA 350.2	4 DEG C		
[ ] TOC	USEPA CE-81-1	4 DEG C		
[ ] pH	SW846 METHOD 9045	4 DEG C		
[x] VOC	LM23	4 DEG C		EA [x]
[x] BN/A	LM25	4 DEG C		DC [x]
[ ] NG	LW27	4 DEG C		
[ ] NAM	LN08	4 DEG C		
[x] DNT	LW23	4 DEG C		[x]

SAMPLE BOTTLE ID NUMBERS: 763; 764, 767; 517; 765

NOTES (LOCATION SKETCH)

* THESE ARE DATACHEM METHODS. EA METHODS: VOC LM17, LM26; B/NA LM20

PP METALS (PRIORITY POLLUTANT): AG, AS, BE, CD, CR, CU, PB, HG, NI, SB, SE, TL, ZN. JS12, B9, JD21, JD20, Y9.

TCLP METALS: CD, CR, HG, PB. JS12, 40 CFR 261.24

DC: 2 bottles
EA: 2 bottles

*TIP • TE failed. New one charging.

SIGNATURE: VM/NR

RECEIVED BY: Nancy E. Rota

ABB ENVIRONMENTAL SERVICES, INC

PAGE 3 OF

FIELD DATA RECORD – SEDIMENT

FIELD SAMPLING NUMBER: P91310DD

PROJECT: USATHAMA-BAAP

SITE ID: PBS-9i-31

LOCATION ACTIVITY: START: 0810 END: 0815

SITE TYPE: BUGR

JOB NUMBER: 6853-04

PROGRAM: C

SAMPLING DATE: 9 24 91

FILE NAME: CSO

WEATHER: cloudy, ~50's

SEDIMENT DATA

DEPTH OF SEDIMENT SAMPLE: 1-5 IN

TYPE OF SAMPLE COLLECTED: [x] DISCRETE [ ] COMPOSITE

TYPE OF SEDIMENT:
- [ ] CLAY
- [x] SAND
- [x] ORGANIC
- [ ] SILT
- [ ] GRAVEL
- [ ] OTHER

EQUIPMENT USED FOR COLLECTION:
- [ ] GRAVITY CORER
- [ ] TULIP BULB PLANTER
- [x] S.S. HAND SPOON
- [ ] ALUMINUM PAN
- [ ] PLASTIC SCOOP
- [ ] OTHER

DECONTAMINATION FLUIDS USED
- [x] POTABLE WATER
- [ ] POTABLE WATER WITH HIGH PRESSURE
- [ ] OTHER

SAMPLE OBSERVATIONS
- [ ] ODOR
- [ ] COLORED

AMBIENT AIR: — PPM

SAMPLE LOCATION: — PPM

pH: — UNITS

ANALYTICAL PARAMETERS

		METHOD NUMBER	PRESERVATION METHOD	VOLUME REQUIRED	SAMPLE COLLECTED	SAMPLE BOTTLE ID NUMBERS
[x]	PP METALS (SPECIFIED BELOW)		4 DEG C		DC [x]	769
[ ]	AL	JS12	4 DEG C			
[ ]	CA		4 DEG C			
[ ]	NA		4 DEG C			
[ ]	CD		4 DEG C			
[ ]	CR		4 DEG C			
[ ]	HG	Y9	4 DEG C			
[ ]	PB	JD21	4 DEG C			
[ ]	TCLP METALS (SPECIFIED BELOW)		4 DEG C			
[ ]	NIT	KF17	4 DEG C			
[ ]	SO4	KT07	4 DEG C			
[ ]	NH3N2	USEPA 350.2	4 DEG C			
[ ]	TOC	USEPA CE-81-1	4 DEG C			
[ ]	pH	SW846 METHOD 9045	4 DEG C			
* [x]	VOC	LM23	4 DEG C		EA [x]	770 773
* [ ]	BN/A	LM25	4 DEG C			
[ ]	NG	LW27	4 DEG C			
[ ]	NAM	LN08	4 DEG C			
[x]	DNT	LW23	4 DEG C		DC [x]	771

NOTES
(LOCATION SKETCH)

* THESE ARE DATACHEM METHODS. EA METHODS: VOC LM17, LM26
B/NA LM20

PP METALS (PRIORITY POLLUTANT): AG, AS, BE, CD, CR, CU, PB, HG, NI, SB, SE, TL, ZN.
JS12, B9, JD21, JD20, Y9.

TCLP METALS: CD, CR, HG, PB.
JS12, 40 CFR 261.24

DC: 2 bottles
EA: 2 bottles

SIGNATURE: VM/MR

RECEIVED BY: Nancy E. Rotza

BB ENVIRONMENTAL SERVICES, INC

FIELD DATA RECORD – SEDIMENT

FIELD SAMPLING NUMBER: P91320000

PROJECT: USATHAMA-BAAP

SITE ID: PBS-91-32

SITE TYPE: BUGR

JOB NUMBER: 6853-04

PROGRAM: C

SAMPLING DATE: 9.24.91

FILE NAME: CSO

WEATHER: cloudy. 50s rainy

LOCATION ACTIVITY: START: 0815 END: 0820

SEDIMENT DATA

DEPTH OF SEDIMENT SAMPLE: 1-3 IN

TYPE OF SAMPLE COLLECTED: [x] DISCRETE [ ] COMPOSITE

TYPE OF SEDIMENT:
- [ ] CLAY
- [x] SAND
- [x] ORGANIC
- [ ] SILT
- [ ] GRAVEL
- [ ] OTHER

EQUIPMENT USED FOR COLLECTION:
- [ ] GRAVITY CORER
- [x] TULIP BULB PLANTER
- [ ] S.S. HAND SPOON
- [x] ALUMINUM PAN
- [ ] PLASTIC SCOOP
- [ ] OTHER

DECONTAMINATION FLUIDS USED:
- [x] POTABLE WATER
- [ ] POTABLE WATER WITH HIGH PRESSURE
- [ ] OTHER

SAMPLE OBSERVATIONS: [ ] ODOR [ ] COLORED

AMBIENT AIR: -- PPM

SAMPLE LOCATION: — PPM

pH: — UNITS

ANALYTICAL PARAMETERS

		METHOD NUMBER	PRESERVATION METHOD	VOLUME REQUIRED	SAMPLE COLLECTED	SAMPLE BOTTLE ID NUMBERS
[x]	PP METALS (SPECIFIED BELOW)		4 DEG C		DC [x]	778
[ ]	AL	JS12	4 DEG C		[ ]	
[ ]	CA	|	4 DEG C		[ ]	
[ ]	NA	|	4 DEG C		[ ]	
[ ]	CD	|	4 DEG C		[ ]	
[ ]	CR	|	4 DEG C		[ ]	
[ ]	HG	Y9	4 DEG C		[ ]	
[ ]	PB	JD21	4 DEG C		[ ]	
[x]	TCLP METALS (SPECIFIED BELOW)		4 DEG C		[ ]	
[ ]	NIT	KF17	4 DEG C		[ ]	
[ ]	SO4	KT07	4 DEG C		[ ]	
[ ]	NH3N2	USEPA 350.2	4 DEG C		[ ]	
[ ]	TOC	USEPA CE-81-1	4 DEG C		[ ]	
[ ]	pH	SW846 METHOD 9045	4 DEG C		[ ]	
* [x]	VOC	LM23	4 DEG C		DC [x]	779 782
* [ ]	BN/A	LM25	4 DEG C		[ ]	
[ ]	NG	LW27	4 DEG C		[ ]	
[ ]	NAM	LN08	4 DEG C		[ ]	
[x]	DNT	LW23	4 DEG C		DC [x]	780

NOTES (LOCATION SKETCH)

* THESE ARE DATACHEM METHODS. EA METHODS: VOC LM17, LM26
B/NA LM20

PP METALS (PRIORITY POLLUTANT): AG, AS, BE, CD, CR, CU, PB, HG, NI, SB, SE, TL, ZN.
JS12, B9, JD21, JD20, Y9.

TCLP METALS: CD, CR, HG, PB.
JS12, 40 CFR 261.24

DC: 24 bottles

~~EA: 2 bottles~~ (MS)

SIGNATURE: VM/NR

RECEIVED BY: Nancy E. Rotta

ABB ENVIRONMENTAL SERVICES, INC

FIELD DATA RECORD – SEDIMENT

FIELD SAMPLING NUMBER: P9133000

PROJECT: USATHAMA-BAAP

SITE ID: PBS-91-33

LOCATION ACTIVITY: START: 0825 END: 0830

SITE TYPE: BUGR

JOB NUMBER: 6853-04

PROGRAM: C

SAMPLING DATE: 9.24.91

FILE NAME: CSO

WEATHER: cloudy, °50s rain

SEDIMENT DATA

DEPTH OF SEDIMENT SAMPLE: 1-3 IN

TYPE OF SAMPLE COLLECTED: ☑ DISCRETE ☐ COMPOSITE

TYPE OF SEDIMENT:
- ☐ CLAY
- ☑ SAND
- ☑ ORGANIC
- ☑ SILT
- ☐ GRAVEL
- ☐ OTHER

EQUIPMENT USED FOR COLLECTION:
- ☐ GRAVITY CORER
- ☑ TULIP BULB PLANTER
- ☑ S.S. HAND SPOON
- ☑ ALUMINUM PAN
- ☐ PLASTIC SCOOP
- ☐ OTHER

DECONTAMINATION FLUIDS USED:
- ☑ POTABLE WATER
- ☐ POTABLE WATER WITH HIGH PRESSURE
- ☐ OTHER

SAMPLE OBSERVATIONS: ☐ ODOR ☐ COLORED

AMBIENT AIR: — PPM

SAMPLE LOCATION: — PPM

pH: — UNITS

ANALYTICAL PARAMETERS

	METHOD NUMBER	PRESERVATION METHOD	VOLUME REQUIRED	SAMPLE COLLECTED	SAMPLE BOTTLE ID NUMBERS
☑ PP METALS (SPECIFIED BELOW)		4 DEG C		☑	181
☐ AL	JS12	4 DEG C			
☐ CA	|	4 DEG C			
☐ NA	|	4 DEG C			
☐ CD	|	4 DEG C			
☐ CR	|	4 DEG C			
☐ HG	Y9	4 DEG C			
☐ PB	JD21	4 DEG C			
☑ TCLP METALS (SPECIFIED BELOW)		4 DEG C		☑	184
☐ NIT	KF17	4 DEG C			
☐ SO4	KT07	4 DEG C		DC	
☐ NH3N2	USEPA 350.2	4 DEG C			
☐ TOC	USEPA CE-81-1	4 DEG C			
☐ pH	SW846 METHOD 9045	4 DEG C			
* ☑ VOC	LM23	4 DEG C		☑	187 188
* ☐ BN/A	LM25	4 DEG C			
☐ NG	LW27	4 DEG C			
☐ NAM	LN08	4 DEG C			
☑ DNT	LW23	4 DEG C		☑	190

NOTES (LOCATION SKETCH)

* THESE ARE DATACHEM METHODS. EA METHODS: VOC LM17, LM26; B/NA LM20

PP METALS (PRIORITY POLLUTANT): AG, AS, BE, CD, CR, CU, PB, HG, NI, SB, SE, TL, ZN. JS12, B9, JD21, JD20, Y9.

TCLP METALS: CD, CR, HG, PB. JS12, 40 CFR 261.24

DC: 4 1 bottles

~~EA: 2 bottles~~

SIGNATURE: VM / MC

RECEIVED BY: Nancy E. Rotta

BB ENVIRONMENTAL SERVICES, INC

FIELD DATA RECORD – SEDIMENT

FIELD SAMPLING NUMBER: P91,34000

PROJECT: USATHAMA-BAAP
SITE ID: PBS-91-34
LOCATION ACTIVITY START: 0830 END: 0835
SITE TYPE: BUGR
JOB NUMBER: 6853-04
PROGRAM: C
SAMPLING DATE: 9.24.91
FILE NAME: CSO
WEATHER: rain, 50's

SEDIMENT DATA

DEPTH OF SEDIMENT SAMPLE: 1-3 IN

TYPE OF SAMPLE COLLECTED: [x] DISCRETE [ ] COMPOSITE

TYPE OF SEDIMENT:
- [ ] CLAY
- [x] SAND
- [x] ORGANIC
- [x] SILT
- [ ] GRAVEL
- [ ] OTHER

EQUIPMENT USED FOR COLLECTION:
- [ ] GRAVITY CORER
- [x] TULIP BULB PLANTER
- [x] S.S. HAND SPOON
- [x] ALUMINUM PAN
- [ ] PLASTIC SCOOP
- [ ] OTHER

DECONTAMINATION FLUIDS USED:
- [x] POTABLE WATER
- [ ] POTABLE WATER WITH HIGH PRESSURE
- [ ] OTHER

SAMPLE OBSERVATIONS: [ ] ODOR [ ] COLORED

AMBIENT AIR: — PPM

SAMPLE LOCATION: — PPM

pH: — UNITS

ANALYTICAL PARAMETERS

	METHOD NUMBER	PRESERVATION METHOD	VOLUME REQUIRED	SAMPLE COLLECTED
[x] PP METALS (SPECIFIED BELOW)		4 DEG C		[x]
[ ] AL	JS12	4 DEG C		[ ]
[ ] CA	|	4 DEG C		[ ]
[ ] NA	|	4 DEG C		[ ]
[ ] CD	|	4 DEG C		[ ]
[ ] CR	|	4 DEG C		[ ]
[ ] HG	Y9	4 DEG C		[ ]
[ ] PB	JD21	4 DEG C		[ ]
[x] TCLP METALS (SPECIFIED BELOW)		4 DEG C		[x]
[ ] NIT	KF17	4 DEG C		[ ]
[ ] SO4	KT07	4 DEG C		[ ]
[ ] NH3N2	USEPA 350.2	4 DEG C		[ ]
[ ] TOC	USEPA CE-81-1	4 DEG C		[ ]
[ ] pH	SW846 METHOD 9045	4 DEG C		[ ]
[x] VOC	LM23	4 DEG C		[x]
[ ] BN/A	LM25	4 DEG C		[ ]
[ ] NG	LW27	4 DEG C		[ ]
[ ] NAM	LN08	4 DEG C		[ ]
[x] DNT	LW23	4 DEG C		[x]

DC

SAMPLE BOTTLE ID NUMBERS: 193, 196, 199, 200, 202

NOTES (LOCATION SKETCH)

* THESE ARE DATACHEM METHODS. EA METHODS: VOC LM17, LM26
B/NA LM20

PP METALS (PRIORITY POLLUTANT): AG, AS, BE, CD, CR, CU, PB, HG, NI, SB, SE, TL, ZN.
JS12, B9, JD21, JD20, Y9.

TCLP METALS: CD, CR, HG, PB.
JS12, 40 CFR 261.24

DC: 4 bottles

~~EA: 2 bottles~~ (VM)

SIGNATURE: VM / NR

RECEIVED BY: Nancy E Roña

ABB ENVIRONMENTAL SERVICES, INC

PAGE 12 OF

FIELD DATA RECORD - SEDIMENT

FIELD SAMPLING NUMBER: P91350000

PROJECT: USATHAMA-BAAP

SITE ID: PBS-91-35

LOCATION ACTIVITY: START: 0840 END: 0845

SITE TYPE: BUGR

JOB NUMBER: 6853-04

PROGRAM: C

SAMPLING DATE: 9.24.91

FILE NAME: CSO

WEATHER: rain, °50's

SEDIMENT DATA

DEPTH OF SEDIMENT SAMPLE: 1-3 IN

TYPE OF SAMPLE COLLECTED: [x] DISCRETE [ ] COMPOSITE

TYPE OF SEDIMENT:
- [ ] CLAY
- [x] SAND
- [x] ORGANIC
- [x] SILT
- [x] GRAVEL
- [ ] OTHER

EQUIPMENT USED FOR COLLECTION:
- [ ] GRAVITY CORER
- [x] TULIP BULB PLANTER
- [ ] S.S. HAND SPOON
- [x] ALUMINUM PAN
- [ ] PLASTIC SCOOP
- [ ] OTHER

DECONTAMINATION FLUIDS USED
- [x] POTABLE WATER
- [ ] POTABLE WATER WITH HIGH PRESSURE
- [ ] OTHER

SAMPLE OBSERVATIONS: [ ] ODOR [ ] COLORED

AMBIENT AIR: — PPM

SAMPLE LOCATION: — PPM

pH: — UNITS

ANALYTICAL PARAMETERS

		METHOD NUMBER	PRESERVATION METHOD	VOLUME REQUIRED	SAMPLE COLLECTED
[x]	PP METALS (SPECIFIED BELOW)		4 DEG C		
[ ]	AL	JS12	4 DEG C		
[ ]	CA		4 DEG C		
[ ]	NA		4 DEG C		
[ ]	CD		4 DEG C		
[ ]	CR		4 DEG C		
[ ]	HG	Y:	4 DEG C		
[ ]	PB	JD21	4 DEG C		
[ ]	TCLP METALS (SPECIFIED BELOW)		4 DEG C		
[ ]	NIT	KF17	4 DEG C		
[ ]	SO4	KT07	4 DEG C		
[ ]	NH3N2	USEPA 350.2	4 DEG C		
[ ]	TOC	USEPA CE-81-1	4 DEG C		
[ ]	pH	SW846 METHOD 9045	4 DEG C		
* [x]	VOC	LM23	4 DEG C		[x]
* [ ]	BN/A	LM25	4 DEG C		[x]
[ ]	NG	LW27	4 DEG C		[x]
[ ]	NAM	LN08	4 DEG C		[x]
[x]	DNT	LW23	4 DEG C		[x]

DC

SAMPLE BOTTLE ID NUMBERS: 787, 782, 791, 789

NOTES (LOCATION SKETCH)

* THESE ARE DATACHEM METHODS. EA METHODS: VOC LM17, LM26; B/NA LM20

PP METALS (PRIORITY POLLUTANT): AG, AS, BE, CD, CR, CU, PB, HG, NI, SB, SE, TL, ZN. JS12, B9, JD21, JD20, Y9.

TCLP METALS: CD, CR, HG, PB. JS12, 40 CFR 261.24

DC: 4 bottles

~~EA: 2 bottles~~ (MR)

SIGNATURE: VM/MR

RECEIVED BY: Nancy E Rotz

BB ENVIRONMENTAL SERVICES, INC

FIELD DATA RECORD – SEDIMENT

FIELD SAMPLING NUMBER: P913600CO

PROJECT: USATHAMA-BAAP

SITE ID: PBS-91-36

LOCATION ACTIVITY: START: 0850 END: 0855

SITE TYPE: BUGR

JOB NUMBER: 6853-04

PROGRAM: C

SAMPLING DATE: 9.24.91

FILE NAME: CSO

WEATHER: rain, 50's

SEDIMENT DATA

DEPTH OF SEDIMENT SAMPLE: 1-5 IN

TYPE OF SAMPLE COLLECTED: [x] DISCRETE [ ] COMPOSITE

TYPE OF SEDIMENT:
- [x] CLAY
- [x] SAND
- [x] ORGANIC
- [x] SILT
- [x] GRAVEL trace
- [ ] OTHER

EQUIPMENT USED FOR COLLECTION:
- [x] GRAVITY CORER
- [x] TULIP BULB PLANTER
- [x] S.S. HAND SPOON
- [x] ALUMINUM PAN
- [ ] PLASTIC SCOOP
- [ ] OTHER

DECONTAMINATION FLUIDS USED:
- [x] POTABLE WATER
- [ ] POTABLE WATER WITH HIGH PRESSURE
- [ ] OTHER

SAMPLE OBSERVATIONS: [ ] ODOR [ ] COLORED

AMBIENT AIR: — PPM

SAMPLE LOCATION: — PPM

pH: — UNITS

ANALYTICAL PARAMETERS

	METHOD NUMBER	PRESERVATION METHOD	VOLUME REQUIRED	SAMPLE COLLECTED
[x] PP METALS (SPECIFIED BELOW)		4 DEG C		
[ ] AL	JS12	4 DEG C		
[ ] CA		4 DEG C		
[ ] NA		4 DEG C		
[ ] CD		4 DEG C		
[ ] CR		4 DEG C		
[ ] HG	Y9	4 DEG C		
[ ] PB	JD21	4 DEG C		
[x] TCLP METALS (SPECIFIED BELOW)		4 DEG C		
[ ] NIT	KF17	4 DEG C		
[ ] SO4	KT07	4 DEG C		
[ ] NH3N2	USEPA 350.2	4 DEG C		
[ ] TOC	USEPA CE-81-1	4 DEG C		
[ ] pH	SW846 METHOD 9045	4 DEG C		
[x] VOC	LM23	4 DEG C	DC	[x]
[ ] BN/A	LM25	4 DEG C		[x]
[ ] NG	LW27	4 DEG C		
[ ] NAM	LN08	4 DEG C		
[x] DNT	LW23	4 DEG C		[x]

SAMPLE BOTTLE ID NUMBERS: 205, 208, 211, 212, 214

NOTES
LOCATION SKETCH)

* THESE ARE DATACHEM METHODS. EA METHODS: VOC LM17, LM26
B/NA LM20

PP METALS (PRIORITY POLLUTANT): AG, AS, BE, CD, CR, CU, PB, HG, NI, SB, SE, TL, ZN.
JS12, B9, JD21, JD20, Y9.

TCLP METALS: CD, CR, HG, PB.
JS12, 40 CFR 261.24

DC: 14 bottles
~~EA: 2 bottles~~

SIGNATURE: VM/MC

RECEIVED BY: Nancy E. Rota

ABB ENVIRONMENTAL SERVICES, INC

FIELD DATA RECORD – SEDIMENT

FIELD SAMPLING NUMBER: F913700 00

PROJECT: USATHAMA-BAAP

SITE ID: PBS-91-37

LOCATION ACTIVITY: START: 0900 END: 0905

SITE TYPE: BUGR

JOB NUMBER: 6853-04

PROGRAM: C

SAMPLING DATE: 9.24.91

FILE NAME: CSO

WEATHER: rain, 50's

SEDIMENT DATA

DEPTH OF SEDIMENT SAMPLE: 1-4 IN

TYPE OF SAMPLE COLLECTED: [x] DISCRETE [ ] COMPOSITE

TYPE OF SEDIMENT:
- [x] CLAY
- [x] SAND
- [x] ORGANIC
- [ ] SILT
- [ ] GRAVEL
- [ ] OTHER

EQUIPMENT USED FOR COLLECTION:
- [ ] GRAVITY CORER
- [x] TULIP BULB PLANTER
- [x] S.S. HAND SPOON
- [x] ALUMINUM PAN
- [ ] PLASTIC SCOOP
- [ ] OTHER

DECONTAMINATION FLUIDS USED:
- [x] POTABLE WATER
- [ ] POTABLE WATER WITH HIGH PRESSURE
- [ ] OTHER

SAMPLE OBSERVATIONS: [ ] ODOR [ ] COLORED

AMBIENT AIR: — PPM

SAMPLE LOCATION: — PPM

pH: — UNITS

ANALYTICAL PARAMETERS

	METHOD NUMBER	PRESERVATION METHOD	VOLUME REQUIRED	SAMPLE COLLECTED
[x] PP METALS (SPECIFIED BELOW)		4 DEG C		
[ ] AL	JS12	4 DEG C		
[ ] CA		4 DEG C		
[ ] NA		4 DEG C		
[ ] CD		4 DEG C		
[ ] CR		4 DEG C		
[ ] HG	Y9	4 DEG C		
[ ] PB	JD21	4 DEG C		
[ ] TCLP METALS (SPECIFIED BELOW)		4 DEG C		
[ ] NIT	KF17	4 DEG C		
[ ] SO4	KT07	4 DEG C		
[ ] NH3N2	USEPA 350.2	4 DEG C		
[ ] TOC	USEPA CE-81-1	4 DEG C		
[ ] pH	SW846 METHOD 9045	4 DEG C		
* [x] VOC	LM23	4 DEG C	DC	[x]
* [ ] BN/A	LM25	4 DEG C		
[ ] NG	LW27	4 DEG C		
[ ] NAM	LN08	4 DEG C		
[x] DNT	LW23	4 DEG C		[x]

SAMPLE BOTTLE ID NUMBERS: 796, 797, 798, 799, 800, 792

NOTES (LOCATION SKETCH)

* THESE ARE DATACHEM METHODS. EA METHODS: VOC LM17, LM26; B/NA LM20

PP METALS (PRIORITY POLLUTANT): AG, AS, BE, CD, CR, CU, PB, HG, NI, SB, SE, TL, ZN. JS12, 89, JD21, JD20, Y9.

TCLP METALS: CD, CR, HG, PB. JS12, 40 CFR 261.24

DC: 4 bottles

SIGNATURE: VM/MR

RECEIVED BY: Nancy E. Rojas

BB ENVIRONMENTAL SERVICES, INC

FIELD DATA RECORD - SEDIMENT

FIELD SAMPLING NUMBER: P91380006

PROJECT: USATHAMA-BAAP

SITE TYPE: BUGR

SAMPLING DATE: 9.24.91

SITE ID: PBS-91-38

JOB NUMBER: 6853-04

FILE NAME: CSO

WEATHER: rain, °50's

LOCATION ACTIVITY: START: 0925 END: 0930

PROGRAM: C

SEDIMENT DATA

DEPTH OF SEDIMENT SAMPLE: 1-4 IN

TYPE OF SAMPLE COLLECTED: [x] DISCRETE [ ] COMPOSITE

TYPE OF SEDIMENT:
- [ ] CLAY
- [x] SAND
- [x] ORGANIC
- [x] SILT
- [x] GRAVEL Some
- [ ] OTHER

EQUIPMENT USED FOR COLLECTION:
- [ ] GRAVITY CORER
- [x] TULIP BULB PLANTER
- [x] S.S. HAND SPOON
- [x] ALUMINUM PAN
- [ ] PLASTIC SCOOP
- [ ] OTHER

DECONTAMINATION FLUIDS USED:
- [x] POTABLE WATER
- [ ] POTABLE WATER WITH HIGH PRESSURE
- [ ] OTHER

SAMPLE OBSERVATIONS: [ ] ODOR [ ] COLORED

AMBIENT AIR: — PPM

SAMPLE LOCATION: — PPM

pH: — UNITS

ANALYTICAL PARAMETERS

	METHOD NUMBER	PRESERVATION METHOD	VOLUME REQUIRED	SAMPLE COLLECTED
[x] PP METALS (SPECIFIED BELOW)		4 DEG C		[x]
[ ] AL	JS12	4 DEG C		[ ]
[ ] CA		4 DEG C		[ ]
[ ] NA		4 DEG C		[ ]
[ ] CD		4 DEG C		[ ]
[ ] CR		4 DEG C		[ ]
[ ] HG	Y9	4 DEG C		[ ]
[ ] PB	JD21	4 DEG C		[ ]
[ ] TCLP METALS (SPECIFIED BELOW)		4 DEG C		[ ]
[ ] NIT	KF17	4 DEG C		[ ]
[ ] SO4	KT07	4 DEG C		[ ]
[ ] NH3N2	USEPA 350.2	4 DEG C		[ ]
[ ] TOC	USEPA.CE-81-1	4 DEG C		[ ]
[x] pH	SW846 METHOD 9045	4 DEG C		[x]
[x] * VOC	LM23	4 DEG C		[x]
[x] * BN/A	LM25	4 DEG C		[x]
[ ] NG	LW27	4 DEG C		[ ]
[x] NAM	LN08	4 DEG C		[x]
[x] DNT	LW23	4 DEG C		[x]

DC

SAMPLE BOTTLE ID NUMBERS: 805, 806, 809, 807

NOTES (LOCATION SKETCH)

* THESE ARE DATACHEM METHODS. EA METHODS: VOC LM17, LM26; B/NA LM20

PP METALS (PRIORITY POLLUTANT): AG, AS, BE, CD, CR, CU, PB, HG, NI, SB, SE, TL, ZN. JS12, 89, JD21, JD20, Y9.

TCLP METALS: CD, CR, HG, PB. JS12, 40 CFR 261.24

DC: 4 bottles

SIGNATURE: VM/ME

RECEIVED BY: Nancy E. Rotta

ABB ENVIRONMENTAL SERVICES, INC

FIELD DATA RECORD – SEDIMENT

FIELD SAMPLING NUMBER: P913900 00

PROJECT: USATHAMA-BAAP

SITE ID: PBS-91-39

SITE TYPE: BUGR

JOB NUMBER: 6853-04

PROGRAM: C

LOCATION ACTIVITY START: 0940 END: 0945

SAMPLING DATE: 9.24.91

FILE NAME: CSO

WEATHER: rain, °50's

SEDIMENT DATA

DEPTH OF SEDIMENT SAMPLE: 1-5 IN

TYPE OF SAMPLE COLLECTED: [✓] DISCRETE [ ] COMPOSITE

TYPE OF SEDIMENT: [✓] CLAY [✓] SAND [✓] ORGANIC [ ] SILT [ ] GRAVEL [ ] OTHER

EQUIPMENT USED FOR COLLECTION: [✓] GRAVITY CORER [✓] TULIP BULB PLANTER [✓] S.S. HAND SPOON [ ] ALUMINUM PAN [ ] PLASTIC SCOOP [ ] OTHER

DECONTAMINATION FLUIDS USED: [✓] POTABLE WATER [ ] POTABLE WATER WITH HIGH PRESSURE [ ] OTHER

SAMPLE OBSERVATIONS: [ ] ODOR [ ] COLORED

AMBIENT AIR: — PPM

SAMPLE LOCATION: — PPM

pH: — UNITS

ANALYTICAL PARAMETERS

	METHOD NUMBER	PRESERVATION METHOD	VOLUME REQUIRED	SAMPLE COLLECTED
[✓] PP METALS (SPECIFIED BELOW)		4 DEG C		[✓]
[ ] AL	JS12	4 DEG C		
[ ] CA		4 DEG C		
[ ] NA		4 DEG C		
[ ] CD		4 DEG C		
[ ] CR		4 DEG C		
[ ] HG	Y9	4 DEG C		
[ ] PB	JD21	4 DEG C		
[✓] TCLP METALS (SPECIFIED BELOW)		4 DEG C	DC	[✓]
[ ] NIT	KF17	4 DEG C		
[ ] SO4	KT07	4 DEG C		
[ ] NH3N2	USEPA 350.2	4 DEG C		
[ ] TOC	USEPA CE-81-1	4 DEG C		
[ ] pH	SW846 METHOD 9045	4 DEG C		
*[✓] VOC	LM23	4 DEG C		[✓]
*[ ] BN/A	LM25	4 DEG C		
[ ] NG	LW27	4 DEG C		
[ ] NAM	LN08	4 DEG C		
[✓] DNT	LW23	4 DEG C		[✓]
[ ]				

SAMPLE BOTTLE ID NUMBERS: 217, 220, 223, 224, 226

NOTES (LOCATION SKETCH)

* THESE ARE DATACHEM METHODS. EA METHODS: VOC LM17, LM26; B/NA LM20

PP METALS (PRIORITY POLLUTANT): AG, AS, BE, CD, CR, CU, PB, HG, NI, SB, SE, TL, ZN. JS12, B9, JD21, JD20, Y9.

TCLP METALS: CD, CR, HG, PB. JS12, 40 CFR 261.24

DC: 4 bottles

SIGNATURE: VM/MC

RECEIVED BY: Nancy E. Rotta

BB ENVIRONMENTAL SERVICES, INC

FIELD DATA RECORD – SEDIMENT

FIELD SAMPLING NUMBER: P914000C

PROJECT: USATHAMA-BAAP

SITE ID: PBS-91

SITE TYPE: BUGR

JOB NUMBER: 6853-04

PROGRAM: C

LOCATION ACTIVITY START: 0950 END: 0955

SAMPLING DATE: 9.24.91

FILE NAME: CSO

WEATHER: rain ~50's

SEDIMENT DATA

DEPTH OF SEDIMENT SAMPLE: 1-4 IN

TYPE OF SAMPLE COLLECTED: [x] DISCRETE [ ] COMPOSITE

TYPE OF SEDIMENT:
- [x] CLAY
- [x] SAND
- [x] ORGANIC
- [x] SILT
- [ ] GRAVEL
- [ ] OTHER

EQUIPMENT USED FOR COLLECTION:
- [x] GRAVITY CORER
- [x] TULIP BULB PLANTER
- [x] S.S. HAND SPOON
- [x] ALUMINUM PAN
- [ ] PLASTIC SCOOP
- [ ] OTHER

DECONTAMINATION FLUIDS USED:
- [x] POTABLE WATER
- [ ] POTABLE WATER WITH HIGH PRESSURE
- [ ] OTHER

SAMPLE OBSERVATIONS: [ ] ODOR [ ] COLORED

AMBIENT AIR: — PPM

SAMPLE LOCATION: — PPM

pH: — UNITS

ANALYTICAL PARAMETERS

	METHOD NUMBER	PRESERVATION METHOD	VOLUME REQUIRED	SAMPLE COLLECTED
[x] PP METALS (SPECIFIED BELOW)		4 DEG C		[x]
[ ] AL	JS12	4 DEG C		
[ ] CA	|	4 DEG C		
[ ] NA	|	4 DEG C		
[ ] CD	|	4 DEG C		
[ ] CR	|	4 DEG C		
[ ] HG	Y9	4 DEG C		
[ ] PB	JD21	4 DEG C		
[ ] TCLP METALS (SPECIFIED BELOW)		4 DEG C	DC	
[ ] NIT	KF17	4 DEG C		
[ ] SO4	KT07	4 DEG C		
[ ] NH3N2	USEPA 350.2	4 DEG C		
[ ] TOC	USEPA CE-81-1	4 DEG C		
[ ] pH	SW846 METHOD 9045	4 DEG C		
[x] VOC	LM23	4 DEG C		[x]
[x] BN/A	LM25	4 DEG C		[x]
[ ] NG	LW27	4 DEG C		
[ ] NAM	LN08	4 DEG C		
[x] DNT	LW23	4 DEG C		[x]

SAMPLE BOTTLE ID NUMBERS: 814; 815, 818; 820; 816

NOTES
LOCATION SKETCH)

* THESE ARE DATACHEM METHODS. EA METHODS: VOC LM17, LM26
B/NA LM20

PP METALS (PRIORITY POLLUTANT): AG, AS, BE, CD, CR, CU, PB, HG, NI, SB, SE, TL, ZN.
JS12, B9, JD21, JD20, Y9.

TCLP METALS: CD, CR, HG, PB.
JS12, 40 CFR 261.24

DC: 4 bottles

SIGNATURE: VM/MR

RECEIVED BY: Nancy E. Rotta

ABB ENVIRONMENTAL SERVICES, INC

FIELD DATA RECORD – SEDIMENT

FIELD SAMPLING NUMBER: P914 1000

PROJECT: USATHAMA-BAAP

SITE ID: PBS-9i-41

LOCATION ACTIVITY: START: 1225 END: 1230

SITE TYPE: BUGR

JOB NUMBER: 6853-04

PROGRAM: C

SAMPLING DATE: 10.i.91

FILE NAME: CSO

WEATHER: cloudy, 50's

SEDIMENT DATA

DEPTH OF SEDIMENT SAMPLE: 0-2 IN

TYPE OF SAMPLE COLLECTED: [x] DISCRETE [ ] COMPOSITE

TYPE OF SEDIMENT: [ ] CLAY [x] SAND [ ] ORGANIC [ ] SILT [x] GRAVEL [ ] OTHER

EQUIPMENT USED FOR COLLECTION: [x] GRAVITY CORER [x] TULIP BULB PLANTER [x] S.S. HAND SPOON [x] ALUMINUM PAN [ ] PLASTIC SCOOP [ ] OTHER

DECONTAMINATION FLUIDS USED: [x] POTABLE WATER [ ] POTABLE WATER WITH HIGH PRESSURE [ ] OTHER

SAMPLE OBSERVATIONS: [ ] ODOR [ ] COLORED

AMBIENT AIR: 0.0 PPM

SAMPLE LOCATION: 0.0 PPM

pH: — UNITS

ANALYTICAL PARAMETERS

		METHOD NUMBER	PRESERVATION METHOD	VOLUME REQUIRED	SAMPLE COLLECTED	SAMPLE BOTTLE ID NUMBERS
[x]	PP METALS (SPECIFIED BELOW)		4 DEG C		DC [x]	2761
[ ]	AL	JS12	4 DEG C			
[ ]	CA		4 DEG C			
[ ]	NA		4 DEG C			
[ ]	CD		4 DEG C			
[ ]	CR		4 DEG C			
[ ]	HG	Y9	4 DEG C			
[ ]	PB	JD21	4 DEG C			
[ ]	TCLP METALS (SPECIFIED BELOW)		4 DEG C			
[ ]	NIT	KF17	4 DEG C			
[ ]	SO4	KT07	4 DEG C			
[ ]	NH3N2	USEPA 350.2	4 DEG C			
[ ]	TOC	USEPA CE-81-1	4 DEG C			
[ ]	pH	SW846 METHOD 9045	4 DEG C			
* [x]	VOC	LM23	4 DEG C		EA [x]	2767 2768
* [x]	BN/A	LM25	4 DEG C			
[ ]	HG	LW27	4 DEG C			
[ ]	NAM	LN08	4 DEG C			
[x]	DNT	LW23	4 DEG C		DC [x]	2773

NOTES (LOCATION SKETCH)

* THESE ARE DATACHEM METHODS. EA METHODS: VOC LM17, LM26
B/NA LM20

PP METALS (PRIORITY POLLUTANT): AG, AS, BE, CD, CR, CU, PB, HG, NI, SB, SE, TL, ZN.
JS12, B9, JD21, JD20, Y9.

TCLP METALS: CD, CR, HG, PB.
JS12, 40 CFR 261.24

DC: 2 bottles
EA: 2 bottles

SIGNATURE: VM/MR

RECEIVED BY: Nancy E. Roka

ABB ENVIRONMENTAL SERVICES, INC

PAGE 19 OF 20

FIELD DATA RECORD - SEDIMENT

FIELD SAMPLING NUMBER: ~~PBS-91~~ P9150000

PROJECT	USATHAMA-BAAP	SITE TYPE	BUGR	SAMPLING DATE	9.24.91
SITE ID	PBS-91-5C	JOB NUMBER	6853-04	FILE NAME	CSO
LOCATION ACTIVITY	START: 1010 END: 1015	PROGRAM	C	WEATHER	rain, 50's

SEDIMENT DATA

DEPTH OF SEDIMENT SAMPLE: 1-5 IN

TYPE OF SAMPLE COLLECTED: [x] DISCRETE [ ] COMPOSITE

TYPE OF SEDIMENT:
- [ ] CLAY
- [x] SAND
- [x] ORGANIC
- [x] SILT
- [ ] GRAVEL
- [ ] OTHER

EQUIPMENT USED FOR COLLECTION:
- [ ] GRAVITY CORER
- [x] TULIP BULB PLANTER
- [ ] S.S. HAND SPOON
- [x] ALUMINUM PAN
- [ ] PLASTIC SCOOP
- [ ] OTHER

DECONTAMINATION FLUIDS USED
- [x] POTABLE WATER
- [ ] POTABLE WATER WITH HIGH PRESSURE
- [ ] OTHER

SAMPLE OBSERVATIONS: [ ] ODOR [ ] COLORED [ ]

AMBIENT AIR: — PPM

SAMPLE LOCATION: — PPM

pH: — UNITS

ANALYTICAL PARAMETERS

	METHOD NUMBER	PRESERVATION METHOD	VOLUME REQUIRED	SAMPLE COLLECTED	SAMPLE BOTTLE ID NUMBERS
[x] PP METALS (SPECIFIED BELOW)		4 DEG C		[x]	823
[ ] AL	JS12	4 DEG C		[ ]	
[ ] CA		4 DEG C		[ ]	
[ ] NA		4 DEG C		[ ]	
[ ] CD		4 DEG C		[ ]	
[ ] CR		4 DEG C		[ ]	
[ ] HG	Y9	4 DEG C		[ ]	
[ ] PB	JD21	4 DEG C		[ ]	
[ ] TCLP METALS (SPECIFIED BELOW)		4 DEG C		[ ]	
[ ] NIT	KF17	4 DEG C		[ ]	
[ ] SO4	KT07	4 DEG C		[ ]	
[ ] NH3N2	USEPA 350.2	4 DEG C		[ ]	
[ ] TOC	USEPA CE-81-1	4 DEG C		[ ]	
[ ] pH	SW846 METHOD 9045	4 DEG C		[ ]	
*[x] VOC	LM23	4 DEG C		[x]	824 / 827
*[ ] BN/A	LM25	4 DEG C		[ ]	
[ ] NG	LW27	4 DEG C		[ ]	
[ ] NAM	LN08	4 DEG C		[ ]	
[x] DNT	LW23	4 DEG C		[x]	825
[ ]				[ ]	
[ ]				[ ]	

DC

NOTES (LOCATION SKETCH)

* THESE ARE DATACHEM METHODS. EA METHODS: VOC LM17, LM26
B/NA LM20

PP METALS (PRIORITY POLLUTANT): AG, AS, BE, CD, CR, CU, PB, HG, NI, SB, SE, TL, ZN.
JS12, B9, JD21, JD20, Y9.

TCLP METALS: CD, CR, HG, PB.
JS12, 40 CFR 261.24

DC: 4 bottles

SIGNATURE: VM/MR

RECEIVED BY: Nancy E. Roka

ABB ENVIRONMENTAL SERVICES, INC

FIELD DATA RECORD - SEDIMENT

FIELD SAMPLING NUMBER: P9151000

PROJECT: USATHAMA-BAAP

SITE ID: PBS-91-51

SITE TYPE: BUGR

JOB NUMBER: 6853-04

PROGRAM: C

SAMPLING DATE: 9.24.91

FILE NAME: CSO

WEATHER: rain, 50's

LOCATION ACTIVITY: START: 1025 END: 1030

SEDIMENT DATA

DEPTH OF SEDIMENT SAMPLE: 1-4 IN

TYPE OF SAMPLE COLLECTED: [x] DISCRETE [ ] COMPOSITE

TYPE OF SEDIMENT: [ ] CLAY [x] SAND [x] ORGANIC [ ] SILT [ ] GRAVEL [ ] OTHER

EQUIPMENT USED FOR COLLECTION: [ ] GRAVITY CORER [x] TULIP BULB PLANTER [ ] S.S. HAND SPOON [x] ALUMINUM PAN [ ] PLASTIC SCOOP [ ] OTHER

DECONTAMINATION FLUIDS USED: [x] POTABLE WATER [ ] POTABLE WATER WITH HIGH PRESSURE [ ] OTHER

SAMPLE OBSERVATIONS: [ ] ODOR [ ] COLORED

AMBIENT AIR: ___ PPM

SAMPLE LOCATION: ___ PPM

pH: ___ UNITS

ANALYTICAL PARAMETERS

	METHOD NUMBER	PRESERVATION METHOD	VOLUME REQUIRED	SAMPLE COLLECTED
[x] PP METALS (SPECIFIED BELOW)		4 DEG C		DC
[ ] AL	JS12	4 DEG C		
[ ] CA		4 DEG C		
[ ] NA		4 DEG C		
[ ] CD		4 DEG C		
[ ] CR		4 DEG C		
[ ] HG	Y9	4 DEG C		
[ ] PB	JD21	4 DEG C		
[ ] TCLP METALS (SPECIFIED BELOW)		4 DEG C		
[ ] NIT	KF17	4 DEG C		
[ ] SO4	KT07	4 DEG C		
[ ] NH3N2	USEPA 350.2	4 DEG C		
[ ] TOC	USEPA CE-81-1	4 DEG C		
[ ] pH	SW846 METHOD 9045	4 DEG C		
[x] * VOC	LM23	4 DEG C		[x]
[x] * BN/A	LM25	4 DEG C		[x]
[ ] NG	LW27	4 DEG C		
[ ] MAM	LM08	4 DEG C		
[x] DNT	LW23	4 DEG C		[x]

SAMPLE BOTTLE ID NUMBERS: 832 / 833 / 836 / 834

NOTES (LOCATION SKETCH)

* THESE ARE DATACHEM METHODS. EA METHODS: VOC LM17, LM26; B/NA LM20

PP METALS (PRIORITY POLLUTANT): AG, AS, BE, CD, CR, CU, PB, HG, NI, SB, SE, TL, ZN. JS12, B9, JD21, JD20, Y9.

TCLP METALS: CD, CR, HG, PB. JS12, 40 CFR 261.24

DC: 4 bottles

SIGNATURE: VM/NR

RECEIVED BY: Nancy E. Roka

ABB ENVIRONMENTAL SERVICES, INC

PAGE 1 OF 22

FIELD DATA RECORD – SEDIMENT

FIELD SAMPLING NUMBER: P91520000

PROJECT: USATHAMA-BAAP

SITE ID: PBS-91-52

SITE TYPE: BUGR

JOB NUMBER: 6853-04

PROGRAM: C

SAMPLING DATE: 9.24.91

FILE NAME: CSO

WEATHER: rain, 50's

LOCATION ACTIVITY: START: 1315 END: 1320

SEDIMENT DATA

DEPTH OF SEDIMENT SAMPLE: 1-5 IN

TYPE OF SAMPLE COLLECTED: [x] DISCRETE [ ] COMPOSITE

TYPE OF SEDIMENT:
- [ ] CLAY
- [x] SAND trace
- [x] ORGANIC
- [x] SILT
- [ ] GRAVEL
- [ ] OTHER

EQUIPMENT USED FOR COLLECTION:
- [x] GRAVITY CORER
- [x] TULIP BULB PLANTER
- [x] S.S. HAND SPOON
- [x] ALUMINUM PAN
- [ ] PLASTIC SCOOP
- [ ] OTHER

DECONTAMINATION FLUIDS USED:
- [x] POTABLE WATER
- [ ] POTABLE WATER WITH HIGH PRESSURE
- [ ] OTHER

SAMPLE OBSERVATIONS: [ ] ODOR [ ] COLORED

AMBIENT AIR: — PPM

SAMPLE LOCATION: — PPM

pH: — UNITS

ANALYTICAL PARAMETERS

	METHOD NUMBER	PRESERVATION METHOD	VOLUME REQUIRED	SAMPLE COLLECTED
[x] PP METALS (SPECIFIED BELOW)		4 DEG C	DC	[x]
[ ] AL	JS12	4 DEG C		[ ]
[ ] CA		4 DEG C		[ ]
[ ] NA		4 DEG C		[ ]
[ ] CD		4 DEG C		[ ]
[ ] CR		4 DEG C		[ ]
[ ] HG	Y9	4 DEG C		[ ]
[ ] PB	JD21	4 DEG C		[ ]
[x] TCLP METALS (SPECIFIED BELOW)		4 DEG C		[x]
[ ] NIT	KF17	4 DEG C		[ ]
[ ] SO4	KT07	4 DEG C		[ ]
[ ] NH3N2	USEPA 350.2	4 DEG C		[ ]
[ ] TOC	USEPA CE-81-1	4 DEG C		[ ]
[ ] pH	SW846 METHOD 9045	4 DEG C		[ ]
*[x] VOC	LM23	4 DEG C		[x]
*[ ] BN/A	LM25	4 DEG C		[ ]
[ ] NG	LW27	4 DEG C		[ ]
[ ] NAM	LN08	4 DEG C		[ ]
[x] DNT	LW23	4 DEG C		[x]

SAMPLE BOTTLE ID NUMBERS: 241, 249, 248, 247, 250

NOTES (LOCATION SKETCH)

* THESE ARE DATACHEM METHODS. EA METHODS: VOC LM17, LM26; B/NA LM20

PP METALS (PRIORITY POLLUTANT): AG, AS, BE, CD, CR, CU, PB, HG, NI, SB, SE, TL, ZN. JS12, B9, JD21, JD20, Y9.

TCLP METALS: CD, CR, HG, PB. JS12, 40 CFR 261.24

DC: 4 bottles

*TIP/TE not working. New one charging

SIGNATURE: VM/NR

RECEIVED BY: Nancy E. Roßa

ABB ENVIRONMENTAL SERVICES, INC

FIELD DATA RECORD – SEDIMENT

FIELD SAMPLING NUMBER: P91530000

PROJECT: USATHAMA-BAAP

SITE ID: PBS-91-53

SITE TYPE: BUGR

JOB NUMBER: 6853-04

PROGRAM: C

LOCATION ACTIVITY: START: 1325 END: 1330

SAMPLING DATE: 9.24.91

FILE NAME: CSO

WEATHER: rain, °50's

SEDIMENT DATA

DEPTH OF SEDIMENT SAMPLE: 1-5 IN

TYPE OF SAMPLE COLLECTED: [x] DISCRETE [ ] COMPOSITE

TYPE OF SEDIMENT:
- [ ] CLAY
- [x] SAND
- [x] ORGANIC
- [x] SILT
- [ ] GRAVEL
- [ ] OTHER

EQUIPMENT USED FOR COLLECTION:
- [ ] GRAVITY CORER
- [x] TULIP BULB PLANTER
- [ ] S.S. HAND SPOON
- [x] ALUMINUM PAN
- [ ] PLASTIC SCOOP
- [ ] OTHER

DECONTAMINATION FLUIDS USED:
- [x] POTABLE WATER
- [ ] POTABLE WATER WITH HIGH PRESSURE
- [ ] OTHER

SAMPLE OBSERVATIONS: [ ] ODOR [ ] COLORED

AMBIENT AIR: — PPM

SAMPLE LOCATION: — PPM

pH: — UNITS

ANALYTICAL PARAMETERS

		METHOD NUMBER	PRESERVATION METHOD	VOLUME REQUIRED	SAMPLE COLLECTED	SAMPLE BOTTLE ID NUMBERS
[x]	PP METALS (SPECIFIED BELOW)		4 DEG C		[x]	841
[ ]	AL	JS12	4 DEG C			
[ ]	CA		4 DEG C			
[ ]	NA		4 DEG C			
[ ]	CD		4 DEG C			
[ ]	CR		4 DEG C			
[ ]	HG	Y9	4 DEG C			
[ ]	PB	JD21	4 DEG C			
[ ]	TCLP METALS (SPECIFIED BELOW)		4 DEG C			
[ ]	NIT	KF17	4 DEG C			
[ ]	SO4	KT07	4 DEG C		DC	
[ ]	NH3N2	USEPA 350.2	4 DEG C			
[ ]	TOC	USEPA CE-81-1	4 DEG C			
[ ]	pH	SW846 METHOD 9045	4 DEG C			
* [x]	VOC	LM23	4 DEG C		[x]	842 845
* [ ]	BN/A	LM25	4 DEG C			
[ ]	NG	LW27	4 DEG C			
[ ]	NAM	LM08	4 DEG C			
[x]	DNT	LW23	4 DEG C		[x]	843

NOTES (LOCATION SKETCH)

* THESE ARE DATACHEM METHODS. EA METHODS: VOC LM17, LM26; B/NA LM20

PP METALS (PRIORITY POLLUTANT): AG, AS, BE, CD, CR, CU, PB, HG, NI, SB, SE, TL, ZN. JS12, B9, JD21, JD20, Y9.

TCLP METALS: CD, CR, HG, PB. JS12, 40 CFR 261.24

DC: 4 bottles

SIGNATURE: VM/MR

RECEIVED BY: Nancy E. Roka

BB ENVIRONMENTAL SERVICES, INC

FIELD DATA RECORD - SEDIMENT

FIELD SAMPLING NUMBER: F9154000 ~~PBS~~

PROJECT: USATHAMA-BAAP

SITE TYPE: BUGR

SAMPLING DATE: 9.24.91

SITE ID: PBS-91-54

JOB NUMBER: 6853-04

FILE NAME: CSO

WEATHER: rain, ~50's

LOCATION ACTIVITY: START: 1335 END: 1340

PROGRAM: C

SEDIMENT DATA

DEPTH OF SEDIMENT SAMPLE: 1-5 IN

TYPE OF SAMPLE COLLECTED: [x] DISCRETE [ ] COMPOSITE

TYPE OF SEDIMENT:
- [ ] CLAY
- [x] SAND
- [x] ORGANIC
- [x] SILT
- [ ] GRAVEL
- [ ] OTHER

EQUIPMENT USED FOR COLLECTION:
- [ ] GRAVITY CORER
- [x] TULIP BULB PLANTER
- [ ] S.S. HAND SPOON
- [x] ALUMINUM PAN
- [ ] PLASTIC SCOOP
- [ ] OTHER

DECONTAMINATION FLUIDS USED
- [x] POTABLE WATER
- [ ] POTABLE WATER WITH HIGH PRESSURE
- [ ] OTHER

SAMPLE OBSERVATIONS: [ ] ODOR [ ] COLORED [ ]

AMBIENT AIR: — PPM

SAMPLE LOCATION: — PPM

pH: — UNITS

ANALYTICAL PARAMETERS

	METHOD NUMBER	PRESERVATION METHOD	VOLUME REQUIRED	SAMPLE COLLECTED	SAMPLE BOTTLE ID NUMBERS
[x] PP METALS (SPECIFIED BELOW)		4 DEG C		[x]	853
[ ] AL	JS12	4 DEG C		[ ]	
[ ] CA		4 DEG C		[ ]	
[ ] NA		4 DEG C		[ ]	
[ ] CD		4 DEG C		[ ]	
[ ] CR		4 DEG C		[ ]	
[ ] HG	Y9	4 DEG C		[ ]	
[ ] PB	JD21	4 DEG C		[ ]	
[ ] TCLP METALS (SPECIFIED BELOW)		4 DEG C		[ ]	
[ ] NIT	KF17	4 DEG C		[ ]	
[ ] SO4	KT07	4 DEG C		[ ]	
[ ] NH3N2	USEPA 350.2	4 DEG C		[ ]	
[ ] TOC	USEPA CE-81-1	4 DEG C		[ ]	
[ ] pH	SW846 METHOD 9045	4 DEG C		[ ]	
*[x] VOC	LM23	4 DEG C		[x]	854 / 857
*[ ] BN/A	LM25	4 DEG C		[ ]	
[ ] NG	LW27	4 DEG C		[ ]	
[ ] NAM	LN08	4 DEG C		[ ]	
[x] DNT	LW23	4 DEG C		[x]	855
[ ]				[ ]	
[ ]				[ ]	

DC

NOTES (LOCATION SKETCH)

* THESE ARE DATACHEM METHODS. EA METHODS: VOC LM17, LM26
B/NA LM20

PP METALS (PRIORITY POLLUTANT): AG, AS, BE, CD, CR ,CU, PB, HG, NI, SB, SE, TL, ZN.
JS12, B9, JD21, JD20, Y9.

TCLP METALS: CD, CR, HG, PB.
JS12, 40 CFR 261.24

DC: 4 bottles

SIGNATURE: VM/MR

RECEIVED BY: Nancy E. Roka

ABB ENVIRONMENTAL SERVICES, INC

FIELD DATA RECORD - SEDIMENT

FIELD SAMPLING NUMBER: P91S5000

PROJECT: USATHAMA-BAAP

SITE ID: PBS-91--55

SITE TYPE: BUGR

JOB NUMBER: 6853-04

PROGRAM: C

SAMPLING DATE: 9.24.91

FILE NAME: CSO

WEATHER: rain, °50's

LOCATION ACTIVITY: START: 1410 END: 1415

SEDIMENT DATA

DEPTH OF SEDIMENT SAMPLE: 0-3 IN

TYPE OF SAMPLE COLLECTED: [x] DISCRETE [ ] COMPOSITE

TYPE OF SEDIMENT:
- [ ] CLAY
- [x] SAND little
- [x] ORGANIC trace
- [ ] SILT
- [ ] GRAVEL
- [ ] OTHER

EQUIPMENT USED FOR COLLECTION:
- [ ] GRAVITY CORER
- [x] TULIP BULB PLANTER
- [ ] S.S. HAND SPOON
- [x] ALUMINUM PAN
- [x] PLASTIC SCOOP
- [x] OTHER scupula

DECONTAMINATION FLUIDS USED
- [x] POTABLE WATER
- [ ] POTABLE WATER WITH HIGH PRESSURE
- [ ] OTHER

SAMPLE OBSERVATIONS: [ ] ODOR [ ] COLORED

AMBIENT AIR: ___ PPM

SAMPLE LOCATION: ___ PPM

pH: ___ UNITS

ANALYTICAL PARAMETERS

		METHOD NUMBER	PRESERVATION METHOD	VOLUME REQUIRED	SAMPLE COLLECTED
[x]	PP METALS (SPECIFIED BELOW)		4 DEG C		
[ ]	AL	JS12	4 DEG C		
[ ]	CA		4 DEG C		
[ ]	NA		4 DEG C		
[ ]	CD		4 DEG C		
[ ]	CR		4 DEG C		
[ ]	HG	Y9	4 DEG C		
[ ]	PB	JD21	4 DEG C		
[x]	TCLP METALS (SPECIFIED BELOW)		4 DEG C		
[ ]	NIT	KF17	4 DEG C		
[ ]	SO4	KT07	4 DEG C		
[ ]	NH3N2	USEPA 350.2	4 DEG C		
[ ]	TOC	USEPA CE-81-1	4 DEG C		
[ ]	pH	SW846 METHOD 9045	4 DEG C		
* [x]	VOC	LM23	4 DEG C	DC	[x]
* [x]	BN/A	LM25	4 DEG C		[x]
[ ]	NG	LW27	4 DEG C		
[ ]	NAM	LN08	4 DEG C		
[x]	DNT	LW23	4 DEG C		[x]

SAMPLE BOTTLE ID NUMBERS: 253, 256, 259, 260, 263, 262

NOTES (LOCATION SKETCH)

* THESE ARE DATACHEM METHODS. EA METHODS: VOC LM17, LM26; B/NA LM20

PP METALS (PRIORITY POLLUTANT): AG, AS, BE, CD, CR, CU, PB, HG, NI, SB, SE, TL, ZN. JS12, B9, JD21, JD20, Y9.

TCLP METALS: CD, CR, HG, PB. JS12, 40 CFR 261.24

DC: 4 bottles

SIGNATURE: VM/ NR

RECEIVED BY: Nancy E. Roka

BB ENVIRONMENTAL SERVICES, INC

FIELD DATA RECORD – SEDIMENT

FIELD SAMPLING NUMBER: P91560000

PROJECT: USATHAMA-BAAP

SITE ID: PBS-91-56

LOCATION ACTIVITY: START: 1430 END: 1435

SITE TYPE: BUGR

JOB NUMBER: 6853-04

PROGRAM: C

SAMPLING DATE: 9.24.91

FILE NAME: CSO

WEATHER: rain, °50's

SEDIMENT DATA

DEPTH OF SEDIMENT SAMPLE: 1-5 IN

TYPE OF SAMPLE COLLECTED: [x] DISCRETE [ ] COMPOSITE

TYPE OF SEDIMENT:
- [ ] CLAY
- [x] SAND little fine
- [x] ORGANIC little
- [ ] SILT
- [ ] GRAVEL
- [ ] OTHER

EQUIPMENT USED FOR COLLECTION:
- [x] GRAVITY CORER
- [x] TULIP BULB PLANTER
- [ ] S.S. HAND SPOON
- [x] ALUMINUM PAN
- [ ] PLASTIC SCOOP
- [x] OTHER scupula

DECONTAMINATION FLUIDS USED
- [x] POTABLE WATER
- [ ] POTABLE WATER WITH HIGH PRESSURE
- [ ] OTHER

SAMPLE OBSERVATIONS: [ ] ODOR [ ] COLORED

AMBIENT AIR: — PPM

SAMPLE LOCATION: — PPM

pH: — UNITS

ANALYTICAL PARAMETERS

	METHOD NUMBER	PRESERVATION METHOD	VOLUME REQUIRED	SAMPLE COLLECTED	SAMPLE BOTTLE ID NUMBERS
[x] PP METALS (SPECIFIED BELOW)		4 DEG C		[x]	859
[ ] AL	JS12	4 DEG C		[ ]	
[ ] CA		4 DEG C		[ ]	
[ ] NA		4 DEG C		[ ]	
[ ] CD		4 DEG C		[ ]	
[ ] CR		4 DEG C		[ ]	
[ ] HG	Y9	4 DEG C		[ ]	
[ ] PB	JD21	4 DEG C		[ ]	
[ ] TCLP METALS (SPECIFIED BELOW)		4 DEG C		[ ]	
[ ] NIT	KF17	4 DEG C		[ ]	
[ ] SO4	KT07	4 DEG C		[ ]	
[ ] NH3N2	USEPA 350.2	4 DEG C		[ ]	
[ ] TOC	USEPA CE-81-1	4 DEG C		[ ]	
[ ] pH	SW846 METHOD 9045	4 DEG C		[ ]	
[x] VOC	LM23	4 DEG C	DC	[x]	860 863
[ ] BN/A	LM25	4 DEG C		[ ]	
[ ] NG	LW27	4 DEG C		[ ]	
[ ] NAM	LN08	4 DEG C		[ ]	
[x] DNT	LW23	4 DEG C		[x]	861

NOTES (LOCATION SKETCH)

* THESE ARE DATACHEM METHODS. EA METHODS: VOC LM17, LM26; B/NA LM20

PP METALS (PRIORITY POLLUTANT): AG, AS, BE, CD, CR, CU, PB, HG, NI, SB, SE, TL, ZN. JS12, B9, JD21, JD20, Y9.

TCLP METALS: CD, CR, HG, PB. JS12, 40 CFR 261.24

DC: 4 bottles

SIGNATURE: VM/MR

RECEIVED BY: Nancy E. Rotta

ABB ENVIRONMENTAL SERVICES, INC

PAGE 6 OF

FIELD DATA RECORD – SEDIMENT

FIELD SAMPLING NUMBER: P91570000

PROJECT: USATHAMA-BAAP

SITE ID: PBS-91-57

LOCATION ACTIVITY: START: 1440 END: 1445

SITE TYPE: BUGR

JOB NUMBER: 6853-04

PROGRAM: C

SAMPLING DATE: 9.24.91

FILE NAME: CSO

WEATHER: rain °50's

SEDIMENT DATA

DEPTH OF SEDIMENT SAMPLE: 1-4 IN

TYPE OF SAMPLE COLLECTED: [x] DISCRETE [ ] COMPOSITE

TYPE OF SEDIMENT:
- [ ] CLAY
- [x] SAND fine
- [x] ORGANIC
- [ ] SILT
- [ ] GRAVEL
- [ ] OTHER

EQUIPMENT USED FOR COLLECTION:
- [ ] GRAVITY CORER
- [x] TULIP BULB PLANTER
- [x] S.S. HAND SPOON
- [ ] ALUMINUM PAN
- [ ] PLASTIC SCOOP
- [x] OTHER Scupula

DECONTAMINATION FLUIDS USED:
- [x] POTABLE WATER
- [ ] POTABLE WATER WITH HIGH PRESSURE
- [ ] OTHER

SAMPLE OBSERVATIONS: [ ] ODOR [ ] COLORED

AMBIENT AIR: — PPM

SAMPLE LOCATION: — PPM

pH: — UNITS

ANALYTICAL PARAMETERS

	METHOD NUMBER	PRESERVATION METHOD	VOLUME REQUIRED	SAMPLE COLLECTED
[x] PP METALS (SPECIFIED BELOW)		4 DEG C		[x]
[ ] AL	JS12	4 DEG C		[ ]
[ ] CA	|	4 DEG C		[ ]
[ ] NA	|	4 DEG C		[ ]
[ ] CD	|	4 DEG C		[ ]
[ ] CR	|	4 DEG C		[ ]
[ ] HG	Y9	4 DEG C		[ ]
[ ] PB	JD21	4 DEG C		[ ]
[ ] TCLP METALS (SPECIFIED BELOW)		4 DEG C		[ ]
[ ] NIT	KF17	4 DEG C		[ ]
[ ] SO4	KT07	4 DEG C		[ ]
[ ] NH3N2	USEPA 350.2	4 DEG C		[ ]
[ ] TOC	USEPA CE-81-1	4 DEG C		[ ]
[ ] pH	SW846 METHOD 9045	4 DEG C		[ ]
*[x] VOC	LM23	4 DEG C	DC	[x]
*[ ] BN/A	LM25	4 DEG C		[ ]
[ ] NG	LW27	4 DEG C		[ ]
[ ] NAM	LN08	4 DEG C		[ ]
[x] DNT	LW23	4 DEG C		[x]

SAMPLE BOTTLE ID NUMBERS: 868, 869, 872, 870

NOTES (LOCATION SKETCH)

* THESE ARE DATACHEM METHODS. EA METHODS: VOC LM17, LM26
B/NA LM20

PP METALS (PRIORITY POLLUTANT): AG, AS, BE, CD, CR, CU, PB, HG, NI, SB, SE, TL, ZN.
JS12, 89, JD21, JD20, Y9.

TCLP METALS: CD, CR, HG, PB.
JS12, 40 CFR 261.24

DC: 4 bottles

SIGNATURE: VM/MR

RECEIVED BY: Nancy E. Rotta

BB ENVIRONMENTAL SERVICES, INC

FIELD DATA RECORD – SEDIMENT

FIELD SAMPLING NUMBER: P91580000

PROJECT: USATHAMA-BAAP
SITE ID: PBS-91-58
LOCATION ACTIVITY START: 1450 END: 1455
SITE TYPE: BUGR
JOB NUMBER: 6853-04
PROGRAM: C
SAMPLING DATE: 9.24.91
FILE NAME: CSO
WEATHER: rain, °50's

SEDIMENT DATA

DEPTH OF SEDIMENT SAMPLE: 1-4 IN

TYPE OF SAMPLE COLLECTED: [x] DISCRETE [ ] COMPOSITE

TYPE OF SEDIMENT:
- [ ] CLAY
- [x] SAND Fine
- [x] ORGANIC
- [x] SILT
- [ ] GRAVEL
- [ ] OTHER

EQUIPMENT USED FOR COLLECTION:
- [x] GRAVITY CORER
- [x] TULIP BULB PLANTER
- [x] S.S. HAND SPOON
- [x] ALUMINUM PAN
- [ ] PLASTIC SCOOP
- [x] OTHER Sequoia

DECONTAMINATION FLUIDS USED:
- [x] POTABLE WATER
- [ ] POTABLE WATER WITH HIGH PRESSURE
- [ ] OTHER

SAMPLE OBSERVATIONS: [ ] ODOR [ ] COLORED

AMBIENT AIR: — PPM
SAMPLE LOCATION: — PPM
pH: — UNITS

ANALYTICAL PARAMETERS

	METHOD NUMBER	PRESERVATION METHOD	VOLUME REQUIRED	SAMPLE COLLECTED	SAMPLE BOTTLE ID NUMBERS
[x] PP METALS (SPECIFIED BELOW)		4 DEG C		[x]	265
[ ] AL	JS12	4 DEG C		[ ]	
[ ] CA		4 DEG C		[ ]	
[ ] NA		4 DEG C		[ ]	
[ ] CD		4 DEG C		[ ]	
[ ] CR		4 DEG C		[ ]	
[ ] HG	Y9	4 DEG C		[ ]	
[ ] PB	JD21	4 DEG C		[ ]	
[x] TCLP METALS (SPECIFIED BELOW)		4 DEG C		[x]	268
[ ] HIT	KF17	4 DEG C	DC	[ ]	
[ ] SO4	KT07	4 DEG C		[ ]	
[ ] NH3N2	USEPA 350.2	4 DEG C		[ ]	
[ ] TOC	USEPA CE-81-1	4 DEG C		[ ]	
[ ] pH	SW846 METHOD 9045	4 DEG C		[ ]	
[x] VOC	LM23	4 DEG C		[x]	271 272
[ ] BN/A	LM25	4 DEG C		[ ]	
[ ] NG	LW27	4 DEG C		[ ]	
[ ] NAM	LN08	4 DEG C		[ ]	
[x] DNT	LW23	4 DEG C		[x]	274

NOTES (LOCATION SKETCH)

* THESE ARE DATACHEM METHODS. EA METHODS: VOC LM17, LM26; B/NA LM20

PP METALS (PRIORITY POLLUTANT): AG, AS, BE, CD, CR, CU, PB, HG, NI, SB, SE, TL, ZN. JS12, B9, JD21, JD20, Y9.

TCLP METALS: CD, CR, HG, PB. JS12, 40 CFR 261.24

DC: 4 bottles

SIGNATURE: VM / MR

RECEIVED BY: Nancy E. Roza

ABB ENVIRONMENTAL SERVICES, INC

PAGE 8 OF

FIELD DATA RECORD - SEDIMENT

FIELD SAMPLING NUMBER: P91590000

PROJECT: USATHAMA-BAAP

SITE ID: PBS-91-59

SITE TYPE: BUGR

JOB NUMBER: 6853-04

PROGRAM: C

SAMPLING DATE: 9.24.91

FILE NAME: CSO

WEATHER: cloudy, 50's

LOCATION ACTIVITY: START: 1455 END: 1500

SEDIMENT DATA

DEPTH OF SEDIMENT SAMPLE: 1-4 IN

TYPE OF SAMPLE COLLECTED: [x] DISCRETE [ ] COMPOSITE

TYPE OF SEDIMENT:
- [ ] CLAY
- [x] SAND fine
- [x] ORGANIC
- [x] SILT
- [ ] GRAVEL
- [ ] OTHER

EQUIPMENT USED FOR COLLECTION:
- [ ] GRAVITY CORER
- [x] TULIP BULB PLANTER
- [ ] S.S. HAND SPOON
- [x] ALUMINUM PAN
- [ ] PLASTIC SCOOP
- [x] OTHER scupula

DECONTAMINATION FLUIDS USED:
- [x] POTABLE WATER
- [ ] POTABLE WATER WITH HIGH PRESSURE
- [ ] OTHER

SAMPLE OBSERVATIONS: [ ] ODOR [ ] COLORED

AMBIENT AIR: — PPM

SAMPLE LOCATION: — PPM

pH: — UNITS

ANALYTICAL PARAMETERS

	METHOD NUMBER	PRESERVATION METHOD	VOLUME REQUIRED	SAMPLE COLLECTED
[x] PP METALS (SPECIFIED BELOW)		4 DEG C		DC
[ ] AL	JS12	4 DEG C		
[ ] CA		4 DEG C		
[ ] NA		4 DEG C		
[ ] CD		4 DEG C		
[ ] CR		4 DEG C		
[ ] HG	Y9	4 DEG C		
[ ] PB	JD21	4 DEG C		
[ ] TCLP METALS (SPECIFIED BELOW)		4 DEG C		
[ ] NIT	KF17	4 DEG C		
[ ] SO4	KT07	4 DEG C		
[ ] NH3N2	USEPA 350.2	4 DEG C		
[ ] TOC	USEPA CE-81-1	4 DEG C		
[ ] pH	SW846 METHOD 9045	4 DEG C		
*[x] VOC	LM23	4 DEG C		[x]
*[ ] BN/A	LM25	4 DEG C		
[ ] NG	LW27	4 DEG C		
[ ] NAM	LN08	4 DEG C		
[x] DNT	LW23	4 DEG C		[x]
[ ]				

SAMPLE BOTTLE ID NUMBERS: 877 878 881 879

NOTES (LOCATION SKETCH)

* THESE ARE DATACHEM METHODS. EA METHODS: VOC LM17, LM26
B/NA LM20

PP METALS (PRIORITY POLLUTANT): AG, AS, BE, CD, CR, CU, PB, HG, NI, SB, SE, TL, ZN.
JS12, B9, JD21, JD20, Y9.

TCLP METALS: CD, CR, HG, PB.
JS12, 40 CFR 261.24

DC: 4 bottles

SIGNATURE: VM/MR

RECEIVED BY: Nancy E. Rokka

ABB ENVIRONMENTAL SERVICES, INC

FIELD DATA RECORD – SEDIMENT

FIELD SAMPLING NUMBER: P91600003

PROJECT: USATHAMA-BAAP

SITE ID: PBS-91-60

SITE TYPE: BUGR

JOB NUMBER: 6853-04

PROGRAM: C

SAMPLING DATE: 9.24.91

FILE NAME: CSO

WEATHER: cloudy, °50's

LOCATION ACTIVITY START: 1520 END: 1525

SEDIMENT DATA

DEPTH OF SEDIMENT SAMPLE: 1-4 IN

TYPE OF SAMPLE COLLECTED: [x] DISCRETE [ ] COMPOSITE

TYPE OF SEDIMENT:
- [ ] CLAY
- [x] SAND fine
- [x] ORGANIC
- [ ] SILT
- [ ] GRAVEL
- [ ] OTHER

EQUIPMENT USED FOR COLLECTION:
- [ ] GRAVITY CORER
- [ ] TULIP BULB PLANTER
- [ ] S.S. HAND SPOON
- [x] ALUMINUM PAN
- [ ] PLASTIC SCOOP
- [x] OTHER scrapula

DECONTAMINATION FLUIDS USED:
- [x] POTABLE WATER
- [ ] POTABLE WATER WITH HIGH PRESSURE
- [ ] OTHER

SAMPLE OBSERVATIONS: [ ] ODOR [ ] COLORED

AMBIENT AIR: — PPM

SAMPLE LOCATION: — PPM

pH: — UNITS

ANALYTICAL PARAMETERS

	METHOD NUMBER	PRESERVATION METHOD	VOLUME REQUIRED	SAMPLE COLLECTED	SAMPLE BOTTLE ID NUMBERS
[x] PP METALS (SPECIFIED BELOW)		4 DEG C		DC [x]	886
[ ] AL	JS12	4 DEG C			
[ ] CA		4 DEG C			
[ ] NA		4 DEG C			
[ ] CD		4 DEG C			
[ ] CR		4 DEG C			
[ ] HG	Y9	4 DEG C			
[ ] PB	JD21	4 DEG C			
[ ] TCLP METALS (SPECIFIED BELOW)		4 DEG C			
[ ] NIT	KF17	4 DEG C			
[ ] SO4	KT07	4 DEG C			
[ ] NH3N2	USEPA 350.2	4 DEG C			
[ ] TOC	USEPA CE-81-1	4 DEG C			
[ ] pH	SW846 METHOD 9045	4 DEG C			
* [x] VOC	LM23	4 DEG C		EA [x]	887 890
* [ ] BN/A	LM25	4 DEG C			
[ ] NG	LW27	4 DEG C			
[ ] NAM	LN08	4 DEG C			
[x] DNT	LW23	4 DEG C		DC [x]	888

NOTES (LOCATION SKETCH)

* THESE ARE DATACHEM METHODS. EA METHODS: VOC LM17, LM26; B/NA LM20

PP METALS (PRIORITY POLLUTANT): AG, AS, BE, CD, CR, CU, PB, HG, NI, SB, SE, TL, ZN. JS12, B9, JD21, JD20, Y9.

TCLP METALS: CD, CR, HG, PB. JS12, 40 CFR 261.24

DC: 2 bottles

EA: 2 bottles

SIGNATURE: VM/MR

RECEIVED BY: Nancy E. Rolla

ABB ENVIRONMENTAL SERVICES, INC

FIELD DATA RECORD – SEDIMENT

FIELD SAMPLING NUMBER: PBi61000

PROJECT: USATHAMA-BAAP

SITE ID: PBS-9i-61

LOCATION ACTIVITY: START: 1530 END: 1535

SITE TYPE: BUGR

JOB NUMBER: 6853-04

PROGRAM: C

SAMPLING DATE: 9.24.91

FILE NAME: CSQ

WEATHER: rain, ~50's

SEDIMENT DATA

DEPTH OF SEDIMENT SAMPLE: 0-3 IN

TYPE OF SAMPLE COLLECTED: [x] DISCRETE [ ] COMPOSITE

TYPE OF SEDIMENT:
- [ ] CLAY
- [x] SAND little
- [x] ORGANIC
- [x] SILT
- [ ] GRAVEL
- [ ] OTHER

EQUIPMENT USED FOR COLLECTION:
- [x] GRAVITY CORER
- [ ] TULIP BULB PLANTER
- [ ] S.S. HAND SPOON
- [x] ALUMINUM PAN
- [ ] PLASTIC SCOOP
- [x] OTHER scoopula

DECONTAMINATION FLUIDS USED:
- [x] POTABLE WATER
- [ ] POTABLE WATER WITH HIGH PRESSURE
- [ ] OTHER

SAMPLE OBSERVATIONS: [ ] ODOR [ ] COLORED

AMBIENT AIR: — PPM

SAMPLE LOCATION: — PPM

pH: — UNITS

ANALYTICAL PARAMETERS

	METHOD NUMBER	PRESERVATION METHOD	VOLUME REQUIRED	SAMPLE COLLECTED	SAMPLE BOTTLE ID NUMBERS
[x] PP METALS (SPECIFIED BELOW)		4 DEG C		[x]	277
[ ] AL	JS12	4 DEG C			
[ ] CA		4 DEG C			
[ ] NA		4 DEG C			
[ ] CD		4 DEG C		DC	
[ ] CR		4 DEG C			
[ ] HG	Y9	4 DEG C			
[x] PB	JD21	4 DEG C			
[x] TCLP METALS (SPECIFIED BELOW)		4 DEG C		[x]	280
[ ] NIT	KF17	4 DEG C			
[ ] SO4	KT07	4 DEG C			
[ ] NH3N2	USEPA 350.2	4 DEG C			
[ ] TOC	USEPA CE-81-1	4 DEG C			
[x] pH	SW846 METHOD 9045	4 DEG C			
* [x] VOC	LM23	4 DEG C		EA [x]	283 284
* [ ] BN/A	LM25	4 DEG C			
[ ] NG	LW27	4 DEG C			
[x] NAM	LW08	4 DEG C			
[x] DNT	LW23	4 DEG C		DC [x]	286

NOTES (LOCATION SKETCH)

* THESE ARE DATACHEM METHODS. EA METHODS: VOC LM17, LM26; B/NA LM20

PP METALS (PRIORITY POLLUTANT): AG, AS, BE, CD, CR, CU, PB, HG, NI, SB, SE, TL, ZN. JS12, B9, JD21, JD20, Y9.

TCLP METALS: CD, CR, HG, PB. JS12, 40 CFR 261.24

DC: 2 bottles
EA: 2 bottles

SIGNATURE: VM/MR

RECEIVED BY: Nancy E Rotta

BB ENVIRONMENTAL SERVICES, INC

FIELD DATA RECORD – SEDIMENT

FIELD SAMPLING NUMBER: P91620000

PROJECT: USATHAMA-BAAP
SITE ID: PBS-91-62
LOCATION \CTIVITY
START: 1545 END: 1550

SITE TYPE: BUGR
JOB NUMBER: 6853-04
PROGRAM: C

SAMPLING DATE: 9.24.91
FILE NAME: CSO
WEATHER: cloudy, 50's rain

SEDIMENT DATA

DEPTH OF SEDIMENT SAMPLE: 1-4 IN

TYPE OF SAMPLE COLLECTED: [x] DISCRETE [ ] COMPOSITE

TYPE OF SEDIMENT:
- [x] CLAY
- [x] SAND
- [x] ORGANIC
- [x] SILT
- [ ] GRAVEL
- [ ] OTHER

EQUIPMENT USED FOR COLLECTION:
- [ ] GRAVITY CORER
- [x] TULIP BULB PLANTER
- [ ] S.S. HAND SPOON
- [x] ALUMINUM PAN
- [x] PLASTIC SCOOP
- [x] OTHER Scupula

DECONTAMINATION FLUIDS USED
- [x] POTABLE WATER
- [ ] POTABLE WATER WITH HIGH PRESSURE
- [ ] OTHER

SAMPLE OBSERVATIONS: [ ] ODOR [ ] COLORED

AMBIENT AIR: — PPM

SAMPLE LOCATION: — PPM

pH: — UNITS

ANALYTICAL PARAMETERS

	METHOD NUMBER	PRESERVATION METHOD	VOLUME REQUIRED	SAMPLE COLLECTED	SAMPLE BOTTLE ID NUMBERS
[x] PP METALS (SPECIFIED BELOW)		4 DEG C		DC [x]	895
[ ] AL	JS12	4 DEG C			
[ ] CA		4 DEG C			
[ ] NA		4 DEG C			
[ ] CD		4 DEG C			
[ ] CR		4 DEG C			
[ ] HG	Y9	4 DEG C			
[ ] PB	JD21	4 DEG C			
[x] TCLP METALS (SPECIFIED BELOW)		4 DEG C			
[ ] NIT	KF17	4 DEG C			
[ ] SO4	KT07	4 DEG C			
[ ] NH3N2	USEPA 350.2	4 DEG C			
[ ] TOC	USEPA CE-81-1	4 DEG C			
[ ] pH	SW846 METHOD 9045	4 DEG C			
* [x] VOC	LM23	4 DEG C		EA [x]	896 899
* [ ] BN/A	LM25	4 DEG C			
[ ] NG	LW27	4 DEG C			
[ ] NAM	LM08	4 DEG C			
[x] DNT	LW23	4 DEG C		DC [x]	897

NOTES (LOCATION SKETCH)

* THESE ARE DATACHEM METHODS. EA METHODS: VOC LM17, LM26
B/NA LM20

PP METALS (PRIORITY POLLUTANT): AG, AS, BE, CD, CR, CU, PB, HG, NI, SB, SE, TL, ZN.
JS12, B9, JD21, JD20, Y9.

TCLP METALS: CD, CR, HG, PB.
JS12, 40 CFR 261.24

DC: 2 bottles
EA: 2 bottles

SIGNATURE: VM/MR

RECEIVED BY: Nancy E. Roka

ABB ENVIRONMENTAL SERVICES, INC

FIELD DATA RECORD – SEDIMENT

FIELD SAMPLING NUMBER: P91630000

PROJECT: USATHAMA-BAAP

SITE ID: PBS-91-63

LOCATION ACTIVITY: START: 1600 END: 1605

SITE TYPE: BUGR

JOB NUMBER: 6853-04

PROGRAM: C

SAMPLING DATE: 9.24.91

FILE NAME: CSO

WEATHER: rain, 50's

SEDIMENT DATA

DEPTH OF SEDIMENT SAMPLE: 1-3 IN

TYPE OF SAMPLE COLLECTED: [x] DISCRETE [ ] COMPOSITE

TYPE OF SEDIMENT:
- [ ] CLAY
- [x] SAND
- [x] ORGANIC little
- [ ] SILT
- [x] GRAVEL
- [ ] OTHER

EQUIPMENT USED FOR COLLECTION:
- [ ] GRAVITY CORER
- [x] TULIP BULB PLANTER
- [ ] S.S. HAND SPOON
- [x] ALUMINUM PAN
- [ ] PLASTIC SCOOP
- [x] OTHER Scupula

DECONTAMINATION FLUIDS USED
- [x] POTABLE WATER
- [ ] POTABLE WATER WITH HIGH PRESSURE
- [ ] OTHER

SAMPLE OBSERVATIONS: [ ] ODOR [ ] COLORED

AMBIENT AIR: — PPM

SAMPLE LOCATION: — PPM

pH: — UNITS

ANALYTICAL PARAMETERS

	METHOD NUMBER	PRESERVATION METHOD	VOLUME REQUIRED	SAMPLE COLLECTED	SAMPLE BOTTLE ID NUMBERS
[x] PP METALS (SPECIFIED BELOW)		4 DEG C		DC [x]	904
[ ] AL	JS12	4 DEG C			
[ ] CA		4 DEG C			
[ ] NA		4 DEG C			
[ ] CD		4 DEG C			
[ ] CR		4 DEG C			
[ ] HG	Y9	4 DEG C			
[ ] PB	JD21	4 DEG C			
[ ] TCLP METALS (SPECIFIED BELOW)		4 DEG C			
[ ] NIT	KF17	4 DEG C			
[ ] SO4	KT07	4 DEG C			
[ ] NH3N2	USEPA 350.2	4 DEG C			
[ ] TOC	USEPA CE-81-1	4 DEG C			
[ ] pH	SW846 METHOD 9045	4 DEG C			
* [x] VOC	LM23	4 DEG C		EA [x]	905 908
* [ ] BN/A	LM25	4 DEG C			
[ ] NG	LW27	4 DEG C			
[ ] NAM	LN08	4 DEG C			
[x] DNT	LW23	4 DEG C		DC [x]	906

NOTES (LOCATION SKETCH)

* THESE ARE DATACHEM METHODS. EA METHODS: VOC LM17, LM26; B/NA LM20

PP METALS (PRIORITY POLLUTANT): AG, AS, BE, CD, CR, CU, PB, HG, NI, SB, SE, TL, ZN. JS12, B9, JD21, JD20, Y9.

TCLP METALS: CD, CR, HG, PB. JS12, 40 CFR 261.24

DC: 2 bottles

EA: 2 bottles

SIGNATURE: VM/MR

RECEIVED BY: Nancy E. Rafa

BB ENVIRONMENTAL SERVICES, INC

FIELD DATA RECORD – SEDIMENT

FIELD SAMPLING NUMBER: P91640005

PROJECT: USATHAMA-BAAP

SITE ID: PBS-91-6H

SITE TYPE: BUGR

JOB NUMBER: 6853-04

PROGRAM: C

LOCATION ACTIVITY START: 1610 END: 1615

SAMPLING DATE: 9.24.91

FILE NAME: CSO

WEATHER: rain, °50's

SEDIMENT DATA

DEPTH OF SEDIMENT SAMPLE: 1-4 IN

TYPE OF SAMPLE COLLECTED: [x] DISCRETE [ ] COMPOSITE

TYPE OF SEDIMENT: [ ] CLAY [x] SAND [x] ORGANIC [x] SILT [x] GRAVEL [ ] OTHER

EQUIPMENT USED FOR COLLECTION: [ ] GRAVITY CORER [x] TULIP BULB PLANTER [ ] S.S. HAND SPOON [x] ALUMINUM PAN [ ] PLASTIC SCOOP [x] OTHER scupula

DECONTAMINATION FLUIDS USED: [x] POTABLE WATER [ ] POTABLE WATER WITH HIGH PRESSURE [ ] OTHER

SAMPLE OBSERVATIONS: [ ] ODOR [ ] COLORED

AMBIENT AIR: — PPM

SAMPLE LOCATION: — PPM

pH: — UNITS

ANALYTICAL PARAMETERS

	METHOD NUMBER	PRESERVATION METHOD	VOLUME REQUIRED	SAMPLE COLLECTED	SAMPLE BOTTLE ID NUMBERS
[x] PP METALS (SPECIFIED BELOW)		4 DEG C		DC [x]	913
[ ] AL	JS12	4 DEG C			
[ ] CA	|	4 DEG C			
[ ] NA	|	4 DEG C			
[ ] CD	|	4 DEG C			
[ ] CR	|	4 DEG C			
[ ] HG	Y9	4 DEG C			
[ ] PB	JD21	4 DEG C			
[ ] TCLP METALS (SPECIFIED BELOW)		4 DEG C			
[ ] NIT	KF17	4 DEG C			
[ ] SO4	KT07	4 DEG C			
[ ] NH3N2	USEPA 350.2	4 DEG C			
[ ] TOC	USEPA CE-81-1	4 DEG C			
[ ] pH	SW846 METHOD 9045	4 DEG C			
[x] VOC	LM23	4 DEG C		EA [x]	914 917
[ ] BN/A	LM25	4 DEG C			
[ ] PG	LW27	4 DEG C			
[ ] HAM	LM08	4 DEG C			
[x] ONT	LW23	4 DEG C		DC [x]	915

NOTES (LOCATION SKETCH)

* THESE ARE DATACHEM METHODS. EA METHODS: VOC LM17, LM26; B/NA LM20

PP METALS (PRIORITY POLLUTANT): AG, AS, BE, CD, CR, CU, PB, HG, NI, SB, SE, TL, ZN. JS12, B9, JD21, JD20, Y9.

TCLP METALS: CD, CR, HG, PB. JS12, 40 CFR 261.24

DC: 2 bottles

EA: 2 bottles

SIGNATURE: VM/MR

RECEIVED BY: Nancy E. Rotta

ABB ENVIRONMENTAL SERVICES, INC

PAGE 14 OF

FIELD DATA RECORD – SEDIMENT

FIELD SAMPLING NUMBER: P9i65000

PROJECT: USATHAMA-BAAP

SITE ID: PBS-9i-65

LOCATION ACTIVITY: START: 1620 END: 1625

SITE TYPE: BUGR

JOB NUMBER: 6853-04

PROGRAM: C

SAMPLING DATE: 9.24.91

FILE NAME: CSO

WEATHER: rain, 50's

SEDIMENT DATA

DEPTH OF SEDIMENT SAMPLE: 0-4 IN

TYPE OF SAMPLE COLLECTED: [x] DISCRETE [ ] COMPOSITE

TYPE OF SEDIMENT:
- [ ] CLAY
- [x] SAND little
- [x] ORGANIC
- [x] SILT
- [ ] GRAVEL
- [ ] OTHER

EQUIPMENT USED FOR COLLECTION:
- [x] GRAVITY CORER
- [x] TULIP BULB PLANTER
- [ ] S.S. HAND SPOON
- [x] ALUMINUM PAN
- [ ] PLASTIC SCOOP
- [x] OTHER scupula

DECONTAMINATION FLUIDS USED:
- [x] POTABLE WATER
- [ ] POTABLE WATER WITH HIGH PRESSURE
- [ ] OTHER

SAMPLE OBSERVATIONS: [ ] ODOR [ ] COLORED

AMBIENT AIR: — PPM

SAMPLE LOCATION: — PPM

pH: — UNITS

ANALYTICAL PARAMETERS

	METHOD NUMBER	PRESERVATION METHOD	VOLUME REQUIRED	SAMPLE COLLECTED
[x] PP METALS (SPECIFIED BELOW)		4 DEG C		DC
[ ] AL	JS12	4 DEG C		
[ ] CA		4 DEG C		
[ ] NA		4 DEG C		
[ ] CD		4 DEG C		
[ ] CR		4 DEG C		
[ ] HG	Y9	4 DEG C		
[ ] PB	JD21	4 DEG C		
[x] TCLP METALS (SPECIFIED BELOW)		4 DEG C		DC
[ ] NIT	KF17	4 DEG C		
[ ] SO4	KT07	4 DEG C		
[ ] NH3N2	USEPA 350.2	4 DEG C		
[ ] TOC	USEPA CE-81-1	4 DEG C		
[ ] pH	SW846 METHOD 9045	4 DEG C		
*[x] VOC	LM23	4 DEG C		EA
*[x] BN/A	LM25	4 DEG C		EA
[ ] NG	LW27	4 DEG C		
[ ] NAM	LN08	4 DEG C		
[x] ONT	LW23	4 DEG C		#

SAMPLE BOTTLE ID NUMBERS: 289, 292, 295, 296, 298

NOTES (LOCATION SKETCH)

* THESE ARE DATACHEM METHODS. EA METHODS: VOC LM17, LM26
B/NA LM20

PP METALS (PRIORITY POLLUTANT): AG, AS, BE, CD, CR, CU, PB, HG, NI, SB, SE, TL, ZN.
JS12, B9, JD21, JD20, Y9.

TCLP METALS: CD, CR, HG, PB.
JS12, 40 CFR 261.24

DC: 2 bottles
EA: 2 bottles

SIGNATURE: VM/MR

RECEIVED BY: Nancy E. Roka

BB ENVIRONMENTAL SERVICES, INC

FIELD DATA RECORD – SEDIMENT

FIELD SAMPLING NUMBER: PB1660 00

PROJECT: USATHAMA-BAAP

SITE ID: PBS-91-66

LOCATION ACTIVITY: START: 0835 END: 0840

SITE TYPE: BUGR

JOB NUMBER: 6853-04

PROGRAM: C

SAMPLING DATE: 9.25.91

FILE NAME: CSO

WEATHER: rain, °50's

SEDIMENT DATA

DEPTH OF SEDIMENT SAMPLE: 1-5 IN

TYPE OF SAMPLE COLLECTED: [x] DISCRETE [ ] COMPOSITE

TYPE OF SEDIMENT:
- [ ] CLAY
- [x] SAND little
- [x] ORGANIC
- [x] SILT
- [ ] GRAVEL
- [ ] OTHER

EQUIPMENT USED FOR COLLECTION:
- [x] GRAVITY CORER
- [x] TULIP BULB PLANTER
- [ ] S.S. HAND SPOON
- [x] ALUMINUM PAN
- [x] PLASTIC SCOOP
- [x] OTHER scupula

DECONTAMINATION FLUIDS USED:
- [x] POTABLE WATER
- [ ] POTABLE WATER WITH HIGH PRESSURE
- [ ] OTHER

SAMPLE OBSERVATIONS: [ ] ODOR [ ] COLORED

AMBIENT AIR: 0.0 PPM

SAMPLE LOCATION: 0.0 PPM

pH: — UNITS

ANALYTICAL PARAMETERS

	METHOD NUMBER	PRESERVATION METHOD	VOLUME REQUIRED	SAMPLE COLLECTED	SAMPLE BOTTLE ID NUMBERS
[x] PP METALS (SPECIFIED BELOW)		4 DEG C		[x]	301
[ ] AL	JS12	4 DEG C			
[ ] CA	|	4 DEG C			
[ ] NA	|	4 DEG C			
[ ] CD	|	4 DEG C			
[ ] CR	|	4 DEG C	DC		
[ ] HG	Y9	4 DEG C			
[ ] PB	JD21	4 DEG C			
[x] TCLP METALS (SPECIFIED BELOW)		4 DEG C		[x]	304
[ ] NIT	KF17	4 DEG C			
[ ] SO4	KT07	4 DEG C			
[ ] NH3N2	USEPA 350.2	4 DEG C			
[ ] TOC	USEPA CE-81-1	4 DEG C			
[ ] pH	SW846 METHOD 9045	4 DEG C			
[x] VOC	LM23	4 DEG C	EA	[x]	307 308
[ ] BN/A	LM25	4 DEG C			
[ ] NG	LW27	4 DEG C			
[ ] NAM	LM08	4 DEG C			
[x] DNT	LW23	4 DEG C	DC	[x]	310

NOES (LOCATION SKETCH)

* THESE ARE DATACHEM METHODS. EA METHODS: VOC LM17, LM26; B/NA LM20

PP METALS (PRIORITY POLLUTANT): AG, AS, BE, CD, CR, CU, PB, HG, NI, SB, SE, TL, ZN. JS12, B9, JD21, JD20, Y9.

TCLP METALS: CD, CR, HG, PB. JS12, 40 CFR 261.24

DC: 2 bottles

EA: 2 bottles

SIGNATURE: VM/MB

RECEIVED BY: Nancy E. Rokka

ABB ENVIRONMENTAL SERVICES, INC

FIELD DATA RECORD – SEDIMENT

FIELD SAMPLING NUMBER: P9167COO

PROJECT: USATHAMA-BAAP

SITE ID: FBS-91-67

LOCATION ACTIVITY: START: 0850 END: 0855

SITE TYPE: BUGR

JOB NUMBER: 6853-04

PROGRAM: C

SAMPLING DATE: 9.25.91

FILE NAME: CSO

WEATHER: rain, °50's

SEDIMENT DATA

DEPTH OF SEDIMENT SAMPLE: 1-4 IN

TYPE OF SAMPLE COLLECTED: [x] DISCRETE [ ] COMPOSITE

TYPE OF SEDIMENT:
- [ ] CLAY
- [x] SAND
- [x] ORGANIC
- [ ] SILT
- [ ] GRAVEL
- [ ] OTHER

EQUIPMENT USED FOR COLLECTION:
- [x] GRAVITY CORER
- [x] TULIP BULB PLANTER
- [x] S.S. HAND SPOON
- [x] ALUMINUM PAN
- [ ] PLASTIC SCOOP
- [ ] OTHER

DECONTAMINATION FLUIDS USED
- [x] POTABLE WATER
- [ ] POTABLE WATER WITH HIGH PRESSURE
- [ ] OTHER

SAMPLE OBSERVATIONS: [ ] ODOR [ ] COLORED

AMBIENT AIR: 0.0 PPM

SAMPLE LOCATION: 0.0 PPM

pH: — UNITS

ANALYTICAL PARAMETERS

		METHOD NUMBER	PRESERVATION METHOD	VOLUME REQUIRED	SAMPLE COLLECTED	SAMPLE BOTTLE ID NUMBERS
[x]	PP METALS (SPECIFIED BELOW)		4 DEG C		DC [x]	922
[ ]	AL	JS12	4 DEG C			
[ ]	CA	|	4 DEG C			
[ ]	NA	|	4 DEG C			
[ ]	CD	|	4 DEG C			
[ ]	CR	|	4 DEG C			
[ ]	HG	Y9	4 DEG C			
[ ]	PB	JD21	4 DEG C			
[ ]	TCLP METALS (SPECIFIED BELOW)		4 DEG C			
[ ]	NIT	KF17	4 DEG C			
[ ]	SO4	KT07	4 DEG C			
[ ]	NH3N2	USEPA 350.2	4 DEG C			
[ ]	TOC	USEPA CE-81-1	4 DEG C			
[x]	pH	SW846 METHOD 9045	4 DEG C			
* [x]	VOC	LM23	4 DEG C		EA [x]	923 926
* [ ]	BN/A	LM25	4 DEG C			
[ ]	NG	LW27	4 DEG C			
[ ]	NAM	LN08	4 DEG C			
[x]	DNT	LW23	4 DEG C		DC [x]	924

NOTES (LOCATION SKETCH)

* THESE ARE DATACHEM METHODS. EA METHODS: VOC LM17, LM26; B/NA LM20

PP METALS (PRIORITY POLLUTANT): AG, AS, BE, CD, CR, CU, PB, HG, NI, SB, SE, TL, ZN. JS12, B9, JD21, JD20, Y9.

TCLP METALS: CD, CR, HG, PB. JS12, 40 CFR 261.24

DC: 2 bottles

EA: 2 bottles

SIGNATURE: VM/MR

RECEIVED BY: Nancy E. Rokra

BB ENVIRONMENTAL SERVICES, INC

FIELD DATA RECORD - SEDIMENT

FIELD SAMPLING NUMBER: F9i68000

PROJECT: USATHAMA-BAAP

SITE ID: PBS-9i-68

SITE TYPE: BUGR

JOB NUMBER: 6853-04

PROGRAM: C

SAMPLING DATE: 9 25 91

FILE NAME: CSO

WEATHER: rain '30's

LOCATION ACTIVITY: START: 0905 END: 0910

SEDIMENT DATA

DEPTH OF SEDIMENT SAMPLE: 1-3 IN

TYPE OF SAMPLE COLLECTED: [✓] DISCRETE [ ] COMPOSITE

TYPE OF SEDIMENT:
- [✓] CLAY
- [✓] SAND
- [✓] ORGANIC
- [✓] SILT
- [✓] GRAVEL
- [ ] OTHER

EQUIPMENT USED FOR COLLECTION:
- [ ] GRAVITY CORER
- [✓] TULIP BULB PLANTER
- [ ] S.S. HAND SPOON
- [✓] ALUMINUM PAN
- [✓] PLASTIC SCOOP
- [✓] OTHER scupula

DECONTAMINATION FLUIDS USED:
- [✓] POTABLE WATER
- [ ] POTABLE WATER WITH HIGH PRESSURE
- [ ] OTHER

SAMPLE OBSERVATIONS: [ ] ODOR [ ] COLORED

AMBIENT AIR: 0.0 PPM

SAMPLE LOCATION: 0.0 PPM

pH: — UNITS

ANALYTICAL PARAMETERS

	METHOD NUMBER	PRESERVATION METHOD	VOLUME REQUIRED	SAMPLE COLLECTED	SAMPLE BOTTLE ID NUMBERS
[✓] PP METALS (SPECIFIED BELOW)		4 DEG C		DC [✓]	931
[ ] AL	JS12	4 DEG C			
[ ] CA		4 DEG C			
[ ] NA		4 DEG C			
[ ] CD		4 DEG C			
[ ] CR		4 DEG C			
[ ] HG	Y9	4 DEG C			
[ ] PB	JD21	4 DEG C			
[ ] TCLP METALS (SPECIFIED BELOW)		4 DEG C			
[ ] NIT	KF17	4 DEG C			
[ ] SO4	KT07	4 DEG C			
[ ] NH3N2	USEPA 350.2	4 DEG C			
[ ] TOC	USEPA CE-81-1	4 DEG C			
[ ] pH	SW846 METHOD 9045	4 DEG C			
[✓] VOC	LM23	4 DEG C		EA [✓]	932 935
[ ] BN/A	LM25	4 DEG C			
[ ] NG	LW27	4 DEG C			
[ ] NAM	LN08	4 DEG C			
[✓] DNT	LW23	4 DEG C		DC [✓]	933

NOTES
LOCATION SKETCH)

* THESE ARE DATACHEM METHODS. EA METHODS: VOC LM17, LM26
B/NA LM20

PP METALS (PRIORITY POLLUTANT): AG, AS, BE, CD, CR, CU, PB, HG, NI, SB, SE, TL, ZN.
JS12, B9, JD21, JD20, Y9.

TCLP METALS: CD, CR, HG, PB.
JS12, 40 CFR 261.24

DC: 2 bottles
EA: 2 bottles

SIGNATURE: VM/MR

RECEIVED BY: Nancy E. Roña

ABB ENVIRONMENTAL SERVICES, INC

FIELD DATA RECORD - SEDIMENT

FIELD SAMPLING NUMBER: FB91690000

PROJECT: USATHAMA-BAAP

SITE ID: FBS-91-69

LOCATION ACTIVITY: START: 0915 END: 0920

SITE TYPE: BUGR

JOB NUMBER: 6853-04

PROGRAM: C

SAMPLING DATE: 9.25.91

FILE NAME: CSO

WEATHER: rain, 50's

SEDIMENT DATA

DEPTH OF SEDIMENT SAMPLE: 1-3 IN

TYPE OF SAMPLE COLLECTED: [x] DISCRETE [ ] COMPOSITE

TYPE OF SEDIMENT:
- [x] CLAY
- [x] SAND
- [x] ORGANIC
- [x] SILT little
- [x] GRAVEL
- [ ] OTHER

EQUIPMENT USED FOR COLLECTION:
- [x] GRAVITY CORER
- [x] TULIP BULB PLANTER
- [ ] S.S. HAND SPOON
- [x] ALUMINUM PAN
- [x] PLASTIC SCOOP
- [x] OTHER scupula

DECONTAMINATION FLUIDS USED:
- [x] POTABLE WATER
- [ ] POTABLE WATER WITH HIGH PRESSURE
- [ ] OTHER

SAMPLE OBSERVATIONS: [ ] ODOR [ ] COLORED

AMBIENT AIR: 0.0 PPM

SAMPLE LOCATION: 0.0 PPM

pH: ___ UNITS

ANALYTICAL PARAMETERS

	METHOD NUMBER	PRESERVATION METHOD	VOLUME REQUIRED	SAMPLE COLLECTED	SAMPLE BOTTLE ID NUMBERS
[x] PP METALS (SPECIFIED BELOW)		4 DEG C		DC	313
[ ] AL	JS12	4 DEG C			
[ ] CA		4 DEG C			
[ ] NA		4 DEG C			
[ ] CD		4 DEG C			
[ ] CR		4 DEG C			
[ ] HG	Y9	4 DEG C			
[ ] PB	JD21	4 DEG C			
[x] TCLP METALS (SPECIFIED BELOW)		4 DEG C			316
[ ] NIT	KF17	4 DEG C			
[ ] SO4	KT07	4 DEG C			
[ ] NH3N2	USEPA 350.2	4 DEG C			
[ ] TOC	USEPA CE-81-1	4 DEG C			
[ ] pH	SW846 METHOD 9045	4 DEG C			
* [x] VOC	LM23	4 DEG C		EA	319 320
* [x] BN/A	LM25	4 DEG C			
[ ] NG	LW27	4 DEG C			
[ ] NAM	LN08	4 DEG C			
[x] DNT	LW23	4 DEG C		DC	322

NOTES (LOCATION SKETCH)

* THESE ARE DATACHEM METHODS. EA METHODS: VOC LM17, LM26
B/NA LM20

PP METALS (PRIORITY POLLUTANT): AG, AS, BE, CD, CR, CU, PB, HG, NI, SB, SE, TL, ZN.
JS12, B9, JD21, JD20, Y9.

TCLP METALS: CD, CR, HG, PB.
JS12, 40 CFR 261.24

DC: 2 bottles
EA: 2 bottles

SIGNATURE: VM/NR

RECEIVED BY: Nancy E. Rokra

BB ENVIRONMENTAL SERVICES, INC

IELD DATA RECORD – SEDIMENT

FIELD SAMPLING NUMBER: P9i70000

PROJECT: USATHAMA-BAAP

SITE ID: PBS-9i-70

SITE TYPE: BUGR

JOB NUMBER: 6853-04

PROGRAM: C

LOCATION ACTIVITY: START: 0925 END: 0930

SAMPLING DATE: 92591

FILE NAME: CSO

WEATHER: rain, 50's

SEDIMENT DATA

DEPTH OF SEDIMENT SAMPLE: 0-3 IN

TYPE OF SAMPLE COLLECTED: [x] DISCRETE [ ] COMPOSITE

TYPE OF SEDIMENT:
- [ ] CLAY
- [x] SAND
- [ ] ORGANIC
- [ ] SILT
- [ ] GRAVEL
- [ ] OTHER

EQUIPMENT USED FOR COLLECTION:
- [x] GRAVITY CORER
- [x] TULIP BULB PLANTER
- [ ] S.S. HAND SPOON
- [x] ALUMINUM PAN
- [ ] PLASTIC SCOOP
- [x] OTHER scupula

DECONTAMINATION FLUIDS USED:
- [x] POTABLE WATER
- [ ] POTABLE WATER WITH HIGH PRESSURE
- [ ] OTHER

SAMPLE OBSERVATIONS: [ ] ODOR [ ] COLORED

AMBIENT AIR: 0.0 PPM

SAMPLE LOCATION: 0.0-1.0 PPM

pH: — UNITS

ANALYTICAL PARAMETERS

	METHOD NUMBER	PRESERVATION METHOD	VOLUME REQUIRED	SAMPLE COLLECTED	SAMPLE BOTTLE ID NUMBERS
[x] PP METALS (SPECIFIED BELOW)		4 DEG C		DC [x]	943
[ ] AL	JS12	4 DEG C			
[ ] CA		4 DEG C			
[ ] NA		4 DEG C			
[ ] CD		4 DEG C			
[ ] CR		4 DEG C			
[ ] HG	Y9	4 DEG C			
[ ] PB	JD21	4 DEG C			
[ ] TCLP METALS (SPECIFIED BELOW)		4 DEG C			
[ ] NIT	KF17	4 DEG C			
[ ] SO4	KT07	4 DEG C			
[ ] NH3N2	USEPA 350.2	4 DEG C			
[ ] TOC	USEPA CE-81-1	4 DEG C			
[ ] pH	SW846 METHOD 9045	4 DEG C			
[x] VOC	LM23	4 DEG C		EA [x]	944 947
[ ] BN/A	LM25	4 DEG C			
[ ] NG	LW27	4 DEG C			
[ ] NAM	LW08	4 DEG C			
[x] DNT	LW23	4 DEG C		DC [x]	945
[ ]					

NOTES (LOCATION SKETCH)

* THESE ARE DATACHEM METHODS. EA METHODS: VOC LM17, LM26
B/NA LM20

PP METALS (PRIORITY POLLUTANT): AG, AS, BE, CD, CR, CU, PB, HG, NI, SB, SE, TL, ZN.
JS12, B9, JD21, JD20, Y9.

TCLP METALS: CD, CR, HG, PB.
JS12, 40 CFR 261.24

DC: 2 bottles
EA: 2 bottles

SIGNATURE: VM/MR

RECEIVED BY: Nancy E. Rojas

ABB ENVIRONMENTAL SERVICES, INC

FIELD DATA RECORD – SEDIMENT

FIELD SAMPLING NUMBER: P91710000

PROJECT: USATHAMA-BAAP

SITE ID: PBS-91-71

LOCATION ACTIVITY: START: 0935 END: 0940

SITE TYPE: BUGR

JOB NUMBER: 6853-04

PROGRAM: C

SAMPLING DATE: 9.24.91

FILE NAME: CSO

WEATHER: rain, °50's

SEDIMENT DATA

DEPTH OF SEDIMENT SAMPLE: 1-4 IN

TYPE OF SAMPLE COLLECTED: [x] DISCRETE [ ] COMPOSITE

TYPE OF SEDIMENT:
- [x] CLAY
- [x] SAND fine
- [x] ORGANIC
- [x] SILT
- [ ] GRAVEL
- [ ] OTHER

EQUIPMENT USED FOR COLLECTION:
- [x] GRAVITY CORER
- [x] TULIP BULB PLANTER
- [ ] S.S. HAND SPOON
- [x] ALUMINUM PAN
- [x] PLASTIC SCOOP
- [x] OTHER scupula

DECONTAMINATION FLUIDS USED:
- [x] POTABLE WATER
- [ ] POTABLE WATER WITH HIGH PRESSURE
- [ ] OTHER

SAMPLE OBSERVATIONS: [ ] ODOR [ ] COLORED

AMBIENT AIR: 0.0 PPM

SAMPLE LOCATION: 0.0 PPM

pH: — UNITS

ANALYTICAL PARAMETERS

	METHOD NUMBER	PRESERVATION METHOD	VOLUME REQUIRED	SAMPLE COLLECTED
[x] PP METALS (SPECIFIED BELOW)		4 DEG C		DC [x]
[ ] AL	JS12	4 DEG C		
[ ] CA		4 DEG C		
[ ] NA		4 DEG C		
[ ] CD		4 DEG C		
[ ] CR		4 DEG C		
[ ] HG	Y9	4 DEG C		
[ ] PB	JD21	4 DEG C		
[ ] TCLP METALS (SPECIFIED BELOW)		4 DEG C		
[ ] NIT	KF17	4 DEG C		
[ ] SO4	KT07	4 DEG C		
[ ] NH3N2	USEPA 350.2	4 DEG C		
[ ] TOC	USEPA CE-81-1	4 DEG C		
[ ] pH	SW846 METHOD 9045	4 DEG C		
*[x] VOC	LM23	4 DEG C		EA [x]
*[ ] BN/A	LM25	4 DEG C		
[ ] NG	LW27	4 DEG C		
[ ] NAM	LN08	4 DEG C		
[x] DNT	LW23	4 DEG C		DC [x]

SAMPLE BOTTLE ID NUMBERS: 947, 950, 953, 951

NOTES (LOCATION SKETCH)

* THESE ARE DATACHEM METHODS. EA METHODS: VOC LM17, LM26; B/NA LM20

PP METALS (PRIORITY POLLUTANT): AG, AS, BE, CD, CR, CU, PB, HG, NI, SB, SE, TL, ZN. JS12, B9, JD21, JD20, Y9.

TCLP METALS: CD, CR, HG, PB. JS12, 40 CFR 261.24

DC: 2 bottles
EA: 2 bottles

SIGNATURE: VM/MR

RECEIVED BY: Nancy E. Roka

BB ENVIRONMENTAL SERVICES, INC

FIELD DATA RECORD – SEDIMENT

FIELD SAMPLING NUMBER: P91720000

PROJECT: USATHAMA-BAAP

SITE ID: PBS-91-72

SITE TYPE: BUGR

JOB NUMBER: 6853-04

PROGRAM: C

SAMPLING DATE: 9.25.91

FILE NAME: CSO

WEATHER: rain, °50's windy

LOCATION ACTIVITY START: 0955 END: 1000

SEDIMENT DATA

DEPTH OF SEDIMENT SAMPLE: 1-4 IN

TYPE OF SAMPLE COLLECTED: [x] DISCRETE [ ] COMPOSITE

TYPE OF SEDIMENT:
- [x] CLAY
- [x] SAND
- [x] ORGANIC
- [x] SILT Some
- [x] GRAVEL
- [ ] OTHER

EQUIPMENT USED FOR COLLECTION:
- [ ] GRAVITY CORER
- [x] TULIP BULB PLANTER
- [ ] S.S. HAND SPOON
- [x] ALUMINUM PAN
- [x] PLASTIC SCOOP
- [x] OTHER Scupula

DECONTAMINATION FLUIDS USED:
- [x] POTABLE WATER
- [ ] POTABLE WATER WITH HIGH PRESSURE
- [ ] OTHER

SAMPLE OBSERVATIONS: [ ] ODOR [ ] COLORED

AMBIENT AIR: 0.0 PPM

SAMPLE LOCATION: 0.3 PPM

pH: — UNITS

ANALYTICAL PARAMETERS

	METHOD NUMBER	PRESERVATION METHOD	VOLUME REQUIRED	SAMPLE COLLECTED	SAMPLE BOTTLE ID NUMBERS
[x] PP METALS (SPECIFIED BELOW)		4 DEG C	DC	[x]	325
[ ] AL	JS12	4 DEG C			
[ ] CA	|	4 DEG C			
[ ] NA	|	4 DEG C			
[ ] CD	|	4 DEG C			
[ ] CR	|	4 DEG C			
[ ] HG	Y9	4 DEG C			
[ ] PB	JD21	4 DEG C			
[x] TCLP METALS (SPECIFIED BELOW)		4 DEG C		[x]	328
[ ] NIT	KF17	4 DEG C			
[ ] SO4	KT07	4 DEG C			
[ ] NH3N2	USEPA 350.2	4 DEG C			
[ ] TOC	USEPA CE-81-1	4 DEG C			
[ ] pH	SW846 METHOD 9045	4 DEG C			
[x] VOC	LM23	4 DEG C	EA	[x]	331 332
[ ] BN/A	LM25	4 DEG C			
[ ] NG	LW27	4 DEG C			
[ ] NAM	LN08	4 DEG C			
[x] DNT	LW23	4 DEG C	DC	[x]	334

NOTES
LOCATION SKETCH)

* THESE ARE DATACHEM METHODS. EA METHODS: VOC LM17, LM26
B/NA LM20

PP METALS (PRIORITY POLLUTANT): AG, AS, BE, CD, CR, CU, PB, HG, NI, SB, SE, TL, ZN.
JS12, B9, JD21, JD20, Y9.

TCLP METALS: CD, CR, HG, PB.
JS12, 40 CFR 261.24

DC: 2 bottles

EA: 2 bottles

SIGNATURE: VM/NR

RECEIVED BY: Nancy E. Rotta

ABB ENVIRONMENTAL SERVICES, INC

PAGE 21 OF

FIELD DATA RECORD – SEDIMENT

FIELD SAMPLING NUMBER: P91730000

PROJECT: USATHAMA-BAAP

SITE ID: PBS-91-73

LOCATION ACTIVITY: START: 0945 END: 0950

SITE TYPE: BUGR

JOB NUMBER: 6853-04

PROGRAM: C

SAMPLING DATE: 9.24.91

FILE NAME: CSO

WEATHER: rain, °50's windy

SEDIMENT DATA

DEPTH OF SEDIMENT SAMPLE: 1-4 IN

TYPE OF SAMPLE COLLECTED: [x] DISCRETE [ ] COMPOSITE

TYPE OF SEDIMENT:
- [ ] CLAY
- [x] SAND little fine
- [x] ORGANIC
- [ ] SILT
- [ ] GRAVEL
- [ ] OTHER

EQUIPMENT USED FOR COLLECTION:
- [ ] GRAVITY CORER
- [x] TULIP BULB PLANTER
- [ ] S.S. HAND SPOON
- [ ] ALUMINUM PAN
- [ ] PLASTIC SCOOP
- [x] OTHER Scupula

DECONTAMINATION FLUIDS USED
- [x] POTABLE WATER
- [ ] POTABLE WATER WITH HIGH PRESSURE
- [ ] OTHER

SAMPLE OBSERVATIONS
- [ ] ODOR
- [ ] COLORED

AMBIENT AIR: 0.0 PPM

SAMPLE LOCATION: 0.3 PPM

pH: — UNITS

ANALYTICAL PARAMETERS

		METHOD NUMBER	PRESERVATION METHOD	VOLUME REQUIRED	SAMPLE COLLECTED	SAMPLE BOTTLE ID NUMBERS
[x]	PP METALS (SPECIFIED BELOW)		4 DEG C		DC [x]	958
[ ]	AL	JS12	4 DEG C			
[ ]	CA		4 DEG C			
[ ]	NA		4 DEG C			
[ ]	CD		4 DEG C			
[ ]	CR		4 DEG C			
[ ]	HG	Y9	4 DEG C			
[ ]	PB	JD21	4 DEG C			
[ ]	TCLP METALS (SPECIFIED BELOW)		4 DEG C			
[ ]	NIT	KF17	4 DEG C			
[ ]	SO4	KT07	4 DEG C			
[ ]	NH3N2	USEPA 350.2	4 DEG C			
[ ]	TOC	USEPA CE-81-1	4 DEG C			
[ ]	pH	SW846 METHOD 9045	4 DEG C			
* [x]	VOC	LM23	4 DEG C		EA [x]	959 962
* [ ]	BN/A	LM25	4 DEG C			
[ ]	NG	LW27	4 DEG C			
[ ]	NAM	LN08	4 DEG C			
[x]	DNT	LW23	4 DEG C		DC [x]	960

NOTES
(LOCATION SKETCH)

* THESE ARE DATACHEM METHODS. EA METHODS: VOC LM17, LM26
B/NA LM20

PP METALS (PRIORITY POLLUTANT): AG, AS, BE, CD, CR, CU, PB, HG, NI, SB, SE, TL, ZN.
JS12, B9, JD21, JD20, Y9.

TCLP METALS: CD, CR, HG, PB.
JS12, 40 CFR 261.24

DC: 2 bottles
EA: 2 bottles

SIGNATURE: VM/MR

RECEIVED BY: Nancy E. Rota

C. JORDAN
FIELD DATA RECORD - SEDIMENT

FIELD SAMPLING NO. NPS89021 1 | WEATHER Sunny / 75°
ROGRAM Q05 | SITE TYPE SEDIMENT | FILE NAME CS0
ROJECT USATHAMA - BAAP | JOB NUMBER 6298-12 | SAMPLING DATE 27 SEP 89
SITE ID NPS-89-02 | LOCATION ACTIVITY START: 1210 END: 1215

EDIMENT DATA
DEPTH OF SEDIMENT SAMPLE .1 to .5 ft
SAMPLE OBSERVATIONS

TYPE OF SEDIMENT
[ ] CLAY
[✓] SAND Mostly
[ ] SILT
[✓] ORGANIC
[ ] GRAVEL
[ ] OTHER

EQUIPMENT USED FOR COLLECTION
[✓] CORING DEVICE
[ ] S.S. SPLIT SPOON
[✓] S.S. HAND SPOON
[✓] ALUMINUM PANS
[ ] S.S. BUCKET
[ ] OTHER

DECONTAMINATION FLUIDS USED
[✓] POTABLE WATER
[ ] POTABLE WATER W/HIGH PRESS.

TYPE OF SAMPLE
[✓] DISCRETE
[ ] COMPOSITE / NO.

AMBIENT AIR VOA — PPM
SAMPLE LOCATION AIR VOA — PPM

([✓] IF REQUIRED AT THIS LOCATION) ANALYTICAL PARAMETER/METHOD	MATRIX	PRESERVATION METHOD	Bottle Size	SAMPLE COLLECTED	SAMPLE BOTTLE ID'S
[ ] NI / JS05	SD	4 DEG. C		[ ]	
[ ] FE / JS05		4 DEG. C		[ ]	
[✓] CD / JS05		4 DEG. C	120ml (4oz)	[✓]	
[✓] CR / JS05		4 DEG. C		[✓]	11
[✓] HG / JB09		4 DEG. C		[✓]	
[✓] PB / JS05		4 DEG. C		[✓]	
[ ] CA / JS05		4 DEG. C		[ ]	
[ ] NA / JS05		4 DEG. C		[ ]	
[ ] AL / JS05		4 DEG. C		[ ]	
[ ] NIT / KT03		4 DEG. C		[ ]	
[ ] SO4 / KT03		4 DEG. C		[ ]	
[ ] VOC / LM12		4 DEG. C		[ ]	
[ ] BN/A / LM11		4 DEG. C		[ ]	
[ ] NAM / LN02		4 DEG. C		[ ]	
[ ] PHTHL / LM11		4 DEG. C		[ ]	
[ ] DNT / LW07		4 DEG. C		[ ]	
[ ] NG / LW10		4 DEG. C		[ ]	
[ ] NH4 / USEPA 350.2		4 DEG. C		[ ]	
[ ] TOC / USEPA CE-81-1		4 DEG. C		[ ]	
[ ] pH / USEPA (SOP GM001)	SD	4 DEG. C		[ ]	

NOTES / SKETCH

Sample taken at staked location. Cd, Cr, Hg, Pb samples are all in 1 jar.

SJS 10-08-89

SIGNATURE OF SAMPLER R. David Cisneros

E. C. JORDAN
FIELD DATA RECORD - SEDIMENT

FIELD SAMPLING NO. NPS-89-03-1 | WEATHER Sunny

PROGRAM QOS | SITE TYPE SEDIMENT | FILE NAME CSO

PROJECT USATHAMA - BAAP | JOB NUMBER 6298-12 | SAMPLING DATE 27 SEP 90

SITE ID NPS-89-03 | LOCATION ACTIVITY START: 1220 END: 1230

SEDIMENT DATA

DEPTH OF SEDIMENT SAMPLE .1 - .5 Ft

SAMPLE OBSERVATIONS _____

TYPE OF SEDIMENT
[ ] CLAY
[M] SAND
[ ] SILT
[ ] ORGANIC
[ ] GRAVEL
[ ] OTHER _____

EQUIPMENT USED FOR COLLECTION
[✓] CORING DEVICE
[ ] S.S. SPLIT SPOON
[✓] S.S. HAND SPOON
[✓] ALUMINUM PANS
[ ] S.S. BUCKET
[ ] OTHER _____

DECONTAMINATION FLUIDS USED
[✓] POTABLE WATER
[ ] POTABLE WATER W/HIGH PRESS.

TYPE OF SAMPLE
[✓] DISCRETE
[ ] COMPOSITE / NO. _____

AMBIENT AIR VOA _____ PPM

SAMPLE LOCATION AIR VOA _____ PPM

([✓] IF REQUIRED AT THIS LOCATION) ANALYTICAL PARAMETER/METHOD	MATRIX	PRESERVATION METHOD	Bottle Size	SAMPLE COLLECTED	SAMPLE BOTTLE ID'S
[ ] NI / JS05	SD	4 DEG. C		[ ]	
[ ] FE / JS05		4 DEG. C		[ ]	
[M] CD / JS05		4 DEG. C	120 ml (4oz.)	[✓]	
[M] CR / JS05		4 DEG. C		[✓]	12
[M] HG / JB09		4 DEG. C		[✓]	
[M] PB / JS05		4 DEG. C		[✓]	
[ ] CA / JS05		4 DEG. C		[ ]	
[ ] NA / JS05		4 DEG. C		[ ]	
[ ] AL / JS05		4 DEG. C		[ ]	
[ ] NIT / KT03		4 DEG. C		[ ]	
[ ] SO4 / KT03		4 DEG. C		[ ]	
[ ] VOC / LM12		4 DEG. C		[ ]	
[ ] BN/A / LM11		4 DEG. C		[ ]	
[ ] NAM / LN02		4 DEG. C		[ ]	
[ ] PHTHL / LM11		4 DEG. C		[ ]	
[ ] DNT / LW07		4 DEG. C		[ ]	
[ ] NG / LW10		4 DEG. C		[ ]	
[ ] NH4 / USEPA 350.2		4 DEG. C		[ ]	
[ ] TOC / USEPA CE-81-1		4 DEG. C		[ ]	
[ ] pH / USEPA (SOP GM001)	SD	4 DEG. C		[ ]	

NOTES / SKETCH

Sample taken at staked location. Water level in pond is low.
Cd, Cr, Pb, Hg samples all in 1 jar.

BJS 10-08-89

SIGNATURE OF SAMPLER [signature]

E. C. JORDAN
FIELD DATA RECORD - SEDIMENT

PROGRAM: QOS

PROJECT: USATHAMA - BAAP

FIELD SAMPLING NO.: NPS89041

SITE TYPE: SEDIMENT

JOB NUMBER: 6298-12

WEATHER: [illegible]

FILE NAME: CSO

SAMPLING DATE: 27SEP00

SITE ID: NPS-89-04

LOCATION ACTIVITY: START: 1305 END: 1315

SEDIMENT DATA

DEPTH OF SEDIMENT SAMPLE: .1 - .5 ft

SAMPLE OBSERVATIONS: _____

TYPE OF SEDIMENT
[✓] CLAY
[✓] SAND
[ ] SILT
[ ] ORGANIC
[ ] GRAVEL
[ ] OTHER _____

EQUIPMENT USED FOR COLLECTION
[✓] CORING DEVICE
[ ] S.S. SPLIT SPOON
[✓] S.S. HAND SPOON
[✓] ALUMINUM PANS
[ ] S.S. BUCKET
[ ] OTHER _____

DECONTAMINATION FLUIDS USED
[✓] POTABLE WATER
[ ] POTABLE WATER W/HIGH PRESS.

TYPE OF SAMPLE
[✓] DISCRETE
[ ] COMPOSITE / NO. _____

AMBIENT AIR VOA: ——— PPM

SAMPLE LOCATION AIR VOA: ——— PPM

(☑ IF REQUIRED AT THIS LOCATION) ANALYTICAL PARAMETER/METHOD	MATRIX	PRESERVATION METHOD	Bottle Size	SAMPLE COLLECTED	SAMPLE BOTTLE ID'S
[ ] NI / JS05	SD	4 DEG. C		[ ]	/
[ ] FE / JS05		4 DEG. C		[ ]	/
[✓] CD / JS05		4 DEG. C	120ml (4oz.)	[✓]	/
[✓] CR / JS05		4 DEG. C		[✓]	13 /
[✓] HG / JB09		4 DEG. C		[✓]	/
[✓] PB / JS05		4 DEG. C		[✓]	/
[ ] CA / JS05		4 DEG. C		[ ]	/
[ ] NA / JS05		4 DEG. C		[ ]	/
[ ] AL / JS05		4 DEG. C		[ ]	/
[ ] NIT / KT03		4 DEG. C		[ ]	/
[ ] SO4 / KT03		4 DEG. C		[ ]	/
[ ] VOC / LM12		4 DEG. C		[ ]	/
[ ] BN/A / LM11		4 DEG. C		[ ]	/
[ ] NAM / LN02		4 DEG. C		[ ]	/
[ ] PHTHL / LM11		4 DEG. C		[ ]	/
[ ] DNT / LW07		4 DEG. C		[ ]	/
[ ] NG / LW10		4 DEG. C		[ ]	/
[ ] NH4 / USEPA 350.2		4 DEG. C		[ ]	/
[ ] TOC / USEPA CE-81-1		4 DEG. C		[ ]	/
[ ] pH / USEPA (SOP GM001)	SD	4 DEG. C		[ ]	/

NOTES / SKETCH

Cd, Cr, Hg, Pb samples all in 1 (4oz.) jar. No stake at location.

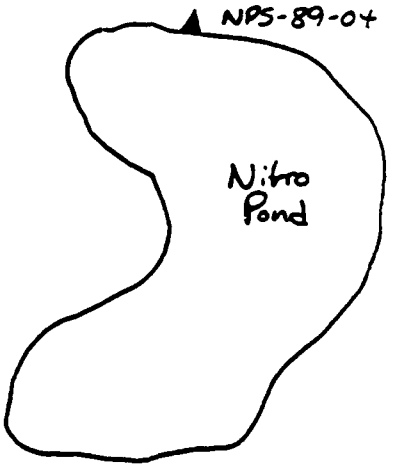

JS 10-08-89

SIGNATURE OF SAMPLER: [signature]

E. C. JORDAN
FIELD DATA RECORD - SEDIMENT

PROGRAM: QOS

PROJECT: USATHAMA - SAAP

FIELD SAMPLING NO.: NPS89051

SITE TYPE: SEDIMENT

JOB NUMBER: 6298-12

WEATHER: Sunny 75

FILE NAME: CSO

SAMPLING DATE: 27 AUG 90

SITE ID: NPS-89-05

LOCATION ACTIVITY: START: 1250 END: 1300

SEDIMENT DATA

DEPTH OF SEDIMENT SAMPLE: .1 - .5 Ft

SAMPLE OBSERVATIONS: _____

TYPE OF SEDIMENT
- [x] CLAY
- [x] SAND
- [ ] SILT
- [x] ORGANIC
- [ ] GRAVEL
- [ ] OTHER _____

EQUIPMENT USED FOR COLLECTION
- [x] CORING DEVICE
- [ ] S.S. SPLIT SPOON
- [x] S.S. HAND SPOON
- [x] ALUMINUM PANS
- [ ] S.S. BUCKET
- [ ] OTHER _____

DECONTAMINATION FLUIDS USED
- [ ] POTABLE WATER
- [ ] POTABLE WATER W/HIGH PRESS.

TYPE OF SAMPLE
- [ ] DISCRETE
- [ ] COMPOSITE / NO. _____

AMBIENT AIR VOA: ——— PPM

SAMPLE LOCATION AIR VOA: ——— PPM

([x] IF REQUIRED AT THIS LOCATION) ANALYTICAL PARAMETER/METHOD	MATRIX	PRESERVATION METHOD	Bottle Size	SAMPLE COLLECTED	SAMPLE BOTTLE ID'S
[ ] NI / JS05	SD	4 DEG. C		[ ]	
[ ] FE / JS05		4 DEG. C		[ ]	
[x] CD / JS05		4 DEG. C	120ml (4oz)	[x]	
[x] CR / JS05		4 DEG. C		[x]	14
[x] HG / JB09		4 DEG. C		[x]	
[x] PB / JS05		4 DEG. C		[x]	
[ ] CA / JS05		4 DEG. C		[ ]	
[ ] NA / JS05		4 DEG. C		[ ]	
[ ] AL / JS05		4 DEG. C		[ ]	
[ ] NIT / KT03		4 DEG. C		[ ]	
[ ] SO4 / KT03		4 DEG. C		[ ]	
[ ] VOC / LM12		4 DEG. C		[ ]	
[ ] BN/A / LM11		4 DEG. C		[ ]	
[ ] NAN / LN02		4 DEG. C		[ ]	
[ ] PNTHL / LM11		4 DEG. C		[ ]	
[ ] DNT / LM07		4 DEG. C		[ ]	
[ ] NG / LM10		4 DEG. C		[ ]	
[ ] NH4 / USEPA 350.2		4 DEG. C		[ ]	
[ ] TOC / USEPA CE-81-1		4 DEG. C		[ ]	
[ ] pH / USEPA (SOP GN001)	SD	4 DEG. C		[ ]	

NOTES / SKETCH: Cr, Cd, Hg + Pb Samples all put in (1) 4oz. jar. No Stake at location.

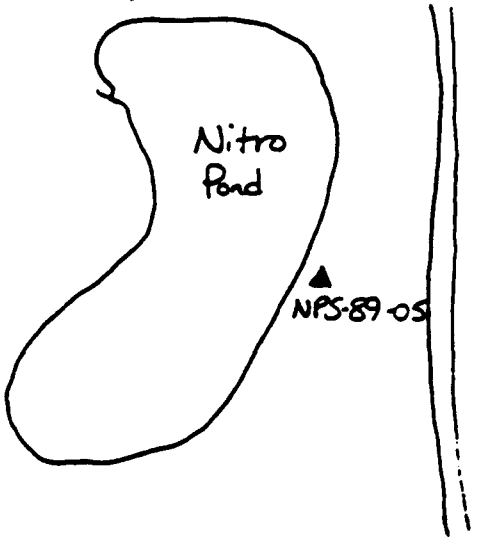

BJS 10-08-89

SIGNATURE OF SAMPLER: R David Rainsford

E. C. JORDAN
FIELD DATA RECORD - SEDIMENT

FIELD SAMPLING NO. NPS89C61 | WEATHER Sunny 75°
PROGRAM QOS | SITE TYPE SEDIMENT | FILE NAME CSO
PROJECT USATHAMA - BAAP | JOB NUMBER 6298-12 | SAMPLING DATE 27SEP9C
SITE ID NPS-89-06 | LOCATION ACTIVITY START: 1235 END: 1245

SEDIMENT DATA
DEPTH OF SEDIMENT SAMPLE: .1 - .5 Ft
SAMPLE OBSERVATIONS: Sm cont. clay

TYPE OF SEDIMENT
[ ] CLAY
[✓] SAND
[ ] SILT
[ ] ORGANIC
[ ] GRAVEL
[ ] OTHER

EQUIPMENT USED FOR COLLECTION
[✓] CORING DEVICE
[ ] S.S. SPLIT SPOON
[✓] S.S. HAND SPOON
[✓] ALUMINUM PANS
[ ] S.S. BUCKET
[ ] OTHER

DECONTAMINATION FLUIDS USED
[✓] POTABLE WATER
[ ] POTABLE WATER W/HIGH PRESS.

TYPE OF SAMPLE
[✓] DISCRETE
[ ] COMPOSITE / NO.

AMBIENT AIR VOA: ——— PPM
SAMPLE LOCATION AIR VOA: ——— PPM

([☑] IF REQUIRED AT THIS LOCATION) ANALYTICAL PARAMETER/METHOD	MATRIX	PRESERVATION METHOD	Bottle Size	SAMPLE COLLECTED	SAMPLE BOTTLE ID'S
[ ] NI / JS05	SO	4 DEG. C		[ ]	
[ ] FE / JS05		4 DEG. C		[ ]	
[✓] CD / JS05		4 DEG. C	120ml (4oz)	[✓]	
[✓] CR / JS05		4 DEG. C		[✓]	B
[✓] HG / JB09		4 DEG. C		[✓]	
[✓] PB / JS05		4 DEG. C		[✓]	
[ ] CA / JS05		4 DEG. C		[ ]	
[ ] NA / JS05		4 DEG. C		[ ]	
[ ] AL / JS05		4 DEG. C		[ ]	
[ ] NIT / KT03		4 DEG. C		[ ]	
[ ] SO4 / KT03		4 DEG. C		[ ]	
[ ] VOC / LM12		4 DEG. C		[ ]	
[ ] BN/A / LM11		4 DEG. C		[ ]	
[ ] NAN / LM02		4 DEG. C		[ ]	
[ ] PNTHL / LM11		4 DEG. C		[ ]	
[ ] DNT / LM07		4 DEG. C		[ ]	
[ ] HG / LM10		4 DEG. C		[ ]	
[ ] NH4 / USEPA 350.2		4 DEG. C		[ ]	
[ ] TOC / USEPA CE-81-1		4 DEG. C		[ ]	
[ ] pH / USEPA (SOP GW001)	SO	4 DEG. C		[ ]	

NOTES / SKETCH
Cd, Cr, Pb, Hg samples all taken ~~at~~ in (1) 4oz. jar. No stake at location.

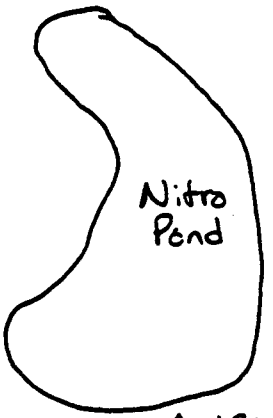

BJS 10-08-89

SIGNATURE OF SAMPLER R David Simmons

E. C. JORDAN
FIELD DATA RECORD - SEDIMENT

PROGRAM: QOS

PROJECT: USATHAMA - BAAP

FIELD SAMPLING NO.: NPS89C07

SITE TYPE: SEDIMENT

JOB NUMBER: 6298-12

WEATHER: Sunny 75°

FILE NAME: CSO

SAMPLING DATE: 27SEP90

SITE ID: NPS-89-C07

LOCATION ACTIVITY: START: 1320 END: 1330

SEDIMENT DATA

DEPTH OF SEDIMENT SAMPLE: .1-.5ft

SAMPLE OBSERVATIONS: _____

TYPE OF SEDIMENT
- [x] CLAY
- [ ] SAND
- [ ] SILT
- [ ] ORGANIC
- [ ] GRAVEL
- [ ] OTHER _____

EQUIPMENT USED FOR COLLECTION
- [x] CORING DEVICE
- [x] S.S. SPLIT SPOON
- [x] S.S. HAND SPOON
- [x] ALUMINUM PANS
- [ ] S.S. BUCKET
- [ ] OTHER _____

DECONTAMINATION FLUIDS USED
- [x] POTABLE WATER
- [ ] POTABLE WATER W/HIGH PRESS.

TYPE OF SAMPLE
- [x] DISCRETE
- [ ] COMPOSITE / NO. _____

AMBIENT AIR VOA: ——— PPM

SAMPLE LOCATION AIR VOA: ——— PPM

([x] IF REQUIRED AT THIS LOCATION) ANALYTICAL PARAMETER/METHOD	MATRIX	PRESERVATION METHOD	Bottle Size	SAMPLE COLLECTED	SAMPLE BOTTLE ID'S
[ ] NI / JSO5	SD	4 DEG. C		[ ]	
[ ] FE / JSO5		4 DEG. C		[ ]	
[x] CD / JSO5		4 DEG. C	120ml (4oz.)	[x]	
[x] CR / JSO5		4 DEG. C		[x]	16
[x] HG / JB09		4 DEG. C		[x]	
[x] PB / JSO5		4 DEG. C		[x]	
[ ] CA / JSO5		4 DEG. C		[ ]	
[ ] NA / JSO5		4 DEG. C		[ ]	
[ ] AL / JSO5		4 DEG. C		[ ]	
[ ] NIT / KT03		4 DEG. C		[ ]	
[ ] SO4 / KT03		4 DEG. C		[ ]	
[ ] VOC / LM12		4 DEG. C		[ ]	
[ ] BN/A / LM11		4 DEG. C		[ ]	
[ ] NAN / LN02		4 DEG. C		[ ]	
[ ] PHTHL / LM11		4 DEG. C		[ ]	
[ ] DNT / LW07		4 DEG. C		[ ]	
[ ] HG / LW10		4 DEG. C		[ ]	
[ ] NH4 / USEPA 350.2		4 DEG. C		[ ]	
[ ] TOC / USEPA CE-81-1		4 DEG. C		[ ]	
[ ] pH / USEPA (SOP GM001)	SD	4 DEG. C		[ ]	

NOTES / SKETCH: Cd, Cr, Pb, Hg all in (1) 4oz. jar. No stake at location.

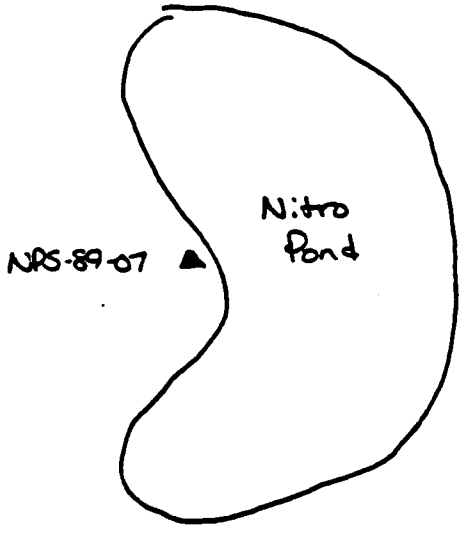

BJS 10-08-89

SIGNATURE OF SAMPLER: R. D Dragmond

E. C. JORDAN
FIELD DATA RECORD - SEDIMENT

FIELD SAMPLING NO. NPS89C51 | WEATHER Sunny 75°
PROGRAM QOS | SITE TYPE SEDIMENT | FILE NAME CSO
PROJECT USATHAMA - BAAP | JOB NUMBER 6298-12 | SAMPLING DATE 27SEP9C
SITE ID NPS-89-C8 | LOCATION ACTIVITY START: 1340 END: 1345

SEDIMENT DATA
DEPTH OF SEDIMENT SAMPLE: .1 - .5 Ft
SAMPLE OBSERVATIONS

TYPE OF SEDIMENT
[ ] CLAY
[ ] SAND
[ ] SILT
[✓] ORGANIC
[ ] GRAVEL
[ ] OTHER

EQUIPMENT USED FOR COLLECTION
[✓] CORING DEVICE
[ ] S.S. SPLIT SPOON
[✓] S.S. HAND SPOON
[✓] ALUMINUM PANS
[ ] S.S. BUCKET
[ ] OTHER

DECONTAMINATION FLUIDS USED
[✓] POTABLE WATER
[ ] POTABLE WATER W/HIGH PRESS.

TYPE OF SAMPLE
[✓] DISCRETE
[ ] COMPOSITE / NO.

AMBIENT AIR VOA ——— PPM
SAMPLE LOCATION AIR VOA ——— PPM

([✓] IF REQUIRED AT THIS LOCATION) ANALYTICAL PARAMETER/METHOD	MATRIX	PRESERVATION METHOD	SAMPLE COLLECTED	SAMPLE BOTTLE ID'S
[ ] NI / JSOS	SD	4 DEG. C	[ ]	
[ ] FE / JSOS		4 DEG. C	[ ]	
[✓] CD / JSOS		4 DEG. C	[✓]	
[✓] CR / JSOS		4 DEG. C	[✓] 120ml (4oz.)	17
[✓] HG / JB09		4 DEG. C	[✓]	
[✓] PB / JSOS		4 DEG. C	[✓]	
[ ] CA / JSOS		4 DEG. C	[ ]	
[ ] NA / JSOS		4 DEG. C	[ ]	
[ ] AL / JSOS		4 DEG. C	[ ]	
[ ] NIT / KT03		4 DEG. C	[ ]	
[ ] SO4 / KT03		4 DEG. C	[ ]	
[ ] VOC / LM12		4 DEG. C	[ ]	
[ ] BN/A / LM11		4 DEG. C	[ ]	
[ ] NAH / LN02		4 DEG. C	[ ]	
[ ] PHTHL / LM11		4 DEG. C	[ ]	
[ ] ONT / LW07		4 DEG. C	[ ]	
[ ] HG / LW10		4 DEG. C	[ ]	
[ ] NH4 / USEPA 350.2		4 DEG. C	[ ]	
[ ] TOC / USEPA CE-81-1		4 DEG. C	[ ]	
[ ] pH / USEPA (SOP GN001)	SD	4 DEG. C	[ ]	

NOTES / SKETCH Cd, Cr, Hg, Pb are all in 1 (4oz.) jar. No stake @ location. Appears to be sm. inlet to pond at south end. EDO Sample taken at beginning of this. Inlet is dry now and looks as though it only gets water during heavy storm.

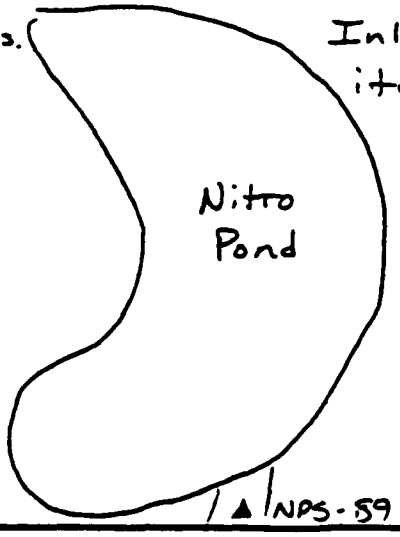

S 10-08-89

SIGNATURE OF SAMPLER R David Simmons

E. C. JORDAN
FIELD DATA RECORD - SEDIMENT

PROGRAM: QOS

PROJECT: USATHAMA - BAAP

FIELD SAMPLING NO.: NPS 89 C9 i

SITE TYPE: SEDIMENT

JOB NUMBER: 6298-12

WEATHER: Sunny / 75°

FILE NAME: CSO

SAMPLING DATE: 27SEP89

SITE ID: NPS-89-C9

LOCATION ACTIVITY: START: 1350 END: 1400

SEDIMENT DATA

DEPTH OF SEDIMENT SAMPLE: .1 to .5 ft

SAMPLE OBSERVATIONS: _____

TYPE OF SEDIMENT
- [ ] CLAY
- [ ] SAND
- [ ] SILT
- [X] ORGANIC
- [ ] GRAVEL
- [ ] OTHER _____

EQUIPMENT USED FOR COLLECTION
- [X] CORING DEVICE
- [ ] S.S. SPLIT SPOON
- [X] S.S. HAND SPOON
- [X] ALUMINUM PANS
- [ ] S.S. BUCKET
- [ ] OTHER _____

DECONTAMINATION FLUIDS USED
- [X] POTABLE WATER
- [ ] POTABLE WATER W/HIGH PRESS.

TYPE OF SAMPLE
- [X] DISCRETE
- [ ] COMPOSITE / NO. _____

AMBIENT AIR VOA: ——— PPM

SAMPLE LOCATION AIR VOA: ——— PPM

([X] IF REQUIRED AT THIS LOCATION) ANALYTICAL PARAMETER/METHOD	MATRIX	PRESERVATION METHOD	Bottle Size	SAMPLE COLLECTED	SAMPLE BOTTLE ID'S
[ ] NI / JS05	SD	4 DEG. C		[ ]	
[ ] FE / JS05		4 DEG. C		[ ]	
[X] CD / JS05		4 DEG. C	120ml (4oz)	[X]	
[X] CR / JS05		4 DEG. C		[X]	15
[X] HG / JB09		4 DEG. C		[X]	
[X] PB / JS05		4 DEG. C		[X]	
[ ] CA / JS05		4 DEG. C		[ ]	
[ ] NA / JS05		4 DEG. C		[ ]	
[ ] AL / JS05		4 DEG. C		[ ]	
[ ] NIT / KT03		4 DEG. C		[ ]	
[ ] SO4 / KT03		4 DEG. C		[ ]	
[ ] VOC / LM12		4 DEG. C		[ ]	
[ ] BN/A / LN11		4 DEG. C		[ ]	
[ ] NAM / LN02		4 DEG. C		[ ]	
[ ] PNTHL / LN11		4 DEG. C		[ ]	
[ ] DNT / LW07		4 DEG. C		[ ]	
[ ] NG / LW10		4 DEG. C		[ ]	
[ ] NH4 / USEPA 350.2		4 DEG. C		[ ]	
[ ] TOC / USEPA CE-81-1		4 DEG. C		[ ]	
[ ] pH / USEPA (SOP GN001)	SD	4 DEG. C		[ ]	

NOTES / SKETCH: Sample taken at staked location in middle of a ditch.
Cd, Cr, Hg, Pb Sample all in (1) 4oz. jar.

BJS 10-08-89

SIGNATURE OF SAMPLER: R. David Downs

E. C. JORDAN
FIELD DATA RECORD - SEDIMENT

PROGRAM: QOS

PROJECT: USATHAMA - BAAP

FIELD SAMPLING NO.: NPS|S|9|1|C|1

SITE TYPE: SEDIMENT

JOB NUMBER: 6298-12

WEATHER: Sunny

FILE NAME: CSO

SAMPLING DATE: 27SEP90

SITE ID: NPS|-|89|-|1|0|

LOCATION ACTIVITY: START: 1405 END: 1415

SEDIMENT DATA

DEPTH OF SEDIMENT SAMPLE: .1 to .5 ft

SAMPLE OBSERVATIONS: _____

TYPE OF SEDIMENT
- [ ] CLAY
- [ ] SAND
- [ ] SILT
- [x] ORGANIC
- [ ] GRAVEL
- [ ] OTHER _____

EQUIPMENT USED FOR COLLECTION
- [x] CORING DEVICE
- [ ] S.S. SPLIT SPOON
- [x] S.S. HAND SPOON
- [x] ALUMINUM PANS
- [ ] S.S. BUCKET
- [ ] OTHER _____

DECONTAMINATION FLUIDS USED
- [x] POTABLE WATER
- [ ] POTABLE WATER W/HIGH PRESS.

TYPE OF SAMPLE
- [x] DISCRETE
- [ ] COMPOSITE / NO. _____

AMBIENT AIR VOA: — PPM

SAMPLE LOCATION AIR VOA: — PPM

([x] IF REQUIRED AT THIS LOCATION) ANALYTICAL PARAMETER/METHOD	MATRIX	PRESERVATION METHOD	Bottle Size	SAMPLE COLLECTED	SAMPLE BOTTLE ID'S
[ ] NI / JS05	SO	4 DEG. C		[ ]	
[ ] FE / JS05		4 DEG. C		[ ]	
[x] CD / JS05		4 DEG. C	(3) 40ml vials	[x]	10
[x] CR / JS05		4 DEG. C		[x]	20
[x] HG / JB09		4 DEG. C		[x]	21
[x] PB / JS05		4 DEG. C		[x]	
[ ] CA / JS05		4 DEG. C		[ ]	
[ ] NA / JS05		4 DEG. C		[ ]	
[ ] AL / JS05		4 DEG. C		[ ]	
[ ] NIT / KT03		4 DEG. C		[ ]	
[ ] SO4 / KT03		4 DEG. C		[ ]	
[ ] VOC / LM12		4 DEG. C		[ ]	
[ ] BN/A / LM11		4 DEG. C		[ ]	
[ ] NAN / LN02		4 DEG. C		[ ]	
[ ] PHTHL / LM11		4 DEG. C		[ ]	
[ ] DNT / LW07		4 DEG. C		[ ]	
[ ] NG / LW10		4 DEG. C		[ ]	
[ ] NH4 / USEPA 350.2		4 DEG. C		[ ]	
[ ] TOC / USEPA CE-81-1		4 DEG. C		[ ]	
[ ] pH / USEPA (SOP GW001)	SO	4 DEG. C		[ ]	

NOTES / SKETCH: Cd, Cr, Hg + Pb are in 3 separate 40 ml vials. Ran out of 4oz. glass jars. Took Samples at staked location.

BJS 10-08-89

SIGNATURE OF SAMPLER: R. David Swann

ABB ENVIRONMENTAL SERVICES, INC.

PAGE 1 OF 25

FIELD DATA RECORD – SURFACE WATER

FIELD SAMPLING NUMBER: NA1010OOC

PROJECT: USATHAMA-BAAP
SITE ID: NPW-91-01
LOCATION ACTIVITY: START: 0905 END: 0910

SITE TYPE: POND
JOB NUMBER: 6853-04
PROGRAM: C

SAMPLING DATE: 9.22.91
FILE NAME: CSW
WEATHER: cloudy, °50s windy

SURFACE WATER DATA

WATER DEPTH @ SAMPLE LOCATION: 1-2"
DEPTH OF SAMPLE FROM TOP OF WATER: Surface
EQUIPMENT USED FOR COLLECTION: [x] NONE, GRAB INTO BOTTLE [ ] BOMB SAMPLER [ ] PUMP

TEMPERATURE: 13.0 DEG C.
pH ..... 9.2 UNITS
SPEC. COND. 145 umhos/cm

SAMPLE LOCATION SKETCH BELOW? [x] YES [ ] NO

AMBIENT AIR SAMPLE LOCATION: — PPM; — PPM

TYPE OF SURFACE WATER: [ ] STREAM [ ] RIVER [x] POND/LAKE [ ] SEEP

DECONTAMINATION FLUIDS USED: [x] POTABLE WATER [ ] NONE

ANALYTICAL PARAMETERS

	METHOD NUMBER	PRESERVATION METHOD	VOLUME REQUIRED	SAMPLE COLLECTED	SAMPLE BOTTLE ID NUMBERS	LAB
[x] TAL METALS (SPECIFIED BELOW)		HNO3 TO pH<2	1 L Poly	[x]	17	DC
[x] NIT	LL8	H2SO4 TO pH<2	500 ml poly	[x]	18	DC
[x] SO4	TT09	4 DEG C		[x]	20	DC
[x] CL	TT09	4 DEG C	1 L Poly	[x]	19	DC
[x] NH3N2	TF30	H2SO4 TO pH<2	1L Poly	[x]	161	EA
[x] TKN	USEPA 351.1	~~H2SO4~~ H2SO4		[x]	162	EA
[x] ALK	USEPA 310.1	4 DEG C		[x]	21	DC
[x] HARD	USEPA 130.2	HNO3 TO pH<2	500 ml P	[x]	22	DC
[x] * VOC	UM21	[redacted], 4 DEG C	(2) 40 ml	[x]	23 / 71	EA
[x] * B/NA	UM25	4 DEG C	(2) 1 L AG	[x]	24 / 72	EA
[ ] NG	UW27	4 DEG C	(2) 1 L AG	[x]	147 / 163	DC
[ ] DNT	UW25	4 DEG C	(2) 1 L AG	[x]	148 / 164	DC
				[ ]		

NOTES

(LOCATION SKETCH?)

* THESE ARE DATACHEM METHODS. EA METHODS: VOC UM19, UM26
B/NA UM24

TAL METALS (TOXIC ANALYTE LIST): AL, SB, AS, BA, BE, CD, CA, CR, CO, CU, FE, PB, MG, MN, HG, NI, K, SE, AG, NA, TL, V, ZN.
SS12, AX8, CC8, SD25, SD29, SD18
**METHOD NUMBER FOR TL PENDING CERTIFICATION

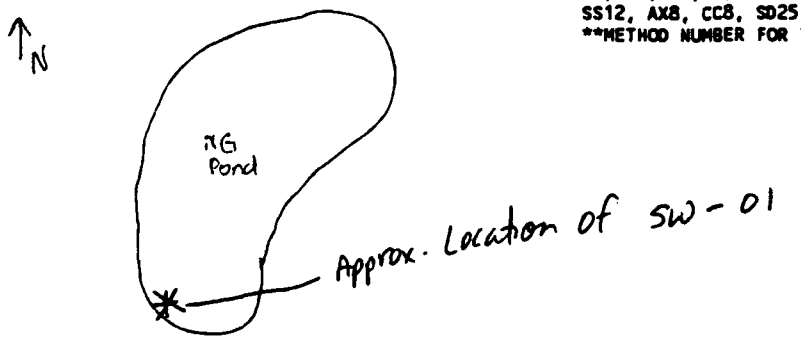

DC: 8 bottles
EA: 5 bottles

SIGNATURE: VM/NR

RECEIVED BY: Nancy E. Rokra

MD 8/9/89

BB ENVIRONMENTAL SERVICES, INC.

IELD DATA RECORD – SURFACE WATER

FIELD SAMPLING NUMBER: N91020000

PROJECT	USATHAMA-BAAP	SITE TYPE	POND
SITE ID	NPW-91-02	JOB NUMBER	6853-04
LOCATION ACTIVITY	START: 0930 END: 0935	PROGRAM	C
SAMPLING DATE	9.22.91	FILE NAME	CSW
WEATHER	cloudy, °50's breezy		

SURFACE WATER DATA

WATER DEPTH / SAMPLE LOCATION: ~ 2" BP

DEPTH OF SAMPLE FROM TOP OF WATER: Surface BP

EQUIPMENT USED FOR COLLECTION: [x] NONE, GRAB INTO BOTTLE; [ ] BOMB SAMPLER; [ ] PUMP _____

TEMPERATURE: 12.5 DEG C.

pH ..... 7.1 UNITS

SPEC. COND. 149 umhos/cm

SAMPLE LOCATION SKETCH BELOW? [x] YES [ ] NO

AMBIENT AIR SAMPLE LOCATION: 0 PPM; 0 PPM

TYPE OF SURFACE WATER: [ ] STREAM [ ] RIVER [x] POND/LAKE [ ] SEEP

DECONTAMINATION FLUIDS USED: [ ] POTABLE WATER [x] NONE

ANALYTICAL PARAMETERS

	METHOD NUMBER	PRESERVATION METHOD	VOLUME REQUIRED	SAMPLE COLLECTED	SAMPLE BOTTLE ID NUMBERS	LAB
[x] TAL METALS (SPECIFIED BELOW)		HNO3 TO pH<2	1 L Poly	[x]	25	DC
[ ] NIT	LL8	H2SO4 TO pH<2	500 ml Poly	[x]	26	DC
[ ] SO4	TT09	4 DEG C		[x]	28	DC
[ ] CL	TT09	4 DEG C	1 L Poly	[x]	27	DC
[ ] NH3N2	TF30	H2SO4 TO pH<2		[x]	149	EA
[ ] TKN	USEPA 351.1	[redacted] H_2SO_4	1 L Poly	[x]	150	EA
[ ] ALK	USEPA 310.1	4 DEG C		[x]	29	DC
[ ] HARD	USEPA 130.2	HNO3 TO pH<2	500 ml P	[x]	30	DC
[ ] VOC	UM21	[redacted] 4 DEG C	(2) 40 ml	[x]	31 / 79	EA
[ ] B/NA	UM25	4 DEG C	(2) 1 L AG	[x]	32 / 80	EA
[ ] NG	UW27	4 DEG C	(2) 1 L AG	[x]	151 / 152	DC
[ ] DNT	UW25	4 DEG C	(2) 1 L AG	[x]	167 / 168	DC

NOTES (LOCATION SKETCH?)

* THESE ARE DATACHEM METHODS. EA METHODS: VOC UM19, UM26; B/NA UM24

TAL METALS (TOXIC ANALYTE LIST): AL, SB, AS, BA, BE, CD, CA, CR, CO, CU, FE, PB, MG, MN, HG, NI, K, SE, AG, NA, TL, V, ZN.
SS12, AX8, CC8, SD25, SD29, SD18
**METHOD NUMBER FOR TL PENDING CERTIFICATION

DC: 8 bottles
EA: 5 bottles

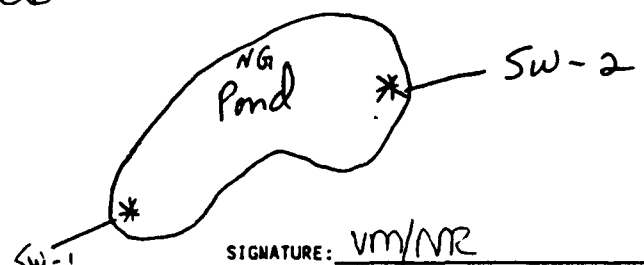

SIGNATURE: VM/NR

RECEIVED BY: Nancy E. Rafra

MD 8/9/89

ABB ENVIRONMENTAL SERVICES, INC

PAGE 2 OF

FIELD DATA RECORD – SEDIMENT

FIELD SAMPLING NUMBER: 09101000

PROJECT: USATHAMA-BAAP

SITE ID: OPS-91-01

SITE TYPE: POND

JOB NUMBER: 6853-04

PROGRAM: C

SAMPLING DATE: 10 3 91

FILE NAME: CSO

WEATHER: Sunny, 70's breezy

LOCATION ACTIVITY: START: 0845 END: 0850

SEDIMENT DATA

DEPTH OF SEDIMENT SAMPLE: 0-6 IN

TYPE OF SAMPLE COLLECTED: [x] DISCRETE [ ] COMPOSITE

TYPE OF SEDIMENT: [ ] CLAY [ ] SAND [x] ORGANIC [x] SILT [ ] GRAVEL [ ] OTHER

EQUIPMENT USED FOR COLLECTION: [x] GRAVITY CORER [x] TULIP BULB PLANTER [x] S.S. HAND SPOON [x] ALUMINUM PAN [ ] PLASTIC SCOOP [ ] OTHER

DECONTAMINATION FLUIDS USED: [x] POTABLE WATER [ ] POTABLE WATER WITH HIGH PRESSURE [ ] OTHER

SAMPLE OBSERVATIONS: [ ] ODOR [ ] COLORED [ ]

AMBIENT AIR: — PPM

SAMPLE LOCATION: — PPM

pH: — UNITS

ANALYTICAL PARAMETERS

	METHOD NUMBER	PRESERVATION METHOD	VOLUME REQUIRED	SAMPLE COLLECTED
[ ] PP METALS (SPECIFIED BELOW)		4 DEG C		
[ ] AL	JS12	4 DEG C		
[x] CA		4 DEG C		DC [x]
[x] NA		4 DEG C		
[ ] CD		4 DEG C		
[ ] CR		4 DEG C		
[ ] HG	Y9	4 DEG C		
[ ] PB	JD21	4 DEG C		
[ ] TCLP METALS (SPECIFIED BELOW)		4 DEG C		
[x] NIT	KF17	4 DEG C		DC [x]
[x] SO4	KT07	4 DEG C		
[x] NH3N2	USEPA 350.2	4 DEG C		
[x] TOC	USEPA CE-81-1	4 DEG C		EA [x]
[x] pH	SW846 METHOD 9045	4 DEG C		
[x] * VOC	LM23	4 DEG C		
[x] * BN/A	LM25	4 DEG C		
[ ] NG	LW27	4 DEG C		
[ ] NAM	LN08	4 DEG C		
[ ] DNT	LW23	4 DEG C		

SAMPLE BOTTLE ID NUMBERS

DC [x] 1255

DC [x] 1256

EA [x] 1257

NOTES (LOCATION SKETCH)

* THESE ARE DATACHEM METHODS. EA METHODS: VOC LM17, LM26; B/NA LM20

PP METALS (PRIORITY POLLUTANT): AG, AS, BE, CD, CR, CU, PB, HG, NI, SB, SE, TL, ZN. JS12, B9, JD21, JD20, Y9.

TCLP METALS: CD, CR, HG, PB. JS12, 40 CFR 261.24

DC: 2 bottles
EA: 1 bottle

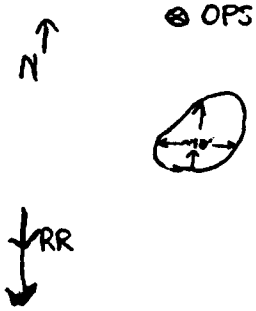

SIGNATURE: VM / MC

RECEIVED BY: Nancy E. Rotia

BB ENVIRONMENTAL SERVICES, INC

ELD DATA RECORD - SEDIMENT

FIELD SAMPLING NUMBER: 09102000

PROJECT: USATHAMA-BAAP

SITE TYPE: POND

SAMPLING DATE: 10 3 91

ITE ID: OPS-91-02

JOB NUMBER: 6853-04

FILE NAME: CSO

'OCATION CTIVITY: START: 0855 END: 0900

PROGRAM: C

WEATHER: sunny, 50's breezy

SEDIMENT DATA

DEPTH OF SEDIMENT SAMPLE: 0-3 IN

TYPE OF SAMPLE COLLECTED: [x] DISCRETE [ ] COMPOSITE

TYPE OF SEDIMENT:
- [ ] CLAY
- [ ] SAND
- [x] ORGANIC
- [x] SILT
- [ ] GRAVEL
- [ ] OTHER

EQUIPMENT USED FOR COLLECTION:
- [x] GRAVITY CORER
- [x] TULIP BULB PLANTER
- [x] S.S. HAND SPOON
- [x] ALUMINUM PAN
- [ ] PLASTIC SCOOP
- [ ] OTHER

DECONTAMINATION FLUIDS USED:
- [x] POTABLE WATER
- [ ] POTABLE WATER WITH HIGH PRESSURE
- [ ] OTHER

SAMPLE OBSERVATIONS: [ ] ODOR [ ] COLORED

AMBIENT AIR: — PPM

SAMPLE LOCATION: — PPM

pH: — UNITS

ANALYTICAL PARAMETERS

	METHOD NUMBER	PRESERVATION METHOD	VOLUME REQUIRED	SAMPLE COLLECTED
[x] PP METALS (SPECIFIED BELOW)		4 DEG C		
[x] AL	JS12	4 DEG C		DC
[x] SA		4 DEG C		
[x] NA		4 DEG C		
[x] CD		4 DEG C		
[x] CR		4 DEG C		
[x] HG	Y9	4 DEG C		
[x] PB	JD21	4 DEG C		
[x] TCLP METALS (SPECIFIED BELOW)		4 DEG C		
[x] NIT	KF17	4 DEG C		DC
[x] SO4	KT07	4 DEG C		
[x] NH3N2	USEPA 350.2	4 DEG C		
[x] TOC	USEPA CE-81-1	4 DEG C		EA
[x] pH	SW846 METHOD 9045	4 DEG C		
[x] VOC	LM23	4 DEG C		
[x] BN/A	LM25	4 DEG C		
[x] NG	LW27	4 DEG C		
[x] NAM	LN08	4 DEG C		
[x] DNT	LW23	4 DEG C		

SAMPLE BOTTLE ID NUMBERS

DC: 1264

DC: 1265

EA: 1266

NOTES

LOCATION SKETCH)

* THESE ARE DATACHEM METHODS. EA METHODS: VOC LM17, LM26
B/NA LM20

PP METALS (PRIORITY POLLUTANT): AG, AS, BE, CD, CR, CU, PB, HG, NI, SB, SE, TL, ZN.
JS12, B9, JD21, JD20, Y9.

TCLP METALS: CD, CR, HG, PB.
JS12, 40 CFR 261.24

DC: 2 bottles
EA: 1 bottle

N ↑

@OPS-91-02 (staked)

~10

RR

SIGNATURE: VM/NR

RECEIVED BY: Nancy E. Rotta

ABB ENVIRONMENTAL SERVICES, INC

FIELD DATA RECORD – SEDIMENT

FIELD SAMPLING NUMBER: 0910300

PROJECT: USATHAMA-BAAP

SITE ID: OPS-91-03

SITE TYPE: POND

JOB NUMBER: 6853-04

PROGRAM: C

LOCATION ACTIVITY START: ~~0815~~ 0715 (MR) END: ~~0930~~ 0925 (MR)

SAMPLING DATE: 10 3 91

FILE NAME: CSO

WEATHER: sunny, 50's breezy

SEDIMENT DATA

DEPTH OF SEDIMENT SAMPLE: 0-3 IN

TYPE OF SAMPLE COLLECTED: [x] DISCRETE [ ] COMPOSITE

TYPE OF SEDIMENT: [ ] CLAY [ ] SAND [x] ORGANIC [x] SILT [ ] GRAVEL [ ] OTHER

EQUIPMENT USED FOR COLLECTION: [ ] GRAVITY CORER [x] TULIP BULB PLANTER [x] S.S. HAND SPOON [x] ALUMINUM PAN [ ] PLASTIC SCOOP [ ] OTHER

DECONTAMINATION FLUIDS USED: [x] POTABLE WATER [ ] POTABLE WATER WITH HIGH PRESSURE [ ] OTHER

SAMPLE OBSERVATIONS: [ ] ODOR [ ] COLORED [ ]

AMBIENT AIR: — PPM

SAMPLE LOCATION: — PPM

pH: — UNITS

ANALYTICAL PARAMETERS

	METHOD NUMBER	PRESERVATION METHOD	VOLUME REQUIRED	SAMPLE COLLECTED
[ ] PP METALS (SPECIFIED BELOW)		4 DEG C		
[x] AL	JS12	4 DEG C		DC [x]
[x] CA		4 DEG C		
[x] NA		4 DEG C		
[x] CD		4 DEG C		
[x] CR		4 DEG C		
[x] HG	Y9	4 DEG C		
[x] PB	JD21	4 DEG C		
[x] TCLP METALS (SPECIFIED BELOW)		4 DEG C		
[x] NIT	KF17	4 DEG C		DC [x]
[x] SO4	KT07	4 DEG C		
[x] NH3N2	USEPA 350.2	4 DEG C		
[x] TOC	USEPA CE-81-1	4 DEG C		
[x] pH	SW846 METHOD 9045	4 DEG C		EA [x]
* [ ] VOC	LM23	4 DEG C		
* [ ] BN/A	LM25	4 DEG C		
[ ] NG	LW27	4 DEG C		
[ ] NAM	LN08	4 DEG C		
[ ] DNT	LW23	4 DEG C		

SAMPLE BOTTLE ID NUMBERS: 1273, 1274, 1275

NOTES (LOCATION SKETCH)

* THESE ARE DATACHEM METHODS. EA METHODS: VOC LM17, LM26; B/NA LM20

PP METALS (PRIORITY POLLUTANT): AG, AS, BE, CD, CR, CU, PB, HG, NI, SB, SE, TL, ZN. JS12, B9, JD21, JD20, Y9.

TCLP METALS: CD, CR, HG, PB. JS12, 40 CFR 261.24

DC: 2 bottles

EA: 1 bottle

RR

⊗ OPS-91-03

SIGNATURE: VM/RR

RECEIVED BY: Nancy E Rotta

[redacted] ENVIRONMENTAL SERVICES, INC

FIELD DATA RECORD – SEDIMENT

FIELD SAMPLING NUMBER: 09104006

PROJECT: USATHAMA-BAAP

SITE ID: OPS-91-04

SITE TYPE: POND

JOB NUMBER: 6853-04

PROGRAM: C

SAMPLING DATE: 10.3.91

FILE NAME: CSO

WEATHER: sunny, 50's breezy

LOCATION ACTIVITY: START: 0925 END: 0930

SEDIMENT DATA

DEPTH OF SEDIMENT SAMPLE: 0-6 IN

TYPE OF SAMPLE COLLECTED: ☑ DISCRETE ☐ COMPOSITE

TYPE OF SEDIMENT:
- ☐ CLAY
- ☐ SAND
- ☑ ORGANIC
- ☑ SILT
- ☐ GRAVEL
- ☐ OTHER

EQUIPMENT USED FOR COLLECTION:
- ☐ GRAVITY CORER
- ☑ TULIP BULB PLANTER
- ☐ S.S. HAND SPOON
- ☑ ALUMINUM PAN
- ☐ PLASTIC SCOOP
- ☐ OTHER

DECONTAMINATION FLUIDS USED:
- ☑ POTABLE WATER
- ☐ POTABLE WATER WITH HIGH PRESSURE
- ☐ OTHER

SAMPLE OBSERVATIONS: ☐ ODOR ☐ COLORED

AMBIENT AIR: — PPM

SAMPLE LOCATION: — PPM

pH: — UNITS

ANALYTICAL PARAMETERS

	METHOD NUMBER	PRESERVATION METHOD	VOLUME REQUIRED	SAMPLE COLLECTED	SAMPLE BOTTLE ID NUMBERS
☐ PP METALS (SPECIFIED BELOW)		4 DEG C			
☑ AL	JS12	4 DEG C			
☑ CA		4 DEG C		DC ☑	1282
☑ NA		4 DEG C			
☐ CD		4 DEG C			
☐ CR		4 DEG C			
☐ HG	Y9	4 DEG C			
☐ PB	JD21	4 DEG C			
☐ TCLP METALS (SPECIFIED BELOW)		4 DEG C			
☑ NIT	KF17	4 DEG C		DC ☑	1283
☑ SO4	KT07	4 DEG C			
☑ NH3N2	USEPA 350.2	4 DEG C			
☑ TOC	USEPA CE-81-1	4 DEG C		EA ☑	1284
☑ pH	SW846 METHOD 9045	4 DEG C			
☐ VOC	LM23	4 DEG C			
☐ BN/A	LM25	4 DEG C			
☐ NG	LW27	4 DEG C			
☐ NAM	LN08	4 DEG C			
☐ DNT	LW23	4 DEG C			

NOTES (LOCATION SKETCH)

* THESE ARE DATACHEM METHODS. EA METHODS: VOC LM17, LM26; B/NA LM20

PP METALS (PRIORITY POLLUTANT): AG, AS, BE, CD, CR, CU, PB, HG, NI, SB, SE, TL, ZN. JS12, B9, JD21, JD20, Y9.

TCLP METALS: CD, CR, HG, PB. JS12, 40 CFR 261.24

DC: 2 bottles

EA: 1 bottle

© OPS-91-04

JRR

SIGNATURE: VM/RR

RECEIVED BY: Nancy E. Roka

ABB ENVIRONMENTAL SERVICES, INC

PAGE 1 OF

FIELD DATA RECORD - SEDIMENT

FIELD SAMPLING NUMBER: P91109 03

PROJECT: USATHAMA-BAAP

SITE ID: PBS-91-109

SITE TYPE: BUGR

JOB NUMBER: 6853-04

PROGRAM: C

LOCATION ACTIVITY: START: 0820 END: 0830

SAMPLING DATE: 9.23.91

FILE NAME: CSO

WEATHER: sunny, 90's

SEDIMENT DATA

DEPTH OF SEDIMENT SAMPLE: 3-3.5'

TYPE OF SAMPLE COLLECTED: [x] DISCRETE [ ] COMPOSITE

TYPE OF SEDIMENT:
- [ ] CLAY
- [ ] SAND
- [x] ORGANIC
- [x] SILT
- [x] GRAVEL
- [ ] OTHER

EQUIPMENT USED FOR COLLECTION:
- [ ] GRAVITY CORER
- [x] TULIP BULB PLANTER
- [x] S.S. HAND SPOON
- [ ] ALUMINUM PAN
- [x] PLASTIC SCOOP
- [x] OTHER hand auger

DECONTAMINATION FLUIDS USED:
- [x] POTABLE WATER
- [ ] POTABLE WATER WITH HIGH PRESSURE
- [ ] OTHER

SAMPLE OBSERVATIONS: [ ] ODOR [ ] COLORED

AMBIENT AIR: 0.0 PPM

SAMPLE LOCATION: 0.0 PPM

pH: — UNITS

ANALYTICAL PARAMETERS

		METHOD NUMBER	PRESERVATION METHOD	VOLUME REQUIRED	SAMPLE COLLECTED
[x]	PP METALS (SPECIFIED BELOW)		4 DEG C		
[ ]	AL	JS12	4 DEG C		
[ ]	CA		4 DEG C		
[ ]	NA		4 DEG C		
[ ]	CD		4 DEG C		
[ ]	CR		4 DEG C		
[ ]	HG	Y9	4 DEG C		
[ ]	PB	JD21	4 DEG C		
[x]	TCLP METALS (SPECIFIED BELOW)		4 DEG C		DC
[ ]	NIT	KF17	4 DEG C		
[ ]	SO4	KT07	4 DEG C		
[ ]	NH3N2	USEPA 350.2	4 DEG C		
[ ]	TOC	USEPA CE-81-1	4 DEG C		
[ ]	pH	SW846 METHOD 9045	4 DEG C		
* [x]	VOC	LM23	4 DEG C		
* [ ]	BN/A	LM25	4 DEG C		
[ ]	NG	LW27	4 DEG C		
[ ]	NAM	LN08	4 DEG C		
[x]	DNT	LW23	4 DEG C		

SAMPLE BOTTLE ID NUMBERS: 61, 64, 67, 68, 70

NOTES (LOCATION SKETCH)

* THESE ARE DATACHEM METHODS. EA METHODS: VOC LM17, LM26
B/NA LM20

PP METALS (PRIORITY POLLUTANT): AG, AS, BE, CD, CR, CU, PB, HG, NI, SB, SE, TL, ZN.
JS12, B9, JD21, JD20, Y9.

TCLP METALS: CD, CR, HG, PB.
JS12, 40 CFR 261.24

DC: 4 bottles

• - 4TH + final attempt to get through rocks + debris.

SIGNATURE: VM/NR

RECEIVED BY: /Nancy E. Riofa

Appendix D.3

Monitoring Well Construction Diagrams

ABB Environmental Services, Inc. — **MONITORING WELL CONSTRUCTION FORM**

Facility/Project Name: BADGER AAP	Grid Location: ____ ft. ☐ N. ☐ S. / ____ ft. ☐ E. ☐ W.	Well Name: PBP-91-02D
Facility License, Permit or Monitoring Number:		Wis. Unique Well Number: ____ DNR Well Number: ____
Type of Well: Water Table Observation Well ☐ 11 / Piezometer ☒ 12	Section Location: NE 1/4 of NW 1/4 of Section 23	Date Well Installed: 10/14/91
Distance Well Is From Waste/Source Boundary: NA ft.	T 10 N, R 6 ☒ E ☐ W	Well Installed By: (Person's Name and Firm): G RODRIGUEZ
Is Well A Point of Enforcement Std. Application? ☐ Yes ☒ No	Location of Well Relative to Waste/Source: ☐ Upgradient ☐ Sidegradient ☒ Downgradient ☐ Not Known	LAYNE

A. Protective pipe, top elevation 850.10 ft. MSL
B. Well casing, top elevation 850.09 ft. MSL
C. Land surface elevation 847.6 ft. MSL
D. Surface seal, bottom ____ ft. MSL or ____ ft.

12. USCS classification of soil near screen:
☐ GP ☐ GM ☐ GC ☒ GW ☐ SW ☐ SP
☐ SM ☐ SC ☐ ML ☐ MH ☐ CL ☐ CH
☐ Bedrock

13. Sieve analysis attached? ☐ Yes ☒ No

14. Drilling method used: Rotary ☐ 50 / Hollow Stem Auger ☐ 41 / DUAL WALL / Other ☐ ____

15. Drilling fluid used: Water ☒ 02 / Air ☒ 01 / Drilling Mud ☐ 03 / None ☐ 99

16. Drilling additives used? ☐ Yes ☒ No
Describe ____

17. Source of water (attach analysis):
PRODUCTION WELL #2

E. Bentonite seal, top 627.6 ft. MSL or 220.0 ft.
F. Fine sand, top ____ ft. MSL or ____ ft.
G. Filter pack, top 617.6 ft. MSL or 230.0 ft.
H. Well screen, top 605.8 ft. MSL or 241.8 ft.
I. Well screen, bottom 595.8 ft. MSL or 251.8 ft.
J. Filter pack, bottom 594.1 ft. MSL or 253.5 ft.
K. Borehole, bottom 594.1 ft. MSL or 253.5 ft.
L. Borehole, diameter 12.0 in.
M. O.D. well casing 01.85 in.
N. I.D. well casing 01.10 in.

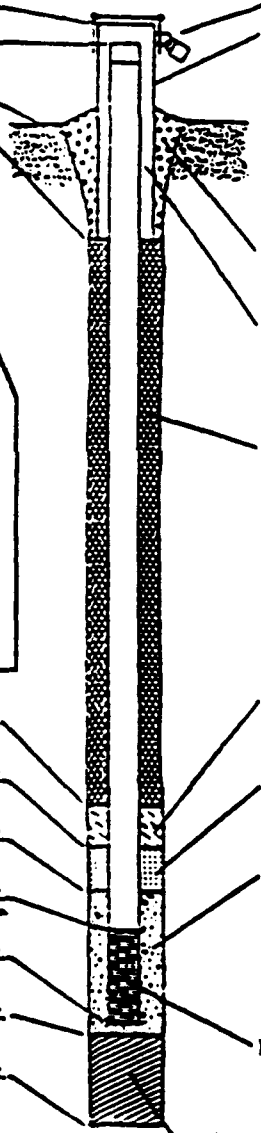

1. Cap and lock? ☒ Yes ☐ No
2. Protective cover pipe:
a. Inside diameter: 06.0 in.
b. Length: 06.0 ft.
c. Material: Steel ☒ 02 / Other ☐ ____
d. Additional protection? ☒ Yes ☐ No
If yes, describe: BUCKING POSTS
3. Surface seal: Bentonite ☐ 30 / Concrete ☒ 01 / Other ☐ ____
4. Material between well casing and protective pipe: Bentonite ☐ 30 / Annular space seal ☒ / Other ☐ ____
5. Annular space seal: Granular Bentonite ☐ 33 / ____ Lbs/gal mud weight ... Bentonite-sand slurry ☐ 35 / ____ Lbs/gal mud weight ..... Bentonite slurry ☐ 34 / 10 % Bentonite ..... Bentonite-cement grout ☒ 50 / 150 Ft³ volume added for any of the above
How installed: Tremie ☐ 01 / Tremie pumped ☐ 02 / Gravity ☒ 03
6. Bentonite seal: Bentonite granules ☐ 32 / ☐ 1/4 in. ☐ 3/8 in. ☐ 1/2 in. Bentonite pellets ☐ 33 / BENTONITE POWDER Other ☒ ____
7. Fine sand material: Manufacturer, product name and mesh size: ____ / Volume added ____ ft³
8. Filter pack material: Manufacturer, product name and mesh size: COLORADO SILICA SAND #4 / Volume added 16 ft³
9. Well casing: Flush threaded PVC schedule 40 ☒ 23 / Flush threaded PVC schedule 80 ☐ 24 / Other ☐ ____
10. Screen material: PVC SCH 40
Screen type: Factory cut ☒ 11 / Continuous slot ☐ 01 / Other ☐ ____
Manufacturer: JOHNSON
Slot size: 0.010 in.
Slotted length: 10.0 ft.
11. Backfill material (below filter pack): None ☒ / Other ☐ ____

I hereby certify that the information on this form is true and correct to the best of my knowledge.

Signature: Ted R Rustad | Firm: ABB-ES

ABB Environmental Services, Inc.

MONITORING WELL CONSTRUCTION

(10-23-91)

Facility/Project Name	Grid Location	Well Name
BADGER AAP	ft. ☐ N. ☐ S.	PBN-91-06C
Facility License, Permit or Monitoring Number	ft. ☐ E. ☐ W.	Wis. Unique Well Number / DNR Well Num
Type of Well: Water Table Observation Well ☐ / Piezometer ☑	Section Location: NE 1/4 of NW 1/4 of Section 03	Date Well Installed: 10/22/91 (m m / d d / y y)
Distance Well Is From Waste/Source Boundary: NA ft.	T 10 N. R 12 ☑ E ☐ W	Well Installed By: (Person's Name and Firm) GABBY RODRIGUEZ
Is Well A Point of Enforcement Std. Application? ☐ Yes ☑ No	Location of Well relative to Waste/Source: ☐ Upgradient ☐ Sidegradient ☑ Downgradient ☐ Not Known	LAYNE

A. Protective pipe, top elevation 848.43 ft. MSL

B. Well casing, top elevation 848.29 ft. MSL

C. Land surface elevation 846.1 ft. MSL

D. Surface seal, bottom ____ ft. MSL or ____ ft.

12. USCS classification of soil near screen:
☐ GP ☐ GM ☐ GC ☐ GW ☑ SW ☐ SP
☐ SM ☐ SC ☐ ML ☐ MH ☐ CL ☐ CH
☐ Bedrock

13. Sieve analysis attached? ☐ Yes ☑ No

14. Drilling method used: Rotary ☐ 50; Hollow Stem Auger ☐ 41; Other ☑ SOIL WALL

15. Drilling fluid used: Water ☑ 02; Air ☑ 01; Drilling Mud ☐ 03; None ☐ 99

16. Drilling additives used? ☐ Yes ☑ No

Describe ____

17. Source of water (attach analysis):
PRODUCTION WELL #2

E. Bentonite seal, top 688.1 ft. MSL or 1580 ft.

F. Fine sand, top ____ ft. MSL or ____ ft.

G. Filter pack, top 668.1 ft. MSL or 1780 ft.

H. Well screen, top 655.3 ft. MSL or 790.8 ft.

I. Well screen, bottom 645.3 ft. MSL or 200.8 ft.

J. Filter pack, bottom 645.1 ft. MSL or 201.6 ft.

K. Borehole, bottom 626.1 ft. MSL or 220.0 ft.

L. Borehole, diameter 09.0 in.

M. O.D. well casing 04.25 in.

N. I.D. well casing 03.75 in.

1. Cap and lock? ☑ Yes ☐ N

2. Protective cover pipe:
a. Inside diameter: 06.0 in.
b. Length: 06.0
c. Material: Steel ☑ 0; Other ☐
d. Additional protection? ☑ Yes ☐ N
If yes, describe: 4 BUCKING POSTS

3. Surface seal: Bentonite ☐ 3; Concrete ☑ 0; Other ☐

4. Material between well casing and protective pipe: Bentonite ☐ 30; Annular space seal ☑; Other ☐

5. Annular space seal: Granular Bentonite ☐ 3
____ Lbs/gal mud weight . . . Bentonite-sand slurry
____ Lbs/gal mud weight . . . . . Bentonite slurry ☐ 3
10 % Bentonite . . . . . Bentonite-cement grout ☑ 50
300 Ft^3 volume added for any of the above
How installed: Tremie ☐ 0; Tremie pumped ☐ 0; Gravity ☑ 03

6. Bentonite seal: Bentonite granules ☐ 3
☐ 1/4 in. ☐ 3/8 in. ☐ 1/2 in. Bentonite pellets ☐ 3
BENTONITE POWDER Other ☑

7. Fine sand material: Manufacturer, product name and mesh size
NONE
Volume added ____ ft^3

8. Filter pack material: Manufacturer, product name and mesh size
COLORADO SILICA SAND #4
Volume added 24 ft^3

9. Well casing: Flush threaded PVC schedule 40 ☐ 2; Flush threaded PVC schedule 80 ☑ 2; Other ☐

10. Screen material: SCH 80 PVC
Screen type: Factory cut ☑ 11; Continuous slot ☐ 0; Other ☐
Manufacturer MONOFLEX
Slot size: 0.010 in
Slotted length: 10.0 ft

11. Backfill material (below filter pack): None ☐
SURROUNDING SEDIMENT Other ☐

I hereby certify that the information on this form is true and correct to the best of my knowledge.

Signature: Karl K. Kuston | Firm: ABB-ES

ABB Environmental Services, Inc.

MONITORING WELL CONSTRUCTION FORM

Facility/Project Name: BADGER AAP	Grid Location: ____ ft. ☐ N. ☐ S. ____ ft. ☐ E. ☐ W.	Well Name: PBN-91-06D
Facility License, Permit or Monitoring Number:		Wis. Unique Well Number: DNR Well Number:
Type of Well: Water Table Observation Well ☐ 11 Piezometer ☒ 12	Section Location: NE 1/4 of NW 1/4 of Section 23	Date Well Installed: 10/12/91 (m m / d d / y y)
Distance Well Is From Waste/Source Boundary: NA ft.	T 10 N. R 12 ☒ E ☐ W	Well Installed By: (Person's Name and Firm): G RODRIGUEZ
Is Well A Point of Enforcement Std. Application? ☐ Yes ☒ No	Location of Well Relative to Waste/Source: ☐ Upgradient ☐ Sidegradient ☒ Downgradient ☐ Not Known	LAYNE

A. Protective pipe, top elevation: 847.68 ft. MSL
B. Well casing, top elevation: 847.50 ft. MSL
C. Land surface elevation: 845.8 ft. MSL
D. Surface seal, bottom: ____ ft. MSL or ____ ft.

12. USCS classification of soil near screen:
☐ GP ☐ GM ☐ GC ☒ GW ☐ SW ☐ SP
☐ SM ☐ SC ☐ ML ☐ MH ☐ CL ☐ CH
☐ Bedrock

13. Sieve analysis attached? ☐ Yes ☒ No

14. Drilling method used: Rotary ☐ 50; Hollow Stem Auger ☐ 41; Other ☒ DUAL WALL

15. Drilling fluid used: Water ☒ 02; Air ☒ 01; Drilling Mud ☐ 03; None ☐ 99

16. Drilling additives used? ☐ Yes ☒ No
Describe ____

17. Source of water (attach analysis):
PRODUCTION WELL #2

E. Bentonite seal, top: 640.8 ft. MSL or 205.0 ft.
F. Fine sand, top: ____ ft. MSL or ____ ft.
G. Filter pack, top: 620.8 ft. MSL or 225.0 ft.
H. Well screen, top: 604.8 ft. MSL or 241.0 ft.
I. Well screen, bottom: 594.8 ft. MSL or 251.0 ft.
J. Filter pack, bottom: 594.8 ft. MSL or 251.2 ft.
K. Borehole, bottom: 594.8 ft. MSL or 251.0 ft.
L. Borehole, diameter: 09.0 in.
M. O.D. well casing: 04.5 in.
N. I.D. well casing: 03.75 in.

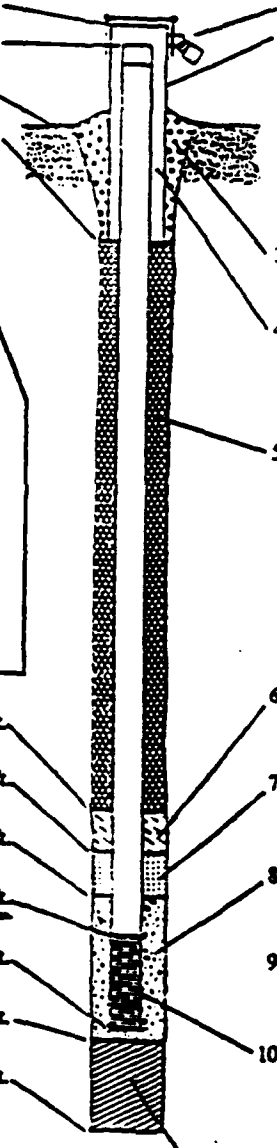

1. Cap and lock? ☒ Yes ☐ No
2. Protective cover pipe:
a. Inside diameter: 06.0 in.
b. Length: 06.0 ft.
c. Material: Steel ☒ 04; Other ☐ ____
d. Additional protection? ☒ Yes ☐ No
If yes, describe: 4 BUCKING POSTS
3. Surface seal: Bentonite ☐ 30; Concrete ☐ 01; Other ☐ ____
4. Material between well casing and protective pipe: Bentonite ☐ 30; Annular space seal ☒; Other ☐ ____
5. Annular space seal: Granular Bentonite ☐ 33; ____ Lbs/gal mud weight ... Bentonite-sand slurry ☐ 35; ____ Lbs/gal mud weight ..... Bentonite slurry ☐ 31; 20 % Bentonite ..... Bentonite-cement grout ☒ 50; ____ Ft^3 volume added for any of the above
How installed: Tremie ☐ 01; Tremie pumped ☐ 02; Gravity ☒ 03
6. Bentonite seal: Bentonite granules ☐ 32; ☐ 1/4 in. ☐ 3/8 in. ☐ 1/2 in. Bentonite pellets ☐ 32; BENTONITE POWDER Other ☐ ____
7. Fine sand material: Manufacturer, product name and mesh size ____
Volume added 20 BB ft^3
8. Filter pack material: Manufacturer, product name and mesh size: COLORADO SILICA SAND #4
Volume added 20 ft^3
9. Well casing: Flush threaded PVC schedule 40 ☐ 23; Flush threaded PVC schedule 30 ☒ 24; Other ☐ ____
10. Screen material: SCH 80 PVC
Screen type: Factory cut ☒ 11; Continuous slot ☐ 01; Other ☐ ____
Manufacturer: MONO FLEX
Slot size: 0.010 in.
Slotted length: 10.0 ft.
11. Backfill material (below filter pack): None ☒; Other ☐ ____

I hereby certify that the information on this form is true and correct to the best of my knowledge.

Signature: Rod Rodriguez | Firm: ABB-ES

ABB Environmental Services, Inc. MONITORING WELL CONSTRUCTI[illegible]

Facility/Project Name: BADGER AAP	Grid Location: ____ ft. ☐ N. ☐ S. ____ ft. ☐ E. ☐ W.	Well Name: PBN-91-12C
Facility License, Permit or Monitoring Number: _____		Wis. Unique Well Number: _____ DNR Well Nu[illegible]
Type of Well: Water Table Observation Well ☐ 11 Piezometer ☒ 12	Section Location: NE 1/4 of NW 1/4 of Section 23 T 10 N, R 6 ☒ E ☐ W	Date Well Installed: 10/24/91 (m m / d d / y y)
Distance Well Is From Waste/Source Boundary: NA ft.		Well Installed By: (Person's Name and Firm) LAYNE ENVIRONMENTAL G RODRIGUEZ
Is Well A Point of Enforcement Std. Application? ☐ Yes ☒ No	Location of Well Relative to Waste/Source: ☐ Upgradient ☐ Sidegradient ☒ Downgradient ☐ Not Known	

A. Protective pipe, top elevation 854.49 ft. MSL

B. Well casing, top elevation 854.42 ft. MSL

C. Land surface elevation 852.2 ft. MSL

D. Surface seal, bottom ____ ft. MSL or ____ ft.

12. USCS classification of soil near screen:
☐ GP ☐ GM ☐ GC ☐ GW ☒ SW ☐ SP
☐ SM ☐ SC ☐ ML ☐ MH ☐ CL ☐ CH
☐ Bedrock

13. Sieve analysis attached? ☐ Yes ☒ No

14. Drilling method used: Rotary ☐ 50 Hollow Stem Auger ☐ 41 Other ☒ DUAL WALL

15. Drilling fluid used: Water ☒ 02 Air ☒ 01 Drilling Mud ☐ 03 None ☐ 99

16. Drilling additives used? ☐ Yes ☒ No

Describe _____

17. Source of water (attach analysis): PRODUCTION WELL # 2

E. Bentonite seal, top 722.2 ft. MSL or 130.0 ft.

F. Fine sand, top ____ ft. MSL or ____ ft.

G. Filter pack, top 702.2 ft. MSL or 150.0 ft.

H. Well screen, top 678.8 ft. MSL or 173.4 ft.

I. Well screen, bottom 668.8 ft. MSL or 183.4 ft.

J. Filter pack, bottom 668.8 ft. MSL or 183.4 ft.

K. Borehole, bottom 652.2 ft. MSL or 200.0 ft.

L. Borehole, diameter 09.0 in.

M. O.D. well casing 04.25 in.

N. I.D. well casing 03.75 in.

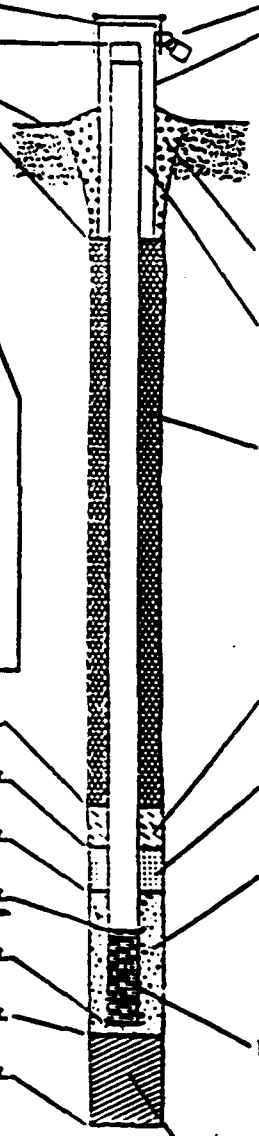

1. Cap and lock? ☒ Yes ☐ No

2. Protective cover pipe:
a. Inside diameter: 06.0
b. Length: 06.0
c. Material: Steel ☒ 0[illegible] Other ☐
d. Additional protection? ☒ Yes ☐ [illegible]
If yes, describe: 4 BUCKING POSTS GRAV. PAD

3. Surface seal: Bentonite ☐ Concrete ☒ Other ☐

4. Material between well casing and protective pipe: Bentonite ☐ Annular space seal ☒ Other ☐

5. Annular space seal: Granular Bentonite ☐
____ Lbs/gal mud weight . . . Bentonite-sand slu[illegible]
____ Lbs/gal mud weight . . . . . Bentonite slurry [illegible]
10 % Bentonite . . . . . Bentonite-cement grout ☒
250 Ft^3 volume added for any of the above
How installed: Tremie ☐ Tremie pumped ☐ 0[illegible] Gravity ☒

6. Bentonite seal: Bentonite granules ☐ ☐ 1/4 in. ☐ 3/8 in. ☐ 1/2 in. Bentonite pellets ☐ 3[illegible] BENTONITE POWDER Other ☒

7. Fine sand material: Manufacturer, product name and mesh s[illegible] NONE
Volume added ____ ft^3

8. Filter pack material: Manufacturer, product name and mesh CSSI SILICA SAND # 4
Volume added 16 ft^3

9. Well casing: Flush threaded PVC schedule 40 ☐ 2[illegible] Flush threaded PVC schedule 80 ☒ Other ☐

10. Screen material: SCH 80 PVC 4"
Screen type: Factory cut ☒ Continuous slot ☐ 0[illegible] Other ☐
Manufacturer MONOFLEX
Slot size: 0.010
Slotted length: 10.0

11. Backfill material (below filter pack): None ☐ SURROUNDING SEDIMENT Other [illegible]

I hereby certify that the information on this form is true and correct to the best of my knowledge.

Signature: Rod R. [illegible] Firm: ABB-ES

ABB Environmental Services, Inc.

MONITORING WELL CONSTRUCTION FORM

Facility/Project Name: BADGER AAP

Facility License, Permit or Monitoring Number:

Grid Location: ____ ft. ☐ N. ☐ S. ____ ft. ☐ E. ☐ W.

Well Name: PBN-91-12D

Wis. Unique Well Number: DNR Well Number:

Type of Well: Water Table Observation Well ☐ Piezometer ☑

Section Location: NE 1/4 of NW 1/4 of Section 23 T 10 N. R 6 ☑ E ☐ W

Date Well Installed: 10/16/91 (m m / d d / y y)

Distance Well is From Waste/Source Boundary: NA ft.

Well Installed By: (Person's Name and Firm) G RODRIGUEZ LAYNE

Is Well A Point of Enforcement Std. Application? ☐ Yes ☑ No

Location of Well Relative to Waste/Source: ☐ Upgradient ☐ Sidegradient ☑ Downgradient ☐ Not Known

A. Protective pipe, top elevation 853.48 ft. MSL

B. Well casing, top elevation 853.29 ft. MSL

C. Land surface elevation 851.2 ft. MSL

D. Surface seal, bottom ____ ft. MSL or ____ ft.

12. USCS classification of soil near screen:
☐ GP ☐ GM ☐ GC ☐ GW ☑ SW ☐ SP
☐ SM ☐ SC ☐ ML ☐ MH ☐ CL ☐ CH
☐ Bedrock

13. Sieve analysis attached? ☐ Yes ☑ No

14. Drilling method used: Rotary ☐ 50 Hollow Stem Auger ☐ 41 DUAL WALL Other ☑

15. Drilling fluid used: Water ☑ 02 Air ☑ 01 Drilling Mud ☐ 03 None ☐ 99

16. Drilling additives used? ☐ Yes ☑ No

Describe ____

17. Source of water (attach analysis): PRODUCTION WELL #2

E. Bentonite seal, top 674.2 ft. MSL or 177.0 ft.

F. Fine sand, top ____ ft. MSL or ____ ft.

G. Filter pack, top 654.2 ft. MSL or 197.0 ft.

H. Well screen, top 630.2 ft. MSL or 221.0 ft.

I. Well screen, bottom 620.2 ft. MSL or 231.0 ft.

J. Filter pack, bottom 620.2 ft. MSL or 231.0 ft.

K. Borehole, bottom 620.2 ft. MSL or 231.0 ft.

L. Borehole, diameter 9.0 in.

M. O.D. well casing 4.25 in.

N. I.D. well casing 3.75 in.

1. Cap and lock? ☑ Yes ☐ No

2. Protective cover pipe:
a. Inside diameter: 6.0 in.
b. Length: 6.0 ft.
c. Material: Steel ☑ 04 Other ☐ ____
d. Additional protection? ☑ Yes ☐ No
If yes, describe: 4 BUCKING POSTS

3. Surface seal: Bentonite ☐ 30 Concrete ☐ 01 Other ☐ ____

4. Material between well casing and protective pipe: Bentonite ☐ 30 Annular space seal ☑ Other ☐ ____

5. Annular space seal: Granular Bentonite ☐ 33
____ Lbs/gal mud weight ... Bentonite-sand slurry ☐ 35
____ Lbs/gal mud weight ..... Bentonite slurry ☐ 31
10 % Bentonite .... Bentonite-cement grout ☑ 50
400 Ft³ volume added for any of the above
How installed: Tremie ☐ 01 Tremie pumped ☐ 02 Gravity ☑ 03

6. Bentonite seal: Bentonite granules ☐ 33
☐ 1/4 in. ☐ 3/8 in. ☐ 1/2 in. Bentonite pellets ☐ 32
BENTONITE POWDER Other ☑ ____

7. Fine sand material: Manufacturer, product name and mesh size
____
Volume added ____ ft³

8. Filter pack material: Manufacturer, product name and mesh size
COLORADO SILICA SAND #4
Volume added 26 ft³

9. Well casing: Flush threaded PVC schedule 40 ☐ 23 Flush threaded PVC schedule 80 ☑ 24 Other ☐ ____

10. Screen material: PVC SCH 80
Screen type: Factory cut ☑ 11 Continuous slot ☐ 01 Other ☐ ____
Manufacturer MONOFLEX
Slot size: 0.010 in.
Slotted length: 10.0 ft.

11. Backfill material (below filter pack): None ☑ Other ☐ ____

I hereby certify that the information on this form is true and correct to the best of my knowledge.

Signature: Rod R. Rustad Firm: ABB-ES

State of Wisconsin
Department of Natural Resources

MONITORING WELL CONSTRUCTION
Form 4400-113A 8-89

Facility/Project Name: BADGER ARMY AMMUNITIONS PLANT	Grid Location: 4802308.1 M ft. ☒ N. ☐ S. / 27705.4 M ft. ☒ E. ☐ W.	Well Name: PBW89013
Facility License, Permit or Monitoring Number: _____		Wis. Unique Well Number: _____ DNR Well Numb: _____
Type of Well: Water Table Observation Well ☐ 11; Piezometer ☒ 12	Section Location: _____ 1/4 of _____ 1/4 of Section _____, T _____ N, R _____ ☐ E ☐ W	Date Well Installed: 01/22/89 (m m d d y y)
Distance Well Is From Waste/Source Boundary: NA ft.	Location of Well Relative to Waste/Source: ☐ Upgradient ☐ Sidegradient ☐ Downgradient ☐ Not Known	Well Installed By: (Person's Name and Firm): J SNOWDEN / E.C. JORDAN Co.
Is Well A Point of Enforcement Std. Application? ☐ Yes ☒ No		

A. Protective pipe, top elevation 873.33 ft. MSL
B. Well casing, top elevation 872.33 ft. MSL
C. Land surface elevation 870.0 ft. MSL
D. Surface seal, bottom _____ ft. MSL or _____ ft.

12. USCS classification of soil near screen:
☐ GP ☐ GM ☐ GC ☒ GW ☐ SW ☐ SP
☐ SM ☐ SC ☐ ML ☐ MH ☐ CL ☐ CH
☐ Bedrock

13. Sieve analysis attached? ☐ Yes ☒ No

14. Drilling method used: Rotary ☐ 50; Hollow Stem Auger ☐ 41; Other ☒ DUAL WALL

15. Drilling fluid used: Water ☐ 02; Air ☒ 01; Drilling Mud ☐ 03; None ☐ 99

16. Drilling additives used? ☐ Yes ☒ No
Describe NA

17. Source of water (attach analysis):
PW #2

E. Bentonite seal, top 327.0 ft. MSL or 543.0 ft.
F. Fine sand, top NA ft. MSL or NA ft.
G. Filter pack, top 331.6 ft. MSL or 548.4 ft.
H. Well screen, top 331.1 ft. MSL or 548.9 ft.
I. Well screen, bottom 321.1 ft. MSL or 558.9 ft.
J. Filter pack, bottom 321.1 ft. MSL or 558.9 ft.
K. Borehole, bottom 321.1 ft. MSL or 558.9 ft.
L. Borehole, diameter 9.5 in.
M. O.D. well casing 4.5 in.
N. I.D. well casing 4.0 in.

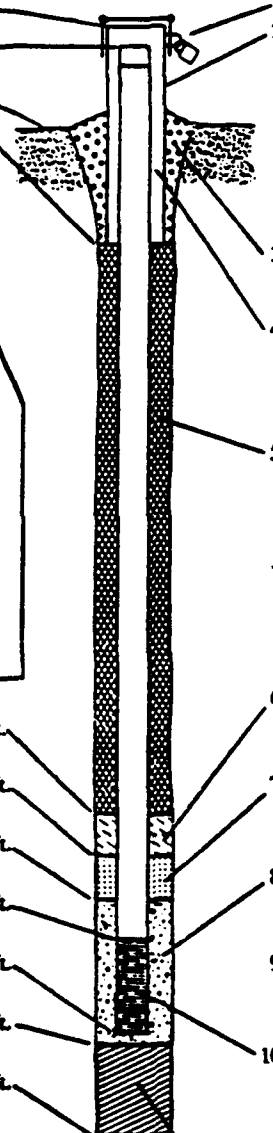

1. Cap and lock? ☒ Yes ☐ No
2. Protective cover pipe:
a. Inside diameter: 6.0 in.
b. Length: 3.0 ft.
c. Material: Steel ☒ 04; Other ☐ _____
d. Additional protection? ☐ Yes ☐ No
If yes, describe: 4 BUCKING SET AROUND THE well
3. Surface seal: Bentonite ☐ 30; Concrete ☐ 01; GRAVEL PAD / Grout Other ☒ _____
4. Material between well casing and protective pipe: Bentonite ☐ 30; Annular space seal ☐; GROUT Other ☒ _____
5. Annular space seal: Granular Bentonite ☐ 33
_____ Lbs/gal mud weight . . . Bentonite-sand slurry ☐
_____ Lbs/gal mud weight . . . . . Bentonite slurry ☐
5 % Bentonite . . . . . Bentonite-cement grout ☒ 50
±1400 gal* volume added for any of the above
How installed: Tremie ☐ 01; Tremie pumped ☒ 02; Gravity ☐ 08
6. Bentonite seal: Bentonite granules ☐ 33
☐ 1/4 in. ☐ 3/8 in. ☐ 1/2 in. Bentonite pellets ☐ 32
Bentonite Slurry Other ☒ _____
7. Fine sand material: Manufacturer, product name and mesh size
NA
Volume added NA ft³
8. Filter pack material: Manufacturer, product name and mesh size
Red Flint, Silica Filter Sand
Volume added ± 1.4 ft³
9. Well casing: Flush threaded PVC schedule 40 ☐ 23; Flush threaded PVC schedule 80 ☒ 24; Other ☐ _____
10. Screen material: Schedule 80 PVC
Screen type: Factory cut ☒ 11; Continuous slot ☐ 01; Other ☐ _____
Manufacturer Tiger
Slot size: 0.010 in.
Slotted length: 25.0 ft.
11. Backfill material (below filter pack): None ☒; Other ☐ _____

I hereby certify that the information on this form is true and correct to the best of my knowledge.

Signature: Paul R. Bol Firm: E. C. Jordan Co.

Please complete and return both sides of this form as required by chs. 144, 147 and 160, Wis. Stats., and ch. NR 141, Wis. Adm. Code. In accordance with ch. 144, Wis Stats., failure to file this form may result in a forfeiture of not less than $10, nor more than $5,000 for each day of violation. In accordance with ch. 147, Wis. Stats., failure to file this form may result in a forfeiture of not more than $10,000 for each day of violation.

State of Wisconsin
Department of Natural Resources

MONITORING WELL CONSTRUCTION
Form 4400-113A 8-89

Facility/Project Name: BADGER ARMY AMUNITIONS PLANT	Grid Location: 4,802,306.7 ft. M ☒ N. ☐ S. / 277,129.7 ft. M ☒ E. ☐ W.	Well Name: PBN-89-01C
Facility License, Permit or Monitoring Number: _____		Wis. Unique Well Number: _____ DNR Well Number: _____
Type of Well: Water Table Observation Well ☐ 11; Piezometer ☒ 12	Section Location: ____ 1/4 of ____ 1/4 of Section ____, T ____ N, R ____ ☐ E ☐ W	Date Well Installed: 04/17/89 (m m / d d / y y)
Distance Well Is From Waste/Source Boundary: NA ft.	Location of Well Relative to Waste/Source: ☐ Upgradient ☐ Sidegradient ☐ Downgradient ☐ Not Known	Well Installed By: (Person's Name and Firm) J. BUSS / EC JORDAN Co.
Is Well A Point of Enforcement Std. Application? ☐ Yes ☒ No		

A. Protective pipe, top elevation 878.30 ft. MSL

B. Well casing, top elevation 878.06 ft. MSL

C. Land surface elevation 875.5 ft. MSL

D. Surface seal, bottom _____ ft. MSL or ____ ft.

12. USCS classification of soil near screen:
☐ GP ☐ GM ☐ GC ☐ GW ☒ SW ☐ SP
☐ SM ☐ SC ☐ ML ☐ MH ☐ CL ☐ CH
☐ Bedrock

13. Sieve analysis attached? ☐ Yes ☒ No

14. Drilling method used: Rotary ☐ 50; Hollow Stem Auger ☐ 41; Other ☒ DUAL WALL

15. Drilling fluid used: Water ☐ 02; Air ☒ 01; Drilling Mud ☐ 03; None ☐ 99

16. Drilling additives used? ☐ Yes ☒ No

Describe _____

17. Source of water (attach analysis): PW # 2

E. Bentonite seal, top 687.5 ft. MSL or 170.0 ft.

F. Fine sand, top NA ft. MSL or NA ft.

G. Filter pack, top 677.5 ft. MSL or 180.0 ft.

H. Well screen, top 664.4 ft. MSL or 193.1 ft.

I. Well screen, bottom 659.4 ft. MSL or 198.1 ft.

J. Filter pack, bottom 659.4 ft. MSL or 198.1 ft.

K. Borehole, bottom 647.5 ft. MSL or 210.0 ft.

L. Borehole, diameter 9.5 in.

M. O.D. well casing 4.5 in.

N. I.D. well casing 4.0 in.

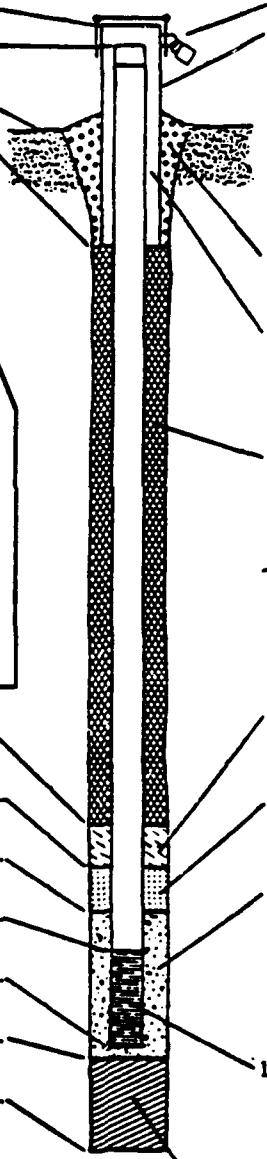

1. Cap and lock? ☒ Yes ☐ No

2. Protective cover pipe:
a. Inside diameter: 6.0 in.
b. Length: 3.0 ft.
c. Material: Steel ☒ 04; Other ☐ __
d. Additional protection? ☐ Yes ☐ No
If yes, describe: 4 BUCKING POST AROUND WELL

3. Surface seal: Bentonite ☐ 30; Concrete ☐ 01; Other ☒ __
GRAVEL PAD w/ CEMENT-BENTONITE COVER

4. Material between well casing and protective pipe: Bentonite ☐ 30; Annular space seal ☐; Other ☒ __
GROUT

5. Annular space seal: Granular Bentonite ☐ 33
____ Lbs/gal mud weight . . . Bentonite-sand slurry ☐ 35
____ Lbs/gal mud weight . . . . . Bentonite slurry ☐ 31
5 % Bentonite . . . . . Bentonite-cement grout ☒ 50
± 450 gal/ft³ volume added for any of the above
How installed: Tremie ☐ 01; Tremie pumped ☒ 02; Gravity ☐ 08

6. Bentonite seal: Bentonite granules ☐ 33
☐ 1/4 in. ☐ 3/8 in. ☐ 1/2 in. Bentonite pellets ☐ 32
Bentonite Slurry Other ☒ __

7. Fine sand material: Manufacturer, product name and mesh size NA
Volume added NA ft³

8. Filter pack material: Manufacturer, product name and mesh size Red Flint, Silica Filter Sand
Volume added ± 2.0 ft³

9. Well casing: Flush threaded PVC schedule 40 ☐ 23; Flush threaded PVC schedule 80 ☒ 24; Other ☐ __

10. Screen material: Schedule 80 PVC
Screen type: Factory cut ☒ 11; Continuous slot ☐ 01; Other ☐ __
Manufacturer Timco
Slot size: 0.010 in.
Slotted length: 05.0 ft.

11. Backfill material (below filter pack): None ☐; Other ☒ Native Cave

I hereby certify that the information on this form is true and correct to the best of my knowledge.

Signature [signature] Firm E.C. Jordan Co.

Please complete and return both sides of this form as required by chs. 144, 147 and 160, Wis. Stats., and ch. NR 141, Wis. Adm. Code. In accordance with ch. 144, Wis Stats., failure to file this form may result in a forfeiture of not less than $10, nor more than $5,000 for each day of violation. In accordance with ch. 147, Wis. Stats., failure to file this form may result in a forfeiture of not more than $10,000 for each day of violation.

State of Wisconsin
Department of Natural Resources

MONITORING WELL CONSTRUCTION
Form 4400-113A 8-89

Facility/Project Name: BADGER ARMY AMMUNITIONS PLANT	Grid Location: 4,802,307.4 m ft. ☒ N. ☐ S. / 277,112.9 m ft. ☒ E. ☐ W.	Well Name: PBN-89-01D
Facility License, Permit or Monitoring Number: _____		Wis. Unique Well Number: _____ DNR Well Nu: _____
Type of Well: Water Table Observation Well ☐ 11 / Piezometer ☒ 12	Section Location: _____ 1/4 of _____ 1/4 of Section _____, T _____ N, R _____ ☐ E ☐ W	Date Well Installed: 01/20/89 (m m / d d / y y)
Distance Well Is From Waste/Source Boundary: NA ft.	Location of Well Relative to Waste/Source: ☐ Upgradient ☐ Sidegradient ☐ Downgradient ☐ Not Known	Well Installed By: (Person's Name and Firm): J SNOWDEN/EC JORDAN Co
Is Well A Point of Enforcement Std. Application? ☐ Yes ☒ No		

A. Protective pipe, top elevation 874.43 ft. MSL
B. Well casing, top elevation 874.05 ft. MSL
C. Land surface elevation 871.5 ft. MSL
D. Surface seal, bottom _____ ft. MSL or _____ ft.

12. USCS classification of soil near screen:
☐ GP ☐ GM ☐ GC ☐ GW ☒ SW ☐ SP
☐ SM ☐ SC ☐ ML ☐ MH ☐ CL ☐ CH
☐ Bedrock

13. Sieve analysis attached? ☐ Yes ☐ No

14. Drilling method used: Rotary ☐ 50 / Hollow Stem Auger ☐ 41 / Other ☐ _____
DUAL WALL

15. Drilling fluid used: Water ☐ 02 / Air ☒ 01 / Drilling Mud ☐ 03 / None ☐ 99

16. Drilling additives used? ☐ Yes ☒ No
Describe _____

17. Source of water (attach analysis):
PW # 2

E. Bentonite seal, top 647.5 ft. MSL or 224.0 ft.
F. Fine sand, top NA ft. MSL or NA ft.
G. Filter pack, top 642.1 ft. MSL or 229.4 ft.
H. Well screen, top 638.3 ft. MSL or 233.2 ft.
I. Well screen, bottom 633.3 ft. MSL or 238.2 ft.
J. Filter pack, bottom 622.5 ft. MSL or 249.0 ft.
K. Borehole, bottom 622.5 ft. MSL or 249.0 ft.
L. Borehole, diameter 9.5 in.
M. O.D. well casing 4.5 in.
N. I.D. well casing 4.0 in.

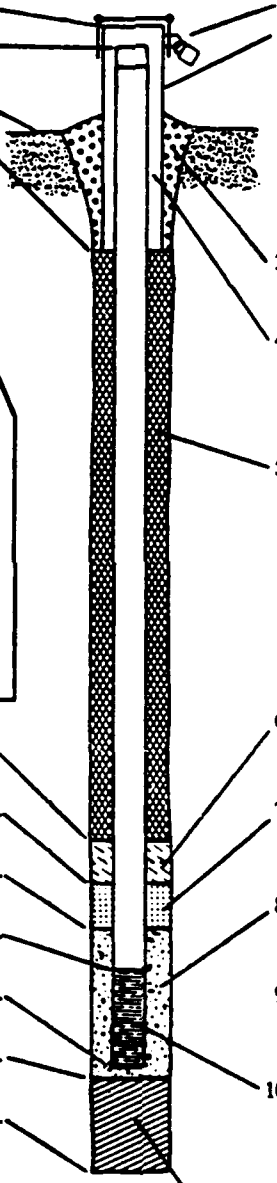

1. Cap and lock? ☒ Yes ☐ No
2. Protective cover pipe:
a. Inside diameter: 6.0 in.
b. Length: 7.0 f
c. Material: Steel ☒ 0 / Other ☐ _____
d. Additional protection? ☐ Yes ☐ No
If yes, describe: 4 BUCKING POST AROUND THE WELL
3. Surface seal: Bentonite ☐ 3 / Concrete ☐ 01 / GRAVEL PAD W/CEMENT-BENTONITE COLLAR Other ☐ _____
4. Material between well casing and protective pipe: Bentonite ☐ 30 / Annular space seal ☐ / GROUT Other ☒
5. Annular space seal: Granular Bentonite ☐ 3 / _____ Lbs/gal mud weight . . . Bentonite-sand slurry ☐ 3 / _____ Lbs/gal mud weight . . . . . Bentonite slurry ☐ / 5 % Bentonite . . . . Bentonite-cement grout ☐ / ± 600 gal/ft³ volume added for any of the above
How installed: Tremie ☐ 0 / Tremie pumped ☒ 0 / Gravity ☐ 08
6. Bentonite seal: Bentonite granules ☐ 3 / ☐ 1/4 in. ☐ 3/8 in. ☐ 1/2 in. Bentonite pellets ☐ 3 / Bentonite Slurry Other ☐ _____
7. Fine sand material: Manufacturer, product name and mesh size: NA
Volume added NA ft³
8. Filter pack material: Manufacturer, product name and mesh size: Red Flint, Silica Filter Sand
Volume added ≈ 22 ft³
9. Well casing: Flush threaded PVC schedule 40 ☐ 23 / Flush threaded PVC schedule 80 ☒ 2 / Other ☐ _____
10. Screen material: Schedule 40 PVC
Screen type: Factory cut ☒ 11 / Continuous slot ☐ 0 / Other ☐ _____
Manufacturer Timco
Slot size: 0.010 in
Slotted length: 25.0 ft
11. Backfill material (below filter pack): None ☒ / Other ☐ _____

I hereby certify that the information on this form is true and correct to the best of my knowledge.

Signature: Paul P Bol Firm: E.C. Jordan

Please complete and return both sides of this form as required by chs. 144, 147 and 160, Wis. Stats., and ch. NR 141, Wis. Adm. Code. In accordance with ch. 144, Wis Stats., failure to file this form may result in a forfeiture of not less than $10, nor more than $5,000 for each day of violation. In accordance with ch. 147, Wis. Stats., failure to file this form may result in a forfeiture of not more than $10,000 for each day of violation.

State of Wisconsin
Department of Natural Resources

MONITORING WELL CONSTRUCTION
Form 4400-113A 8-89

Facility/Project Name: BADGER ARMY AMMUNITION PLANT	Grid Location: 4,802,305.1 ft. ☒ N. ☐ S.; 277,312.0 ft. ☒ E. ☐ W.	Well Name: PZN-89-02B
Facility License, Permit or Monitoring Number:		Wis. Unique Well Number / DNR Well Number:
Type of Well: Water Table Observation Well ☐ 11; Piezometer ☒ 12	Section Location: ____ 1/4 of ____ 1/4 of Section ____, T ____ N, R ____ ☐ E ☐ W	Date Well Installed: 03/21/89 (m m / d d / y y)
Distance Well Is From Waste/Source Boundary: NA ft.	Location of Well Relative to Waste/Source: ☐ Upgradient ☐ Sidegradient ☐ Downgradient ☐ Not Known	Well Installed By: (Person's Name and Firm): F. BRADSON / E.C. JORDAN CO
Is Well A Point of Enforcement Std. Application? ☐ Yes ☒ No		

A. Protective pipe, top elevation 900.31 ft. MSL
B. Well casing, top elevation 900.25 ft. MSL
C. Land surface elevation 897.6 ft. MSL
D. Surface seal, bottom ____ ft. MSL or ____ ft.

12. USCS classification of soil near screen:
☐ GP ☐ GM ☐ GC ☐ GW ☐ SW ☒ SP
☐ SM ☐ SC ☐ ML ☐ MH ☐ CL ☐ CH
☐ Bedrock

13. Sieve analysis attached? ☐ Yes ☒ No

14. Drilling method used: Rotary ☐ 50; Hollow Stem Auger ☐ 41; DUAL WALL; Other ☐

15. Drilling fluid used: Water ☐ 02; Air ☒ 01; Drilling Mud ☐ 03; None ☐ 99

16. Drilling additives used? ☐ Yes ☒ No
Describe ____

17. Source of water (attach analysis):
PW #2

E. Bentonite seal, top 754.6 ft. MSL or 143 ft.
F. Fine sand, top NA ft. MSL or NA ft.
G. Filter pack, top 749.6 ft. MSL or 148 ft.
H. Well screen, top 742.6 ft. MSL or 155 ft.
I. Well screen, bottom 737.6 ft. MSL or 160 ft.
J. Filter pack, bottom 737.6 ft. MSL or 160 ft.
K. Borehole, bottom 717.6 ft. MSL or 180 ft.
L. Borehole, diameter 9.5 in.
M. O.D. well casing 4.5 in.
N. I.D. well casing 4.0 in.

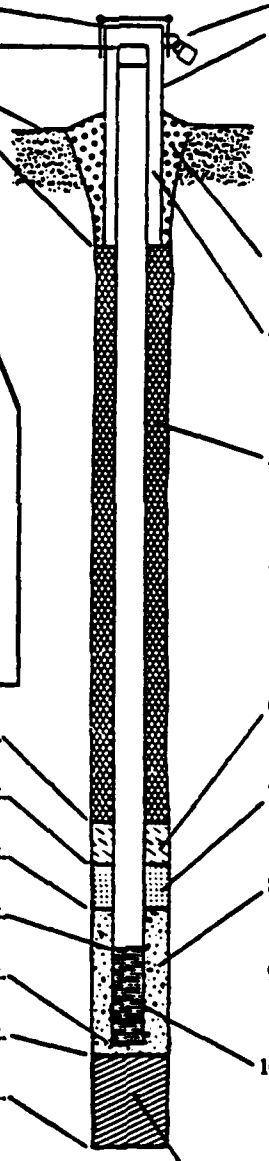

1. Cap and lock? ☒ Yes ☐ No
2. Protective cover pipe:
a. Inside diameter: 6.0 in.
b. Length: 7.0 ft.
c. Material: Steel ☒ 04; Other ☐ ____
d. Additional protection? ☒ Yes ☐ No
If yes, describe: 4 BUCKLING POST SURROUNDING THE WELL
3. Surface seal: Bentonite ☐ 30; Concrete ☐ 01; GRAVEL W/ CEMENT-BENTONITE COLAR Other ☒
4. Material between well casing and protective pipe: Bentonite ☐ 30; Annular space seal ☐; GROUT Other ☒
5. Annular space seal: Granular Bentonite ☐ 33; ____ Lbs/gal mud weight ... Bentonite-sand slurry ☐ 35; ____ Lbs/gal mud weight ..... Bentonite slurry ☐ 31; 5 % Bentonite .... Bentonite-cement grout ☒ 50; 400 gal/ft volume added for any of the above
How installed: Tremie ☐ 01; Tremie pumped ☒ 02; Gravity ☐ 08
6. Bentonite seal: Bentonite granules ☐ 33; ☐1/4 in. ☐3/8 in. ☐1/2 in. Bentonite pellets ☐ 32; Bentonite Slurry Other ☒
7. Fine sand material: Manufacturer, product name and mesh size: N/A
Volume added N/A ft³
8. Filter pack material: Manufacturer, product name and mesh size: Red Flint, Silica Filter Sand
Volume added ≈ 1.3 ft³
9. Well casing: Flush threaded PVC schedule 40 ☐ 23; Flush threaded PVC schedule 80 ☒ 24; Other ☐ ____
10. Screen material: Schedule 80 PVC
Screen type: Factory cut ☒ 11; Continuous slot ☐ 01; Other ☐ ____
Manufacturer Timco
Slot size: 0.010 in.
Slotted length: 05.0 ft.
11. Backfill material (below filter pack): None ☐; Drill Cuttings Other ☒

I hereby certify that the information on this form is true and correct to the best of my knowledge.

Signature: [signature] Firm: E. C. Jordan Co.

Please complete and return both sides of this form as required by chs. 144, 147 and 160, Wis. Stats., and ch. NR 141, Wis. Adm. Code. In accordance with ch. 144, Wis Stats., failure to file this form may result in a forfeiture of not less than $10, nor more than $5,000 for each day of violation. In accordance with ch. 147, Wis. Stats., failure to file this form may result in a forfeiture of not more than $10,000 for each day of violation.

State of Wisconsin
Department of Natural Resources

MONITORING WELL CONSTRUCTION
Form 4400-113A 8-8[illegible]

Facility/Project Name: BADGER ARMY AMMUNITION PLANT	Grid Location: 4,802,307.0 m ft. N. ☐ S. / 277,290.9 m ft. E. ☐ W.	Well Name: PBN-89-02C
Facility License, Permit or Monitoring Number: _____		Wis. Unique Well Number: _____ DNR Well Number: _____
Type of Well: Water Table Observation Well ☐ 11; Piezometer ☒ 12	Section Location: _____ 1/4 of _____ 1/4 of Section _____, _____ N, R _____ ☐ E ☐ W	Date Well Installed: 03/19/89 (m m / d d / y y)
Distance Well Is From Waste/Source Boundary: NA ft.	Location of Well Relative to Waste/Source: ☐ Upgradient ☐ Sidegradient ☐ Downgradient ☐ Not Known	Well Installed By: (Person's Name and Firm) J BUSS / E.C. JORDAN CO
Is Well A Point of Enforcement Std. Applicaton? ☐ Yes ☒ No		

A. Protective pipe, top elevation 897.18 ft. MSL
B. Well casing, top elevation 897.04 ft. MSL
C. Land surface elevation 894.5 ft. MSL
D. Surface seal, bottom _____ ft. MSL or _____ ft.

12. USCS classification of soil near screen:
☐ GP ☐ GM ☐ GC ☐ GW ☐ SW ☒ SP
☐ SM ☐ SC ☐ ML ☐ MH ☐ CL ☐ CH
☐ Bedrock

13. Sieve analysis attached? ☐ Yes ☒ No

14. Drilling method used: Rotary ☐ 50; Hollow Stem Auger ☐ 41; Other ☒ [illegible]
HAMMER RIG

15. Drilling fluid used: Water ☐ 02; Air ☒ 01; Drilling Mud ☐ 03; None ☐ 99

16. Drilling additives used? ☐ Yes ☒ No
Describe _____

17. Source of water (attach analysis):
PW #2

E. Bentonite seal, top 719.5 ft. MSL or 175.0 ft.
F. Fine sand, top NA ft. MSL or NA ft.
G. Filter pack, top 712.5 ft. MSL or 182.0 ft.
H. Well screen, top 706.4 ft. MSL or 188.1 ft.
I. Well screen, bottom 701.2 ft. MSL or 193.3 ft.
I. Filter pack, bottom 701.2 ft. MSL or 193.3 ft.
K. Borehole, bottom 684.5 ft. MSL or 210.0 ft.
L. Borehole, diameter 9.5 in.
M. O.D. well casing 4.5 in.
N. I.D. well casing 4.0 in.

1. Cap and lock? ☒ Yes ☐ No
2. Protective cover pipe:
a. Inside diameter: 6.0 in.
b. Length: 2.0 ft.
c. Material: Steel ☒ 04; Other ☐ __
d. Additional protection? ☐ Yes ☒ No
If yes, describe: 4 LOCKING POSTS SURROUNDING PIPE
3. Surface seal: Bentonite ☐ 30; Concrete ☐ 01; Other ☒ __
GRAVEL PAD W/ CEMENT - BENTONITE SEAL COVER
4. Material between well casing and protective pipe: Bentonite ☐ 30; Annular space seal ☐; Other ☒ __
GROUT
5. Annular space seal: Granular Bentonite ☐ 3; _____ Lbs/gal mud weight . . . Bentonite-sand slurry ☐ 2; _____ Lbs/gal mud weight . . . . . Bentonite slurry ☐ 3; 5 % Bentonite . . . . Bentonite-cement grout ☐ 50; ±1000 gals volume added for any of the above
How installed: Tremie ☐ 0; Tremie pumped ☒ 02; Gravity ☐ 08
6. Bentonite seal: Bentonite granules ☐ 33; ☐1/4 in. ☐3/8 in. ☐1/2 in. Bentonite pellets ☐ 32; Other ☒ __
Bentonite Slurry
7. Fine sand material: Manufacturer, product name and mesh size
NA
Volume added NA ft³
8. Filter pack material: Manufacturer, product name and mesh size
Red Flint, Silica Filter Sand
Volume added ≈ 1.2 ft³
9. Well casing: Flush threaded PVC schedule 40 ☐ 23; Flush threaded PVC schedule 80 ☒ 24; Other ☐ __
10. Screen material: Schedule 80 PVC
Screen type: Factory cut ☒ 11; Continuous slot ☐ 01; Other ☐ __
Manufacturer Timco
Slot size: 0.01 in
Slotted length: 05.0 ft.
11. Backfill material (below filter pack): None ☐; Other ☐
Native Caved

I hereby certify that the information on this form is true and correct to the best of my knowledge.

Signature [signature] Firm E.C. Jordan Co.

Please complete and return both sides of this form as required by chs. 144, 147 and 160, Wis. Stats., and ch. NR 141, Wis. Adm. Code. In accordance with ch. 144, Wis Stats., failure to file this form may result in a forfeiture of not less than $10, nor more than $5,000 for each day of violation. In accordance with ch. 147, Wis. Stats., failure to file this form may result in a forfeiture of not more than $10,000 for each day of violation.

State of Wisconsin
Department of Natural Resources

MONITORING WELL CONSTRUCTION
Form 4400-113A 8-89

Facility/Project Name: BADGER ARMY AMUNITION PLANT	Grid Location: 4802334.4 ft. ☒ N. ☐ S. / 276,880.1 ft. ☒ E. ☐ W.	Well Name: PBW-89-03B
Facility License, Permit or Monitoring Number: _____		Wis. Unique Well Number: _____ DNR Well Number: _____
Type of Well: Water Table Observation Well ☐ 11 / Piezometer ☒ 12	Section Location: _____ 1/4 of _____ 1/4 of Section _____, T _____ N. R _____ ☐ E ☐ W	Date Well Installed: 03/10/89 (m m / d d / y y)
Distance Well Is From Waste/Source Boundary: NA ft.	Location of Well Relative to Waste/Source: ☐ Upgradient ☐ Sidegradient ☐ Downgradient ☐ Not Known	Well Installed By: (Person's Name and Firm) D H BELAN / E.C. Jordan Co.
Is Well A Point of Enforcement Std. Application? ☐ Yes ☒ No		

A. Protective pipe, top elevation 847.03 ft. MSL
B. Well casing, top elevation 846.8 ft. MSL
C. Land surface elevation 844.9 ft. MSL
D. Surface seal, bottom _____ ft. MSL or _____ ft.

12. USCS classification of soil near screen:
☐ GP ☐ GM ☐ GC ☐ GW ☐ SW ☒ SP
☐ SM ☐ SC ☐ ML ☐ MH ☐ CL ☐ CH
☐ Bedrock

13. Sieve analysis attached? ☐ Yes ☒ No

14. Drilling method used: Rotary ☐ 50; Hollow Stem Auger ☐ 41; Other ☒ DUAL WALL

15. Drilling fluid used: Water ☐ 02; Air ☒ 01; Drilling Mud ☐ 03; None ☐ 99

16. Drilling additives used? ☐ Yes ☒ No
Describe _____

17. Source of water (attach analysis):
PW # 2

E. Bentonite seal, top 734.9 ft. MSL or 110.0 ft.
F. Fine sand, top NA ft. MSL or NA ft.
G. Filter pack, top 729.9 ft. MSL or 115.0 ft.
H. Well screen, top 724.9 ft. MSL or 120.0 ft.
I. Well screen, bottom 719.9 ft. MSL or 125.0 ft.
J. Filter pack, bottom 719.9 ft. MSL or 125.0 ft.
K. Borehole, bottom 716.9 ft. MSL or 128.0 ft.
L. Borehole, diameter 9.5 in.
M. O.D. well casing 4.5 in.
N. I.D. well casing 4.0 in.

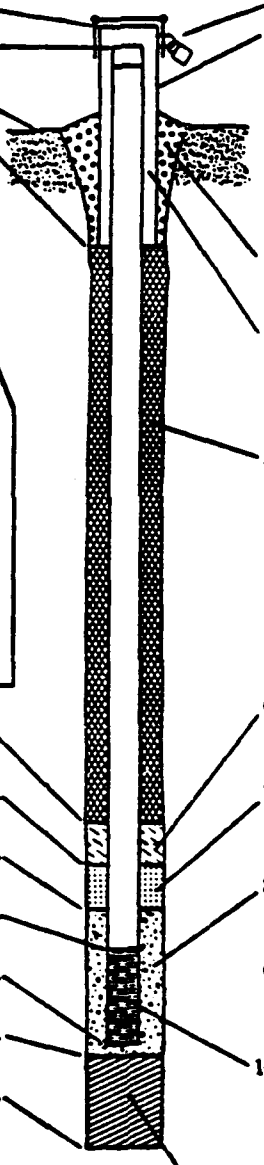

1. Cap and lock? ☒ Yes ☐ No
2. Protective cover pipe:
a. Inside diameter: 6.0 in.
b. Length: 7.0 ft.
c. Material: Steel ☒ 04; Other ☐ __ _____
d. Additional protection? ☒ Yes ☐ No
If yes, describe: 4 BUMPER POSTS FOR COMPASS
3. Surface seal: Bentonite ☐ 30; Concrete ☐ 01; GRAVEL W/CEMENT-BENTONITE COLLAR Other ☒ __
4. Material between well casing and protective pipe: Bentonite ☐ 30; Annular space seal ☐; GROUT Other ☒ __
5. Annular space seal: Granular Bentonite ☐ 33; _____ Lbs/gal mud weight ... Bentonite-sand slurry ☐ 35; _____ Lbs/gal mud weight ..... Bentonite slurry ☐ 31; 5 % Bentonite ..... Bentonite-cement grout ☐ 50; ±900 gal/ft volume added for any of the above
How installed: Tremie ☐ 01; Tremie pumped ☒ 02; Gravity ☐ 08
6. Bentonite seal: Bentonite granules ☐ 33; ☐1/4 in. ☐3/8 in. ☐1/2 in. Bentonite pellets ☐ 32; Bentonite Slurry Other ☒ __
7. Fine sand material: Manufacturer, product name and mesh size: NA
Volume added NA ft³
8. Filter pack material: Manufacturer, product name and mesh size: Red Flint, Silica Filter Sand
Volume added ≈1.1 ft³
9. Well casing: Flush threaded PVC schedule 40 ☐ 23; Flush threaded PVC schedule 80 ☒ 24; Other ☐ __ _____
10. Screen material: Schedule 80 PVC
Screen type: Factory cut ☒ 11; Continuous slot ☐ 01; Other ☐ __ _____
Manufacturer Jimco
Slot size: 0.010 in.
Slotted length: 5.0 ft.
11. Backfill material (below filter pack): None ☐; Natural Cave Other ☒

I hereby certify that the information on this form is true and correct to the best of my knowledge.

Signature: Paul R. Bol | Firm: E. C Jordan Co.

Please complete and return both sides of this form as required by chs. 144, 147 and 160, Wis. Stats., and ch. NR 141, Wis. Adm. Code. In accordance with ch. 144, Wis Stats., failure to file this form may result in a forfeiture of not less than $10, nor more than $5,000 for each day of violation. In accordance with ch. 147, Wis. Stats., failure to file this form may result in a forfeiture of not more than $10,000 for each day of violation.

State of Wisconsin
Department of Natural Resources

MONITORING WELL CONSTRUCTION
Form 4400-113A 8-89

Facility/Project Name: Badger Army Ammunition Plant	Grid Location: 4,802,333.9 ft ☒ N. ☐ S. / 726,550.7 ft ☒ E. ☐ W.	Well Name: PBN-89-03C
Facility License, Permit or Monitoring Number:		Wis. Unique Well Number / DNR Well Numb
Type of Well: Water Table Observation Well ☐ 11; Piezometer ☒ 12	Section Location: ____ 1/4 of ____ 1/4 of Section ____, T ____ N, R ____ ☐ E ☐ W	Date Well Installed: 03/09/89 (m m / d d / y y)
Distance Well Is From Waste/Source Boundary: NA ft.	Location of Well Relative to Waste/Source: ☐ Upgradient ☐ Sidegradient ☐ Downgradient ☐ Not Known	Well Installed By: (Person's Name and Firm): D.H. Belan / E.C. Jordan Co
Is Well A Point of Enforcement Std. Application? ☐ Yes ☒ No		

A. Protective pipe, top elevation 847.02 ft. MSL
B. Well casing, top elevation 846.87 ft. MSL
C. Land surface elevation 844.1 ft. MSL
D. Surface seal, bottom ____ ft. MSL or ____ ft.

12. USCS classification of soil near screen:
☒ GP ☐ GM ☐ GC ☐ GW ☐ SW ☐ SP
☐ SM ☐ SC ☐ ML ☐ MH ☐ CL ☐ CH
☐ Bedrock

13. Sieve analysis attached? ☐ Yes ☒ No

14. Drilling method used: Rotary ☐ 50; Hollow Stem Auger ☐ 41; Other ☒ ____
Dual Wall - percussion

15. Drilling fluid used: Water ☐ 02; Air ☒ 01; Drilling Mud ☐ 03; None ☐ 99

16. Drilling additives used? ☐ Yes ☒ No
Describe ____

17. Source of water (attach analysis):
PW #2

E. Bentonite seal, top 702.1 ft. MSL or 142.0 ft.
F. Fine sand, top NA ft. MSL or NA ft.
G. Filter pack, top 692.1 ft. MSL or 147.0 ft.
H. Well screen, top 689.1 ft. MSL or 155.0 ft.
I. Well screen, bottom 684.1 ft. MSL or 160.0 ft.
J. Filter pack, bottom 684.1 ft. MSL or 160.0 ft.
K. Borehole, bottom 684.1 ft. MSL or 160.0 ft.
L. Borehole, diameter 9.5 in.
M. O.D. well casing 4.5 in.
N. I.D. well casing 4.0 in.

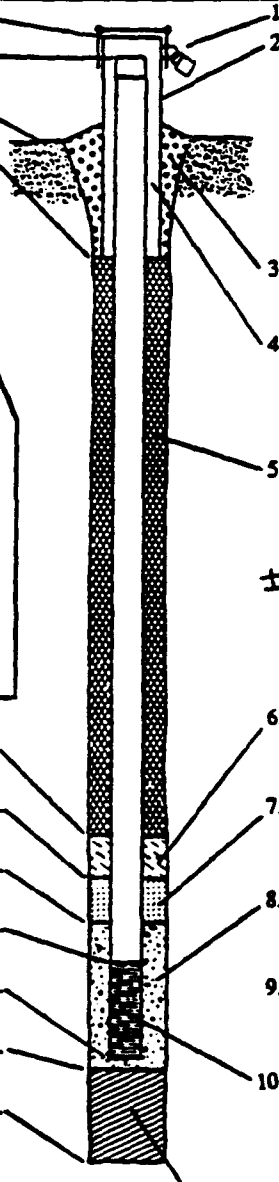

1. Cap and lock? ☒ Yes ☐ No
2. Protective cover pipe:
a. Inside diameter: 6.1 in
b. Length: 12.0 ft
c. Material: Steel ☒ 04; Other ☐ ____
d. Additional protection? ☒ Yes ☐ No
If yes, describe: 4 locking posts
3. Surface seal: Bentonite ☐ 30; Concrete ☐ 0; Grout; Other ☒ ____
4. Material between well casing and protective pipe: Bentonite ☐ 30; Annular space seal ☐; Grout; Other ☒ ____
5. Annular space seal: Granular Bentonite ☐ 3; ____ Lbs/gal mud weight . . . Bentonite-sand slurry ☐ ____; ____ Lbs/gal mud weight . . . . . Bentonite slurry ☐ 31; 5 % Bentonite . . . . Bentonite-cement grout ☒ 50; ±1200 gal volume added for any of the above
How installed: Tremie ☐ 01; Tremie pumped ☒ 02; Gravity ☐ 08
6. Bentonite seal: Bentonite granules ☐ 32; ☐ 1/4 in. ☐ 3/8 in. ☐ 1/2 in. Bentonite pellets ☐ 33; Bentonite Slurry; Other ☒ ____
7. Fine sand material: Manufacturer, product name and mesh size: NA
Volume added NA ft³
8. Filter pack material: Manufacturer, product name and mesh size: Red Flint, Silica Sand
Volume added = 1.4 ft³
9. Well casing: Flush threaded PVC schedule 40 ☐ 23; Flush threaded PVC schedule 80 ☒ 24; Other ☐ ____
10. Screen material: Schedule 80 PVC
Screen type: Factory cut ☒ 11; Continuous slot ☐ 01; Other ☐ ____
Manufacturer Timco
Slot size: 0.010 in
Slotted length: 5.0 ft
11. Backfill material (below filter pack): None ☐; Other ☐ ____

I hereby certify that the information on this form is true and correct to the best of my knowledge.

Signature: D.H. Belan | Firm: E.C. Jordan Co

Please complete and return both sides of this form as required by chs. 144, 147 and 160, Wis. Stats., and ch. NR 141, Wis. Adm. Code. In accordance with ch. 144, Wis Stats., failure to file this form may result in a forfeiture of not less than $10, nor more than $5,000 for each day of violation. In accordance with ch. 147, Wis. Stats., failure to file this form may result in a forfeiture of not more than $10,000 for each day of violation.

State of Wisconsin
Department of Natural Resources

MONITORING WELL CONSTRUCTION
Form 4400-113A 8-89

Facility/Project Name: Badger Army Ammunitions Plant	Grid Location: 4,801,782.3 m ~~ft~~ ☒ N. ☐ S.	Well Name: PBN-89-04B
Facility License, Permit or Monitoring Number: _____	277,097.8 m ~~ft~~ ☒ E. ☐ W.	Wis. Unique Well Number: _____ DNR Well Number: _____
Type of Well: Water Table Observation Well ☐ 11; Piezometer ☒ 12	Section Location: ____ 1/4 of ____ 1/4 of Section ____, T ____ N, R ____ ☐ E ☐ W	Date Well Installed: 03/19/89 (m m / d d / y y)
Distance Well Is From Waste/Source Boundary: NA ft.		Well Installed By: (Person's Name and Firm) P. Bolmer / E.C. Jordan Co.
Is Well A Point of Enforcement Std. Application? ☐ Yes ☒ No	Location of Well Relative to Waste/Source: ☐ Upgradient ☐ Sidegradient ☐ Downgradient ☐ Not Known	

A. Protective pipe, top elevation 859.40 ft. MSL

B. Well casing, top elevation 859.23 ft. MSL

C. Land surface elevation 856.9 ft. MSL

D. Surface seal, bottom _____ ft. MSL or ____ ft.

12. USCS classification of soil near screen:
☐ GP ☐ GM ☐ GC ☐ GW ☐ SW ☒ SP
☐ SM ☐ SC ☐ ML ☐ MH ☐ CL ☐ CH
☐ Bedrock

13. Sieve analysis attached? ☐ Yes ☒ No

14. Drilling method used: Rotary ☐ 50; Hollow Stem Auger ☒ 41; Other ☐ ____

15. Drilling fluid used: Water ☐ 02; Air ☐ 01; Drilling Mud ☐ 03; None ☒ 99

16. Drilling additives used? ☐ Yes ☒ No

Describe _____

17. Source of water (attach analysis): PW #2

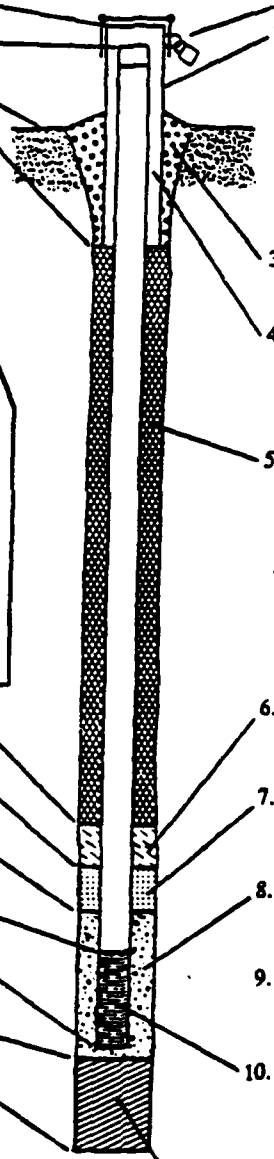

E. Bentonite seal, top 737.1 ft. MSL or 119.8 ft.

F. Fine sand, top NA ft. MSL or NA ft.

G. Filter pack, top 732.1 ft. MSL or 124.8 ft.

H. Well screen, top 717.9 ft. MSL or 139.0 ft.

I. Well screen, bottom 712.9 ft. MSL or 144.0 ft.

J. Filter pack, bottom 712.9 ft. MSL or 144.0 ft.

K. Borehole, bottom 706.9 ft. MSL or 150.0 ft.

L. Borehole, diameter 9.5 in.

M. O.D. well casing 4.5 in.

N. I.D. well casing 4.0 in.

1. Cap and lock? ☒ Yes ☐ No

2. Protective cover pipe:
a. Inside diameter: 6.0 in.
b. Length: 2.0 ft.
c. Material: Steel ☒ 04; Other ☐ __
d. Additional protection? ☐ Yes ☐ No
If yes, describe: 4 bucking posts

3. Surface seal: Bentonite ☐ 30; Concrete ☐ 01; Other ☒ __
Grout

4. Material between well casing and protective pipe: Bentonite ☐ 30; Annular space seal ☐; Other ☒ __
Grout

5. Annular space seal: Granular Bentonite ☐ 33
____ Lbs/gal mud weight . . . Bentonite-sand slurry ☐ 35
____ Lbs/gal mud weight . . . . . Bentonite slurry ☐ 31
5 % Bentonite . . . . . Bentonite-cement grout ☒ 50
* 310 gal ~~ft³~~ volume added for any of the above
How installed: Tremie ☐ 01; Tremie pumped ☒ 02; Gravity ☐ 08

6. Bentonite seal: Bentonite granules ☐ 33
☐ 1/4 in. ☐ 3/8 in. ☐ 1/2 in. Bentonite pellets ☐ 32
Bentonite Slurry Other ☒ __

7. Fine sand material: Manufacturer, product name and mesh size
NA
Volume added NA ft³

8. Filter pack material: Manufacturer, product name and mesh size
Red Flint, Silica Sand
Volume added ≈ 2.1 ft³

9. Well casing: Flush threaded PVC schedule 40 ☐ 23; Flush threaded PVC schedule 80 ☒ 24; Other ☐ __

10. Screen material: Schedule 80 PVC
Screen type: Factory cut ☒ 11; Continuous slot ☐ 01; Other ☐ __
Manufacturer Timco
Slot size: 0.010 in.
Slotted length: 5.0 ft.

11. Backfill material (below filter pack): None ☐; Native Sand Other ☒

I hereby certify that the information on this form is true and correct to the best of my knowledge.

Signature	Firm
P. Bolmer	E.C. Jordan Co.

Please complete and return both sides of this form as required by chs. 144, 147 and 160, Wis. Stats., and ch. NR 141, Wis. Adm. Code. In accordance with ch. 144, Wis Stats., failure to file this form may result in a forfeiture of not less than $10, nor more than $5,000 for each day of violation. In accordance with ch. 147, Wis. Stats., failure to file this form may result in a forfeiture of not more than $10,000 for each day of violation.

State of Wisconsin
Department of Natural Resources

MONITORING WELL CONSTRUCTION
Form 4400-113A 8-89

Facility/Project Name: Badger Army Ammunition Plant
Facility License, Permit or Monitoring Number:

Grid Location: 4,801,775.2 m ft N. S. / 777,169.6 m ft E. W.

Well Name: PBW-89-04C
Wis. Unique Well Number: DNR Well Numb

Type of Well: Water Table Observation Well 11 / Piezometer 12

Section Location: ____ 1/4 of ____ 1/4 of Section ____, T ____ N, R ____ E W

Date Well Installed: 04/26/89 (m m / d d / y y)

Distance Well Is From Waste/Source Boundary: NA ft.

Well Installed By: (Person's Name and Firm) J. Buss / E.C. Jordan Co.

Is Well A Point of Enforcement Std. Application? Yes / No

Location of Well Relative to Waste/Source: Upgradient / Sidegradient / Downgradient / Not Known

A. Protective pipe, top elevation 862.51 ft. MSL
B. Well casing, top elevation 859.70 ft. MSL
C. Land surface elevation 852.1 ft MSL
D. Surface seal, bottom ____ ft. MSL or ____ ft.

12. USCS classification of soil near screen:
GP GM GC GW SW SP
SM SC ML MH CL CH
Bedrock

13. Sieve analysis attached? Yes / No

14. Drilling method used: Rotary 50 / Hollow Stem Auger 41 / Other
Dual Wall

15. Drilling fluid used: Water 02 / Air 01 / Drilling Mud 03 / None 99

16. Drilling additives used? Yes / No
Describe ____

17. Source of water (attach analysis):
PW #2

E. Bentonite seal, top 712.1 ft. MSL or 140.0 ft.
F. Fine sand, top NA ft. MSL or NA ft.
G. Filter pack, top 692.1 ft. MSL or 165.0 ft.
H. Well screen, top 682.2 ft. MSL or 175.5 ft.
I. Well screen, bottom 672.2 ft. MSL or 185.5 ft.
J. Filter pack, bottom 662.7 ft. MSL or 190.0 ft.
K. Borehole, bottom 662.7 ft. MSL or 190.0 ft.
L. Borehole, diameter 9.5 in.
M. O.D. well casing 4.5 in.
N. I.D. well casing 4.0 in.

1. Cap and lock? Yes / No
2. Protective cover pipe:
a. Inside diameter: 6.0 in.
b. Length: 2.0 ft.
c. Material: Steel 04 / Other ____
d. Additional protection? Yes / No
If yes, describe: 9 bucking posts
3. Surface seal: Bentonite 30 / Concrete 01 / Other
Grout
4. Material between well casing and protective pipe: Bentonite 30 / Annular space seal / Other
Grout
5. Annular space seal: Granular Bentonite ____ / ____ Lbs/gal mud weight ... Bentonite-sand slurry ____ / ____ Lbs/gal mud weight ..... Bentonite slurry 31 / 5 % Bentonite ..... Bentonite-cement grout 50
≈ 400 Sacks volume added for any of the above
How installed: Tremie 01 / Tremie pumped 02 / Gravity 08
6. Bentonite seal: Bentonite granules 33 / 1/4 in. 3/8 in. 1/2 in. Bentonite pellets 32 / Other
Bentonite Slurry
7. Fine sand material: Manufacturer, product name and mesh size
NA
Volume added NA ft³
8. Filter pack material: Manufacturer, product name and mesh size
Red Flint, Silica Sand
Volume added ≈ 2.2 ft³
9. Well casing: Flush threaded PVC schedule 40 23 / Flush threaded PVC schedule 80 24 / Other
10. Screen material: Schedule 80 PVC
Screen type: Factory cut 11 / Continuous slot 01 / Other
Manufacturer Timco
Slot size: 0.010 in.
Slotted length: 5.0 ft.
11. Backfill material (below filter pack): None / Other
Native Fill

I hereby certify that the information on this form is true and correct to the best of my knowledge.
Signature: [signature] Firm: E.C. Jordan Co

Please complete and return both sides of this form as required by chs. 144, 147 and 160, Wis. Stats., and ch. NR 141, Wis. Adm. Code. In accordance with ch. 144, Wis Stats., failure to file this form may result in a forfeiture of not less than $10, nor more than $5,000 for each day of violation. In accordance with ch. 147, Wis. Stats., failure to file this form may result in a forfeiture of not more than $10,000 for each day of violation.

State of Wisconsin
Department of Natural Resources

MONITORING WELL CONSTRUCTION
Form 4400-113A 8-89

Facility/Project Name: Badger Army Ammunition Plants
Facility License, Permit or Monitoring Number: _____

Grid Location: 4,802,323.1 m ft. N. ☐ S. — 276,741.2 m ft. E. ☐ W.
Well Name: PBM-89-05
Wis. Unique Well Number: _____ DNR Well Number: _____

Type of Well: Water Table Observation Well ☒ 11 — Piezometer ☐ 12
Section Location: _____ 1/4 of _____ 1/4 of Section _____, T _____ N, R _____ ☐ E ☐ W
Date Well Installed: 03/06/89 (m m d d y y)

Distance Well Is From Waste/Source Boundary: NA ft.
Location of Well Relative to Waste/Source: ☐ Upgradient ☐ Sidegradient ☐ Downgradient ☐ Not Known
Well Installed By: (Person's Name and Firm) Bill Metzger / E. C. Jordan Co.

Is Well A Point of Enforcement Std. Application? ☐ Yes ☒ No

A. Protective pipe, top elevation 855.20 ft. MSL
B. Well casing, top elevation 855.58 ft. MSL
C. Land surface elevation 852.3 ft. MSL
D. Surface seal, bottom _____ ft. MSL or _____ ft.

12. USCS classification of soil near screen:
☐ GP ☐ GM ☐ GC ☐ GW ☐ SW ☒ SP
☐ SM ☐ SC ☐ ML ☐ MH ☐ CL ☐ CH
☐ Bedrock

13. Sieve analysis attached? ☐ Yes ☒ No

14. Drilling method used: Rotary ☐ 50; Hollow Stem Auger ☒ 41; Other ☐ ___

15. Drilling fluid used: Water ☐ 02; Air ☐ 01; Drilling Mud ☐ 03; None ☒ 99

16. Drilling additives used? ☐ Yes ☒ No
Describe _____

17. Source of water (attach analysis):
PW #2

E. Bentonite seal, top 787.3 ft. MSL or 65.0 ft.
F. Fine sand, top NA ft. MSL or NA ft.
G. Filter pack, top 782.6 ft. MSL or 69.7 ft.
H. Well screen, top 776.8 ft. MSL or 75.5 ft.
I. Well screen, bottom 756.8 ft. MSL or 95.5 ft.
J. Filter pack, bottom 752.3 ft. MSL or 100.0 ft.
K. Borehole, bottom 752.3 ft. MSL or 100.0 ft.
L. Borehole, diameter 9.5 in.
M. O.D. well casing 4.5 in.
N. I.D. well casing 4.0 in.

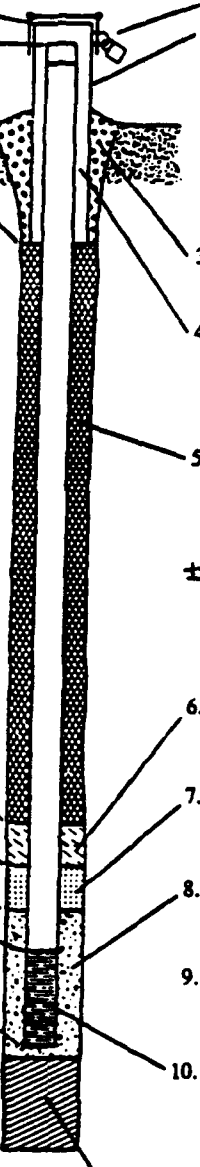

1. Cap and lock? ☒ Yes ☐ No
2. Protective cover pipe:
a. Inside diameter: 6.0 in.
b. Length: 7.0 ft.
c. Material: Steel ☒ 04; Other ☐ ___
d. Additional protection? ☒ Yes ☐ No
If yes, describe: 4 bucking posts
3. Surface seal: Bentonite ☐ 30; Concrete ☐ 01; Other ☒ ___
Grout
4. Material between well casing and protective pipe: Bentonite ☐ 30; Annular space seal ☐; Other ☒ ___
Grout
5. Annular space seal: Granular Bentonite ☐ 33
___ Lbs/gal mud weight ... Bentonite-sand slurry ☐ 35
___ Lbs/gal mud weight ..... Bentonite slurry ☐ 31
5 % Bentonite .... Bentonite-cement grout ☒ 50
± 400 gal volume added for any of the above
How installed: Tremie ☐ 01; Tremie pumped ☒ 02; Gravity ☐ 08
6. Bentonite seal: Bentonite granules ☐ 33
☐ 1/4 in. ☒ 3/8 in. ☐ 1/2 in. Bentonite pellets ☒ 32
Other ☐ ___
7. Fine sand material: Manufacturer, product name and mesh size
NA
Volume added NA ft³
8. Filter pack material: Manufacturer, product name and mesh size
Red Flint Sand
Volume added ≈ 3.3 ft³
9. Well casing: Flush threaded PVC schedule 40 ☐ 23; Flush threaded PVC schedule 80 ☒ 24; Other ☐ ___
10. Screen material: Schedule 80 PVC
Screen type: Factory cut ☒ 11; Continuous slot ☐ 01; Other ☐ ___
Manufacturer Timco
Slot size: 0.010 in.
Slotted length: 20.0 ft.
11. Backfill material (below filter pack): None ☐; Other ☒
Native Fill

I hereby certify that the information on this form is true and correct to the best of my knowledge.

Signature: _____ Firm: E. C. Jordan Co.

Please complete and return both sides of this form as required by chs. 144, 147 and 160, Wis. Stats., and ch. NR 141, Wis. Adm. Code. In accordance with ch. 144, Wis Stats., failure to file this form may result in a forfeiture of not less than $10, nor more than $5,000 for each day of violation. In accordance with ch. 147, Wis. Stats., failure to file this form may result in a forfeiture of not more than $10,000 for each day of violation.

State of Wisconsin
Department of Natural Resources

MONITORING WELL CONSTRUCTION
Form 4400-113A 8-89

Facility/Project Name: Badger Army Ammunition Plant	Grid Location: 4,802,328.9 m ft ☒ N. ☐ S.; 399,473.6 m ft ☒ E. ☐ W.	Well Name: PBM-89-06
Facility License, Permit or Monitoring Number: _____		Wis. Unique Well Number: _____ DNR Well Numb: _____
Type of Well: Water Table Observation Well ☒ 11; Piezometer ☐ 12	Section Location: ____ 1/4 of ____ 1/4 of Section ____; T ____ N, R ____ ☐ E ☐ W	Date Well Installed: 04/30/89 (m m / d d / y y)
Distance Well Is From Waste/Source Boundary: NA ft.	Location of Well Relative to Waste/Source: ☐ Upgradient ☐ Sidegradient ☐ Downgradient ☐ Not Known	Well Installed By: (Person's Name and Firm): Christine Moore / E.C. Jordan C
Is Well A Point of Enforcement Std. Application? ☐ Yes ☒ No		

A. Protective pipe, top elevation: 886.50 ft. MSL
B. Well casing, top elevation: 886.37 ft. MSL
C. Land surface elevation: 883.7 ft. MSL
D. Surface seal, bottom: _____ ft. MSL or _____ ft.

12. USCS classification of soil near screen:
☐ GP ☐ GM ☐ GC ☐ GW ☐ SW ☒ SP
☐ SM ☐ SC ☐ ML ☐ MH ☐ CL ☐ CH
☐ Bedrock

13. Sieve analysis attached? ☐ Yes ☐ No

14. Drilling method used: Rotary ☐ 50; Hollow Stem Auger ☐ 41; Other ☒ ___
Dual Wall

15. Drilling fluid used: Water ☐ 02; Air ☒ 01; Drilling Mud ☐ 03; None ☐ 99

16. Drilling additives used? ☐ Yes ☒ No
Describe _____

17. Source of water (attach analysis):
PW #2

E. Bentonite seal, top: 782.2 ft. MSL or 96.0 ft.
F. Fine sand, top: NA ft. MSL or NA ft.
G. Filter pack, top: 779.7 ft. MSL or 104.0 ft.
H. Well screen, top: 767.7 ft. MSL or 116.0 ft.
I. Well screen, bottom: 747.7 ft. MSL or 136.0 ft.
J. Filter pack, bottom: 744.7 ft. MSL or 139.0 ft.
K. Borehole, bottom: 723.7 ft. MSL or 160.0 ft.
L. Borehole, diameter: 9.5 in.
M. O.D. well casing: 4.5 in.
N. I.D. well casing: 4.0 in.

1. Cap and lock? ☒ Yes ☐ No
2. Protective cover pipe:
a. Inside diameter: 6.0 in
b. Length: 7.0 ft
c. Material: Steel ☒ 0-; Other ☐ __
d. Additional protection? ☒ Yes ☐ No
If yes, describe: 4 bucking Posts
3. Surface seal: Bentonite ☐ 30; Concrete ☐ 0; Other ☒ _
Grout
4. Material between well casing and protective pipe: Bentonite ☐ 30; Annular space seal ☐; Other ☒ __
Grout
5. Annular space seal: Granular Bentonite ☐ 3_; _____ Lbs/gal mud weight . . . Bentonite-sand slurry ☐ _; _____ Lbs/gal mud weight . . . . . Bentonite slurry ☐ 3_; 5 % Bentonite . . . . Bentonite-cement grout ☒ 50; ± 400 gal volume added for any of the above
How installed: Tremie ☐ 01; Tremie pumped ☒ 02; Gravity ☐ 08
6. Bentonite seal: Bentonite granules ☐ 33; ☐ 1/4 in. ☒ 3/8 in. ☐ 1/2 in. Bentonite pellets ☒ 32; Other ☐ __
1
7. Fine sand material: Manufacturer, product name and mesh size
NA
Volume added NA ft³
8. Filter pack material: Manufacturer, product name and mesh siz
Red Flint / Silica Sand
Volume added ≈ 3.9 ft³
9. Well casing: Flush threaded PVC schedule 40 ☐ 23; Flush threaded PVC schedule 80 ☒ 24; Other ☐ __
10. Screen material: Schedule 80 PVC __
Screen type: Factory cut ☒ 11; Continuous slot ☐ 01; Other ☐ __
Manufacturer Timco
Slot size: 0.010 in
Slotted length: 20.0 ft.
11. Backfill material (below filter pack): None ☐; Other ☒
Drilled Cuttings

I hereby certify that the information on this form is true and correct to the best of my knowledge.

Signature: _____ Firm: E.C. Jordan Co.

Please complete and return both sides of this form as required by chs. 144, 147 and 160 Wis. Stats., and ch. NR 141, Wis. Adm. Code. In accordance with ch. 144, Wis Stats., failure to file this form may result in a forfeiture of not less than $10, nor more than $5,000 for each day of violation. In accordance with ch. 147, Wis. Stats., failure to file this form may result in a forfeiture of not more than $10,000 for each day of violation.

State of Wisconsin
Department of Natural Resources

MONITORING WELL CONSTRUCTION
Form 4400-113A 8-89

Facility/Project Name: Badger Army Ammunitions Plant	Grid Location: 4,801,794.0 m ft. ☒ N. ☐ S. / 276,910.3 m ft. ☒ E. ☐ W.	Well Name: PBM-89-07
Facility License, Permit or Monitoring Number: _____		Wis. Unique Well Number: _____ DNR Well Number: _____
Type of Well: Water Table Observation Well ☐ 11; Piezometer ☐ 12	Section Location: ____ 1/4 of ____ 1/4 of Section ____, T ____ N, R ____ ☐ E ☐ W	Date Well Installed: 03/03/89 (m m / d d / y y)
Distance Well Is From Waste/Source Boundary: NA ft.	Location of Well Relative to Waste/Source: ☐ Upgradient ☐ Sidegradient ☐ Downgradient ☐ Not Known	Well Installed By: (Person's Name and Firm) Brian Butler / E.C. Jordan Co.
Is Well A Point of Enforcement Std. Application? ☐ Yes ☒ No		

A. Protective pipe, top elevation 849.56 ft. MSL

B. Well casing, top elevation 849.36 ft. MSL

C. Land surface elevation 846.6 ft. MSL

D. Surface seal, bottom _____ ft. MSL or _____ ft.

12. USCS classification of soil near screen:
☐ GP ☐ GM ☐ GC ☐ GW ☐ SW ☒ SP
☐ SM ☐ SC ☐ ML ☐ MH ☐ CL ☐ CH
☐ Bedrock

13. Sieve analysis attached? ☐ Yes ☒ No

14. Drilling method used: Rotary ☐ 50; Hollow Stem Auger ☒ 41; Other ☐ _____

15. Drilling fluid used: Water ☐ 02; Air ☐ 01; Drilling Mud ☐ 03; None ☒ 99

16. Drilling additives used? ☐ Yes ☒ No

Describe _____

17. Source of water (attach analysis): PW #2

E. Bentonite seal, top 784.6 ft. MSL or 62.0 ft.

F. Fine sand, top NA ft. MSL or NA ft.

G. Filter pack, top 780.1 ft. MSL or 66.5 ft.

H. Well screen, top 764.1 ft. MSL or 82.5 ft.

I. Well screen, bottom 754.1 ft. MSL or 92.5 ft.

J. Filter pack, bottom 754.1 ft. MSL or 92.5 ft.

K. Borehole, bottom 751.6 ft. MSL or 95.0 ft.

L. Borehole, diameter 95 in.

M. O.D. well casing 4.5 in.

N. I.D. well casing 4.0 in.

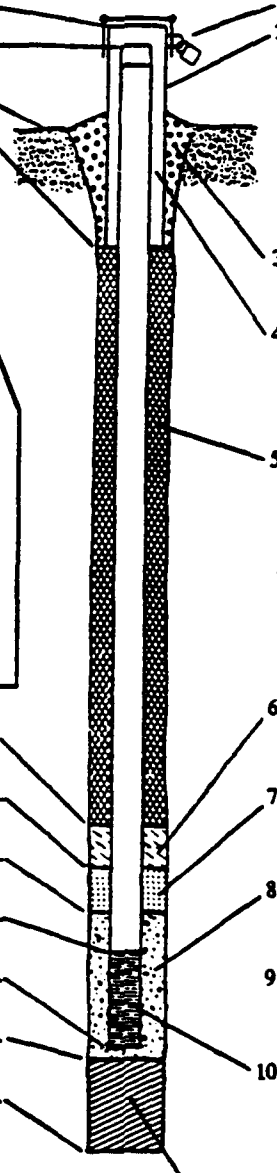

1. Cap and lock? ☒ Yes ☐ No

2. Protective cover pipe:
a. Inside diameter: 6.0 in.
b. Length: 7.0 ft.
c. Material: Steel ☒ 04; Other ☐ __
d. Additional protection? ☐ Yes ☐ No
If yes, describe: 4 backing Posts

3. Surface seal: Bentonite ☐ 30; Concrete ☐ 01; Other ☒ __
Grout

4. Material between well casing and protective pipe: Bentonite ☐ 30; Annular space seal ☐; Other ☒ __
Grout

5. Annular space seal: Granular Bentonite ☐ 33
____ Lbs/gal mud weight . . . Bentonite-sand slurry ☐ 35
____ Lbs/gal mud weight . . . . . Bentonite slurry ☐ 31
5 % Bentonite . . . . . Bentonite-cement grout ☒ 50
±400 gal ~~ft³~~ volume added for any of the above
How installed: Tremie ☐ 01; Tremie pumped ☒ 02; Gravity ☐ 08

6. Bentonite seal: Bentonite granules ☐ 33
☐ 1/4 in. ☒ 3/8 in. ☐ 1/2 in. Bentonite pellets ☒ 32
_____ Other ☐ __

7. Fine sand material: Manufacturer, product name and mesh size
NA
Volume added NA ft³

8. Filter pack material: Manufacturer, product name and mesh size
Red flint, silica sand
Volume added ≈2.9 ft³

9. Well casing: Flush threaded PVC schedule 40 ☐ 23; Flush threaded PVC schedule 80 ☒ 24; Other ☐ __

10. Screen material: Schedule 80 PVC
Screen type: Factory cut ☒ 11; Continuous slot ☐ 01; Other ☐ __
Manufacturer Timco
Slot size: 0.010 in.
Slotted length: 10.0 ft.

11. Backfill material (below filter pack): None ☐; Other ☒
Natural Cave

I hereby certify that the information on this form is true and correct to the best of my knowledge.

Signature	Firm
[signature]	E.C. Jordan Co.

Please complete and return both sides of this form as required by chs. 144, 147 and 160, Wis. Stats., and ch. NR 141, Wis. Adm. Code. In accordance with ch. 144, Wis Stats., failure to file this form may result in a forfeiture of not less than $10, nor more than $5,000 for each day of violation. In accordance with ch. 147, Wis. Stats., failure to file this form may result in a forfeiture of not more than $10,000 for each day of violation.

State of Wisconsin
Department of Natural Resources

MONITORING WELL CONSTRUCTION
Form 4400-113A 8-89

Facility/Project Name: Badger Army Ammunition Plant	Grid Location: 4,801,728.3 ~~ft.~~ M ☒ N. ☐ S. / 277,305.0 ~~ft.~~ M ☒ E. ☐ W.	Well Name: PBM-89-08
Facility License, Permit or Monitoring Number: _____		Wis. Unique Well Number: _____ DNR Well Number: _____
Type of Well: Water Table Observation Well ☒ 11; Piezometer ☐ 12	Section Location: ____ 1/4 of ____ 1/4 of Section ____, T ____ N, R ____ ☐ E ☐ W	Date Well Installed: 03/14/89 (m m / d d / y y)
Distance Well Is From Waste/Source Boundary: NA ft.		Well Installed By: (Person's Name and Firm) Rick Allen / E.C. Jordan Co.
Is Well A Point of Enforcement Std. Application? ☐ Yes ☒ No	Location of Well Relative to Waste/Source: ☐ Upgradient ☐ Sidegradient ☐ Downgradient ☐ Not Known	

A. Protective pipe, top elevation 888.22 ft. MSL

B. Well casing, top elevation 888.56 ft. MSL

C. Land surface elevation 885.5 ft. MSL

D. Surface seal, bottom _____ ft. MSL or _____ ft.

12. USCS classification of soil near screen:
☐ GP ☐ GM ☐ GC ☐ GW ☐ SW ☒ SP
☐ SM ☐ SC ☐ ML ☐ MH ☐ CL ☐ CH
☐ Bedrock

13. Sieve analysis attached? ☐ Yes ☒ No

14. Drilling method used: Rotary ☐ 50; Hollow Stem Auger ☒ 41; Other ☐ _____

15. Drilling fluid used: Water ☐ 02; Air ☐ 01; Drilling Mud ☐ 03; None ☒ 99

16. Drilling additives used? ☐ Yes ☒ No

Describe _____

17. Source of water (attach analysis): PW #2

E. Bentonite seal, top 790.5 ft. MSL or 95.0 ft.

F. Fine sand, top NA ft. MSL or NA ft.

G. Filter pack, top 785.5 ft. MSL or 100.0 ft.

H. Well screen, top 780.5 ft. MSL or 105.0 ft.

I. Well screen, bottom 760.5 ft. MSL or 125.0 ft.

J. Filter pack, bottom 760.5 ft. MSL or 125.0 ft.

K. Borehole, bottom 755.5 ft. MSL or 130.0 ft.

L. Borehole, diameter 9.5 in.

M. O.D. well casing 4.5 in.

N. I.D. well casing 4.0 in.

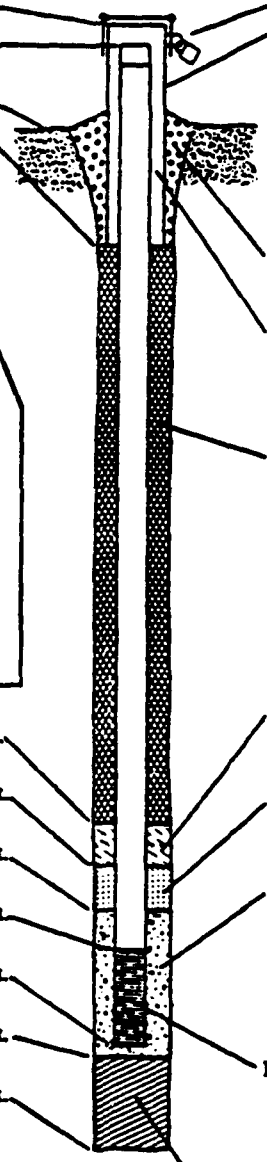

1. Cap and lock? ☒ Yes ☐ No

2. Protective cover pipe:
a. Inside diameter: 6.0 in
b. Length: 2.0 ft
c. Material: Steel ☒ 04; Other ☐ __
d. Additional protection? ☒ Yes ☐ No
If yes, describe: 4 backing Posts

3. Surface seal: Bentonite ☐ 30; Concrete ☐ 0; Other ☒ Grout

4. Material between well casing and protective pipe: Bentonite ☐ 30; Annular space seal ☐; Other ☒ Grout

5. Annular space seal: Granular Bentonite ☒ 3
____ Lbs/gal mud weight . . . Bentonite-sand slurry ☐
____ Lbs/gal mud weight . . . . . Bentonite slurry ☐ 3
5 % Bentonite . . . . . Bentonite-cement grout ☒ 50
± 260 gal ~~ft³~~ volume added for any of the above
How installed: Tremie ☐ 0; Tremie pumped ☒ 02; Gravity ☐ 08

6. Bentonite seal: Bentonite granules ☐ 3[illegible]
☐ 1/4 in. ☒ 3/8 in. ☐ 1/2 in. Bentonite pellets ☒ 3[illegible]
Other ☐ __

7. Fine sand material: Manufacturer, product name and mesh size: NA
Volume added NA ft³

8. Filter pack material: Manufacturer, product name and mesh size: Red Flint, Silica Sand
Volume added ≈ 2.5 ft³

9. Well casing: Flush threaded PVC schedule 40 ☐ 23; Flush threaded PVC schedule 80 ☒ 24; Other ☐ __

10. Screen material: Schedule 80 PVC
Screen type: Factory cut ☒ 11; Continuous slot ☐ 01; Other ☐ __
Manufacturer Timco
Slot size: 0.010 in
Slotted length: 30.0 ft.

11. Backfill material (below filter pack): None ☐; Other ☒ Native cave

I hereby certify that the information on this form is true and correct to the best of my knowledge.

Signature: [signature] Firm: E.C. Jordan Co.

Please complete and return both sides of this form as required by chs. 144, 147 and 160, Wis. Stats., and ch. NR 141, Wis. Adm. Code. In accordance with ch. 144, Wis Stats., failure to file this form may result in a forfeiture of not less than $10, nor more than $5,000 for each day of violation. In accordance with ch. 147, Wis. Stats., failure to file this form may result in a forfeiture of not more than $10,000 for each day of violation.

State of Wisconsin
Department of Natural Resources

MONITORING WELL CONSTRUCTION
Form 4400-113A 8-89

Facility/Project Name: Badger Army Ammunition Plant	Grid Location: 4,603,218.5 M N. ☐ S. / 277,295.5 M E. ☐ W.	Well Name: PBM-89-09
Facility License, Permit or Monitoring Number:		Wis. Unique Well Number / DNR Well Number
Type of Well: Water Table Observation Well ☒ 11; Piezometer ☐ 12	Section Location: ____ 1/4 of ____ 1/4 of Section ____; T ____ N, R ____ ☐ E ☐ W	Date Well Installed: 03/01/89 (m m / d d / y y)
Distance Well Is From Waste/Source Boundary: NA ft.	Location of Well Relative to Waste/Source: ☐ Upgradient ☐ Sidegradient ☐ Downgradient ☐ Not Known	Well Installed By: (Person's Name and Firm) Jeff Pickett / E.C Jordan Co
Is Well A Point of Enforcement Std. Application? ☐ Yes ☒ No		

A. Protective pipe, top elevation 883.64 ft. MSL
B. Well casing, top elevation 883.48 ft. MSL
C. Land surface elevation 880.6 ft. MSL
D. Surface seal, bottom ____ ft. MSL or ____ ft.

12. USCS classification of soil near screen:
☐ GP ☐ GM ☐ GC ☐ GW ☐ SW ☒ SP
☐ SM ☐ SC ☐ ML ☐ MH ☐ CL ☐ CH
☐ Bedrock

13. Sieve analysis attached? ☐ Yes ☒ No

14. Drilling method used: Rotary ☐ 50; Hollow Stem Auger ☒ 41; Other ☐ ____

15. Drilling fluid used: Water ☐ 02; Air ☐ 01; Drilling Mud ☐ 03; None ☒ 99

16. Drilling additives used? ☐ Yes ☒ No
Describe ____

17. Source of water (attach analysis):
PW #2

E. Bentonite seal, top 187.6 ft. MSL or 93.0 ft.
F. Fine sand, top NA ft. MSL or NA ft.
G. Filter pack, top 182.6 ft. MSL or 98.0 ft.
H. Well screen, top 177.6 ft. MSL or 103.0 ft.
I. Well screen, bottom 157.6 ft. MSL or 123.0 ft.
J. Filter pack, bottom 157.6 ft. MSL or 123.0 ft.
K. Borehole, bottom 155.6 ft. MSL or 125.0 ft.
L. Borehole, diameter 9.5 in.
M. O.D. well casing 4.5 in.
N. I.D. well casing 4.0 in.

1. Cap and lock? ☒ Yes ☐ No
2. Protective cover pipe:
a. Inside diameter: 6.0 in.
b. Length: 7.0 ft.
c. Material: Steel ☒ 04; Other ☐ ____
d. Additional protection? ☒ Yes ☐ No
If yes, describe: 4 locking bolts
3. Surface seal: Bentonite ☐ 30; Concrete ☐ 01; Other ☒ Grout
4. Material between well casing and protective pipe: Bentonite ☐ 30; Annular space seal ☐; Other ☒ Grout
5. Annular space seal: Granular Bentonite ☐ 33
____ Lbs/gal mud weight ... Bentonite-sand slurry ☐ 35
____ Lbs/gal mud weight ..... Bentonite slurry ☐ 31
5 % Bentonite ..... Bentonite-cement grout ☒ 50
≈ 900 gal/ft³ volume added for any of the above
How installed: Tremie ☐ 01; Tremie pumped ☒ 02; Gravity ☐ 08
6. Bentonite seal: Bentonite granules ☐ 33
☐ 1/4 in. ☒ 3/8 in. ☐ 1/2 in. Bentonite pellets ☒ 32
Other ☐ ____
7. Fine sand material: Manufacturer, product name and mesh size
NA
Volume added NA ft³
8. Filter pack material: Manufacturer, product name and mesh size
Red Flint silica filter sand
Volume added ≈ 28 ft³
9. Well casing: Flush threaded PVC schedule 40 ☐ 23; Flush threaded PVC schedule 80 ☒ 24; Other ☐ ____
10. Screen material: Schedule 80 PVC
Screen type: Factory cut ☒ 11; Continuous slot ☐ 01; Other ☐ ____
Manufacturer Timco
Slot size: 0.010 in.
Slotted length: 20.0 ft.
11. Backfill material (below filter pack): None ☐; Other ☒ Natural cave

I hereby certify that the information on this form is true and correct to the best of my knowledge.

Signature: [signature] Firm: E.C Jordan Co.

Please complete and return both sides of this form as required by chs. 144, 147 and 160, Wis. Stats., and ch. NR 141, Wis. Adm. Code. In accordance with ch. 144, Wis Stats., failure to file this form may result in a forfeiture of not less than $10, nor more than $5,000 for each day of violation. In accordance with ch. 147, Wis. Stats., failure to file this form may result in a forfeiture of not more than $10,000 for each day of violation.

State of Wisconsin
Department of Natural Resources

MONITORING WELL CONSTRUCTION
Form 4400-113A 8-89

Facility/Project Name: Badger Army Ammunition Plant	Grid Location: 4,802,838.7 m ~~ft~~ ☒ N. ☐ S. / 277,270.4 m ~~ft~~ ☒ E. ☐ W.	Well Name: PBN-89-10A
Facility License, Permit or Monitoring Number: _____		Wis. Unique Well Number: _____ DNR Well Number: _____
Type of Well: Water Table Observation Well ☒ 11; Piezometer ☐ 12	Section Location: ____ 1/4 of ____ 1/4 of Section ____, T ____ N, R ____ ☐ E ☐ W	Date Well Installed: 02/22/89 (m m / d d / y y)
Distance Well Is From Waste/Source Boundary: NA ft.		Well Installed By: (Person's Name and Firm) D. H. Belan / E. C. Jordan Co.
Is Well A Point of Enforcement Std. Application? ☐ Yes ☒ No	Location of Well Relative to Waste/Source: ☐ Upgradient ☐ Sidegradient ☐ Downgradient ☐ Not Known	

A. Protective pipe, top elevation 889.79 ft. MSL

B. Well casing, top elevation 889.65 ft. MSL

C. Land surface elevation 886.8 ft. MSL

D. Surface seal, bottom _____ ft. MSL or ____ ft.

12. USCS classification of soil near screen:
☐ GP ☐ GM ☐ GC ☐ GW ☐ SW ☒ SP
☐ SM ☐ SC ☐ ML ☐ MH ☐ CL ☐ CH
☐ Bedrock

13. Sieve analysis attached? ☐ Yes ☒ No

14. Drilling method used: Rotary ☐ 50; Hollow Stem Auger ☐ 41; Other ☒ Dual Wall

15. Drilling fluid used: Water ☐ 02; Air ☒ 01; Drilling Mud ☐ 03; None ☐ 99

16. Drilling additives used? ☐ Yes ☒ No

Describe _____

17. Source of water (attach analysis): PW #2

E. Bentonite seal, top 794.8 ft. MSL or 92.0 ft.

F. Fine sand, top NA ft. MSL or NA ft.

G. Filter pack, top 787.3 ft. MSL or 99.5 ft.

H. Well screen, top 778.8 ft. MSL or 108.0 ft.

I. Well screen, bottom 758.8 ft. MSL or 128.0 ft.

J. Filter pack, bottom 758.8 ft. MSL or 128.0 ft.

K. Borehole, bottom 756.8 ft. MSL or 130.0 ft.

L. Borehole, diameter 9.5 in.

M. O.D. well casing 4.5 in.

N. I.D. well casing 4.0 in.

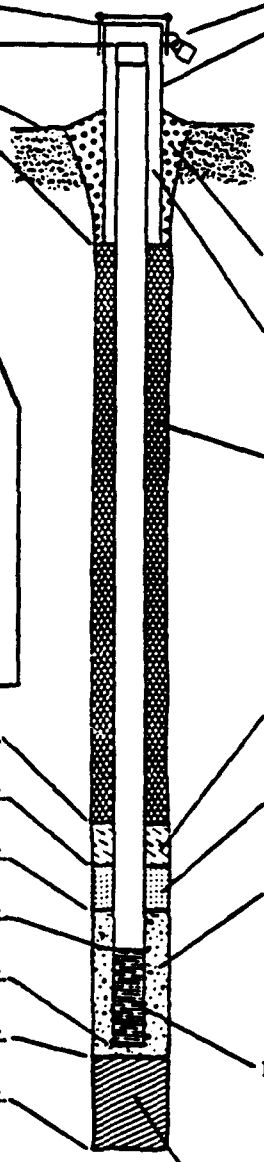

1. Cap and lock? ☒ Yes ☐ No

2. Protective cover pipe:
a. Inside diameter: 6.0 in
b. Length: 2.0 ft
c. Material: Steel ☒ 04; Other ☐ __
d. Additional protection? ☒ Yes ☐ No
If yes, describe: 4 bucking Posts

3. Surface seal: Bentonite ☐ 30; Concrete ☐ 0[illegible]; Other ☒ Grout

4. Material between well casing and protective pipe: Bentonite ☐ 30; Annular space seal ☐; Other ☒ Grout

5. Annular space seal: Granular Bentonite ☒ [illegible]3
____ Lbs/gal mud weight . . . Bentonite-sand slurry ☒ [illegible]
____ Lbs/gal mud weight . . . . . Bentonite slurry ☐ 3[illegible]
5 % Bentonite . . . . . Bentonite-cement grout ☒ 50
± 250 gal ft³ volume added for any of the above
How installed: Tremie ☐ 0[illegible]; Tremie pumped ☐ 02; Gravity ☐ 08

6. Bentonite seal: Bentonite granules ☐ 3[illegible]
☐ 1/4 in. ☒ 3/8 in. ☐ 1/2 in. Bentonite pellets ☒ 3[illegible]
Other ☐ __

7. Fine sand material: Manufacturer, product name and mesh size NA
Volume added NA ft³

8. Filter pack material: Manufacturer, product name and mesh size Red Flint, Silica Filter Sand
Volume added ≈ 3.1 ft³

9. Well casing: Flush threaded PVC schedule 40 ☐ 23; Flush threaded PVC schedule 80 ☒ 2[illegible]; Other ☐ __

10. Screen material: schedule 80 PVC
Screen type: Factory cut ☒ 11; Continuous slot ☐ 01; Other ☐ __
Manufacturer Timco
Slot size: 0.010 in
Slotted length: 20.0 ft

11. Backfill material (below filter pack): None ☐ [illegible]; Other ☒ Natural Cave

I hereby certify that the information on this form is true and correct to the best of my knowledge.

Signature	Firm
[signature]	E.C. Jordan Co.

Please complete and return both sides of this form as required by chs. 144, 147 and 160, Wis. Stats., and ch. NR 141, Wis. Adm. Code. In accordance with ch. 144, Wis Stats., failure to file this form may result in a forfeiture of not less than $10, nor more than $5,000 for each day of violation. In accordance with ch. 147, Wis. Stats., failure to file this form may result in a forfeiture of not more than $10,000 for each day of violation.

State of Wisconsin
Department of Natural Resources

MONITORING WELL CONSTRUCTION
Form 4400-113A 8-89

Facility/Project Name: Badger Army Ammunition Plant	Grid Location: 4,802,839.4 ft. ☒ N. ☐ S. / 272,282.1 ft. ☒ E. ☐ W.	Well Name: PBN-89-10B
Facility License, Permit or Monitoring Number:		Wis. Unique Well Number: DNR Well Number:
Type of Well: Water Table Observation Well ☐ 11; Piezometer ☒ 12	Section Location: ____ 1/4 of ____ 1/4 of Section ____, T ____ N, R ____ ☐ E ☐ W	Date Well Installed: 02/28/89 (m m / d d / y y)
Distance Well Is From Waste/Source Boundary: NA ft.	Location of Well Relative to Waste/Source: ☐ Upgradient ☐ Sidegradient ☐ Downgradient ☐ Not Known	Well Installed By: (Person's Name and Firm): Dave H. Belan / E.C. Jordan Co.
Is Well A Point of Enforcement Std. Application? ☐ Yes ☒ No		

A. Protective pipe, top elevation 891.99 ft. MSL
B. Well casing, top elevation 891.81 ft. MSL
C. Land surface elevation 889.1 ft. MSL
D. Surface seal, bottom ____ ft. MSL or ____ ft.

12. USCS classification of soil near screen:
☐ GP ☐ GM ☐ GC ☐ GW ☐ SW ☒ SP
☐ SM ☐ SC ☐ ML ☐ MH ☐ CL ☐ CH
☐ Bedrock

13. Sieve analysis attached? ☐ Yes ☒ No

14. Drilling method used: Rotary ☐ 50; Hollow Stem Auger ☐ 41; Other ☒ ____
Dual Wall

15. Drilling fluid used: Water ☐ 02; Air ☒ 01; Drilling Mud ☐ 03; None ☐ 99

16. Drilling additives used? ☐ Yes ☒ No

Describe ____

17. Source of water (attach analysis):
PW #2

E. Bentonite seal, top 740.1 ft. MSL or 149.0 ft.
F. Fine sand, top NA ft. MSL or NA ft.
G. Filter pack, top 735.1 ft. MSL or 154.0 ft.
H. Well screen, top 727.1 ft. MSL or 161.2 ft.
I. Well screen, bottom 723.4 ft. MSL or 166.7 ft.
J. Filter pack, bottom 722.4 ft. MSL or 166.7 ft.
K. Borehole, bottom 722.4 ft. MSL or 166.7 ft.
L. Borehole, diameter 9.5 in.
M. O.D. well casing 4.6 in.
N. I.D. well casing 4.0 in.

1. Cap and lock? ☒ Yes ☐ No
2. Protective cover pipe:
a. Inside diameter: 6.0 in.
b. Length: 2.0 ft.
c. Material: Steel ☒ 04; Other ☐ ____
d. Additional protection? ☒ Yes ☐ No
If yes, describe: 4 bucking posts
3. Surface seal: Bentonite ☐ 30; Concrete ☐ 01; Other ☒ ____
Grout
4. Material between well casing and protective pipe: Bentonite ☐ 30; Annular space seal ☐; Other ☒ ____
Grout
5. Annular space seal: Granular Bentonite ☐ 33
____ Lbs/gal mud weight ... Bentonite-sand slurry ☐ 35
____ Lbs/gal mud weight ..... Bentonite slurry ☐ 31
5 % Bentonite .... Bentonite-cement grout ☒ 50
± 400 gal/ft³ volume added for any of the above
How installed: Tremie ☐ 01; Tremie pumped ☒ 02; Gravity ☐ 08
6. Bentonite seal: Bentonite granules ☐ 33
☐ 1/4 in. ☒ 3/8 in. ☐ 1/2 in. Bentonite pellets ☒ 32; Other ☐ ____
7. Fine sand material: Manufacturer, product name and mesh size
NA
Volume added NA ft³
8. Filter pack material: Manufacturer, product name and mesh size
Red Flint, Silica Filter Sand
Volume added ≈ 64 ft³
9. Well casing: Flush threaded PVC schedule 40 ☐ 23; Flush threaded PVC schedule 80 ☒ 24; Other ☐ ____
10. Screen material: schedule 80 PVC
Screen type: Factory cut ☒ 11; Continuous slot ☐ 01; Other ☐ ____
Manufacturer Timco
Slot size: 0.010 in.
Slotted length: 5.0 ft.
11. Backfill material (below filter pack): None ☒; Other ☐ ____

I hereby certify that the information on this form is true and correct to the best of my knowledge.

Signature: [signature] Firm: E.C Jordan Co.

Please complete and return both sides of this form as required by chs. 144, 147 and 160, Wis. Stats., and ch. NR 141, Wis. Adm. Code. In accordance with ch. 144, Wis Stats., failure to file this form may result in a forfeiture of not less than $10, nor more than $5,000 for each day of violation. In accordance with ch. 147, Wis. Stats., failure to file this form may result in a forfeiture of not more than $10,000 for each day of violation.

State of Wisconsin
Department of Natural Resources

MONITORING WELL CONSTRUCTION
Form 4400-113A 8-89

Facility/Project Name: Badger Army Ammunition Plant	Grid Location: 4,502,838.4 ft. ☒ N. ☐ S. / 277,259.1 ft. ☒ E. ☐ W.	Well Name: PBW-89-10C
Facility License, Permit or Monitoring Number:		Wis. Unique Well Number / DNR Well Numb
Type of Well: Water Table Observation Well ☐ 11; Piezometer ☒ 12	Section Location: ____ 1/4 of ____ 1/4 of Section ____, T ____ N, R ____ ☐ E ☐ W	Date Well Installed: 02/03/89 (m m d d y y)
Distance Well Is From Waste/Source Boundary: NA ft.	Location of Well Relative to Waste/Source: ☐ Upgradient ☐ Sidegradient ☐ Downgradient ☐ Not Known	Well Installed By: (Person's Name and Firm): Dave A. Beken / E.C. Jordan Co
Is Well A Point of Enforcement Std. Applicaton? ☐ Yes ☒ No		

A. Protective pipe, top elevation 881.04 ft. MSL
B. Well casing, top elevation 881.00 ft. MSL
C. Land surface elevation 884.2 ft. MSL
D. Surface seal, bottom ____ ft. MSL or ____ ft.

12. USCS classification of soil near screen:
☐ GP ☐ GM ☐ GC ☐ GW ☐ SW ☒ SP
☐ SM ☐ SC ☐ ML ☐ MH ☐ CL ☐ CH
☐ Bedrock

13. Sieve analysis attached? ☐ Yes ☐ No

14. Drilling method used: Rotary ☐ 50; Hollow Stem Auger ☐ 41; Other ☒ —
Direct Push

15. Drilling fluid used: Water ☐ 02; Air ☐ 01; Drilling Mud ☐ 03; None ☐ 99

16. Drilling additives used? ☐ Yes ☒ No

Describe ____

17. Source of water (attach analysis):
PW #2

E. Bentonite seal, top 707.2 ft. MSL or 177.0 ft.
F. Fine sand, top NA ft. MSL or NA ft.
G. Filter pack, top 702.2 ft. MSL or 182.0 ft.
H. Well screen, top 697.7 ft. MSL or 187.0 ft.
I. Well screen, bottom 692.7 ft. MSL or 192.0 ft.
J. Filter pack, bottom 692.7 ft. MSL or 192.0 ft.
K. Borehole, bottom 679.7 ft. MSL or 205 ft.
L. Borehole, diameter 9.5 in.
M. O.D. well casing 4.5 in.
N. I.D. well casing 4.0 in.

1. Cap and lock? ☒ Yes ☐ No
2. Protective cover pipe:
a. Inside diameter: 6.0 in
b. Length: 7.0 ft
c. Material: Steel ☒ 04; Other ☐ __
d. Additional protection? ☒ Yes ☐ No
If yes, describe: 4 bucking Posts
3. Surface seal: Bentonite ☐ 30; Concrete ☐ 01; Other ☒ __
Grout
4. Material between well casing and protective pipe: Bentonite ☐ 30; Annular space seal ☐; Other ☒ __
Grout
5. Annular space seal: Granular Bentonite ☐ 03
____ Lbs/gal mud weight . . . Bentonite-sand slurry ☐ 05
____ Lbs/gal mud weight . . . . . Bentonite slurry ☐ 31
5 % Bentonite . . . . Bentonite-cement grout ☒ 50
± 1100 gal/ft³ volume added for any of the above
How installed: Tremie ☐ 01; Tremie pumped ☒ 02; Gravity ☐ 08
6. Bentonite seal: Bentonite granules ☐ 33
☐ 1/4 in. ☒ 3/8 in. ☐ 1/2 in. Bentonite pellets ☒ 32
____ Other ☐ __
7. Fine sand material: Manufacturer, product name and mesh size
NA
Volume added NA ft³
8. Filter pack material: Manufacturer, product name and mesh size
Red Flint, Silica Filter Sand
Volume added ≈ 1.1 ft³
9. Well casing: Flush threaded PVC schedule 40 ☐ 23; Flush threaded PVC schedule 80 ☒ 24
____ Other ☐ __
10. Screen material: Schedule 80 PVC
Screen type: Factory cut ☒ 11; Continuous slot ☐ 01
____ Other ☐ __
Manufacturer Timco
Slot size: 0.010 in.
Slotted length: 5.0 ft.
11. Backfill material (below filter pack): None ☐
Native cave Other ☒

I hereby certify that the information on this form is true and correct to the best of my knowledge.

Signature: Paul L. Bol Firm: E.C. Jordan Co.

Please complete and return both sides of this form as required by chs. 144, 147 and 160, Wis. Stats., and ch. NR 141, Wis. Adm. Code. In accordance with ch. 144, Wis Stats., failure to file this form may result in a forfeiture of not less than $10, nor more than $5,000 for each day of violation. In accordance with ch. 147, Wis. Stats., failure to file this form may result in a forfeiture of not more than $10,000 for each day of violation.

State of Wisconsin
Department of Natural Resources

MONITORING WELL CONSTRUCTION
Form 4400-113A 8-89

Facility/Project Name: Badger Army Ammunition Plant	Grid Location: 4,602,635.9 M ft. ☒ N. ☐ S. 272,226.0 ft. ☒ E. ☐ W.	Well Name: PBW-89-100
Facility License, Permit or Monitoring Number:		Wis. Unique Well Number: DNR Well Number:
Type of Well: Water Table Observation Well ☐ 11; Piezometer ☒ 12	Section Location: ____ 1/4 of ____ 1/4 of Section ____, T ____ N, R ____ ☐ E ☐ W	Date Well Installed: 04/22/89 (m m d d y y)
Distance Well Is From Waste/Source Boundary: NA ft.	Location of Well Relative to Waste/Source: ☐ Upgradient ☐ Sidegradient ☐ Downgradient ☐ Not Known	Well Installed By: (Person's Name and Firm) Christian Moore / E.C. Jordan Co.
Is Well A Point of Enforcement Std. Application? ☐ Yes ☒ No		

A. Protective pipe, top elevation 884.39 ft. MSL
B. Well casing, top elevation 884.25 ft. MSL
C. Land surface elevation 880.9 ft. MSL
D. Surface seal, bottom ____ ft. MSL or ____ ft.

12. USCS classification of soil near screen:
☐ GP ☐ GM ☐ GC ☐ GW ☐ SW ☒ SP
☐ SM ☐ SC ☐ ML ☐ MH ☐ CL ☐ CH
☐ Bedrock

13. Sieve analysis attached? ☐ Yes ☒ No

14. Drilling method used: Rotary ☐ 50; Hollow Stem Auger ☐ 41; Other ☒ ___
Dual Wall

15. Drilling fluid used: Water ☐ 02; Air ☒ 01; Drilling Mud ☐ 03; None ☐ 99

16. Drilling additives used? ☐ Yes ☒ No
Describe ____

17. Source of water (attach analysis):
PW #2

E. Bentonite seal, top 691.9 ft. MSL or 213 ft.
F. Fine sand, top NA ft. MSL or NA ft.
G. Filter pack, top 659.9 ft. MSL or 221.0 ft.
H. Well screen, top 648.9 ft. MSL or 232.0 ft.
I. Well screen, bottom 643.9 ft. MSL or 237.0 ft.
J. Filter pack, bottom 643.9 ft. MSL or 232.0 ft.
K. Borehole, bottom 625.9 ft. MSL or 255.0 ft.
L. Borehole, diameter 9.5 in.
M. O.D. well casing 4.5 in.
N. I.D. well casing 4.0 in.

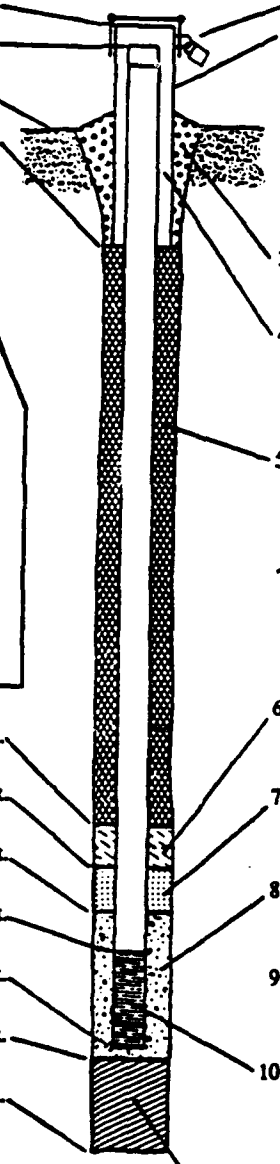

1. Cap and lock? ☒ Yes ☐ No
2. Protective cover pipe:
a. Inside diameter: 6.0 in.
b. Length: 7.0 ft.
c. Material: Steel ☒ 04; Other ☐ ____
d. Additional protection? ☒ Yes ☐ No
If yes, describe: 4 bucking Posts
3. Surface seal: Bentonite ☐ 30; Concrete ☐ 01; Other ☒ ____
Grout
4. Material between well casing and protective pipe: Bentonite ☐ 30; Annular space seal ☐; Other ☒ ____
Grout
5. Annular space seal: Granular Bentonite ☐ 33
____ Lbs/gal mud weight ... Bentonite-sand slurry ☐ 35
____ Lbs/gal mud weight ..... Bentonite slurry ☐ 31
5 % Bentonite .... Bentonite-cement grout ☒ 50
± 580 gal/ft³ volume added for any of the above
How installed: Tremie ☐ 01; Tremie pumped ☒ 02; Gravity ☐ 08
6. Bentonite seal: Bentonite granules ☐ 33
☐ 1/4 in. ☒ 3/8 in. ☐ 1/2 in. Bentonite pellets ☒ 32
Other ☐ ____
7. Fine sand material: Manufacturer, product name and mesh size
NA
Volume added NA ft³
8. Filter pack material: Manufacturer, product name and mesh size
Red Flint Silica Filter Sand
Volume added ≈ 1.8 ft³
9. Well casing: Flush threaded PVC schedule 40 ☐ 23; Flush threaded PVC schedule 80 ☒ 24; Other ☐ ____
10. Screen material: Schedule 40 PVC
Screen type: Factory cut ☒ 11; Continuous slot ☐ 01; Other ☐ ____
Manufacturer Timco
Slot size: 0.010 in.
Slotted length: 5.0 ft.
11. Backfill material (below filter pack): None ☐; Other ☐ ____

I hereby certify that the information on this form is true and correct to the best of my knowledge.

Signature: [signature] Firm: E.C Jordan Co.

Please complete and return both sides of this form as required by chs. 144, 147 and 160, Wis. Stats., and ch. NR 141, Wis. Adm. Code. In accordance with ch. 144, Wis Stats., failure to file this form may result in a forfeiture of not less than $10, nor more than $5,000 for each day of violation. In accordance with ch. 147, Wis. Stats., failure to file this form may result in a forfeiture of not more than $10,000 for each day of violation.

State of Wisconsin
Department of Natural Resources

MONITORING WELL CONSTRUCTION
Form 4400-113A 8-89

Facility/Project Name	Grid Location	Well Name
Badger Army Ammunition Plant	4,803,527.2 M ☒ N. ☐ S.	PBM-89-11
Facility License, Permit or Monitoring Number	277,261.9 M ☒ E. ☐ W.	Wis. Unique Well Number / DNR Well Number
Type of Well: Water Table Observation Well ☒ 11; Piezometer ☐ 12	Section Location: ____ 1/4 of ____ 1/4 of Section ____, T ____ N, R ____ ☐ E ☐ W	Date Well Installed: 03/07/89 (m m / d d / y y)
Distance Well Is From Waste/Source Boundary: NA ft.	Location of Well Relative to Waste/Source: ☐ Upgradient ☐ Sidegradient ☐ Downgradient ☐ Not Known	Well Installed By: (Person's Name and Firm) John Snowden / E.C. Jordan Co.
Is Well A Point of Enforcement Std. Application? ☐ Yes ☒ No		

A. Protective pipe, top elevation 884.49 ft. MSL

B. Well casing, top elevation 884.41 ft. MSL

C. Land surface elevation 881.6 ft. MSL

D. Surface seal, bottom ____ ft. MSL or ____ ft.

12. USCS classification of soil near screen:
☐ GP ☐ GM ☐ GC ☐ GW ☐ SW ☒ SP
☐ SM ☐ SC ☐ ML ☐ MH ☐ CL ☐ CH
☐ Bedrock

13. Sieve analysis attached? ☐ Yes ☒ No

14. Drilling method used: Rotary ☐ 50; Hollow Stem Auger ☒ 41; Other ☐

15. Drilling fluid used: Water ☐ 02; Air ☐ 01; Drilling Mud ☐ 03; None ☒ 99

16. Drilling additives used? ☐ Yes ☒ No

Describe ____

17. Source of water (attach analysis): PW #2

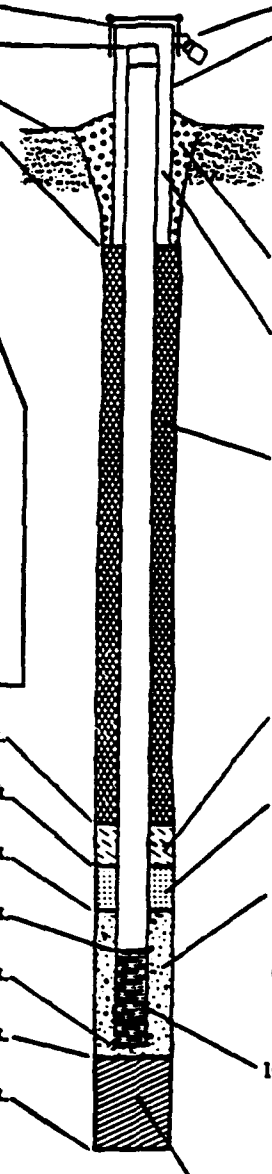

E. Bentonite seal, top 804.6 ft. MSL or 77.0 ft.

F. Fine sand, top NA ft. MSL or NA ft.

G. Filter pack, top 799.6 ft. MSL or 82.0 ft.

H. Well screen, top 790.6 ft. MSL or 91.0 ft.

I. Well screen, bottom 770.6 ft. MSL or 111.0 ft.

J. Filter pack, bottom 770.6 ft. MSL or 111.0 ft.

K. Borehole, bottom 751.6 ft. MSL or 130 ft.

L. Borehole, diameter 9.5 in.

M. O.D. well casing 4.5 in.

N. I.D. well casing 4.0 in.

1. Cap and lock? ☒ Yes ☐ No

2. Protective cover pipe:
a. Inside diameter: 6.0 in
b. Length: 7.0 ft
c. Material: Steel ☒ 04; Other ☐ __
d. Additional protection? ☒ Yes ☐ No
If yes, describe: 4 backing Ports

3. Surface seal: Bentonite ☐ 30; Concrete ☐ 01; Other ☒ Grout

4. Material between well casing and protective pipe: Bentonite ☐ 30; Annular space seal ☐; Other ☒ Grout

5. Annular space seal: Granular Bentonite ☐ 33
____ Lbs/gal mud weight . . . Bentonite-sand slurry ☐ 35
____ Lbs/gal mud weight . . . . . Bentonite slurry ☐
5 % Bentonite . . . . . Bentonite-cement grout ☒ 50
≈ 210 gal ft³ volume added for any of the above
How installed: Tremie ☐ 01; Tremie pumped ☒ 02; Gravity ☐ 08

6. Bentonite seal: Bentonite granules ☐ 33
☐ 1/4 in. ☒ 3/8 in. ☐ 1/2 in. Bentonite pellets ☒ 32; Other ☐ __

7. Fine sand material: Manufacturer, product name and mesh size NA
Volume added NA ft³

8. Filter pack material: Manufacturer, product name and mesh size Red Flint, Silica Filter Sand
Volume added ≈ 3.2 ft³

9. Well casing: Flush threaded PVC schedule 40 ☐ 23; Flush threaded PVC schedule 80 ☒ 24; Other ☐ __

10. Screen material: Schedule 80 PVC
Screen type: Factory cut ☒ 11; Continuous slot ☐ 01; Other ☐ __
Manufacturer Timco
Slot size: 0.010 in.
Slotted length: 20.0 ft.

11. Backfill material (below filter pack): None ☐; Other ☒ Natural Cave

I hereby certify that the information on this form is true and correct to the best of my knowledge.

Signature	Firm
[signature]	E.C. Jordan Co.

Please complete and return both sides of this form as required by chs. 144, 147 and 160, Wis. Stats., and ch. NR 141, Wis. Adm. Code. In accordance with ch. 144, Wis Stats., failure to file this form may result in a forfeiture of not less than $10, nor more than $5,000 for each day of violation. In accordance with ch. 147, Wis. Stats., failure to file this form may result in a forfeiture of not more than $10,000 for each day of violation.

State of Wisconsin
Department of Natural Resources

MONITORING WELL CONSTRUCTION
Form 4400-113A 8-89

Facility/Project Name: Badger Army Ammunition Plant
Facility License, Permit or Monitoring Number: _____

Grid Location: 4,501,376.2 m N. ☒ N. ☐ S.
277,058.9 m E. ☒ E. ☐ W.

Well Name: PBN-89-12A
Wis. Unique Well Number: _____ DNR Well Number: _____

Type of Well: Water Table Observation Well ☒ 11
Piezometer ☐ 12

Section Location: _____ 1/4 of _____ 1/4 of Section _____, T _____ N, R _____ ☐ E ☐ W

Date Well Installed: 02/02/89 (m m / d d / y y)

Distance Well Is From Waste/Source Boundary: NA ft.

Well Installed By: (Person's Name and Firm): Brenin Butler / E.C. Jordan Co.

Is Well A Point of Enforcement Std. Application? ☐ Yes ☒ No

Location of Well Relative to Waste/Source: ☐ Upgradient ☐ Sidegradient ☐ Downgradient ☐ Not Known

A. Protective pipe, top elevation: 855.21 ft. MSL
B. Well casing, top elevation: 855.66 ft. MSL
C. Land surface elevation: 853.6 ft. MSL
D. Surface seal, bottom: _____ ft. MSL or _____ ft.

12. USCS classification of soil near screen:
☐ GP ☐ GM ☐ GC ☐ GW ☐ SW ☒ SP
☐ SM ☐ SC ☐ ML ☐ MH ☐ CL ☐ CH
☐ Bedrock

13. Sieve analysis attached? ☐ Yes ☒ No

14. Drilling method used: Rotary ☐ 50; Hollow Stem Auger ☒ 41; Other ☐ ___

15. Drilling fluid used: Water ☐ 02; Air ☐ 01; Drilling Mud ☐ 03; None ☒ 99

16. Drilling additives used? ☐ Yes ☒ No

Describe _____

17. Source of water (attach analysis): PW #2

E. Bentonite seal, top: 781.2 ft. MSL or 70.9 ft.
F. Fine sand, top: NA ft. MSL or NA ft.
G. Filter pack, top: 776.5 ft. MSL or 76.1 ft.
H. Well screen, top: 771.9 ft. MSL or 80.7 ft.
I. Well screen, bottom: 751.9 ft. MSL or 100.7 ft.
J. Filter pack, bottom: 754.6 ft. MSL or 98.0 ft.
K. Borehole, bottom: 747.6 ft. MSL or 105.0 ft.
L. Borehole, diameter: 9.5 in.
M. O.D. well casing: 4.5 in.
N. I.D. well casing: 4.0 in.

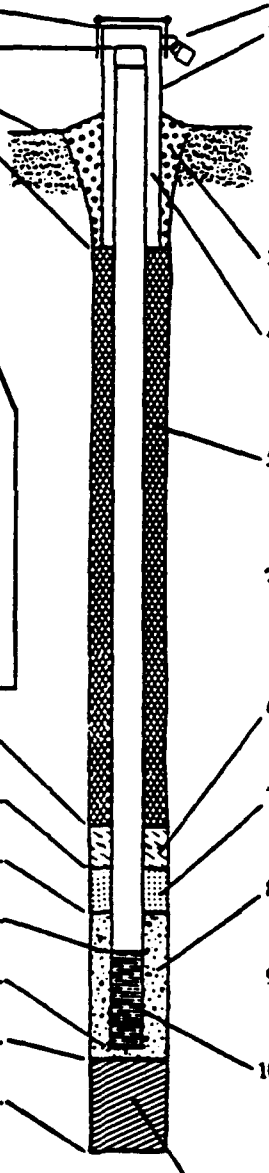

1. Cap and lock? ☒ Yes ☐ No
2. Protective cover pipe:
a. Inside diameter: 6.0 in.
b. Length: 2.0 ft.
c. Material: Steel ☒ 04; Other ☐ __
d. Additional protection? ☒ Yes ☐ No
If yes, describe: 4 bucking Rods
3. Surface seal: Bentonite ☐ 30; Concrete ☐ 01; Other ☒ __ (Grout)
4. Material between well casing and protective pipe: Bentonite ☐ 30; Annular space seal ☐; Other ☒ __ (Grout)
5. Annular space seal: Granular Bentonite ☐ 33
_____ Lbs/gal mud weight . . . Bentonite-sand slurry ☐ 35
_____ Lbs/gal mud weight . . . . . Bentonite slurry ☐ 31
5 % Bentonite . . . . Bentonite-cement grout ☒ 50
± 800 gal volume added for any of the above
How installed: Tremie ☐ 01; Tremie pumped ☒ 02; Gravity ☐ 08
6. Bentonite seal: Bentonite granules ☐ 33
☐ 1/4 in. ☒ 3/8 in. ☐ 1/2 in. Bentonite pellets ☒ 32
Other ☐ __
7. Fine sand material: Manufacturer, product name and mesh size: NA
Volume added: NA ft³
8. Filter pack material: Manufacturer, product name and mesh size: Red Flint, Silica Filter Sand
Volume added: ± 2.4 ft³
9. Well casing: Flush threaded PVC schedule 40 ☐ 23; Flush threaded PVC schedule 80 ☒ 24; Other ☐ __
10. Screen material: Schedule 80 PVC
Screen type: Factory cut ☒ 11; Continuous slot ☐ 01; Other ☐ __
Manufacturer: Timco
Slot size: 0.010 in.
Slotted length: 20.0 ft.
11. Backfill material (below filter pack): None ☐; Other ☒ (Native Cave)

I hereby certify that the information on this form is true and correct to the best of my knowledge.

Signature: _____ Firm: E.C. Jordan Co.

Please complete and return both sides of this form as required by chs. 144, 147 and 160, Wis. Stats., and ch. NR 141, Wis. Adm. Code. In accordance with ch. 144, Wis Stats., failure to file this form may result in a forfeiture of not less than $10, nor more than $5,000 for each day of violation. In accordance with ch. 147, Wis. Stats., failure to file this form may result in a forfeiture of not more than $10,000 for each day of violation.

State of Wisconsin
Department of Natural Resources

MONITORING WELL CONSTRUCTION
Form 4400-113A 8-89

Facility/Project Name: Badger Army Ammunition Plant	Grid Location: 4,801,368.5 m ft ☒ N. ☐ S. / 277,058.5 m ft ☒ E. ☐ W.	Well Name: PBW-89-12B
Facility License, Permit or Monitoring Number: _____		Wis. Unique Well Number: _____ DNR Well Number: _____
Type of Well: Water Table Observation Well ☐ 11; Piezometer ☒ 12	Section Location: ____ 1/4 of ____ 1/4 of Section ____, T ____ N, R ____ ☐ E ☐ W	Date Well Installed: 04/15/89 (m m / d d / y y)
Distance Well Is From Waste/Source Boundary: NA ft.		Well Installed By: (Person's Name and Firm) Jim Buss / E.C Jordan Co
Is Well A Point of Enforcement Std. Application? ☐ Yes ☒ No	Location of Well Relative to Waste/Source: ☐ Upgradient ☐ Sidegradient ☐ Downgradient ☐ Not Known	

A. Protective pipe, top elevation 856.33 ft. MSL

B. Well casing, top elevation 856.04 ft. MSL

C. Land surface elevation 852.6 ft. MSL

D. Surface seal, bottom _____ ft. MSL or ____ ft.

12. USCS classification of soil near screen:
☐ GP ☐ GM ☐ GC ☐ GW ☐ SW ☒ SP
☐ SM ☐ SC ☐ ML ☐ MH ☐ CL ☐ CH
☐ Bedrock

13. Sieve analysis attached? ☐ Yes ☒ No

14. Drilling method used: Rotary ☐ 50; Hollow Stem Auger ☐ 41; Other ☒ Dual Wall

15. Drilling fluid used: Water ☐ 02; Air ☒ 01; Drilling Mud ☐ 03; None ☐ 99

16. Drilling additives used? ☐ Yes ☒ No

Describe _____

17. Source of water (attach analysis): PW #2

E. Bentonite seal, top 738.6 ft. MSL or 114.0 ft.

F. Fine sand, top NA ft. MSL or NA ft.

G. Filter pack, top 728.6 ft. MSL or 124.0 ft.

H. Well screen, top 719.6 ft. MSL or 133.0 ft.

I. Well screen, bottom 714.6 ft. MSL or 138.0 ft.

J. Filter pack, bottom 714.6 ft. MSL or 138.0 ft.

K. Borehole, bottom 712.6 ft. MSL or 140.0 ft.

L. Borehole, diameter 9.5 in.

M. O.D. well casing 4.5 in.

N. I.D. well casing 4.0 in.

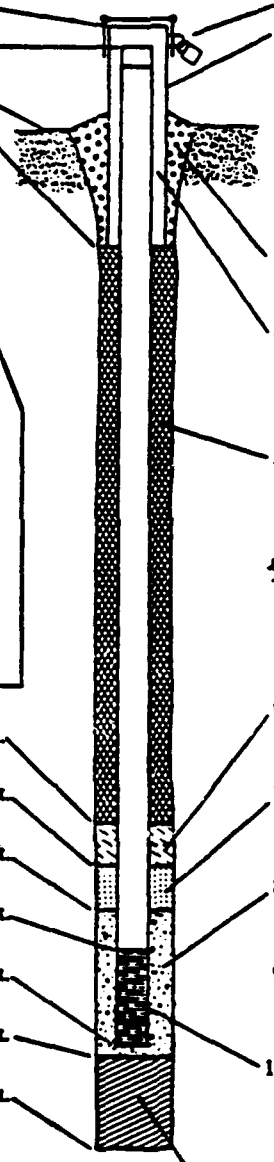

1. Cap and lock? ☒ Yes ☐ No

2. Protective cover pipe:
a. Inside diameter: 6.0 in.
b. Length: 2.0 ft
c. Material: Steel ☒ 04; Other ☐ __
d. Additional protection? ☒ Yes ☐ No
If yes, describe: 4 bucking Posts

3. Surface seal: Bentonite ☐ 30; Concrete ☐ 0[illegible]; Other ☒ Grout

4. Material between well casing and protective pipe: Bentonite ☐ 30; Annular space seal ☐; Other ☒ Grout

5. Annular space seal: Granular Bentonite ☐ 33
____ Lbs/gal mud weight . . . Bentonite-sand slurry ☐ 3[illegible]
____ Lbs/gal mud weight . . . . . Bentonite slurry ☐
5 % Bentonite . . . . . Bentonite-cement grout ☒ 50
± 300 gal ft³ volume added for any of the above
How installed: Tremie ☐ 01; Tremie pumped ☒ 02; Gravity ☐ 08

6. Bentonite seal: Bentonite granules ☐ 33
☐ 1/4 in. ☒ 3/8 in. ☐ 1/2 in. Bentonite pellets ☒ 32; Other ☐ __

7. Fine sand material: Manufacturer, product name and mesh size NA
Volume added NA ft³

8. Filter pack material: Manufacturer, product name and mesh size Red Flint, Silica Filter Sand
Volume added ≈ 1.5 ft³

9. Well casing: Flush threaded PVC schedule 40 ☐ 23; Flush threaded PVC schedule 80 ☒ 24; Other ☐ __

10. Screen material: Schedule 80 PVC
Screen type: Factory cut ☒ 11; Continuous slot ☐ 01; Other ☐ __
Manufacturer Timco
Slot size: 0.010 in.
Slotted length: 5.0 ft.

11. Backfill material (below filter pack): None ☐; Other ☒ Native cave

I hereby certify that the information on this form is true and correct to the best of my knowledge.

Signature [signature] Firm E. C Jordan Co.

Please complete and return both sides of this form as required by chs. 144, 147 and 160, Wis. Stats., and ch. NR 141, Wis. Adm. Code. In accordance with ch. 144, Wis Stats., failure to file this form may result in a forfeiture of not less than $10, nor more than $5,000 for each day of violation. In accordance with ch. 147, Wis. Stats., failure to file this form may result in a forfeiture of not more than $10,000 for each day of violation.

US ARMY ENVIRONMENTAL HYGIENE AGENCY
GROUNDWATER MONITOR WELL SUMMARY

PROJECT Badger AAP DATE 9 Sep - 9 Oct 85

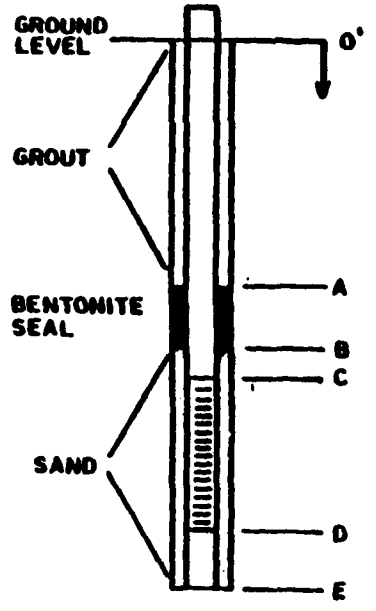

A - TOP OF BENTONITE SEAL
B - TOP OF SAND
C - TOP OF WELL SCREEN
D - TOP OF SEDIMENT TRAP
E - TOTAL WELL DEPTH

All measurements in feet except as noted

WELL NO.	PBN-85-01A	PBN-85-02A	PBN-85-03A	PBN-85-04A			
A	35.0	60.0	66.0	84.0			
B	41.0*	66.0	72.0	90.0			
C	108.7	125.1	81.7	99.5			
D	117.7	134.1	90.7	108.5			
E	118.7	135.1	91.7	109.5			
GROUT THICKNESS	35.0	60.0	66.0	84.0			
BENTONITE SEAL THICKNESS	6.0	6.0	6.0	6.0			
LENGTH OF Steel STANDPIPE	3.6	3.4	3.3	3.3			
LENGTH OF SCREEN	9.0	9.0	9.0	9.0			
LENGTH OF SEDIMENT TRAP	1.0	1.0	1.0	1.0			
SCREEN SLOT SIZE (IN)	.010	.010	.010	.010			
Water Level from Top Steel Casing	102.4	127.5	79.2	90.1			
Water Level from Ground Surface	98.8	124.1	75.9	86.8			
Elevation Top Steel Casing	873.11	892.60	849.76	858.39			
REMARKS	*Gravel and cobbles collapsed into the borehole						

Geohydrologic Study No. 38-26-0504-86, Badger AAP, WI, 9 Sep - 9 Oct 85

US ARMY ENVIRONMENTAL HYGIENE AGENCY
GROUNDWATER MONITOR WELL SUMMARY

PROJECT Badger AAP DATE 9 Sep - 9 Oct 85

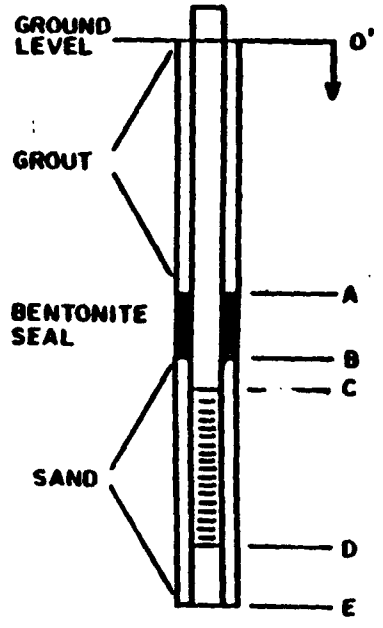

A - TOP OF BENTONITE SEAL
B - TOP OF SAND
C - TOP OF WELL SCREEN
D - TOP OF SEDIMENT TRAP
E - TOTAL WELL DEPTH

All measurements in feet except as noted

WELL NO.	PBM-85-01	PBM-85-02	PBM-85-03	PBM-85-04	PBM-85-05	PBM-85-06	
A	36.0	31.0	63.0	88.0	77.0	67.0	
B	42.0*	40.0*	70.0*	94.0	83.0	73.0	
C	108.4	88.9	135.7	112.0	94.9	85.2	
D	11..	97.9	144.7	121.0	103.9	94.2	
E	118.4	98.9	145.7	122.0	104.9	95.2	
GROUT THICKNESS	36.0	31.0	63.0	88.0	77.0	67.0	
BENTONITE SEAL THICKNESS	6.0	9.0	7.0	6.0	6.0	6.0	
LENGTH OF Steel STANDPIPE	3.9	3.3	3.4	3.7	3.6	3.3	
LENGTH OF SCREEN	9.0	9.0	9.0	9.0	9.0	9.0	
LENGTH OF SEDIMENT TRAP	1.0	1.0	1.0	1.0	1.0	1.0	
SCREEN SLOT SIZE (IN)	.010	.010	.010	.010	.010	.010	
Water Level from Top Steel Casing	90.5	77.0	114.2	95.9	94.1	79.5	
Water Level from Ground Surface	86.6	73.7	110.8	92.2	90.5	76.2	
Elevation Top Steel Casing	861.72	847.80	884.75	865.74	863.23	846.78	
REMARKS	*Gravel and cobbles collapsed into the borehole						

AEHA Form 93, 1 Aug 81 (HSE-ES)

Geohydrologic Study No. 38-26-0504-86, Badger AAP, WI, 9 Sep - 9 Oct 85

WELL CONSTRUCTION FORMS

Background Wells

BGM-91-01
BGM-91-02
BGM-91-03

Propellant Burning Ground

PBP-91-01B
PBP-91-01C
PBP-91-01D
PBP-91-02B
PBP-91-02C
PBP-91-02D
PBN-91-06C
PBN-91-06D
PBN-91-12C
PBN-91-12D
PBN-89-01B
PBN-89-01C
PBN-89-01D
PBN-89-02B
PBN-89-02C
PBN-89-03B
PBN-89-03C
PBN-89-04B
PBN-89-04C
PBM-89-05
PBM-89-06
PBM-89-07
PBM-89-08
PBM-89-09
PBN-89-10A
PBN-89-10B
PBN-89-10C
PBN-89-10D
PBM-89-11
PBN-89-12A
PBN-89-12B
PBM-85-01
PBM-85-02
PBM-85-03
PBM-85-04
PBM-85-05
PBM-85-06
PBN-85-01A
PBN-85-02A
PBN-85-03A
PBN-85-04A
PBM-82-01
PBM-82-02
PBM-82-03
PBM-82-04
PBM-82-05
PBN-82-01A
PBN-82-01B
PBN-82-01C
PBN-82-02A
PBN-82-02B
PBN-82-02C
PBN-82-03A
PBN-82-03B
PBN-82-03C
PBN-82-04A
PBN-82-04B
PBN-82-04C
PBN-82-05A
PBN-82-05B
PBN-82-05C

Landfill 1

LOM-91-01
LOM-91-02
LOM-89-01
LON-89-02A
LON-89-02B
LON-89-03A
LON-89-03B

Settling Ponds and Spoils Disposal Area

SPN-91-02D
SPN-91-03D
SPN-91-04D
SPN-89-01C
SPN-89-02A
SPN-89-02B
SPN-89-02C
SPN-89-03B
SPN-89-03C
SPN-89-04B
SPN-89-04C
SPN-89-05A
SPN-89-05B

Deterrent Burning Ground

DBM-89-01
DBN-89-02A
DBN-89-02B
DBM-89-03
DBN-89-04A
DBN-89-04B
DBM-89-05
DBM-82-01
DBM-82-02
DBN-82-01B
DBN-82-01C

Existing Landfill

ELN-91-07A
ELN-91-07B
ELM-91-10
ELM-89-01
ELN-89-02A
ELN-89-02B
ELM-89-03
ELN-89-04A
ELN-89-04B
ELM-89-05
ELN-89-06B
ELM-89-07
ELM-89-08
ELM-89-09
ELN-82-01A
ELN-82-01B
ELN-82-01C
ELN-82-02A
ELN-82-02B
ELN-82-02C
ELN-82-03A
ELN-82-03B
ELN-82-03C
ELN-82-04A
ELN-82-04B
ELN-82-04C

Rocket Paste Area

RPM-91-01
RPM-89-01
RPM-89-02

Nitroglycerine Pond	SWN-91-05B
	SWN-91-05C
NPM-89-01	SWN-91-05D
New Acid Area	Base-wide
NAN-81-01A	S1101
NAN-81-02B	S1102
NAN-81-03B	S1103
NAN-81-03C	S1104
NAN-81-04B	S1105
NAN-81-04C	S1106
	S1107
Oleum Plant	S1108
and Pond	S1109
	S1110
OPM-89-01	S1111
OPM-89-02	S1112
OPM-89-03	S1113
	S1114
Old Acid Area	S1115
	S1116
OAM-91-01	S1117
OAM-89-01	S1118
OAM-89-02	S1119
	S1120
Old Fuel Oil Tank	S1121
	S1122
FTM-89-01	S1123
PHM-91-01	S1124
	S1125
Off-Post (South)	S1126
	S1127
PBN-91-01C	S1128
PBN-91-02B	S1129
PBN-91-02C	S1130
PBN-91-03B	S1131
PBN-91-03C	S1132
PBM-90-01D	S1133
PBM-90-02D	S1134
PBM-90-03D	S1135
PBN-90-04B	S1145
PBN-90-04D	S1146
SWN-91-01B	S1147
SWN-91-01C	S1148
SWN-91-01D	S1149
SWN-91-02C	S1150
SWN-91-02D	S1151
SWN-91-03B	S1152A
SWN-91-03C	S1152B
SWN-91-03D	S1153
SWN-91-03E	
SWN-91-04C	
SWN-91-04D	

ABB Environmental Services, Inc. **MONITORING WELL CONSTRUCTION FORM**

Facility/Project Name: BADGER AAP
Facility License, Permit or Monitoring Number: _____
Grid Location: _____ ft. ☐ N. ☐ S. _____ ft. ☐ E. ☐ W.
Well Name: BGM-91-01
Wis. Unique Well Number: _____ DNR Well Number: _____
Type of Well: Water Table Observation Well ☑ 11; Piezometer ☐ 12
Section Location: SW 1/4 of NE 1/4 of Section 3, T 10 N, R 6 ☑ E ☐ W
Date Well Installed: 10/28/91
Distance Well is From Waste/Source Boundary: NA ft.
Well Installed By: (Person's Name and Firm) GABBY RODRIGUEZ, LAYNE ENVIRONMENTAL
Is Well A Point of Enforcement Std. Application? ☐ Yes ☑ No
Location of Well Relative to Waste/Source: ☑ Upgradient ☐ Sidegradient ☐ Downgradient ☐ Not Known

A. Protective pipe, top elevation 874.15 ft. MSL
B. Well casing, top elevation 874.01 ft. MSL
C. Land surface elevation 873.8 ft. MSL
D. Surface seal, bottom _____ ft. MSL or _____ ft.

12. USCS classification of soil near screen:
☐ GP ☐ GM ☐ GC ☐ GW ☐ SW ☑ SP
☐ SM ☐ SC ☐ ML ☐ MH ☐ CL ☐ CH
☐ Bedrock

13. Sieve analysis attached? ☐ Yes ☑ No
14. Drilling method used: Rotary ☐ 50; Hollow Stem Auger ☐ 41; DUAL WALL; Other ☑
15. Drilling fluid used: Water ☑ 02; Air ☐ 01; Drilling Mud ☐ 03; None ☐ 99
16. Drilling additives used? ☐ Yes ☑ No
Describe _____
17. Source of water (attach analysis): PRODUCTION WELL #2

E. Bentonite seal, top 827.3 ft. MSL or 046.5 ft.
F. Fine sand, top _____ ft. MSL or _____ ft.
G. Filter pack, top 820.8 ft. MSL or 053.0 ft.
H. Well screen, top 812.5 ft. MSL or 061.3 ft.
I. Well screen, bottom 802.5 ft. MSL or 071.3 ft.
J. Filter pack, bottom 795.8 ft. MSL or 078.0 ft.
K. Borehole, bottom 795.8 ft. MSL or 078.0 ft.
L. Borehole, diameter 09.0 in.
M. O.D. well casing 04.25 in.
N. I.D. well casing 02.75 in.

1. Cap and lock? ☐ Yes ☑ No
2. Protective cover pipe:
a. Inside diameter: 06.0 in.
b. Length: 06.0 ft.
c. Material: Steel ☑ 04; Other ☐ _____
d. Additional protection? ☑ Yes ☐ No
If yes, describe: BUCKING POSTS GRAN PAD
3. Surface seal: Bentonite ☐ 30; Concrete ☑ 01; Other ☐ _____
4. Material between well casing and protective pipe: Bentonite ☐ 30; Annular space seal ☑; Other ☐ _____
5. Annular space seal: Granular Bentonite ☐ 33; _____ Lbs/gal mud weight ... Bentonite-sand slurry ☐ 35; _____ Lbs/gal mud weight ..... Bentonite slurry ☐ 31; 5 % Bentonite ..... Bentonite-cement grout ☑ 50; 75 Ft³ volume added for any of the above
How installed: Tremie ☐ 01; Tremie pumped ☐ 02; Gravity ☑ 08
6. Bentonite seal: Bentonite granules ☐ 33; ☑ 1/4 in. ☐ 3/8 in. ☐ 1/2 in. Bentonite pellets ☑ 32; Other ☐ _____
7. Fine sand material: Manufacturer, product name and mesh size: None
Volume added _____ ft³
8. Filter pack material: Manufacturer, product name and mesh size: CSSI SILICA SAND #4
Volume added 26 ft³
9. Well casing: Flush threaded PVC schedule 40 ☐ 23; Flush threaded PVC schedule 80 ☑ 24; Other ☐ _____
10. Screen material: SCH 80 4" Diam PVC
Screen type: Factory cut ☑ 11; Continuous slot ☐ 01; Other ☐ _____
Manufacturer: MONOFLEX
Slot size: 0.010 in.
Slotted length: 10.0 ft.
11. Backfill material (below filter pack): None ☑; Other ☐ _____

I hereby certify that the information on this form is true and correct to the best of my knowledge.
Signature: Rod R Rueter Firm: ABB-ES

ABB Environmental Services, Inc. MONITORING WELL CONSTRUCTIO[illegible]

Facility/Project Name: BADGER AAP	Grid Location: ____ ft. ☐ N. ☐ S. ____ ft. ☐ E. ☐ W.	Well Name: BGM-91-02
Facility License, Permit or Monitoring Number: _____		Wis. Unique Well Number: _____ DNR Well N[illegible]
Type of Well: Water Table Observation Well ☑ 11; Piezometer ☐ 12	Section Location: ____ 1/4 of ____ 1/4 of Section ____ T ____ N, R ____ ☐ E ☐ W	Date Well Installed: 11/06/91 (m m / d d / y y)
Distance Well Is From Waste/Source Boundary: NA ft.		Well Installed By: (Person's Name and Firm) G RODRIGUEZ LAYNE
Is Well A Point of Enforcement Std. Application? ☐ Yes ☑ No	Location of Well Relative to Waste/Source: ☑ Upgradient ☐ Sidegradient ☐ Downgradient ☐ Not Known	

A. Protective pipe, top elevation 876.73 ft. MSL

B. Well casing, top elevation 876.61 ft. MSL

C. Land surface elevation 874.4 ft. MSL

D. Surface seal, bottom ____ ft. MSL or ____ ft.

12. USCS classification of soil near screen:
☐ GP ☐ GM ☐ GC ☐ GW ☐ SW ☑ SP
☐ SM ☐ SC ☐ ML ☐ MH ☐ CL ☐ CH
☐ Bedrock

13. Sieve analysis attached? ☐ Yes ☑ No

14. Drilling method used: Rotary ☐ 50; Hollow Stem Auger ☐ 41; Other ☑ DUAL WALL REV. AIR

15. Drilling fluid used: Water ☑ 02; Air ☑ 01; Drilling Mud ☐ 03; None ☐ 99

16. Drilling additives used? ☐ Yes ☑ No

Describe _____

17. Source of water (attach analysis): PRODUCTION WELL # 2

E. Bentonite seal, top 814.4 ft. MSL or 060.0 ft.

F. Fine sand, top ____ ft. MSL or ____ ft.

G. Filter pack, top 809.4 ft. MSL or 065.5 ft.

H. Well screen, top 800.6 ft. MSL or 073.8 ft.

I. Well screen, bottom 790.6 ft. MSL or 083.8 ft.

J. Filter pack, bottom 787.4 ft. MSL or 087.0 ft.

K. Borehole, bottom 787.4 ft. MSL or 087.0 ft.

L. Borehole, diameter 09.0 in.

M. O.D. well casing 04.25 in.

N. I.D. well casing 03.75 in.

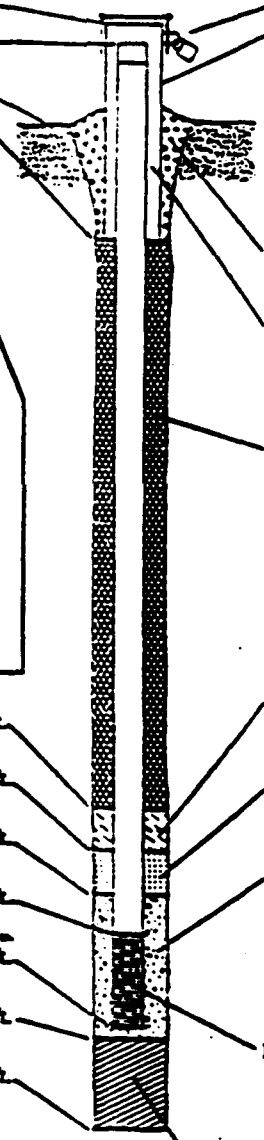

1. Cap and lock? ☑ Yes ☐

2. Protective cover pipe:
a. Inside diameter: 06.[illegible]
b. Length: 06.[illegible]
c. Material: Steel ☑ Other ☐
d. Additional protection? ☑ Yes ☐
If yes, describe: BUCKING POSTS, GRAN PAD

3. Surface seal: Bentonite ☐ Concrete ☑ Other ☐

4. Material between well casing and protective pipe: Bentonite ☐ Annular space seal ☑ Other ☐

5. Annular space seal: Granular Bentonite ☐
____ Lbs/gal mud weight . . . Bentonite-sand slurry ☐
____ Lbs/gal mud weight . . . . . Bentonite slurry ☐
5 % Bentonite . . . . . Bentonite-cement grout ☑
100 Ft^3 volume added for any of the above
How installed: Tremie ☐ Tremie pumped ☐ Gravity ☑

6. Bentonite seal: Bentonite granules ☐
☑ 1/4 in. ☐ 3/8 in. ☐ 1/2 in. Bentonite pellets ☑ Other ☐

7. Fine sand material: Manufacturer, product name and mesh NONE
Volume added ____ ft^3

8. Filter pack material: Manufacturer, product name and mesh CSSI SILICA SAND
Volume added ____ ft^3

9. Well casing: Flush threaded PVC schedule 40 ☐ Flush threaded PVC schedule 80 ☑ Other ☐

10. Screen material: SCH 80 PVC 4"
Screen type: Factory cut ☑ Continuous slot ☐ Other ☐
Manufacturer MONOFLEX
Slot size: 0.015
Slotted length: (RR) 10.0 ~~[illegible]~~

11. Backfill material (below filter pack): None ☑ Other ☐

I hereby certify that the information on this form is true and correct to the best of my knowledge.

Signature: Robt R Rustad | Firm: ABB-ES

ABB Environmental Services, Inc.

MONITORING WELL CONSTRUCTION FOR:

Facility/Project Name: BADGER AAP

Facility License, Permit or Monitoring Number:

Grid Location: ____ ft. ☐ N. ☐ S. ____ ft. ☐ E. ☐ W.

Well Name: BGM-91-03

Wis. Unique Well Number: DNR Well Number:

Type of Well: Water Table Observation Well ☑ 11; Piezometer ☐ 12

Section Location: ____ 1/4 of ____ 1/4 of Section ____ T ____ N, R ____ ☐ E ☐ W

Date Well Installed: 11/08/91 (m m / d d / y y)

Distance Well is From Waste/Source Boundary: NA ft.

Well Installed By: (Person's Name and Firm) GABBY RODRIGUEZ LAYNE

Is Well A Point of Enforcement Std. Application? ☐ Yes ☑ No

Location of Well Relative to Waste/Source: ☑ Upgradient ☐ Sidegradient ☐ Downgradient ☐ Not Known

A. Protective pipe, top elevation: 863.68 ft. MSL

B. Well casing, top elevation: 863.56 ft. MSL

C. Land surface elevation: 861.1 ft. MSL

D. Surface seal, bottom: ____ ft. MSL or ____ ft.

12. USCS classification of soil near screen:
☐ GP ☐ GM ☐ GC ☐ GW ☑ SW ☑ SP
☐ SM ☐ SC ☐ ML ☐ MH ☐ CL ☐ CH
☐ Bedrock

13. Sieve analysis attached? ☐ Yes ☑ No

14. Drilling method used: Rotary ☐ 50; Hollow Stem Auger ☐ 41; DUAL WALL; Other ☑

15. Drilling fluid used: Water ☐ 02; Air ☑ 01; Drilling Mud ☐ 03; None ☐ 99

16. Drilling additives used? ☐ Yes ☑ No

Describe ____

17. Source of water (attach analysis): PRODUCTION WELL # 2

E. Bentonite seal, top: 786.1 ft. MSL or 0750 ft.

F. Fine sand, top: ____ ft. MSL or ____ ft.

G. Filter pack, top: 778.1 ft. MSL or 0830 ft.

H. Well screen, top: 771.6 ft. MSL or 0895 ft.

I. Well screen, bottom: 761.6 ft. MSL or 0995 ft.

J. Filter pack, bottom: 761.1 ft. MSL or 1000 ft.

K. Borehole, bottom: 761.1 ft. MSL or 1000 ft.

L. Borehole, diameter: 09.0 in.

M. O.D. well casing: 04.25 in.

N. I.D. well casing: 02.75 in.

1. Cap and lock? ☑ Yes ☐ No

2. Protective cover pipe:
a. Inside diameter: 06.0 in.
b. Length: 06.0 ft.
c. Material: Steel ☑ 04; Other ☐ ____
d. Additional protection? ☑ Yes ☐ No
If yes, describe: BUCKING POSTS GRAV PAD

3. Surface seal: Bentonite ☐ 30; Concrete ☑ 01; Other ☐ ____

4. Material between well casing and protective pipe: Bentonite ☐ 30; Annular space seal ☑; Other ☐ ____

5. Annular space seal: Granular Bentonite ☐ 33; ____ Lbs/gal mud weight ... Bentonite-sand slurry ☐ 35; ____ Lbs/gal mud weight ..... Bentonite slurry ☐ 31; 5 % Bentonite ..... Bentonite-cement grout ☑ 50; 150 Ft³ volume added for any of the above
How installed: Tremie ☐ 01; Tremie pumped ☐ 02; Gravity ☑ 08

6. Bentonite seal: Bentonite granules ☐ 33; ☐ 1/4 in. ☐ 3/8 in. ☐ 1/2 in. Bentonite pellets ☐ 32; BENTONITE POWDER Other ☑ ____

7. Fine sand material: Manufacturer, product name and mesh size: NONE
Volume added ____ ft³

8. Filter pack material: Manufacturer, product name and mesh size: CSSI SILICA SAND # 4
Volume added 20 ft³

9. Well casing: Flush threaded PVC schedule 40 ☐ 23; Flush threaded PVC schedule 30 ☑ 24; Other ☐ ____

10. Screen material: SCH 80 PVC 4" DIAM
Screen type: Factory cut ☑ 11; Continuous slot ☐ 01; Other ☐ ____
Manufacturer: MONOFLEX
Slot size: 0.010 in.
Slotted length: 01.0 ft.

11. Backfill material (below filter pack): None ☑; Other ☐ ____

I hereby certify that the information on this form is true and correct to the best of my knowledge.

Signature: Rod R Rueston Firm: ABB-ES

ABB Environmental Services, Inc. MONITORING WELL CONSTRUCTIO

Facility/Project Name: BADGER AAP
Facility License, Permit or Monitoring Number:
Grid Location: ft. N. S. / ft. E. W.
Well Name: PTSP-91-01B
Wis. Unique Well Number: DNR Well Nu
Type of Well: Water Table Observation Well 11 / Piezometer
Section Location: NE 1/4 of NW 1/4 of Section 23, T 10 N, R 6 E W
Date Well Installed: 10/13/91
Distance Well Is From Waste/Source Boundary: NA ft.
Well Installed By: (Person's Name and Firm) G RODRIGUEZ / LAYNE
Is Well A Point of Enforcement Std. Application? Yes / No
Location of Well Relative to Waste/Source: Upgradient / Sidegradient / Downgradient / Not Known

A. Protective pipe, top elevation 850.60 ft. MSL
B. Well casing, top elevation 850.53 ft. MSL
C. Land surface elevation 848.3 ft. MSL
D. Surface seal, bottom ft. MSL or ft.

12. USCS classification of soil near screen:
GP GM GC GW SW SP
SM SC ML MH CL CH
Bedrock

13. Sieve analysis attached? Yes / No

14. Drilling method used: Rotary 50 / Hollow Stem Auger 41 / Other
DUAL WALL

15. Drilling fluid used: Water 02 / Air 01 / Drilling Mud 03 / None 99

16. Drilling additives used? Yes / No
Describe N/A

17. Source of water (attach analysis):
PRODUCTION WELL #2

E. Bentonite seal, top ft. MSL or ft.
F. Fine sand, top ft. MSL or ft.
G. Filter pack, top 724.3 ft. MSL or 124.0 ft.
H. Well screen, top 714.3 ft. MSL or 134.0 ft.
I. Well screen, bottom 704.3 ft. MSL or 144.0 ft.
J. Filter pack, bottom 704.3 ft. MSL or 144.0 ft.
K. Borehole, bottom 593.5 ft. MSL or 255.0 ft.
L. Borehole, diameter 09.0 in.
M. O.D. well casing 02.38 in.
N. I.D. well casing 02.10 in.

1. Cap and lock? Yes
2. Protective cover pipe:
a. Inside diameter: 06.0 in.
b. Length: 06.0 ft.
c. Material: Steel 04 / Other
d. Additional protection? Yes
If yes, describe: BUCKING POSTS
3. Surface seal: Bentonite / Concrete / Other
4. Material between well casing and protective pipe: Bentonite / Annular space seal / Other
5. Annular space seal: Granular Bentonite
Lbs/gal mud weight ... Bentonite-sand slurry
Lbs/gal mud weight ..... Bentonite slurry
10 % Bentonite .... Bentonite-cement grout
150 Ft³ volume added for any of the above
How installed: Tremie / Tremie pumped 02 / Gravity
6. Bentonite seal: Bentonite granules / 1/4 in. 3/8 in. 1/2 in. Bentonite pellets / BENTONITE POWDER Other
7. Fine sand material: Manufacturer, product name and mesh s
Volume added ft³
8. Filter pack material: Manufacturer, product name and mesh
COLORADO SILICA SAND #4
Volume added 16 ft³
9. Well casing: Flush threaded PVC schedule 40 / Flush threaded PVC schedule 80 / Other
10. Screen material: SCH 40 PVC
Screen type: Factory cut / Continuous slot / Other
Manufacturer TIMCO
Slot size: 0.010
Slotted length: 10.0
11. Backfill material (below filter pack): None / Other

I hereby certify that the information on this form is true and correct to the best of my knowledge.
Signature: Rod Rueter
Firm: ABB-ES

ABB Environmental Services, Inc.

MONITORING WELL CONSTRUCTION FOR:

Facility/Project Name: BADGER AAP	Grid Location: _____ ft. ☐ N. ☐ S. _____ ft. ☐ E. ☐ W.	Well Name: PBP-91-01C
Facility License, Permit or Monitoring Number: _____		Wis. Unique Well Number: _____ DNR Well Number: _____
Type of Well: Water Table Observation Well ☐ 11; Piezometer ☒ 12	Section Location: NE 1/4 of NW 1/4 of Section 23; T 10 N. R 6 ☒ E ☐ W	Date Well Installed: 10/13/91 (m m d d y y)
Distance Well Is From Waste/Source Boundary: NA ft.	Location of Well Relative to Waste/Source: ☐ Upgradient ☐ Sidegradient ☒ Downgradient ☐ Not Known	Well Installed By: (Person's Name and Firm): G RODRIGUEZ; LAYNE
Is Well A Point of Enforcement Std. Application? ☐ Yes ☒ No		

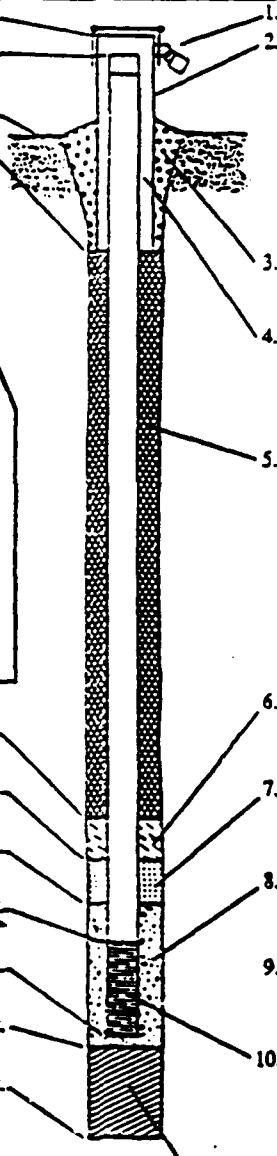

A. Protective pipe, top elevation 850.60 ft. MSL
B. Well casing, top elevation 850.53 ft. MSL
C. Land surface elevation 848.3 ft. MSL
D. Surface seal, bottom _____ ft. MSL or _____ ft.

12. USCS classification of soil near screen:
☐ GP ☐ GM ☐ GC ☐ GW ☒ SW ☐ SP
☐ SM ☐ SC ☐ ML ☐ MH ☐ CL ☐ CH
☐ Bedrock

13. Sieve analysis attached? ☐ Yes ☒ No

14. Drilling method used: Rotary ☐ 50; Hollow Stem Auger ☐ 41; DUAL WALL; Other ☐

15. Drilling fluid used: Water ☒ 02; Air ☒ 01; Drilling Mud ☐ 03; None ☐ 99

16. Drilling additives used? ☐ Yes ☒ No

Describe _____

1. Source of water (attach analysis):
PRODUCTION WELL #2

E. Bentonite seal, top 688.3 ft. MSL or 160.0 ft.
F. Fine sand, top _____ ft. MSL or _____ ft.
G. Filter pack, top 678.3 ft. MSL or 170.0 ft.
H. Well screen, top 668.3 ft. MSL or 180.0 ft.
I. Well screen, bottom 658.3 ft. MSL or 190.0 ft.
J. Filter pack, bottom 658.3 595.3 ft. MSL or 190.0 ft.
K. Borehole, bottom 253 ft. MSL or 253.0 ft.
L. Borehole, diameter 09.0 in.
M. O.D. well casing 02.25 in.
N. I.D. well casing 02.10 in.

1. Cap and lock? ☒ Yes ☐ No
2. Protective cover pipe:
a. Inside diameter: 06.0 in.
b. Length: 06.0 ft.
c. Material: Steel ☒ 04; _____ Other ☐ __
d. Additional protection? ☒ Yes ☐ No
If yes, describe: BUCKING POSTS
3. Surface seal: Bentonite ☐ 30; Concrete ☒ 01; _____ Other ☐ __
4. Material between well casing and protective pipe: Bentonite ☐ 30; Annular space seal ☒; _____ Other ☐ __
5. Annular space seal: Granular Bentonite ☐ 31; _____ Lbs/gal mud weight . . . Bentonite-sand slurry ☐ 35; _____ Lbs/gal mud weight . . . . . Bentonite slurry ☐ 33; 10 % Bentonite . . . . . Bentonite-cement grout ☒ 50; 158 Ft³ volume added for any of the above
How installed: Tremie ☐ 01; Tremie pumped ☐ 02; Gravity ☒ 03
6. Bentonite seal: Bentonite granules ☐ 32; ☐ 1/4 in. ☐ 3/8 in. ☐ 1/2 in. Bentonite pellets ☐ 32; BENTONITE POWDER Other ☐ __
7. Fine sand material: Manufacturer, product name and mesh size: _____; Volume added _____ ft³
8. Filter pack material: Manufacturer, product name and mesh size: COLORADO SILICA SAND #4; Volume added 16 ft³
9. Well casing: Flush threaded PVC schedule 40 ☒ 23; Flush threaded PVC schedule 80 ☐ 24; _____ Other ☐ __
10. Screen material: SCH 40 PVC; Screen type: Factory cut ☒ 11; Continuous slot ☐ 01; _____ Other ☐ __
Manufacturer TIMCO
Slot size: 0.010 in.
Slotted length: 10.0 ft.
11. Backfill material (below filter pack): None ☒; _____ Other ☐

I hereby certify that the information on this form is true and correct to the best of my knowledge.

Signature: _____ Firm: ABB-ES

ABB Environmental Services, Inc. MONITORING WELL CONSTRUC F

Facility/Project Name: BADGER AAP
Facility License, Permit or Monitoring Number:
Grid Location: ft. N. S. / ft. E. W.
Well Name: PISP-91-01D
Wis. Unique Well Number: DNR Well Nu
Type of Well: Water Table Observation Well 11 / Piezometer 12
Section Location: NE 1/4 of NW 1/4 of Section 23 T 10 N. R 12 E W
Date Well Installed: 10/13/91
Distance Well Is From Waste/Source Boundary: NA ft.
Well Installed By: (Person's Name and Firm) G RODRIGUEZ / LAYNE
Is Well A Point of Enforcement Std. Application? Yes / No
Location of Well Relative to Waste/Source: Upgradient / Sidegradient / Downgradient / Not Known

A. Protective pipe, top elevation 850.60 ft. MSL
B. Well casing, top elevation 850.53 ft. MSL
C. Land surface elevation 848.3 ft. MSL
D. Surface seal, bottom ft. MSL or ft.

12. USCS classification of soil near screen:
GP GM GC GW SW SP
SM SC ML MH CL CH
Bedrock

13. Sieve analysis attached? Yes / No

14. Drilling method used: Rotary 50 / Hollow Stem Auger 41 / Other
DUAL WALL

15. Drilling fluid used: Water 02 / Air 01 / Drilling Mud 03 / None 99

16. Drilling additives used? Yes / No
Describe

17. Source of water (attach analysis):
#2 PRODUCTION PUMP

E. Bentonite seal, top 627.3 ft. MSL or 221.0 ft.
F. Fine sand, top ft. MSL or ft.
G. Filter pack, top 617.3 ft. MSL or 231.0 ft.
H. Well screen, top 605.8 ft. MSL or 242.5 ft.
I. Well screen, bottom 595.8 ft. MSL or 252.5 ft.
J. Filter pack, bottom 595.3 ft. MSL or 253.0 ft.
K. Borehole, bottom 595.3 ft. MSL or 253.0 ft.
L. Borehole, diameter 9.0 in.
M. O.D. well casing 1.25 in.
N. I.D. well casing 1.10 in.

1. Cap and lock? Yes
2. Protective cover pipe:
a. Inside diameter: 6.9
b. Length: 6.9
c. Material: Steel / Other
d. Additional protection? Yes
If yes, describe: BUCKING POSTS
3. Surface seal: Bentonite / Concrete / Other
4. Material between well casing and protective pipe: Bentonite / Annular space seal / Other
5. Annular space seal: Granular Benton
Lbs/gal mud weight . . . Bentonite-sand slurry
Lbs/gal mud weight . . . . . Bentonite slurry
10 % Bentonite . . . . Bentonite-cement grout
150 Ft³ volume added for any of the above
How installed: Tremie / Tremie pumped / Gravity
6. Bentonite seal: Bentonite granules / 1/4 in. 3/8 in. 1/2 in. Bentonite pellets / BENTONITE POWDER Other
7. Fine sand material: Manufacturer, product name and mesh s
Volume added ft³
8. Filter pack material: Manufacturer, product name and mesh
COLORADO SILICA SAND #4
Volume added 16 ft³
9. Well casing: Flush threaded PVC schedule 40 / Flush threaded PVC schedule 80 / Other
10. Screen material: SCH 40 PVC
Screen type: Factory cut / Continuous slot / Other
Manufacturer TIMCO
Slot size: 0.01
Slotted length: 10.
11. Backfill material (below filter pack): None / Other

I hereby certify that the information on this form is true and correct to the best of my knowledge.
Signature | Firm

ABB Environmental Services, Inc.

MONITORING WELL CONSTRUCTION FOR:

Facility/Project Name: BADGER AAP	Grid Location: _____ ft. ☐ N. ☐ S. _____ ft. ☐ E. ☐ W.	Well Name: PBP-91-02B
Facility License, Permit or Monitoring Number: _____		Wis. Unique Well Number: _____ DNR Well Number: _____
Type of Well: Water Table Observation Well ☐ 11; Piezometer ☒ 12	Section Location: NE 1/4 of NW 1/4 of Section 23; T 10 N, R 6 ☒ E ☐ W	Date Well Installed: 10/15/91 (m m / d d / y y)
Distance Well Is From Waste/Source Boundary: NA ft.	Location of Well Relative to Waste/Source: ☐ Upgradient ☐ Sidegradient ☒ Downgradient ☐ Not Known	Well Installed By: (Person's Name and Firm): G RODRIGUEZ / LAYNE
Is Well A Point of Enforcement Std. Application? ☐ Yes ☒ No		

A. Protective pipe, top elevation 850.10 ft. MSL

B. Well casing, top elevation 850.09 ft. MSL

C. Land surface elevation 847.6 ft. MSL

D. Surface seal, bottom _____ ft. MSL or _____ ft.

12. USCS classification of soil near screen:
☐ GP ☐ GM ☐ GC ☐ GW ☒ SW ☐ SP
☐ SM ☐ SC ☐ ML ☐ MH ☐ CL ☐ CH
☐ Bedrock

13. Sieve analysis attached? ☐ Yes ☒ No

14. Drilling method used: Rotary ☐ 50; Hollow Stem Auger ☐ 41; Other ☐ _____
DUAL WALL

15. Drilling fluid used: Water ☒ 02; Air ☒ 01; Drilling Mud ☐ 03; None ☐ 99

16. Drilling additives used? ☐ Yes ☒ No
Describe _____

17. Source of water (attach analysis):
PRODUCTION WELL #2

E. Bentonite seal, top NONE ft. MSL or NONE ft.

F. Fine sand, top NONE ft. MSL or NONE ft.

G. Filter pack, top 776 ft. MSL or 120.0 ft.

H. Well screen, top 717.3 ft. MSL or 130.3 ft.

I. Well screen, bottom 707.3 ft. MSL or 140.3 ft.

J. Filter pack, bottom 706.6 ft. MSL or 141.0 ft.

K. Borehole, bottom 594.1 ft. MSL or 253.5 ft.

L. Borehole, diameter 09.0 in.

M. O.D. well casing 01.25 in.

N. I.D. well casing 01.00 in.

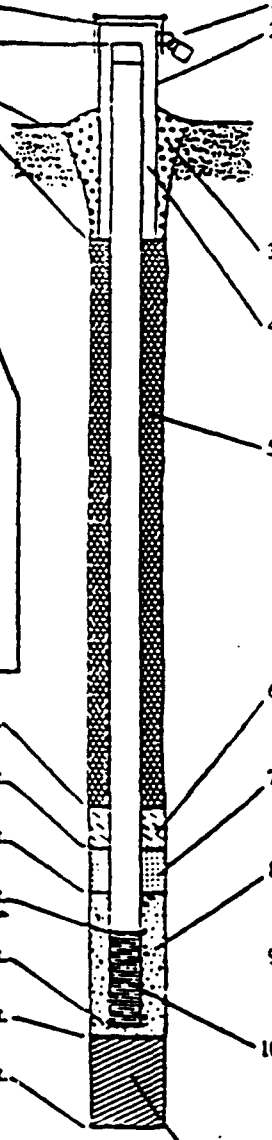

1. Cap and lock? ☒ Yes ☐ No

2. Protective cover pipe:
a. Inside diameter: 06.0 in.
b. Length: 04.0 ft.
c. Material: Steel ☒ 04; Other ☐ _____
d. Additional protection? ☒ Yes ☐ No
If yes, describe: BUILDING POSTS

3. Surface seal: Bentonite ☐ 30; Concrete ☒ 01; Other ☐ _____

4. Material between well casing and protective pipe: Bentonite ☐ 30; Annular space seal ☒; Other ☐ _____

5. Annular space seal: Granular Bentonite ☐ 32
_____ Lbs/gal mud weight . . . Bentonite-sand slurry ☐ 33
_____ Lbs/gal mud weight . . . . . Bentonite slurry ☐ 34
10 % Bentonite . . . . . Bentonite-cement grout ☒ 50
150 Ft³ volume added for any of the above
How installed: Tremie ☐ 01; Tremie pumped ☐ 02; Gravity ☒ 03

6. Bentonite seal: Bentonite granules ☐ 33
☐ 1/4 in. ☐ 3/8 in. ☐ 1/2 in. Bentonite pellets ☐ 34
BENTONITE POWDER Other ☐ _____

7. Fine sand material: Manufacturer, product name and mesh size
_____
Volume added _____ ft³

8. Filter pack material: Manufacturer, product name and mesh size
COLORADO SILICA SAND
Volume added 16 ft³

9. Well casing: Flush threaded PVC schedule 40 ☒ 23; Flush threaded PVC schedule 80 ☐ 24; Other ☐ _____

10. Screen material: SCH 40 PVC
Screen type: Factory cut ☒ 11; Continuous slot ☐ 01; _____ _____ Other ☐ _____
Manufacturer TIMCO
Slot size: 0.010 in.
Slotted length: 10.0 ft.

11. Backfill material (below filter pack): None ☒; Other ☐ _____

I hereby certify that the information on this form is true and correct to the best of my knowledge.

Signature: Paul R Rankin | Firm: ABB-ES

ABB Environmental Services, Inc. MONITORING WELL CONSTRUCTION F

Facility/Project Name: BADGER AAP
Facility License, Permit or Monitoring Number:

Grid Location: ft. N. S. / ft. E. W.

Well Name: PISP-91-02C
Wis. Unique Well Number: DNR Well Nu

Type of Well: Water Table Observation Well 11 / Piezometer 12

Section Location: NE 1/4 of NW 1/4 of Section 25 T 10 N. R 6 E W

Date Well Installed: 10/14/91

Distance Well Is From Waste/Source Boundary: NA ft.

Location of Well Relative to Waste/Source: Upgradient / Sidegradient / Downgradient / Not Known

Well Installed By: (Person's Name and Firm): G RODRIGUES / LAYNE

Is Well A Point of Enforcement Std. Application? Yes / No

A. Protective pipe, top elevation 850.20 ft. MSL
B. Well casing, top elevation 850.09 ft. MSL
C. Land surface elevation 847.6 ft. MSL
D. Surface seal, bottom ____ ft. MSL or ____ ft.

12. USCS classification of soil near screen:
GP GM GC GW SW SP
SM SC ML MH CL CH
Bedrock

13. Sieve analysis attached? Yes / No

14. Drilling method used: Rotary 50 / Hollow Stem Auger 41 / Other
DUAL WALL

15. Drilling fluid used: Water 02 / Air 01 / Drilling Mud 03 / None 99

16. Drilling additives used? Yes / No

Describe

17. Source of water (attach analysis):
PRODUCTION WELL #2

E. Bentonite seal, top 687.6 ft. MSL or 160.0 ft.
F. Fine sand, top ____ ft. MSL or ____ ft.
G. Filter pack, top 677.6 ft. MSL or 170.0 ft.
H. Well screen, top 667.3 ft. MSL or 180.3 ft.
I. Well screen, bottom 657.3 ft. MSL or 190.3 ft.
J. Filter pack, bottom 657.0 ft. MSL or 190.0 ft.
K. Borehole, bottom 594.1 ft. MSL or 253.5 ft.
L. Borehole, diameter 09.0 in.
M. O.D. well casing 02.25 in.
N. I.D. well casing 02.10 in.

1. Cap and lock? Yes
2. Protective cover pipe:
a. Inside diameter: 06.
b. Length: 06.0
c. Material: Steel / Other
d. Additional protection? Yes
If yes, describe: BUCKING POSTS
3. Surface seal: Bentonite / Concrete / Other
4. Material between well casing and protective pipe: Bentonite / Annular space seal / Other
5. Annular space seal: Granular Bento
____ Lbs/gal mud weight . . . Bentonite-sand slurry
____ Lbs/gal mud weight . . . . . Bentonite slurry
10 % Bentonite . . . . . Bentonite-cement grout
150 Ft³ volume added for any of the above
How installed: Tremie / Tremie pumped / Gravity
6. Bentonite seal: Bentonite granules / 1/4 in. 3/8 in. 1/2 in. Bentonite pellets / BENTONITE POWDER Other
7. Fine sand material: Manufacturer, product name and mesh s
Volume added ____ ft³
8. Filter pack material: Manufacturer, product name and mesh
COLORADO SILICA SAND
Volume added 16 ft³
9. Well casing: Flush threaded PVC schedule 40 / Flush threaded PVC schedule 80 / Other
10. Screen material: SCH 40 PVC
Screen type: Factory cut / Continuous slot / Other
Manufacturer TYMCO
Slot size: 0.01
Slotted length:
11. Backfill material (below filter pack): Non / Other

I hereby certify that the information on this form is true and correct to the best of my knowledge.

Signature: Paul R. Rudolf | Firm: ABB-ES

WELL DETAIL INFORMATION SHEET

JOB NO. C 10313

BORING NO. PBM-82-01

DATE 3/18/82

CHIEF Larry F.

LOCATION Badger Army Ammunition Plant; Propellent Burning Ground

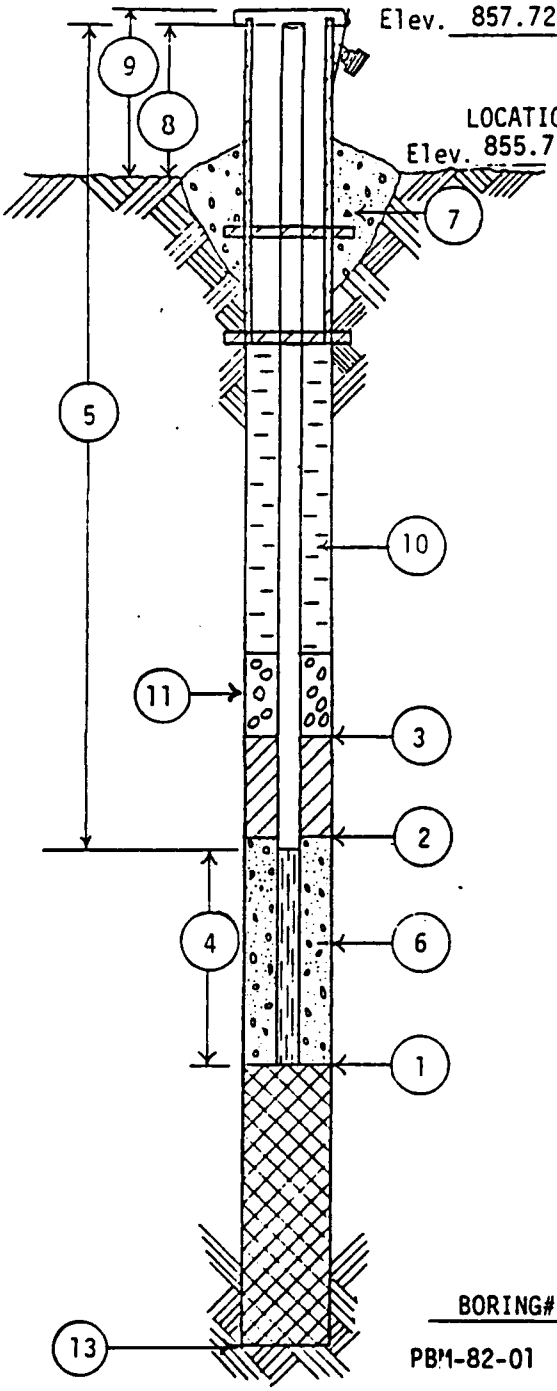

All depth measurements of well detail assumed to be from ground surface unless otherwise indicated.

(1) DEPTH TO BOTTOM OF WELL POINT OR SLOTTED PIPE 100 FEET.

(2) DEPTH OF BOTTOM OF SEAL (if installed) 65 FEET.

(3) DEPTH TO TOP OF SEAL (if installed) 45 FEET.

(4) LENGTH OF PVC WELL SCREEN, 20 FEET.

(5) TOTAL LENGTH OF PIPE 82.5 FEET @ 4 IN. DIAMETER.

(6) TYPE OF FILTER MATERIAL AROUND WELL POINT OR SLOTTED PIPE Pea Gravel.

(7) CONCRETE CAP, (YES) NO (Circle One)

(8) HEIGHT OF WELL CASING ABOVE GROUND 2.5 FEET.

(9) PROTECTIVE CASING? (YES) NO (Circle One)
HEIGHT ABOVE GROUND 2.5.
LOCKING CAP? (YES) NO (Circle One)

(10) TYPE OF BACKFILL: 5:1 Cement: Bentonite

(11) THICKNESS OF GRAVEL PACK 35 FEET.

(12) DEPTH TO FIRST COUPLING 3 FEET.
COUPLING INTERVAL 9.75 FEET.

(13) TOTAL DEPTH OF BOREHOLE 100 FEET.

BORING#	DATE	TIME	DEPTH TO WATER	REMARKS
PBM-82-01	5/11/82	-	83.65'	From top of casing

WELL DETAIL INFORMATION SHEET

JOB NO. C 10313

BORING NO. PBM-82-02

DATE 3/17/82

CHIEF Larry F.

LOCATION Badger Army Ammunition Plant; Propellent Burning Grounds

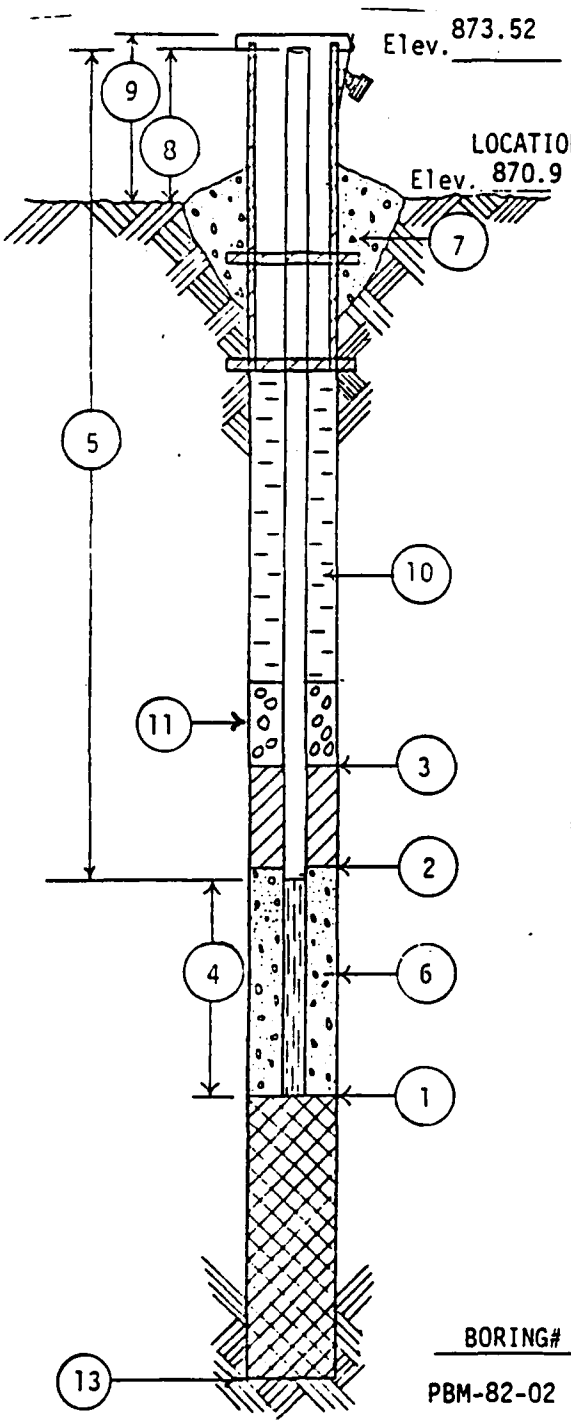

All depth measurements of well detail assumed to be from ground surface unless otherwise indicated.

(1) DEPTH TO BOTTOM OF WELL POINT OR SLOTTED PIPE 114.8 FEET.

(2) DEPTH OF BOTTOM OF SEAL (if installed) 87 FEET.

(3) DEPTH TO TOP OF SEAL (if installed) 67 FEET.

(4) LENGTH OF PVC WELL SCREEN, 20 FEET.

(5) TOTAL LENGTH OF PIPE 97.3 FEET @ 4 IN. DIAMETER.

(6) TYPE OF FILTER MATERIAL AROUND WELL POINT OR SLOTTED PIPE Pea Gravel.

(7) CONCRETE CAP, (YES) NO (Circle One)

(8) HEIGHT OF WELL CASING ABOVE GROUND 2.5 FEET.

(9) PROTECTIVE CASING? (YES) NO (Circle One)
HEIGHT ABOVE GROUND 2.5.
LOCKING CAP? (YES) NO (Circle One)

(10) TYPE OF BACKFILL: 6:2 Cement: Bentonite

(11) THICKNESS OF GRAVEL PACK 27.8 FEET.

(12) DEPTH TO FIRST COUPLING 7.55 FEET.
COUPLING INTERVAL 9.75 FEET.

(13) TOTAL DEPTH OF BOREHOLE 114.8 FEET.

BORING#	DATE	TIME	DEPTH TO WATER	REMARKS
PBM-82-02	5/11/82	-	99.40'	From top of casing

WELL DETAIL INFORMATION SHEET

JOB NO. C 10313

BORING NO. PBM-82-03

DATE 3/16/82

CHIEF Larry F.

LOCATION Badger Army Ammunition Plant; Propellent Burning Grounc

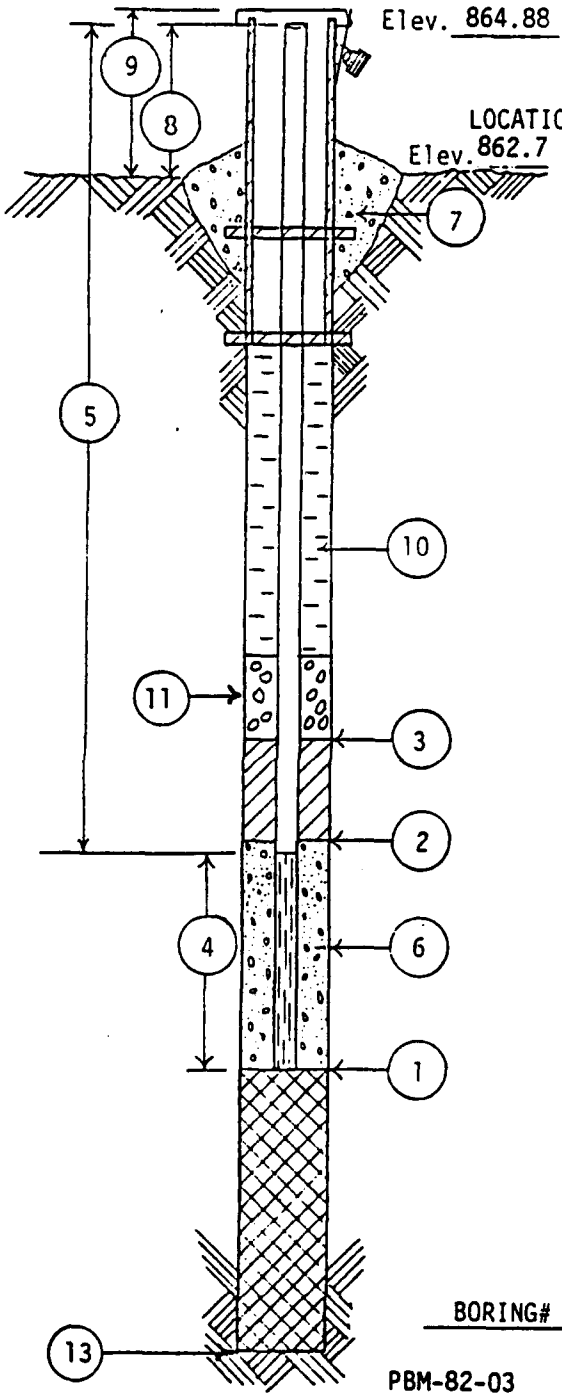

All depth measurements of well detail assumed to be from ground surface unless otherwise indicated.

(1) DEPTH TO BOTTOM OF WELL POINT OR SLOTTED PIPE 107.25 FEET.

(2) DEPTH OF BOTTOM OF SEAL (if installed) 77 FEET.

(3) DEPTH TO TOP OF SEAL (if installed) 55 FEET.

(4) LENGTH OF PVC WELL SCREEN, 20 FEET.

(5) TOTAL LENGTH OF PIPE 89.75 FEET @ 4 IN. DIAMETER.

(6) TYPE OF FILTER MATERIAL AROUND WELL POINT OR SLOTTED PIPE Pea Gravel.

(7) CONCRETE CAP, (YES) NO (Circle One)

(8) HEIGHT OF WELL CASING ABOVE GROUND 2.5 FEET.

(9) PROTECTIVE CASING? (YES) NO (Circle One)
HEIGHT ABOVE GROUND 2.5.
LOCKING CAP? (YES) NO (Circle One)

(10) TYPE OF BACKFILL: 4:2 Cement: Bentonite

(11) THICKNESS OF GRAVEL PACK 30 FEET.

(12) DEPTH TO FIRST COUPLING 0 FEET.
COUPLING INTERVAL 9.75 FEET.

(13) TOTAL DEPTH OF BOREHOLE 107.25 FEET.

BORING#	DATE	TIME	DEPTH TO WATER	REMARKS
PBM-82-03	5/11/82	-	91.70	From top of casing

WELL DETAIL INFORMATION SHEET

JOB NO. C 10313

BORING NO. PBM-82-04

DATE 3/17/82

CHIEF Larry F.

LOCATION Badger Army Ammunition Plant; Propellent Burning Grounds

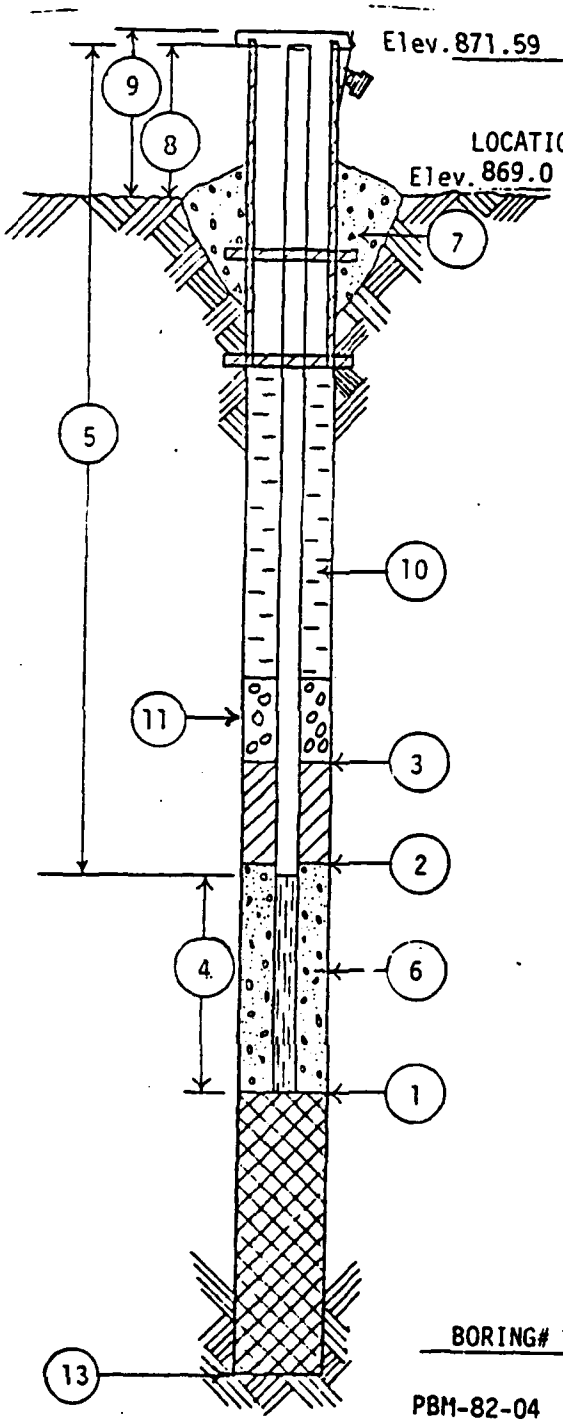

All depth measurements of well detail assumed to be from ground surface unless otherwise indicated.

(1) DEPTH TO BOTTOM OF WELL POINT OR SLOTTED PIPE 113 FEET.

(2) DEPTH OF BOTTOM OF SEAL (if installed) 82 FEET.

(3) DEPTH TO TOP OF SEAL (if installed) 58 FEET.

(4) LENGTH OF PVC WELL SCREEN, 20 FEET.

(5) TOTAL LENGTH OF PIPE 95.5 FEET @ 4 IN. DIAMETER.

(6) TYPE OF FILTER MATERIAL AROUND WELL POINT OR SLOTTED PIPE Pea Gravel .

(7) CONCRETE CAP, (YES) NO (Circle One)

(8) HEIGHT OF WELL CASING ABOVE GROUND 2.5 FEET.

(9) PROTECTIVE CASING? (YES) NO (Circle One)
HEIGHT ABOVE GROUND 2.5 .
LOCKING CAP? (YES) NO (Circle One)

(10) TYPE OF BACKFILL: 4:2 Cement: Bentonite

(11) THICKNESS OF GRAVEL PACK 31 FEET.

(12) DEPTH TO FIRST COUPLING 5.75 FEET.
COUPLING INTERVAL 9.75 FEET.

(13) TOTAL DEPTH OF BOREHOLE 113 FEET.

BORING#	DATE	TIME	DEPTH TO WATER	REMARKS
PBM-82-04	5/11/82	-	98.63'	From top of casing

WELL DETAIL INFORMATION SHEET

JOB NO. C 10313

BORING NO. PBM-82-05

DATE 5/3/82

CHIEF Tom O.

LOCATION Badger Army Ammunition Plant; Propellent Burning Grounds

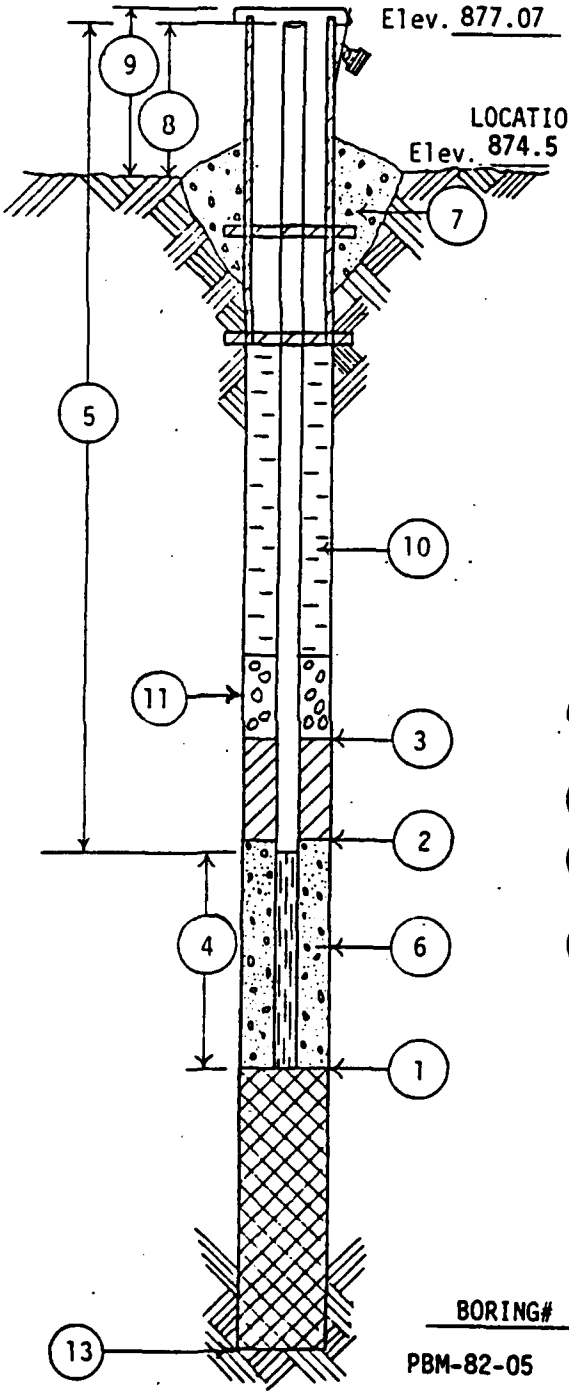

All depth measurements of well detail assumed to be from ground surface unless otherwise indicated.

(1) DEPTH TO BOTTOM OF WELL POINT OR SLOTTED PIPE 121.25 FEET.

(2) DEPTH OF BOTTOM OF SEAL (if installed) 85 FEET.

(3) DEPTH TO TOP OF SEAL (if installed) 65 FEET.

(4) LENGTH OF PVC WELL SCREEN, 20 FEET.

(5) TOTAL LENGTH OF PIPE 103.75 FEET @ 4 IN. DIAMETER.

(6) TYPE OF FILTER MATERIAL AROUND WELL POINT OR SLOTTED PIPE Pea Gravel .

(7) CONCRETE CAP, (YES) NO (Circle One)

(8) HEIGHT OF WELL CASING ABOVE GROUND 2.5 FEET.

(9) PROTECTIVE CASING? (YES) NO (Circle One)
HEIGHT ABOVE GROUND 2.5 .
LOCKING CAP? (YES) NO (Circle One)

(10) TYPE OF BACKFILL: 5:2 Cement:Bentonite

(11) THICKNESS OF GRAVEL PACK 36.25 FEET.

(12) DEPTH TO FIRST COUPLING 5.5 FEET.
COUPLING INTERVAL 9.75 FEET.

(13) TOTAL DEPTH OF BOREHOLE 121.25 FEET.

BORING#	DATE	TIME	DEPTH TO WATER	REMARKS
PBM-82-05	5/11/82	-	104.14'	From top of casing

WELL DETAIL INFORMATION SHEET

JOB NO. C 10313

BORING NO. PBN-82-01A

DATE 3/18/82

CHIEF LF

LOCATION Badger Army Ammunition Plant; Propellent Burning Ground

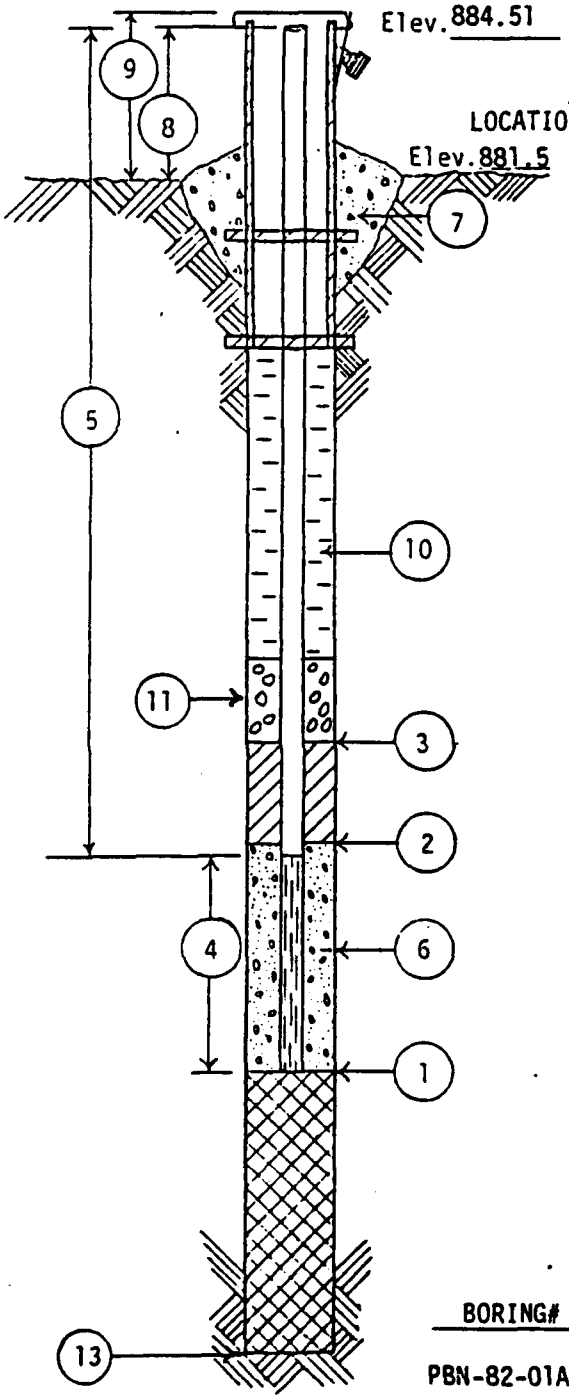

All depth measurements of well detail assumed to be from ground surface unless otherwise indicated.

(1) DEPTH TO BOTTOM OF WELL POINT OR SLOTTED PIPE 115.25 FEET.

(2) DEPTH OF BOTTOM OF SEAL (if installed) 93 FEET.

(3) DEPTH TO TOP OF SEAL (if installed) 73 FEET.

(4) LENGTH OF PVC WELL SCREEN, 10 FEET.

(5) TOTAL LENGTH OF PIPE 107.75 FEET @ 4 IN. DIAMETER.

(6) TYPE OF FILTER MATERIAL AROUND WELL POINT OR SLOTTED PIPE Pea Gravel.

(7) CONCRETE CAP, (YES) NO (Circle One)

(8) HEIGHT OF WELL CASING ABOVE GROUND 2.5 FEET.

(9) PROTECTIVE CASING? (YES) NO (Circle One)
HEIGHT ABOVE GROUND 2.5.
LOCKING CAP? (YES) NO (Circle One)

(10) TYPE OF BACKFILL: 5:1 Cement: Bentonite

(11) THICKNESS OF GRAVEL PACK 22.25 FEET.

(12) DEPTH TO FIRST COUPLING 8.0 FEET.
COUPLING INTERVAL 9.75 FEET.

(13) TOTAL DEPTH OF BOREHOLE 115.25 FEET.

BORING#	DATE	TIME	DEPTH TO WATER	REMARKS
PBN-82-01A	5/11/82	-	109.51'	From top of casing

WELL DETAIL INFORMATION SHEET

JOB NO. C 10313
BORING NO. PBN-82-01B
DATE 3/10/82
CHIEF LF

LOCATION Badger Army Ammunition Plant: Propellent Burning Ground

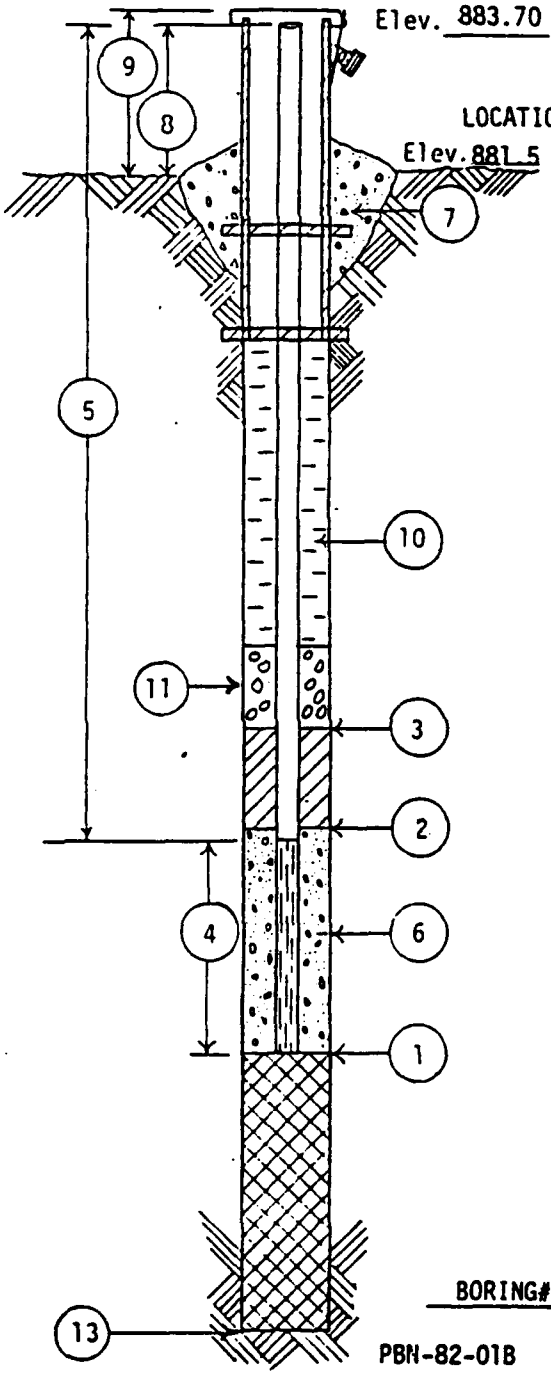

All depth measurements of well detail assumed to be from ground surface unless otherwise indicated.

(1) DEPTH TO BOTTOM OF WELL POINT OR SLOTTED PIPE 129 FEET.

(2) DEPTH OF BOTTOM OF SEAL (if installed) 111.5 FEET.

(3) DEPTH TO TOP OF SEAL (if installed) 82 FEET.

(4) LENGTH OF PVC WELL SCREEN, 2 FEET.

(5) TOTAL LENGTH OF PIPE 129.5 FEET @ 4 IN. DIAMETER.

(6) TYPE OF FILTER MATERIAL AROUND WELL POINT OR SLOTTED PIPE Pea Gravel.

(7) CONCRETE CAP, (YES) NO (Circle One)

(8) HEIGHT OF WELL CASING ABOVE GROUND 2.5 FEET.

(9) PROTECTIVE CASING? (YES) NO (Circle One)
HEIGHT ABOVE GROUND 2.5.
LOCKING CAP? (YES) NO (Circle One)

(10) TYPE OF BACKFILL: 5:2 Cement: Bentonite

(11) THICKNESS OF GRAVEL PACK 17.5 FEET.

(12) DEPTH TO FIRST COUPLING 0 FEET.
COUPLING INTERVAL 9.75 FEET.

(13) TOTAL DEPTH OF BOREHOLE 129 FEET.

BORING#	DATE	TIME	DEPTH TO WATER	REMARKS
PBN-82-01B	5/11/82	-	108.67'	From top of casing

WELL DETAIL INFORMATION SHEET

JOB NO. C 10313

BORING NO. PBN-82-01C

DATE 3/10/82

CHIEF LF

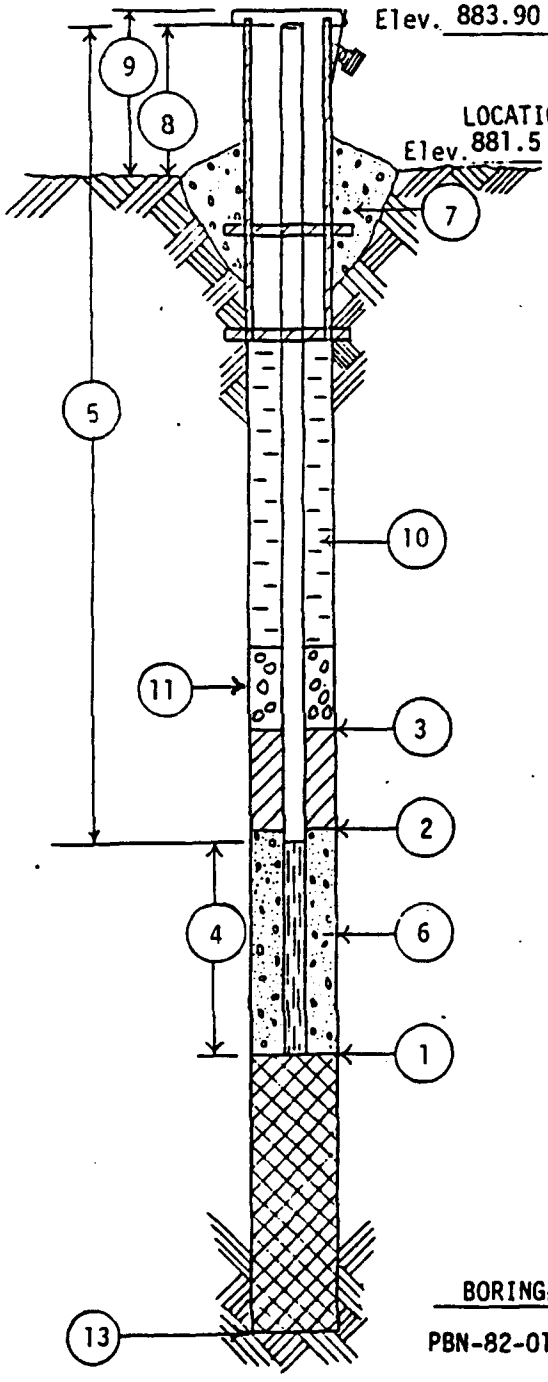

LOCATION Badger Army Ammunition Plant; Propellent Burning Grounds

All depth measurements of well detail assumed to be from ground surface unless otherwise indicated.

(1) DEPTH TO BOTTOM OF WELL POINT OR SLOTTED PIPE 138.5 FEET.

(2) DEPTH OF BOTTOM OF SEAL (if installed) 106 FEET.

(3) DEPTH TO TOP OF SEAL (if installed) 68 FEET.

(4) LENGTH OF PVC WELL SCREEN, 2 FEET.

(5) TOTAL LENGTH OF PIPE 139 FEET @ 4 IN. DIAMETER.

(6) TYPE OF FILTER MATERIAL AROUND WELL POINT OR SLOTTED PIPE Pea Gravel.

(7) CONCRETE CAP, (YES) NO (Circle One)

(8) HEIGHT OF WELL CASING ABOVE GROUND 2.5 FEET.

(9) PROTECTIVE CASING? (YES) NO (Circle One)
HEIGHT ABOVE GROUND 2.5.
LOCKING CAP? (YES) NO (Circle One)

(10) TYPE OF BACKFILL: 8:3 Cement: Bentonite

(11) THICKNESS OF GRAVEL PACK 32.5 FEET.

(12) DEPTH TO FIRST COUPLING 0 FEET.
COUPLING INTERVAL 9.75 FEET.

(13) TOTAL DEPTH OF BOREHOLE 138.5 FEET.

BORING#	DATE	TIME	DEPTH TO WATER	REMARKS
PBN-82-01C	5/11/82	-	108.88'	From top of casing

WELL DETAIL INFORMATION SHEET

JOB NO. C 10313
BORING NO. PBN-82-02A
DATE 5/1/82
CHIEF Tom O.

LOCATION Badger Army Ammunition Plant; Propellent Burning Grounds

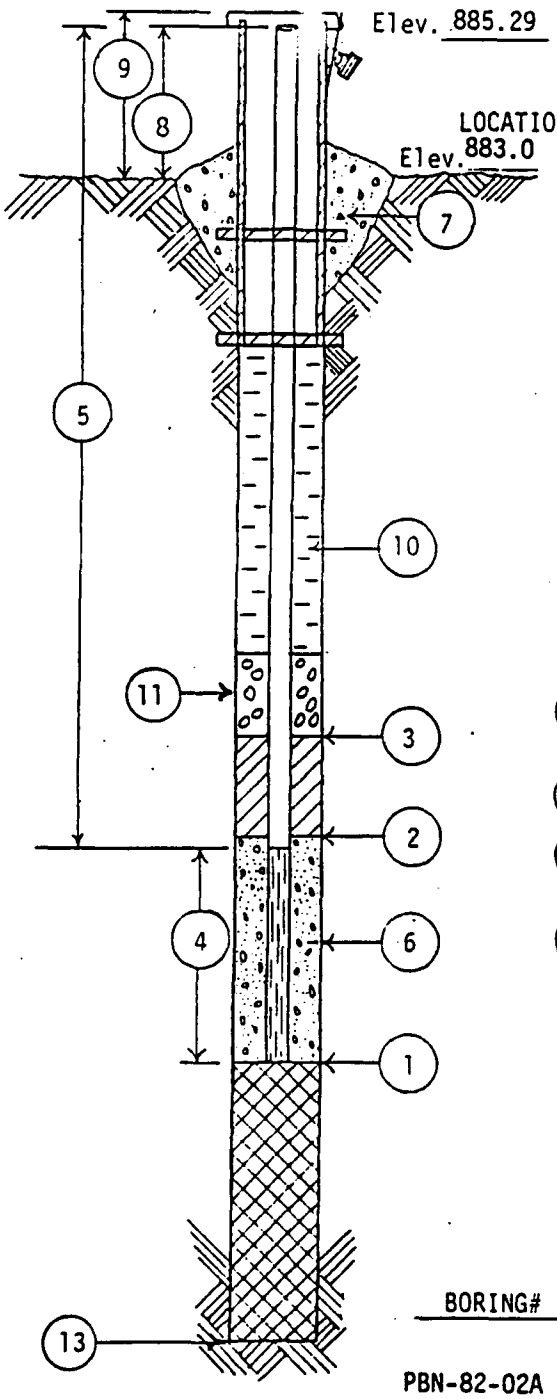

All depth measurements of well detail assumed to be from ground surface unless otherwise indicated.

(1) DEPTH TO BOTTOM OF WELL POINT OR SLOTTED PIPE 116 FEET.

(2) DEPTH OF BOTTOM OF SEAL (if installed) 97 FEET.

(3) DEPTH TO TOP OF SEAL (if installed) 77 FEET.

(4) LENGTH OF PVC WELL SCREEN, 10 FEET.

(5) TOTAL LENGTH OF PIPE 108.50 FEET @ 4 IN. DIAMETER.

(6) TYPE OF FILTER MATERIAL AROUND WELL POINT OR SLOTTED PIPE Pea Gravel.

(7) CONCRETE CAP, (YES) NO (Circle One)

(8) HEIGHT OF WELL CASING ABOVE GROUND 2.5 FEET.

(9) PROTECTIVE CASING? (YES) NO (Circle One)
HEIGHT ABOVE GROUND 2.5.
LOCKING CAP? (YES) NO (Circle One)

(10) TYPE OF BACKFILL: 5:2 Cement:Bentonite

(11) THICKNESS OF GRAVEL PACK 19 FEET.

(12) DEPTH TO FIRST COUPLING 8.75 FEET.
COUPLING INTERVAL 9.75 FEET.

(13) TOTAL DEPTH OF BOREHOLE 116 FEET.

BORING#	DATE	TIME	DEPTH TO WATER	REMARKS
PBN-82-02A	5/11/82	-	111.11'	From top of casing

WELL DETAIL INFORMATION SHEET

JOB NO. C 10313
BORING NO. PBN-82-02B
DATE 3/9/82
CHIEF LF

LOCATION Badger Army Ammunition Plant; Propellent Burning Grounds

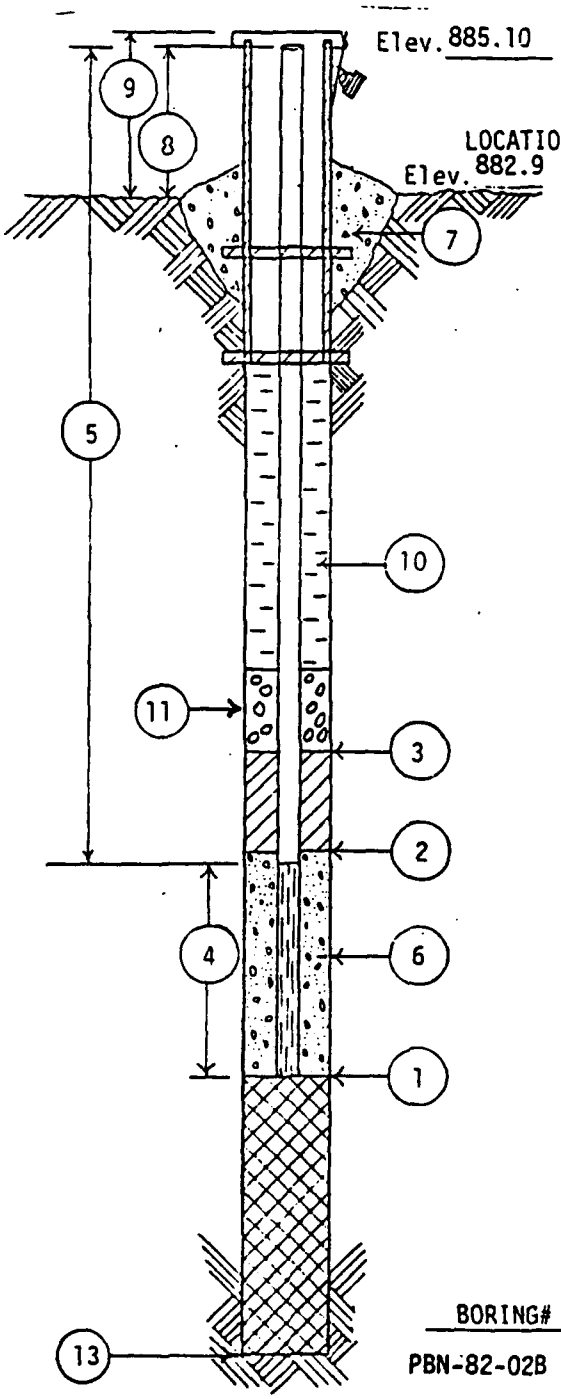

All depth measurements of well detail assumed to be from ground surface unless otherwise indicated.

(1) DEPTH TO BOTTOM OF WELL POINT OR SLOTTED PIPE 129.5 FEET.

(2) DEPTH OF BOTTOM OF SEAL (if installed) 118 FEET.

(3) DEPTH TO TOP OF SEAL (if installed) 80 FEET.

(4) LENGTH OF PVC WELL SCREEN, 2 FEET.

(5) TOTAL LENGTH OF PIPE 130 FEET @ 4 IN. DIAMETER.

(6) TYPE OF FILTER MATERIAL AROUND WELL POINT OR SLOTTED PIPE Pea Gravel

(7) CONCRETE CAP, (YES) NO (Circle One)

(8) HEIGHT OF WELL CASING ABOVE GROUND 2.5 FEET.

(9) PROTECTIVE CASING? (YES) NO (Circle One)
HEIGHT ABOVE GROUND 2.5.
LOCKING CAP? (YES) NO (Circle One)

(10) TYPE OF BACKFILL: 5:1 Cement: Bentonite

(11) THICKNESS OF GRAVEL PACK 11.5 FEET.

(12) DEPTH TO FIRST COUPLING .75 FEET.
COUPLING INTERVAL 9.75 FEET.

(13) TOTAL DEPTH OF BOREHOLE 129.5 FEET.

BORING#	DATE	TIME	DEPTH TO WATER	REMARKS
PBN-82-02B	5/11/82	-	110.78'	From top of casing

WELL DETAIL INFORMATION SHEET

JOB NO. C 10313
BORING NO. PBN-82-02C
DATE 3/8/82
CHIEF Larry F.
LOCATION Badger Army Ammunition Plant; Propelient Burning Grounds

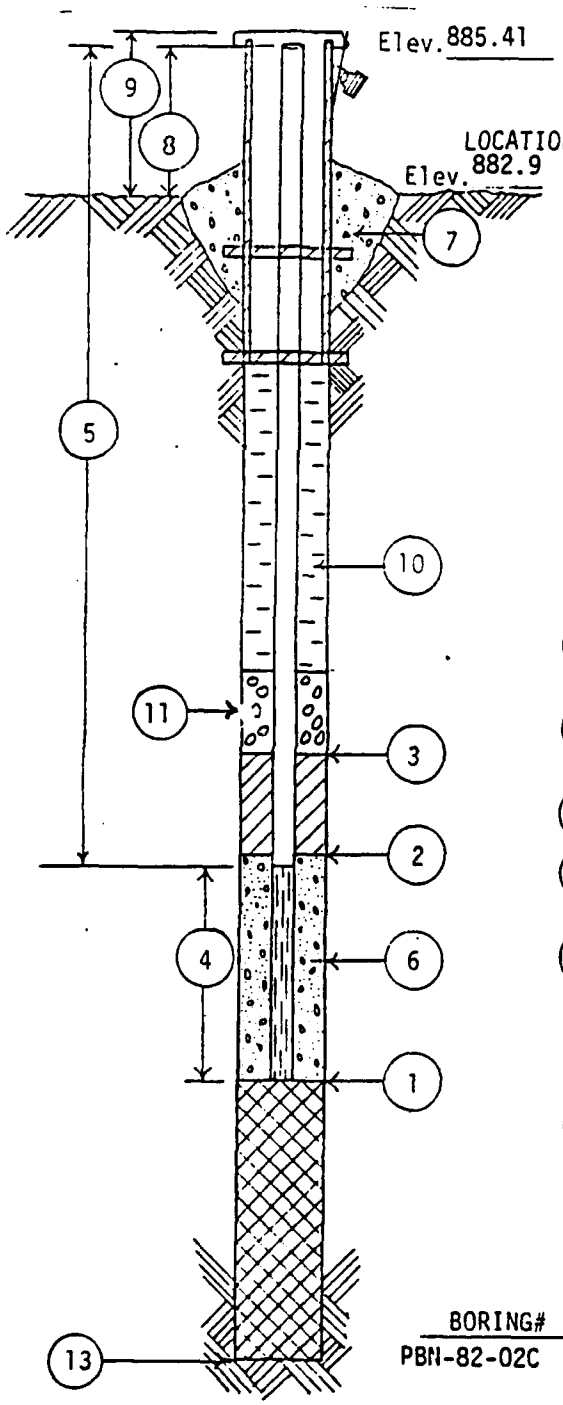

All depth measurements of well detail assumed to be from ground surface unless otherwise indicated.

(1) DEPTH TO BOTTOM OF WELL POINT OR SLOTTED PIPE 138.7 FEET.

(2) DEPTH OF BOTTOM OF SEAL (if installed) 128.5 FEE.

(3) DEPTH TO TOP OF SEAL (if installed) 108 FEET.

(4) LENGTH OF PVC WELL SCREEN, 2 FEET.

(5) TOTAL LENGTH OF PIPE 139.2 FEET @ 4 IN. DIAMETER.

(6) TYPE OF FILTER MATERIAL AROUND WELL POINT OR SLOTTED PIPE Pea Gravel .

(7) CONCRETE CAP, (YES) NO (Circle One)

(8) HEIGHT OF WELL CASING ABOVE GROUND 2.5 FEET.

(9) PROTECTIVE CASING? (YES) NO (Circle One)
HEIGHT ABOVE GROUND 2.5 .
LOCKING CAP? (YES) NO (Circle One)

(10) TYPE OF BACKFILL: 7:1 Cement: Bentonite

(11) THICKNESS OF GRAVEL PACK 10.2 FEET.

(12) DEPTH TO FIRST COUPLING 1.75 FEET.
COUPLING INTERVAL 9.75 FEET.

(13) TOTAL DEPTH OF BOREHOLE 138.7 FEET.

BORING#	DATE	TIME	DEPTH TO WATER	REMARKS
PBN-82-02C	5/11/82	-	111.18'	From top of casing

WELL DETAIL INFORMATION SHEET

JOB NO. C 10313

BORING NO. PBN-82-03A

DATE 3/15/82

CHIEF Larry F.

LOCATION Badger Army Ammunition Plant; Propellent Burning Grounds

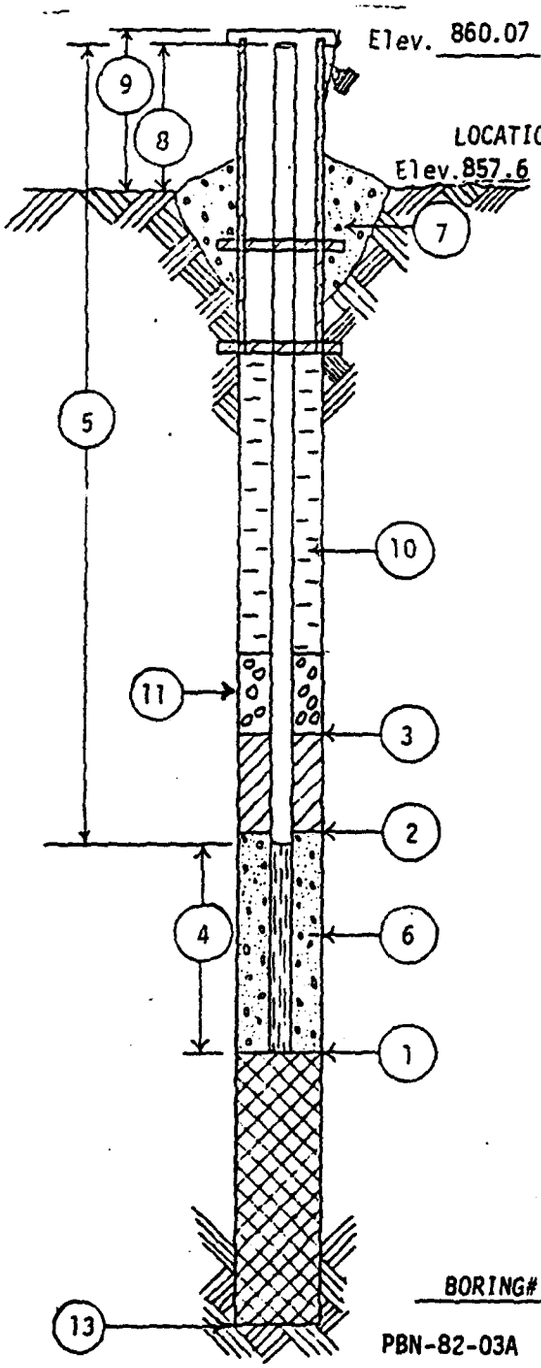

All depth measurements of well detail assumed to be from ground surface unless otherwise indicated.

(1) DEPTH TO BOTTOM OF WELL POINT OR SLOTTED PIPE 94 FEET.

(2) DEPTH OF BOTTOM OF SEAL (if installed) 78 FEET.

(3) DEPTH TO TOP OF SEAL (if installed) 58 FEET.

(4) LENGTH OF PVC WELL SCREEN, 10 FEET.

(5) TOTAL LENGTH OF PIPE 86.5 FEET @ 4 IN. DIAMETER.

(6) TYPE OF FILTER MATERIAL AROUND WELL POINT OR SLOTTED PIPE Pea Gravel.

(7) CONCRETE CAP, (YES) NO (Circle One)

(8) HEIGHT OF WELL CASING ABOVE GROUND 2.5 FEET.

(9) PROTECTIVE CASING? (YES) NO (Circle One)
HEIGHT ABOVE GROUND 2.5
LOCKING CAP? (YES) NO (Circle One)

(10) TYPE OF BACKFILL: 4:1 Cement: Bentonite

(11) THICKNESS OF GRAVEL PACK 16 FEET.

(12) DEPTH TO FIRST COUPLING 5.95 FEET.
COUPLING INTERVAL 9.75 FEET.

(13) TOTAL DEPTH OF BOREHOLE 94 FEET.

BORING#	DATE	TIME	DEPTH TO WATER	REMARKS
PBN-82-03A	5/11/82	-	87.48'	From top of casing

WELL DETAIL INFORMATION SHEET

JOB NO. C 10313

BORING NO. PBN-82-03B

DATE 3/15/82

CHIEF Larry F.

LOCATION Badger Army Ammunition Plant; Propellent Burning Grounds

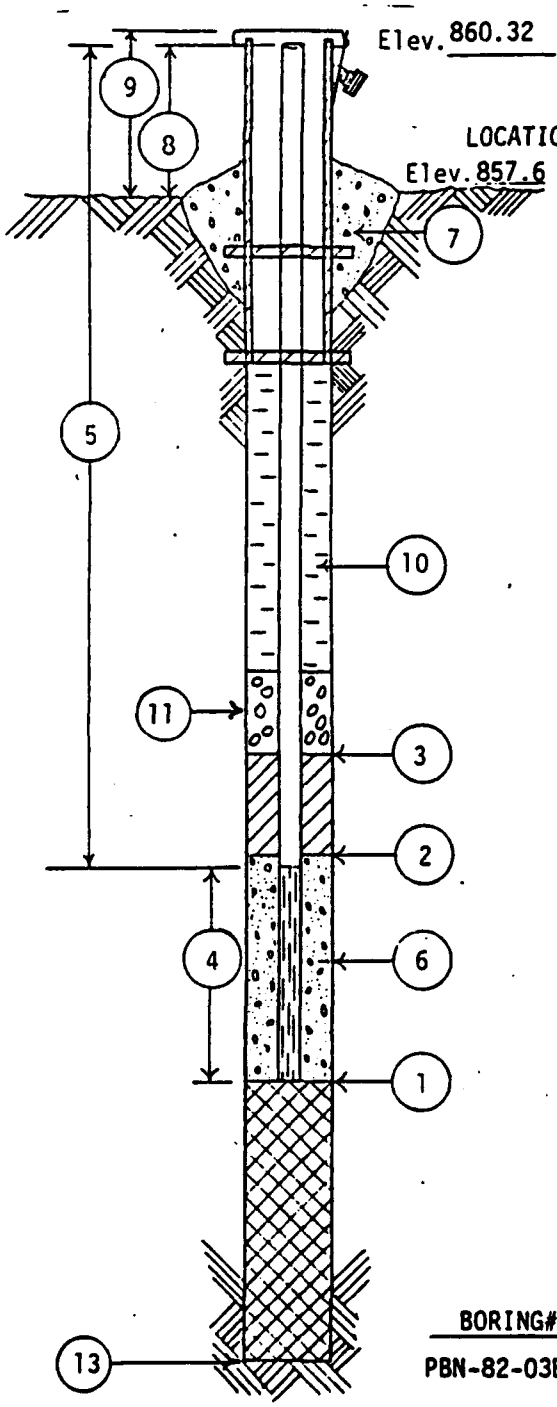

All depth measurements of well detail assumed to be from ground surface unless otherwise indicated.

(1) DEPTH TO BOTTOM OF WELL POINT OR SLOTTED PIPE 106 FEET.

(2) DEPTH OF BOTTOM OF SEAL (if installed) 85 FEET.

(3) DEPTH TO TOP OF SEAL (if installed) 65 FEET.

(4) LENGTH OF PVC WELL SCREEN, 2 FEET.

(5) TOTAL LENGTH OF PIPE 106.5 FEET @ 4 IN. DIAMETER.

(6) TYPE OF FILTER MATERIAL AROUND WELL POINT OR SLOTTED PIPE Pea Gravel.

(7) CONCRETE CAP, (YES) NO (Circle One)

(8) HEIGHT OF WELL CASING ABOVE GROUND 2.5 FEET.

(9) PROTECTIVE CASING? (YES) NO (Circle One)
HEIGHT ABOVE GROUND 2.5.
LOCKING CAP? (YES) NO (Circle One)

(10) TYPE OF BACKFILL: 4:2 Cement: Bentonite

(11) THICKNESS OF GRAVEL PACK 21 FEET.

(12) DEPTH TO FIRST COUPLING 6.35 FEET.
COUPLING INTERVAL 9.75 FEET.

(13) TOTAL DEPTH OF BOREHOLE 106 FEET.

BORING#	DATE	TIME	DEPTH TO WATER	REMARKS
PBN-82-03B	5/11/82	-	87.73'	From top of casing

WELL DETAIL INFORMATION SHEET

JOB NO. C 10313

BORING NO. PBN-82-03C

DATE 3/15/82

CHIEF Larry F.

LOCATION Badger Army Ammunition Plant; Propellent Burning Grounds

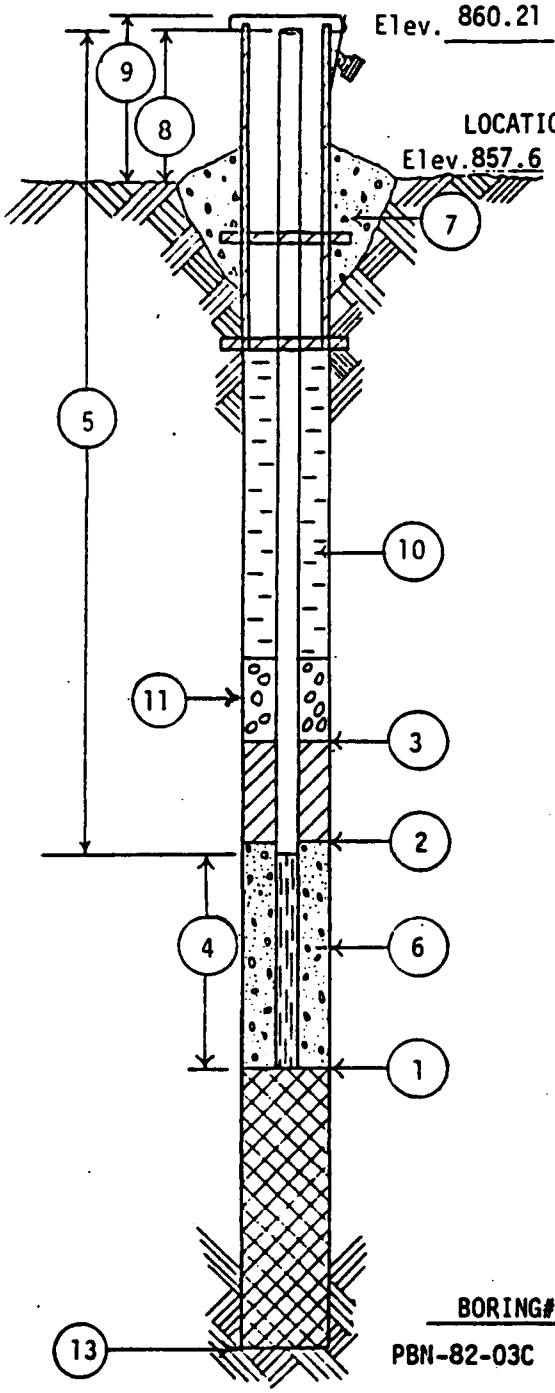

All depth measurements of well detail assumed to be from ground surface unless otherwise indicated.

(1) DEPTH TO BOTTOM OF WELL POINT OR SLOTTED PIPE 115 FEET.

(2) DEPTH OF BOTTOM OF SEAL (if installed) 101 FEET.

(3) DEPTH TO TOP OF SEAL (if installed) 75 FEET.

(4) LENGTH OF PVC WELL SCREEN, 2 FEET.

(5) TOTAL LENGTH OF PIPE 115.5 FEET @ 4 IN. DIAMETER.

(6) TYPE OF FILTER MATERIAL AROUND WELL POINT OR SLOTTED PIPE Pea Gravel.

(7) CONCRETE CAP, (YES) NO (Circle One)

(8) HEIGHT OF WELL CASING ABOVE GROUND 2.5 FEET.

(9) PROTECTIVE CASING? (YES) NO (Circle One)
HEIGHT ABOVE GROUND 2.5.
LOCKING CAP? (YES) NO (Circle One)

(10) TYPE OF BACKFILL: 5:2 Cement: Bentonite

(11) THICKNESS OF GRAVEL PACK 14 FEET.

(12) DEPTH TO FIRST COUPLING 5.75 FEET.
COUPLING INTERVAL 9.75 FEET.

(13) TOTAL DEPTH OF BOREHOLE 115 FEET.

BORING#	DATE	TIME	DEPTH TO WATER	REMARKS
PBN-82-03C	5/11/82	-	87.62'	From top of casing

WELL DETAIL INFORMATION SHEET

JOB NO. C 10313

BORING NO. PBN-82-04A

DATE 3/12/82

CHIEF Larry F.

LOCATION Badger Army Ammunition Plant; Propellent Burning Grounds

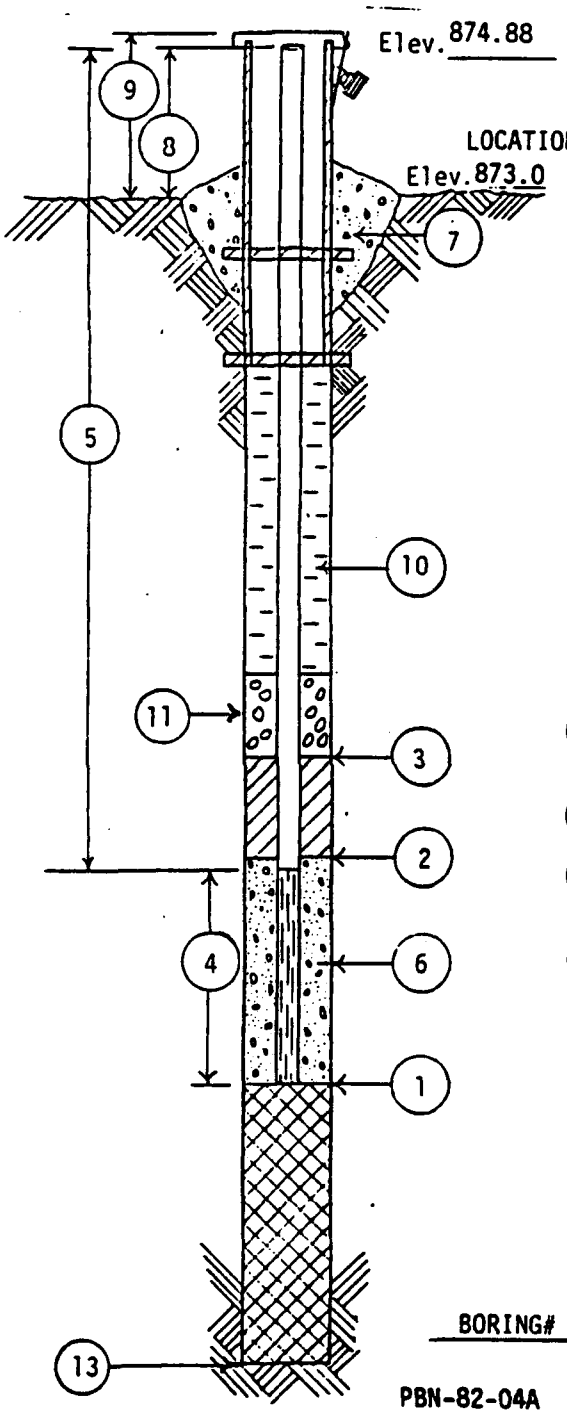

All depth measurements of well detail assumed to be from ground surface unless otherwise indicated.

(1) DEPTH TO BOTTOM OF WELL POINT OR SLOTTED PIPE 106 FEET.

(2) DEPTH OF BOTTOM OF SEAL (if installed) 90 FEET.

(3) DEPTH TO TOP OF SEAL (if installed) 65 FEET.

(4) LENGTH OF PVC WELL SCREEN, 10 FEET.

(5) TOTAL LENGTH OF PIPE 98.5 FEET @ 4 IN. DIAMETER.

(6) TYPE OF FILTER MATERIAL AROUND WELL POINT OR SLOTTED PIPE Pea Gravel.

(7) CONCRETE CAP, (YES) NO (Circle One)

(8) HEIGHT OF WELL CASING ABOVE GROUND 2.5 FEET.

(9) PROTECTIVE CASING? (YES) NO (Circle One)
HEIGHT ABOVE GROUND 2.5.
LOCKING CAP? (YES) NO (Circle One)

(10) TYPE OF BACKFILL: Cement: Bentonite 5:2

(11) THICKNESS OF GRAVEL PACK 16 FEET.

(12) DEPTH TO FIRST COUPLING 8.25 FEET.
COUPLING INTERVAL 9.75 FEET.

(13) TOTAL DEPTH OF BOREHOLE 106 FEET.

BORING#	DATE	TIME	DEPTH TO WATER	REMARKS
PBN-82-04A	5/11/82	-	102.78	From top of casing

WELL DETAIL INFORMATION SHEET

JOB NO. C 10313

4.77

BORING NO. PBN-82-04B

DATE 3/13/82

CHIEF LF

LOCATION Badger Army Ammunition Plant; Propellent Burning Grounds

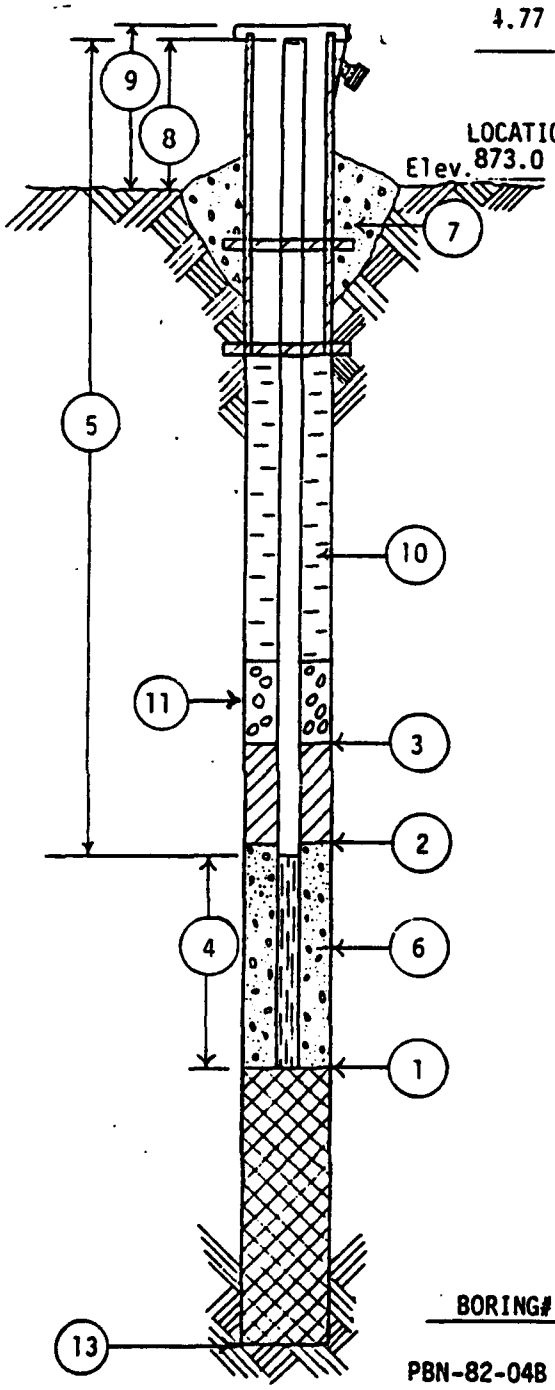

All depth measurements of well detail assumed to be from ground surface unless otherwise indicated.

(1) DEPTH TO BOTTOM OF WELL POINT OR SLOTTED PIPE 118 FEET.

(2) DEPTH OF BOTTOM OF SEAL (if installed) 104 FEET.

(3) DEPTH TO TOP OF SEAL (if installed) 79 FEET.

(4) LENGTH OF PVC WELL SCREEN, 2 FEET.

(5) TOTAL LENGTH OF PIPE 118.5 FEET @ 4 IN. DIAMETER.

(6) TYPE OF FILTER MATERIAL AROUND WELL POINT OR SLOTTED PIPE Pea Gravel.

(7) CONCRETE CAP, (YES) NO (Circle One)

(8) HEIGHT OF WELL CASING ABOVE GROUND 2.5 FEET.

(9) PROTECTIVE CASING? (YES) NO (Circle One)
HEIGHT ABOVE GROUND 2.5.
LOCKING CAP? (YES) NO (Circle One)

(10) TYPE OF BACKFILL: Bentonite & Cement Grout 1:5

(11) THICKNESS OF GRAVEL PACK 14 FEET.

(12) DEPTH TO FIRST COUPLING 1.0 FEET.
COUPLING INTERVAL 9.75 FEET.

(13) TOTAL DEPTH OF BOREHOLE 118 FEET.

BORING#	DATE	TIME	DEPTH TO WATER	REMARKS
PBN-82-04B	5/11/82	-	102.61'	From top of casing

WELL DETAIL INFORMATION SHEET

JOB NO. C 10313

BORING NO. PBN-82-04C

DATE 3/12/82

CHIEF Larry F.

LOCATION Badger Army Ammunition Plant; Propellent Burning Ground

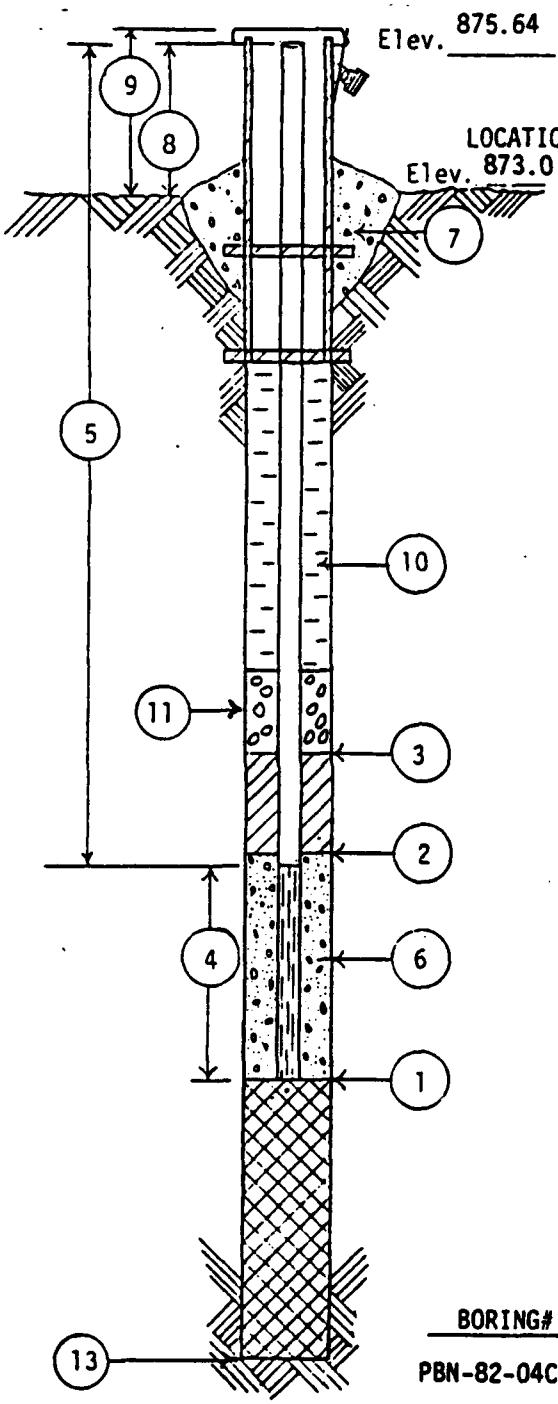

All depth measurements of well detail assumed to be from ground surface unless otherwise indicated.

(1) DEPTH TO BOTTOM OF WELL POINT OR SLOTTED PIPE 129.0 FEET.

(2) DEPTH OF BOTTOM OF SEAL (if installed) 110 FEET.

(3) DEPTH TO TOP OF SEAL (if installed) 80 FEET.

(4) LENGTH OF PVC WELL SCREEN, 2.0 FEET.

(5) TOTAL LENGTH OF PIPE 129.5 FEET @ 4 IN. DIAMETER.

(6) TYPE OF FILTER MATERIAL AROUND WELL POINT OR SLOTTED PIPE Pea Gravel.

(7) CONCRETE CAP, (YES) NO (Circle One)

(8) HEIGHT OF WELL CASING ABOVE GROUND 2.5 FEET.

(9) PROTECTIVE CASING? (YES) NO (Circle One)
HEIGHT ABOVE GROUND 2.5.
LOCKING CAP? (YES) NO (Circle One)

(10) TYPE OF BACKFILL: 5:2 Cement: Bentonite

(11) THICKNESS OF GRAVEL PACK 19 FEET.

(12) DEPTH TO FIRST COUPLING 0.25 FEET.
COUPLING INTERVAL 9.75 FEET.

(13) TOTAL DEPTH OF BOREHOLE 129.0 FEET.

BORING#	DATE	TIME	DEPTH TO WATER	REMARKS
PBN-82-04C	5/11/82	-	103.52'	From top of casing

WELL DETAIL INFORMATION SHEET

JOB NO. C 10313

BORING NO. PBN-82-05A

DATE 3/13/82

CHIEF LF

LOCATION Badger Army Ammunition Plant; Propellent Burning Grounds

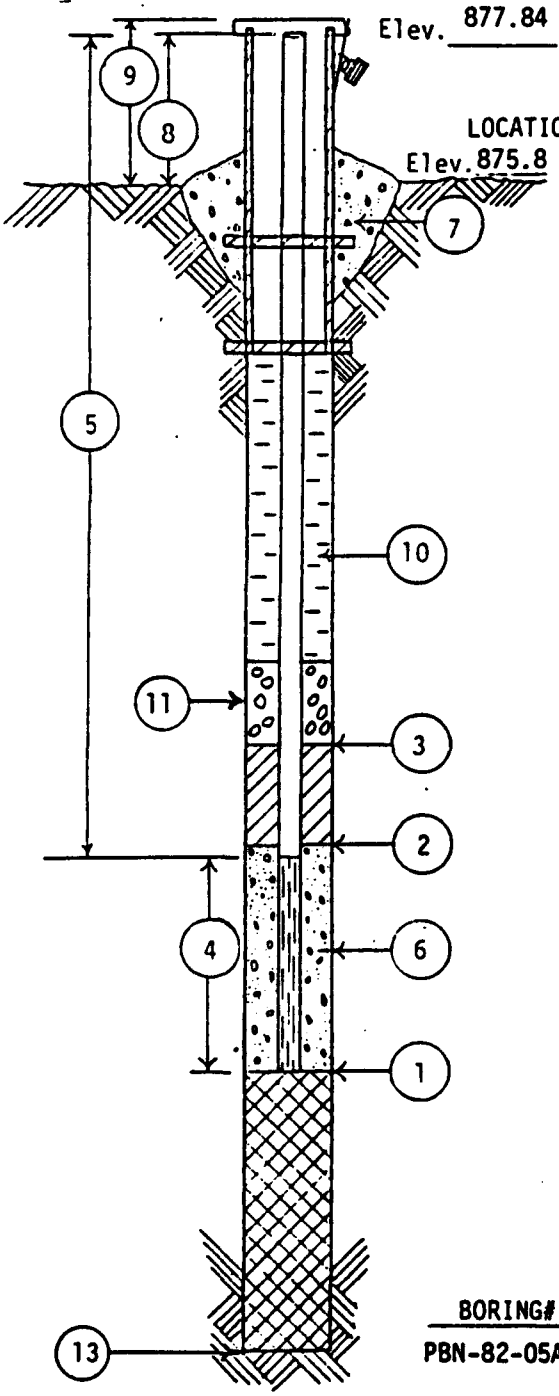

All depth measurements of well detail assumed to be from ground surface unless otherwise indicated.

(1) DEPTH TO BOTTOM OF WELL POINT OR SLOTTED PIPE 110 FEET.

(2) DEPTH OF BOTTOM OF SEAL (if installed) 100 FEET.

(3) DEPTH TO TOP OF SEAL (if installed) 80 FEET.

(4) LENGTH OF PVC WELL SCREEN, 10 FEET.

(5) TOTAL LENGTH OF PIPE 102.5 FEET @ 4 IN. DIAMETER.

(6) TYPE OF FILTER MATERIAL AROUND WELL POINT OR SLOTTED PIPE Pea Gravel.

(7) CONCRETE CAP, (YES) NO (Circle One)

(8) HEIGHT OF WELL CASING ABOVE GROUND 2.5 FEET.

(9) PROTECTIVE CASING? (YES) NO (Circle One)
HEIGHT ABOVE GROUND 2.5.
LOCKING CAP? (YES) NO (Circle One)

(10) TYPE OF BACKFILL: 5:1 Cement Bentonite Grout

(11) THICKNESS OF GRAVEL PACK 10 FEET.

(12) DEPTH TO FIRST COUPLING 4 FEET.
COUPLING INTERVAL 9.75 FEET.

(13) TOTAL DEPTH OF BOREHOLE 110 FEET.

BORING#	DATE	TIME	DEPTH TO WATER	REMARKS
PBN-82-05A	5/11/82	-	105.98	From top of casing

WELL DETAIL INFORMATION SHEET

JOB NO. C 10313

BORING NO. PBN-82-05B

DATE 3/11/82

CHIEF Larry F.

LOCATION Badger Army Ammunition Plant; Propellent Burning Ground

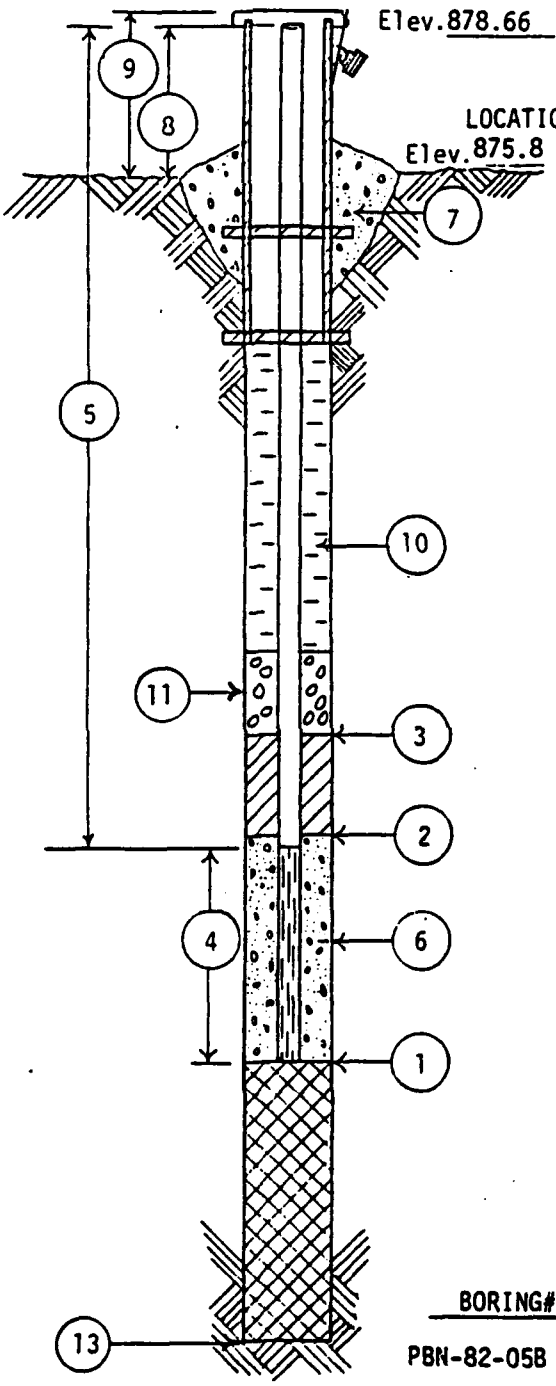

All depth measurements of well detail assumed to be from ground surface unless otherwise indicated.

(1) DEPTH TO BOTTOM OF WELL POINT OR SLOTTED PIPE 121.75 FEET.

(2) DEPTH OF BOTTOM OF SEAL (if installed) 102 FEET.

(3) DEPTH TO TOP OF SEAL (if installed) 80 FEET.

(4) LENGTH OF PVC WELL SCREEN, 2.0 FEET.

(5) TOTAL LENGTH OF PIPE 122.25 FEET @ 4 IN. DIAMETER.

(6) TYPE OF FILTER MATERIAL AROUND WELL POINT OR SLOTTED PIPE Pea Gravel.

(7) CONCRETE CAP, (YES) NO (Circle One)

(8) HEIGHT OF WELL CASING ABOVE GROUND 2.5 FEET.

(9) PROTECTIVE CASING? (YES) NO (Circle One)
HEIGHT ABOVE GROUND 2.5.
LOCKING CAP? (YES) NO (Circle One)

(10) TYPE OF BACKFILL: 5:2 Cement: Bentonite

(11) THICKNESS OF GRAVEL PACK 19.75 FEET.

(12) DEPTH TO FIRST COUPLING 2.75 FEET.
COUPLING INTERVAL 9.75 FEET.

(13) TOTAL DEPTH OF BOREHOLE 121.75 FEET.

BORING#	DATE	TIME	DEPTH TO WATER	REMARKS
PBN-82-05B	5/11/82	-	105.19'	From top of casing

WELL DETAIL INFORMATION SHEET

JOB NO. C 10313

BORING NO. PBN-82-05C

DATE 3/11/82

CHIEF Larry F.

LOCATION Badger Army Ammunition Plant; Propellent Burning Grounds

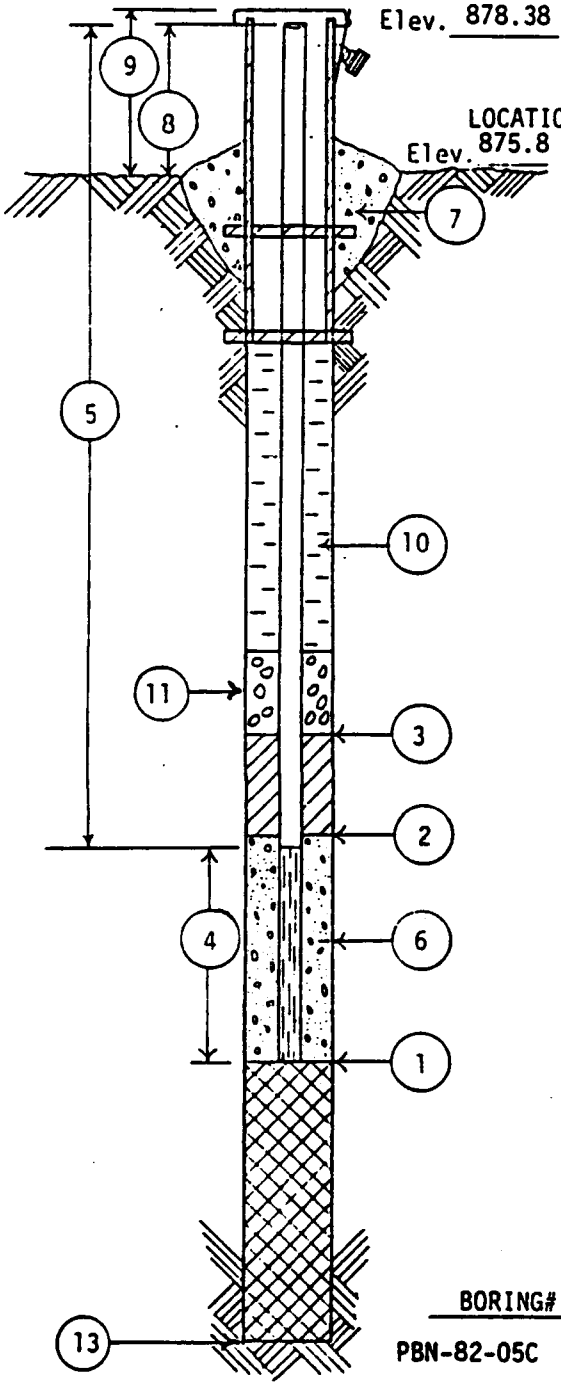

All depth measurements of well detail assumed to be from ground surface unless otherwise indicated.

(1) DEPTH TO BOTTOM OF WELL POINT OR SLOTTED PIPE 131 FEET.

(2) DEPTH OF BOTTOM OF SEAL (if installed) 122 FEET.

(3) DEPTH TO TOP OF SEAL (if installed) 90 FEET.

(4) LENGTH OF PVC WELL SCREEN, 2.0 FEET.

(5) TOTAL LENGTH OF PIPE 131.5 FEET @ 4 IN. DIAMETER.

(6) TYPE OF FILTER MATERIAL AROUND WELL POINT OR SLOTTED PIPE Pea Gravel.

(7) CONCRETE CAP, (YES) NO (Circle One)

(8) HEIGHT OF WELL CASING ABOVE GROUND 2.5 FEET.

(9) PROTECTIVE CASING? (YES) NO (Circle One)
HEIGHT ABOVE GROUND 2.5.
LOCKING CAP? (YES) NO (Circle One)

(10) TYPE OF BACKFILL: 7:4 Cement: Bentonite

(11) THICKNESS OF GRAVEL PACK 9 FEET.

(12) DEPTH TO FIRST COUPLING 1.5 FEET.
COUPLING INTERVAL 9.75 FEET.

(13) TOTAL DEPTH OF BOREHOLE 131 FEET.

BORING#	DATE	TIME	DEPTH TO WATER	REMARKS
PBN-82-05C	5/11/82	-	105.64'	From top of casing

ABB Environmental Services, Inc.

MONITORING WELL CONSTRUCTION FOR:

Facility/Project Name: BADGER AAP

Facility License, Permit or Monitoring Number:

Grid Location: ____ ft. ☐ N. ☐ S. ____ ft. ☐ E. ☐ W.

Well Name: LOM-91-01

Wis. Unique Well Number: DNR Well Number:

Type of Well: Water Table Observation Well ☑ 11; Piezometer ☐ 12

Section Location: SE 1/4 of SW 1/4 of Section 11; T 10 N, R 6 ☒ E ☐ W

Date Well Installed: 10/10/91

Distance Well Is From Waste/Source Boundary: NA ft.

Well Installed By: (Person's Name and Firm): G. RODRIGUEZ / LAYNE

Is Well A Point of Enforcement Std. Application? ☐ Yes ☒ No

Location of Well Relative to Waste/Source: ☐ Upgradient ☐ Sidegradient ☐ Downgradient ☑ Not Known

A. Protective pipe, top elevation 917.77 ft. MSL

B. Well casing, top elevation 917.51 ft. MSL

C. Land surface elevation 915.5 ft. MSL

D. Surface seal, bottom ____ ft. MSL or ____ ft.

12. USCS classification of soil near screen:
☐ GP ☐ GM ☐ GC ☑ GW ☐ SW ☐ SP
☐ SM ☐ SC ☐ ML ☐ MH ☐ CL ☐ CH
☐ Bedrock

13. Sieve analysis attached? ☐ Yes ☑ No

14. Drilling method used: Rotary ☐ 50; Hollow Stem Auger ☐ 41; DUAL WALL; Other ☑

15. Drilling fluid used: Water ☑ 02; Air ☑ 01; Drilling Mud ☐ 03; None ☐ 99

16. Drilling additives used? ☐ Yes ☑ No

Describe ____

17. Source of water (attach analysis): PRODUCTION PUMP 2

E. Bentonite seal, top 790.5 ft. MSL or 125.0 ft.

F. Fine sand, top N/A ft. MSL or ____ ft.

G. Filter pack, top 783.5 ft. MSL or 132.0 ft.

H. Well screen, top 775.8 ft. MSL or 139.7 ft.

I. Well screen, bottom 765.8 ft. MSL or 149.7 ft.

J. Filter pack, bottom 764.5 ft. MSL or 151.0 ft.

K. Borehole, bottom 764.5 ft. MSL or 151.0 ft.

L. Borehole, diameter 09.0 in.

M. O.D. well casing 04.00 in.

N. I.D. well casing 3.75 in.

1. Cap and lock? ☑ Yes ☐ No

2. Protective cover pipe:
a. Inside diameter: 06.0 in.
b. Length: 06.0 ft.
c. Material: Steel ☑ 04; Other ☐ __
d. Additional protection? ☑ Yes ☐ No
If yes, describe: 3 BOLLARD POSTS

3. Surface seal: Bentonite ☐ 30; Concrete ☑ 01; Other ☐ __

4. Material between well casing and protective pipe: Bentonite ☐ 30; Annular space seal ☑; Other ☐ __

5. Annular space seal: Granular Bentonite ☐ 33; ____ Lbs/gal mud weight ... Bentonite-sand slurry ☐ 35; ____ Lbs/gal mud weight ..... Bentonite slurry ☐ 31; 10 % Bentonite ..... Bentonite-cement grout ☑ 50; 150 Ft³ volume added for any of the above
How installed: Tremie ☐ 01; Tremie pumped ☐ 02; Gravity ☑ 03

6. Bentonite seal: Bentonite granules ☐ 33; ☑ 1/4 in. ☐ 3/8 in. ☐ 1/2 in. Bentonite pellets ☑ 32; RR BENTONITE POWDER; Other ☑ __

7. Fine sand material: Manufacturer, product name and mesh size: NONE
Volume added ____ ft³

8. Filter pack material: Manufacturer, product name and mesh size: COLORADO SILICA SAND
Volume added 20 ft³

9. Well casing: Flush threaded PVC schedule 40 ☐ 23; Flush threaded PVC schedule 80 ☑ 24; Other ☐ __

10. Screen material: PVC SCH 80
Screen type: Factory cut ☑ 11; Continuous slot ☐ 01; Other ☐ __
Manufacturer: MONOFLEX
Slot size: 0.010 in.
Slotted length: 06.0 ft.

11. Backfill material (below filter pack): None ☑; Other ☐

I hereby certify that the information on this form is true and correct to the best of my knowledge.

Signature: Rod R. Rueter Firm: ABB-ES

ABB Environmental Services, Inc. MONITORING WELL CONSTRU[redacted] FOR

Facility/Project Name: BADGER AAP	Grid Location: ____ ft. ☐ N. ☐ S. ____ ft. ☐ E. ☐ W.	Well Name: LOM-91-02
Facility License, Permit or Monitoring Number: _____		Wis. Unique Well Number: _____ DNR Well Nr. _____
Type of Well: Water Table Observation Well ☑ Piezometer ☐	Section Location: SE 1/4 of SW 1/4 of Section 11, T 10 N, R 6 ☑ E ☐ W	Date Well Installed: 10/25/91 (m m / d d / y y)
Distance Well is From Waste/Source Boundary: N/A ft.	Location of Well Relative to Waste/Source: ☑ Upgradient ☐ Sidegradient ☐ Downgradient ☐ Not Known	Well Installed By: (Person's Name and Firm) G RODRIGUEZ & LAYNE
Is Well A Point of Enforcement Std. Application? ☐ Yes ☑ No		

A. Protective pipe, top elevation 912.14 ft. MSL
B. Well casing, top elevation 912.30 ft. MSL
C. Land surface elevation 910.3 ft. MSL
D. Surface seal, bottom _____ ft. MSL or _____ ft.

12. USCS classification of soil near screen:
☐ GP ☐ GM ☐ GC ☑ GW ☐ SW ☐ SP
☐ SM ☐ SC ☐ ML ☐ MH ☐ CL ☐ CH
☐ Bedrock

13. Sieve analysis attached? ☐ Yes ☑ No

14. Drilling method used: Rotary ☐ 50; Hollow Stem Auger ☐ 41; Other ☑ DUAL WALL

15. Drilling fluid used: Water ☑ 02; Air ☑ 01; Drilling Mud ☐ 03; None ☐ 99

16. Drilling additives used? ☐ Yes ☑ No
Describe _____

17. Source of water (attach analysis):
PRODUCTION WELL # 2

E. Bentonite seal, top 786.8 ft. MSL or 123.5 ft.
F. Fine sand, top _____ ft. MSL or _____ ft.
G. Filter pack, top 781.3 ft. MSL or 129.0 ft.
H. Well screen, top 773.9 ft. MSL or 136.4 ft.
I. Well screen, bottom 763.9 ft. MSL or 146.4 ft.
J. Filter pack, bottom 762.3 ft. MSL or 148.0 ft.
K. Borehole, bottom 762.3 ft. MSL or 148.0 ft.
L. Borehole, diameter 09.0 in.
M. O.D. well casing 04.25 in.
N. I.D. well casing 02.75 in.

1. Cap and lock? ☑ Yes ☐
2. Protective cover pipe:
a. Inside diameter: 06.0
b. Length: 06.0
c. Material: Steel ☑ Other ☐
d. Additional protection? ☑ Yes ☐
If yes, describe: 4 BOLLARD POSTS
3. Surface seal: Bentonite ☐ Concrete ☑ Other ☐
4. Material between well casing and protective pipe: Bentonite ☐ Annular space seal ☑ Other ☐
5. Annular space seal: Granular Bento[redacted] ☐
_____ Lbs/gal mud weight . . . Bentonite-sand s[redacted]
_____ Lbs/gal mud weight . . . . . Bentonite slurry ☐
10 % Bentonite . . . . . Bentonite-cement grout ☑
250 Ft³ volume added for any of the above
How installed: Tremie ☐ Tremie pumped ☐ Gravity ☑
6. Bentonite seal: Bentonite granules ☐ ☑ 1/4 in. ☐ 3/8 in. ☐ 1/2 in. Bentonite pellets ☑ Other ☐
7. Fine sand material: Manufacturer, product name and mesh
NONE
Volume added _____ ft³
8. Filter pack material: Manufacturer, product name and mesh size
CSSI SILICA SAND #4
Volume added 20 ft³
9. Well casing: Flush threaded PVC schedule 40 ☐ Flush threaded PVC schedule 80 ☑ Other ☐
10. Screen material: SCH 80 PVC 4" Dia
Screen type: Factory cut ☑ Continuous slot ☐ Other ☐
Manufacturer MONOFLEX
Slot size: 0.010
Slotted length: 10.0
11. Backfill material (below filter pack): None ☑ Oth[redacted]

I hereby certify that the information on this form is true and correct to the best of my knowledge.

Signature: Rod K. Rueter Firm: ABB-ES

State of Wisconsin
Department of Natural Resources

MONITORING WELL CONSTRUCTION
Form 4400-113A 5-89

Facility/Project Name: Badger Army Ammunition Plant	Grid Location: 4,803,093.4 m N. ☐ S.; 777,471.9 m E. ☒ W.	Well Name: LOM-89-01
Facility License, Permit or Monitoring Number:		Wis. Unique Well Number: DNR Well Number:
Type of Well: Water Table Observation Well ☒ 11; Piezometer ☐ 12	Section Location: ____ 1/4 of ____ 1/4 of Section ____, T ____ N, R ____ ☐ E ☐ W	Date Well Installed: 02/17/89 (m m / d d / y y)
Distance Well Is From Waste/Source Boundary: NA ft.	Location of Well Relative to Waste/Source: ☐ Upgradient ☐ Sidegradient ☐ Downgradient ☐ Not Known	Well Installed By: (Person's Name and Firm): Dave H. Beken / E. C. Jordan Co.
Is Well A Point of Enforcement Std. Application? ☐ Yes ☒ No		

A. Protective pipe, top elevation 918.18 ft. MSL
B. Well casing, top elevation 912.86 ft. MSL
C. Land surface elevation 915.9 ft. MSL
D. Surface seal, bottom ____ ft. MSL or ____ ft.

12. USCS classification of soil near screen:
☒ GP ☐ GM ☐ GC ☐ GW ☐ SW ☒ SP
☒ SM ☐ SC ☐ ML ☐ MH ☐ CL ☐ CH
☐ Bedrock

13. Sieve analysis attached? ☐ Yes ☒ No

14. Drilling method used: Rotary ☐ 50; Hollow Stem Auger ☐ 41; Other ☒
Dual Wall

15. Drilling fluid used: Water ☐ 02; Air ☒ 01; Drilling Mud ☐ 03; None ☐ 99

16. Drilling additives used? ☐ Yes ☒ No
Describe ____

17. Source of water (attach analysis):
AW #2

E. Bentonite seal, top 791.9 ft. MSL or 124.0 ft.
F. Fine sand, top NA ft. MSL or NA ft.
G. Filter pack, top 786.9 ft. MSL or 129.0 ft.
H. Well screen, top 777.4 ft. MSL or 138.5 ft.
I. Well screen, bottom 752.4 ft. MSL or 163.5 ft.
J. Filter pack, bottom 752.4 ft. MSL or 158.5 ft.
K. Borehole, bottom 752.4 ft. MSL or 156.5 ft.
L. Borehole, diameter 9.5 in.
M. O.D. well casing 4.5 in.
N. I.D. well casing 4.0 in.

1. Cap and lock? ☒ Yes ☐ No
2. Protective cover pipe:
a. Inside diameter: 6.0 in.
b. Length: 2.0 ft.
c. Material: Steel ☒ 04; Other ☐ ____
d. Additional protection? ☒ Yes ☐ No
If yes, describe: 4 bucking posts
3. Surface seal: Bentonite ☐ 30; Concrete ☐ 01; Other ☒ ____
Grout
4. Material between well casing and protective pipe: Bentonite ☐ 30; Annular space seal ☐; Other ☒ ____
Grout
5. Annular space seal: Granular Bentonite ☐ 33
____ Lbs/gal mud weight ... Bentonite-sand slurry ☐ 35
____ Lbs/gal mud weight ..... Bentonite slurry ☐ 31
5 % Bentonite ..... Bentonite-cement grout ☒ 50
± 550 Gal. volume added for any of the above
How installed: Tremie ☐ 01; Tremie pumped ☒ 02; Gravity ☐ 08
6. Bentonite seal: Bentonite granules ☐ 33
☐ 1/4 in. ☒ 3/8 in. ☐ 1/2 in. Bentonite pellets ☒ 32
Other ☐ ____
7. Fine sand material: Manufacturer, product name and mesh size
NA
Volume added NA ft³
8. Filter pack material: Manufacturer, product name and mesh size
Red Flint, Silica Filter Sand
Volume added ≈ 3.3 ft³
9. Well casing: Flush threaded PVC schedule 40 ☐ 23; Flush threaded PVC schedule 80 ☒ 24; Other ☐ ____
10. Screen material: Schedule 40 PVC
Screen type: Factory cut ☒ 11; Continuous slot ☐ 01; Other ☐ ____
Manufacturer Timco
Slot size: 0.010 in.
Slotted length: 20.0 ft.
11. Backfill material (below filter pack): None ☒; Other ☐ ____

I hereby certify that the information on this form is true and correct to the best of my knowledge.

Signature: Paul L. Bol | Firm: E. C. Jordan Co.

Please complete and return both sides of this form as required by chs. 144, 147 and 160, Wis. Stats., and ch. NR 141, Wis. Adm. Code. In accordance with ch. 144, Wis Stats., failure to file this form may result in a forfeiture of not less than $10, nor more than $5,000 for each day of violation. In accordance with ch. 147, Wis. Stats., failure to file this form may result in a forfeiture of not more than $10,000 for each day of violation.

State of Wisconsin
Department of Natural Resources

MONITORING WELL CONSTRUCTION
Form 4400-113A 8-89

Facility/Project Name	Grid Location	Well Name
Badger Army Ammunition Plant	4,802,958.1 ft. ☒ N. ☐ S.	LON-89-02A
Facility License, Permit or Monitoring Number	719,468.6 ft. ☒ E. ☐ W.	Wis. Unique Well Number / DNR Well Num
Type of Well: Water Table Observation Well ☒ 11; Piezometer ☐ 12	Section Location: ____ 1/4 of ____ 1/4 of Section ____; T ____ N, R ____ ☐ E ☐ W	Date Well Installed: 02/19/89 (m m d d y y)
Distance Well Is From Waste/Source Boundary: NA ft.	Location of Well Relative to Waste/Source: ☐ Upgradient ☐ Sidegradient ☐ Downgradient ☐ Not Known	Well Installed By: (Person's Name and Firm): Dave H. Belan / E.C Jordan Co
Is Well A Point of Enforcement Std. Application? ☐ Yes ☒ No		

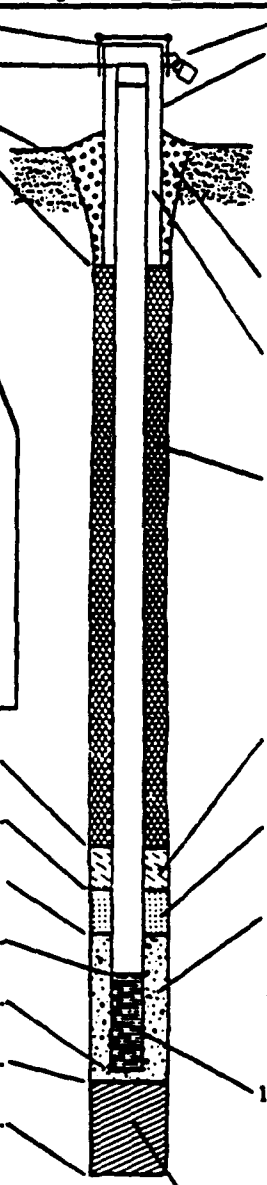

A. Protective pipe, top elevation 920.24 ft. MSL
B. Well casing, top elevation 920.59 ft. MSL
C. Land surface elevation 918.5 ft. MSL
D. Surface seal, bottom ____ ft. MSL or ____ ft.

12. USCS classification of soil near screen:
☐ GP ☐ GM ☐ GC ☐ GW ☐ SW ☒ SP
☐ SM ☐ SC ☐ ML ☐ MH ☐ CL ☐ CH
☐ Bedrock

13. Sieve analysis attached? ☐ Yes ☒ No

14. Drilling method used: Rotary ☐ 50; Hollow Stem Auger ☐ 41; Other ☒ —
Dual Wall

15. Drilling fluid used: Water ☐ 02; Air ☐ 01; Drilling Mud ☐ 03; None ☒ 99

16. Drilling additives used? ☐ Yes ☒ No
Describe ____

17. Source of water (attach analysis):
PW #2

E. Bentonite seal, top 792.5 ft. MSL or 126.0 ft.
F. Fine sand, top NA ft. MSL or NA ft.
G. Filter pack, top 785.7 ft. MSL or 132.5 ft.
H. Well screen, top 779.5 ft. MSL or 139.0 ft.
I. Well screen, bottom 759.5 ft. MSL or 159.0 ft.
J. Filter pack, bottom 759.5 ft. MSL or 159.0 ft.
K. Borehole, bottom 758.5 ft. MSL or 160.0 ft.
L. Borehole, diameter 9.5 in.
M. O.D. well casing 4.5 in.
N. I.D. well casing 4.0 in.

1. Cap and lock? ☒ Yes ☐ No
2. Protective cover pipe:
a. Inside diameter: 6.6 in
b. Length: 2.0 ft
c. Material: Steel ☒ 04; Other ☐ ____
d. Additional protection? ☒ Yes ☐ No
If yes, describe: 4 bucking Posts
3. Surface seal: Bentonite ☐ 30; Concrete ☐ 0; Grout; Other ☒ ____
4. Material between well casing and protective pipe: Bentonite ☐ 30; Annular space seal ☐; Grout; Other ☒ ____
5. Annular space seal: Granular Bentonite ☐ 33
____ Lbs/gal mud weight . . . Bentonite-sand slurry ☐ 35
____ Lbs/gal mud weight . . . . . Bentonite slurry ☐ 31
5 % Bentonite . . . . Bentonite-cement grout ☒ 50
± 760 gal/ft³ volume added for any of the above
How installed: Tremie ☐ 01; Tremie pumped ☒ 02; Gravity ☐ 08
6. Bentonite seal: Bentonite granules ☐ 33
☐ 1/4 in. ☒ 3/8 in. ☐ 1/2 in. Bentonite pellets ☒ 32
Other ☐ ____
7. Fine sand material: Manufacturer, product name and mesh size
NA
Volume added NA ft³
8. Filter pack material: Manufacturer, product name and mesh size
Red Flint, Silica F. Mesh Sand
Volume added ≈ 2.9 ft³
9. Well casing: Flush threaded PVC schedule 40 ☐ 23; Flush threaded PVC schedule 80 ☒ 24; Other ☐ ____
10. Screen material: Schedule 80 PVC
Screen type: Factory cut ☒ 11; Continuous slot ☐ 01; Other ☐ ____
Manufacturer Timco
Slot size: 0.___ in.
Slotted length: ___.__ ft.
11. Backfill material (below filter pack): None ☐
Native cave; Other ☒ ____

I hereby certify that the information on this form is true and correct to the best of my knowledge.

Signature: Paul F. Bol — Firm: E.C Jordan Co

Please complete and return both sides of this form as required by chs. 144, 147 and 160, Wis. Stats., and ch. NR 141, Wis. Adm. Code. In accordance with ch. 144, Wis Stats., failure to file this form may result in a forfeiture of not less than $10, nor more than $5,000 for each day of violation. In accordance with ch. 147, Wis. Stats., failure to file this form may result in a forfeiture of not more than $10,000 for each day of violation.

State of Wisconsin
Department of Natural Resources

MONITORING WELL CONSTRUCTION
Form 4400-113A 8-89

Facility/Project Name: Badger Army Ammunitions Plant	Grid Location: 4,802,960.5 M ☒ N. ☐ S. / 277,477.6 M ☒ E. ☐ W.	Well Name: LOW-89-02B
Facility License, Permit or Monitoring Number: _____		Wis. Unique Well Number: _____ DNR Well Number: _____
Type of Well: Water Table Observation Well ☐ 11; Piezometer ☒ 12	Section Location: ____ 1/4 of ____ 1/4 of Section ____, T ____ N, R ____ ☐ E ☐ W	Date Well Installed: 02/18/89 (m m / d d / y y)
Distance Well Is From Waste/Source Boundary: NA ft.	Location of Well Relative to Waste/Source: ☐ Upgradient ☐ Sidegradient ☐ Downgradient ☐ Not Known	Well Installed By: (Person's Name and Firm) Dave H. Belan / E. C. Jordan Co.
Is Well A Point of Enforcement Std. Application? ☐ Yes ☒ No		

A. Protective pipe, top elevation 921.26 ft. MSL

B. Well casing, top elevation 921.13 ft. MSL

C. Land surface elevation 918.9 ft. MSL

D. Surface seal, bottom ____ ft. MSL or ____ ft.

12. USCS classification of soil near screen:
☒ GP ☐ GM ☐ GC ☐ GW ☐ SW ☒ SP
☐ SM ☐ SC ☐ ML ☐ MH ☐ CL ☐ CH
☐ Bedrock

13. Sieve analysis attached? ☐ Yes ☒ No

14. Drilling method used: Rotary ☐ 50; Hollow Stem Auger ☐ 41; Other ☒ Dual Wall

15. Drilling fluid used: Water ☐ 02; Air ☒ 01; Drilling Mud ☐ 03; None ☐ 99

16. Drilling additives used? ☐ Yes ☐ No

Describe _____

17. Source of water (attach analysis): PW #2

E. Bentonite seal, top 741.4 ft. MSL or 177.5 ft.

F. Fine sand, top NA ft. MSL or NA ft.

G. Filter pack, top 736.4 ft. MSL or 182.5 ft.

H. Well screen, top 725.9 ft. MSL or 193.0 ft.

I. Well screen, bottom 720.9 ft. MSL or 198.0 ft.

J. Filter pack, bottom 720.9 ft. MSL or 198.0 ft.

K. Borehole, bottom 718.9 ft. MSL or 200.0 ft.

L. Borehole, diameter 9.5 in.

M. O.D. well casing 4.5 in.

N. I.D. well casing 4.0 in.

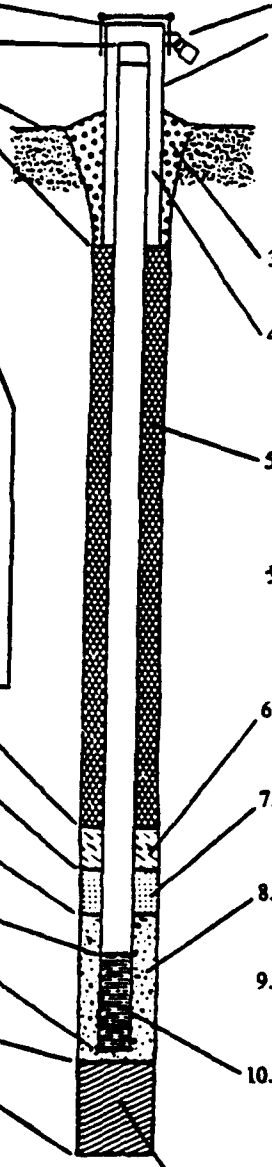

1. Cap and lock? ☒ Yes ☐ No

2. Protective cover pipe:
a. Inside diameter: 6.0 in.
b. Length: 7.0 ft.
c. Material: Steel ☒ 04; Other ☐ __
d. Additional protection? ☒ Yes ☐ No
If yes, describe: 4 bucking Posts

3. Surface seal: Bentonite ☐ 30; Concrete ☐ 01; Other ☒ Grout

4. Material between well casing and protective pipe: Bentonite ☐ 30; Annular space seal ☐; Other ☒ Grout

5. Annular space seal: Granular Bentonite ☐ 33
____ Lbs/gal mud weight . . . Bentonite-sand slurry ☐ 35
____ Lbs/gal mud weight . . . . . Bentonite slurry ☐ 31
5 % Bentonite . . . . . Bentonite-cement grout ☒ 50
± 700 gal ~~ft³~~ volume added for any of the above
How installed: Tremie ☐ 01; Tremie pumped ☒ 02; Gravity ☐ 08

6. Bentonite seal: Bentonite granules ☐ 33
☐ 1/4 in. ☒ 3/8 in. ☐ 1/2 in. Bentonite pellets ☒ 32
Other ☐ __

7. Fine sand material: Manufacturer, product name and mesh size NA
Volume added NA ft³

8. Filter pack material: Manufacturer, product name and mesh size Red Flint, Silica Filter Sand
Volume added ≈ 1.7 ft³

9. Well casing: Flush threaded PVC schedule 40 ☐ 23; Flush threaded PVC schedule 80 ☒ 24; Other ☐ __

10. Screen material: Schedule 80 PVC
Screen type: Factory cut ☒ 11; Continuous slot ☐ 01; Other ☐ __
Manufacturer Timco
Slot size: 0.010 in.
Slotted length: 5.0 ft.

11. Backfill material (below filter pack): None ☐; Other ☒ Native cave

I hereby certify that the information on this form is true and correct to the best of my knowledge.

Signature	Firm
Paul L. Bel	E. C. Jordan Co.

Please complete and return both sides of this form as required by chs. 144, 147 and 160, Wis. Stats., and ch. NR 141, Wis. Adm. Code. In accordance with ch. 144, Wis Stats., failure to file this form may result in a forfeiture of not less than $10, nor more than $5,000 for each day of violation. In accordance with ch. 147, Wis. Stats., failure to file this form may result in a forfeiture of not more than $10,000 for each day of violation.

State of Wisconsin
Department of Natural Resources

MONITORING WELL CONSTRUCTION
Form 4400-113A 8-8

Facility/Project Name: Badger Army Ammunition Plant	Grid Location: 4,502,959.3 m N. ☐ S. / 297,521.8 m E. ☐ W.	Well Name: LON-89-03A
Facility License, Permit or Monitoring Number:		Wis. Unique Well Number: DNR Well Num:
Type of Well: Water Table Observation Well ☒ 11; Piezometer ☐ 12	Section Location: ____ 1/4 of ____ 1/4 of Section ____, T ____ N, R ____ ☐ E ☐ W	Date Well Installed: 02/20/89 (m m / d d / y y)
Distance Well Is From Waste/Source Boundary: NA ft.	Location of Well Relative to Waste/Source: ☐ Upgradient ☐ Sidegradient ☐ Downgradient ☐ Not Known	Well Installed By: (Person's Name and Firm) Dave H. Belan / E.C. Jordan Co
Is Well A Point of Enforcement Std. Application? ☐ Yes ☒ No		

A. Protective pipe, top elevation 922.29 ft. MSL
B. Well casing, top elevation 922.14 ft. MSL
C. Land surface elevation 919.2 ft. MSL
D. Surface seal, bottom ____ ft. MSL or ____ ft.

12. USCS classification of soil near screen:
☐ GP ☐ GM ☐ GC ☐ GW ☐ SW ☒ SP
☐ SM ☐ SC ☐ ML ☐ MH ☐ CL ☐ CH
☐ Bedrock

13. Sieve analysis attached? ☐ Yes ☒ No

14. Drilling method used: Rotary ☐ 50; Hollow Stem Auger ☐ 41; Other ☒ Dual Wall

15. Drilling fluid used: Water ☐ 02; Air ☒ 01; Drilling Mud ☐ 03; None ☐ 99

16. Drilling additives used? ☐ Yes ☒ No
Describe ____

17. Source of water (attach analysis): PW #2

E. Bentonite seal, top 792.7 ft. MSL or 126.5 ft.
F. Fine sand, top NA ft. MSL or NA ft.
G. Filter pack, top 786.7 ft. MSL or 133.0 ft.
H. Well screen, top 781.2 ft. MSL or 138.0 ft.
I. Well screen, bottom 761.2 ft. MSL or 158.0 ft.
J. Filter pack, bottom 761.2 ft. MSL or 158.0 ft.
K. Borehole, bottom 759.2 ft. MSL or 160.0 ft.
L. Borehole, diameter 9.5 in.
M. O.D. well casing 4.5 in.
N. I.D. well casing 4.0 in.

1. Cap and lock? ☒ Yes ☐ No
2. Protective cover pipe:
a. Inside diameter: 6.0 in
b. Length: 2.0 ft
c. Material: Steel ☒ 02; Other ☐ __
d. Additional protection? ☒ Yes ☐ No
If yes, describe: 4 bucking Posts
3. Surface seal: Bentonite ☐ 30; Concrete ☐ 0; Other ☒ Grout
4. Material between well casing and protective pipe: Bentonite ☐ 30; Annular space seal ☐; Other ☒ Grout
5. Annular space seal: Granular Bentonite ☐ 33
____ Lbs/gal mud weight . . . Bentonite-sand slurry ☐ 3
____ Lbs/gal mud weight . . . . . Bentonite slurry ☐ 3
5 % Bentonite . . . . . Bentonite-cement grout ☒ 50
+700 gal volume added for any of the above
How installed: Tremie ☐ 0; Tremie pumped ☒ 02; Gravity ☐ 08
6. Bentonite seal: Bentonite granules ☐ 3
☐ 1/4 in. ☒ 3/8 in. ☐ 1/2 in. Bentonite pellets ☒ 32
Other ☐ __
7. Fine sand material: Manufacturer, product name and mesh size: NA
Volume added NA ft³
8. Filter pack material: Manufacturer, product name and mesh size: Red Flint, Silica Filter Sand
Volume added ≈ 28 ft³
9. Well casing: Flush threaded PVC schedule 40 ☐ 23; Flush threaded PVC schedule 80 ☒ 24; Other ☐ __
10. Screen material: Schedule 80 PVC
Screen type: Factory cut ☒ 11; Continuous slot ☐ 01; Other ☐ __
Manufacturer Timco
Slot size: 0.010 in
Slotted length: 20.0 ft.
11. Backfill material (below filter pack): None ☐; Other ☒ Native cave

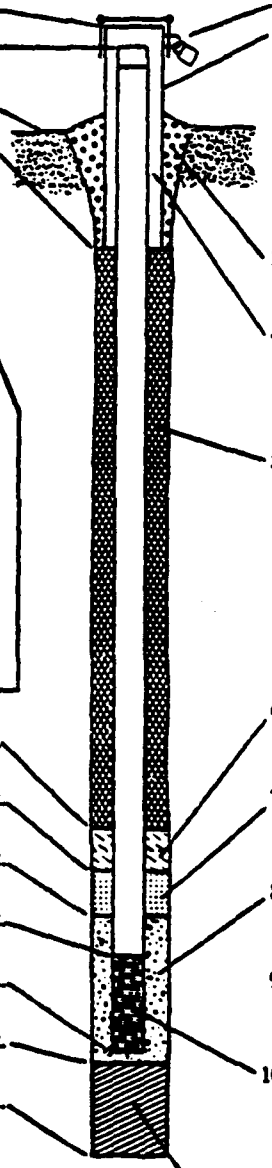

I hereby certify that the information on this form is true and correct to the best of my knowledge.

Signature: [signature] Firm: E.C. Jordan Co.

Please complete and return both sides of this form as required by chs. 144, 147 and 160, Wis. Stats., and ch. NR 141, Wis. Adm. Code. In accordance with ch. 144, Wis Stats., failure to file this form may result in a forfeiture of not less than $10, nor more than $5,000 for each day of violation. In accordance with ch. 147, Wis. Stats., failure to file this form may result in a forfeiture of not more than $10,000 for each day of violation.

State of Wisconsin
Department of Natural Resources

MONITORING WELL CONSTRUCTION
Form 4400-113A 8-89

Facility/Project Name: Badger Army Ammunition Plant	Grid Location: 4,802,959.1 m ft N. S.; 272,510.9 m ft E. W.	Well Name: LON-89-03B
Facility License, Permit or Monitoring Number:		Wis. Unique Well Number / DNR Well Number:
Type of Well: Water Table Observation Well 11; Piezometer 12	Section Location: 1/4 of 1/4 of Section; T N, R E W	Date Well Installed: 02/20/89 (mm/dd/yy)
Distance Well Is From Waste/Source Boundary: NA ft.	Location of Well Relative to Waste/Source: Upgradient; Sidegradient; Downgradient; Not Known	Well Installed By: (Person's Name and Firm): Dave A. Beken / E.C. Jordan Co.
Is Well A Point of Enforcement Std. Application? Yes; No		

A. Protective pipe, top elevation 922.19 ft. MSL
B. Well casing, top elevation 921.99 ft. MSL
C. Land surface elevation 919.5 ft. MSL
D. Surface seal, bottom ____ ft. MSL or ____ ft.

12. USCS classification of soil near screen:
GP GM GC GW SW SP
SM SC ML MH CL CH
Bedrock

13. Sieve analysis attached? Yes No

14. Drilling method used: Rotary 50; Hollow Stem Auger 41; Other
Dual Wall

15. Drilling fluid used: Water 02; Air 01; Drilling Mud 03; None 99

16. Drilling additives used? Yes No
Describe

17. Source of water (attach analysis):
PW #2

E. Bentonite seal, top 748.5 ft. MSL or 171.0 ft.
F. Fine sand, top NA ft. MSL or NA ft.
G. Filter pack, top 743.5 ft. MSL or 176.0 ft.
H. Well screen, top 726.5 ft. MSL or 193.0 ft.
I. Well screen, bottom 721.5 ft. MSL or 198.0 ft.
J. Filter pack, bottom 721.5 ft. MSL or 198.0 ft.
K. Borehole, bottom 719.5 ft. MSL or 200.0 ft.
L. Borehole, diameter 9.5 in.
M. O.D. well casing 4.5 in.
N. I.D. well casing 4.0 in.

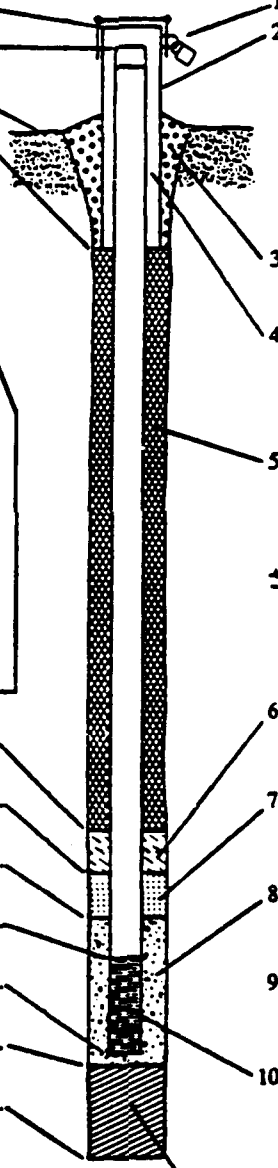

1. Cap and lock? Yes No
2. Protective cover pipe:
a. Inside diameter: 6.0 in.
b. Length: 2.0 ft.
c. Material: Steel 04; Other
d. Additional protection? Yes No
If yes, describe: 4 bucking Posts
3. Surface seal: Bentonite 30; Concrete 01; Other
Grout
4. Material between well casing and protective pipe: Bentonite 30; Annular space seal; Other
Grout
5. Annular space seal: Granular Bentonite 33; ____ Lbs/gal mud weight ... Bentonite-sand slurry 35; ____ Lbs/gal mud weight ..... Bentonite slurry 31; 5 % Bentonite .... Bentonite-cement grout 50
± 700 gal ft³ volume added for any of the above
How installed: Tremie 01; Tremie pumped 02; Gravity 08
6. Bentonite seal: Bentonite granules 33; 1/4 in. 3/8 in. 1/2 in. Bentonite pellets 32; Other
7. Fine sand material: Manufacturer, product name and mesh size
NA
Volume added NA ft³
8. Filter pack material: Manufacturer, product name and mesh size
Red Flint, Silica Filter Sand
Volume added ≈ 7.4 ft³
9. Well casing: Flush threaded PVC schedule 40 23; Flush threaded PVC schedule 80 24; Other
10. Screen material: Schedule 80 PVC
Screen type: Factory cut 11; Continuous slot 01; Other
Manufacturer Timco
Slot size: 0.010 in.
Slotted length: 5.0 ft.
11. Backfill material (below filter pack): None; Other
Natural Cave

I hereby certify that the information on this form is true and correct to the best of my knowledge.

Signature Paul Bol Firm E.C Jordan Co

Please complete and return both sides of this form as required by chs. 144, 147 and 160, Wis. Stats., and ch. NR 141, Wis. Adm. Code. In accordance with ch. 144, Wis Stats., failure to file this form may result in a forfeiture of not less than $10, nor more than $5,000 for each day of violation. In accordance with ch. 147, Wis. Stats., failure to file this form may result in a forfeiture of not more than $10,000 for each day of violation.

ABB Environmental Services, Inc. — **MONITORING WELL CONSTRUCTION**

Facility/Project Name: BADGER AAP
Facility License, Permit or Monitoring Number:
Grid Location: ft. N. S. / ft. E. W.
Well Name: SPN-91-02D
Wis. Unique Well Number: DNR Well Num:
Type of Well: Water Table Observation Well / Piezometer 12
Section Location: 1/4 of 1/4 of Section; T N, R E W
Date Well Installed: 10/09/91
Distance Well is From Waste/Source Boundary: NA ft.
Well Installed By: (Person's Name and Firm) G. RODRIGUEZ / LAYNE
Is Well A Point of Enforcement Std. Appucation? Yes / No
Location of Well Relative to Waste/Source: Upgradient / Sidegradient / Downgradient / Not Known

A. Protective pipe, top elevation: 824.12 ft. MSL
B. Well casing, top elevation: 824.03 ft. MSL
C. Land surface elevation: 821.6 ft. MSL
D. Surface seal, bottom: ft. MSL or ft.

12. USCS classification of soil near screen:
GP GM GC GW SW SP
SM SC ML MH CL CH
Bedrock

13. Sieve analysis attached? Yes / No

14. Drilling method used: Rotary 50 / Hollow Stem Auger 41 / Other — DUAL WALL

15. Drilling fluid used: Water 02 / Air 01 / Drilling Mud 03 / None 99

16. Drilling additives used? Yes / No
Describe

17. Source of water (attach analysis): PRODUCTION PUMP #2

E. Bentonite seal, top: 685.6 ft. MSL or 136.0 ft.
F. Fine sand, top: NA ft. MSL or NA ft.
G. Filter pack, top: 665.6 ft. MSL or 156.0 ft.
H. Well screen, top: 648.8 ft. MSL or 172.8 ft.
I. Well screen, bottom: 638.8 ft. MSL or 182.8 ft.
J. Filter pack, bottom: 638.6 ft. MSL or 182.8 ft.
K. Borehole, bottom: 631.6 ft. MSL or 190.0 ft.
L. Borehole, diameter: 09.0 in.
M. O.D. well casing: 04.00 in.
N. I.D. well casing: 2.25 in.

1. Cap and lock? Yes / N
2. Protective cover pipe:
a. Inside diameter: 06.0
b. Length: 06.0
c. Material: Steel 04 / Other
d. Additional protection? Yes / N
If yes, describe: 4 BUCKING POSTS
3. Surface seal: Bentonite 3 / Concrete / Other
4. Material between well casing and protective pipe: Bentonite / Annular space seal / Other
5. Annular space seal: Granular Bentonite / ____ Lbs/gal mud weight . . . Bentonite-sand slurry / ____ Lbs/gal mud weight . . . . . Bentonite slurry / 10 % Bentonite . . . . . Bentonite-cement grout 50 / 200 Ft³ volume added for any of the above
How installed: Tremie / Tremie pumped 02 / Gravity 0
6. Bentonite seal: Bentonite granules / 1/4 in. 3/8 in. 1/2 in. Bentonite pellets / BENTONITE POWDER Other
7. Fine sand material: Manufacturer, product name and mesh si
Volume added ____ ft³
8. Filter pack material: Manufacturer, product name and mesh s
COLORADO SILICA SAND #4
Volume added 20 ft³
9. Well casing: Flush threaded PVC schedule 40 / Flush threaded PVC schedule 80 2 / Other
10. Screen material: PVC SCH 80
Screen type: Factory cut 1 / Continuous slot 0 / Other
Manufacturer: MONOFLEX
Slot size: 0.010i
Slotted length: 10.0 f
11. Backfill material (below filter pack): None / Other

I hereby certify that the information on this form is true and correct to the best of my knowledge.
Signature: Rod R Rueter
Firm: ABB-ES

ABB Environmental Services, Inc. **MONITORING WELL CONSTRUCTION FORM**

Facility/Project Name: BADGER AAP	Grid Location: ____ ft. ☐ N. ☐ S. ____ ft. ☐ E. ☐ W.	Well Name: SPN-91-03D
Facility License, Permit or Monitoring Number:		Wis. Unique Well Number: DNR Well Number:
Type of Well: Water Table Observation Well ☐ 11 Piezometer ☑ 12	Section Location: ____ 1/4 of ____ 1/4 of Section ____ T ____ N. R ____ ☐ E ☐ W	Date Well Installed: 10/08/91 (m m / d d / y y)
Distance Well is From Waste/Source Boundary: NA ft.	Location of Well relative to Waste/Source: ☐ Upgradient ☐ Sidegradient ☑ Downgradient ☐ Not Known	Well Installed By: (Person's Name and Firm): G. RODRIGUEZ LAYNE
Is Well A Point of Enforcement Std. Application? ☐ Yes ☑ No		

A. Protective pipe, top elevation 819.48 ft. MSL

B. Well casing, top elevation 819.36 ft. MSL

C. Land surface elevation 816.7 ft. MSL

D. Surface seal, bottom _____ ft. MSL or 00.0 ft.

12. USCS classification of soil near screen:
☐ GP ☐ GM ☐ GC ☐ GW ☐ SW ☐ SP
☐ SM ☐ SC ☐ ML ☐ MH ☐ CL ☐ CH
☐ Bedrock

13. Sieve analysis attached? ☐ Yes ☐ No

14. Drilling method used: Rotary ☐ 50; Hollow Stem Auger ☐ 41; DUAL WALL; Other ☑

15. Drilling fluid used: Water ☑ 02; Air ☑ 01; Drilling Mud ☐ 03; None ☐ 99

16. Drilling additives used? ☐ Yes ☑ No

Describe _____

17. Source of water (attach analysis):
PRODUCTION WELL # 2

E. Bentonite seal, top 663.7 ft. MSL or 153.0 ft.

F. Fine sand, top _____ ft. MSL or _____ ft.

G. Filter pack, top 643.7 ft. MSL or 173.0 ft.

H. Well screen, top 626.2 ft. MSL or 190.5 ft.

I. Well screen, bottom 616.2 ft. MSL or 200.5 ft.

J. Filter pack, bottom 615.7 ft. MSL or 201.0 ft.

K. Borehole, bottom 614.7 ft. MSL or 202.0 ft.

L. Borehole, diameter 09.0 in.

M. O.D. well casing 04.00 in.

N. I.D. well casing 3.75 in.

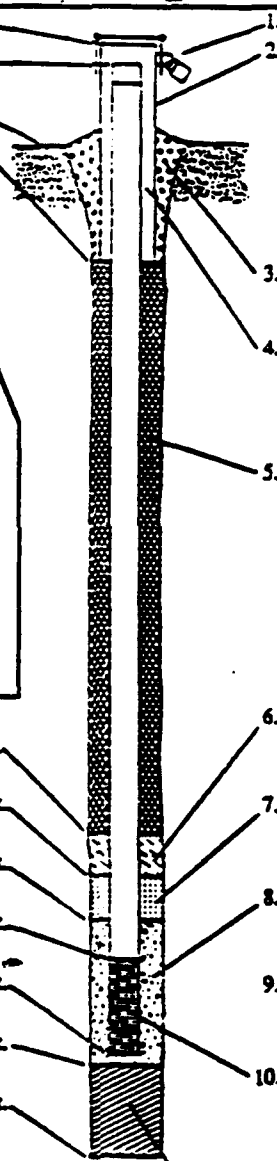

1. Cap and lock? ☑ Yes ☐ No

2. Protective cover pipe:
a. Inside diameter: 06.0 in.
b. Length: 06.0 ft.
c. Material: Steel ☑ 04; Other ☐ ____
d. Additional protection? ☑ Yes ☐ No
If yes, describe: BUCKING POSTS

3. Surface seal: Bentonite ☐ 30; Concrete ☑ 01; Other ☐ ____

4. Material between well casing and protective pipe: Bentonite ☐ 30; Annular space seal ☑; Other ☐ ____

5. Annular space seal: Granular Bentonite ☐ 33; ____ Lbs/gal mud weight . . . Bentonite-sand slurry ☐ 35; ____ Lbs/gal mud weight . . . . . Bentonite slurry ☐ 31; 10 % Bentonite . . . . . Bentonite-cement grout ☑ 50; ____ Ft^3 volume added for any of the above
How installed: Tremie ☐ 01; Tremie pumped ☐ 02; Gravity ☑ 08

6. Bentonite seal: Bentonite granules ☐ 33; ☐ 1/4 in. ☐ 3/8 in. ☐ 1/2 in. Bentonite pellets ☐ 32; BENTONITE POWDER Other ☑ ____

7. Fine sand material: Manufacturer, product name and mesh size
Volume added 20 ft^3

8. Filter pack material: Manufacturer, product name and mesh size
COLORADO SILICA SAND #4
Volume added 16 ft^3

9. Well casing: Flush threaded PVC schedule 40 ☐ 23; Flush threaded PVC schedule 80 ☑ 24; Other ☐ ____

10. Screen material: SCHEDULE 80 PVC
Screen type: Factory cut ☑ 11; Continuous slot ☐ 01; Other ☐ ____
Manufacturer MONOFLEX
Slot size: 0.010 in.
Slotted length: 10.0 ft.

11. Backfill material (below filter pack): None ☑; Other ☐ ____

I hereby certify that the information on this form is true and correct to the best of my knowledge.

Signature: Ted R Rueter | Firm: ABB-ES

ABB Environmental Services, Inc. MONITORING WELL CONSTRUCTION FORM

Facility/Project Name: BADGER AAP	Grid Location: ____ ft. ☐ N. ☐ S. ____ ft. ☐ E. ☐ W.	Well Name: SPN-91-04D
Facility License, Permit or Monitoring Number:		Wis. Unique Well Number: UNK Well Num:
Type of Well: Water Table Observation Well ☐ 11; Piezometer ☑ 12	Section Location: ____ 1/4 of ____ 1/4 of Section ____, T ____ N, R ____ ☐ E ☐ W	Date Well Installed: 10/01/91 (m m / d d / y y)
Distance Well is From Waste/Source Boundary: NA ft.	Location of Well Relative to Waste/Source: ☐ Upgradient ☐ Sidegradient ☑ Downgradient ☐ Not Known	Well Installed By: (Person's Name and Firm) GABBY RODRIGUEZ / LAYNE
Is Well A Point of Enforcement Std. Application? ☐ Yes ☒ No		

A. Protective pipe, top elevation 992.92 ft. MSL

B. Well casing, top elevation 990.58 ft. MSL

C. Land surface elevation 988.8 ft. MSL

D. Surface seal, bottom ____ ft. MSL or ____ ft.

12. USCS classification of soil near screen:
☐ GP ☐ GM ☐ GC ☐ GW ☐ SW ☑ SP
☐ SM ☐ SC ☐ ML ☐ MH ☐ CL ☐ CH
☐ Bedrock

13. Sieve analysis attached? ☐ Yes ☐ No

14. Drilling method used: Rotary ☐ 50; Hollow Stem Auger ☐ 41; DUAL WALL REV. AIR Other ☑

15. Drilling fluid used: Water ☑ 02; Air ☑ 01; Drilling Mud ☐ 03; None ☐ 99

16. Drilling additives used? ☐ Yes ☑ No

Describe ____

17. Source of water (attach analysis):
PRODUCTION WELL # 2

E. Bentonite seal, top 656.8 ft. MSL or 144.0 ft.

F. Fine sand, top N/A ft. MSL or N/A ft.

G. Filter pack, top 636.8 ft. MSL or 164.0 ft.

H. Well screen, top 634.8 ft. MSL or 196.0 ft.

I. Well screen, bottom 594.8 ft. MSL or 206.0 ft.

J. Filter pack, bottom 591.8 ft. MSL or 209.0 ft.

K. Borehole, bottom 588.8 ft. MSL or 212.0 ft.

L. Borehole, diameter 23.0 in.

M. O.D. well casing 4.500 in.

N. I.D. well casing 3.75 in.

1. Cap and lock? ☑ Yes ☐ No

2. Protective cover pipe:
a. Inside diameter: 6.0
b. Length: 6.0.0
c. Material: Steel ☑ 02; Other ☐ ____
d. Additional protection? ☐ Yes ☐ No
If yes, describe: 4 BUCKING POSTS

3. Surface seal: Bentonite ☐ 30; Concrete ☐ ____; Other ☐ ____

4. Material between well casing and protective pipe:
Bentonite ☐ 30; Annular space seal ☑; Other ☐ ____

5. Annular space seal: Granular Bentonite ☐ 33
____ Lbs/gal mud weight . . . Bentonite-sand slurry ☐ 34
____ Lbs/gal mud weight . . . . . Bentonite slurry ☐ ____
10 % Bentonite . . . . . Bentonite-cement grout ☑ 50
250 Ft³ volume added for any of the above
How installed: Tremie ☐ 1; Tremie pumped ☐ 02; Gravity ☐ 03

6. Bentonite seal: Bentonite granules ☐ 3; ☐ 1/4 in. ☐ 3/8 in. ☐ 1/2 in. Bentonite pellets ☐ ____
BENTONITE POWDER Other ☐ ____

7. Fine sand material: Manufacturer, product name and mesh size
N/A
Volume added N/A ft³

8. Filter pack material: Manufacturer, product name and mesh size
COLORADO SILICA SAND #4 S...
Volume added 20 ft³

9. Well casing: Flush threaded PVC schedule 40 ☐ 23; Flush threaded PVC schedule 80 ☑ 24; Other ☐ ____

10. Screen material: PVC
Screen type: Factory cut ☑ 11; Continuous slot ☐ 0; Other ☐ ____
Manufacturer MONOFLEX
Slot size: 0.010
Slotted length: 10.0

11. Backfill material (below filter pack): None ☑; Other ☐ ____

I hereby certify that the information on this form is true and correct to the best of my knowledge.

Signature: Rod R Rueter Firm: ABB-ES

State of Wisconsin
Department of Natural Resources

MONITORING WELL CONSTRUCTION
Form 4400-113A 8-39

Facility/Project Name: Badger Army Ammunition Plant	Grid Location: 4,800,906.7 ft. N. ☐ S. / 276,414.4 ft. E. ☒ W.	Well Name: SPW-89-01C
Facility License, Permit or Monitoring Number:		Wis. Unique Well Number: DNR Well Number:
Type of Well: Water Table Observation Well ☐ 11; Piezometer ☒ 12	Section Location: ____ 1/4 of ____ 1/4 of Section ____; T ____ N, R ____ ☐ E ☐ W	Date Well Installed: 03/28/89 (m m d d y y)
Distance Well Is From Waste/Source Boundary: NA ft.	Location of Well Relative to Waste/Source: ☐ Upgradient ☐ Sidegradient ☐ Downgradient ☐ Not Known	Well Installed By: (Person's Name and Firm): Dave Belan / E.C. Jordan Co.
Is Well A Point of Enforcement Std. Application? ☐ Yes ☒ No		

A. Protective pipe, top elevation 830.20 ft. MSL
B. Well casing, top elevation 830.__ ft. MSL
C. Land surface elevation 827.8 ft. MSL
D. Surface seal, bottom _____ ft. MSL or ____ ft.

12. USCS classification of soil near screen:
☐ GP ☐ GM ☐ GC ☐ GW ☐ SW ☒ SP
☐ SM ☐ SC ☐ ML ☐ MH ☐ CL ☐ CH
☐ Bedrock

13. Sieve analysis attached? ☐ Yes ☒ No

14. Drilling method used: Rotary ☐ 50; Hollow Stem Auger ☐ 41; Other ☒ —
Dual Wall

15. Drilling fluid used: Water ☐ 02; Air ☒ 01; Drilling Mud ☐ 03; None ☐ 99

16. Drilling additives used? ☐ Yes ☒ No
Describe _____

17. Source of water (attach analysis):
PW #2

E. Bentonite seal, top 722.8 ft. MSL or 105.0 ft.
F. Fine sand, top NA ft. MSL or NA ft.
G. Filter pack, top 717.8 ft. MSL or 110.0 ft.
H. Well screen, top 711.8 ft. MSL or 116.0 ft.
I. Well screen, bottom 706.8 ft. MSL or 121.0 ft.
J. Filter pack, bottom 706.8 ft. MSL or 121.0 ft.
K. Borehole, bottom 692.8 ft. MSL or 135.0 ft.
L. Borehole, diameter 9.5 in.
M. O.D. well casing 4.5 in.
N. I.D. well casing 4.0 in.

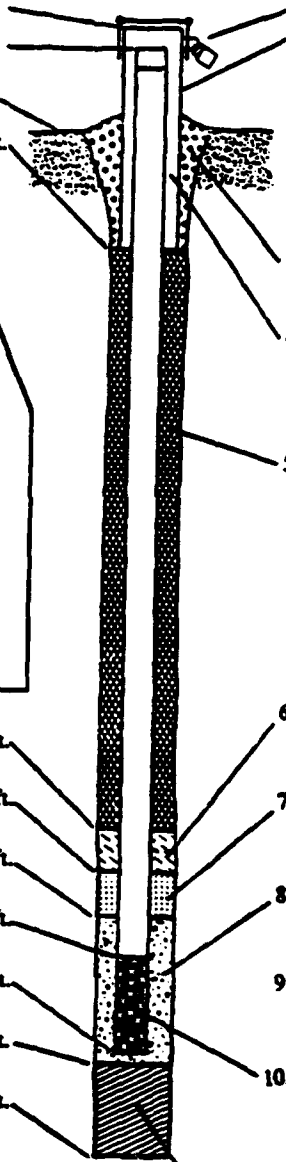

1. Cap and lock? ☒ Yes ☐ No
2. Protective cover pipe:
a. Inside diameter: 6.0 in.
b. Length: 7.0 ft.
c. Material: Steel ☒ 04; Other ☐ __
d. Additional protection? ☒ Yes ☐ No
If yes, describe: 4 bucking Posts
3. Surface seal: Bentonite ☐ 30; Concrete ☐ 01; Other ☒ __
Grout
4. Material between well casing and protective pipe: Bentonite ☐ 30; Annular space seal ☐; Other ☒ __
Grout
5. Annular space seal: Granular Bentonite ☐ 33
____ Lbs/gal mud weight ... Bentonite-sand slurry ☐ 35
____ Lbs/gal mud weight ..... Bentonite slurry ☐ 31
5 % Bentonite ..... Bentonite-cement grout ☒ 50
≈ 270 gal/ft³ volume added for any of the above
How installed: Tremie ☐ 01; Tremie pumped ☒ 02; Gravity ☐ 08
6. Bentonite seal: Bentonite granules ☐ 33
☐ 1/4 in. ☐ 3/8 in. ☐ 1/2 in. Bentonite pellets ☐ 32
Bentonite Slurry Other ☒ __
7. Fine sand material: Manufacturer, product name and mesh size
NA
Volume added NA ft³
8. Filter pack material: Manufacturer, product name and mesh size
Red Flint, Silica Filter Sand
Volume added ≈ 1.2 ft³
9. Well casing: Flush threaded PVC schedule 40 ☐ 23; Flush threaded PVC schedule 80 ☒ 24; Other ☐ __
10. Screen material: Schedule 80 PVC
Screen type: Factory cut ☒ 11; Continuous slot ☐ 01; Other ☐ __
Manufacturer Timco
Slot size: 0.010 in.
Slotted length: 5.0 ft.
11. Backfill material (below filter pack): None ☐; Other ☒
Native Cave

I hereby certify that the information on this form is true and correct to the best of my knowledge.

Signature: [signature] Firm: E.C. Jordan Co.

Please complete and return both sides of this form as required by chs. 144, 147 and 160, Wis. Stats., and ch. NR 141, Wis. Adm. Code. In accordance with ch. 144, Wis Stats., failure to file this form may result in a forfeiture of not less than $10, nor more than $5,000 for each day of violation. In accordance with ch. 147, Wis. Stats., failure to file this form may result in a forfeiture of not more than $10,000 for each day of violation.

State of Wisconsin
Department of Natural Resources

MONITORING WELL CONSTRUCTION
Form 4400-113A 8-89

Facility/Project Name: Badger Army Ammunition Plant
Facility License, Permit or Monitoring Number: _____

Grid Location: 4,600,904.7 ft. M. ☒ N. ☐ S.; 276,654.4 ft. M. ☒ E. ☐ W.

Well Name: SPN-89-02A
Wis. Unique Well Number: _____ DNR Well Number: _____

Type of Well: Water Table Observation Well ☒ 11; Piezometer ☐ 12

Section Location: _____ 1/4 of _____ 1/4 of Section _____, T _____ N, R _____ ☐ E ☐ W

Date Well Installed: 02/22/89 (m m / d d / y y)

Distance Well Is From Waste/Source Boundary: NA ft.

Well Installed By: (Person's Name and Firm): Bill Metzger / E. C. Jordan Co.

Is Well A Point of Enforcement Std. Application? ☐ Yes ☒ No

Location of Well Relative to Waste/Source: ☐ Upgradient ☐ Sidegradient ☐ Downgradient ☐ Not Known

A. Protective pipe, top elevation: 823.76 ft. MSL
B. Well casing, top elevation: 823.67 ft. MSL
C. Land surface elevation: 820.8 ft. MSL
D. Surface seal, bottom _____ ft. MSL or _____ ft.

12. USCS classification of soil near screen:
☐ GP ☐ GM ☐ GC ☐ GW ☐ SW ☒ SP
☐ SM ☐ SC ☐ ML ☐ MH ☐ CL ☐ CH
☐ Bedrock

13. Sieve analysis attached? ☐ Yes ☒ No

14. Drilling method used: Rotary ☐ 50; Hollow Stem Auger ☒ 41; Other ☐ ___

15. Drilling fluid used: Water ☐ 02; Air ☐ 01; Drilling Mud ☐ 03; None ☒ 99

16. Drilling additives used? ☐ Yes ☒ No
Describe _____

17. Source of water (attach analysis):
PW #2

E. Bentonite seal, top: 780.8 ft. MSL or 40.0 ft.
F. Fine sand, top: NA ft. MSL or NA ft.
G. Filter pack, top: 775.8 ft. MSL or 45.0 ft.
H. Well screen, top: 761.8 ft. MSL or 51.0 ft.
I. Well screen, bottom: 749.8 ft. MSL or 71.0 ft.
J. Filter pack, bottom: 749.8 ft. MSL or 71.0 ft.
K. Borehole, bottom: 746.8 ft. MSL or 74.0 ft.
L. Borehole, diameter: 9.5 in.
M. O.D. well casing: 4.5 in.
N. I.D. well casing: 4.0 in.

1. Cap and lock? ☒ Yes ☐ No
2. Protective cover pipe:
a. Inside diameter: 6.0 in.
b. Length: 2.0 ft.
c. Material: Steel ☒ 04; Other ☐ ___
d. Additional protection? ☒ Yes ☐ No
If yes, describe: 4 backing Posts
3. Surface seal: Bentonite ☐ 30; Concrete ☐ 01; Other ☒ ___
Grout
4. Material between well casing and protective pipe: Bentonite ☐ 30; Annular space seal ☐; Other ☒ ___
Grout
5. Annular space seal: Granular Bentonite ☐ 33
___ Lbs/gal mud weight . . . Bentonite-sand slurry ☐ 35
___ Lbs/gal mud weight . . . . . Bentonite slurry ☐
5 % Bentonite . . . . . Bentonite-cement grout ☐
± 250 gal/ft³ volume added for any of the above
How installed: Tremie ☐ 01; Tremie pumped ☒ 02; Gravity ☐ 08
6. Bentonite seal: Bentonite granules ☐ 33
☐ 1/4 in. ☒ 3/8 in. ☐ 1/2 in. Bentonite pellets ☒ 32
Other ☐ ___
7. Fine sand material: Manufacturer, product name and mesh size
NA
Volume added NA ft³
8. Filter pack material: Manufacturer, product name and mesh size
Red Flint, Silica Filter Sand
Volume added ≈ 2.9 ft³
9. Well casing: Flush threaded PVC schedule 40 ☐ 23; Flush threaded PVC schedule 80 ☒ 24; Other ☐ ___
10. Screen material: Schedule 80 PVC
Screen type: Factory cut ☒ 11; Continuous slot ☐ 01; Other ☐ ___
Manufacturer Timco
Slot size: 0.01 in.
Slotted length: 20.0 ft.
11. Backfill material (below filter pack): None ☐; Other ☒
Native Cuttings

I hereby certify that the information on this form is true and correct to the best of my knowledge.

Signature: [signature] Firm: E. C. Jordan Co.

Please complete and return both sides of this form as required by chs. 144, 147 and 160, Wis. Stats., and ch. NR 141, Wis. Adm. Code. In accordance with ch. 144, Wis Stats., failure to file this form may result in a forfeiture of not less than $10, nor more than $5,000 for each day of violation. In accordance with ch. 147, Wis. Stats., failure to file this form may result in a forfeiture of not more than $10,000 for each day of violation.

State of Wisconsin
Department of Natural Resources

MONITORING WELL CONSTRUCTION
Form 4400-113A 8-89

Facility/Project Name: Badger Army Ammunition Plant	Grid Location: 4,800,902.4 ft. ☒ N. ☐ S. / 276,690.1 ft. ☒ E. ☐ W.	Well Name: SPN-89-02B
Facility License/Permit or Monitoring Number: _____		Wis. Unique Well Number: _____ DNR Well Number: _____
Type of Well: Water Table Observation Well ☐ 11; Piezometer ☒ 12	Section Location: ____ 1/4 of ____ 1/4 of Section ____, T ____ N, R ____ ☐ E ☐ W	Date Well Installed: 03/15/89 (m m / d d / y y)
Distance Well Is From Waste/Source Boundary: NA ft.	Location of Well Relative to Waste/Source: ☐ Upgradient ☐ Sidegradient ☐ Downgradient ☐ Not Known	Well Installed By: (Person's Name and Firm) Paul Bolmer / E.C. Jordan Co.
Is Well A Point of Enforcement Std. Application? ☐ Yes ☒ No		

A. Protective pipe, top elevation 823.66 ft. MSL

B. Well casing, top elevation 823.53 ft. MSL

C. Land surface elevation 820.3 ft. MSL

D. Surface seal, bottom _____ ft. MSL or ____ ft.

12. USCS classification of soil near screen:
☐ GP ☐ GM ☐ GC ☐ GW ☐ SW ☒ SP
☐ SM ☐ SC ☐ ML ☐ MH ☐ CL ☐ CH
☐ Bedrock

13. Sieve analysis attached? ☐ Yes ☒ No

14. Drilling method used: Rotary ☐ 50; Hollow Stem Auger ☒ 41; Other ☐ ____

15. Drilling fluid used: Water ☐ 02; Air ☐ 01; Drilling Mud ☐ 03; None ☒ 99

16. Drilling additives used? ☐ Yes ☒ No

Describe _____

17. Source of water (attach analysis): PW #2

E. Bentonite seal, top 767.3 ft. MSL or 53.0 ft.

F. Fine sand, top NA ft. MSL or NA ft.

G. Filter pack, top 762.3 ft. MSL or 58.0 ft.

H. Well screen, top 726.5 ft. MSL or 93.8 ft.

I. Well screen, bottom 721.5 ft. MSL or 98.8 ft.

J. Filter pack, bottom 721.5 ft. MSL or 98.8 ft.

K. Borehole, bottom 715.3 ft. MSL or 105.0 ft.

L. Borehole, diameter 9.5 in.

M. O.D. well casing 4.5 in.

N. I.D. well casing 4.0 in.

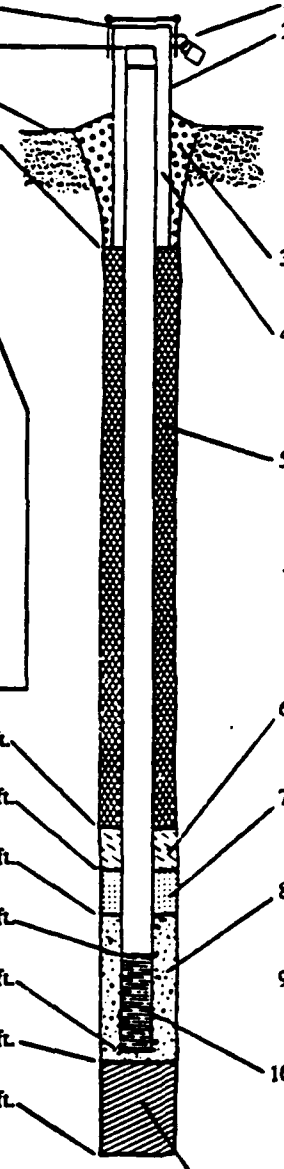

1. Cap and lock? ☒ Yes ☐ No

2. Protective cover pipe:
a. Inside diameter: 6.0 in.
b. Length: 2.0 ft.
c. Material: Steel ☒ 04; Other ☐ __
d. Additional protection? ☒ Yes ☐ No
If yes, describe: 4 backing Posts

3. Surface seal: Bentonite ☐ 30; Concrete ☐ 01; Other ☒ __
Grout

4. Material between well casing and protective pipe: Bentonite ☐ 30; Annular space seal ☐; Other ☒ __
Grout

5. Annular space seal: Granular Bentonite ☐ 33
____ Lbs/gal mud weight . . . Bentonite-sand slurry ☐ 35
____ Lbs/gal mud weight . . . . . Bentonite slurry ☐ 31
5 % Bentonite . . . . . Bentonite-cement grout ☒ 50
± 140 gal ~~ft³~~ volume added for any of the above
How installed: Tremie ☐ 01; Tremie pumped ☒ 02; Gravity ☐ 08

6. Bentonite seal: Bentonite granules ☐ 33
☐ 1/4 in. ☐ 3/8 in. ☐ 1/2 in. Bentonite pellets ☐ 32
Bentonite Slurry Other ☒ __

7. Fine sand material: Manufacturer, product name and mesh size
NA
Volume added NA ft³

8. Filter pack material: Manufacturer, product name and mesh size
Red Flint, Silica Filter Sand
Volume added ≈ 4.5 ft³

9. Well casing: Flush threaded PVC schedule 40 ☐ 23; Flush threaded PVC schedule 80 ☒ 24; Other ☐ __

10. Screen material: schedule 80 PVC
Screen type: Factory cut ☒ 11; Continuous slot ☐ 01; Other ☐ __
Manufacturer Timco
Slot size: 0.010 in.
Slotted length: 5.0 ft.

11. Backfill material (below filter pack): None ☐; Native cave Other ☒

I hereby certify that the information on this form is true and correct to the best of my knowledge.

Signature	Firm
Paul P. Bolmer	E.C. Jordan Co.

Please complete and return both sides of this form as required by chs. 144, 147 and 160, Wis. Stats., and ch. NR 141, Wis. Adm. Code. In accordance with ch. 144, Wis Stats., failure to file this form may result in a forfeiture of not less than $10, nor more than $5,000 for each day of violation. In accordance with ch. 147, Wis. Stats., failure to file this form may result in a forfeiture of not more than $10,000 for each day of violation.

State of Wisconsin
Department of Natural Resources

MONITORING WELL CONSTRUCTION
Form 4400-113A 8-89

Facility/Project Name: Badger Army Ammunitions Plant	Grid Location: 4,800,903.2 ft N. S. / 276,702.8 ft E. W.	Well Name: SPN-89-02C
Facility License, Permit or Monitoring Number:		Wis. Unique Well Number: DNR Well Numb
Type of Well: Water Table Observation Well ☐ 11; Piezometer ☒ 12	Section Location: ____ 1/4 of ____ 1/4 of Section ____; T ____ N, R ____ ☐ E ☐ W	Date Well Installed: 04/14/89 (m m d d y y)
Distance Well Is From Waste/Source Boundary: NA ft.	Location of Well Relative to Waste/Source: ☐ Upgradient ☐ Sidegradient ☐ Downgradient ☐ Not Known	Well Installed By: (Person's Name and Firm): Bill Metzger / E.C. Jordan Co.
Is Well A Point of Enforcement Std. Application? ☐ Yes ☒ No		

A. Protective pipe, top elevation 832.64 ft. MSL
B. Well casing, top elevation 828.60 ft. MSL
C. Land surface elevation 820.0 ft MSL
D. Surface seal, bottom _____ ft. MSL or ____ ft.

12. USCS classification of soil near screen:
☐ GP ☐ GM ☐ GC ☐ GW ☐ SW ☒ SP
☐ SM ☐ SC ☐ ML ☐ MH ☐ CL ☐ CH
☐ Bedrock

13. Sieve analysis attached? ☐ Yes ☐ No

14. Drilling method used: Rotary ☐ 50; Hollow Stem Auger ☐ 41; Dual Wall; Other ☒ ___

15. Drilling fluid used: Water ☐ 02; Air ☒ 01; Drilling Mud ☐ 03; None ☐ 99

16. Drilling additives used? ☐ Yes ☒ No
Describe _____

17. Source of water (attach analysis):
PW #2

E. Bentonite seal, top 722.0 ft. MSL or 100.0 ft.
F. Fine sand, top NA ft. MSL or NA ft.
G. Filter pack, top 704.0 ft. MSL or 116.0 ft.
H. Well screen, top 696.0 ft. MSL or 124.0 ft.
I. Well screen, bottom 691.0 ft. MSL or 129.0 ft.
J. Filter pack, bottom 691.0 ft. MSL or 129.0 ft.
K. Borehole, bottom 680.0 ft. MSL or 140.0 ft.
L. Borehole, diameter 9.5 in.
M. O.D. well casing 4.5 in.
N. I.D. well casing 4.0 in.

1. Cap and lock? ☒ Yes ☐ No
2. Protective cover pipe:
a. Inside diameter: 6.0 in.
b. Length: 9.0 ft.
c. Material: Steel ☒ 04; Other ☐ ___
d. Additional protection? ☒ Yes ☐ No
If yes, describe: 4 bucking posts
3. Surface seal: Bentonite ☐ 30; Concrete ☐ 01; Grout; Other ☒ ___
4. Material between well casing and protective pipe: Bentonite ☐ 30; Annular space seal ☐; Grout; Other ☒ ___
5. Annular space seal: Granular Bentonite ☐ 33
____ Lbs/gal mud weight . . . Bentonite-sand slurry ☐ 35
____ Lbs/gal mud weight . . . . . Bentonite slurry ☐ 31
5 % Bentonite . . . . . Bentonite-cement grout ☒ 50
≈ 270 gal/ft³ volume added for any of the above
How installed: Tremie ☐ 01; Tremie pumped ☒ 02; Gravity ☐ 08
6. Bentonite seal: Bentonite granules ☐ 33
☐ 1/4 in. ☐ 3/8 in. ☐ 1/2 in. Bentonite pellets ☐ 32
Bentonite Slurry; Other ☒ ___
7. Fine sand material: Manufacturer, product name and mesh size
NA
Volume added NA ft³
8. Filter pack material: Manufacturer, product name and mesh siz
Red Flint, Silica Fi
Volume added ≈ 14 ft³
9. Well casing: Flush threaded PVC schedule 40 ☐ 23; Flush threaded PVC schedule 80 ☒ 24; Other ☐ ___
10. Screen material: Schedule 80 PVC
Screen type: Factory cut ☒ 11; Continuous slot ☐ 01; Other ☐ ___
Manufacturer Timco
Slot size: 0.010 in.
Slotted length: 5.0 ft.
11. Backfill material (below filter pack): None ☐; Native Cave; Other ☒

I hereby certify that the information on this form is true and correct to the best of my knowledge.

Signature: Paul K Bol | Firm: E.C. Jordan Co.

Please complete and return both sides of this form as required by sts. 144, 147 and 160, Wis. Stats., and ch. NR 141, Wis. Adm. Code. In accordance with ch. 144, Wis Stats., failure to file this form may result in a forfeiture of not less than $10, nor more than $5,000 for each day of violation. In accordance with ch. 147, Wis. Stats., failure to file this form may result in a forfeiture of not more than $10,000 for each day of violation.

State of Wisconsin
Department of Natural Resources

MONITORING WELL CONSTRUCTION
Form 4400-113A 8-89

Facility/Project Name: Badger Army Ammunition Plant	Grid Location: 4,800,953.7 m N. ☒ N. ☐ S.; 276,907.0 m E. ☒ E. ☐ W.	Well Name: SPN-89-03B
Facility License, Permit or Monitoring Number:		Wis. Unique Well Number / DNR Well Number
Type of Well: Water Table Observation Well ☐ 11; Piezometer ☒ 12	Section Location: ____ 1/4 of ____ 1/4 of Section ____, T ____ N, R ____ ☐ E ☐ W	Date Well Installed: 03/22/89 (m m / d d / y y)
Distance Well Is From Waste/Source Boundary: NA ft.	Location of Well Relative to Waste/Source: ☐ Upgradient ☐ Sidegradient ☐ Downgradient ☐ Not Known	Well Installed By: (Person's Name and Firm): Paul Balmer / E.C. Jordan Co.
Is Well A Point of Enforcement Std. Application? ☐ Yes ☒ No		

A. Protective pipe, top elevation 818.21 ft. MSL
B. Well casing, top elevation 818.09 ft. MSL
C. Land surface elevation 815.1 ft. MSL
D. Surface seal, bottom ____ ft. MSL or ____ ft.

12. USCS classification of soil near screen:
☐ GP ☐ GM ☐ GC ☐ GW ☐ SW ☒ SP
☐ SM ☐ SC ☐ ML ☐ MH ☐ CL ☐ CH
☐ Bedrock

13. Sieve analysis attached? ☐ Yes ☐ No

14. Drilling method used: Rotary ☐ 50; Hollow Stem Auger ☒ 41; Other ☐ ____

15. Drilling fluid used: Water ☐ 02; Air ☐ 01; Drilling Mud ☐ 03; None ☒ 99

16. Drilling additives used? ☐ Yes ☒ No
Describe ____

17. Source of water (attach analysis):
PW #2

E. Bentonite seal, top 739.9 ft. MSL or 75.2 ft.
F. Fine sand, top NA ft. MSL or NA ft.
G. Filter pack, top 732.5 ft. MSL or 82.6 ft.
H. Well screen, top 726.4 ft. MSL or 88.7 ft.
I. Well screen, bottom 721.4 ft. MSL or 93.7 ft.
J. Filter pack, bottom 721.4 ft. MSL or 93.7 ft.
K. Borehole, bottom 715.1 ft. MSL or 100.0 ft.
L. Borehole, diameter 9.5 in.
M. O.D. well casing 4.5 in.
N. I.D. well casing 4.0 in.

1. Cap and lock? ☒ Yes ☐ No
2. Protective cover pipe:
a. Inside diameter: 6.0 in.
b. Length: 2.0 ft.
c. Material: Steel ☒ 04; Other ☐ ____
d. Additional protection? ☒ Yes ☐ No
If yes, describe: 4 bucking Posts
3. Surface seal: Bentonite ☐ 30; Concrete ☐ 01; Other ☒ Grout
4. Material between well casing and protective pipe: Bentonite ☐ 30; Annular space seal ☐; Other ☒ Grout
5. Annular space seal: Granular Bentonite ☐ 33; ____ Lbs/gal mud weight ... Bentonite-sand slurry ☐ 35; ____ Lbs/gal mud weight ..... Bentonite slurry ☐ 31; 5 % Bentonite ..... Bentonite-cement grout ☒ 50; ± 200 gal volume added for any of the above
How installed: Tremie ☐ 01; Tremie pumped ☒ 02; Gravity ☐ 08
6. Bentonite seal: Bentonite granules ☐ 33; ☐ 1/4 in. ☐ 3/8 in. ☐ 1/2 in. Bentonite pellets ☐ 32; Bentonite Slurry Other ☒
7. Fine sand material: Manufacturer, product name and mesh size: NA
Volume added NA ft³
8. Filter pack material: Manufacturer, product name and mesh size: Red Flint, Silica Filter Sand
Volume added ≈ 1.2 ft³
9. Well casing: Flush threaded PVC schedule 40 ☐ 23; Flush threaded PVC schedule 80 ☒ 24; Other ☐ ____
10. Screen material: Schedule 80 PVC
Screen type: Factory cut ☒ 11; Continuous slot ☐ 01; Other ☐ ____
Manufacturer Timco
Slot size: 0.010 in.
Slotted length: 5.0 ft.
11. Backfill material (below filter pack): None ☐; Other ☒ Native soil

I hereby certify that the information on this form is true and correct to the best of my knowledge.

Signature: Paul Balmer Firm: E.C. Jordan Co.

Please complete and return both sides of this form as required by chs. 144, 147 and 160, Wis. Stats., and ch. NR 141, Wis. Adm. Code. In accordance with ch. 144, Wis Stats., failure to file this form may result in a forfeiture of not less than $10, nor more than $5,000 for each day of violation. In accordance with ch. 147, Wis. Stats., failure to file this form may result in a forfeiture of not more than $10,000 for each day of violation.

State of Wisconsin
Department of Natural Resources

MONITORING WELL CONSTRUCTION
Form 4400-113A 8-89

Facility/Project Name: Badger Army Ammunition Plant	Grid Location: 4,803,992.4 ft N. ☐ S. / 277,666.8 ft E. ☒ W.	Well Name: SPW-89-03C
Facility License, Permit or Monitoring Number:		Wis. Unique Well Number: DNR Well Numb:
Type of Well: Water Table Observation Well ☐ 11; Piezometer ☒ 12	Section Location: ____ 1/4 of ____ 1/4 of Section ____; T ____ N, R ____ ☐ E ☐ W	Date Well Installed: 03/31/89 (m m / d d / y y)
Distance Well Is From Waste/Source Boundary: NA ft.	Location of Well Relative to Waste/Source: ☐ Upgradient ☐ Sidegradient ☐ Downgradient ☐ Not Known	Well Installed By: (Person's Name and Firm): Dave H. Belon / E.C. Jordan Co
Is Well A Point of Enforcement Std. Application? ☐ Yes ☒ No		

A. Protective pipe, top elevation 818.65 ft. MSL
B. Well casing, top elevation 818.25 ft. MSL
C. Land surface elevation 815.3 ft. MSL
D. Surface seal, bottom ____ ft. MSL or ____ ft.

12. USCS classification of soil near screen:
☐ GP ☐ GM ☐ GC ☐ GW ☐ SW ☒ SP
☐ SM ☐ SC ☐ ML ☐ MH ☐ CL ☐ CH
☐ Bedrock

13. Sieve analysis attached? ☐ Yes ☒ No

14. Drilling method used: Rotary ☐ 50; Hollow Stem Auger ☐ 41; Other ☒ —
Dual Wall

15. Drilling fluid used: Water ☐ 02; Air ☒ 01; Drilling Mud ☐ 03; None ☐ 99

16. Drilling additives used? ☐ Yes ☒ No
Describe ____

17. Source of water (attach analysis):
PW #2

E. Bentonite seal, top 703.3 ft. MSL or 112.0 ft.
F. Fine sand, top NA ft. MSL or NA ft.
G. Filter pack, top 698.3 ft. MSL or 117.0 ft.
H. Well screen, top 692.6 ft. MSL or 122.7 ft.
I. Well screen, bottom 682.6 ft. MSL or 132.7 ft.
J. Filter pack, bottom 682.6 ft. MSL or 127.7 ft.
K. Borehole, bottom 685.3 ft. MSL or 130.0 ft.
L. Borehole, diameter 8.5 in.
M. O.D. well casing 4.5 in.
N. I.D. well casing 4.0 in.

1. Cap and lock? ☒ Yes ☐ No
2. Protective cover pipe:
a. Inside diameter: 6.0 in.
b. Length: 7.9 ft.
c. Material: Steel ☒ 04; Other ☐ ____
d. Additional protection? ☒ Yes ☐ No
If yes, describe: 4 Bucking Posts
3. Surface seal: Bentonite ☐ 30; Concrete ☐ 01; Other ☒ —
Grout
4. Material between well casing and protective pipe: Bentonite ☐ 30; Annular space seal ☐; Other ☒ —
Grout
5. Annular space seal: Granular Bentonite ☐ 33
____ Lbs/gal mud weight . . . Bentonite-sand slurry
____ Lbs/gal mud weight . . . . . Bentonite slurry
5 % Bentonite . . . . Bentonite-cement grout ☒ 50
± 300 gal/ft³ volume added for any of the above
How installed: Tremie ☐ 01; Tremie pumped ☒ 02; Gravity ☐ 08
6. Bentonite seal: Bentonite granules ☐ 32; ☐1/4 in. ☐3/8 in. ☐1/2 in. Bentonite pellets ☐ 32
Bentonite Slurry Other ☒ —
7. Fine sand material: Manufacturer, product name and mesh size
NA
Volume added NA ft³
8. Filter pack material: Manufacturer, product name and mesh size
Red Flint Silica Fine Sand
Volume added ____ ft³
9. Well casing: Flush threaded PVC schedule 40 ☐ 23; Flush threaded PVC schedule 80 ☒ 24; Other ☐ —
10. Screen material: Schedule 80 PVC
Screen type: Factory cut ☒ 11; Continuous slot ☐ 01; Other ☐ —
Manufacturer Tinco
Slot size: 0.010 in.
Slotted length: 5.0 ft.
11. Backfill material (below filter pack): None ☐
Native Cave Other ☒

I hereby certify that the information on this form is true and correct to the best of my knowledge.

Signature: [signature] Firm: E.C. Jordan Co.

Please complete and return both sides of this form as required by chs. 144, 147 and 160, Wis. Stats., and cn. NR 141, Wis. Adm. Code. In accordance with ch. 144, Wis Stats., failure to file this form may result in a forfeiture of not less than $10, nor more than $5,000 for each day of violation. In accordance with ch. 147, Wis. Stats., failure to file this form may result in a forfeiture of not more than $10,000 for each day of violation.

State of Wisconsin
Department of Natural Resources

MONITORING WELL CONSTRUCTION
Form 4400-113A 8-89

Facility/Project Name: Badger Army Ammunition Plant	Grid Location: 4,800,868.5 M. ☒ N. ☐ S.; 277,211.6 ft. ☒ E. ☐ W.	Well Name: SPW-89-04B
Facility License, Permit or Monitoring Number:		Wis. Unique Well Number: DNR Well Number:
Type of Well: Water Table Observation Well ☐ 11; Piezometer ☒ 12	Section Location: ____ 1/4 of ____ 1/4 of Section ____, T ____ N, R ____ ☐ E ☐ W	Date Well Installed: 03/09/89 (m m d d y y)
Distance Well Is From Waste/Source Boundary: NA ft.	Location of Well Relative to Waste/Source: ☐ Upgradient ☐ Sidegradient ☐ Downgradient ☐ Not Known	Well Installed By: (Person's Name and Firm) John Snowden / E.C. Jordan Co.
Is Well A Point of Enforcement Std. Application? ☐ Yes ☒ No		

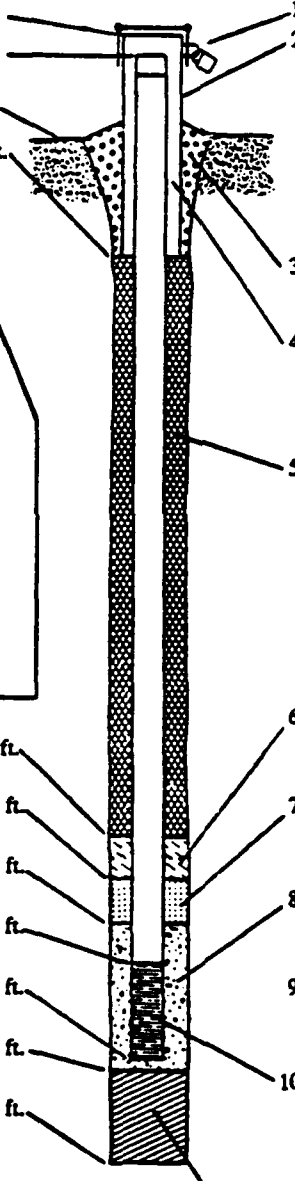

A. Protective pipe, top elevation 804.42 ft. MSL
B. Well casing, top elevation 804.21 ft. MSL
C. Land surface elevation 801.6 ft. MSL
D. Surface seal, bottom ____ ft. MSL or ____ ft.

12. USCS classification of soil near screen:
☐ GP ☐ GM ☐ GC ☐ GW ☐ SW ☒ SP
☐ SM ☐ SC ☐ ML ☐ MH ☐ CL ☐ CH
☐ Bedrock

13. Sieve analysis attached? ☐ Yes ☐ No

14. Drilling method used: Rotary ☐ 50; Hollow Stem Auger ☒ 41; Other ☐ ____

15. Drilling fluid used: Water ☐ 02; Air ☐ 01; Drilling Mud ☐ 03; None ☒ 99

16. Drilling additives used? ☐ Yes ☒ No
Describe ____

17. Source of water (attach analysis):
PW#2

E. Bentonite seal, top 742.6 ft. MSL or 59.0 ft.
F. Fine sand, top NA ft. MSL or NA ft.
G. Filter pack, top 737.6 ft. MSL or 64.0 ft.
H. Well screen, top 731.6 ft. MSL or 70.0 ft.
I. Well screen, bottom 726.6 ft. MSL or 75.0 ft.
J. Filter pack, bottom 726.6 ft. MSL or 75.0 ft.
K. Borehole, bottom 721.6 ft. MSL or 80.0 ft.
L. Borehole, diameter 9.5 in.
M. O.D. well casing 4.5 in.
N. I.D. well casing 4.0 in.

1. Cap and lock? ☒ Yes ☐ No
2. Protective cover pipe:
a. Inside diameter: 6.0 in.
b. Length: 2.0 ft.
c. Material: Steel ☒ 04; Other ☐ ____
d. Additional protection? ☒ Yes ☐ No
If yes, describe: 4 bucking Posts
3. Surface seal: Bentonite ☐ 30; Concrete ☐ 01; Grout; Other ☒ ____
4. Material between well casing and protective pipe: Bentonite ☐ 30; Annular space seal ☐; Grout; Other ☒ ____
5. Annular space seal: Granular Bentonite ☐ 33; ____ Lbs/gal mud weight ... Bentonite-sand slurry ☐ 35; ____ Lbs/gal mud weight ..... Bentonite slurry ☐ 31; 5 % Bentonite ..... Bentonite-cement grout ☒ 50; ±400 gals volume added for any of the above
How installed: Tremie ☐ 01; Tremie pumped ☒ 02; Gravity ☐ 08
6. Bentonite seal: Bentonite granules ☐ 33; ☐ 1/4 in. ☐ 3/8 in. ☐ 1/2 in. Bentonite pellets ☐ 32; Bentonite slurry; Other ☒ ____
7. Fine sand material: Manufacturer, product name and mesh size: NA
Volume added NA ft³
8. Filter pack material: Manufacturer, product name and mesh size: Red Flint, Silica Fillisand
Volume added ≤ 1.2 ft³
9. Well casing: Flush threaded PVC schedule 40 ☐ 23; Flush threaded PVC schedule 80 ☒ 24; Other ☐ ____
10. Screen material: Schedule 80 PVC
Screen type: Factory cut ☒ 11; Continuous slot ☐ 01; Other ☐ ____
Manufacturer Johnson
Slot size: 0.010 in.
Slotted length: 5.0 ft.
11. Backfill material (below filter pack): None ☐; Native Cave; Other ☒

I hereby certify that the information on this form is true and correct to the best of my knowledge.

Signature: Paul L. Bol | Firm: E.C. Jordan Co.

Please complete and return both sides of this form as required by chs. 144, 147 and 160, Wis. Stats., and ch. NR 141, Wis. Adm. Code. In accordance with ch. 144, Wis Stats., failure to file this form may result in a forfeiture of not less than $10, nor more than $5,000 for each day of violation. In accordance with ch. 147, Wis. Stats., failure to file this form may result in a forfeiture of not more than $10,000 for each day of violation.

State of Wisconsin
Department of Natural Resources

MONITORING WELL CONSTRUCTION
Form 4400-113A 8-89

Facility/Project Name: Badger Army Ammunition Plant
Facility License, Permit or Monitoring Number:

Grid Location: 4,600,868.3 ft. M ☒ N. ☐ S.; 277,242.8 ft. ☒ E. ☐ W.

Well Name: SPN-89-04C
Wis. Unique Well Number: DNR Well Num:

Type of Well: Water Table Observation Well ☐ 11; Piezometer ☒ 12

Section Location: ____ 1/4 of ____ 1/4 of Section ____, T ____ N, R ____ ☐ E ☐ W

Date Well Installed: 03/30/89 (m m / d d / y y)

Distance Well Is From Waste/Source Boundary: NA ft.

Well Installed By: (Person's Name and Firm): Dave Belan / E.C. Jordan Co.

Is Well A Point of Enforcement Std. Application? ☐ Yes ☒ No

Location of Well Relative to Waste/Source: ☐ Upgradient ☐ Sidegradient ☐ Downgradient ☐ Not Known

A. Protective pipe, top elevation: 803.36 ft. MSL
B. Well casing, top elevation: 803.19 ft. MSL
C. Land surface elevation: 800.2 ft. MSL
D. Surface seal, bottom: ____ ft. MSL or ____ ft.

12. USCS classification of soil near screen:
☐ GP ☐ GM ☐ GC ☐ GW ☐ SW ☒ SP
☐ SM ☐ SC ☐ ML ☐ MH ☐ CL ☐ CH
☐ Bedrock

13. Sieve analysis attached? ☐ Yes ☒ No

14. Drilling method used: Rotary ☐ 50; Hollow Stem Auger ☐ 41; Dual Wall; Other ☒ ___

15. Drilling fluid used: Water ☐ 02; Air ☒ 01; Drilling Mud ☐ 03; None ☐ 99

16. Drilling additives used? ☐ Yes ☒ No
Describe ____

17. Source of water (attach analysis):
PW # 2

E. Bentonite seal, top: 210.2 ft. MSL or 90.5 ft.
F. Fine sand, top: NA ft. MSL or NA ft.
G. Filter pack, top: 205.2 ft. MSL or 95.5 ft.
H. Well screen, top: 699.2 ft. MSL or 101.5 ft.
I. Well screen, bottom: 694.2 ft. MSL or 106.5 ft.
J. Filter pack, bottom: 694.2 ft. MSL or 106.5 ft.
K. Borehole, bottom: 670.2 ft. MSL or 130.0 ft.
L. Borehole, diameter: 9.5 in.
M. O.D. well casing: 4.5 in.
N. I.D. well casing: 4.0 in.

1. Cap and lock? ☒ Yes ☐ No
2. Protective cover pipe:
a. Inside diameter: 6.0 in.
b. Length: 9.0 ft.
c. Material: Steel ☒ 04; Other ☐ __
d. Additional protection? ☒ Yes ☐ No
If yes, describe: 4 bucking Posts
3. Surface seal: Bentonite ☐ 30; Concrete ☐ 01; Other ☒ __
Grout
4. Material between well casing and protective pipe: Bentonite ☐ 30; Annular space seal ☐ __; Other ☒ __
Grout
5. Annular space seal: Granular Bentonite ☐ 03
____ Lbs/gal mud weight . . . Bentonite-sand slurry ☐ 05
____ Lbs/gal mud weight . . . . . Bentonite slurry ☐ 03
5 % Bentonite . . . . . Bentonite-cement grout ☒ 50
≈ 250 gal/ft³ Volume added for any of the above
How installed: Tremie ☐ 01; Tremie pumped ☒ 02; Gravity ☐ 08
6. Bentonite seal: Bentonite granules ☐ 33
☐ 1/4 in. ☐ 3/8 in. ☐ 1/2 in. Bentonite pellets ☐ 32
Bentonite Slurry Other ☒ __
7. Fine sand material: Manufacturer, product name and mesh size
NA
Volume added NA ft³
8. Filter pack material: Manufacturer, product name and mesh size
Red Flint, Silica Filter Sand
Volume added ≈ 1.2 ft³
9. Well casing: Flush threaded PVC schedule 40 ☐ 23; Flush threaded PVC schedule 80 ☒ 24; Other ☐ __
10. Screen material: Schedule 80 PVC
Screen type: Factory cut ☒ 11; Continuous slot ☐ 01; Other ☐ __
Manufacturer Timco
Slot size: 0.010 in.
Slotted length: 5.0 ft.
11. Backfill material (below filter pack): None ☐; Other ☒
Native Cave

I hereby certify that the information on this form is true and correct to the best of my knowledge.

Signature: Paul L. Bol
Firm: E.C. Jordan Co.

Please complete and return both sides of this form as required by chs. 144, 147 and 160, Wis. Stats., and ch. NR 141, Wis. Adm. Code. In accordance with ch. 144, Wis Stats., failure to file this form may result in a forfeiture of not less than $10, nor more than $5,000 for each day of violation. In accordance with ch. 147, Wis. Stats., failure to file this form may result in a forfeiture of not more than $10,000 for each day of violation.

State of Wisconsin
Department of Natural Resources

MONITORING WELL CONSTRUCTION
Form 4400-113A 8-89

Facility/Project Name: Badger Army Ammunition Plant
Facility License, Permit or Monitoring Number: _____

Grid Location: 4,800,838.1 m SC N. S. / 299,011.3 m SC E. W.

Well Name: SPN-89-05A

Wis. Unique Well Number: _____ DNR Well Number: _____

Type of Well: Water Table Observation Well 11 / Piezometer 12

Section Location: _____ 1/4 of _____ 1/4 of Section _____ T _____ N, R _____ E W

Date Well Installed: 02/19/89 (m m d d y y)

Distance Well Is From Waste/Source Boundary: NA ft.

Well Installed By: (Person's Name and Firm) Bill Metzger / E.C. Jordan Co

Is Well A Point of Enforcement Std. Application? Yes / No

Location of Well Relative to Waste/Source: Upgradient / Sidegradient / Downgradient / Not Known

A. Protective pipe, top elevation 804.18 ft. MSL
B. Well casing, top elevation 804.25 ft. MSL
C. Land surface elevation 801.6 ft. MSL
D. Surface seal, bottom _____ ft. MSL or _____ ft.

12. USCS classification of soil near screen:
GP GM GC GW SW SP
SM SC ML MH CL CH
Bedrock

13. Sieve analysis attached? Yes / No

14. Drilling method used: Rotary 50 / Hollow Stem Auger 41 / Other _____

15. Drilling fluid used: Water 02 / Air 01 / Drilling Mud 03 / None 99

16. Drilling additives used? Yes / No
Describe _____

17. Source of water (attach analysis): PW #2

E. Bentonite seal, top 779.6 ft. MSL or 22.0 ft.
F. Fine sand, top NA ft. MSL or NA ft.
G. Filter pack, top 774.6 ft. MSL or 27.0 ft.
H. Well screen, top 769.6 ft. MSL or 32.0 ft.
I. Well screen, bottom 749.6 ft. MSL or 52.0 ft.
J. Filter pack, bottom 749.6 ft. MSL or 52.0 ft.
K. Borehole, bottom 741.6 ft. MSL or 60.2 ft.
L. Borehole, diameter 9.5 in.
M. O.D. well casing 4.5 in.
N. I.D. well casing 4.0 in.

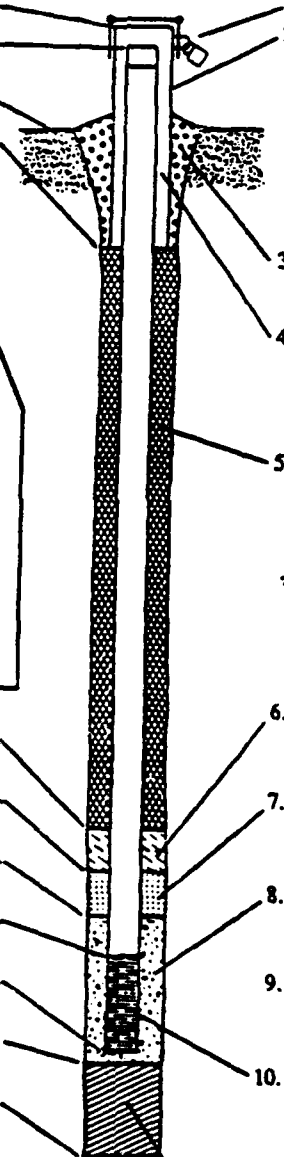

1. Cap and lock? Yes / No
2. Protective cover pipe:
a. Inside diameter: 6.5 in.
b. Length: 2.0 ft.
c. Material: Steel 04 / Other _____
d. Additional protection? Yes / No
If yes, describe: 4 bracing posts
3. Surface seal: Bentonite 30 / Concrete 01 / Other Grout
4. Material between well casing and protective pipe: Bentonite 30 / Annular space seal / Other Grout
5. Annular space seal: Granular Bentonite 33 / _____ Lbs/gal mud weight ... Bentonite-sand slurry 35 / _____ Lbs/gal mud weight ..... Bentonite slurry 31 / 5 % Bentonite .... Bentonite-cement grout 50 / ≈ 400 gals volume added for any of the above
How installed: Tremie 01 / Tremie pumped 02 / Gravity 08
6. Bentonite seal: Bentonite granules 33 / 1/4 in. 3/8 in. 1/2 in. Bentonite pellets 32 / Other _____
7. Fine sand material: Manufacturer, product name and mesh size: NA
Volume added NA ft³
8. Filter pack material: Manufacturer, product name and mesh size: Red Flint, Silica Filter Sand
Volume added ≈ 2.8 ft³
9. Well casing: Flush threaded PVC schedule 40 23 / Flush threaded PVC schedule 80 24 / Other _____
10. Screen material: Schedule 80 PVC
Screen type: Factory cut 11 / Continuous slot 01 / Other _____
Manufacturer: Timco
Slot size: 0.010 in.
Slotted length: 20.0 ft.
11. Backfill material (below filter pack): None / Other Native Cave

I hereby certify that the information on this form is true and correct to the best of my knowledge.

Signature: [signature] Firm: E.C Jordan Co

Please complete and return both sides of this form as required by chs. 144, 147 and 160, Wis. Stats., and ch. NR 141, Wis. Adm. Code. In accordance with ch. 144, Wis Stats., failure to file this form may result in a forfeiture of not less than $10, nor more than $5,000 for each day of violation. In accordance with ch. 147, Wis. Stats., failure to file this form may result in a forfeiture of not more than $10,000 for each day of violation.

State of Wisconsin
Department of Natural Resources

MONITORING WELL CONSTRUCTION
Form 4400-113A 8-89

Facility/Project Name: Badger Army Ammunition Plant	Grid Location: 4,800,834.8 ~~ft.~~ m ☒ N. ☐ S. / 379,006.9 ~~ft.~~ m ☒ E. ☐ W.	Well Name: SPN-89-05B
Facility License, Permit or Monitoring Number:		Wis. Unique Well Number: DNR Well Num.:
Type of Well: Water Table Observation Well ☐ 11; Piezometer ☒ 12	Section Location: ____ 1/4 of ____ 1/4 of Section ____, T ____ N, R ____ ☐ E ☐ W	Date Well Installed: 03/30/89 (m m / d d / y y)
Distance Well Is From Waste/Source Boundary: NA ft.	Location of Well Relative to Waste/Source: ☐ Upgradient ☐ Sidegradient ☐ Downgradient ☐ Not Known	Well Installed By: (Person's Name and Firm) Dave Belan / E.C. Jordan Co.
Is Well A Point of Enforcement Std. Application? ☐ Yes ☒ No		

A. Protective pipe, top elevation 804.21 ft. MSL

B. Well casing, top elevation 804.02 ft. MSL

C. Land surface elevation 801.6 ft. MSL

D. Surface seal, bottom ____ ft. MSL or ____ ft.

12. USCS classification of soil near screen:
☐ GP ☐ GM ☐ GC ☐ GW ☒ SW ☒ SP
☐ SM ☐ SC ☐ ML ☐ MH ☐ CL ☐ CH
☐ Bedrock

13. Sieve analysis attached? ☐ Yes ☒ No

14. Drilling method used: Rotary ☐ 50; Hollow Stem Auger ☐ 41; Other ☒ Dual Wall

15. Drilling fluid used: Water ☐ 02; Air ☒ 01; Drilling Mud ☐ 03; None ☐ 99

16. Drilling additives used? ☐ Yes ☒ No

Describe ____

17. Source of water (attach analysis): PW #2

E. Bentonite seal, top 730.1 ft. MSL or 71.5 ft.

F. Fine sand, top NA ft. MSL or NA ft.

G. Filter pack, top 725.1 ft. MSL or 76.5 ft.

H. Well screen, top 719.6 ft. MSL or 82.0 ft.

I. Well screen, bottom 714.6 ft. MSL or 87.0 ft.

J. Filter pack, bottom 712.6 ft. MSL or 89.0 ft.

K. Borehole, bottom 712.6 ft. MSL or 89.0 ft.

L. Borehole, diameter 9.5 in.

M. O.D. well casing 4.5 in.

N. I.D. well casing 4.0 in.

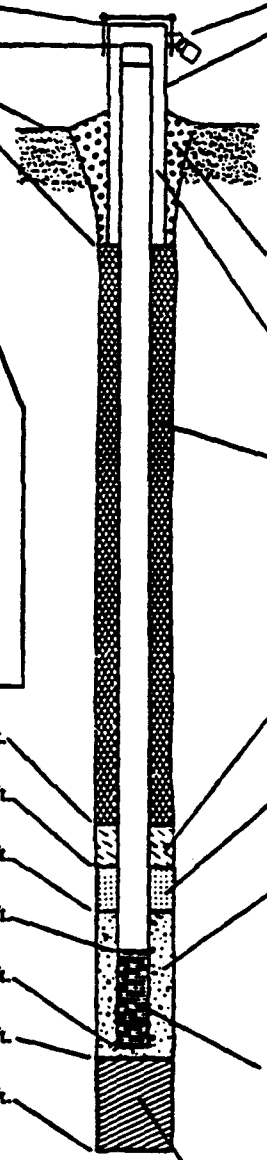

1. Cap and lock? ☒ Yes ☐ No

2. Protective cover pipe:
a. Inside diameter: 6.0 in.
b. Length: 2.0 ft.
c. Material: Steel ☒ 04; Other ☐ __
d. Additional protection? ☒ Yes ☐ No
If yes, describe: 4 backing Posts

3. Surface seal: Bentonite ☐ 30; Concrete ☐ 0; Other ☒ Grout

4. Material between well casing and protective pipe: Bentonite ☐ 30; Annular space seal ☐; Other ☒ Grout

5. Annular space seal: Granular Bentonite ☐ 3
____ Lbs/gal mud weight . . . Bentonite-sand slurry ☐ 5
____ Lbs/gal mud weight . . . . . Bentonite slurry ☐ 3
5 % Bentonite . . . . . Bentonite-cement grout ☒ 5
± 190 gal ~~ft³~~ volume added for any of the above
How installed: Tremie ☐ 01; Tremie pumped ☒ 02; Gravity ☐ 08

6. Bentonite seal: Bentonite granules ☐ 33
☐ 1/4 in. ☐ 3/8 in. ☐ 1/2 in. Bentonite pellets ☐ 32
Bentonite Slurry Other ☒ __

7. Fine sand material: Manufacturer, product name and mesh size
NA
Volume added NA ft³

8. Filter pack material: Manufacturer, product name and mesh size
Red Flint, Silica Filter Sand
Volume added ≈ 1.4 ft³

9. Well casing: Flush threaded PVC schedule 40 ☐ 23; Flush threaded PVC schedule 80 ☒ 24; Other ☐ __

10. Screen material: schedule 80 PVC __
Screen type: Factory cut ☒ 11; Continuous slot ☐ 01; Other ☐ __
Manufacturer Timco
Slot size: 0.010 in.
Slotted length: 05.0 ft.

11. Backfill material (below filter pack): None ☒; Other ☐

I hereby certify that the information on this form is true and correct to the best of my knowledge.

Signature	Firm
[signature]	E.C. Jordan Co.

Please complete and return both sides of this form as required by chs. 144, 147 and 160, Wis. Stats., and ch. NR 141, Wis. Adm. Code. In accordance with ch. 144, Wis Stats., failure to file this form may result in a forfeiture of not less than $10, nor more than $5,000 for each day of violation. In accordance with ch. 147, Wis. Stats., failure to file this form may result in a forfeiture of not more than $10,000 for each day of violation.

State of Wisconsin
Department of Natural Resources

MONITORING WELL CONSTRUCTION
Form 4400-113A 8-89

Facility/Project Name: Badger Army Ammunition Plant
Facility License, Permit or Monitoring Number: _____

Grid Location: 4,805,556.1 ft. ☒ N. ☐ S.; 979,611.3 ft. ☒ E. ☐ W.

Well Name: OBM-89-01
Wis. Unique Well Number: _____ DNR Well Number: _____

Type of Well: Water Table Observation Well ☒ 11; Piezometer ☐ 12

Section Location: _____ 1/4 of _____ 1/4 of Section _____, T _____ N, R _____ ☐ E ☐ W

Date Well Installed: 02/02/89 (m m d d y y)

Distance Well Is From Waste/Source Boundary: NA ft.

Location of Well Relative to Waste/Source: ☐ Upgradient ☐ Sidegradient ☐ Downgradient ☐ Not Known

Well Installed By: (Person's Name and Firm): Jim Buss / E.C. Jordan Co.

Is Well A Point of Enforcement Std. Application? ☐ Yes ☒ No

A. Protective pipe, top elevation: 896.17 ft. MSL
B. Well casing, top elevation: 895.99 ft. MSL
C. Land surface elevation: 893.6 ft. MSL
D. Surface seal, bottom: _____ ft. MSL or _____ ft.

12. USCS classification of soil near screen:
☒ GP ☐ GM ☐ GC ☐ GW ☐ SW ☐ SP
☐ SM ☐ SC ☐ ML ☐ MH ☐ CL ☐ CH
☐ Bedrock

13. Sieve analysis attached? ☐ Yes ☒ No

14. Drilling method used: Rotary ☐ 50; Hollow Stem Auger ☐ 41; Other ☒ ___
Dual Wall

15. Drilling fluid used: Water ☐ 02; Air ☒ 01; Drilling Mud ☐ 03; None ☐ 99

16. Drilling additives used? ☐ Yes ☒ No
Describe _____

17. Source of water (attach analysis):
PW #2

E. Bentonite seal, top: 827.1 ft. MSL or 66.5 ft.
F. Fine sand, top: NA ft. MSL or NA ft.
G. Filter pack, top: 799.6 ft. MSL or 94.0 ft.
H. Well screen, top: 788.6 ft. MSL or 105.0 ft.
I. Well screen, bottom: 768.6 ft. MSL or 125.0 ft.
Filter pack, bottom: 766.6 ft. MSL or 127.0 ft.
J. Borehole, bottom: 766.6 ft. MSL or 127.0 ft.
Borehole, diameter: 9.5 in.
K. O.D. well casing: 4.5 in.
N. I.D. well casing: 4.0 in.

1. Cap and lock? ☒ Yes ☐ No
2. Protective cover pipe:
a. Inside diameter: 6.0 in.
b. Length: 7.0 ft.
c. Material: Steel ☒ 04; Other ☐ ___
d. Additional protection? ☒ Yes ☐ No
If yes, describe: 4 bucking posts
3. Surface seal: Bentonite ☐ 30; Concrete ☐ 01; Other ☒ ___
Grout
4. Material between well casing and protective pipe: Bentonite ☐ 30; Annular space seal ☐; Other ☒ ___
Grout
5. Annular space seal: Granular Bentonite ☐ 33
_____ Lbs/gal mud weight . . . Bentonite-sand slurry ☐ 35
_____ Lbs/gal mud weight . . . . . Bentonite slurry ☐ 31
5 % Bentonite . . . . . Bentonite-cement grout ☒ 50
± 250 gal ft³ volume added for any of the above
How installed: Tremie ☐ 01; Tremie pumped ☒ 02; Gravity ☐ 08
6. Bentonite seal: Bentonite granules ☐ 33
☐ 1/4 in. ☒ 3/8 in. ☐ 1/2 in. Bentonite pellets ☒ 32
_____ Other ☐ ___
7. Fine sand material: Manufacturer, product name and mesh size
NA
Volume added NA ft³
8. Filter pack material: Manufacturer, product name and mesh size
Red Flint, Silica Fl Sand
Volume added ≈ 36 ft³
9. Well casing: Flush threaded PVC schedule 40 ☐ 23; Flush threaded PVC schedule 80 ☒ 24; Other ☐ ___
10. Screen material: Schedule 80 PVC
Screen type: Factory cut ☒ 11; Continuous slot ☐ 01; Other ☐ ___
Manufacturer Timco
Slot size: 0.010 in.
Slotted length: 20.0 ft.
11. Backfill material (below filter pack): None ☒; Other ☐

I hereby certify that the information on this form is true and correct to the best of my knowledge.

Signature: Paul F. Bol Firm: E.C Jordan Co

Please complete and return both sides of this form as required by chs. 144, 147 and 160, Wis. Stats., and ch. NR 141, Wis. Adm. Code. In accordance with ch. 144, Wis Stats., failure to file this form may result in a forfeiture of not less than $10, nor more than $5,000 for each day of violation. In accordance with ch. 147, Wis. Stats., failure to file this form may result in a forfeiture of not more than $10,000 for each day of violation.

State of Wisconsin
Department of Natural Resources

MONITORING WELL CONSTRUCTION
Form 4400-113A 8-89

Facility/Project Name: Badger Army Ammunitions Plant	Grid Location: 4,805,558.4 m ft N. S. / 379,769.2 m ft E. W.	Well Name: DBN-89-02A
Facility License, Permit or Monitoring Number:		Wis. Unique Well Number / DNR Well Number:
Type of Well: Water Table Observation Well 11 / Piezometer 12	Section Location: ____ 1/4 of ____ 1/4 of Section ____, T ____ N, R ____ E W	Date Well Installed: 02/02/89 (m m d d y y)
Distance Well Is From Waste/Source Boundary: NA ft.		Well Installed By: (Person's Name and Firm) Fred Bogdan / E.C. Jordan C
Is Well A Point of Enforcement Std. Application? Yes / No	Location of Well Relative to Waste/Source: Upgradient, Sidegradient, Downgradient, Not Known	

A. Protective pipe, top elevation 887.25 ft. MSL
B. Well casing, top elevation 882.10 ft. MSL
C. Land surface elevation 884.8 ft. MSL
D. Surface seal, bottom ____ ft. MSL or ____ ft.

12. USCS classification of soil near screen:
GP GM GC GW SW SP
SM SC ML MH CL CH
Bedrock

13. Sieve analysis attached? Yes / No

14. Drilling method used: Rotary 50 / Hollow Stem Auger 41 / Other
Dual Wall

15. Drilling fluid used: Water 02 / Air 01 / Drilling Mud 03 / None 99

16. Drilling additives used? Yes / No

Describe ____

17. Source of water (attach analysis):
PW #2

E. Bentonite seal, top 801.8 ft. MSL or 83.0 ft.
F. Fine sand, top NA ft. MSL or NA ft.
G. Filter pack, top 796.8 ft. MSL or 88.0 ft.
H. Well screen, top 785.3 ft. MSL or 99.5 ft.
I. Well screen, bottom 765.3 ft. MSL or 119.5 ft.
J. Filter pack, bottom 764.8 ft. MSL or 120.0 ft.
K. Borehole, bottom 764.8 ft. MSL or 120.0 ft.
L. Borehole, diameter 9.5 in.
M. O.D. well casing 4.5 in.
N. I.D. well casing 4.0 in.

1. Cap and lock? Yes / No
2. Protective cover pipe:
a. Inside diameter: 6.0 in.
b. Length: 2.0'
c. Material: Steel 0 / Other
d. Additional protection? Yes / No
If yes, describe: 4 bucking Posts
3. Surface seal: Bentonite 3 / Concrete 01 / Other
Grout
4. Material between well casing and protective pipe: Bentonite 30 / Annular space seal / Other
Grout
5. Annular space seal: Granular Bentonite 3 / ____ Lbs/gal mud weight ... Bentonite-sand slurry 35 / ____ Lbs/gal mud weight ..... Bentonite slurry / 5 % Bentonite ..... Bentonite-cement grout 50 / ≈ 900 gal volume added for any of the above
How installed: Tremie 0 / Tremie pumped 0 / Gravity 08
6. Bentonite seal: Bentonite granules 3 / 1/4 in. 3/8 in. 1/2 in. Bentonite pellets 3 / Other
7. Fine sand material: Manufacturer, product name and mesh size
NA
Volume added NA ft³
8. Filter pack material: Manufacturer, product name and mesh size
Red Flint, Silica Filter Sand
Volume added ≈ 3.5 ft³
9. Well casing: Flush threaded PVC schedule 40 2 / Flush threaded PVC schedule 80 2 / Other
10. Screen material: Schedule 80 PVC
Screen type: Factory cut 1 / Continuous slot 0 / Other
Manufacturer Timco
Slot size: 0.010 in
Slotted length: 20.0 f
11. Backfill material (below filter pack): None / Other

I hereby certify that the information on this form is true and correct to the best of my knowledge.

Signature: Paul F. Bol | Firm: E.C. Jordan Co

Please complete and return both sides of this form as required by chs. 144, 147 and 160, Wis. Stats., and ch. NR 141, Wis. Adm. Code. In accordance with ch. 144, Wis Stats., failure to file this form may result in a forfeiture of not less than $10, nor more than $5,000 for each day of violation. In accordance with ch. 147, Wis. Stats., failure to file this form may result in a forfeiture of not more than $10,000 for each day of violation.

ate of Wisconsin
Department of Natural Resources

MONITORING WELL CONSTRUCTION
Form 4400-113A 8-89

ity/Project Name: Dger Army Ammunition Plant	Grid Location: 4,805,549.6 ~~ft~~ m ☒ N. ☐ S. / 279,764.0 ~~ft~~ m ☒ E. ☐ W.	Well Name: DBN-89-02B
Facility License, Permit or Monitoring Number: _____		Wis. Unique Well Number: _____ DNR Well Number: _____
e of Well: Water Table Observation Well ☐ 11; Piezometer ☒ 12	Section Location: ____ 1/4 of ____ 1/4 of Section ____, T ____ N, R ____ ☐ E ☐ W	Date Well Installed: 02/02/89 (m m / d d / y y)
Distance Well Is From Waste/Source Boundary: NA ft.	Location of Well Relative to Waste/Source: ☐ Upgradient ☐ Sidegradient ☐ Downgradient ☐ Not Known	Well Installed By: (Person's Name and Firm) Fred Bragdon / E.C. Jordan Co.
Well A Point of Enforcement Std. Application? ☐ Yes ☒ No		

Protective pipe, top elevation 887.02 ft. MSL
ll casing, top elevation 886.90 ft. MSL
and surface elevation 884.8 ft. MSL
Surface seal, bottom _____ ft. MSL or ____ ft.

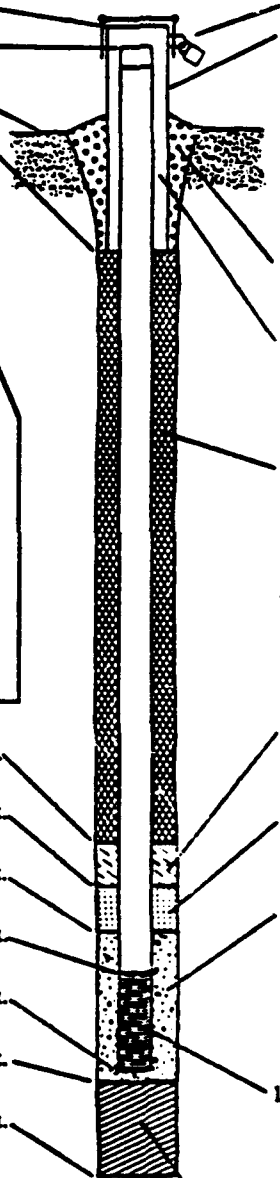

12. USCS classification of soil near screen:
☒ GP ☐ GM ☐ GC ☐ GW ☐ SW ☐ SP
☐ SM ☐ SC ☐ ML ☐ MH ☐ CL ☐ CH
☐ Bedrock

13. Sieve analysis attached? ☐ Yes ☐ No

Drilling method used: Rotary ☐ 50; Hollow Stem Auger ☐ 41; Other ☒ Dual Wall

. Drilling fluid used: Water ☐ 02; Air ☒ 01; Drilling Mud ☐ 03; None ☐ 99

Drilling additives used? ☐ Yes ☒ No

Describe _____

Source of water (attach analysis): PW #2

Bentonite seal, top 754.8 ft. MSL or 130.0 ft.
F. Fine sand, top NA ft. MSL or NA ft.
G. Filter pack, top 745.8 ft. MSL or 139.0 ft.
Well screen, top 739.8 ft. MSL or 145.0 ft.
I. Well screen, bottom 734.8 ft. MSL or 150.0 ft.
J. Filter pack, bottom 734.8 ft. MSL or 150.0 ft.
K. Borehole, bottom 724.8 ft. MSL or 160.0 ft.
L. Borehole, diameter 9.5 in.
M. O.D. well casing 4.5 in.
N. I.D. well casing 4.0 in.

1. Cap and lock? ☒ Yes ☐ No
2. Protective cover pipe:
a. Inside diameter: 6.0 in.
b. Length: 7.0 ft.
c. Material: Steel ☒ 04; Other ☐ __
d. Additional protection? ☒ Yes ☐ No
If yes, describe: 4 backing Posts
3. Surface seal: Bentonite ☐ 30; Concrete ☐ 01; Other ☒ Grout
4. Material between well casing and protective pipe: Bentonite ☐ 30; Annular space seal ☐; Other ☒ Grout
5. Annular space seal: Granular Bentonite ☐ 33
____ Lbs/gal mud weight . . . Bentonite-sand slurry ☐ 35
____ Lbs/gal mud weight . . . . . Bentonite slurry ☐ 31
5 % Bentonite . . . . . Bentonite-cement grout ☒ 50
± 1300 gal ~~ft³~~ volume added for any of the above
How installed: Tremie ☐ 01; Tremie pumped ☒ 02; Gravity ☐ 08
6. Bentonite seal: Bentonite granules ☐ 33
☐ 1/4 in. ☐ 3/8 in. ☐ 1/2 in. Bentonite pellets ☒ 32; Other ☐ __
7. Fine sand material: Manufacturer, product name and mesh size NA
Volume added NA ft³
8. Filter pack material: Manufacturer, product name and mesh size Red Flint, Silica Filter Sand
Volume added ≈ 1.2 ft³
9. Well casing: Flush threaded PVC schedule 40 ☐ 23; Flush threaded PVC schedule 80 ☒ 24; Other ☐ __
10. Screen material: Schedule 80 PVC
Screen type: Factory cut ☒ 11; Continuous slot ☐ 01; Other ☐ __
Manufacturer Timco
Slot size: 0.010 in.
Slotted length: 5.0 ft.
11. Backfill material (below filter pack): None ☐; Other ☒ Natural Cave

eby certify that the information on this form is true and correct to the best of my knowledge.

Signature	Firm
Paul L. Bol	E.C. Jordan Co.

ase complete and return both sides of this form as required by chs. 144, 147 and 160, Wis. Stats., and ch. NR 141, Wis. Adm. Code. In accordance with . 144, Wis Stats., failure to file this form may result in a forfeiture of not less than $10, nor more than $5,000 for each day of violation. In accordance with ch. 147, Wis. Stats., failure to file this form may result in a forfeiture of not more than $10,000 for each day of violation.

State of Wisconsin
Department of Natural Resources

MONITORING WELL CONSTRUCTIO[redacted]
Form 4400-113A 8-8[redacted]

Facility/Project Name: Badger Army Ammunition Plant	Grid Location: 4,805,597.8 M ft ☒ N. ☐ S. / 279,806.8 M ft ☒ E. ☐ W.	Well Name: OBM-89-03
Facility License, Permit or Monitoring Number: _____		Wis. Unique Well Number: _____ DNR Well Numb: _____
Type of Well: Water Table Observation Well ☒ 11; Piezometer ☐ 12	Section Location: ____ 1/4 of ____ 1/4 of Section ____, T ____ N, R ____ ☐ E ☐ W	Date Well Installed: 02/16/89 (m m / d d / y y)
Distance Well Is From Waste/Source Boundary: NA ft.	Location of Well Relative to Waste/Source: ☐ Upgradient ☐ Sidegradient ☐ Downgradient ☐ Not Known	Well Installed By: (Person's Name and Firm) Dave H. Belan / E. C. Jordan Co.
Is Well A Point of Enforcement Std. Application? ☐ Yes ☒ No		

A. Protective pipe, top elevation 898.99 ft. MSL

B. Well casing, top elevation 898.85 ft. MSL

C. Land surface elevation 896.4 ft. MSL

D. Surface seal, bottom ____ ft. MSL or ____ ft.

12. USCS classification of soil near screen:
☒ GP ☐ GM ☐ GC ☐ GW ☐ SW ☐ SP
☐ SM ☐ SC ☐ ML ☐ MH ☐ CL ☐ CH
☐ Bedrock

13. Sieve analysis attached? ☐ Yes ☒ No

14. Drilling method used: Rotary ☐ 50; Hollow Stem Auger ☐ 41; Other ☒ Dual Wall

15. Drilling fluid used: Water ☐ 02; Air ☒ 01; Drilling Mud ☐ 03; None ☐ 99

16. Drilling additives used? ☐ Yes ☒ No

Describe _____

17. Source of water (attach analysis): PW #2

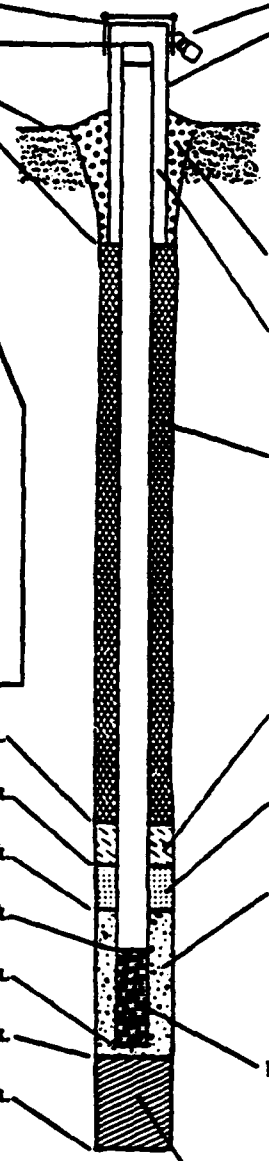

E. Bentonite seal, top 808.4 ft. MSL or 88.0 ft.

F. Fine sand, top NA ft. MSL or NA ft.

G. Filter pack, top 798.4 ft. MSL or 98.0 ft.

H. Well screen, top 783.4 ft. MSL or 113.0 ft.

I. Well screen, bottom 763.4 ft. MSL or 133.0 ft.

J. Filter pack, bottom 757.4 ft. MSL or 139.0 ft.

K. Borehole, bottom 757.4 ft. MSL or 139.0 ft.

L. Borehole, diameter 9.5 in.

M. O.D. well casing 4.5 in.

N. I.D. well casing 4.0 in.

1. Cap and lock? ☒ Yes ☐

2. Protective cover pipe:
a. Inside diameter: 6.0
b. Length: 2.0
c. Material: Steel ☒ 04; Other ☐ __
d. Additional protection? ☒ Yes ☐ No
If yes, describe: 4 backing posts

3. Surface seal: Bentonite ☐ 30; Concrete ☐ 0; Other ☒ Grout

4. Material between well casing and protective pipe: Bentonite ☐ 3[illegible]; Annular space seal ☐; Other ☒ Grout

5. Annular space seal: Granular Bentonit[redacted]
____ Lbs/gal mud weight . . . Bentonite-sand slurry [redacted]
____ Lbs/gal mud weight . . . . . Bentonite slurry ☐ 3[illegible]
5 % Bentonite . . . . . Bentonite-cement grout ☒ 5[illegible]
± 330 gal ft³ volume added for any of the above
How installed: Tremie ☐ 0; Tremie pumped ☒ 02; Gravity ☐ 0[illegible]

6. Bentonite seal: Bentonite granules ☐ 33
☐ 1/4 in. ☒ 3/8 in. ☐ 1/2 in. Bentonite pellets ☒ 32
Other ☐ __

7. Fine sand material: Manufacturer, product name and mesh siz NA
Volume added NA ft³

8. Filter pack material: Manufacturer, product name and mesh siz Red Flint, Silica Filter Sand
Volume added ≈ 45 ft³

9. Well casing: Flush threaded PVC schedule 40 ☐ 23; Flush threaded PVC schedule 80 ☒ 24; Other ☐ __

10. Screen material: Schedule 80 PVC
Screen type: Factory cut ☒ 11; Continuous slot ☐ 01; Other ☐ __
Manufacturer Timco
Slot size: 0.010 in
Slotted length: 20.0 ft.

11. Backfill material (below filter pack): None [redacted]; Other Natural Cave

I hereby certify that the information on this form is true and correct to the best of my knowledge.

Signature [signature] Firm E. C. Jordan Co.

Please complete and return both sides of this form as required by chs. 144, 147 and 160, Wis. Stats., and ch. NR 141, Wis. Adm. Code. In accordance with ch. 144, Wis Stats., failure to file this form may result in a forfeiture of not less than $10, nor more than $5,000 for each day of violation. In accordance with ch. 147, Wis. Stats., failure to file this form may result in a forfeiture of not more than $10,000 for each day of violation.

State of Wisconsin
Department of Natural Resources

MONITORING WELL CONSTRUCTION
Form 4400-113A 8-89

City/Project Name: Badger Army Ammunition Plant	Grid Location: 4,605,574.1 m N. ☐ S.; 329,605.0 m E. ☐ W.	Well Name: DBN-89-04A
Facility License, Permit or Monitoring Number:		Wis. Unique Well Number / DNR Well Number
Type of Well: Water Table Observation Well ☒ 11; Piezometer ☐ 12	Section Location: ____ 1/4 of ____ 1/4 of Section ____, T ____ N, R ____ ☐ E ☐ W	Date Well Installed: 02/15/89 (m m d d y y)
Distance Well Is From Waste/Source Boundary: NA ft.	Location of Well Relative to Waste/Source: ☐ Upgradient ☐ Sidegradient ☐ Downgradient ☐ Not Known	Well Installed By: (Person's Name and Firm): Dave H. Beken / E.C. Jordan Co.
Is Well A Point of Enforcement Std. Application? ☐ Yes ☒ No		

A. Protective pipe, top elevation 920.07 ft. MSL
B. Well casing, top elevation 919.89 ft. MSL
C. Land surface elevation 917.5 ft. MSL
D. Surface seal, bottom ____ ft. MSL or ____ ft.

12. USCS classification of soil near screen:
☐ GP ☐ GM ☐ GC ☐ GW ☐ SW ☒ SP
☐ SM ☐ SC ☐ ML ☐ MH ☐ CL ☐ CH
☐ Bedrock

13. Sieve analysis attached? ☐ Yes ☐ No

Drilling method used: Rotary ☐ 50; Hollow Stem Auger ☐ 41; Other ☒ Dual Wall

E. Drilling fluid used: Water ☐ 02; Air ☒ 01; Drilling Mud ☐ 03; None ☐ 99

Drilling additives used? ☐ Yes ☒ No

Describe ____

Source of water (attach analysis): PW #2

E. Bentonite seal, top 291.5 ft. MSL or 626.0 ft.
F. Fine sand, top NA ft. MSL or NA ft.
G. Filter pack, top 286.5 ft. MSL or 631.0 ft.
H. Well screen, top 282.5 ft. MSL or 635.0 ft.
I. Well screen, bottom 262.5 ft. MSL or 655.0 ft.
J. Filter pack, bottom 262.5 ft. MSL or 655.0 ft.
K. Borehole, bottom 262.5 ft. MSL or 655.0 ft.
L. Borehole, diameter 9.5 in.
M. O.D. well casing 4.5 in.
N. I.D. well casing 4.0 in.

1. Cap and lock? ☒ Yes ☐ No
2. Protective cover pipe:
a. Inside diameter: 6.0 in.
b. Length: 2.0 ft.
c. Material: Steel ☒ 04; Other ☐ __
d. Additional protection? ☒ Yes ☐ No
If yes, describe: 4 locking Posts
3. Surface seal: Bentonite ☐ 30; Concrete ☐ 01; Other ☒ Grout
4. Material between well casing and protective pipe: Bentonite ☐ 30; Annular space seal ☐; Other ☒ Grout
5. Annular space seal: Granular Bentonite ☐ 33; ____ Lbs/gal mud weight ... Bentonite-sand slurry ☐ 35; ____ Lbs/gal mud weight ..... Bentonite slurry ☐ 31; 5 % Bentonite ..... Bentonite-cement grout ☒ 50; ± 340 gal volume added for any of the above
How installed: Tremie ☐ 01; Tremie pumped ☒ 02; Gravity ☐ 08
6. Bentonite seal: Bentonite granules ☐ 33; ☐ 1/4 in. ☒ 3/8 in. ☐ 1/2 in. Bentonite pellets ☒ 32; Other ☐ __
7. Fine sand material: Manufacturer, product name and mesh size: NA
Volume added NA ft³
8. Filter pack material: Manufacturer, product name and mesh size: Red Flint, Silica Filter Sand
Volume added ± 26 ft³
9. Well casing: Flush threaded PVC schedule 40 ☐ 23; Flush threaded PVC schedule 80 ☒ 24; Other ☐ __
10. Screen material: Schedule 80 PVC
Screen type: Factory cut ☒ 11; Continuous slot ☐ 01; Other ☐ __
Manufacturer Timco
Slot size: 0.01 in.
Slotted length: 20.0 ft.
11. Backfill material (below filter pack): None ☒; Other ☐

I hereby certify that the information on this form is true and correct to the best of my knowledge.

Signature: [signature] Firm: E.C. Jordan Co.

Please complete and return both sides of this form as required by chs. 144, 147 and 160, Wis. Stats., and ch. NR 141, Wis. Adm. Code. In accordance with ch. 144, Wis Stats., failure to file this form may result in a forfeiture of not less than $10, nor more than $5,000 for each day of violation. In accordance with ch. 147, Wis. Stats., failure to file this form may result in a forfeiture of not more than $10,000 for each day of violation.

State of Wisconsin
Department of Natural Resources

MONITORING WELL CONSTRUCTION
Form 4400-113A 8-

Facility/Project Name: Badger Army Ammunition Plant
Facility License, Permit or Monitoring Number:

Grid Location: 4,805,881.4 ft N. S. / 279,599.6 ft E. W.

Well Name: DBN-89-04B
Wis. Unique Well Number: DNR Well Nu

Type of Well: Water Table Observation Well 11; Piezometer 12

Section Location: ____ 1/4 of ____ 1/4 of Section ____, T ____ N, R ____ E W

Date Well Installed: 02/14/89 (m m d d y y)

Distance Well Is From Waste/Source Boundary: NA ft.

Well Installed By: (Person's Name and Firm): Jim Bass / E.C. Jordan Co.

Is Well A Point of Enforcement Std. Application? Yes No

Location of Well Relative to Waste/Source: Upgradient; Sidegradient; Downgradient; Not Known

A. Protective pipe, top elevation 920.30 ft. MSL
B. Well casing, top elevation 920.14 ft. MSL
C. Land surface elevation 917.2 ft. MSL
D. Surface seal, bottom ____ ft. MSL or ____ ft.

12. USCS classification of soil near screen:
GP GM GC GW SW SP
SM SC ML MH CL CH
Bedrock

13. Sieve analysis attached? Yes No

14. Drilling method used: Rotary 50; Hollow Stem Auger 41; Other
Dual Wall

15. Drilling fluid used: Water 02; Air 01; Drilling Mud 03; None 99

16. Drilling additives used? Yes No

Describe ____

17. Source of water (attach analysis):
PW #2

E. Bentonite seal, top 745.2 ft. MSL or 172.0 ft.
F. Fine sand, top NA ft. MSL or NA ft.
G. Filter pack, top 740.2 ft. MSL or 177.0 ft.
H. Well screen, top 735.2 ft. MSL or 182.0 ft.
I. Well screen, bottom 730.2 ft. MSL or 187.0 ft.
J. Filter pack, bottom 730.2 ft. MSL or 187.0 ft.
K. Borehole, bottom 722.2 ft. MSL or 195.0 ft.
L. Borehole, diameter 9.5 in.
M. O.D. well casing 4.5 in.
N. I.D. well casing 4.0 in.

1. Cap and lock? Yes
2. Protective cover pipe:
a. Inside diameter: 6.0
b. Length: 7.5
c. Material: Steel 04; Other
d. Additional protection? Yes
If yes, describe: 4 bucking Posts
3. Surface seal: Bentonite 30; Concrete; Other
Grout
4. Material between well casing and protective pipe: Bentonite; Annular space seal; Other
Grout
5. Annular space seal: Granular Bentonite 3; ____ Lbs/gal mud weight ... Bentonite-sand slurry 3; ____ Lbs/gal mud weight ..... Bentonite slurry; 5 % Bentonite ..... Bentonite-cement grout 50; ± 450 gal volume added for any of the above
How installed: Tremie; Tremie pumped 02; Gravity 0
6. Bentonite seal: Bentonite granules; 1/4 in. 3/8 in. 1/2 in. Bentonite pellets 32; Other
7. Fine sand material: Manufacturer, product name and mesh si
NA
Volume added NA ft³
8. Filter pack material: Manufacturer, product name and mesh si
Red Flint, Silica Filter Sand
Volume added ± 61 ft³
9. Well casing: Flush threaded PVC schedule 40; Flush threaded PVC schedule 80 2; Other
10. Screen material: Schedule 80 PVC
Screen type: Factory cut 1; Continuous slot 0; Other
Manufacturer Timco
Slot size: 0.010
Slotted length: 5.0 ft.
11. Backfill material (below filter pack): Non; Other
Native Cave

I hereby certify that the information on this form is true and correct to the best of my knowledge.

Signature: Paul P. Bol
Firm: E.C. Jordan Co.

Please complete and return both sides of this form as required by chs. 144, 147 and 160, Wis. Stats., and ch. NR 141, Wis. Adm. Code. In accordance with ch. 144, Wis Stats., failure to file this form may result in a forfeiture of not less than $10, nor more than $5,000 for each day of violation. In accordance with ch. 147, Wis. Stats., failure to file this form may result in a forfeiture of not more than $10,000 for each day of violation.

State of Wisconsin
Department of Natural Resources

MONITORING WELL CONSTRUCTION
Form 4400-113A 8-89

Facility/Project Name: Badger Army Ammunition Plant	Grid Location: 4,805,625.7 m/ft N. S.; 279,535.2 m/ft E. W.	Well Name: OBM-89-05
Facility License, Permit or Monitoring Number:		Wis. Unique Well Number / DNR Well Number
Type of Well: Water Table Observation Well 11; Piezometer 12	Section Location: 1/4 of 1/4 of Section; T N, R E W	Date Well Installed: 02/15/89
Distance Well Is From Waste/Source Boundary: NA ft.	Location of Well Relative to Waste/Source: Upgradient, Sidegradient, Downgradient, Not Known	Well Installed By: (Person's Name and Firm) Dede Belan / E.C. Jordan Co.
Is Well A Point of Enforcement Std. Application? Yes, No		

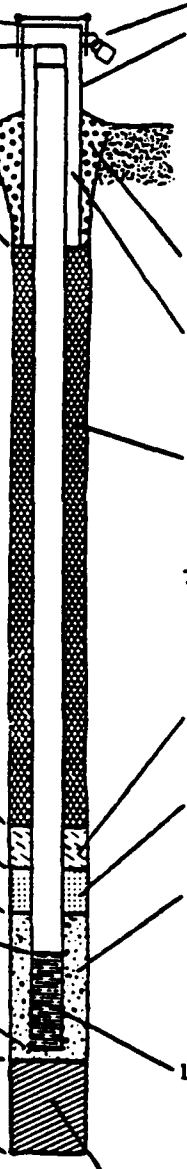

A. Protective pipe, top elevation 900.58 ft. MSL
B. Well casing, top elevation 900.93 ft. MSL
C. Land surface elevation 897.9 ft. MSL
D. Surface seal, bottom ____ ft. MSL or ____ ft.

12. USCS classification of soil near screen:
GP GM GC GW SW SP
SM SC ML MH CL CH
Bedrock

13. Sieve analysis attached? Yes, No

14. Drilling method used: Rotary 50; Hollow Stem Auger 41; Other — Dual Wall

15. Drilling fluid used: Water 02; Air 01; Drilling Mud 03; None 99

16. Drilling additives used? Yes, No

Describe ____

17. Source of water (attach analysis): PW #2

E. Bentonite seal, top 805.9 ft. MSL or 92.0 ft.
F. Fine sand, top NA ft. MSL or NA ft.
G. Filter pack, top 801.9 ft. MSL or 96.0 ft.
H. Well screen, top 790.9 ft. MSL or 101.0 ft.
I. Well screen, bottom 770.9 ft. MSL or 121.0 ft.
J. Filter pack, bottom 770.9 ft. MSL or 121.0 ft.
K. Borehole, bottom 770.9 ft. MSL or 121.0 ft.
L. Borehole, diameter 9.5 in.
M. O.D. well casing 4.5 in.
N. I.D. well casing 4.0 in.

1. Cap and lock? Yes, No
2. Protective cover pipe:
a. Inside diameter: 6.0 in.
b. Length: 2.0 ft.
c. Material: Steel 04; Other ____
d. Additional protection? Yes, No
If yes, describe: 4 bucking posts
3. Surface seal: Bentonite 30; Concrete 01; Other Grout
4. Material between well casing and protective pipe: Bentonite 30; Annular space seal; Other Grout
5. Annular space seal: Granular Bentonite 33; ____ Lbs/gal mud weight ... Bentonite-sand slurry 35; ____ Lbs/gal mud weight ..... Bentonite slurry 31; 5 % Bentonite .... Bentonite-cement grout 50
± 250 gal volume added for any of the above
How installed: Tremie 01; Tremie pumped 02; Gravity 08
6. Bentonite seal: Bentonite granules 33; 1/4 in. 3/8 in. 1/2 in. Bentonite pellets 32; Other
7. Fine sand material: Manufacturer, product name and mesh size NA
Volume added NA ft³
8. Filter pack material: Manufacturer, product name and mesh size Red Flint, Silica Filter Sand
Volume added ≈ 3.4 ft³
9. Well casing: Flush threaded PVC schedule 40 23; Flush threaded PVC schedule 80 24; Other
10. Screen material: Schedule 80 PVC
Screen type: Factory cut 11; Continuous slot 01; Other
Manufacturer Timco
Slot size: 0.010 in.
Slotted length: 20.0 ft.
11. Backfill material (below filter pack): None; Other

I hereby certify that the information on this form is true and correct to the best of my knowledge.

Signature: Dede Belan Firm: E.C. Jordan Co.

Please complete and return both sides of this form as required by chs. 144, 147 and 160, Wis. Stats., and ch. NR 141, Wis. Adm. Code. In accordance with ch. 144, Wis Stats., failure to file this form may result in a forfeiture of not less than $10, nor more than $5,000 for each day of violation. In accordance with ch. 147, Wis. Stats., failure to file this form may result in a forfeiture of not more than $10,000 for each day of violation.

WELL DETAIL INFORMATION SHEET

JOB NO. C 10313
BORING NO. DBM-82-01
DATE 3/23/82
CHIEF Mark D.

LOCATION Badger Army Ammunition Plant; Deterrent Burning Grour

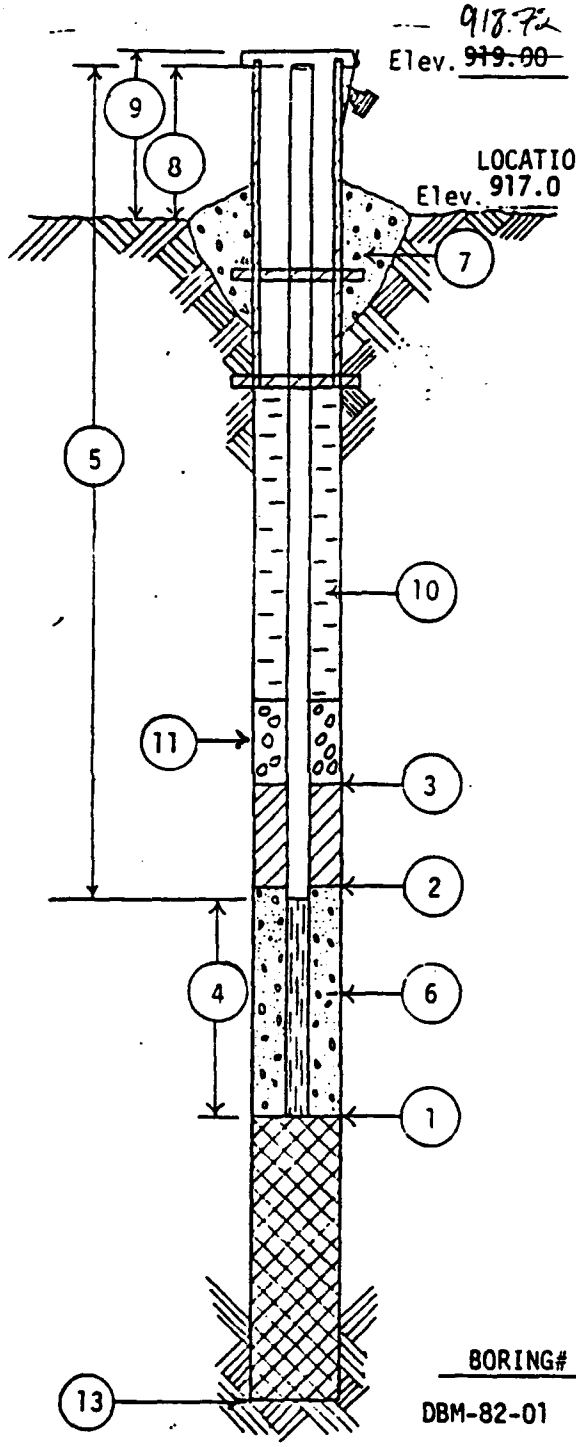

All depth measurements of well detail assumed to be from ground surface unless otherwise indicated.

(1) DEPTH TO BOTTOM OF WELL POINT OR SLOTTED PIPE 173 FEET.

(2) DEPTH OF BOTTOM OF SEAL (if installed) 146 FEET.

(3) DEPTH TO TOP OF SEAL (if installed) 126 FEET.

(4) LENGTH OF PVC WELL SCREEN, 20 FEET.

(5) TOTAL LENGTH OF PIPE 155.5 FEET @ 4 IN. DIAMETER.

(6) TYPE OF FILTER MATERIAL AROUND WELL POINT OR SLOTTED PIPE Pea Gravel .

(7) CONCRETE CAP, (YES) NO (Circle One)

(8) HEIGHT OF WELL CASING ABOVE GROUND 2.2 FEET.

(9) PROTECTIVE CASING? (YES) NO (Circle One)
HEIGHT ABOVE GROUND 2.2 .
LOCKING CAP? (YES) NO (Circle One)

(10) TYPE OF BACKFILL: 6:2 Cement: Bentonite

(11) THICKNESS OF GRAVEL PACK 27 FEET.

(12) DEPTH TO FIRST COUPLING 7.85 FEET.
COUPLING INTERVAL 9.75 FEET.

(13) TOTAL DEPTH OF BOREHOLE 176 FEET.

BORING#	DATE	TIME	DEPTH TO WATER	REMARKS
DBM-82-01	5/11/82	-	139.73'	From top of casir.

WELL DETAIL INFORMATION SHEET

JOB NO. C 10313

BORING NO. DBM-82-02

DATE 3/20/82

CHIEF Tom O.

LOCATION Badger Army Ammunition Plant; Deterrent Burning Grounds

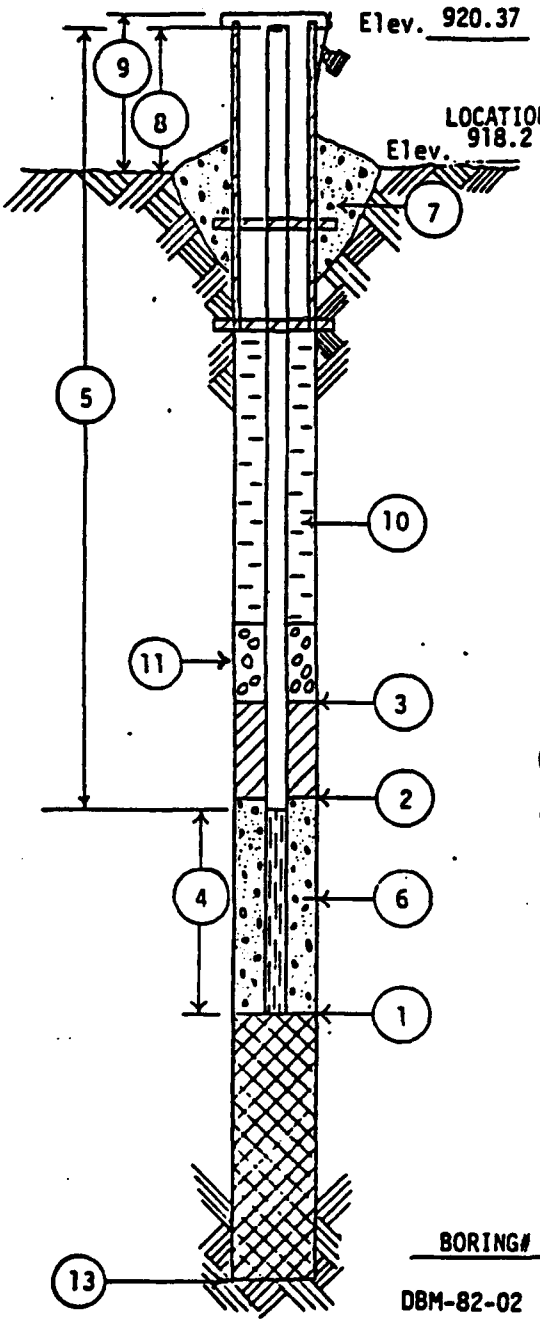

All depth measurements of well detail assumed to be from ground surface unless otherwise indicated.

(1) DEPTH TO BOTTOM OF WELL POINT OR SLOTTED PIPE 155.5 FEET.

(2) DEPTH OF BOTTOM OF SEAL (if installed) 125.5 FEET.

(3) DEPTH TO TOP OF SEAL (if installed) 105.5 FEET.

(4) LENGTH OF PVC WELL SCREEN, 20 FEET.

(5) TOTAL LENGTH OF PIPE 138 FEET @ 4 IN. DIAMETER.

(6) TYPE OF FILTER MATERIAL AROUND WELL POINT OR SLOTTED PIPE Pea Gravel .

(7) CONCRETE CAP, (YES) NO (Circle One)

(8) HEIGHT OF WELL CASING ABOVE GROUND 2.5 FEET.

(9) PROTECTIVE CASING? (YES) NO (Circle One)
HEIGHT ABOVE GROUND 2.5 .
LOCKING CAP? (YES) NO (Circle One)

(10) TYPE OF BACKFILL: 5:2 Cement: Bentonite

(11) THICKNESS OF GRAVEL PACK 30 FEET.

(12) DEPTH TO FIRST COUPLING 9.25 FEET.
COUPLING INTERVAL 9.75 FEET.

(13) TOTAL DEPTH OF BOREHOLE 155.5 FEET.

BORING#	DATE	TIME	DEPTH TO WATER	REMARKS
DBM-82-02	5/11/82	-	137.66'	From top of casing

WELL DETAIL INFORMATION SHEET

JOB NO. C 10313

BORING NO. DBN-82-01B

DATE 3/22/82

CHIEF Tom O.

LOCATION Badger Army Ammunition Plant; Deterrent Burning Groun

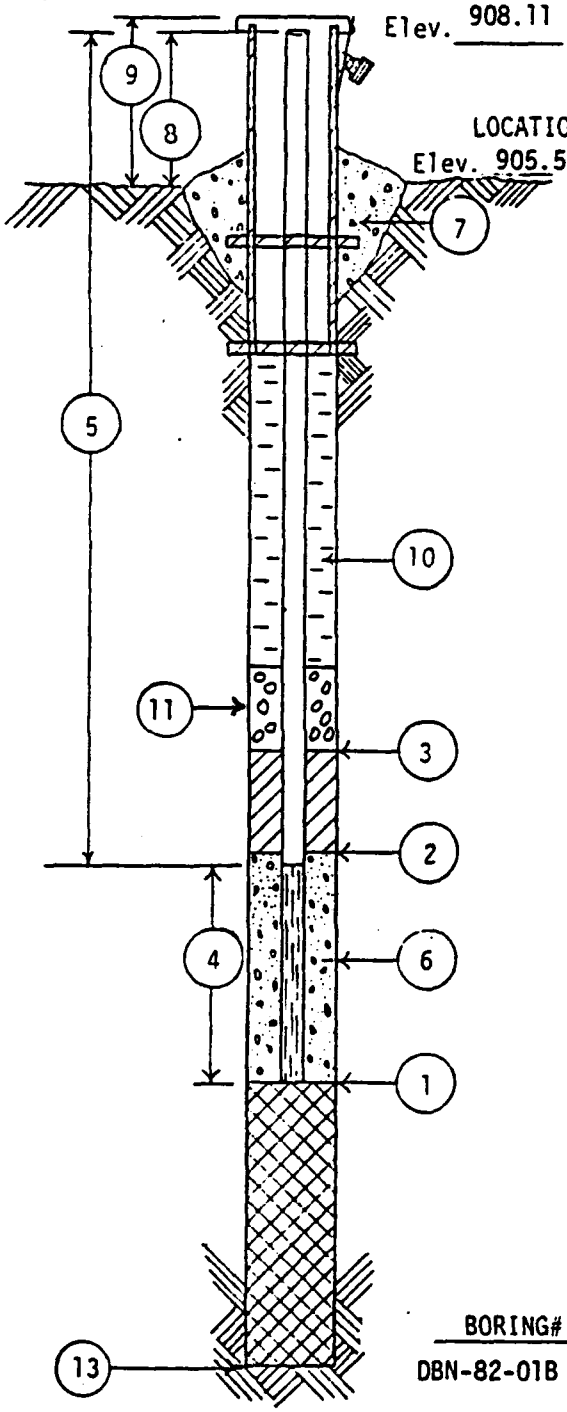

All depth measurements of well detail assumed to be from ground surface unless otherwise indicated.

(1) DEPTH TO BOTTOM OF WELL POINT OR SLOTTED PIPE 157 FEET.

(2) DEPTH OF BOTTOM OF SEAL (if installed) 146 FEET.

(3) DEPTH TO TOP OF SEAL (if installed) 126 FEET.

(4) LENGTH OF PVC WELL SCREEN, 2 FEET.

(5) TOTAL LENGTH OF PIPE 157.5 FEET @ 4 IN. DIAMETER.

(6) TYPE OF FILTER MATERIAL AROUND WELL POINT OR SLOTTED PIPE Pea Gravel .

(7) CONCRETE CAP, (YES) NO (Circle One)

(8) HEIGHT OF WELL CASING ABOVE GROUND 2.5 FEET.

(9) PROTECTIVE CASING? (YES) NO (Circle One)
HEIGHT ABOVE GROUND 2.5 .
LOCKING CAP? (YES) NO (Circle One)

(10) TYPE OF BACKFILL: 7:2 Cement: Bentonite

(11) THICKNESS OF GRAVEL PACK 11 FEET.

(12) DEPTH TO FIRST COUPLING 8.75 FEET.
COUPLING INTERVAL 9.75 FEET.

(13) TOTAL DEPTH OF BOREHOLE 157 FEET.

BORING#	DATE	TIME	DEPTH TO WATER	REMARKS
DBN-82-01B	5/11/82	-	128.68'	From top of casin

WELL DETAIL INFORMATION SHEET

JOB NO. C 10313

BORING NO. DBN-82-01C

DATE 3/22/82

CHIEF Tom O.

LOCATION Badger Army Ammunition Plant; Deterrent Burning Grounds

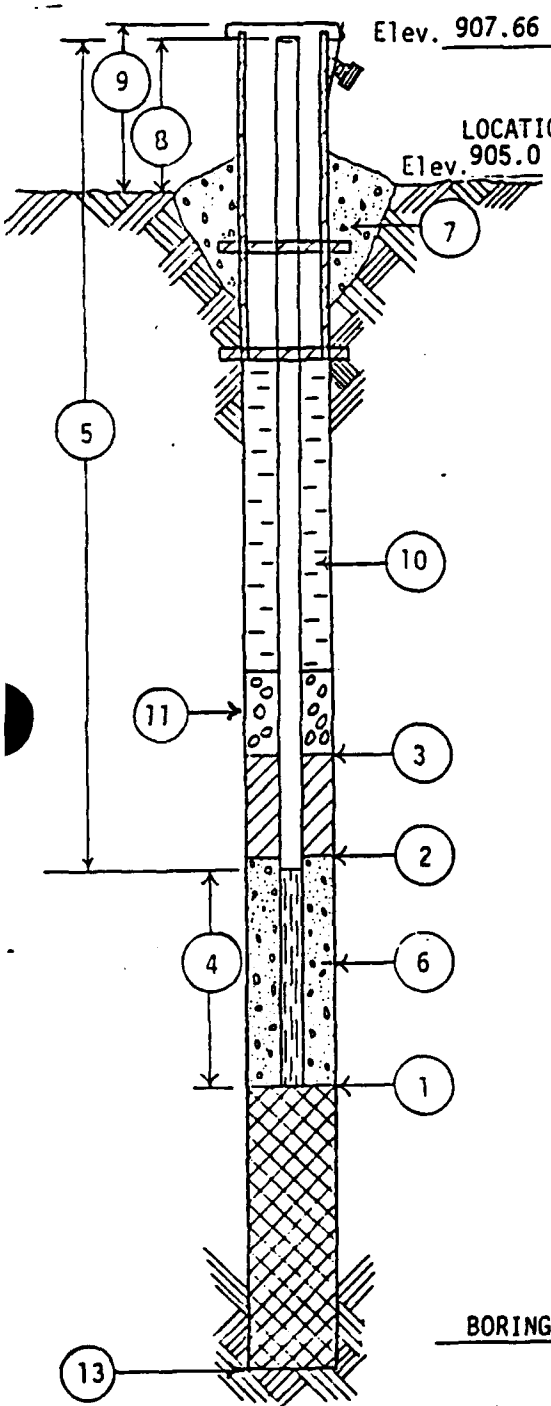

All depth measurements of well detail assumed to be from ground surface unless otherwise indicated.

(1) DEPTH TO BOTTOM OF WELL POINT OR SLOTTED PIPE 167 FEET.

(2) DEPTH OF BOTTOM OF SEAL (if installed) 156 FEET.

(3) DEPTH TO TOP OF SEAL (if installed) 136 FEET.

(4) LENGTH OF PVC WELL SCREEN, 2.0 FEET.

(5) TOTAL LENGTH OF PIPE 167.5 FEET @ 4 IN. DIAMETER.

(6) TYPE OF FILTER MATERIAL AROUND WELL POINT OR SLOTTED PIPE Pea Gravel .

(7) CONCRETE CAP, (YES) NO (Circle One)

(8) HEIGHT OF WELL CASING ABOVE GROUND 2.5 FEET.

(9) PROTECTIVE CASING? (YES) NO (Circle One)
HEIGHT ABOVE GROUND 2.5 .
LOCKING CAP? (YES) NO (Circle One)

(10) TYPE OF BACKFILL: 6:2 Cement: Bentonite

(11) THICKNESS OF GRAVEL PACK 11 FEET.

(12) DEPTH TO FIRST COUPLING 9.0 FEET.
COUPLING INTERVAL 9.75 FEET.

(13) TOTAL DEPTH OF BOREHOLE 167 FEET.

BORING#	DATE	TIME	DEPTH TO WATER	REMARKS
ELN-82-01C	5/11/82	-	128.28	From top of casing

ABB Environmental Services, Inc. MONITORING WELL CONSTRUC[redacted] FO

Facility/Project Name: BADGER AAP	Grid Location: ____ ft. ☐ N. ☐ S. ____ ft. ☐ E. ☐ W.	Well Name: ELN-91-07A
Facility License, Permit or Monitoring Number:		Wis. Unique Well Number: DNR Well Nu
Type of Well: Water Table Observation Well ☑ 11 Piezometer ☐ 12	Section Location: ____ 1/4 of ____ 1/4 of Section ____ T ____ N. R ____ ☐ E ☐ W	Date Well Installed: 11/10/91 (m m / d d / y y)
Distance Well is From Waste/Source Boundary: NA ft.	Location of Well Relative to Waste/Source: ☐ Upgradient ☐ Sidegradient ☑ Downgradient ☐ Not Known	Well Installed By: (Person's Name and Firm) G RODRIGUEZ LAYNE
Is Well A Point of Enforcement Std. Application? ☐ Yes ☒ No		

A. Protective pipe, top elevation 897.23 ft. MSL
B. Well casing, top elevation 897.65 ft. MSL
C. Land surface elevation 895.3 ft. MSL
D. Surface seal, bottom _____ ft. MSL or _____ ft.

12. USCS classification of soil near screen:
☐ GP ☐ GM ☐ GC ☑ GW ☑ SW ☐ SP
☐ SM ☐ SC ☐ ML ☐ MH ☐ CL ☐ CH
☐ Bedrock

13. Sieve analysis attached? ☐ Yes ☑ No

14. Drilling method used: Rotary ☐ 50; Hollow Stem Auger ☐ 41; DUAL WALL REV. AIR Other ☑

15. Drilling fluid used: Water ☐ 02; Air ☑ 01; Drilling Mud ☐ 03; None ☐ 99

16. Drilling additives used? ☐ Yes ☑ No

Describe _____

17. Source of water (attach analysis):
BAAP PRODUCTION WELL #2

E. Bentonite seal, top 796.3 ft. MSL or 099.0 ft.
F. Fine sand, top _____ ft. MSL or ~~~~ ft.
G. Filter pack, top 791.3 ft. MSL or 104.0 ft.
H. Well screen, top 779.5 ft. MSL or 115.8 ft.
I. Well screen, bottom 769.5 ft. MSL or 125.8 ft.
J. Filter pack, bottom 769.3 ft. MSL or 126.0 ft.
K. Borehole, bottom 765.3 ft. MSL or 130.0 ft.
L. Borehole, diameter 09.0 in.
M. O.D. well casing 04.50 in.
N. I.D. well casing 03.75 in.

1. Cap and lock? ☑ Yes ☐
2. Protective cover pipe:
a. Inside diameter: 06.5
b. Length: 06.0
c. Material: Steel ☑ 0 Other ☐
d. Additional protection? ☑ Yes ☐ 1
If yes, describe: BUCKING POSTS AND GRAVEL
3. Surface seal: Bentonite ☐ 30 Concrete ☑ Other ☐
4. Material between well casing and protective pipe: Bentonite ☐ 30 Annular space seal ☑ Other ☐
5. Annular space seal: Granular Bento[redacted] 33
_____ Lbs/gal mud weight ... Bentonite-sand sl[redacted]
_____ Lbs/gal mud weight ..... Bentonite slurry ☐
5 % Bentonite ..... Bentonite-cement grout ☑ 50
_____ Ft³ volume added for any of the above
How installed: Tremie ☐ Tremie pumped ☐ 0 Gravity ☑ 08
6. Bentonite seal: Bentonite granules ☐ ☑ 1/4 in. ☐ 3/8 in. ☐ 1/2 in. Bentonite pellets ☑ 3 Other ☐
7. Fine sand material: Manufacturer, product name and mesh s: #2 SC
Volume added _____ ft³
8. Filter pack material: Manufacturer, product name and mesh s: CSS ± #4
Volume added 20 ft³
9. Well casing: Flush threaded PVC schedule 40 ☐ 23 Flush threaded PVC schedule 80 ☑ 2 Other ☐
10. Screen material: SCH 80 4" PVC
Screen type: Factory cut ☑ 1 Continuous slot ☐ 0 Other ☐
Manufacturer MONOFLEX
Slot size: 0.010
Slotted length: 10.0
11. Backfill material (below filter pack): None ☐ SURROUNDING SEDIMENTS Other [redacted]

I hereby certify that the information on this form is true and correct to the best of my knowledge.

Signature: Rod R Rueter Firm: ABB-ES

WELL DETAIL INFORMATION SHEET

JOB NO. C 10313

BORING NO. DBM-82-02

DATE 3/20/82

CHIEF Tom O.

LOCATION Badger Army Ammunition Plant; Deterrent Burning Grounds

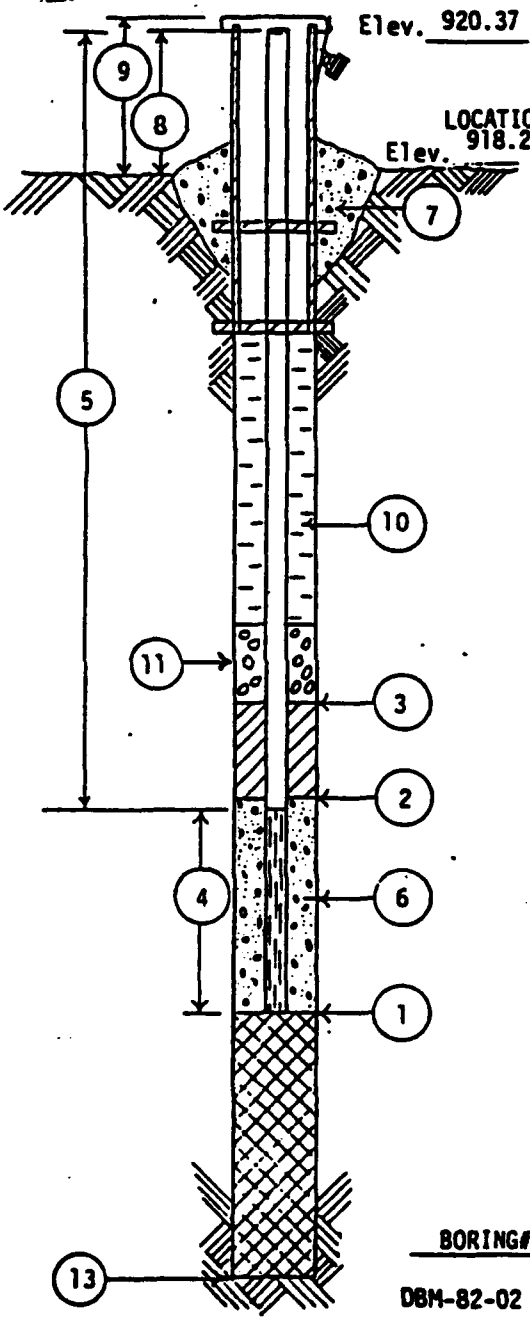

All depth measurements of well detail assumed to be from ground surface unless otherwise indicated.

(1) DEPTH TO BOTTOM OF WELL POINT OR SLOTTED PIPE 155.5 FEET.

(2) DEPTH OF BOTTOM OF SEAL (if installed) 125.5 FEET.

(3) DEPTH TO TOP OF SEAL (if installed) 105.5 FEET.

(4) LENGTH OF PVC WELL SCREEN, 20 FEET.

(5) TOTAL LENGTH OF PIPE 138 FEET @ 4 IN. DIAMETER.

(6) TYPE OF FILTER MATERIAL AROUND WELL POINT OR SLOTTED PIPE Pea Gravel.

(7) CONCRETE CAP, (YES) NO (Circle One)

(8) HEIGHT OF WELL CASING ABOVE GROUND 2.5 FEET.

(9) PROTECTIVE CASING? (YES) NO (Circle One)
HEIGHT ABOVE GROUND 2.5
LOCKING CAP? (YES) NO (Circle One)

(10) TYPE OF BACKFILL: 5:2 Cement: Bentonite

(11) THICKNESS OF GRAVEL PACK 30 FEET.

(12) DEPTH TO FIRST COUPLING 9.25 FEET.
COUPLING INTERVAL 9.75 FEET.

(13) TOTAL DEPTH OF BOREHOLE 155.5 FEET.

BORING#	DATE	TIME	DEPTH TO WATER	REMARKS
DBM-82-02	5/11/82	-	137.66'	From top of casing

WELL DETAIL INFORMATION SHEET

JOB NO. C 10313

BORING NO. DBN-82-01B

DATE 3/22/82

CHIEF Tom O.

LOCATION Badger Army Ammunition Plant; Deterrent Burning Groun

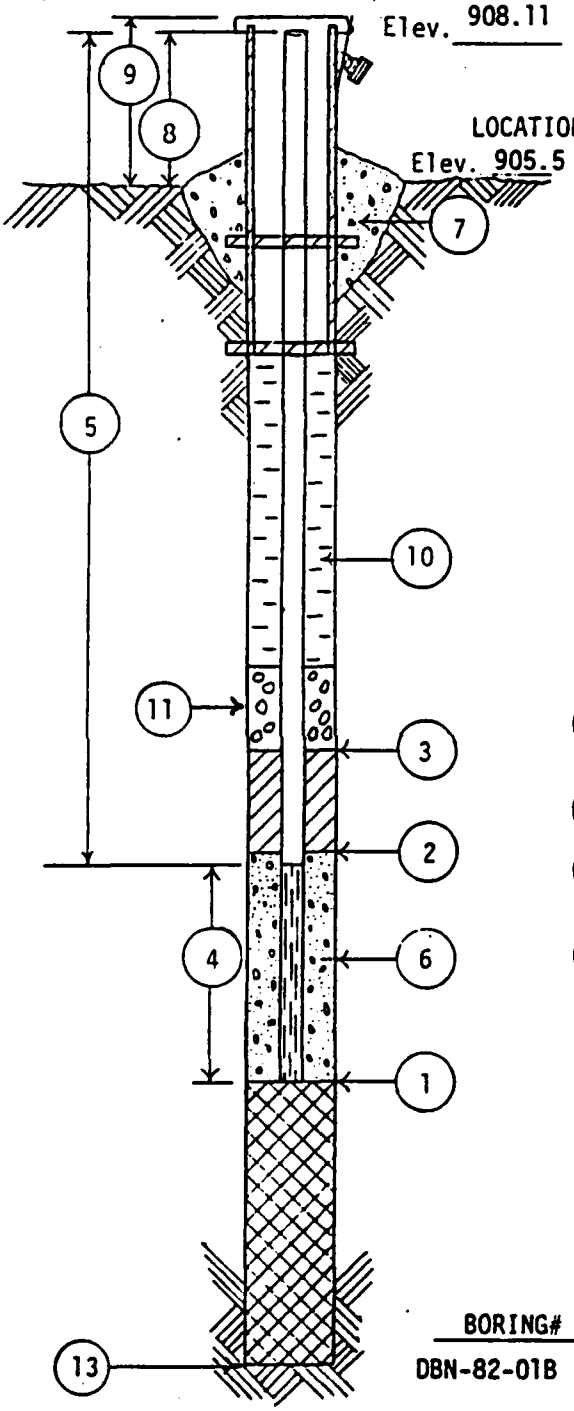

All depth measurements of well detail assumed to be from ground surface unless otherwise indicated.

(1) DEPTH TO BOTTOM OF WELL POINT OR SLOTTED PIPE 157 FEET.

(2) DEPTH OF BOTTOM OF SEAL (if installed) 146 FEET.

(3) DEPTH TO TOP OF SEAL (if installed) 126 FEET.

(4) LENGTH OF PVC WELL SCREEN, 2 FEET.

(5) TOTAL LENGTH OF PIPE 157.5 FEET @ 4 IN. DIAMETER.

(6) TYPE OF FILTER MATERIAL AROUND WELL POINT OR SLOTTED PIPE Pea Gravel.

(7) CONCRETE CAP, (YES) NO (Circle One)

(8) HEIGHT OF WELL CASING ABOVE GROUND 2.5 FEET.

(9) PROTECTIVE CASING? (YES) NO (Circle One)
HEIGHT ABOVE GROUND 2.5.
LOCKING CAP? (YES) NO (Circle One)

(10) TYPE OF BACKFILL: 7:2 Cement: Bentonite

(11) THICKNESS OF GRAVEL PACK 11 FEET.

(12) DEPTH TO FIRST COUPLING 8.75 FEET.
COUPLING INTERVAL 9.75 FEET.

(13) TOTAL DEPTH OF BOREHOLE 157 FEET.

BORING#	DATE	TIME	DEPTH TO WATER	REMARKS
DBN-82-01B	5/11/82	-	128.68'	From top of casin

WELL DETAIL INFORMATION SHEET

JOB NO. C 10313

BORING NO. ELN-82-03A

DATE 3/24/82

CHIEF Larry F.

LOCATION Badger Army Ammunition Plant; Existing Landfill

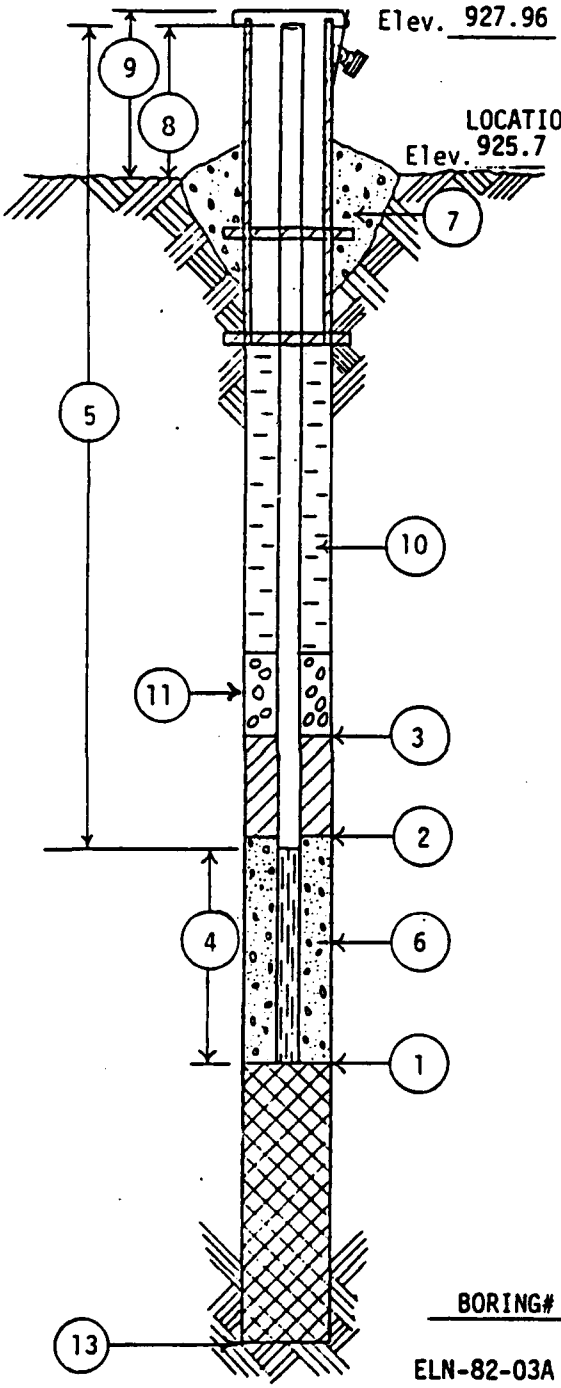

All depth measurements of well detail assumed to be from ground surface unless otherwise indicated.

(1) DEPTH TO BOTTOM OF WELL POINT OR SLOTTED PIPE 155 FEET.

(2) DEPTH OF BOTTOM OF SEAL (if installed) 140 FEET.

(3) DEPTH TO TOP OF SEAL (if installed) 120 FEET.

(4) LENGTH OF PVC WELL SCREEN, 10 FEET.

(5) TOTAL LENGTH OF PIPE 147.5 FEET @ 4 IN. DIAMETER.

(6) TYPE OF FILTER MATERIAL AROUND WELL POINT OR SLOTTED PIPE Pea Gravel .

(7) CONCRETE CAP, (YES) NO (Circle One)

(8) HEIGHT OF WELL CASING ABOVE GROUND 2.5 FEET.

(9) PROTECTIVE CASING? (YES) NO (Circle One)
HEIGHT ABOVE GROUND 2.5 .
LOCKING CAP? (YES) NO (Circle One)

(10) TYPE OF BACKFILL: Cement: Bentonite Grout 5:1

(11) THICKNESS OF GRAVEL PACK 15 FEET.

(12) DEPTH TO FIRST COUPLING 0.7 FEET.
COUPLING INTERVAL 9.75 FEET.

(13) TOTAL DEPTH OF BOREHOLE 155 FEET.

BORING#	DATE	TIME	DEPTH TO WATER	REMARKS
ELN-82-03A	5/11/82	-	148.65'	From top of casing

WELL DETAIL INFORMATION SHEET

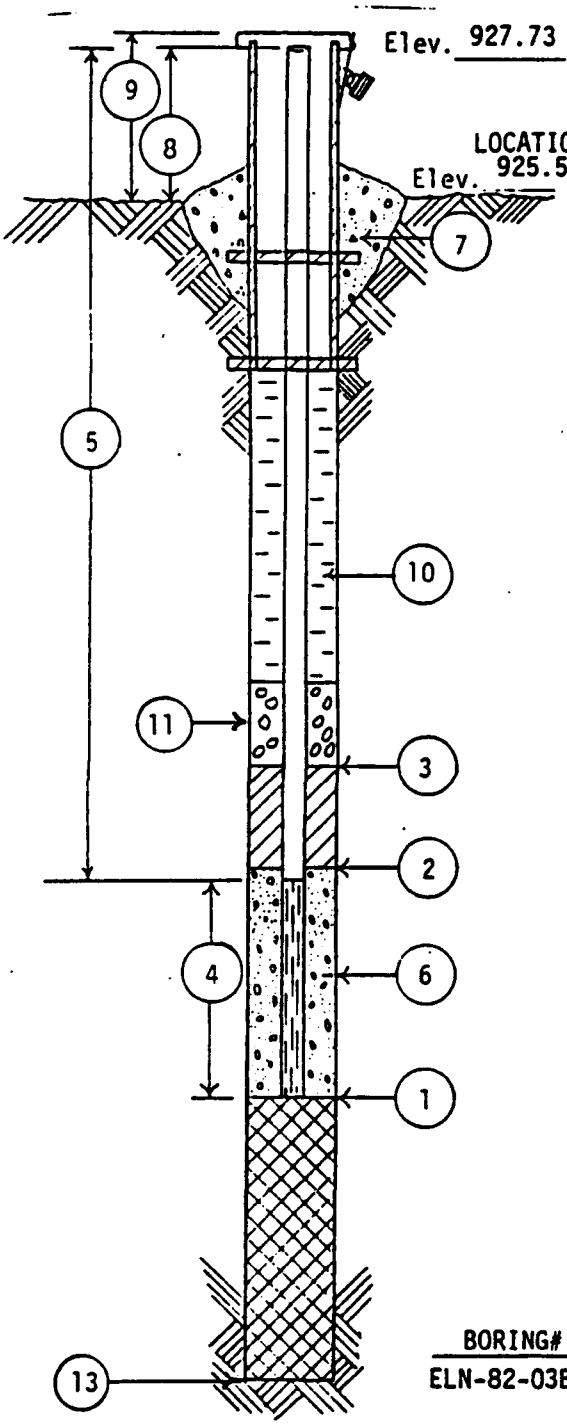

JOB NO. C 10313

BORING NO. ELN-82-03B

DATE 3/25/82

CHIEF TO

LOCATION Badger Army Ammunition Plant; Existing Landfill

All depth measurements of well detail assumed to be from ground surface unless otherwise indicated.

(1) DEPTH TO BOTTOM OF WELL POINT OR SLOTTED PIPE 166 FEET.

(2) DEPTH OF BOTTOM OF SEAL (if installed) 146 FEET.

(3) DEPTH TO TOP OF SEAL (if installed) 126 FEET.

(4) LENGTH OF PVC WELL SCREEN, 2 FEET.

(5) TOTAL LENGTH OF PIPE 166.5 FEET @ 4 IN. DIAMETER.

(6) TYPE OF FILTER MATERIAL AROUND WELL POINT OR SLOTTED PIPE Pea Gravel.

(7) CONCRETE CAP, (YES) NO (Circle One)

(8) HEIGHT OF WELL CASING ABOVE GROUND 2.5 FEET.

(9) PROTECTIVE CASING? (YES) NO (Circle One)
HEIGHT ABOVE GROUND 2.5.
LOCKING CAP? (YES) NO (Circle One)

(10) TYPE OF BACKFILL: Cement: Bentonite Grout

(11) THICKNESS OF GRAVEL PACK 20 FEET.

(12) DEPTH TO FIRST COUPLING 8.5 FEET.
COUPLING INTERVAL 9.75 FEET.

(13) TOTAL DEPTH OF BOREHOLE 166 FEET.

BORING#	DATE	TIME	DEPTH TO WATER	REMARKS
ELN-82-03B	3/25/82	4:30	50'	1 hour after development
	3/26/82	11:30	125'	
	5/11/82	-	148.54'	From top of casing

WELL DETAIL INFORMATION SHEET

JOB NO. C 10313

BORING NO. ELN-82-03C

DATE 3/24/82

CHIEF TO

LOCATION Badger Army Ammunition Plant; Existing Landfill

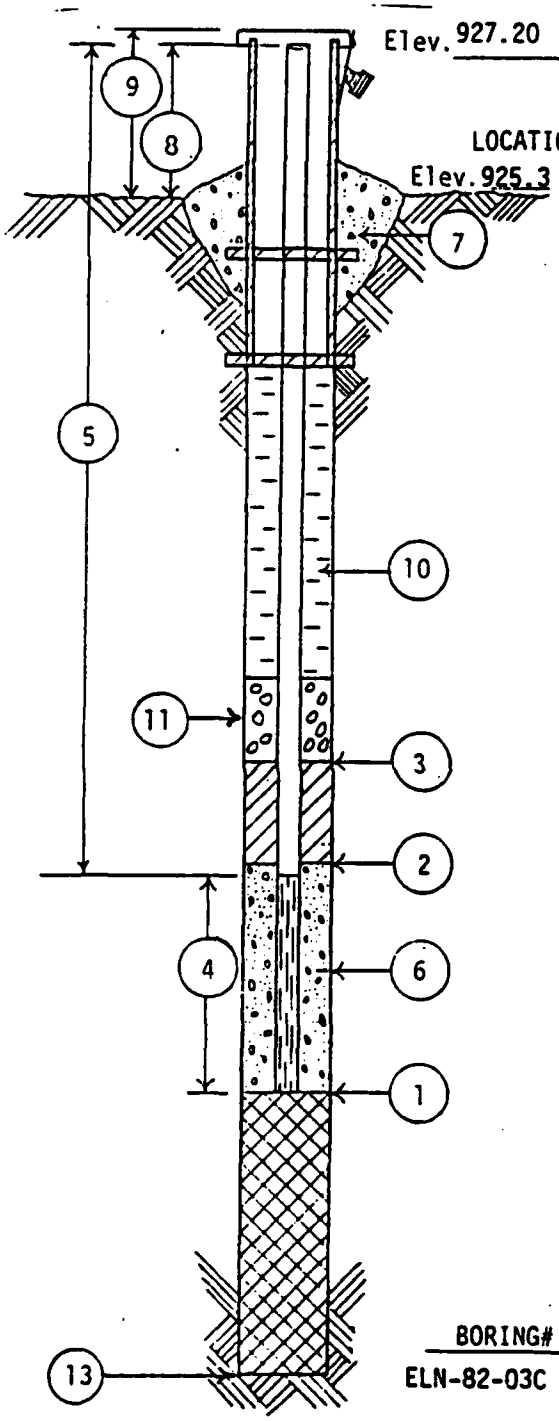

All depth measurements of well detail assumed to be from ground surface unless otherwise indicated.

(1) DEPTH TO BOTTOM OF WELL POINT OR SLOTTED PIPE 176 FEET.

(2) DEPTH OF BOTTOM OF SEAL (if installed) 164 FEET.

(3) DEPTH TO TOP OF SEAL (if installed) 144 FEET.

(4) LENGTH OF PVC WELL SCREEN, 2 FEET.

(5) TOTAL LENGTH OF PIPE 176.5 FEET @ 4 IN. DIAMETER.

(6) TYPE OF FILTER MATERIAL AROUND WELL POINT OR SLOTTED PIPE Pea Gravel.

(7) CONCRETE CAP, (YES) NO (Circle One)

(8) HEIGHT OF WELL CASING ABOVE GROUND 2.5 FEET.

(9) PROTECTIVE CASING? (YES) NO (Circle One)
HEIGHT ABOVE GROUND 2.5.
LOCKING CAP? (YES) NO (Circle One)

(10) TYPE OF BACKFILL: Cement, Bentonite Grout 5:1

(11) THICKNESS OF GRAVEL PACK 12 FEET.

(12) DEPTH TO FIRST COUPLING 8.5 FEET.
COUPLING INTERVAL 9.75 FEET.

(13) TOTAL DEPTH OF BOREHOLE 176 FEET.

BORING#	DATE	TIME	DEPTH TO WATER	REMARKS
ELN-82-03C	5/11/82	0	148.04	From top of casing

WELL DETAIL INFORMATION SHEET

JOB NO. C 10313
BORING NO. ELN-82-04A
DATE 3/26/82
CHIEF LF

LOCATION Badger Army Ammunition Plant; Existing Landfill

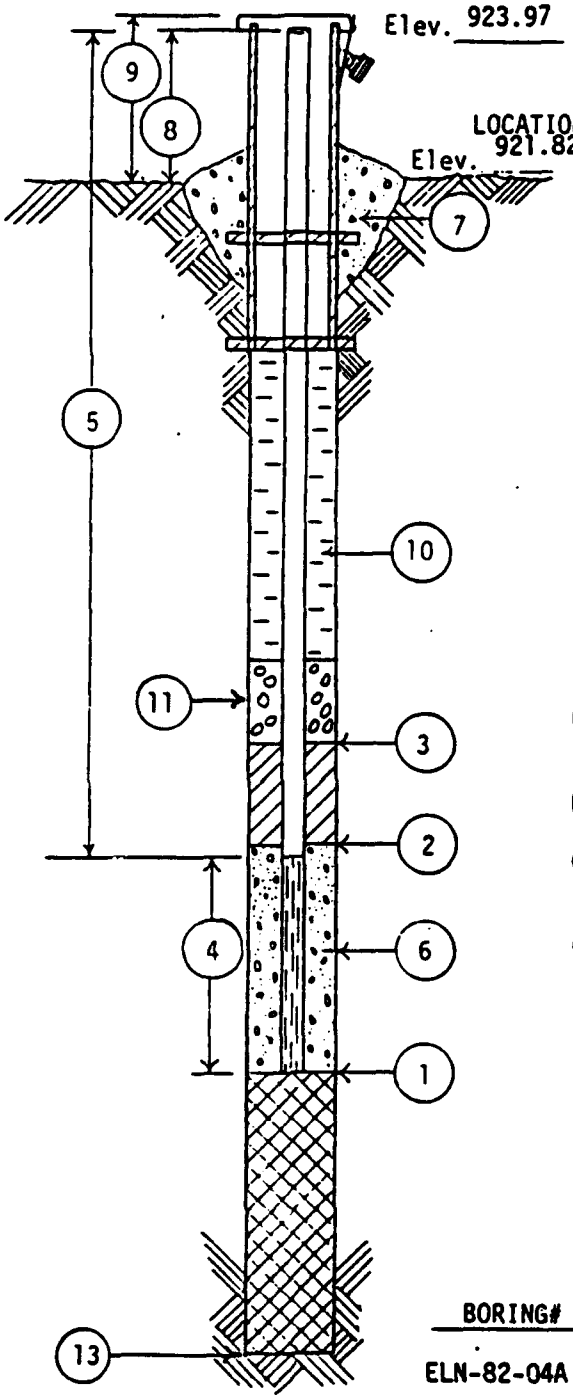

All depth measurements of well detail assumed to be from ground surface unless otherwise indicated.

(1) DEPTH TO BOTTOM OF WELL POINT OR SLOTTED PIPE 151 FEET.

(2) DEPTH OF BOTTOM OF SEAL (if installed) 131 FEET.

(3) DEPTH TO TOP OF SEAL (if installed) 111 FEET.

(4) LENGTH OF PVC WELL SCREEN, 10 FEET.

(5) TOTAL LENGTH OF PIPE 143.5 FEET @ 4 IN. DIAMETER.

(6) TYPE OF FILTER MATERIAL AROUND WELL POINT OR SLOTTED PIPE Pea Gravel.

(7) CONCRETE CAP, (YES) NO (Circle One)

(8) HEIGHT OF WELL CASING ABOVE GROUND 2.5 FEET.

(9) PROTECTIVE CASING? (YES) NO (Circle One)
HEIGHT ABOVE GROUND 2.5.
LOCKING CAP? (YES) NO (Circle One)

(10) TYPE OF BACKFILL: Cement: Bentonite Grout 5:1

(11) THICKNESS OF GRAVEL PACK 20 FEET.

(12) DEPTH TO FIRST COUPLING 5 FEET.
COUPLING INTERVAL 9.75 FEET.

(13) TOTAL DEPTH OF BOREHOLE 151 FEET.

BORING#	DATE	TIME	DEPTH TO WATER	REMARKS
ELN-82-04A	5/11/82	-	144.25'	From top of casing

WELL DETAIL INFORMATION SHEET

JOB NO. C 10313

BORING NO. ELN-82-04B

DATE 3/26/82

CHIEF LF

LOCATION Badger Army Ammunition Plant; Existing Landfill

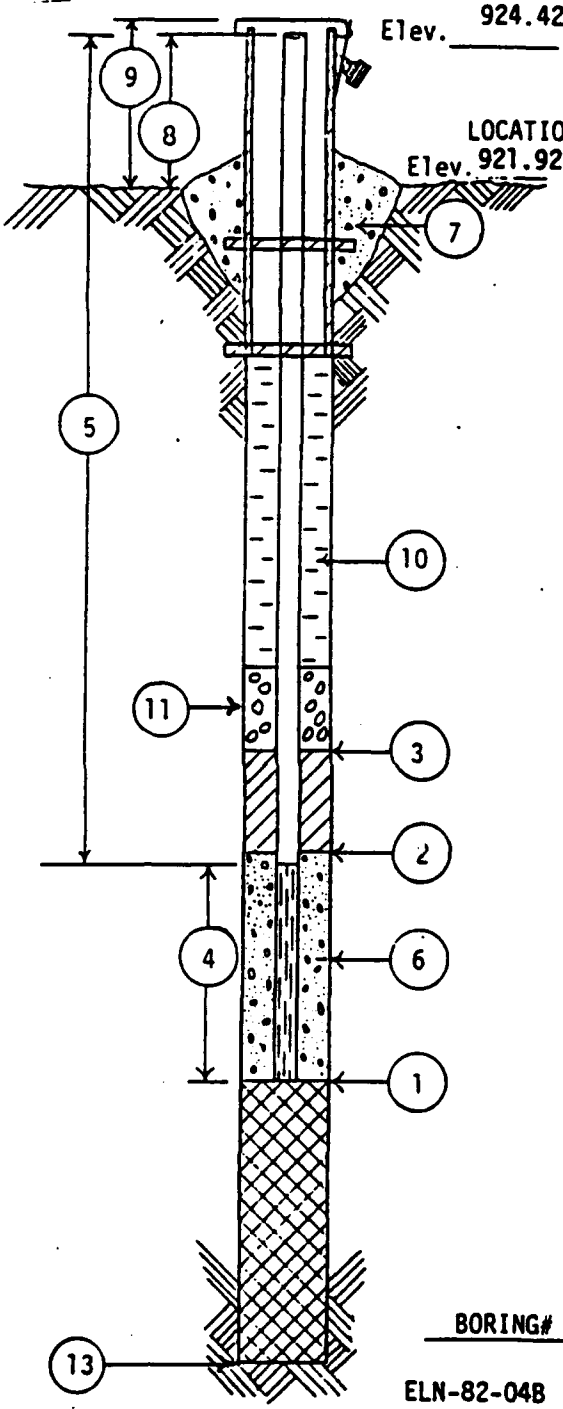

All depth measurements of well detail assumed to be from ground surface unless otherwise indicated.

(1) DEPTH TO BOTTOM OF WELL POINT OR SLOTTED PIPE 165 FEET.

(2) DEPTH OF BOTTOM OF SEAL (if installed) 143 FEET.

(3) DEPTH TO TOP OF SEAL (if installed) 123 FEET.

(4) LENGTH OF PVC WELL SCREEN, 2 FEET.

(5) TOTAL LENGTH OF PIPE 165.5 FEET @ 2 IN. DIAMETER.

(6) TYPE OF FILTER MATERIAL AROUND WELL POINT OR SLOTTED PIPE Pea Gravel.

(7) CONCRETE CAP, (YES) NO (Circle One)

(8) HEIGHT OF WELL CASING ABOVE GROUND 2.5 FEET.

(9) PROTECTIVE CASING? (YES) NO (Circle One)
HEIGHT ABOVE GROUND 2.5.
LOCKING CAP? (YES) NO (Circle One)

(10) TYPE OF BACKFILL: Bentonite: Cement Grout 3:5

(11) THICKNESS OF GRAVEL PACK 22 FEET.

(12) DEPTH TO FIRST COUPLING 8.5 FEET.
COUPLING INTERVAL 9.75 FEET.

(13) TOTAL DEPTH OF BOREHOLE 165 FEET.

BORING#	DATE	TIME	DEPTH TO WATER	REMARKS
ELN-82-04B	5/11/82	-	144.47'	From top of casing

WELL DETAIL INFORMATION SHEET

JOB NO. C 10313

BORING NO. ELN-82-04C

DATE 3/25/82

CHIEF LF

LOCATION Badger Army Ammunition Plant: Existing Landfill

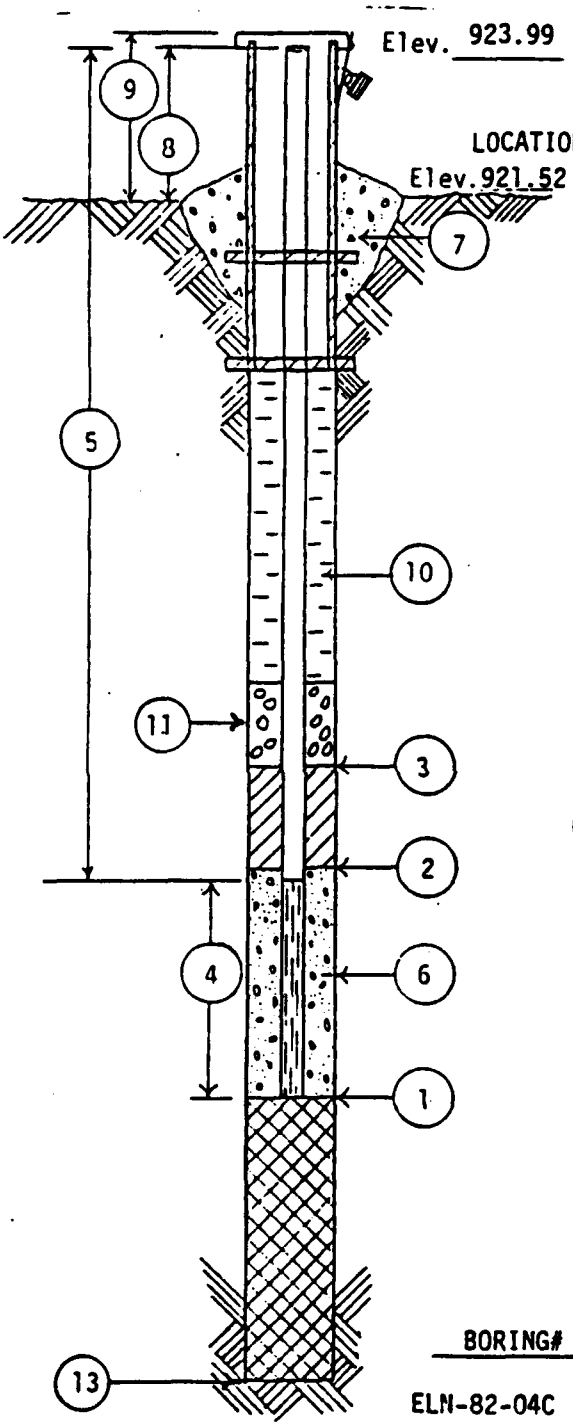

All depth measurements of well detail assumed to be from ground surface unless otherwise indicated.

(1) DEPTH TO BOTTOM OF WELL POINT OR SLOTTED PIPE 173 FEET.

(2) DEPTH OF BOTTOM OF SEAL (if installed) 152 FEET.

(3) DEPTH TO TOP OF SEAL (if installed) 132 FEET.

(4) LENGTH OF PVC WELL SCREEN, 2 FEET.

(5) TOTAL LENGTH OF PIPE 173.5 FEET @ 4 IN. DIAMETER.

(6) TYPE OF FILTER MATERIAL AROUND WELL POINT OR SLOTTED PIPE Pea Gravel .

(7) CONCRETE CAP, (YES) NO (Circle One)

(8) HEIGHT OF WELL CASING ABOVE GROUND 2.5 FEET.

(9) PROTECTIVE CASING? (YES) NO (Circle One)
HEIGHT ABOVE GROUND 2.5 .
LOCKING CAP? (YES) NO (Circle One)

(10) TYPE OF BACKFILL: 5:1 Cement: Bentonite

(11) THICKNESS OF GRAVEL PACK 21 FEET.

(12) DEPTH TO FIRST COUPLING 9.0 FEET.
COUPLING INTERVAL 9.75 FEET.

(13) TOTAL DEPTH OF BOREHOLE 173 FEET.

BORING#	DATE	TIME	DEPTH TO WATER	REMARKS
ELN-82-04C	5/11/82	-	144.77'	From top of casing

ABB Environmental Services, Inc. **MONITORING WELL CONSTRUCTION FOR:**

Facility/Project Name: Baden AAP
Facility License, Permit or Monitoring Number:
Grid Location: ____ ft. ☐ N. ☐ S. ____ ft. ☐ E. ☐ W.
Well Name: RPM-91-01
Wis. Unique Well Number: DNR Well Number:
Type of Well: Water Table Observation Well ☒ 11 Piezometer ☐ 12
Section Location: SE 1/4 of SW 1/4 of Section 7, T 10 N, R 7 ☒ E ☐ W
Date Well Installed: 10/23/91 (m m d d y y)
Distance Well Is From Waste/Source Boundary: NA ft.
Well Installed By: (Person's Name and Firm) G RODRIGUEZ LAYNE
Is Well A Point of Enforcement Std. Application? ☐ Yes ☒ No
Location of Well Relative to Waste/Source: ☒ Upgradient ☐ Sidegradient ☐ Downgradient ☐ Not Known

A. Protective pipe, top elevation 834.14 ft. MSL
B. Well casing, top elevation 832.96 ft. MSL
C. Land surface elevation 831.8 ft. MSL
D. Surface seal, bottom ____ ft. MSL or ____ ft.

12. USCS classification of soil near screen:
☐ GP ☐ GM ☐ GC ☒ GW ☒ SW ☐ SP
☐ SM ☐ SC ☐ ML ☐ MH ☐ CL ☐ CH
☐ Bedrock

13. Sieve analysis attached? ☐ Yes ☒ No

14. Drilling method used: Rotary ☐ 50; Hollow Stem Auger ☐ 41; Other ☒ DUAL WALL

15. Drilling fluid used: Water ☒ 02; Air ☒ 01; Drilling Mud ☐ 03; None ☐ 99

16. Drilling additives used? ☐ Yes ☒ No
Describe ____

17. Source of water (attach analysis):
PRODUCTION WELL # 2

E. Bentonite seal, top 788.4 ft. MSL or 083.4 ft.
F. Fine sand, top ____ ft. MSL or ____ ft.
G. Filter pack, top 782.8 ft. MSL or 089.0 ft.
H. Well screen, top 776.0 ft. MSL or 095.8 ft.
I. Well screen, bottom 766.0 ft. MSL or 105.8 ft.
J. Filter pack, bottom 761.8 ft. MSL or 110.0 ft.
K. Borehole, bottom 761.8 ft. MSL or 110.0 ft.
L. Borehole, diameter 09.0 in.
M. O.D. well casing 04.25 in.
N. I.D. well casing 03.75 in.

1. Cap and lock? ☒ Yes ☐ No
2. Protective cover pipe:
a. Inside diameter: 06.0 in.
b. Length: 060.0 ft.
c. Material: Steel ☒ 02; Other ☐ ____
d. Additional protection? ☒ Yes ☐ No
If yes, describe: BOLLARDS & POSTS + GRAVEL
3. Surface seal: Bentonite ☐ 30; Concrete ☒ 01; Other ☐ ____
4. Material between well casing and protective pipe: Bentonite ☐ 30; Annular space seal ☒; Other ☐ ____
5. Annular space seal: Granular Bentonite ☐ 33; ____ Lbs/gal mud weight ... Bentonite-sand slurry ☐ 35; ____ Lbs/gal mud weight ..... Bentonite slurry ☐ 31; 5 % Bentonite ..... Bentonite-cement grout ☒ 50; 120 Ft³ volume added for any of the above
How installed: Tremie ☐ 01; Tremie pumped ☐ 02; Gravity ☒ 03
6. Bentonite seal: Bentonite granules ☐ 33; ☒ 1/4 in. ☐ 3/8 in. ☐ 1/2 in. Bentonite pellets ☒ 32; Other ☐ ____
7. Fine sand material: Manufacturer, product name and mesh size: NONE
Volume added ____ ft³
8. Filter pack material: Manufacturer, product name and mesh size: CSSI SILICA SAND #4
Volume added 24 ft³
9. Well casing: Flush threaded PVC schedule 40 ☐ 23; Flush threaded PVC schedule 80 ☒ 24; Other ☐ ____
10. Screen material: SCH 80 PVC 4" DIAM
Screen type: Factory cut ☒ 11; Continuous slot ☐ 01; Other ☐ ____
Manufacturer: MONOFLEX
Slot size: 0.010 in.
Slotted length: 10.00 ft.
11. Backfill material (below filter pack): None ☒; Other ☐ ____

I hereby certify that the information on this form is true and correct to the best of my knowledge.
Signature: Ted R Rueter Firm: ABB-ES

State of Wisconsin
Department of Natural Resources

MONITORING WELL CONSTRUCTION
Form 4400-113A 8-89

Facility/Project Name: Badger Army Ammunition Plant	Grid Location: 4,803,845.3 ~~ft.~~ M ☒ N. ☐ S.	Well Name: RPM-89-01
Facility License, Permit or Monitoring Number: _____	279,502.4 ft. ☒ E. ☐ W.	Wis. Unique Well Number: _____ DNR Well Numb: _____
Type of Well: Water Table Observation Well ☒ 11; Piezometer ☐ 12	Section Location: ____ 1/4 of ____ 1/4 of Section ____, T ____ N, R ____ ☐ E ☐ W	Date Well Installed: 10/16/89 (m m / d d / y y)
Distance Well Is From Waste/Source Boundary: NA ft.	Location of Well Relative to Waste/Source: ☐ Upgradient ☒ Sidegradient ☒ Downgradient ☐ Not Known	Well Installed By: (Person's Name and Firm) Jim Buss / E.C. Jordan Co
Is Well A Point of Enforcement Std. Application? ☐ Yes ☒ No		

A. Protective pipe, top elevation 888.83 ft. MSL

B. Well casing, top elevation 888.65 ft. MSL

C. Land surface elevation 886.2 ft. MSL

D. Surface seal, bottom _____ ft. MSL or ____ ft.

12. USCS classification of soil near screen:
☐ GP ☐ GM ☐ GC ☐ GW ☐ SW ☐ SP
☒ SM ☐ SC ☐ ML ☐ MH ☐ CL ☐ CH
☐ Bedrock

13. Sieve analysis attached? ☐ Yes ☒ No

14. Drilling method used: Rotary ☒ 50; Hollow Stem Auger ☐ 41; Other ☐ ____
Drill Through casing

15. Drilling fluid used: Water ☐ 02; Air ☒ 01; Drilling Mud ☐ 03; None ☐ 99

16. Drilling additives used? ☐ Yes ☒ No

Describe _____

17. Source of water (attach analysis):
PW #2

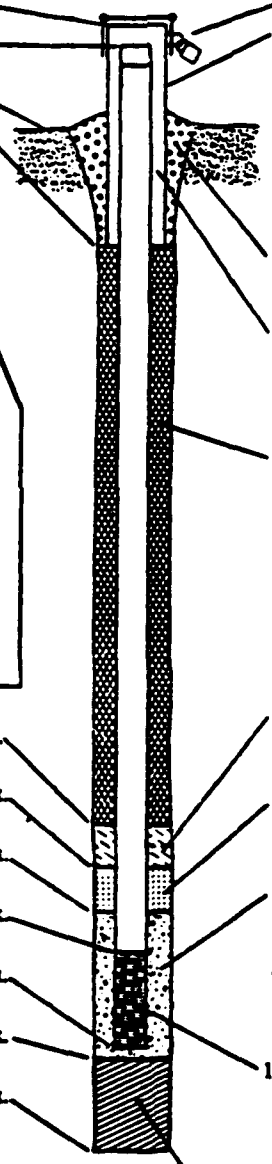

E. Bentonite seal, top 791.2 ft. MSL or 95.0 ft.

F. Fine sand, top NA ft. MSL or NA ft.

G. Filter pack, top 786.2 ft. MSL or 100.0 ft.

H. Well screen, top 781.4 ft. MSL or 104.8 ft.

I. Well screen, bottom 761.9 ft. MSL or 124.3 ft.

J. Filter pack, bottom 760.2 ft. MSL or 126.0 ft.

K. Borehole, bottom 759.2 ft. MSL or 127.0 ft.

L. Borehole, diameter 9.5 in.

M. O.D. well casing 4.5 in.

N. I.D. well casing 4.0 in.

1. Cap and lock? ☒ Yes ☐ No

2. Protective cover pipe:
a. Inside diameter: 6.0 in.
b. Length: 7.0 ft.
c. Material: Steel ☒ 04; Other ☐ __
d. Additional protection? ☒ Yes ☐ No
If yes, describe: 4 bucking posts around the well

3. Surface seal: Bentonite ☐ 30; Concrete ☐ 0; Other ☒ __
Grout

4. Material between well casing and protective pipe: Bentonite ☐ 3[illegible]; Annular space seal ☐; Other ☒ __
Grout

5. Annular space seal: Granular Bentonite ☐ [illegible]
____ Lbs/gal mud weight . . . Bentonite-sand slurry ☐ [illegible]
____ Lbs/gal mud weight . . . . . Bentonite slurry ☐ [illegible]
5 % Bentonite . . . . . Bentonite-cement grout ☒ 50
± 260 gal ~~ft³~~ volume added for any of the above
How installed: Tremie ☐ 0[illegible]; Tremie pumped ☒ 02; Gravity ☐ 08

6. Bentonite seal: Bentonite granules ☐ 3[illegible]
☐ 1/4 in. ☒ 3/8 in. ☐ 1/2 in. Bentonite pellets ☒ 3[illegible]; Other ☐ __

7. Fine sand material: Manufacturer, product name and mesh size
NA
Volume added NA ft³

8. Filter pack material: Manufacturer, product name and mesh size
Mesamac Warrior, Specialty Filter Sands
Volume added ~~ft³~~ 29 ft³

9. Well casing: Flush threaded PVC schedule 40 ☐ 23; Flush threaded PVC schedule 80 ☒ 24; Other ☐ __

10. Screen material: Schedule 80 PVC
Screen type: Factory cut ☒ 11; Continuous slot ☐ 01; Other ☐ __
Manufacturer Manoflex
Slot size: 0.010 in.
Slotted length: 19.5 ft.

11. Backfill material (below filter pack): None ☐; Other ☒
Mesamac Warrior, Specialty Filter Sands

I hereby certify that the information on this form is true and correct to the best of my knowledge.

Signature [signature] Firm E. C. Jordan Co.

Please complete and return both sides of this form as required by chs. 144, 147 and 160, Wis. Stats., and ch. NR 141, Wis. Adm. Code. In accordance with ch. 144, Wis Stats., failure to file this form may result in a forfeiture of not less than $10, nor more than $5,000 for each day of violation. In accordance with ch. 147, Wis. Stats., failure to file this form may result in a forfeiture of not more than $10,000 for each day of violation.

BORING NO RPM-89-01

OVERBURDEN
MONITORING WELL SHEET

PROJECT BAAP
PROJECT NO 1049-04
ELEVATION —
FIELD GEOLOGIST J. Buss

LOCATION Rocket Area
BORING RPM-89-01
DATE 10/16/89

DRILLER Mathey/M. Tinnin
DRILLING METHOD Air Rotary
DEVELOPMENT METHOD Pumping

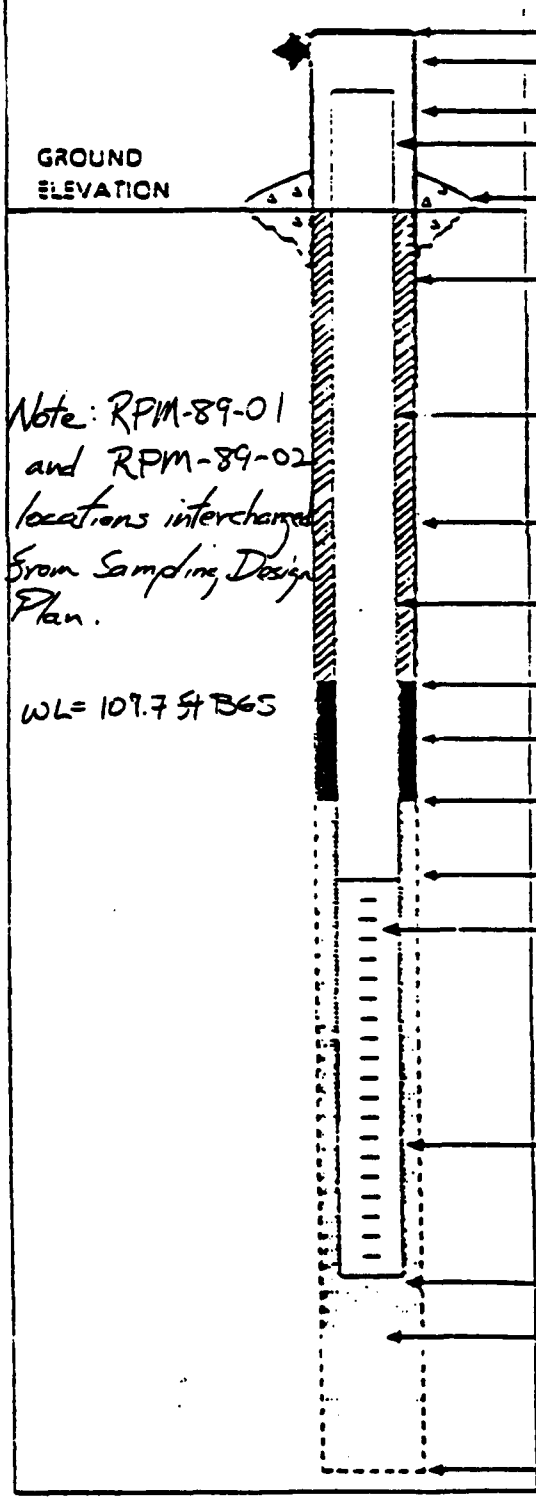

Note: RPM-89-01 and RPM-89-02 locations interchanged from Sampling Design Plan.

WL= 109.7 ft BGS

ELEVATION OF TOP OF SURFACE CASING —
ELEVATION OF TOP OF RISER PIPE —
STICK - UP TOP OF SURFACE CASING —
STICK - UP RISER PIPE: 2.8
TYPE OF SURFACE SEAL: concrete collar w/ stone pad
I.D. OF SURFACE CASING 5 7/8 in
TYPE OF SURFACE CASING locking steel protector casing.
RISER PIPE I.D. 3.75 in.
TYPE OF RISER PIPE Schedule 80 PVC
BORE-HOLE DIAMETER: 9 in
TYPE OF BACKFILL: cement/bentonite grout.
[redacted] / DEPTH TOP OF SEAL: 95 ft
TYPE OF SEAL: Bentonite Pellets
DEPTH TOP OF SAND PACK 100 ft
[redacted] / DEPTH TOP OF SCREEN: 104.8 ft
TYPE OF SCREEN schedule 80 slotted
SLOT SIZE x LENGTH 20 ft 0.01 in
I.D. OF SCREEN: 3.75 in
TYPE OF SAND PACK: Mervamec Warrior Specialty Filter Sands
[redacted] / DEPTH BOTTOM OF SCREEN: 124.3 ft
ELEVATION / DEPTH BOTTOM OF SAND PACK 126 ft
TYPE OF BACKFILL BELOW OBSERVATION WELL Mervamec Warrior Specialty Filter Sand
[redacted] / DEPTH OF HOLE 127 ft

State of Wisconsin
Department of Natural Resources

MONITORING WELL CONSTRUCTION
Form 4400-113A 6-89

Facility/Project Name: Badger Army Ammunition Plant	Grid Location: 4,803,851.0 m ft N. S.; 279,100.8 m ft E. W.	Well Name: RPM-89-02
Facility License, Permit or Monitoring Number:		Wis. Unique Well Number / DNR Well Num:
Type of Well: Water Table Observation Well 11; Piezometer 12	Section Location: ____ 1/4 of ____ 1/4 of Section ____, T ____ N, R ____ E W	Date Well Installed: 10/12/89 (m m d d y y)
Distance Well Is From Waste/Source Boundary: NA ft.	Location of Well Relative to Waste/Source: Upgradient; Sidegradient; Downgradient; Not Known	Well Installed By: (Person's Name and Firm) Jim Buss / E.C. Jordan Co
Is Well A Point of Enforcement Std. Application? Yes; No		

A. Protective pipe, top elevation 824.95 ft. MSL
B. Well casing, top elevation 824.26 ft. MSL
C. Land surface elevation 823.0 ft. MSL
D. Surface seal, bottom ____ ft. MSL or ____ ft.

12. USCS classification of soil near screen:
GP GM GC GW SW SP
SM SC ML MH CL CH
Bedrock

13. Sieve analysis attached? Yes No

14. Drilling method used: Rotary 50; Hollow Stem Auger 41; Other
Drill through casing

15. Drilling fluid used: Water 02; Air 01; Drilling Mud 03; None 99

16. Drilling additives used? Yes No

Describe ____

17. Source of water (attach analysis):
PW #2

E. Bentonite seal, top 791.0 ft. MSL or 32.0 ft.
F. Fine sand, top NA ft. MSL or NA ft.
G. Filter pack, top 786.0 ft. MSL or 87.0 ft.
H. Well screen, top 780.7 ft. MSL or 92.3 ft.
I. Well screen, bottom 761.3 ft. MSL or 111.8 ft.
J. Filter pack, bottom 758.0 ft. MSL or 115.0 ft.
K. Borehole, bottom 758.0 ft. MSL or 115.0 ft.
L. Borehole, diameter 9.5 in.
M. O.D. well casing 4.5 in.
N. I.D. well casing 4.0 in.

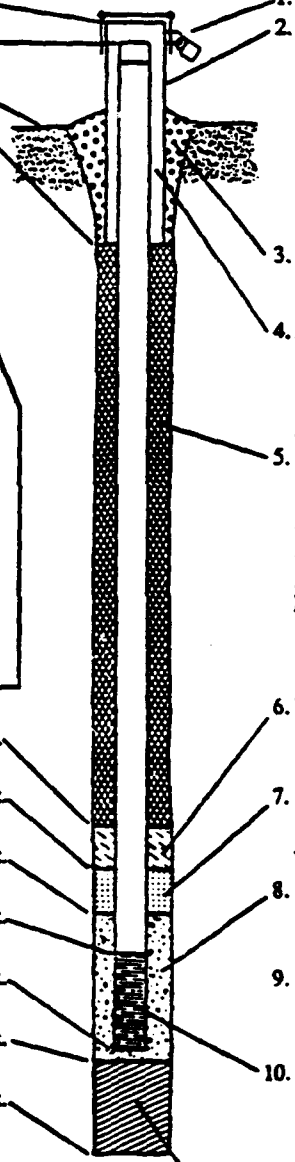

1. Cap and lock? Yes No
2. Protective cover pipe:
a. Inside diameter: 6.0
b. Length: 2.0
c. Material: Steel 04; Other ____
d. Additional protection? Yes No
If yes, describe: 4 bucking posts
3. Surface seal: Bentonite 30; Concrete 0; Other
Grout
4. Material between well casing and protective pipe: Bentonite; Annular space seal; Other
Grout
5. Annular space seal: Granular Bentonite; ____ Lbs/gal mud weight ... Bentonite-sand slurry; ____ Lbs/gal mud weight ..... Bentonite slurry 3.; 5 % Bentonite ..... Bentonite-cement grout 50; ≈ 360 ft³ volume added for any of the above
How installed: Tremie 0; Tremie pumped 02; Gravity 08
6. Bentonite seal: Bentonite granules 33; 1/4 in. 3/8 in. 1/2 in. Bentonite pellets 32; Other
7. Fine sand material: Manufacturer, product name and mesh size
NA
Volume added NA ft³
8. Filter pack material: Manufacturer, product name and mesh size
Mesmer Worrier, Specialty Silica Sands
Volume added ≈ 3.1 ft³
9. Well casing: Flush threaded PVC schedule 40 23; Flush threaded PVC schedule 80 24; Other
10. Screen material: Schedule 80 PVC
Screen type: Factory cut 11; Continuous slot 01; Other
Manufacturer Morrie Flex
Slot size: 0.010 in.
Slotted length: 19.5 ft.
11. Backfill material (below filter pack): None; Other

I hereby certify that the information on this form is true and correct to the best of my knowledge.

Signature: [signature] Firm: E.C. Jordan Co.

Please complete and return both sides of this form as required by chs. 144, 147 and 160, Wis. Stats., and ch. NR 141, Wis. Adm. Code. In accordance with ch. 144, Wis Stats., failure to file this form may result in a forfeiture of not less than $10, nor more than $5,000 for each day of violation. In accordance with ch. 147, Wis. Stats., failure to file this form may result in a forfeiture of not more than $10,000 for each day of violation.

BORING NO RPM-89-02

OVERBURDEN
MONITORING WELL SHEET

PROJECT 3AAP Phase II
PROJECT NO 6049-04
ELEVATION
FIELD GEOLOGIST Jim Buss

LOCATION Rocket Paste
BORING RPM-89-02
DATE 10/12/89

DRILLER Mac Tinnin
DRILLING METHOD IH-60
DEVELOPMENT METHOD

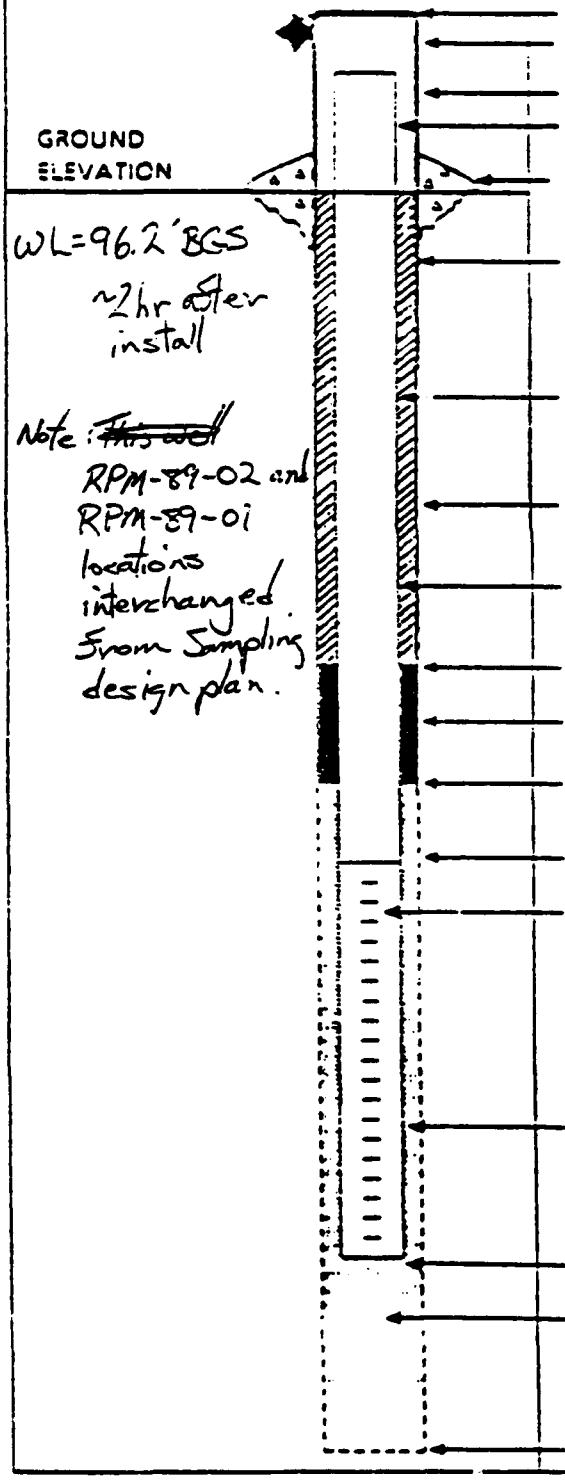

ELEVATION OF TOP OF SURFACE CASING:
ELEVATION OF TOP OF RISER PIPE:
STICK - UP TOP OF SURFACE CASING:
STICK - UP RISER PIPE: 2.2'
TYPE OF SURFACE SEAL: concrete collar w/ stone pad
I.D OF SURFACE CASING: 5 7/8 in
TYPE OF SURFACE CASING: locking steel protector casing
RISER PIPE I.D 3.75 in
TYPE OF RISER PIPE Schedule 80 PVC
BORE-OLE DIAMETER: 9 in
TYPE OF BACKFILL: 82'-60' Natural Cave 60-0 grout
~~ELEVATION~~ / DEPTH TOP OF SEAL: 82 ft
TYPE OF SEAL: Bentonite pellets
DEPTH TOP OF SAND PACK 87 ft
~~ELEVATION~~ / DEPTH TOP OF SCREEN: 92.3
TYPE OF SCREEN Schedule 80
SLOT SIZE x LENGTH 20 ft 0.01 in
I.D OF SCREEN: 3.75 in
TYPE OF SAND PACK: Meramec Warrior Specialty Sands
~~ELEVATION~~ / DEPTH BOTTOM OF SCREEN: 111.8
~~ELEVATION~~ / DEPTH BOTTOM OF SAND PACK: 115 ft.
TYPE OF BACKFILL BELOW OBSERVATION WELL Silica filter sand
~~ELEVATION~~ / DEPTH OF HOLE ~~JAB~~ 115

State of Wisconsin
Department of Natural Resources

MONITORING WELL CONSTRUCTION
Form 4400-113A 8-89

Facility/Project Name: Badger Army Ammunitions Plant Facility License, Permit or Monitoring Number:	Grid Location: 4,804,671.6 ft. N. ☐ S. 379,174.7 ft. E. ☐ W.	Well Name: NPM-89-01 Wis. Unique Well Number / DNR Well Numb
Type of Well: Water Table Observation Well ☒ 11 Piezometer ☐ 12	Section Location: ____ 1/4 of ____ 1/4 of Section ____, T ____ N, R ____ ☐ E ☐ W	Date Well Installed: 10/25/89 (m m d d y y)
Distance Well Is From Waste/Source Boundary: NA ft.	Location of Well Relative to Waste/Source: ☐ Upgradient ☐ Sidegradient ☒ Downgradient ☐ Not Known	Well Installed By: (Person's Name and Firm): Dave Beland / E.C. Jordan Co.
Is Well A Point of Enforcement Std. Application? ☐ Yes ☒ No		

A. Protective pipe, top elevation 863.03 ft. MSL
B. Well casing, top elevation 862.72 ft. MSL
C. Land surface elevation 861.5 ft MSL
D. Surface seal, bottom ____ ft. MSL or ____ ft.

12. USCS classification of soil near screen:
☐ GP ☐ GM ☐ GC ☒ GW ☐ SW ☐ SP
☐ SM ☐ SC ☐ ML ☐ MH ☐ CL ☐ CH
☐ Bedrock

13. Sieve analysis attached? ☐ Yes ☒ No

14. Drilling method used: Rotary ☒ 50
Hollow Stem Auger ☐ 41
Other ☐
Drill through casing

15. Drilling fluid used: Water ☐ 02 Air ☒ 01
Drilling Mud ☐ 03 None ☐ 99

16. Drilling additives used? ☐ Yes ☒ No

Describe ____

17. Source of water (attach analysis):
PW #2

E. Bentonite seal, top 292.5 ft. MSL or 69.0 ft.
F. Fine sand, top NA ft. MSL or NA ft.
G. Filter pack, top 282.5 ft. MSL or 79.0 ft.
H. Well screen, top 282.5 ft. MSL or 79.0 ft.
I. Well screen, bottom 262.5 ft. MSL or 99.0 ft.
J. Filter pack, bottom 261.5 ft. MSL or 100.0 ft.
K. Borehole, bottom 250.5 ft. MSL or 111.0 ft.
L. Borehole, diameter 9.5 in.
M. O.D. well casing 4.50 in.
N. I.D. well casing 4.0 in.

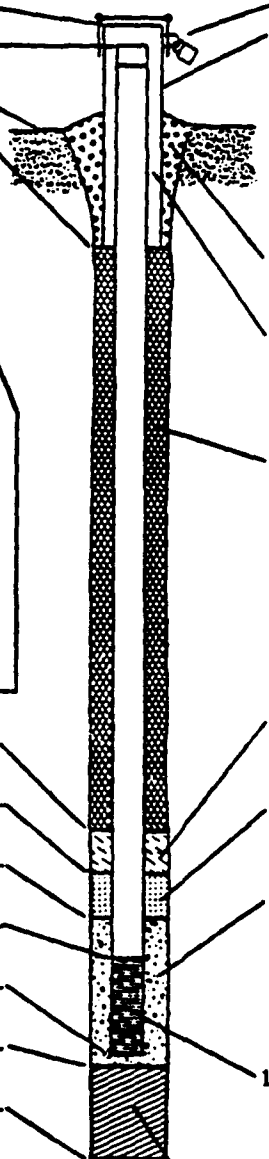

1. Cap and lock? ☒ Yes ☐ N
2. Protective cover pipe:
a. Inside diameter: 6.0
b. Length: 2.0
c. Material: Steel ☒ 04
Other ☐
d. Additional protection? ☒ Yes ☐ N
If yes, describe: 4 bucking posts
3. Surface seal: Bentonite ☐ 30
Concrete ☐ 0
Grout Other ☒
4. Material between well casing and protective pipe:
Bentonite ☐ 30
Annular space seal ☐
Grout Other ☒
5. Annular space seal: Granular Bentoni 33
____ Lbs/gal mud weight . . . Bentonite-sand slurr 3
____ Lbs/gal mud weight . . . . . Bentonite slurry ☐ 3
5 % Bentonite . . . . . Bentonite-cement grout ☒ 50
± 300 gal Ft³ volume added for any of the above
How installed: Tremie ☐ 0
Tremie pumped ☒ 02
Gravity ☐ 0
6. Bentonite seal: Bentonite granules ☐ 3
☐ 1/4 in. ☒ 3/8 in. ☐ 1/2 in. Bentonite pellets ☒ 32
____ Other ☐
7. Fine sand material: Manufacturer, product name and mesh siz
NA
Volume added NA ft³
8. Filter pack material: Manufacturer, product name and mesh si
Materials Western, Specialty Filter Sands
Volume added ≈ 29 ft³
9. Well casing: Flush threaded PVC schedule 40 ☐ 2
Flush threaded PVC schedule 80 ☒ 2
____ Other ☐
10. Screen material: Schedule 80 PVC
Screen type: Factory cut ☒ 11
Continuous slot ☐ 01
____ Other ☐
Manufacturer Monoflex
Slot size: 0.010 in.
Slotted length: 20.0 ft.
11. Backfill material (below filter pack): None
____ Other

I hereby certify that the information on this form is true and correct to the best of my knowledge.

Signature: P. L. Beland Firm: E.C. Jordan Co.

Please complete and return both sides of this form as required by chs. 144, 147 and 160, Wis. Stats., and ch. NR 141, Wis. Adm. Code. In accordance with ch. 144, Wis Stats., failure to file this form may result in a forfeiture of not less than $10, nor more than $5,000 for each day of violation. In accordance with ch. 147, Wis. Stats., failure to file this form may result in a forfeiture of not more than $10,000 for each day of violation.

APPENDIX C - 1

WELL DETAIL INFORMATION SHEET

JOB NO. OB-P No. 65283
BORING NO. NAN 8101 A
DATE 2-9-82
CHIEF R.F. Sarko and Associates, Inc.
LOCATION New Acid Area - Synthetic Acid Plant

Elev. 911.82

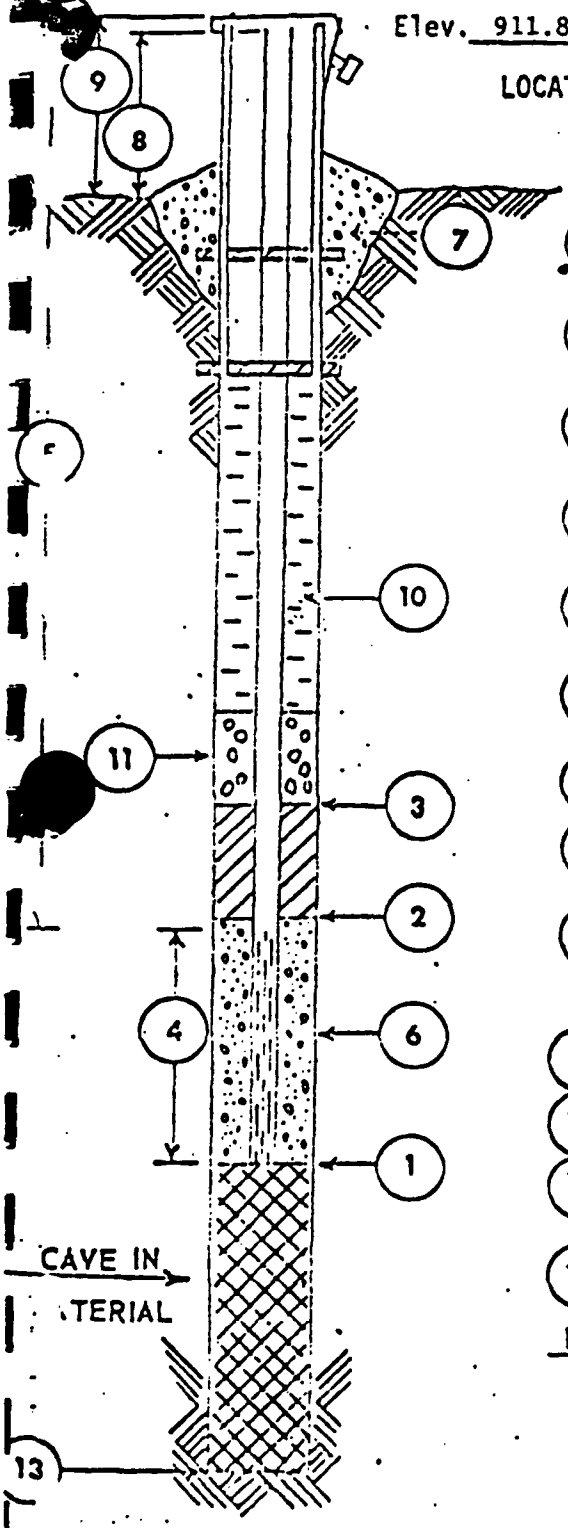

All depth measurements of well detail to be from ground surface.

1. DEPTH TO BOTTOM OF WELL POINT OR SLOTTED PIPE 141.50 FEET.
2. DEPTH OF BOTTOM OF SEAL (if installed) 126.50 FEET.
3. DEPTH TO TOP OF SEAL (if installed) 0.00 FEET.
4. LENGTH OF PVC WELL SCREEN, 10.0 FEET. 10.0 FEET SLOTTED
5. TOTAL LENGTH OF PIPE 135.05 FEET @ 4.0 IN. DIAMETER.
6. TYPE OF FILTER MATERIAL AROUND WELL POINT OR SLOTTED PIPE Pea Gravel.
7. CONCRETE CAP. (YES) NO (Circle One)
8. HEIGHT OF WELL CASING ABOVE GROUND 3.50 FEET.
9. PROTECTIVE CASING? (YES) NO (Circle One)
   HEIGHT ABOVE GROUND 3.50
   LOCKING CAP? (YES) NO (Circle One)
10. TYPE OF BACKFILL: Bentonite
11. THICKNESS OF GRAVEL PACK 0 FEET.
12. DEPTH TO FIRST COUPLING 15.0 FEET From (TOC)
    COUPLING INTERVAL 20.0 FEET.
13. TOTAL DEPTH OF BOREHOLE 143.00 FEET.

BORING #	DATE	TIME	DEPTH TO WATER	GROUNDWATER ELEVATION
Stabilized			131.50	780.32

R.F. SARKO AND ASSOCIATES, INC.
Consulting Engineers
104 King Street
Madison, Wisconsin 53703

APPENDIX C - 2

WELL DETAIL INFORMATION SHEET

JOB NO. OB-P No. 65283
BORING NO. NAN 8101 D
DATE 2-9-82
CHIEF R.F. Sarko and Associates, Inc.
LOCATION New Acid Area - Synthetic Acid Plant

Elev. 911.72

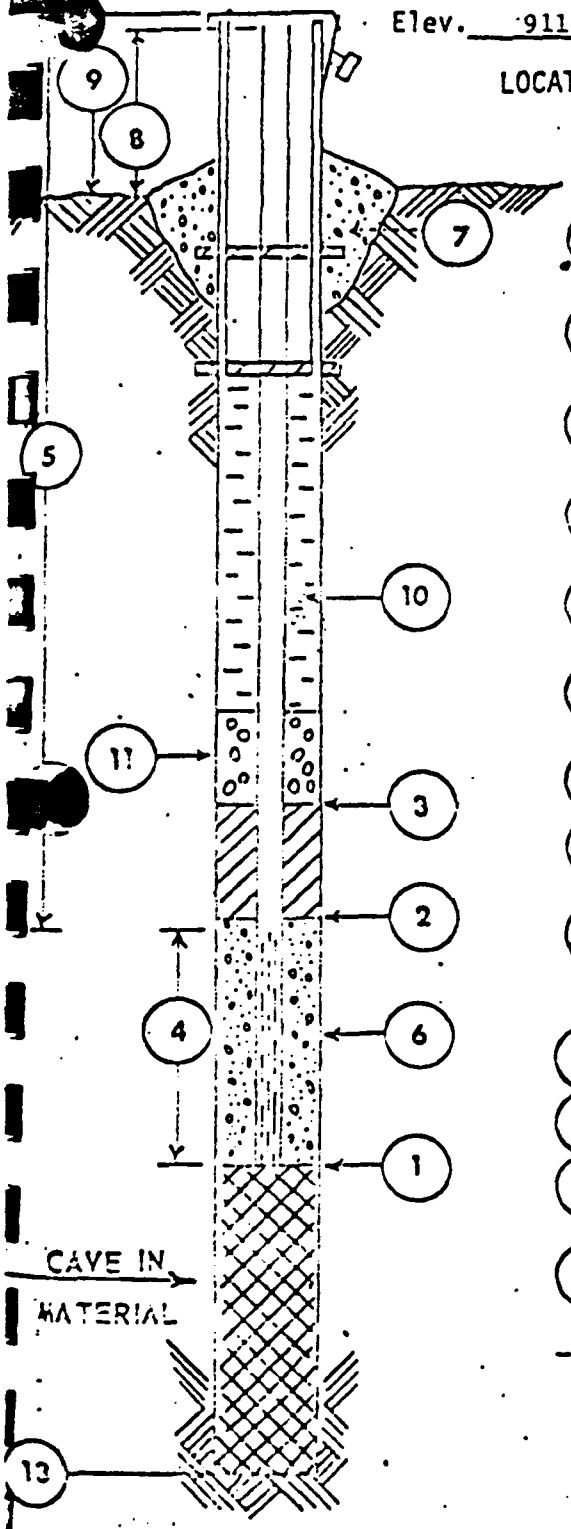

All depth measurements of well detail to be from ground surface.

(1) DEPTH TO BOTTOM OF WELL POINT OR SLOTTED PIPE 166.50 FEET.

(2) DEPTH OF BOTTOM OF SEAL (if installed) 156.50 FEET.

(3) DEPTH TO TOP OF SEAL (if installed) 0.00 FEET.

(4) LENGTH OF PVC WELL SCREEN, 5.0 FEET. 5.0 FEET SLOTTED

(5) TOTAL LENGTH OF PIPE 164.00 FEET @ 4.0 IN. DIAMETER.

(6) TYPE OF FILTER MATERIAL AROUND WELL POINT OR SLOTTED PIPE Pea Gravel.

(7) CONCRETE CAP. (YES) NO (Circle One)

(8) HEIGHT OF WELL CASING ABOVE GROUND 2.50 FEET.

(9) PROTECTIVE CASING? (YES) NO (Circle One)
HEIGHT ABOVE GROUND 2.50
LOCKING CAP? (YES) NO (Circle One)

(10) TYPE OF BACKFILL: Bentonite

(11) THICKNESS OF GRAVEL PACK 0.0 FEET.

(12) DEPTH TO FIRST COUPLING 4.0 FEET From (TOC)
COUPLING INTERVAL 10.0 FEET.

(13) TOTAL DEPTH OF BOREHOLE 172.00 FEET.

BORING #	DATE	TIME	DEPTH TO WATER	GROUNDWATER ELEVATION
Stabilized			155.75	Piezometer

R.F. SARKO AND ASSOCIATES, INC.
Consulting Engineers
104 King Street
Madison, Wisconsin 53703

APPENDIX C - 3

WELL D[illegible]L INFORMATION SHEET

JOB NO. OB-P No. 65283
BORING NO. NAM 8102 B
DATE 2-9-82
CHIEF R.F. Sarko and Associates, Inc.
LOCATION New Acid Area - Synthetic Acid Plant

Elev. 914.54

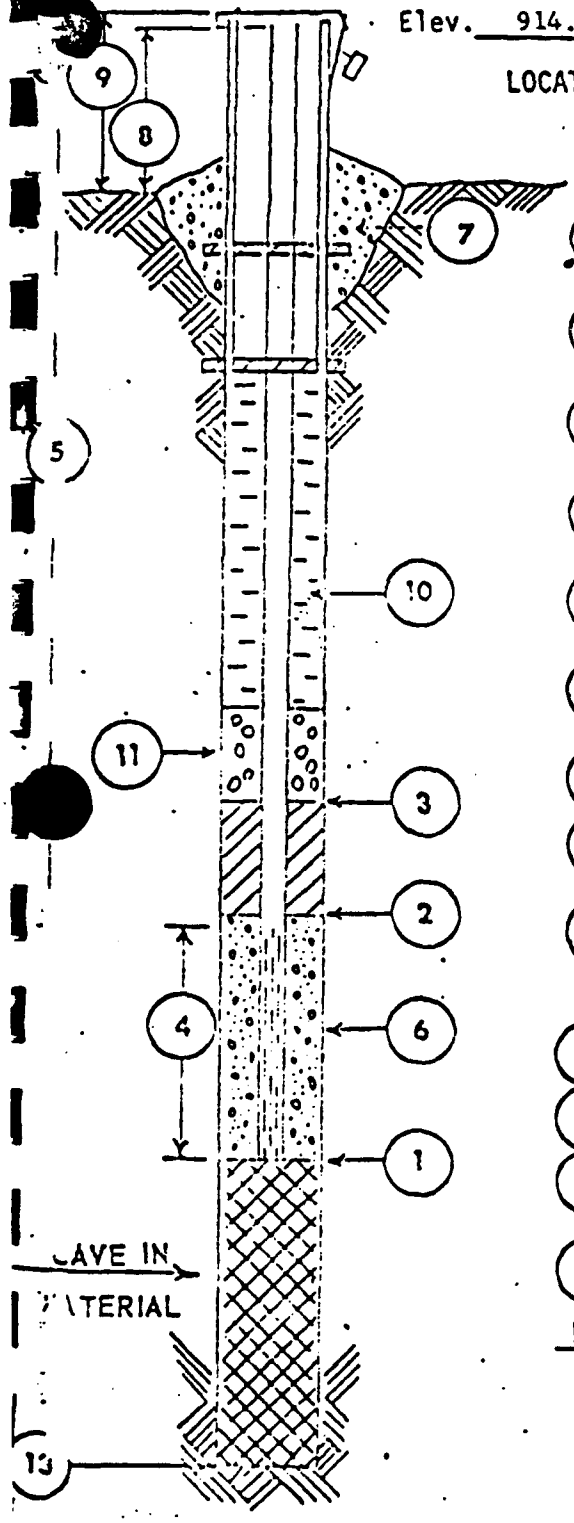

All depth measurements of well detail to be from ground surface.

1. DEPTH TO BOTTOM OF WELL POINT OR SLOTTED PIPE 145.00 FEET.
2. DEPTH OF BOTTOM OF SEAL (if installed) 130.00 FEET.
3. DEPTH TO TOP OF SEAL (if installed) 0.00 FEET.
4. LENGTH OF PVC WELL SCREEN, 10.0 FEET. 10.0 FEET SLOTTED
5. TOTAL LENGTH OF PIPE 137.00 FEET @ 4" IN. DIAMETER.
6. TYPE OF FILTER MATERIAL AROUND WELL POINT OR SLOTTED PIPE Pea Gravel.
7. CONCRETE CAP. (YES) NO (Circle One)
8. HEIGHT OF WELL CASING ABOVE GROUND 2.0 FEET.
9. PROTECTIVE CASING? (YES) NO (Circle One)
   HEIGHT ABOVE GROUND 2.0
   LOCKING CAP? (YES) NO (Circle One)
10. TYPE OF BACKFILL: Bentonite
11. THICKNESS OF GRAVEL PACK 0.0 FEET.
12. DEPTH TO FIRST COUPLING 7.00 FEET From (TOC)
    COUPLING INTERVAL 10.0 FEET.
13. TOTAL DEPTH OF BOREHOLE 149.00 FEET.

BORING #	DATE	TIME	DEPTH TO WATER	GROUNDWATER ELEVATION
Stabilized			134.38	780.16

R.F. SARKO AND ASSOCIATES, INC.
Consulting Engineers
104 King Street
Madison, Wisconsin 53703

APPENDIX C - 4

WELL DETAIL INFORMATION SHEET

JOB NO. OB-P No. 65283
BORING NO. NAN 8103 B
DATE 2-9-82
CHIEF R.F. Sarko and Associates, Inc.
LOCATION New Acid Area - Synthetic Acid Plant

Elev. 915.06

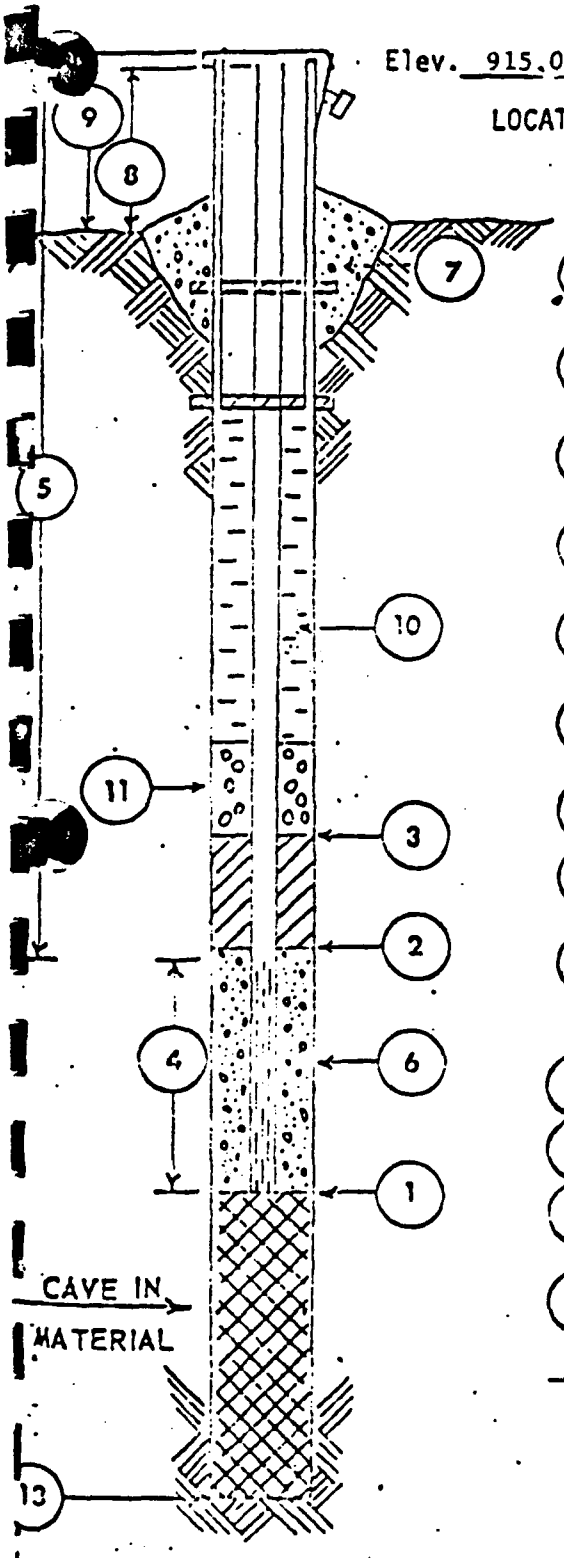

All depth measurements of well detail to be from ground surface.

1. DEPTH TO BOTTOM OF WELL POINT OR SLOTTED PIPE 145.00 FEET.
2. DEPTH OF BOTTOM OF SEAL (if installed) 130.00 FEET.
3. DEPTH TO TOP OF SEAL (if installed) 0.00 FEET.
4. LENGTH OF PVC WELL SCREEN, 10.00 FEET. 10.00 FEET SLOTTED
5. TOTAL LENGTH OF PIPE 137.00 FEET @ 4.0 IN. DIAMETER.
6. TYPE OF FILTER MATERIAL AROUND WELL POINT OR SLOTTED PIPE Pea Gravel.
7. CONCRETE CAP. (YES) NO (Circle One)
8. HEIGHT OF WELL CASING ABOVE GROUND 2.0 FEET.
9. PROTECTIVE CASING? (YES) NO (Circle One)
   HEIGHT ABOVE GROUND 2.0
   LOCKING CAP? (YES) NO (Circle One)
10. TYPE OF BACKFILL: Bentonite
11. THICKNESS OF GRAVEL PACK 0.0 FEET.
12. DEPTH TO FIRST COUPLING 17.0 FEET (From TOC)
    COUPLING INTERVAL 20.0 FEET.
13. TOTAL DEPTH OF BOREHOLE 149.00 FEET.

BORING #	DATE	TIME	DEPTH TO WATER	GROUNDWATER ELEVATION
Stabilized			135.00	780.06

R.F. SARKO AND ASSOCIATES, INC.
Consulting Engineers
104 King Street
Madison, Wisconsin 53703

APPENDIX C - 5

WELL DET. INFORMATION SHEET

JOB NO. OB-P No. 65283
BORING NO. NAN 8103 C
DATE 2-9-82
CHIEF R.F. Sarko and Associates, Inc.
LOCATION New Acid Area - Synthetic Acid Plant

Elev. 915.11

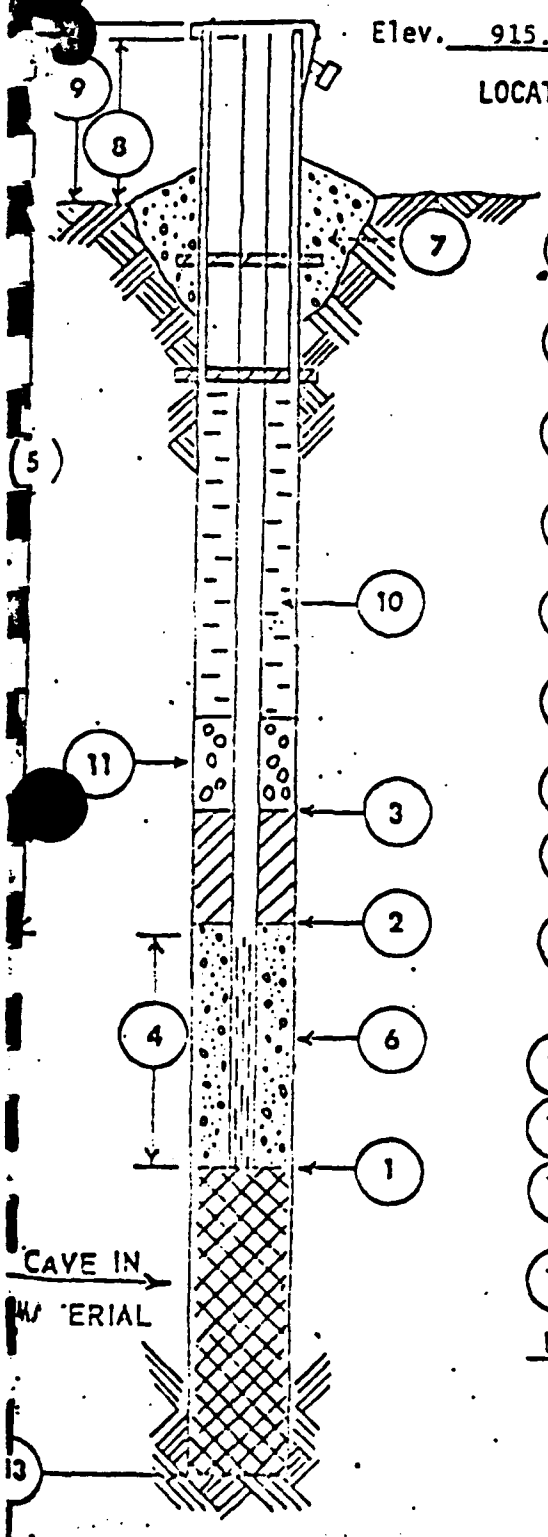

All depth measurements of well detail to be from ground surface.

1. DEPTH TO BOTTOM OF WELL POINT OR SLOTTED PIPE 170.83 FEET.
2. DEPTH OF BOTTOM OF SEAL (if installed) 160.83 FEET.
3. DEPTH TO TOP OF SEAL (if installed) 0.00 FEET.
4. LENGTH OF PVC WELL SCREEN, 5.0 FEET. 5.0 FEET SLOTTED
5. TOTAL LENGTH OF PIPE 167.79 FEET @ 4.0 IN. DIAMETER.
6. TYPE OF FILTER MATERIAL AROUND WELL POINT OR SLOTTED PIPE Pea Gravel.
7. CONCRETE CAP. (YES) NO (Circle One)
8. HEIGHT OF WELL CASING ABOVE GROUND 1.96 FEET.
9. PROTECTIVE CASING? (YES) NO (Circle One)
   HEIGHT ABOVE GROUND 1.96
   LOCKING CAP? (YES) NO (Circle One)
10. TYPE OF BACKFILL: Bentonite
11. THICKNESS OF GRAVEL PACK 0.0 FEET.
12. DEPTH TO FIRST COUPLING 7.5 FEET (From TOC)
    COUPLING INTERVAL 10.0 FEET.
13. TOTAL DEPTH OF BOREHOLE 174.00 FEET.

BORING #	DATE	TIME	DEPTH TO WATER	GROUNDWATER ELEVATION
Stabilized			134.66	Piezometer

R.F. SARKO AND ASSOCIATES, INC.
Consulting Engineers
104 King Street
Madison, Wisconsin 53703

APPENDIX C - 6

WELL DETAIL INFORMATION SHEET

JOB NO. OB-P No. 65283
BORING NO. NAN 8104 B
DATE 2-9-82
CHIEF R.F. Sarko and Associates, Inc.
LOCATION New Acid Area - Syncheric Acid Plant

Elev. 925.11

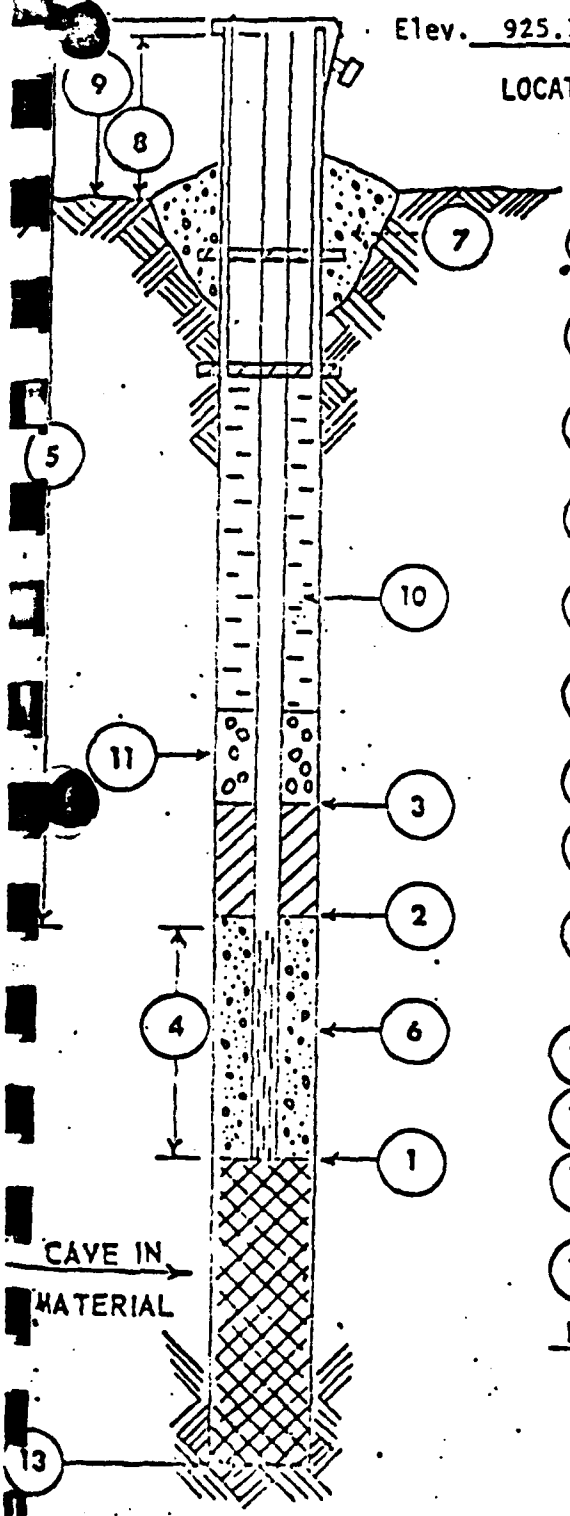

All depth measurements of well detail to be from ground surface.

Riser Elev. 925.91
147.85
777.06
-5

1. DEPTH TO BOTTOM OF WELL POINT OR SLOTTED PIPE 154.85 FEET.
2. DEPTH OF BOTTOM OF SEAL (if installed) 139.85 FEET.
3. DEPTH TO TOP OF SEAL (if installed) 0.00 FEET.
4. LENGTH OF PVC WELL SCREEN, 10.0 FEET. 10.0 FEET SLOTTED
5. TOTAL LENGTH OF PIPE 147.85 FEET @ 4 IN. DIAMETER.
6. TYPE OF FILTER MATERIAL AROUND WELL POINT OR SLOTTED PIPE Pea Gravel.
7. CONCRETE CAP. (YES) NO (Circle One)
8. HEIGHT OF WELL CASING ABOVE GROUND 3.0 FEET.
9. PROTECTIVE CASING? (YES) NO (Circle One)
   HEIGHT ABOVE GROUND 3.0
   LOCKING CAP? (YES) NO (Circle One)
10. TYPE OF BACKFILL: Bentonite
11. THICKNESS OF GRAVEL PACK 0.0 FEET.
12. DEPTH TO FIRST COUPLING 7.85 FEET From (TOC)
    COUPLING INTERVAL 20.0 FEET.
13. TOTAL DEPTH OF BOREHOLE 161.0 FEET.

BORING #	DATE	TIME	DEPTH TO WATER	GROUNDWATER ELEVATION
Stabilized			145.00	780.11

R.F. SARKO AND ASSOCIATES, INC.
Consulting Engineers
104 King Street
Madison, Wisconsin 53703

APPENDIX C - 7

WELL DETAIL INFORMATION SHEET

JOB NO. OB-P No. 65283
BORING NO. NAN 8104 C
DATE 2-9-82
CHIEF R.F. Sarko and Associates, Inc.
LOCATION New Acid Area - Synthetic Acid Plant

Elev. 924.80

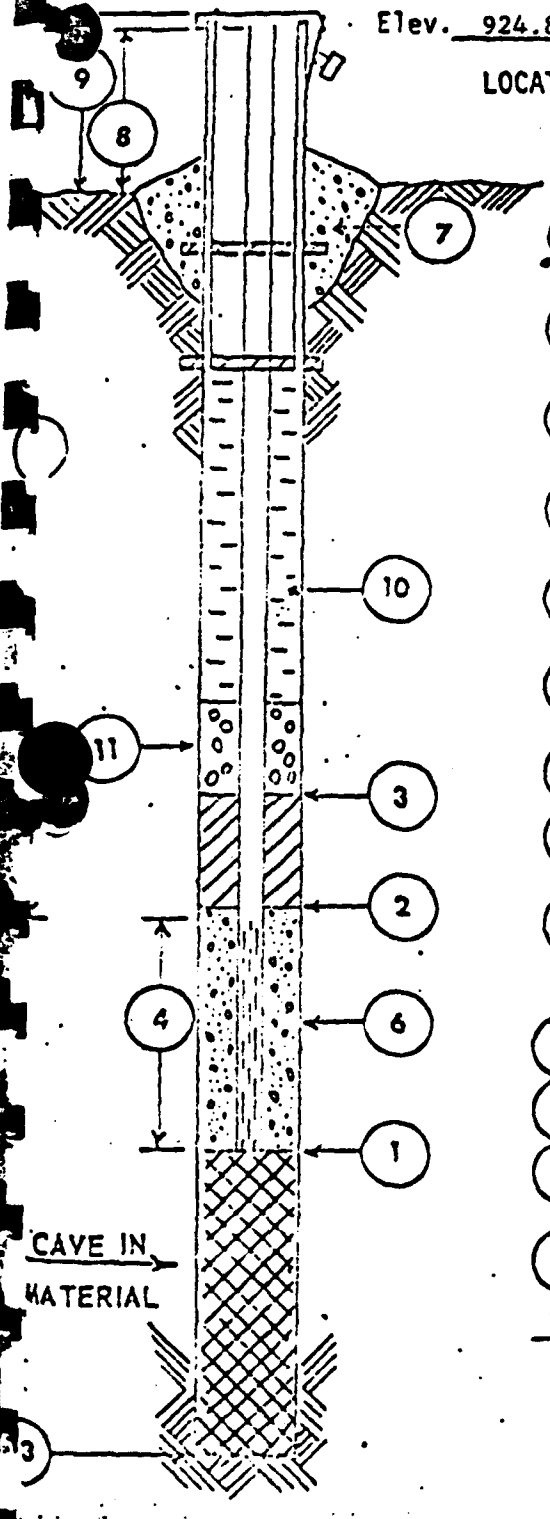

All depth measurements of well detail to be from ground surface.

Riser 925.25
-172.
753.

1. DEPTH TO BOTTOM OF WELL POINT OR SLOTTED PIPE 175.17 FEET.
2. DEPTH OF BOTTOM OF SEAL (if installed) 165.17 FEET.
3. DEPTH TO TOP OF SEAL (if installed) 0.00 FEET. 750.57
4. LENGTH OF PVC WELL SCREEN, 5.0 FEET. 5.0 FEET SLOTTED
5. TOTAL LENGTH OF PIPE 172.17 FEET @ 4.0 IN. DIAMETER.
6. TYPE OF FILTER MATERIAL AROUND WELL POINT OR SLOTTED PIPE Pea Gravel.
7. CONCRETE CAP. YES NO (Circle One)
8. HEIGHT OF WELL CASING ABOVE GROUND 2.0 FEET.
9. PROTECTIVE CASING? YES NO (Circle One)
   HEIGHT ABOVE GROUND 2.0
   LOCKING CAP? YES NO (Circle One)
10. TYPE OF BACKFILL: Bentonite
11. THICKNESS OF GRAVEL PACK 0.0 FEET.
12. DEPTH TO FIRST COUPLING 2.17 FEET From (TOC)
    COUPLING INTERVAL 10.00 FEET.
13. TOTAL DEPTH OF BOREHOLE 178.00 FEET.

BORING #	DATE	TIME	DEPTH TO WATER	GROUNDWATER ELEVATION
Stabilized			144.58	Piezometer

R.F. SARKO AND ASSOCIATES, INC.
Consulting Engineers
104 King Street
Madison, Wisconsin 53703

State of Wisconsin
Department of Natural Resources

MONITORING WELL CONSTRUCTION
Form 4400-113A 8-89

Facility/Project Name: Badger Army Ammunition Plant	Grid Location: 4,806,289.5 ft. N. S. / 278,932.9 ft. E. W.	Well Name: OPM-89-03
Facility License, Permit or Monitoring Number:		Wis. Unique Well Number / DNR Well Number
Type of Well: Water Table Observation Well 11 / Piezometer 12	Section Location: 1/4 of 1/4 of Section; T N, R E W	Date Well Installed: 11/11/89
Distance Well Is From Waste/Source Boundary: NA ft.	Location of Well Relative to Waste/Source: Upgradient / Sidegradient / Downgradient / Not Known	Well Installed By: (Person's Name and Firm) Nadia Glucksberg / E.C. Jordan Co
Is Well A Point of Enforcement Std. Application? Yes / No		

A. Protective pipe, top elevation 929.98 ft. MSL
B. Well casing, top elevation 929.25 ft. MSL
C. Land surface elevation 928.2 ft. MSL
D. Surface seal, bottom ft. MSL or ft.

12. USCS classification of soil near screen:
GP GM GC GW SW SP
SM SC ML MH CL CH
Bedrock

13. Sieve analysis attached? Yes / No

14. Drilling method used: Rotary 50 / Hollow Stem Auger 41 / Other
Drill through casing

15. Drilling fluid used: Water 02 / Air 01 / Drilling Mud 03 / None 99

16. Drilling additives used? Yes / No
Describe

17. Source of water (attach analysis):
PW. #2

E. Bentonite seal, top 796.2 ft. MSL or 132.0 ft.
F. Fine sand, top NA ft. MSL or NA ft.
G. Filter pack, top 791.2 ft. MSL or 132.0 ft.
H. Well screen, top 785.2 ft. MSL or 142.5 ft.
I. Well screen, bottom 765.7 ft. MSL or 162.5 ft.
J. Filter pack, bottom 765.7 ft. MSL or 162.5 ft.
K. Borehole, bottom 765.7 ft. MSL or 162.5 ft.
L. Borehole, diameter 9.5 in.
M. O.D. well casing 4.50 in.
N. I.D. well casing 4.00 in.

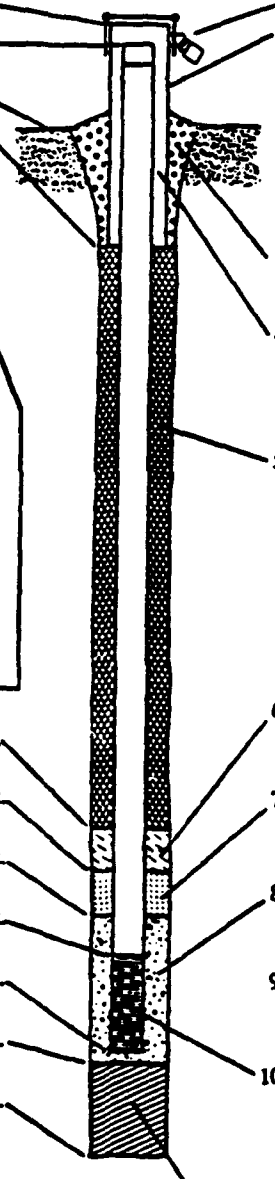

1. Cap and lock? Yes / No
2. Protective cover pipe:
a. Inside diameter: 6.00
b. Length: 2.00
c. Material: Steel 04 / Other
d. Additional protection? Yes / No
If yes, describe: 4 bucking Posts
3. Surface seal: Bentonite 30 / Concrete 01 / Other
Grout
4. Material between well casing and protective pipe: Bentonite / Annular space seal / Other
Grout
5. Annular space seal: Granular Bentonite
Lbs/gal mud weight ... Bentonite-sand slurry
Lbs/gal mud weight ..... Bentonite slurry 32
5 % Bentonite .... Bentonite-cement grout 50
≈350 gal/ft³ volume added for any of the above
How installed: Tremie 00 / Tremie pumped 02 / Gravity 00
6. Bentonite seal: Bentonite granules 33
1/4 in. 3/8 in. 1/2 in. Bentonite pellets 32
Other
7. Fine sand material: Manufacturer, product name and mesh size
NA
Volume added NA ft³
8. Filter pack material: Manufacturer, product name and mesh size
Mesco-Wasser Specialty Filter Sands
Volume added ≈28 ft³
9. Well casing: Flush threaded PVC schedule 40 / Flush threaded PVC schedule 80 24
Other
10. Screen material: Schedule 80 PVC
Screen type: Factory cut 11 / Continuous slot 00 / Other
Manufacturer Mono-Slot
Slot size: 0.010 in
Slotted length: 20 ft.
11. Backfill material (below filter pack): None / Other

I hereby certify that the information on this form is true and correct to the best of my knowledge.

Signature: Paul P. Bol | Firm: E.C. Jordan Co.

Please complete and return both sides of this form as required by chs. 144, 147 and 160, Wis. Stats., and ch. NR 141, Wis. Adm. Code. In accordance with ch. 144, Wis Stats., failure to file this form may result in a forfeiture of not less than $10, nor more than $5,000 for each day of violation. In accordance with ch. 147, Wis. Stats., failure to file this form may result in a forfeiture of not more than $10,000 for each day of violation.

State of Wisconsin
Department of Natural Resources

MONITORING WELL CONSTRUCTION
Form 4400-113A 8-89

Facility/Project Name: Badger Army Ammunitions Plant
Facility License, Permit or Monitoring Number: _____

Grid Location: 4,806,528.0 M ft. ☒ N. ☐ S.; 279,241.0 M ft. ☒ E. ☐ W.

Well Name: OPM-89-02
Wis. Unique Well Number: _____ DNR Well Number: _____

Type of Well: Water Table Observation Well ☒ 11; Piezometer ☐ 12

Section Location: _____ 1/4 of _____ 1/4 of Section _____, T _____ N, R _____ ☐ E ☐ W

Date Well Installed: 11/02/89 (m m d d y y)

Distance Well Is From Waste/Source Boundary: NA ft.

Location of Well Relative to Waste/Source: ☐ Upgradient ☒ Sidegradient ☒ Downgradient ☐ Not Known

Well Installed By: (Person's Name and Firm): Nadia Glucksberg / E.L. Jordan Co

Is Well A Point of Enforcement Std. Application? ☐ Yes ☒ No

A. Protective pipe, top elevation 829.61 ft. MSL
B. Well casing, top elevation 829.46 ft. MSL
C. Land surface elevation 827.6 ft. MSL
D. Surface seal, bottom _____ ft. MSL or _____ ft.

12. USCS classification of soil near screen:
☐ GP ☐ GM ☐ GC ☐ GW ☐ SW ☒ SP
☐ SM ☐ SC ☐ ML ☐ MH ☐ CL ☐ CH
☐ Bedrock

13. Sieve analysis attached? ☐ Yes ☐ No

14. Drilling method used: Rotary ☒ 50; Hollow Stem Auger ☐ 41; Other ☐ ___
Drill through casing

15. Drilling fluid used: Water ☐ 02; Air ☒ 01; Drilling Mud ☐ 03; None ☐ 99

16. Drilling additives used? ☐ Yes ☒ No
Describe _____

17. Source of water (attach analysis):
PW #2

E. Bentonite seal, top 794.6 ft. MSL or 33.0 ft.
F. Fine sand, top NA ft. MSL or NA ft.
G. Filter pack, top 789.6 ft. MSL or 38.0 ft.
H. Well screen, top 784.6 ft. MSL or 43.0 ft.
I. Well screen, bottom 764.6 ft. MSL or 113.0 ft.
J. Filter pack, bottom 764.6 ft. MSL or 113.0 ft.
K. Borehole, bottom 759.6 ft. MSL or 118.0 ft.
L. Borehole, diameter 9.5 in.
M. O.D. well casing 4.50 in.
N. I.D. well casing 4.00 in.

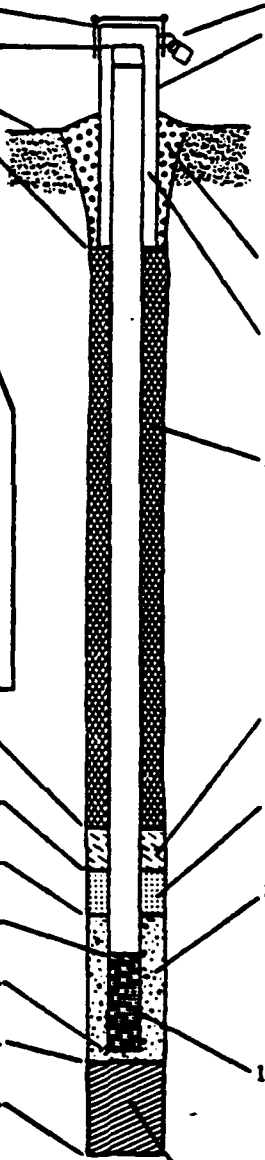

1. Cap and lock? ☒ Yes ☐ No
2. Protective cover pipe:
a. Inside diameter: 6.0 in.
b. Length: 7.0 ft.
c. Material: Steel ☒ 04; Other ☐ ___
d. Additional protection? ☒ Yes ☐ No
If yes, describe: 4 bucking Posts
3. Surface seal: Bentonite ☐ 30; Concrete ☐ 01; Other ☒ ___
Grout
4. Material between well casing and protective pipe: Bentonite ☐ 30; Annular space seal ☐; Other ☒ ___
Grout
5. Annular space seal: Granular Bentonite ☐ 33
___ Lbs/gal mud weight . . . Bentonite-sand slurry ☐ 35
___ Lbs/gal mud weight . . . . . Bentonite slurry ☐ 31
5 % Bentonite . . . . . Bentonite-cement grout ☒ 50
÷ 210 gal/ft volume added for any of the above
How installed: Tremie ☐ 01; Tremie pumped ☒ 02; Gravity ☐ 08
6. Bentonite seal: Bentonite granules ☐ 33
☐ 1/4 in. ☒ 3/8 in. ☐ 1/2 in. Bentonite pellets ☒ 32
Other ☐ ___
7. Fine sand material: Manufacturer, product name and mesh size
NA
Volume added NA ft³
8. Filter pack material: Manufacturer, product name and mesh size
Mercuries Wedge, Specially Filter Sands
Volume added ≈ 28 ft³
9. Well casing: Flush threaded PVC schedule 40 ☐ 23; Flush threaded PVC schedule 80 ☒ 24; Other ☐ ___
10. Screen material: Schedule 80 PVC
Screen type: Factory cut ☒ 11; Continuous slot ☐ 01; Other ☐ ___
Manufacturer Monoslot
Slot size: 0.01 in.
Slotted length: 20.0 ft.
11. Backfill material (below filter pack): None ☒; Other ☐

I hereby certify that the information on this form is true and correct to the best of my knowledge.

Signature: Paul F. Bol Firm: E.L. Jordan Co.

Please complete and return both sides of this form as required by chs. 144, 147 and 160, Wis. Stats., and ch. NR 141, Wis. Adm. Code. In accordance with ch. 144, Wis Stats., failure to file this form may result in a forfeiture of not less than $10, nor more than $5,000 for each day of violation. In accordance with ch. 147, Wis. Stats., failure to file this form may result in a forfeiture of not more than $10,000 for each day of violation.

State of Wisconsin
Department of Natural Resources

MONITORING WELL CONSTRUCTION
Form 4400-113A 8-39

Facility/Project Name: Badger Army Ammunition Plant	Grid Location: 4,806,289.5 ft. ☒ N. ☐ S. / 278,932.9 ft. ☒ E. ☐ W.	Well Name: OPM-89-03
Facility License, Permit or Monitoring Number: _____		Wis. Unique Well Number: _____ DNR Well Num: _____
Type of Well: Water Table Observation Well ☒ 11; Piezometer ☐ 12	Section Location: ____ 1/4 of ____ 1/4 of Section ____, T ____ N, R ____ ☐ E ☐ W	Date Well Installed: 11/11/89 (m m / d d / y y)
Distance Well Is From Waste/Source Boundary: NA ft.	Location of Well Relative to Waste/Source: ☐ Upgradient ☒ Sidegradient ☒ Downgradient ☐ Not Known	Well Installed By: (Person's Name and Firm) Nadia Glucksberg / E.C. Jordan Co.
Is Well A Point of Enforcement Std. Application? ☐ Yes ☒ No		

A. Protective pipe, top elevation 929.98 ft. MSL
B. Well casing, top elevation 929.25 ft. MSL
C. Land surface elevation 928.2 ft. MSL
D. Surface seal, bottom _____ ft. MSL or _____ ft.

12. USCS classification of soil near screen:
☐ GP ☒ GM ☐ GC ☐ GW ☐ SW ☒ SP
☐ SM ☐ SC ☐ ML ☐ MH ☐ CL ☐ CH
☐ Bedrock

13. Sieve analysis attached? ☐ Yes ☒ No

14. Drilling method used: Rotary ☒ 50; Hollow Stem Auger ☐ 41; Other ☐ ___
Drill through casing

15. Drilling fluid used: Water ☐ 02; Air ☒ 01; Drilling Mud ☐ 03; None ☐ 99

16. Drilling additives used? ☐ Yes ☒ No
Describe _____

17. Source of water (attach analysis):
PW. #2

E. Bentonite seal, top 796.2 ft. MSL or 132.0 ft.
F. Fine sand, top NA ft. MSL or NA ft.
G. Filter pack, top 791.2 ft. MSL or 132.0 ft.
H. Well screen, top 785.2 ft. MSL or 142.5 ft.
I. Well screen, bottom 765.7 ft. MSL or 162.5 ft.
J. Filter pack, bottom 765.7 ft. MSL or 162.5 ft.
K. Borehole, bottom 765.7 ft. MSL or 162.5 ft.
L. Borehole, diameter 9.5 in.
M. O.D. well casing 4.50 in.
N. I.D. well casing 4.00 in.

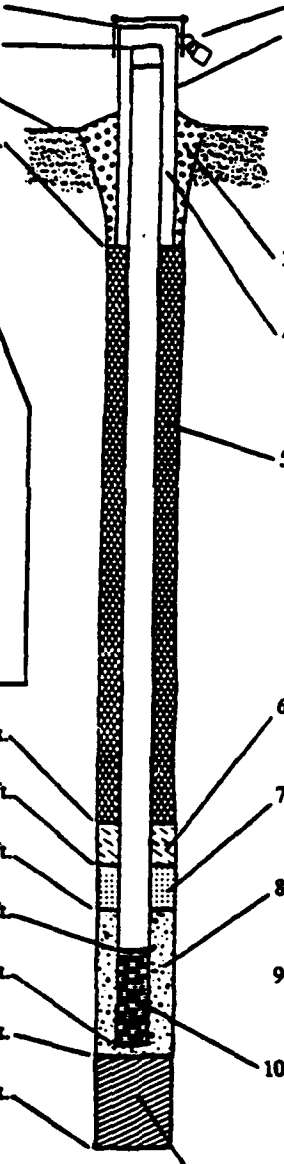

1. Cap and lock? ☒ Yes ☐ No
2. Protective cover pipe:
a. Inside diameter: 6.0
b. Length: 2.0
c. Material: Steel ☒ 04; Other ☐ _____
d. Additional protection? ☒ Yes ☐ No
If yes, describe: 4 bucking posts
3. Surface seal: Bentonite ☐ 30; Concrete ☐ 0; Other ☒ Grout
4. Material between well casing and protective pipe: Bentonite ☐ 3; Annular space seal ☐; Other ☒ Grout
5. Annular space seal: Granular Bentonite ☐; ____ Lbs/gal mud weight ... Bentonite-sand slurry ☐; ____ Lbs/gal mud weight ..... Bentonite slurry ☐; 5 % Bentonite .... Bentonite-cement grout ☒ 50; ≈ 350 gal ft³ volume added for any of the above
How installed: Tremie ☐ 0; Tremie pumped ☒ 02; Gravity ☐ 0
6. Bentonite seal: Bentonite granules ☐ 3; ☐ 1/4 in. ☒ 3/8 in. ☐ 1/2 in. Bentonite pellets ☒ 32; Other ☐ _____
7. Fine sand material: Manufacturer, product name and mesh size
NA
Volume added NA ft³
8. Filter pack material: Manufacturer, product name and mesh size
Mercon Warrior Specialty Filter Sands
Volume added ≈ 28 ft³
9. Well casing: Flush threaded PVC schedule 40 ☐ 22; Flush threaded PVC schedule 80 ☒ 24; Other ☐ _____
10. Screen material: Schedule 80 PVC
Screen type: Factory cut ☒ 11; Continuous slot ☐ 0; Other ☐ _____
Manufacturer Monoflex
Slot size: 0.010in
Slotted length: 20.0ft.
11. Backfill material (below filter pack): None ☒; Other ☐ _____

I hereby certify that the information on this form is true and correct to the best of my knowledge.

Signature: Paul F. Bol | Firm: E.C. Jordan Co.

Please complete and return both sides of this form as required by chs. 144, 147 and 160, Wis. Stats., and ch. NR 141, Wis. Adm. Code. In accordance with ch. 144, Wis Stats., failure to file this form may result in a forfeiture of not less than $10, nor more than $5,000 for each day of violation. In accordance with ch. 147, Wis. Stats., failure to file this form may result in a forfeiture of not more than $10,000 for each day of violation.

ABB Environmental Services, Inc.

MONITORING WELL CONSTRUCTION FOR:

Facility/Project Name: BADGER AAP
Facility License, Permit or Monitoring Number:
Grid Location: ft. ☐ N. ☐ S. / ft. ☐ E. ☐ W.
Well Name: OAM-91-01
Wis. Unique Well Number: DNR Well Number:
Type of Well: Water Table Observation Well ☑ 11 / Piezometer ☐ 12
Section Location: SE 1/4 of NE 1/4 of Section 3
Date Well Installed: 10/27/91 (m m d d y y)
Distance Well Is From Waste/Source Boundary: ft.
T 10 N, R 6 ☑ E ☐ W
Well Installed By: (Person's Name and Firm): G RODRIGUEZ / LAYNE ENVIRONMENTAL
Is Well A Point of Enforcement Std. Application? ☐ Yes ☑ No
Location of Well Relative to Waste/Source: ☐ Upgradient ☐ Sidegradient ☑ Downgradient ☐ Not Known

A. Protective pipe, top elevation: 877.17 ft. MSL
B. Well casing, top elevation: 877.04 ft. MSL
C. Land surface elevation: 875.1 ft. MSL
D. Surface seal, bottom: ft. MSL or ft.

12. USCS classification of soil near screen:
☐ GP ☐ GM ☐ GC ☐ GW ☑ SW ☐ SP
☐ SM ☐ SC ☐ ML ☐ MH ☐ CL ☐ CH
☐ Bedrock

13. Sieve analysis attached? ☐ Yes ☑ No

14. Drilling method used: Rotary ☐ 50 / Hollow Stem Auger ☐ 41 / Other ☑ DUAL WALL

15. Drilling fluid used: Water ☑ 02 / Air ☐ 01 / Drilling Mud ☐ 03 / None ☐ 99

16. Drilling additives used? ☐ Yes ☑ No
Describe:

17. Source of water (attach analysis): PRODUCTION WELL # 2

E. Bentonite seal, top: 799.6 ft. MSL or 075.5 ft.
F. Fine sand, top: ft. MSL or ft.
G. Filter pack, top: 795.1 ft. MSL or 080.0 ft.
H. Well screen, top: 789.6 ft. MSL or 085.5 ft.
I. Well screen, bottom: 779.6 ft. MSL or 095.5 ft.
J. Filter pack, bottom: 775.1 ft. MSL or 100.0 ft.
K. Borehole, bottom: 775.1 ft. MSL or 100.0 ft.
L. Borehole, diameter: 09.0 in.
M. O.D. well casing: 04.25 in.
N. I.D. well casing: 03.75 in.

1. Cap and lock? ☑ Yes ☐ No
2. Protective cover pipe:
a. Inside diameter: 06.0 in.
b. Length: 060 ft.
c. Material: Steel ☑ 04 / Other ☐
d. Additional protection? ☑ Yes ☐ No
If yes, describe: BUCKLING POSTS + GRAV PAD
3. Surface seal: Bentonite ☐ 30 / Concrete ☑ 01 / Other ☐
4. Material between well casing and protective pipe: Bentonite ☐ 30 / Annular space seal ☑ / Other ☐
5. Annular space seal: Granular Bentonite ☐ 33 / ____ Lbs/gal mud weight ... Bentonite-sand slurry ☐ 35 / ____ Lbs/gal mud weight ..... Bentonite slurry ☐ 31 / 5 % Bentonite ..... Bentonite-cement grout ☑ 50 / 150 Ft³ volume added for any of the above
How installed: Tremie ☐ 01 / Tremie pumped ☐ 02 / Gravity ☑ 03
6. Bentonite seal: Bentonite granules ☐ 32 / ☑ 1/4 in. ☐ 3/8 in. ☐ 1/2 in. Bentonite pellets ☑ 32 / Other ☐
7. Fine sand material: Manufacturer, product name and mesh size: NONE / Volume added: ____ ft³
8. Filter pack material: Manufacturer, product name and mesh size: CSSI SILICA SAND #4 / Volume added: 24 ft³
9. Well casing: Flush threaded PVC schedule 40 ☐ 23 / Flush threaded PVC schedule 80 ☑ 24 / Other ☐
10. Screen material: SCH 80 4" DIAM PVC / Screen type: Factory cut ☑ 11 / Continuous slot ☐ 01 / Other ☐ / Manufacturer: MONOFLEX / Slot size: 0.010 in. / Slotted length: 010.0 ft
11. Backfill material (below filter pack): None ☐ / Other ☐

I hereby certify that the information on this form is true and correct to the best of my knowledge.

Signature: Rod R Rodriguez | Firm: ABB - ENVIRONTAL SERV.

State of Wisconsin
Department of Natural Resources

MONITORING WELL CONSTRUCTION
Form 4400-113A 8-89

Facility/Project Name: Badger Army Ammunition Plant	Grid Location: 4,805,744.0 m ☒ N. ☐ S. / 270,076.2 m ☒ E. ☐ W.	Well Name: OAM-89-01
Facility License, Permit or Monitoring Number:		Wis. Unique Well Number: DNR Well Number:
Type of Well: Water Table Observation Well ☒ 11 / Piezometer ☐ 12	Section Location: ____ 1/4 of ____ 1/4 of Section ____, T ____ N, R ____ ☐ E ☐ W	Date Well Installed: 10/27/89 (m m / d d / y y)
Distance Well Is From Waste/Source Boundary: NA ft.	Location of Well Relative to Waste/Source: ☐ Upgradient ☐ Sidegradient ☒ Downgradient ☐ Not Known	Well Installed By: (Person's Name and Firm): Nadia Gluckstern / E.C. Jordan
Is Well A Point of Enforcement Std. Application? ☐ Yes ☒ No		

A. Protective pipe, top elevation: 824.47 ft. MSL
B. Well casing, top elevation: 824.38 ft. MSL
C. Land surface elevation: 822.2 ft. MSL
D. Surface seal, bottom: ____ ft. MSL or ____ ft.

12. USCS classification of soil near screen:
☐ GP ☐ GM ☐ GC ☐ GW ☐ SW ☒ SP
☐ SM ☐ SC ☐ ML ☐ MH ☐ CL ☐ CH
☐ Bedrock

13. Sieve analysis attached? ☐ Yes ☒ No

14. Drilling method used: Rotary ☐ 50 / Hollow Stem Auger ☒ 41 / Other ☐ ____

15. Drilling fluid used: Water ☐ 02 / Air ☐ 01 / Drilling Mud ☐ 03 / None ☐ 99

16. Drilling additives used? ☐ Yes ☒ No
Describe ____

17. Source of water (attach analysis):
PW #2

E. Bentonite seal, top: 802.3 ft. MSL or 20.0 ft.
F. Fine sand, top: NA ft. MSL or NA ft.
G. Filter pack, top: 797.2 ft. MSL or 25.0 ft.
H. Well screen, top: 791.7 ft. MSL or 30.5 ft.
I. Well screen, bottom: 771.7 ft. MSL or 100.5 ft.
J. Filter pack, bottom: 771.7 ft. MSL or 100.5 ft.
K. Borehole, bottom: 770.2 ft. MSL or 102.0 ft.
L. Borehole, diameter: 9.5 in.
M. O.D. well casing: 4.50 in.
N. I.D. well casing: 4.00 in.

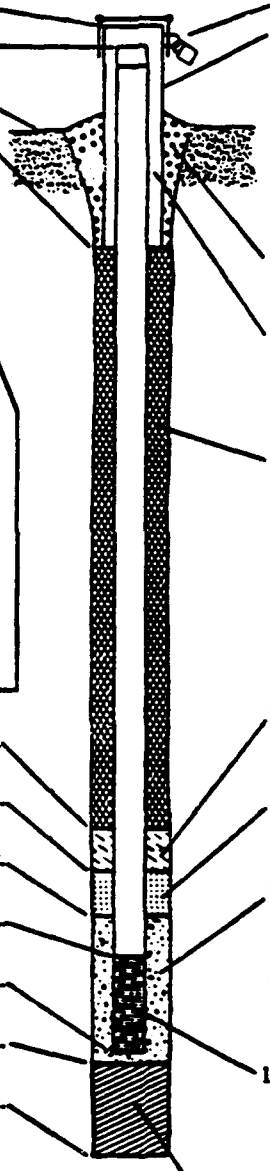

1. Cap and lock? ☒ Yes ☐ No
2. Protective cover pipe:
a. Inside diameter: 6.0
b. Length: 2.0
c. Material: Steel ☒ 6 / Other ☐ ____
d. Additional protection? ☒ Yes ☐ No
If yes, describe: 4 bucking Posts
3. Surface seal: Bentonite ☐ 30 / Concrete ☐ 0 / Grout / Other ☒ ____
4. Material between well casing and protective pipe: Bentonite ☐ 30 / Annular space seal ☐ / Grout / Other ☒ ____
5. Annular space seal: Granular Bentonite ☐ 33 / ____ Lbs/gal mud weight . . . Bentonite-sand slurry ☐ 3 / ____ Lbs/gal mud weight . . . . . Bentonite slurry ☐ / 5 % Bentonite . . . . Bentonite-cement grout ☒ / 200 gal/ft³ volume added for any of the above
How installed: Tremie ☐ 0 / Tremie pumped ☒ 02 / Gravity ☐ 08
6. Bentonite seal: Bentonite granules ☐ 3 / ☐ 1/4 in. ☒ 3/8 in. ☐ 1/2 in. Bentonite pellets ☒ 3 / Other ☐ ____
7. Fine sand material: Manufacturer, product name and mesh size: NA / Volume added NA ft³
8. Filter pack material: Manufacturer, product name and mesh size: Megamer Wedron Specialty Silica Sands / Volume added ≈ 25 ft³
9. Well casing: Flush threaded PVC schedule 40 ☐ 23 / Flush threaded PVC schedule 80 ☒ 2 / Other ☐ ____
10. Screen material: Schedule 80 PVC / Screen type: Factory cut ☒ 1 / Continuous slot ☐ 0 / Other ☐ ____ / Manufacturer Monoflex / Slot size: 0.010 in. / Slotted length: 70.0 ft.
11. Backfill material (below filter pack): None ☐ / Other ☐ ____

I hereby certify that the information on this form is true and correct to the best of my knowledge.

Signature: Paul P. Bol | Firm: E.C. Jordan.

Please complete and return both sides of this form as required by chs. 144, 147 and 160, Wis. Stats., and ch. NR 141, Wis. Adm. Code. In accordance with ch. 144, Wis Stats., failure to file this form may result in a forfeiture of not less than $10, nor more than $5,000 for each day of violation. In accordance with ch. 147, Wis. Stats., failure to file this form may result in a forfeiture of not more than $10,000 for each day of violation.

State of Wisconsin
Department of Natural Resources

MONITORING WELL CONSTRUCTION
Form 4400-113A 8-89

Facility/Project Name: Badger Army Ammunitions Plant	Grid Location: 4,805,673.4 M ☒ N. ☐ S. / 276,115.5 M ☒ E. ☐ W.	Well Name: OAM-89-02
Facility License, Permit or Monitoring Number: _____		Wis. Unique Well Number: _____ DNR Well Number: _____
Type of Well: Water Table Observation Well ☒ 11; Piezometer ☐ 12	Section Location: ____ 1/4 of ____ 1/4 of Section ____, T ____ N, R ____ ☐ E ☐ W	Date Well Installed: 10/30/89 (m m / d d / y y)
Distance Well Is From Waste/Source Boundary: NA ft.		Well Installed By: (Person's Name and Firm) Nadia Glucksberg, E.C. Jordan
Is Well A Point of Enforcement Std. Application? ☐ Yes ☒ No	Location of Well Relative to Waste/Source: ☐ Upgradient ☐ Sidegradient ☒ Downgradient ☐ Not Known	

A. Protective pipe, top elevation 875.14 ft. MSL
B. Well casing, top elevation 874.91 ft. MSL
C. Land surface elevation 872.4 ft. MSL
D. Surface seal, bottom ____ ft. MSL or ____ ft.

12. USCS classification of soil near screen:
☐ GP ☐ GM ☐ GC ☐ GW ☐ SW ☒ SP
☐ SM ☐ SC ☐ ML ☐ MH ☐ CL ☐ CH
☐ Bedrock

13. Sieve analysis attached? ☐ Yes ☐ No

14. Drilling method used: Rotary ☐ 50; Hollow Stem Auger ☒ 41; Other ☐ ____

15. Drilling fluid used: Water ☐ 02; Air ☐ 01; Drilling Mud ☐ 03; None ☒ 99

16. Drilling additives used? ☐ Yes ☒ No

Describe ____

17. Source of water (attach analysis): ____

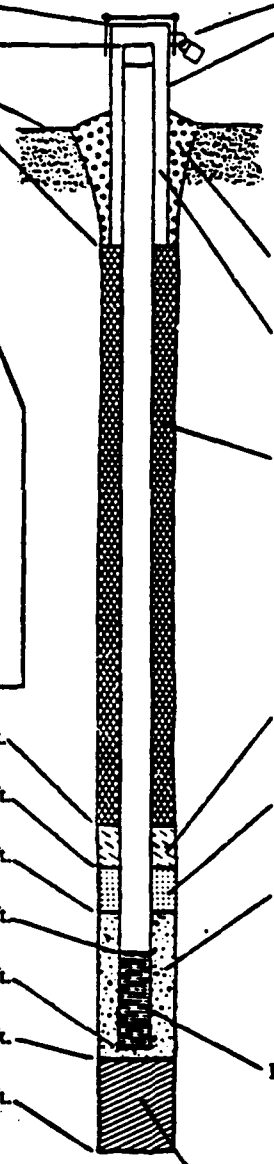

E. Bentonite seal, top 802.4 ft. MSL or 70.0 ft.
F. Fine sand, top NA ft. MSL or NA ft.
G. Filter pack, top 792.4 ft. MSL or 75.0 ft.
H. Well screen, top 792.4 ft. MSL or 80.0 ft.
I. Well screen, bottom 772.4 ft. MSL or 100.0 ft.
J. Filter pack, bottom 770.4 ft. MSL or 102.0 ft.
K. Borehole, bottom 770.4 ft. MSL or 102.0 ft.
L. Borehole, diameter 9.5 in.
M. O.D. well casing 4.50 in.
N. I.D. well casing 4.00 in.

1. Cap and lock? ☒ Yes ☐ No
2. Protective cover pipe:
a. Inside diameter: 6.0 in.
b. Length: 7.0 ft.
c. Material: Steel ☒ 04; Other ☐ __
d. Additional protection? ☒ Yes ☐ No
If yes, describe: 4 bucking posts
3. Surface seal: Bentonite ☐ 30; Concrete ☐ 01; Other ☒ __ Grout
4. Material between well casing and protective pipe: Bentonite ☐ 30; Annular space seal ☐; Other ☒ __ Grout
5. Annular space seal: Granular Bentonite ☐ 33
____ Lbs/gal mud weight . . . Bentonite-sand slurry ☐ 35
____ Lbs/gal mud weight . . . . . Bentonite slurry ☐ 31
5 % Bentonite . . . . . Bentonite-cement grout ☒ 50
____ gal ~~ft³~~ volume added for any of the above
How installed: Tremie ☐ 01; Tremie pumped ☐ 02; Gravity ☐ 08
6. Bentonite seal: Bentonite granules ☐ 33
☐ 1/4 in. ☐ 3/8 in. ☐ 1/2 in. Bentonite pellets ☒ 32
Other ☐ __
7. Fine sand material: Manufacturer, product name and mesh size NA
Volume added NA ft³
8. Filter pack material: Manufacturer, product name and mesh size Meramec Warrior, Specialty Filter Sands
Volume added ≈ 3.0 ft³
9. Well casing: Flush threaded PVC schedule 40 ☐ 23; Flush threaded PVC schedule 80 ☒ 24; Other ☐ __
10. Screen material: Schedule 80 PVC
Screen type: Factory cut ☒ 11; Continuous slot ☐ 01; Other ☐ __
Manufacturer Mono Flex
Slot size: 0.010 in.
Slotted length: 22.0 ft.
11. Backfill material (below filter pack): None ☐; Other ☒ Filter Sand

I hereby certify that the information on this form is true and correct to the best of my knowledge.

Signature	Firm
Paul L. Bol	E. C. Jordan

Please complete and return both sides of this form as required by chs. 144, 147 and 160, Wis. Stats., and ch. NR 141, Wis. Adm. Code. In accordance with ch. 144, Wis Stats., failure to file this form may result in a forfeiture of not less than $10, nor more than $5,000 for each day of violation. In accordance with ch. 147, Wis. Stats., failure to file this form may result in a forfeiture of not more than $10,000 for each day of violation.

State of Wisconsin
Department of Natural Resources

MONITORING WELL CONSTRUCTION
Form 4400-113A 8-89

Facility/Project Name: Badger Army Ammunition Plant	Grid Location: 4,805,592.7 m ft. N. ☐ S. / 26,061.9 m ft. E. ☐ W.	Well Name: FTM-89-01
Facility License, Permit or Monitoring Number:		Wis. Unique Well Number: DNR Well Numb:
Type of Well: Water Table Observation Well ☒ 11 / Piezometer ☐ 12	Section Location: ____ 1/4 of ____ 1/4 of Section ____, T ____ N, R ____ ☐ E ☐ W	Date Well Installed: 10/30/89 (m m d d y y)
Distance Well Is From Waste/Source Boundary: NA ft.	Location of Well Relative to Waste/Source: ☐ Upgradient ☐ Sidegradient ☐ Downgradient ☐ Not Known	Well Installed By: (Person's Name and Firm) Nadia Glucksberg/E.C. Jordan Co.
Is Well A Point of Enforcement Std. Application? ☐ Yes ☒ No		

A. Protective pipe, top elevation 824.96 ft. MSL
B. Well casing, top elevation 824.32 ft. MSL
C. Land surface elevation 822.4 ft. MSL
D. Surface seal, bottom ____ ft. MSL or ____ ft.

12. USCS classification of soil near screen:
☐ GP ☐ GM ☐ GC ☐ GW ☐ SW ☒ SP
☐ SM ☐ SC ☐ ML ☐ MH ☐ CL ☐ CH
☐ Bedrock

13. Sieve analysis attached? ☐ Yes ☒ No

14. Drilling method used: Rotary ☐ 50 / Hollow Stem Auger ☒ 41 / Other ☐ ____

15. Drilling fluid used: Water ☐ 02 / Air ☐ 01 / Drilling Mud ☐ 03 / None ☒ 99

16. Drilling additives used? ☐ Yes ☒ No
Describe ____

17. Source of water (attach analysis):
PW #2

E. Bentonite seal, top 803.1 ft. MSL or 69.3 ft.
F. Fine sand, top NA ft. MSL or NA ft.
G. Filter pack, top 798.4 ft. MSL or 94.0 ft.
H. Well screen, top 792.9 ft. MSL or 99.5 ft.
I. Well screen, bottom 772.9 ft. MSL or 99.5 ft.
J. Filter pack, bottom 772.4 ft. MSL or 100.0 ft.
K. Borehole, bottom 769.4 ft. MSL or 103.0 ft.
L. Borehole, diameter 9.5 in.
M. O.D. well casing 4.50 in.
N. I.D. well casing 4.02 in.

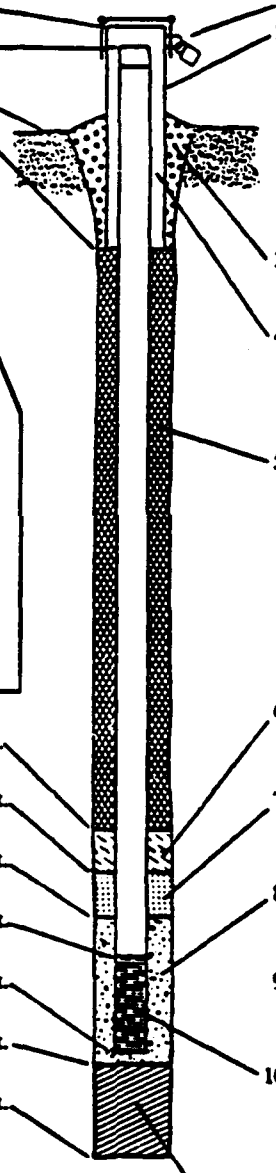

1. Cap and lock? ☒ Yes ☐ No
2. Protective cover pipe:
a. Inside diameter: 6.0 in
b. Length: 2.0 ft
c. Material: Steel ☒ 04 / Other ☐ ____
d. Additional protection? ☒ Yes ☐ No
If yes, describe: 4 bucking posts
3. Surface seal: Bentonite ☐ 30 / Concrete ☐ 0 / Other ☒ ____
Grout
4. Material between well casing and protective pipe: Bentonite ☐ 30 / Annular space seal ☐ / Other ☒ ____
Grout
5. Annular space seal: Granular Bentonite ☐ 33
____ Lbs/gal mud weight . . . Bentonite-sand slurry ☐
____ Lbs/gal mud weight . . . . . Bentonite slurry ☐
5 % Bentonite . . . . . Bentonite-cement grout ☒ 50
± 200 gal/ft³ volume added for any of the above
How installed: Tremie ☐ 0 / Tremie pumped ☒ 02 / Gravity ☐ 08
6. Bentonite seal: Bentonite granules ☐ 3
☐ 1/4 in. ☒ 3/8 in. ☐ 1/2 in. Bentonite pellets ☒ 32 / Other ☐ ____
7. Fine sand material: Manufacturer, product name and mesh size
NA
Volume added NA ft³
8. Filter pack material: Manufacturer, product name and mesh si
Morie Industries Specialty Filter Sands.
Volume added ≈ 29 ft³
9. Well casing: Flush threaded PVC schedule 40 ☐ 23 / Flush threaded PVC schedule 80 ☒ 24 / Other ☐ ____
10. Screen material: Schedule 80 PVC
Screen type: Factory cut ☒ 11 / Continuous slot ☐ 0 / Other ☐ ____
Manufacturer Monoflex
Slot size: 0.010 in
Slotted length: 20.0 ft
11. Backfill material (below filter pack): None ☐ / Other ☒
Filter Sand

I hereby certify that the information on this form is true and correct to the best of my knowledge.

Signature: [signature] Firm: E.C. Jordan Co.

Please complete and return both sides of this form as required by chs. 144, 147 and 160, Wis. Stats., and ch. NR 141, Wis. Adm. Code. In accordance with ch. 144, Wis Stats., failure to file this form may result in a forfeiture of not less than $10, nor more than $5,000 for each day of violation. In accordance with ch. 147, Wis. Stats., failure to file this form may result in a forfeiture of not more than $10,000 for each day of violation.

of Wisconsin
rtment of Natural Resources

Route to: Solid Waste ☐ Haz. Waste ☐ Wastewater ☐
Env. Response & Repair ☐ Underground Tanks ☐ Other ☐ _____

MONITORING WELL CONSTRUCTION
Form 4400-113A Rev. 4-90

Facility/Project Name OLIN CORP / BAAP	Local Grid Location of Well _____ ft. ☐N ☐S _____ ft. ☐E ☐W	Well Name PHM-9101
Facility License, Permit or Monitoring Number _____	Grid Origin Location Lat. _____ Long. _____ or St. Plane _____ ft. N, _____ ft. E.	Wis. Unique Well Number / DNR Well Number _____
Type of Well Water Table Observation Well ☒ 11 Piezometer ☐ 12	Section Location of Waste/Source ___ 1/4 of ___ 1/4 of Sec. ___ T. 10 N. R. 6 ☒E ☐W	Date Well Installed 06/06/91 (m m d d y y)
Distance Well Is From Waste/Source Boundary UNKNOWN ft.	Location of Well Relative to Waste/Source u ☐ Upgradient s ☐ Sidegradient d ☒ Downgradient n ☐ Not Known	Well Installed By: (Person's Name and Firm) JON WEEKS WTD
Is Well A Point of Enforcement Std. Application? ☐ Yes ☐ No		

A. Protective pipe, top elevation _____ ft. MSL
B. Well casing, top elevation _____ ft. MSL
C. Land surface elevation ___0.0 ft. MSL
D. Surface seal, bottom _____ ft. MSL or _5.0 ft.

12. USCS classification of soil near screen:
GP ☐ GM ☐ GC ☐ GW ☐ SW ☒ SP ☐
SM ☐ SC ☐ ML ☐ MH ☐ CL ☐ CH ☐
Bedrock ☐

13. Sieve analysis attached? ☐ Yes ☒ No

14. Drilling method used: Rotary ☐ 50
Hollow Stem Auger ☒ 41
Other ☐ ___
_____

15. Drilling fluid used: Water ☐ 02 Air ☐ 01
Drilling Mud ☐ 03 None ☒ 99

16. Drilling additives used? ☐ Yes ☒ No
Describe _____

17. Source of water (attach analysis):
_____

E. Bentonite seal, top _____ ft. MSL or _____ ft.
F. Fine sand, top _____ ft. MSL or _77.9 ft.
G. Filter pack, top _____ ft. MSL or _79.9 ft.
H. Screen joint, top _____ ft. MSL or _83.3 ft.
I. Well bottom _____ ft. MSL or _97.5 ft.
J. Filter pack, bottom _____ ft. MSL or _98.0 ft.
K. Borehole, bottom _____ ft. MSL or _98.0 ft.
L. Borehole, diameter 10.0 in.
M. O.D. well casing _4.50 in.
N. I.D. well casing _4.03 in.

1. Cap and lock? ☒ Yes ☐ No
2. Protective cover pipe:
a. Inside diameter: _6.0 in.
b. Length: _7.0 ft.
c. Material: Steel ☒ 04
_____ Other ☐ ___
d. Additional protection? ☐ Yes ☐ No
If yes, describe: BUMPER POSTS
3. Surface seal: Bentonite ☒ 30
Concrete ☐ 01
_____ Other ☐ ___
4. Material between well casing and protective pipe:
Bentonite ☒ 30
Annular space seal ☐ ___
_____ Other ☐ ___
5. Annular space seal: a. Granular Bentonite ☐ 33
b. _____ Lbs/gal mud weight . . . Bentonite-sand slurry ☐ 35
c. _____ Lbs/gal mud weight . . . . . Bentonite slurry ☒ 31
d. _____ % Bentonite . . . . . Bentonite-cement grout ☐ 50
e. 54 Ft³ volume added for any of the above
f. How installed: Tremie ☐ 01
Tremie pumped ☒ 02
Gravity ☐ 08
6. ~~Bentonite seal:~~ a. Bentonite granules ☒ 33
b. ☐1/4 in. ☐3/8 in. ☐1/2 in. Bentonite pellets ☐ 32
c. _____ Other ☐ ___
7. Fine sand material: Manufacturer, product name & mesh size
a. UNIMIN GRANUSIL #120
b. Volume added 1.0 ft³
8. Filter pack material: Manufacturer, product name and mesh size
a. RED FLINT SAND #30
b. Volume added 5.5 ft³
9. Well casing: Flush threaded PVC schedule 40 ☐ 23
Flush threaded PVC schedule 80 ☒ 24
_____ Other ☐ ___
10. Screen material: SCHEDULE 80 PVC
a. Screen type: Factory cut ☒ 11
Continuous slot ☐ 01
_____ Other ☐ ___
b. Manufacturer TIMCO
c. Slot size: 0.010 in.
d. Slotted length: 15.0 ft.
11. Backfill material (below filter pack): None ☒ 14
_____ Other ☐ ___

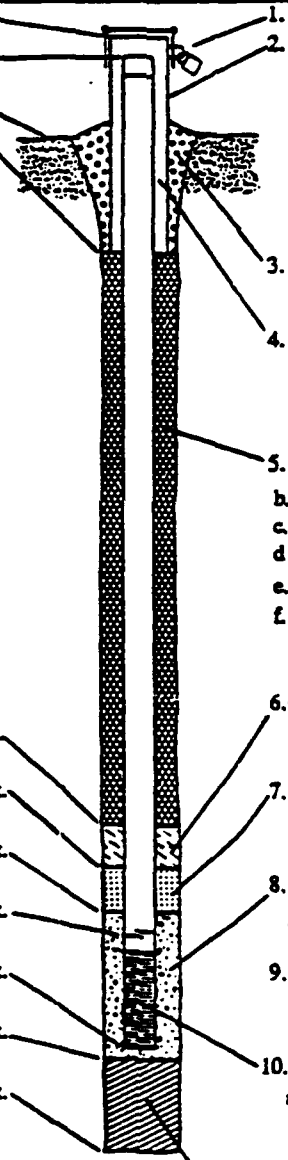

I hereby certify that the information on this form is true and correct to the best of my knowledge.

Signature	Firm
David J. Ohe	Eder Associates

Please complete both sides of this form and return to the appropriate DNR office listed at the top of this form as required by chs. 144, 147 and 160, Wis. Stats., and ch. NR 141, Wis. Ad. Code. In accordance with ch.144, Wis Stats., failure to file this form may result in a forfeiture of not less than $10, nor more than $5000 for each day of violation. In accordance with ch. 147, Wis. Stats., failure to file this form may result in a forfeiture of not more than $10,000 for each

ABB Environmental Services, Inc. MONITORING WELL CONSTRUC[redacted] FC

Facility/Project Name: BADGER AAP
Facility License, Permit or Monitoring Number:
Grid Location: ft. N. S. / ft. E. W.
Well Name: PBN-91-01C
Wis. Unique Well Number: DNR Well Nu
Type of Well: Water Table Observation Well 11 / Piezometer 12
Section Location: 1/4 of 1/4 of Section; T N, R E W
Date Well Installed: 10/25/91 (m m d d y y)
Distance Well Is From Waste/Source Boundary: NA ft.
Well Installed By: (Person's Name and Firm): A. Rodriguez - Driller; Layne Environmental
Is Well A Point of Enforcement Std. Application? Yes / No
Location of Well Relative to Waste/Source: Upgradient / Sidegradient / Downgradient / Not Known

A. Protective pipe, top elevation 830.17 ft. MSL
B. Well casing, top elevation 830.04 ft. MSL
C. Land surface elevation 828.0 ft. MSL
D. Surface seal, bottom ft. MSL or ft.

12. USCS classification of soil near screen:
GP GM GC GW SW SP
SM SC ML MH CL CH
Bedrock
13. Sieve analysis attached? Yes / No
14. Drilling method used: Rotary 50 / Hollow Stem Auger 41 / Other: Dual Wall Rev. Circ. Hammer
15. Drilling fluid used: Water 02 / Air 01 / Drilling Mud 03 / None 99
16. Drilling additives used? Yes / No
Describe
17. Source of water (attach analysis): Production Well #2 - BAAP

E. Bentonite seal, top 718.0 ft. MSL or 110.0 ft.
F. Fine sand, top ft. MSL or N/A ft.
G. Filter pack, top 798.0 ft. MSL or 130.0 ft.
H. Well screen, top 685.5 ft. MSL or 142.5 ft.
I. Well screen, bottom 675.5 ft. MSL or 152.5 ft.
J. Filter pack, bottom 675.5 ft. MSL or 152.5 ft.
K. Borehole, bottom 668.0 ft. MSL or 160.0 ft.
L. Borehole, diameter 9.0 in.
M. O.D. well casing 4.25 in.
N. I.D. well casing 3.75 in.

1. Cap and lock? Yes
2. Protective cover pipe:
a. Inside diameter: 06.[illegible]
b. Length: 06.[illegible]
c. Material: Steel / Other
d. Additional protection? Yes
If yes, describe: Bucking Post (4) Cement
3. Surface seal: Bentonite / Concrete / Other
4. Material between well casing and protective pipe: Bentonite / Annular space seal / Other: Cement - Bentonite Grout
5. Annular space seal: Granular Bento[illegible]
Lbs/gal mud weight ... Bentonite-sand slu[illegible]
Lbs/gal mud weight ..... Bentonite slurry
5 % Bentonite ..... Bentonite-cement grout
Ft³ volume added for any of the above
How installed: Tremie / Tremie pumped / Gravity
6. Bentonite seal: Bentonite granules / 1/4 in. 3/8 in. 1/2 in. Bentonite pellets / Other: Bentonite Slurry
7. Fine sand material: Manufacturer, product name and mesh s: None
Volume added ft³
8. Filter pack material: Manufacturer, product name and mesh: CSSI #4
Volume added ft³
9. Well casing: Flush threaded PVC schedule 40 / Flush threaded PVC schedule 80 / Other
10. Screen material: PVC SCH 80
Screen type: Factory cut / Continuous slot / Other
Manufacturer: MONOFLEX
Slot size: 0.010
Slotted length: 10.0
11. Backfill material (below filter pack): None / Other: Native Sands

I hereby certify that the information on this form is true and correct to the best of my knowledge.
Signature: Rod R. Rueter Firm: ABB-ES

ABB Environmental Services, Inc.

MONITORING WELL CONSTRUCTION FORM

Facility/Project Name: BAAP RI/FS

Facility License, Permit or Monitoring Number:

Grid Location: ft. ☐ N. ☐ S. / ft. ☐ E. ☐ W.

Well Name: PBW-91-02B

Wis. Unique Well Number: DNR Well Number:

Type of Well: Water Table Observation Well ☐ 11; Piezometer ☒ 12

Section Location: 1/4 of 1/4 of Section; T N, R ☐ E ☐ W

Date Well Installed: 02/28/91

Distance Well is From Waste/Source Boundary: NA ft.

Well Installed By: (Person's Name and Firm): Art Radziewicz, Layne Environmental

Is Well A Point of Enforcement Std. Application? ☐ Yes ☒ No

Location of Well Relative to Waste/Source: ☐ Upgradient ☐ Sidegradient ☒ Downgradient ☐ Not Known

A. Protective pipe, top elevation: 821.36 ft. MSL

B. Well casing, top elevation: 821.20 ft. MSL

C. Land surface elevation: 819.0 ft. MSL

D. Surface seal, bottom: ft. MSL or ft.

12. USCS classification of soil near screen:
☒ GP ☐ GM ☐ GC ☐ GW ☐ SW ☒ SP
☐ SM ☐ SC ☐ ML ☐ MH ☐ CL ☐ CH
☐ Bedrock

13. Sieve analysis attached? ☐ Yes ☒ No

14. Drilling method used: Rotary ☐ 50; Hollow Stem Auger ☐ 41; Other ☒ Dual wall reverse circulation

15. Drilling fluid used: Water ☒ 02; Air ☒ 01; Drilling Mud ☐ 03; None ☐ 99

16. Drilling additives used? ☐ Yes ☒ No

Describe:

17. Source of water (attach analysis): PW #2

E. Bentonite seal, top: 741.0 ft. MSL or 78.0 ft.

F. Fine sand, top: ft. MSL or ft.

G. Filter pack, top: 720.9 ft. MSL or 98.1 ft.

H. Well screen, top: 714.0 ft. MSL or 102.0 ft.

I. Well screen, bottom: 704.0 ft. MSL or 112.0 ft.

J. Filter pack, bottom: 704.0 ft. MSL or 112.0 ft.

K. Borehole, bottom: 704.0 ft. MSL or 112.0 ft.

L. Borehole, diameter: 10 in.

M. O.D. well casing: 4.25 in.

N. I.D. well casing: 3.75 in.

1. Cap and lock? ☒ Yes ☐ No

2. Protective cover pipe:
a. Inside diameter: 6.0 in.
b. Length: 6.5 ft.
c. Material: Steel ☒ 04; Other ☐
d. Additional protection? ☒ Yes ☐ No
If yes, describe: Gravel pad + Bollards

3. Surface seal: Bentonite ☐ 30; Concrete ☒ 01; Other ☐

4. Material between well casing and protective pipe: Bentonite ☐ 30; Annular space seal ☒; Other ☐

5. Annular space seal: Granular Bentonite ☐ 33
___ Lbs/gal mud weight ... Bentonite-sand slurry ☐ 35
___ Lbs/gal mud weight ..... Bentonite slurry ☐ 31
5 % Bentonite .... Bentonite-cement grout ☒ 50
42 Ft³ volume added for any of the above
How installed: Tremie ☐ 01; Tremie pumped ☐ 02; Gravity ☒ 08

6. Bentonite seal: Bentonite granules ☐ 33
☐ 1/4 in. ☐ 3/8 in. ☐ 1/2 in. Bentonite pellets ☐ 32
20' Bentonite Slurry Other ☐

7. Fine sand material: Manufacturer, product name and mesh size: None
Volume added: ft³

8. Filter pack material: Manufacturer, product name and mesh size: CSS1 Silica Sand
Volume added: ft³

9. Well casing: Flush threaded PVC schedule 40 ☐ 23; Flush threaded PVC schedule 80 ☒ 24; Other ☐

10. Screen material: PVC Schedule 80
Screen type: Factory cut ☒ 11; Continuous slot ☐ 01; Other ☐
Manufacturer: MonoFlex, Inc.
Slot size: 0.010 in.
Slotted length: 10.0 ft.

11. Backfill material (below filter pack): None ☒; Other ☐

I hereby certify that the information on this form is true and correct to the best of my knowledge.

Signature: Paul Rudat Firm: ABB-ES

ABB Environmental Services, Inc. **MONITORING WELL CONSTRUC[redacted] FOR**

Facility/Project Name: BAAP RI/FS	Grid Location: ____ ft. ☐ N. ☐ S. ____ ft. ☐ E. ☐ W.	Well Name: PBW-91-02C
Facility License, Permit or Monitoring Number:		Wis. Unique Well Number: DNR Well Nu
Type of Well: Water Table Observation Well ☐ 11; Piezometer ☒ 12	Section Location: ____ 1/4 of ____ 1/4 of Section ____, T ____ N, R ____ ☐ E ☐ W	Date Well Installed: 09/32/91 (m m / d d / y y)
Distance Well is From Waste/Source Boundary: NA ft.	Location of Well Relative to Waste/Source: ☐ Upgradient ☐ Sidegradient ☒ Downgradient ☐ Not Known	Well Installed By: (Person's Name and Firm): Art Robinson; Layne Environmental
Is Well A Point of Enforcement Std. Application? ☐ Yes ☒ No		

A. Protective pipe, top elevation 822.09 ft. MSL
B. Well casing, top elevation 821.92 ft. MSL
C. Land surface elevation 819.9 ft. MSL
D. Surface seal, bottom ____ ft. MSL or ____ ft.

12. USCS classification of soil near screen:
☐ GP ☐ GM ☐ GC ☐ GW ☐ SW ☒ SP
☐ SM ☐ SC ☐ ML ☐ MH ☐ CL ☐ CH
☐ Bedrock

13. Sieve analysis attached? ☐ Yes ☒ No

14. Drilling method used: Rotary ☐ 50; Hollow Stem Auger ☐ 41; Dual wall Reverse Circulation Other ☒

15. Drilling fluid used: Water ☒ 02; Air ☒ 01; Drilling Mud ☐ 03; None ☐ 99

16. Drilling additives used? ☐ Yes ☒ No
Describe ____

17. Source of water (attach analysis): PW #2

E. Bentonite seal, top 709.9 ft. MSL or 110.0 ft.
F. Fine sand, top ____ ft. MSL or ____ ft.
G. Filter pack, top 688.9 ft. MSL or 131.0 ft.
H. Well screen, top 668.6 ft. MSL or 151.3 ft.
I. Well screen, bottom 658.6 ft. MSL or 161.3 ft.
J. Filter pack, bottom 658.6 ft. MSL or 161.3 ft.
K. Borehole, bottom 658.6 ft. MSL or 161.3 ft.
L. Borehole, diameter 9.0 in.
M. O.D. well casing 4.25 in.
N. I.D. well casing ~~3.0~~ 3.75 in.

1. Cap and lock? ☒ Yes ☐
2. Protective cover pipe:
a. Inside diameter: 6.0 in.
b. Length: 6. ft.
c. Material: Steel ☒; Other ☐
d. Additional protection? ☒ Yes ☐
If yes, describe: General Pad & Bumper post
3. Surface seal: Bentonite ☐; Concrete ☒; Other ☐
4. Material between well casing and protective pipe: Bentonite ☐; Annular space seal ☒; Other ☐
5. Annular space seal: Granular Bentonite ☐; ____ Lbs/gal mud weight ... Bentonite-sand slurry ☐; ____ Lbs/gal mud weight ..... Bentonite slurry ☐; 5 % Bentonite ..... Bentonite-cement grout ☒; 64 Ft³ volume added for any of the above
How installed: Tremie ☐; Tremie pumped ☐; Gravity ☒
6. Bentonite seal: Bentonite granules ☐; ☐1/4 in. ☐3/8 in. ☐1/2 in. Bentonite pellets ☐; 20' Bentonite Slurry Other ☒
7. Fine sand material: Manufacturer, product name and mesh: None
Volume added ____ ft³
8. Filter pack material: Manufacturer, product name and mesh size: CSSI Silica Sand
Volume added ____ ft³
9. Well casing: Flush threaded PVC schedule 40 ☐; Flush threaded PVC schedule 80 ☒; Other ☐
10. Screen material: PVC schedule 80
Screen type: Factory cut ☒; Continuous slot ☐; Other ☐
Manufacturer: MonoFlex, Inc.
Slot size: 0.010
Slotted length: 20.0
11. Backfill material (below filter pack): None ☐; Other ☐

I hereby certify that the information on this form is true and correct to the best of my knowledge.

Signature: Rod Rhodes Firm: ABB-ES

ABB Environmental Services, Inc. **MONITORING WELL CONSTRUCTION FORM**

Facility/Project Name: BAAP	Grid Location: ____ ft. ☐ N. ☐ S. ____ ft. ☐ E. ☐ W.	Well Name: PBU-91-033
Facility License, Permit or Monitoring Number: _____		Wis. Unique Well Number: _____ DNR Well Number: _____
Type of Well: Water Table Observation Well ☐ 11; Piezometer ☒ 12	Section Location: ____ 1/4 of ____ 1/4 of Section ____, T ____ N, R ____ ☐ E ☐ W	Date Well Installed: 09/26/91 (mm/dd/yy)
Distance Well Is From Waste/Source Boundary: NA ft.	Location of Well Relative to Waste/Source: ☐ Upgradient ☐ Sidegradient ☒ Downgradient ☐ Not Known	Well Installed By: (Person's Name and Firm) Art Rodriguez, Laura Environmental
Is Well A Point of Enforcement Std. Application? ☐ Yes ☒ No		

A. Protective pipe, top elevation 814.89 ft. MSL

B. Well casing, top elevation 814.72 ft. MSL

C. Land surface elevation 812.7 ft. MSL

D. Surface seal, bottom ____ ft. MSL or ____ ft.

12. USCS classification of soil near screen:
☐ GP ☒ GM ☐ GC ☐ GW ☐ SW ☒ SP
☐ SM ☐ SC ☐ ML ☐ MH ☐ CL ☐ CH
☐ Bedrock

13. Sieve analysis attached? ☐ Yes ☒ No

14. Drilling method used: Rotary ☐ 50; Hollow Stem Auger ☐ 41; Dual Wall Reverse Circulation Other ☒

15. Drilling fluid used: Water ☒ 02; Air ☒ 01; Drilling Mud ☐ 03; None ☐ 99

16. Drilling additives used? ☐ Yes ☒ No

Describe _____

17. Source of water (attach analysis): PW # 2

E. Bentonite seal, top 744.7 ft. MSL or 68 ft.

F. Fine sand, top ____ ft. MSL or ____ ft.

G. Filter pack, top 724.7 ft. MSL or 88 ft.

H. Well screen, top 716.7 ft. MSL or 96 ft.

I. Well screen, bottom 706.7 ft. MSL or 106.1 ft.

J. Filter pack, bottom 706.7 ft. MSL or 106.1 ft.

K. Borehole, bottom 706.7 ft. MSL or 106.1 ft.

L. Borehole, diameter 9.0 in.

M. O.D. well casing 4.25 in.

N. I.D. well casing ~~4.0~~ 3.75 in.

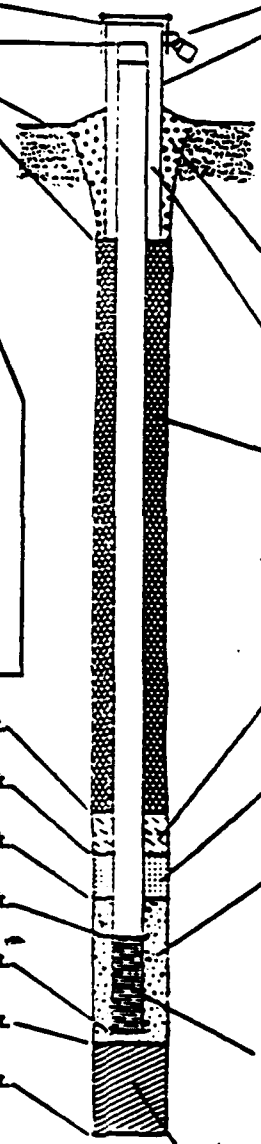

1. Cap and lock? ☒ Yes ☐ No

2. Protective cover pipe:
a. Inside diameter: 6.0 in.
b. Length: 6.0 ft.
c. Material: Steel ☒ 04; Other ☐ __
d. Additional protection? ☒ Yes ☒ No
If yes, describe: 4 Bucking Post GRAVEL PAD

3. Surface seal: Bentonite ☐ 30; Concrete ☐ 01; Other ☐ __

4. Material between well casing and protective pipe: Bentonite ☐ 30; Annular space seal ☒; Other ☐ __

5. Annular space seal: Granular Bentonite ☐ 33
____ Lbs/gal mud weight . . . Bentonite-sand slurry ☐ 35
____ Lbs/gal mud weight . . . . . Bentonite slurry ☐ 31
5 % Bentonite . . . . . Bentonite-cement grout ☒ 50
324 ~~97~~ Ft³ volume added for any of the above
How installed: Tremie ☐ 01; Tremie pumped ☐ 02; Gravity ☒ 08

6. Bentonite seal: Bentonite granules ☐ 33
☐ 1/4 in. ☐ 3/8 in. ☐ 1/2 in. Bentonite pellets ☐ 32
20' Bentonite Slurry Other ☐ __

7. Fine sand material: Manufacturer, product name and mesh size: none
Volume added ____ ft³

8. Filter pack material: Manufacturer, product name and mesh size: CSSI Silica Sand
Volume added ____ ft³

9. Well casing: Flush threaded PVC schedule 40 ☐ 23; Flush threaded PVC schedule 80 ☒ 24; Other ☐ __

10. Screen material: PVC Schedule 80
Screen type: Factory cut ☒ 11; Continuous slot ☐ 01; Other ☐ __
Manufacturer: Monoflex, Inc.
Slot size: 0.010 in.
Slotted length: 10.0 ft.

11. Backfill material (below filter pack): None ☒; Other ☐

I hereby certify that the information on this form is true and correct to the best of my knowledge.

Signature	Firm
[signature]	ABB-ES

ABB Environmental Services, Inc. MONITORING WELL CONSTRUC[illegible] FOR[illegible]

Facility/Project Name: BAAP	Grid Location: ____ ft. ☐ N. ☐ S. ____ ft. ☐ E. ☐ W.	Well Name: PBN-91-036
Facility License, Permit or Monitoring Number: _____		Wis. Unique Well Number: _____ DNR Well Nu[illegible]
Type of Well: Water Table Observation Well ☐ 11; Piezometer ☒ 12	Section Location: ____ 1/4 of ____ 1/4 of Section ____ T ____ N, R ____ ☐ E ☐ W	Date Well Installed: 09/29/91 (m m / d d / y y)
Distance Well is From Waste/Source Boundary: NA ft.		Well Installed By: (Person's Name and Firm) Art Rodriguez, Layne Environmental
Is Well A Point of Enforcement Std. Application? ☐ Yes ☒ No	Location of Well Relative to Waste/Source: ☐ Upgradient ☐ Sidegradient ☒ Downgradient ☐ Not Known	

A. Protective pipe, top elevation 814.50 ft. MSL

B. Well casing, top elevation 814.37 ft. MSL

C. Land surface elevation 812.3 ft. MSL

D. Surface seal, bottom — ft. MSL or — ft.

12. USCS classification of soil near screen:
☐ GP ☐ GM ☐ GC ☐ GW ☐ SW ☒ SP
☐ SM ☐ SC ☐ ML ☐ MH ☐ CL ☐ CH
☐ Bedrock

13. Sieve analysis attached? ☐ Yes ☒ No

14. Drilling method used: Rotary ☐ 50; Hollow Stem Auger ☐ 41; Dual Wall Reverse Circulation Other ☒

15. Drilling fluid used: Water ☒ 02; Air ☒ 01; Drilling Mud ☐ 03; None ☐ 99

16. Drilling additives used? ☐ Yes ☒ No

Describe _____

17. Source of water (attach analysis): PW #2

E. Bentonite seal, top 704.3 ft. MSL or 108.0 ft.

F. Fine sand, top — ft. MSL or — ft.

G. Filter pack, top 684.2 ft. MSL or 128.1 ft.

H. Well screen, top 670.0 ft. MSL or 142.3 ft.

I. Well screen, bottom 660.0 ft. MSL or 152.3 ft.

J. Filter pack, bottom 660.0 ft. MSL or 152.3 ft.

K. Borehole, bottom ~~[illegible]~~ 660.0 ft. MSL or 152.3 ft.

L. Borehole, diameter 9.0 in.

M. O.D. well casing 4.25 in.

N. I.D. well casing ~~[illegible]~~ 3.75 in.

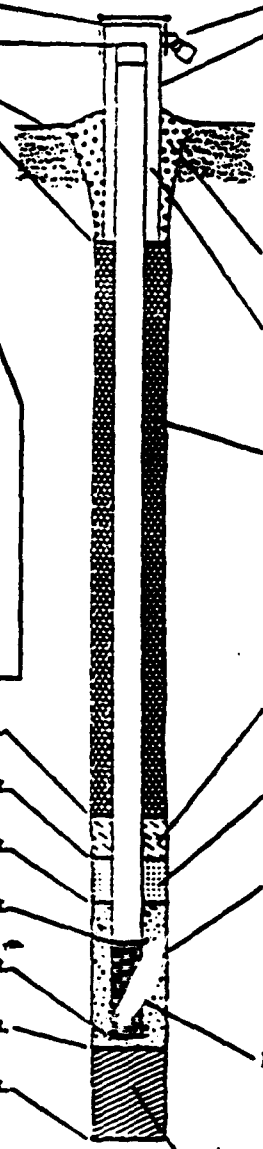

1. Cap and lock? ☒ Yes ☐

2. Protective cover pipe:
a. Inside diameter: 6.0
b. Length: 6.0
c. Material: Steel ☒ 04; Other ☐
d. Additional protection? ☐ Yes ☐
If yes, describe: _____

3. Surface seal: Bentonite ☐ 30; Concrete ☐; Other ☐

4. Material between well casing and protective pipe: Bentonite ☐ 30; Annular space seal ☒; Other ☐

5. Annular space seal: Granular Benton[illegible] 33
____ Lbs/gal mud weight . . . Bentonite-sand slu[illegible]
____ Lbs/gal mud weight . . . . . Bentonite slurry ☐
5 % Bentonite . . . . . Bentonite-cement grout ☒ 50
64 Ft^3 volume added for any of the above
How installed: Tremie ☐; Tremie pumped ☐ 0[illegible]; Gravity ☒ 08

6. Bentonite seal: Bentonite granules ☐ 3[illegible]
☐ 1/4 in. ☐ 3/8 in. ☐ 1/2 in. Bentonite pellets ☐ 3[illegible]
20' Bentonite Slurry Other ☒

7. Fine sand material: Manufacturer, product name and mesh s[illegible]
None
Volume added _____ ft^3

8. Filter pack material: Manufacturer, product name and mesh size
CSSI Silica Sand
Volume added _____ ft^3

9. Well casing: Flush threaded PVC schedule 40 ☐ 23; Flush threaded PVC schedule 80 ☒ 2[illegible]; Other ☐

10. Screen material: PVC schedule 80
Screen type: Factory cut ☐ 1[illegible]; Continuous slot ☐ 0[illegible]; Other ☐
Manufacturer Monoflex, Inc
Slot size: 0.010
Slotted length: 10.0

11. Backfill material (below filter pack): None ☐; Other ☐

I hereby certify that the information on this form is true and correct to the best of my knowledge.

Signature: Rod R. Rust[illegible] Firm: ABB-ES

State of Wisconsin
Department of Natural Resources

MONITORING WELL CONSTRUCTION
Form 4400-113A 8-89

Facility/Project Name: Badger Army Ammunition Plant
Facility License, Permit or Monitoring Number:

Grid Location: ft. N. S. / ft. E. W.

Well Name: PBM-90-01D
Wis. Unique Well Number: DNR Well Number:

Type of Well: Water Table Observation Well 11 / Piezometer 12
Section Location: 1/4 of 1/4 of Section
Date Well Installed: 08/25/90 (m m / d d / y y)
Distance Well Is From Waste/Source Boundary: ft.
T N. R E W
Well Installed By: (Person's Name and Firm) J. Buss → E C Jordan
Is Well A Point of Enforcement Std. Application? Yes / No
Location of Well Relative to Waste/Source: Upgradient / Sidegradient / Downgradient / Not Known

A. Protective pipe, top elevation ft. MSL
B. Well casing, top elevation ft. MSL
C. Land surface elevation ft. MSL
D. Surface seal, bottom ft. MSL or ft.

12. USCS classification of soil near screen:
GP GM GC GW SW SP
SM SC ML MH CL CH
Bedrock

13. Sieve analysis attached? Yes / No

14. Drilling method used: Rotary 50 / Hollow Stem Auger 41 / Dual Wall Reverse Circulation / Other

15. Drilling fluid used: Water 02 / Air 01 / Drilling Mud 03 / None 99

16. Drilling additives used? Yes / No
Describe

17. Source of water (attach analysis):
Production Well #2

E. Bentonite seal, top ft. MSL or 180.0 ft.
F. Fine sand, top ft. MSL or ft.
G. Filter pack, top ft. MSL or 185.0 ft.
H. Well screen, top ft. MSL or 200.5 ft.
I. Well screen, bottom ft. MSL or 210.5 ft.
J. Filter pack, bottom ft. MSL or 210.5 ft.
K. Borehole, bottom ft. MSL or 217.0 ft.
L. Borehole, diameter 9.5 in.
M. O.D. well casing 4.5 in.
N. I.D. well casing 4.0 in.

1. Cap and lock? Yes / No
2. Protective cover pipe:
a. Inside diameter: in.
b. Length: ft.
c. Material: Steel 04 / Other
d. Additional protection? Yes / No
If yes, describe: 4 bucking Rods
3. Surface seal: Bentonite 30 / Concrete 01 / Grout / Other
4. Material between well casing and protective pipe: Bentonite 30 / Annular space seal / Bentonite/cement Grout / Other
5. Annular space seal: Granular Bentonite 33 / Lbs/gal mud weight ... Bentonite-sand slurry 35 / Lbs/gal mud weight ..... Bentonite slurry 31 / 5 % Bentonite ..... Bentonite-cement grout 50 / ≈ 540 gal ft³ volume added for any of the above
How installed: Tremie 01 / Tremie pumped 02 / Gravity 08
6. Bentonite seal: Bentonite granules 33 / 1/4 in. 3/8 in. 1/2 in. Bentonite pellets 32 / Bentonite Slurry / Other
7. Fine sand material: Manufacturer, product name and mesh size
Volume added ft³
8. Filter pack material: Manufacturer, product name and mesh size
10-20 Colorado Silica Sand Colorado Silica Sand Co.
Volume added ft³
9. Well casing: Flush threaded PVC schedule 40 23 / Flush threaded PVC schedule 80 24 / Other
10. Screen material: Schedule 80 PVC
Screen type: Factory cut 11 / Continuous slot 01 / Other
Manufacturer Drilling Equipment Supply Inc
Slot size: 0.010 in.
Slotted length: 10.0 ft.
11. Backfill material (below filter pack): None / Native cave / Other

I hereby certify that the information on this form is true and correct to the best of my knowledge.

Signature: [signature] Firm: E C Jordan

Please complete and return both sides of this form as required by chs. 144, 147 and 160, Wis. Stats., and ch. NR 141, Wis. Adm. Code. In accordance with ch. 144, Wis. Stats., failure to file this form may result in a forfeiture of not less than $10, nor more than $5,000 for each day of violation. In accordance

State of Wisconsin
Department of Natural Resources

MONITORING WELL CONSTRUCTION
Form 4400-113A 8

Facility/Project Name	Grid Location	Well Name
Badger Army Ammunition Plant	____ ft. ☐ N. ☐ S.	ABM-90-02D
Facility License, Permit or Monitoring Number	____ ft. ☐ E. ☐ W.	Wis. Unique Well Number / DNR Well Number
Type of Well: Water Table Observation Well ☐ 11; Piezometer ☒ 12	Section Location: ____ 1/4 of ____ 1/4 of Section ____; T ____ N, R ____ ☐ E ☐ W	Date Well Installed: 08/15/90 (m m d d y y)
Distance Well Is From Waste/Source Boundary: ____ ft.	Location of Well Relative to Waste/Source: ☐ Upgradient ☐ Sidegradient ☒ Downgradient ☐ Not Known	Well Installed By: (Person's Name and Firm): Jim Buss - F C Jordan
Is Well A Point of Enforcement Std. Application? ☐ Yes ☐ No		

A. Protective pipe, top elevation ____ ft. MSL
B. Well casing, top elevation ____ ft. MSL
C. Land surface elevation ____ ft. MSL
D. Surface seal, bottom ____ ft. MSL or ____ ft.

12. USCS classification of soil near screen:
☒ GP ☐ GM ☐ GC ☐ GW ☐ SW ☐ SP
☐ SM ☐ SC ☐ ML ☐ MH ☐ CL ☐ CH
☐ Bedrock

13. Sieve analysis attached? ☐ Yes ☐ No

14. Drilling method used: Rotary ☐ 50; Hollow Stem Auger ☐ 41; Other ☒
Dual Wall

15. Drilling fluid used: Water ☐ 02; Air ☒ 01; Drilling Mud ☐ 03; None ☐ 99

16. Drilling additives used? ☐ Yes ☒ No

Describe ____

17. Source of water (attach analysis):
PW #2

E. Bentonite seal, top ____ ft. MSL or 124.0 ft.
F. Fine sand, top ____ ft. MSL or ____ ft.
G. Filter pack, top ____ ft. MSL or 122.0 ft.
H. Well screen, top ____ ft. MSL or 199.5 ft.
I. Well screen, bottom ____ ft. MSL or 209.5 ft.
or
I. Filter pack, bottom ____ ft. MSL or 209.5 ft.
J. Borehole, bottom ____ ft. MSL or 214.0 ft.
K. Borehole, diameter 9.5 in.
L. O.D. well casing 4.5 in.
M. I.D. well casing 4.0 in.

1. Cap and lock? ☒ Yes ☐ N
2. Protective cover pipe:
a. Inside diameter: ____ in.
b. Length: ____
c. Material: Steel ☒ 04; Other ☐ ____
d. Additional protection? ☒ Yes ☐ N
If yes, describe: 4 Bucking Posts
3. Surface seal: Bentonite ☐ 30; Concrete ☐ 1; Other ☒ ____
Grout
4. Material between well casing and protective pipe: Bentonite ☐ 30; Annular space seal ☐; Other ☒ ____
Grout
5. Annular space seal: Granular Bentonite 33
____ Lbs/gal mud weight . . . Bentonite-sand slurry 3
____ Lbs/gal mud weight . . . . . Bentonite slurry ☐ 2.
5 % Bentonite . . . . Bentonite-cement grout ☒ 50
≈ 50 gal ft³ volume added for any of the above
How installed: Tremie ☐ 0; Tremie pumped ☒ 02; Gravity ☐ 0
6. Bentonite seal: Bentonite granules ☐ 3; ☐1/4 in. ☐3/8 in. ☐1/2 in. Bentonite pellets ☐ 32
Bentonite Slurry Other ☒ ____
7. Fine sand material: Manufacturer, product name and mesh si
Volume added ____ ft³
8. Filter pack material: Manufacturer, product name and mesh s
Colorado Silica Sand #0, Colorado Silica Sand 10-2
Volume added ____ ft³
9. Well casing: Flush threaded PVC schedule 40 ☐ 2; Flush threaded PVC schedule 80 ☐ 2; Other ☐ ____
10. Screen material: Schedule 40 PVC
Screen type: Factory cut ☒ 1; Continuous slot ☐ 0; Other ☐ ____
Manufacturer Drilling Equipment Supply, Inc
Slot size: 0.010 in.
Slotted length: ____ ft.
11. Backfill material (below filter pack): None ☐; Other ☒
Native caved

I hereby certify that the information on this form is true and correct to the best of my knowledge.

Signature ____ Firm ____

Please complete and return both sides of this form as required by chs. 144, 147 and 160, Wis. Stats., and ch. NR 141, Wis. Adm. Code. In accordance with s. 144, Wis Stats., failure to file this form may result in a forfeiture of not less than $10, nor more than $5,000 for each day of violation. In accordance

State of Wisconsin
Department of Natural Resources

MONITORING WELL CONSTRUCTION
Form 4400-113A 8-89

Facility/Project Name: Badger Army Ammunition Plant
Facility License, Permit or Monitoring Number:

Grid Location: ft. ☐ N. ☐ S. / ft. ☐ E. ☐ W.

Well Name: PBM-90-03D
Wis. Unique Well Number: DNR Well Number:

Type of Well: Water Table Observation Well ☐ 11 / Piezometer ☒ 12

Section Location: ____ 1/4 of ____ 1/4 of Section ____, T ____ N, R ____ ☐ E ☐ W

Date Well Installed: 05/12/90

Distance Well Is From Waste/Source Boundary: ft.

Well Installed By: (Person's Name and Firm): Jim Bass - E. C Jordan

Is Well A Point of Enforcement Std. Application? ☐ Yes ☐ No

Location of Well Relative to Waste/Source: ☐ Upgradient ☐ Sidegradient ☒ Downgradient ☐ Not Known

A. Protective pipe, top elevation ____ ft. MSL
B. Well casing, top elevation ____ ft. MSL
C. Land surface elevation ____ ft. MSL
D. Surface seal, bottom ____ ft. MSL or ____ ft.

12. USCS classification of soil near screen:
☒ GP ☐ GM ☐ GC ☐ GW ☐ SW ☐ SP
☐ SM ☐ SC ☐ ML ☐ MH ☐ CL ☐ CH
☐ Bedrock

13. Sieve analysis attached? ☐ Yes ☐ No

14. Drilling method used: Rotary ☐ 50 / Hollow Stem Auger ☐ 41 / Other ☒
Dual Wall

15. Drilling fluid used: Water ☐ 02 / Air ☒ 01 / Drilling Mud ☐ 03 / None ☐ 99

16. Drilling additives used? ☐ Yes ☒ No
Describe

17. Source of water (attach analysis):
PW #2

E. Bentonite seal, top ____ ft. MSL or 169.0 ft.
F. Fine sand, top ____ ft. MSL or ____ ft.
G. Filter pack, top ____ ft. MSL or 179.0 ft.
I. Well screen, top ____ ft. MSL or 189.5 ft.
Well screen, bottom ____ ft. MSL or 199.5 ft.
J. Filter pack, bottom ____ ft. MSL or 200.0 ft.
K. Borehole, bottom ____ ft. MSL or 205.0 ft.
L. Borehole, diameter 9.5 in.
M. O.D. well casing 4.5 in.
N. I.D. well casing 4.0 in.

1. Cap and lock? ☐ Yes ☐ No
2. Protective cover pipe:
a. Inside diameter: ___ in.
b. Length: ___ ft.
c. Material: Steel ☒ 04 / Other ☐ ___
d. Additional protection? ☒ Yes ☐ No
If yes, describe: 4 bucking Posts
3. Surface seal: Bentonite ☐ 30 / Concrete ☐ 01 / Grout / Other ☒ ___
4. Material between well casing and protective pipe: Bentonite ☐ 30 / Annular space seal ☐ / Grout / Other ☒ ___
5. Annular space seal: Granular Bentonite ☐ 33 / ____ Lbs/gal mud weight ... Bentonite-sand slurry ☐ 35 / ____ Lbs/gal mud weight ..... Bentonite slurry ☐ 31 / 5 % Bentonite .... Bentonite-cement grout ☒ 50 / ≈ 465 gal ft³ volume added for any of the above
How installed: Tremie ☐ 01 / Tremie pumped ☒ 02 / Gravity ☐ 03
6. Bentonite seal: Bentonite granules ☐ 33 / ☐ 1/4 in. ☐ 3/8 in. ☐ 1/2 in. Bentonite pellets ☐ 32 / bentonite slurry / Other ☒ ___
7. Fine sand material: Manufacturer, product name and mesh size
Volume added ____ ft³
8. Filter pack material: Manufacturer, product name and mesh size
Colorado Silica Sand Co, Colorado Silica Sand - 10-20
Volume added ____ ft³
9. Well casing: Flush threaded PVC schedule 40 ☐ 23 / Flush threaded PVC schedule 80 ☒ 24 / Other ☐ ___
10. Screen material: Schedule 80 PVC
Screen type: Factory cut ☒ 11 / Continuous slot ☐ 01 / Other ☐ ___
Manufacturer: Drilling Equipment Supply Inc
Slot size: 0.010 in.
Slotted length: 10.0 ft.
11. Backfill material (below filter pack): None ☐ / Native Cave / Other ☒

I hereby certify that the information on this form is true and correct to the best of my knowledge.

Signature: [signature] Firm: E. C Jordan

Please complete and return both sides of this form as required by chs. 144, 147 and 160, Wis. Stats., and ch. NR 141, Wis. Adm. Code. In accordance with

State of Wisconsin
Department of Natural Resources

MONITORING WELL CONSTRUCTION
Form 4400-113A 8-89

Facility/Project Name: Badger Army Ammunition Plant	Grid Location: ____ ft. ☐ N. ☐ S. ____ ft. ☐ E. ☐ W.	Well Name: PBN-90-04B
Facility License, Permit or Monitoring Number:		Wis. Unique Well Number / DNR Well Number
Type of Well: Water Table Observation Well ☐ 11; Piezometer ☒ 12	Section Location: ____ 1/4 of ____ 1/4 of Section ____, T ____ N, R ____ ☐ E ☐ W	Date Well Installed: 05/06/90 (m m d d y y)
Distance Well Is From Waste/Source Boundary: ____ ft.	Location of Well Relative to Waste/Source: ☐ Upgradient ☐ Sidegradient ☒ Downgradient ☐ Not Known	Well Installed By: (Person's Name and Firm) Paul Bolmer - E C Jordan
Is Well A Point of Enforcement Std. Application? ☐ Yes ☐ No		

A. Protective pipe, top elevation _____ ft. MSL
B. Well casing, top elevation _____ ft. MSL
C. Land surface elevation _____ ft. MSL
D. Surface seal, bottom _____ ft. MSL or _____ ft.

12. USCS classification of soil near screen:
☒ GP ☐ GM ☐ GC ☐ GW ☐ SW ☐ SP
☐ SM ☐ SC ☐ ML ☐ MH ☐ CL ☐ CH
☐ Bedrock

13. Sieve analysis attached? ☐ Yes ☐ No

14. Drilling method used: Rotary ☐ 50; Hollow Stem Auger ☐ 41; Other ☐ ____
Dual Wall

15. Drilling fluid used: Water ☐ 02; Air ☒ 01; Drilling Mud ☐ 03; None ☐ 99

16. Drilling additives used? ☐ Yes ☒ No
Describe _____

17. Source of water (attach analysis):
PW #2

E. Bentonite seal, top _____ ft. MSL or 92.8 ft.
F. Fine sand, top _____ ft. MSL or _____ ft.
G. Filter pack, top _____ ft. MSL or 102.8 ft.
H. Well screen, top _____ ft. MSL or 110.0 ft.
I. Well screen, bottom _____ ft. MSL or 130.0 ft.
J. Filter pack, bottom _____ ft. MSL or 130.5 ft.
K. Borehole, bottom _____ ft. MSL or 130.0 ft.
L. Borehole, diameter 9.5 in.
M. O.D. well casing 4.5 in.
N. I.D. well casing 4.0 in.

1. Cap and lock? ☒ Yes ☐
2. Protective cover pipe:
a. Inside diameter: ____ in.
b. Length: ____ ft.
c. Material: Steel ☒ 04; Other ☐ ____
d. Additional protection? ☒ Yes ☐
If yes, describe: 4 locking Rods
3. Surface seal: Bentonite ☐ 30; Concrete ☐ 31; Other ☒
Grout
4. Material between well casing and protective pipe: Bentonite ☐ 30; Annular space seal ☐; Other ☒
Grout
5. Annular space seal: Granular Bentonite ☐ 33
____ Lbs/gal mud weight . . . Bentonite-sand slurry ☐
____ Lbs/gal mud weight . . . . . Bentonite slurry ☐
5 % Bentonite . . . . . Bentonite-cement grout ☒ 50
≈ 270 gal volume added for any of the above
How installed: Tremie ☐; Tremie pumped ☒ 02; Gravity ☐
6. Bentonite seal: Bentonite granules ☐
☐ 1/4 in. ☐ 3/8 in. ☐ 1/2 in. Bentonite pellets ☐ 32
Bentonite Slurry Other ☒
7. Fine sand material: Manufacturer, product name and mesh size
Volume added _____ ft³
8. Filter pack material: Manufacturer, product name and mesh size
Colorado Silica Sand Co, Colorado Silica Sand
Volume added _____ ft³
9. Well casing: Flush threaded PVC schedule 40 ☐; Flush threaded PVC schedule 80 ☒; Other ☐ ____
10. Screen material: Schedule 80 PVC
Screen type: Factory cut ☒ 11; Continuous slot ☐ 01; Other ☐ ____
Manufacturer Drilling Equipment & Supply Inc
Slot size: 0.010 in.
Slotted length: 20.0 ft.
11. Backfill material (below filter pack): None ☐
Native cave Other ☒

I hereby certify that the information on this form is true and correct to the best of my knowledge.

Signature _____ Firm E C Jordan

Please complete and return both sides of this form as required by chs. 144, 147 and 160, Wis. Stats., and ch. NR 141, Wis. Adm. Code. In accordance with ch. 144, Wis. Stats., failure to file this form may result in a forfeiture of not less than $10, nor more than $5,000 for each day of violation. In accordance

State of Wisconsin
Department of Natural Resources

MONITORING WELL CONSTRUCTION
Form 4400-113A 8-89

Facility/Project Name: Badger Army Ammunition Plant
Facility License, Permit or Monitoring Number:

Grid Location: ____ ft. ☐ N. ☐ S. ____ ft. ☐ E. ☐ W.

Well Name: PBN-90-04D
Wis. Unique Well Number: DNR Well Number:

Type of Well: Water Table Observation Well ☐ 11; Piezometer ☒ 12

Section Location: ____ 1/4 of ____ 1/4 of Section ____ T ____ N, R ____ ☐ E ☐ W

Date Well Installed: 05/05/90 (m m / d d / y y)

Distance Well Is From Waste/Source Boundary: ____ ft.

Well Installed By: (Person's Name and Firm) Paul Balmer - E C Jordan

Is Well A Point of Enforcement Std. Application? ☐ Yes ☐ No

Location of Well Relative to Waste/Source: ☐ Upgradient ☐ Sidegradient ☒ Downgradient ☐ Not Known

A. Protective pipe, top elevation ____ ft. MSL
B. Well casing, top elevation ____ ft. MSL
C. Land surface elevation ____ ft. MSL
D. Surface seal, bottom ____ ft. MSL or ____ ft.

12. USCS classification of soil near screen:
☒ GP ☐ GM ☐ GC ☐ GW ☐ SW ☐ SP
☐ SM ☐ SC ☐ ML ☐ MH ☐ CL ☐ CH
☐ Bedrock

13. Sieve analysis attached? ☐ Yes ☒ No

14. Drilling method used: Rotary ☐ 50; Hollow Stem Auger ☐ 41; Other ☐
Dual Wall

15. Drilling fluid used: Water ☐ 02; Air ☒ 01; Drilling Mud ☐ 03; None ☐ 99

16. Drilling additives used? ☐ Yes ☒ No
Describe ____

17. Source of water (attach analysis):
PW #2

E. Bentonite seal, top ____ ft. MSL or 192.0 ft.
F. Fine sand, top ____ ft. MSL or ____ ft.
G. Filter pack, top ____ ft. MSL or 206.5 ft.
H. Well screen, top ____ ft. MSL or 216.5 ft.
I. Well screen, bottom ____ ft. MSL or 226.5 ft.
J. Filter pack, bottom ____ ft. MSL or 231.0 ft.
K. Borehole, bottom ____ ft. MSL or 232.0 ft.
L. Borehole, diameter 9.5 in.
M. O.D. well casing 4.5 in.
N. I.D. well casing 4.0 in.

1. Cap and lock? ☒ Yes ☐ No
2. Protective cover pipe:
a. Inside diameter: ____ in.
b. Length: ____ ft.
c. Material: Steel ☒ 04; Other ☐ ____
d. Additional protection? ☒ Yes ☐ No
If yes, describe: 4 bucking Rods
3. Surface seal: Bentonite ☐ 30; Concrete ☐ 01; Other ☒
Grout
4. Material between well casing and protective pipe: Bentonite ☐ 30; Annular space seal ☐; Other ☒
Grout
5. Annular space seal: Granular Bentonite ☐ 33
____ Lbs/gal mud weight . . . Bentonite-sand slurry ☐ 35
____ Lbs/gal mud weight . . . . . Bentonite slurry ☐ 31
5 % Bentonite . . . . Bentonite-cement grout ☒ 50
≈ 560 gal ☒ volume added for any of the above
How installed: Tremie ☐ 01; Tremie pumped ☒ 02; Gravity ☐ 08
6. Bentonite seal: Bentonite granules ☐ 32
☐ 1/4 in. ☐ 3/8 in. ☐ 1/2 in. Bentonite pellets ☐ 32
Benbark Slurry Other ☒
7. Fine sand material: Manufacturer, product name and mesh size
Volume added ____ ft³
8. Filter pack material: Manufacturer, product name and mesh size
Colorado Silica Sand Co, Colorado Silica Sand, 10-20
Volume added ____ ft³
9. Well casing: Flush threaded PVC schedule 40 ☐ 23; Flush threaded PVC schedule 80 ☒ 24; Other ☐
10. Screen material: Schedule 80 PVC
Screen type: Factory cut ☒ 11; Continuous slot ☐ 01; Other ☐
Manufacturer Drilling Equipment Supply, Inc
Slot size: 0.010 in.
Slotted length: 10.0 ft.
11. Backfill material (below filter pack): None ☐; Other ☒
Native cave

I hereby certify that the information on this form is true and correct to the best of my knowledge.

Signature: Paul F. Balmer Firm: E.C. Jordan

Please complete and return both sides of this form as required by chs. 144, 147 and 160, Wis. Stats., and ch. NR 141, Wis. Adm. Code. In accordance with ch. 144, Wis. Stats., failure to file this form may result in a forfeiture of not less than $10, nor more than $5,000 for each day of violation. In accordance

ABB Environmental Services, Inc.

MONITORING WELL CONSTRUCTION FORM

Facility/Project Name: BHP RI/FS

Facility License, Permit or Monitoring Number:

Grid Location: ____ ft. ☐ N. ☐ S. ____ ft. ☐ E. ☐ W.

Well Name: SW-41-01B

Wis. Unique Well Number: DNR Well Nu

Type of Well: Water Table Observation Well ☐ 11; Piezometer ☑ 12

Section Location: ____ 1/4 of ____ 1/4 of Section ____, T ____ N. R ____ ☐ E ☐ W

Date Well Installed: 10/05/91

Distance Well is From Waste/Source Boundary: NA ft.

Well Installed By: (Person's Name and Firm) Art Rodriguez; Layne Environmental

Is Well A Point of Enforcement Std. Application? ☐ Yes ☑ No

Location of Well Relative to Waste/Source: ☐ Upgradient ☐ Sidegradient ☑ Downgradient ☐ Not Known

A. Protective pipe, top elevation: 833.45 ft. MSL

B. Well casing, top elevation: 833.25 ft. MSL

C. Land surface elevation: 830.8 ft. MSL

D. Surface seal, bottom: ____ ft. MSL or ____ ft.

12. USCS classification of soil near screen:
☑ GP ☐ GM ☐ GC ☐ GW ☐ SW ☑ SP
☐ SM ☐ SC ☐ ML ☐ MH ☐ CL ☐ CH
☐ Bedrock

13. Sieve analysis attached? ☐ Yes ☑ No

14. Drilling method used: Rotary ☐ 50; Hollow Stem Auger ☐ 41; Dual wall reverse circulation; Other ☑

15. Drilling fluid used: Water ☑ 02; Air ☑ 01; Drilling Mud ☐ 03; None ☐ 99

16. Drilling additives used? ☐ Yes ☑ No

Describe ____

17. Source of water (attach analysis): PW #2

E. Bentonite seal, top: 773.3 ft. MSL or 57.5 ft.

F. Fine sand, top: ____ ft. MSL or ____ ft.

G. Filter pack, top: 753.3 ft. MSL or 77.5 ft.

H. Well screen, top: 727.1 ft. MSL or 103.1 ft.

I. Well screen, bottom: 717.1 ft. MSL or 113.1 ft.

J. Filter pack, bottom: 717.1 ft. MSL or 103.1 ft.

K. Borehole, bottom: 717.1 ft. MSL or 113.1 ft.

L. Borehole, diameter: 9.0 in.

M. O.D. well casing: 4.25 in. 3.75

N. I.D. well casing: 4.0

1. Cap and lock? ☑ Yes ☐

2. Protective cover pipe:
a. Inside diameter: 6.
b. Length: 6.
c. Material: Steel ☑ 04; Other ☐
d. Additional protection? ☑ Yes ☐
If yes, describe: locking posts + grout pad

3. Surface seal: Bentonite ☐ 30; Concrete ☑; Other ☐

4. Material between well casing and protective pipe: Bentonite ☐; Annular space seal ☒; Other ☐

5. Annular space seal: Granular Bentonite ☐ 33
____ Lbs/gal mud weight . . . Bentonite-sand slurry ☐
____ Lbs/gal mud weight . . . . . Bentonite slurry ☐
5 % Bentonite . . . . . Bentonite-cement grout ☐
____ Ft^3 volume added for any of the above
How installed: Tremie ☐; Tremie pumped ☐ 02; Gravity ☑ 09

6. Bentonite seal: Bentonite granules ☐; ☐1/4 in. ☐3/8 in. ☐1/2 in. Bentonite pellets ☐; 20' Bentonite slurry Other ☑

7. Fine sand material: Manufacturer, product name and mesh s: None
Volume added ____ ft^3

8. Filter pack material: Manufacturer, product name and mesh: CSSI silica sand
Volume added 5.3 ft^3

9. Well casing: Flush threaded PVC schedule 40 ☐ 23; Flush threaded PVC schedule 80 ☑; Other ☐

10. Screen material: PVC schedule 80
Screen type: Factory cut ☑ 1; Continuous slot ☐ 0; Other ☐
Manufacturer: Manoflex Inc
Slot size: 0.010
Slotted length: 20.0

11. Backfill material (below filter pack): None ☑; Other ☐

I hereby certify that the information on this form is true and correct to the best of my knowledge.

Signature: Karl R. Kunkel Firm: ABB-ES

ABB Environmental Services, Inc.

MONITORING WELL CONSTRUCTION FORM

BAAD RT /ES

Facility/Project Name

Facility License, Permit or Monitoring Number

Grid Location ____ ft. ☐ N. ☐ S. ____ ft. ☐ E. ☐ W.

Well Name SWD-91-01C

Wis. Unique Well Number DNR Well Number

Type of Well: Water Table Observation Well ☐ 11; Piezometer ☒ 12

Section Location ____ 1/4 of ____ 1/4 of Section ____ T ____ N, R ____ ☐ E ☐ W

Date Well Installed 10/16/91

Distance Well is From Waste/Source Boundary: NA ft.

Well Installed By: (Person's Name and Firm) Art Rodriguez, Layne Environmental

Is Well A Point of Enforcement Std. Application? ☐ Yes ☒ No

Location of Well Relative to Waste/Source: ☐ Upgradient ☐ Sidegradient ☒ Downgradient ☐ Not Known

A. Protective pipe, top elevation 834.12 ft. MSL

B. Well casing, top elevation 834.03 ft. MSL

C. Land surface elevation 831.0 ft. MSL

D. Surface seal, bottom ____ ft. MSL or ____ ft.

12. USCS classification of soil near screen:
☐ GP ☐ GM ☐ GC ☐ GW ☐ SW ☒ SP
☐ SM ☐ SC ☐ ML ☐ MH ☐ CL ☐ CH
☐ Bedrock

13. Sieve analysis attached? ☐ Yes ☒ No

14. Drilling method used: Rotary ☐ 50; Hollow Stem Auger ☐ 41; Other ☒ Dual wall Reverse Circulation

15. Drilling fluid used: Water ☒ 02; Air ☒ 01; Drilling Mud ☐ 03; None ☐ 99

16. Drilling additives used? ☐ Yes ☒ No

Describe ____

17. Source of water (attach analysis): PW #2

E. Bentonite seal, top 711.0 ft. MSL or 120.0 ft.

F. Fine sand, top ____ ft. MSL or ____ ft.

G. Filter pack, top 691.0 ft. MSL or 140.0 ft.

H. Well screen, top 682.8 ft. MSL or 148.2 ft.

I. Well screen, bottom 672.8 ft. MSL or 158.2 ft.

J. Filter pack, bottom 670.9 ft. MSL or 160.1 ft.

K. Borehole, bottom 670.9 ft. MSL or 160.1 ft.

L. Borehole, diameter 9.0 in.

M. O.D. well casing 4.25 in.

N. I.D. well casing 4 3.75 in.

1. Cap and lock? ☒ Yes ☐ No

2. Protective cover pipe:
a. Inside diameter: 6.0 in.
b. Length: 6.0 ft.
c. Material: Steel ☒ 04; Other ☐ ____
d. Additional protection? ☒ Yes ☐ No
If yes, describe: Bucking Post + gravel pad

3. Surface seal: Bentonite ☐ 30; Concrete ☒ 01; Other ☐ ____

4. Material between well casing and protective pipe: Bentonite ☐ 30; Annular space seal ☒; Other ☐ ____

5. Annular space seal: Granular Bentonite ☐ 33
____ Lbs/gal mud weight ... Bentonite-sand slurry ☐ 35
____ Lbs/gal mud weight ..... Bentonite slurry ☐ 31
5 % Bentonite ..... Bentonite-cement grout ☒ 50
____ Ft^3 volume added for any of the above
How installed: Tremie ☐ 01; Tremie pumped ☐ 02; Gravity ☒ 08

6. Bentonite seal: Bentonite granules ☐ 33; ☐1/4 in. ☐3/8 in. ☐1/2 in. Bentonite pellets ☐ 32
20' Bentonite Slurry Other ☒ ____

7. Fine sand material: Manufacturer, product name and mesh size: None
Volume added ____ ft^3

8. Filter pack material: Manufacturer, product name and mesh size: CSS Silica Sand
Volume added 4 ft^3

9. Well casing: Flush threaded PVC schedule 40 ☐ 23; Flush threaded PVC schedule 80 ☒ 24; Other ☐ ____

10. Screen material: PVC Schedule 80
Screen type: Factory cut ☒ 11; Continuous slot ☐ 01; Other ☐ ____
Manufacturer MonoFlex
Slot size: 0.010 in.
Slotted length: 12.2 ft.

11. Backfill material (below filter pack): None ☒; Other ☐ ____

I hereby certify that the information on this form is true and correct to the best of my knowledge.

Signature Rod R Rust Firm ABB-ES

ABB Environmental Services, Inc. MONITORING WELL CONSTRUCTI

Facility/Project Name: BAAP RI/FS
Facility License, Permit or Monitoring Number:
Grid Location: ft. N. S. / ft. E. W.
Well Name: SWN-91-011
Wis. Unique Well Number: DNR Well Nu
Type of Well: Water Table Observation Well 11 / Piezometer 12
Section Location: 1/4 of 1/4 of Section; T N. R E W
Date Well Installed: 10/14/91
Distance Well is From Waste/Source Boundary: NA ft.
Well Installed By: (Person's Name and Firm): Art Rodriguez / Layne Environmental
Is Well A Point of Enforcement Std. Application? Yes No
Location of Well Relative to Waste/Source: Upgradient Sidegradient Downgradient Not Known

A. Protective pipe, top elevation 833.76 ft. MSL
B. Well casing, top elevation 833.57 ft. MSL
C. Land surface elevation 831.5 ft. MSL
D. Surface seal, bottom ft. MSL or ft.

12. USCS classification of soil near screen:
GP GM GC GW SW SP
SM SC ML MH CL CH
Bedrock

13. Sieve analysis attached? Yes No

14. Drilling method used: Rotary 50 / Hollow Stem Auger 41 / Other: Dual Well Reverse circulation

15. Drilling fluid used: Water 02 / Air 01 / Drilling Mud 03 / None 99

16. Drilling additives used? Yes No
Describe

17. Source of water (attach analysis): PW #2

E. Bentonite seal, top 681.5 ft. MSL or 150.0 ft.
F. Fine sand, top ft. MSL or ft.
G. Filter pack, top 661.5 ft. MSL or 170.0 ft.
H. Well screen, top 643.4 ft. MSL or 188.1 ft.
I. Well screen, bottom 633.4 ft. MSL or 198.1 ft.
J. Filter pack, bottom 631.3 ft. MSL or 200.2 ft.
K. Borehole, bottom 631.3 ft. MSL or 200.2 ft.
L. Borehole, diameter 10 in.
M. O.D. well casing 4.25 in.
N. I.D. well casing 4.0 3.75 in.

1. Cap and lock? Yes
2. Protective cover pipe:
a. Inside diameter: 6.
b. Length: 6.
c. Material: Steel / Other
d. Additional protection? Yes
If yes, describe: Bollards + gravel pad
3. Surface seal: Bentonite / Concrete / Other
4. Material between well casing and protective pipe: Bentonite / Annular space seal / Other
5. Annular space seal: Granular Bentonite
Lbs/gal mud weight ... Bentonite-sand slurry
Lbs/gal mud weight ..... Bentonite slurry
5 % Bentonite ..... Bentonite-cement grout
Ft³ volume added for any of the above
How installed: Tremie / Tremie pumped / Gravity
6. Bentonite seal: Bentonite granules / 1/4 in. 3/8 in. 1/2 in. Bentonite pellets / 20' Bentonite Slurry Other
7. Fine sand material: Manufacturer, product name and mesh: none
Volume added ft³
8. Filter pack material: Manufacturer, product name and mesh: CSSI Silica Sand
Volume added 4 ft³
9. Well casing: Flush threaded PVC schedule 40 / Flush threaded PVC schedule 80 / Other
10. Screen material: PVC Schedule 80
Screen type: Factory cut / Continuous slot / Other
Manufacturer: MacroMex, Inc
Slot size: 0.01
Slotted length: 10.
11. Backfill material (below filter pack): None / Other

I hereby certify that the information on this form is true and correct to the best of my knowledge.
Signature: Rod R. Rueb Firm: ABB-ES

ABB Environmental Services, Inc. MONITORING WELL CONSTRUCTION FORM

Facility/Project Name: RAAP RI/FS	Grid Location: ____ ft. ☐ N. ☐ S. ____ ft. ☐ E. ☐ W.	Well Name: SWN-91-02
Facility License, Permit or Monitoring Number: ____		Wis. Unique Well Number: ____ DNR Well Number: ____
Type of Well: Water Table Observation Well ☐ 11; Piezometer ☒ 12	Section Location: ____ 1/4 of ____ 1/4 of Section ____ T ____ N, R ____ ☐ E ☐ W	Date Well Installed: 10/22/91 (m m d d y y)
Distance Well Is From Waste/Source Boundary: NA ft.	Location of Well Relative to Waste/Source: ☐ Upgradient ☐ Sidegradient ☒ Downgradient ☐ Not Known	Well Installed By: (Person's Name and Firm) Art Rodriguez, Layne Environmental
Is Well A Point of Enforcement Std. Application? ☐ Yes ☒ No		

A. Protective pipe, top elevation 836.60 ft. MSL

B. Well casing, top elevation 836.39 ft. MSL

C. Land surface elevation 834.4 ft. MSL

D. Surface seal, bottom ____ ft. MSL or ____ ft.

12. USCS classification of soil near screen:
☐ GP ☐ GM ☐ GC ☐ GW ☐ SW ☒ SP
☐ SM ☐ SC ☐ ML ☐ MH ☐ CL ☐ CH
☐ Bedrock

13. Sieve analysis attached? ☐ Yes ☒ No

14. Drilling method used: Rotary ☐ 50; Hollow Stem Auger ☐ 41; Dual Wall Reverse Circulation Other ☒

15. Drilling fluid used: Water ☒ 02; Air ☒ 01; Drilling Mud ☐ 03; None ☐ 99

16. Drilling additives used? ☐ Yes ☒ No

Describe ____

17. Source of water (attach analysis): PW #2

E. Bentonite seal, top 718.3 ft. MSL or 116.2 ft.

F. Fine sand, top ____ ft. MSL or ____ ft.

G. Filter pack, top 698.2 ft. MSL or 136.2 ft.

H. Well screen, top 691.9 ft. MSL or 142.5 ft.

I. Well screen, bottom 681.9 ft. MSL or 152.5 ft.

J. Filter pack, bottom 679.4 ft. MSL or 155 ft.

K. Borehole, bottom 679.4 ft. MSL or 155 ft.

L. Borehole, diameter 9.0 in.

M. O.D. well casing 4.25 in.

N. I.D. well casing ~~4.0~~ 3.75 in.

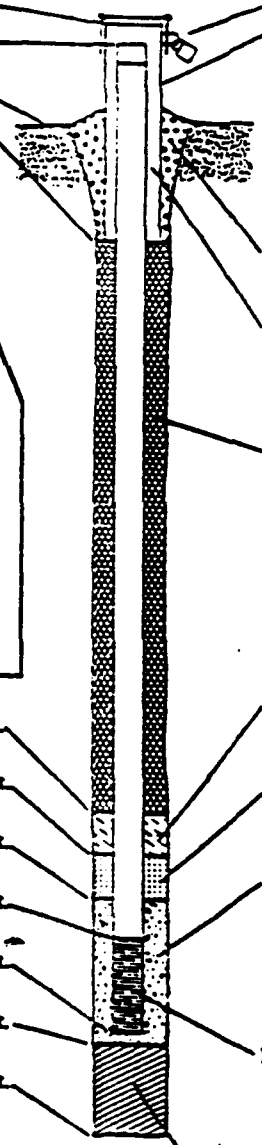

1. Cap and lock? ☒ Yes ☐ No

2. Protective cover pipe:
a. Inside diameter: 6.0 in.
b. Length: 6.0 ft.
c. Material: Steel ☒ 04; Other ☐ __
d. Additional protection? ☒ Yes ☐ No
If yes, describe: Bucking Posts + Gravel Pad

3. Surface seal: Bentonite ☐ 30; Concrete ☒ 01; Other ☐ __

4. Material between well casing and protective pipe: Bentonite ☐ 30; Annular space seal ☒; Other ☐ __

5. Annular space seal: Granular Bentonite ☐ 33
____ Lbs/gal mud weight . . . Bentonite-sand slurry ☐ 35
____ Lbs/gal mud weight . . . . . Bentonite slurry ☐ 31
5 % Bentonite . . . . . Bentonite-cement grout ☒ 50
____ Ft^3 volume added for any of the above
How installed: Tremie ☐ 01; Tremie pumped ☐ 02; Gravity ☒ 08

6. Bentonite seal: Bentonite granules ☐ 33
☐ 1/4 in. ☐ 3/8 in. ☐ 1/2 in. Bentonite pellets ☐ 32
20' Bentonite Slurry Other ☒ __

7. Fine sand material: Manufacturer, product name and mesh size: None
Volume added ____ ft^3

8. Filter pack material: Manufacturer, product name and mesh size: CSSI Silica Sand
Volume added 4 ft^3

9. Well casing: Flush threaded PVC schedule 40 ☐ 23; Flush threaded PVC schedule 80 ☒ 24; Other ☐ __

10. Screen material: PVC Schedule 80
Screen type: Factory cut ☒ 11; Continuous slot ☐ 01; Other ☐ __
Manufacturer Monoflex
Slot size: 0.010 in.
Slotted length: 10.0 ft.

11. Backfill material (below filter pack): None ☒; Other ☐

I hereby certify that the information on this form is true and correct to the best of my knowledge.

Signature: Rod R. Rustad | Firm: ABB-ES

ABB Environmental Services, Inc.

MONITORING WELL CONSTRUCTION FORM

Facility/Project Name: BAAP RI/FS
Facility License, Permit or Monitoring Number:
Grid Location: ft. ☐ N. ☐ S. / ft. ☐ E. ☐ W.
Well Name: SWMU-41-02D
Wis. Unique Well Number: DNR Well Number:
Type of Well: Water Table Observation Well ☐ 11 / Piezometer ☒ 12
Section Location: 1/4 of 1/4 of Section; T N, R ☐ E ☐ W
Date Well Installed: 12/23/94
Distance Well Is From Waste/Source Boundary: NA ft.
Well Installed By: (Person's Name and Firm): Art Rodriguez / Layne Environmental
Is Well A Point of Enforcement Std. Application? ☐ Yes ☒ No
Location of Well Relative to Waste/Source: ☐ Upgradient ☐ Sidegradient ☒ Downgradient ☐ Not Known

A. Protective pipe, top elevation: 826.76 ft. MSL
B. Well casing, top elevation: 836.61 ft. MSL
C. Land surface elevation: 834.5 ft. MSL
D. Surface seal, bottom: ft. MSL or ft.

12. USCS classification of soil near screen:
☒ GP ☐ GM ☐ GC ☐ GW ☐ SW ☒ SP
☐ SM ☐ SC ☐ ML ☐ MH ☐ CL ☐ CH
☐ Bedrock

13. Sieve analysis attached? ☐ Yes ☒ No

14. Drilling method used: Rotary ☐ 50 / Hollow Stem Auger ☐ 41
Dual wall Reverse Circulation Other ☒

15. Drilling fluid used: Water ☒ 02 / Air ☒ 01 / Drilling Mud ☐ 03 / None ☐ 99

16. Drilling additives used? ☐ Yes ☒ No
Describe

17. Source of water (attach analysis):
PW #2

E. Bentonite seal, top: 694.1 ft. MSL or 140.4 ft.
F. Fine sand, top: ft. MSL or ft.
G. Filter pack, top: 674.1 ft. MSL or 160.4 ft.
H. Well screen, top: 659.5 ft. MSL or 175.0 ft.
I. Well screen, bottom: 649.5 ft. MSL or 185.0 ft.
J. Filter pack, bottom: 644.3 ft. MSL or 190.2 ft.
K. Borehole, bottom: 644.3 ft. MSL or 190.2 ft.
L. Borehole, diameter: 9.0 in.
M. O.D. well casing: 4.25 in.
N. I.D. well casing: 3.75 in.

1. Cap and lock? ☒ Yes ☐ No
2. Protective cover pipe:
a. Inside diameter: 6.0 in.
b. Length: 6.0
c. Material: Steel ☒ 0 / Other ☐
d. Additional protection? ☒ Yes ☐ No
If yes, describe: Bollards, Posts & gravel pad
3. Surface seal: Bentonite ☐ 3 / Concrete ☒ 0 / Other ☐
4. Material between well casing and protective pipe: Bentonite ☐ 30 / Annular space seal ☒ / Other ☐
5. Annular space seal: Granular Bentonite ☐ 3 / Bentonite-sand slurry ☐ 35
Lbs/gal mud weight ... Bentonite slurry
5 % Bentonite .... Bentonite-cement grout
Ft³ volume added for any of the above
How installed: Tremie ☐ 0 / Tremie pumped ☐ 0 / Gravity ☒ 08
6. Bentonite seal: Bentonite granules ☒ 3 / ☐1/4 in. ☐3/8 in. ☐1/2 in. Bentonite pellets ☐ 3 / Other ☐
7. Fine sand material: Manufacturer, product name and mesh size: none
Volume added ft³
8. Filter pack material: Manufacturer, product name and mesh size: CSST Silica Sand
Volume added 4 ft³
9. Well casing: Flush threaded PVC schedule 40 ☐ 2 / Flush threaded PVC schedule 80 ☒ 24 / Other ☐
10. Screen material: PVC Schedule 80 / Screen type: Factory cut ☒ 11 / Continuous slot ☐ 0 / Other ☐
Manufacturer: Monoflex
Slot size: 0.010 in.
Slotted length: 10.0 ft
11. Backfill material (below filter pack): None ☒ / Other ☐

I hereby certify that the information on this form is true and correct to the best of my knowledge.

Signature: Fred R. Turnbull | Firm: ABB-ES

ABB Environmental Services, Inc. **MONITORING WELL CONSTRUCTION FORM**

Facility/Project Name: BAAP RI/FS	Grid Location: ____ ft. ☐ N. ☐ S. ____ ft. ☐ E. ☐ W.	Well Name: SWN-91-03B
Facility License, Permit or Monitoring Number: _____		Wis. Unique Well Number: _____ DNR Well Number: _____
Type of Well: Water Table Observation Well ☐ 11; Piezometer ☒ 12	Section Location: ____ 1/4 of ____ 1/4 of Section ____ T ____ N. R ____ ☐ E ☐ W	Date Well Installed: 10/08/91 (m m d d y y)
Distance Well Is From Waste/Source Boundary: NA ft.		Well Installed By: (Person's Name and Firm) Art Rodriguez, Layne Environmental
Is Well A Point of Enforcement Std. Application? ☐ Yes ☒ No	Location of Well Relative to Waste/Source: ☐ Upgradient ☐ Sidegradient ☒ Downgradient ☐ Not Known	

A. Protective pipe, top elevation 836.20 ft. MSL

B. Well casing, top elevation 836.63 ft. MSL

C. Land surface elevation 834.7 ft. MSL

D. Surface seal, bottom ____ ft. MSL or ____ ft.

12. USCS classification of soil near screen:
☒ GP ☐ GM ☐ GC ☐ GW ☐ SW ☒ SP
☐ SM ☐ SC ☐ ML ☐ MH ☐ CL ☐ CH
☐ Bedrock

13. Sieve analysis attached? ☐ Yes ☒ No

14. Drilling method used: Rotary ☐ 50; Hollow Stem Auger ☐ 41; Dual Wall Reverse Circulation Other ☒

15. Drilling fluid used: Water ☒ 02; Air ☒ 01; Drilling Mud ☐ 03; None ☐ 99

16. Drilling additives used? ☐ Yes ☒ No

Describe _____

17. Source of water (attach analysis): PW #2

E. Bentonite seal, top 766.7 ft. MSL or 68.0 ft.

F. Fine sand, top ____ ft. MSL or ____ ft.

G. Filter pack, top 746.5 ft. MSL or 88.2 ft.

H. Well screen, top 731.3 ft. MSL or 103.4 ft.

I. Well screen, bottom 721.3 ft. MSL or 113.4 ft.

J. Filter pack, bottom 721.3 ft. MSL or 113.4 ft.

K. Borehole, bottom 721.3 ft. MSL or 113.4 ft.

L. Borehole, diameter 9.0 in.

M. O.D. well casing 4.25 in.

N. I.D. well casing ~~4.0~~ 3.75 in.

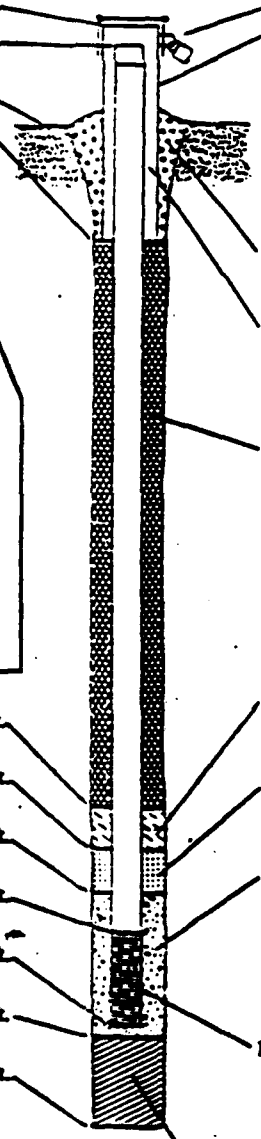

1. Cap and lock? ☒ Yes ☐ No

2. Protective cover pipe:
a. Inside diameter: 6.0 in.
b. Length: 6.0 ft.
c. Material: Steel ☒ 04; Other ☐ __
d. Additional protection? ☒ Yes ☐ No
If yes, describe: Gravel Pad + Bucking Posts

3. Surface seal: Bentonite ☐ 30; Concrete ☒ 01; Other ☐ __

4. Material between well casing and protective pipe: Bentonite ☐ 30; Annular space seal ☒; Other ☐ __

5. Annular space seal: Granular Bentonite ☐ 33
____ Lbs/gal mud weight . . . Bentonite-sand slurry ☐ 35
____ Lbs/gal mud weight . . . . . Bentonite slurry ☐ 31
5 % Bentonite . . . . . Bentonite-cement grout ☒ 50
37.4 Ft^3 volume added for any of the above
How installed: Tremie ☐ 01; Tremie pumped ☐ 02; Gravity ☒ 08

6. Bentonite seal: Bentonite granules ☐ 33
☐ 1/4 in. ☐ 3/8 in. ☐ 1/2 in. Bentonite pellets ☐ 32
Bentonite Slurry 20' Other ☒ __

7. Fine sand material: Manufacturer, product name and mesh size
~~CSSI Silica Sand~~ None
Volume added ____ ft^3

8. Filter pack material: Manufacturer, product name and mesh size
CSSI Silica Sand
Volume added 4 ft^3

9. Well casing: Flush threaded PVC schedule 40 ☐ 23; Flush threaded PVC schedule 80 ☒ 24; Other ☐ __

10. Screen material: PVC Schedule 80
Screen type: Factory cut ☒ 11; Continuous slot ☐ 01; Other ☐ __
Manufacturer Monoflex Inc
Slot size: 0.010 in.
Slotted length: 10.0 ft.

11. Backfill material (below filter pack): None ☒; Other ☐

I hereby certify that the information on this form is true and correct to the best of my knowledge.

Signature: Rod R. Rustan | Firm: ABB-ES

ABB Environmental Services, Inc. MONITORING WELL CONSTRUCTION

Facility/Project Name: BAAP R1/ES
Facility License, Permit or Monitoring Number:
Grid Location: ft. N. S. / ft. E. W.
Well Name: SWM-91-03C
Wis. Unique Well Number: DNR Well Num:
Type of Well: Water Table Observation Well 11; Piezometer 12
Section Location: 1/4 of 1/4 of Section; T N. R E W
Date Well Installed: 10/22/91
Distance Well is From Waste/Source Boundary: NA ft.
Well Installed By: (Person's Name and Firm): Art Rodriguez, Layne environmental
Is Well A Point of Enforcement Std. Application? Yes / No
Location of Well Relative to Waste/Source: Upgradient / Sidegradient / Downgradient / Not Known

A. Protective pipe, top elevation 836.74 ft. MSL
B. Well casing, top elevation 836.73 ft. MSL
C. Land surface elevation 834.6 ft. MSL
D. Surface seal, bottom ft. MSL or ft.

12. USCS classification of soil near screen:
GP GM GC GW SW SP
SM SC ML MH CL CH
Bedrock

13. Sieve analysis attached? Yes / No
14. Drilling method used: Rotary 50; Hollow Stem Auger 41; Dual Wall Reverse Circ. Other
15. Drilling fluid used: Water 02; Air 01; Drilling Mud 03; None 99
16. Drilling additives used? Yes / No
Describe
17. Source of water (attach analysis): PW #2

E. Bentonite seal, top 716.6 ft. MSL or 118.0 ft.
F. Fine sand, top ft. MSL or ft.
G. Filter pack, top 696.4 ft. MSL or 138.2 ft.
H. Well screen, top 681.8 ft. MSL or 152.8 ft.
I. Well screen, bottom 671.8 ft. MSL or 162.8 ft.
J. Filter pack, bottom 671.8 ft. MSL or 162.8 ft.
K. Borehole, bottom 671.8 ft. MSL or 162.8 ft.
L. Borehole, diameter 10 in.
M. O.D. well casing 4.25 / 3.75 in.
N. I.D. well casing 4 in.

1. Cap and lock? Yes
2. Protective cover pipe:
a. Inside diameter: 6.2 in.
b. Length: 6.0 ft.
c. Material: Steel 02; Other
d. Additional protection? Yes; If yes, describe: Gravel Pad + Bollard Post
3. Surface seal: Bentonite 30; Concrete; Other
4. Material between well casing and protective pipe: Bentonite 30; Annular space seal; Other
5. Annular space seal: Granular Bentonite; Lbs/gal mud weight ... Bentonite-sand slurry; Lbs/gal mud weight ..... Bentonite slurry; 5 % Bentonite ..... Bentonite-cement grout 50; 64 Ft³ volume added for any of the above
How installed: Tremie; Tremie pumped 07; Gravity 08
6. Bentonite seal: Bentonite granules 3; 1/4 in. 3/8 in. 1/2 in. Bentonite pellets 3; 20' Bentonite Slurry Other
7. Fine sand material: Manufacturer, product name and mesh si: none
Volume added ft³
8. Filter pack material: Manufacturer, product name and mesh s: CSSI Silica Sand
Volume added 2.7 ft³
9. Well casing: Flush threaded PVC schedule 40 23; Flush threaded PVC schedule 80 2; Other
10. Screen material: PVC Schedule 80
Screen type: Factory cut 1; Continuous slot 0; Other
Manufacturer: MonoFlex Inc
Slot size: 0.010 in.
Slotted length: 10.0
11. Backfill material (below filter pack): None; Other

I hereby certify that the information on this form is true and correct to the best of my knowledge.
Signature: Robert P. Rueter Firm: ABB-ES

ABB Environmental Services, Inc. **MONITORING WELL CONSTRUCTION FORM**

Facility/Project Name: BAAP RI/FS	Grid Location: ____ ft. ☐ N. ☐ S. ____ ft. ☐ E. ☐ W.	Well Name: SWN-91-03D
Facility License, Permit or Monitoring Number: _____		Wis. Unique Well Number: _____ DNR Well Number: _____
Type of Well: Water Table Observation Well ☐ 11; Piezometer ☒ 12	Section Location: ____ 1/4 of ____ 1/4 of Section ____ T ____ N, R ____ ☐ E ☐ W	Date Well Installed: 10/01/91 (m m / d d / y y)
Distance Well Is From Waste/Source Boundary: NA ft.	Location of Well Relative to Waste/Source: ☐ Upgradient ☐ Sidegradient ☒ Downgradient ☐ Not Known	Well Installed By: (Person's Name and Firm) Art Rodriguez, Layne Environmental
Is Well A Point of Enforcement Std. Application? ☐ Yes ☒ No		

A. Protective pipe, top elevation 837.09 ft. MSL

B. Well casing, top elevation 837.09 ft. MSL

C. Land surface elevation 835.0 ft. MSL

D. Surface seal, bottom ____ ft. MSL or ____ ft.

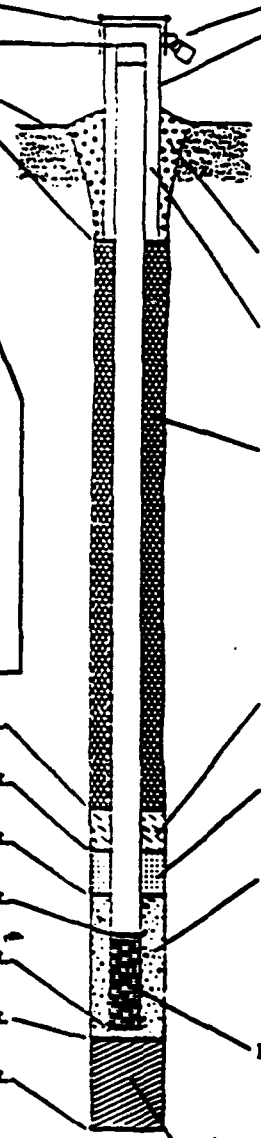

12. USCS classification of soil near screen:
☒ GP ☐ GM ☐ GC ☐ GW ☐ SW ☒ SP
☐ SM ☐ SC ☐ ML ☐ MH ☐ CL ☐ CH
☐ Bedrock

13. Sieve analysis attached? ☐ Yes ☒ No

14. Drilling method used: Rotary ☐ 50; Hollow Stem Auger ☐ 41; Dual walled reverse circulation Other ☒

15. Drilling fluid used: Water ☒ 02; Air ☒ 01; Drilling Mud ☐ 03; None ☐ 99

16. Drilling additives used? ☐ Yes ☒ No

Describe _____

17. Source of water (attach analysis): PW #2

E. Bentonite seal, top 690.0 ft. MSL or 145.0 ft.

F. Fine sand, top ____ ft. MSL or ____ ft.

G. Filter pack, top 659.8 ft. MSL or 175.2 ft.

H. Well screen, top 635.9 ft. MSL or 199.1 ft.

I. Well screen, bottom 625.9 ft. MSL or 209.1 ft.

J. Filter pack, bottom 625.9 ft. MSL or 209.1 ft.

K. Borehole, bottom 625.9 ft. MSL or 209.1 ft.

L. Borehole, diameter 9.0 in.

M. O.D. well casing 4.25 in.

N. I.D. well casing ~~4.0~~ 3.75 in.

1. Cap and lock? ☒ Yes ☐ No

2. Protective cover pipe:
a. Inside diameter: 6.0 in.
b. Length: 6.0 ft.
c. Material: Steel ☒ 04; Other ☐ __
d. Additional protection? ☒ Yes ☐ No
If yes, describe: gravel pad + Bucking posts

3. Surface seal: Bentonite ☐ 30; Concrete ☒ 01; Other ☐ __

4. Material between well casing and protective pipe: Bentonite ☐ 30; Annular space seal ☒; Other ☐ __

5. Annular space seal: Granular Bentonite ☐ 33
____ Lbs/gal mud weight . . . Bentonite-sand slurry ☐ 35
____ Lbs/gal mud weight . . . . . Bentonite slurry ☐ 31
5 % Bentonite . . . . . Bentonite-cement grout ☒ 50
130 Ft^3 volume added for any of the above
How installed: Tremie ☐ 01; Tremie pumped ☐ 02; Gravity ☒ 08

6. Bentonite seal: Bentonite granules ☐ 33
☐ 1/4 in. ☐ 3/8 in. ☐ 1/2 in. Bentonite pellets ☐ 32
30' Bentonite Slurry Other ☒ __

7. Fine sand material: Manufacturer, product name and mesh size: none
Volume added ____ ft^3

8. Filter pack material: Manufacturer, product name and mesh size: CSSI Silica Sand
Volume added 4 ft^3

9. Well casing: Flush threaded PVC schedule 40 ☐ 23; Flush threaded PVC schedule 80 ☒ 24; Other ☐ __

10. Screen material: PVC schedule 80
Screen type: Factory cut ☒ 11; Continuous slot ☐ 01; Other ☐ __
Manufacturer: Manoflex, Inc.
Slot size: 0.010 in.
Slotted length: 10.0 ft.

11. Backfill material (below filter pack): None ☒; Other ☐

I hereby certify that the information on this form is true and correct to the best of my knowledge.

Signature: Paul R. Rustow | Firm: ABB-ES

ABB Environmental Services, Inc.

MONITORING WELL CONSTRUCTION FOR

Facility/Project Name: BAAP RI/FS
Facility License, Permit or Monitoring Number:

Grid Location: ____ ft. ☐ N. ☐ S. ____ ft. ☐ E. ☐ W.

Well Name: SWN-91-03E
Wis. Unique Well Number: DNR Well Number:

Type of Well: Water Table Observation Well ☐ 11 Piezometer ☒ 12

Section Location: ____ 1/4 of ____ 1/4 of Section ____ T ____ N, R ____ ☐ E ☐ W

Date Well Installed: 11/10/91 (m m / d d / y y)

Distance Well Is From Waste/Source Boundary: NA ft.

Location of Well Relative to Waste/Source: ☐ Upgradient ☐ Sidegradient ☒ Downgradient ☐ Not Known

Well Installed By: (Person's Name and Firm): A. Rodriguez, Layne Environmental

Is Well A Point of Enforcement Std. Application? ☐ Yes ☒ No

A. Protective pipe, top elevation: 837.56 ft. MSL
B. Well casing, top elevation: 837.38 ft. MSL
C. Land surface elevation: 835.0 ft. MSL
D. Surface seal, bottom: ____ ft. MSL or ____ ft.

12. USCS classification of soil near screen:
☐ GP ☐ GM ☐ GC ☐ GW ☐ SW ☐ SP
☐ SM ☐ SC ☐ ML ☐ MH ☐ CL ☐ CH
☒ Bedrock

13. Sieve analysis attached? ☐ Yes ☒ No

14. Drilling method used: Rotary ☒ 50; Hollow Stem Auger ☐ 41; Other ☒ ____
Dual-Wall Rev. Circ.

15. Drilling fluid used: Water ☒ 02; Air ☒ 01; Drilling Mud ☐ 03; None ☐ 99

16. Drilling additives used? ☐ Yes ☒ No
Describe ____

17. Source of water (attach analysis):
BAAP Production Well #2

E. Bentonite seal, top: 635.0 ft. MSL or 200.0 ft.
F. Fine sand, top: ____ ft. MSL or ____ ft.
G. Filter pack, top: 615.0 ft. MSL or 220.0 ft.
H. Well screen, top: 607.1 ft. MSL or 227.9 ft.
I. Well screen, bottom: 597.1 ft. MSL or 237.9 ft.
J. Filter pack, bottom: 577.0 ft. MSL or 258.0 ft.
K. Borehole, bottom: 577.0 ft. MSL or 258.0 ft.
L. Borehole, diameter: 5.5 in.
M. O.D. well casing: 4.50 in.
N. I.D. well casing: 3.75 in.

1. Cap and lock? ☒ Yes ☐
2. Protective cover pipe:
a. Inside diameter: 6.
b. Length: 6.
c. Material: Steel ☒ 0; Other ☐ ____
d. Additional protection? ☒ Yes ☐
If yes, describe: Bucking Rods + Gravel Pad
3. Surface seal: Bentonite ☐; Concrete ☒; Other ☐ ____
4. Material between well casing and protective pipe: Bentonite ☐; Annular space seal ☒; Other ☐ ____
5. Annular space seal: Granular Bentonite ☐; ____ Lbs/gal mud weight ... Bentonite-sand slurry ☐; ____ Lbs/gal mud weight ..... Bentonite slurry ☐; 5 % Bentonite ..... Bentonite-cement grout ☒; 130 Ft³ volume added for any of the above
How installed: Tremie ☐; Tremie pumped ☐; Gravity ☒
6. Bentonite seal: Bentonite granules ☐; ☐1/4 in. ☐3/8 in. ☐1/2 in. Bentonite pellets ☐; Bentonite Slurry; Other ☒
7. Fine sand material: Manufacturer, product name and mesh: None
Volume added ____ ft³
8. Filter pack material: Manufacturer, product name and mesh: CSSI 10-20 Silica Sand
Volume added ~4.75 ft³
9. Well casing: Flush threaded PVC schedule 40 ☐; Flush threaded PVC schedule 80 ☒; Other ☐ ____
10. Screen material: Schedule 80 PVC
Screen type: Factory cut ☒; Continuous slot ☐; Other ☐ ____
Manufacturer: Monoflex, Inc.
Slot size: 0.010
Slotted length: 10.0
11. Backfill material (below filter pack): None ☐; CSSI 10-20 Silica Sand; Other ☒

I hereby certify that the information on this form is true and correct to the best of my knowledge.

Signature: R. Pendleton
Firm: ABB Environmental Services, Inc.

ABB Environmental Services, Inc. **MONITORING WELL CONSTRUCTION FORM**

Facility/Project Name: BAAP RI/FS	Grid Location: ____ ft. ☐ N. ☐ S. ____ ft. ☐ E. ☐ W.	Well Name: SWN-91-04C
Facility License, Permit or Monitoring Number:		Wis. Unique Well Number: DNR Well Number:
Type of Well: Water Table Observation Well ☐ 11; Piezometer ☒ 12	Section Location: ____ 1/4 of ____ 1/4 of Section ____; T ____ N. R ____ ☐ E ☐ W	Date Well Installed: 10/23/91 (m m d d y y)
Distance Well Is From Waste/Source Boundary: NA ft.	Location of Well Relative to Waste/Source: ☐ Upgradient ☐ Sidegradient ☒ Downgradient ☐ Not Known	Well Installed By: (Person's Name and Firm): Art Rodriguez, Layne Environmental
Is Well A Point of Enforcement Std. Application? ☐ Yes ☒ No		

A. Protective pipe, top elevation 835.07 ft. MSL
B. Well casing, top elevation 834.87 ft. MSL
C. Land surface elevation 832.8 ft. MSL
D. Surface seal, bottom ____ ft. MSL or ____ ft.

12. USCS classification of soil near screen:
☐ GP ☐ GM ☐ GC ☐ GW ☐ SW ☒ SP
☐ SM ☐ SC ☐ ML ☐ MH ☐ CL ☐ CH
☐ Bedrock

13. Sieve analysis attached? ☐ Yes ☒ No

14. Drilling method used: Rotary ☐ 50; Hollow Stem Auger ☐ 41; Dual wall reverse circulation Other ☒

15. Drilling fluid used: Water ☒ 02; Air ☒ 01; Drilling Mud ☐ 03; None ☐ 99

16. Drilling additives used? ☐ Yes ☒ No
Describe ____

17. Source of water (attach analysis): PW#2

E. Bentonite seal, top 708.6 ft. MSL or 124.2 ft.
F. Fine sand, top ____ ft. MSL or ____ ft.
G. Filter pack, top 688.6 ft. MSL or 144.2 ft.
H. Well screen, top 678.8 ft. MSL or 154.0 ft.
I. Well screen, bottom 668.8 ft. MSL or 164.0 ft.
J. Filter pack, bottom 668.8 ft. MSL or 164.0 ft.
K. Borehole, bottom 668.8 ft. MSL or 164.0 ft.
L. Borehole, diameter 10.0 in.
M. O.D. well casing 4.25 in.
N. I.D. well casing 4.0 3.75

1. Cap and lock? ☒ Yes ☐ No
2. Protective cover pipe:
a. Inside diameter: 6.0 in.
b. Length: 6.5 ft.
c. Material: Steel ☒ 04; Other ☐ ____
d. Additional protection? ☒ Yes ☐ No
If yes, describe: Bollards posts + gravel pad
3. Surface seal: Bentonite ☐ 30; Concrete ☒ 01; Other ☐ ____
4. Material between well casing and protective pipe: Bentonite ☐ 30; Annular space seal ☒; Other ☐ ____
5. Annular space seal: Granular Bentonite ☐ 33
____ Lbs/gal mud weight ... Bentonite-sand slurry ☐ 35
____ Lbs/gal mud weight ..... Bentonite slurry ☐ 31
5 % Bentonite .... Bentonite-cement grout ☒ 50
____ Ft^3 volume added for any of the above
How installed: Tremie ☐ 01; Tremie pumped ☐ 02; Gravity ☒ 08
6. Bentonite seal: Bentonite granules ☐ 33
☐ 1/4 in. ☐ 3/8 in. ☐ 1/2 in. Bentonite pellets ☐ 32
20' Bentonite Slurry Other ☒ ____
7. Fine sand material: Manufacturer, product name and mesh size: none
Volume added ____ ft^3
8. Filter pack material: Manufacturer, product name and mesh size: CSSI Silica Sand
Volume added 4 ft^3
9. Well casing: Flush threaded PVC schedule 40 ☐ 23; Flush threaded PVC schedule 80 ☒ 24; Other ☐ ____
10. Screen material: PVC Schedule 80
Screen type: Factory cut ☒ 11; Continuous slot ☐ 01; Other ☐ ____
Manufacturer: Monoflex Inc
Slot size: 0.010 in.
Slotted length: 10.0 ft.
11. Backfill material (below filter pack): None ☒; Other ☐ ____

I hereby certify that the information on this form is true and correct to the best of my knowledge.

Signature: Karl P. Rinehart From: ABB-ES

ABB Environmental Services, Inc.

MONITORING WELL CONSTRUCTION FORM

Facility/Project Name: BAAP RI/FS

Facility License, Permit or Monitoring Number:

Grid Location: ____ ft. ☐ N. ☐ S. ____ ft. ☐ E. ☐ W.

Well Name: SWD-91-041

Wis. Unique Well Number: DNR Well Nur

Type of Well: Water Table Observation Well ☐ 11 Piezometer ☒ 12

Section Location: ____ 1/4 of ____ 1/4 of Section ____ T ____ N. R ____ ☐ E ☐ W

Date Well Installed: 10/04/91

Distance Well is From Waste/Source Boundary: NA ft.

Well Installed By: (Person's Name and Firm) Art Rodriguez, Layne Environmental

Is Well A Point of Enforcement Std. Application? ☐ Yes ☒ No

Location of Well Relative to Waste/Source: ☐ Upgradient ☐ Sidegradient ☒ Downgradient ☐ Not Known

A. Protective pipe, top elevation: 835.40 ft. MSL

B. Well casing, top elevation: 835.28 ft. MSL

C. Land surface elevation: 833.5 ft. MSL

D. Surface seal, bottom: ____ ft. MSL or ____ ft.

12. USCS classification of soil near screen:
☒ GP ☐ GM ☐ GC ☐ GW ☐ SW ☒ SP
☐ SM ☐ SC ☐ ML ☐ MH ☐ CL ☐ CH
☐ Bedrock

13. Sieve analysis attached? ☐ Yes ☒ No

14. Drilling method used: Rotary ☐ 50; Hollow Stem Auger ☐ 41; Other ☒ Dual Wall Reverse Circulation

15. Drilling fluid used: Water ☒ 02; Air ☒ 01; Drilling Mud ☐ 03; None ☐ 99

16. Drilling additives used? ☐ Yes ☒ No

Describe ____

17. Source of water (attach analysis): PW #2

E. Bentonite seal, top: 676.5 ft. MSL or 157.0 ft.

F. Fine sand, top: ____ ft. MSL or ____ ft.

G. Filter pack, top: 656.5 ft. MSL or 177.0 ft.

H. Well screen, top: 646.5 ft. MSL or 187.0 ft.

I. Well screen, bottom: 636.5 ft. MSL or 197.0 ft.

J. Filter pack, bottom: 636.5 ft. MSL or 197.0 ft.

K. Borehole, bottom: 636.5 ft. MSL or 197.0 ft.

L. Borehole, diameter: 10 in.

M. O.D. well casing: 4.25 in.

N. I.D. well casing: 3.75 in.

1. Cap and lock? ☒ Yes ☐

2. Protective cover pipe:
a. Inside diameter: 6.3 in.
b. Length: 6.5
c. Material: Steel ☒; Other ☐
d. Additional protection? ☒ Yes ☐
If yes, describe: Bucky posts + gravel pad

3. Surface seal: Bentonite ☐ 30; Concrete ☒ 01; Other ☐

4. Material between well casing and protective pipe: Bentonite ☐ 30; Annular space seal ☒; Other ☐

5. Annular space seal: Granular Bentonite ☐ 33
____ Lbs/gal mud weight ... Bentonite-sand slurry ☐
____ Lbs/gal mud weight ..... Bentonite slurry ☐
5 % Bentonite ..... Bentonite-cement grout ☐
100 Ft³ volume added for any of the above
How installed: Tremie ☐; Tremie pumped ☐; Gravity ☒ 08

6. Bentonite seal: Bentonite granules ☐; ☐1/4 in. ☐3/8 in. ☐1/2 in. Bentonite pellets ☐; 20' Bentonite Slurry Other ☒

7. Fine sand material: Manufacturer, product name and mesh s
None
Volume added ____ ft³

8. Filter pack material: Manufacturer, product name and mesh size
CSSI Silica Sand
Volume added 2.7 ft³

9. Well casing: Flush threaded PVC schedule 40 ☐ 23; Flush threaded PVC schedule 80 ☒ 2; Other ☐

10. Screen material: PVC schedule 80
Screen type: Factory cut ☒ 11; Continuous slot ☐ 0; Other ☐
Manufacturer: Monoflex Inc
Slot size: 0.010
Slotted length: 10.0

11. Backfill material (below filter pack): None ☒; Other ☐

I hereby certify that the information on this form is true and correct to the best of my knowledge.

Signature: Karl R. Kunkel Firm: ABB-ES

ABB Environmental Services, Inc. **MONITORING WELL CONSTRUCTION FORM**

Facility/Project Name: BAAP RI/FS	Grid Location: ____ ft. ☐ N. ☐ S. ____ ft. ☐ E. ☐ W.	Well Name: SWM-91-05B
Facility License, Permit or Monitoring Number:	Wis. Unique Well Number:	DNR Well Number:
Type of Well: Water Table Observation Well ☐ 11; Piezometer ☒ 12	Section Location: ____ 1/4 of ____ 1/4 of Section ____; T ____ N, R ____ ☐ E ☐ W	Date Well Installed: 10/23/91
Distance Well Is From Waste/Source Boundary: NA ft.	Location of Well Relative to Waste/Source: ☐ Upgradient ☐ Sidegradient ☒ Downgradient ☐ Not Known	Well Installed By: (Person's Name and Firm) Art Rodriguez - Layne Environmental
Is Well A Point of Enforcement Std. Application? ☐ Yes ☒ No		

A. Protective pipe, top elevation: 832.80 ft. MSL
B. Well casing, top elevation: 832.67 ft. MSL
C. Land surface elevation: 830.5 ft. MSL
D. Surface seal, bottom: ____ ft. MSL or ____ ft.

12. USCS classification of soil near screen:
☒ GP ☐ GM ☐ GC ☐ GW ☐ SW ☒ SP
☐ SM ☐ SC ☐ ML ☐ MH ☐ CL ☐ CH
☐ Bedrock

13. Sieve analysis attached? ☐ Yes ☒ No

14. Drilling method used: Rotary ☐ 50; Hollow Stem Auger ☐ 41; Dual wall Reverse circulation Other ☒

15. Drilling fluid used: Water ☒ 02; Air ☒ 01; Drilling Mud ☐ 03; None ☐ 99

16. Drilling additives used? ☐ Yes ☒ No
Describe ____

17. Source of water (attach analysis):
PW #2

E. Bentonite seal, top: 754.5 ft. MSL or 76.0 ft.
F. Fine sand, top: ____ ft. MSL or ____ ft.
G. Filter pack, top: 734.5 ft. MSL or 96.0 ft.
H. Well screen, top: 728.0 ft. MSL or 102.5 ft.
I. Well screen, bottom: 718.0 ft. MSL or 112.5 ft.
J. Filter pack, bottom: 718.0 ft. MSL or 112.5 ft.
K. Borehole, bottom: 718.0 ft. MSL or 112.5 ft.
L. Borehole, diameter: 9.0 in.
M. O.D. well casing: 4.25 in.
N. I.D. well casing: 3.75 in.

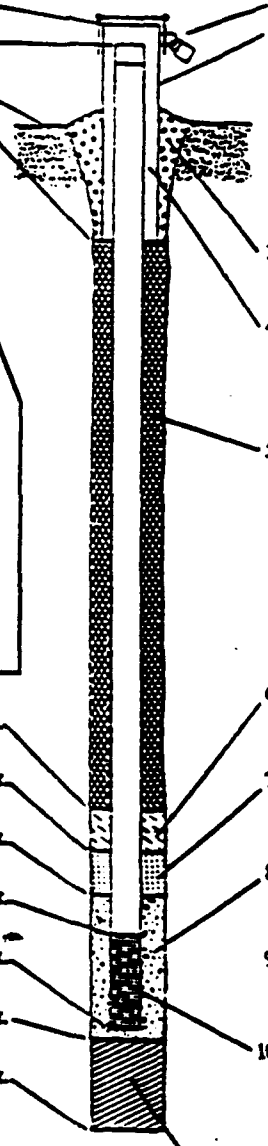

1. Cap and lock? ☒ Yes ☐ No
2. Protective cover pipe:
a. Inside diameter: 6.2 in.
b. Length: 6.2 ft.
c. Material: Steel ☒ 04; Other ☐ ____
d. Additional protection? ☒ Yes ☐ No
If yes, describe: Bucking Posts & gravel pad
3. Surface seal: Bentonite ☐ 30; Concrete ☒ 01; Other ☐ ____
4. Material between well casing and protective pipe: Bentonite ☐ 30; Annular space seal ☒; Other ☐ ____
5. Annular space seal: Granular Bentonite ☐ 33; ____ Lbs/gal mud weight ... Bentonite-sand slurry ☐ 35; ____ Lbs/gal mud weight ..... Bentonite slurry ☐ 31; 5 % Bentonite ..... Bentonite-cement grout ☒ 50; 41 Ft³ volume added for any of the above
How installed: Tremie ☐ 01; Tremie pumped ☐ 02; Gravity ☒ 08
6. Bentonite seal: Bentonite granules ☐ 33; ☐ 1/4 in. ☐ 3/8 in. ☐ 1/2 in. Bentonite pellets ☐ 32; 20' Bentonite Slurry Other ☒ ____
7. Fine sand material: Manufacturer, product name and mesh size: none
Volume added: — ft³
8. Filter pack material: Manufacturer, product name and mesh size: CSS Silica sand
Volume added: 4 ft³
9. Well casing: Flush threaded PVC schedule 40 ☐ 23; Flush threaded PVC schedule 80 ☒ 24; Other ☐ ____
10. Screen material: PVC Schedule 80
Screen type: Factory cut ☒ 11; Continuous slot ☐ 01; Other ☐ ____
Manufacturer: MonoFlex
Slot size: 0.010 in.
Slotted length: 10.0 ft.
11. Backfill material (below filter pack): None ☒; Other ☐ ____

I hereby certify that the information on this form is true and correct to the best of my knowledge.

Signature: Rod K. Rueter Firm: ABB-ES

ABB Environmental Services, Inc. **MONITORING WELL CONSTRUCTION FORM**

Facility/Project Name: BAAP RI/FS	Grid Location: ____ ft. ☐ N. ☐ S. ____ ft. ☐ E. ☐ W.	Well Name: SWN-91-05C
Facility License, Permit or Monitoring Number: ____		Wis. Unique Well Number: ____ DNR Well Number: ____
Type of Well: Water Table Observation Well ☐ 11; Piezometer ☒ 12	Section Location: ____ 1/4 of ____ 1/4 of Section ____ T ____ N, R ____ ☐ E ☐ W	Date Well Installed: 10/11/91 (mm/dd/yy)
Distance Well Is From Waste/Source Boundary: NA ft.	Location of Well Relative to Waste/Source: ☐ Upgradient ☐ Sidegradient ☒ Downgradient ☐ Not Known	Well Installed By: (Person's Name and Firm) Art Rodriguez, Layne Environmental
Is Well A Point of Enforcement Std. Application? ☐ Yes ☒ No		

A. Protective pipe, top elevation 832.94 ft. MSL

B. Well casing, top elevation 832.86 ft. MSL

C. Land surface elevation 830.8 ft. MSL

D. Surface seal, bottom ____ ft. MSL or ____ ft.

12. USCS classification of soil near screen:
☐ GP ☐ GM ☐ GC ☐ GW ☐ SW ☒ SP
☐ SM ☐ SC ☐ ML ☐ MH ☐ CL ☐ CH
☐ Bedrock

13. Sieve analysis attached? ☐ Yes ☒ No

14. Drilling method used: Rotary ☐ 50; Hollow Stem Auger ☐ 41; Dual Wall Reverse Circulation Other ☒

15. Drilling fluid used: Water ☒ 02; Air ☒ 01; Drilling Mud ☐ 03; None ☐ 99

16. Drilling additives used? ☐ Yes ☒ No

Describe ____

17. Source of water (attach analysis): PW #2

E. Bentonite seal, top 722.6 ft. MSL or 108.2 ft.

F. Fine sand, top ____ ft. MSL or ____ ft.

G. Filter pack, top 702.6 ft. MSL or 128.2 ft.

H. Well screen, top 693.8 ft. MSL or 137.0 ft.

I. Well screen, bottom 683.8 ft. MSL or 147.0 ft.

J. Filter pack, bottom 683.8 ft. MSL or 147.0 ft.

K. Borehole, bottom 683.8 ft. MSL or 147.0 ft.

L. Borehole, diameter 10 in.

M. O.D. well casing 4.25 in.

N. I.D. well casing ~~4.0~~ 3.75 in.

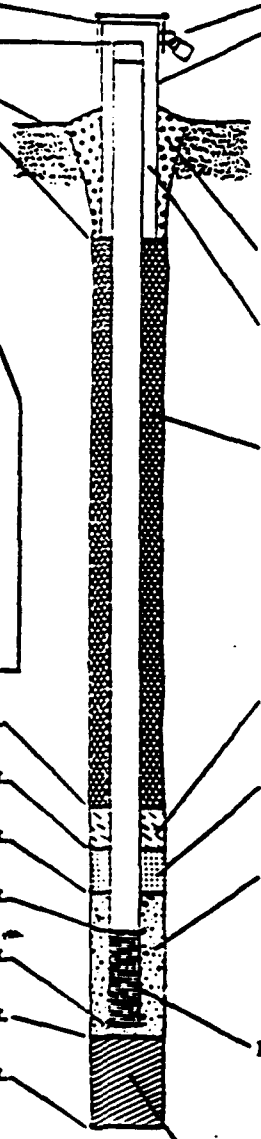

1. Cap and lock? ☒ Yes ☐

2. Protective cover pipe:
a. Inside diameter: 6.0 in.
b. Length: 6.0
c. Material: Steel ☒; Other ☐
d. Additional protection? ☒ Yes ☐
If yes, describe: gravel pad + Bucking post

3. Surface seal: Bentonite ☐ 30; Concrete ☒; Other ☐

4. Material between well casing and protective pipe: Bentonite ☐ 30; Annular space seal ☒; Other ☐

5. Annular space seal: Granular Bentonite ☐ 33
____ Lbs/gal mud weight . . . Bentonite-sand slurry ☐
____ Lbs/gal mud weight . . . . . Bentonite slurry ☐
5 % Bentonite . . . . . Bentonite-cement grout ☐
64 Ft^3 volume added for any of the above
How installed: Tremie ☐; Tremie pumped ☐; Gravity ☒ 03

6. Bentonite seal: Bentonite granules ☐; ☐ 1/4 in. ☐ 3/8 in. ☐ 1/2 in. Bentonite pellets ☐; 20' Bentonite Slurry Other ☒

7. Fine sand material: Manufacturer, product name and mesh size: none
Volume added ____ ft^3

8. Filter pack material: Manufacturer, product name and mesh size: CSSI Silica sand
Volume added 2.6 ft^3

9. Well casing: Flush threaded PVC schedule 40 ☐ 23; Flush threaded PVC schedule 80 ☒; Other ☐

10. Screen material: PVC Schedule 80
Screen type: Factory cut ☒ 11; Continuous slot ☐; Other ☐
Manufacturer: Monoflex Inc
Slot size: 0.010
Slotted length: 10.0

11. Backfill material (below filter pack): None ☒; Other ☐

I hereby certify that the information on this form is true and correct to the best of my knowledge.

Signature: Rod R. Rustom | Firm: ABB-ES

ABB Environmental Services, Inc. MONITORING WELL CONSTRUCTION FORM

Facility/Project Name: BHAP RI/FS
Facility License, Permit or Monitoring Number:
Grid Location: ft. N. S. / ft. E. W.
Well Name: SWN-91-05D
Wis. Unique Well Number: DNR Well Number:
Type of Well: Water Table Observation Well 11; Piezometer 12
Section Location: 1/4 of 1/4 of Section; T N, R E W
Date Well Installed: 10/02/91 (m m d d y y)
Distance Well Is From Waste/Source Boundary: NA ft.
Well Installed By: (Person's Name and Firm) Art Radziper, Layne Environmental
Is Well A Point of Enforcement Std. Application? Yes / No
Location of Well Relative to Waste/Source: Upgradient / Sidegradient / Downgradient / Not Known

A. Protective pipe, top elevation 833.48 ft. MSL
B. Well casing, top elevation 833.31 ft. MSL
C. Land surface elevation 831.2 ft. MSL
D. Surface seal, bottom ft. MSL or ft.

12. USCS classification of soil near screen:
GP GM GC GW SW SP
SM SC ML MH CL CH
Bedrock

13. Sieve analysis attached? Yes / No

14. Drilling method used: Rotary 50; Hollow Stem Auger 41; Other
Dual Wall Reverse Circulation

15. Drilling fluid used: Water 02; Air 01; Drilling Mud 03; None 99

16. Drilling additives used? Yes / No

Describe

17. Source of water (attach analysis):
RW #2

E. Bentonite seal, top 673.2 ft. MSL or 158.0 ft.
F. Fine sand, top ft. MSL or ft.
G. Filter pack, top 653.1 ft. MSL or 178.1 ft.
H. Well screen, top 640.7 ft. MSL or 190.5 ft.
I. Well screen, bottom 630.7 ft. MSL or 200.5 ft.
J. Filter pack, bottom 630.7 ft. MSL or 200.5 ft.
K. Borehole, bottom 628.8 ft. MSL or 202.4 ft.
L. Borehole, diameter 9.0 in.
M. O.D. well casing 4.25 in.
N. I.D. well casing 3.75 in.

1. Cap and lock? Yes / No
2. Protective cover pipe:
a. Inside diameter: 6.0 in.
b. Length: 6.0 ft.
c. Material: Steel 04; Other
d. Additional protection? Yes / No
If yes, describe: Gravel pad + Bumper Posts
3. Surface seal: Bentonite 30; Concrete 01; Other
4. Material between well casing and protective pipe: Bentonite 30; Annular space seal; Other
5. Annular space seal: Granular Bentonite 33; ____ Lbs/gal mud weight ... Bentonite-sand slurry 35; ____ Lbs/gal mud weight ..... Bentonite slurry 31; 5 % Bentonite ..... Bentonite-cement grout 50; 100 Ft³ volume added for any of the above
How installed: Tremie 01; Tremie pumped 02; Gravity 08
6. Bentonite seal: Bentonite granules 33; 1/4 in. 3/8 in. 1/2 in. Bentonite pellets 32; 20' Bentonite Slurry Other
7. Fine sand material: Manufacturer, product name and mesh size: none
Volume added ft³
8. Filter pack material: Manufacturer, product name and mesh size: CSS Silica Sand
Volume added 4 ft³
9. Well casing: Flush threaded PVC schedule 40 23; Flush threaded PVC schedule 30 24; Other
10. Screen material: PVC Schedule 80
Screen type: Factory cut 11; Continuous slot 01; Other
Manufacturer: MonaFlex Inc
Slot size: 0.010 in.
Slotted length: 10.0 ft.
11. Backfill material (below filter pack): None; Other

I hereby certify that the information on this form is true and correct to the best of my knowledge.
Signature: Paul R. Rantol Firm: ABB-ES

Badger Army Ammunition Plant
Baraboo, Wisconsin

WELL DETAIL INFORMATION SHEET

JOB NO. C 3742
BORING NO. S1101
DATE 12/14/79
CHIEF RJR
LOCATION N484,732.21 E2,064,640.61

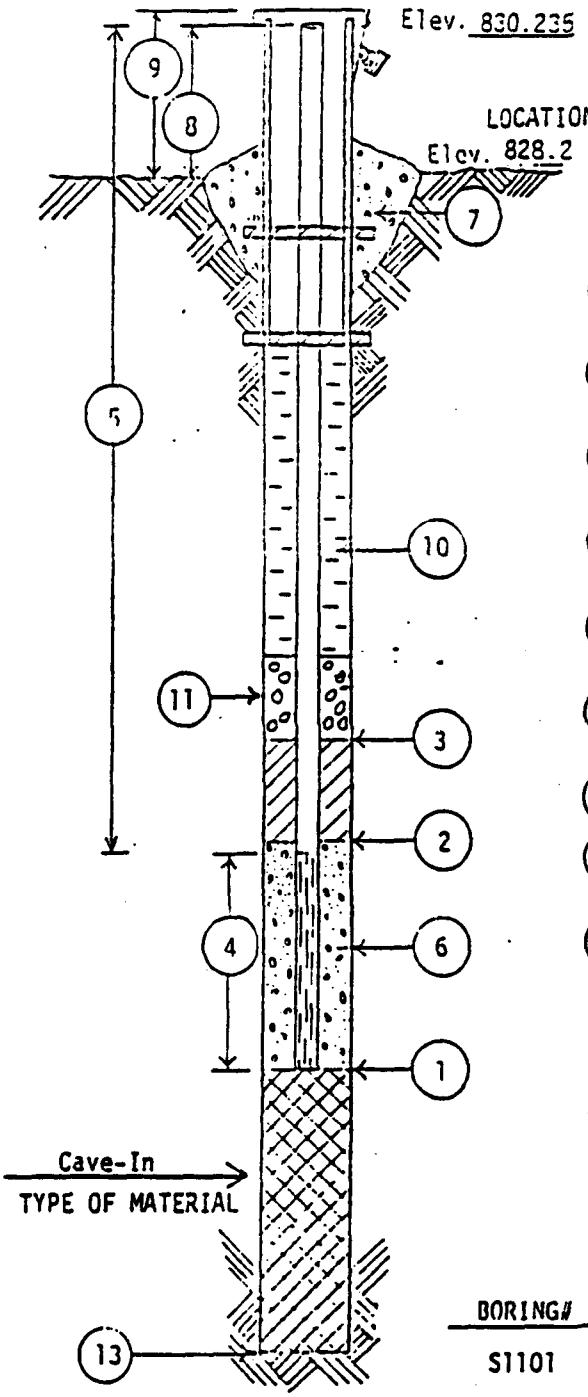

All depth measurements of well detail to be from ground surface.

(1) DEPTH TO BOTTOM OF WELL POINT OR SLOTTED PIPE 68 FEET.

(2) DEPTH OF BOTTOM OF SEAL (if installed) 12'1" FEET.

(3) DEPTH TO TOP OF SEAL (if installed) - 10' FEET.

(4) LENGTH OF PVC WELL SCREEN, 20 FEET. _____ Feet Slotted

(5) TOTAL LENGTH OF PIPE 50 FEET @ 4 ID IN. DIAMETER.

(6) TYPE OF FILTER MATERIAL AROUND WELL POINT OR SLOTTED PIPE Cave-In.

(7) CONCRETE CAP, YES (NO) (Circle One)

(8) HEIGHT OF WELL CASING ABOVE GROUND 2.0 FEET.

(9) PROTECTIVE CASING? (YES) NO (Circle One)
HEIGHT ABOVE GROUND 3.3'.
LOCKING CAP? YES NO (Circle One)

(10) TYPE OF BACKFILL: Cement-Bentonite Grout

(11) THICKNESS OF GRAVEL PACK 3:1 by weight None FEET.

(12) DEPTH TO FIRST COUPLING 5.0 FEET. (Fro
COUPLING INTERVAL 10.2 FEET.

(13) TOTAL DEPTH OF BOREHOLE 80.0 FEET.

BORING#	DATE	TIME	DEPTH TO WATER	GROUNDWATER ELEVATION
S1101	2/19/80		65.98'	764.26'

Badger Army Ammunition Plant
Baraboo, Wisconsin

WELL DETAIL INFORMATION SHEET

JOB NO. C 8742
BORING NO. S1102
DATE 11/5/79
CHIEF HFS
LOCATION N484, 691.76 E2,067,598.46

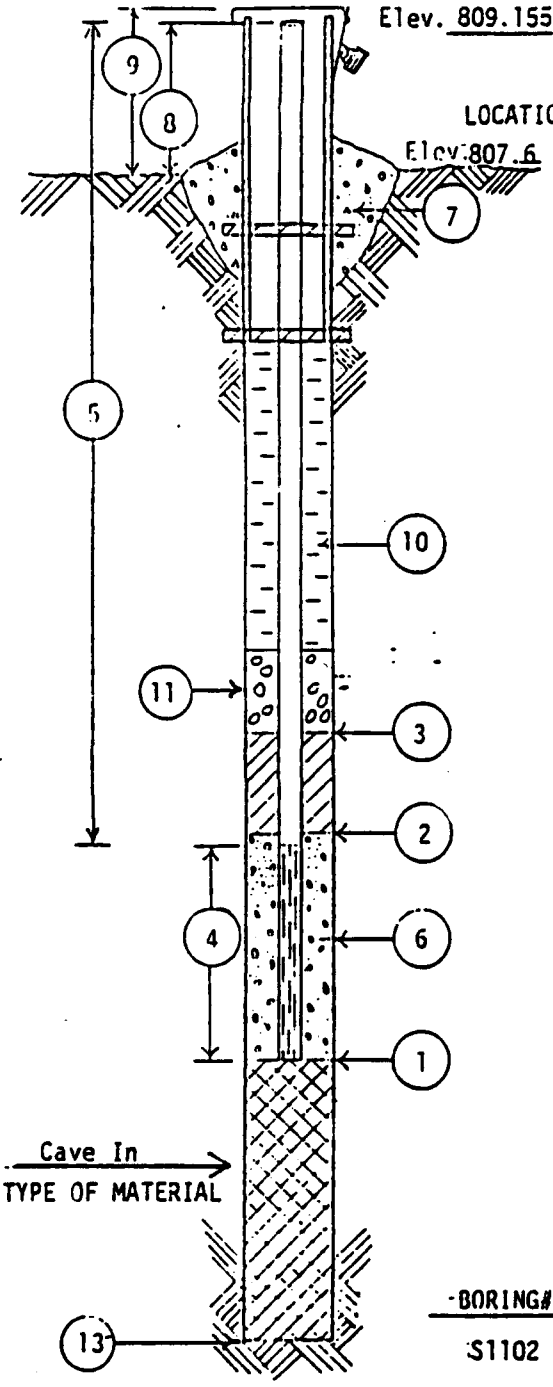

All depth measurements of well detail to be from ground surface.

(1) DEPTH TO BOTTOM OF WELL POINT OR SLOTTED PIPE 64.60 FEET.

(2) DEPTH OF BOTTOM OF SEAL (if installed) 40.92 FEET.

(3) DEPTH TO TOP OF SEAL (if installed) 36.56 FEET.

(4) LENGTH OF PVC WELL SCREEN, 20.00 FEET. 19 Feet Slotted

(5) TOTAL LENGTH OF PIPE 46.18 FEET @ 4 ID IN. DIAMETER.

(6) TYPE OF FILTER MATERIAL AROUND WELL POINT OR SLOTTED PIPE Medium Sand .

(7) CONCRETE CAP, YES (NO) (Circle One)

(8) HEIGHT OF WELL CASING ABOVE GROUND 1.58 FEET.

(9) PROTECTIVE CASING? (YES) NO (Circle One)
HEIGHT ABOVE GROUND 2.6'.
LOCKING CAP? (YES) NO (Circle One)

(10) TYPE OF BACKFILL Cement/Bentonite Grout 3:1 by weight

(11) THICKNESS OF GRAVEL PACK 4.23 FEET.

(12) DEPTH TO FIRST COUPLING .40 FEET. From (TOC)
COUPLING INTERVAL 15.26 FEET.

(13) TOTAL DEPTH OF BOREHOLE 65 FEET.

BORING#	DATE	TIME	DEPTH TO WATER	GROUNDWATER ELEVATION
S1102	2/19/80		45.27'	763.89

Note: S1103 nearest sample boring

Badger Army Ammunition Plant
Baraboo, Wisconsin

WELL DETAIL INFORMATION SHEET

JOB NO. C 3742
BORING NO. S1103
DATE 11/2/79
CHIEF HES
LOCATION N484,687.77 E2,067,591.00

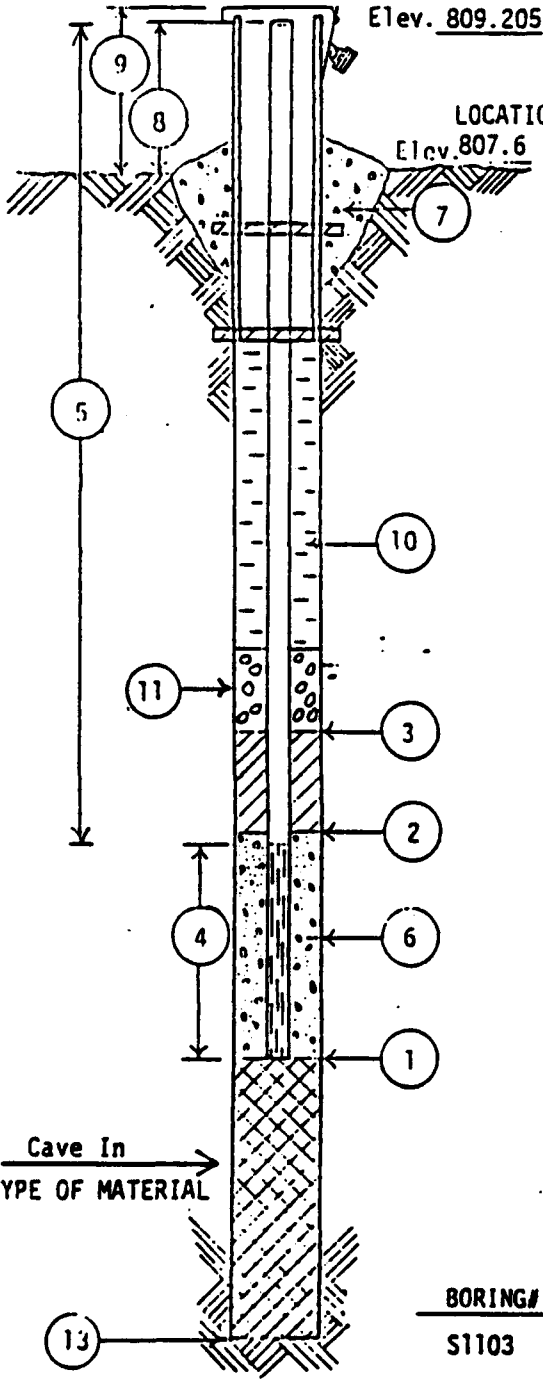

All depth measurements of well detail to be from ground surface.

(1) DEPTH TO BOTTOM OF WELL POINT OR SLOTTED PIPE 120.11 FEET.

(2) DEPTH OF BOTTOM OF SEAL (if installed) 109.79 FEET.

(3) DEPTH TO TOP OF SEAL (if installed) 107.25 FEET.

(4) LENGTH OF PVC WELL SCREEN, 5.05 FEET. 5.05 Feet Slotted

(5) TOTAL LENGTH OF PIPE 116.64 FEET @ 4 I.D. IN. DIAMETER.

(6) TYPE OF FILTER MATERIAL AROUND WELL POINT OR SLOTTED PIPE Medium Sand.

(7) CONCRETE CAP, YES (NO) (Circle One)

(8) HEIGHT OF WELL CASING ABOVE GROUND 1.58 FEET.

(9) PROTECTIVE CASING? (YES) NO (Circle One)
HEIGHT ABOVE GROUND
LOCKING CAP? (YES) NO (Circle One)

(10) TYPE OF BACKFILL: Cement/Bentonite Grout 3:1 by weight

(11) THICKNESS OF GRAVEL PACK 1.07 FEET.

(12) DEPTH TO FIRST COUPLING 4.40 FEET. From (TOC
COUPLING INTERVAL 10.2 FEET.

(13) TOTAL DEPTH OF BOREHOLE 120 FEET.

BORING#	DATE	TIME	DEPTH TO WATER	GROUNDWATER ELEVATION
S1103	2/19/80		45.24	763.97

Badger Army Ammunition Plant
Baraboo, Wisconsin

WELL DETAIL INFORMATION SHEET

JOB NO. C 8742
BORING NO. S1104
DATE 11/7/79
CHIEF HFS
LOCATION N484,801.60 E2,071,095.05

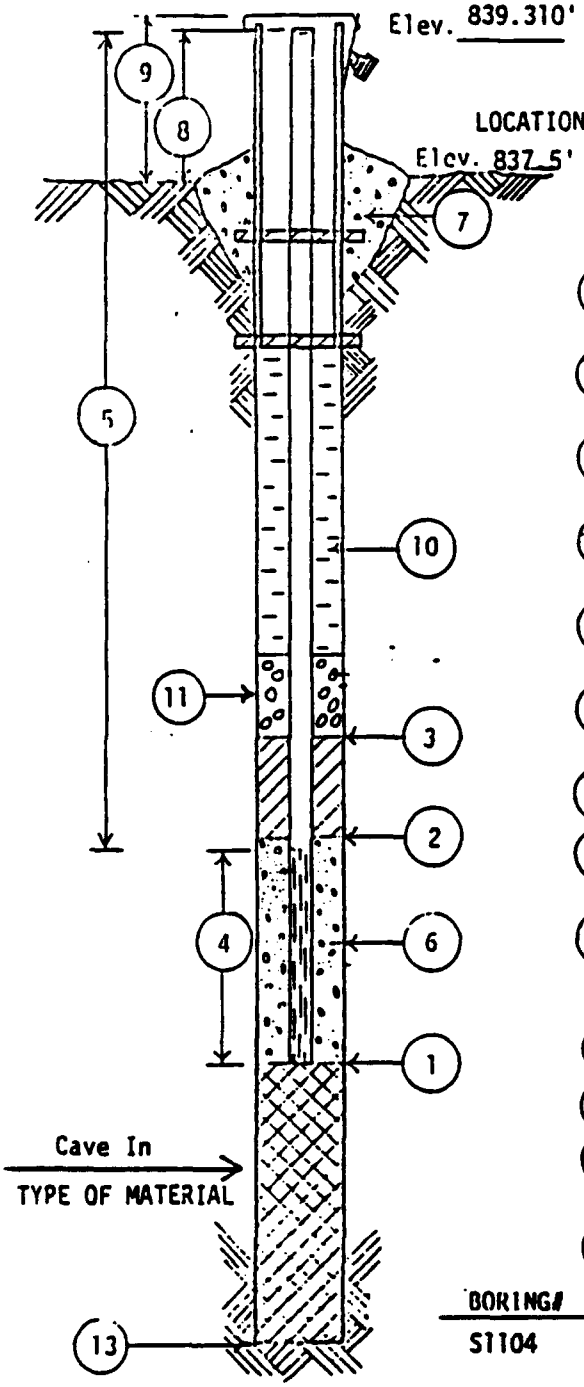

All depth measurements of well detail to be from ground surface.

(1) DEPTH TO BOTTOM OF WELL POINT OR SLOTTED PIPE 93.52 FEET.

(2) DEPTH OF BOTTOM OF SEAL (if installed) 65.6 FEET.

(3) DEPTH TO TOP OF SEAL (if installed) 64.6 FEET.

(4) LENGTH OF PVC WELL SCREEN, 20.22 FEET. 18.92 Feet Slotted

(5) TOTAL LENGTH OF PIPE 75.10 FEET @ 4 I.D. IN. DIAMETER.

(6) TYPE OF FILTER MATERIAL AROUND WELL POINT OR SLOTTED PIPE Medium Sand .

(7) CONCRETE CAP, YES (NO) (Circle One)

(8) HEIGHT OF WELL CASING ABOVE GROUND 1.8 FEET.

(9) PROTECTIVE CASING? (YES) NO (Circle One)
HEIGHT ABOVE GROUND .
LOCKING CAP? (YES) NO (Circle One)

(10) TYPE OF BACKFILL: Cement/Bentonite Grout 3:1 by weight

(11) THICKNESS OF GRAVEL PACK 3 FEET.

(12) DEPTH TO FIRST COUPLING 2.56 FEET. From (TOC)
COUPLING INTERVAL 10.2 FEET.

(13) TOTAL DEPTH OF BOREHOLE 96 FEET.

BORING#	DATE	TIME	DEPTH TO WATER	GROUNDWATER ELEVATION
S1104	2/19/80		75.20'	764.11'

Note: S1106 nearest sampled boring

Badger Army Ammunition Plant
Baraboo, Wisconsin

WELL DETAIL INFORMATION SHEET

JOB NO. C 3742
BORING NO. S1103
DATE 11/2/79
CHIEF HFS
LOCATION N484,687.77 E2,067,591.00

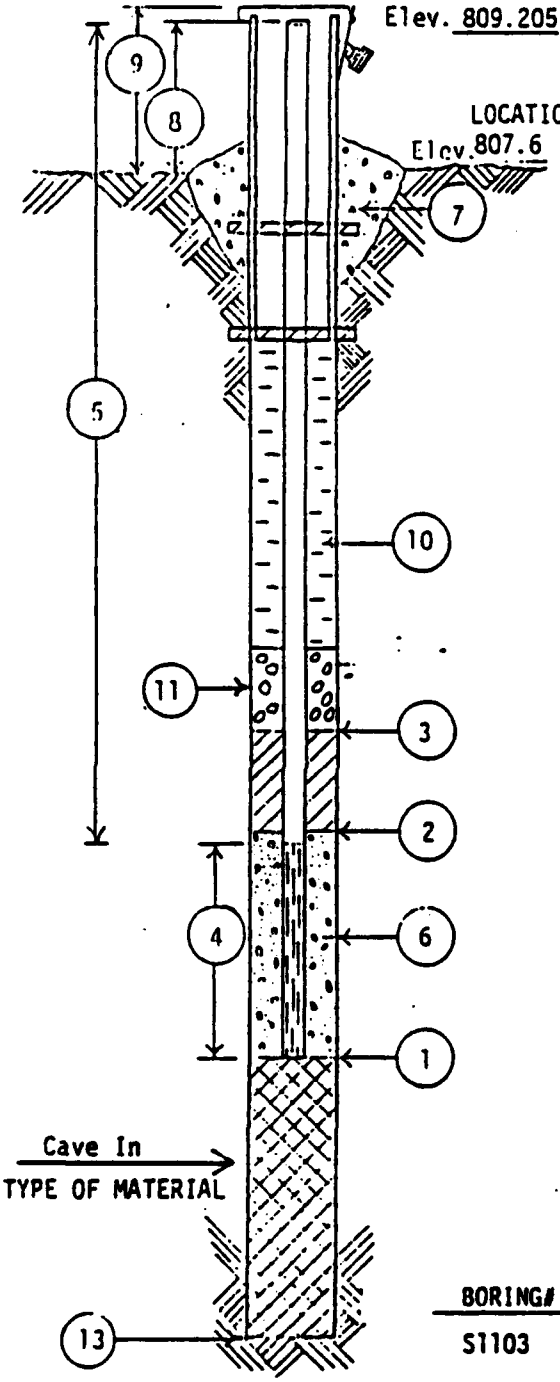

All depth measurements of well detail to be from ground surface.

(1) DEPTH TO BOTTOM OF WELL POINT OR SLOTTED PIPE 120.11 FEET.

(2) DEPTH OF BOTTOM OF SEAL (if installed) 109.79 FEET.

(3) DEPTH TO TOP OF SEAL (if installed) 107.25 FEET.

(4) LENGTH OF PVC WELL SCREEN, 5.05 FEET. 5.05 Feet Slotted

(5) TOTAL LENGTH OF PIPE 116.64 FEET @ 4 I.D. IN. DIAMETER.

(6) TYPE OF FILTER MATERIAL AROUND WELL POINT OR SLOTTED PIPE Medium Sand.

(7) CONCRETE CAP, YES (NO) (Circle One)

(8) HEIGHT OF WELL CASING ABOVE GROUND 1.58 FEET.

(9) PROTECTIVE CASING? (YES) NO (Circle One)
HEIGHT ABOVE GROUND .
LOCKING CAP? (YES) NO (Circle One)

(10) TYPE OF BACKFILL: Cement/Bentonite Grout 3:1 by weight

(11) THICKNESS OF GRAVEL PACK 1.07 FEET.

(12) DEPTH TO FIRST COUPLING 4.40 FEET. (Fro (TO
COUPLING INTERVAL 10.2 FEET.

(13) TOTAL DEPTH OF BOREHOLE 120 FEET.

BORING#	DATE	TIME	DEPTH TO WATER	GROUNDWATER ELEVATION
S1103	2/19/80		45.24	763.97

Badger Army Ammunition Plant
araboo, Wisconsin

WELL DETAIL INFORMATION SHEET

JOB NO. C 8742
BORING NO. S1106
DATE 11/14/79
CHIEF HFS
LOCATION N484,793.05 E2,071,101.83

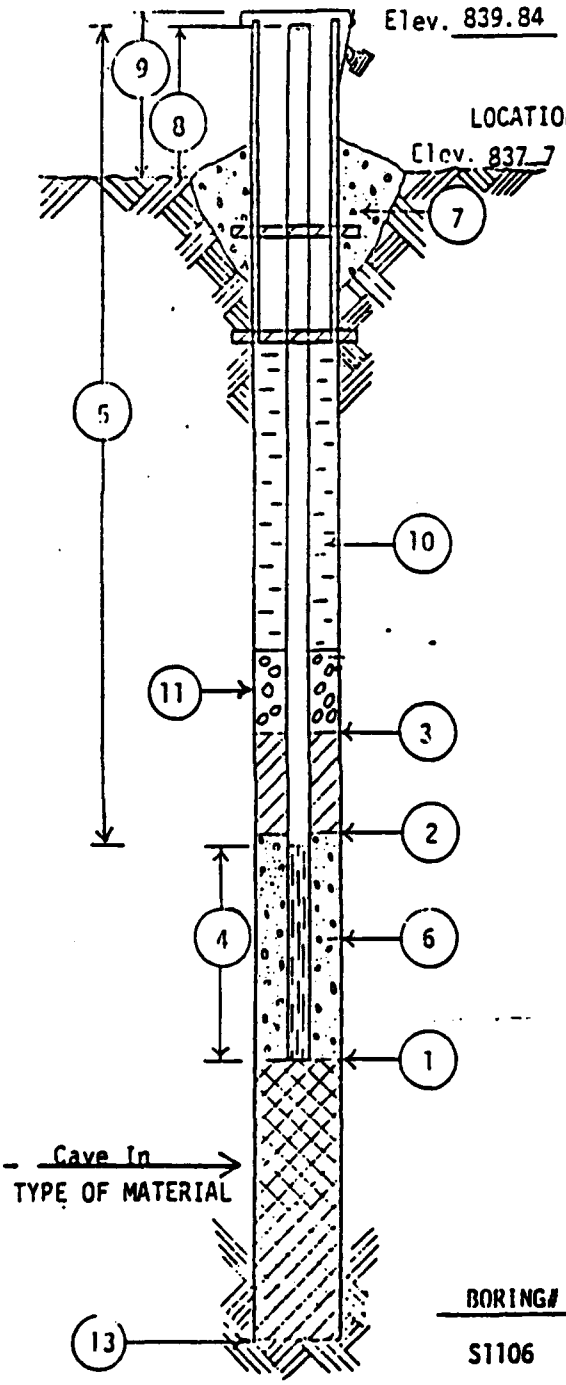

All depth measurements of well detail to be from ground surface.

(1) DEPTH TO BOTTOM OF WELL POINT OR SLOTTED PIPE 135.72 FEET.

(2) DEPTH OF BOTTOM OF SEAL (if installed) 125.15 FEET.

(3) DEPTH TO TOP OF SEAL (if installed) 119.55 FEET.

(4) LENGTH OF PVC WELL SCREEN, 4.96 FEET. 4.5 Feet Slotted

(5) TOTAL LENGTH OF PIPE 132.87 FEET @ 4 I.D. IN. DIAMETER.

(6) TYPE OF FILTER MATERIAL AROUND WELL POINT OR SLOTTED PIPE Medium Sand & Cave in Material

(7) CONCRETE CAP, YES (NO) (Circle One)

(8) HEIGHT OF WELL CASING ABOVE GROUND 2.1 FEET.

(9) PROTECTIVE CASING? (YES) NO (Circle One)
HEIGHT ABOVE GROUND
LOCKING CAP? (YES) NO (Circle One)

(10) TYPE OF BACKFILL: Cement/Bentonite Grout 3:1 by weight

(11) THICKNESS OF GRAVEL PACK 7.8 FEET.

(12) DEPTH TO FIRST COUPLING .55 FEET. From (TOC)
COUPLING INTERVAL 10.2 FEET.

(13) TOTAL DEPTH OF BOREHOLE 136 FEET.

BORING#	DATE	TIME	DEPTH TO WATER	GROUNDWATER ELEVATION
S1106	2/19/80		75.74'	764.10'

Badger Army Ammunition Plant
Baraboo, Wisconsin

WELL DETAIL INFORMATION SHEET

JOB NO. C 8742
BORING NO. S1107
DATE 1/10/80
CHIEF HFS
LOCATION N484,860.18 E2,072,645.25

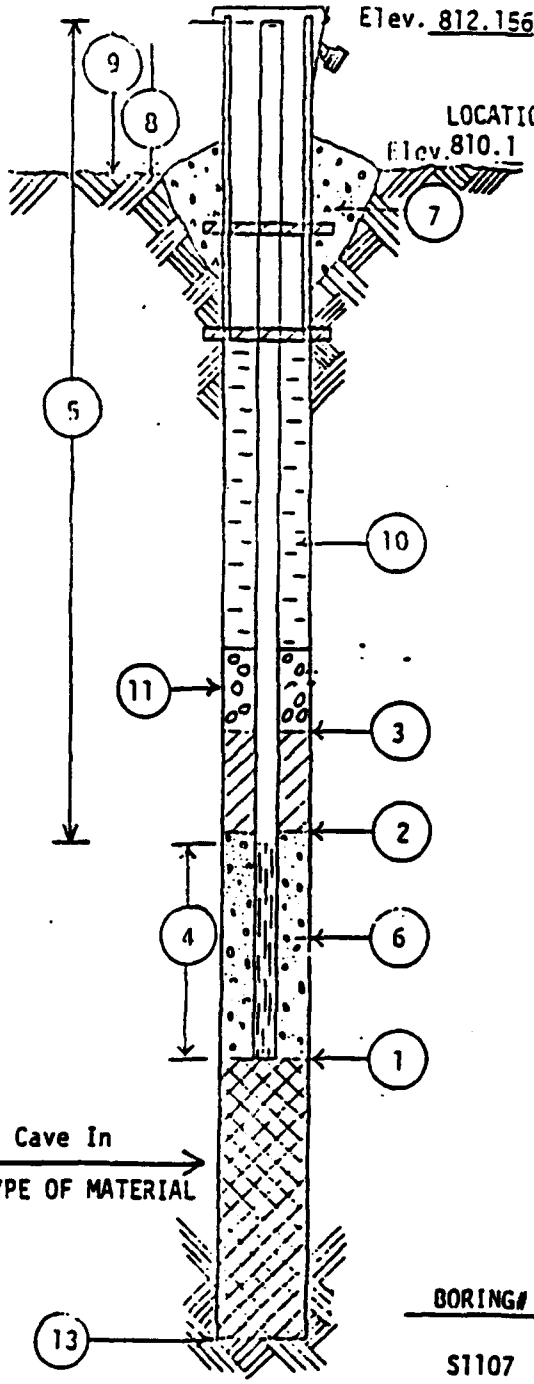

All depth measurements of well detail to be from ground surface.

(1) DEPTH TO BOTTOM OF WELL POINT OR SLOTTED PIPE 73.7 FEET.

(2) DEPTH OF BOTTOM OF SEAL (if installed) 8.1 FEET.

(3) DEPTH TO TOP OF SEAL (if installed) 7 FEET.

(4) LENGTH OF PVC WELL SCREEN, 20.39 FEET. 18.80 Feet Slotted

(5) TOTAL LENGTH OF PIPE 55.43 FEET @ 4 I.D. IN. DIAMETER.

(6) TYPE OF FILTER MATERIAL AROUND WELL POINT OR SLOTTED PIPE Cave-in & Medium San

(7) CONCRETE CAP, YES (NO) (Circle One)

(8) HEIGHT OF WELL CASING ABOVE GROUND 2.1 FEET.

(9) PROTECTIVE CASING? (YES) NO (Circle One)
HEIGHT ABOVE GROUND 2.1
LOCKING CAP? (YES) NO (Circle One)

(10) TYPE OF BACKFILL: Cement/Bentonite Grout 3:1 by weign

(11) THICKNESS OF GRAVEL PACK 1 FEET.

(12) DEPTH TO FIRST COUPLING 4.35 FEET. (TC From
COUPLING INTERVAL 10.2 FEET.

(13) TOTAL DEPTH OF BOREHOLE 78 FEET.

BORING#	DATE	TIME	DEPTH TO WATER	GROUNDWATER ELEVATION
S1107	2/19/80		47.93	764.23

Badger Army Ammunition Plant
araboo, Wisconsin

WELL DETAIL INFORMATION SHEET

JOB NO. C 8742
BORING NO. S1108
DATE 12/28/79
CHIEF J. Rose
LOCATION N484,751.72 E2,073,316.38

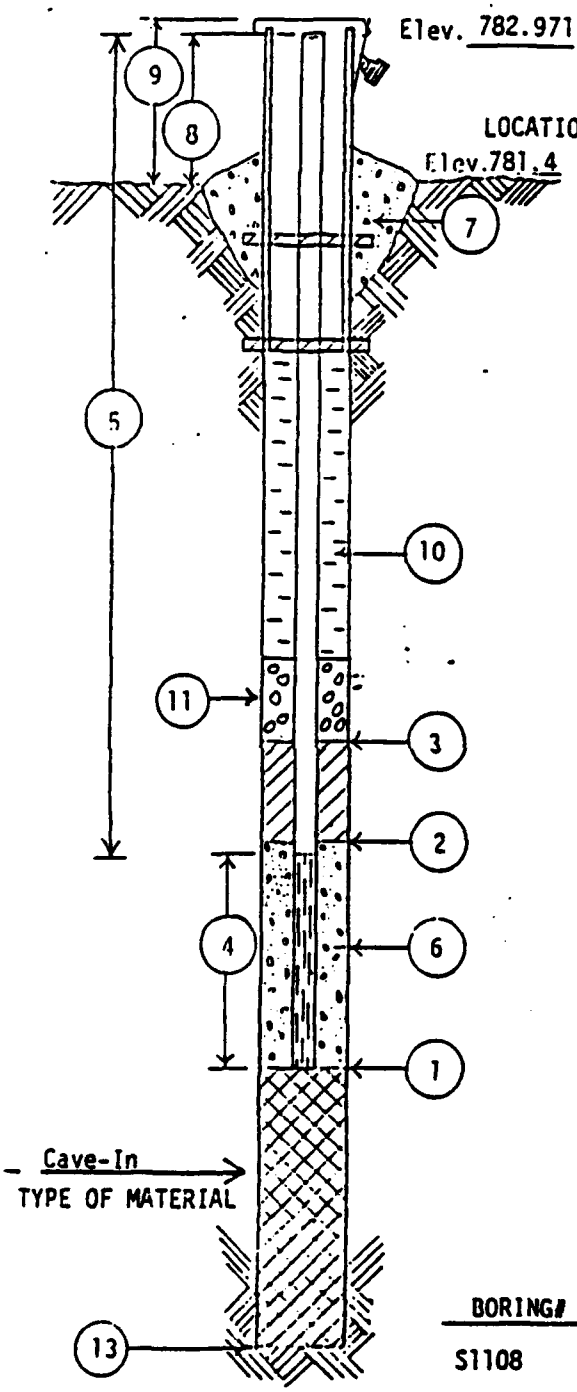

All depth measurements of well detail to be from ground surface.

(1) DEPTH TO BOTTOM OF WELL POINT OR SLOTTED PIPE 39.25 FEET.

(2) DEPTH OF BOTTOM OF SEAL (if installed) 9.5 FEET.

(3) DEPTH TO TOP OF SEAL (if installed) 8.5 FEET.

(4) LENGTH OF PVC WELL SCREEN, 20.41 FEET. 19.01 Feet Slotted

(5) TOTAL LENGTH OF PIPE 20.44 FEET @ 4 IN. DIAMETER.

(6) TYPE OF FILTER MATERIAL AROUND WELL POINT OR SLOTTED PIPE Medium Sand.

(7) CONCRETE CAP, YES (NO) (Circle One)

(8) HEIGHT OF WELL CASING ABOVE GROUND 1.6 FEET.

(9) PROTECTIVE CASING? (YES) NO (Circle One)
HEIGHT ABOVE GROUND 2.9'.
LOCKING CAP? (YES) NO (Circle One)

(10) TYPE OF BACKFILL: Cement Bentonite Grout 3:1 by weight

(11) THICKNESS OF GRAVEL PACK 1.5 FEET.

(12) DEPTH TO FIRST COUPLING 10.21 FEET. From (TOC)
COUPLING INTERVAL 10.2 FEET.

(13) TOTAL DEPTH OF BOREHOLE 42 FEET.

BORING#	DATE	TIME	DEPTH TO WATER	GROUNDWATER ELEVATION
S1108	2/19/80		18.92	764.05

Badger Army Ammunition Plant
Baraboo, Wisconsin

WELL DETAIL INFORMATION SHEET

JOB NO. C 8742
BORING NO. S1109
DATE 2/14/80
CHIEF HFS
LOCATION N488,536.15 E2,064,509.76

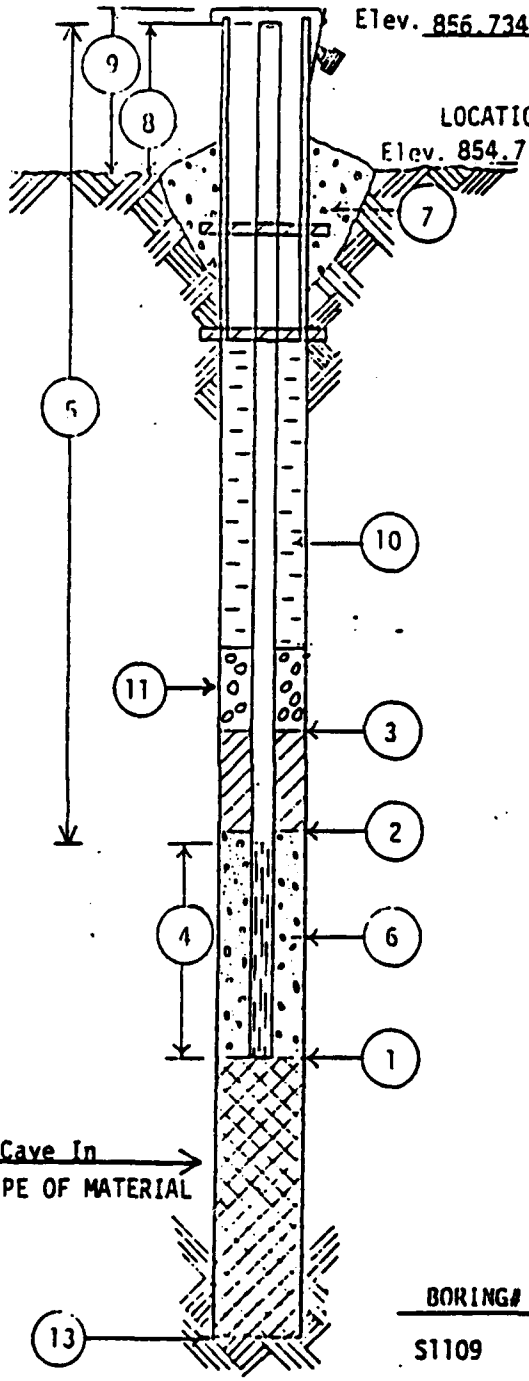

All depth measurements of well detail to be from ground surface.

(1) DEPTH TO BOTTOM OF WELL POINT OR SLOTTED PIPE 107.34 FEET.

(2) DEPTH OF BOTTOM OF SEAL (if installed) 12 FEET.

(3) DEPTH TO TOP OF SEAL (if installed) 11 FEET.

(4) LENGTH OF PVC WELL SCREEN, 20.38 FEET. 19.06 Feet Slotted

(5) TOTAL LENGTH OF PIPE 89.01 FEET @ 4 I.D. IN. DIAMETER.

(6) TYPE OF FILTER MATERIAL AROUND WELL POINT OR SLOTTED PIPE Medium Sand.

(7) CONCRETE CAP, YES (NO) (Circle One)

(8) HEIGHT OF WELL CASING ABOVE GROUND 2.05 FEET.

(9) PROTECTIVE CASING? (YES) NO (Circle One)
HEIGHT ABOVE GROUND 2.05.
LOCKING CAP? (YES) NO (Circle One)

(10) TYPE OF BACKFILL: Cement/Bentonite Grout 6:1 by weignt

(11) THICKNESS OF GRAVEL PACK 2 FEET.

(12) DEPTH TO FIRST COUPLING 7.42 FEET.
COUPLING INTERVAL 10.21 FEET.

(13) TOTAL DEPTH OF BOREHOLE 108 FEET.

BORING#	DATE	TIME	DEPTH TO WATER	GROUNDWATER ELEVATION
S1109	2/19/80		87.18'	769.55'

Radger Army Ammunition Plant
araboo, Wisconsin

WELL DETAIL INFORMATION SHEET

JOB NO. C 8742
BORING NO. S1110
DATE 1/15/80
CHIEF HFS
LOCATION N486,476.12 E2,073,302.11

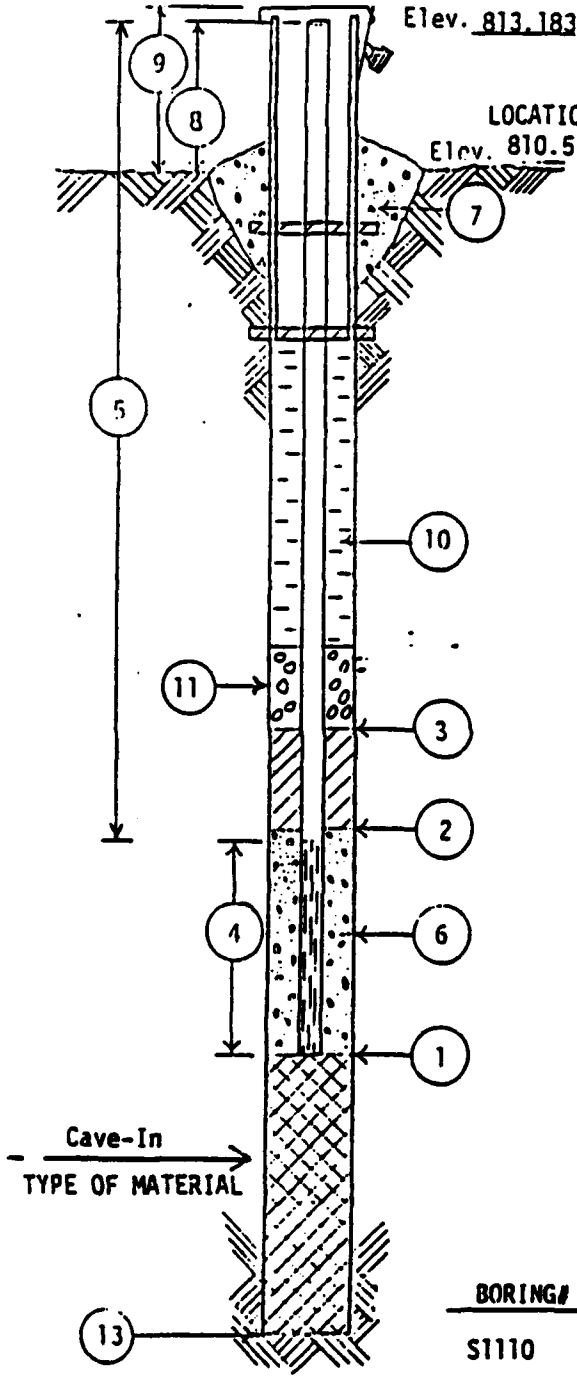

All depth measurements of well detail to be from ground surface.

(1) DEPTH TO BOTTOM OF WELL POINT OR SLOTTED PIPE 62 FEET.

(2) DEPTH OF BOTTOM OF SEAL (if installed) 12 FEET.

(3) DEPTH TO TOP OF SEAL (if installed) 11 FEET.

(4) LENGTH OF PVC WELL SCREEN, 20.24 FEET. 18.98 Feet Slotted

(5) TOTAL LENGTH OF PIPE 44.41 FEET @ 4 I.D. IN. DIAMETER.

(6) TYPE OF FILTER MATERIAL AROUND WELL POINT OR SLOTTED PIPE Medium Sand.

(7) CONCRETE CAP, YES (NO) (Circle One)

(8) HEIGHT OF WELL CASING ABOVE GROUND 2.7 FEET.

(9) PROTECTIVE CASING? (YES) NO (Circle One)
HEIGHT ABOVE GROUND 2.7.
LOCKING CAP? (YES) NO (Circle One)

(10) TYPE OF BACKFILL: Cement/Bentonite Grout 5.6:1 by weight

(11) THICKNESS OF GRAVEL PACK 3 FEET.

(12) DEPTH TO FIRST COUPLING 3.62 FEET. From (TOC)
COUPLING INTERVAL 10.2 FEET.

(13) TOTAL DEPTH OF BOREHOLE 66 FEET.

BORING#	DATE	TIME	DEPTH TO WATER	GROUNDWATER ELEVATION
S1110	2/19/80		45.76	767.42

Radger Army Ammunition Plant
araboo, Wisconsin

WELL DETAIL INFORMATION SHEET

JOB NO. C 8742
BORING NO. S1111
DATE 1/2/80
CHIEF HFS
LOCATION N487,413.09 E2,075,847.11

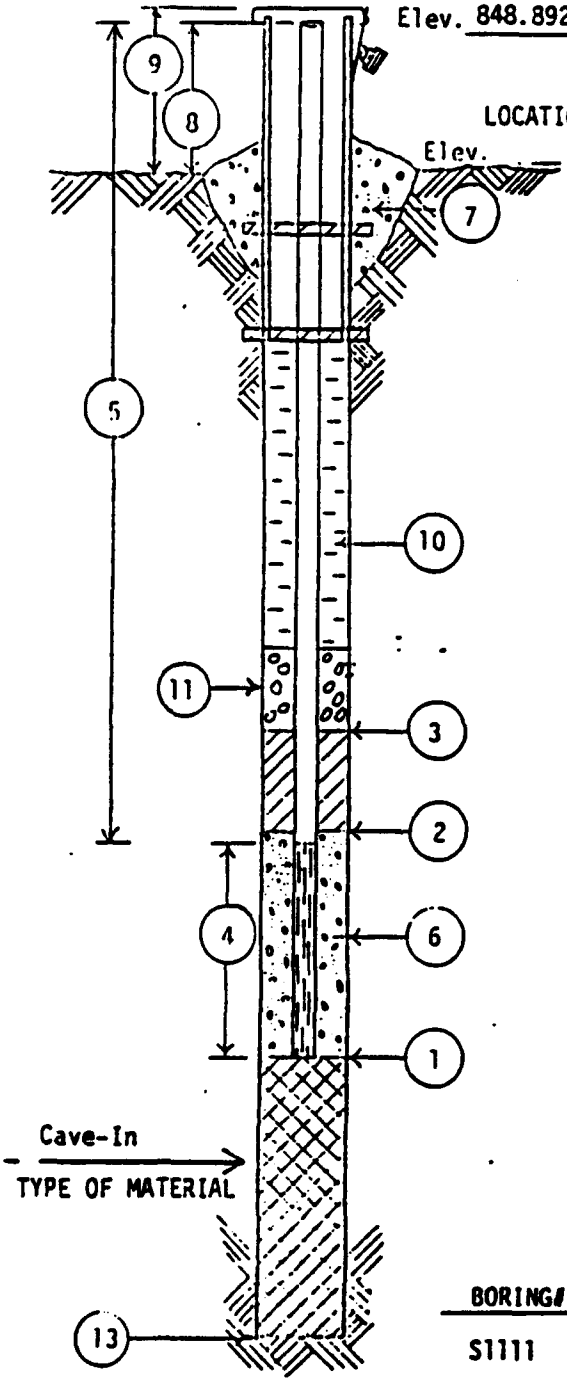

All depth measurements of well detail to be from ground surface.

(1) DEPTH TO BOTTOM OF WELL POINT OR SLOTTED PIPE 99 FEET.

(2) DEPTH OF BOTTOM OF SEAL (if installed) 9 FEET.

(3) DEPTH TO TOP OF SEAL (if installed) 8 FEET.

(4) LENGTH OF PVC WELL SCREEN, 20.24 FEET. 18.92 Feet Slotted

(5) TOTAL LENGTH OF PIPE 80.93 FEET @ 4 I.D. IN. DIAMETER.

(6) TYPE OF FILTER MATERIAL AROUND WELL POINT OR SLOTTED PIPE Medium Sand.

(7) CONCRETE CAP, YES (NO) (Circle One)

(8) HEIGHT OF WELL CASING ABOVE GROUND 2.4 FEET.

(9) PROTECTIVE CASING? (YES) NO (Circle One)
HEIGHT ABOVE GROUND 2.4.
LOCKING CAP? (YES) NO (Circle One)

(10) TYPE OF BACKFILL: Cement/Bentonite Grout 5.6:1 by weight

(11) THICKNESS OF GRAVEL PACK 1 FEET.

(12) DEPTH TO FIRST COUPLING 9.32 FEET. From (TOC
COUPLING INTERVAL 10.23 FEET.

(13) TOTAL DEPTH OF BOREHOLE 102 FEET.

BORING#	DATE	TIME	DEPTH TO WATER	GROUNDWATER ELEVATION
S1111	2/19/80		79.34'	769.55'

Badger Army Ammunition Plant
Baraboo, Wisconsin

WELL DETAIL INFORMATION SHEET

JOB NO. C 8742
BORING NO. S1112
DATE 1/4/80
CHIEF HFS
LOCATION N409,049.07 E2,076,746.15

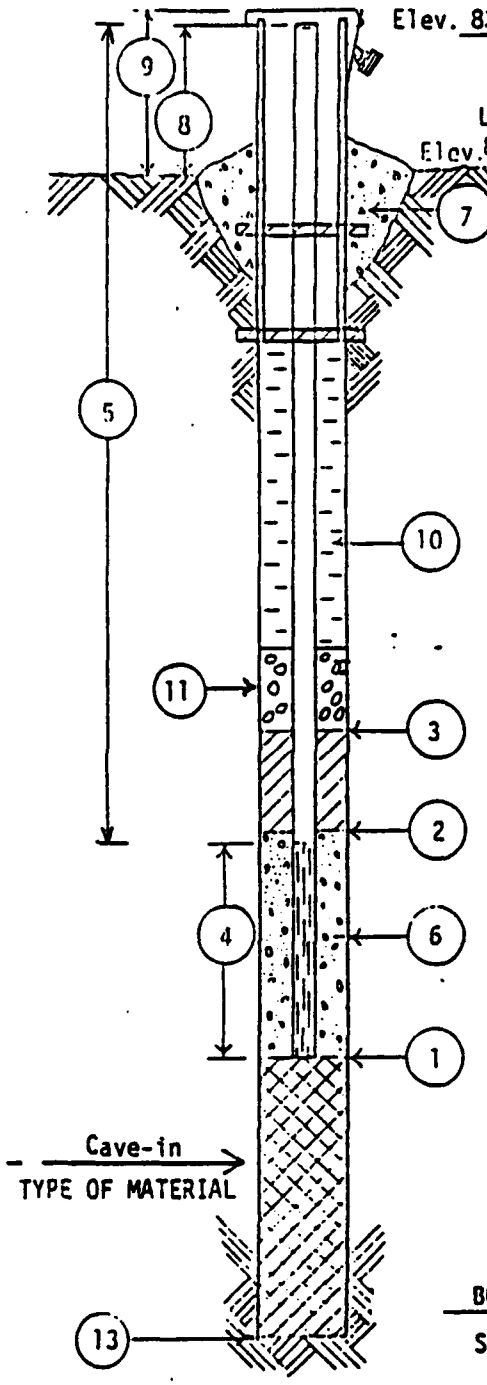

All depth measurements of well detail to be from ground surface.

(1) DEPTH TO BOTTOM OF WELL POINT OR SLOTTED PIPE 91.7 FEET.

(2) DEPTH OF BOTTOM OF SEAL (if installed) 11 FEET.

(3) DEPTH TO TOP OF SEAL (if installed) 10 FEET.

(4) LENGTH OF PVC WELL SCREEN, 20.26 FEET. 19.3 Feet Slotted

(5) TOTAL LENGTH OF PIPE 73.56 FEET @ 4 I.D. IN. DIAMETER.

(6) TYPE OF FILTER MATERIAL AROUND WELL POINT OR SLOTTED PIPE Cave-in.

(7) CONCRETE CAP, YES (NO) (Circle One)

(8) HEIGHT OF WELL CASING ABOVE GROUND 2.1 FEET.

(9) PROTECTIVE CASING? (YES) NO (Circle One)
HEIGHT ABOVE GROUND .
LOCKING CAP? (YES) NO (Circle One)

(10) TYPE OF BACKFILL: Cement/Bentonite Grout 5.6:1 by weight

(11) THICKNESS OF GRAVEL PACK 1 FEET.

(12) DEPTH TO FIRST COUPLING 2.2 FEET. From (TOC)
COUPLING INTERVAL 10.19 FEET.

(13) TOTAL DEPTH OF BOREHOLE 96 FEET.

BORING#	DATE	TIME	DEPTH TO WATER	GROUNDWATER ELEVATION
S1112	2/19/80		65.38	772.95

Badger Army Ammunition Plant
araboo, Wisconsin

WELL DETAIL INFORMATION SHEET

JOB NO. C 8742
BORING NO. S1113
DATE 11/23/79
CHIEF HFS
LOCATION N491,611.53 E2,079,573.54

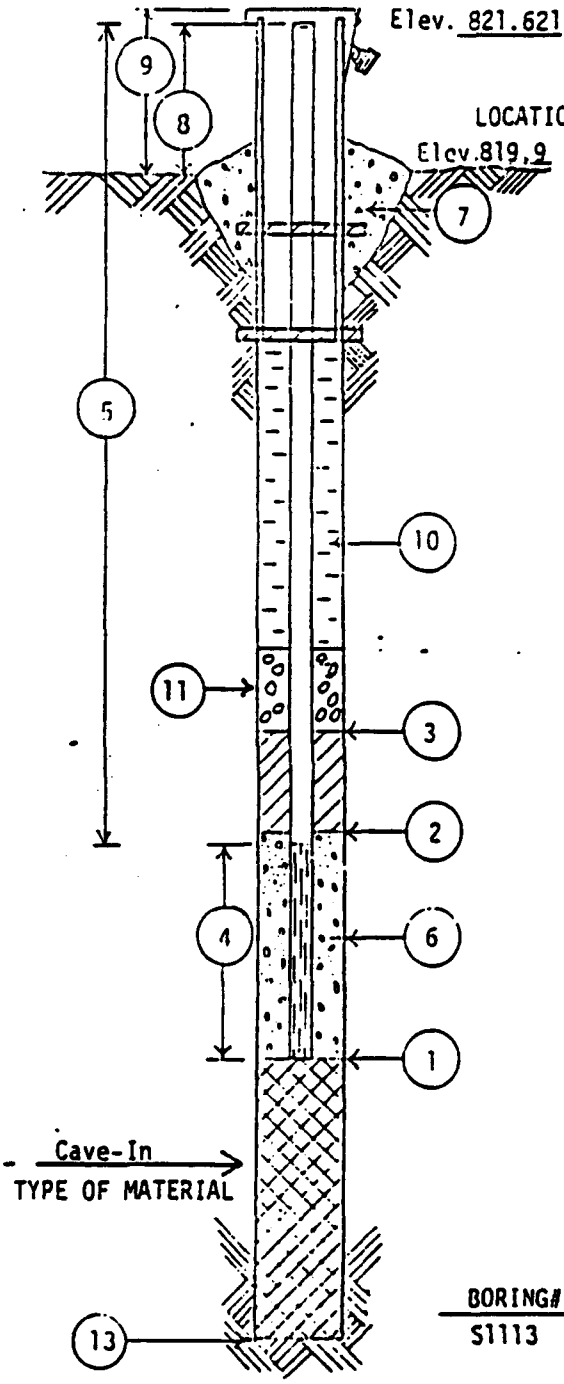

All depth measurements of well detail to be from ground surface.

(1) DEPTH TO BOTTOM OF WELL POINT OR SLOTTED PIPE 66.13 FEET.

(2) DEPTH OF BOTTOM OF SEAL (if installed) 39 FEET.

(3) DEPTH TO TOP OF SEAL (if installed) 38 FEET.

(4) LENGTH OF PVC WELL SCREEN, 20.23 FEET. 18.91 Feet Slotted

(5) TOTAL LENGTH OF PIPE 47.60 FEET @ 4 I.D. IN. DIAMETER.

(6) TYPE OF FILTER MATERIAL AROUND WELL POINT OR SLOTTED PIPE Medium Sand .

(7) CONCRETE CAP, YES (NO) (Circle One)

(8) HEIGHT OF WELL CASING ABOVE GROUND 1.70 FEET.

(9) PROTECTIVE CASING? (YES) NO (Circle One)
HEIGHT ABOVE GROUND .
LOCKING CAP? (YES) NO (Circle One)

(10) TYPE OF BACKFILL: Cement/Bentonite Grout 3:1 by weight

(11) THICKNESS OF GRAVEL PACK 6 FEET.

(12) DEPTH TO FIRST COUPLING 6.76 FEET. From (TOC
COUPLING INTERVAL 10.19 FEET.

(13) TOTAL DEPTH OF BOREHOLE 67 FEET.

BORING#	DATE	TIME	DEPTH TO WATER	GROUNDWATER ELEVATION
S1113	2/19/80		47.34	774.28

Note: S1114 nearest sampled boring

Badger Army Ammunition Plant
Baraboo, Wisconsin

WELL DETAIL INFORMATION SHEET

JOB NO. C 8742
BORING NO. S1114
DATE 11/20/79
CHIEF HES
LOCATION N491,603.29 E2,079.574.42

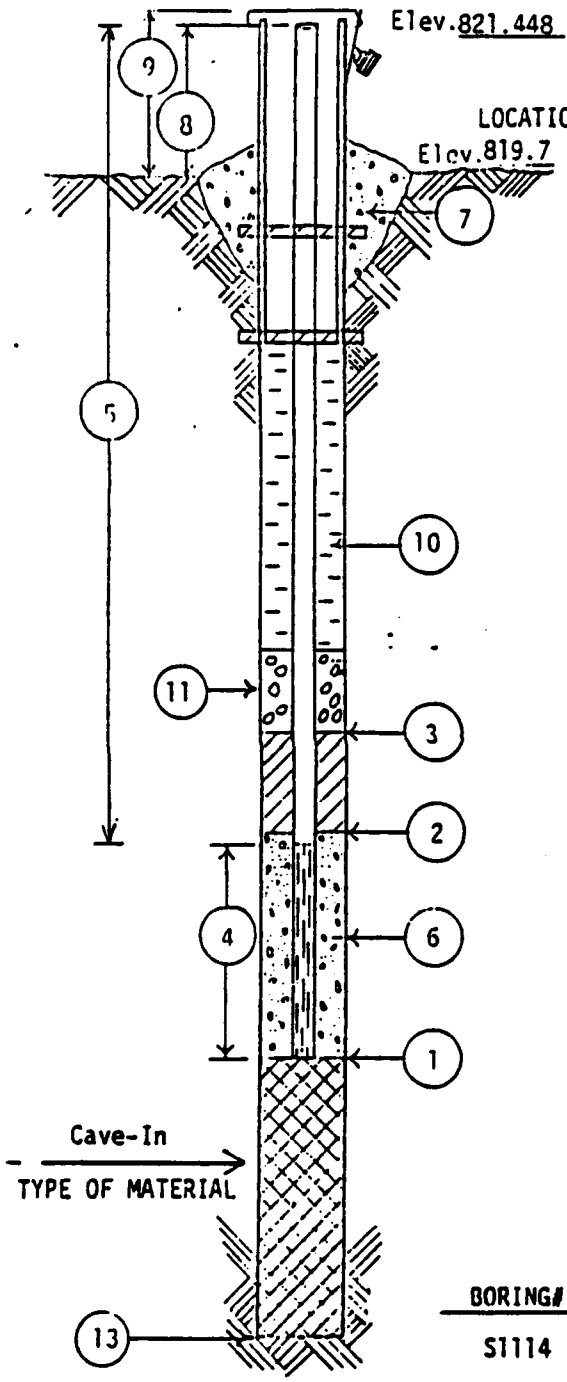

All depth measurements of well detail to be from ground surface.

(1) DEPTH TO BOTTOM OF WELL POINT OR SLOTTED PIPE 105.35 FEET.

(2) DEPTH OF BOTTOM OF SEAL (if installed) 95.5 FEET.

(3) DEPTH TO TOP OF SEAL (if installed) 94.5 FEET.

(4) LENGTH OF PVC WELL SCREEN, 5.02 FEET. 4.43 Feet Slotted

(5) TOTAL LENGTH OF PIPE 102.03 FEET @ 4 I.D. IN. DIAMETER.

(6) TYPE OF FILTER MATERIAL AROUND WELL POINT OR SLOTTED PIPE Medium Sand.

(7) CONCRETE CAP, YES (NO) (Circle One)

(8) HEIGHT OF WELL CASING ABOVE GROUND 1.7 FEET.

(9) PROTECTIVE CASING? (YES) NO (Circle One)
HEIGHT ABOVE GROUND
LOCKING CAP? (YES) NO (Circle One)

(10) TYPE OF BACKFILL: Cement Bentonite Grout 3:1 by weight

(11) THICKNESS OF GRAVEL PACK 3.5 FEET.

(12) DEPTH TO FIRST COUPLING 9.08 FEET. From (TOC)
COUPLING INTERVAL 10.2 FEET.

(13) TOTAL DEPTH OF BOREHOLE 106 FEET.

BORING#	DATE	TIME	DEPTH TO WATER	GROUNDWATER ELEVATION
S1114	2/19/80		47.15	774.30

Badger Army Ammunition Plant
araboo, Wisconsin

WELL DETAIL INFORMATION SHEET

JOB NO. C 8742
BORING NO. S1115
DATE 12/14/79
CHIEF HFS
LOCATION N490,444.29 E2,070,340.79

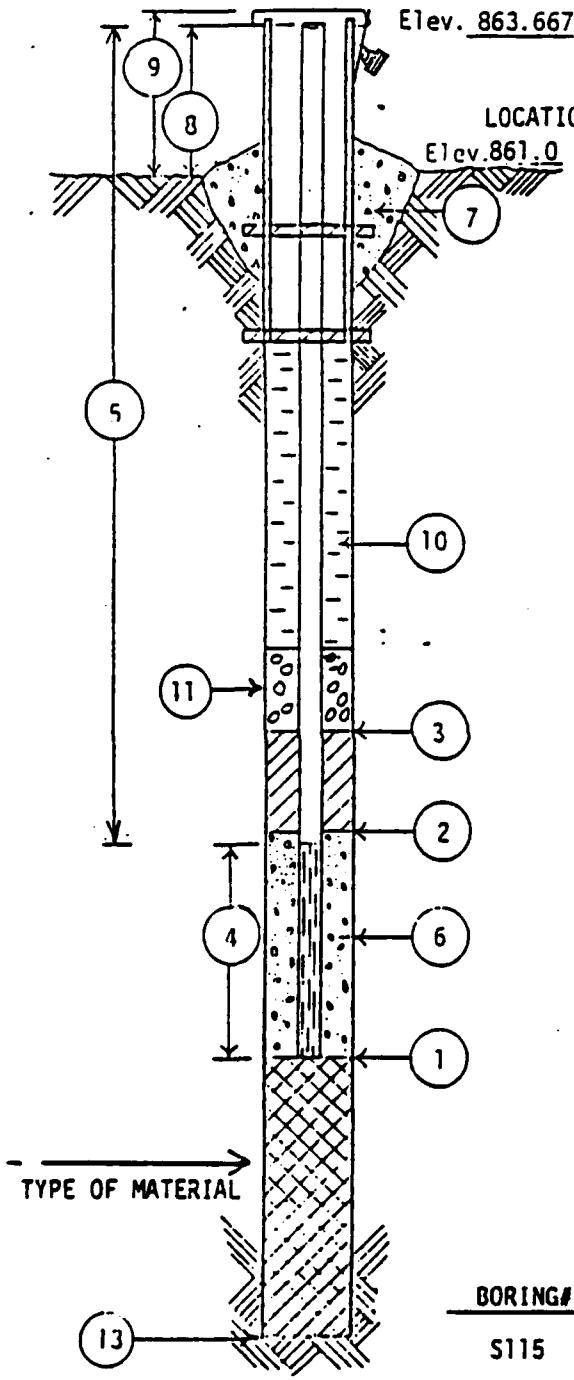

All depth measurements of well detail to be from ground surface.

(1) DEPTH TO BOTTOM OF WELL POINT OR SLOTTED PIPE 110 FEET.

(2) DEPTH OF BOTTOM OF SEAL (if installed) 12'1" FEET.

(3) DEPTH TO TOP OF SEAL (if installed) 11 FEET.

(4) LENGTH OF PVC WELL SCREEN, 20.39 FEET. _____ Feet Slotted

(5) TOTAL LENGTH OF PIPE 92 FEET @ 4 IN. DIAMETER.

(6) TYPE OF FILTER MATERIAL AROUND WELL POINT OR SLOTTED PIPE Medium Sand .

(7) CONCRETE CAP, YES (NO) (Circle One)

(8) HEIGHT OF WELL CASING ABOVE GROUND 2.7 FEET.

(9) PROTECTIVE CASING? (YES) NO (Circle One)
HEIGHT ABOVE GROUND 3.1' .
LOCKING CAP? (YES) NO (Circle One)

(10) TYPE OF BACKFILL: Cement/Bentonite Grout 5.6 to 1 by weight

(11) THICKNESS OF GRAVEL PACK 3 FEET.

(12) DEPTH TO FIRST COUPLING 10.21 FEET.
COUPLING INTERVAL 10.22 FEET.

(13) TOTAL DEPTH OF BOREHOLE 110 FEET.

BORING#	DATE	TIME	DEPTH TO WATER	GROUNDWATER ELEVATION
S115	2/19/80		89.56'	774.11'

Note: S1116 nearest sampled boring

Badger Army Ammunition Plant
Baraboo, Wisconsin

WELL DETAIL INFORMATION SHEET

JOB NO. C 8742
BORING NO. S1116
DATE 12/13/79
CHIEF HFS
LOCATION N490,445.70 E,2070,359.29

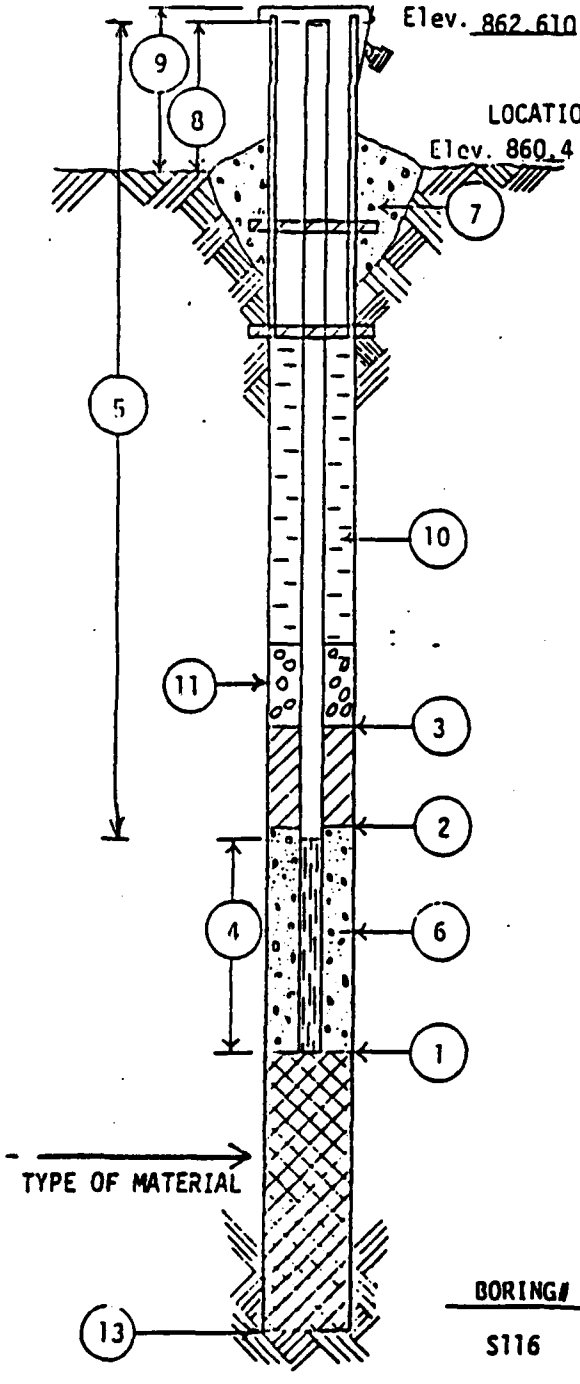

All depth measurements of well detail to be from ground surface.

(1) DEPTH TO BOTTOM OF WELL POINT OR SLOTTED PIPE 141.4 FEET.

(2) DEPTH OF BOTTOM OF SEAL (if installed) 98.1 FEET.

(3) DEPTH TO TOP OF SEAL (if installed) 97 FEET.

(4) LENGTH OF PVC WELL SCREEN, 5.22 FEET. 4.55 Feet Slotted

(5) TOTAL LENGTH OF PIPE 138.32 FEET @ 4 IN. DIAMETER.

(6) TYPE OF FILTER MATERIAL AROUND WELL POINT OR SLOTTED PIPE Cave-In Medium Sand

(7) CONCRETE CAP, YES (NO) (Circle One)

(8) HEIGHT OF WELL CASING ABOVE GROUND 2.2 FEET.

(9) PROTECTIVE CASING? (YES) NO (Circle One)
HEIGHT ABOVE GROUND 4'.
LOCKING CAP? (YES) NO (Circle One)

(10) TYPE OF BACKFILL: Cement-Bentonite Grout 5.6:1 by weight

(11) THICKNESS OF GRAVEL PACK 5 FEET.

(12) DEPTH TO FIRST COUPLING 5.43 FEET. From (TOC
COUPLING INTERVAL 10.2 FEET.

(13) TOTAL DEPTH OF BOREHOLE 141.5 FEET.

BORING#	DATE	TIME	DEPTH TO WATER	GROUNDWATER ELEVATION
S116	2/19/80		90.65	771.96

Radger Army Ammunition Plant
Baraboo, Wisconsin

WELL DETAIL INFORMATION SHEET

JOB NO. C 8742
BORING NO. S1117
DATE 2/13/80
CHIEF HFS
LOCATION N490,354.23 E2,066,372.44

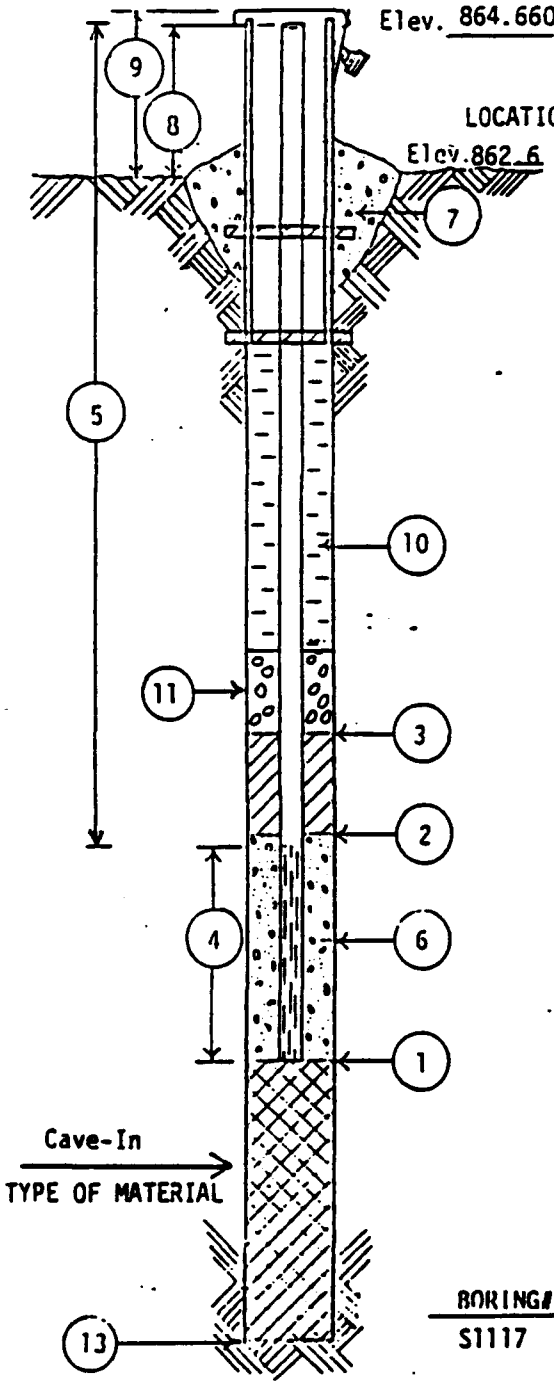

All depth measurements of well detail to be from ground surface.

(1) DEPTH TO BOTTOM OF WELL POINT OR SLOTTED PIPE 119.07 FEET.

(2) DEPTH OF BOTTOM OF SEAL (if installed) 11 FEET.

(3) DEPTH TO TOP OF SEAL (if installed) 10 FEET.

(4) LENGTH OF PVC WELL SCREEN, 20.22 FEET. 19.06 Feet Slotted

(5) TOTAL LENGTH OF PIPE 100.90 FEET @ 4 I.D. IN. DIAMETER.

(6) TYPE OF FILTER MATERIAL AROUND WELL POINT OR SLOTTED PIPE Medium Sand .

(7) CONCRETE CAP, YES (NO) (Circle One)

(8) HEIGHT OF WELL CASING ABOVE GROUND 2.05 FEET.

(9) PROTECTIVE CASING? (YES) NO (Circle One)
HEIGHT ABOVE GROUND 2.05 .
LOCKING CAP? (YES) NO (Circle One)

(10) TYPE OF BACKFILL: Cement/Bentonite Grout 6:1 by weight

(11) THICKNESS OF GRAVEL PACK 2 FEET.

(12) DEPTH TO FIRST COUPLING 8.99 FEET. (Fr - TOC)
COUPLING INTERVAL 10.21 FEET.

(13) TOTAL DEPTH OF BOREHOLE 120 FEET.

BORING#	DATE	TIME	DEPTH TO WATER	GROUNDWATER ELEVATION
S1117	2/19/80		92.14	772.52

Badger Army Ammunition Plant
araboo, Wisconsin

WELL DETAIL INFORMATION SHEET

JOB NO. C 8742
BORING NO. S1118
DATE 11/30/79
CHIEF HFS
LOCATION N492,933.24 E2,072,320.48

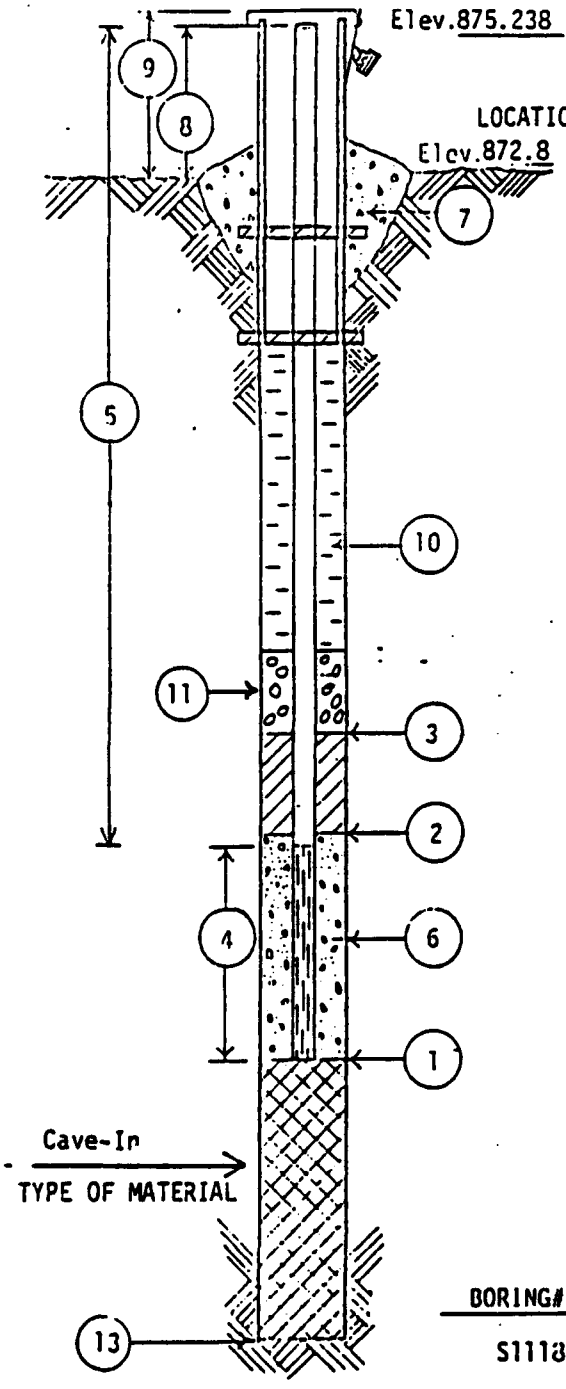

All depth measurements of well detail to be from ground surface.

(1) DEPTH TO BOTTOM OF WELL POINT OR SLOTTED PIPE 108.4 FEET.

(2) DEPTH OF BOTTOM OF SEAL (if installed) 85 FEET.

(3) DEPTH TO TOP OF SEAL (if installed) 83 FEET.

(4) LENGTH OF PVC WELL SCREEN, 20.23 FEET. 18.94 Feet Slotted

(5) TOTAL LENGTH OF PIPE 90.56 FEET @ 4 I.D. IN. DIAMETER.

(6) TYPE OF FILTER MATERIAL AROUND WELL POINT OR SLOTTED PIPE Medium Sand.

(7) CONCRETE CAP, YES (NO) (Circle One)

(8) HEIGHT OF WELL CASING ABOVE GROUND 2.4 FEET.

(9) PROTECTIVE CASING? (YES) NO (Circle One)
HEIGHT ABOVE GROUND .
LOCKING CAP? (YES) NO (Circle One)

(10) TYPE OF BACKFILL: Cement/ Bentonite Grout

(11) THICKNESS OF GRAVEL PACK 5 FEET.

(12) DEPTH TO FIRST COUPLING 3.79 FEET. From (TOC,
COUPLING INTERVAL 10.2 FEET.

(13) TOTAL DEPTH OF BOREHOLE 110 FEET.

BORING#	DATE	TIME	DEPTH TO WATER	GROUNDWATER ELEVATION
S1118	2/19/80		99.75	775.49

Badger Army Ammunition Plant
Baraboo, Wisconsin

WELL DETAIL INFORMATION SHEET

JOB NO. C 8742
BORING NO. S1119
DATE 1/22/80
CHIEF HFS
LOCATION N496,201.38 E2,072,983.10

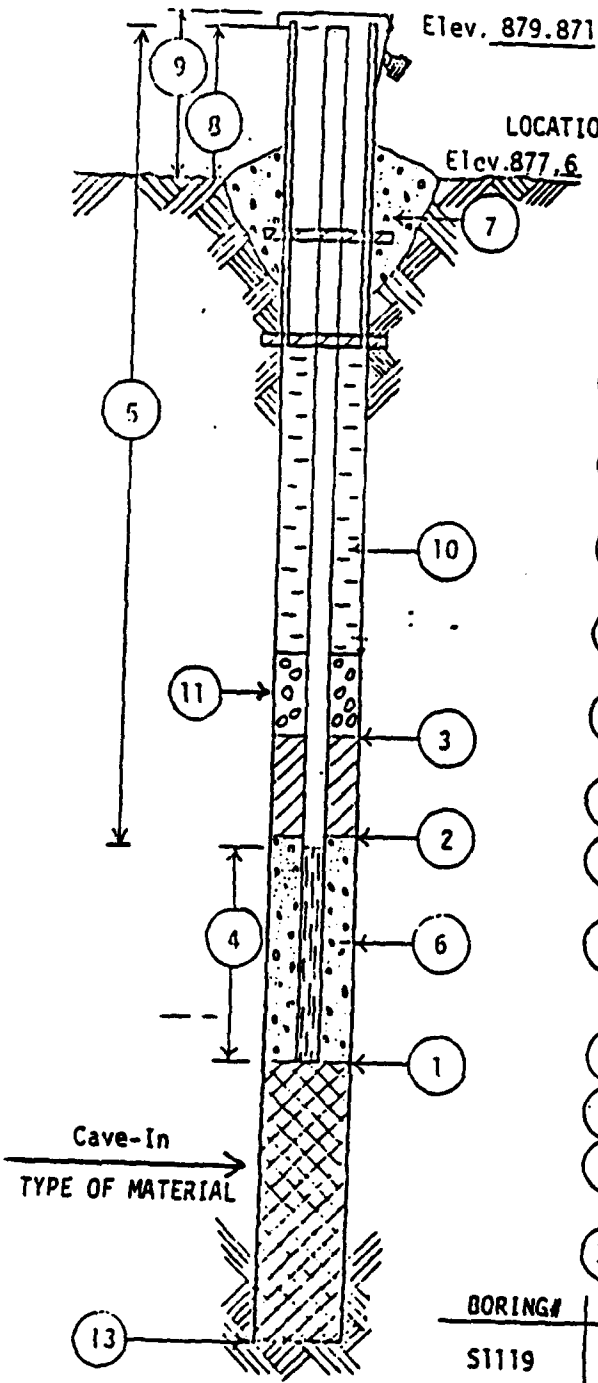

All depth measurements of well detail to be from ground surface.

(1) DEPTH TO BOTTOM OF WELL POINT OR SLOTTED PIPE 119.66 FEET.

(2) DEPTH OF BOTTOM OF SEAL (if installed) 12 FEET.

(3) DEPTH TO TOP OF SEAL (if installed) 11 FEET.

(4) LENGTH OF PVC WELL SCREEN, 20.07 FEET. 18.94 Feet Slotted

(5) TOTAL LENGTH OF PIPE 101.79 FEET @ 4 I.D. IN. DIAMETER.

(6) TYPE OF FILTER MATERIAL AROUND WELL POINT OR SLOTTED PIPE Medium Sand.

(7) CONCRETE CAP, YES (NO) (Circle One)

(8) HEIGHT OF WELL CASING ABOVE GROUND 2.2 FEET.

(9) PROTECTIVE CASING? (YES) NO (Circle One)
HEIGHT ABOVE GROUND 2.2.
LOCKING CAP? (YES) NO (Circle One)

(10) TYPE OF BACKFILL: Cement/Bentonite Grout 6:1 by weight

(11) THICKNESS OF GRAVEL PACK 3 FEET.

(12) DEPTH TO FIRST COUPLING 9.90 FEET. Fro (TOC
COUPLING INTERVAL 10.21 FEET.

(13) TOTAL DEPTH OF BOREHOLE 121 FEET.

BORING#	DATE	TIME	DEPTH TO WATER	GROUNDWATER ELEVATION
S1119	2/19/80		102.86	777.01

adger Army Ammunition Plant
araboo, Wisconsin

WELL DETAIL INFORMATION SHEET

JOB NO. C 8742
BORING NO. S1120
DATE 1/17/80
CHIEF HFS
LOCATION N493,313.14 E2,075,597.06

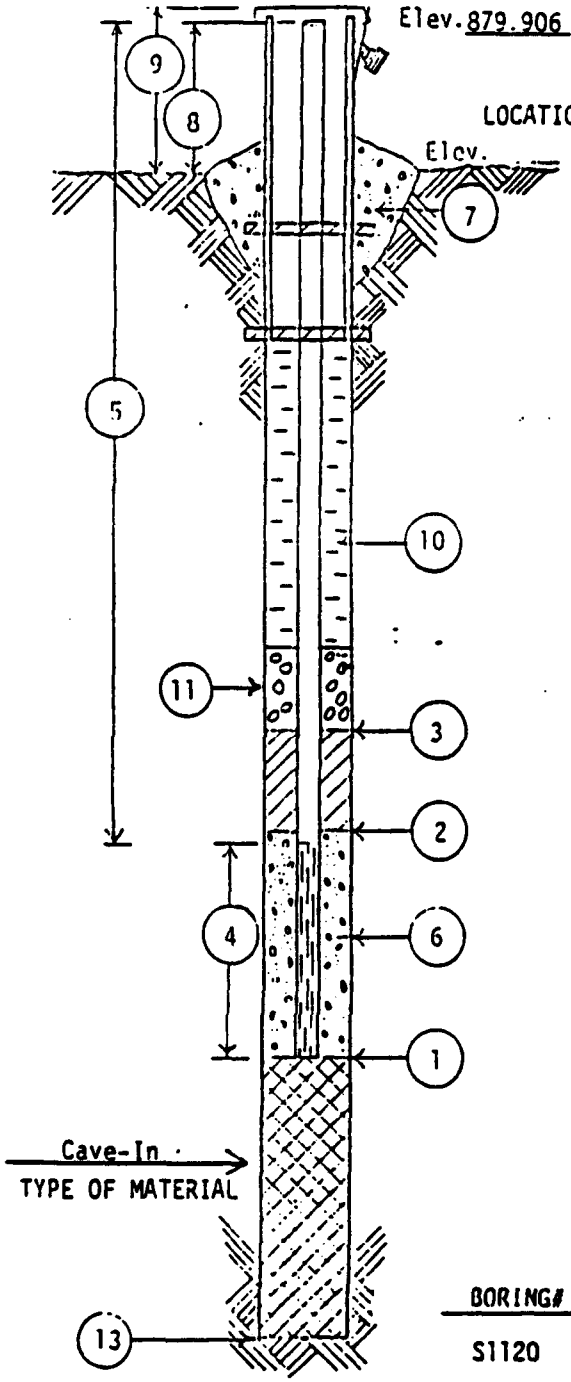

All depth measurements of well detail to be from ground surface.

(1) DEPTH TO BOTTOM OF WELL POINT OR SLOTTED PIPE 122.81 FEET.

(2) DEPTH OF BOTTOM OF SEAL (if installed) 12 FEET.

(3) DEPTH TO TOP OF SEAL (if installed) 11 FEET.

(4) LENGTH OF PVC WELL SCREEN, 20.18 FEET. 18.94 Feet Slotted

(5) TOTAL LENGTH OF PIPE 105.48 FEET @ 4 I.D. IN. DIAMETER.

(6) TYPE OF FILTER MATERIAL AROUND WELL POINT OR SLOTTED PIPE Medium Sand.

(7) CONCRETE CAP, YES (NO) (Circle One)

(8) HEIGHT OF WELL CASING ABOVE GROUND 2.85 FEET.

(9) PROTECTIVE CASING? (YES) NO (Circle One)
HEIGHT ABOVE GROUND .
LOCKING CAP? (YES) NO (Circle One)

(10) TYPE OF BACKFILL: Cement/Bentonite Grout

(11) THICKNESS OF GRAVEL PACK 2 6:1 by weight FEET.

(12) DEPTH TO FIRST COUPLING 3.14 FEET. From (TOC)
COUPLING INTERVAL 10.23 FEET.

(13) TOTAL DEPTH OF BOREHOLE 125 FEET.

BORING#	DATE	TIME	DEPTH TO WATER	GROUNDWATER ELEVATION
S1120	2/19/80		104.54	775.37

Radger Army Ammunition Plant
araboo, Wisconsin

WELL DETAIL INFORMATION SHEET

JOB NO. C 8742
BORING NO. S1121
DATE 1/18/80
CHIEF HFS
LOCATION N496,296.77 E2,079,127.02

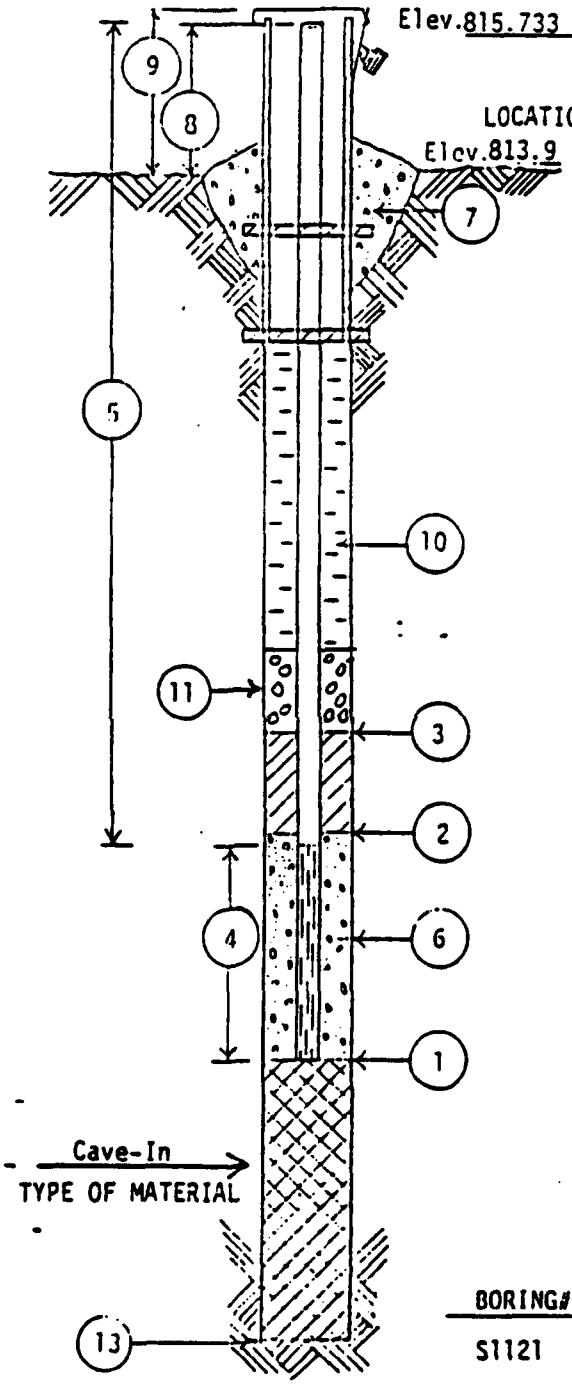

All depth measurements of well detail to be from ground surface.

(1) DEPTH TO BOTTOM OF WELL POINT OR SLOTTED PIPE 59.3 FEET.

(2) DEPTH OF BOTTOM OF SEAL (if installed) 12 FEET.

(3) DEPTH TO TOP OF SEAL (if installed) 11 FEET.

(4) LENGTH OF PVC WELL SCREEN, 20.19 FEET. 18.94 Feet Slotted

(5) TOTAL LENGTH OF PIPE 40.92 FEET @ 4 I.D. IN. DIAMETER.

(6) TYPE OF FILTER MATERIAL AROUND WELL POINT OR SLOTTED PIPE Medium Sand.

(7) CONCRETE CAP, YES (NO) (Circle One)

(8) HEIGHT OF WELL CASING ABOVE GROUND 1.8 FEET.

(9) PROTECTIVE CASING? (YES) NO (Circle One)
HEIGHT ABOVE GROUND 1.8.
LOCKING CAP? (YES) NO (Circle One)

(10) TYPE OF BACKFILL: Cement/Bentonite Grout 6:1 by weight

(11) THICKNESS OF GRAVEL PACK 3 FEET.

(12) DEPTH TO FIRST COUPLING 10.23 FEET. (Fro TO
COUPLING INTERVAL 10.23 FEET.

(13) TOTAL DEPTH OF BOREHOLE 61 FEET.

BORING#	DATE	TIME	DEPTH TO WATER	GROUNDWATER ELEVATION
S1121	2/19/80		39.74	775.99

"adger Army Ammunition Plant
araboo, Wisconsin

WELL DETAIL INFORMATION SHEET

JOB NO. C 8742
BORING NO. S1122
DATE 1/25/80
CHIEF HFS
LOCATION N500,702.29 E2,074,444.43

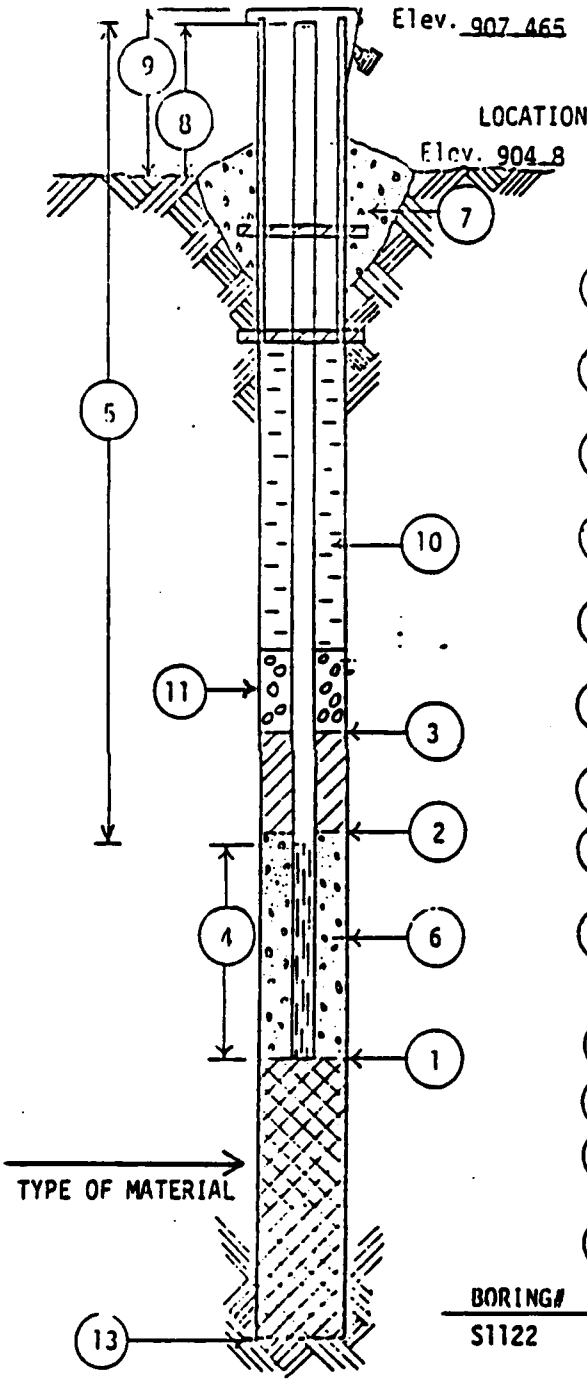

All depth measurements of well detail to be from ground surface.

(1) DEPTH TO BOTTOM OF WELL POINT OR SLOTTED PIPE 144 FEET.

(2) DEPTH OF BOTTOM OF SEAL (if installed) 9 FEET.

(3) DEPTH TO TOP OF SEAL (if installed) 8 FEET.

(4) LENGTH OF PVC WELL SCREEN, 20.18 FEET. 18.54 Feet Slotted

(5) TOTAL LENGTH OF PIPE 126.44 FEET @ 4 I.D. IN. DIAMETER.

(6) TYPE OF FILTER MATERIAL AROUND WELL POINT OR SLOTTED PIPE Medium Sand .

(7) CONCRETE CAP, YES (NO) (Circle One)

(8) HEIGHT OF WELL CASING ABOVE GROUND 2.6 FEET.

(9) PROTECTIVE CASING? (YES) NO (Circle One)
HEIGHT ABOVE GROUND 2.6 .
LOCKING CAP? (YES) NO (Circle One)

(10) TYPE OF BACKFILL: Cement/Bentonite Grout 6:1 by weight

(11) THICKNESS OF GRAVEL PACK 2 FEET.

(12) DEPTH TO FIRST COUPLING 3.89 FEET. From (TOC)
COUPLING INTERVAL 10.20 FEET.

(13) TOTAL DEPTH OF BOREHOLE 144 FEET.

BORING#	DATE	TIME	DEPTH TO WATER	GROUNDWATER ELEVATION
S1122	2/19/80		128.70	778.77

Radger Army Ammunition Plant
araboo, Wisconsin

WELL DETAIL INFORMATION SHEET

JOB NO. C 8742
BORING NO. S1123
DATE 12/28/79
CHIEF JR
LOCATION N494,500.23 E2,062,374.27

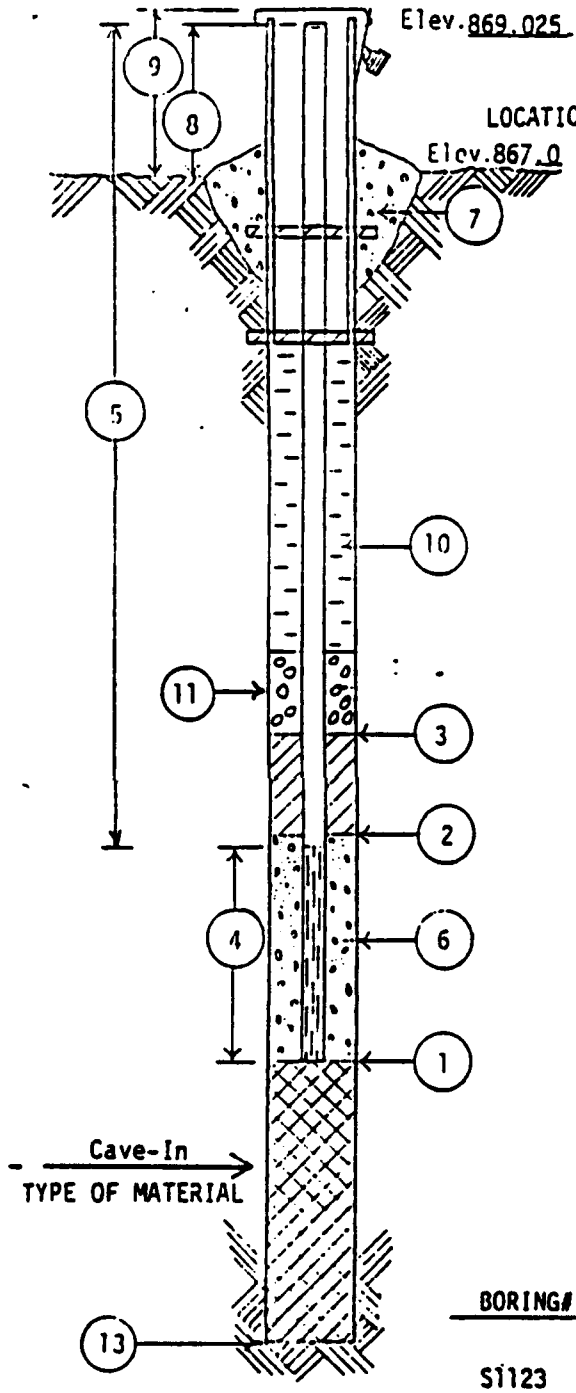

All depth measurements of well detail to be from ground surface.

(1) DEPTH TO BOTTOM OF WELL POINT OR SLOTTED PIPE 134.32 FEET.

(2) DEPTH OF BOTTOM OF SEAL (if installed) 10.0 FEET.

(3) DEPTH TO TOP OF SEAL (if installed) 6.5 FEET.

(4) LENGTH OF PVC WELL SCREEN, 20.42 FEET. 19.0 Feet Slotted

(5) TOTAL LENGTH OF PIPE 115.90 FEET @ 4 I.D. IN. DIAMETER.

(6) TYPE OF FILTER MATERIAL AROUND WELL POINT OR SLOTTED PIPE Cave-in Material

(7) CONCRETE CAP, YES (NO) (Circle One)

(8) HEIGHT OF WELL CASING ABOVE GROUND 2.00 FEET.

(9) PROTECTIVE CASING? (YES) NO (Circle One)
HEIGHT ABOVE GROUND .
LOCKING CAP? (YES) NO (Circle One)

(10) TYPE OF BACKFILL: Cement/Bentonite Grout

(11) THICKNESS OF GRAVEL PACK 0.5 FEET.

(12) DEPTH TO FIRST COUPLING 1.50 FEET. From (T
COUPLING INTERVAL 10.2 FEET.

(13) TOTAL DEPTH OF BOREHOLE 135 FEET.

BORING#	DATE	TIME	DEPTH TO WATER	GROUNDWATER ELEVATION
S1123	2/19/80		87.28	781.75

Badger Army Ammunition Plant
Baraboo, Wisconsin

WELL DETAIL INFORMATION SHEET

JOB NO. C 8742
BORING NO. S1124
DATE 12/19/79
CHIEF J. Rose
LOCATION N497,938.40 E2,072,925.10

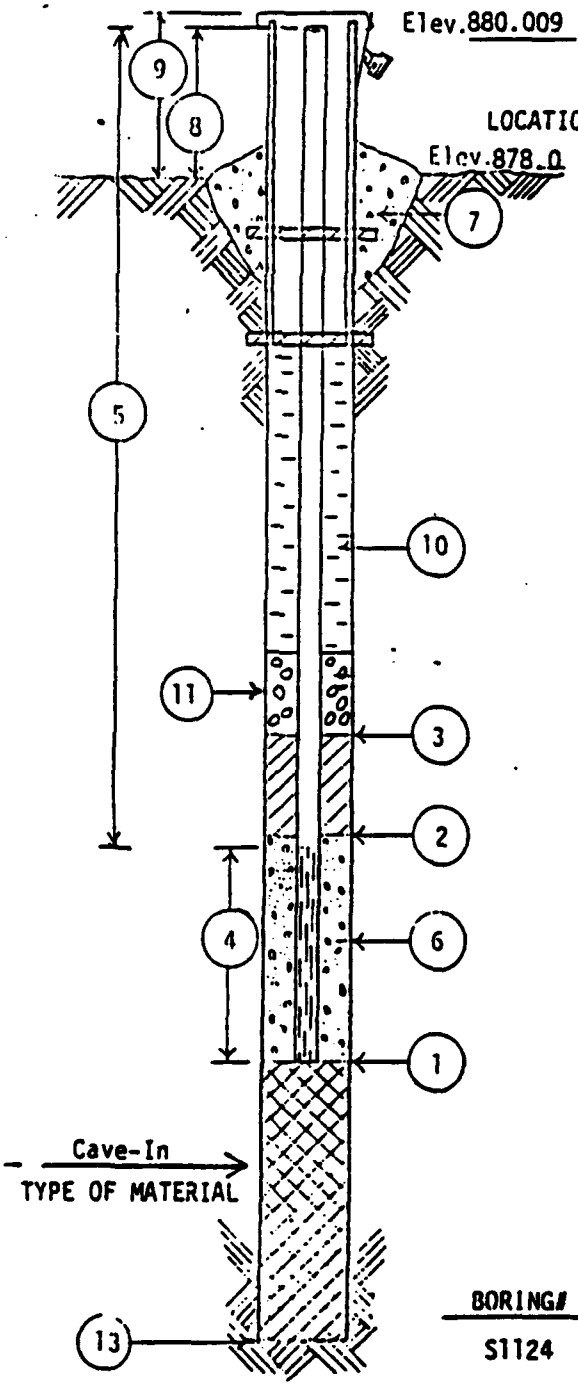

All depth measurements of well detail to be from ground surface.

(1) DEPTH TO BOTTOM OF WELL POINT OR SLOTTED PIPE 128.77 FEET.

(2) DEPTH OF BOTTOM OF SEAL (if installed) 10.00 FEET.

(3) DEPTH TO TOP OF SEAL (if installed) 9.0 FEET.

(4) LENGTH OF PVC WELL SCREEN, 20.16 FEET. 18.86 Feet Slotted

(5) TOTAL LENGTH OF PIPE 110.61 FEET @ 4 I.D. IN. DIAMETER.

(6) TYPE OF FILTER MATERIAL AROUND WELL POINT OR SLOTTED PIPE Cave-In Material & Medium San

(7) CONCRETE CAP, YES (NO) (Circle One)

(8) HEIGHT OF WELL CASING ABOVE GROUND 2.0 FEET.

(9) PROTECTIVE CASING? (YES) NO (Circle One)
HEIGHT ABOVE GROUND 2.0
LOCKING CAP? (YES) NO (Circle One)

(10) TYPE OF BACKFILL: Cave-in Material & Medium Sand

(11) THICKNESS OF GRAVEL PACK - FEET.

(12) DEPTH TO FIRST COUPLING 8.61 FEET. From (TOC
COUPLING INTERVAL 10.21 FEET.

(13) TOTAL DEPTH OF BOREHOLE 130.00 FEET.

BORING#	DATE	TIME	DEPTH TO WATER	GROUNDWATER ELEVATION
S1124	2/19/80		100.19	779.82

Badger Army Ammunition Plant
Baraboo, Wisconsin

WELL DETAIL INFORMATION SHEET

JOB NO. C 8742
BORING NO. S1125
DATE 12/27/79
CHIEF HFS
LOCATION N496,507.67 E2,067,952.90

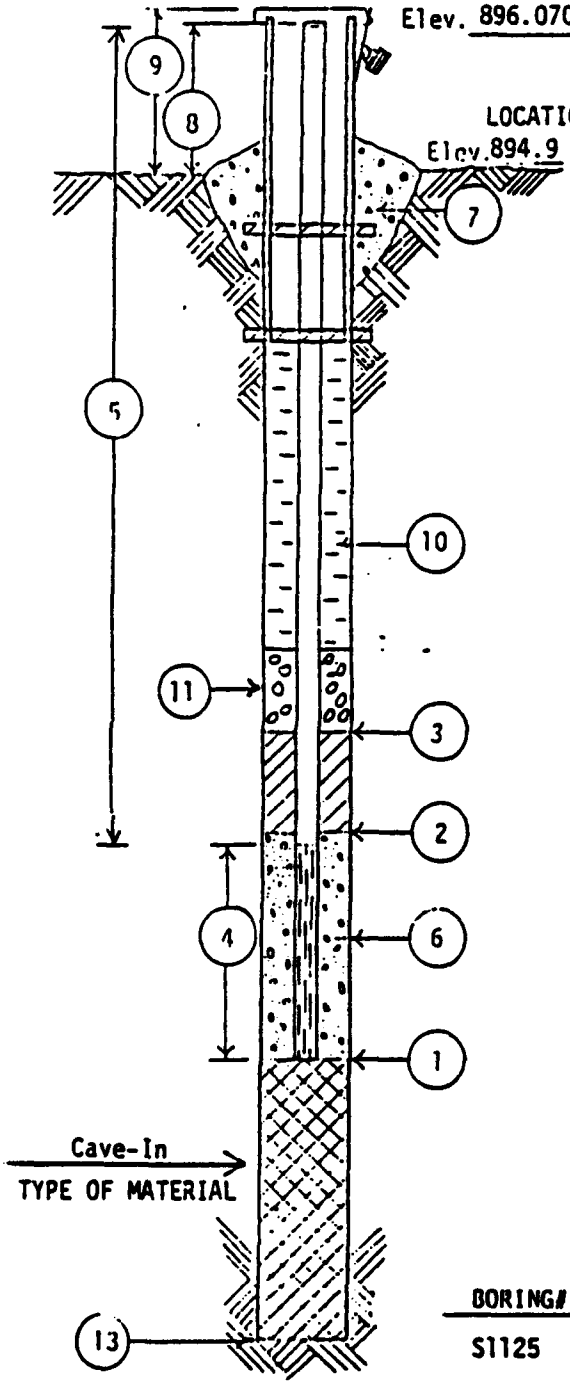

All depth measurements of well detail to be from ground surface.

(1) DEPTH TO BOTTOM OF WELL POINT OR SLOTTED PIPE 126.3 FEET.

(2) DEPTH OF BOTTOM OF SEAL (if installed) 7 FEET.

(3) DEPTH TO TOP OF SEAL (if installed) 6 FEET.

(4) LENGTH OF PVC WELL SCREEN, 20.22 FEET. 18.91 Feet Slotted

(5) TOTAL LENGTH OF PIPE 107.29 FEET @ 4 I.D. IN. DIAMETER.

(6) TYPE OF FILTER MATERIAL AROUND WELL POINT OR SLOTTED PIPE Medium Sand.

(7) CONCRETE CAP, YES (NO) (Circle One)

(8) HEIGHT OF WELL CASING ABOVE GROUND 1.2 FEET.

(9) PROTECTIVE CASING? (YES) NO (Circle One)
HEIGHT ABOVE GROUND 3.5.
LOCKING CAP? (YES) NO (Circle One)

(10) TYPE OF BACKFILL: Cement/Bentonite Grout 5.6:1 by weight

(11) THICKNESS OF GRAVEL PACK 1 FEET.

(12) DEPTH TO FIRST COUPLING 5.00 FEET. (From (T
COUPLING INTERVAL 10.23 FEET.

(13) TOTAL DEPTH OF BOREHOLE 126.5 FEET.

BORING#	DATE	TIME	DEPTH TO WATER	GROUNDWATER ELEVATION
S1125	2/19/80		118.70	777.37

"adger Army Ammunition Plant
araboo, Wisconsin

WELL DETAIL INFORMATION SHEET

JOB NO. C 8742
BORING NO. S1126
DATE 2/11/80
CHIEF HFS
LOCATION N500.012.88 E2,063,332.17

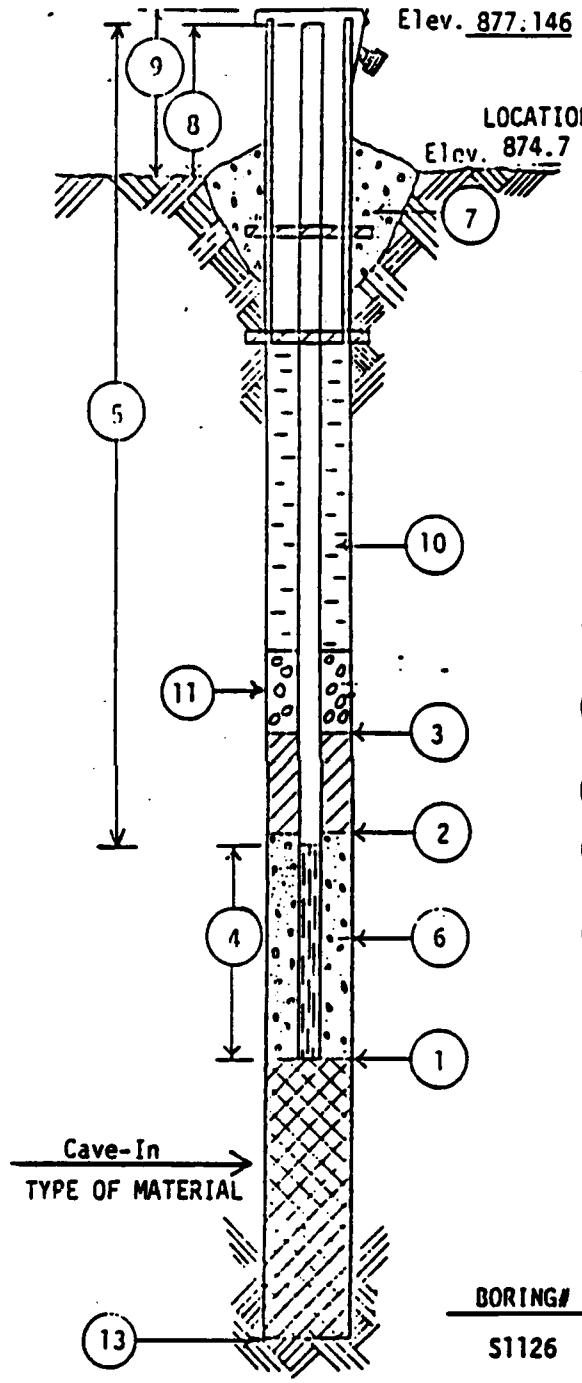

All depth measurements of well detail to be from ground surface.

(1) DEPTH TO BOTTOM OF WELL POINT OR SLOTTED PIPE 113.55 FEET.

(2) DEPTH OF BOTTOM OF SEAL (if installed) 12 FEET.

(3) DEPTH TO TOP OF SEAL (if installed) 11 FEET.

(4) LENGTH OF PVC WELL SCREEN, 19.86 FEET. 18.92 Feet Slotted

(5) TOTAL LENGTH OF PIPE 96.14 FEET @ 4 I.D. IN. DIAMETER.

(6) TYPE OF FILTER MATERIAL AROUND WELL POINT OR SLOTTED PIPE Medium Sand .

(7) CONCRETE CAP, YES (NO) (Circle One)

(8) HEIGHT OF WELL CASING ABOVE GROUND 2.45 FEET.

(9) PROTECTIVE CASING? (YES) NO (Circle One)
HEIGHT ABOVE GROUND 2.45 .
LOCKING CAP? (YES) NO (Circle One)

(10) TYPE OF BACKFILL: Cement/Bentonite Grout 6:1 by weignt

(11) THICKNESS OF GRAVEL PACK 3 FEET.

(12) DEPTH TO FIRST COUPLING 4.28 FEET. From (TOC)
COUPLING INTERVAL 10.21 FEET.

(13) TOTAL DEPTH OF BOREHOLE 116.5 FEET.

BORING#	DATE	TIME	DEPTH TO WATER	GROUNDWATER ELEVATION
S1126	2/19/80		89.68	787.47

Badger Army Ammunition Plant
Baraboo, Wisconsin

WELL DETAIL INFORMATION SHEET

JOB NO. C 8742
BORING NO. S1127
DATE 2/8/80
CHIEF HFS
LOCATION N503,380.50 E2,063,312.68

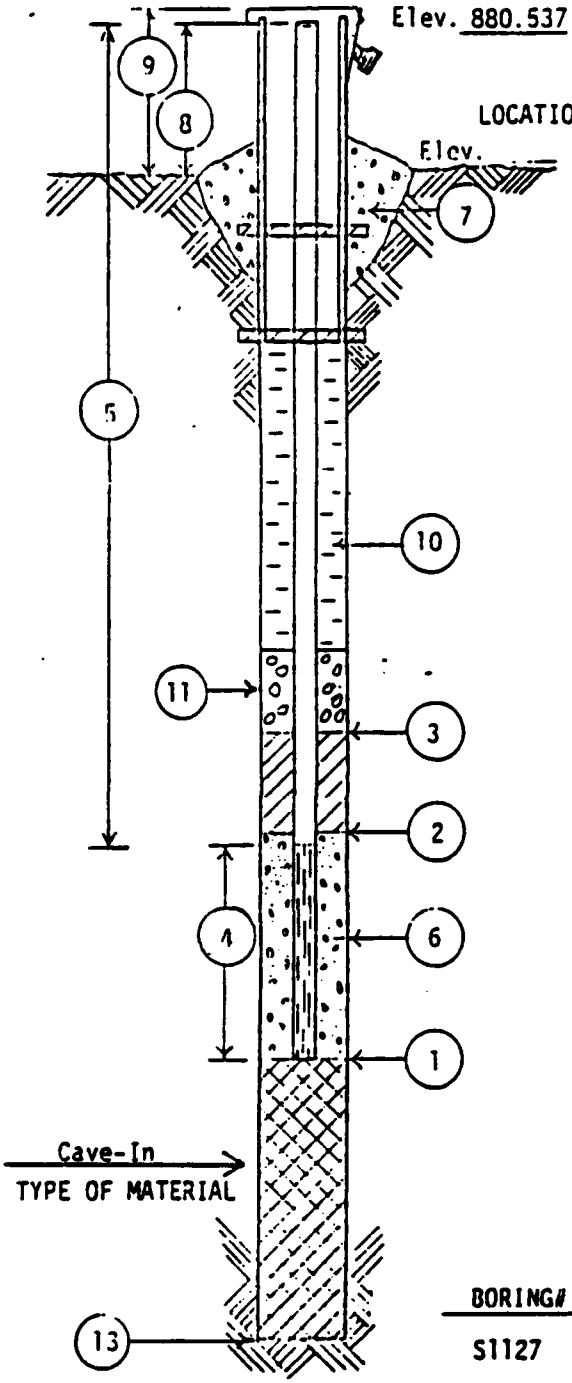

All depth measurements of well detail to be from ground surface.

(1) DEPTH TO BOTTOM OF WELL POINT OR SLOTTED PIPE 74.84 FEET.

(2) DEPTH OF BOTTOM OF SEAL (if installed) 11 FEET.

(3) DEPTH TO TOP OF SEAL (if installed) 10 FEET.

(4) LENGTH OF PVC WELL SCREEN, 20.25 FEET. 19.19 Feet Slotted

(5) TOTAL LENGTH OF PIPE 56.82 FEET @ 4 I.D. IN. DIAMETER.

(6) TYPE OF FILTER MATERIAL AROUND WELL POINT OR SLOTTED PIPE Medium Sand.

(7) CONCRETE CAP, YES (NO) (Circle One)

(8) HEIGHT OF WELL CASING ABOVE GROUND 2.23 FEET.

(9) PROTECTIVE CASING? (YES) NO (Circle One)
HEIGHT ABOVE GROUND 2.23.
LOCKING CAP? (YES) NO (Circle One)

(10) TYPE OF BACKFILL: Cement/Bentonite Grout 3:1 by weight

(11) THICKNESS OF GRAVEL PACK 2 FEET.

(12) DEPTH TO FIRST COUPLING 5.70 FEET. (From TOC)
COUPLING INTERVAL 10.2 FEET.

(13) TOTAL DEPTH OF BOREHOLE 75 FEET.

BORING#	DATE	TIME	DEPTH TO WATER	GROUNDWATER ELEVATION
S1127	2/19/80		65.51	815.03

Radger Army Ammunition Plant
araboo, Wisconsin

WELL DETAIL INFORMATION SHEET

JOB NO. C 9742
BORING NO. S1128
DATE 12/19/79
CHIEF HFS
LOCATION N504,039.19 E2,062,711.52

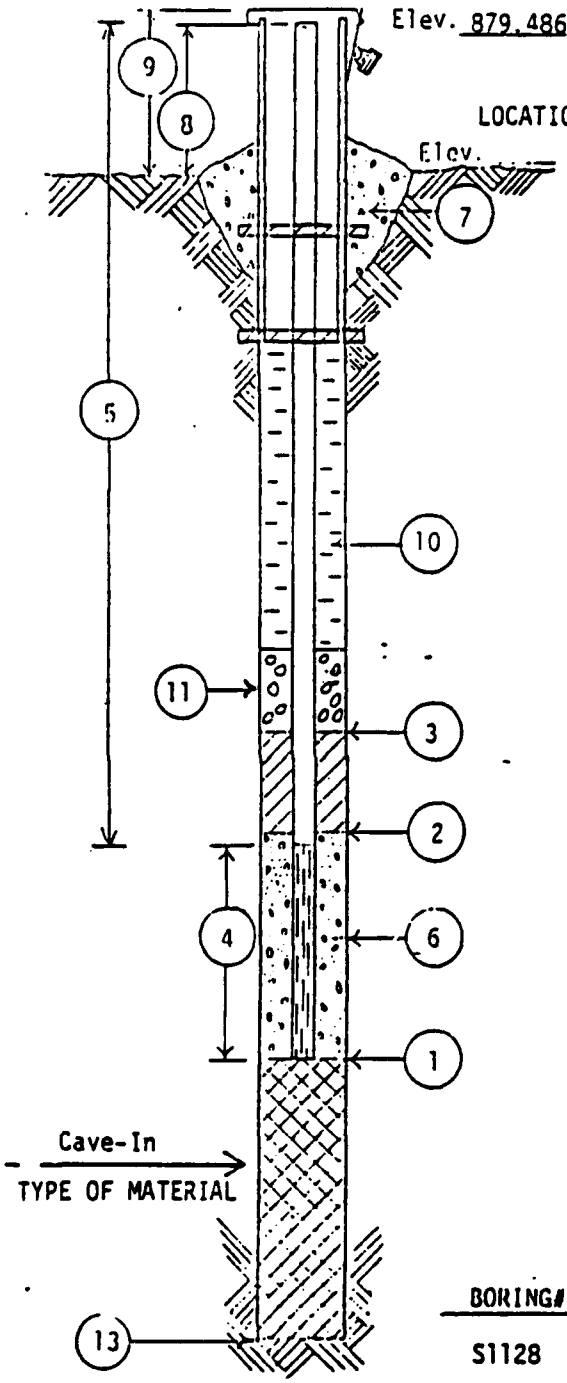

All depth measurements of well detail to be from ground surface.

(1) DEPTH TO BOTTOM OF WELL POINT OR SLOTTED PIPE 74.43 FEET.

(2) DEPTH OF BOTTOM OF SEAL (if installed) 11.25 FEET.

(3) DEPTH TO TOP OF SEAL (if installed) 10.25 FEET.

(4) LENGTH OF PVC WELL SCREEN, 20.39 FEET. 19.03 Feet Slotted

(5) TOTAL LENGTH OF PIPE 56.34 FEET @ 4 I.D. IN. DIAMETER.

(6) TYPE OF FILTER MATERIAL AROUND WELL POINT OR SLOTTED PIPE Cave-In .

(7) CONCRETE CAP, YES (NO) (Circle One)

(8) HEIGHT OF WELL CASING ABOVE GROUND 2.3 FEET.

(9) PROTECTIVE CASING? (YES) NO (Circle One)
HEIGHT ABOVE GROUND 2.4 .
LOCKING CAP? (YES) NO (Circle One)

(10) TYPE OF BACKFILL: Cement Bentonite Grout 5.6:1 by weight

(11) THICKNESS OF GRAVEL PACK 3 FEET.

(12) DEPTH TO FIRST COUPLING 5.2 FEET. From (TOC
COUPLING INTERVAL 10.2 FEET.

(13) TOTAL DEPTH OF BOREHOLE 75 FEET.

BORING#	DATE	TIME	DEPTH TO WATER	GROUNDWATER ELEVATION
S1128	2/19/80		56.22	823.27

Badger Army Ammunition Plant
Baraboo, Wisconsin

WELL DETAIL INFORMATION SHEET

JOB NO. C 8742
BORING NO. S1129
DATE 2/7/80
CHIEF HFS
LOCATION N503,571.75 E2,068,121.29

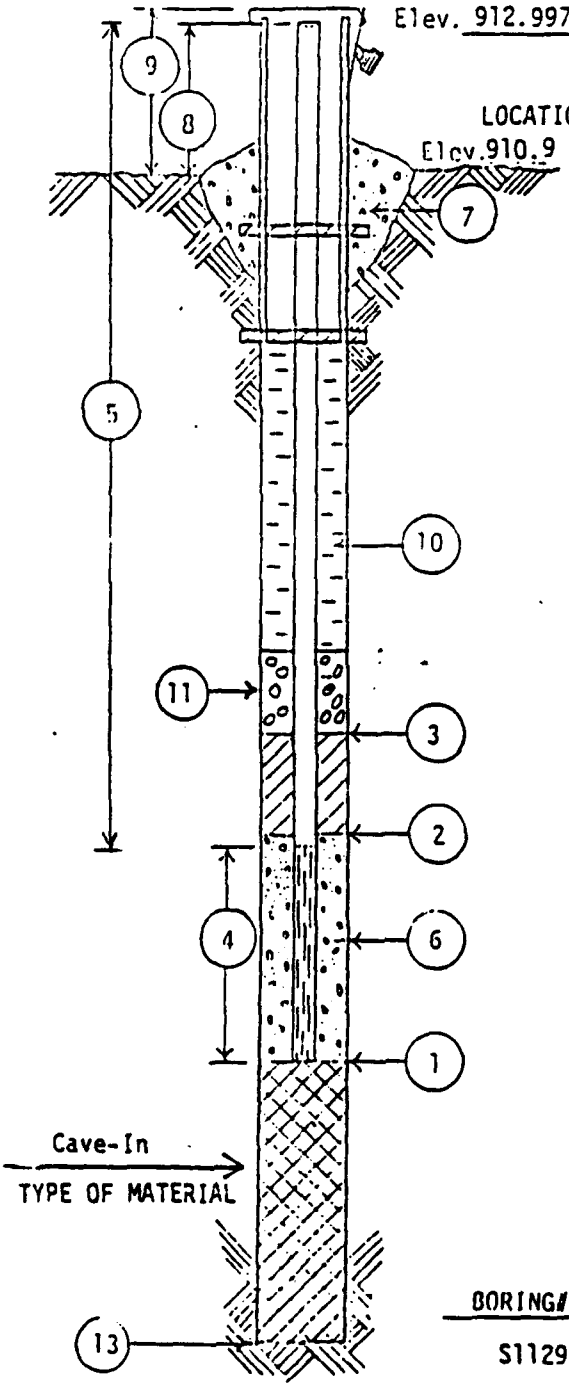

All depth measurements of well detail to be from ground surface.

(1) DEPTH TO BOTTOM OF WELL POINT OR SLOTTED PIPE 117.96 FEET.

(2) DEPTH OF BOTTOM OF SEAL (if installed) 8 FEET.

(3) DEPTH TO TOP OF SEAL (if installed) 7 FEET.

(4) LENGTH OF PVC WELL SCREEN, 20.01 FEET. 19.02 Feet Slotted

(5) TOTAL LENGTH OF PIPE 100.00 FEET @ 4 I.D. IN. DIAMETER.

(6) TYPE OF FILTER MATERIAL AROUND WELL POINT OR SLOTTED PIPE Medium Sand.

(7) CONCRETE CAP, YES (NO) (Circle One)

(8) HEIGHT OF WELL CASING ABOVE GROUND 2.05 FEET.

(9) PROTECTIVE CASING? (YES) NO (Circle One)
HEIGHT ABOVE GROUND 2.05.
LOCKING CAP? (YES) NO (Circle One)

(10) TYPE OF BACKFILL: Cement/Bentonite Grout 6:1 by weight

(11) THICKNESS OF GRAVEL PACK 1 FEET.

(12) DEPTH TO FIRST COUPLING 9.03 FEET. From (T
COUPLING INTERVAL 10.22 FEET.

(13) TOTAL DEPTH OF BOREHOLE 120 FEET.

BORING#	DATE	TIME	DEPTH TO WATER	GROUNDWATER ELEVATION
S1129	2/19/80		83.86	829.14

"adger Army Ammunition Plant
araboo, Wisconsin

WELL DETAIL INFORMATION SHEET

JOB NO. C 8742
BORING NO. S1130
DATE 12/17/79
CHIEF HFS
LOCATION N504,611.11 E2,071,659.47

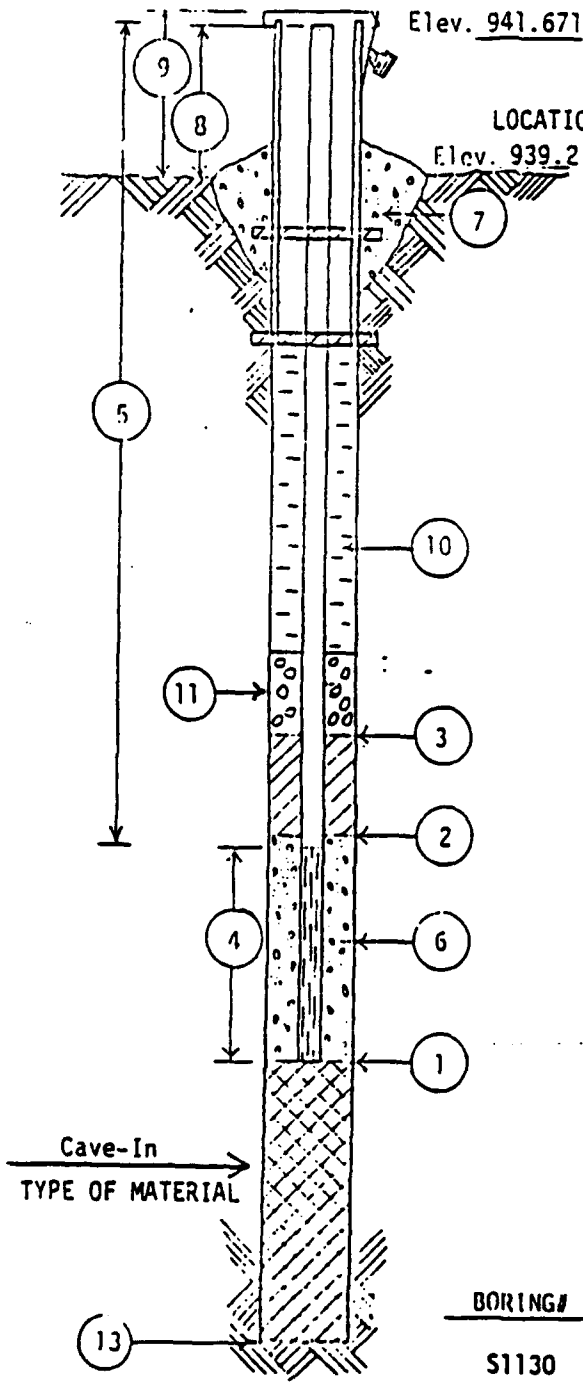

All depth measurements of well detail to be from ground surface.

(1) DEPTH TO BOTTOM OF WELL POINT OR SLOTTED PIPE 124.44 FEET.

(2) DEPTH OF BOTTOM OF SEAL (if installed) 10 FEET.

(3) DEPTH TO TOP OF SEAL (if installed) 9 FEET.

(4) LENGTH OF PVC WELL SCREEN, 20.25 FEET. _____ Feet Slotted

(5) TOTAL LENGTH OF PIPE 106.64 FEET @ 4 I.D. IN. DIAMETER.

(6) TYPE OF FILTER MATERIAL AROUND WELL POINT OR SLOTTED PIPE Cave-In.

(7) CONCRETE CAP, YES (NO) (Circle One)

(8) HEIGHT OF WELL CASING ABOVE GROUND 2.5 FEET.

(9) PROTECTIVE CASING? (YES) NO (Circle One)
HEIGHT ABOVE GROUND 3.62.
LOCKING CAP? (YES) NO (Circle One)

(10) TYPE OF BACKFILL: Cement/Bentonite Grout 3:1 by weight

(11) THICKNESS OF GRAVEL PACK 1 FEET.

(12) DEPTH TO FIRST COUPLING 4.52 FEET. (TOC
COUPLING INTERVAL 10.2 FEET.

(13) TOTAL DEPTH OF BOREHOLE 125 FEET.

BORING#	DATE	TIME	DEPTH TO WATER	GROUNDWATER ELEVATION
S1130	2/19/80		80.94	860.73

Note: S1131 Nearest sampled boring

Radger Army Ammunition Plant
araboo, Wisconsin

WELL DETAIL INFORMATION SHEET

JOB NO. C 8742
BORING NO. S1131
DATE 12/6/79
CHIEF J. Rose
LOCATION N504,612.08 E2,071,642.61

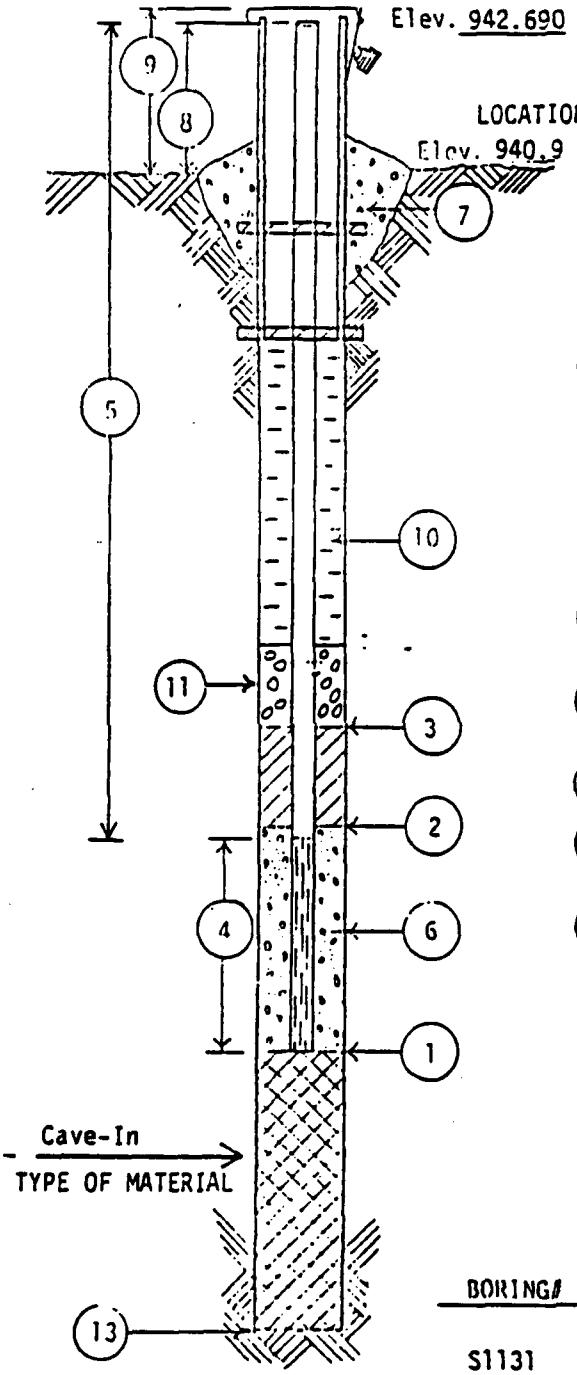

All depth measurements of well detail to be from ground surface.

(1) DEPTH TO BOTTOM OF WELL POINT OR SLOTTED PIPE 153.49 FEET.

(2) DEPTH OF BOTTOM OF SEAL (if installed) 135.0 FEET.

(3) DEPTH TO TOP OF SEAL (if installed) 125.0 FEET.

(4) LENGTH OF PVC WELL SCREEN, 5.20 FEET. 4.6 Feet Slotted

(5) TOTAL LENGTH OF PIPE 150.08 FEET @ 4 I D IN. DIAMETER.

(6) TYPE OF FILTER MATERIAL AROUND WELL POINT OR SLOTTED PIPE Medium Sand.

(7) CONCRETE CAP, YES (NO) (Circle One)

(8) HEIGHT OF WELL CASING ABOVE GROUND 1.79 FEET.

(9) PROTECTIVE CASING? (YES) NO (Circle One)
HEIGHT ABOVE GROUND 3.
LOCKING CAP? (YES) NO (Circle One)

(10) TYPE OF BACKFILL: Cement/Bentonite Grout 6.5:1 by weight

(11) THICKNESS OF GRAVEL PACK 5 FEET.

(12) DEPTH TO FIRST COUPLING 5.80 FEET.
COUPLING INTERVAL 10.2 FEET.

(13) TOTAL DEPTH OF BOREHOLE 155 FEET.

BORING#	DATE	TIME	DEPTH TO WATER	GROUNDWATER ELEVATION
S1131	2/19/80		105.40	837.29

Badger Army Ammunition Plant
Baraboo, Wisconsin

WELL DETAIL INFORMATION SHEET

JOB NO. C 8742
BORING NO. S1132
DATE 2/4/80
CHIEF HFS
LOCATION N502,464.29 E2,072,997.91

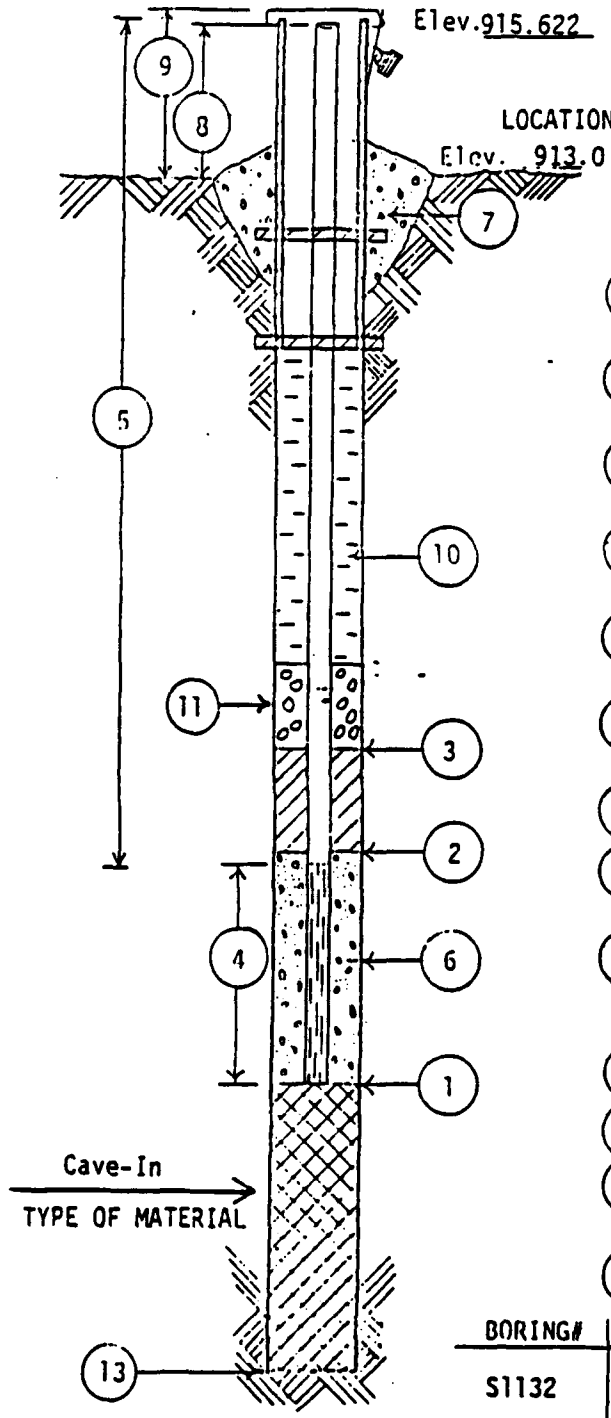

All depth measurements of well detail to be from ground surface.

(1) DEPTH TO BOTTOM OF WELL POINT OR SLOTTED PIPE 157.64 FEET.

(2) DEPTH OF BOTTOM OF SEAL (if installed) 9 FEET.

(3) DEPTH TO TOP OF SEAL (if installed) 8 FEET.

(4) LENGTH OF PVC WELL SCREEN, 20.29 FEET. 18.35 Feet Slotted

(5) TOTAL LENGTH OF PIPE 140 FEET @ 4 I.D. IN. DIAMETER.

(6) TYPE OF FILTER MATERIAL AROUND WELL POINT OR SLOTTED PIPE Medium Sand.

(7) CONCRETE CAP, YES (NO) (Circle One)

(8) HEIGHT OF WELL CASING ABOVE GROUND 2.65 FEET.

(9) PROTECTIVE CASING? (YES) NO (Circle One)
HEIGHT ABOVE GROUND 2.65.
LOCKING CAP? (YES) NO (Circle One)

(10) TYPE OF BACKFILL: Cement/Bentonite Grout 6:1 by weight

(11) THICKNESS OF GRAVEL PACK 1 FEET.

(12) DEPTH TO FIRST COUPLING 7.11 FEET.
COUPLING INTERVAL 10.22 FEET.

(13) TOTAL DEPTH OF BOREHOLE 160 FEET.

BORING#	DATE	TIME	DEPTH TO WATER	GROUNDWATER ELEVATION
S1132	2/19/80		136.45	779.17

adger Army Ammunition Plant
araboo, Wisconsin

WELL DETAIL INFORMATION SHEET

JOB NO. C 8742

BORING NO. S1133

DATE 2/19/80

CHIEF HFS

LOCATION N494,744.69 E2,064,454.40

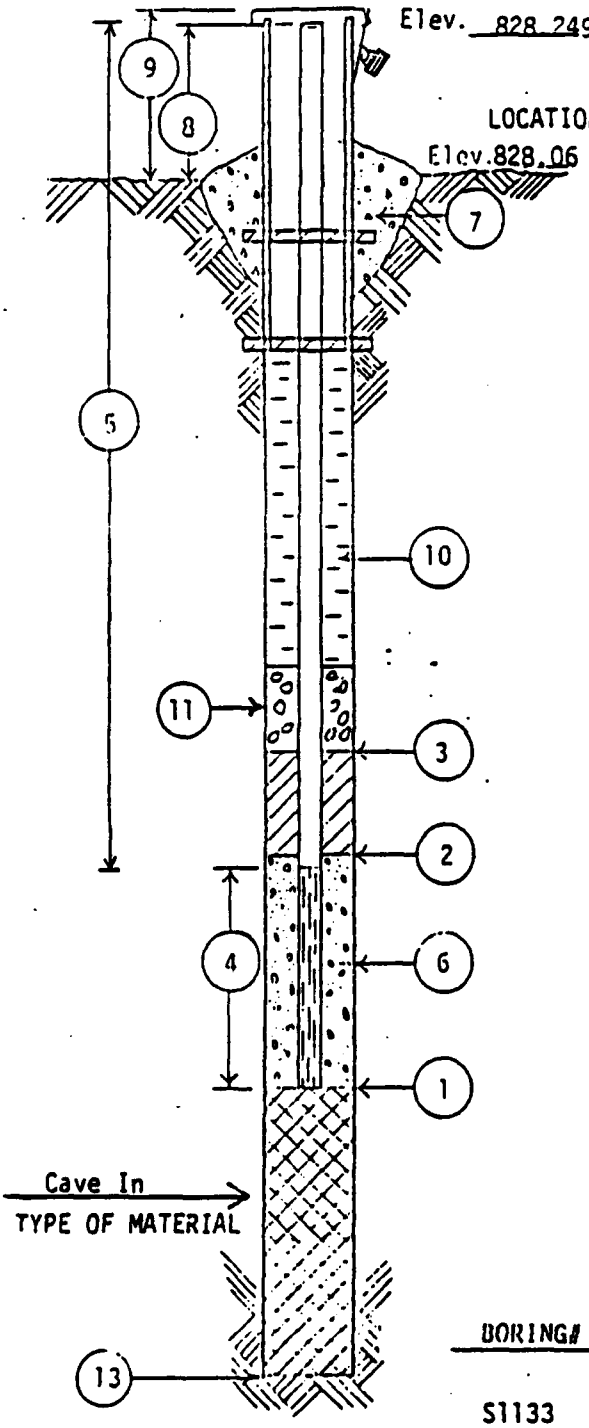

All depth measurements of well detail to be from ground surface.

(1) DEPTH TO BOTTOM OF WELL POINT OR SLOTTED PIPE 97.00 FEET.

(2) DEPTH OF BOTTOM OF SEAL (if installed) 90 FEET.

(3) DEPTH TO TOP OF SEAL (if installed) 89 FEET.

(4) LENGTH OF PVC WELL SCREEN, 5.16 FEET. 4.60 Feet Slotted

(5) TOTAL LENGTH OF PIPE 92.03 FEET @ 4 I.D. IN. DIAMETER.

(6) TYPE OF FILTER MATERIAL AROUND WELL POINT OR SLOTTED PIPE Medium Sand.

(7) CONCRETE CAP, YES (NO) (Circle One)

(8) HEIGHT OF WELL CASING ABOVE GROUND .19 FEET.

(9) PROTECTIVE CASING? (YES) NO (Circle One)
HEIGHT ABOVE GROUND .80
LOCKING CAP? (YES) NO (Circle One)

(10) TYPE OF BACKFILL: Cement/Bentonite Grout 6:1 by weight

(11) THICKNESS OF GRAVEL PACK 3 FEET

(12) DEPTH TO FIRST COUPLING 10.23 FEET.
COUPLING INTERVAL 10.23 FEET.

(13) TOTAL DEPTH OF BOREHOLE 100 FEET

BORING#	DATE	TIME	DEPTH TO WATER	GROUNDWATER ELEVATION
S1133	2/19/80		64.64	763.61

WELL DETAIL INFORMATION SHEET

JOB NO. 4910
BORING NO. S-83-1148
Elev. 801.82 DATE 10-10-83
CHIEF R F Sarko and Associates, Inc.
LOCATION N 2,801,577 E 6,204,146

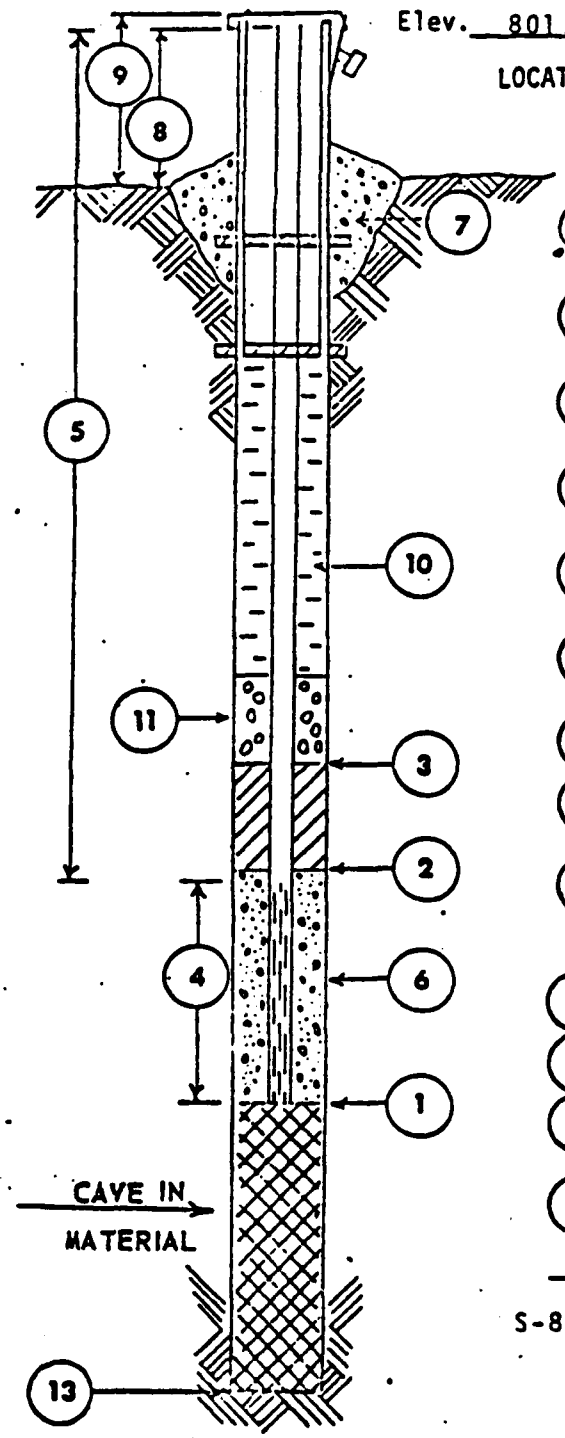

All depth measurements of well detail to be from ground surface.

(1) DEPTH TO BOTTOM OF WELL POINT OR SLOTTED PIPE 56.67 FEET.

(2) DEPTH OF BOTTOM OF SEAL (if installed) 27 FEET.

(3) DEPTH TO TOP OF SEAL (if installed) 19 FEET.

(4) LENGTH OF PVC WELL SCREEN, 25 FEET. 25 FEET SLOTTED

(5) TOTAL LENGTH OF PIPE 34 FEET @ 5 IN. DIAMETER.

(6) TYPE OF FILTER MATERIAL AROUND WELL POINT OR SLOTTED PIPE Pea Gravel.

(7) CONCRETE CAP. (YES) NO (Circle One)

(8) HEIGHT OF WELL CASING ABOVE GROUND 2.33 FEET.

(9) PROTECTIVE CASING? (YES) NO (Circle One)
HEIGHT ABOVE GROUND 29 Inches
LOCKING CAP? (YES) NO (Circle One)

(10) TYPE OF BACKFILL: Bentonite-Cement Mix

(11) THICKNESS OF GRAVEL PACK 5' above Screen FEET.

(12) DEPTH TO FIRST COUPLING 14 FEET From (TOC)
COUPLING INTERVAL 20 FEET.

(13) TOTAL DEPTH OF BOREHOLE 76.67 FEET.

BORING #	DATE	TIME	DEPTH TO WATER	GROUNDWATER ELEVATION
S-83-1148	5/5/83	2:05	From top of PVC 39.2 feet	762.62

GEOLOGICAL & SOILS SURVEY
AND GROUNDWATER MONITORING PROJ

SK-3932 SHEET 1 OF 6

WELL DETAIL INFORMATION SHEET

JOB NO. 4910
BORING NO. S-83-1147
DATE 10-10-83
CHIEF R.F. Sarko and Associates, Inc.

Elev. 815.23

LOCATION N 3,021.422 E 5,149.283

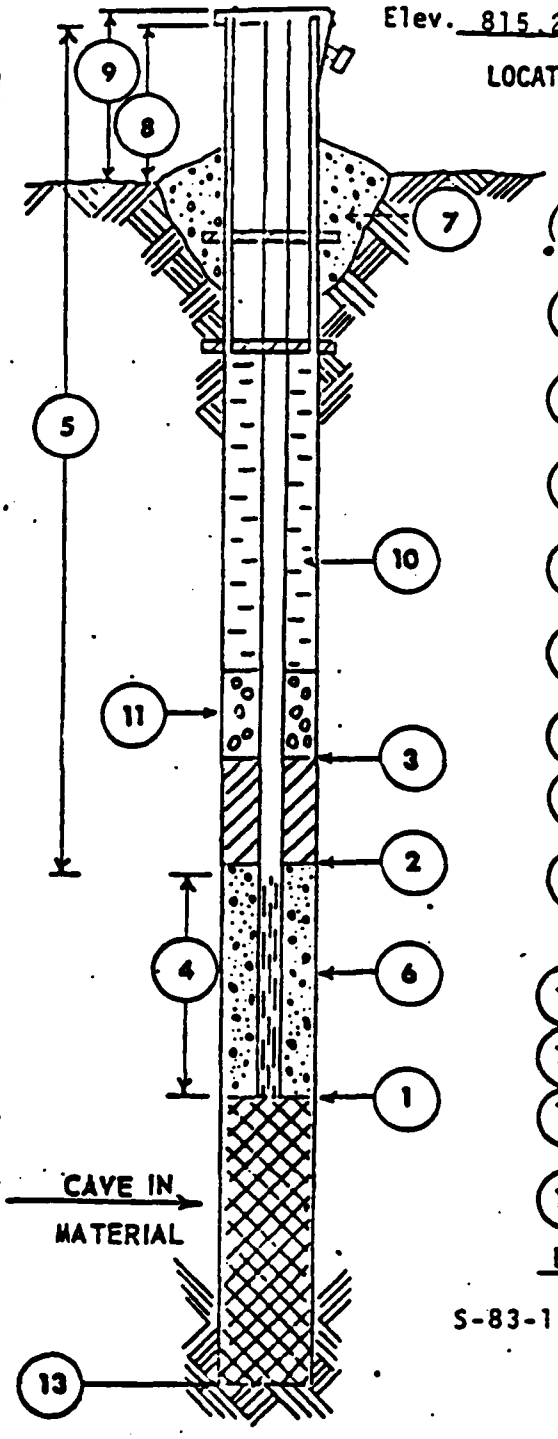

All depth measurements of well detail to be from ground surface.

(1) DEPTH TO BOTTOM OF WELL POINT OR SLOTTED PIPE 70.75 FEET.

(2) DEPTH OF BOTTOM OF SEAL (if installed) 41 FEET.

(3) DEPTH TO TOP OF SEAL (if installed) 33 FEET.

(4) LENGTH OF PVC WELL SCREEN, 25 FEET. 25 FEET SLOTTED

(5) TOTAL LENGTH OF PIPE 48 FEET @ 5 IN. DIAMETER.

(6) TYPE OF FILTER MATERIAL AROUND WELL POINT OR SLOTTED PIPE Pea Gravel.

(7) CONCRETE CAP. (YES) NO (Circle One)

(8) HEIGHT OF WELL CASING ABOVE GROUND 2.25 FEET.

(9) PROTECTIVE CASING? (YES) NO (Circle One)
HEIGHT ABOVE GROUND 2.42 feet
LOCKING CAP? (YES) NO (Circle One)

(10) TYPE OF BACKFILL: Bentonite-Cement

(11) THICKNESS OF GRAVEL PACK 5 feet above screen FEET.

(12) DEPTH TO FIRST COUPLING 20 FEET (From TOC)
COUPLING INTERVAL one at 8' then 20 FEET.

(13) TOTAL DEPTH OF BOREHOLE 90.75 FEET.

BORING #	DATE	TIME	DEPTH TO WATER	GROUNDWATER ELEVATION
S-83-1147	5/5/83	1:42	From top of PVC 52.8 feet	762.43

GEOLOGICAL & SOILS SURVEY
AND GROUNDWATER MONITORING PROJECT

SK-3932 SHEET 1 OF 6

WELL DETAIL INFORMATION SHEET

JOB NO. 4910
BORING NO. S-83-1149
Elev. 805.80 DATE 10-10-83
CHIEF R. E. Sarko and Associates, Inc.
LOCATION N 3,252,536 E 7,110,671

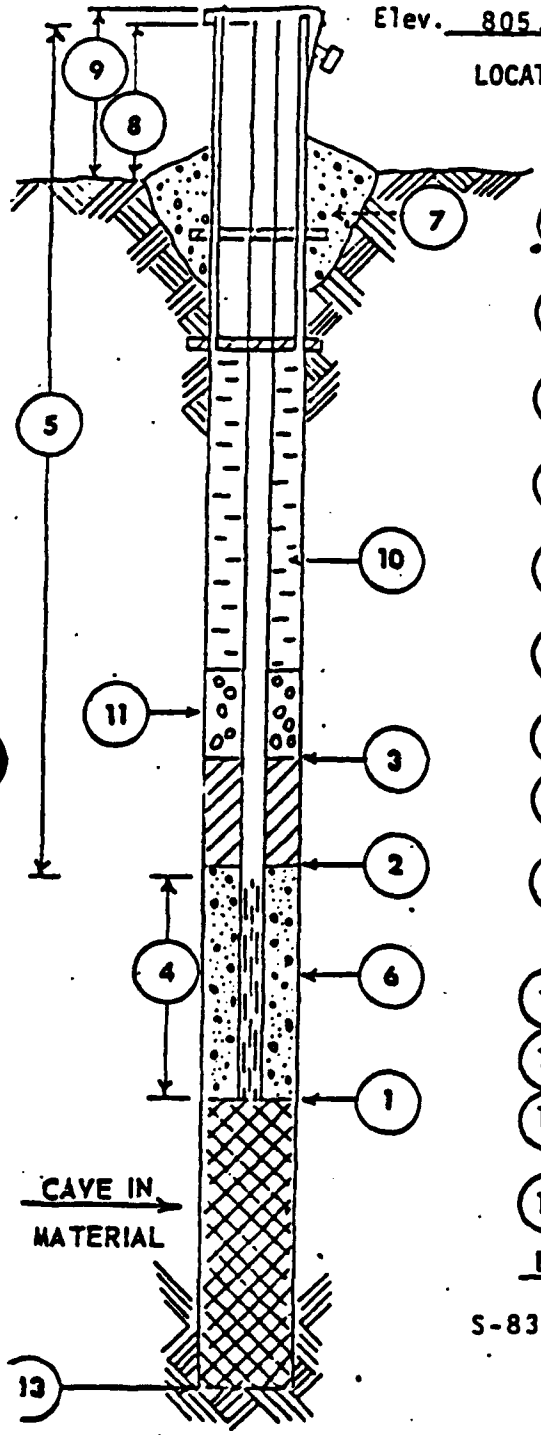

All depth measurements of well detail to be from ground surface.

(1) DEPTH TO BOTTOM OF WELL POINT OR SLOTTED PIPE 60.83 FEET.

(2) DEPTH OF BOTTOM OF SEAL (if installed) 31 FEET.

(3) DEPTH TO TOP OF SEAL (if installed) 23 FEET.

(4) LENGTH OF PVC WELL SCREEN, 25 FEET. 25 FEET SLOTTED

(5) TOTAL LENGTH OF PIPE 38 FEET @ 5 IN. DIAMETER.

(6) TYPE OF FILTER MATERIAL AROUND WELL POINT OR SLOTTED PIPE Pea Gravel.

(7) CONCRETE CAP. (YES) NO (Circle One)

(8) HEIGHT OF WELL CASING ABOVE GROUND 2.17 FEET.

(9) PROTECTIVE CASING? (YES) NO (Circle One)
HEIGHT ABOVE GROUND 28 inches
LOCKING CAP? (YES) NO (Circle One)

(10) TYPE OF BACKFILL: Bentonite-Cement

(11) THICKNESS OF GRAVEL PACK 5' above screen FEET.

(12) DEPTH TO FIRST COUPLING 18 FEET From (TOC)
COUPLING INTERVAL 20 FEET.

(13) TOTAL DEPTH OF BOREHOLE 80.83 FEET.

BORING #	DATE	TIME	DEPTH TO WATER	GROUNDWATER ELEVATION
S-83-1149	5/5/83	2:20	From top of PVC 42.3 feet	763.50

GEOLOGICAL & SOILS SURVEY
AND GROUNDWATER MONITORING PROJECT
SK-3932 SHEET 1 OF 6

WELL DETAIL INFORMATION SHEET

JOB NO. 4910
BORING NO. S-83-1150
DATE 10-10-83
CHIEF R.F. Sarko and Associates, Inc.
LOCATION N 14,918 656 E 8,243 989

Elev. 895.81

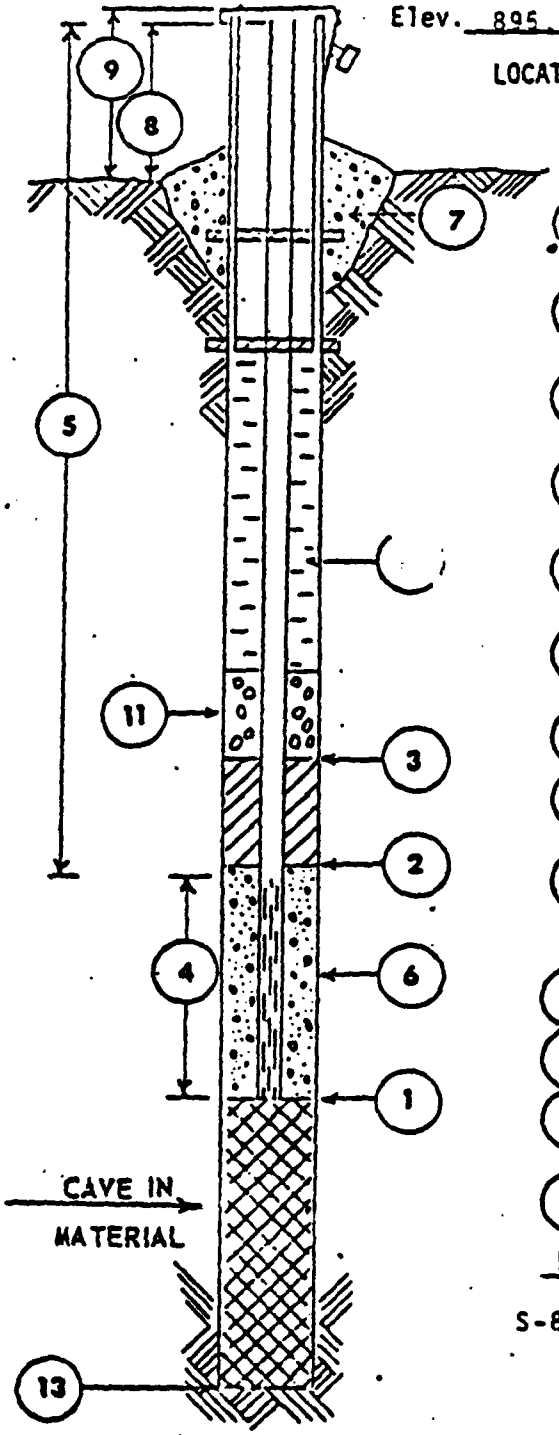

All depth measurements of well detail to be from ground surface.

1. DEPTH TO BOTTOM OF WELL POINT OR SLOTTED PIPE 135.25 FEET.
2. DEPTH OF BOTTOM OF SEAL (if installed) 105 FEET.
3. DEPTH TO TOP OF SEAL (if installed) 97 FEET.
4. LENGTH OF PVC WELL SCREEN, 25 FEET. 25 FEET SLOTTED
5. TOTAL LENGTH OF PIPE 113 FEET @ 5 IN. DIAMETER.
6. TYPE OF FILTER MATERIAL AROUND WELL POINT OR SLOTTED PIPE Pea Gravel.
7. CONCRETE CAP. (YES) NO (Circle One)
8. HEIGHT OF WELL CASING ABOVE GROUND 2.75 FEET.
9. PROTECTIVE CASING? (YES) NO (Circle One)
   HEIGHT ABOVE GROUND 33 inches
   LOCKING CAP? (YES) NO (Circle One)
10. TYPE OF BACKFILL: Bentonite-Cement
11. THICKNESS OF GRAVEL PACK 5' above screen FEET.
12. DEPTH TO FIRST COUPLING 13 FEET From (TOC)
    COUPLING INTERVAL 20 FEET.
13. TOTAL DEPTH OF BOREHOLE 155.5 FEET.

BORING #	DATE	TIME	DEPTH TO WATER	GROUNDWATER ELEVATION
S-83-1150	5/5/83	2:55	From top of PVC 118.6'	777.21

GEOLOGICAL & SOILS SURVEY
AND GROUNDWATER MONITORING PROJECT
SK-3932 SHEET 1 OF 6

WELL DETAIL INFORMATION SHEET

JOB NO. 4910
BORING NO. S-83-1151
Elev. 893.33 DATE 10-10-83
CHIEF R.F. Sarko and Associates, Inc.
LOCATION N 21,898.327 E 12,254.520

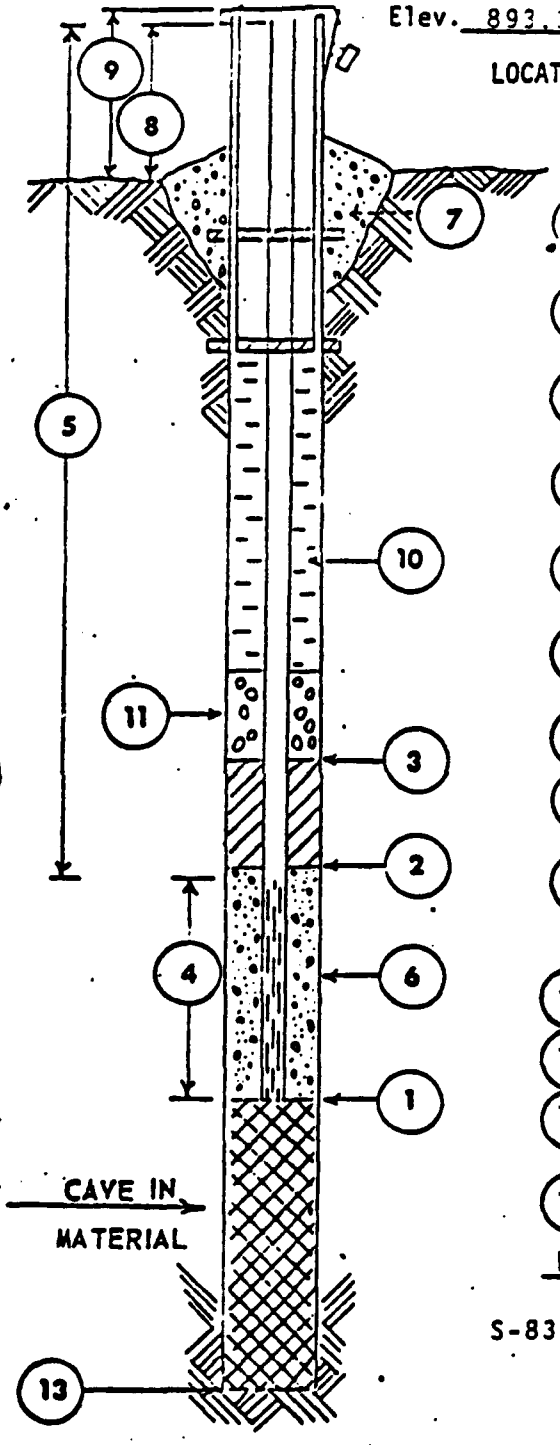

All depth measurements of well detail to be from ground surface.

1. DEPTH TO BOTTOM OF WELL POINT OR SLOTTED PIPE 131.42 FEET.
2. DEPTH OF BOTTOM OF SEAL (if installed) 101 FEET.
3. DEPTH TO TOP OF SEAL (if installed) 93 FEET.
4. LENGTH OF PVC WELL SCREEN, 25 FEET. 25 FEET SLOTTED
5. TOTAL LENGTH OF PIPE 109 FEET @ 5 IN. DIAMETER.
6. TYPE OF FILTER MATERIAL AROUND WELL POINT OR SLOTTED PIPE Pea Gravel.
7. CONCRETE CAP. YES NO (Circle One)
8. HEIGHT OF WELL CASING ABOVE GROUND 2.58 FEET.
9. PROTECTIVE CASING? YES NO (Circle One)
   HEIGHT ABOVE GROUND 33 inches
   LOCKING CAP? YES NO (Circle One)
10. TYPE OF BACKFILL: Bentonite-Cement
11. THICKNESS OF GRAVEL PACK 5' above screen FEET.
12. DEPTH TO FIRST COUPLING 9 FEET From (TOC)
    COUPLING INTERVAL 20 FEET.
13. TOTAL DEPTH OF BOREHOLE 151.42 FEET.

BORING #	DATE	TIME	DEPTH TO WATER	GROUNDWATER ELEVATION
S-83-1151	5/5/83	3:17	From Top of PVC 113.7	779.63

GEOLOGIC
AND GROU
SK-3932 SHEET 1 O

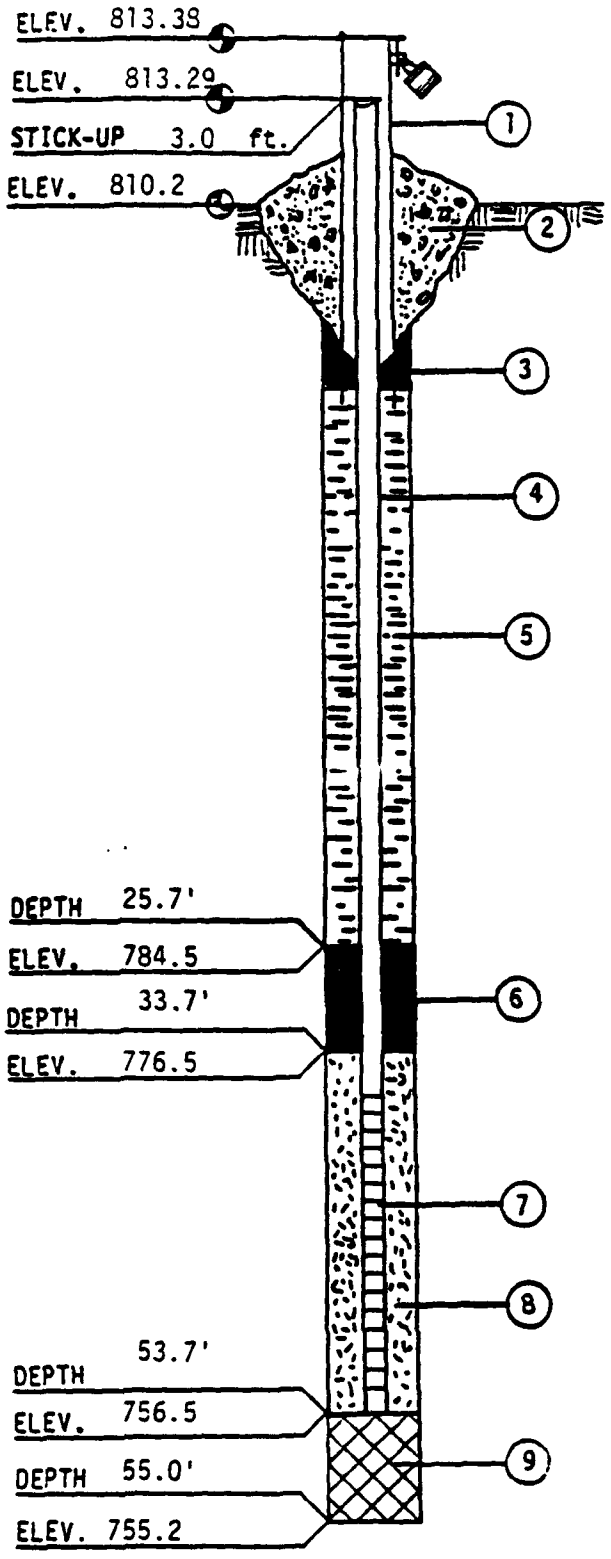

MONITORING WELL CONSTRUCTION INFORMATION

JOB NO. C 12228

BORING/WELL NO. S-85-1152A

DATE 9/27/85

CHIEF/UNIT LS

1. PROTECTIVE CASING (YES) NO

   LOCKING (YES) NO

2. CONCRETE SEAL (YES) NO

3. TYPE OF SURFACE SEAL (IF INSTALLED)

   -

4. SOLID PIPE TYPE PVC SCH 80

   SOLID PIPE LENGTH 42 ft.

   JOINT TYPE SLIP/GLUED (THREADED)

5. TYPE OF BACKFILL Cement-Bentonite

   HOW INSTALLED (TREMIE) FROM SURFACE

6. TYPE OF LOWER SEAL (IF INSTALLED)
   Bentonite Pellets

7. SCREEN TYPE PVC SCH 80

   SCREEN LENGTH 15.0

   SLOT-SIZE 0.010" LENGTH 12 ft.

   SCREEN DIAMETER 4.0 in.

8. TYPE OF BACKFILL AROUND SCREEN
   Flint Sand

9. TYPE OF BACKFILL Sluff

10. DRILLING METHOD Wash Boring/Roller Bit

11. ADDITIVES USED (IF ANY)
    Bentonite

WATER LEVEL 8.7' DATE 9/27/85

*ALL DEPTHS MEASURED FROM GROUND SURFACE.

WARZYN ENGINEERING INC

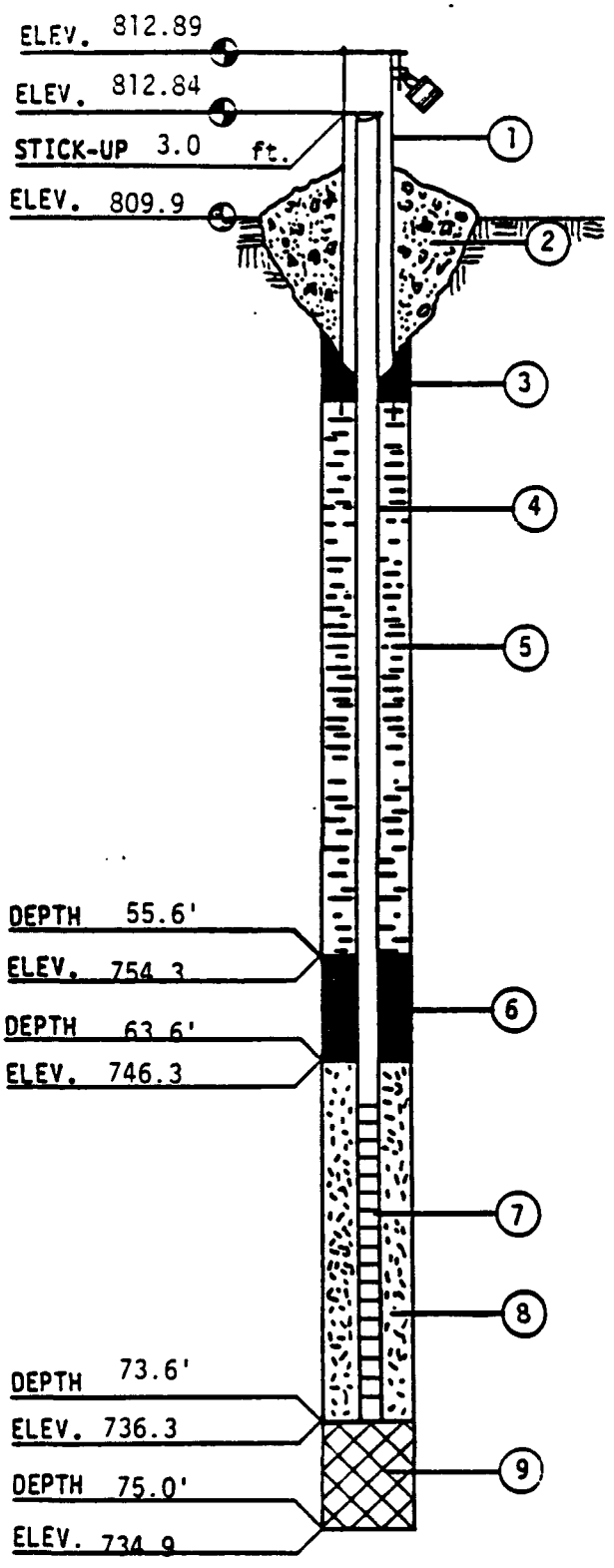

WARZYN ENGINEERING INC

MONITORING WELL CONSTRUCTION INFORMATION

JOB NO. C 12228

BORING/WELL NO. S-85-1152B

DATE 9/26/85

CHIEF/UNIT LS

1. PROTECTIVE CASING (YES) NO

   LOCKING (YES) NO

2. CONCRETE SEAL (YES) NO

3. TYPE OF SURFACE SEAL (IF INSTALLED)
   Granular Bentonite

4. SOLID PIPE TYPE PVC SCH 80

   SOLID PIPE LENGTH 73 ft.

   JOINT TYPE SLIP/GLUED (THREADED)

5. TYPE OF BACKFILL Cement/Bentonite Grout

   HOW INSTALLED - (TREMIE) FROM SURFACE

6. TYPE OF LOWER SEAL (IF INSTALLED)
   Bentonite Pellets

7. SCREEN TYPE 4" SCH 80 PVC

   SCREEN LENGTH 5.0'

   SLOT-SIZE 0.010" LENGTH 4.0 ft.

   SCREEN DIAMETER 4.0 in.

8. TYPE OF BACKFILL AROUND SCREEN
   Flint Sand

9. TYPE OF BACKFILL Sluff

10. DRILLING METHOD Wash Boring/Roller Bit

11. ADDITIVES USED (IF ANY)
    Bentonite

WATER LEVEL 32.6' DATE 9/26/85

*ALL DEPTHS MEASURED FROM GROUND SURFACE.

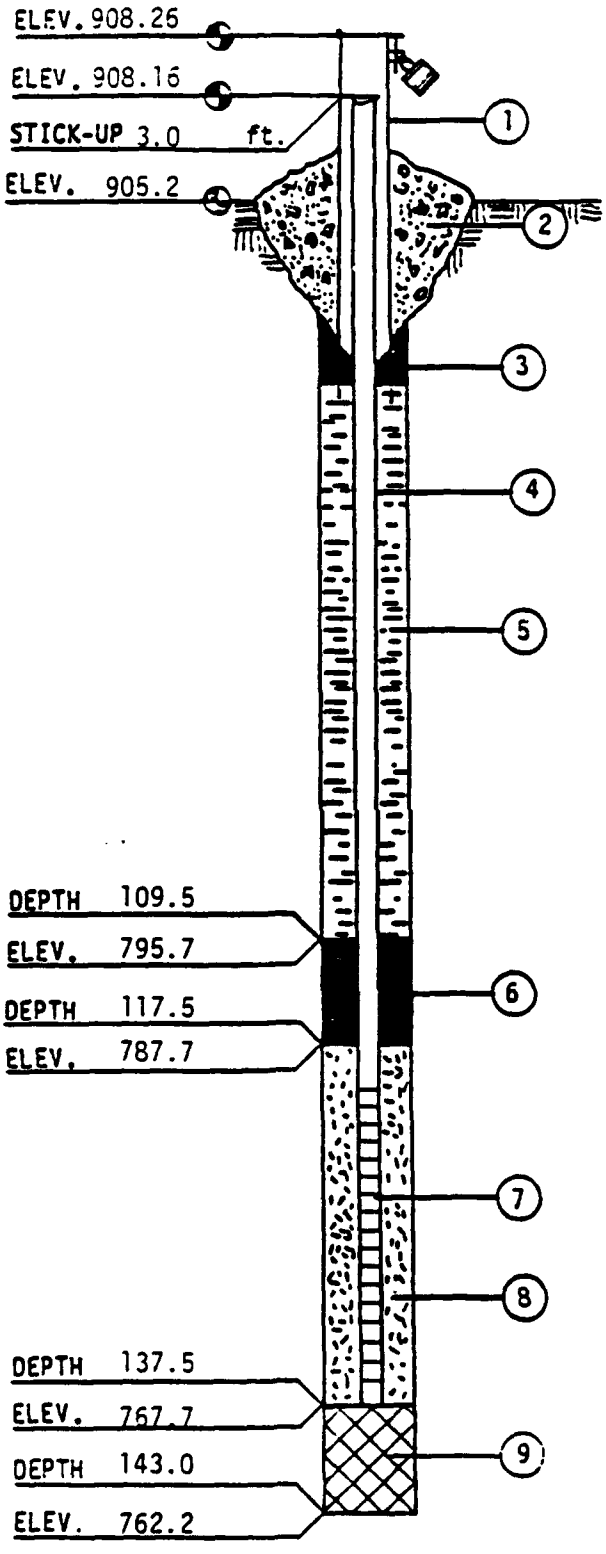

WARZYN ENGINEERING INC

MONITORING WELL CONSTRUCTION INFORMATION

JOB NO. C 12228

BORING/WELL NO. S-85-1153

DATE 9/20/85

CHIEF/UNIT LS

1. PROTECTIVE CASING (YES) NO
   LOCKING (YES) NO
2. CONCRETE SEAL (YES) NO
3. TYPE OF SURFACE SEAL (IF INSTALLED)
   Cement
4. SOLID PIPE TYPE 4" SCH 80 PVC
   SOLID PIPE LENGTH 125.5 ft.
   JOINT TYPE SLIP/GLUED (THREADED)
5. TYPE OF BACKFILL Cement Grout
   HOW INSTALLED (TREMIE FROM SURFACE)
6. TYPE OF LOWER SEAL (IF INSTALLED)
   Bentonite Pellets
7. SCREEN TYPE 4" PVC
   SCREEN LENGTH 15.0'
   SLOT-SIZE 0.010" LENGTH 12.0 ft.
   SCREEN DIAMETER 4.0 in.
8. TYPE OF BACKFILL AROUND SCREEN
   Flint Sand
9. TYPE OF BACKFILL Sluff
10. DRILLING METHOD Wasn Boring/Roller Bit
11. ADDITIVES USED (IF ANY)
    Bentonite Powder

WATER LEVEL 110.3' DATE 9/23/85

*ALL DEPTHS MEASURED FROM GROUND SURFACE.

ABB Environmental Services, Inc. MONITORING WELL CONSTRUCTION FORM

Facility/Project Name	Grid Location	Well Name
BADGER AAP	____ ft. ☐ N. ☐ S.	ELN-91-07B
Facility License, Permit or Monitoring Number	____ ft. ☐ E. ☐ W.	Wis. Unique Well Number / DNR Well Number
Type of Well: Water Table Observation Well ☑ 11; Piezometer ☐ 12	Section Location: ____ 1/4 of ____ 1/4 of Section ____; T ____ N, R ____ ☐ E ☐ W	Date Well Installed: 11/09/91 (m m d d y y)
Distance Well is From Waste/Source Boundary: NA ft.	Location of Well Relative to Waste/Source: ☑ Upgradient ☐ Sidegradient ☐ Downgradient ☐ Not Known	Well Installed By: (Person's Name and Firm): GARRY RODRIGUEZ; LAYNE
Is Well A Point of Enforcement Std. Application? ☐ Yes ☒ No		

A. Protective pipe, top elevation 895.99 ft. MSL
B. Well casing, top elevation 895.88 ft. MSL
C. Land surface elevation 893.9 ft. MSL
D. Surface seal, bottom ____ ft. MSL or ____ ft.

12. USCS classification of soil near screen:
☐ GP ☐ GM ☐ GC ☑ GW ☑ SW ☐ SP
☐ SM ☐ SC ☐ ML ☐ MH ☐ CL ☐ CH
☐ Bedrock

13. Sieve analysis attached? ☐ Yes ☑ No

14. Drilling method used: Rotary ☐ 50; Hollow Stem Auger ☐ 41; DUAL WALL; Other ☑

15. Drilling fluid used: Water ☐ 02; Air ☑ 01; Drilling Mud ☐ 03; None ☐ 99

16. Drilling additives used? ☐ Yes ☑ No
Describe ____

17. Source of water (attach analysis):
PRODUCTION WELL # 2

E. Bentonite seal, top 776.9 ft. MSL or 117.0 ft.
F. Fine sand, top ____ ft. MSL or ____ ft.
G. Filter pack, top 766.4 ft. MSL or 127.5 ft.
H. Well screen, top 758.9 ft. MSL or 135.0 ft.
I. Well screen, bottom 748.9 ft. MSL or 145.0 ft.
J. Filter pack, bottom 748.9 ft. MSL or 145.0 ft.
K. Borehole, bottom 743.9 ft. MSL or (20) 150 ft.
L. Borehole, diameter 09.0 in.
M. O.D. well casing 04.25 in.
N. I.D. well casing 03.75 in.

1. Cap and lock? ☑ Yes ☐ No
2. Protective cover pipe:
a. Inside diameter: 06.0 in.
b. Length: 99.0 ft.
c. Material: Steel ☑ 04; Other ☐ ____
d. Additional protection? ☑ Yes ☐ No
If yes, describe: BUCKLED POSTS + CONC PAD
3. Surface seal: Bentonite ☐ 30; Concrete ☑ 01; Other ☐ ____
4. Material between well casing and protective pipe: Bentonite ☐ 30; Annular space seal ☑; Other ☐ ____
5. Annular space seal: Granular Bentonite ☐ 33; ____ Lbs/gal mud weight ... Bentonite-sand slurry ☐ 35; ____ Lbs/gal mud weight ..... Bentonite slurry ☐ 31; 5 % Bentonite .... Bentonite-cement grout ☑ 50; 200 Ft³ volume added for any of the above
How installed: Tremie ☐ 01; Tremie pumped ☐ 02; Gravity ☑ 08
6. Bentonite seal: Bentonite granules ☐ 33; ☐ 1/4 in. ☐ 3/8 in. ☐ 1/2 in. Bentonite pellets ☐ 32; BENTONITE POWDER Other ☑
7. Fine sand material: Manufacturer, product name and mesh size: NONE
Volume added ____ ft³
8. Filter pack material: Manufacturer, product name and mesh size: CSSI SILICA SAND #4
Volume added 20 ft³
9. Well casing: Flush threaded PVC schedule 40 ☐ 23; Flush threaded PVC schedule 80 ☑ 24; Other ☐ ____
10. Screen material: SCH 80 4" PVC
Screen type: Factory cut ☑ 11; Continuous slot ☐ 01; Other ☐ ____
Manufacturer MONOFLEX
Slot size: 0.010 in.
Slotted length: 10.0 ft.
11. Backfill material (below filter pack): None ☐; SURROUNDING SOIL Other ☑

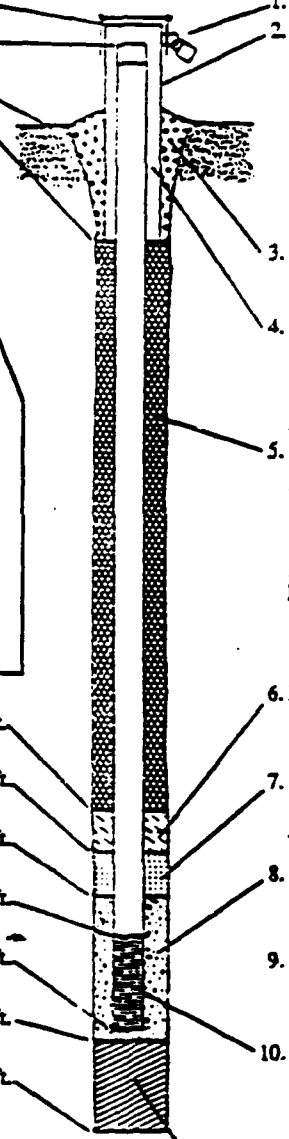

I hereby certify that the information on this form is true and correct to the best of my knowledge.

Signature: [signature] Firm: ABB-ES

ABB Environmental Services, Inc. MONITORING WELL CONSTRUCTION FORM

Facility/Project Name: BADGER AAP	Grid Location: ____ ft. ☐ N. ☐ S. ____ ft. ☐ E. ☐ W.	Well Name: ELM-91-10
Facility License, Permit or Monitoring Number: _____		Wis. Unique Well Number: _____ DNR Well Number: _____
Type of Well: Water Table Observation Well ☒ 11; Piezometer ☐ 12	Section Location: ____ 1/4 of ____ 1/4 of Section ____ T ____ N, R ____ ☐ E ☐ W	Date Well Installed: 11/13/91 (m m / d d / y y)
Distance Well Is From Waste/Source Boundary: NA ft.	Location of Well Relative to Waste/Source: ☐ Upgradient ☐ Sidegradient ☒ Downgradient ☐ Not Known	Well Installed By: (Person's Name and Firm) G RODRIGUEZ LAYNE
Is Well A Point of Enforcement Std. Application? ☐ Yes ☒ No		

A. Protective pipe, top elevation 923.16 ft. MSL

B. Well casing, top elevation 923.04 ft. MSL

C. Land surface elevation 920.8 ft. MSL

D. Surface seal, bottom ____ ft. MSL or ____ ft.

12. USCS classification of soil near screen:
☐ GP ☐ GM ☐ GC ☐ GW ☒ SW ☒ SP
☐ SM ☐ SC ☐ ML ☐ MH ☐ CL ☐ CH
☐ Bedrock

13. Sieve analysis attached? ☐ Yes ☒ No

14. Drilling method used: Rotary ☐ 50; Hollow Stem Auger ☐ 41; Other ☒ DUAL WALL REV AIR

15. Drilling fluid used: Water ☐ 02; Air ☒ 01; Drilling Mud ☐ 03; None ☐ 99

16. Drilling additives used? ☐ Yes ☒ No

Describe ____

17. Source of water (attach analysis): PRODUCTION WELL # 2

E. Bentonite seal, top 793.8 ft. MSL or 127.0 ft.

F. Fine sand, top ____ ft. MSL or ____ ft.

G. Filter pack, top 787.8 ft. MSL or 133.0 ft.

H. Well screen, top 781.8 ft. MSL or 139.0 ft.

I. Well screen, bottom 766.8 ft. MSL or 154.0 ft.

J. Filter pack, bottom 766.8 ft. MSL or 154.0 ft.

K. Borehole, bottom 766.8 ft. MSL or 154.0 ft.

L. Borehole, diameter 09.0 in.

M. O.D. well casing 04.50 in.

N. I.D. well casing 03.75 in.

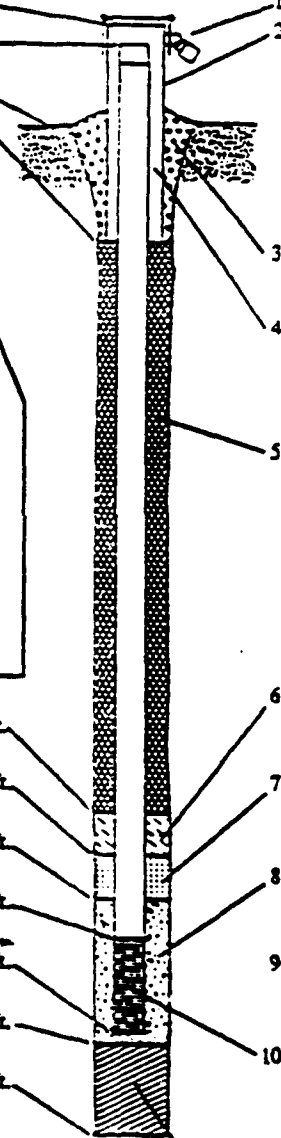

1. Cap and lock? ☒ Yes ☐ ...

2. Protective cover pipe:
a. Inside diameter: 06.0
b. Length: 06.0
c. Material: Steel ☒ 0... Other ☐
d. Additional protection? ☐ Yes ☐ N...
If yes, describe: BUCKING POSTS GRAVEL PA...

3. Surface seal: Bentonite ☐ 30; Concrete ☒; Other ☐

4. Material between well casing and protective pipe: Bentonite ☐ 30; Annular space seal ☒; Other ☐

5. Annular space seal: Granular Bentonite ☐ 3...
____ Lbs/gal mud weight . . . Bentonite-sand slurry ☐ 3...
____ Lbs/gal mud weight . . . . . Bentonite slurry ☐ ...
5 % Bentonite . . . . . Bentonite-cement grout ☒ 50
200 Ft^3 volume added for any of the above
How installed: Tremie ☐ (...; Tremie pumped ☐ 0...; Gravity ☒ 0...

6. Bentonite seal: Bentonite granules ☐ 3...
☒ 1/4 in. ☐ 3/8 in. ☐ 1/2 in. Bentonite pellets ☒ 3...
Other ☐

7. Fine sand material: Manufacturer, product name and mesh si...
NONE
Volume added ____ ft^3

8. Filter pack material: Manufacturer, product name and mesh si...
CSSI #4
Volume added 24 ft^3

9. Well casing: Flush threaded PVC schedule 40 ☐ 23; Flush threaded PVC schedule 80 ☒ 2...; Other ☐

10. Screen material: 4" SCH 80 PVC
Screen type: Factory cut ☒ 1...; Continuous slot ☐ 0...; Other ☐
Manufacturer MONOFLEX
Slot size: 0.010 i...
Slotted length: 10.0

11. Backfill material (below filter pack): None ☒; Other ☐

I hereby certify that the information on this form is true and correct to the best of my knowledge.

Signature: Rod R. Rustan | Firm: ABB - ES

State of Wisconsin
Department of Natural Resources

MONITORING WELL CONSTRUCTION
Form 4400-113A 8-89

Facility/Project Name: Badger Army Ammunition Plant	Grid Location: 4,805,783.8 m ft N. S. / 279,844.9 m ft E. W.	Well Name: ELM-89-01
Facility License, Permit or Monitoring Number:		Wis. Unique Well Number: DNR Well Number:
Type of Well: Water Table Observation Well 11 / Piezometer 12	Section Location: ____ 1/4 of ____ 1/4 of Section ____, T ____ N, R ____ E W	Date Well Installed: 01/18/89 (m m d d y y)
Distance Well Is From Waste/Source Boundary: NA ft.	Location of Well Relative to Waste/Source: Upgradient, Sidegradient, Downgradient, Not Known	Well Installed By: (Person's Name and Firm) John Snowden / E.C. Jordan Co.
Is Well A Point of Enforcement Std. Application? Yes / No		

A. Protective pipe, top elevation 922.88 ft. MSL
B. Well casing, top elevation 922.23 ft. MSL
C. Land surface elevation 920.5 ft. MSL
D. Surface seal, bottom ____ ft. MSL or ____ ft.

12. USCS classification of soil near screen:
GP GM GC GW SW SP
SM SC ML MH CL CH
Bedrock

13. Sieve analysis attached? Yes / No

14. Drilling method used: Rotary 50; Hollow Stem Auger 41; Other — Dual Wall

15. Drilling fluid used: Water 02; Air 01; Drilling Mud 03; None 99

16. Drilling additives used? Yes / No
Describe ____

17. Source of water (attach analysis):
PW #2

E. Bentonite seal, top 795.1 ft. MSL or 125.4 ft.
F. Fine sand, top NA ft. MSL or NA ft.
G. Filter pack, top 789.9 ft. MSL or 130.6 ft.
H. Well screen, top 775.0 ft. MSL or 145.5 ft.
I. Well screen, bottom 755.5 ft. MSL or 165.0 ft.
J. Filter pack, bottom 755.5 ft. MSL or 165.0 ft.
K. Borehole, bottom 755.1 ft. MSL or 165.4 ft.
L. Borehole, diameter 9.5 in.
M. O.D. well casing 4.5 in.
N. I.D. well casing 4.0 in.

1. Cap and lock? Yes / No
2. Protective cover pipe:
a. Inside diameter: 6.0 in.
b. Length: 2.0 ft.
c. Material: Steel 04; Other ____
d. Additional protection? Yes / No
If yes, describe: 4 locking Posts
3. Surface seal: Bentonite 30; Concrete 01; Other — Grout
4. Material between well casing and protective pipe: Bentonite 30; Annular space seal; Other — Grout
5. Annular space seal: Granular Bentonite 33; ____ Lbs/gal mud weight ... Bentonite-sand slurry 35; ____ Lbs/gal mud weight ..... Bentonite slurry 31; 5 % Bentonite .... Bentonite-cement grout 50
± 340 gal/ft³ volume added for any of the above
How installed: Tremie 01; Tremie pumped 02; Gravity 08
6. Bentonite seal: Bentonite granules 33; 1/4 in. 3/8 in. 1/2 in. Bentonite pellets 32; Other
7. Fine sand material: Manufacturer, product name and mesh size
NA
Volume added NA ft³
8. Filter pack material: Manufacturer, product name and mesh size
Red Flint, Silica Filter Sand
Volume added ≈ 3.8 ft³
9. Well casing: Flush threaded PVC schedule 40 23; Flush threaded PVC schedule 80 24; Other
10. Screen material: Schedule 80 PVC
Screen type: Factory cut 11; Continuous slot 01; Other
Manufacturer Lingo
Slot size: 0.01 in.
Slotted length: 20.0 ft.
11. Backfill material (below filter pack): None; Other

I hereby certify that the information on this form is true and correct to the best of my knowledge.
Signature ____ Firm E.C. Jordan Co.

Please complete and return both copies of this form as required by chs. 144, 147 and 160, Wis. Stats., and ch. NR 141, Wis. Adm. Code. In accordance with ch. 144, Wis Stats., failure to file this form may result in a forfeiture of not less than $10, nor more than $5,000 for each day of violation. In accordance with ch. 147, Wis. Stats., failure to file this form may result in a forfeiture of not more than $10,000 for each day of violation.

State of Wisconsin
Department of Natural Resources

MONITORING WELL CONSTRUCTION
Form 4400-113A 8-89

Facility/Project Name: Badger Army Ammunition Plant	Grid Location: 4,885,748.3 m N. ☐ S.; 279,992.0 m E. ☐ W.	Well Name: ELN-89-02A
Facility License, Permit or Monitoring Number:		Wis. Unique Well Number / DNR Well Number
Type of Well: Water Table Observation Well ☒ 11; Piezometer ☐ 12	Section Location: ____ 1/4 of ____ 1/4 of Section ____, T ____ N, R ____ ☐ E ☐ W	Date Well Installed: 02/22/89 (m m d d y y)
Distance Well Is From Waste/Source Boundary: NA ft.	Location of Well Relative to Waste/Source: ☐ Upgradient ☐ Sidegradient ☐ Downgradient ☐ Not Known	Well Installed By: (Person's Name and Firm) Dave H. Belan / E.C Jordan Co.
Is Well A Point of Enforcement Std. Application? ☐ Yes ☒ No		

A. Protective pipe, top elevation 921.85 ft. MSL
B. Well casing, top elevation 921.10 ft. MSL
C. Land surface elevation 919.4 ft. MSL
D. Surface seal, bottom ____ ft. MSL or ____ ft.

12. USCS classification of soil near screen:
☒ GP ☐ GM ☐ GC ☐ GW ☐ SW ☒ SP
☐ SM ☐ SC ☐ ML ☐ MH ☐ CL ☐ CH
☐ Bedrock

13. Sieve analysis attached? ☐ Yes ☒ No

14. Drilling method used: Rotary ☐ 50; Hollow Stem Auger ☐ 41; Other ☒ ____
Dual Wall

15. Drilling fluid used: Water ☐ 02; Air ☒ 01; Drilling Mud ☐ 03; None ☐ 99

16. Drilling additives used? ☐ Yes ☒ No
Describe ____

17. Source of water (attach analysis):
DW #2

E. Bentonite seal, top 791.4 ft. MSL or 128.0 ft.
F. Fine sand, top NA ft. MSL or NA ft.
G. Filter pack, top 786.4 ft. MSL or 133.0 ft.
H. Well screen, top 780.4 ft. MSL or 139.0 ft.
I. Well screen, bottom 760.4 ft. MSL or 159.0 ft.
J. Filter pack, bottom 760.4 ft. MSL or 159.0 ft.
K. Borehole, bottom 759.4 ft. MSL or 160.0 ft.
L. Borehole, diameter 9.5 in.
M. O.D. well casing 4.5 in.
N. I.D. well casing 4.0 in.

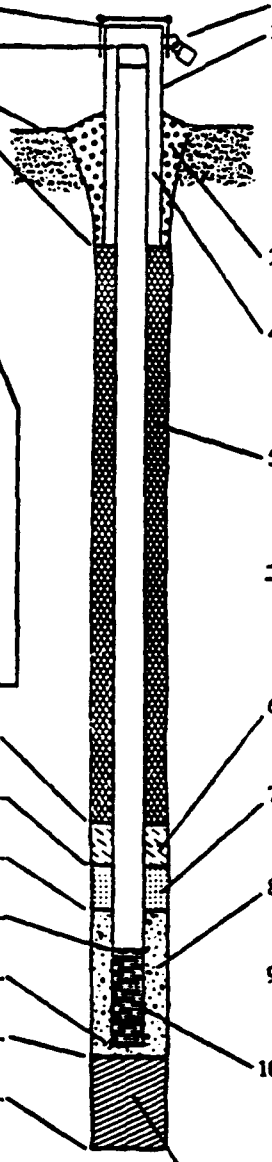

1. Cap and lock? ☒ Yes ☐ No
2. Protective cover pipe:
a. Inside diameter: 6.0 in
b. Length: 7.0 ft
c. Material: Steel ☒ 04; Other ☐ ____
d. Additional protection? ☒ Yes ☐ No
If yes, describe: 4 bucking posts
3. Surface seal: Bentonite ☐ 30; Concrete ☐ 0; Other ☒ ____
Grout
4. Material between well casing and protective pipe: Bentonite ☐ 30; Annular space seal ☐; Other ☒ ____
Grout
5. Annular space seal: Granular Bentonite ☐ 33
____ Lbs/gal mud weight . . . Bentonite-sand slurry ☐ 31
____ Lbs/gal mud weight . . . . . Bentonite slurry ☐ 30
5 % Bentonite . . . . . Bentonite-cement grout ☒ 50
± 350 gal volume added for any of the above
How installed: Tremie ☐ 01; Tremie pumped ☒ 02; Gravity ☐ 08
6. Bentonite seal: Bentonite granules ☐ 33
☐ 1/4 in. ☒ 3/8 in. ☐ 1/2 in. Bentonite pellets ☒ 32
____ Other ☐ ____
7. Fine sand material: Manufacturer, product name and mesh size
NA
Volume added NA ft³
8. Filter pack material: Manufacturer, product name and mesh size
Red Flint, Silica Filter Sand
Volume added ± 3.0 ft³
9. Well casing: Flush threaded PVC schedule 40 ☐ 23; Flush threaded PVC schedule 80 ☒ 24; Other ☐ ____
10. Screen material: Schedule 80 PVC
Screen type: Factory cut ☒ 11; Continuous slot ☐ 01; Other ☐ ____
Manufacturer Lynco
Slot size: 0.010 in
Slotted length: 20.0 ft
11. Backfill material (below filter pack): None ☐; Other ☒
Natural Cave

I hereby certify that the information on this form is true and correct to the best of my knowledge.

Signature: Paul K. Bol | Firm: E.C. Jordan Co.

Please complete and return both sides of this form as required by chs. 144, 147 and 160, Wis. Stats., and ch. NR 141, Wis. Adm. Code. In accordance with ch. 144, Wis Stats., failure to file this form may result in a forfeiture of not less than $10, nor more than $5,000 for each day of violation. In accordance with ch. 147, Wis. Stats., failure to file this form may result in a forfeiture of not more than $10,000 for each day of violation.

State of Wisconsin
Department of Natural Resources

MONITORING WELL CONSTRUCTION
Form 4400-113A 8-89

Facility/Project Name: Badger Army Ammunition Plant
Facility License, Permit or Monitoring Number: _____

Grid Location: 4,805,747.6 m ft. N. ☐ S. / 280,607.9 m ft. E. ☐ W.

Well Name: ELN-89-02B
Wis. Unique Well Number: _____ DNR Well Number: _____

Type of Well: Water Table Observation Well ☐ 11; Piezometer ☒ 12

Section Location: _____ 1/4 of _____ 1/4 of Section _____, T _____ N, R _____ ☐ E ☐ W

Date Well Installed: 09/18/89 (m m d d y y)

Distance Well Is From Waste/Source Boundary: NA ft.

Location of Well Relative to Waste/Source: ☐ Upgradient ☐ Sidegradient ☐ Downgradient ☐ Not Known

Well Installed By: (Person's Name and Firm) Jim Buss / E.C. Jordan Co.

Is Well A Point of Enforcement Std. Application? ☐ Yes ☒ No

A. Protective pipe, top elevation 921.36 ft. MSL
B. Well casing, top elevation 920.19 ft. MSL
C. Land surface elevation 918.0 ft. MSL
D. Surface seal, bottom _____ ft. MSL or _____ ft.

12. USCS classification of soil near screen:
☐ GP ☐ GM ☐ GC ☐ GW ☐ SW ☐ SP
☒ SM ☐ SC ☐ ML ☐ MH ☐ CL ☐ CH
☐ Bedrock

13. Sieve analysis attached? ☐ Yes ☒ No

14. Drilling method used: Rotary ☐ 50; Hollow Stem Auger ☐ 41; Other ☒ Dual Wall

15. Drilling fluid used: Water ☐ 02; Air ☒ 01; Drilling Mud ☐ 03; None ☐ 99

16. Drilling additives used? ☐ Yes ☒ No
Describe _____

17. Source of water (attach analysis): PW #2

E. Bentonite seal, top 762.0 ft. MSL or 156.0 ft.
F. Fine sand, top NA ft. MSL or NA ft.
G. Filter pack, top 752.0 ft. MSL or 166.0 ft.
H. Well screen, top 744.5 ft. MSL or 173.5 ft.
I. Well screen, bottom 739.5 ft. MSL or 178.5 ft.
J. Filter pack, bottom 739.5 ft. MSL or 178.5 ft.
K. Borehole, bottom 737.0 ft. MSL or 181.0 ft.
L. Borehole, diameter 9.5 in.
M. O.D. well casing 4.5 in.
N. I.D. well casing 4.0 in.

1. Cap and lock? ☒ Yes ☐ No
2. Protective cover pipe:
a. Inside diameter: 6.0 in.
b. Length: 3.0 ft.
c. Material: Steel ☒ 04; Other ☐ _____
d. Additional protection? ☒ Yes ☐ No
If yes, describe: 4 bucking Posts
3. Surface seal: Bentonite ☐ 30; Concrete ☐ 01; Other ☒ Grout
4. Material between well casing and protective pipe: Bentonite ☐ 30; Annular space seal ☐; Other ☒ Grout
5. Annular space seal: Granular Bentonite ☐ 33
_____ Lbs/gal mud weight . . . Bentonite-sand slurry ☐ 35
_____ Lbs/gal mud weight . . . . . Bentonite slurry ☐ 31
5 % Bentonite . . . . Bentonite-cement grout ☒ 50
430 gal volume added for any of the above
How installed: Tremie ☐ 01; Tremie pumped ☒ 02; Gravity ☐ 08
6. Bentonite seal: Bentonite granules ☐ 33
☐ 1/4 in. ☐ 3/8 in. ☐ 1/2 in. Bentonite pellets ☐ 32
Bentonite Slurry Other ☒
7. Fine sand material: Manufacturer, product name and mesh size: NA
Volume added NA ft³
8. Filter pack material: Manufacturer, product name and mesh size: Red Flint, Silica Filter Sand
Volume added ≈ 14 ft³
9. Well casing: Flush threaded PVC schedule 40 ☐ 23; Flush threaded PVC schedule 80 ☒ 24; Other ☐ _____
10. Screen material: Schedule 80 PVC
Screen type: Factory cut ☒ 11; Continuous slot ☐ 01; Other ☐ _____
Manufacturer Tiemco
Slot size: 0.010 in.
Slotted length: 5.0 ft.
11. Backfill material (below filter pack): None ☐; Other ☒ Native Fill

I hereby certify that the information on this form is true and correct to the best of my knowledge.

Signature: [signature] Firm: E.C. Jordan Co.

Please complete and return both sides of this form as required by chs. 144, 147 and 160, Wis. Stats., and ch. NR 141, Wis. Adm. Code. In accordance with ch. 144, Wis Stats., failure to file this form may result in a forfeiture of not less than $10, nor more than $5,000 for each day of violation. In accordance with ch. 147, Wis. Stats., failure to file this form may result in a forfeiture of not more than $10,000 for each day of violation.

State of Wisconsin
Department of Natural Resources

MONITORING WELL CONSTRUCTION
Form 4400-113A 8-89

Facility/Project Name: Badger Army Ammunition Plant
Facility License, Permit or Monitoring Number:
Grid Location: 4,805,777.0 m ft. N. S. / 280,214.9 m ft. E. W.
Well Name: ELM-89-03
Wis. Unique Well Number: DNR Well Numb
Type of Well: Water Table Observation Well 11; Piezometer 12
Section Location: 1/4 of 1/4 of Section; T N, R E W
Date Well Installed: 01/25/89 (m m d d y y)
Distance Well Is From Waste/Source Boundary: NA ft.
Location of Well Relative to Waste/Source: Upgradient; Sidegradient; Downgradient; Not Known
Well Installed By: (Person's Name and Firm): Scott Wibby / E.C. Jordan Co.
Is Well A Point of Enforcement Std. Application? Yes; No

A. Protective pipe, top elevation 916.45 ft. MSL
B. Well casing, top elevation 916.28 ft. MSL
C. Land surface elevation 914.0 ft. MSL
D. Surface seal, bottom ft. MSL or ft.

12. USCS classification of soil near screen:
GP GM GC GW SW SP
SM SC ML MH CL CH
Bedrock

13. Sieve analysis attached? Yes; No

14. Drilling method used: Rotary 50; Hollow Stem Auger 41; Other
Dual Wall

15. Drilling fluid used: Water 02; Air 01; Drilling Mud 03; None 99

16. Drilling additives used? Yes; No

Describe

17. Source of water (attach analysis):
PW #2

E. Bentonite seal, top 804.0 ft. MSL or 110.0 ft.
F. Fine sand, top NA ft. MSL or NA ft.
G. Filter pack, top 793.0 ft. MSL or 121.0 ft.
H. Well screen, top 784.0 ft. MSL or 130.0 ft.
I. Well screen, bottom 764.0 ft. MSL or 150.0 ft.
J. Filter pack, bottom 764.0 ft. MSL or 150.0 ft.
K. Borehole, bottom 734.0 ft. MSL or 180.0 ft.
L. Borehole, diameter 9.5 in.
M. O.D. well casing 4.5 in.
N. I.D. well casing 4.0 in.

1. Cap and lock? Yes; No
2. Protective cover pipe:
a. Inside diameter: 6.5 in
b. Length: 2.0 ft
c. Material: Steel 04; Other
d. Additional protection? Yes; No
If yes, describe: 4 Locking Bolts
3. Surface seal: Bentonite 30; Concrete 01; Other
Grout
4. Material between well casing and protective pipe: Bentonite 30; Annular space seal; Other
Grout
5. Annular space seal: Granular Bentonite; Lbs/gal mud weight ... Bentonite-sand slurry; Lbs/gal mud weight ..... Bentonite slurry; 5 % Bentonite ..... Bentonite-cement grout 50
≈ 495 gal volume added for any of the above
How installed: Tremie 01; Tremie pumped 02; Gravity 08
6. Bentonite seal: Bentonite granules 33; 1/4 in. 3/8 in. 1/2 in. Bentonite pellets 32; Other
7. Fine sand material: Manufacturer, product name and mesh size
NA
Volume added NA ft³
8. Filter pack material: Manufacturer, product name and mesh size
Red Flint, Silica Filter Sand
Volume added ≈ 3.2 ft³
9. Well casing: Flush threaded PVC schedule 40 23; Flush threaded PVC schedule 80 24; Other
10. Screen material: Schedule 80 PVC
Screen type: Factory cut 11; Continuous slot 01; Other
Manufacturer Timco
Slot size: 0.01 in.
Slotted length: 20.0 ft.
11. Backfill material (below filter pack): None; Other
Native Cave

I hereby certify that the information on this form is true and correct to the best of my knowledge.
Signature: Paul F. Bol
Firm: E.C. Jordan Co.

Please complete and return both sides of this form as required by chs. 144, 147 and 160, Wis. Stats., and ch. NR 141, Wis. Adm. Code. In accordance with ch. 144, Wis Stats., failure to file this form may result in a forfeiture of not less than $10, nor more than $5,000 for each day of violation. In accordance with ch. 147, Wis. Stats., failure to file this form may result in a forfeiture of not more than $10,000 for each day of violation.

State of Wisconsin
Department of Natural Resources

MONITORING WELL CONSTRUCTION
Form 4400-113A 8-89

Facility/Project Name: Badger Army Ammunition Plant
Facility License, Permit or Monitoring Number: _____

Grid Location: 4,805,979.2 m ft. ☒ N. ☐ S.; 280,159.8 m ft. ☒ E. ☐ W.

Well Name: ELM-89-04A
Wis. Unique Well Number: _____ DNR Well Number: _____

Type of Well: Water Table Observation Well ☒ 11; Piezometer ☐ 12

Section Location: _____ 1/4 of _____ 1/4 of Section _____, T _____ N, R _____ ☐ E ☐ W

Date Well Installed: 03/30/87 (m m / d d / y y)

Distance Well Is From Waste/Source Boundary: NA ft.

Well Installed By: (Person's Name and Firm) Rick Alka / E.C. Jordan Co

Is Well A Point of Enforcement Std. Application? ☐ Yes ☒ No

Location of Well Relative to Waste/Source: ☐ Upgradient ☐ Sidegradient ☐ Downgradient ☐ Not Known

A. Protective pipe, top elevation 926.43 ft. MSL
B. Well casing, top elevation 926.28 ft. MSL
C. Land surface elevation 924.1 ft. MSL
D. Surface seal, bottom _____ ft. MSL or _____ ft.

12. USCS classification of soil near screen:
☐ GP ☐ GM ☐ GC ☐ GW ☐ SW ☒ SP
☐ SM ☐ SC ☐ ML ☐ MH ☐ CL ☐ CH
☐ Bedrock

13. Sieve analysis attached? ☐ Yes ☐ No

14. Drilling method used: Rotary ☐ 50; Hollow Stem Auger ☒ 41; Other ☐ __

15. Drilling fluid used: Water ☐ 02; Air ☐ 01; Drilling Mud ☐ 03; None ☒ 99

16. Drilling additives used? ☐ Yes ☒ No
Describe _____

17. Source of water (attach analysis):
PW #2

E. Bentonite seal, top 788.1 ft. MSL or 136.0 ft.
F. Fine sand, top NA ft. MSL or NA ft.
G. Filter pack, top 783.1 ft. MSL or 141.0 ft.
H. Well screen, top 782.1 ft. MSL or 142.0 ft.
I. Well screen, bottom 762.1 ft. MSL or 162.0 ft.
J. Filter pack, bottom 758.1 ft. MSL or 166.0 ft.
K. Borehole, bottom 756.1 ft. MSL or 168.0 ft.
L. Borehole, diameter 9.5 in.
M. O.D. well casing 4.5 in.
N. I.D. well casing 4.0 in.

1. Cap and lock? ☒ Yes ☐ No
2. Protective cover pipe:
a. Inside diameter: 6.0 in.
b. Length: 2.0 ft.
c. Material: Steel ☒ 04; Other ☐ __
d. Additional protection? ☒ Yes ☐ No
If yes, describe: 4 bucking Posts
3. Surface seal: Bentonite ☐ 30; Concrete ☐ 01; Other ☒ __
Grout
4. Material between well casing and protective pipe: Bentonite ☐ 30; Annular space seal ☐; Other ☒ __
Grout
5. Annular space seal: Granular Bentonite ☐ 33
____ Lbs/gal mud weight . . . Bentonite-sand slurry ☐ 35
____ Lbs/gal mud weight . . . . . Bentonite slurry ☐ 31
5 % Bentonite . . . . Bentonite-cement grout ☒ 50
±600 gal volume added for any of the above
How installed: Tremie ☐ 01; Tremie pumped ☒ 02; Gravity ☐ 08
6. Bentonite seal: Bentonite granules ☐ 33
☐ 1/4 in. ☒ 3/8 in. ☐ 1/2 in. Bentonite pellets ☒ 32
Other ☐ __
7. Fine sand material: Manufacturer, product name and mesh size
NA
Volume added NA ft³
8. Filter pack material: Manufacturer, product name and mesh size
Red Flint, Silica Filter Sand
Volume added ≈ 2.8 ft³
9. Well casing: Flush threaded PVC schedule 40 ☐ 23; Flush threaded PVC schedule 80 ☒ 24; Other ☐ __
10. Screen material: Schedule 80 PVC
Screen type: Factory cut ☒ 11; Continuous slot ☐ 01; Other ☐ __
Manufacturer Lineo
Slot size: 0.010 in.
Slotted length: 20.0 ft.
11. Backfill material (below filter pack): None ☐; Other ☒
Red Flint Filter Sand

I hereby certify that the information on this form is true and correct to the best of my knowledge.

Signature: Paul P. Bol Firm: E.C. Jordan Co.

Please complete and return both sides of this form as required by chs. 144, 147 and 160, Wis. Stats., and ch. NR 141, Wis. Adm. Code. In accordance with ch. 144, Wis Stats., failure to file this form may result in a forfeiture of not less than $10, nor more than $5,000 for each day of violation. In accordance with ch. 147, Wis. Stats., failure to file this form may result in a forfeiture of not more than $10,000 for each day of violation.

State of Wisconsin
Department of Natural Resources

MONITORING WELL CONSTRUCTION
Form 4400-113A 8-89

Facility/Project Name	Grid Location	Well Name
Badger Army Ammunitions Plant	4,805,957.7 m ☒ N. ☐ S.	ELN-89-04B
Facility License, Permit or Monitoring Number	280,172.7 m ☒ E. ☐ W.	Wis. Unique Well Number / DNR Well Number
Type of Well: Water Table Observation Well ☐ 11; Piezometer ☒ 12	Section Location: ____ 1/4 of ____ 1/4 of Section ____, T ____ N, R ____ ☐ E ☐ W	Date Well Installed: 04/02/89 (m m d d y y)
Distance Well Is From Waste/Source Boundary: NA ft.	Location of Well Relative to Waste/Source: ☐ Upgradient ☐ Sidegradient ☐ Downgradient ☐ Not Known	Well Installed By: (Person's Name and Firm) Dave Belau / E.C. Jordan Co.
Is Well A Point of Enforcement Std. Application? ☐ Yes ☒ No		

A. Protective pipe, top elevation 926.80 ft. MSL

B. Well casing, top elevation 926.63 ft. MSL

C. Land surface elevation 924.8 ft. MSL

D. Surface seal, bottom ____ ft. MSL or ____ ft.

12. USCS classification of soil near screen:
☒ GP ☐ GM ☐ GC ☐ GW ☐ SW ☐ SP
☐ SM ☐ SC ☐ ML ☐ MH ☐ CL ☐ CH
☐ Bedrock

13. Sieve analysis attached? ☐ Yes ☒ No

14. Drilling method used: Rotary ☐ 50; Hollow Stem Auger ☐ 41; Other ☒ Dual Wall

15. Drilling fluid used: Water ☐ 02; Air ☒ 01; Drilling Mud ☐ 03; None ☐ 99

16. Drilling additives used? ☐ Yes ☒ No

Describe ____

17. Source of water (attach analysis): PW#2

E. Bentonite seal, top 742.8 ft. MSL or 182.0 ft.

F. Fine sand, top NA ft. MSL or NA ft.

G. Filter pack, top 737.8 ft. MSL or 187.0 ft.

H. Well screen, top 730.8 ft. MSL or 194.0 ft.

I. Well screen, bottom 725.8 ft. MSL or 199.0 ft.

J. Filter pack, bottom 725.8 ft. MSL or 199.0 ft.

K. Borehole, bottom 725.8 ft. MSL or 199.0 ft.

L. Borehole, diameter 9.5 in.

M. O.D. well casing 4.5 in.

N. I.D. well casing 4.0 in.

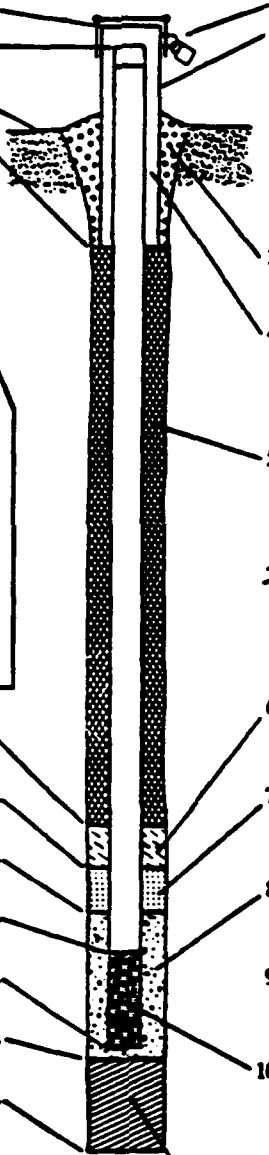

1. Cap and lock? ☒ Yes ☐ No

2. Protective cover pipe:
a. Inside diameter: 6.0 in.
b. Length: 7.0 ft.
c. Material: Steel ☒ 04; Other ☐ __
d. Additional protection? ☒ Yes ☐ No
If yes, describe: 4 bucking Posts

3. Surface seal: Bentonite ☐ 30; Concrete ☐ 0; Other ☒ Grout

4. Material between well casing and protective pipe: Bentonite ☐ 30; Annular space seal ☐; Other ☒ Grout

5. Annular space seal: Granular Bentonite ☐ 33
____ Lbs/gal mud weight . . . Bentonite-sand slurry ☐
____ Lbs/gal mud weight . . . . . Bentonite slurry ☐
5 % Bentonite . . . . . Bentonite-cement grout ☒
± 485 gal/ft³ volume added for any of the above
How installed: Tremie ☐ 0; Tremie pumped ☒ 02; Gravity ☐ 08

6. Bentonite seal: Bentonite granules ☐ 3; ☐ 1/4 in. ☒ 3/8 in. ☐ 1/2 in. Bentonite pellets ☒ 32; Other ☐ __

7. Fine sand material: Manufacturer, product name and mesh size: NA
Volume added NA ft³

8. Filter pack material: Manufacturer, product name and mesh size: Red Flint, Silica Filter Sand
Volume added ≈ 1.3 ft³

9. Well casing: Flush threaded PVC schedule 40 ☐ 23; Flush threaded PVC schedule 80 ☒ 24; Other ☐ __

10. Screen material: schedule 80 PVC
Screen type: Factory cut ☒ 11; Continuous slot ☐ 01; Other ☐ __
Manufacturer Timco
Slot size: 0.010 in.
Slotted length: 5.0 ft.

11. Backfill material (below filter pack): None ☐; Other ☐

I hereby certify that the information on this form is true and correct to the best of my knowledge.

Signature	Firm
[signature]	E.C. Jordan Co.

Please complete and return both sides of this form as required by chs. 144, 147 and 160, Wis. Stats., and ch. NR 141, Wis. Adm. Code. In accordance with ch. 144, Wis Stats., failure to file this form may result in a forfeiture of not less than $10, nor more than $5,000 for each day of violation. In accordance with ch. 147, Wis. Stats., failure to file this form may result in a forfeiture of not more than $10,000 for each day of violation.

State of Wisconsin
Department of Natural Resources

MONITORING WELL CONSTRUCTION
Form 4400-113A 8-89

Facility/Project Name: Badger Army Ammunition Plant
Facility License, Permit or Monitoring Number: _____

Grid Location: 4,606,115.1 m ft. ☒ N. ☐ S.; 250,061.1 m ft. ☒ E. ☐ W.

Well Name: ELM-89-05
Wis. Unique Well Number: _____ DNR Well Number: _____

Type of Well: Water Table Observation Well ☒ 11; Piezometer ☐ 12

Section Location: _____ 1/4 of _____ 1/4 of Section _____; T _____ N, R _____ ☐ E ☐ W

Date Well Installed: 02/01/89 (m m d d y y)

Distance Well Is From Waste/Source Boundary: NA ft.

Location of Well Relative to Waste/Source: ☐ Upgradient ☐ Sidegradient ☐ Downgradient ☐ Not Known

Well Installed By: (Person's Name and Firm) Fred Bogdon / E.C. Jordan Co.

Is Well A Point of Enforcement Std. Applicaton? ☐ Yes ☒ No

A. Protective pipe, top elevation 901.06 ft. MSL
B. Well casing, top elevation 900.95 ft. MSL
C. Land surface elevation 898.2 ft. MSL
D. Surface seal, bottom _____ ft. MSL or _____ ft.

12. USCS classification of soil near screen:
☐ GP ☐ GM ☐ GC ☐ GW ☒ SW ☐ SP
☐ SM ☐ SC ☐ ML ☐ MH ☐ CL ☐ CH
☐ Bedrock

13. Sieve analysis attached? ☐ Yes ☒ No

14. Drilling method used: Rotary ☐ 50; Hollow Stem Auger ☐ 41; Other ☒ ___
Dual Wall

15. Drilling fluid used: Water ☐ 02; Air ☒ 01; Drilling Mud ☐ 03; None ☐ 99

16. Drilling additives used? ☐ Yes ☒ No
Describe _____

17. Source of water (attach analysis):
PW #2

E. Bentonite seal, top 795.2 ft. MSL or 103.0 ft.
F. Fine sand, top NA ft. MSL or NA ft.
G. Filter pack, top 790.2 ft. MSL or 108.0 ft.
H. Well screen, top 785.2 ft. MSL or 113.0 ft.
I. Well screen, bottom 765.2 ft. MSL or 133.0 ft.
J. Filter pack, bottom 763.2 ft. MSL or 135.0 ft.
K. Borehole, bottom 758.2 ft. MSL or 140.0 ft.
L. Borehole, diameter 9.5 in.
M. O.D. well casing 4.5 in.
N. I.D. well casing 4.0 in.

1. Cap and lock? ☒ Yes ☐ No
2. Protective cover pipe:
a. Inside diameter: 6.5 in.
b. Length: 7.0 ft.
c. Material: Steel ☒ 04; Other ☐ __
d. Additional protection? ☒ Yes ☐ No
If yes, describe: 4 locking Posts
3. Surface seal: Bentonite ☐ 30; Concrete ☐ 01; Grout; Other ☒ __
4. Material between well casing and protective pipe: Bentonite ☐ 30; Annular space seal ☐; Grout; Other ☒ __
5. Annular space seal: Granular Bentonite ☐ 33
___ Lbs/gal mud weight ... Bentonite-sand slurry ☐ 35
___ Lbs/gal mud weight ..... Bentonite slurry ☐ 31
5 % Bentonite .... Bentonite-cement grout ☒ 50
± 210 gal ft volume added for any of the above
How installed: Tremie ☐ 01; Tremie pumped ☒ 02; Gravity ☐ 08
6. Bentonite seal: Bentonite granules ☐ 33
☐ 1/4 in. ☒ 3/8 in. ☐ 1/2 in. Bentonite pellets ☒ 32
_____ Other ☐ __
7. Fine sand material: Manufacturer, product name and mesh size
NA
Volume added NA ft³
8. Filter pack material: Manufacturer, product name and mesh size
Red Flint, Silic Filter Sand
Volume added ≈ 3.0 ft³
9. Well casing: Flush threaded PVC schedule 40 ☐ 23; Flush threaded PVC schedule 80 ☒ 24; Other ☐ __
10. Screen material: Schedule 80 PVC __
Screen type: Factory cut ☒ 11; Continuous slot ☐ 01; Other ☐ __
Manufacturer Timco
Slot size: 0.010 in.
Slotted length: 20.0 ft.
11. Backfill material (below filter pack): None ☐; Other ☒
Natural Cave + Filter Pack

I hereby certify that the information on this form is true and correct to the best of my knowledge.

Signature: _____ Firm: E.C. Jordan. Co.

Please complete and return both sides of this form as required by chs. 144, 147 and 160, Wis. Stats., and ch. NR 141, Wis. Adm. Code. In accordance with ch. 144, Wis Stats., failure to file this form may result in a forfeiture of not less than $10, nor more than $5,000 for each day of violation. In accordance with ch. 147, Wis. Stats., failure to file this form may result in a forfeiture of not more than $10,000 for each day of violation.

State of Wisconsin
Department of Natural Resources

MONITORING WELL CONSTRUCTIO[redacted]
Form 4400-113A 8-8[redacted]

Facility/Project Name	Grid Location	Well Name
Badger Army Ammunition Plant	4,805,864.6 M ☒ N. ☐ S.	ELN-89-06B
Facility License, Permit or Monitoring Number	280,212.4 M ☒ E. ☐ W.	Wis. Unique Well Number / DNR Well Number
Type of Well: Water Table Observation Well ☐ 11; Piezometer ☒ 12	Section Location: ____ 1/4 of ____ 1/4 of Section ____, T ____ N, R ____ ☐ E ☐ W	Date Well Installed: 04/04/89 (m m d d y y)
Distance Well Is From Waste/Source Boundary: NA ft.	Location of Well Relative to Waste/Source: ☐ Upgradient ☐ Sidegradient ☐ Downgradient ☐ Not Known	Well Installed By: (Person's Name and Firm) Dave Belan / E.C. Jordan Co.
Is Well A Point of Enforcement Std. Application? ☐ Yes ☒ No		

A. Protective pipe, top elevation 908.87 ft. MSL
B. Well casing, top elevation 908.22 ft. MSL
C. Land surface elevation 906.1 ft. MSL
D. Surface seal, bottom ____ ft. MSL or ____ ft.

12. USCS classification of soil near screen:
☐ GP ☐ GM ☐ GC ☒ GW ☐ SW ☒ SP
☐ SM ☐ SC ☐ ML ☐ MH ☐ CL ☐ CH
☐ Bedrock

13. Sieve analysis attached? ☐ Yes ☒ No

14. Drilling method used: Rotary ☐ 50; Hollow Stem Auger ☐ 41; Other ☒ Dual Wall

15. Drilling fluid used: Water ☐ 02; Air ☒ 01; Drilling Mud ☐ 03; None ☐ 99

16. Drilling additives used? ☐ Yes ☒ No

Describe ____

17. Source of water (attach analysis): PW #2

E. Bentonite seal, top 741.1 ft. MSL or 165.0 ft.
F. Fine sand, top NA ft. MSL or NA ft.
G. Filter pack, top 736.1 ft. MSL or 170.0 ft.
H. Well screen, top 729.1 ft. MSL or 177.0 ft.
I. Well screen, bottom 724.1 ft. MSL or 182.0 ft.
J. Filter pack, bottom 724.1 ft. MSL or 182.0 ft.
K. Borehole, bottom 706.1 ft. MSL or 200.0 ft.
L. Borehole, diameter 9.5 in.
M. O.D. well casing 4.5 in.
N. I.D. well casing 4.0 in.

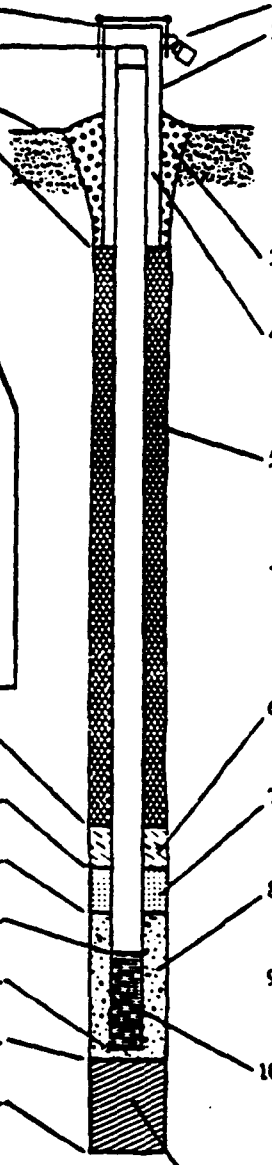

1. Cap and lock? ☒ Yes ☐ No
2. Protective cover pipe:
a. Inside diameter: 6.0 in
b. Length: 7.0 ft
c. Material: Steel ☒ 04; Other ☐ __
d. Additional protection? ☒ Yes ☐ No
If yes, describe: 4 bucking Posts
3. Surface seal: Bentonite ☐ 30; Concrete ☐ 0; Other ☒ Grout
4. Material between well casing and protective pipe: Bentonite ☐ 30; Annular space seal ☐; Other ☒ Grout
5. Annular space seal: Granular Bentonite ☐ 33
____ Lbs/gal mud weight . . . Bentonite-sand slurry ☐ 3[illegible]
____ Lbs/gal mud weight . . . . . Bentonite slurry ☐ 3
5 % Bentonite . . . . . Bentonite-cement grout ☒ 50
≈ 440 gal ft³ volume added for any of the above
How installed: Tremie ☐ 0; Tremie pumped ☒ 02; Gravity ☐ 08
6. Bentonite seal: Bentonite granules ☐ 33
☐ 1/4 in. ☐ 3/8 in. ☐ 1/2 in. Bentonite pellets ☐ 32
Bentonite Slurry Other ☒ __
7. Fine sand material: Manufacturer, product name and mesh size NA
Volume added NA ft³
8. Filter pack material: Manufacturer, product name and mesh size Red Flint, Silica Filter Sand
Volume added ≈ 1.3 ft³
9. Well casing: Flush threaded PVC schedule 40 ☐ 23; Flush threaded PVC schedule 80 ☒ 24; Other ☐ __
10. Screen material: Schedule 80 PVC
Screen type: Factory cut ☒ 11; Continuous slot ☐ 01; Other ☐ __
Manufacturer Tiexo
Slot size: 0.010 in
Slotted length: 5.0 ft.
11. Backfill material (below filter pack): None [redacted]; Other Natural Cave

I hereby certify that the information on this form is true and correct to the best of my knowledge.

Signature [signature] Firm E.C. Jordan Co.

Please complete and return both sides of this form as required by chs. 144, 147 and 160, Wis. Stats., and ch. NR 141, Wis. Adm. Code. In accordance with ch. 144, Wis Stats., failure to file this form may result in a forfeiture of not less than $10, nor more than $5,000 for each day of violation. In accordance with ch. 147, Wis. Stats., failure to file this form may result in a forfeiture of not more than $10,000 for each day of violation.

State of Wisconsin
Department of Natural Resources

MONITORING WELL CONSTRUCTION
Form 4400-113A 8-89

Facility/Project Name	Grid Location	Well Name
Badger Army Ammunition Plant	4,805,589.2 m ft. ☒ N. ☐ S.	ELM-89-07
Facility License, Permit or Monitoring Number	250,112.7 m ft. ☒ E. ☐ W.	Wis. Unique Well Number / DNR Well Number
Type of Well: Water Table Observation Well ☒ 11; Piezometer ☐ 12	Section Location: ____ 1/4 of ____ 1/4 of Section ____, T ____ N, R ____ ☐ E ☐ W	Date Well Installed: 05/14/89 (m m d d y y)
Distance Well Is From Waste/Source Boundary: NA ft.	Location of Well Relative to Waste/Source: ☐ Upgradient ☐ Sidegradient ☐ Downgradient ☐ Not Known	Well Installed By: (Person's Name and Firm) Jim Buss / E.C Jordan Co.
Is Well A Point of Enforcement Std. Application? ☐ Yes ☒ No		

A. Protective pipe, top elevation 916.25 ft. MSL
B. Well casing, top elevation 916.19 ft. MSL
C. Land surface elevation 913.2 ft MSL
D. Surface seal, bottom ____ ft. MSL or ____ ft.

12. USCS classification of soil near screen:
☒ GP ☐ GM ☐ GC ☐ GW ☐ SW ☐ SP
☐ SM ☐ SC ☐ ML ☐ MH ☐ CL ☐ CH
☐ Bedrock

13. Sieve analysis attached? ☐ Yes ☒ No

14. Drilling method used: Rotary ☐ 50; Hollow Stem Auger ☐ 41; Other ☒ ——
Dual Wall

15. Drilling fluid used: Water ☐ 02; Air ☒ 01; Drilling Mud ☐ 03; None ☐ 99

16. Drilling additives used? ☐ Yes ☒ No
Describe ____

17. Source of water (attach analysis):
PW#2

E. Bentonite seal, top 801.1 ft. MSL or 112.0 ft.
F. Fine sand, top NA ft. MSL or NA ft.
G. Filter pack, top 796.1 ft. MSL or 117.0 ft.
H. Well screen, top 783.4 ft. MSL or 130.3 ft.
I. Well screen, bottom 763.4 ft. MSL or 150.3 ft.
J. Filter pack, bottom 763.4 ft. MSL or 150.3 ft.
K. Borehole, bottom 743.4 ft. MSL or 170.3 ft.
L. Borehole, diameter 9.5 in.
M. O.D. well casing 4.5 in.
N. I.D. well casing 4.0 in.

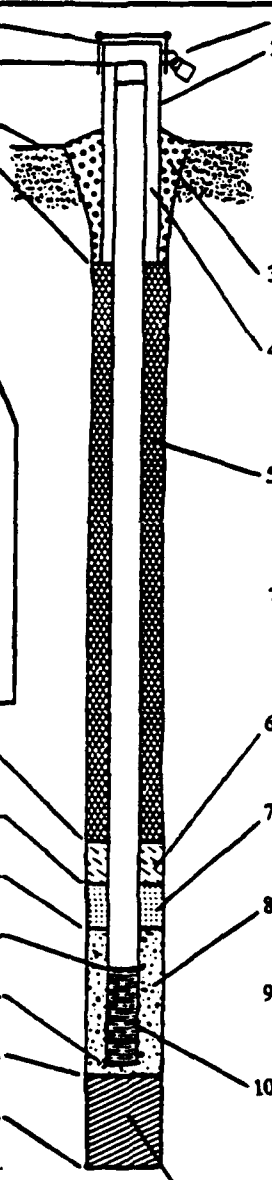

1. Cap and lock? ☒ Yes ☐ No
2. Protective cover pipe:
a. Inside diameter: 6.0 in.
b. Length: 7.0 ft.
c. Material: Steel ☒ 04; Other ☐ ____
d. Additional protection? ☒ Yes ☐ No
If yes, describe: 4 locking Posts
3. Surface seal: Bentonite ☐ 30; Concrete ☐ 01; Other ☒ Grout
4. Material between well casing and protective pipe: Bentonite ☐ 30; Annular space seal ☐; Other ☒ Grout
5. Annular space seal: Granular Bentonite ☐ 33; ____ Lbs/gal mud weight ... Bentonite-sand slurry ☐ 35; ____ Lbs/gal mud weight ..... Bentonite slurry ☐ 31; 5 % Bentonite ..... Bentonite-cement grout ☒ 50
±290 gal-ft³ volume added for any of the above
How installed: Tremie ☐ 01; Tremie pumped ☒ 02; Gravity ☐ 08
6. Bentonite seal: Bentonite granules ☐ 33; ☐ 1/4 in. ☒ 3/8 in. ☐ 1/2 in. Bentonite pellets ☒ 32; Other ☐ ____
7. Fine sand material: Manufacturer, product name and mesh size
NA
Volume added NA ft³
8. Filter pack material: Manufacturer, product name and mesh size
Red Flint, Silica Filter Sand
Volume added ≈ 3.7 ft³
9. Well casing: Flush threaded PVC schedule 40 ☐ 23; Flush threaded PVC schedule 80 ☒ 24; Other ☐ ____
10. Screen material: Schedule 80 PVC
Screen type: Factory cut ☒ 11; Continuous slot ☐ 01; Other ☐ ____
Manufacturer Timco
Slot size: 0.010 in.
Slotted length: 20.0 ft.
11. Backfill material (below filter pack): None ☐; Other ☒ Native Cave

I hereby certify that the information on this form is true and correct to the best of my knowledge.

Signature [signature] Firm E.C Jordan Co.

Please complete and return both sides of this form as required by chs. 144, 147 and 160, Wis. Stats., and ch. NR 141, Wis. Adm. Code. In accordance with ch. 144, Wis Stats., failure to file this form may result in a forfeiture of not less than $10, nor more than $5,000 for each day of violation. In accordance with ch. 147, Wis. Stats., failure to file this form may result in a forfeiture of not more than $10,000 for each day of violation.

State of Wisconsin
Department of Natural Resources

MONITORING WELL CONSTRUCTIO
Form 4400-113A 8-8

Facility/Project Name: Badger Army Ammunition Plant	Grid Location: 4,805,593.1 ft. N. ☒ S. / 379,992.7 ft. E. ☒ W.	Well Name: ELM-89-08
Facility License, Permit or Monitoring Number:		Wis. Unique Well Number / DNR Well Numb
Type of Well: Water Table Observation Well ☒ 11 / Piezometer ☐ 12	Section Location: ____ 1/4 of ____ 1/4 of Section ____, T ____ N, R ____ ☐ E ☐ W	Date Well Installed: 04/04/89 (m m d d y y)
Distance Well Is From Waste/Source Boundary: NA ft.	Location of Well Relative to Waste/Source: ☐ Upgradient ☐ Sidegradient ☐ Downgradient ☐ Not Known	Well Installed By: (Person's Name and Firm) Rick Allen / E.C. Jordan Co.
Is Well A Point of Enforcement Std. Application? ☐ Yes ☒ No		

A. Protective pipe, top elevation 906.21 ft. MSL
B. Well casing, top elevation 906.04 ft. MSL
C. Land surface elevation 903.0 ft. MSL
D. Surface seal, bottom ____ ft. MSL or ____ ft.

12. USCS classification of soil near screen:
☐ GP ☐ GM ☐ GC ☐ GW ☐ SW ☒ SP
☐ SM ☐ SC ☐ ML ☐ MH ☐ CL ☐ CH
☐ Bedrock

13. Sieve analysis attached? ☐ Yes ☒ No

14. Drilling method used: Rotary ☐ 50 / Hollow Stem Auger ☒ 41 / Other ☐ ____

15. Drilling fluid used: Water ☐ 02 / Air ☐ 01 / Drilling Mud ☐ 03 / None ☒ 99

16. Drilling additives used? ☐ Yes ☒ No

Describe ____

17. Source of water (attach analysis):
PW#2

E. Bentonite seal, top 800.0 ft. MSL or 103.0 ft.
F. Fine sand, top NA ft. MSL or NA ft.
G. Filter pack, top 785.0 ft. MSL or 118.0 ft.
H. Well screen, top 118 ft. MSL or 125.0 ft.
I. Well screen, bottom 158.0 ft. MSL or 145 ft.
J. Filter pack, bottom 758.0 ft. MSL or 145 ft.
K. Borehole, bottom 754.0 ft. MSL or 149 ft.
L. Borehole, diameter 9.5 in.
M. O.D. well casing 4.5 in.
N. I.D. well casing 4.0 in.

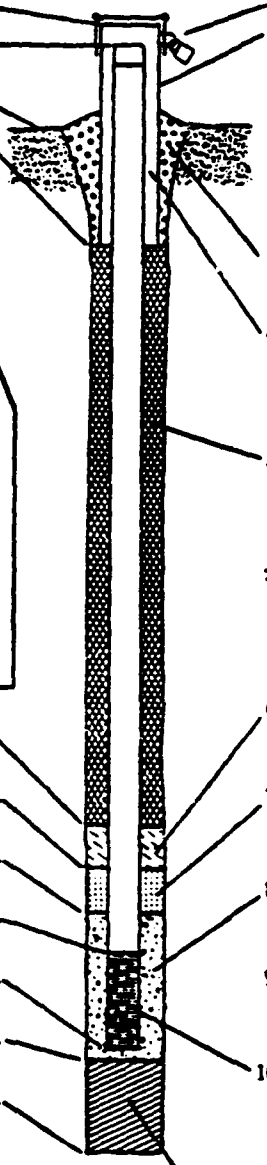

1. Cap and lock? ☒ Yes ☐ No
2. Protective cover pipe:
a. Inside diameter: 6.0 in
b. Length: 2.0 ft
c. Material: Steel ☒ 04 / Other ☐ ____
d. Additional protection? ☒ Yes ☐ No
If yes, describe: 4 bucking Posts
3. Surface seal: Bentonite ☐ 30 / Concrete ☐ 0 / Other ☒ ____
Grout
4. Material between well casing and protective pipe: Bentonite ☐ 30 / Annular space seal ☐ / Other ☒ ____
Grout
5. Annular space seal: Granular Bentonite ☐ 3 / ____ Lbs/gal mud weight ... Bentonite-sand slurry ☐ 3 / ____ Lbs/gal mud weight ..... Bentonite slurry ☐ 3 / 5 % Bentonite ..... Bentonite-cement grout ☒ 50
≈ 1200 gal volume added for any of the above
How installed: Tremie ☐ 0 / Tremie pumped ☒ 02 / Gravity ☐ 09
6. Bentonite seal: Bentonite granules ☐ 3 / ☐ 1/4 in. ☒ 3/8 in. ☐ 1/2 in. Bentonite pellets ☐ 32
Peltic coated Natural Sand Cem Mixture Other ☒ ____
7. Fine sand material: Manufacturer, product name and mesh size
NA
Volume added NA ft³
8. Filter pack material: Manufacturer, product name and mesh size
Red Flint Silica Filter Sand
Volume added ≈ 3.0 ft³
9. Well casing: Flush threaded PVC schedule 40 ☐ 23 / Flush threaded PVC schedule 80 ☒ 24 / Other ☐ ____
10. Screen material: Schedule 80 PVC
Screen type: Factory cut ☒ 11 / Continuous slot ☐ 01 / Other ☐ ____
Manufacturer Tinco
Slot size: 0.010 in
Slotted length: 20.0 ft
11. Backfill material (below filter pack): None ☐ / Other ☒
Natural Cave

I hereby certify that the information on this form is true and correct to the best of my knowledge.

Signature: Paul F. Bol | Firm: E.C. Jordan Co.

Please complete and return both sides of this form as required by chs. 144, 147 and 160, Wis. Stats., and ch. NR 141, Wis. Adm. Code. In accordance with ch. 144, Wis Stats., failure to file this form may result in a forfeiture of not less than $10, nor more than $5,000 for each day of violation. In accordance with ch. 147, Wis. Stats., failure to file this form may result in a forfeiture of not more than $10,000 for each day of violation.

State of Wisconsin
Department of Natural Resources

MONITORING WELL CONSTRUCTION
Form 4400-113A 8-89

Facility/Project Name: Badger Army Ammunition Plant	Grid Location: 4,805,843.9 ft N. S. / 279,744.6 ft E. W.	Well Name: ELM-89-09
Facility License, Permit or Monitoring Number:		Wis. Unique Well Number: DNR Well Number:
Type of Well: Water Table Observation Well 11 / Piezometer 12	Section Location: ____ 1/4 of ____ 1/4 of Section ____, T ____ N, R ____ E W	Date Well Installed: 04/13/89 (m m d d y y)
Distance Well Is From Waste/Source Boundary: NA ft.	Location of Well Relative to Waste/Source: Upgradient, Sidegradient, Downgradient, Not Known	Well Installed By: (Person's Name and Firm): Bill Metzger / E.C. Jordan Co.
Is Well A Point of Enforcement Std. Application? Yes / No		

A. Protective pipe, top elevation 922.82 ft. MSL
B. Well casing, top elevation 921.29 ft. MSL
C. Land surface elevation 919.6 ft. MSL
D. Surface seal, bottom ____ ft. MSL or ____ ft.

12. USCS classification of soil near screen:
☐ GP ☐ GM ☐ GC ☐ GW ☐ SW ☒ SP
☐ SM ☐ SC ☐ ML ☐ MH ☐ CL ☐ CH
☐ Bedrock

13. Sieve analysis attached? ☐ Yes ☒ No

14. Drilling method used: Rotary ☐ 50 / Hollow Stem Auger ☒ 41 / Other ☐ ____

15. Drilling fluid used: Water ☐ 02 / Air ☐ 01 / Drilling Mud ☐ 03 / None ☒ 99

16. Drilling additives used? ☐ Yes ☒ No
Describe ____

17. Source of water (attach analysis):
PW #2

E. Bentonite seal, top 794.6 ft. MSL or 125.0 ft.
F. Fine sand, top ____ ft. MSL or NA ft.
G. Filter pack, top 789.6 ft. MSL or 130.0 ft.
H. Well screen, top 784.6 ft. MSL or 135.0 ft.
I. Well screen, bottom 764.6 ft. MSL or 155.0 ft.
J. Filter pack, bottom 762.6 ft. MSL or 157.0 ft.
K. Borehole, bottom 759.6 ft. MSL or 162.0 ft.
L. Borehole, diameter 9.5 in.
M. O.D. well casing 9.5 in.
N. I.D. well casing 4.0 in.

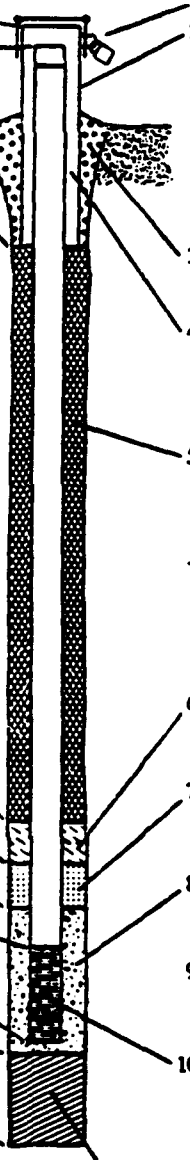

1. Cap and lock? ☒ Yes ☐ No
2. Protective cover pipe:
a. Inside diameter: 6.0 in.
b. Length: 2.0 ft.
c. Material: Steel ☒ 04 / Other ☐ ____
d. Additional protection? ☒ Yes ☐ No
If yes, describe: 4 bucking Posts
3. Surface seal: Bentonite ☐ 30 / Concrete ☐ 01 / Other ☒ Grout
4. Material between well casing and protective pipe: Bentonite ☐ 30 / Annular space seal ☐ / Other ☒ Grout
5. Annular space seal: Granular Bentonite ☐ 33
____ Lbs/gal mud weight ... Bentonite-sand slurry ☐ 35
____ Lbs/gal mud weight ..... Bentonite slurry ☐ 31
5 % Bentonite .... Bentonite-cement grout ☒ 50
340 gal/ft² volume added for any of the above
How installed: Tremie ☐ 01 / Tremie pumped ☒ 02 / Gravity ☐ 08
6. Bentonite seal: Bentonite granules ☐ 33
☐ 1/4 in. ☒ 3/8 in. ☐ 1/2 in. Bentonite pellets ☒ 32
Other ☐ ____
7. Fine sand material: Manufacturer, product name and mesh size
NA
Volume added NA ft³
8. Filter pack material: Manufacturer, product name and mesh size
Red Flint Silica Filter Sand
Volume added ≈ 3.0 ft³
9. Well casing: Flush threaded PVC schedule 40 ☐ 23 / Flush threaded PVC schedule 80 ☒ 24 / Other ☐ ____
10. Screen material: Schedule 80 PVC
Screen type: Factory cut ☒ 11 / Continuous slot ☐ 01 / Other ☐ ____
Manufacturer: Jonas
Slot size: 0.010 in.
Slotted length: 20.0 ft.
11. Backfill material (below filter pack): None ☐ / Other ☒ Native Cave

I hereby certify that the information on this form is true and correct to the best of my knowledge.

Signature: [signature] Firm: E.C. Jordan Co.

Please complete and return both sides of this form as required by chs. 144, 147 and 160, Wis. Stats., and ch. NR 141, Wis. Adm. Code. In accordance with ch. 144, Wis Stats., failure to file this form may result in a forfeiture of not less than $10, nor more than $5,000 for each day of violation. In accordance with ch. 147, Wis. Stats., failure to file this form may result in a forfeiture of not more than $10,000 for each day of violation.

WELL DETAIL INFORMATION SHEET

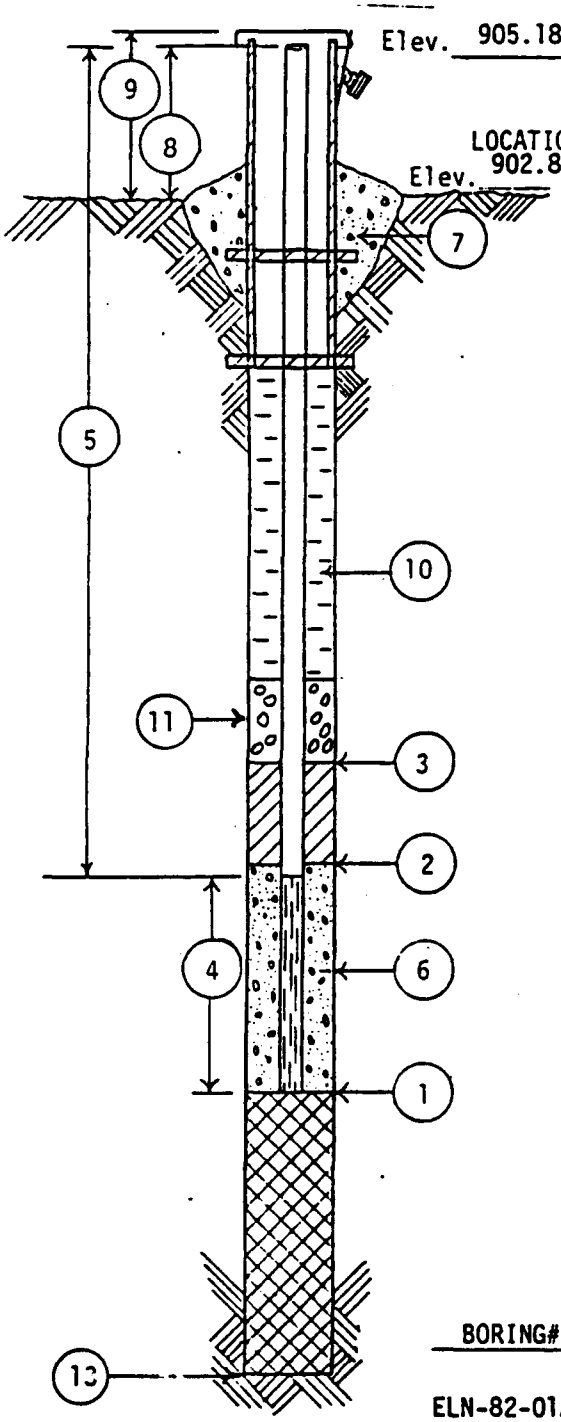

JOB NO. C 10313

BORING NO. ELN-82-01A

DATE 3/30/82

CHIEF Tom O.

LOCATION Badger Army Ammunition Plant; Existing Landfill

All depth measurements of well detail assumed to be from ground surface unless otherwise indicated.

(1) DEPTH TO BOTTOM OF WELL POINT OR SLOTTED PIPE 132 FEET.

(2) DEPTH OF BOTTOM OF SEAL (if installed) 112 FEET.

(3) DEPTH TO TOP OF SEAL (if installed) 92 FEET.

(4) LENGTH OF PVC WELL SCREEN, 10 FEET.

(5) TOTAL LENGTH OF PIPE 124.5 FEET @ 4 IN. DIAMETER.

(6) TYPE OF FILTER MATERIAL AROUND WELL POINT OR SLOTTED PIPE Pea Gravel.

(7) CONCRETE CAP, (YES) NO (Circle One)

(8) HEIGHT OF WELL CASING ABOVE GROUND 2.5 FEET.

(9) PROTECTIVE CASING? (YES) NO (Circle One)
HEIGHT ABOVE GROUND 2.5.
LOCKING CAP? (YES) NO (Circle One)

(10) TYPE OF BACKFILL: Cement:Bentonite 5:1

(11) THICKNESS OF GRAVEL PACK 20 FEET.

(12) DEPTH TO FIRST COUPLING 5 FEET.
COUPLING INTERVAL 9.75 FEET.

(13) TOTAL DEPTH OF BOREHOLE 132 FEET.

BORING#	DATE	TIME	DEPTH TO WATER	REMARKS
ELN-82-01A	5/11/82	-	125.16'	From top of casing

WELL DETAIL INFORMATION SHEET

JOB NO. C 10313

BORING NO. ELN-82-01B

DATE 3/31/82

CHIEF Tom O.

LOCATION Badger Army Ammunition Plant; Existing Landfill

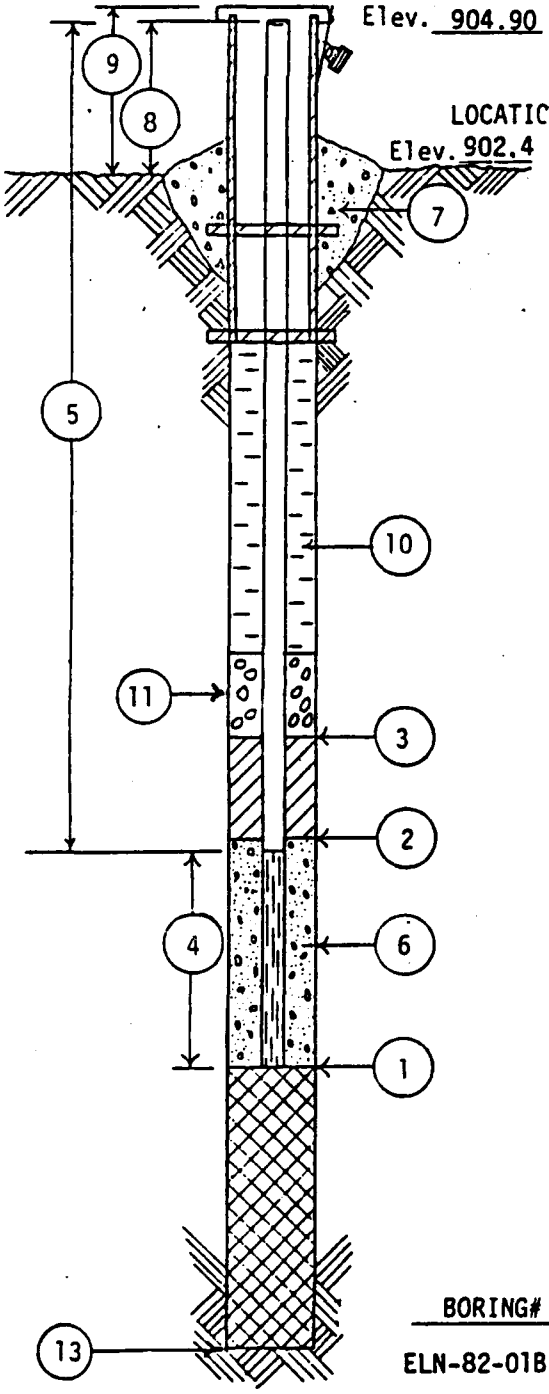

All depth measurements of well detail assumed to be from ground surface unless otherwise indicated.

(1) DEPTH TO BOTTOM OF WELL POINT OR SLOTTED PIPE 143.5 FEET.

(2) DEPTH OF BOTTOM OF SEAL (if installed) 126 FEET.

(3) DEPTH TO TOP OF SEAL (if installed) 106 FEET.

(4) LENGTH OF PVC WELL SCREEN, 2.0 FEET.

(5) TOTAL LENGTH OF PIPE 144 FEET @ 4 IN. DIAMETER.

(6) TYPE OF FILTER MATERIAL AROUND WELL POINT OR SLOTTED PIPE Pea Gravel.

(7) CONCRETE CAP, (YES) NO (Circle One)

(8) HEIGHT OF WELL CASING ABOVE GROUND 2.5 FEET.

(9) PROTECTIVE CASING? (YES) NO (Circle One)
HEIGHT ABOVE GROUND 2.5.
LOCKING CAP? (YES) NO (Circle One)

(10) TYPE OF BACKFILL: 6:2 Cement:Bentonite

(11) THICKNESS OF GRAVEL PACK 17.5 FEET.

(12) DEPTH TO FIRST COUPLING 5.15 FEET.
COUPLING INTERVAL 9.75 FEET.

(13) TOTAL DEPTH OF BOREHOLE 143.5 FEET.

BORING#	DATE	TIME	DEPTH TO WATER	REMARKS
ELN-82-01B	5/11/82	-	124.84'	From top of casing

WELL DETAIL INFORMATION SHEET

JOB NO. C 10313

BORING NO. ELN-82-01C

DATE 3/29/82

CHIEF Tom O.

LOCATION Badger Army Ammunition Plant; Existing Landfill

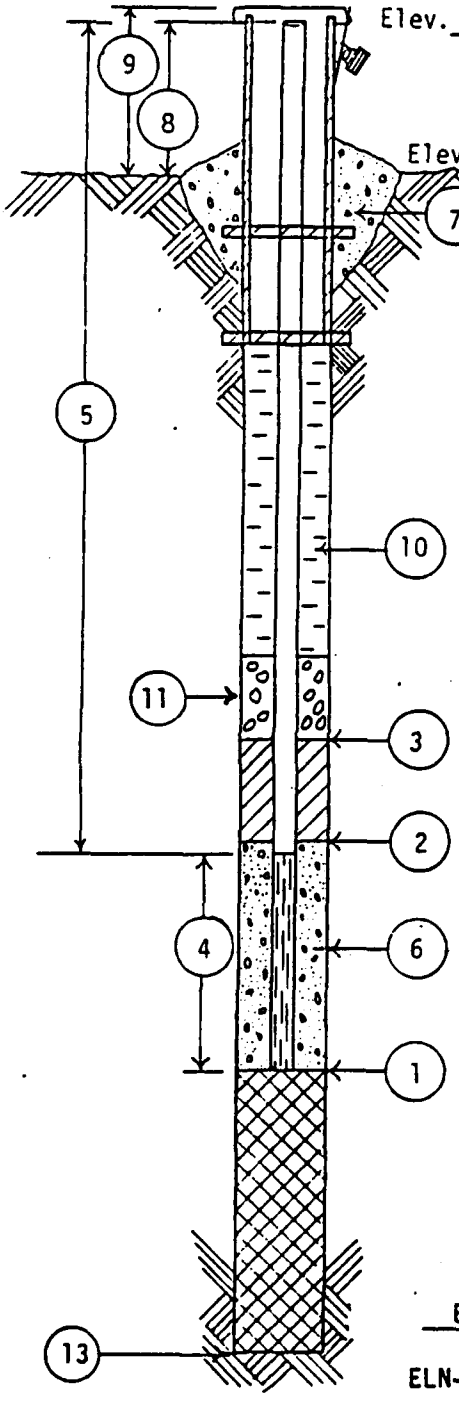

All depth measurements of well detail assumed to be from ground surface unless otherwise indicated.

(1) DEPTH TO BOTTOM OF WELL POINT OR SLOTTED PIPE 153.5 FEET.

(2) DEPTH OF BOTTOM OF SEAL (if installed) 140 FEET.

(3) DEPTH TO TOP OF SEAL (if installed) 120 FEET.

(4) LENGTH OF PVC WELL SCREEN, 2.0 FEET.

(5) TOTAL LENGTH OF PIPE 154 FEET @ 4 IN. DIAMETER.

(6) TYPE OF FILTER MATERIAL AROUND WELL POINT OR SLOTTED PIPE Pea Gravel.

(7) CONCRETE CAP, (YES) NO (Circle One)

(8) HEIGHT OF WELL CASING ABOVE GROUND 2.5 FEET.

(9) PROTECTIVE CASING? (YES) NO (Circle One)
HEIGHT ABOVE GROUND 2.5.
LOCKING CAP? (YES) NO (Circle One)

(10) TYPE OF BACKFILL: 5:2 Cement:Bentonite

(11) THICKNESS OF GRAVEL PACK 13.5 FEET.

(12) DEPTH TO FIRST COUPLING 5.35 FEET.
COUPLING INTERVAL 9.75 FEET.

(13) TOTAL DEPTH OF BOREHOLE 153.5 FEET.

BORING#	DATE	TIME	DEPTH TO WATER	REMARKS
ELN-82-01C	5/11/82	-	125.46'	From top of casin

WELL DETAIL INFORMATION SHEET

JOB NO. C 10313

BORING NO. ELN-82-02A

DATE 4/1/82

CHIEF Tom O.

LOCATION Badger Army Ammunition Plant; Existing Landfill

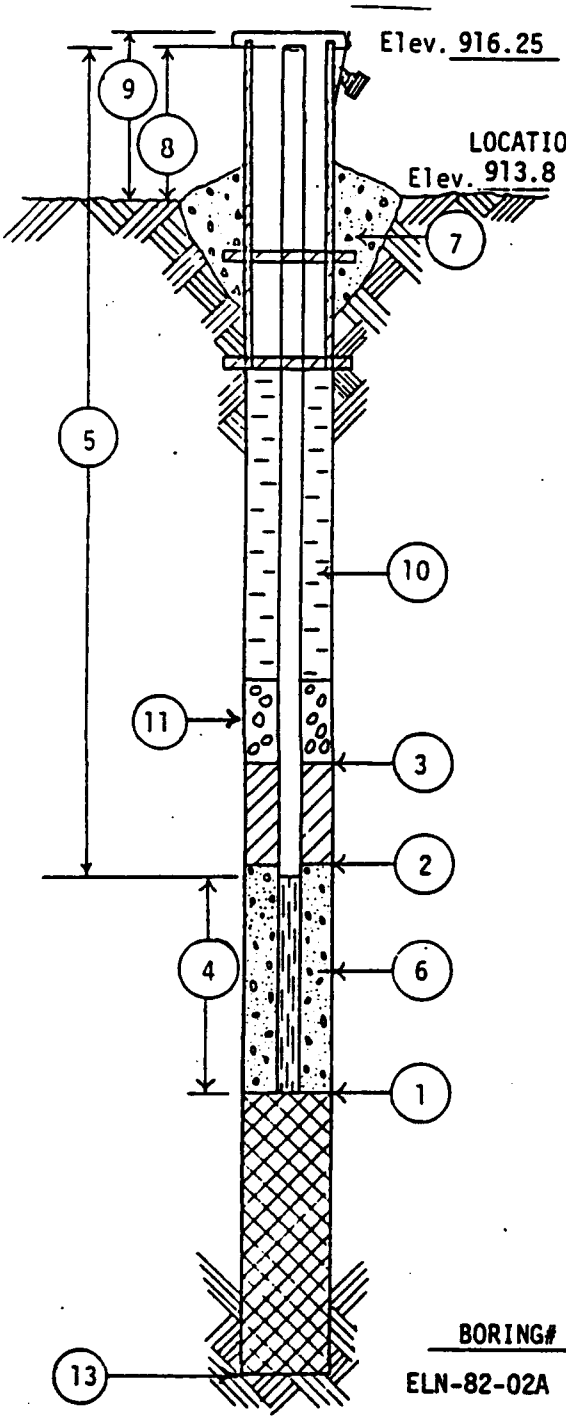

All depth measurements of well detail assumed to be from ground surface unless otherwise indicated.

(1) DEPTH TO BOTTOM OF WELL POINT OR SLOTTED PIPE 142 FEET.

(2) DEPTH OF BOTTOM OF SEAL (if installed) 122 FEET.

(3) DEPTH TO TOP OF SEAL (if installed) 102 FEET.

(4) LENGTH OF PVC WELL SCREEN, 10 FEET.

(5) TOTAL LENGTH OF PIPE 134.5 FEET @ 4 IN. DIAMETER.

(6) TYPE OF FILTER MATERIAL AROUND WELL POINT OR SLOTTED PIPE Pea Gravel.

(7) CONCRETE CAP, (YES) NO (Circle One)

(8) HEIGHT OF WELL CASING ABOVE GROUND 2.5 FEET.

(9) PROTECTIVE CASING? (YES) NO (Circle One)
HEIGHT ABOVE GROUND 2.5.
LOCKING CAP? (YES) NO (Circle One)

(10) TYPE OF BACKFILL: 6:2 Cement:Bentonite

(11) THICKNESS OF GRAVEL PACK 20 FEET.

(12) DEPTH TO FIRST COUPLING 5.55 FEET.
COUPLING INTERVAL 9.75 FEET.

(13) TOTAL DEPTH OF BOREHOLE 142 FEET.

BORING#	DATE	TIME	DEPTH TO WATER	REMARKS
ELN-82-02A	5/11/82	-	136.72'	From top of casing

WELL DETAIL INFORMATION SHEET

JOB NO. C 10313

BORING NO. ELN-82-02B

DATE 4/1/82

CHIEF Tom O.

LOCATION Badger Army Ammunition Plant; Existing Landfill

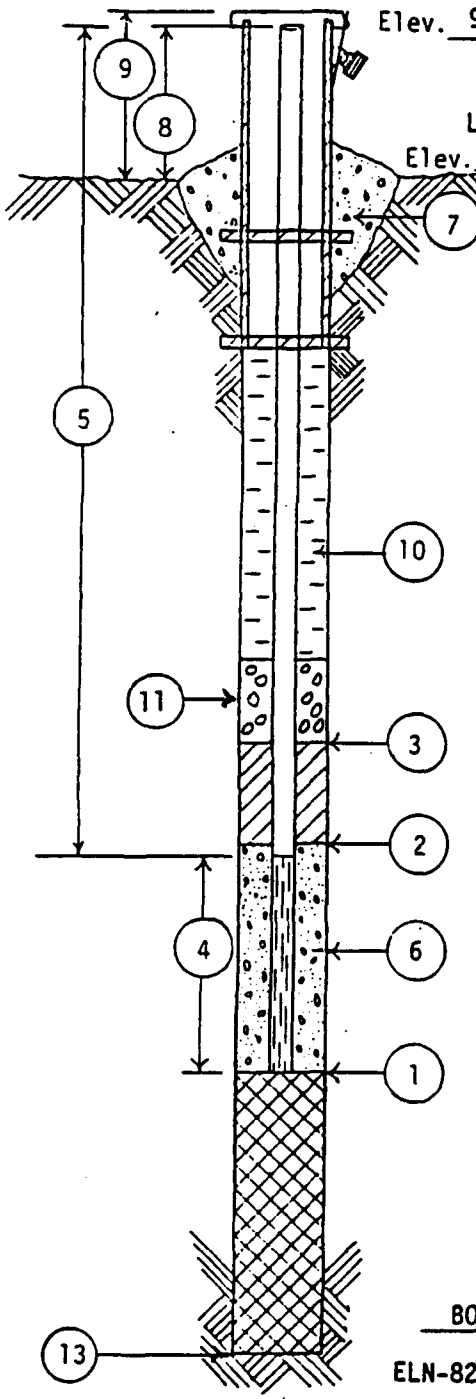

All depth measurements of well detail assumed to be from ground surface unless otherwise indicated.

(1) DEPTH TO BOTTOM OF WELL POINT OR SLOTTED PIPE 151.5 FEET.

(2) DEPTH OF BOTTOM OF SEAL (if installed) 136 FEET.

(3) DEPTH TO TOP OF SEAL (if installed) 116 FEET.

(4) LENGTH OF PVC WELL SCREEN, 2 FEET.

(5) TOTAL LENGTH OF PIPE 152 FEET @ 4 IN. DIAMETER.

(6) TYPE OF FILTER MATERIAL AROUND WELL POINT OR SLOTTED PIPE Pea Gravel.

(7) CONCRETE CAP, (YES) NO (Circle One)

(8) HEIGHT OF WELL CASING ABOVE GROUND 2.5 FEET.

(9) PROTECTIVE CASING? (YES) NO (Circle One)
HEIGHT ABOVE GROUND 2.5.
LOCKING CAP? (YES) NO (Circle One)

(10) TYPE OF BACKFILL: 6:2 Cement:Bentonite

(11) THICKNESS OF GRAVEL PACK 15.5 FEET.

(12) DEPTH TO FIRST COUPLING 5.2 FEET.
COUPLING INTERVAL 9.75 FEET.

(13) TOTAL DEPTH OF BOREHOLE 151.5 FEET.

BORING#	DATE	TIME	DEPTH TO WATER	REMARKS
ELN-82-02B	5/11/82	-	137.35'	From top of casin

WELL DETAIL INFORMATION SHEET

JOB NO. C 10313

BORING NO. ELN-82-02C

DATE 4/2/82

CHIEF Tom O.

LOCATION Badger Army Ammunition Plant; Existing Landill

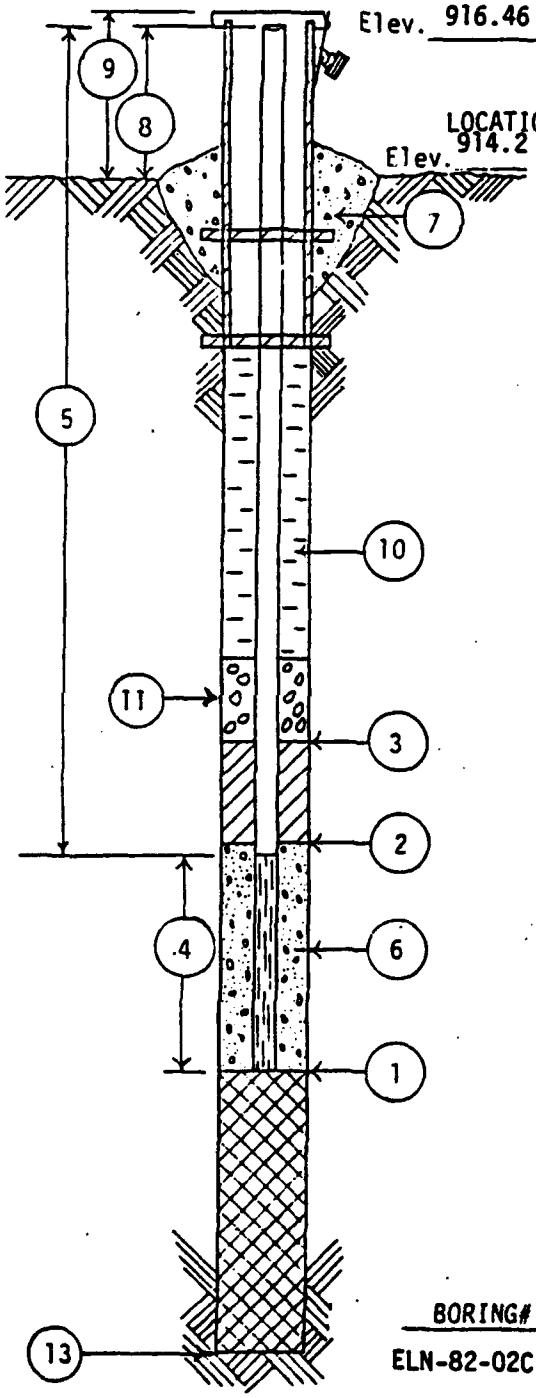

All depth measurements of well detail assumed to be from ground surface unless otherwise indicated.

(1) DEPTH TO BOTTOM OF WELL POINT OR SLOTTED PIPE 162.75 FEET.

(2) DEPTH OF BOTTOM OF SEAL (if installed) 152 FEET.

(3) DEPTH TO TOP OF SEAL (if installed) 132 FEET.

(4) LENGTH OF PVC WELL SCREEN, 2 FEET.

(5) TOTAL LENGTH OF PIPE 163.25 FEET @ 4 IN. DIAMETER.

(6) TYPE OF FILTER MATERIAL AROUND WELL POINT OR SLOTTED PIPE Pea Gravel.

(7) CONCRETE CAP, (YES) NO (Circle One)

(8) HEIGHT OF WELL CASING ABOVE GROUND 2.5 FEET.

(9) PROTECTIVE CASING? (YES) NO (Circle One)
HEIGHT ABOVE GROUND 2.5.
LOCKING CAP? (YES) NO (Circle One)

(10) TYPE OF BACKFILL: 6:2 Cement:Bentonite

(11) THICKNESS OF GRAVEL PACK 10.75 FEET.

(12) DEPTH TO FIRST COUPLING 4.75 FEET.
COUPLING INTERVAL 9.75 FEET.

(13) TOTAL DEPTH OF BOREHOLE 162.75 FEET.

BORING#	DATE	TIME	DEPTH TO WATER	REMARKS
ELN-82-02C	5/11/82	-	136.94'	From top of casing

This Page Intentionally Left Blank.

Appendix D.4

Well Development Records

This Page Intentionally Left Blank.

State of Wisconsin
Department of Natural Resources

MONITORING WELL DEVELOPMENT
Form 4400-113B 8-89

Facility/Project Name: BADGER ARMY AMMUNITION PLANT
Well Name: PBM-89-09
License, Permit or Monitoring Number:
Wis. Unique Well Number:
DNR Well Number:

		Before Development	After Development
1. Can this well be purged dry?	☐ Yes ☒ No		
2. Well development method			
surged with bailer and bailed	☐ 41		
surged with bailer and pumped	☐ 61		
surged with block and bailed	☐ 42		
surged with block and pumped	☐ 62		
surged with block, bailed and pumped	☐ 70		
compressed air	☐ 20		
bailed only	☐ 10		
pumped only	☒ 51		
pumped slowly	☐ 50		
Other	☐ ___		
11. Depth to Water (from top of well casing)		107.20 ft.	107.59 ft.
Date		03/18/89 (m m d d y y)	03/19/89 (m m d d y y)
Time		15:00 ☐ a.m. ☒ p.m.	15:00 ☐ a.m. ☒ p.m.
12. Sediment in well bottom		___.__ inches	___.__ inches
13. Water clarity		Clear ☐ 10 Turbid ☒ 15 (Describe) CLOUDY FOR FIRST VOLUME THEN CLEAR	Clear ☐ 20 Turbid ☐ 25 (Describe)
3. Time spent developing well	105 min.		
4. Depth of well (from top of well casing)	125.__ ft.		
5. Inside diameter of well	4.0 in.		
6. Volume of water in filter pack and well casing	33 AND 85.__ gal.		
7. Volume of water removed from well	415.__ gal.		
8. Volume of water added (if any)	50.__ gal.		
9. Source of water added			
Fill in if drilling fluids were used and well is at solid waste facility:			
14. Total suspended solids		____.__ mg/l	____.__ mg/l
15. COD		____.__ mg/l	____.__ mg/l
10. Analysis performed on water added? (If yes, attach results)	☐ Yes ☒ No		

Additional comments on development:

Well developed by: Person's Name and Firm

Name: R DAVID DINSMORE

Firm: C E ENVIRONMENTAL

I hereby certify that the above information is true and correct to the best of my knowledge.

Signature: [signature]

Firm: C E ENVIRONMENTAL

NOTE: Shaded areas are for DNR use only. See instructions for more information.

State of Wisconsin
Department of Natural Resources

MONITORING WELL DEVELOPMENT

Form 4400-113B 8-89

Facility/Project Name: BADGER ARMY AMUNITION PLANT

Well Name: PBN-89-10A

License, Permit or Monitoring Number:

Wis. Unique Well Number:

DNR Well Number:

1. Can this well be purged dry? ☐ Yes ☒ No

2. Well development method

surged with bailer and bailed	☐	4 1
surged with bailer and pumped	☐	6 1
surged with block and bailed	☐	4 2
surged with block and pumped	☐	6 2
surged with block, bailed and pumped	☐	7 0
compressed air	☐	2 0
bailed only	☐	1 0
pumped only	☒	5 1
pumped slowly	☐	5 0
Other _____	☐	

3. Time spent developing well: 75 min.

4. Depth of well (from top of casisng): 126.__ ft.

5. Inside diameter of well: 4.0 in.

6. Volume of water in filter pack and well casing: 52.__ gal.

7. Volume of water removed from well: 160.__ gal.

8. Volume of water added (if any): 0.__ gal.

9. Source of water added: _____

10. Analysis performed on water added? ☐ Yes ☒ No
(If yes, attach results)

	Before Development	After Development
11. Depth to Water (from top of well casing)	115.58 ft.	115.48 ft.
Date	03/17/89 (m m d d y y)	03/17/89 (m m d d y y)
Time	14:45 ☐ a.m. ☒ p.m.	15:00 ☐ a.m. ☒ p.m.
12. Sediment in well bottom	__.__ inches	__.__ inches
13. Water clarity	Clear ☐ 10 Turbid ☒ 15 (Describe) WATER CLEARED AFTER 2ND VOLUME	Clear ☐ 20 Turbid ☐ 25 (Describe)

Fill in if drilling fluids were used and well is at solid waste facility:

14. Total suspended solids	____.__ mg/l	____.__ mg/l
15. COD	____.__ mg/l	____.__ mg/l

Additional comments on development:

Well developed by: Person's Name and Firm

Name: R. DAVID DINSMORE

Firm: C E ENVIRONMENTAL

I hereby certify that the above information is true and correct to the best of my knowledge.

Signature: [signature]

Firm: C E ENVIRONMENTAL

NOTE: Shaded areas are for DNR use only. See instructions for more information.

State of Wisconsin
Department of Natural Resources

MONITORING WELL DEVELOPMENT

Form 4400-113B 8-89

Facility/Project Name: BADGER ARMY AMMUNITION PLANT

Well Name: PBW-89-10B

License, Permit or Monitoring Number: _____

Wis. Unique Well Number: _____ DNR Well Number: ___

1. Can this well be purged dry? ☐ Yes ☒ No

2. Well development method

surged with bailer and bailed	☐	4 1
surged with bailer and pumped	☐	6 1
surged with block and bailed	☐	4 2
surged with block and pumped	☐	6 2
surged with block, bailed and pumped	☐	7 0
compressed air	☐	2 0
bailed only	☐	1 0
pumped only	☒	5 1
pumped slowly	☐	5 0
Other _____	☐	___

3. Time spent developing well: 100 min.

4. Depth of well (from top of well casisng): 168.__ ft.

5. Inside diameter of well: 4.0 in.

6. Volume of water in filter pack and well casing: 45.__ gal.

7. Volume of water removed from well: 225.__ gal.

8. Volume of water added (if any): 0.__ gal.

9. Source of water added _____

10. Analysis performed on water added? ☐ Yes ☒ No
(If yes, attach results)

	Before Development	After Development
11. Depth to Water (from top of well casing)	117.70 ft.	117.57 ft.
Date	03/18/89 (m m d d y y)	03/19/89 (m m d d y y)
Time	12:50 ☐ a.m. ☒ p.m.	13:00 ☐ a.m. ☒ p.m.
12. Sediment in well bottom	___.__ inches	___.__ inches
13. Water clarity	Clear ☒ 10 Turbid ☐ 15 (Describe)	Clear ☐ 20 Turbid ☐ 25 (Describe)
Fill in if drilling fluids were used and well is at solid waste facility:		
14. Total suspended solids	_____.__ mg/l	_____.__ mg/l
15. COD	_____.__ mg/l	_____.__ mg/l

Additional comments on development:

Well developed by: Person's Name and Firm

Name: R DAVID DUNSMORE

Firm: C E ENVIRONMENTAL

I hereby certify that the above information is true and correct to the best of my knowledge.

Signature: _____

Firm: C E ENVIRONMENTAL

NOTE: Shaded areas are for DNR use only. See instructions for more information.

State of Wisconsin
Department of Natural Resources

MONITORING WELL DEVELOPMENT
Form 4400-113B 8-89

Facility/Project Name: BADGER ARMY AMUNITION PLANT
Well Name: PBW-89-10C
License, Permit or Monitoring Number: _____
Wis. Unique Well Number: _____
DNR Well Number: ___

1. Can this well be purged dry? ☐ Yes ☒ No

2. Well development method

surged with bailer and bailed	☐	4 1
surged with bailer and pumped	☐	6 1
surged with block and bailed	☐	4 2
surged with block and pumped	☐	6 2
surged with block, bailed and pumped	☐	7 0
compressed air	☐	2 0
bailed only	☐	1 0
pumped only	☒	5 1
pumped slowly	☐	5 0
Other _____	☐	___

3. Time spent developing well: 105 min.
4. Depth of well (from top of well casisng): 190.__ ft.
5. Inside diameter of well: 4.0 in.
6. Volume of water in filter pack and well casing: 71.__ gal.
7. Volume of water removed from well: 355.__ gal.
8. Volume of water added (if any): __0.__ gal.
9. Source of water added: _____
10. Analysis performed on water added? ☐ Yes ☒ No (If yes, attach results)

	Before Development	After Development
11. Depth to Water (from top of well casing)	112.50 ft.	112.58 ft.
Date	03/19/89 (m m d d y y)	05/21/89 (m m d d y y)
Time	10:00 ☒ a.m. ☐ p.m.	10:00 ☒ a.m. ☐ p.m.
12. Sediment in well bottom	___.__ inches	___.__ inches
13. Water clarity	Clear ☒ 10 Turbid ☐ 15 (Describe)	Clear ☐ 20 Turbid ☐ 25 (Describe)
Fill in if drilling fluids were used and well is at solid waste facility:		
14. Total suspended solids	_____.__ mg/l	_____.__ mg/l
15. COD	_____.__ mg/l	_____.__ mg/l

Additional comments on development:

Well developed by: Person's Name and Firm

Name: R. DAVID DINSMORE
Firm: C. E ENVIRONMENTAL

I hereby certify that the above information is true and correct to the best of my knowledge.

Signature: William Dinsmore
Firm: C E ENVIRONMENTAL

NOTE: Shaded areas are for DNR use only. See instructions for more information.

State of Wisconsin
Department of Natural Resources

MONITORING WELL DEVELOPMENT
Form 4400-113B 8-89

Facility/Project Name: BADGER ARMY AMUNITION PLANT
Well Name: PRN-89-10D
License, Permit or Monitoring Number:
Wis. Unique Well Number:
DNR Well Number:

1. Can this well be purged dry? ☐ Yes ☒ No

2. Well development method

surged with bailer and bailed	☐	4 1
surged with bailer and pumped	☐	6 1
surged with block and bailed	☐	4 2
surged with block and pumped	☐	6 2
surged with block, bailed and pumped	☐	7 0
compressed air	☐	2 0
bailed only	☐	1 0
pumped only	☒	5 1
pumped slowly	☐	5 0
Other _____	☐	

3. Time spent developing well: 531 min.
4. Depth of well (from top of well casisng): 240.0 ft.
5. Inside diameter of well: 4.0 in.
6. Volume of water in filter pack and well casing: 110.1 gal.
7. Volume of water removed from well: 3700.0 gal.
8. Volume of water added (if any): 300.0 gal.
9. Source of water added: _____
10. Analysis performed on water added? ☐ Yes ☒ No (If yes, attach results)

	Before Development	After Development
11. Depth to Water (from top of well casing)	110.10 ft.	111.06 ft.
Date (m m d d y y)	05/06/89	10/25/89
Time	9:00 ☒ a.m. ☐ p.m.	__:__ ☐ a.m. ☐ p.m.
12. Sediment in well bottom	__.__ inches	__.__ inches
13. Water clarity	Clear ☐ 10 Turbid ☐ 15 (Describe)	Clear ☐ 20 Turbid ☐ 25 (Describe)

Fill in if drilling fluids were used and well is at solid waste facility:

14. Total suspended solids	____.__ mg/l	____.__ mg/l
15. COD	____.__ mg/l	____.__ mg/l

Additional comments on development:

Well developed by: Person's Name and Firm

Name: JOE FORTES
Firm: CE ENVIRONMENTAL

I hereby certify that the above information is true and correct to the best of my knowledge.

Signature: [signature]
Firm: CE ENVIRONMENTAL

NOTE: Shaded areas are for DNR use only. See instructions for more information.

State of Wisconsin
Department of Natural Resources

MONITORING WELL DEVELOPMENT

Form 4400-113B 8-89

Facility/Project Name: RADGER ARMY AMUNITION PLANT

Well Name: PBM-89-11

License, Permit or Monitoring Number: _____

Wis. Unique Well Number: _____

DNR Well Number: _____

1. Can this well be purged dry? ☐ Yes ☐ No

2. Well development method

surged with bailer and bailed	☐	4 1
surged with bailer and pumped	☐	6 1
surged with block and bailed	☐	4 2
surged with block and pumped	☐	6 2
surged with block, bailed and pumped	☐	7 0
compressed air	☐	2 0
bailed only	☐	1 0
pumped only	☒	5 1
pumped slowly	☐	5 0
Other _____	☐	___

3. Time spent developing well: 330 min.

4. Depth of well (from top of well casisng): 113.__ ft.

5. Inside diameter of well: 4.0 in.

6. Volume of water in filter pack and well casing: 50.__ gal.

7. Volume of water removed from well: 1650.__ gal.

8. Volume of water added (if any): 300.__ gal.

9. Source of water added: DRILLING PROCESS

10. Analysis performed on water added? ☐ Yes ☒ No
(If yes, attach results)

	Before Development	After Development
11. Depth to Water (from top of well casing)	106.73 ft.	106.69 ft.
Date	05/22/89 (m m d d y y)	05/23/89 (m m d d y y)
Time	9:00 ☒ a.m. ☐ p.m.	10:00 ☒ a.m. ☐ p.m.
12. Sediment in well bottom	___.__ inches	___.__ inches
13. Water clarity	Clear ☒ 10 Turbid ☐ 15 (Describe)	Clear ☐ 20 Turbid ☐ 25 (Describe)

Fill in if drilling fluids were used and well is at solid waste facility:

14. Total suspended solids	_____.__ mg/l	_____.__ mg/l
15. COD	_____.__ mg/l	_____.__ mg/l

Additional comments on development:

Well developed by: Person's Name and Firm

Name: R DAVID DINSMORE

Firm: C E ENVIRONMENTAL

I hereby certify that the above information is true and correct to the best of my knowledge.

Signature: William Dick

Firm: C E ENVIRONMENTAL

NOTE: Shaded areas are for DNR use only. See instructions for more information.

State of Wisconsin
Department of Natural Resources

MONITORING WELL DEVELOPMENT
Form 4400-113B 8-89

Facility/Project Name	Well Name
BADGER ARMY AMUNITION PLANT	PBN-89-12A
License, Permit or Monitoring Number	Wis. Unique Well Number / DNR Well Number
_____	_____ / _____

1. Can this well be purged dry? ☐ Yes ☒ No

2. Well development method

surged with bailer and bailed	☐	4 1
surged with bailer and pumped	☐	6 1
surged with block and bailed	☐	4 2
surged with block and pumped	☐	6 2
surged with block, bailed and pumped	☐	7 0
compressed air	☐	2 0
bailed only	☐	1 0
pumped only	☒	5 1
pumped slowly	☐	5 0
Other _____	☐	

3. Time spent developing well 60 min.

4. Depth of well (from top of well casisng) 102.__ ft.

5. Inside diameter of well 4.0 in.

6. Volume of water in filter pack and well casing 30.__ gal.

7. Volume of water removed from well 150.__ gal.

8. Volume of water added (if any) 0.__ gal.

9. Source of water added _____

10. Analysis performed on water added? ☐ Yes ☒ No
(If yes, attach results)

	Before Development	After Development
11. Depth to Water (from top of well casing)	87.25 ft.	87.74 ft.
Date	03/21/89 (m m d d y y)	03/22/89 (m m d d y y)
Time	9:00 ☒ a.m. ☐ p.m.	9:00 ☒ a.m. ☐ p.m.
12. Sediment in well bottom	___.__ inches	___.__ inches
13. Water clarity	Clear ☐ 10 Turbid ☐ 15 (Describe)	Clear ☐ 20 Turbid ☐ 25 (Describe)

Fill in if drilling fluids were used and well is at solid waste facility:

14. Total suspended solids	_____.__ mg/l	_____.__ mg/l
15. COD	_____.__ mg/l	_____.__ mg/l

Additional comments on development:

Well developed by: Person's Name and Firm

Name: R DAVID DINSMORE

Firm: CE ENVIRONMENTAL

I hereby certify that the above information is true and correct to the best of my knowledge.

Signature: [signature]

Firm: CE ENVIRONMENTAL

NOTE: Shaded areas are for DNR use only. See instructions for more information.

State of Wisconsin
Department of Natural Resources

MONITORING WELL DEVELOPMENT

Form 4400-113B 8-89

Facility/Project Name: BADGER ARMY AMMUNITION PLANT

Well Name: PBN-89-12B

License, Permit or Monitoring Number:

Wis. Unique Well Number:

DNR Well Number:

1. Can this well be purged dry? ☐ Yes ☒ No

2. Well development method

surged with bailer and bailed	☐	4 1
surged with bailer and pumped	☐	6 1
surged with block and bailed	☐	4 2
surged with block and pumped	☐	6 2
surged with block, bailed and pumped	☐	7 0
compressed air	☐	2 0
bailed only	☐	1 0
pumped only	☒	5 1
pumped slowly	☐	5 0
Other _____	☐	

3. Time spent developing well: 1539 min.

4. Depth of well (from top of well casisng): 142.__ ft.

5. Inside diameter of well: 4.0 in.

6. Volume of water in filter pack and well casing: 235.8 gal.

7. Volume of water removed from well: 9235.__ gal.

8. Volume of water added (if any): 3000.__ gal.

9. Source of water added: _____

10. Analysis performed on water added? ☐ Yes ☒ No
(If yes, attach results)

	Before Development	After Development
11. Depth to Water (from top of well casing)	88.54 ft.	89.85 ft.
Date	04/26/89 (m m d d y y)	10/13/89 (m m d d y y)
Time	8:50 ☒ a.m. ☐ p.m.	__:__ ☐ a.m. ☐ p.m.
12. Sediment in well bottom	__.__ inches	__.__ inches
13. Water clarity	Clear ☒ 10 Turbid ☐ 15 (Describe)	Clear ☐ 20 Turbid ☐ 25 (Describe)

Fill in if drilling fluids were used and well is at solid waste facility:

14. Total suspended solids	_____.__ mg/l	_____.__ mg/l
15. COD	_____.__ mg/l	_____.__ mg/l

Additional comments on development:

Well developed by: Person's Name and Firm

Name: _____

Firm: C E ENVIRONMENTAL

I hereby certify that the above information is true and correct to the best of my knowledge.

Signature: William Lynch

Firm: C E ENVIRONMENTAL

NOTE: Shaded areas are for DNR use only. See instructions for more information.

ABB Environmental Services, Inc.

MONITORING WELL DEVELOPMENT FORM

Facility/Project Name	Well Name
BAAP - USATHAMA	LOM-91-01
License, Permit or Monitoring Number: _____	Wis. Unique Well Number: _____ / DNR Well Number: _____

1. Can this well be purged dry? ☐ Yes ☑ No

2. Well development method

surged with bailer and bailed	☐	41
surged with bailer and pumped	☐	61
surged with block and bailed	☐	42
surged with block and pumped	☐	62
surged with block, bailed and pumped	☐	70
compressed air	☐	20
bailed only	☐	10
pumped only (w/ surging)	☑	51
pumped slowly	☐	50
Other _____	☐	

3. Time spent developing well: 193 min.

*4. Depth of well (from top of well casisng): 152. ft.

5. Inside diameter of well: 28 ~~in~~ ft

6. Volume of water in filter pack and well casing: 12.2 gal.

7. Volume of water removed from well: 62.0 gal.

8. Volume of water added (if any): 0.0 gal.

9. Source of water added: none

10. Analysis performed on water added? ☑ Yes ☐ No
(If yes, attach results) VOC

	Before Development	After Development	24 hrs after
11. Depth to Water (from top of well casing)	144.64 ft.	144.62 ft.	144.64
Date	10/16/91 (mm dd yy)	10/16/91 (mm dd yy)	1725 10-18-9
Time	2~~0~~ (NR) : 31 ☐ a.m. ☑ p.m.	5:43 ☐ a.m. ☑ p.m.	
12. Sediment in well bottom	__.__ inches	__.__ inches	
13. Water clarity	Clear ☐ 10 Turbid ☑ 15 (Describe)	Clear ☑ 20 Turbid ☐ 25 (Describe)	

Fill in if drilling fluids were used and well is at solid waste facility:

14. Total suspended solids	___.__ mg/l	___.__ mg/l
15. COD	___.__ mg/l	___.__ mg/l
16. Screen length (from diagram)	10.0 ft.	

** well not labelled - we labelled -
** grouting incomplete/ collar to be installed

Additional comments on development:

W/C = -.20 -.20
Stick-up = 2.1± 2.1±
pump rate = NA (pump rate always changing)

* - initial bottom reading = (NR) ~~152~~ ~ 151.8'
- final bottom reading = 151.72'

24 hrs after 151.85'

	initial	15 gal	45 gal	62 gal
T (°C)	14.5 →	15.9	12.8	12.4
pH (units)	7.7	7.3	7.4	7.2
cond. (µmhos)	592	~~592~~ (NR) 595	632	634

Well developed by: Person's Name and Firm

Name: Nancy Roka / Vicki Miller

Firm: ABB-ES

I hereby certify that the above information is true and correct to the best of my knowledge.

Signature: Nancy E. Roka

Firm: ABB-ES

NOTE: Shaded areas are for DNR use only. See instructions for more information.

Grund-fos Redi-flo 2 w/ brass straining cloth and 3/8" ID tubing used for development

~~purge volume = (152 - 144.64) × 1.69 gal/ft~~

ABB Environmental Services, Inc.

MONITORING WELL DEVELOPMENT FORM

Facility/Project Name: LOM-91-02

Well Name: BAAP / USATHAMA

License, Permit or Monitoring Number: _____

Wis. Unique Well Number: _____ DNR Well Number: _____

1. Can this well be purged dry? ☐ Yes ☑ No

2. Well development method

surged with bailer and bailed	☐	4 1
surged with bailer and pumped	☐	6 1
surged with block and bailed	☐	4 2
surged with block and pumped	☐	6 2
surged with block, bailed and pumped	☐	7 0
compressed air	☐	2 0
bailed only	☐	1 0
pumped only (with surging)	☑	5 1
pumped slowly	☐	5 0
Other _____	☐	___

3. Time spent developing well: 90 min.

4. Depth of well (from top of well casing): 142.1 ft.

5. Inside diameter of well: 4.00 in.

6. Volume of water in filter pack and well casing: 18.6 gal.

7. Volume of water removed from well: 93.0 gal.

8. Volume of water added (if any): 0.0 gal.

9. Source of water added: _____

10. Analysis performed on water added? ☐ Yes ☐ No (If yes, attach results)

	Before Development	After Development
11. Depth to Water (from top of well casing)	138.67 ft.	138.64 ft.
Date	11/10/91 (m m d d y y)	11/10/91 (m m d d y y)
Time	09:00 ☑ a.m. ☐ p.m.	10:30 ☑ a.m. ☐ p.m.
12. Sediment in well bottom	___.__ inches	___.__ inches
13. Water clarity	Clear ☐ 10 Turbid ☑ 15 (Describe)	Clear ☑ 20 Turbid ☐ 25 (Describe)
Fill in if drilling fluids were used and well is at solid waste facility:		
14. Total suspended solids	____.__ mg/l	____.__ mg/l
15. COD	____.__ mg/l	____.__ mg/l
16. Screen length	10.0 ft.	

17. Pump used was Grundfos Redi-Flo 2 w/ Straining Cloth

Additional comments on development:

	19	38	56	74	93
T (°C)	11.3	11.5	11.6	11.4	11.2
pH (units)	7.2	7.4	7.5	7.5	7.5
cond. (µmhos)	700	710	709	711	7:14
Time	09:16	09:32	09:48	10:04	10:20

well to casing: 0.12 (0.11)
stick-up: 2.30 (2.31)
initial depth to bottom: 148.95
final depth to bottom: 148.78 (148.95)

Well developed by: Person's Name and Firm

Name: D VON BUSHBERGER / D. DICKE

Firm: ABB-ES

I hereby certify that the above information is true and correct to the best of my knowledge.

Signature: D. F. von Bushberger

Firm: ABB-ES

NOTE: Shaded areas are for DNR use only. See instructions for more information.

State of Wisconsin
Department of Natural Resources

MONITORING WELL DEVELOPMENT
Form 4400-113B 8-89

Facility/Project Name: BADGER ARMY AMUNITION PLANT
Well Name: LOM-89-01
License, Permit or Monitoring Number:
Wis. Unique Well Number:
DNR Well Number:

		Before Development	After Development
1. Can this well be purged dry?	☐ Yes ☒ No		
2. Well development method			
surged with bailer and bailed	☐ 41		
surged with bailer and pumped	☐ 61		
surged with block and bailed	☐ 42		
surged with block and pumped	☐ 62		
surged with block, bailed and pumped	☐ 70		
compressed air	☐ 20		
bailed only	☐ 10		
pumped only	☒ 51		
pumped slowly	☐ 50		
Other	☐		
11. Depth to Water (from top of well casing)		142.71 ft.	142.87 ft.
Date		03/05/89 (m m d d y y)	03/06/89 (m m d d y y)
Time		11:30 ☒ a.m. ☐ p.m.	11:00 ☐ a.m. ☐ p.m.
12. Sediment in well bottom		___.__ inches	___.__ inches
13. Water clarity		Clear ☒ 10 Turbid ☐ 15 (Describe)	Clear ☐ 20 Turbid ☐ 25 (Describe)
3. Time spent developing well	60 min.		
4. Depth of well (from top of well casisng)	156.__ ft.		
5. Inside diameter of well	4.0 in.		
6. Volume of water in filter pack and well casing	34.__ gal.		
7. Volume of water removed from well	170.__ gal.		
8. Volume of water added (if any)	0.__ gal.		
9. Source of water added			
10. Analysis performed on water added? (If yes, attach results)	☐ Yes ☒ No		

Fill in if drilling fluids were used and well is at solid waste facility:

	Before Development	After Development
14. Total suspended solids	_____.__ mg/l	_____.__ mg/l
15. COD	_____.__ mg/l	_____.__ mg/l

Additional comments on development:

Well developed by: Person's Name and Firm

Name: R. DAVID DINSMORE

Firm: C E ENVIRONMENTAL

I hereby certify that the above information is true and correct to the best of my knowledge.

Signature: [signature]

Firm: C E ENVIRONMENTAL

NOTE: Shaded areas are for DNR use only. See instructions for more information.

State of Wisconsin
Department of Natural Resources

MONITORING WELL DEVELOPMENT

Form 4400-113B 8-89

Facility/Project Name: BADGER ARMY AMUNITION PLANT

Well Name: LON-89-02A

License, Permit or Monitoring Number:

Wis. Unique Well Number:

DNR Well Number:

1. Can this well be purged dry? ☐ Yes ☒ No

2. Well development method

surged with bailer and bailed	☐	4 1
surged with bailer and pumped	☐	6 1
surged with block and bailed	☐	4 2
surged with block and pumped	☐	6 2
surged with block, bailed and pumped	☐	7 0
compressed air	☐	2 0
bailed only	☐	1 0
pumped only	☒	5 1
pumped slowly	☐	5 0
Other _____	☐	

3. Time spent developing well: 105 min.

4. Depth of well (from top of well casisng): 156.__ ft.

5. Inside diameter of well: 4.0 in.

6. Volume of water in filter pack and well casing: 32.__ gal.

7. Volume of water removed from well: 160.__ gal.

8. Volume of water added (if any): __6.__ gal.

9. Source of water added: _____

10. Analysis performed on water added? ☐ Yes ☒ No
(If yes, attach results)

	Before Development	After Development
11. Depth to Water (from top of well casing)	145.67 ft.	146.20 ft.
Date	05/06/89 (m m d d y y)	05/07/89 (m m d d y y)
Time	8:45 ☒ a.m. ☐ p.m.	12:06 ☐ a.m. ☐ p.m.
12. Sediment in well bottom	__.__ inches	__.__ inches
13. Water clarity	Clear ☒ 10 Turbid ☐ 15 (Describe)	Clear ☐ 20 Turbid ☐ 25 (Describe)
Fill in if drilling fluids were used and well is at solid waste facility:		
14. Total suspended solids	_____.__ mg/l	_____.__ mg/l
15. COD	_____.__ mg/l	_____.__ mg/l

Additional comments on development:

Well developed by: Person's Name and Firm

Name: R. DAVID DINSMORE

Firm: C E ENVIRONMENTAL

I hereby certify that the above information is true and correct to the best of my knowledge.

Signature: [signature]

Firm: C E ENVIRONMENTAL

NOTE: Shaded areas are for DNR use only. See instructions for more information.

State of Wisconsin
Department of Natural Resources

MONITORING WELL DEVELOPMENT

Form 4400-113B 8-89

Facility/Project Name: BADGER ARMY AMUNITION PLANT

Well Name: LON-89-02D

License, Permit or Monitoring Number: _____

Wis. Unique Well Number: _____ DNR Well Number: _____

1. Can this well be purged dry? ☐ Yes ☒ No

2. Well development method

surged with bailer and bailed	☐	4 1
surged with bailer and pumped	☐	6 1
surged with block and bailed	☐	4 2
surged with block and pumped	☐	6 2
surged with block, bailed and pumped	☐	7 0
compressed air	☐	2 0
bailed only	☐	1 0
pumped only	☒	5 1
pumped slowly	☐	5 0
Other _____	☐	

3. Time spent developing well: 90 min.

4. Depth of well (from top of well casisng): 200 ft.

5. Inside diameter of well: 4.0 in.

6. Volume of water in filter pack and well casing: 51.__ gal.

7. Volume of water removed from well: 255.__ gal.

8. Volume of water added (if any): __0.__ gal.

9. Source of water added: _____

10. Analysis performed on water added? ☐ Yes ☒ No
(If yes, attach results)

	Before Development	After Development
11. Depth to Water (from top of well casing)	146.17 ft.	145.68 ft.
Date	03/06/89 (m m d d y y)	03/07/89 (m m d d y y)
Time	11:00 ☒ a.m. ☐ p.m.	12:00 ☐ a.m. ☐ p.m.
12. Sediment in well bottom	___.__ inches	___.__ inches
13. Water clarity	Clear ☐ 10 Turbid ☐ 15 (Describe)	Clear ☐ 20 Turbid ☐ 25 (Describe)

Fill in if drilling fluids were used and well is at solid waste facility:

14. Total suspended solids	_____.__ mg/l	_____.__ mg/l
15. COD	_____.__ mg/l	_____.__ mg/l

Additional comments on development:

Well developed by: Person's Name and Firm

Name: R DAVID DINSMORE

Firm: C E ENVIRONMENTAL

I hereby certify that the above information is true and correct to the best of my knowledge.

Signature: [signature]

Firm: C E ENVIRONMENTAL

NOTE: Shaded areas are for DNR use only. See instructions for more information.

State of Wisconsin
Department of Natural Resources

MONITORING WELL DEVELOPMENT
Form 4400-113B 8-89

Facility/Project Name	Well Name	
BADGER ARMY AMUNITION PLANT	LON - 89 - 03A	
License, Permit or Monitoring Number	Wis. Unique Well Number	DNR Well Number
_____	_____	___

1. Can this well be purged dry? ☐ Yes ☒ No

2. Well development method
   - surged with bailer and bailed ☐ 41
   - surged with bailer and pumped ☐ 61
   - surged with block and bailed ☐ 42
   - surged with block and pumped ☐ 62
   - surged with block, bailed and pumped ☐ 70
   - compressed air ☐ 20
   - bailed only ☐ 10
   - pumped only ☒ 51
   - pumped slowly ☐ 50
   - Other _____ ☐ [ ]

3. Time spent developing well 60 min.

4. Depth of well (from top of well casisng) 160. ft.

5. Inside diameter of well 40 in.

6. Volume of water in filter pack and well casing 31. gal.

7. Volume of water removed from well 155. gal.

8. Volume of water added (if any) 0. gal.

9. Source of water added _____

10. Analysis performed on water added? ☐ Yes ☒ No
(If yes, attach results)

	Before Development	After Development
11. Depth to Water (from top of well casing)	147.49 ft.	147.53 ft.
Date	03/05/89 (mm dd yy)	03/06/89 (mm dd yy)
Time	15:00 ☐ a.m. ☒ p.m.	16:00 ☐ a.m. ☒ p.m.
12. Sediment in well bottom	__.__ inches	__.__ inches
13. Water clarity	Clear ☐ 10 Turbid ☒ 15 (Describe) Log marked water cloudy and colored brown	Clear ☐ 20 Turbid ☐ 25 (Describe)

Fill in if drilling fluids were used and well is at solid waste facility:

14. Total suspended solids	____.__ mg/l	____.__ mg/l
15. COD	____.__ mg/l	____.__ mg/l

Additional comments on development:

Well developed by: Person's Name and Firm	I hereby certify that the above information is true and correct to the best of my knowledge.
Name: R. DAVID DINSMORE	Signature: [signature]
Firm: C E ENVIRONMENTAL	Firm: C E ENVIRONMENTAL

NOTE: Shaded areas are for DNR use only. See instructions for more information.

State of Wisconsin
Department of Natural Resources

MONITORING WELL DEVELOPMENT
Form 4400-113B 8-89

Facility/Project Name: BADGER ARMY AMUNITION PLANT
Well Name: LON-89-03B
License, Permit or Monitoring Number:
Wis. Unique Well Number:
DNR Well Number:

		Before Development	After Development
1. Can this well be purged dry?	☐ Yes ☒ No		
2. Well development method			
surged with bailer and bailed	☐ 41		
surged with bailer and pumped	☐ 61		
surged with block and bailed	☐ 42		
surged with block and pumped	☐ 62		
surged with block, bailed and pumped	☐ 70		
compressed air	☐ 20		
bailed only	☐ 10		
pumped only	☒ 51		
pumped slowly	☐ 50		
Other _____	☐ ___		
3. Time spent developing well	75 min.		
4. Depth of well (from top of well casisng)	199.__ ft.		
5. Inside diameter of well	4.0 in.		
6. Volume of water in filter pack and well casing	56.__ gal.		
7. Volume of water removed from well	280.__ gal.		
8. Volume of water added (if any)	__0.__ gal.		
9. Source of water added	_____		
10. Analysis performed on water added? (If yes, attach results)	☐ Yes ☒ No		
11. Depth to Water (from top of well casing)		147.14 ft.	147.18 ft.
Date		03/05/89 (m m d d y y)	03/06/89 (m m d d y y)
Time		12:45 ☐ a.m. ☒ p.m.	13:00 ☐ a.m. ☒ p.m.
12. Sediment in well bottom		__.__ inches	__.__ inches
13. Water clarity		Clear ☒ 10 Turbid ☐ 15 (Describe)	Clear ☐ 20 Turbid ☐ 25 (Describe)
Fill in if drilling fluids were used and well is at solid waste facility:			
14. Total suspended solids		_____.__ mg/l	_____.__ mg/l
15. COD		_____.__ mg/l	_____.__ mg/l

Additional comments on development:

Well developed by: Person's Name and Firm

Name: R. DAVID DINSMORE

Firm: C E ENVIRONMENTAL

I hereby certify that the above information is true and correct to the best of my knowledge.

Signature:

Firm: C E ENVIRONMENTAL

NOTE: Shaded areas are for DNR use only. See instructions for more information.

ABB Environmental Services, Inc.

MONITORING WELL DEVELOPMENT FORM

Facility/Project Name: BAAP - USATHAMA

Well Name: SPN-91-02D

License, Permit or Monitoring Number:

Wis. Unique Well Number:

DNR Well Number:

1. Can this well be purged dry? ☐ Yes ☑ No

2. Well development method

surged with bailer and bailed	☐	41
surged with bailer and pumped	☐	61
surged with block and bailed	☐	42
surged with block and pumped	☐	62
surged with block, bailed and pumped	☐	70
compressed air	☐	20
bailed only	☐	10
pumped only (with surging)	☑	51
pumped slowly	☐	50
Other _____	☐	___

3. Time spent developing well: 945 min.

4. Depth of well (from top of well casing): 184.8 ft.

5. Inside diameter of well: 3.75 in.

6. Volume of water in filter pack and well casing: 107.0 gal.

7. Volume of water removed from well: 3536.0 gal.

8. Volume of water added (if any): 1000.0 gal.

9. Source of water added: BPW #2

10. Analysis performed on water added? ☑ Yes ☐ No (If yes, attach results)

	Before Development	After Development
11. Depth to Water (from top of well casing)	62.15 ft.	62.25 ft. 1623
Date	11/18/91 (m m d d y y)	11/20/91 (m m d d y y) 11/20
Time	15:40 ☐ a.m. ☒ p.m.	15:00 ☐ a.m. ☒ p.m. 1630
12. Sediment in well bottom	___.__ inches	___.__ inches
13. Water clarity	Clear ☒ 10 Turbid ☐ 15 (Describe)	Clear ☒ 20 Turbid ☐ 25 (Describe)

Fill in if drilling fluids were used and well is at solid waste facility:

14. Total suspended solids	____.__ mg/l	____.__ mg/l
15. COD	____.__ mg/l	____.__ mg/l
16. Screen length	10.0 ft.	

Additional comments on development:

	initial			final
T (°C)	12.1	10.5	11.6	11.3
pH (units)	8.5	7.8	8.6	8.9
cond. (umhos)	954	590	345	379
Time	1542	1315	1115	1445
	11/18/91	11/19/91	11/20/91	11/20/91

well to casing: -.10'
stick-up: 2.40'± FROM GRND
initial depth to bottom: 184.79'
final depth to bottom: 184.11' 184.2

Well developed by: Person's Name and Firm

Name: S. David Loucks

Firm: ABB ENVIRONMENTAL SERVICES

I hereby certify that the above information is true and correct to the best of my knowledge.

Signature: S. David Loucks

Firm: ABB ENVIRONMENTAL SERVICES

NOTE: Shaded areas are for DNR use only. See instructions for more information.

11.18.91 Pump 1 hr.
11.19.91 Started at 0730. Pump down at 0800. Back up 0930.
STARTED PUMPING AT 1645 11.19.91

11/20/91 - RANGE OF GWS AT 1140
- RESUMED PUMPING AT 1155

METAL WELL PIPE ABOVE GROUND SURFACE - 2.5 ft
PVC WELL CASING TOP BELOW METAL PIPE TOP - 2.0 IN.

ABB Environmental Services, Inc.

MONITORING WELL DEVELOPMENT FORM

Facility/Project Name: BAAP- USATHAMA	Well Name: SPN-91-03D
License, Permit or Monitoring Number: _____	Wis. Unique Well Number: _____ / DNR Well Number: _____

1. Can this well be purged dry? ☐ Yes ☑ No

2. Well development method

surged with bailer and bailed	☐	41
surged with bailer and pumped	☐	61
surged with block and bailed	☐	42
surged with block and pumped	☐	62
surged with block, bailed and pumped	☐	70
compressed air	☐	20
bailed only	☐	10
pumped only (with surging)	☑	51
pumped slowly	☐	50
Other _____	☐	

3. Time spent developing well: 625 min.

4. Depth of well (from top of well casisng): 203.4 ft.

5. Inside diameter of well: 3.75 in.

6. Volume of water in filter pack and well casing: 124.0 ~~620.7~~ gal. (TR)

7. Volume of water removed from well: 3620.0 gal.

8. Volume of water added (if any): 1000.0 gal.

9. Source of water added: BPW #2

10. Analysis performed on water added? ☑ Yes ☐ No (If yes, attach results)

	Before Development	After Development (24 hrs later)
11. Depth to Water (from top of well casing)	57.24 ft.	57.23 ft. 57.23
Date	11/21/91 (mm dd yy)	11/22/91 (mm dd yy) 11·23·91
Time	07:45 ☒ a.m. ☐ p.m.	11:30 ☒ a.m. ☐ p.m. 1350
12. Sediment in well bottom	__.__ inches	__.__ inches
13. Water clarity	Clear ☐ 10 Turbid ☑ 15 (Describe) SLIGHTLY CLOUDY	Clear ☑ 20 Turbid ☐ 25 (Describe)

Fill in if drilling fluids were used and well is at solid waste facility:

14. Total suspended solids	___.__ mg/l	___.__ mg/l
15. COD	___.__ mg/l	___.__ mg/l
16. Screen length	10.0 ft.	

Additional comments on development:

T (°C)	11.2	10.7	10.2 (→1640)	NOT TAKEN
pH (units)	6.7	6.7	7.2	7.0
cond. (µmhos)	520	480	469	545
Time	0900	1416	1640	1110
	11·21·91	11·21·91	11·21·91	11·22·91

well to casing: - 2.0" =
stick-up: 2.5' =
initial depth to bottom: 203.39
final depth to bottom: 203.40

203.40

Well developed by: Person's Name and Firm

Name: B. DAVID LOUCKS

Firm: ABB ENVIRONMENTAL SERVICES

I hereby certify that the above information is true and correct to the best of my knowledge.

Signature: B. David Loucks

Firm: ABB ENVIRONMENTAL SERVICES

NOTE: Shaded areas are for DNR use only. See instructions for more information.

11·21·91 PUMPING BEGINS AT 0850 @ 3.5 GPM
11·21·91 2nd PUMP BEGINS AT 1320 @ 4.9 GPM
11·22·91 [illegible]

METAL WELL PIPE 2.45 ft ABOVE GROUND

ABB Environmental Services, Inc.

MONITORING WELL DEVELOPMENT FORM

Facility/Project Name: BAAP - USATHAMA

Well Name: SPN-91-04D

License, Permit or Monitoring Number: _____

Wis. Unique Well Number: _____ DNR Well Number: _____

1. Can this well be purged dry? ☐ Yes ☑ No

2. Well development method

surged with bailer and bailed	☐	4 1
surged with bailer and pumped	☐	6 1
surged with block and bailed	☐	4 2
surged with block and pumped	☐	6 2
surged with block, bailed and pumped	☐	7 0
compressed air	☐	2 0
bailed only	☐	1 0
pumped only (with surging)	☑	5 1
pumped slowly	☐	5 0
Other _____	☐	___

3. Time spent developing well: 615 min.

4. Depth of well (from top of well casisng): 203.85 ft.

5. Inside diameter of well: 3.75 in.

6. Volume of water in filter pack and well casing: 225.95 gal.

7. Volume of water removed from well: 3773.5 gal.

8. Volume of water added (if any): 1000.0 gal.

9. Source of water added: BPW #2

10. Analysis performed on water added? ☑ Yes ☐ No (If yes, attach results)

	Before Development	After Development
11. Depth to Water (from top of well casing)	40.65 ft.	40.72 ft. 40.7
Date	11/22/91 (m m d d y y)	11/23/91 (m m d d y y) 11/22-1
Time	12:22 ☐ a.m. ☑ p.m.	13:40 ☐ a.m. ☑ p.m. 1450
12. Sediment in well bottom	___.__ inches	___.__ inches
13. Water clarity	Clear ☒ 10 Turbid ☐ 15 (Describe)	Clear ☒ 20 Turbid ☐ 25 (Describe)
Fill in if drilling fluids were used and well is at solid waste facility:		
14. Total suspended solids	___.__ mg/l	___.__ mg/l
15. COD	___.__ mg/l	___.__ mg/l
16. Screen length	10.0 ft.	

24.5 late

Additional comments on development:

T (°C)	NOT TAKEN	NOT TAKEN	NOT TAKEN	NOT TAKEN
pH (units)	6.0	6.0	7.0	7.0
cond. (umhos)	454	415	419	401
Time	12:37	0827	1037	1251
	11.20.91	11.23.91	11.23.91	11.23.91

well to casing stick-up: -36/2.45

initial depth to bottom: 207.75 ⊗

final depth to bottom: 203.85 203.82

Well developed by: Person's Name and Firm

Name: B. DAVID LOUCKS

Firm: ABB ENVIRONMENTAL SERVICES

I hereby certify that the above information is true and correct to the best of my knowledge.

Signature: B. David Loucks

Firm: ABB ENVIRONMENTAL SERVICES

NOTE: Shaded areas are for DNR use only. See instructions for more information.

BEGAN PUMPING AT 1135 @ 3.5 GPM - PUMPING ENDS AT 1635 ON 11.22.91

BEGAN PUMPING AT 0825 W/ 3 SUBMERSIBLE PUMPS @ COMBINED RATE OF 9.5 GPM ON 11.23.91

State of Wisconsin
Department of Natural Resources

MONITORING WELL DEVELOPMENT
Form 4400-113B 8-89

Facility/Project Name: BADGER ARMY AMUNITION PLANT
Well Name: SPN-89-01C
License, Permit or Monitoring Number:
Wis. Unique Well Number:
DNR Well Number:

1. Can this well be purged dry? ☐ Yes ☒ No

2. Well development method

surged with bailer and bailed	☐	4 1
surged with bailer and pumped	☐	6 1
surged with block and bailed	☐	4 2
surged with block and pumped	☐	6 2
surged with block, bailed and pumped	☐	7 0
compressed air	☐	2 0
bailed only	☐	1 0
pumped only	☒	5 1
pumped slowly	☐	5 0
Other _____	☐	

3. Time spent developing well _____ min.

4. Depth of well (from top of well casisng) 120.__ ft.

5. Inside diameter of well 4.0 in.

6. Volume of water in filter pack and well casing .59.__ gal.

7. Volume of water removed from well 295.__ gal.

8. Volume of water added (if any) __6.__ gal.

9. Source of water added _____

10. Analysis performed on water added? ☐ Yes ☒ No
(If yes, attach results)

	Before Development	After Development
11. Depth to Water (from top of well casing)	65.11 ft.	66.41 ft.
Date	04/29/90 (m m d d y y)	10/25/89 (m m d d y y)
Time	☐ a.m. ☐ p.m.	☐ a.m. ☐ p.m.
12. Sediment in well bottom	___.__ inches	___.__ inches
13. Water clarity	Clear ☐ 10 Turbid ☒ 15 (Describe)	Clear ☐ 20 Turbid ☐ 25 (Describe)
Fill in if drilling fluids were used and well is at solid waste facility:		
14. Total suspended solids	_____.__ mg/l	_____.__ mg/l
15. COD	_____.__ mg/l	_____.__ mg/l

Additional comments on development:

Well developed by: Person's Name and Firm

Name: _____

Firm: C E ENVIRONMENTAL

I hereby certify that the above information is true and correct to the best of my knowledge.

Signature: William Bigler

Firm: C E ENVIRONMENTAL

NOTE: Shaded areas are for DNR use only. See instructions for more information.

State of Wisconsin
Department of Natural Resources

MONITORING WELL DEVELOPMENT
Form 4400-113B 8-89

Facility/Project Name: BADGER ARMY AMMUNITION PLANT
Well Name: SDN-89-02A
License, Permit or Monitoring Number:
Wis. Unique Well Number:
DNR Well Number:

		Before Development	After Development
1. Can this well be purged dry?	☐ Yes ☒ No		
2. Well development method			
surged with bailer and bailed	☐ 41		
surged with bailer and pumped	☐ 61		
surged with block and bailed	☐ 42		
surged with block and pumped	☐ 62		
surged with block, bailed and pumped	☐ 70		
compressed air	☐ 20		
bailed only	☐ 10		
pumped only	☒ 51		
pumped slowly	☐ 50		
Other _____	☐		
11. Depth to Water (from top of well casing)		58.80 ft.	58.70 ft.
Date		05/18/89 mm dd yy	05/19/89 mm dd yy
Time		8:30 ☒ a.m. ☐ p.m.	10:00 ☐ a.m. ☒ p.m.
12. Sediment in well bottom		___.__ inches	___.__ inches
13. Water clarity		Clear ☐ 10 Turbid ☒ 15 (Describe) WATER MUDDY CLAY - FINE SAND BOUND UP PUMP.	Clear ☐ 20 Turbid ☐ 25 (Describe)
3. Time spent developing well	210 min.		
4. Depth of well (from top of well casisng)	72.__ ft.		
5. Inside diameter of well	4.0 in.		
6. Volume of water in filter pack and well casing	52.__ gal.		
7. Volume of water removed from well	160.__ gal.		
8. Volume of water added (if any)	0.__ gal.		
9. Source of water added	_____		
10. Analysis performed on water added? (If yes, attach results)	☐ Yes ☐ No		

Fill in if drilling fluids were used and well is at solid waste facility:

14. Total suspended solids		____.__ mg/l	____.__ mg/l
15. COD		____.__ mg/l	____.__ mg/l

Additional comments on development:

Well developed by: Person's Name and Firm

Name: R. DAVID DINSMORE

Firm: C E ENVIRONMENTAL

I hereby certify that the above information is true and correct to the best of my knowledge.

Signature: William Dyck

Firm: C E ENVIRONMENTAL

NOTE: Shaded areas are for DNR use only. See instructions for more information.

State of Wisconsin
Department of Natural Resources

MONITORING WELL DEVELOPMENT
Form 4400-113B 8-89

Facility/Project Name: BADGER ARMY AMUNITION PLANT
Well Name: SPN-89-02B
License, Permit or Monitoring Number:
Wis. Unique Well Number:
DNR Well Number:

		Before Development	After Development
1. Can this well be purged dry?	☐ Yes ☒ No		
2. Well development method			
surged with bailer and bailed	☐ 4 1		
surged with bailer and pumped	☐ 6 1		
surged with block and bailed	☐ 4 2		
surged with block and pumped	☐ 6 2		
surged with block, bailed and pumped	☐ 7 0		
compressed air	☐ 2 0		
bailed only	☐ 1 0		
pumped only	☒ 5 1		
pumped slowly	☐ 5 0		
Other _____	☐ ___		
11. Depth to Water (from top of well casing)		59.69 ft.	58.0 ft.
Date		04/30/89 (m m d d y y)	05/02/89 (m m d d y y)
Time		8:15 ☒ a.m. ☐ p.m.	10:00 ☒ a.m. ☐ p.m.
12. Sediment in well bottom		___.__ inches	___.__ inches
13. Water clarity		Clear ☒ 1 0 / Turbid ☐ 1 5 (Describe)	Clear ☐ 2 0 / Turbid ☐ 2 5 (Describe)
3. Time spent developing well	925 min.		
4. Depth of well (from top of well casisng)	100.__ ft.		
5. Inside diameter of well	4\0 in.		
6. Volume of water in filter pack and well casing	50.__ gal.		
7. Volume of water removed from well	4675.__ gal.		
8. Volume of water added (if any)	1450.__ gal.		
9. Source of water added	_____		
10. Analysis performed on water added? (If yes, attach results)	☐ Yes ☒ No		

Fill in if drilling fluids were used and well is at solid waste facility:

	Before Development	After Development
14. Total suspended solids	_____.__ mg/l	_____.__ mg/l
15. COD	_____.__ mg/l	_____.__ mg/l

Additional comments on development:

Well developed by: Person's Name and Firm

Name: TINA LEBLANC

Firm: C E ENVIRONMENTAL

I hereby certify that the above information is true and correct to the best of my knowledge.

Signature: [signature]

Firm: C E ENVIRONMENTAL

NOTE: Shaded areas are for DNR use only. See instructions for more information.

State of Wisconsin
Department of Natural Resources

MONITORING WELL DEVELOPMENT
Form 4400-113B 8-89

Facility/Project Name	Well Name	
BADGER ARMY AMUNITION PLANT	SPN-89-02C	
License, Permit or Monitoring Number	Wis. Unique Well Number	DNR Well Number
_____	_____	___

1. Can this well be purged dry? ☐ Yes ☒ No

2. Well development method
   - surged with bailer and bailed ☐ 41
   - surged with bailer and pumped ☐ 61
   - surged with block and bailed ☐ 42
   - surged with block and pumped ☐ 62
   - surged with block, bailed and pumped ☐ 70
   - compressed air ☐ 20
   - bailed only ☐ 10
   - pumped only ☒ 51
   - pumped slowly ☐ 50
   - Other _____ ☐ ___

3. Time spent developing well 1261 min.

4. Depth of well (from top of well casisng) 131.__ ft.

5. Inside diameter of well 4.0 in.

6. Volume of water in filter pack and well casing 74.7 gal.

7. Volume of water removed from well 7570.__ gal.

8. Volume of water added (if any) 2400.__ gal.

9. Source of water added _____

10. Analysis performed on water added? ☐ Yes ☒ No
(If yes, attach results)

	Before Development	After Development
11. Depth to Water (from top of well casing)	57.76 ft.	59.__ ft.
Date	05/01/89 (mm dd yy)	10/25/89 (mm dd yy)
Time	11:00 ☒ a.m. ☐ p.m.	__:__ ☐ a.m. ☐ p.m.
12. Sediment in well bottom	__.__ inches	__.__ inches
13. Water clarity	Clear ☒ 10 Turbid ☐ 15 (Describe)	Clear ☐ 20 Turbid ☐ 25 (Describe)

Fill in if drilling fluids were used and well is at solid waste facility:

14. Total suspended solids	____.__ mg/l	____.__ mg/l
15. COD	____.__ mg/l	____.__ mg/l

Additional comments on development:

Well developed by: Person's Name and Firm	I hereby certify that the above information is true and correct to the best of my knowledge.
Name: TWA LE BLANC	Signature: [signature]
Firm: C E ENVIRONMENTAL	Firm: C E ENVIRONMENTAL

NOTE: Shaded areas are for DNR use only. See instructions for more information.

State of Wisconsin
Department of Natural Resources

MONITORING WELL DEVELOPMENT

Form 4400-113B 8-89

Facility/Project Name: BADGER ARMY AMUNITION PLANT

Well Name: SPN-89-03B

License, Permit or Monitoring Number:

Wis. Unique Well Number:

DNR Well Number:

		Before Development	After Development
1. Can this well be purged dry?	☐ Yes ☒ No		
2. Well development method			
surged with bailer and bailed	☐ 4 1		
surged with bailer and pumped	☐ 6 1		
surged with block and bailed	☐ 4 2		
surged with block and pumped	☐ 6 2		
surged with block, bailed and pumped	☐ 7 0		
compressed air	☐ 2 0		
bailed only	☐ 1 0		
pumped only	☒ 5 1		
pumped slowly	☐ 5 0		
Other _____	☐		
3. Time spent developing well	943 min.		
4. Depth of well (from top of well casisng)	95.__ ft.		
5. Inside diameter of well	4.0 in.		
6. Volume of water in filter pack and well casing	37.__ gal.		
7. Volume of water removed from well	5660.__ gal.		
8. Volume of water added (if any)	1825.__ gal.		
9. Source of water added	_____		
10. Analysis performed on water added? (If yes, attach results)	☐ Yes ☒ No		
11. Depth to Water (from top of well casing)		52.87 ft.	54.23 ft.
Date		05/01/89 m m d d y y	06/25/89 m m d d y y
Time		12:00 ☐ a.m. ☐ p.m.	__:__ ☐ a.m. ☐ p.m.
12. Sediment in well bottom		__.__ inches	__.__ inches
13. Water clarity		Clear ☒ 10 Turbid ☐ 15 (Describe)	Clear ☐ 20 Turbid ☐ 25 (Describe)
Fill in if drilling fluids were used and well is at solid waste facility:			
14. Total suspended solids		_____.__ mg/l	_____.__ mg/l
15. COD		_____.__ mg/l	_____.__ mg/l

Additional comments on development:

Well developed by: Person's Name and Firm

Name:

Firm: C E ENVIRONMENTAL

I hereby certify that the above information is true and correct to the best of my knowledge.

Signature: William Dyer

Firm: C E ENVIRONMENTAL

NOTE: Shaded areas are for DNR use only. See instructions for more information.

State of Wisconsin
Department of Natural Resources

MONITORING WELL DEVELOPMENT

Form 4400-113B 8-89

Facility/Project Name: BADGER ARMY AMUNITION PLANT

Well Name: SPN-89-03C

License, Permit or Monitoring Number: _____

Wis. Unique Well Number: _____

DNR Well Number: _____

1. Can this well be purged dry? ☐ Yes ☒ No

2. Well development method

surged with bailer and bailed	☐	4 1
surged with bailer and pumped	☐	6 1
surged with block and bailed	☐	4 2
surged with block and pumped	☐	6 2
surged with block, bailed and pumped	☐	7 0
compressed air	☐	2 0
bailed only	☐	1 0
pumped only	☒	5 1
pumped slowly	☐	5 0
Other _____	☐	

3. Time spent developing well: 1448 min.

4. Depth of well (from top of well casisng): 129.__ ft.

5. Inside diameter of well: 4.0 in.

6. Volume of water in filter pack and well casing: 58.__ gal.

7. Volume of water removed from well: 3690.__ gal.

8. Volume of water added (if any): 2800.__ gal.

9. Source of water added: _____

10. Analysis performed on water added? ☐ Yes ☒ No
(If yes, attach results)

	Before Development	After Development
11. Depth to Water (from top of well casing)	53.08 ft.	54.41 ft.
Date	04/28/89 (m m d d y y)	10/25/89 (m m d d y y)
Time	15:30 ☐ a.m. ☒ p.m.	__:__ ☐ a.m. ☐ p.m.
12. Sediment in well bottom	__.__ inches	__.__ inches
13. Water clarity	Clear ☐ 10 Turbid ☐ 15 (Describe)	Clear ☐ 20 Turbid ☐ 25 (Describe)
Fill in if drilling fluids were used and well is at solid waste facility:		
14. Total suspended solids	_____.__ mg/l	_____.__ mg/l
15. COD	_____.__ mg/l	_____.__ mg/l

Additional comments on development:

Well developed by: Person's Name and Firm

Name: _____

Firm: C E ENVIRONMENTAL

I hereby certify that the above information is true and correct to the best of my knowledge.

Signature: [signature]

Firm: C E ENVIRONMENTAL

NOTE: Shaded areas are for DNR use only. See instructions for more information.

State of Wisconsin
Department of Natural Resources

MONITORING WELL DEVELOPMENT
Form 4400-113B 8-89

Facility/Project Name: BADGER ARMY AMUNITION PLANT
Well Name: SPN-89-04B
License, Permit or Monitoring Number:
Wis. Unique Well Number:
DNR Well Number:

1. Can this well be purged dry? ☐ Yes ☒ No

2. Well development method

surged with bailer and bailed	☐	41
surged with bailer and pumped	☐	61
surged with block and bailed	☐	42
surged with block and pumped	☐	62
surged with block, bailed and pumped	☐	70
compressed air	☐	20
bailed only	☐	10
pumped only	☒	51
pumped slowly	☐	50
Other _____	☐	

3. Time spent developing well: 75 min.
4. Depth of well (from top of well casisng): 24. ft.
5. Inside diameter of well: 4.0 in.
6. Volume of water in filter pack and well casing: 33. gal.
7. Volume of water removed from well: 165. gal.
8. Volume of water added (if any): 0. gal.
9. Source of water added: _____
10. Analysis performed on water added? ☐ Yes ☒ No (If yes, attach results)

	Before Development	After Development
11. Depth to Water (from top of well casing)	38.77 ft.	38.88 ft.
Date	03/19/89 (m m d d y y)	03/21/89 (m m d d y y)
Time	13:00 ☐ a.m. ☒ p.m.	13:00 ☐ a.m. ☒ p.m.
12. Sediment in well bottom	___.__ inches	___.__ inches
13. Water clarity	Clear ☐ 10 Turbid ☒ 15 (Describe) CLOUDY	Clear ☐ 20 Turbid ☐ 25 (Describe)

Fill in if drilling fluids were used and well is at solid waste facility:

14. Total suspended solids	_____.__ mg/l	_____.__ mg/l
15. COD	_____.__ mg/l	_____.__ mg/l

Additional comments on development:

Well developed by: Person's Name and Firm

Name: R DAVID DINSMORE
Firm: C & E ENVIRONMENTAL

I hereby certify that the above information is true and correct to the best of my knowledge.

Signature: [signature]
Firm: C & E ENVIRONMENTAL

NOTE: Shaded areas are for DNR use only. See instructions for more information.

State of Wisconsin
Department of Natural Resources

MONITORING WELL DEVELOPMENT
Form 4400-113B 8-89

Facility/Project Name: BADGER ARMY AMUNITION PLANT
Well Name: SPN-89-04C
License, Permit or Monitoring Number:
Wis. Unique Well Number:
DNR Well Number:

1. Can this well be purged dry? ☐ Yes ☒ No

2. Well development method

surged with bailer and bailed	☐	4 1
surged with bailer and pumped	☐	6 1
surged with block and bailed	☐	4 2
surged with block and pumped	☐	6 2
surged with block, bailed and pumped	☐	7 0
compressed air	☐	2 0
bailed only	☐	1 0
pumped only	☒	5 1
pumped slowly	☐	5 0
Other _____	☐	

3. Time spent developing well: 75 min.
4. Depth of well (from top of well casisng): 106.0 ft.
5. Inside diameter of well: 4.0 in.
6. Volume of water in filter pack and well casing: 76.0 gal.
7. Volume of water removed from well: 380.0 gal.
8. Volume of water added (if any): 0.0 gal.
9. Source of water added: _____
10. Analysis performed on water added? ☐ Yes ☒ No (If yes, attach results)

	Before Development	After Development
11. Depth to Water (from top of well casing)	38.3 ft.	39.78 ft.
Date	05/01/89 (m m d d y y)	10/25/89 (m m d d y y)
Time	16:15 ☐ a.m. ☒ p.m.	__:__ ☐ a.m. ☐ p.m.
12. Sediment in well bottom	__.__ inches	__.__ inches
13. Water clarity	Clear ☐ 10 Turbid ☒ 15 (Describe)	Clear ☐ 20 Turbid ☐ 25 (Describe)

Fill in if drilling fluids were used and well is at solid waste facility:

14. Total suspended solids	_____.__ mg/l	_____.__ mg/l
15. COD	_____.__ mg/l	_____.__ mg/l

Additional comments on development:

Well developed by: Person's Name and Firm

Name:

Firm: C E ENVIRONMENTAL

I hereby certify that the above information is true and correct to the best of my knowledge.

Signature: William Dyer

Firm: C E ENVIRONMENTAL

NOTE: Shaded areas are for DNR use only. See instructions for more information.

State of Wisconsin
Department of Natural Resources

MONITORING WELL DEVELOPMENT
Form 4400-113B 8-89

Facility/Project Name: BADGER ARMY AMUNITION PLANT
Well Name: SPW-89-05A
License, Permit or Monitoring Number:
Wis. Unique Well Number:
DNR Well Number:

1. Can this well be purged dry? ☐ Yes ☒ No

2. Well development method

surged with bailer and bailed	☐	4 1
surged with bailer and pumped	☐	6 1
surged with block and bailed	☐	4 2
surged with block and pumped	☐	6 2
surged with block, bailed and pumped	☐	7 0
compressed air	☐	2 0
bailed only	☐	1 0
pumped only	☒	5 1
pumped slowly	☐	5 0
Other _____	☐	___

3. Time spent developing well _____ min.

4. Depth of well (from top of well casisng) 60.0 ft.

5. Inside diameter of well 4.0 in.

6. Volume of water in filter pack and well casing 40.0 gal.

7. Volume of water removed from well 200.0 gal.

8. Volume of water added (if any) 0.0 gal.

9. Source of water added _____

10. Analysis performed on water added? ☐ Yes ☒ No
(If yes, attach results)

	Before Development	After Development
11. Depth to Water (from top of well casing)	40.0 ft.	40.0 ft.
Date	03/07/89 (m m d d y y)	03/08/89 (m m d d y y)
Time	11:15 ☒ a.m. ☐ p.m.	12:00 ☐ a.m. ☐ p.m.
12. Sediment in well bottom	___.__ inches	___.__ inches
13. Water clarity	Clear ☐ 10 Turbid ☐ 15 (Describe)	Clear ☐ 20 Turbid ☐ 25 (Describe)
Fill in if drilling fluids were used and well is at solid waste facility:		
14. Total suspended solids	_____.__ mg/l	_____.__ mg/l
15. COD	_____.__ mg/l	_____.__ mg/l

Additional comments on development:

Well developed by: Person's Name and Firm

Name: R. DAVID DIXMORE

Firm: C E ENVIRONMENTAL

I hereby certify that the above information is true and correct to the best of my knowledge.

Signature:

Firm: CE ENVIRONMENTAL

NOTE: Shaded areas are for DNR use only. See instructions for more information.

State of Wisconsin
Department of Natural Resources

MONITORING WELL DEVELOPMENT

Form 4400-113B 8-89

Facility/Project Name: BADGER ARMY AMUNITION PLANT

Well Name: SPN-89-05B

License, Permit or Monitoring Number: _____

Wis. Unique Well Number: _____

DNR Well Number: _____

1. Can this well be purged dry? ☐ Yes ☒ No

2. Well development method

surged with bailer and bailed	☐	4 1
surged with bailer and pumped	☐	6 1
surged with block and bailed	☐	4 2
surged with block and pumped	☐	6 2
surged with block, bailed and pumped	☐	7 0
compressed air	☐	2 0
bailed only	☐	1 0
pumped only	☒	5 1
pumped slowly	☐	5 0
Other _____	☐	___

3. Time spent developing well: 54 min.

4. Depth of well (from top of well casisng): 98.__ ft.

5. Inside diameter of well: 4.0 in.

6. Volume of water in filter pack and well casing: 44.__ gal.

7. Volume of water removed from well: 220.__ gal.

8. Volume of water added (if any): 0.__ gal.

9. Source of water added: _____

10. Analysis performed on water added? ☐ Yes ☒ No (If yes, attach results)

	Before Development	After Development
11. Depth to Water (from top of well casing)	39 14 ft.	40.39 ft.
Date	05/01/89 (m m d d y y)	10/25/89 (m m d d y y)
Time	14:06 ☐ a.m. ☒ p.m.	__:__ ☐ a.m. ☐ p.m.
12. Sediment in well bottom	__.__ inches	__.__ inches
13. Water clarity	Clear ☐ 10 Turbid ☐ 15 (Describe)	Clear ☐ 20 Turbid ☐ 25 (Describe)

Fill in if drilling fluids were used and well is at solid waste facility:

14. Total suspended solids	_____.__ mg/l	_____.__ mg/l
15. COD	_____.__ mg/l	_____.__ mg/l

Additional comments on development:

Well developed by: Person's Name and Firm

Name: TINA LE BLANC

Firm: C E ENVIRONMENTAL

I hereby certify that the above information is true and correct to the best of my knowledge.

Signature: [signature]

Firm: C E ENVIRONMENTAL

NOTE: Shaded areas are for DNR use only. See instructions for more information.

State of Wisconsin
Department of Natural Resources

MONITORING WELL DEVELOPMENT
Form 4400-113B 8-89

Facility/Project Name	Well Name	
BADGER ARMY AMMUNITION PLANT	DBM-89-01	
License, Permit or Monitoring Number	Wis. Unique Well Number	DNR Well Number
_____	_____	___

1. Can this well be purged dry? ☐ Yes ☒ No

2. Well development method

surged with bailer and bailed	☐	41
surged with bailer and pumped	☐	61
surged with block and bailed	☐	42
surged with block and pumped	☐	62
surged with block, bailed and pumped	☐	70
compressed air	☐	20
bailed only	☐	10
pumped only	☒	51
pumped slowly	☐	50
Other _____	☐	___

3. Time spent developing well __35 min.

4. Depth of well (from top of well casisng) 124.__ ft.

5. Inside diameter of well 4.0 in.

6. Volume of water in filter pack and well casing 37.__ gal.

7. Volume of water removed from well 185.__ gal.

8. Volume of water added (if any) 0.__ gal.

9. Source of water added _____

10. Analysis performed on water added? ☐ Yes ☒ No
(If yes, attach results)

	Before Development	After Development
11. Depth to Water (from top of well casing)	110.55 ft.	112.00 ft.
Date	03/06/89 (mm dd yy)	03/07/89 (mm dd yy)
Time	14:00 ☐ a.m. ☒ p.m.	14:00 ☐ a.m. ☒ p.m.
12. Sediment in well bottom	__.__ inches	__.__ inches
13. Water clarity	Clear ☒ 10 Turbid ☐ 15 (Describe)	Clear ☐ 20 Turbid ☐ 25 (Describe)

Fill in if drilling fluids were used and well is at solid waste facility:

14. Total suspended solids	____.__ mg/l	____.__ mg/l
15. COD	____.__ mg/l	____.__ mg/l

Additional comments on development:

Well developed by: Person's Name and Firm	I hereby certify that the above information is true and correct to the best of my knowledge.
Name: R DAVID DINAMORE	Signature: [signature]
Firm: CE ENVIRONMENTAL	Firm: CE ENVIRONMENTAL

NOTE: Shaded areas are for DNR use only. See instructions for more information.

State of Wisconsin
Department of Natural Resources

MONITORING WELL DEVELOPMENT
Form 4400-113B 8-89

Facility/Project Name: BADGER ARMY AMUNITION PLANT
Well Name: DBM-89-02A
License, Permit or Monitoring Number:
Wis. Unique Well Number:
DNR Well Number:

1. Can this well be purged dry? ☐ Yes ☒ No

2. Well development method

surged with bailer and bailed	☐	4 1
surged with bailer and pumped	☐	6 1
surged with block and bailed	☐	4 2
surged with block and pumped	☐	6 2
surged with block, bailed and pumped	☐	7 0
compressed air	☐	2 0
bailed only	☐	1 0
pumped only	☒	5 1
pumped slowly	☐	5 0
Other _____	☐	

3. Time spent developing well: 90 min.
4. Depth of well (from top of well casisng): 120.__ ft.
5. Inside diameter of well: 4.0 in.
6. Volume of water in filter pack and well casing: 37.__ gal.
7. Volume of water removed from well: 185.__ gal.
8. Volume of water added (if any): 0.__ gal.
9. Source of water added: _____
10. Analysis performed on water added? ☐ Yes ☒ No (If yes, attach results)

	Before Development	After Development
11. Depth to Water (from top of well casing)	107.89 ft.	107.63 ft.
Date	05/06/89 (m m d d y y)	05/07/89 (m m d d y y)
Time	15:00 ☐ a.m. ☒ p.m.	15:20 ☐ a.m. ☒ p.m.
12. Sediment in well bottom	__.__ inches	__.__ inches
13. Water clarity	Clear ☒ 10 Turbid ☐ 15 (Describe)	Clear ☐ 20 Turbid ☐ 25 (Describe)
Fill in if drilling fluids were used and well is at solid waste facility:		
14. Total suspended solids	____.__ mg/l	____.__ mg/l
15. COD	____.__ mg/l	____.__ mg/l

Additional comments on development:

Well developed by: Person's Name and Firm

Name: R. DAVID DINSMORE
Firm: C-E - ENVIRONMENTAL

I hereby certify that the above information is true and correct to the best of my knowledge.

Signature: [signature]
Firm: C E ENVIRONMENTAL

NOTE: Shaded areas are for DNR use only. See instructions for more information.

State of Wisconsin
Department of Natural Resources

MONITORING WELL DEVELOPMENT

Form 4400-113B 8-89

Facility/Project Name: BADGER ARMY AMUNITION PLANT

Well Name: DBN-89-02B

License, Permit or Monitoring Number:

Wis. Unique Well Number:

DNR Well Number:

		Before Development	After Development
1. Can this well be purged dry?	☐ Yes ☒ No		
2. Well development method			
surged with bailer and bailed	☐ 4 1		
surged with bailer and pumped	☐ 6 1		
surged with block and bailed	☐ 4 2		
surged with block and pumped	☐ 6 2		
surged with block, bailed and pumped	☐ 7 0		
compressed air	☐ 2 0		
bailed only	☐ 1 0		
pumped only	☒ 5 1		
pumped slowly	☐ 5 0		
Other _____	☐ ___		
11. Depth to Water (from top of well casing)		107.71 ft.	107.72 ft.
Date		03/07/89 (m m d d y y)	03/08/89 (m m d d y y)
Time		8:50 ☒ a.m. ☐ p.m.	10:00 ☒ a.m. ☐ p.m.
12. Sediment in well bottom		___.__ inches	___.__ inches
13. Water clarity		Clear ☒ 10 Turbid ☐ 15 (Describe)	Clear ☐ 20 Turbid ☐ 25 (Describe)
3. Time spent developing well	___75 min.		
4. Depth of well (from top of well casisng)	151.__ ft.		
5. Inside diameter of well	__4.0__ in.		
6. Volume of water in filter pack and well casing	__57.__ gal.		
7. Volume of water removed from well	185.__ gal.		
8. Volume of water added (if any)	___0.__ gal.		
9. Source of water added	_____		
10. Analysis performed on water added? (If yes, attach results)	☐ Yes ☒ No		
Fill in if drilling fluids were used and well is at solid waste facility:			
14. Total suspended solids		_____.__ mg/l	_____.__ mg/l
15. COD		_____.__ mg/l	_____.__ mg/l

Additional comments on development:

Well developed by: Person's Name and Firm

Name: R DAVID DABMORE

Firm: C E ENVIRONMENTAL

I hereby certify that the above information is true and correct to the best of my knowledge.

Signature: [signature]

Firm: C E ENVIRONMENTAL

NOTE: Shaded areas are for DNR use only. See instructions for more information.

State of Wisconsin
Department of Natural Resources

MONITORING WELL DEVELOPMENT

Form 4400-113B 8-89

Facility/Project Name	Well Name	
BADGER ARMY AMMUNITION PLANT	DBAA-89-03	
License, Permit or Monitoring Number	Wis. Unique Well Number	DNR Well Number
_____	_____	___

		Before Development	After Development
1. Can this well be purged dry?	☐ Yes ☒ No		
2. Well development method			
surged with bailer and bailed	☐ 4 1		
surged with bailer and pumped	☐ 6 1		
surged with block and bailed	☐ 4 2		
surged with block and pumped	☐ 6 2		
surged with block, bailed and pumped	☐ 7 0		
compressed air	☐ 2 0		
bailed only	☐ 1 0		
pumped only	☒ 5 1		
pumped slowly	☐ 5 0		
Other _____	☐ ___		
11. Depth to Water (from top of well casing)		119.59 ft.	119.65 ft.
Date		03/17/89 (m m d d y y)	03/13/89 (m m d d y y)
Time		☐ a.m. 13:00 ☒ p.m.	☐ a.m. 13:00 ☒ p.m.
12. Sediment in well bottom		___.__ inches	___.__ inches
13. Water clarity		Clear ☐ 10 / Turbid ☒ 15	Clear ☐ 20 / Turbid ☐ 25
(Describe)		WATER CLOUDED UP AFTER 2ND VOLUME	
3. Time spent developing well	___60 min.		
4. Depth of well (from top of well casisng)	132.__ ft.		
5. Inside diameter of well	_4.0_ in.		
6. Volume of water in filter pack and well casing	_45.__ gal.		
7. Volume of water removed from well	235.__ gal.		
8. Volume of water added (if any)	___0.__ gal.		
9. Source of water added	_____		
10. Analysis performed on water added? (If yes, attach results)	☐ Yes ☒ No		
Fill in if drilling fluids were used and well is at solid waste facility:			
14. Total suspended solids		_____.__ mg/l	_____.__ mg/l
15. COD		_____.__ mg/l	_____.__ mg/l

Additional comments on development:

Well developed by: Person's Name and Firm	I hereby certify that the above information is true and correct to the best of my knowledge.
Name: R. DAVID DINSMORE	Signature:
Firm: C E ENVIRONMENTAL	Firm: C E ENVIRONMENTAL

NOTE: Shaded areas are for DNR use only. See instructions for more information.

State of Wisconsin
Department of Natural Resources

MONITORING WELL DEVELOPMENT

Form 4400-113B 8-89

Facility/Project Name: BADGER ARMY AMUNITION PLANT

Well Name: DBN-89-04A

License, Permit or Monitoring Number:

Wis. Unique Well Number:

DNR Well Number:

1. Can this well be purged dry? ☐ Yes ☒ No

2. Well development method

surged with bailer and bailed	☐	4 1
surged with bailer and pumped	☐	6 1
surged with block and bailed	☐	4 2
surged with block and pumped	☐	6 2
surged with block, bailed and pumped	☐	7 0
compressed air	☐	2 0
bailed only	☐	1 0
pumped only	☒	5 1
pumped slowly	☐	5 0
Other _____	☐	

3. Time spent developing well: 75 min.

4. Depth of well (from top of well casisng): 154.0 ft.

5. Inside diameter of well: 4.0 in.

6. Volume of water in filter pack and well casing: 34.5 gal.

7. Volume of water removed from well: 172.5 gal.

8. Volume of water added (if any): 0.0 gal.

9. Source of water added: _____

10. Analysis performed on water added? ☐ Yes ☒ No
(If yes, attach results)

	Before Development	After Development
11. Depth to Water (from top of well casing)	136.36 ft.	136.35 ft.
Date	03/01/89 (m m d d y y)	03/02/89 (m m d d y y)
Time	15:45 ☐ a.m. ☒ p.m.	16:00 ☐ a.m. ☒ p.m.
12. Sediment in well bottom	___.__ inches	___.__ inches
13. Water clarity	Clear ☒ 10 Turbid ☐ 15 (Describe)	Clear ☐ 20 Turbid ☐ 25 (Describe)
Fill in if drilling fluids were used and well is at solid waste facility:		
14. Total suspended solids	_____.__ mg/l	_____.__ mg/l
15. COD	_____.__ mg/l	_____.__ mg/l

Additional comments on development:

Well developed by: Person's Name and Firm

Name: R. DAVID DINSMORE

Firm: C E ENVIRONMENTAL

I hereby certify that the above information is true and correct to the best of my knowledge.

Signature: [signature]

Firm: C E ENVIRONMENTAL

NOTE: Shaded areas are for DNR use only. See instructions for more information.

State of Wisconsin
Department of Natural Resources

MONITORING WELL DEVELOPMENT

Form 4400-113B 8-89

Facility/Project Name: BADGER ARMY AMUNITION PLANT

Well Name: DBN-89-04B

License, Permit or Monitoring Number:

Wis. Unique Well Number:

DNR Well Number:

1. Can this well be purged dry? ☐ Yes ☒ No

2. Well development method

surged with bailer and bailed	☐	41
surged with bailer and pumped	☐	61
surged with block and bailed	☐	42
surged with block and pumped	☐	62
surged with block, bailed and pumped	☐	70
compressed air	☐	20
bailed only	☐	10
pumped only	☒	51
pumped slowly	☐	50
Other _____	☐	

3. Time spent developing well: 75 min.

4. Depth of well (from top of well casisng): 189.__ ft.

5. Inside diameter of well: 4.0 in.

6. Volume of water in filter pack and well casing: 40.__ gal.

7. Volume of water removed from well: 200.__ gal.

8. Volume of water added (if any): 0.__ gal.

9. Source of water added: _____

10. Analysis performed on water added? ☐ Yes ☒ No
(If yes, attach results)

	Before Development	After Development
11. Depth to Water (from top of well casing)	140.57 ft.	140.61 ft.
Date	03/02/89 (m m d d y y)	03/03/89 (m m d d y y)
Time	16:00 ☐ a.m. ☒ p.m.	16:00 ☐ a.m. ☒ p.m.
12. Sediment in well bottom	__.__ inches	__.__ inches
13. Water clarity	Clear ☐ 10 Turbid ☒ 15 (Describe) BROWN color	Clear ☐ 20 Turbid ☐ 25 (Describe)

Fill in if drilling fluids were used and well is at solid waste facility:

14. Total suspended solids	_____.__ mg/l	_____.__ mg/l
15. COD	_____.__ mg/l	_____.__ mg/l

Additional comments on development:

Well developed by: Person's Name and Firm

Name: R. DAVID DIXMORE

Firm: C E ENVIRONMENTAL

I hereby certify that the above information is true and correct to the best of my knowledge.

Signature: [signature]

Firm: C E ENVIRONMENTAL

NOTE: Shaded areas are for DNR use only. See instructions for more information.

State of Wisconsin
Department of Natural Resources

MONITORING WELL DEVELOPMENT
Form 4400-113B 8-89

Facility/Project Name: BADGER ARMY AMMUNITION PLANT
Well Name: DBM-89-05
License, Permit or Monitoring Number:
Wis. Unique Well Number:
DNR Well Number:

1. Can this well be purged dry? ☐ Yes ☒ No

2. Well development method

surged with bailer and bailed	☐	4 1
surged with bailer and pumped	☐	6 1
surged with block and bailed	☐	4 2
surged with block and pumped	☐	6 2
surged with block, bailed and pumped	☐	7 0
compressed air	☐	2 0
bailed only	☐	1 0
pumped only	☒	5 1
pumped slowly	☐	5 0
Other _____	☐	___

3. Time spent developing well: 90 min.
4. Depth of well (from top of well casisng): 124.__ ft.
5. Inside diameter of well: 4.0 in.
6. Volume of water in filter pack and well casing: 35.__ gal.
7. Volume of water removed from well: 175.__ gal.
8. Volume of water added (if any): 0.__ gal.
9. Source of water added: _____
10. Analysis performed on water added? ☐ Yes ☒ No (If yes, attach results)

	Before Development	After Development
11. Depth to Water (from top of well casing)	113.97 ft.	113.81 ft.
Date	03/05/89 (m m d d y y)	03/06/89 (m m d d y y)
Time	8:00 ☒ a.m. ☐ p.m.	9:00 ☒ a.m. ☐ p.m.
12. Sediment in well bottom	___.__ inches	___.__ inches
13. Water clarity	Clear ☐ 10 Turbid ☒ 15	Clear ☐ 20 Turbid ☐ 25
(Describe)	CLEARED UP AFTER 3RD VOLUME PURGED	
14. Total suspended solids	_____.__ mg/l	_____.__ mg/l
15. COD	_____.__ mg/l	_____.__ mg/l

Fill in if drilling fluids were used and well is at solid waste facility:

Additional comments on development:

Well developed by: Person's Name and Firm

Name: R. DAVID DINSMORE
Firm: C E ENVIRONMENTAL

I hereby certify that the above information is true and correct to the best of my knowledge.

Signature: _____
Firm: _____

NOTE: Shaded areas are for DNR use only. See instructions for more information.

ABB Environmental Services, Inc.

MONITORING WELL DEVELOPMENT FORM

Facility/Project Name: BAAP- USATHAMA

Well Name: ELN-91-07A

License, Permit or Monitoring Number: _____

Wis. Unique Well Number: _____ DNR Well Number: _____

1. Can this well be purged dry? ☐ Yes ☑ No

2. Well development method

surged with bailer and bailed	☐	41
surged with bailer and pumped	☐	61
surged with block and bailed	☐	42
surged with block and pumped	☐	62
surged with block, bailed and pumped	☐	70
compressed air	☐	20
bailed only	☐	10
pumped only (with surging)	☑	51
pumped slowly	☐	50
Other _____	☐	___

3. Time spent developing well: 50 min.

4. Depth of well (from top of well casing): 128.2 ft.

5. Inside diameter of well: 3.75 in.

6. Volume of water in filter pack and well casing: 27.0 gal.

7. Volume of water removed from well: 125.__ gal.

8. Volume of water added (if any): 0.0 gal.

9. Source of water added: NA

10. Analysis performed on water added? ☐ Yes ☒ No
(If yes, attach results)

	Before Development	After Development
11. Depth to Water (from top of well casing)	120.53 ft.	120.52 ft.
Date	11/21/91 (m m d d y y)	11/21/91 (m m d d y y)
Time	10:55 ☒ a.m. ☐ p.m.	11:45 ☒ a.m. ☐ p.m.
12. Sediment in well bottom	___.__ inches	___.__ inches
13. Water clarity	Clear ☐ 10 Turbid ☒ 15 (Describe) initially	Clear ☒ 20 Turbid ☐ 25 (Describe)
14. Total suspended solids	_____.__ mg/l	_____.__ mg/l
15. COD	_____.__ mg/l	_____.__ mg/l
16. Screen length	10.0 ft.	

24 hr later

Fill in if drilling fluids were used and well is at solid waste facility:

Additional comments on development:

	initial	45	90	+35
T (°C)	10.4	10.7	10.9	10.7
pH (units)	8.3	7.5	7.3	7.4
cond. (µmhos)	448	444	439	439
Time	1055	1806	1117	1128

well to casing: -.11
stick-up: 2.7
initial depth to bottom: 128.20
final depth to bottom: 128.25

128.19

Well developed by: Person's Name and Firm

Name: D. Dionne + L. Carter

Firm: ABB-ES

I hereby certify that the above information is true and correct to the best of my knowledge.

Signature: _____

Firm: ABB-ES

NOTE: Shaded areas are for DNR use only. See instructions for more information.

ABB Environmental Services, Inc.

MONITORING WELL DEVELOPMENT FORM

Facility/Project Name: BAAP- USATHAMA

Well Name: ELN-91-07B

License, Permit or Monitoring Number: _____

Wis. Unique Well Number: _____ DNR Well Number: _____

1. Can this well be purged dry? ☐ Yes ☒ No

2. Well development method

surged with bailer and bailed	☐	4 1
surged with bailer and pumped	☐	6 1
surged with block and bailed	☐	4 2
surged with block and pumped	☐	6 2
surged with block, bailed and pumped	☐	7 0
compressed air	☐	2 0
bailed only	☐	1 0
pumped only (with surging)	☑	5 1
pumped slowly	☐	5 0
Other _____	☐	___

3. Time spent developing well: 30 min.

4. Depth of well (from top of well casing): 146.9 ft.

5. Inside diameter of well: 3.75 in.

6. Volume of water in filter pack and well casing: 26.0 gal.

7. Volume of water removed from well: 180.0 gal.

8. Volume of water added (if any): 0.0 gal.

9. Source of water added: NA

10. Analysis performed on water added? ☐ Yes ☒ No
(If yes, attach results)

	Before Development	After Development (24 hrs later)
11. Depth to Water (from top of well casing)	118.74 ft.	118.74 ft. 118.7
Date	11/21/91 (m m d d y y)	11/21/91 11/22/9
Time	09:55 ☒ a.m. ☐ p.m.	10:25 ☐ a.m. ☐ p.m. 13:01
12. Sediment in well bottom	___.__ inches	___.__ inches
13. Water clarity	Clear ☐ 10 Turbid ☒ 15 (Describe) initially / clear after 180 gallons	Clear ☒ 20 Turbid ☐ 25 (Describe)
Fill in if drilling fluids were used and well is at solid waste facility:		
14. Total suspended solids	____.__ mg/l	____.__ mg/l
15. COD	____.__ mg/l	____.__ mg/l
16. Screen length	10.0? ft.	

Additional comments on development:

	Initial	60	120	180
T (°C)	10.2	10.4	10.6	10.6
pH (units)	7.8	8.4	8.3	8.2
cond. (µmhos)	413	426	427	429
Time	09:55	10:05	10:15	10:25

well to casing: -0.11
stick-up: 2.28
initial depth to bottom: 146.92
final depth to bottom: 146.95 146.95

Well developed by: Person's Name and Firm

Name: DAVID R DIANNE & LAURA CARTER

Firm: ABB-ES

I hereby certify that the above information is true and correct to the best of my knowledge.

Signature: David R Dianne

Firm: ABB ES

NOTE: Shaded areas are for DNR use only. See instructions for more information.

ABB Environmental Services, Inc.

MONITORING WELL DEVELOPMENT FORM

Facility/Project Name: BAAP-USATHAMA

Well Name: ELM-91-10

License, Permit or Monitoring Number:

Wis. Unique Well Number:

DNR Well Number:

1. Can this well be purged dry? ☐ Yes ☑ No

2. Well development method

surged with bailer and bailed	☐	4 1
surged with bailer and pumped	☑	6 1
surged with block and bailed	☐	4 2
surged with block and pumped	☐	6 2
surged with block, bailed and pumped	☐	7 0
compressed air	☐	2 0
bailed only	☐	1 0
pumped only (with surging) NR	☐	5 1
pumped slowly	☐	5 0
Other _____	☐	

3. Time spent developing well: 30 min.

4. Depth of well (from top of well casing): 156.9 ft.

5. Inside diameter of well: 3.75 in.

6. Volume of water in filter pack and well casing: 28.5 ~~142.0~~ gal.

7. Volume of water removed from well: 142.0 gal.

8. Volume of water added (if any): 0.0 gal.

9. Source of water added: —

10. Analysis performed on water added? ☐ Yes ☐ No (If yes, attach results)

	Before Development	After Development
11. Depth to Water (from top of well casing)	145.63 ft.	145.67 ft. 145.8
Date	11/21/91 (m m d d y y)	11/21/91 11:41
Time	12:07 ☐ a.m. ☒ p.m.	12:37 ☐ a.m. ☑ p.m. 13:35
12. Sediment in well bottom	___.__ inches	___.__ inches
13. Water clarity	Clear ☐ 10 Turbid ☒ 15 (Describe)	Clear ☒ 20 Turbid ☐ 25 (Describe)

Fill in if drilling fluids were used and well is at solid waste facility:

14. Total suspended solids	—— mg/l	—— mg/l
15. COD	—— mg/l	—— mg/l
16. Screen length	15.0 ft	

Additional comments on development:

	Initial			
T (°C)	10.9	11.0	11.0	11.1
pH (units)	8.1	8.4	7.3	7.4
cond. (µmhos)	568	649	680	707
Time	1207	1217	1227	1237

well to casing: -0.11
stick-up: 2.20
initial depth to bottom: 156.94
final depth to bottom: 156.97 156.98

Well developed by: Person's Name and Firm

Name: DAVID R. DIONNE & LAURA E. CARRA

Firm: ABB-ES

I hereby certify that the above information is true and correct to the best of my knowledge.

Signature: [signature]

Firm: ABB ES

NOTE: Shaded areas are for DNR use only. See instructions for more information.

WELL DEVELOPMENT FORMS

Background Wells

BGM-91-01
BGM-91-02
BGM-91-03

Propellant Burning Ground

PBN-91-06C
PBN-91-06D
PBN-91-12C
PBN-91-12D
PBN-89-01B
PBN-89-01C
PBN-89-01D
PBN-89-02B
PBN-89-02C
PBN-89-03B
PBN-89-03C
PBN-89-04B
PBN-89-04C
PBM-89-05
PBM-89-06
PBM-89-07
PBM-89-08
PBM-89-09
PBN-89-10A
PBN-89-10B
PBN-89-10C
PBN-89-10D
PBM-89-11
PBN-89-12A
PBN-89-12B

Landfill 1

LOM-91-01
LOM-91-02
LOM-89-01
LON-89-02A
LON-89-02B
LON-89-03A
LON-89-03B

Settling Ponds and Spoils Disposal Area

SPN-91-02D
SPN-91-03D
SPN-91-04D
SPN-89-01C
SPN-89-02A
SPN-89-02B
SPN-89-02C
SPN-89-03B
SPN-89-03C
SPN-89-04B
SPN-89-04C
SPN-89-05A
SPN-89-05B

Deterrent Burning Ground

DBM-89-01
DBN-89-02A
DBN-89-02B
DBM-89-03
DBN-89-04A
DBN-89-04B
DBM-89-05

Existing Landfill

ELN-91-07A
ELN-91-07B
ELM-91-10
ELM-89-01
ELN-89-02A
ELN-89-02B
ELM-89-03
ELN-89-04A
ELN-89-04B
ELM-89-05
ELN-89-06B
ELM-89-07
ELM-89-08
ELM-89-09

Rocket Paste Area

RPM-91-01
RPM-89-01
RPM-89-02

Nitroglycerine Pond

NPM-89-01

Oleum Plant and Pond

OPM-89-01
OPM-89-02
OPM-89-03

Old Acid Area

OAM-91-01
OAM-89-01
OAM-89-02

Old Fuel Oil Tank

FTM-89-01

Off-Post (South)

PBN-91-01C
PBN-91-02B
PBN-91-02C
PBN-91-03B
PBN-91-03C
PBM-90-01D
PBM-90-02D
PBM-90-03D
PBN-90-04B
PBN-90-04D
SWN-91-01B
SWN-91-01C
SWN-91-01D
SWN-91-02C
SWN-91-02D
SWN-91-03B
SWN-91-03C
SWN-91-03D
SWN-91-03E
SWN-91-04C
SWN-91-04D
SWN-91-05B
SWN-91-05C
SWN-91-05D

This Page Intentionally Left Blank.

ABB Environmental Services, Inc.

MONITORING WELL DEVELOPMENT FORM

Facility/Project Name: BAAP- USATHAMA

Well Name: BGM-91-01

License, Permit or Monitoring Number: _____

Wis. Unique Well Number: _____ DNR Well Number: _____

1. Can this well be purged dry? ☐ Yes ☑ No

2. Well development method

surged with bailer and bailed	☐	4 1
surged with bailer and pumped	☐	6 1
surged with block and bailed	☐	4 2
surged with block and pumped	☐	6 2
surged with block, bailed and pumped	☐	7 0
compressed air	☐	2 0
bailed only	☐	1 0
pumped only (with surging)	☒	5 1
pumped slowly	☐	5 0
Other _____	☐	___

3. Time spent developing well: 65 min.

4. Depth of well (from top of well casing): 73.3 ft.

5. Inside diameter of well: 3.75 in.

6. Volume of water in filter pack and well casing: 25.3 gal.

7. Volume of water removed from well: 136.0 gal.

8. Volume of water added (if any): 0.0 gal.

9. Source of water added: —

10. Analysis performed on water added? ☐ Yes ☐ No (If yes, attach results)

	Before Development	After Development (24 hr. later)
11. Depth to Water (from top of well casing)	61.12 ft.	61.17 ft. 61.21
Date	11/09/21 (m m d d y y)	11/09/21 (m m d d y y) 11/10/91
Time	14:02 ☐ a.m. ☒ p.m.	15:20 ☐ a.m. ☒ p.m. 14:25
12. Sediment in well bottom	___.__ inches	___.__ inches
13. Water clarity	Clear ☐ 10 Turbid ☒ 15 (Describe)	Clear ☒ 20 Turbid ☐ 25 (Describe)

Fill in if drilling fluids were used and well is at solid waste facility:

14. Total suspended solids	—.__ mg/l	—.__ mg/l
15. COD	—.__ mg/l	—.__ mg/l
16. Screen length	10.0 ft.	

17. Pump used was Grundfos Redi-Flo 2 w/ straining cloth

Additional comments on development:

	27	55	82	109	136
T (°C)	—	—	—	—	—
pH (units)	6.8	7.0	6.8	6.8	6.8
cond. (umhos)	455	453	464	458	478
Time	14:29	14:40	14:51	15:02	15:13

well to casing stick-up: 0.14"/2.24" →

initial depth to bottom: 73.34/73.35

final depth to bottom: ← 73.28

Well developed by: Person's Name and Firm

Name: D. DIONNE/D. VAN BUSHBERGER

Firm: ABB-ES

I hereby certify that the above information is true and correct to the best of my knowledge.

Signature: D. VanBushberger

Firm: ABB-ES

NOTE: Shaded areas are for DNR use only. See instructions for more information.

ABB Environmental Services, Inc.

MONITORING WELL DEVELOPMENT FORM

Facility/Project Name: BAAP- USATHAMA

Well Name: BGM-91-02

License, Permit or Monitoring Number: _____

Wis. Unique Well Number: _____ DNR Well Number: _____

1. Can this well be purged dry? ☐ Yes ☑ No

2. Well development method

surged with bailer and bailed	☐	4 1
surged with bailer and pumped	☐	6 1
surged with block and bailed	☐	4 2
surged with block and pumped	☐	6 2
surged with block, bailed and pumped	☐	7 0
compressed air	☐	2 0
bailed only	☐	1 0
pumped only (with surging)	☑	5 1
pumped slowly	☐	5 0
Other _____	☐	___

3. Time spent developing well: 40 min.

4. Depth of well (from top of well casing): 85.7 ft.

5. Inside diameter of well: 4.0 in.

6. Volume of water in filter pack and well casing: 17.0 gal.

7. Volume of water removed from well: 85.0 gal.

8. Volume of water added (if any): 0.0 gal.

9. Source of water added: —

10. Analysis performed on water added? ☐ Yes ☐ No (If yes, attach results)

	Before Development	After Development
11. Depth to Water (from top of well casing)	77.29 ft.	77.34 ft. 77.1
Date	11/09/91 (mm/dd/yy)	11/09/91 11/10 1
Time	16:00 ☐ a.m. ☑ p.m.	17:00 ☐ a.m. ☑ p.m. 14:32
12. Sediment in well bottom	___.__ inches	___.__ inches
13. Water clarity	Clear ☐ 10 Turbid ☑ 15 (Describe)	Clear ☑ 20 Turbid ☐ 25 (Describe)
Fill in if drilling fluids were used and well is at solid waste facility:		
14. Total suspended solids	—— mg/l	—— mg/l
15. COD	—— mg/l	—— mg/l
16. Screen length	10.0 ft.	

17. Pump used was Grundfos Redi-Flo 2 w/ straining cloth

Additional comments on development:

well to casing: 0.15 0.12
stick-up: 2.57 2.3
initial depth to bottom: 85.70
final depth to bottom: 85.73 85.68

	17	34	51	68	85
T (°C)	—	—	—	—	—
pH (units)	6.8	7.0	7.0	6.8	6.8
cond. (umhos)	485	485	485	485	490
Time	16:27	16:34	16:41	16:48	16:55

Well developed by: Person's Name and Firm

Name: D. DIONNE / D. VON BUSHBERGER

Firm: ABB-ES

I hereby certify that the above information is true and correct to the best of my knowledge.

Signature: Dwight von Bushberger

Firm: ABB-ES

NOTE: Shaded areas are for DNR use only. See instructions for more information.

ABB Environmental Services, Inc.

MONITORING WELL DEVELOPMENT FORM

Facility/Project Name: BAAP- USATHAMA

Well Name: BGM-91-03

License, Permit or Monitoring Number: _____

Wis. Unique Well Number: _____ DNR Well Number: _____

1. Can this well be purged dry? ☐ Yes ☑ No

2. Well development method

surged with bailer and bailed	☐	4 1
surged with bailer and pumped	☐	6 1
surged with block and bailed	☐	4 2
surged with block and pumped	☐	6 2
surged with block, bailed and pumped	☐	7 0
compressed air	☐	2 0
bailed only	☐	1 0
pumped only (with surging)	☑	5 1
pumped slowly	☐	5 0
Other _____	☐	

3. Time spent developing well: 65 min.

4. Depth of well (from top of well casisng): 101.9 ft.

5. Inside diameter of well: 4.00 in.

6. Volume of water in filter pack and well casing: 31.0 gal.

7. Volume of water removed from well: 155.0 gal.

8. Volume of water added (if any): 0.0 gal.

9. Source of water added: —

10. Analysis performed on water added? ☐ Yes ☐ No (If yes, attach results)

	Before Development	After Development
11. Depth to Water (from top of well casing)	80.40 ft.	80.44 ft. 80.40
Date	11/10/91 (mm/dd/yy)	11/10/91 (mm/dd/yy) 11/11/91
Time	12:36 ☐ a.m. ☑ p.m.	13:46 ☐ a.m. ☑ p.m. 15:40
12. Sediment in well bottom	___.__ inches	___.__ inches
13. Water clarity	Clear ☐ 10 Turbid ☑ 15 (Describe)	Clear ☑ 20 Turbid ☐ 25 (Describe)

Fill in if drilling fluids were used and well is at solid waste facility:

14. Total suspended solids	—— mg/l	—— mg/l
15. COD	—— mg/l	—— mg/l
16. Screen length	10.0 ft.	

17. Pump used was Grund-fos Redi-flo 2 w/ straining cloth

Additional comments on development:

	31	62	93	124	155
T (°C)	10.3	10.2	10.5	10.3	10.2
pH (units)	7.8	7.8	7.8	7.8	7.8
cond. (umhos)	593	581	577	576	576
Time	12:37	12:50	13:03	13:16	13:29

well to casing stick-up: } 2.40

initial depth to bottom: 101.85

final depth to bottom: 101.85 101.86

* well not grouted or cemented yet ∴ casing not secure

Well developed by: Person's Name and Firm

Name: DAVID DIONNE / DOUGLAS VON BUSHBERGER

Firm: ABB-ES

I hereby certify that the above information is true and correct to the best of my knowledge.

Signature: /Nancy E. Roper

Firm: ABB-ES

NOTE: Shaded areas are for DNR use only. See instructions for more information.

ABB Environmental Services, Inc.

MONITORING WELL DEVELOPMENT FORM

Facility/Project Name: BAAP- USATHAMA

Well Name: PBN-91-06C

License, Permit or Monitoring Number:

Wis. Unique Well Number:

DNR Well Number:

1. Can this well be purged dry? ☐ Yes ☑ No

2. Well development method

surged with bailer and bailed	☐	4 1
surged with bailer and pumped	☐	6 1
surged with block and bailed	☐	4 2
surged with block and pumped	☐	6 2
surged with block, bailed and pumped	☐	7 0
compressed air	☐	2 0
bailed only	☐	1 0
pumped only (with surging)	☑	5 1
pumped slowly	☐	5 0
Other _____	☐	

3. Time spent developing well: 654.7 min.

4. Depth of well (from top of well casisng): 203.5 ft.

5. Inside diameter of well: 3.75 in.

6. Volume of water in filter pack and well casing: 121.5 gal.

7. Volume of water removed from well: 3205.2 gal.

8. Volume of water added (if any): 900.0 gal.

9. Source of water added: BPW #2

10. Analysis performed on water added? ☑ Yes ☐ No (If yes, attach results)

	Before Development	After Development
11. Depth to Water (from top of well casing)	83.10 ft.	53.12 ft. 53.2
Date	11/20/91 (m m d d y y)	11/21/91 (m m d d y y) 11-21
Time	12:42 ☐ a.m. ☑ p.m.	3:05 ☐ a.m. ☑ p.m. 4 Pts.
12. Sediment in well bottom	___.__ inches	___.__ inches
13. Water clarity	Clear ☐ 10 Turbid ☑ 15 (Describe)	Clear ☑ 20 Turbid ☐ 25 (Describe)
Fill in if drilling fluids were used and well is at solid waste facility:		
14. Total suspended solids	____.__ mg/l	____.__ mg/l
15. COD	____.__ mg/l	____.__ mg/l
16. Screen length	10.0 ft.	

Additional comments on development:

	11-20	11-20	11-21	11-21
T (°C)	10.3	10.0	9.3	9.5
pH (units)	7.94	7.92	7.39	7.96
cond. (µmhos)	651	6410	619	624
Time	4:35 PM	1 PM	11:35 AM	3:05

1515

well to casing: -.12
stick-up: 2.48
initial depth to bottom: 203.54
final depth to bottom: 203.56

203.5

Well developed by: Person's Name and Firm

Name: Keith Kolwinski/Lana Cates

Firm: ABB-ES

I hereby certify that the above information is true and correct to the best of my knowledge.

Signature: Keith Kolwinski

Firm: ABB-ES

NOTE: Shaded areas are for DNR use only. See instructions for more information.

START Purge at 1 PM - 11-20-91

stopped purge at 4:35 PM - 11-20-91

3.63 hr. intervals to sample.

ABB Environmental Services, Inc.

MONITORING WELL DEVELOPMENT FORM

Facility/Project Name: BAAP - USATHAMA

Well Name: PBN-91-06D

License, Permit or Monitoring Number: _____

Wis. Unique Well Number: _____ DNR Well Number: _____

1. Can this well be purged dry? ☐ Yes ☑ No

2. Well development method

surged with bailer and bailed	☐	4 1
surged with bailer and pumped	☐	6 1
surged with block and bailed	☐	4 2
surged with block and pumped	☐	6 2
surged with block, bailed and pumped	☐	7 0
compressed air	☐	2 0
bailed only	☐	1 0
pumped only (with surging)	☑	5 1
pumped slowly	☐	5 0
Other _____	☐	___

3. Time spent developing well: 753 min.

4. Depth of well (from top of well casisng): 253.2 ft.

5. Inside diameter of well: 4.00 in.

6. Volume of water in filter pack and well casing: 138.2 gal.

7. Volume of water removed from well: 3691.0 gal.

8. Volume of water added (if any): 1000.0 gal.

9. Source of water added: BPW #2

10. Analysis performed on water added? ☑ Yes ☐ No (If yes, attach results)

	Before Development	After Development
11. Depth to Water (from top of well casing)	82.3 ft.	82.35 ft. 82.2?
Date	11/21/91 (m m d d y y)	11/23/91 (m m d d y y) 11:24A
Time	3:30 ☐ a.m. ☑ p.m.	4:00 ☐ a.m. ☑ p.m. 1500
12. Sediment in well bottom	___.__ inches	___.__ inches
13. Water clarity	Clear ☐ 10 Turbid ☐ 15 (Describe)	Clear ☑ 20 Turbid ☐ 25 (Describe)
Fill in if drilling fluids were used and well is at solid waste facility:		
14. Total suspended solids	____.__ mg/l	____.__ mg/l
15. COD	____.__ mg/l	____.__ mg/l
16. Screen length	10.0 ft. ?	

24 hrs later

Additional comments on development:

	11-21	11-22	11-22	11-22
T (°C)	9.6	9.9	9.8	9.5
pH (units)	8.18	7.36	7.74	7.86
cond. (µmhos)	431	680	628	624
Time	3:15 PM	10:45 AM	1:30 PM	400 PM

well to casing: .19
stick-up: 2.4
initial depth to bottom: 253.77
final depth to bottom: 253.77 253.75

Well developed by: Person's Name and Firm

Name: Keith Kolaneli

Firm: ABB-ES

I hereby certify that the above information is true and correct to the best of my knowledge.

Signature: Keith Kolaneli

Firm: ABB-ES

NOTE: Shaded areas are for DNR use only. See instructions for more information.

Started to purge at 3:15 PM
Stopped purge at 5:00 PM - 11-21-91
Started 8 AM - 11-22-91

Data collection e.g. 4.16 hrs (pump)
Stopped at 4:00 PM 11-22-91
(well)

ABB Environmental Services, Inc.

MONITORING WELL DEVELOPMENT FORM

Facility/Project Name: BAAP - USFITHAMA

Well Name: PBN-91-12C

License, Permit or Monitoring Number:

Wis. Unique Well Number:

DNR Well Number:

1. Can this well be purged dry? ☐ Yes ☑ No

2. Well development method

surged with bailer and bailed	☐	4 1
surged with bailer and pumped	☐	6 1
surged with block and bailed	☐	4 2
surged with block and pumped	☐	6 2
surged with block, bailed and pumped	☐	7 0
compressed air	☐	2 0
bailed only	☐	1 0
pumped only (with surging)	☑	5 1
pumped slowly	☐	5 0
Other _____	☐	

3. Time spent developing well: 426 min.

4. Depth of well (from top of well casisng): 185.9 ft.

5. Inside diameter of well: 3.75 in

6. Volume of water in filter pack and well casing: 93.5 gal.

7. Volume of water removed from well: 2077.0 gal.

8. Volume of water added (if any): 670.0 gal.

9. Source of water added: BAAP PW#2

10. Analysis performed on water added? ☑ Yes ☐ No (If yes, attach results)

	Before Development	After Development
11. Depth to Water (from top of well casing)	93.__ ft.	93.05 ft. 90.
Date	11/19/91 (m m d d y y)	11/20/91 (m m d d y y) 11-? 9
Time	11:55 ☑ a.m. ☐ p.m.	12:35 ☐ a.m. ☑ p.m. 4:30pm
12. Sediment in well bottom	___.__ inches	___.__ inches
13. Water clarity	Clear ☐ 10 Turbid ☑ 15 (Describe)	Clear ☑ 20 Turbid ☐ 25 (Describe)

Fill in if drilling fluids were used and well is at solid waste facility:

14. Total suspended solids	____.__ mg/l	____.__ mg/l
15. COD	____.__ mg/l	____.__ mg/l
16. Screen length	10.0 ft.	

Additional comments on development:

	11-19 final	11-19	11-20	11-20 final
T (°C)	11.1	[illegible]	10.2	11.0
pH (units)	7.44	[illegible]	7.32	7.87
cond. (umhos)	941	[illegible]	658	680
Time	[illegible] 1:35 PM	[illegible] 4:10 PM	[illegible] AM	12:20 PM

well to casing: .06
stick-up: 2.55
initial depth to bottom: 185.9
final depth to bottom: 185.87 185.8

Well developed by: Person's Name and Firm

Name: K. Kohanski / Laura Cantera

Firm: ABB-ES

I hereby certify that the above information is true and correct to the best of my knowledge.

Signature: Nancy E. Rofka

Firm: ABB-ES

NOTE: Shaded areas are for DNR use only. See instructions for more information.

started pump 1:35 pm (11-19-91) (2) - 1 pump stopped at 2 PM - pump clogged - (0.5 hr)
↳ 1 pump - 1:35 start (7.06 hr) | 11-19 - stopped pump at 4:30 pm
11-20 - started pump at 8:30 am

ABB Environmental Services, Inc.

MONITORING WELL DEVELOPMENT FORM

Facility/Project Name	Well Name
BAAP - USATHAMA	PBN-91-12D
License, Permit or Monitoring Number	Wis. Unique Well Number / DNR Well Number

1. Can this well be purged dry? ☐ Yes ☑ No

2. Well development method
   - surged with bailer and bailed ☐ 41
   - surged with bailer and pumped ☐ 61
   - surged with block and bailed ☐ 42
   - surged with block and pumped ☐ 62
   - surged with block, bailed and pumped ☐ 70
   - compressed air ☐ 20
   - bailed only ☐ 10
   - pumped only (with surging) ☑ 51
   - pumped slowly ☐ 50
   - Other _____ ☐ ___

3. Time spent developing well 370 min.

4. Depth of well (from top of well casisng) 233.3 ft.

5. Inside diameter of well 4.06 in.

6. Volume of water in filter pack and well casing 125.5 gal.

7. Volume of water removed from well 3128.0 gal.

8. Volume of water added (if any) 835.0 gal.

9. Source of water added BPW #2

10. Analysis performed on water added? ☑ Yes ☐ No (If yes, attach results)

	Before Development	After Development	24 hrs later
11. Depth to Water (from top of well casing)	93.93 ft.	89.30 ft.	89.3
Date	11/18/91 (mm dd yy)	11/19/91 (mm dd yy)	11-2/91
Time	1:45 ☐ a.m. ☒ p.m.	12:30 ☐ a.m. ☒ p.m.	5 AM
12. Sediment in well bottom	___.___ inches	___.___ inches	
13. Water clarity	Clear ☐ 10 Turbid ☑ 15 (Describe)	Clear ☑ 20 Turbid ☐ 25 (Describe)	

Fill in if drilling fluids were used and well is at solid waste facility:

14. Total suspended solids	___.___ mg/l	___.___ mg/l
15. COD	___.___ mg/l	___.___ mg/l
16. Screen length	10.0 ft.	

Additional comments on development:

	11/18 initial		11/19 diff water	final
T (°C)	11.4	10.9	10.6	10.7
pH (units)	7.48	7.4	10.0	8.40
cond. (µmhos)	617	620	389	~~[illegible]~~ 758
Time	2:10pm	4:31pm	8:40 AM	12:20 pm

well to casing: -0.19
stick-up: 2.37
initial depth to bottom: 233.32
final depth to bottom: 233.32

233.30

Well developed by: Person's Name and Firm

Name: M. McGlone / K. Kohanski

Firm: ABB-ES

I hereby certify that the above information is true and correct to the best of my knowledge.

Signature: Nancy E. Roka

Firm: ABB-ES

NOTE: Shaded areas are for DNR use only. See instructions for more information.

11/18 Start of pumping @ 2:00

11/19 Start @ 8:15 2 pumps

11-19 Stopped pumping 12:20

Time spent pumping: 6 hr 10 min

2 1/2

State of Wisconsin
Department of Natural Resources

MONITORING WELL DEVELOPMENT
Form 4400-113B 8-89

Facility/Project Name: BADGER ARMY AMUNITION PLANT
Well Name: PBW-89-01B
License, Permit or Monitoring Number:
Wis. Unique Well Number:
DNR Well Number:

1. Can this well be purged dry? ☐ Yes ☒ No

2. Well development method

surged with bailer and bailed	☐	4 1
surged with bailer and pumped	☐	6 1
surged with block and bailed	☐	4 2
surged with block and pumped	☐	6 2
surged with block, bailed and pumped	☐	7 0
compressed air	☐	2 0
bailed only	☐	1 0
pumped only	☒	5 1
pumped slowly	☐	5 0
Other _____	☐	

3. Time spent developing well: 150 min.
4. Depth of well (from top of well casing): 161.__ ft.
5. Inside diameter of well: 4.0 in.
6. Volume of water in filter pack and well casing: 49.__ gal.
7. Volume of water removed from well: 245.__ gal.
8. Volume of water added (if any): __0.__ gal.
9. Source of water added: _____
10. Analysis performed on water added? ☐ Yes ☒ No (If yes, attach results)

	Before Development	After Development
11. Depth to Water (from top of well casing)	100.89 ft.	100.93 ft.
Date	03/07/89 (m m d d y y)	03/08/89 (m m d d y y)
Time	15:00 ☐ a.m. ☒ p.m.	15:00 ☐ a.m. ☒ p.m.
12. Sediment in well bottom	___.__ inches	___.__ inches
13. Water clarity	Clear ☐ 10 Turbid ☐ 15 (Describe)	Clear ☐ 20 Turbid ☐ 25 (Describe)
Fill in if drilling fluids were used and well is at solid waste facility:		
14. Total suspended solids	_____.__ mg/l	_____.__ mg/l
15. COD	_____.__ mg/l	_____.__ mg/l

Additional comments on development:

Well developed by: Person's Name and Firm

Name: R DAVID DINSMORE
Firm: C E ENVIRONMENTAL

I hereby certify that the above information is true and correct to the best of my knowledge.

Signature:
Firm: C E ENVIRONMENTAL

NOTE: Shaded areas are for DNR use only. See instructions for more information.

State of Wisconsin
Department of Natural Resources

MONITORING WELL DEVELOPMENT
Form 4400-113B 8-89

Facility/Project Name: BADGER ARMY AMUNITION PLANT
Well Name: PBN-89-01C
License, Permit or Monitoring Number:
Wis. Unique Well Number:
DNR Well Number:

		Before Development	After Development
1. Can this well be purged dry?	☐ Yes ☒ No		
2. Well development method			
surged with bailer and bailed	☐ 4 1		
surged with bailer and pumped	☐ 6 1		
surged with block and bailed	☐ 4 2		
surged with block and pumped	☐ 6 2		
surged with block, bailed and pumped	☐ 7 0		
compressed air	☐ 2 0		
bailed only	☐ 1 0		
pumped only	☒ 5 1		
pumped slowly	☐ 5 0		
Other	☐		
11. Depth to Water (from top of well casing)		106.0 ft.	107.09 ft.
Date		04/26/89 (m m d d y y)	10/25/89 (m m d d y y)
Time		14:00 ☐ a.m. ☒ p.m.	__:__ ☐ a.m. ☐ p.m.
12. Sediment in well bottom		__.__ inches	__.__ inches
13. Water clarity		Clear ☐ 10 Turbid ☐ 15 (Describe)	Clear ☐ 20 Turbid ☐ 25 (Describe)
3. Time spent developing well	1892 min.		
4. Depth of well (from top of well casisng)	202.__ ft.		
5. Inside diameter of well	4.1 in.		
6. Volume of water in filter pack and well casing	78.7 gal.		
7. Volume of water removed from well	9460.__ gal.		
8. Volume of water added (if any)	3000.__ gal.		
9. Source of water added			
10. Analysis performed on water added? (If yes, attach results)	☐ Yes ☒ No		
Fill in if drilling fluids were used and well is at solid waste facility:			
14. Total suspended solids		_____.__ mg/l	_____.__ mg/l
15. COD		_____.__ mg/l	_____.__ mg/l

Additional comments on development:

Well developed by: Person's Name and Firm

Name: R. DAVID DINSMORE

Firm: C E ENVIRONMENTAL

I hereby certify that the above information is true and correct to the best of my knowledge.

Signature:

Firm: C E ENVIRONMENTAL

NOTE: Shaded areas are for DNR use only. See instructions for more information.

State of Wisconsin
Department of Natural Resources

MONITORING WELL DEVELOPMENT

Form 4400-113B 8-89

Facility/Project Name: DAGGER ARMY AMMUNITION PLANT

Well Name: PBN-89-01D

License, Permit or Monitoring Number: _____

Wis. Unique Well Number: _____

DNR Well Number: _____

1. Can this well be purged dry? ☐ Yes ☒ No

2. Well development method

surged with bailer and bailed	☐	4 1
surged with bailer and pumped	☐	6 1
surged with block and bailed	☐	4 2
surged with block and pumped	☐	6 2
surged with block, bailed and pumped	☐	7 0
compressed air	☐	2 0
bailed only	☐	1 0
pumped only	☒	5 1
pumped slowly	☐	5 0
Other _____	☐	___

3. Time spent developing well: 120 min.

4. Depth of well (from top of well casisng): 239.__ ft.

5. Inside diameter of well: 4.0 in.

6. Volume of water in filter pack and well casing: 107.__ gal.

7. Volume of water removed from well: 555.__ gal.

8. Volume of water added (if any): __0.__ gal.

9. Source of water added: _____

10. Analysis performed on water added? ☐ Yes ☒ No
(If yes, attach results)

	Before Development	After Development
11. Depth to Water (from top of well casing)	102.14 ft.	102.15 ft.
Date	03/16/89 (m m d d y y)	03/17/89 (m m d d y y)
Time	9:00 ☒ a.m. ☐ p.m.	10:00 ☐ a.m. ☒ p.m.
12. Sediment in well bottom	___.__ inches	___.__ inches
13. Water clarity	Clear ☒ 10 Turbid ☐ 15 (Describe)	Clear ☐ 20 Turbid ☐ 25 (Describe)

Fill in if drilling fluids were used and well is at solid waste facility:

14. Total suspended solids	_____.__ mg/l	_____.__ mg/l
15. COD	_____.__ mg/l	_____.__ mg/l

Additional comments on development:

Well developed by: Person's Name and Firm

Name: R. DAVID DINSMORE

Firm: C E ENVIRONMENTAL

I hereby certify that the above information is true and correct to the best of my knowledge.

Signature: [signature]

Firm: C E ENVIRONMENTAL

NOTE: Shaded areas are for DNR use only. See instructions for more information.

State of Wisconsin
Department of Natural Resources

MONITORING WELL DEVELOPMENT
Form 4400-113B 8-89

Facility/Project Name: BADGER ARMY AMMUNITION PLANT
Well Name: PBN-89-02B
License, Permit or Monitoring Number:
Wis. Unique Well Number:
DNR Well Number:

		Before Development	After Development
1. Can this well be purged dry?	☐ Yes ☒ No		
2. Well development method			
surged with bailer and bailed	☐ 41		
surged with bailer and pumped	☐ 61		
surged with block and bailed	☐ 42		
surged with block and pumped	☐ 62		
surged with block, bailed and pumped	☐ 70		
compressed air	☐ 20		
bailed only	☐ 10		
pumped only	☒ 51		
pumped slowly	☐ 50		
Other	☐		
3. Time spent developing well	75 min.		
4. Depth of well (from top of well casisng)	160.0 ft.		
5. Inside diameter of well	4.0 in.		
6. Volume of water in filter pack and well casing	81.0 gal.		
7. Volume of water removed from well	155.0 gal.		
8. Volume of water added (if any)	0.0 gal.		
9. Source of water added			
10. Analysis performed on water added? (If yes, attach results)	☐ Yes ☒ No		
11. Depth to Water (from top of well casing)		129.23 ft.	129.22 ft.
Date		04/20/89 mm dd yy	04/21/89 mm dd yy
Time		9:45 ☒ a.m. ☐ p.m.	10:00 ☒ a.m. ☐ p.m.
12. Sediment in well bottom		___.__ inches	___.__ inches
13. Water clarity		Clear ☒ 10 Turbid ☐ 15 (Describe)	Clear ☐ 20 Turbid ☐ 25 (Describe)
Fill in if drilling fluids were used and well is at solid waste facility:			
14. Total suspended solids		_____.__ mg/l	_____.__ mg/l
15. COD		_____.__ mg/l	_____.__ mg/l

Additional comments on development:

Well developed by: Person's Name and Firm

Name: R. DAVID DINSMORE

Firm: C E ENVIRONMENTAL

I hereby certify that the above information is true and correct to the best of my knowledge.

Signature: [signature]

Firm: C E ENVIRONMENTAL

NOTE: Shaded areas are for DNR use only. See instructions for more information.

State of Wisconsin
Department of Natural Resources

MONITORING WELL DEVELOPMENT
Form 4400-113B 8-89

Facility/Project Name: BADGER ARMY AMUNITION PLANT
Well Name: PRN-89-02C
License, Permit or Monitoring Number:
Wis. Unique Well Number:
DNR Well Number:

		Before Development	After Development
1. Can this well be purged dry?	☐ Yes ☒ No		
2. Well development method			
surged with bailer and bailed	☐ 4 1		
surged with bailer and pumped	☐ 6 1		
surged with block and bailed	☐ 4 2		
surged with block and pumped	☐ 6 2		
surged with block, bailed and pumped	☐ 7 0		
compressed air	☐ 2 0		
bailed only	☐ 1 0		
pumped only	☒ 5 1		
pumped slowly	☐ 5 0		
Other _____	☐ __		
3. Time spent developing well	120 min.		
4. Depth of well (from top of well casisng)	195.__ ft.		
5. Inside diameter of well	4.0 in.		
6. Volume of water in filter pack and well casing	55.__ gal.		
7. Volume of water removed from well	375.__ gal.		
8. Volume of water added (if any)	__0.__ gal.		
9. Source of water added	_____		
10. Analysis performed on water added? (If yes, attach results)	☐ Yes ☒ No		
11. Depth to Water (from top of well casing)		125.71 ft.	125.80 ft.
Date		04/20/89 m m d d y y	04/21/89 m m d d y y
Time		13:00 ☐ a.m. ☒ p.m.	13:00 ☐ a.m. ☒ p.m.
12. Sediment in well bottom		__.__ inches	__.__ inches
13. Water clarity		Clear ☐ 10 Turbid ☒ 15	Clear ☐ 20 Turbid ☐ 25
(Describe)		white cloudy color	
Fill in if drilling fluids were used and well is at solid waste facility:			
14. Total suspended solids		____.__ mg/l	____.__ mg/l
15. COD		____.__ mg/l	____.__ mg/l

Additional comments on development:

Well developed by: Person's Name and Firm

Name: R. DAVID DINSMORE

Firm: C E ENVIRONMENTAL

I hereby certify that the above information is true and correct to the best of my knowledge.

Signature: [signature]

Firm: C E ENVIRONMENTAL

NOTE: Shaded areas are for DNR use only. See instructions for more information.

State of Wisconsin
Department of Natural Resources

MONITORING WELL DEVELOPMENT
Form 4400-113B 8-89

Facility/Project Name: BADGER ARMY AMMUNITION PLANT
Well Name: PBN-89-03B
License, Permit or Monitoring Number:
Wis. Unique Well Number:
DNR Well Number:

		Before Development	After Development
1. Can this well be purged dry?	☐ Yes ☒ No		
2. Well development method			
surged with bailer and bailed	☐ 41		
surged with bailer and pumped	☐ 61		
surged with block and bailed	☐ 42		
surged with block and pumped	☐ 62		
surged with block, bailed and pumped	☐ 70		
compressed air	☐ 20		
bailed only	☐ 10		
pumped only	☒ 51		
pumped slowly	☐ 50		
Other _____	☐ ___		
11. Depth to Water (from top of well casing)		75.93 ft.	78.00 ft.
Date		03/16/89 (m m d d y y)	03/17/89 (m m d d y y)
Time		12:30 ☐ a.m. ☒ p.m.	13:00 ☐ a.m. ☒ p.m.
12. Sediment in well bottom		___.__ inches	___.__ inches
13. Water clarity		Clear ☐ 10 Turbid ☐ 15 (Describe)	Clear ☐ 20 Turbid ☐ 25 (Describe)
3. Time spent developing well	150 min.		
4. Depth of well (from top of well casisng)	125.__ ft.		
5. Inside diameter of well	4.0 in.		
6. Volume of water in filter pack and well casing	40.__ gal.		
7. Volume of water removed from well	200.__ gal.		
8. Volume of water added (if any)	0.__ gal.		
9. Source of water added	_____		
10. Analysis performed on water added? (If yes, attach results)	☐ Yes ☒ No		
Fill in if drilling fluids were used and well is at solid waste facility:			
14. Total suspended solids		____.__ mg/l	____.__ mg/l
15. COD		____.__ mg/l	____.__ mg/l

Additional comments on development:

Well developed by: Person's Name and Firm

Name: R. D. DINSMORE

Firm: C E ENVIRONMENTAL

I hereby certify that the above information is true and correct to the best of my knowledge.

Signature: [signature]

Firm: C E ENVIRONMENTAL

NOTE: Shaded areas are for DNR use only. See instructions for more information.

State of Wisconsin
Department of Natural Resources

MONITORING WELL DEVELOPMENT

Form 4400-113B 8-89

Facility/Project Name: BADGER ARMY AMUNITION PLANT

Well Name: PBN-87-03C

License, Permit or Monitoring Number:

Wis. Unique Well Number:

DNR Well Number:

1. Can this well be purged dry? ☐ Yes ☒ No

2. Well development method

surged with bailer and bailed	☐	4 1
surged with bailer and pumped	☐	6 1
surged with block and bailed	☐	4 2
surged with block and pumped	☐	6 2
surged with block, bailed and pumped	☐	7 0
compressed air	☐	2 0
bailed only	☐	1 0
pumped only	☒	5 1
pumped slowly	☐	5 0
Other _____	☐	___

3. Time spent developing well: 1418 min.

4. Depth of well (from top of well casisng): 162.__ ft.

5. Inside diameter of well: 4.0 in.

6. Volume of water in filter pack and well casing: 95.__ gal.

7. Volume of water removed from well: 8475.__ gal.

8. Volume of water added (if any): 2400.__ gal.

9. Source of water added: _____

10. Analysis performed on water added? ☐ Yes ☒ No
(If yes, attach results)

	Before Development	After Development
11. Depth to Water (from top of well casing)	74.83 ft.	74.87 ft.
Date	04/22/89 (m m d d y y)	04/23/89 (m m d d y y)
Time	9:35 ☒ a.m. ☐ p.m.	10:00 ☒ a.m. ☐ p.m.
12. Sediment in well bottom	___.__ inches	___.__ inches
13. Water clarity	Clear ☒ 10 Turbid ☐ 15 (Describe)	Clear ☐ 20 Turbid ☐ 25 (Describe)

Fill in if drilling fluids were used and well is at solid waste facility:

14. Total suspended solids	_____.__ mg/l	_____.__ mg/l
15. COD	_____.__ mg/l	_____.__ mg/l

Additional comments on development:

Well developed by: Person's Name and Firm

Name: R. DAVID DINSMORE

Firm: C E ENVIRONMENTAL

I hereby certify that the above information is true and correct to the best of my knowledge.

Signature: [signature]

Firm: C E ENVIRONMENTAL

NOTE: Shaded areas are for DNR use only. See instructions for more information.

State of Wisconsin
Department of Natural Resources

MONITORING WELL DEVELOPMENT
Form 4400-113B 8-89

Facility/Project Name: BADGER ARMY AMUNITION PLANT
Well Name: PSN-89-04B
License, Permit or Monitoring Number:
Wis. Unique Well Number:
DNR Well Number:

1. Can this well be purged dry? ☐ Yes ☒ No

2. Well development method

surged with bailer and bailed	☐	4 1
surged with bailer and pumped	☐	6 1
surged with block and bailed	☐	4 2
surged with block and pumped	☐	6 2
surged with block, bailed and pumped	☐	7 0
compressed air	☐	2 0
bailed only	☐	1 0
pumped only	☒	5 1
pumped slowly	☐	5 0
Other _____	☐	___

3. Time spent developing well ____ min.
4. Depth of well (from top of well casisng) 146.__ ft.
5. Inside diameter of well 4.0 in.
6. Volume of water in filter pack and well casing 54.__ gal.
7. Volume of water removed from well 1170.__ gal.
8. Volume of water added (if any) ≥ 300.__ gal.
9. Source of water added _____
10. Analysis performed on water added? ☐ Yes ☒ No (If yes, attach results)

	Before Development	After Development
11. Depth to Water (from top of well casing)	89.40 ft.	89.4 ft.
Date	04/22/89 (mm dd yy)	04/25/89 (mm dd yy)
Time	13:00 ☐ a.m. ☒ p.m.	13:00 ☐ a.m. ☒ p.m.
12. Sediment in well bottom	__.__ inches	__.__ inches
13. Water clarity	Clear ☐ 10 Turbid ☒ 15 (Describe) DK. BROWN	Clear ☐ 20 Turbid ☐ 25 (Describe)
Fill in if drilling fluids were used and well is at solid waste facility:		
14. Total suspended solids	____.__ mg/l	____.__ mg/l
15. COD	____.__ mg/l	____.__ mg/l

Additional comments on development:

Well developed by: Person's Name and Firm
Name: R. DAVID DINSMORE
Firm: C E ENVIRONMENTAL

I hereby certify that the above information is true and correct to the best of my knowledge.
Signature: [signature]
Firm: C E ENVIRONMENTAL

NOTE: Shaded areas are for DNR use only. See instructions for more information.

State of Wisconsin
Department of Natural Resources

MONITORING WELL DEVELOPMENT

Form 4400-113B 8-89

Facility/Project Name: BADGER ARMY AMUNITION PLANT

Well Name: PBN-89-04C

License, Permit or Monitoring Number:

Wis. Unique Well Number:

DNR Well Number:

1. Can this well be purged dry? ☐ Yes ☒ No

2. Well development method

surged with bailer and bailed	☐	4 1
surged with bailer and pumped	☐	6 1
surged with block and bailed	☐	4 2
surged with block and pumped	☐	6 2
surged with block, bailed and pumped	☐	7 0
compressed air	☐	2 0
bailed only	☐	1 0
pumped only	☒	5 1
pumped slowly	☐	5 0
Other _____	☐	___

3. Time spent developing well: 1520 min.

4. Depth of well (from top of well casisng): 198.__ ft.

5. Inside diameter of well: 4.0 in.

6. Volume of water in filter pack and well casing: 86.__ gal.

7. Volume of water removed from well: 1425.__ gal.

8. Volume of water added (if any): 3000.__ gal.

9. Source of water added: _____

10. Analysis performed on water added? ☐ Yes ☒ No
(If yes, attach results)

	Before Development	After Development
11. Depth to Water (from top of well casing)	92.20 ft.	91.96 ft.
Date	04/23/89 (m m d d y y)	04/26/89 (m m d d y y)
Time	10:15 ☒ a.m. ☐ p.m.	11:00 ☒ a.m. ☐ p.m.
12. Sediment in well bottom	___.__ inches	___.__ inches
13. Water clarity	Clear ☒ 10 Turbid ☐ 15 (Describe)	Clear ☐ 20 Turbid ☐ 25 (Describe)

Fill in if drilling fluids were used and well is at solid waste facility:

14. Total suspended solids	_____.__ mg/l	_____.__ mg/l
15. COD	_____.__ mg/l	_____.__ mg/l

Additional comments on development:

Well developed by: Person's Name and Firm

Name: R. DAVID DINSMORE

Firm: C E ENVIRONMENTAL

I hereby certify that the above information is true and correct to the best of my knowledge.

Signature: [signature]

Firm: C E ENVIRONMENTAL

NOTE: Shaded areas are for DNR use only. See instructions for more information.

State of Wisconsin
Department of Natural Resources

MONITORING WELL DEVELOPMENT

Form 4400-113B 8-89

Facility/Project Name: BADGER ARMY AMUNITION PLANT

Well Name: PBM - 89-05

License, Permit or Monitoring Number: _____

Wis. Unique Well Number: _____

DNR Well Number: _____

1. Can this well be purged dry? ☐ Yes ☒ No

2. Well development method

surged with bailer and bailed	☐	4 1
surged with bailer and pumped	☐	6 1
surged with block and bailed	☐	4 2
surged with block and pumped	☐	6 2
surged with block, bailed and pumped	☐	7 0
compressed air	☐	2 0
bailed only	☐	1 0
pumped only	☒	5 1
pumped slowly	☐	5 0
Other _____	☐	

3. Time spent developing well: 420 min.

4. Depth of well (from top of well casisng): 98.__ ft.

5. Inside diameter of well: 4.0 in.

6. Volume of water in filter pack and well casing: 36.__ gal.

7. Volume of water removed from well: 5180.0 gal.

8. Volume of water added (if any): * 1000.0 gal.

9. Source of water added: _____

10. Analysis performed on water added? ☐ Yes ☐ No
(If yes, attach results)

	Before Development	After Development
11. Depth to Water (from top of well casing)	83.79 ft.	83.80 ft.
Date	04/21/89 (m m d d y y)	04/23/89 (m m d d y y)
Time	10:00 ☒ a.m. ☐ p.m.	10:00 ☒ a.m. ☐ p.m.
12. Sediment in well bottom	___.__ inches	___.__ inches
13. Water clarity	Clear ■ 10 Turbid ☐ 15 (Describe)	Clear ☐ 20 Turbid ☐ 25 (Describe)
Fill in if drilling fluids were used and well is at solid waste facility:		
14. Total suspended solids	_____.__ mg/l	_____.__ mg/l
15. COD	_____.__ mg/l	_____.__ mg/l

Additional comments on development:

* only multiplied by 3 in the volume calculation instead of 5.

Well developed by: Person's Name and Firm

Name: R. David Dinsmore

Firm: C E Environmental

I hereby certify that the above information is true and correct to the best of my knowledge.

Signature: [signature]

Firm: CE Environmental

NOTE: Shaded areas are for DNR use only. See instructions for more information.

State of Wisconsin
Department of Natural Resources

MONITORING WELL DEVELOPMENT
Form 4400-113B 8-89

Facility/Project Name: BADGER ARMY AMUNITION PLANT
Well Name: PBM-89-06
License, Permit or Monitoring Number:
Wis. Unique Well Number:
DNR Well Number:

1. Can this well be purged dry? ☐ Yes ☐ No

2. Well development method

surged with bailer and bailed	☐	4 1
surged with bailer and pumped	☐	6 1
surged with block and bailed	☐	4 2
surged with block and pumped	☐	6 2
surged with block, bailed and pumped	☐	7 0
compressed air	☐	2 0
bailed only	☐	1 0
pumped only	☐	5 1
pumped slowly	☐	5 0
Other _____	☐	

3. Time spent developing well ____ min.

4. Depth of well (from top of well casisng) ____.__ ft.

5. Inside diameter of well ____.__ in.

6. Volume of water in filter pack and well casing ____.__ gal.

7. Volume of water removed from well ____.__ gal.

8. Volume of water added (if any) ____.__ gal.

9. Source of water added _____

10. Analysis performed on water added? ☐ Yes ☐ No
(If yes, attach results)

	Before Development	After Development
11. Depth to Water (from top of well casing)	____.__ ft.	____.__ ft.
Date	__/__/__ m m d d y y	__/__/__ m m d d y y
Time	__:__ ☐ a.m. ☐ p.m.	__:__ ☐ a.m. ☐ p.m.
12. Sediment in well bottom	__.__ inches	__.__ inches
13. Water clarity	Clear ☐ 10 Turbid ☐ 15 (Describe)	Clear ☐ 20 Turbid ☐ 25 (Describe)

Fill in if drilling fluids were used and well is at solid waste facility:

14. Total suspended solids	____.__ mg/l	____.__ mg/l
15. COD	____.__ mg/l	____.__ mg/l

Additional comments on development:

WELL NOT DEVLOPED DUE TO LACK OF WATER

Well developed by: Person's Name and Firm

Name: R. DAVID DINSMORE

Firm: C E ENVIRONMENTAL

I hereby certify that the above information is true and correct to the best of my knowledge.

Signature: _____

Firm: C E ENVIRONMENTAL

NOTE: Shaded areas are for DNR use only. See instructions for more information.

State of Wisconsin
Department of Natural Resources

MONITORING WELL DEVELOPMENT

Form 4400-113B 8-89

Facility/Project Name: BADGER ARMY AMMUNITION PLANT

Well Name: PBM-89-07

License, Permit or Monitoring Number: _____

Wis. Unique Well Number: _____

DNR Well Number: _____

1. Can this well be purged dry? ☐ Yes ☒ No

2. Well development method

surged with bailer and bailed	☐	4 1
surged with bailer and pumped	☐	6 1
surged with block and bailed	☐	4 2
surged with block and pumped	☐	6 2
surged with block, bailed and pumped	☐	7 0
compressed air	☐	2 0
bailed only	☐	1 0
pumped only	☒	5 1
pumped slowly	☐	5 0
Other _____	☐	

3. Time spent developing well: 60 min.

4. Depth of well (from top of well casisng): 91.0 ft.

5. Inside diameter of well: 4.0 in.

6. Volume of water in filter pack and well casing: 31.0 gal.

7. Volume of water removed from well: 155.0 gal.

8. Volume of water added (if any): 0.0 gal.

9. Source of water added: _____

10. Analysis performed on water added? ☐ Yes ☒ No (If yes, attach results)

	Before Development	After Development
11. Depth to Water (from top of well casing)	79.73 ft.	79.65 ft.
Date	03/21/89 (m m d d y y)	03/21/89 (m m d d y y)
Time	11:00 ☒ a.m. ☐ p.m.	11:00 ☒ a.m. ☐ p.m.
12. Sediment in well bottom	___.__ inches	___.__ inches
13. Water clarity	Clear ☒ 10 Turbid ☐ 15 (Describe)	Clear ☐ 20 Turbid ☐ 25 (Describe)
Fill in if drilling fluids were used and well is at solid waste facility:		
14. Total suspended solids	_____.__ mg/l	_____.__ mg/l
15. COD	_____.__ mg/l	_____.__ mg/l

Additional comments on development:

Well developed by: Person s Name and Firm

Name: R. DAVID DINSMORE

Firm: C. E ENVIRONMENTAL

I hereby certify that the above information is true and correct to the best of my knowledge.

Signature: William Dinsmore

Firm: C. E ENVIRONMENTAL

NOTE: Shaded areas are for DNR use only. See instructions for more information.

State of Wisconsin
Department of Natural Resources

MONITORING WELL DEVELOPMENT

Form 4400-113B 8-89

Facility/Project Name: BADGER ARMY AMMUNITION PLANT

Well Name: PBM-89-08

License, Permit or Monitoring Number:

Wis. Unique Well Number:

DNR Well Number:

1. Can this well be purged dry? ☐ Yes ☒ No

2. Well development method

surged with bailer and bailed	☐	4 1
surged with bailer and pumped	☐	6 1
surged with block and bailed	☐	4 2
surged with block and pumped	☐	6 2
surged with block, bailed and pumped	☐	7 0
compressed air	☐	2 0
bailed only	☐	1 0
pumped only	☒	5 1
pumped slowly	☐	5 0
Other _____	☐	___

3. Time spent developing well 615 min.

4. Depth of well (from top of well casisng) 127.__ ft.

5. Inside diameter of well 4.0 in.

6. Volume of water in filter pack and well casing 28.__ gal.

7. Volume of water removed from well 6165.__ gal.

8. Volume of water added (if any) 3000.__ gal.

9. Source of water added _____

10. Analysis performed on water added? ☐ Yes ☒ No
(If yes, attach results)

	Before Development	After Development
11. Depth to Water (from top of well casing)	119.00 ft.	120.57 ft.
Date	04/26/89 (m m d d y y)	12/13/89 (m m d d y y)
Time	10:50 ☐ a.m. ☒ p.m.	__:__ ☐ a.m. ☐ p.m.
12. Sediment in well bottom	___.__ inches	___.__ inches
13. Water clarity	Clear ☐ 10 Turbid ☒ 15 (Describe)	Clear ☐ 20 Turbid ☐ 25 (Describe)
Fill in if drilling fluids were used and well is at solid waste facility:		
14. Total suspended solids	_____.__ mg/l	_____.__ mg/l
15. COD	_____.__ mg/l	_____.__ mg/l

Additional comments on development:

Well developed by: Person's Name and Firm

Name: R. DAVID DIKSMOLE

Firm: C E ENVIRONMENTAL

I hereby certify that the above information is true and correct to the best of my knowledge.

Signature: [signature]

Firm: C E ENVIRONMENTAL

NOTE: Shaded areas are for DNR use only. See instructions for more information.

State of Wisconsin
Department of Natural Resources

MONITORING WELL DEVELOPMENT

Form 4400-113B 8-89

Facility/Project Name: RADGER ARMY AMUNITION PLANT

Well Name: ELM-89-01

License, Permit or Monitoring Number:

Wis. Unique Well Number:

DNR Well Number:

1. Can this well be purged dry? ☐ Yes ☒ No

2. Well development method

surged with bailer and bailed	☐	4 1
surged with bailer and pumped	☐	6 1
surged with block and bailed	☐	4 2
surged with block and pumped	☐	6 2
surged with block, bailed and pumped	☐	7 0
compressed air	☐	2 0
bailed only	☐	1 0
pumped only	☒	5 1
pumped slowly	☐	5 0
Other _____	☐	___

3. Time spent developing well: 165 min.

4. Depth of well (from top of well casisng): 182.1 ft.

5. Inside diameter of well: 4.0 in.

6. Volume of water in filter pack and well casing: 49.0 gal.

7. Volume of water removed from well: 245.__ gal.

8. Volume of water added (if any): __0.0 gal.

9. Source of water added: NA

10. Analysis performed on water added? ☐ Yes ☒ No
(If yes, attach results)

	Before Development	After Development
11. Depth to Water (from top of well casing)	142.47 ft.	142.43 ft.
Date	03/01/89 (m m d d y y)	03/02/89 (m m d d y y)
Time	10:00 ☒ a.m. ☐ p.m.	12:00 ☐ a.m. ☐ p.m.
12. Sediment in well bottom	___.__ inches	___.__ inches
13. Water clarity	Clear ☒ 10 Turbid ☐ 15 (Describe)	Clear ☐ 20 Turbid ☐ 25 (Describe)
Fill in if drilling fluids were used and well is at solid waste facility:		
14. Total suspended solids	_____.__ mg/l	_____.__ mg/l
15. COD	_____.__ mg/l	_____.__ mg/l

Additional comments on development:

Well developed by: Person's Name and Firm

Name: R. DAVID DINSMORE

Firm: C.E ENVIRONMENTAL

I hereby certify that the above information is true and correct to the best of my knowledge.

Signature: Willard Dyche

Firm: CE ENVIRONMENTAL

NOTE: Shaded areas are for DNR use only. See instructions for more information.

State of Wisconsin
Department of Natural Resources

MONITORING WELL DEVELOPMENT
Form 4400-113B 8-89

Facility/Project Name: BAGER ARMY AMMUNITION PLANT
Well Name: EGM-89-02A
License, Permit or Monitoring Number:
Wis. Unique Well Number:
DNR Well Number:

1. Can this well be purged dry? ☒ Yes ☐ No

2. Well development method

surged with bailer and bailed	☐	4 1
surged with bailer and pumped	☐	6 1
surged with block and bailed	☐	4 2
surged with block and pumped	☐	6 2
surged with block, bailed and pumped	☐	7 0
compressed air	☐	2 0
bailed only	☐	1 0
pumped only	☐	5 1
pumped slowly	☐	5 0
Other _____	☐	

3. Time spent developing well: 60 min.
4. Depth of well (from top of well casisng): 146. ft.
5. Inside diameter of well: 4.0 in.
6. Volume of water in filter pack and well casing: 26. gal.
7. Volume of water removed from well: 0.0 gal.
8. Volume of water added (if any): 0.0 gal.
9. Source of water added: _____
10. Analysis performed on water added? ☐ Yes ☐ No (If yes, attach results)

	Before Development	After Development
11. Depth to Water (from top of well casing)	140.74 ft.	142.72 ft.
Date	03/04/89 (m m d d y y)	10/25/89 (m m d d y y)
Time	13:00 ☐ a.m. ☐ p.m.	__:__ ☐ a.m. ☐ p.m.
12. Sediment in well bottom	__.__ inches	__.__ inches
13. Water clarity	Clear ☐ 10 Turbid ☐ 15 (Describe)	Clear ☐ 20 Turbid ☐ 25 (Describe)
Fill in if drilling fluids were used and well is at solid waste facility:		
14. Total suspended solids	_____.__ mg/l	_____.__ mg/l
15. COD	_____.__ mg/l	_____.__ mg/l

Additional comments on development:

NO WATER PUMPED FROM WELL. PUMP INTAKE HIGHER THAN WATER LEVEL

Well developed by: Person's Name and Firm

Name: R. DAVID DINSMORE

Firm: C. E ENVIRONMENTAL

I hereby certify that the above information is true and correct to the best of my knowledge.

Signature: [signature]

Firm: C. E ENVIRONMENTAL

NOTE: Shaded areas are for DNR use only. See instructions for more information.

State of Wisconsin
Department of Natural Resources

MONITORING WELL DEVELOPMENT

Form 4400-113B 8-89

Facility/Project Name: BADGER ARMY AMMUNITION PLANT

Well Name: ELN-89-02B

License, Permit or Monitoring Number: _____

Wis. Unique Well Number: _____

DNR Well Number: _____

1. Can this well be purged dry? ☐ Yes ☒ No

2. Well development method

surged with bailer and bailed	☐	4 1
surged with bailer and pumped	☐	6 1
surged with block and bailed	☐	4 2
surged with block and pumped	☐	6 2
surged with block, bailed and pumped	☐	7 0
compressed air	☐	2 0
bailed only	☐	1 0
pumped only	☒	5 1
pumped slowly	☐	5 0
Other _____	☐	___

3. Time spent developing well: 30 min.

4. Depth of well (from top of well casisng): 179.0 ft.

5. Inside diameter of well: 4.0 in.

6. Volume of water in filter pack and well casing: 57.0 gal.

7. Volume of water removed from well: 185.0 gal.

8. Volume of water added (if any): 0.0 gal.

9. Source of water added: _____

10. Analysis performed on water added? ☐ Yes ☒ No
(If yes, attach results)

	Before Development	After Development
11. Depth to Water (from top of well casing)	141.88 ft.	143.41 ft.
Date	05/02/89 (m m d d y y)	10/25/89 (m m d d y y)
Time	8:30 ☒ a.m. ☐ p.m.	__:__ ☐ a.m. ☐ p.m.
12. Sediment in well bottom	__.__ inches	__.__ inches
13. Water clarity	Clear ☐ 10 Turbid ☒ 15 (Describe)	Clear ☐ 20 Turbid ☐ 25 (Describe)
Fill in if drilling fluids were used and well is at solid waste facility:		
14. Total suspended solids	_____.__ mg/l	_____.__ mg/l
15. COD	_____.__ mg/l	_____.__ mg/l

Additional comments on development:

Well developed by: Person's Name and Firm

Name: _____

Firm: C E ENVIRONMENTAL

I hereby certify that the above information is true and correct to the best of my knowledge.

Signature: [signature]

Firm: C E ENVIRONMENTAL

NOTE: Shaded areas are for DNR use only. See instructions for more information.

State of Wisconsin
Department of Natural Resources

MONITORING WELL DEVELOPMENT
Form 4400-113B 8-89

Facility/Project Name: BADGER ARMY AMUNITION PLANT
Well Name: ELM-89-03
License, Permit or Monitoring Number:
Wis. Unique Well Number:
DNR Well Number:

1. Can this well be purged dry? ☐ Yes ☒ No

2. Well development method

surged with bailer and bailed	☐	4 1
surged with bailer and pumped	☐	6 1
surged with block and bailed	☐	4 2
surged with block and pumped	☐	6 2
surged with block, bailed and pumped	☐	7 0
compressed air	☐	2 0
bailed only	☐	1 0
pumped only	☒	5 1
pumped slowly	☐	5 0
Other _____	☐	___

3. Time spent developing well: 80 min.
4. Depth of well (from top of well casisng): 151.1 ft.
5. Inside diameter of well: 4.0 in.
6. Volume of water in filter pack and well casing: 34.__ gal.
7. Volume of water removed from well: 180.__ gal.
8. Volume of water added (if any): ____.__ gal.
9. Source of water added: _____
10. Analysis performed on water added? ☐ Yes ☒ No (If yes, attach results)

	Before Development	After Development
11. Depth to Water (from top of well casing)	137.24 ft.	137.18 ft.
Date	03/04/89 (m m d d y y)	03/05/89 (m m d d y y)
Time	15:10 ☐ a.m. ☒ p.m.	16:00 ☐ a.m. ☒ p.m.
12. Sediment in well bottom	___.__ inches	___.__ inches
13. Water clarity	Clear ☒ 10 Turbid ☐ 15 (Describe)	Clear ☐ 20 Turbid ☐ 25 (Describe)
Fill in if drilling fluids were used and well is at solid waste facility:		
14. Total suspended solids	_____.__ mg/l	_____.__ mg/l
15. COD	_____.__ mg/l	_____.__ mg/l

Additional comments on development:

Well developed by: Person's Name and Firm

Name: R. DAVID DIMSMORE
Firm: C-E ENVIRONMENTAL

I hereby certify that the above information is true and correct to the best of my knowledge.

Signature: [signature]
Firm: C-E ENVIRONMENTAL

NOTE: Shaded areas are for DNR use only. See instructions for more information.

State of Wisconsin
Department of Natural Resources

MONITORING WELL DEVELOPMENT
Form 4400-113B 8-89

Facility/Project Name: BADGER ARMY AMUNITION PLANT

Well Name: ELN-89-04A

License, Permit or Monitoring Number: _____

Wis. Unique Well Number: _____

DNR Well Number: _____

1. Can this well be purged dry? ☐ Yes ☒ No

2. Well development method

surged with bailer and bailed	☐	4 1
surged with bailer and pumped	☐	6 1
surged with block and bailed	☐	4 2
surged with block and pumped	☐	6 2
surged with block, bailed and pumped	☐	7 0
compressed air	☐	2 0
bailed only	☐	1 0
pumped only	☒	5 1
pumped slowly	☐	5 0
Other _____	☐	___

3. Time spent developing well: 480 min.

4. Depth of well (from top of well casisng): 163.__ ft.

5. Inside diameter of well: 4.0 in.

6. Volume of water in filter pack and well casing: 36.__ gal.

7. Volume of water removed from well: 1680.__ gal.

8. Volume of water added (if any): 360.__ gal.

9. Source of water added: _____

10. Analysis performed on water added? ☐ Yes ☒ No
(If yes, attach results)

	Before Development	After Development
11. Depth to Water (from top of well casing)	147.54 ft.	147.97 ft.
Date	04/28/89 (m m d d y y)	10/25/89 (m m d d y y)
Time	14:30 ☐ a.m. ☒ p.m.	__:__ ☐ a.m. ☐ p.m.
12. Sediment in well bottom	__.__ inches	__.__ inches
13. Water clarity	Clear ☒ 10 Turbid ☐ 15 (Describe)	Clear ☐ 20 Turbid ☐ 25 (Describe)

Fill in if drilling fluids were used and well is at solid waste facility:

14. Total suspended solids	_____.__ mg/l	_____.__ mg/l
15. COD	_____.__ mg/l	_____.__ mg/l

Additional comments on development:

Well developed by: Person's Name and Firm

Name: GEOFF KNIGHT

Firm: C E ENVIRONMENTAL

I hereby certify that the above information is true and correct to the best of my knowledge.

Signature: [signature]

Firm: C E ENVIRONMENTAL

NOTE: Shaded areas are for DNR use only. See instructions for more information.

State of Wisconsin
Department of Natural Resources

MONITORING WELL DEVELOPMENT
Form 4400-113B 8-89

Facility/Project Name: BADGER ARMY AMUNITION PLANT
Well Name: ELN-89-04B
License, Permit or Monitoring Number:
Wis. Unique Well Number:
DNR Well Number:

1. Can this well be purged dry? ☐ Yes ☒ No

2. Well development method

surged with bailer and bailed	☐	4 1
surged with bailer and pumped	☐	6 1
surged with block and bailed	☐	4 2
surged with block and pumped	☐	6 2
surged with block, bailed and pumped	☐	7 0
compressed air	☐	2 0
bailed only	☐	1 0
pumped only	☒	5 1
pumped slowly	☐	5 0
Other _____	☐	

3. Time spent developing well: 45 min.

4. Depth of well (from top of well casisng): 199.__ ft.

5. Inside diameter of well: 4.0 in.

6. Volume of water in filter pack and well casing: 44.__ gal.

7. Volume of water removed from well: 220.__ gal.

8. Volume of water added (if any): 0.__ gal.

9. Source of water added: _____

10. Analysis performed on water added? ☐ Yes ☒ No
(If yes, attach results)

	Before Development	After Development
11. Depth to Water (from top of well casing)	148.62 ft.	149.19 ft.
Date	04/28/89 (m m d d y y)	10/25/89 (m m d d y y)
Time	11:00 ☒ a.m. ☐ p.m.	__:__ ☐ a.m. ☐ p.m.
12. Sediment in well bottom	__.__ inches	__.__ inches
13. Water clarity	Clear ☒ 10 Turbid ☐ 15 (Describe)	Clear ☐ 20 Turbid ☐ 25 (Describe)

Fill in if drilling fluids were used and well is at solid waste facility:

14. Total suspended solids	_____.__ mg/l	_____.__ mg/l
15. COD	_____.__ mg/l	_____.__ mg/l

Additional comments on development:

Well developed by: Person's Name and Firm

Name: VICKI MILLER

Firm: C E ENVIRONMENTAL

I hereby certify that the above information is true and correct to the best of my knowledge.

Signature: [signature]

Firm: C E ENVIRONMENTAL

NOTE: Shaded areas are for DNR use only. See instructions for more information.

State of Wisconsin
Department of Natural Resources

MONITORING WELL DEVELOPMENT

Form 4400-113B 8-89

Facility/Project Name: BADGER ARMY AMMUNITION PLANT

Well Name: ELM-89-05

License, Permit or Monitoring Number: _____

Wis. Unique Well Number: _____ DNR Well Number: _____

		Before Development	After Development
1. Can this well be purged dry?	☐ Yes ☐ No		
2. Well development method			
surged with bailer and bailed	☐ 4 1		
surged with bailer and pumped	☐ 6 1		
surged with block and bailed	☐ 4 2		
surged with block and pumped	☐ 6 2		
surged with block, bailed and pumped	☐ 7 0		
compressed air	☐ 2 0		
bailed only	☐ 1 0		
pumped only	☒ 5 1		
pumped slowly	☐ 5 0		
Other _____	☐ ___		
11. Depth to Water (from top of well casing)		121.18 ft.	121.0 ft.
Date		03/01/89 (m m d d y y)	03/02/89 (m m d d y y)
Time		14:15 ☐ a.m. ☒ p.m.	15:00 ☐ a.m. ☒ p.m.
12. Sediment in well bottom		___.__ inches	___.__ inches
13. Water clarity		Clear ☒ 10 Turbid ☐ 15 (Describe)	Clear ☐ 20 Turbid ☐ 25 (Describe)
3. Time spent developing well	60 min.		
4. Depth of well (from top of well casisng)	128.__ ft.		
5. Inside diameter of well	4.0 in.		
6. Volume of water in filter pack and well casing	27.__ gal.		
7. Volume of water removed from well	135.__ gal.		
8. Volume of water added (if any)	0.__ gal.		
9. Source of water added	_____		
10. Analysis performed on water added? (If yes, attach results)	☐ Yes ☒ No		
Fill in if drilling fluids were used and well is at solid waste facility:			
14. Total suspended solids		____.__ mg/l	____.__ mg/l
15. COD		____.__ mg/l	____.__ mg/l

Additional comments on development:

Well developed by: Person's Name and Firm

Name: R DAVID DINSMORE

Firm: C E ENVIRONMENTAL

I hereby certify that the above information is true and correct to the best of my knowledge.

Signature: [signature]

Firm: C E ENVIRONMENTAL

NOTE: Shaded areas are for DNR use only. See instructions for more information.

State of Wisconsin
Department of Natural Resources

MONITORING WELL DEVELOPMENT

Form 4400-113B 8-89

Facility/Project Name: BADGER ARMY AMMUNITION PLANT

Well Name: ELN-89-06B

License, Permit or Monitoring Number: _____

Wis. Unique Well Number: _____

DNR Well Number: _____

1. Can this well be purged dry? ☐ Yes ☒ No

2. Well development method

surged with bailer and bailed	☐	4 1
surged with bailer and pumped	☐	6 1
surged with block and bailed	☐	4 2
surged with block and pumped	☐	6 2
surged with block, bailed and pumped	☐	7 0
compressed air	☐	2 0
bailed only	☐	1 0
pumped only	☒	5 1
pumped slowly	☐	5 0
Other _____	☐	___

3. Time spent developing well: 287 min.

4. Depth of well (from top of well casing): 183.__ ft.

5. Inside diameter of well: 4.0 in.

6. Volume of water in filter pack and well casing: 45.__ gal.

7. Volume of water removed from well: 1725.__ gal.

8. Volume of water added (if any): 300.__ gal.

9. Source of water added: _____

10. Analysis performed on water added? ☐ Yes ☐ No
(If yes, attach results)

	Before Development	After Development
11. Depth to Water (from top of well casing)	129.59 ft.	129.48 ft.
Date	05/03/89 (m m d d y y)	05/04/89 (m m d d y y)
Time	__:__ ☐ a.m. ☐ p.m.	__:__ ☐ a.m. ☐ p.m.
12. Sediment in well bottom	__.__ inches	__.__ inches
13. Water clarity	Clear ☐ 10 Turbid ☐ 15 (Describe)	Clear ☐ 20 Turbid ☐ 25 (Describe)
Fill in if drilling fluids were used and well is at solid waste facility:		
14. Total suspended solids	_____.__ mg/l	_____.__ mg/l
15. COD	_____.__ mg/l	_____.__ mg/l

Additional comments on development:

Well developed by: Person's Name and Firm

Name: _____

Firm: C E ENVIRONMENTAL

I hereby certify that the above information is true and correct to the best of my knowledge.

Signature: [signature]

Firm: C E ENVIRONMENTAL

NOTE: Shaded areas are for DNR use only. See instructions for more information.

State of Wisconsin
Department of Natural Resources

MONITORING WELL DEVELOPMENT
Form 4400-113B 8-89

Facility/Project Name	Well Name	
BADGER ARMY AMUNITION PLANT	ELM-89-07	
License, Permit or Monitoring Number	Wis. Unique Well Number	DNR Well Number
_____	_____	___

1. Can this well be purged dry? ☐ Yes ☒ No

2. Well development method

surged with bailer and bailed	☐	41
surged with bailer and pumped	☐	61
surged with block and bailed	☐	42
surged with block and pumped	☐	62
surged with block, bailed and pumped	☐	70
compressed air	☐	20
bailed only	☐	10
pumped only	☒	51
pumped slowly	☐	50
Other _____	☐	

3. Time spent developing well 480 min.

4. Depth of well (from top of well casisng) 152. ft.

5. Inside diameter of well 4.0 in.

6. Volume of water in filter pack and well casing 36. gal.

7. Volume of water removed from well 2680. gal.

8. Volume of water added (if any) 500. gal.

9. Source of water added _____

10. Analysis performed on water added? ☐ Yes ☒ No
(If yes, attach results)

	Before Development	After Development
11. Depth to Water (from top of well casing)	138.11 ft.	138.67 ft.
Date	04/30/89 (mm dd yy)	10/25/89 (mm dd yy)
Time	8:20 ☒ a.m. ☐ p.m.	__:__ ☐ a.m. ☐ p.m.
12. Sediment in well bottom	__.__ inches	__.__ inches
13. Water clarity	Clear ☐ 10 Turbid ☐ 15 (Describe)	Clear ☐ 20 Turbid ☐ 25 (Describe)

Fill in if drilling fluids were used and well is at solid waste facility:

14. Total suspended solids	____.__ mg/l	____.__ mg/l
15. COD	____.__ mg/l	____.__ mg/l

Additional comments on development:

Well developed by: Person's Name and Firm	I hereby certify that the above information is true and correct to the best of my knowledge.
Name: VICKI MILLER	Signature: [signature]
Firm: C E ENVIRONMENTAL	Firm: C E ENVIRONMENTAL

NOTE: Shaded areas are for DNR use only. See instructions for more information.

State of Wisconsin
Department of Natural Resources

MONITORING WELL DEVELOPMENT
Form 4400-113B 8-89

Facility/Project Name: BADGER ARMY AMUNITION PLANT
Well Name: ELM-89-08
License, Permit or Monitoring Number:
Wis. Unique Well Number:
DNR Well Number:

1. Can this well be purged dry? ☐ Yes ☒ No

2. Well development method

surged with bailer and bailed	☐	4 1
surged with bailer and pumped	☐	6 1
surged with block and bailed	☐	4 2
surged with block and pumped	☐	6 2
surged with block, bailed and pumped	☐	7 0
compressed air	☐	2 0
bailed only	☐	1 0
pumped only	☒	5 1
pumped slowly	☐	5 0
Other _____	☐	___

3. Time spent developing well: 140 min.
4. Depth of well (from top of well casing): 147.__ ft.
5. Inside diameter of well: 4.0 in.
6. Volume of water in filter pack and well casing: 41.__ gal.
7. Volume of water removed from well: 205.1 gal.
8. Volume of water added (if any): __0.__ gal.
9. Source of water added: _____
10. Analysis performed on water added? ☐ Yes ☒ No (If yes, attach results)

	Before Development	After Development
11. Depth to Water (from top of well casing)	126.95 ft.	127.05 ft.
Date (m m d d y y)	04/25/89	04/26/89
Time	14:00 ☐ a.m. ☒ p.m.	14:00 ☐ a.m. ☒ p.m.
12. Sediment in well bottom	___.__ inches	___.__ inches
13. Water clarity	Clear ☐ 10 Turbid ☒ 15 (Describe) Brown color	Clear ☐ 20 Turbid ☐ 25 (Describe)

Fill in if drilling fluids were used and well is at solid waste facility:

14. Total suspended solids	_____.__ mg/l	_____.__ mg/l
15. COD	_____.__ mg/l	_____.__ mg/l

Additional comments on development:

Well developed by: Person's Name and Firm

Name: R. DAVID DINSMORE
Firm: C E ENVIRONMENTAL

I hereby certify that the above information is true and correct to the best of my knowledge.

Signature: [signature]
Firm: C E ENVIRONMENTAL

NOTE: Shaded areas are for DNR use only. See instructions for more information.

State of Wisconsin
Department of Natural Resources

MONITORING WELL DEVELOPMENT
Form 4400-113B 8-89

Facility/Project Name: BADGER ARMY AMUNITION PLANT

Well Name: ELN-89-09

License, Permit or Monitoring Number:

Wis. Unique Well Number:

DNR Well Number:

1. Can this well be purged dry? ☐ Yes ☒ No

2. Well development method

surged with bailer and bailed	☐	4 1
surged with bailer and pumped	☐	6 1
surged with block and bailed	☐	4 2
surged with block and pumped	☐	6 2
surged with block, bailed and pumped	☐	7 0
compressed air	☐	2 0
bailed only	☐	1 0
pumped only	☒	5 1
pumped slowly	☐	5 0
Other _____	☐	___

3. Time spent developing well: 231 min.

4. Depth of well (from top of well casisng): 156.__ ft.

5. Inside diameter of well: 4.0 in.

6. Volume of water in filter pack and well casing: 28.__ gal.

7. Volume of water removed from well: 1590.__ gal.

8. Volume of water added (if any): 250.__ gal.

9. Source of water added: _____

10. Analysis performed on water added? ☐ Yes ☒ No
(If yes, attach results)

	Before Development	After Development
11. Depth to Water (from top of well casing)	140.16 ft.	140.20 ft.
Date	04/29/89 (m m d d y y)	04/30/90 (m m d d y y)
Time	☐ a.m. ☐ p.m. __:__	☐ a.m. ☐ p.m. __:__
12. Sediment in well bottom	__.__ inches	__.__ inches
13. Water clarity	Clear ☐ 10 Turbid ☒ 15 (Describe)	Clear ☐ 20 Turbid ☐ 25 (Describe)
Fill in if drilling fluids were used and well is at solid waste facility:		
14. Total suspended solids	_____.__ mg/l	_____.__ mg/l
15. COD	_____.__ mg/l	_____.__ mg/l

Additional comments on development:

Well developed by: Person's Name and Firm

Name: Vicki Miller

Firm: C E ENVIRONMENTAL

I hereby certify that the above information is true and correct to the best of my knowledge.

Signature: [signature]

Firm: C E ENVIRONMENTAL

NOTE: Shaded areas are for DNR use only. See instructions for more information.

ABB Environmental Services, Inc.

MONITORING WELL DEVELOPMENT FORM

Facility/Project Name: BAAP	Well Name: RPM-91-01
License, Permit or Monitoring Number: _____	Wis. Unique Well Number: _____ / DNR Well Number: _____

1. Can this well be purged dry? ☐ Yes ☑ No

2. Well development method
   - surged with bailer and bailed ☐ 41
   - surged with bailer and pumped ☐ 61
   - surged with block and bailed ☐ 42
   - surged with block and pumped ☐ 62
   - surged with block, bailed and pumped ☐ 70
   - compressed air ☐ 20
   - bailed only ☐ 10
   - pumped only (with surging) ☑ 51
   - pumped slowly ☐ 50
   - Other _____ ☐ [ ]

3. Time spent developing well: 90 min.

4. Depth of well (from top of well casisng): 108.1 ft.

5. Inside diameter of well: 4.00 in.

6. Volume of water in filter pack and well casing: 13.2 gal.

7. Volume of water removed from well: 65.0 gal.

8. Volume of water added (if any): 0.0 gal.

9. Source of water added: N/A

10. Analysis performed on water added? ☐ Yes ☒ No
(If yes, attach results)

	Before Development	After Development
11. Depth to Water (from top of well casing)	100.11 ft.	100.10 ft.
Date (mm dd yy)	11/09/91	11/09/91
Time	15:30 ☒ a.m. ☒ p.m.	10:00 ☒ a.m. ☐ p.m.
12. Sediment in well bottom	108.1 inches	108.2 inches
13. Water clarity	Clear ☐ 10 Turbid ☒ 15 (Describe)	Clear ☒ 20 Turbid ☐ 25 (Describe) slightly cloudy

Fill in if drilling fluids were used and well is at solid waste facility:

14. Total suspended solids	— mg/l	— mg/l
15. COD	— mg/l	— mg/l
16. Screen length	10.0 ft.	

17. Pump used was Grundfos Redi-Flo 2 w/ straining cloth

Additional comments on development:

	63	66	59	52	65
T (°C)	—	—	—	—	—
pH (units)	~7	~7	~7	~7	~7
cond. (µmhos)	608	614	613	580	607

NO CONCRETE COLLAR OR STONE

well to casing: -.19 -.19
stick-up: 2.5± 2.5
initial depth to bottom: 108.1
final depth to bottom: 108.2 108.2

Well developed by: Person's Name and Firm

Name: D. Dionne / D. VonBushberger

Firm: ABB-ES

I hereby certify that the above information is true and correct to the best of my knowledge.

Signature: D. F. VonBushberger / Nancy E. Rok

Firm: ABB-ES

NOTE: Shaded areas are for DNR use only. See instructions for more information.

State of Wisconsin
Department of Natural Resources

MONITORING WELL DEVELOPMENT
Form 4400-113B 8-89

Facility/Project Name: BADGER ARMY AMMUNITION PLANT
Well Name: RPM-89-01
License, Permit or Monitoring Number:
Wis. Unique Well Number:
DNR Well Number:

1. Can this well be purged dry? ☒ Yes ☐ No

2. Well development method

surged with bailer and bailed	☐	4 1
surged with bailer and pumped	☐	6 1
surged with block and bailed	☐	4 2
surged with block and pumped	☒	6 2
surged with block, bailed and pumped	☐	7 0
compressed air	☐	2 0
bailed only	☐	1 0
pumped only	☐	5 1
pumped slowly	☐	5 0
Other _____	☐	

3. Time spent developing well: 150 min.
4. Depth of well (from top of well casisng): 127.__ ft.
5. Inside diameter of well: 4.0 in.
6. Volume of water in filter pack and well casing: 16.__ gal.
7. Volume of water removed from well: 11.5 gal.
8. Volume of water added (if any): 0.__ gal.
9. Source of water added: _____
10. Analysis performed on water added? ☐ Yes ☒ No (If yes, attach results)

	Before Development	After Development
11. Depth to Water (from top of well casing)	112.54 ft.	___.__ ft.
Date	11/05/89 (m m d d y y)	__/__/__ (m m d d y y)
Time	12:30 ☐ a.m. ☒ p.m.	__:__ ☐ a.m. ☐ p.m.
12. Sediment in well bottom	___.__ inches	___.__ inches
13. Water clarity	Clear ☐ 10 Turbid ☐ 15 (Describe)	Clear ☐ 20 Turbid ☐ 25 (Describe)
Fill in if drilling fluids were used and well is at solid waste facility:		
14. Total suspended solids	_____.__ mg/l	_____.__ mg/l
15. COD	_____.__ mg/l	_____.__ mg/l

Additional comments on development:

Well developed by: Person's Name and Firm

Name: DAVID S. DIONNE
Firm: C E ENVIRONMENTAL

I hereby certify that the above information is true and correct to the best of my knowledge.

Signature: [signature]
Firm: C E ENVIRONMENTAL

NOTE: Shaded areas are for DNR use only. See instructions for more information.

State of Wisconsin
Department of Natural Resources

MONITORING WELL DEVELOPMENT

Form 4400-113B 8-89

Facility/Project Name: RADGER ARMY AMUNITION PLANT
Well Name: RPM-89-02
License, Permit or Monitoring Number:
Wis. Unique Well Number:
DNR Well Number:

1. Can this well be purged dry? ☐ Yes ☒ No

2. Well development method

surged with bailer and bailed	☐	4 1
surged with bailer and pumped	☐	6 1
surged with block and bailed	☐	4 2
surged with block and pumped	☐	6 2
surged with block, bailed and pumped	☐	7 0
compressed air	☐	2 0
bailed only	☐	1 0
pumped only	☒	5 1
pumped slowly	☐	5 0
Other _____	☐	

3. Time spent developing well: 10 min.
4. Depth of well (from top of well casisng): 111.8 ft.
5. Inside diameter of well: 4.0 in.
6. Volume of water in filter pack and well casing: 34. gal.
7. Volume of water removed from well: 170. gal.
8. Volume of water added (if any): 0. gal.
9. Source of water added: _____
10. Analysis performed on water added? ☐ Yes ☒ No (If yes, attach results)

	Before Development	After Development
11. Depth to Water (from top of well casing)	98.73 ft.	98.75 ft.
Date	11/20/89 (m m d d y y)	11/21/89 (m m d d y y)
Time	13:00 ☐ a.m. ☒ p.m.	12:00 ☐ a.m. ☒ p.m.
12. Sediment in well bottom	___.__ inches	___.__ inches
13. Water clarity	Clear ☒ 10 Turbid ☐ 15 (Describe)	Clear ☐ 20 Turbid ☐ 25 (Describe)
Fill in if drilling fluids were used and well is at solid waste facility:		
14. Total suspended solids	____.__ mg/l	____.__ mg/l
15. COD	____.__ mg/l	____.__ mg/l

Additional comments on development:

Well developed by: Person's Name and Firm

Name: WILLARD Dycher
Firm: CE ENVIRONMENTAL

I hereby certify that the above information is true and correct to the best of my knowledge.

Signature: Willard Dycher
Firm: CE ENVIRONMENTAL

NOTE: Shaded areas are for DNR use only. See instructions for more information.

State of Wisconsin
Department of Natural Resources

MONITORING WELL DEVELOPMENT

Form 4400-113B 8-89

Facility/Project Name: BADGER ARMY AMMUNITION PLANT

Well Name: NPM-89-01

License, Permit or Monitoring Number: _____

Wis. Unique Well Number: _____ DNR Well Number: ____

1. Can this well be purged dry? ☐ Yes ☒ No

2. Well development method

surged with bailer and bailed	☐	4 1
surged with bailer and pumped	☐	6 1
surged with block and bailed	☐	4 2
surged with block and pumped	☐	6 2
surged with block, bailed and pumped	☐	7 0
compressed air	☐	2 0
bailed only	☐	1 0
pumped only	☒	5 1
pumped slowly	☐	5 0
Other _____	☐	☐☐

3. Time spent developing well: 150 min.

4. Depth of well (from top of well casisng): 99.__ ft.

5. Inside diameter of well: 4.0 in.

6. Volume of water in filter pack and well casing: 43.__ gal.

7. Volume of water removed from well: 315.__ gal.

8. Volume of water added (if any): __0.__ gal.

9. Source of water added _____

10. Analysis performed on water added? ☐ Yes ☒ No
(If yes, attach results)

	Before Development	After Development
11. Depth to Water (from top of well casing)	85.33 ft.	85.85 ft.
Date	11/19/89 (m m d d y y)	11/20/89 (m m d d y y)
Time	2:30 ☒ a.m. ☐ p.m.	10:00 ☒ a.m. ☐ p.m.
12. Sediment in well bottom	__.__ inches	__.__ inches
13. Water clarity	Clear ☒ 10 Turbid ☐ 15 (Describe)	Clear ☐ 20 Turbid ☐ 25 (Describe)
Fill in if drilling fluids were used and well is at solid waste facility:		
14. Total suspended solids	_____.__ mg/l	_____.__ mg/l
15. COD	_____.__ mg/l	_____.__ mg/l

Additional comments on development:

Well developed by: Person's Name and Firm

Name: WILLARD DYCHE

Firm: C E ENVIRONMENTAL

I hereby certify that the above information is true and correct to the best of my knowledge.

Signature: [signature]

Firm: C E ENVIRONMENTAL

NOTE: Shaded areas are for DNR use only. See instructions for more information.

State of Wisconsin
Department of Natural Resources

MONITORING WELL DEVELOPMENT
Form 4400-113B 8-89

Facility/Project Name: BADGER ARMY AMMUNITION PLANT
Well Name: OPM-8901
License, Permit or Monitoring Number:
Wis. Unique Well Number:
DNR Well Number:

1. Can this well be purged dry? ☐ Yes ☒ No

2. Well development method

surged with bailer and bailed	☐	41
surged with bailer and pumped	☐	61
surged with block and bailed	☐	42
surged with block and pumped	☒	62
surged with block, bailed and pumped	☐	70
compressed air	☐	20
bailed only	☐	10
pumped only	☐	51
pumped slowly	☐	50
Other _____	☐	

3. Time spent developing well: 400 min.
4. Depth of well (from top of well casisng): 86.5 ft.
5. Inside diameter of well: 4.0 in.
6. Volume of water in filter pack and well casing: 38. gal.
7. Volume of water removed from well: 190. gal.
8. Volume of water added (if any): 0. gal.
9. Source of water added: _____
10. Analysis performed on water added? ☐ Yes ☒ No (If yes, attach results)

	Before Development	After Development
11. Depth to Water (from top of well casing)	65.6 ft.	60.02 ft.
Date	11/19/89 (m m d d y y)	12/08/89 (m m d d y y)
Time	15:00 ☐ a.m. ☒ p.m.	15:00 ☐ a.m. ☒ p.m.
12. Sediment in well bottom	. inches	. inches
13. Water clarity	Clear ☐ 10 Turbid ☒ 15 (Describe) ORANGE COLOR	Clear ☐ 20 Turbid ☐ 25 (Describe)

Fill in if drilling fluids were used and well is at solid waste facility:

14. Total suspended solids	. mg/l	. mg/l
15. COD	. mg/l	. mg/l

Additional comments on development:

Well developed by: Person's Name and Firm

Name: DAVID B DOANE
Firm: C E ENVIRONMENTAL

I hereby certify that the above information is true and correct to the best of my knowledge.

Signature: [signature]
Firm: C E ENVIRONMENTAL

NOTE: Shaded areas are for DNR use only. See instructions for more information.

State of Wisconsin
Department of Natural Resources

MONITORING WELL DEVELOPMENT

Form 4400-113B 8-89

Facility/Project Name: BADGER ARMY AMMUNITION PLANT

Well Name: OBM-89-02

License, Permit or Monitoring Number:

Wis. Unique Well Number:

DNR Well Number:

1. Can this well be purged dry? ☐ Yes ☐ No

2. Well development method

surged with bailer and bailed	☐	4 1
surged with bailer and pumped	☐	6 1
surged with block and bailed	☐	4 2
surged with block and pumped	☒	6 2
surged with block, bailed and pumped	☐	7 0
compressed air	☐	2 0
bailed only	☐	1 0
pumped only	☒	5 1
pumped slowly	☐	5 0
Other _____	☐	

3. Time spent developing well: 500 min.

4. Depth of well (from top of well casisng): 112.__ ft.

5. Inside diameter of well: 4.0 in.

6. Volume of water in filter pack and well casing: 31.__ gal.

7. Volume of water removed from well: 155.__ gal.

8. Volume of water added (if any): __6.__ gal.

9. Source of water added: _____

10. Analysis performed on water added? ☐ Yes ☒ No
(If yes, attach results)

	Before Development	After Development
11. Depth to Water (from top of well casing)	100.22 ft.	100.05 ft.
Date	11/16/89 (m m d d y y)	11/21/89 (m m d d y y)
Time	11:00 ☒ a.m. ☐ p.m.	14:00 ☐ a.m. ☒ p.m.
12. Sediment in well bottom	__.__ inches	__.__ inches
13. Water clarity	Clear ☐ 10 Turbid ☒ 15 (Describe)	Clear ☐ 20 Turbid ☐ 25 (Describe)
Fill in if drilling fluids were used and well is at solid waste facility:		
14. Total suspended solids	_____.__ mg/l	_____.__ mg/l
15. COD	_____.__ mg/l	_____.__ mg/l

Additional comments on development:

Well developed by: Person's Name and Firm

Name: WILLARD DYCHE

Firm: C E ENVIRONMENTAL

I hereby certify that the above information is true and correct to the best of my knowledge.

Signature: [signature]

Firm: C E ENVIRONMENTAL

NOTE: Shaded areas are for DNR use only. See instructions for more information.

State of Wisconsin
Department of Natural Resources

MONITORING WELL DEVELOPMENT

Form 4400-113B 8-89

Facility/Project Name: BADGER ARMY AMUNITION PLANT

Well Name: OPM-89-03

License, Permit or Monitoring Number: _____

Wis. Unique Well Number: _____

DNR Well Number: _____

1. Can this well be purged dry? ☐ Yes ☒ No

2. Well development method

surged with bailer and bailed	☐	4 1
surged with bailer and pumped	☐	6 1
surged with block and bailed	☐	4 2
surged with block and pumped	☐	6 2
surged with block, bailed and pumped	☐	7 0
compressed air	☐	2 0
bailed only	☐	1 0
pumped only	☒	5 1
pumped slowly	☐	5 0
Other _____	☐	___

3. Time spent developing well: 150 min.

4. Depth of well (from top of well casisng): 162.5 ft.

5. Inside diameter of well: 4.0 in.

6. Volume of water in filter pack and well casing: 30.__ gal.

7. Volume of water removed from well: 150.__ gal.

8. Volume of water added (if any): 6.__ gal.

9. Source of water added: _____

10. Analysis performed on water added? ☐ Yes ☒ No
(If yes, attach results)

	Before Development	After Development
11. Depth to Water (from top of well casing)	151.26 ft.	151.19 ft.
Date	11/20/89 (m m d d y y)	11/21/89 (m m d d y y)
Time	8:00 ☒ a.m. ☐ p.m.	10:00 ☒ a.m. ☐ p.m.
12. Sediment in well bottom	___.__ inches	___.__ inches
13. Water clarity	Clear ☐ 10 Turbid ☒ 15 (Describe) Cloudy Gray color	Clear ☐ 20 Turbid ☐ 25 (Describe)

Fill in if drilling fluids were used and well is at solid waste facility:

14. Total suspended solids	_____.__ mg/l	_____.__ mg/l
15. COD	_____.__ mg/l	_____.__ mg/l

Additional comments on development:

Well developed by: Person's Name and Firm

Name: Willard Dyche

Firm: CE ENVIRONMENTAL

I hereby certify that the above information is true and correct to the best of my knowledge.

Signature: William Dyche

Firm: CE ENVIRONMENTAL

NOTE: Shaded areas are for DNR use only. See instructions for more information.

ABB Environmental Services, Inc.

MONITORING WELL DEVELOPMENT FORM

Facility/Project Name: BAAP- USATHAMA

Well Name: OAM-91-01

License, Permit or Monitoring Number: _____

Wis. Unique Well Number: _____ DNR Well Number: _____

1. Can this well be purged dry? ☐ Yes ☑ No

2. Well development method

surged with bailer and bailed	☐	4 1
surged with bailer and pumped	☐	6 1
surged with block and bailed	☐	4 2
surged with block and pumped	☐	6 2
surged with block, bailed and pumped	☐	7 0
compressed air	☐	2 0
bailed only	☐	1 0
pumped only (with surging)	☑	5 1
pumped slowly	☐	5 0
Other _____	☐	___

3. Time spent developing well: 55 min.

4. Depth of well (from top of well casisng): 28.0 ft.

5. Inside diameter of well: 3.75 in.

6. Volume of water in filter pack and well casing: 11.0 gal.

7. Volume of water removed from well: 55.0 gal.

8. Volume of water added (if any): 0. gal.

9. Source of water added: —

10. Analysis performed on water added? ☐ Yes ☐ No (If yes, attach results)

	Before Development	After Development
11. Depth to Water (from top of well casing)	21.38 ft.	21.42 ft. 21.39
Date	11/09/91 (m m / d d / y y)	11/09/91 11/11/91
Time	12:30 ☐ a.m. ☑ p.m.	13:25 ☐ a.m. ☑ p.m. 14:10
12. Sediment in well bottom	___.__ inches	___.__ inches
13. Water clarity	Clear ☐ 10 Turbid ☐ 15 (Describe)	Clear ☐ 20 Turbid ☐ 25 (Describe)

24 hrs. later

Fill in if drilling fluids were used and well is at solid waste facility:

14. Total suspended solids	—— mg/l	—— mg/l
15. COD	—— mg/l	—— mg/l
16. Screen length	10.0 ft.	

17. Pump used was Grundfos Redi-Flo 2 w/ straining cloth

Additional comments on development:

	11	22	33	44	55
T (°C)	~	~	~	~	~
pH (units)	~6.5	6.5	6.5	6.5	6.5
cond. (µmhos)	529	531	533	535	535
Time	12:45	12:52	12:58	13:04	13:13

well to casing stick-up: SEE DAVE NO GROUTING INSECURE CASING

initial depth to bottom: 98.02 / 98.10

final depth to bottom: 98.08

Well developed by: Person's Name and Firm

Name: D. Dionne / D. VonBushberger

Firm: ABB-ES

I hereby certify that the above information is true and correct to the best of my knowledge.

Signature: D. Dionne / Nancy E. Rofia

Firm: ABB-ES

NOTE: Shaded areas are for DNR use only. See instructions for more information.

State of Wisconsin
Department of Natural Resources

MONITORING WELL DEVELOPMENT

Form 4400-113B 8-89

Facility/Project Name	Well Name
BADGER ARMY AMMUNITION PLANT	OAM-89-01
License, Permit or Monitoring Number	Wis. Unique Well Number / DNR Well Number
_____	_____ / _____

		Before Development	After Development
1. Can this well be purged dry?	☐ Yes ☒ No		
2. Well development method			
surged with bailer and bailed	☐ 41		
surged with bailer and pumped	☐ 61		
surged with block and bailed	☐ 42		
surged with block and pumped	☒ 62		
surged with block, bailed and pumped	☐ 70		
compressed air	☐ 20		
bailed only	☐ 10		
pumped only	☐ 51		
pumped slowly	☐ 50		
Other _____	☐ ___		
11. Depth to Water (from top of well casing)		86.31 ft.	86.20 ft.
Date		11/07/89 (m m d d y y)	11/08/89 (m m d d y y)
Time		☐ a.m. ☒ 12:45 p.m.	☐ a.m. ☒ 13:00 p.m.
12. Sediment in well bottom		___.__ inches	___.__ inches
13. Water clarity		Clear ☒ 10 Turbid ☐ 15 (Describe)	Clear ☐ 20 Turbid ☐ 25 (Describe)
3. Time spent developing well	231 min.		
4. Depth of well (from top of well casisng)	101.__ ft.		
5. Inside diameter of well	4.0 in.		
6. Volume of water in filter pack and well casing	31.__ gal.		
7. Volume of water removed from well	155.__ gal.		
8. Volume of water added (if any)	0.__ gal.		
9. Source of water added	_____		
10. Analysis performed on water added? (If yes, attach results)	☐ Yes ☒ No		
Fill in if drilling fluids were used and well is at solid waste facility:			
14. Total suspended solids		_____.__ mg/l	_____.__ mg/l
15. COD		_____.__ mg/l	_____.__ mg/l

Additional comments on development:

Well developed by: Person's Name and Firm	I hereby certify that the above information is true and correct to the best of my knowledge.
Name: DAVID B. DIONNE	Signature: William Dionne
Firm: CE ENVIRONMENTAL	Firm: CE ENVIRONMENTAL

NOTE: Shaded areas are for DNR use only. See instructions for more information.

State of Wisconsin
Department of Natural Resources

MONITORING WELL DEVELOPMENT

Form 4400-113B 8-89

Facility/Project Name	Well Name
BADGER ARMY AMMUNITION PLANT	OAM-89-02
License, Permit or Monitoring Number	Wis. Unique Well Number / DNR Well Number
_____	_____ / _____

1. Can this well be purged dry? ☐ Yes ☒ No

2. Well development method

surged with bailer and bailed	☐	4 1
surged with bailer and pumped	☐	6 1
surged with block and bailed	☐	4 2
surged with block and pumped	☒	6 2
surged with block, bailed and pumped	☐	7 0
compressed air	☐	2 0
bailed only	☐	1 0
pumped only	☐	5 1
pumped slowly	☐	5 0
Other _____	☐	

3. Time spent developing well 285 min.

4. Depth of well (from top of well casisng) 111.__ ft.

5. Inside diameter of well 4.0 in.

6. Volume of water in filter pack and well casing 41.__ gal.

7. Volume of water removed from well 305.__ gal.

8. Volume of water added (if any) __0.__ gal.

9. Source of water added _____

10. Analysis performed on water added? ☐ Yes ☒ No
(If yes, attach results)

	Before Development	After Development
11. Depth to Water (from top of well casing)	87.23 ft.	87.21 ft.
Date	01/15/89 (m m d d y y)	11/16/89 (m m d d y y)
Time	13:30 ☐ a.m. ☒ p.m.	14:00 ☐ a.m. ☒ p.m.
12. Sediment in well bottom	__.__ inches	__.__ inches
13. Water clarity	Clear ☐ 10 Turbid ☒ 15 (Describe) BROWN COLOR	Clear ☐ 20 Turbid ☐ 25 (Describe)

Fill in if drilling fluids were used and well is at solid waste facility:

14. Total suspended solids	_____.__ mg/l	_____.__ mg/l
15. COD	_____.__ mg/l	_____.__ mg/l

Additional comments on development:

Well developed by: Person's Name and Firm

Name: R. DOUG DINSMORE

Firm: C E ENVIRONMENTAL

I hereby certify that the above information is true and correct to the best of my knowledge.

Signature: _____

Firm: C E ENVIRONMENTAL

NOTE: Shaded areas are for DNR use only. See instructions for more information.

State of Wisconsin
Department of Natural Resources

MONITORING WELL DEVELOPMENT

Form 4400-113B 8-89

Facility/Project Name: BADGER ARMY AMUNITION PLANT

Well Name: FTM-89-01

License, Permit or Monitoring Number:

Wis. Unique Well Number:

DNR Well Number:

1. Can this well be purged dry? ☐ Yes ☒ No

2. Well development method

surged with bailer and bailed	☐	4 1
surged with bailer and pumped	☐	6 1
surged with block and bailed	☐	4 2
surged with block and pumped	☒	6 2
surged with block, bailed and pumped	☐	7 0
compressed air	☐	2 0
bailed only	☐	1 0
pumped only	☒	5 1
pumped slowly	☐	5 0
Other _____	☐	

3. Time spent developing well: 200 min.

4. Depth of well (from top of well casisng): 99.5 ft.

5. Inside diameter of well: 4.0 in.

6. Volume of water in filter pack and well casing: 34. gal.

7. Volume of water removed from well: 110. gal.

8. Volume of water added (if any): 0. gal.

9. Source of water added: _____

10. Analysis performed on water added? ☐ Yes ☒ No
(If yes, attach results)

	Before Development	After Development
11. Depth to Water (from top of well casing)	86.55 ft.	86.50 ft.
Date	11/17/89 (m m d d y y)	11/20/89 (m m d d y y)
Time	15:26 ☐ a.m. ☒ p.m.	16:00 ☒ a.m. ☐ p.m.
12. Sediment in well bottom	___.__ inches	___.__ inches
13. Water clarity	Clear ☒ 10 / Turbid ☐ 15 (Describe)	Clear ☐ 20 / Turbid ☐ 25 (Describe)

Fill in if drilling fluids were used and well is at solid waste facility:

14. Total suspended solids	_____.__ mg/l	_____.__ mg/l
15. COD	_____.__ mg/l	_____.__ mg/l

Additional comments on development:

Well developed by: Person's Name and Firm

Name: WILLARD DYCHE

Firm: CE ENVIRONMENTAL

I hereby certify that the above information is true and correct to the best of my knowledge.

Signature: Willard Dyche

Firm: CE ENVIRONMENTAL

NOTE: Shaded areas are for DNR use only. See instructions for more information.

ABB Environmental Services, Inc.

MONITORING WELL DEVELOPMENT FORM

Facility/Project Name: BAAP-USATHAMA

Well Name: PBN-91-01C

License, Permit or Monitoring Number: _____

Wis. Unique Well Number: _____ DNR Well Number: _____

1. Can this well be purged dry? ☐ Yes ☒ No

2. Well development method

surged with bailer and bailed	☒	41
surged with bailer and pumped	☐	61
surged with block and bailed	☐	42
surged with block and pumped	☐	62
surged with block, bailed and pumped	☐	70
compressed air	☐	20
bailed only	☐	10
pumped only (with surging)	☑	51
pumped slowly	☐	50
Other _____	☐	

3. Time spent developing well: 225 min.

4. Depth of well (from top of well casisng): 87.7 ft.

5. Inside diameter of well: 4.00 in.

6. Volume of water in filter pack and well casing: 66.5 gal.

7. Volume of water removed from well: 1338. gal.

8. Volume of water added (if any): 335.0 gal.

9. Source of water added: Pump House #2

10. Analysis performed on water added? ☐ Yes ☒ No
(If yes, attach results)

	Before Development	After Development
11. Depth to Water (from top of well casing)	87.75 ft.	87.68 ft. 87.57
Date	11/21/91 (m m d d y y)	11/22/91 11/23/91
Time	15:00 ☐ a.m. ☑ p.m.	10:10 ☑ a.m. ☐ p.m. 10:45
12. Sediment in well bottom	___.__ inches	___.__ inches
13. Water clarity	Clear ☐ 10 Turbid ☑ 15 (Describe) Slightly	Clear ☑ 20 Turbid ☐ 25 (Describe)
Fill in if drilling fluids were used and well is at solid waste facility:		
14. Total suspended solids	____.__ mg/l	____.__ mg/l
15. COD	____.__ mg/l	____.__ mg/l
16. Screen length	10.0 ft.	

24 hr. later

Additional comments on development:

	Initial	946	892	1338
T (°C)	11.5	11.8	12.0	12.4
pH (units)	8.0	7.9	8.4	8.0
cond. (umhos)	800	456	676	821
Time	1510	16.24	0855	1010

Sky 1700 Sky 0815 11-22

well to casing: 0.15
stick-up: 2.45
initial depth to bottom: 154.70
final depth to bottom: 154.68

154.70

Well developed by: Person's Name and Firm

Name: DAVID B. DIONNE

Firm: ABB-ES

I hereby certify that the above information is true and correct to the best of my knowledge.

Signature: Susan E Cate

Firm: ABB-ES

NOTE: Shaded areas are for DNR use only. See instructions for more information.

ABB Environmental Services, Inc.

MONITORING WELL DEVELOPMENT FORM

Facility/Project Name: BAAP - WELL DEVELOPMENT

Well Name: FEN-91-02B

License, Permit or Monitoring Number: _____

Wis. Unique Well Number: _____ DNR Well Number: _____

1. Can this well be purged dry? ☐ Yes ☒ No

2. Well development method

surged with bailer and bailed	☐	4 1
surged with bailer and pumped	☐	6 1
surged with block and bailed	☐	4 2
surged with block and pumped	☐	6 2
surged with block, bailed and pumped	☐	7 0
compressed air	☐	2 0
bailed only	☐	1 0
pumped only (with surging)	☒	5 1
pumped slowly	☐	5 0
Other _____	☐	___

3. Time spent developing well: 63 min.

4. Depth of well (from top of well casing): 117.8 ft.

5. Inside diameter of well: 4.__ in.

6. Volume of water in filter pack and well casing: 42.0 gal.

7. Volume of water removed from well: 210.0 gal.

8. Volume of water added (if any): 00 gal.

9. Source of water added: NONE

10. Analysis performed on water added? ☐ Yes ☐ No
(If yes, attach results)

	Before Development	After Development
11. Depth to Water (from top of well casing)	79.60 ft.	79.60 ft.
Date	10/26/91 (m m d d y y)	10/28/91 (m m d d y y)
Time	09:00 ☒ a.m. ☐ p.m.	14:00 ☐ a.m. ☒ p.m.
12. Sediment in well bottom	___.__ inches	___.__ inches
13. Water clarity	Clear ☐ 10 Turbid ☒ 15 (Describe)	Clear ☒ 20 Turbid ☐ 25 (Describe)
Fill in if drilling fluids were used and well is at solid waste facility:		
14. Total suspended solids	_____.__ mg/l	_____.__ mg/l
15. COD	_____.__ mg/l	_____.__ mg/l
16. Screen length		

24 hrs. 7 17

17. Pump used was Grund-fos Redi-Flo 2, w/ brass strainer cloth

Additional comments on development:

	10	70	140	210
T (°C)	11.0	10.7	10.8	10.9
pH (units)	7.20	7.31	7.28	7.48
cond. (umhos)	724	735	739	749

well to casing: -0.15
stick-up: 2.35
initial depth to bottom: 117.78
final depth to bottom: 117.77

24 hrs 117.81

Well developed by: Person's Name and Firm

Name: B. CHILDS & L. CARTER

Firm: ABB-ES

I hereby certify that the above information is true and correct to the best of my knowledge.

Signature: Laura E. Carter

Firm: ABB-ES

NOTE: Shaded areas are for DNR use only. See instructions for more information.

ABB Environmental Services, Inc.

MONITORING WELL DEVELOPMENT FORM

Facility/Project Name: BAAP- USATHAMA

Well Name: PBN-91-02C

License, Permit or Monitoring Number: _____

Wis. Unique Well Number: _____ DNR Well Number: _____

1. Can this well be purged dry? ☐ Yes ☑ No

2. Well development method

surged with bailer and bailed	☐	4 1
surged with bailer and pumped	☐	6 1
surged with block and bailed	☐	4 2
surged with block and pumped	☐	6 2
surged with block, bailed and pumped	☐	7 0
compressed air	☐	2 0
bailed only	☐	1 0
pumped only (with surging)	☑	5 1
pumped slowly	☐	5 0
Other _____	☐	

3. Time spent developing well: 415 min.

4. Depth of well (from top of well casisng): 163.6 ft.

5. Inside diameter of well: 4.00 in.

6. Volume of water in filter pack and well casing: 85.4 gal.

7. Volume of water removed from well: 2437.0 gal.

8. Volume of water added (if any): 670.0 gal.

9. Source of water added: BPW #2

10. Analysis performed on water added? ☑ Yes ☐ No
(If yes, attach results)

	Before Development	After Development (24 hr. later)
11. Depth to Water (from top of well casing)	29.60 ft.	29.60 ft. 79.40
Date	11/22/91 mm dd yy	11/23/91 mm dd yy 11:249
Time	10:20 ☒ a.m. ☐ p.m.	17:15 ☐ a.m. ☒ p.m. 1030
12. Sediment in well bottom	___.__ inches	___.__ inches
13. Water clarity	Clear ☐ 10 Turbid ☒ 15 (Describe) slightly	Clear ☒ 20 Turbid ☐ 25 (Describe)

Fill in if drilling fluids were used and well is at solid waste facility:

14. Total suspended solids	____.__ mg/l	____.__ mg/l
15. COD	____.__ mg/l	____.__ mg/l
16. Screen length	10.0 ft.	

Additional comments on development:

	Initial	812	1624	2437
T (°C)	11.4	13.1	11.3	10.4
pH (units)	8.1	8.0	8.3	8.4
cond. (µmhos)	720	731	735	696
Time	1020	12:35	14 50	1705

well to casing: 0.17
stick-up: 2.45
initial depth to bottom: 163.60
final depth to bottom: 163.63 163.68

Well developed by: Person's Name and Firm

Name: David B. Dionne

Firm: ABB-ES

I hereby certify that the above information is true and correct to the best of my knowledge.

Signature: D B Dionne

Firm: ABB-ES

NOTE: Shaded areas are for DNR use only. See instructions for more information.

ABB Environmental Services, Inc.

MONITORING WELL DEVELOPMENT FORM

Facility/Project Name: USAF THAMA / BAPP

Well Name: PBW-91-036

License, Permit or Monitoring Number: _____

Wis. Unique Well Number: _____ DNR Well Number: _____

1. Can this well be purged dry? ☐ Yes ☒ No

2. Well development method

surged with bailer and bailed	☐	4 1
surged with bailer and pumped	☐	6 1
surged with block and bailed	☐	4 2
surged with block and pumped	☐	6 2
surged with block, bailed and pumped	☐	7 0
compressed air	☐	2 0
bailed only	☐	1 0
pumped only (with surging)	☒	5 1
pumped slowly	☐	5 0
Other _____	☐	

3. Time spent developing well: 0050 min.

4. Depth of well (from top of well casing): 108.5 ft.

5. Inside diameter of well: 4.00 in.

6. Volume of water in filter pack and well casing: 40.9 gal.

7. Volume of water removed from well: 204.5 gal.

8. Volume of water added (if any): 0.0 gal.

9. Source of water added: _____

10. Analysis performed on water added? ☐ Yes ☐ No
(If yes, attach results)

	Before Development	After Development
11. Depth to Water (from top of well casing)	73.90 ft.	73.78 ft.
Date	10/27/91 (m m d d y y)	10/27/91 (m m d d y y)
Time	10:15 ☒ a.m. ☐ p.m.	15:00 ☐ a.m. ☒ p.m.
12. Sediment in well bottom	___.__ inches	___.__ inches
13. Water clarity	Clear ☐ 10 Turbid ☒ 15 (Describe)	Clear ☐ 20 Turbid ☐ 25 (Describe)
Fill in if drilling fluids were used and well is at solid waste facility:		
14. Total suspended solids	_____.__ mg/l	_____.__ mg/l
15. COD	_____.__ mg/l	_____.__ mg/l
16. Screen length	10.1'	

17. Pump used was Grund-fos Redi-Flo 2 w/ brass straining cloth

Additional comments on development:

	10	69	136	204.5
T (°C)	10.4	11.0	11.0	10.9
pH (units)	8.05	7.66	7.70	7.46
cond. (umhos)	479	720	693	685

well to casing: -0.18
stick-up: 2.34
initial depth to bottom: 108.5
final depth to bottom: 108.5

108.51

Well developed by: Person's Name and Firm

Name: L. Carter and R. Pendleton

Firm: ABB Environmental Services, Inc.

I hereby certify that the above information is true and correct to the best of my knowledge.

Signature: _____

Firm: _____

NOTE: Shaded areas are for DNR use only. See instructions for more information.

ABB Environmental Services, Inc.

MONITORING WELL DEVELOPMENT FORM

Facility/Project Name: BAAP-USATHAMA

Well Name: PBN-91-03C

License, Permit or Monitoring Number: _____

Wis. Unique Well Number: _____ DNR Well Number: _____

1. Can this well be purged dry? ☐ Yes ☑ No

2. Well development method

surged with bailer and bailed	☐	4 1
surged with bailer and pumped	☐	6 1
surged with block and bailed	☐	4 2
surged with block and pumped	☐	6 2
surged with block, bailed and pumped	☐	7 0
compressed air	☐	2 0
bailed only	☐	1 0
pumped only (with surging)	☑	5 1
pumped slowly	☐	5 0
Other _____	☐	___

3. Time spent developing well: 380 min.

4. Depth of well (from top of well casing): 154.5 ft.

5. Inside diameter of well: 4.00 in.

6. Volume of water in filter pack and well casing: 78.0 gal.

7. Volume of water removed from well: 2279.0 gal.

8. Volume of water added (if any): 670.0 gal.

9. Source of water added: BPW #2

10. Analysis performed on water added? ☑ Yes ☐ No (If yes, attach results)

	Before Development	After Development (24 hrs late)
11. Depth to Water (from top of well casing)	72.75 ft.	72.74 ft. 72.55
Date	11/23/91 (mm/dd/yy)	11/23/91 11-24-9 (mm/dd/yy)
Time	08:50 ☒ a.m. ☐ p.m.	15:10 ☐ a.m. ☐ p.m. 1450
12. Sediment in well bottom	___.__ inches	___.__ inches
13. Water clarity	Clear ☐ 10 Turbid ☒ 15 (Describe) slightly	Clear ☐ 20 Turbid ☐ 25 (Describe)
Fill in if drilling fluids were used and well is at solid waste facility:		
14. Total suspended solids	____.__ mg/l	____.__ mg/l
15. COD	____.__ mg/l	____.__ mg/l
16. Screen length	10.0 ft.	

Additional comments on development:

	Initial	759	1518	2279
T (°C)	11.0	11.0	10.1	10.5
pH (units)	9.6	9.4	8.7	8.0
cond. (µmhos)	603	603	630	626
Time	8:50	1056	1302	1508

well to casing: -0.15
stick-up: 2.4
initial depth to bottom: 154.52
final depth to bottom: 154.55 154.55

Well developed by: Person's Name and Firm

Name: DAVID B. DIONNE

Firm: ABB-ES

I hereby certify that the above information is true and correct to the best of my knowledge.

Signature: [signature]

Firm: ABB ES

NOTE: Shaded areas are for DNR use only. See instructions for more information.

State of Wisconsin
Department of Natural Resources

MONITORING WELL DEVELOPMENT

Form 4400-113B 8-89

Facility/Project Name: Badger Army Ammunition Plant

Well Name: PBM-90-01D

License, Permit or Monitoring Number:

Wis. Unique Well Number:

DNR Well Number:

1. Can this well be purged dry? ☐ Yes ☒ No

2. Well development method

surged with bailer and bailed	☐	4 1
surged with bailer and pumped	☐	6 1
surged with block and bailed	☐	4 2
surged with block and pumped	☐	6 2
surged with block, bailed and pumped	☐	7 0
compressed air	☐	2 0
bailed only	☐	1 0
pumped only	☒	5 1
pumped slowly	☐	5 0
Other _____	☐	

3. Time spent developing well: 100 min.

4. Depth of well (from top of well casing): 213.6 ft.

5. Inside diameter of well: 4.0 in.

6. Volume of water in filter pack and well casing: 96.5 gal.

7. Volume of water removed from well: 485.0 gal.

8. Volume of water added (if any): 0.0 gal.

9. Source of water added: _____

10. Analysis performed on water added? ☐ Yes ☒ No (If yes, attach results)

	Before Development	After Development
11. Depth to Water (from top of well casing)	88.78 ft.	____.__ ft.
Date	09/04/20 (m m d d y y)	__/__/__ (m m d d y y)
Time	16:00 ☐ a.m. ☒ p.m.	__:__ ☐ a.m. ☐ p.m.
12. Sediment in well bottom	___.__ inches	___.__ inches
13. Water clarity	Clear ☒ 10 Turbid ☐ 15 (Describe)	Clear ☐ 20 Turbid ☐ 25 (Describe)

Fill in if drilling fluids were used and well is at solid waste facility:

14. Total suspended solids	_____.__ mg/l	_____.__ mg/l
15. COD	_____.__ mg/l	_____.__ mg/l

Additional comments on development:

Well developed by: Person's Name and Firm

Name: R. David Dingmore

Firm: E.C. Jordan

I hereby certify that the above information is true and correct to the best of my knowledge.

Signature: [signature]

Firm: E.C. Jordan

NOTE: Shaded areas are for DNR use only. See instructions for more information.

State of Wisconsin
Department of Natural Resources

MONITORING WELL DEVELOPMENT
Form 4400-113B 8-89

Facility/Project Name: Badger Army Ammunition Plant
Well Name: PBM-90-020
License, Permit or Monitoring Number:
Wis. Unique Well Number:
DNR Well Number:

1. Can this well be purged dry? ☐ Yes ☒ No

2. Well development method

surged with bailer and bailed	☐	4 1
surged with bailer and pumped	☐	6 1
surged with block and bailed	☐	4 2
surged with block and pumped	☐	6 2
surged with block, bailed and pumped	☐	7 0
compressed air	☐	2 0
bailed only	☐	1 0
pumped only	☒	5 1
pumped slowly	☐	5 0
Other _____	☐	___

3. Time spent developing well: 210 min.
4. Depth of well (from top of well casisng): 207.8 ft.
5. Inside diameter of well: 4.0 in.
6. Volume of water in filter pack and well casing: 209.0 gal.
7. Volume of water removed from well: 1042.0 gal.
8. Volume of water added (if any): 0.0 gal.
9. Source of water added: NA
10. Analysis performed on water added? ☐ Yes ☒ No (If yes, attach results)

	Before Development	After Development
11. Depth to Water (from top of well casing)	29.01 ft.	____.__ ft.
Date	09/05/90 (m m d d y y)	__/__/__ (m m d d y y)
Time	02:00 ☐ a.m. ☐ p.m.	__:__ ☐ a.m. ☐ p.m.
12. Sediment in well bottom	__.__ inches	__.__ inches
13. Water clarity	Clear ☒ 10 Turbid ☐ 15 (Describe)	Clear ☐ 20 Turbid ☐ 25 (Describe)
Fill in if drilling fluids were used and well is at solid waste facility:		
14. Total suspended solids	____.__ mg/l	____.__ mg/l
15. COD	____.__ mg/l	____.__ mg/l

Additional comments on development:

Well developed by: Person's Name and Firm

Name: R. David Dunmore
Firm: E.C. Jordan

I hereby certify that the above information is true and correct to the best of my knowledge.

Signature:
Firm: E C Jordan

NOTE: Shaded areas are for DNR use only. See instructions for more information.

State of Wisconsin
Department of Natural Resources

MONITORING WELL DEVELOPMENT

Form 4400-113B 8-89

Facility/Project Name: Barker Army Ammunition Plant
Well Name: PBM-90-030
License, Permit or Monitoring Number:
Wis. Unique Well Number:
DNR Well Number:

		Before Development	After Development
1. Can this well be purged dry?	☐ Yes ☒ No		
2. Well development method			
surged with bailer and bailed	☐ 4 1		
surged with bailer and pumped	☐ 6 1		
surged with block and bailed	☐ 4 2		
surged with block and pumped	☐ 6 2		
surged with block, bailed and pumped	☐ 7 0		
compressed air	☐ 2 0		
bailed only	☐ 1 0		
pumped only	☒ 5 1		
pumped slowly	☐ 5 0		
Other _____	☐ ___		
11. Depth to Water (from top of well casing)		73.20 ft.	____.__ ft.
Date		09/05/90 (m m d d y y)	__/__/__ (m m d d y y)
Time		11:00 ☒ a.m. ☐ p.m.	__:__ ☐ a.m. ☐ p.m.
12. Sediment in well bottom		___.__ inches	___.__ inches
13. Water clarity		Clear ☒ 1 0 Turbid ☐ 1 5 (Describe)	Clear ☐ 2 0 Turbid ☐ 2 5 (Describe)
3. Time spent developing well	205 min.		
4. Depth of well (from top of well casisng)	201.8 ft.		
5. Inside diameter of well	4.0 in.		
6. Volume of water in filter pack and well casing	1205.0 gal.		
7. Volume of water removed from well	3525.0 gal.		
8. Volume of water added (if any)	0.0 gal.		
9. Source of water added	_____		
10. Analysis performed on water added? (If yes, attach results)	☐ Yes ☒ No		

Fill in if drilling fluids were used and well is at solid waste facility:

14. Total suspended solids	____.__ mg/l	____.__ mg/l
15. COD	____.__ mg/l	____.__ mg/l

Additional comments on development:

Well developed by: Person's Name and Firm

Name: R. David Dinsmore

Firm: E.C. Jordan

I hereby certify that the above information is true and correct to the best of my knowledge.

Signature: [signature]

Firm: E.C. Jordan

NOTE: Shaded areas are for DNR use only. See instructions for more information.

State of Wisconsin
Department of Natural Resources

MONITORING WELL DEVELOPMENT

Form 4400-113B 8-89

Facility/Project Name: Badger Army Ammunition Plant

Well Name: PBN-90-04B

License, Permit or Monitoring Number:

Wis. Unique Well Number:

DNR Well Number:

		Before Development	After Development
1. Can this well be purged dry?	☐ Yes ☒ No		
2. Well development method			
surged with bailer and bailed	☐ 4 1		
surged with bailer and pumped	☐ 6 1		
surged with block and bailed	☐ 4 2		
surged with block and pumped	☐ 6 2		
surged with block, bailed and pumped	☐ 7 0		
compressed air	☐ 2 0		
bailed only	☐ 1 0		
pumped only	☒ 5 1		
pumped slowly	☐ 5 0		
Other _____	☐ ___		
11. Depth to Water (from top of well casing)		92.02 ft.	___.__ ft.
Date		09/06/90 (m m d d y y)	__/__/__ (m m d d y y)
Time		05:00 ☒ a.m. ☐ p.m.	__:__ ☐ a.m. ☐ p.m.
12. Sediment in well bottom		__.__ inches	__.__ inches
13. Water clarity		Clear ☐ 10 Turbid ☒ 15 (Describe)	Clear ☐ 20 Turbid ☐ 25 (Describe)
3. Time spent developing well	120 min.		
4. Depth of well (from top of well casisng)	122.5 ft.		
5. Inside diameter of well	4.0 in.		
6. Volume of water in filter pack and well casing	798.0 gal.		
7. Volume of water removed from well	3990.0 gal.		
8. Volume of water added (if any)	0.0 gal.		
9. Source of water added	_____		
Fill in if drilling fluids were used and well is at solid waste facility:			
14. Total suspended solids		____.__ mg/l	____.__ mg/l
15. COD		____.__ mg/l	____.__ mg/l
10. Analysis performed on water added? (If yes, attach results)	☐ Yes ☒ No		

Additional comments on development:

Well developed by: Person's Name and Firm

Name: R. David Dinsmore

Firm: E. C. Jordan

I hereby certify that the above information is true and correct to the best of my knowledge.

Signature: [signature]

Firm: E. C. Jordan

NOTE: Shaded areas are for DNR use only. See instructions for more information.

State of Wisconsin
Department of Natural Resources

MONITORING WELL DEVELOPMENT

Form 4400-113B 8-89

Facility/Project Name: Badger Army Ammunition Plant
Well Name: PBM-90-040
License, Permit or Monitoring Number:
Wis. Unique Well Number:
DNR Well Number:

1. Can this well be purged dry? ☐ Yes ☒ No

2. Well development method

surged with bailer and bailed	☐	4 1
surged with bailer and pumped	☐	6 1
surged with block and bailed	☐	4 2
surged with block and pumped	☐	6 2
surged with block, bailed and pumped	☐	7 0
compressed air	☐	2 0
bailed only	☐	1 0
pumped only	☒	5 1
pumped slowly	☐	5 0
Other _____	☐	___

3. Time spent developing well: 2135 min.

4. Depth of well (from top of well casisng): 220.1 ft.

5. Inside diameter of well: 4.0 in.

6. Volume of water in filter pack and well casing: 3492.0 gal.

7. Volume of water removed from well: 10,665.0 gal.

8. Volume of water added (if any): ____.__ gal.

9. Source of water added: _____

10. Analysis performed on water added? ☐ Yes ☒ No
(If yes, attach results)

	Before Development	After Development
11. Depth to Water (from top of well casing)	92.04 ft.	____.__ ft.
Date	08/28/90 (m m d d y y)	__/__/__ (m m d d y y)
Time	14:00 ☐ a.m. ☒ p.m.	__:__ ☐ a.m. ☐ p.m.
12. Sediment in well bottom	___.__ inches	___.__ inches
13. Water clarity	Clear ☐ 10 Turbid ☐ 15 (Describe)	Clear ☐ 20 Turbid ☐ 25 (Describe)
Fill in if drilling fluids were used and well is at solid waste facility:		
14. Total suspended solids	____.__ mg/l	____.__ mg/l
15. COD	____.__ mg/l	____.__ mg/l

Additional comments on development:

Well developed by: Person's Name and Firm

Name: R. David Dunmore

Firm: E.C. Jordan

I hereby certify that the above information is true and correct to the best of my knowledge.

Signature: [signature]

Firm: E.C Jordan

NOTE: Shaded areas are for DNR use only. See instructions for more information.

ABB Environmental Services, Inc.

MONITORING WELL DEVELOPMENT FORM

Facility/Project Name	Well Name
BAAP – USATHAMA	SWN-91-01B
License, Permit or Monitoring Number: _____	Wis. Unique Well Number: _____ / DNR Well Number: _____

1. Can this well be purged dry? ☐ Yes ☑ No

2. Well development method
   - surged with bailer and bailed ☐ 41
   - surged with bailer and pumped ☐ 61
   - surged with block and bailed ☐ 42
   - surged with block and pumped ☐ 62
   - surged with block, bailed and pumped ☐ 70
   - compressed air ☐ 20
   - bailed only ☐ 10
   - pumped only (with surging) ☑ 51
   - pumped slowly ☐ 50
   - Other _____ ☐ [ ]

3. Time spent developing well: (10-18) 540 + (10-19) ____ min.

4. Depth of well (from top of well casisng): 115.2 ft. (from diagram) 113.1 BGS

5. Inside diameter of well: __.33 in.

6. Volume of water in filter pack and well casing: 23.9 gal.

7. Volume of water removed from well: (10-18) 1350 + (10-19) 2833.0 gal.

8. Volume of water added (if any) (during drilling): 700.0 gal.

9. Source of water added: BAAP production well #2

10. Analysis performed on water added? ☑ Yes ☐ No (If yes, attach results)

	Before Development	After Development
11. Depth to Water (from top of well casing)	78.67 ft.	78.68 ft. (24 hrs. after 78.66)
Date (mm dd yy)	10/18/91	10/19/91
Time	9:15 ☑ a.m. ☐ p.m.	11:00 ☐ a.m. ☑ p.m. (10-20-91 1810)
12. Sediment in well bottom	__.__ inches	__.__ inches
13. Water clarity	Clear ☐ 10; Turbid ☑ 15; (Describe) cloudy	Clear ☑ 20; Turbid ☐ 25; (Describe)

Fill in if drilling fluids were used and well is at solid waste facility:

14. Total suspended solids	—.__ mg/l	—.__ mg/l
15. COD	—.__ mg/l	—.__ mg/l
16. Screen length	10.0 ft.	

turn over for calculations + notes

17. Pump used was Grundfos Redi-Flo 2 (w/ brass straining cloth + 3/8" ID tubing)

Additional comments on development:

	initial	~~1700~~ gal	1890	2833
T (°C)	10.4	10.0	11.9	10.3
pH (units)	7.5	7.0	7.4	6.9
cond. (µmhos)	605	600	735	633
Time	0950	1530	1045	1700

see notes on back (1051)

well to casing:	-.20	-.20
stick-up:	2.2±	2.25±
from well: initial depth to bottom:	115.19	
from well: final depth to bottom:	115.30	115.16 (fine sand in bottom)

*No collar yet

Well developed by: Person's Name and Firm

Name: V. Miller / N. Roka

Firm: ABB-ES

I hereby certify that the above information is true and correct to the best of my knowledge.

Signature: Nancy E. Roka

Firm: ABB-ES

- Started pumping at 0930. Pump rate at 2.5 gal/min. at 329 Hz. (Top of H2O column)
- (1030) Lowered pump to bottom of well and continued surging. No visible silt.
- (1045-1100) Pump slowing, with surging, we increased pump rate and brought up quite a bit of brown silt. Continued surging frequently until H2O cleared + pump rate remained at 2.5+ gal/min.
- (1230) Pump rate still 2.5+ gpm
- (1[illegible]) Stopped pumping for drug (almost dark). Pumped finished at just under 250 min at 335 Hz.

~~NOTE: Shaded areas are for DNR use only. See instructions for more information.~~

ABB Environmental Services, Inc.

MONITORING WELL DEVELOPMENT FORM

Facility/Project Name: BAAP- USATHAMA	Well Name: SWN-91-01C
License, Permit or Monitoring Number: _____	Wis. Unique Well Number: _____ / DNR Well Number: _____

1. Can this well be purged dry? ☐ Yes ☑ No

2. Well development method

surged with bailer and bailed	☐	41
surged with bailer and pumped	☐	61
surged with block and bailed	☐	42
surged with block and pumped	☐	62
surged with block, bailed and pumped	☐	70
compressed air	☐	20
bailed only	☐	10
pumped only (with surging)	☑	51
pumped slowly	☐	50
Other _____	☐	

3. Time spent developing well: 1125 min.

4. Depth of well (from top of well casisng): 160.2 ft.

5. Inside diameter of well: __.33 in.

6. Volume of water in filter pack and well casing: 75.0 gal.

7. Volume of water removed from well: 3375.0 gal.

8. Volume of water added (if any): 1000.0 gal.

9. Source of water added: BPW #2

10. Analysis performed on water added? ☑ Yes ☐ No (If yes, attach results)

	Before Development	After Development	24 s. after
11. Depth to Water (from top of well casing)	79.43 ft.	79.47 ft.	NR
Date	10/22/91 (mm dd yy)	10/23/91 (mm dd yy)	10:2 9
Time	7:35 ☑ a.m. ☐ p.m.	14:50 ☐ a.m. ☑ p.m.	14:30
12. Sediment in well bottom	__.__ inches	__.__ inches	
13. Water clarity	Clear ☐ 10 Turbid ☑ 15 (Describe)	Clear ☑ 20 Turbid ☐ 25 (Describe) Effervescent	

Fill in if drilling fluids were used and well is at solid waste facility:

14. Total suspended solids	___.__ mg/l	___.__ mg/l
15. COD	___.__ mg/l	___.__ mg/l
16. Screen length	10.0 ft.	

17. Grund-fos Redi-Flo ~~tub~~ pump w/ brass straining cloth used for development. 3/8" 1[illegible]

Additional comments on development:

	initial	1125	2250	3375
T (°C)	12.1	12.7	12.1	12.8
pH (units)	7.9	7.5	7.4	7.4
cond. (µmhos)	383	567	633	654
Time	0745	1400	0835	1450
Date	10.22.91	10.22.91	10.23.91	10.23.91

well to casing:	-.09	-.09
stick-up:	2.7±	2.7±
initial depth to bottom:	160.18	↓
final depth to bottom:	160.15	160.20

* No collar on well yet

Well developed by: Person's Name and Firm

Name: N. Roka / V. Miller

Firm: ABB-ES

I hereby certify that the above information is true and correct to the best of my knowledge.

Signature: Nancy E. Roka

Firm: ABB-ES

(0845) Pump on + running at 3 gpm. Top of H_2O column
(0820) Lowered to bottom of well + surged for ~1/2 hr. Slightly turbid surged to cloudy. H_2O appeared effervescent. Pumping 3+ gpm.
~~NOTE: Shaded areas are for DNR use only. See instructions for more information.~~
(1040) Surged. No silt. H_2O still very effervescent. 3+ gpm.
(1535) Surged - No silt - very effervescent. 3+ gpm.
(1845) Had surged few more times. Shut down pump after 11 hrs. and 1980 gal.
10.23.91 (0705) Started pumping at bow 3 gpm. Effervescent. Calibrated pH/cond. meters #12 to 4.7 [illegible]
(142[illegible]) [illegible] clear. Effervescent. [illegible] pump to top of H_2O column

ABB Environmental Services, Inc.

MONITORING WELL DEVELOPMENT FORM

Facility/Project Name	Well Name
USATHAMA / BAAP	SWN-90-01D
License, Permit or Monitoring Number: _____	Wis. Unique Well Number: _____ / DNR Well Number: _____

1. Can this well be purged dry? ☐ Yes ☒ No

2. Well development method
   - surged with bailer and bailed ☐ 41
   - surged with bailer and pumped ☐ 61
   - surged with block and bailed ☐ 42
   - surged with block and pumped ☐ 62
   - surged with block, bailed and pumped ☐ 70
   - compressed air ☐ 20
   - bailed only ☐ 10
   - pumped only (with surging) ☒ 51
   - pumped slowly ☐ 50
   - Other _____ ☐ ____

3. Time spent developing well: 1130 min.

4. Depth of well (from top of well casisng): 200.7 ft.

5. Inside diameter of well: 4 in.

6. Volume of water in filter pack and well casing: 110.0 gal.

7. Volume of water removed from well: 5650.0 gal.

8. Volume of water added (if any): 1700.0 gal.

9. Source of water added: BPW-2

10. Analysis performed on water added? ☐ Yes ☐ No (If yes, attach results)

	Before Development	After Development
11. Depth to Water (from top of well casing)	78.92 ft.	79.04 ft. 79.02
Date (mm/dd/yy)	10/24/91	10/26/91 10/27/91
Time	13:30 ☐ a.m. ☒ p.m.	12:45 ☐ a.m. ☒ p.m. 17:15 pm
12. Sediment in well bottom	___.__ inches	___.__ inches
13. Water clarity	Clear ☒ 10; Turbid ☒ 15; (Describe)	Clear ☒ 20; Turbid ☐ 25; (Describe)

Fill in if drilling fluids were used and well is at solid waste facility:

14. Total suspended solids	—.__ mg/l	____.__ mg/l
15. COD	—.__ mg/l	____.__ mg/l
16. Screen length	10 ft	

17. Grundfos Redi-flo pump w/brass straining cloth used for development

Additional comments on development:

	INITIAL	1883	3766	5850
T (°C)	13.1	10.7	10.2	10.2
pH (units)	7.7	7.60	7.55	7.55
cond. (µmhos)	456	683	701	6.65
Time	1410	1200	1100	1700
Date	10/24/91	10/25/91	10/26/91	10/26/91

well to casing: .18
stick-up: 2.3
initial depth to bottom: 200.69
final depth to bottom: 200.63 200.62

Well developed by: Person's Name and Firm

Name: Bill Childs & Laura Carter

Firm: ABB-ES

I hereby certify that the above information is true and correct to the best of my knowledge.

Signature: Bill Childs

Firm: ABB-ES

(1400) Pump on and running at 4 gpm top of H2O Column 5.0 (WGC) 10/26/91 STARTED PUMP @ 0830

NOTE: Shaded areas are for DNR use only. See instructions for more information.

SAMPLED @ 1100 - 1700

(1430) Lowered pump to bottom of well and surged until clear

FINAL VOA SAMPLED @ 1720

(1700) Shut pump off for day

SHUT OFF PUMP @ 1710

(0945) Restart pump flow rate = @ 5 gpm

ABB Environmental Services, Inc.

MONITORING WELL DEVELOPMENT FORM

Facility/Project Name: BAAP - USATHAMA

Well Name: SWN-91-02C

License, Permit or Monitoring Number: ---

Wis. Unique Well Number: ---

DNR Well Number: ---

		Before Development	After Development
1. Can this well be purged dry?	☐ Yes ☑ No		
2. Well development method			
surged with bailer and bailed	☐ 4 1		
surged with bailer and pumped	☐ 6 1		
surged with block and bailed	☐ 4 2		
surged with block and pumped	☐ 6 2		
surged with block, bailed and pumped	☐ 7 0		
compressed air	☐ 2 0		
bailed only	☐ 1 0		
pumped only (with surging)	☑ 5 1		
pumped slowly	☐ 5 0		
Other _____	☐ ___		
11. Depth to Water (from top of well casing)		82.66 ft.	82.70 ft. * 8:7
Date		11/19/91 (mm/dd/yy)	11/19/91 (mm/dd/yy) 11/20 11
Time		9:10 ☑ a.m. ☐ p.m.	16:00 ☐ a.m. ☑ p.m. 16:40
12. Sediment in well bottom		___.__ inches	___.__ inches
13. Water clarity		Clear ☑ 10 Turbid ☐ 15 (Describe)	Clear ☑ 20 Turbid ☐ 25 (Describe)

3. Time spent developing well (Pumping Time): 390 min.

4. Depth of well (from top of well casing): 154.6 ft.

5. Inside diameter of well: 4.00 in.

6. Volume of water in filter pack and well casing: 66.0 ~~330.0~~ gal.

7. Volume of water removed from well: 1530.0 gal.

8. Volume of water added (if any): 400.0 gal. (During Installation)

9. Source of water added: _____

10. Analysis performed on water added? ☐ Yes ☑ No (If yes, attach results)

Fill in if drilling fluids were used and well is at solid waste facility:

	Before Development	After Development
14. Total suspended solids	---.__ mg/l	---.__ mg/l
15. COD	---.__ mg/l	---.__ mg/l
16. Screen length	10.0 ft.	

Additional comments on development: Ogal 516gal 1032 1530

	~~730~~	~~847~~	~~1363~~	-
T (°C)	10.7	10.6	10.9	10.6
pH (units)	7.79	7.59	7.30	7.5
cond. (umhos)	659	660	662	661
Time	9:10	11:20	13:30	15:40

Add 20 min for downtime of pump

well to casing: 0.23 — 0.2

stick-up: 1.30

initial depth to bottom: 154.6

final depth to bottom: 154.6 ** 154.55

Well developed by: Person's Name and Firm

Name: L. Carter + J. Jacobson

Firm: ABB-ES

I hereby certify that the above information is true and correct to the best of my knowledge.

Signature: [signature]

Firm: ABB-ES

* water ^ Depth measured 24 hrs later but pumping had started @ well 020 @ 10:20 am

** claim

NOTE: Shaded areas are for DNR use only. See instructions for more information.

Started pumping @ 9:10 @ 4gpm stop @ 15:40

well 2D ... ~45' ...

ABB Environmental Services, Inc.

MONITORING WELL DEVELOPMENT FORM

Facility/Project Name: BAAP - USAFTHAMA

Well Name: SWN-91-02D

License, Permit or Monitoring Number:

Wis. Unique Well Number: DNR Well Number:

24hr

		Before Development	After Development
1. Can this well be purged dry?	☐ Yes ☑ No		
2. Well development method			
surged with bailer and bailed	☐ 41		
surged with bailer and pumped	☐ 61		
surged with block and bailed	☐ 42		
surged with block and pumped	☐ 62		
surged with block, bailed and pumped	☐ 70		
compressed air	☐ 20		
bailed only	☐ 10		
pumped only (with surging)	☑ 51		
pumped slowly	☐ 50		
Other _____	☐		
11. Depth to Water (from top of well casing)		82.95 ft.	83.05 ft. 83.03
Date		11/20/91 (m m d d y y)	11/21/91 (8:00 to) 11/22/91
Time		10:20 ☒ a.m. ☐ p.m. (to 16:45)	14:04 ☐ a.m. ☒ p.m. 14:0[illegible]
12. Sediment in well bottom		___.__ inches	___.__ inches
13. Water clarity		Clear ☒ 10 Turbid ☐ 15 (Describe) Pump clogged with fine sand had to disassemble and clean impellers. water quality was clear.	Clear ☒ 20 Turbid ☐ 25 (Describe)
3. Time spent developing well (pumping time)		749 min.	
4. Depth of well (from top of well casing)		187.4 ft.	
5. Inside diameter of well		4.00 in.	
6. Volume of water in filter pack and well casing		98.3 ~~441.4~~ gal.	
7. Volume of water removed from well		2 991.0 gal.	
8. Volume of water added (if any) During Installation		835.0 gal.	
9. Source of water added		BAAP PW #2	
10. Analysis performed on water added? (If yes, attach results)	☑ Yes ☐ No		
Fill in if drilling fluids were used and well is at solid waste facility:			
14. Total suspended solids		____.__ mg/l	____.__ mg/l
15. COD		____.__ mg/l	____.__ mg/l
16. Screen length		10.0 ft.	

Additional comments on development:

	0 gal	999 gal	1998	~2997
T (°C)	10.6	10.9	9.9	10.3
pH (units)	8.2	8.2	8.27	8.24
cond. (umhos)	522	605	594	598
Time	10:20 (11/20)	14:30 (11/20)	9:54 (11/21)	~~50~~ 14:04 (11/21)

well to casing: -0.17 -0.17
stick-up: 1.45
initial depth to bottom: 187.36
final depth to bottom: 187.10 187.10

Well developed by: Person's Name and Firm

Name: L. Carter & J. Jacobson

Firm: ABB-ES

I hereby certify that the above information is true and correct to the best of my knowledge.

Signature: R.P. Jacobson

Firm: ABB-ES

NOTE: Shaded areas are for DNR use only. See instructions for more information.

Stopped pumping @ 16:45 (also ran out of gas) started pumping again @ 8:00 am 11/21

Run time 6:25 or 385 min. x 4 gpm = 1540 gpm pumped on 11/20
1998 gal - 1540 = 458 gallons @ 4 gal/min = 1 hr 54 min until next sample (8:00 + 1hr 54 min) = 9:54 am

ABB Environmental Services, Inc.

MONITORING WELL DEVELOPMENT FORM

Facility/Project Name: BAAP - USATHAMA

Well Name: SWN-91-03B

License, Permit or Monitoring Number:

Wis. Unique Well Number: DNR Well Number:

1. Can this well be purged dry? ☐ Yes ☒ No

2. Well development method

surged with bailer and bailed	☐	41
surged with bailer and pumped	☐	61
surged with block and bailed	☐	42
surged with block and pumped	☐	62
surged with block, bailed and pumped	☐	70
compressed air	☐	20
bailed only	☐	10
pumped only (with surging)	☒	51
pumped slowly	☐	50
Other _____	☐	

3. Time spent developing well: 750 min.

4. Depth of well (from top of well casisng): 115.5 ft.

5. Inside diameter of well: 4.00 in.

6. Volume of water in filter pack and well casing: 45.6 gal.

7. Volume of water removed from well: 1730.0 gal.

8. Volume of water added (if any): 500.0 gal.

9. Source of water added: BAAP prod. well #2

10. Analysis performed on water added? ☒ Yes ☐ No (If yes, attach results)

	Before Development	After Development
11. Depth to Water (from top of well casing)	84.67 ft.	84.52 ft.
Date	11/07/91 (m m d d y y)	11/08/91 (m m d d y y)
Time	09:00 ☑ a.m. ☐ p.m. (16 30)	01:12 ☐ a.m. ☑ p.m. (8:12)
12. Sediment in well bottom	___.__ inches	___.__ inches
13. Water clarity	Clear ☒ 10 Turbid ☐ 15 (Describe)	Clear ☒ 20 Turbid ☐ 25 (Describe)

Fill in if drilling fluids were used and well is at solid waste facility:

14. Total suspended solids	____.__ mg/l	____.__ mg/l
15. COD	____.__ mg/l	____.__ mg/l
16. Screen length	10.0 ft.	

17. Pump used was Grundfos Redi-Flo 2 w/ straining cloth

Additional comments on development:

	0	500	09:47 1000	13:07 12 1500
T (°C)	9.2	9.5	9.8	9.9
pH (units)	7.79	7.22	7.52	7.83
cond. (µmhos)	671	668	668	669
	11:15	~~14:35~~	17:55	~~3:20 PM~~

14:40 → Broke down @ 16:30 w/ 5 min delay for gas filling

well to casing: 0.08 0.10
stick-up: 1.92
initial depth to bottom: 115.54
final depth to bottom: 115.35

Well developed by: Person's Name and Firm

Name: D. Dionne / D. VonBushberger

Firm: ABB-ES

I hereby certify that the above information is true and correct to the best of my knowledge.

Signature: Dwight Smith / Nancy E. Rof.

Firm: ABB-ES

NOTE: Shaded areas are for DNR use only. See instructions for more information.

*No final observational sample collected - H2O was clear

ABB Environmental Services, Inc.

MONITORING WELL DEVELOPMENT FORM

Facility/Project Name: BAAP

Well Name: SWN-91-03C

License, Permit or Monitoring Number: _____

Wis. Unique Well Number: _____ DNR Well Number: _____

1. Can this well be purged dry? ☐ Yes ☒ No

2. Well development method

surged with bailer and bailed	☐	4 1
surged with bailer and pumped	☐	6 1
surged with block and bailed	☐	4 2
surged with block and pumped	☐	6 2
surged with block, bailed and pumped	☐	7 0
compressed air	☐	2 0
bailed only	☐	1 0
pumped only (with surging)	☒	5 1
pumped slowly	☐	5 0
Other _____	☐	

3. Time spent developing well _____ min.

4. Depth of well (from top of well casing) 165.3 ft.

5. Inside diameter of well 4.0 in.

6. Volume of water in filter pack and well casing 388.__ gal.

7. Volume of water removed from well 8488.0 gal.

8. Volume of water added (if any) __0.0 gal.

9. Source of water added _____

10. Analysis performed on water added? N/A ☐ Yes ☒ No (If yes, attach results)

	Before Development	After Development	
11. Depth to Water (from top of well casing)	84.57 ft.	84.50 ft.	84.5
Date	11/09/91 (m m d d y y)	11/18/91 (m m d d y y)	11/19
Time	8:30 ☒ a.m. ☐ p.m.	17:00 ☐ a.m. ☒ p.m.	16:48
12. Sediment in well bottom	___.__ inches	___.__ inches	
13. Water clarity	Clear ☒ 10 Turbid ☐ 15 (Describe)	Clear ☒ 20 Turbid ☐ 25 (Describe)	

Fill in if drilling fluids were used and well is at solid waste facility:

14. Total suspended solids	_____.__ mg/l	_____.__ mg/l
15. COD	_____.__ mg/l	_____.__ mg/l
16. Screen length	10 ft.	

Additional comments on development:

	388	3088	5788	8488
T (°C)	8.4	8.8	9.8	10.3
pH (units)	7.78	8.01	7.41	7.87
cond. (µmhos)	4.26	442	416	433

well to casing: - 0.01 → -0.01
stick-up: 2'
initial depth to bottom: 165.34
final depth to bottom: 165.40 → 165.40

Well developed by: Person's Name and Firm

Name: J. JACOBSON & L. CARTER

Firm: ABB-ES

I hereby certify that the above information is true and correct to the best of my knowledge.

Signature: Laura E. Carter

Firm: ABB-ES

NOTE: Shaded areas are for DNR use only. See instructions for more information.

began pumping 11/9/91 @ 08:30 · Took samples (VOC) after 5 volumes from top of water column. @ 10:40
Flow rate = 3 gpm
Time to remove 1 vol = 26 min.

ABB Environmental Services, Inc.

MONITORING WELL DEVELOPMENT FORM

Facility/Project Name: USATHAMA - BAAP

Well Name: SWN - 91-03D

License, Permit or Monitoring Number:

Wis. Unique Well Number: | DNR Well Number:

1. Can this well be purged dry? ☐ Yes ☑ No

2. Well development method

surged with bailer and bailed	☐	4 1
surged with bailer and pumped	☐	6 1
surged with block and bailed	☐	4 2
surged with block and pumped	☐	6 2
surged with block, bailed and pumped	☐	7 0
compressed air	☐	2 0
bailed only	☐	1 0
pumped only (with surging)	☑	5 1
pumped slowly	☐	5 0
Other _____	☐	

3. Time spent developing well _____ min.

4. Depth of well (from top of well casisng) 210.4 ft.

5. Inside diameter of well 4.00 in.

6. Volume of water in filter pack and well casing 564.4 gal.

7. Volume of water removed from well 2664.4 gal.

8. Volume of water added (if any) 700.0 gal.

9. Source of water added BAAP PW #2

10. Analysis performed on water added? ☑ Yes ☐ No (If yes, attach results)

	Before Development	After Development
11. Depth to Water (from top of well casing)	210.04 ft.	35.03 ft. 24h. 8 D
Date	11/07/91 (m m d d y y)	11/23/91 11.09
Time	09:26 ☑ a.m. ☐ p.m.	16:45 ☐ a.m. ☐ p.m. 1645
12. Sediment in well bottom	____ inches	____ inches
13. Water clarity	Clear ☑ 10 Turbid ☐ 15 (Describe)	Clear ☑ 20 Turbid ☐ 25 (Describe)

Fill in if drilling fluids were used and well is at solid waste facility:

14. Total suspended solids	____ mg/l	____ mg/l
15. COD	____ mg/l	____ mg/l
16. Screen length	10 ft	

17. Pump used was Grund-fos Redi-Flo 2 w/ brass straining cloth

Additional comments on development:

	11/7	11/8 12:30	4:30	
	564.4	1264.4	1964.4	2664
T (°C)	9.6	8.7	9.6	9.3
pH (units)	7.24	7.23	7.94	7.94
cond. (umhos)	532	528	536	524

well to casing stick-up: flush 1.11 (from rock bed)

initial depth to bottom: 210.41 ft

final depth to bottom: 210.45 ≈ 210.44

Well developed by: Person's Name and Firm

Name: P. OWEN & L. CARTER

Firm: ABB-ES

I hereby certify that the above information is true and correct to the best of my knowledge.

Signature: Laura E Carter

Firm: ABB-ES

NOTE: Shaded areas are for DNR use only. See instructions for more information.

BEGAN PUMPING 11/7/91 09:26
FLOW RATE = 3 gpm
TIME TO REMOVE 1 VOLUME = 37 MIN.

TOOK SAMPLES (VOC) AFTER 5 VOLUMES WERE REMOVED (12:35). LOWERED PUMP & SURGED. REMOVED 2100 gal. @ 3 gpm. 11.6 HOURS TO COMPLETE.
11/8/91 STARTED PUMP AT 5:30 SAMPLED

ABB Environmental Services, Inc.

MONITORING WELL DEVELOPMENT FORM

Facility/Project Name: BAAP- USATHAMA

Well Name: SWN-91-03E

License, Permit or Monitoring Number: _____

Wis. Unique Well Number: _____ DNR Well Number: _____

1. Can this well be purged dry? ☐ Yes ☑ No

2. Well development method

surged with bailer and bailed	☐	4 1
surged with bailer and pumped	☐	6 1
surged with block and bailed	☐	4 2
surged with block and pumped	☐	6 2
surged with block, bailed and pumped	☐	7 0
compressed air	☐	2 0
bailed only	☐	1 0
pumped only (with surging)	☑	5 1
pumped slowly	☐	5 0
Other _____	☐	

3. Time spent developing well: 190 min.

4. Depth of well (from top of well casisng): 240.5 ft.

5. Inside diameter of well: 4.00 in.

6. Volume of water in filter pack and well casing: 131.0 gal.

7. Volume of water removed from well: 331.0 gal.

8. Volume of water added (if any): 67.0 gal.

9. Source of water added: BPW #2

10. Analysis performed on water added? ☑ Yes ☐ No (If yes, attach results)

	Before Development	After Development	24 hr. later
11. Depth to Water (from top of well casing)	85.19 ft.	85.28 ft.	85.2
Date	11/12/91 (m m d d y y)	11/12/91 (m m d d y y)	11/13/91
Time	08:15 ☑ a.m. ☐ p.m.	11:25 ☑ a.m. ☐ p.m.	11:26 AM
12. Sediment in well bottom	___.__ inches	___.__ inches	
13. Water clarity	Clear ☐ 10 Turbid ☑ 15 (Describe)	Clear ☑ 20 Turbid ☐ 25 (Describe)	

Fill in if drilling fluids were used and well is at solid waste facility:

14. Total suspended solids	____.__ mg/l	____.__ mg/l
15. COD	____.__ mg/l	____.__ mg/l
16. Screen length	10'	10'

Additional comments on development:

	INITIAL	26.1	52.2	78.3	104	131			
T (°C)	9.4	10.2	10.5	10.3	10.3				
pH (units)	7.6	7.8	7.78	7.82	7.81	7.79	7.76	7.81	7.86
cond. (µmhos)	6.09	6.25	6.27	6.27	6.29	6.29	6.30	6.35	6.25
Time	08:45	09:15	9:30	9:40	9:50	10:00	10:10	10:20	10:30

well to casing: .18' (.18)
stick-up: 2.93'
initial depth to bottom: 240.49 (1.5)
final depth to bottom: 240.49 (240.48)

Well developed by: Person's Name and Firm

Name: P. OWEN + L CARTER

Firm: ABB - ES

I hereby certify that the above information is true and correct to the best of my knowledge.

Signature: _____

Firm: ABB-ES

NOTE: Shaded areas are for DNR use only. See instructions for more information.

ABB Environmental Services, Inc. **MONITORING WELL DEVELOPMENT FORM**

Facility/Project Name: BAAP- USATHAMA	Well Name: SWN-91-04C
License, Permit or Monitoring Number: _____	Wis. Unique Well Number: _____ / DNR Well Number: _____

1. Can this well be purged dry? ☐ Yes ☒ No

2. Well development method
   - surged with bailer and bailed ☐ 41
   - surged with bailer and pumped ☐ 61
   - surged with block and bailed ☐ 42
   - surged with block and pumped ☐ 62
   - surged with block, bailed and pumped ☐ 70
   - compressed air ☐ 20
   - bailed only ☐ 10
   - pumped only (with surging) ☒ 51
   - pumped slowly ☐ 50
   - Other _____ ☐ ___

3. Time spent developing well: ~~[illegible]~~ 342 min.

4. Depth of well (from top of well casisng): 165.5 ft.

5. Inside diameter of well: 4.00 in.

6. Volume of water in filter pack and well casing: 73.1 gal.

7. Volume of water removed from well: 2375.0 gal.

8. Volume of water added (if any): ~~670.0~~ ~~335~~.0 gal. 335.0 per Nancy R.

9. Source of water added: BPW #2 @ 8:30 11/22

10. Analysis performed on water added? ☒ Yes ☐ No (If yes, attach results)

	Before Development	After Development
11. Depth to Water (from top of well casing)	84.28 ft.	84.39 ft.
Date	11/21/91 (mm dd yy)	11/22/91 (mm dd yy)
Time	15:00 ☐ a.m. ☒ p.m.	12:02 ☐ a.m. ☒ p.m.
12. Sediment in well bottom	___.___ inches	___.___ inches
13. Water clarity	Clear ☐ 10 Turbid ☒ 15 (Describe) small amt of fines made water slightly turbid (cleared after a few minutes of pumping)	Clear ☒ 20 Turbid ☐ 25 (Describe)

Fill in if drilling fluids were used and well is at solid waste facility:

14. Total suspended solids	___.___ mg/l	___.___ mg/l
15. COD	___.___ mg/l	___.___ mg/l
16. Screen length	? 10.0 ft.	

24 5 later

* Volume of water figure of 670gpm changed to 335gpm (See No. 8) after pumping had commenced hence 2nd sample was taken @ 520gpm instead of 457gpm as required for an even increment

Additional comments on development:

	0	~~792~~ *520gpm	~~1585~~ 914gpm	~~2375~~ 1370 gal
T (°C)	10.9	11.0	11.4	12.2
pH (units)	8.15	8.44	8.05	8.28
cond. (µmhos)	546	627	654	665
Time	15:00 (11/21)	8:30 (11/22)	10:08 (11/22)	12:02 (11/22)

sample every 3hrs @ 8:30

well to casing: -0.22 -0.22
stick-up: 1.70
initial depth to bottom: 165.47
final depth to bottom: 165.48 165.48

Well developed by: Person's Name and Firm	I hereby certify that the above information is true and correct to the best of my knowledge.
Name: R.D. Jackson	Signature: R.D. Jackson
Firm: ABB-ES	Firm: ABB-ES

NOTE: Shaded areas are for DNR use only. See instructions for more information.

(1) Started Pumping @ 15:00 @ 4gpm
Total of ~~2375~~ 1370 gal will require ~~[illegible]~~ 342 min
Shut down @ 16:45 11/21
for total pumping of 105 min x 4gpm = 420

(2) Started pumping again 11/22 @ 8:05. 2nd sample ~~will be~~ taken @ ~~792 gpm = 420 gal~~ 8:30
~~= 372 gal/min / 4gpm = 93 minutes or 1 hr 33 min~~ ~~8:05 + 1:33 = 9:38~~
25 min x 4gmp = 100gpm ⇒ 420gpm + 100gpm = 520

ABB Environmental Services, Inc.

MONITORING WELL DEVELOPMENT FORM

Facility/Project Name: BAAP - USATHAMA

Well Name: SWN-91-04D

License, Permit or Monitoring Number: _____

Wis. Unique Well Number: _____ DNR Well Number: _____

	Before Development	After Development (24 hrs. later)
11. Depth to Water (from top of well casing)	84.60 ft.	84.60 ft. 84.45
Date	11/22/91 (m m d d y y)	11/23/91 11:24A
Time	12:15 ☐ a.m. ☒ p.m.	16:31 ☐ a.m. ☒ p.m. 1600
12. Sediment in well bottom	___.__ inches	___.__ inches
13. Water clarity	Clear ☐ 10 Turbid ☒ 15 (Describe) Slightly cloudy Cleared after a few minutes of pumping after purging	Clear ☒ 20 Turbid ☐ 25 (Describe)
Fill in if drilling fluids were used and well is at solid waste facility:		
14. Total suspended solids	____.__ mg/l	____.__ mg/l
15. COD	____.__ mg/l	____.__ mg/l
16. Screen length	10.0 ft.	

1. Can this well be purged dry? ☐ Yes ☒ No

2. Well development method

surged with bailer and bailed	☐	4 1
surged with bailer and pumped	☐	6 1
surged with block and bailed	☐	4 2
surged with block and pumped	☐	6 2
surged with block, bailed and pumped	☐	7 0
compressed air	☐	2 0
bailed only	☐	1 0
pumped only (with surging)	☑	5 1
pumped slowly	☐	5 0
Other _____	☐	___

3. Time spent developing well: 746 min.

4. Depth of well (from top of well casing): 199.5 ft.

5. Inside diameter of well: 4.00 in.

6. Volume of water in filter pack and well casing: 75.2 gal.

7. Volume of water removed from well: 2982.0 gal.

8. Volume of water added (if any): 835.0 gal.

9. Source of water added: BPW #2

10. Analysis performed on water added? ☑ Yes ☐ No (If yes, attach results)

Additional comments on development:

Gallons	0	994	1988	2982
T (°C)	12.7	10.9	10.6	10.9
pH (units)	8.31 ~~8.31~~	8.97	E.Q.	8.02
cond. (umhos)	528	517	494	515
Time	12:15 (11-22)	16:24 (11-22)	12:22 (11-23)	16:31 (11-23)

4 hrs 9 min between samples

well to casing: -0.10
stick-up: 1.20
initial depth to bottom: 199.52
final depth to bottom: 199.53 199.53

Well developed by: Person's Name and Firm

Name: J. Jackson

Firm: ABB-ES

I hereby certify that the above information is true and correct to the best of my knowledge.

Signature: J. Jackson

Firm: ABB-ES

NOTE: Shaded areas are for DNR use only. See instructions for more information.

Started pumping @ 12:15 (11/22) @ 4 gpm. Total pumping time will be 746 minutes (12 hrs 26 minutes) Stopped Pumping @ 16:50 for total flow of 275 min x 4 gal/min = 1100 gpm on 11/22. Started pumping again @ 8:40 11/23. Sample point will be @ 1988 gal - 1100 gal = 888 gpm. 888/4 gpm = 222 min or 3 hrs 42 min + 8:40 = 12:22

AB3 Environmental Services, Inc. **MONITORING WELL DEVELOPMENT FORM**

Facility/Project Name	Well Name
BAAP - USATHAMA	SWN-91-05B
License, Permit or Monitoring Number	Wis. Unique Well Number / DNR Well Number

1. Can this well be purged dry? ☐ Yes ☑ No

2. Well development method
   - surged with bailer and bailed ☐ 41
   - surged with bailer and pumped ☐ 61
   - surged with block and bailed ☐ 42
   - surged with block and pumped ☐ 62
   - surged with block, bailed and pumped ☐ 70
   - compressed air ☐ 20
   - bailed only ☐ 10
   - pumped only (with surging) ☑ 51
   - pumped slowly ☐ 50
   - Other _____ ☐

3. Time spent developing well 660 min.

4. Depth of well (from top of well casisng) 115.4 ft.

5. Inside diameter of well __.~~28~~ 33 in. ft.

6. Volume of water in filter pack and well casing 33.3 gal.

7. Volume of water removed from well 1660.0 gal.

8. Volume of water added (if any) (during installation) 500.0 gal.

9. Source of water added BAAP production well #2

10. Analysis performed on water added? ☑ Yes ☐ No (If yes, attach results)

	Before Development	After Development
11. Depth to Water (from top of well casing)	85.31 ft.	85.31 ft. 24 hrs. at 85 3
Date	10/17/91 (mm dd yy)	10/17/91 (mm dd yy) 17-5 10-1 91
Time	7:15 ☑ a.m. ☐ p.m.	7:15 ☐ a.m. ☑ p.m.
12. Sediment in well bottom	__.__ inches	__.__ inches
13. Water clarity	Clear ☐ 10 Turbid ☑ 15 (Describe)	Clear ☑ 20 Turbid ☐ 25 (Describe)

Fill in if drilling fluids were used and well is at solid waste facility:

14. Total suspended solids	___.__ mg/l	___.__ mg/l
15. COD	___.__ mg/l	___.__ mg/l
16. Screen length	10.0 ft.	

turn over for calculations →

Additional comments on development:

Time:	initial	1300 500 gal.	1620 1235 gal	1915 1660
T (°C)	12.1	12.9	13.9	13.1
pH (units)	7.2	7.2	7.4	7.1
cond. (µmhos)	693	693	705	694

- counted volume up to 110 gal. Then started timing at 0950 at @ 3 gal./min. (max functioning ~300 Hz)

well to casing: -.13 -.18
stick-up: 2.6± 2.6±
initial depth to bottom: 115.37
final depth to bottom: 115.41 115.43

Well developed by: Person's Name and Firm

Name: Nancy Roka/Vicki Miller

Firm: ABB-ES

I hereby certify that the above information is true and correct to the best of my knowledge.

Signature: Nancy E. Roka

Firm: ABB-ES

(1130) Still pumping 3 gal/min. At this time we've pumped 410 gal.
(1500) Pump purging at 2.5 gal/min. Can't ↑ Hz or will overload converter/pump

NOTE: Shaded areas are for DNR use only. See instructions for more information.

(1620) Pump still purging at 2.5 gal/min. We've pumped 1235 gal.
(1815) Pump still purging at 2.5 gal/min. Freq. = 326 Hz
+ ~~###~~ 111 - Grund-fos Redi-Flo 2 w/ brass straining cloth and 3/8" ID tubing

ABB Environmental Services, Inc.

MONITORING WELL DEVELOPMENT FORM

Facility/Project Name: SWN-91-05C	Well Name: BAAP-USATHAMA
License, Permit or Monitoring Number: _____	Wis. Unique Well Number: _____ / DNR Well Number: _____

1. Can this well be purged dry? ☐ Yes ☑ No

2. Well development method
   - surged with bailer and bailed ☐ 41
   - surged with bailer and pumped ☐ 61
   - surged with block and bailed ☐ 42
   - surged with block and pumped ☐ 62
   - surged with block, bailed and pumped ☐ 70
   - compressed air ☐ 20
   - bailed only ☐ 10
   - pumped only (with surging) ☑ 51
   - pumped slowly ☐ 50
   - Other _____ ☐ ___

3. Time spent developing well: 1110 min.

4. Depth of well (from top of well casisng): 149.1 ft.

5. Inside diameter of well: __.33 ~~in.~~ ft.

6. Volume of water in filter pack and well casing: 60.5 gal.

7. Volume of water removed from well: 3300.0 gal.

8. Volume of water added (if any): 1000.0 gal.

9. Source of water added: BPW #2

10. Analysis performed on water added? ☑ Yes ☐ No (If yes, attach results)

	Before Development	After Development	24 hrs later
11. Depth to Water (from top of well casing)	85.56 ft.	85.65 ft.	85.59
Date (mm/dd/yy)	10/20/91	10/21/91	10-22-9
Time	7:37 (VM) ☑ a.m. ☐ p.m.	4:20 ☐ a.m. ☑ p.m.	1730
12. Sediment in well bottom	__.__ inches	__.__ inches	
13. Water clarity	Clear ☐ 10 / Turbid ☑ 15 (Describe) Cloudy	Clear ☑ 20 / Turbid ☐ 25 (Describe)	

Fill in if drilling fluids were used and well is at solid waste facility:

14. Total suspended solids	____.__ mg/l	____.__ mg/l
15. COD	____.__ mg/l	____.__ mg/l
16. Screen length	10.0 ft.	

17. Used Grundfos Redi-Flo 2 pump w/ brass ~~[illegible]~~ straining cloth over intake + 3/8" ID tubing

Additional comments on development:

	initial	1329	~~2340~~ 2160 (VM)	~3300
T (°C)	11.1	12.1	12.5	13.8
pH (units)	7.36	6.7	7.2	7.6
cond. (µmhos)	413	633	627	681
Time	0752	1515	~~1057~~ 0955 (VM)	1620
Date	10.20.91	10.20.91	10.21.91	10.21.91

well to casing: -.07 -.07
stick-up: 2.4± 2.4±
initial depth to bottom: 149.10
final depth to bottom: (VM) 149.12 149.09
*No concrete collar yet

Well developed by: Person's Name and Firm

Name: N. Roka / V. Miller

Firm: ABB-ES

I hereby certify that the above information is true and correct to the best of my knowledge.

Signature: Nancy E. Roka

Firm: ABB-ES

Started pumping 10.20.91 at 0750 (3 gpm) at top of H2O column.
(0820) Pumped out standing H2O. Lowered pump to bottom well. Surged for at ½ hour very turbid
~~NOTE: Shaded areas are for DNR use only. See instructions for more information.~~ pulling very turbid, the cloudy (silty) H2O out
(1150) Pump still running at 3 gpm more surging. P silt and fine sand.
(1420) Started surging (still 3 gpm) Brought up a lot of silt and fine sand.
(1510) End surging much less (slightly cloudy) silt, still getting fine sand. 3 gpm.
(1800) Stopped developing for day. Still 3 gpm minus time spent filling gas (~10 min.), purged 10 hrs/1800 gal. →

ABB Environmental Services, Inc.

MONITORING WELL DEVELOPMENT FORM

Facility/Project Name	Well Name
USATHAMA / BAAP	SWN-91-05D
License, Permit or Monitoring Number	Wis. Unique Well Number / DNR Well Number

1. Can this well be purged dry? ☐ Yes ☑ No

2. Well development method

surged with bailer and bailed	☐	41
surged with bailer and pumped	☐	61
surged with block and bailed	☐	42
surged with block and pumped	☐	62
surged with block, bailed and pumped	☐	70
compressed air	☐	20
bailed only	☐	10
pumped only (with surging)	☑	51
pumped slowly	☐	50
Other _____	☐	

3. Time spent developing well 2285 min.

4. Depth of well (from top of well casisng) 202.9 ft.

5. Inside diameter of well 4 in.

6. Volume of water in filter pack and well casing 99 gal.

7. Volume of water removed from well 7995.0 gal.

8. Volume of water added (if any) 2500.0 gal.

9. Source of water added PW-2

10. Analysis performed on water added? ☐ Yes ☑ No
(If yes, attach results)

	Before Development	After Development
11. Depth to Water (from top of well casing)	86.18 ft.	~~90.96~~ ft. 85.96
Date	10/27/91 (mm dd yy)	11/06/91 (mm dd yy)
Time	08:00 ☒ a.m. ☐ p.m.	16:45 ☐ a.m. ☑ p.m. 16:35
12. Sediment in well bottom	__.__ inches	__.__ inches
13. Water clarity	Clear ☒ 10 Turbid ☐ 15 (Describe)	Clear ☑ 20 Turbid ☐ 25 (Describe)

Fill in if drilling fluids were used and well is at solid waste facility:

14. Total suspended solids	— mg/l	— mg/l
15. COD	— mg/l	— mg/l
16. Screen length	10.0 ft.	

17. Pump used was Grunfos Redi-Flo 2 w/ brass straining cloth

Additional comments on development:

	10	2665	5330	7995
T (°C)	11.3	11.6	12.0	9.3
pH (units)	7.45	7.46	7.70	7.28
cond. (µmhos)	658	636	675	722

well to casing: -0.18 -.18
stick-up: 2.62 1.18
initial depth to bottom: 202.93
final depth to bottom: 202.95 202.96

Well developed by: Person's Name and Firm

Name: [signature]

Firm: ABB ENVIRONMENTAL

I hereby certify that the above information is true and correct to the best of my knowledge.

Signature: [signature]

Firm: ABB ENVIRONMENTAL

2665 gal left

NOTE: Shaded areas are for DNR use only. See instructions for more information.

Appendix D.5

Regional Water Supply Well Logs

This Page Intentionally Left Blank.

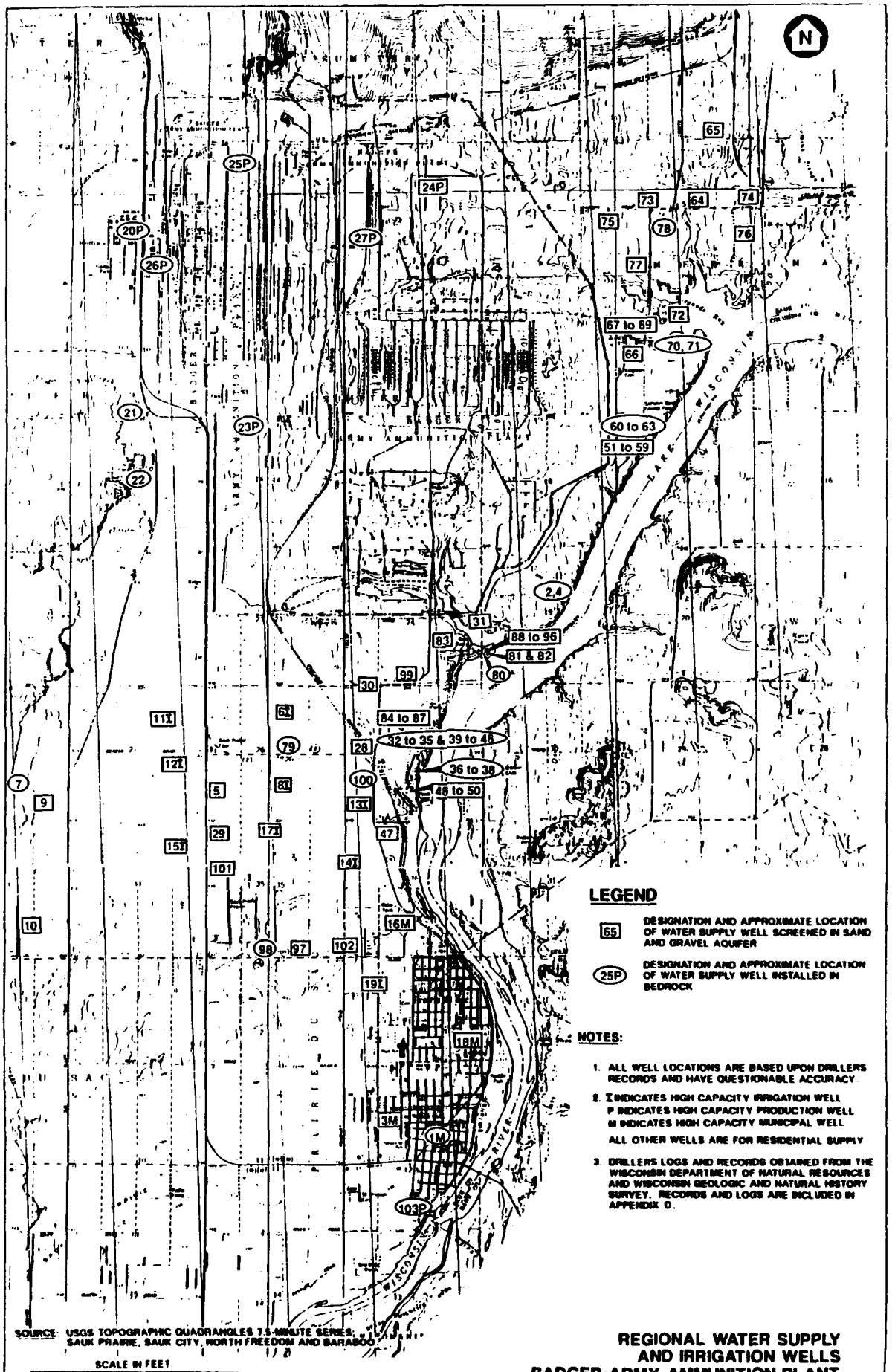
N
65
25P
24P
73
64
74
75
78
76
20P
27P
77
26P
72
67 to 69
70, 71
66
21
23P
60 to 63
51 to 59
22
2,4
31
88 to 96
83
81 & 82
80
99
30
84 to 87
11I
6I
32 to 35 & 39 to 46
79
28
12I
36 to 38
5
8I
100
48 to 50
7
9
13I
47
29
17I
15I
14I
101
10
16M
98
97
102
19I
18M
3M
1M
103P
SOURCE: USGS TOPOGRAPHIC QUADRANGLES 7.5-MINUTE SERIES: SAUK PRAIRIE, SAUK CITY, NORTH FREEDOM AND BARABOO
SCALE IN FEET
0
4000
8000
LEGEND
65 DESIGNATION AND APPROXIMATE LOCATION OF WATER SUPPLY WELL SCREENED IN SAND AND GRAVEL AQUIFER
25P DESIGNATION AND APPROXIMATE LOCATION OF WATER SUPPLY WELL INSTALLED IN BEDROCK
NOTES:
1. ALL WELL LOCATIONS ARE BASED UPON DRILLERS RECORDS AND HAVE QUESTIONABLE ACCURACY
2. I INDICATES HIGH CAPACITY IRRIGATION WELL
P INDICATES HIGH CAPACITY PRODUCTION WELL
M INDICATES HIGH CAPACITY MUNICIPAL WELL
ALL OTHER WELLS ARE FOR RESIDENTIAL SUPPLY
3. DRILLERS LOGS AND RECORDS OBTAINED FROM THE WISCONSIN DEPARTMENT OF NATURAL RESOURCES AND WISCONSIN GEOLOGIC AND NATURAL HISTORY SURVEY. RECORDS AND LOGS ARE INCLUDED IN APPENDIX D.
REGIONAL WATER SUPPLY AND IRRIGATION WELLS
BADGER ARMY AMMUNITION PLANT
ECJORDANCO

8049-14

SAUK CITY VILLAGE WELL #1 SK-8 1

~~WATERWORKS WELL, SAUK CITY, WIS.~~

C, NE, SW, NE¼, SW ¼, NE¼, Sec. 12, T9, R.6 E., Sauk Co.
L.P. O'Connors, Driller
Completed, May, 1921
Samples examined by F.T. Thwaites, U.W. Nos. 53365-53397
Elevation ~~[illegible]~~ 753' ETM

1" = 100'

Formation	Depth	Description	Remarks
OUTWASH	0-4	Soil, no samples	
	4-10	Gravel, no samples	
	10-100	Sand, light gray, no samples	17 Ground water level; Flow 401 g.p.m. Pressure 14# at surface
	100-124	Quicksand, no samples	
	124-128	Sand and colored gravel, no samples	
EAU CLAIRE	128-130	Sandstone, "honeycomb", no samples	135
	130-134	Shale, no sam	
	134-148	"Blue magnesian lime" (blue limy shale) no samples	
	148-160	Sandstone, fine, gray, black specks, no samples	160 water rose 1'
	160-180	Sandstone, very hard, white, no samples	
	180-220	Shale, blue, no samples	
	220-234	"Quartzite", very hard, no samples	
	234-244	Sandstone, fine, gray, hard, mica, no samples	
	244-249	Sandstone, fine, gray limy, some gray limy shale	
	249-250	Shale, gray, hard part no lime; soft, limy	
	250-256	Ss., very fine to fine, gray, limy; sh. as above; slow drilling	
	256-300	Sandstone, very fine, gray, limy	
MT. SIMON	300-305	Sandstone, medium to fine, gray	300 First rise of water
	305-332	Sandstone, fine, gray, limy; streaks of gray, limy shale	
	332-335	Sandstone, coarse to very fine, gray, limy; gray shale	
	335-345	Ss., fine to very fine, gray, pyrite, hard drilling, crevices	340 when crevice was plugged well overflows
	345-352	Sandstone, fine, gray; gray shale layers	
	352-375	Sandstone, medium to fine, gray, limy	
	375-400	Shale, gray, top mainly not limy, bottom, soft, "spongy" and limy	
	400-420	Sandstone, fine to very coarse, gray	400 Second rise of water
	420-480	Sandstone, medium to coarse, gray with pink grains	
	480-485	Sandstone, coarse to medium, gray, limy, soft	
PRE-CAMB.	485-496	Sandstone, very coarse to medium, lt. yellowish gray, pink grs.	496 Flow increased 15 g.p.m. for every ft
	496-503	Sandstone as above. big flow of water	
	503-520	Sandstone, coarse to fine, light yellowish gray, wet seasily	
	520-523	Sandstone like above, some lime, feldspar grains	
	523-525	Granite, pink (quartz, feldspar, mica)	

8" pipe

8" hole

128

172

223

2

UNIVERSITY OF WISCONSIN GEOLOGICAL & NATURAL HISTORY SURVEY
1815 University Avenue, Madison, Wisconsin 53706

Log No. J6-Sk-17
Sample Nos. All Retained

Well name U.S. Dairy Forage Research Center Test Hole
Town of Merrimac
Owner.... U.S. Dairy Forage Research Center
Address.. Route 1
Prairie du Sac, WI 53578
Driller.. Ace Well Drilling, Inc.
Engineer. Carl C. Crane, Inc.
Madison, Wisconsin

County: Sauk
Completed... 1979
Field check.
Altitude.... 860' ETM
Use..... Test
Static w.l..
Spec. cap...

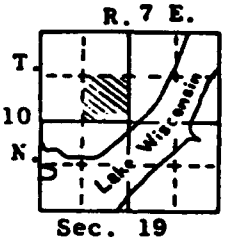

Quad. Sauk City 7½'

Drill Hole						Casing & Liner Pipe or Curbing							
Dia.	from	to	Dia.	from	to	Dia.	Wgt.& Kind	from	to	Dia.	Wgt.& Kind	from	to

Grout: Kind	from	to

Samples from 0 to 400' Rec'd: 5/25/79 Studied by: Kathleen Massie Issued: 2/2/82

Formations: Surface, Drift, Eau Claire Formation

Remarks: For final well see J139-Sk-198.

LOG OF WELL:

	Depths	Graphic Section	Rock Type	Color	Grain Size Mode	Grain Size Range	Miscellaneous Characteristics
Sfc.	0-5		Soil	Dark yl bn	—	—	Trace organic material.
10'	5-10		"	Yellow bn	—	—	—
	10-15		Gravel	Mxd yl bn	Gran	Gran/S peb	Dolomite, oolitic cht, trp, cht, qtz. Mch snd, ltl st, cl.
	15-20		"	"	S peb	Gran/M peb	Dol, grnt, cht, glaucic ss, quartz, Much silt, clay, ltl snd.
	20-25		"	"	"	"	Dol, chert, glaucic ss, quartz, trap, Much sand, silt, clay.
D	25-30		"	"	"	"	Same plus oolitic chert.
	30-35		Gvl & clay	"	M peb	Gran/L peb	Dolic (clay), Dol, silcemtd ss, cht, trp, qtz, Much snd, st.
R	35-40		"	"	"	"	Same.
	40-45		"	"	S peb	"	Same plus oolitic chert.
I	45-50		"	"	"	"	Same.
	50-55		"	"	"	Gran/M peb	"
F	55-60		"	"	Gran	"	"
	60-65		Clay	Red Yellow	—	—	Dolomitic. Much gravel, sand, silt.
T	65-70		"	"	—	—	Same.
	70-75		Gravel	Mxd yl bn	S peb	Gran/S peb	Dolomite, glaucic ss, chert, trap, quartz, Much sand, silt, cl.
	75-80		"	"	"	"	Same but little silt, clay.
	80-85		"	"	"	"	Dolomite, glaucic ss, chert, trap, quartz, Mch snd, ltl st, cl.
	85-90		"	"	Gran	"	Same plus granite.
	90-95		Sand	Lt yl bn	M	Vfn/VC	Much gravel, Little silt, clay.
	95-100		"	"	"	"	Same.
	100-105		"	"	"	"	"
	105-110		"	"	C	"	Much gravel, silt, clay.
	110-115		"	"	M	"	Much gravel, Little silt, clay.
	115-120		"	"	"	"	Same.
	120-125		"	"	"	"	Much silt, Little clay, Trace gravel.
	125-130		"	"	"	"	Same.
	130-135		"	"	"	"	Much silt, clay, Trace gravel.
	135-140		"	"	C	"	Same.
	140-145		"	"	M	"	Little gravel, silt, Trace clay.
	145-150		"	"	C	"	Much gravel, Little silt, Trace clay.
	150-155		"	"	"	"	Same.
	155-160		"	"	VC	"	Much gravel, silt, Little clay.

U. VERSITY OF WISCONSIN GEOLOGICAL & NATURAL HISTORY SURVEY
1[illegible] 5 University Avenue, Madison, Wisconsin 53706

Log No. J8-Sk-176
Sample Nos. All retained

Well name: U.S. Dairy Forage Research Center Test Hole

Depths	Graphic Section	Rock Type	Color	Grain Size Mode	Grain Size Range	Miscellaneous Characteristics
160-165		Sand	Lt yl bn	C	Vfn/VC	Much gravel, silt. Little clay.
165-170		"	"	"	"	Same.
170-175		"	"	"	"	Much gravel, Little silt, Trace clay.
175-180		"	"	"	"	Little gravel, silt.
180-185		"	"	"	"	Same.
185-190		"	"	M	"	Few granules, Little silt.
190-195		"	"	C	"	Many granules, Little silt.
195-200		"	"	"	"	Few granules, Little silt.
200-205		"	"	M	"	Same.
205-210		"	"	"	"	Much gravel, silt, Little clay.
210-215		"	"	C	"	Same.
215-220		"	"	M	"	Many granules, Much silt, clay.
220-225		Gravel	Mxd brown	Gran	Gran/S peb	Granite, dolomite, quartz, trap, chert, Much sand, silt, clay.
225-230		"	"	"	"	Same.
230-235		Sand	Lt yl bn	C	Vfn/VC	Much silt, Few granules, Little clay.
235-240		"	"	"	"	Much silt, clay, Trace gravel.
240-245		Gravel	Mxd brown	Gran	Gran/S peb	Granite, dolomite, quartz, trap, chert, Much sand, Little silt.
245-250		Sand	"	C	Vfn/VC	Much gravel, silt, clay.
250-255		Sandstone	Gray	M	Vfn/VC	Rnd to well rnd, Mch dolic cem, Mch dolic sh, Tr pyr, gvl.
255-260		Shale & ss	"	Fn	"	Dolic(shale), Rnd, Trace pyrite, iron staining, iron staining.
260-265		"	Lt bn gry	"	"	Same.
265-270		"	"	"	"	"
270-275		Shale	Gray brown	—	—	Dolomitic, Trace pyrite, Much sand, Trace iron staining.
275-280		"	"	—	—	Same.
280-285		"	Lt gry bn	—	—	Dolomitic, Trace sand, pyrite, iron staining.
285-290		"	"	—	—	Same.
290-295		"	"	—	—	Dolomitic, Little sand, Trace pyrite, iron staining.
295-300		"	"	—	—	Same.
300-305		"	"	—	—	Dolomitic, Much sand, iron staining, Trace pyrite.
305-310		"	"	—	—	Same.
310-315		"	Gray brown	—	—	"
315-320		"	"	—	—	"
320-325		"	"	—	—	"
325-330		"	"	—	—	Dolomitic, Much iron staining, Little sand, Trace pyrite.
330-335		Shale & ss	Dark gray	Fn	Vfn/VC	Dolic (shale), Rnd, Ltl dol cem, Trace pyrite, iron staining.
335-340		"	"	"	"	Dolic (sh), Rnd, Mch V G dol cem, Tr pyr cem, Tr pyr.
340-345		"	"	"	"	Same, iron staining, fossil molds (?).
345-350		"	"	"	"	"
350-355		"	"	"	"	"
355-360		"	"	M	"	"
360-365		"	"	"	"	Dolic(sh), Mxd lt&dk gry sh, Rnd, Mch V G dol cem, Tr pyr cem.
365-370		"	"	"	"	Same but ltl M dol, Tr pyr, M dol, Fe stng, foss molds(?).
370-375		"	"	"	"	Same.
375-380		"	"	"	"	"
380-385		"	"	"	"	"
385-390		"	"	"	"	"
390-395		"	"	"	"	Dolic (sh), Mxd lamntd lt&dk gry sh, Rnd, Ltl V G dol cem,
395-400		"	"	"	"	Same, Tr pyr cem, pyr, fnly disser pyr, Fe stng, foss molds(?), but slightly less shale.

END OF LOG

UNIVERSITY OF WISCONSIN GEOLOGICAL & NATURAL HISTORY SURVEY
1815 University Avenue, Madison, Wisconsin 53706

Log No.F34-Sk-1
Sample Nos. All Retained

Well name Sauk City Village Well #3
Prairie du Sac Township
Owner.... Village of Sauk City
Address.. 806 Water Street
Sauk City, WI 53583
Driller.. Layne-Northwest Co.
Engineer.

County: Sauk
Completed... 11/75
Field check. 760'
Altitude.... ~~782'~~ ETM
Use..... Municipal
Static w.l.. 27'
Spec. cap... 125 GPM/ft

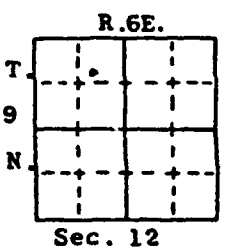

Location: ~~NW~~ SE, SE, ~~SE~~, $SE\frac{1}{4}$, $SW\frac{1}{4}$, $NE\frac{1}{4}$, $NW\frac{1}{4}$, sec.12, T.9N., R.6E. Quad. Sauk City $7\frac{1}{2}$'

Drill Hole						Casing & Liner Pipe or Curbing							
Dia.	from	to	Dia.	from	to	Dia.	Wgt.& Kind	from	to	Dia.	Wgt.& Kind	from	to
44"	0	141'				36"	A53 3/8" wall welded	0	80'	18"	Stainless steel	81'	141'
						18"	A53 3/8" wall welded shutter screen	+3.5'	81'			-	

Grout: Kind	from	to
Ready Mix	0	$77\frac{1}{2}$'
Neat Cement	$77\frac{1}{2}$'	$79\frac{1}{2}$'
Sand Pad	$79\frac{1}{2}$'	80'

Samples from 0 to 140' Rec'd: 11/10/75 Studied by: Mark Ver Hoeve Issued: 8/4/78

Formations: Alluvium

Remarks: Well tested 12 hours at 2005 GPM with 16 feet of drawdown. Driller reports total well depth of 141'. Well drilled by reverse rotary.

LOG OF WELL:

	Depths	Graphic Section	Rock Type	Color	Grain Size Mode	Grain Size Range	Miscellaneous Characteristics
	0-15			NO SAMPLE.			
ALLUVIUM	15-20		Sand	Lt yl bn	C	Vfn/VC	Little gravel. Trace silt.
	20-25		Gravel	Mixed	S peb	Gran/M peb	Dolomite, granite, trap, chert, oolite, quartz. Much sand.
	25-30		Sand	Med v plbn	C	Vfn/VC	Little gravel. Trace silt.
	30-35		"	"	"	"	Same.
	35-40		"	"	"	"	"
	40-45		"	"	"	"	"
	45-50		Gravel	Mixed	S peb	Gran/L peb	Dolo, grnt, trap, rhyol porphyry, chert, quartz. Little sand.
	50-55		"	"	"	"	Dol, chert, dol-cemtd ss, qtz, grnt, trap, rhyol porph, st, Mch sand.
	55-60		Sand	Med v pl bn	C	Vfn/VC	Trace granules, silt.
	60-65		"	"	"	"	Trace gravel, silt.
	65-70		"	"	"	"	Trace granules, silt.
	70-75		"	"	"	"	Same.
	75-80		"	"	"	"	Little gravel. Trace silt.
	80-85		"	"	"	"	Same.
	85-90		"	"	"	"	"
	90-95		"	"	"	"	"
	95-100		"	"	"	"	"
	100-105		"	"	"	"	Trace granules, silt.
	105-110		Sand	Med v plbn	C	Vfn/VC	Trace gravel, silt.
	110-115		"	"	"	"	Same.
	115-120		"	"	"	"	"
	120-125		"	"	"	"	"
	125-130		"	"	"	"	"
	130-135		"	"	"	"	"
140	135-140		"	"	"	"	"
			END OF LOG				

State of Wisconsin
Department of Natural Resources
Box 7921
Madison, Wisconsin 53707

NOTE: White Copy - Division's Copy; Green Copy - Driller's Copy; Yellow Copy - Owner's Copy

Received Nov. 10 1979 SK-193

WELL CONSTRUCTOR'S REPORT

Form 3300-15 Rev. 12-76

4

J139

COUNTY: Sauk

CHECK (✓) ONE: ☒ Town ☐ Village ☐ City

Name: Merrimac

1/4 NW 1/4 1/4 Section: E Section: 19 Township: 10N Range: 7E

2 LOCATION OR - Grid or Street No. Street Name: Hy 78

AND - If available subdivision name, lot & block No.: PERMAN. WELL #85821

3. NAME ☐ OWNER ☐ AGENT AT TIME OF DRILLING CHECK (✓) ONE: North Central Dairy Forge

ADDRESS: WELL #1 Reserve Center

POST OFFICE: Baraboo Wis.

4. Distance in feet from well to nearest: (Record answer in appropriate block)

Building	Sanitary Bldg. Drain		Sanitary Bldg. Sewer		Floor Drain Connected To:		Storm Bldg. Drain		Storm Bldg. Sewer	
	C.I.	Other	C.I.	Other	C.I. Sewer	Other Sewer	C.I.	Other	C.I.	Other
			270							

Street Sewer		Other Sewers		Foundation Drain Connected to:		Seepage Sump		Clearwater Sump	Septic Tank	Holding Tank	Sewage Absorption Unit
San.	Storm	C.I.	Other	Sewer	Sewage Sump	C.I.	Other				Seepage Pit
				Clearwater Dr.	Clearwater Sump						Seepage Bed
											Seepage Trench

Privy	Pet Waste Pit	Pit: Nonconforming Existing	Subsurface Pumproom	Barn Gutter	Animal Barn Pen	Animal Yard	Silo With Pit	Glass Lined Storage Facility	Silo w/o Pit	Earthen Silage Storage Trench Or Pit
		Well	Nonconforming Existing							
		Pump								
		Tank								

Temporary Manure Stack	Watertight Liquid Manure Tank	Solid Manure Storage Structure	Subsurface Gasoline or Oil Tank	Waste Pond or Land Disposal Unit (Specify Type)	Other (Give Description)
					SAUK Co. MISC. #10

5 Well is intended to supply water for: Reserve Center

6 DRILLHOLE

Dia. (in.)	From (ft.)	To (ft.)	Dia. (in.)	From (ft.)	To (ft.)
12	Surface	270	8	270	575

7 CASING, LINER, CURBING AND SCREEN

Dia. (in.)	Material, Weight, Specification & Method of Assembly	From (ft.)	To (ft.)
8	new pipe	Surface	273
	ASTM A53		
	322 Wall.		
	W.S.P.		
	FILE LOCATION: MERRIMAC		

8. GROUT OR OTHER SEALING MATERIAL

Kind	From (ft.)	To (ft.)
Cement + Water	Surface	270

9. FORMATIONS

Kind	From (ft.)	To (ft.)
Clay	Surface	5
Sandy Clay	5	15
Sand + gravel some clay	15	70
Sand fine Sand	70	190
Sand + Coarse Gravel	190	263
Sandstone Rock with shale	263	570
Granite Hard Rock	570	575
APPROVAL DATE: SEPT. 20 1979		

10. TYPE OF DRILLING MACHINE USED cc: To STATE GEOLOGIST

☐ Cable Tool ☒ Rotary-hammer w/drilling mud & air ☐ Jetting with
☐ Rotary-air w/drilling mud ☐ Rotary-hammer & air ☐ Air ☐ Water
☐ Rotary-w/drilling mud ☐ Reverse Rotary

Well construction completed on 11-4 19 79

Well is terminated 36 inches ☒ above ☐ below final grade

Well disinfected upon completion ☒ Yes ☐ No

Well sealed watertight upon completion ☒ Yes ☐ No

MISCELLANEOUS DATA

Yield Test: 90 Hrs. at 3.30 GPM

Depth from surface to normal water level 51 Ft.

Depth of water level when pumping 130 Ft. Stabilized ☒ Yes ☐ No Specific Capacity = 4.2 GPM/Ft.

Water sample sent to Smith H. laboratory on 11-7 19 79

Opinion concerning other pollution hazards, information concerning difficulties encountered, and data relating to nearby wells, screens, seals, method of ...g the well, amount of cement used in grouting, blasting, etc., should be given on reverse side.

Signature: Marvin Hoyer Registered Well Driller

Complete Mail Address: R4 Wisconsin Dells Wis. 53965

WELL CONSTRUCTION REPORT
WISCONSIN STATE BOARD OF HEALTH
WELL DRILLING DIVISION

5

JUL 11 1942

Note: Section 32 of the Wisconsin Well Drilling Sanitary Code, having the force and effect of law, provides that within thirty days after completion of every well the driller shall submit a report covering all essential details of construction to the State Board of Health on a form provided by the Board.

Owner H. Stechelberg — Driller Wm H. Smith

Street or RFD R.F.D. — Post Office Coleman

Post Office Prairie Du Sac — Date Mar. 14 / 42 — Permit No. 87

LOCATION OF PREMISES

Sauk County — Town of Prairie Du Sac Town

Describe further by subdivision, plat, district, lake, lot, block, nearest principal highway, etc., whichever apply.

On highway U.S. 12.

The square below represents a section of land divided into 40 acre tracts. Mark the position of the premises in the section.

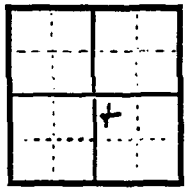

Sec. 26

Twp. 9n

Range 6 E ~~W~~

DIAGRAM OF PREMISES

See discussion and illustration in Part III Well Drilling Code. In making the diagram in the space below consider 10 ft. as the distance between lines. Be sure to indicate NORTH.

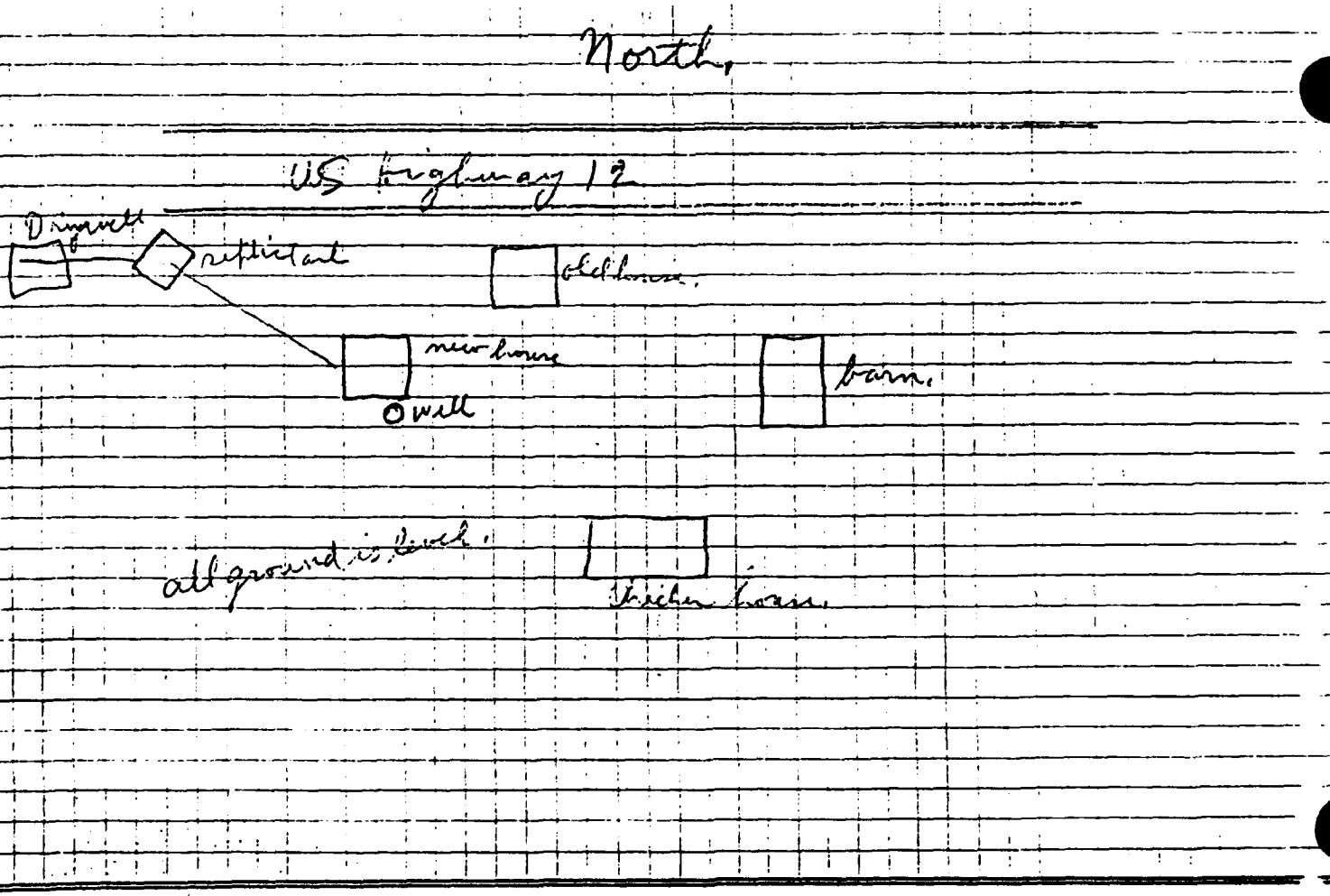

Additional copies of this form may be obtained in lots of 12 for 25¢. Send remittance with order to State Board of Health, Well Drilling Division, Madison, Wis.

WELL LOG *and* REPORT

In this column indicate the kind of casing, liner, shoe and other accessories used.

6 in Well Drillers
1 ft used with
Drive shoe.

& 20 ft of cement.

WELL DIAGRAM
Use a red line to show casing or liner pipe. Use black for drill or borehole.

Inches Diameter
2 3 4 5 6 8 10 12 14 16 18

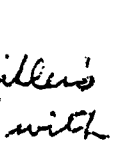

Depth
5
22
25
50
75
100
112
150
200
212
400
800
1200

Draw the diagram to show the right half only

In this column state the kind of formations penetrated, their thickness in feet and if water bearing.

Top soil 5 ft.

Sand and gravel
Dry. 112 ft.

Sand
water bearing

gravel bed.

Record of FINAL Pumping test

Duration of test
Hours 2 hrs.

Pumping rate
G.P.M. 350 GPM.

Depth of pump in well. Ft. 120 ft.

Standing water-level (from surface)
Ft. 76 ft.

Water-level when pumping Ft. 86 ft.

Water. End of test.
Clear Clear
Cloudy
Turbid

Was the well sterilized?
Yes yes No

To which laboratory was sample sent?
Madison
Date

Was the well sealed on completion?
Yes yes No

How high did you leave the casing-pipe above grade?
6 inches above pit floor.

Well was completed
Date March 10

Well Driller
Wm H. Smith
Signature

6

State Department of Private Water
Box 79
Madison, Wisconsin 53707

NOTE:
White Copy — Division's Copy
Green Copy — Driller's Copy
Yellow Copy — Owner's Copy

WELL CONSTRUCTOR'S RE
Form 3300-15 Rev. 2-79

JUN 10 198

1. COUNTY: Sauk
CHECK (✓) ONE: ☒ Town ☐ Village ☐ City
Name: Prairie Du Sac

2. LOCATION: ¼ Section or Gov't. Lot: NW 5 E; Section: 26; Township Range: 10N 6E
OR – Grid or Street No.: Street or Road Name: Co. Hy. Z
AND – If available subdivision name, lot & block No.:

3. NAME ☒ OWNER ☐ AGENT AT TIME OF DRILLING CHECK (✓) ON: Lins Farm's Ron Lin's
ADDRESS: E11520 Hy. Z — Well # 3 PERM # 2978
POST OFFICE: Prairy Du Sac — ZIP CODE:

4. Distance in feet from well to nearest: (Record answer in appropriate block)

Building	Sanitary Bldg. Drain C.I.	Sanitary Bldg. Drain Other	Sanitary Bldg. Sewer C.I.	Sanitary Bldg. Sewer Other	Floor Drain Connected To: C.I. Sewer	Floor Drain Connected To: Other Sewer	Storm Bldg. Drain C.I.	Storm Bldg. Drain Other	Storm Bldg. Sewer C.I.	Storm Bldg. Sewer Other
1/4 Mi.										

Street Sewer San.	Street Sewer Storm	Other Sewers C.I.	Other Sewers Other	Foundation Drain Connected to: Sewer / Sewage Sump / Clearwater Dr. / Clearwater Sump	Sewage Sump C.I.	Sewage Sump Other	Clearwater Sump	Septic Tank	Holding Tank	Sewage Absorption Unit: Seepage Pit / Seepage Bed / Seepage Trench	Manure Hopper or Retention or Pnuematic Tank

Privy	Pet Waste Pit	Pit: Nonconforming Existing: Well / Pump / Tank	Subsurface Pumproom Nonconforming Existing	Barn Gutter	Animal Barn Pen	Animal Yard	Silo With Pit	Glass Lined Storage Facility	Silo w/o Pit	Earthen Silage Storage Trench Or Pit	Earthen Manure Ba

Temporary Manure Stack or Platform	Watertight Liquid Manure Tank or Basin	Manure Pressure Pipe	Subsurface Gasoline or Oil Tank	Waste Pond or Land Disposal Unit (Specify Type)	Manure Storage Basin / Concrete Floor Only / Concrete Floor and Partial Concrete Walls	Other (Describe)

5. Well is intended to supply water for: Irrigation

6. DRILLHOLE

Dia. (in.)	From (ft.)	To (ft.)	Dia. (in.)	From (ft.)	To (ft.)
20	Surface	187			

7. CASING, LINER, CURBING AND SCREEN

Dia. (in.)	Material, Weight, Specification Mfg. & Method of Assembly	From (ft.)	To (ft.)
14	PE 250 Well	Surface	156
14	Johnson SS Screen	156	187

8. GROUT OR OTHER SEALING MATERIAL

Kind	From (ft.)	To (ft.)
Drill Cutting's	Surface	147
gravel Pack	147	187

9. FORMATIONS

Kind	From (ft.)	To (ft.)
Sand + gravel	Surface	187
Fine To	156	
Coarse Sand	156	187

Sauk Co. IRRIG #56
Approval date: June 21, 1985
File location: Prairie Du Sac
cc: State Geologist

10. TYPE OF DRILLING MACHINE USED
☐ Cable Tool ☒ Rotary-air w/drilling mud ☐ Rotary-w/drilling mud ☐ Rotary-hammer w/drilling mud & air ☐ Rotary-hammer & air ☐ Reverse Rotary ☐ Jetting with ☐ Air ☐ Water

Well construction completed on 7-10 1985

Well is terminated 14 inches ☒ above ☐ below final grade

Well disinfected upon completion ☐ Yes ☒ No

Well sealed watertight upon completion ☒ Yes ☐ No

11. MISCELLANEOUS DATA S.C. = 90.9 GPM/Ft
Yield Test: 10 Hrs. at 1000 GPM
Depth from surface to normal water level 80 Ft.
Depth of water level when pumping 91 Ft. Stabilized ☒ Yes ☐ No

Water sample sent to — laboratory on — 19

Your opinion concerning other pollution hazards, information concerning difficulties encountered, and data relating to nearby wells, screens, seals, method of finishing the well, amount of cement used in grouting, blasting, etc., should be given on reverse side.

Signature: Tom Prem
Business Name and Complete Mailing Address: Tom Prem Well Drilling RT 2 SP. Gr.

State of Wisconsin
Department of Natural Resources
Private Water Supply
Box 7921
Madison, Wisconsin 53707

NOTE:
White Copy – Division's Copy
Green Copy – Driller's Copy
Yellow Copy – Owner's Copy

WELL CONSTRUCTOR'S REPORT

Form 3300-15 Rev. 2-79

JAN 25 1984

1. COUNTY: Sauk
CHECK (✓) ONE: ☒ Town ☐ Village ☐ City Name: Prairie Du Sac

2. LOCATION: ¼ Section or Gov't. Lot: NE ¼ SW ¼ | Section: 28 | Township: 10N | Range: 6E
OR – Grid or Street No. | Street or Road Name
AND – If available subdivision name, lot & block No.

3. NAME ☒ OWNER ☐ AGENT AT TIME OF DRILLING CHECK (✓) ONE: Mrs Conley Kleinert
ADDRESS: RR
POST OFFICE: Prairie Du Sac, Wis ZIP CODE: 53578

4. Distance in feet from well to nearest: (Record answer in appropriate block)

Building	Sanitary Bldg. Drain C.I.	Sanitary Bldg. Drain Other	Sanitary Bldg. Sewer C.I.	Sanitary Bldg. Sewer Other	Floor Drain Connected To: C.I. Sewer	Floor Drain Connected To: Other Sewer	Storm Bldg. Drain C.I.	Storm Bldg. Drain Other	Storm Bldg. Sewer C.I.	Storm Bldg. Sewer Other
15 ft	58 ft		37 ft		35 ft					

Street Sewer San.	Street Sewer Storm	Other Sewers C.I.	Other Sewers Other	Foundation Drain Sewer	Foundation Drain Clearwater Dr.	Connected to: Sewage Sump	Connected to: Clearwater Sump	Sewage Sump C.I.	Sewage Sump Other	Clearwater Sump	Septic Tank	Holding Tank	Sewage Absorption Unit: Seepage Pit / Seepage Bed / Seepage Trench	Manure Hopper or Retention or Pnuematic Tank
											60'		75'	

Privy	Pet Waste Pit	Pit: Nonconforming Existing: Well / Pump / Tank	Subsurface Pumproom Nonconforming Existing	Barn Gutter	Animal Barn Pen	Animal Yard	Silo With Pit	Glass Lined Storage Facility	Silo w/o Pit	Earthen Silage Storage Trench Or Pit	Earthen Manure Basin

Temporary Manure Stack or Platform	Watertight Liquid Manure Tank or Basin	Manure Pressure Pipe	Subsurface Gasoline or Oil Tank	Waste Pond or Land Disposal Unit (Specify Type)	Manure Storage Basin / Concrete Floor Only / Concrete Floor and Partial Concrete Walls	Other (Describe)

5. Well is intended to supply water for: Home

6. DRILLHOLE

Dia. (in.)	From (ft.)	To (ft.)	Dia. (in.)	From (ft.)	To (ft.)
11	Surface	20			
6	20	239			

7. CASING, LINER, CURBING AND SCREEN

Dia. (in.)	Material, Weight, Specification Mfg. & Method of Assembly	From (ft.)	To (ft.)
6"	New Stand Blasted	Surface	229
19.15 # per ft	A120		
w/o coupling	A.F. Steel (Union, J.L., Swai, DL)		

8. GROUT OR OTHER SEALING MATERIAL

Kind	From (ft.)	To (ft.)
Drill Cuttings	Surface	20

9. FORMATIONS

Kind	From (ft.)	To (ft.)
Sand	Surface	75
Sand & Gravel	75	160
Sand Rock	160	239

10. TYPE OF DRILLING MACHINE USED
☒ Cable Tool ☐ Rotary-air w/drilling mud ☐ Rotary-w/drilling mud ☐ Rotary-hammer w/drilling mud & air ☐ Rotary-hammer & air ☐ Reverse Rotary ☐ Jetting with ☐ Air ☐ Water

Well construction completed on May 27 1983

11. MISCELLANEOUS DATA
Yield Test: 15 Hrs. at 25 GPM
Depth from surface to normal water level 50 Ft.
Depth of water level when pumping 50 Ft. Stabilized ☒ Yes ☐ No

Well is terminated 12 inches ☒ above ☐ below final grade
Well disinfected upon completion ☒ Yes ☐ No
Well sealed watertight upon completion ☒ Yes ☐ No

Water sample sent to Madison laboratory on June 1 1983

[illegible] opinion concerning other pollution hazards, information concerning difficulties encountered, and data relating to nearby wells, screens, seals, method of [illegible]ing the well, amount of cement used in grouting, blasting, etc., should be given on reverse side.

Signature: L. Verne Welsch Registered Well Driller
Business Name and Complete Mailing Address: 245 Park Ave Prairie Du Sac

UNIVERSITY OF WISCONSIN GEOLOGICAL & NATURAL HISTORY SURVEY
1815 University Avenue, Madison, Wisconsin 53706

Log No. 8

Well Name Lins Farms Well #2
Town of Prairie du Sac
Owner.... ~~Lins Farms~~ Kenneth S. Lins
Address.. ~~Route 1~~ E 11575 Hwy Z
Prairie du Sac, WI 53578
Driller.. Ace Well Drilling, Inc.
Engineer.

County: Sauk
Completed... 8/4/79
Field check.
Altitude.... 835' ETM
Use..... Irrigation
Static w.l.. 79'
Spec. cap... 28 GPM/ft.

T. 10 N.
Sec. 26

Location: Just E of center, S½, Sec. 26, T10N, R6E Quad. Sauk City 7½'

Drill Hole						Casing & Liner Pipe or Curbing							
Dia.	from	to	Dia.	from	to	Dia.	Wgt.& Kind	from	to	Dia.	Wgt.& Kind	from	to
17"	0	162'				14"	0.375 wall New pipe U.S.P. Johnson screen	+15" 137'	137' 162'				

Drilling method: Rotary
Samples from 0 to 161' Rec'd: 11/9/79

Studied by: Teresa E. Handy

Grout	from	to
Drill cuttings	0	105'
Gravel pack	105'	162'

Issued: 2/2/82

Formations: Surface, Drift

Remarks: Well tested for 4 hours at 800 GPM with 29 feet of drawdown.
DNR Permanent Well #29765 and Sauk Co. Irrigation #56.
Driller reports total well depth of 162'.

LOG OF WELL:

	Depths	Graphic Section	Rock Type	Color	Grain Size Mode	Grain Size Range	Miscellaneous Characteristics
Sur. 10'	0-5		Sand	Dk yl bn	C	Vfn/VC	Much clay. Little gravel, silt, soil.
	5-10		"	"	"	"	Same.
	10-15		Gravel	Mixed	Gr	Gran/S peb	Grnt,dol,cht,qtz,sts,trap,sil-cem ss,fos dol. Mch snd. Ltl st.
	15-20		"	"	S peb	Gran/M peb	Same plus glauconitic sandstone.
	20-25		"	"	"	"	Same plus limonite-cem ss but no glauconitic sandstone.
	25-30		"	"	"	"	Grnt,dol,cht,qtz,sts,trap,glaucic ss,sil-cem ss,pol cht. Mch snd.
	30-35		"	"	"	"	Same. Ltl st. Tr cl.
	35-40		"	"	"	"	Same but no glauconitic sandstone, clay.
D	40-45		Sand	Yl brown	C	Vfn/VC	Much gravel(Gran/M peb). Little silt.
R	45-50		Gravel	Mixed	S peb	Gran/M peb	Dol,fos dol,cht grnt,sil-cem ss,pol cht,sts,qtz,trap,glaucic ss.
I	50-55		"	"	"	"	Same plus trace clay&trace cvd soil but no glaucic ss. Mch snd. Ltl st.
F	55-60		"	"	"	"	Same but no soil.
T	60-65		"	"	"	"	Same plus limonite-cem sandstone but no oolitic chert.
	65-70		Sand	Yl brown	C	Vfn/VC	Much gravel(Gran/M peb). Little silt.
	70-75		"	"	"	"	Much gravel (Gran/S peb). Little silt.
	75-80		"	"	"	"	Same.
	80-85		"	"	"	"	"
	85-90		"	"	VC	"	Much gravel(Gran/M peb). Little silt.
	90-95		"	"	C	"	Much gravel(Gran/S peb). Little silt.
	95-100		"	"	VC	"	Same.
	100-105		Gravel	Mixed	S peb	Gran/M peb	Dol,fos dol&cht,ool cht,grnt,sts,qtz,sil-cem ss,trap. Mch snd.
	105-110		"	"	"	"	Same plus limonite-cemented sandstone. Ltl st.
	110-115		Sand	Yl brown	VC	Vfn/VC	Much gravel. Little silt.
	115-120		Gravel	Mixed	S peb	Gran/M peb	Dol,fos dol,cht,oolcht,sil-cem ss,qtz,lim-cem ss,s. ,grnt,trap.
	120-125		"	"	"	"	Same but no limonite-cemented sandstone. Mch snd. Ltl st.
	125-130		"	"	"	"	Same plus glauconitic ss.
	130-135		Sand	Yl brown	VC	Vfn/VC	Much gravel. Little silt.
	135-140		"	"	"	"	Same.
	140-145		"	"	"	"	"
	145-150		"	"	"	"	"
	150-155		"	"	"	"	"
151'	155-161		"	"	"	"	"

END OF LOG

SK-193

State of Wisconsin
Department of Natural Resources
Box 7921
Madison, Wisconsin 53707

NOTE:
White Copy – Division's Copy
Green Copy – Driller's Copy
Yellow Copy – Owner's Copy

WELL CONSTRUCTOR'S REPORT
Form 3300-15 Rev. 12-76

1. [illegible]TY: Sauk
CHECK (✓) ONE: ☒ Town ☐ Village ☐ City
Name: Prairie Du Sac

2. LOCATION: ¼ Section: SE; Section: 26; Township: 10 N; Range: 6 E
Grid or Street No. / Street Name: ACTUALLY CENTER OF S½, S26
ND – If available subdivision name, lot & block No.

3. NAME ☒ OWNER ☐ AGENT AT TIME OF DRILLING CHECK (✓) ONE: Lime Farm WELL #2
ADDRESS: R#1 PERMAN WELL # 29765
POST OFFICE: Prairie Du Sac Wi 53578

4. Distance in feet from well to nearest: (Record answer in appropriate block)

Building	Sanitary Bldg. Drain C.I.	Sanitary Bldg. Drain Other	Sanitary Bldg. Sewer C.I.	Sanitary Bldg. Sewer Other	Floor Drain Connected To: C.I. Sewer	Floor Drain Connected To: Other Sewer	Storm Bldg. Drain C.I.	Storm Bldg. Drain Other	Storm Bldg. Sewer C.I.	Storm Bldg. Sewer Other

Street Sewer San.	Street Sewer Storm	Other Sewers C.I.	Other Sewers Other	Foundation Drain Connected to: Sewer	Sewage Sump	Clearwater Dr.	Clearwater Sump	Sewage Sump C.I.	Sewage Sump Other	Clearwater Sump	Septic Tank	Holding Tank	Sewage Absorption Unit: Seepage Pit / Seepage Bed / Seepage Trench

Pr.	Pet Waste Pit	Pit: Nonconforming Existing: Well / Pump / Tank	Subsurface Pumproom Nonconforming Existing	Barn Gutter	Animal Barn Pen	Animal Yard	Silo With Pit	Glass Lined Storage Facility	Silo w/o Pit	Earthen Silage Storage Trench Or Pit

Temporary Manure Stack	Watertight Liquid Manure Tank	Solid Manure Storage Structure	Subsurface Gasoline or Oil Tank	Waste Pond or Land Disposal Unit (Specify Type)	Other (Give Description)
					SAUK CO. IRRIG. #56

5. Well is intended to supply water for: Irrigation

6. DRILLHOLE

Dia. (in.)	From (ft.)	To (ft.)	Dia. (in.)	From (ft.)	To (ft.)
17	Surface	162			

7. [illegible]G, LINER, CURBING AND SCREEN

Dia. (in.)	Material, Weight, Specification & Method of Assembly	From (ft.)	To (ft.)
11	0.375 Wall	Surface	137
	New Pipe		
	U.S.P.		
	Johnson Screen	137	162

8. GROUT OR OTHER SEALING MATERIAL

Kind	From (ft.)	To (ft.)
Drill Cuttings	Surface	105
Gravel Pack	105	162

9. FORMATIONS

Kind	From (ft.)	To (ft.)
Sand	Surface	7
Sand + Coarse Gravel	7	162

APPROVAL DATE: APRIL 11, 1979
FILE LOCATION: PRAIRIE DU SAC
CC: TO STATE GEOLOGIST

10. TYPE OF DRILLING MACHINE USED
☐ Cable Tool ☒ Rotary-hammer w/drilling mud & air ☐ Jetting with ☐ Air ☐ Water
☐ Rotary-air w/drilling mud ☐ Rotary-hammer & air
☐ Rotary-w/drilling mud ☐ Reverse Rotary

Well construction completed on 8-4 1979

Well is terminated 15 inches ☒ above ☐ below final grade

Well disinfected upon completion ☒ Yes ☐ No

Well sealed watertight upon completion ☒ Yes ☐ No

11. MISCELLANEOUS DATA
Yield Test: 4 Hrs. at 800 GPM
Depth from surface to normal water level 79 Ft.
Depth of water level when pumping 108 Ft. Stabilized ☒ Yes ☐ No

Water sample sent to [illegible] 27.6 gpm/ft = Spec. Cap. laboratory on 12-10 1980

[illegible]ion concerning other pollution hazards, information concerning difficulties encountered, and data relating to nearby wells, screens, seals, method of fi[illegible] the well, amount of cement used in grouting, blasting, etc., should be given on reverse side.

Signature: [illegible] Registered Well Driller
Complete Mail Address: R#4 Wi. Dells, Wi 53965

State of Wisconsin
Department of Natural Resources
Box 7921
Madison, Wisconsin 53707

NOTE:
White Copy – Division's Copy
Green Copy – Driller's Copy
Yellow Copy – Owner's Copy

WELL CONSTRUCTOR'S REPORT
Form 3300–15 Rev. 12-76

9

ADD ? 1985

1. COUNTY: Sauk
CHECK (✓) ONE: ☑ Town ☐ Village ☐ City
Name: Prairie Du Sac

2. LOCATION: ¼ Section: SW¼ SE¼ | Section: 28 | Township: 10 N | Range: 6 E
OR – Grid or Street No. | Street Name:
AND – If available subdivision name, lot & block No.

3. NAME ☒ OWNER ☐ AGENT AT TIME OF DRILLING CHECK (✓) ONE
Donald F. Cummings
ADDRESS: Rt #1 Box 305
POST OFFICE: Prairie Du Sac Wisc. 53578

4. Distance in feet from well to nearest: (Record answer in appropriate block)

Building	Sanitary Bldg. Drain		Sanitary Bldg. Sewer		Floor Drain Connected To:		Storm Bldg. Drain		Storm Bldg. Sewer	
	C.I.	Other	C.I.	Other	C.I. Sewer	Other Sewer	C.I.	Other	C.I.	Other
25'										

Street Sewer		Other Sewers		Foundation Drain Connected to:		Sewage Sump		Clearwater Sump	Septic Tank	Holding Tank	Sewage Absorption Unit
San.	Storm	C.I.	Other	Sewer	Sewage Sump	C.I.	Other		90'		Seepage Pit
				Clearwater Dr.	Clearwater Sump						Seepage Bed 53'
											Seepage Trench

Privy	Pet Waste Pit	Pit: Nonconforming Existing	Subsurface Pumproom Nonconforming Existing	Barn Gutter	Animal Barn Pen	Animal Yard	Silo With Pit	Glass Lined Storage Facility	Silo w/o Pit	Earthen Silage Storage Trench Or Pit
		Well								
		Pump								
		Tank								

Temporary Manure Stack	Watertight Liquid Manure Tank	Solid Manure Storage Structure	Subsurface Gasoline or Oil Tank	Waste Pond or Land Disposal Unit (Specify Type)	Other (Give Description)

5. Well is intended to supply water for: Household

6. DRILLHOLE

Dia. (in.)	From (ft.)	To (ft.)
Casing 6	Surface	Driven to 53'
Pulled back to		50'

Dia. (in.)	From (ft.)	To (ft.)

7. CASING, LINER, CURBING AND SCREEN

Dia. (in.)	Material, Weight, Specification & Method of Assembly	From (ft.)	To (ft.)
6 5/8 OD	Welded	Surface	48'
	Dong Kuk		
	A.S.T.M. A120		
	Johnson S.S. 6" Telescoping Screen with K packer	50'	53'

8. GROUT OR OTHER SEALING MATERIAL

Kind	From (ft.)	To (ft.)
	Surface	

9. FORMATIONS

Kind	From (ft.)	To (ft.)
Sand & Gravel	Surface	53'

10. TYPE OF DRILLING MACHINE USED
☒ Cable Tool ☐ Rotary-air w/drilling mud ☐ Rotary-w/drilling mud ☐ Rotary-hammer w/drilling mud & air ☐ Rotary-hammer & air ☐ Reverse Rotary ☐ Jetting with Air ☐ Water

Well construction completed on Aug 15 1974

11. MISCELLANEOUS DATA
Yield Test: 12 Hrs. at 30 GPM
Depth from surface to normal water level 36 Ft.
Depth of water level when pumping 41 Ft. Stabilized ☒ Yes ☐ No

Well is terminated 15 inches ☒ above ☐ below final grade
Well disinfected upon completion ☒ Yes ☐ No
Well sealed watertight upon completion ☒ Yes ☐ No O.T.

Water sample sent to State Lab of Hygiene laboratory on Feb 10 1975

Your opinion concerning other pollution hazards, information concerning difficulties encountered, and data relating to nearby wells, screens, seals, method of finishing the well, amount of cement used in grouting, blasting, etc., should be given on reverse side.

Signature: Sam Kodanaka Registered Well Driller

Complete Mail Address: RT #1 Arena Wisc 53503

10

State of Wisconsin
Department of Natural Resources
Private Water Supply
Box 7921
Madison, Wisconsin 53707

NOTE:
White Copy – Division's Copy
Green Copy – Driller's Copy
Yellow Copy – Owner's Copy

WELL CONSTRUCTOR'S REPORT
Form 3300-15 Rev. 2-79

MAY 17 1984

1. COUNTY: SAUK | CHECK (✓) ONE: ☑ Town ☐ Village ☐ City | Name: PRAIRIE DU SAC

2. LOCATION: ¼ Section or Gov't. Lot: SE 1/4 | Section: 33 | Township, Range: 10N 6E
OR – Grid or Street No. | Street or Road Name:
AND – If available subdivision name, lot & block No.:

3. NAME ☑ OWNER ☐ AGENT AT TIME OF DRILLING CHECK (✓) ONE: Gerard Bruenig
ADDRESS: R1
POST OFFICE: Prairie Du Sac, WI | ZIP CODE:

4. Distance in feet from well to nearest: (Record answer in appropriate block)

Building	Sanitary Bldg. Drain C.I.	Sanitary Bldg. Drain Other	Sanitary Bldg. Sewer C.I.	Sanitary Bldg. Sewer Other	Floor Drain Connected To: C.I. Sewer	Floor Drain Connected To: Other Sewer	Storm Bldg. Drain C.I.	Storm Bldg. Drain Other	Storm Bldg. Sewer C.I.	Storm Bldg. Sewer Other
8										

Street Sewer San.	Street Sewer Storm	Other Sewers C.I.	Other Sewers Other	Foundation Drain Connected to: Sewer / Clearwater Dr.	Foundation Drain Connected to: Sewage Sump / Clearwater Sump	Sewage Sump C.I.	Sewage Sump Other	Clearwater Sump	Septic Tank	Holding Tank	Sewage Absorption Unit: Seepage Pit / Seepage Bed / Seepage Trench	Manure Hopper or Retention or Pneumatic Tank
									30		Seepage Bed 60	✓

Privy	Pet Waste Pit	Pit: Nonconforming Existing: Well / Pump / Tank	Subsurface Pumproom Nonconforming Existing	Barn Gutter	Animal Barn Pen	Animal Yard	Silo With Pit	Glass Lined Storage Facility	Silo w/o Pit	Earthen Storage Or Pit	Silage Trench	Earthen Manure Basin

Temporary Manure Stack or Platform	Watertight Liquid Manure Tank or Basin	Manure Pressure Pipe	Subsurface Gasoline or Oil Tank	Waste Pond or Land Disposal Unit (Specify Type)	Manure Storage Basin / Concrete Floor Only / Concrete Floor and Partial Concrete Walls	Other (Describe)

5. Well is intended to supply water for: HOME

6. DRILLHOLE

Dia. (in.)	From (ft.)	To (ft.)	Dia. (in.)	From (ft.)	To (ft.)
10	Surface	109			

7. CASING, LINER, CURBING AND SCREEN

Dia. (in.)	Material, Weight, Specification Mfg. & Method of Assembly	From (ft.)	To (ft.)
6	Plain End, New Pipe ASTM A120, 18.97 lbs per ft Electric Welded	Surface	106
6	Johnson Stainless Steel Screen	106	109

8. GROUT OR OTHER SEALING MATERIAL

Kind	From (ft.)	To (ft.)
Drilling Mud	Surface	106

9. FORMATIONS

Kind	From (ft.)	To (ft.)
Sand & Fine Gravel	Surface	109

10. TYPE OF DRILLING MACHINE USED
☐ Cable Tool ☑ Rotary-air w/drilling mud ☐ Rotary-w/drilling mud ☐ Rotary-hammer w/drilling mud & air ☐ Rotary-hammer & air ☐ Reverse Rotary ☐ Jetting with: ☐ Air ☐ Water

Well construction completed on 12/30 19 83

11. MISCELLANEOUS DATA
Yield Test: 1 Hrs. at 15 GPM
Depth from surface to normal water level 70 Ft.
Depth of water level when pumping 82 Ft. Stabilized ☑ Yes ☐ No

Well is terminated 12 inches ☑ above ☐ below final grade
Well disinfected upon completion ☑ Yes ☐ No
Well sealed watertight upon completion ☑ Yes ☐ No

Water sample sent to S. L. H. laboratory on 5/2 19 84

Other opinion concerning other pollution hazards, information concerning difficulties encountered, and data relating to nearby wells, screens, seals, method of finishing the well, amount of cement used in grouting, blasting, etc., should be given on reverse side.

Signature: Brian K. Hoffman Registered Well Driller

Business Name and Complete Mailing Address: Ace Well Drilling Inc.
N 9899 - Hwy. 23
Wisconsin Dells, WI 53965
(608) 254-2322

WISCONSIN GEOLOGICAL & NATURAL HISTORY SURVEY
1815 University Avenue, Madison, Wisconsin 53706

Log No. R162-[illegible] 11

Well name Kindschi's, Inc. Well #1
Prairie du Sac Township
Owner.... Kindschi's, Inc. c/o Jerome Kindschi
Address.. Route 1
Prairie du Sac, WI 53578
Driller.. Ace Well Drilling, Inc.
Engineer.

County: Sauk
Completed... 5/26/77
Field check. 830'
Altitude.... [redacted] ETM
Use..... Irrigation
Static w.l.. 65'
Spec. cap... 22 GPM/ft

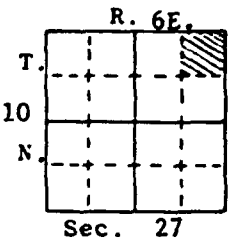

Location: C, NE, Sec. 27, T10N, R6E
Quad. Sauk Prairie 7½'

Drill Hole						Casing & Liner Pipe or Curbing							
Dia.	from	to	Dia.	from	to	Dia.	Wgt.& Kind	from	to	Dia.	Wgt.& Kind	from	to
18"	0	140'				14"	P.E.new pipe U.S. ASTM A53 0.375 wall	+13"	115'		25 ft. Johnson screen 35 slot	115'	140'

Grout	from	to
drill cuttings	0	100'
Gravel pack	100'	140'

Drilling method: rotary
Samples from 0 to 155' Rec'd: 7/6/77

Studied by: Teresa E. Handy

Issued: 8/12/82

Formations: Surface, Outwash

Remarks: Well tested for 4 hours at 1000 GPM with 45 feet of drawdown.
Driller reports total well depth of 140'.
DNR Permanent Well #29750 and Sauk Co. Irrigation #44.

LOG OF WELL:

	Depths	Graphic Section	Rock Type	Color	Grain Size Mode	Grain Size Range	Miscellaneous Characteristics
Sfc.	0-5		Soil	Black	—	—	Trace organic material.
	5-10		"	Dk yl bn	—	—	Same.
15'	10-15		"	V dk bn	—	—	" Mch snd. Ltl st. Tr cvd soil.
	15-20		Gravel	Mixed	S peb	Gran/S peb	Grnt,qtz,dol,cht,trp,lim-cemtd ss,silcemtd ss, fossif dol&cht.
	20-25		"	"	"	"	Same plus oolic cht but no lim-cemented sandstone.
	25-30		"	"	"	"	Same plus siltstone but no caved soil.
O	30-35		"	"	"	"	Same plus limonite-cemented sandstone.
U	35-40		"	"	"	"	Grnt,qtz,dol,cht,trp,lim-cemtd ss,silcemtd ss,fossif dol&cht.
T	40-45		"	"	"	"	Same but no fossilferous chert. sts.Mch snd,Ltl st.
W	45-50		"	"	"	"	Same plus trace caved soil.
A	50-55		"	"	"	"	Grnt,qtz,dol,cht,trp,fossif dol&cht,oolic cht. Mch sand. Ltl st.
S	55-60		"	"	"	"	Same plus silica-cemented sandstone but no oolitic chert.
H	60-65		"	"	"	Gran/M peb	Same but no fossiliferous chert.
	65-70		"	"	"	"	Grnt, qtz, dol, cht, trp, fossif dol, oolic cht. Mch snd.Ltl st.
	70-75		"	"	"	Gran/S peb	Same plus silica-cemented sandstone.
	75-80		Sand	Yl brown	M	Vfn/VC	Few granules. Little silt.
	80-85		"	"	"	"	Same.
	85-90		"	"	"	"	Little silt. Trace granules.
	90-95		"	"	"	"	Same.
	95-100		"	"	C	"	"
	100-105		"	"	"	"	"
	105-110		"	"	"	"	"
	110-115		"	"	VC	"	"
	115-120		"	"	C	"	"
	120-125		"	"	"	"	"
	125-130		"	"	"	"	"
	130-135		"	"	"	"	"
	135-140		"	"	"	"	"
	140-145		"	"	"	"	"
	145-150		"	"	"	"	"
140'	150-155		"	"	"	"	"

END OF LOG

UNIVERSITY OF WISCONSIN GEOLOGICAL & NATURAL HISTORY SURVEY
815 University Avenue, Madison, Wisconsin 53706

Log No.J89-Sk-179

Well name Art Mueller, Jr. Well
Town of Prairie du Sac
r.... Art Mueller, Jr.
ss.. ~~Route 1~~ S9143 Hwy 12
Prairie du Sac,WI 53578
riller..Ace Well Drilling, Inc.
ngineer.

County: Sauk

Completed... 1/28/78
Field check. 830'
Altitude.... ~~981~~' ETM
Use..... Irrigation
Static w.l.. 65'
Spec. cap... 18 GPM/ft

12
6E.
T. 10 N.
Sec. 27

LOCATION: SE, SW, SW, SW, NE, NW, SE, Sec. 27, T10N, R6E Quad. Sauk Prairie 7½'

Drill Hole						Casing & Liner Pipe or Curbing							
Dia.	from	to	Dia.	from	to	Dia.	Wgt.& Kind	from	to	Dia.	Wgt.& Kind	from	to
17"	0	164'				12"	P.E. new pipe 0.375 ASTM A53 U.S.P.	+13"	144'	12"	screen	144'	164'

Grout	from	to
Puddle Clay	0	120'
Gravel Pack	120'	164'

Drilling method: Rotary
amples from 0 to 165' Rec'd: 2/6/80

Studied by: Sara T. Sauers

Issued: 1/12/82

ormations: Surface, Alluvium

emarks: Well tested for five hours at 800 GPM with 45 feet of drawdown.
Driller reports total well depth of 164'.
DNR Permanent Well #29761 and Sauk Co. Irrigation #54.

F WELL:

Depths	Graphic Section	Rock Type	Color	Grain Size Mode	Grain Size Range	Miscellaneous Characteristics
0-5		Soil	V dk bn	—	—	
5-10		Sand	Yellow bn	C	Vfn/VC	Trace granules, silt, soil.
10-15		"	Dk yl bn	"	"	Much soil. Trace granules.
15-20		"	Mixed bn	"	"	Much gravel. Trace soil, silt.
20-25		"	Pale brown	"	"	Trace granules, silt.
25-30		"	"	"	"	Same.
30-35		"	"	"	"	Trace gravel (Gran/S peb), silt.
35-40		"	"	"	"	Trace gravel (Gran/S peb), silt, caved soil.
40-45		"	"	"	"	Little gravel. Trace silt.
45-50		Gravel	Mixed bn	Gran	Gran/M peb	Quartz,chert,grnt,metavolcs,trap,dol,ss. Much sand. Trace silt.
50-55		"	"	"	"	Quartz,chert,limestone,dol,metavolcs,granite,trap,ltl snd,Tr st.
55-60		Sand	Mxd pl bn	C	Vfn/VC	Much gravel. Trace silt.
60-65		Gravel	Mixed bn	Gran	Gran/M peb	Quartz,chert,dol,grnt,metavolcs,trap,sandstone,ltl snd. Tr st.
65-70		"	"	"	"	Same.
70-75		"	"	"	Gran/S peb	Same but much sand.
75-80		"	"	"	"	Qtz,cht,ool,chert,granite,metavolcs,trap,dol. Mch snd.Tr st,
80-85		"	"	"	"	Qtz,cht,dol,granite,metavolcs,trap, Mch snd, Tr st, cvd soil.
85-90		"	"	"	"	Same.
90-95		Sand	"	C	Vfn/VC	Much gravel. Trace silt.
95-100		"	"	"	"	Same.
100-105		"	"	"	"	"
105-110		"	"	"	"	"
110-115		"	Lt yl bn	"	"	Trace silt.
115-120		"	"	"	"	Trace granules, silt.
120-125		"	Pale bn	"	"	Same.
125-130		"	"	"	"	"
130-135		"	"	"	"	"
135-140		"	"	"	"	"
140-145		"	"	"	"	"
145-150		"	"	"	"	"
150-155		"	Lt yl bn	"	"	Trace silt.
155-160		"	"	"	"	Trace silt, caved soil.
160-165		"	"	"	"	Trace silt.

END OF LOG

UNIVERSITY OF WISCONSIN GEOLOGICAL & NATURAL HISTORY SURVEY
1815 University Avenue, Madison, Wisconsin 53706

Log No. H188-Sk-125

17

Well name Lloyd Mueller Well
Prairie du Sac Township
Owner.... Lloyd Mueller
Address.. ~~Route 1~~ S9294 Hwy 78
Prairie du Sac, WI 53578
Driller.. Ace Well Drilling, Inc.
Engineer.

County: Sauk
Completed... 6/8/77
Field check.
Altitude.... 830' ETM
Use..... Irrigation
Static w.l.. 83'
Spec. cap... 18.6 GPM/ft

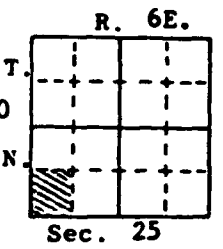

LOCATION: NE, NW, NE, NW, SE, SW, SW Sec. 36, T10N, R6E Quad. Sauk City 7½'

Drill Hole						Casing & Liner Pipe or Curbing							
Dia.	from	to	Dia.	from	to	Dia.	Wgt.& Kind	from	to	Dia.	Wgt.& Kind	from	to
17"	0	158'				12"	new pipe 3/8 ASTM A53 Grade B	+13"	138'	12"	Johnson 35 slot screen	138'	158'

Grout	from	to
puddle clay	0	90'
Gravel pack	90'	158'

Drilling method: rotary
Samples from 0 to 172' Rec'd: 7/6/77

Studied by: Teresa E. Handy

Issued: 8/12/82

Formations: Surface, Outwash

Remarks: Well tested for 4 hours at 800 GPM with 43 feet of drawdown.
Driller reports total well depth of 158'.
DNR Permanent Well #29746 and Sauk Co. Irrigation # 40.

LOG OF WELL:

	Depths	Graphic Section	Rock Type	Color	Grain Size Mode	Grain Size Range	Miscellaneous Characteristics
ur 10	0-5		Soil	Black	—	—	Trace organic material.
	5-10		"	Dk yl bn	—	—	Same.
	10-15		Gravel	Mixed	S peb	Gran/M peb	Grnt,qtz,trp,cht,dol,fossif dol,sts,silcem ss,oolic cht,Ltl snd st.
	15-20		"	"	"	"	Same plus trace clay.
	20-25		"	"	"	"	Same plus fossiliferous chert but no oolitic chert, clay.
	25-30		"	"	"	"	Grnt,qtz,trp,cht,dol,fossif dol,sts,silcem ss,oolic cht,Mch snd
	30-35		"	"	"	"	Same plus fossif chert, limonite-cemented ss, iron fm. Ltl st.
O	35-40		Sand	Lt yl bn	C/VC	Vfn/VC	Little gravel (Gran/S peb), silt.
U	40-45		"	"	"	"	Same.
r	45-50		"	"	VC	"	"
W	50-55		"	"	"	"	"
A	55-60		"	"	"	"	Few granules. Little silt.
S	60-65		"	"	"	"	Same.
h	65-70		"	"	"	"	Little gravel (Gran/S peb), silt.
	70-75		"	"	"	"	Few granules. Little silt.
	75-80		"	Yellow bn	"	"	Same.
	80-85		"	"	"	"	Little gravel (Gran/S peb), silt.
	85-90		"	"	C	"	Same.
	90-95		"	"	"	"	"
	95-100		"	"	"	"	Little silt. Trace granules.
	100-105		"	"	"	"	Same.
	105-110		"	"	"	"	Few granules. Little silt.
	110-115		"	"	"	"	Same.
	115-120		"	"	VC	"	Little silt. Trace granules.
	120-125		"	"	"	"	Few granules. Little silt.
	125-130		"	"	"	"	Same.
	130-135		"	Lt yl bn	C	"	"
	135-140		"	"	"	"	Little silt. Trace granules.
	140-145		"	"	"	"	Same.
	145-150		"	"	"	"	"
	150-155		"	"	"	"	"
	155-160		"	"	"	"	"

U[illegible]VERSITY OF WISCONSIN GEOLOGICAL & NATURAL HISTORY SURVEY
1[illegible]3 University Avenue, Madison, Wisconsin 53706

Log No. H188-Sk-185

W[illegible]l name: Lloyd Mueller Well

Depths	Graphic Section	Rock Type	Color	Grain Size		Miscellaneous Characteristics
				Mode	Range	
160-165		Sand	Lt yl bn	C	Vfn/VC	Little silt. Trace granules.
165-170		"	"	"	"	Same.
170-172		NO SAMPLE. Empty sample bag.				
		END OF LOG				

Out.
16

UNIVERSITY OF WISCONSIN GEOLOGICAL & NATURAL HISTORY SURVEY
1815 University Avenue, Madison, Wisconsin 53706

Log No. Sk-124
Issued: June 1

14

County: Sauk

Well name Melvin Bickford, Well #2
Town of Prairie du Sac
Owner.... Melvin Bickford
Address.. 790 Brdwy, Prairie du Sac, Wis.

Driller.. Sylvester Haupt
Engineer.

Completed... 6-30-65
Field check.
Altitude.... 820' ETM
Use..... Irrigation
Static w. l. 50'
Spec. cap... 38.4

R. 6E
T. 10 N.
Sec. 36

Location: SW¼,SW¼,SE¼,SW¼,NW¼,SW¼,NW¼,Sec. 36,T10N,R6E Quad. Baraboo 15'

Drill Hole						Casing & Liner Pipe or Curbing							
Dia.	from	to	Dia.	from	to	Dia.	Wgt.& Kind	from	to	Dia.	Wgt.& Kind	from	to
32"	0	152'				18"	10 ga. steel	+14"	112'				
						18"	10 ga. screen	112'	152'				

Grout: Kind	from	to
native formation	0	100'
Gravel	100'	152'

Samples from 0 to 152' Date received: 3-8-66
Sample Nos. 262638 to 262667 Examined by: J. Warren Date: 2-13-67
Formations: Drift

Remarks: Well tested for 10 hrs. at 1,000 gpm with 26 ft. of drawdown. Sample tags give the following well location: center of NW¼, sec, 1, T9N., R.6E.
DNR Permanent Well #29703 & Sauk Co. #4.

LOG OF WELL:

DRIFT	0-5	5		Snd, dk bn & mxd clr, M & C, rnd,Psrtg,tr fn&VC: mch org mat & st
	5-12	7		Snd, mxd clr, C & VC, rnd, F srtg, tr M; ltl fn gvl
	12-22	10		Snd, mxd clr, C & VC, rnd, F srtg, ltl M; tr fn gvl
	22-32	10		Snd, mxd clr, M & C, rnd, F srtg, ltl VC;
	32-37	5		Snd, mxd clr, M & C, rnd, F srtg, ltl VC & fn; tr fn gvl
	37-42	5		Snd, mxd clr, M & C, rnd, F srtg, mch VC; tr fn & M gvl
	42-52	10		Snd, mxd clr, C & VC, Srnd, F srtg, tr M; mch fn gvl, tr st
	52-57	5		Snd, mxd clr, C & VC, rnd, F srtg, ltl M; tr fn gvl
	57-62	5		Snd, mxd clr, C & VC, rnd, F srtg, mch M, tr fn; ltl fn gvl, tr M
	62-72	10		Snd, mxd clr, C & VC, rnd, F srtg, ltl M; tr fn gvl
	72-77	5		Snd, mxd clr, C & VC, rnd, F srtg, mch M, tr fn; tr fn gvl
	77-82	5		Snd, mxd clr, C, rnd, F srtg, mch M & VC;
	82-92	10		Snd, mxd clr, C & VC, rnd, F srtg, ltl M; ltl fn gvl & wood
	92-112	20		Snd, mxd clr, C & VC, rnd, F srtg, ltl M; tr fn gvl
	112-117	5		Snd, mxd clr, C & VC, rnd, F srtg, ltl M; mch fn gvl, tr M
	117-122	5		Snd, mxd clr, C & VC, rnd, F srtg, tr M; mch fn gvl, tr M & st
	122-127	5		Gvl, mxd clr, fn, ang, P srtg; ltl C&VC snd, ltl M/Vfn & org mat
	127-132	5		Snd, mxd clr, M & C, rnd, F srtg, ltl fn & VC; tr fn gvl & wood
	132-137	5		Snd, mxd clr, C, rnd, F srtg, ltl M & VC; tr fn gvl & wood &M gv
	137-147	10		Gvl, mxd clr, fn, Srnd, F srtg; ltl C & VC snd
152'	147-152	5		Snd, mxd clr, C & VC, rnd, F srtg, tr M; mch fn gvl

END OF WELL

UNIVERSITY OF WISCONSIN GEOLOGICAL & NATURAL HISTORY SURVEY
3817 Mineral Point Rd., Madison, Wisconsin 53705

Log No. P61-SI 21 15

Well name	Melvin Nolden Well #1	County: Sauk	
	Town of Prairie du Sac	Completed...	10/21/82
Owner....	Melvin Nolden	Field check.	829.
Address..	~~Route 1~~ S 9417 Hwy 12	Altitude....	~~828'~~ ETM
	Prairie du Sac, WI 53578	Use.....	Irrigation
Driller..	Sylvester Haupt	Static w.l..	82'
Engineer.		Spec. cap...	50 GPM/ft.

R. 6 E.
T. 10 N.
Sec. 34

LOCATION: NE, SW, SW, SW, SW, NE, NE, Sec. 34, T10N, R6E

Quad. Sauk Prairie 7½'

Drill Hole						Casing & Liner Pipe or Curbing							
Dia.	from	to	Dia.	from	to	Dia.	Wgt.& Kind	from	to	Dia.	Wgt.& Kind	from	to
32"	0	198'				16"	.250 wall steel	+13"	178'				
						16"	Johnson Screen	178'	198'				

Drilling method:
Samples from 0 to 190' Rec'd: 3/27/85

Grout	from	to
Native Formation	0	172'
Gravel Pack	172'	198'

Studied by: Tom Hanson (0-115')
Craig S. Schwandt (115'-190')

Issued: 2/14/86

Formations: Outwash

Remarks: Well tested for 4 hours at 900 GPM with 20 feet of drawdown.
DNR Permanent Well #29775 & Sauk Co. Irrigation #67.
Drill cuttings from Melvin Nolden Well #2 located in center of NW¼,sec. 34,T10N,R6E were received in poor condition and could not be analyzed.

LOG OF WELL:

Depths	Graphic Section	Rock Type	Color	Grain Size Mode	Grain Size Range	Miscellaneous Characteristics
0-5		Sand	Yl brown	M	Vfn/VC	Trace granules,silt.
5-10		"	"	"	"	Same.
10-15		"	"	"	"	"
15-20		NO	SAMPLE.	Driller reports same as adjoining intervals.		
20-25		Sand	Yl brown	M	Vfn/VC	Trace gravel (Gran/L peb),silt.
25-30		"	"	"	"	Trace gravel (Gran/S peb),silt,caved organics.
30-35		"	Gy brown	C	"	Little gravel (Gran/M peb),silt,caved organics.
35-40		"	Brown	M	"	Much silt. Trace gravel (Gran/S peb),caved organics.
40-45		"	"	"	"	Same.
45-50		"	Yl brown	"	"	Trace granules,silt.
50-70		NO	SAMPLE.	Driller reports same as adjoining intervals.		
70-75		Sand	Brown	C	Vfn/VC	Trace gravel (Gran/S peb),silt.
75-80		Gravel	Dk brown	Gran	Gran/M peb	Granite,chert,trap,dolomite,rhyolite,volcanics. Mch snd. Tr st.
80-85		"	"	"	"	Same plus oolitic chert.
85-90		Sand	"	C	Vfn/VC	Much gravel (Gran/S peb). Trace silt.
90-95		"	"	"	"	Much gravel (Gran/M peb). Trace silt.
95-100		"	"	"	"	Much gravel (Gran/L peb). Trace silt.
100-110		NO	SAMPLE.	Driller reports same as adjoining intervals.		
110-115		Gravel	Mxd yl bn	Gran	Gran/M peb	Dol,chert,qtz,trap,volc,granite. Much sand.
115-120		"	"	S peb	Gran/L peb	Same.
120-125		NO	SAMPLE.	Driller reports same as adjoining intervals.		
125-130		"	"	Gran	Gran/M peb	Same plus silty sandstone.
130-135		Sand	Pl brown	C	Vfn/VC	Much gravel (Gran/M peb).
135-140		Gravel	Mixed	S peb	Gran/M peb	Dol,volc,trap,cht,qtz,grnt,rhyolite,wea ign. Much sand.
140-145		Sand	Pl brown	C	Vfn/VC	Much gravel (Gran/M peb).
145-150		Gravel	Mixed	S peb	Gran/M peb	Dol,schist,trap,cht,grnt,volc,wea ign. Much sand. Trace silt.
150-155		"	"	"	"	Same.
155-160		"	"	"	"	"

UNIVERSITY OF WISCONSIN GEOLOGICAL & NATURAL HISTORY SURVEY
3817 Mineral Point Rd., Madison, Wisconsin 53705

Log No.P61-Sk-21

Well name: Melvin Nolden Well #1

	Depths	Graphic Section	Rock Type	Color	Grain Size Mode	Grain Size Range	Miscellaneous Characteristics
OUTWASH 190'	160-165		Gravel	Mixed	S peb	Gran/M peb	Grnt,col,chert,trap,wea ign,quartz,volc,quartzite. Much sand.
	165-170		"	"	"	"	Same.
	170-175		"	"	"	"	Same plus gneiss.
	175-180		"	"	"	"	Same.
	180-185		NO	SAMPLE.	Driller reports same as adjoining intervals.		
	185-190		"	"	Gran	"	Same.
				END OF LOG			
			Samples with missing sample bag tags.				
	A		Gravel	Mixed	Gran	Gran/L peb	Granite,dol,chert,trap,volc,wea ign. Much sand.
	B		"	Lt gray	VLP	Gran/VL peb	Dol,gneiss,trap,anorthosite,volc,chert,quartz. Much sand.
	C		Sand	Lt yl bn	M	Vfn/VC	Trace gravel (Gran/M peb),silt.
	D		"	"	C	"	Same.
	E		"	"	M	"	"
	F		"	"	C	"	Same but much gravel (Gran/L peb).
	G		Gravel	Mxd rd bn	Gran	Gran/M peb	Dol,volc,granite,trap,sts,quartz. Much sand.
	H		"	Mixed	S peb	Gran/L peb	Dol,trap,granite,chert,volc. Trace sand.
	I		Sand	Lt yl bn	C	Vfn/VC	Little gravel (Gran/M peb).

PRAIRIE DU SAC VILLAGE WELL #2

~~VILLAGE WELL NO. 3, PRAIRIE DU SAC, SAUK CO., WIS.~~ 16

SE, NW, NE NE

SE¼SW¼ sec. 36, T. 10 N., R. 6 E.

H. A. Platt, Engineer Layne-Northwest Co., Contractors, 1

Samples examined by F. T. Thwaites, Nos. 194632-194664

3' ETM

~~0-5~~	~~5~~		~~Soil, sandy, black~~
5-20	15		Sand, fine to pebbles, yellow-gray
20-75	55		Gravel, coarse to fine, some sand
~~75-80~~	~~5~~		~~Sand, very coarse, gray~~
80-90	10		Gravel, coarse to fine, some sand
90-110	20		Sand, fine to pebbles, light gray
110-125	15		Gravel, medium to coarse, some sand
125-140	15		Sand, coarse to very coarse, gray
140-162	22		Gravel, medium to fine, some sand

162

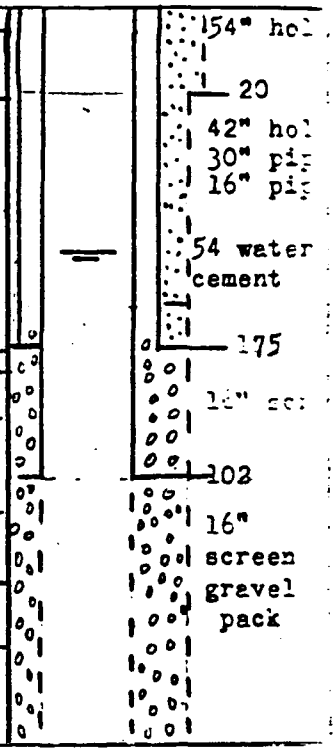

ed 12 hours at 1200 g.p.m. specific capacity = 170 g.p.m./ft.

ditional copies may be secured from Wisconsin Geological Survey, Science Hall, Madison 6, Wis.

DNR Perm. # 85911 + Sauk Co. #7.

First Water Quality Test For WISCONSIN UNIQUE WELL NUMBER AY 370

State of Wisconsin
Department of Natural Resources
Private Water Supply — WS2
Box 7921
Madison, WI 53707

16

Property Owner: Prairie Du Sac Telephone Number: (608) 643-2421
Mailing Address: 560 Park Avenue
City: Prairie Du Sac State: WI Zip Code: 53578
County: Sauk County Well Location Permit No.: W Well Completion Date: 06 / 11 / 91 (M M D D Y Y)

Well Constructor (Business Name): Layne-Northwest Registration #: 582
Address: W229 N5005 DuPlainville Road
City: Pewaukee, State: WI Zip Code: 53072

2. Mark well location in correct 40-acre parcel of section.

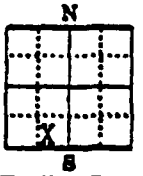

1. Location (Please type or print using a black pen.)
☐ Town ☑ City ☐ Village of Prairie Du Sac
Fire # (if available)
Grid or Street Address or Road Name and Number (if available): River Drive
Subdivision Name Lot # Block #
Gov't Lot # ____ or SE ¼ of SW ¼ of Section 36 ; T 10 N; R 6 ☐ E ☐ W

3. Well Type ☐ New ☐ Replacement ☐ Reconstruction/Rehabilitation
of well constructed in 19 56.
Reason for new, reconstructed, replaced, or rehabilitated well?: To reduce nitrate concentration
☐ Drilled ☐ Driven Point ☐ Jetted ☐ Other

Well serves ____ # of homes and/or City (ex: barn, restaurant, church, school, industry, etc.)
High Capacity Well? ☒ Yes ☐ No
High Capacity Property? ☒ Yes ☐ No

Well Located on Highest Point of Property. Consistent with the General Layout and Surroundings? ☒ Yes ☐ No
Well Located in Floodplain? ☐ Yes ☒ No
Distance In Feet From Well To Nearest:
____ 1. Landfill
____ 2. Building Overhang
____ 3. Septic or Holding Tank
____ 4. Sewage Absorption Unit
____ 5. Nonconforming Pit
____ 6. Buried Home Heating Oil Tank
____ 7. Buried Petroleum Tank
____ 8. Shoreline/Swimming Pool
____ 9. Downspout/Yard Hydrant
____ 10. Privy
____ 11. Foundation Drain to Clearwater
____ 12. Foundation Drain to Sewer
____ 13. Building Drain ☐ Cast Iron or Plastic ☐ Other
____ 14. Building Sewer ☐ Gravity ☐ Pressure ☐ Cast Iron or Plastic ☐ Other
____ 15. Collector Sewer
____ 16. Clearwater Sump
____ 17. Wastewater Sump
____ 18. Paved Animal Barn Pen
____ 19. Animal Yard or Shelter
____ 20. Silo — Type ____
____ 21. Barn Gutter
____ 22. Manure Pipe ☐ Gravity ☐ Pressure ☐ Cast Iron or Plastic ☐ Other
____ 23. Other Manure Storage ____ Other NR 112 Waste Source
____ 24. ____

Drillhole Dimensions

Dia. (in.)	From (ft.)	To (ft.)
10	surface	75'
12	75	210
5¼	210	554

Method of constructing upper enlarged drillhole. (If applicable ✓ more than one.)
☒ 1. Rotary — Mud Circulation
☒ 2. Rotary — Air
☒ 3. Rotary — Foam
☐ 4. Reverse Rotary
☐ 5. Cable-tool Bit ____ in. dia.
☐ 6. Temp. Outer Casing 24 in. dia. Removed? ☒ Yes ☐ No If no, explain ____
☐ 7. Other ____

Casing, Liner, Screen

Dia. (in.)	Material, Weight, Specification, Mfg. & Method of Assembly	From (ft.)	To (ft.)
	new steel bl. p.e. welded A-53- 62.58 lb-Livingstone	surface	226
(in.)	screen type and material	From	To

Grout or Other Sealing Material

Method: tremie — Kind of Sealing Material	From (ft.)	To (ft.)	# Sacks Cement
neat cement	surface	210	650

9. Geology — Type, Caving/Noncaving, Color, Hardness, Etc.

From (ft.)	To (ft.)	
surface	165	existing well
160	186	sand & gravel
186	191	shale
191	196	shale & sand stone
191	216	sand stone
216	283	shale
283	355	sand stone
255	453	limestone
453	550	sandstone
550	554	pink granite

10. Static Water Level: ____ ft. above ground level; 4 ft. below ground surface

11. Pump Test: Pumping Level 330 ft. below surface; Pumping at 1700 GPM for 4 hours

12. Well is: 12 in. ☐ Above ☐ Below Grade
Developed? ☒ Yes ☐ No
Disinfected? ☒ Yes ☐ No
Capped? ☒ Yes ☐ No

13. Were all unused, noncomplying, or unsafe wells properly sealed with sealant? ☒ Yes ☐ No If no, explain ____

14. Signature of Well Constructor: Layne-Northwest Date Signed: 6-11-91
Signature of Drill Rig Operator: Lester Waddel Date Signed: 6-12-91

Use additional comments on reverse side about geology, etc.

WELL CONSTRUCTION REPORT

ABB
ASEA BROWN BOVERI

ABB Environmental Services, Inc.

261 Commercial Street/P.O. Box 7050 Portland, Maine 04112
(207) 775-5401

TELEPHONE MEMORANDUM

PROJECT NO.: 6853-03 DATE: 2/10/92

CLIENT: USATHAMA

PROJECT DESCRIPTION: Badger AAP

BETWEEN: Rod Pendleton

AND: Russ Kiveney (Strandon Associates, Madison, WI)

SUBJECT: Water level in Prairie du Sac Well #2

Mr Kiveney was the consulting engineer for the town of Prairie du Sac when Well #2 was extended to a total depth of 554 feet below ground surface. I asked Mr. Kiveney if he recalled the artesian condition in the well (indicated on the drilling log from Layne-Northwest Co.). Mr. Kiveney confirmed that the water level is very close to ground surface.

DISTRIBUTION:

ABB

J. Pickett HP-3F
J. Buss HP3-F
C. Walker HP3-B / File 2.56

UNIVERSITY OF WISCONSIN GEOLOGICAL & NATURAL HISTORY SURVEY
3817 Mineral Point Rd., Madison, Wisconsin 53705

Log No. N73-S.

17

Well name Kindschi's Inc. Well #3
Town of Prairie du Sac
Owner.... Kindschi's, Inc. c/o Jerome Kindschi
Address.. Route 1
Prairie du Sac, WI 53587
Driller.. Ace Well Drilling, Inc.
Engineer.

County: Sauk
Completed... 2/19/82
Field check.
Altitude.... 833' ETM
Use..... Irrigation
Static w.l.. 80'
Spec. cap... 22 GPM/ft.

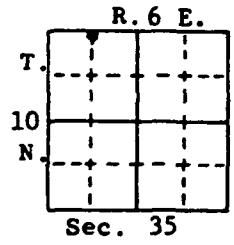

LOCATION: NE, NE, NE, NE, NW, NE, NW, Sec. 35, T10N, R6E Quad. Sauk Prairie 7½'

Drill Hole						Casing & Liner Pipe or Curbing							
Dia.	from	to	Dia.	from	to	Dia.	Wgt.& Kind	from	to	Dia.	Wgt.& Kind	from	to
18"	0	181'				14"	P.E. new pipe U.S. 0.375 wall	+13"	156'	14"	Johnson Screen 35 slot	156'	181'

Grout	from	to
Drill cuttings	0	140'
Gravel pack	140'	181'

Drilling method: Rotary
Samples from 0 to 180' Rec'd: 1/31/83

Studied by: Craig S. Schwandt

Issued: 9/13/85

Formations: Surface, Outwash

Remarks: DNR Permanent Well #29779 & Sauk Co. Irrigation #70.
Driller reports total well depth of 181'.
Well tested for 4 hours at 1000 GPM with 45 feet of drawdown.

LOG OF WELL:

	Depths	Graphic Section	Rock Type	Color	Grain Size Mode	Grain Size Range	Miscellaneous Characteristics
Sfc.	0-5		Soil	V dk brown	—	—	Much dark yellow brown sand. Little gravel. Trace silt.
	5-10		Gravel	Lt yl bn	Gran	Gran/S peb	Dol,grnt,sch,rhy porph,qtz,cht,ool cht,trap. Mch sand, Tr silt.
	10-15		"	"	"	Gran/M peb	Same.
	15-20		"	"	"	Gran/S peb	Dolomite,sndy dolomite,sil cem ss,quartz,chert,trap. Mch sand.
	20-25		"	Bn yellow	"	"	Sndy dolomite,chert,sil cem ss,quartz,trap. Mch sand, Tr silt.
	25-30		"	"	S peb	Gran/M peb	Granite,gabbro,dolomite,cht,hemic siltstone. Mch sand, Tr silt.
	30-35		"	"	"	"	Dol,cht,diabase,sch,wea igneous,grnt,qtz,ss. Mch sand, Tr silt
	35-40		"	"	Gran	"	Dol,chert,diabase,granite,trap,volc,quartz. Mch sand, Tr silt.
	40-45		"	"	"	Gran/S peb	Dol,sch,db,trap,grnt,chert,wea ig,hemic sts. Mch sand, Tr silt.
	45-50		Sand	"	C	Vfn/VC	Trace gravel (Gran/S peb), silt.
	50-55		"	"	"	"	Same.
	55-60		"	"	"	"	Trace granules, silt.
	60-65		"	"	"	"	Little gravel (Gran/M peb), Trace silt.
	65-70		"	"	"	"	Little gravel (Gran/S prb), Trace silt.
	70-75		"	"	"	"	Same.
	75-80		"	"	"	"	"
	80-85		"	"	"	"	"
	85-90		"	"	"	"	"
	90-95		"	"	"	"	"
	95-100		"	"	"	"	"
	100-105		"	"	"	"	"
	105-110		"	"	"	"	"
	110-115		"	"	"	"	"
	115-120		"	"	"	"	"
	120-125		"	"	"	"	"
	125-130		"	"	"	"	Much gravel (Gran/S peb), Trace silt.
	130-135		Gravel	"	Gran	Gran/S peb	Cht,ool cht,ls,dol,lim & sil cem ss,few volc,gab,trap,grnt,qtzt
	135-140		"	"	"	"	Same plus rhyolite. Mch sand, Tr silt.
	140-145		Sand	"	C	Vfn/VC	Much gravel (Gran/S peb), Trace silt.
	145-150		"	"	"	"	Little gravel (Gran/S peb), Trace silt.
	150-155		"	"	"	"	Same.
	155-160		"	"	"	"	Much gravel (Gran/S peb), Trace silt.

OUTWASH

NIVERSITY OF WISCONSIN GEOLOGICAL & NATURAL HISTORY SURVEY
3817 Mineral Point Rd., Madison, Wisconsin 53705

Log No. N73-Sk-218

l name: Kindschi's Inc. Well #3

Depths	Graphic Section	Rock Type	Color	Grain Size		Miscellaneous Characteristics
				Mode	Range	
160-165		Sand	Bn yellow	C	Vfn/VC	Much gravel (Gran/S peb). Trace silt.
165-170		"	"	"	"	Same.
170-175		"	"	"	"	"
175-180		"	"	"	"	Little gravel (Gran/S peb). Trace silt.
		END OF LOG				

Prairie du Sac Village Well #1
~~CITY WELL NO. 2, PRAIRIE DU SAC, WIS.~~
(47) SE¼ SE¼ SW¼, NE¼ NE¼ SE¼, sec. 1, T. 9 N., R. 6 E.
R. C. Amundson, Engineer; Layne-Northwest Co., Contractor
Samples from test well examined by F. T. Thwaites,
City Park Nos. 133955-133-980

18

Alt 778'

DRIFT	0-5	5		Sand, medium, brown-gray
	5-15	10		Sand, coarse, light gray, dolomitic
	15-25	10		Gravel, fine, very stony
	25-35	10		Sand, medium, light gray
	35-150	115		Sand, medium to coarse, some pebbles at top, light gray, dolomitic
	150			
EAU CL	150-170	20		Sandstone, fine to medium, light gray, dolomitic
	170-180	10		Sandstone, medium to fine, light gray, dol.
	40 180-190	10		Shale, sandy, gray, dolomitic

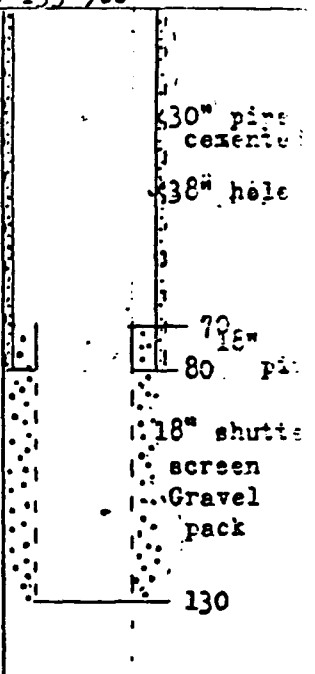

Formations: Drift (outwash); Eau Claire
Specific capacity of final well = 56 g.p.m./ft.

UNIVERSITY OF WISCONSIN GEOLOGICAL & NATURAL HISTORY SURVEY
1815 University Avenue, Madison, Wisconsin 53706

Log No. Sk-12[illegible]
Issued: June [illegible]

19

County: Sauk

Well name Melvin Bickford, Well #1
Town of Prairie du Sac
Owner.... Melvin Bickford
Address.. 790 Broadway
Prairie [illegible]c, Wisconsin
Driller.. Sylveste
Engineer.

Completed... 7/8/65
Field check.
Altitude.... 780' ETM
Use..... Irrigation
Static w. l. -- 79'
Spec. cap... -- 56.0

R. 6E
T. 9 N.
Sec. 1

SE SE, SW, SW, SE, NW, NW, Sec. 1, T9N, R6E

Quad. Baraboo 15'

Drill Hole						Casing & Liner Pipe or Curbing							
Dia.	from	to	Dia.	from	to	Dia.	Wgt. & Kind	from	to	Dia.	Wgt. & Kind	from	to
32"	0	187'				18"	10ga. steel	+13"	147'				
						18"	10ga. screen	147'	187'				

Grout: Kind	from	to
Native formation	0	140'
Gravel shroud	140'	187'

Samples from 0 to 186'
Sample Nos. 262678 to 262715
Formations: Drift

Date received: 3/8/66
Examined by: J. Warren

Date: 2/13/67

Remarks: Well tested for 10 hours at 1400 gpm with 25 feet of drawdown. Corrected well depth-187'. Sample tags give the following well location: NW¼, NW¼, sec.36, T.10N, R.6E.
DNR Chem. Well # 29704 = Sauk Co. #5.

LOG OF WELL:

0-2	2		Snd, dk bn&mxd clr, M&C, Srnd, VP srtg, ltl fn&V fn; mch org mat, ltl st
2-5	3		Snd, dk yl or&mxd clr, M&C, rnd, ltl fn, V fn&VC; ltl st&cl, trfn gvl
5-10	5		Snd, mxd clr, M&C, rnd, P srtg, ltl VC & fn; tr st
10-15	5		Snd, mxd clr, M, rnd, P srtg, mch C & fn, ltl VC; tr fn gvl
15-20	5		Snd, mxd clr, M & C, rnd, P srtg, ltl VC, tr fn; ltl fn gvl
20-42	22		Snd, mxd clr, M & C, rnd, F srtg, ltl VC;
42-57	15		Snd, mxd clr, M & C, rnd, F srtg, ltl VC; tr st
57-62	5		Snd, mxd clr, M & C, rnd, F srtg, tr VC;
62-67	5		Snd, mxd clr, M, rnd, F srtg, ltl C, tr fn & VC;
67-72	5		Snd, mxd clr, M, rnd, F srtg, ltl C, tr fn;
72-77	5		Snd, mxd clr, M & C, rnd, F srtg;
77-82	5		Snd, mxd clr, M, Sang, F srtg, ltl C;
82-92	10		Snd, mxd clr, M & C, Srnd, F srtg, ltl VC;
92-112	20		Snd, mxd clr, C & VC, rnd, F srtg, tr M; ltl fn gvl, tr roots
112-117	5		Snd, mxd clr, M & fn, Srnd, F srtg, ltl C, tr VC;
117-132	15		Snd, mxd clr, M, rnd, F srtg, ltl C;
132-142	10		Snd, mxd clr, C, rnd, F srtg, tr M, mch VC;
142-147	5		Snd, mxd clr, C & VC, rnd, ltl M;
147-157	10		Snd, mxd clr, C & VC, rnd, F srtg, ltl M; ltl fn gvl
157-167	10		Snd, mxd clr, C & VC, rnd, F srtg; mch fn gvl
167-177	10		Snd, mxd clr, C & VC, rnd, F srtg, tr M; mch fn gvl, tr M & st
177-182	5		Snd, mxd clr, C & VC, rnd, F srtg, tr M; mch fn gvl
182-186	4		Snd, mxd clr, C & VC, rnd, F srtg, tr M; mch fn gvl, ltl st & wood

WISCONSIN GEOLOGICAL SURVEY, Science Hall, 500 block N. Park St., Madison, Wis. Log No. Sk-55

Bluffview Acres, Inc. Well #1

~~Badger Village Development Corp.~~, Baraboo, Wis.

SE, NW, NW, SW, [illegible] NE¼, SW¼, Sec. 3, T 10N, R 6E, Sumpter Township

Earl C. Fuchs, Driller, ~~May 1960~~ 5/31/60

Sample Nos. 226027-226082 - Examined by M. E. Ostrom

Ell 866' ETM

20

DRIFT	0- 5	5		St&Cl,gry bn,dolic cem;tr snd	+12
	5- 10	5		St&Cl,gry bn,dolic cem;ltl snd	10' 12"steel pipe
	10- 15	5		Snd,lt yl bn,M&C,Srnd,mch VC&fn,ltl Vfn,mxd	13 3/4"hol
	15- 50	35		Snd,lt yl bn,M&C,Srnd,P srtg,ltl VC&fn,mostly C	43'
	50- 55	5		Snd,lt yl bn,M&C,Srnd,ltl VC&fn,mostly C;ltl gvl	8"steel pipe
	55- 80	25		Snd,lt yl bn,M&C,Srnd,P srtg,ltl VC&fn,mostly C;mch fn gvl	72'Water L
	80- 85	5		Snd,lt yl bn,M&C,ltl VC&fn,mostly qtz;ltl gvl	
	85-100	15		Snd,lt yl bn,M&C,Srnd,P srtg,ltl VC&fn,mostly qtz;mch Vfh gvl	
	100-105	5		Snd,lt yl bn,M&C,ltl VC&fn,mostly qtz;ltl gvl	
	105-110	5		Snd,lt yl bn,M&C,Srnd,P srtg,ltl VC&fn,mostly qtz	
	110-120	10		Snd,lt yl bn,M&C,Srnd,P srtg,ltl VC&fn,mostly qtz;mch Vfn&fn gvl	
	120-125	5		Snd,lt yl bn,M&C,Srnd,ltl VC&fn,mostly qtz;ltl gvl	
	125-130	5		Snd,lt yl bn,M&C,Srnd,ltl VC&fn,mostly qtz	
	130-150	20		Snd,lt yl bn,M&C,Srnd,P srtg,ltl VC&fn,mostly qtz;tr Vfn gvl	
	150-160	10		Gvl,lt yl bn,fn&Vfn,Sang,P srtg,tr M,mxd;mch snd,mostly qtz	
175	160-175	15		Gvl,lt yl bn,fn&Vfn,Sang,P srtg,tr M,mxd;mch snd,mostly qtz;mch cl	
DRESBACH	175-180	5		Ss,ol gry,M&C,Srnd,G cem dol & si,mch fn&Vfn	180'
	180-185	5		Dol,gry gn,fn&M,dns,mch snd & cl;mch sh & ss	
	185-190	5		Ss,ol gry,C&VC,F dol & si cem,mch M,ltl fn&Vfn	
	190-195	5		Ss,ol gry,C&VC,F dol & si cem,mch M,ltl fn&Vfn	
	195-200	5		Ss,ol gry,C&VC,F dol & si cem,mch M,ltl fn&Vfn	
	200-205	5		Ss,ol gry,C&VC,F dol & si cem,mch M,ltl fn&Vfn	
	205-210	5		Ss,ol gry,M&C,F dol & si cem,tr VC,mch fn&Vfn	
	210-215	5		Ss,gry or pnk,C&M,F dol & si cem,mch fn,ltl Vfn	7 7/8"hole
	215-220	5		Ss,gry rd,M&C,G dol & si cem,mch fn,ltl VC;tr sts	
	220-230	10		Ss,gry or pnk,M&C,Srnd,P srtg,G dol & si,mch fn,ltl VC,tr Vfn;mch dol;few granules	
	230-235	5		Dol,ol gry,fn&Vfn,dns,V sndy & sty;ltl gry rd sts	
	235-245	10		Dol,gry or pnk,fn&Vfn,dns,V sndy & sty;ltl gry rd sts;few granules	
	245-250	5		Ss,Vlt ol gry,C&M,F dol & si cem,mch VC & fn	
90	250-265	15		Granite wash	
PC 15	265-280	15		Granite	280'

Formations: Drift, Dresbach, Precambrian

Well tested for ½ hr. at 200 gpm with 78 ft. of drawdown. Specific capacity = 2.5 gpm per ft. of drawdown.

DNR Perm. Well #85838 + Sauk Co. #2.

OWNER: State Village Well #1
Thomas & Betty Winch, Mazomanie, Wis.
SE, NW, NE, SE¼, SW¼, Sec. 10, T 10N, R 6E 860' ETM
Don O'Connor, Driller - 9-24-64
Sample Nos. 251995-252045, Examined by M.E. Ostrom - 2-18-64

21

	0-10	10	St, Myl rd bn, P; Si, mch snd, cl	+14"
	10-20	10	Snd, mxd, M, C, Srnd, Psrtg, tr fn, Vfn, VC, trVfn, fn Mgvl	12"Pipe
	20-40	20	Snd, mxd, M, C, Srnd, Psrtg, tr fn, Vfn, VC, trVfn, fn gvl	40'
	40-50	10	Snd, mxd, M, C, Srnd, Psrtg, tr fn, Vfn, VC, trVfn, fn gvl, st	
L	50-65	15	Snd, mxd, M, C, Srnd, Psrtg, tr fn, Vfn, VC, mch st, cl	
	65-80	15	Snd, mxd, C, VC, Srnd, Psrtg, trM	
V	80-90	10	Snd, mxd, C, VC, Srnd, Psrtg, trM, trVfn gvl	85' Water Lvl
	90-135	45	Snd, mxd, C, VC, Srnd, Psrtg, trM, trVfn gvl, fn gvl	8"Pipe
	135-140	5	Snd, mxd, C, VC, Srnd, Psrtg, trM, mchVfn, fn gvl	
	140-145	5	Snd, mxd, C, VC, Sang, Psrtg, trM, fn, mchVfn, fn gvl	
	145-150	5	Snd, Vlt yl, M, fn, Srnd, Psrtg, tr sang, C, VC, Vfn gvl	
	150-165	15	Snd, mxd, C, VC, S nd, Psrtg, trM, mchVfn, fn gvl	
	165-170	5	Ss, Vlt yl, M, fn, Srnd, Psrtg, trC, mch "caved"	170'
	170-180	10	Ss, lt yl, M, rnd, Gsrtg, trC	
	180-215	35	Ss, lt yl rd, M, rnd, Gsrtg, Dolc:F, trC, fn, Vfn	
E	215-220	5	Ss, lt yl, M, rnd, Fsrtg, Dolc:F, trC, fn, Vfn	
	220-225	5	Ss, lt yl, M, rnd, Fsrtg, trC	
A	225-235	10	Ss, Myl, M, rnd, Fsrtg, trC	
	235-245	10	Ss, Myl, M, rnd, F rtg, trC, fn	
	245-255	10	No Sample	
	255-260	5	Ss, lt yl, M, C, rnd, Psrtg, Dolc:P, tr fn, Vfn, tr calc	
	260-265	5	Ss, lt yl, M, C, rnd, Psrtg, Dolc:P, tr fn, Vfn, tr calc	
105	265-270	5	Ss, lt yl, M, C, rnd, Dolc:P, tr fn, Vfn, tr calc, mch st	270'

Formations: Alluvium, Dresbach

Well tested for 6 hrs. at 210 gpm with 55 ft. of drawdown.
Specific capacity = 3.8 gpm per ft. of drawdown.
DNR Permanent Well #85810 & Sauk Co. Miscellaneous #5.

now ~~St. Ida Convent~~ Valley of Our Lady Ind. Well SK-11

formerly **E.L.PHILIPP WELL, SAUK CO.** (22)

NW, NW, SE, NW. SW, SW 1/4, NE 1/4, Sec. 15, 10-6 E

L.P. O'Connors, Driller
Completed Jan., 1922
Elevation 859' ETM
Samples examined by F.T. Thwaites, U.W. Nos. 54347-54445, 54485-91.

Formation	Depth	Description
DRIFT	0-8	Soil & brown clay (loess)
	8-65	Sand, coarse, gray, pebbles to 3/8"
	65-70	Gravel, stones to 1/2" - water
	70-95	Sand, medium to coarse, yellowish gray, calcar.
	95-106	Till, yellowish gray, sandy
	106-109	Sand, coarse, yellowish gray
	109-115	Till, like above
	115-125	Gravel, gray, coarse
	125-140	Clay, gray, very calcareous
	140-150	Sand, coarse to medium, light yellowish gray
	150-155	Clay like 125-140
	155-170	Sand, coarse to medium, light yellowish gray
	170-180	Sand, fine, gray (non-glacial)
	180-190	Sand, very coarse, gray, glacial
EAU CLAIRE	190-225	Shale, green, very calcareous; sandstone, fine, yellowish gray, hard, calcareous
	225-270	Sandstone, medium to fine, light yellowish gray, calcareous
	270-285	Sandstone, medium, yellow, "running"
	285-310	Shale, bluish gray, calcareous
	310-315	Sandstone, very fine, lt. gray, very shaley, calcar.
	315-350	Shale, bluish gray, calcareous.
MT. SIMON	350-360	Sandstone, medium, light yellow, calcareous.
	360-425	Shale, greenish, brownish & bluish gray, part sandy, mainly calcareous.
	425-440	Sandstone, fine, gray, much pyrite, calcareous
	440-445	Shale, pinkish gray, calcareous
	445-455	Dolomite, gray, shaly, sandy, pyrite spheres
	455-460	Shale, like 440-445
	460-475	Sandstone coarse, light yellowish gray, calcareous
	475-485	Sandstone, fine, light yellowish gray, calcareous
	485-490	Shale, like 440-445
	490-520	Sandstone, very fine to medium, gray, calcareous
	520-540±	Conglomerate, gray, pink quartzite pebbles - no sample [illegible]
PRE-CAMB.	540± - 625	Granite, gray, upper part decomposed, red

Depth scale: 190, 160, 190, 85

Well: 60 — 45 artesian head ground water; 8" casing; 190; 6" liner; 8" hole; 390 packer; 565; 6" hole

~~BADGER ARMY AMMUNITION PLANT WELL #5~~
~~NE ¼ NO. 5, BADGER ORDNANCE WORKS, SAUK CO., WIS.~~
Layne-Northwest Co., Contractors, 1942
NE, SE, NE, SE, NW ¼, NE¼NW¼ sec. 14, T. 10 N., R. 6 E. Elevation ~~960~~ 960' ETM 23
Samples examined by F. T. Thwaites, Nos. 115033-115141

0-5	5		Silt, black	
5-10	5		Gravel, fine, sandy, yellow-brown, leached	
10-20	10		Gravel, fine, sandy, light gray	
20-60	40		Sand, coarse to medium, light gray	
60-75	15		Gravel, coarse, stony	65 water
75-85	10		Gravel, fine and sand, very coarse	
85-95	10		Gravel, coarse, stony	12" drive pipe
95-130	35		Sand, medium to very coarse, some pebbles, light gray	
130-140	10		Gravel, coarse, stony	
140-190	50		Sand, coarse to medium, light gray	
190-195	5		Gravel, fine, sandy, silty (till?)	
195-200	5		Gravel, fine, very sandy	
200-230	30		Sand, coarse to medium, light gray	
230-240	10		Gravel, sandy	
240-250	10		Sandstone, fine to medium, white to lt.gray	245
250-260	10		Sandstone, fine to medium, lt.yellow-gray	
260-270	10		No sample, 260-265; Ss., fine, gray, dol.	
270-285	15		Siltstone, gray, dolomitic	
285-350	65		Shale, silty, dark gray, dolomitic	
350-370	20		Siltstone, light gray, dolomitic	
370-390	20		Sandstone, fine to silty, gray, dolomitic	
390-450	60		Siltstone, light gray, dolomitic; shale, dark gray, dolomitic; no sample 420-425	
450-485	35		Siltstone, light gray, slightly dolomitic	
485-495	10		Sandstone, silty to coarse, light gray	
495-515	20		Conglomerate, quartzite pebs. in ss like above	
515-520	5		Conglomerate, quartzite pebs. in ss, fine-crs.	
520-540	20		Granite, gray, decomposed	
540-553	13		Granite, pink with some quartzite inclusions	

Formations: Drift (glacial outwash); Eau Claire (base may be at 370); Mt. Simon; pre-Cambrian (granite intruding quartzite)

Tested at 602 g.p.m. specific capacity = 6.35 g.p.m.

BADGER ARMY AMMUNITION PLANT WELL #4

~~WELL NO. 4, BADGER ORDNANCE WORKS, SAUK CO., WIS.~~

SE, SW, SE, SW, SE, NW, ~~NE, SW,~~ NE¼ sec. 1, T. 10 N., R. 6 E. Elevation ~~902~~ 904' ETM 24

Layne-Northwest Co., Contractors, 1942

Samples examined by F. T. Thwaites, Nos. 114995-115032

	0-5	5	Soil, clay, black		
	5-10	5	Till, yellow-gray, leached		
	10-20	10	Gravel, coarse, sandy		
	20-25	5	Till, yellow-gray, dolomitic		
	25-45	20	Gravel, fine, much quartzite, mostly stony		
	45-50	5	Gravel, fine, sandy		
	50-55	5	Sand, pebbly, gray, dolomitic		
	55-60	5	Gravel, fine, sandy		
DRIFT	60-95	35	Sand, coarse, light gray, glacial		12" drive pipe 90 water
	95-105	10	Till, sandy, yellow-gray, dolomitic		
	105-115	10	Sand, fine to coarse, light gray, glacial		
	115-130	15	Clay, light pink, dolomitic		
	130-135	5	Sand, very fine to medium, gray, dolomitic		
	135-150	15	Gravel, fine, sandy		
	150-155	5	Sand, coarse to medium, light gray, glacial		
	155-170	15	Gravel, medium to coarse, stony		
	170-185	15	Gravel, fine to coarse, some sand		170 Layne Keyst[illegible] shutter scr[illegible]
189	185-189	4	Gravel, fine, some sand		

Tested at 302 g.p.m. specific capacity = 60.4 g.p.m.

~~WELL NO. 3, BADGER ORDNANCE WORKS, SAUK CO., WIS.~~
Layne-Northwest Co., Contractors, 1942
Samples examined by F. T. Thwaites, Nos. 114551-114640
SE, SW, NE, SW, NE, ~~SW~~, ~~NW¼NW¼~~ sec. 2, T. 10 N., R. 6 E.
~~Elevation 884~~ 887' ETM

25

	0-5	5		Clay, black	
	5-10	5		Clay, brown	
	10-15	5		Sand, medium to fine, light brown-gray	
	15-20	5		Sand, coarse to fine, light gray	
	20-35	15		Gravel, fine, very sandy	
	35-55	20		Sand, medium to very coarse, light gray	12" drive pip
	55-65	10		Gravel, fine, sandy	
	65-109	44		Sand, medium to fine, light gray	
109					90 water
	109-115	6		Conglomerate, quartzite, quatz pebbles	
	115-120	5		Conglomerate, more fine to medium, yel-gy ss.	
	120-130	10		Sandstone, fine to medium, light brown	
	130-140	10		Sandstone, medium to fine, lt.gy; peb. qz.	
	140-150	10		Sandstone, fine to medium, light gray	
	150-155	5		Sandstone, like above; pebbles pink quartzite	160
	155-165	10		Sandstone, medium to fine, light pink	
	165-175	10		Sandstone, fine to medium, light gray	
	175-180	5		Siltstone, light gray, dolomitic	
	180-185	5		Siltstone like above; pebbles quartzite	
	185-195	10		Siltstone, gray, dolomitic	
	195-200	5		Sandstone, very fine, yellow-gray, dol.	
	200-240	40		Sandstone, fine to silty, light gray, dol.	12" hole
	240-250	10		Siltstone, gray, dolomitic; ss, fine, lt.gy.	
	250-265	15		Sandstone, fine to silty, light gray, dol.	
	265-285	20		Siltstone, gray, dolomitic; ss, fine, lt.gy.	
	285-295	10		Siltstone, lt.gray, dol., pebs. pink qz.	
	295-310	15		Siltstone, light gray, dolomitic	
	310-330	20		Siltstone, gray, light pink, dolomitic	
	330-340	10		Siltstone like above; conglomerate, pink	
	340-390	50		Conglomerate, pebbles quatz and quartzite in sandstone, coarse to fine, pink, dolomitic	
	390-430	40		Siltstone, red to pink, some quartzite pebbles	
321					
	430-451	21		Granite, pink, fine-grained	

Formations; Drift, glacial outwash; Eau Claire; pre-Cambrian
Tested at 140 g.p.m. specific capacity = 1.73 g.p.m.

Badger Army Ammunition Plant Well #1

~~WELL NO. 1, BADGER ORDNANCE WORKS, SAUK CO., WIS.~~

Sa, NE, NE NE, SW¼,SW¼SE¼ sec. 3, T. 10 N., R. 6 E. (Administration Area) 26

Mason and Hanger Co., Engineers; Layne-Northwest Co., C

Samples examined by F. T. Thwaites, Nos. 115723-115772B

Elevation = 883

DRIFT	0-5	5		Soil, black sand clay, brown, leached	
	5-25	20		Sand, very coarse to medium, yellow-brown	
	25 -58	33		Gravel, very sandy	
	58-93	35		Sand, medium to fine, light gray, dolomitic, mainly quartz grains	68 water
	93-132	39		Gravel, sandy (water)	16" steel pipe
	132-172	40		Sand, coarse to fine, light gray, dolomitic (water)	
	172-176	4		Sand, very fine to silty, light gray, dol.	
199	176-199	23		Clay, dark gray, dolomitic	
EAU CLAIRE	199-201	2		Sandstone, very fine to silty, lt.gray, dol.	
	201-209	8		Sandstone, medium to silty, lt.gray, dol.	208
	209-216	7		Siltstone, sandy, lt.yellow-gray, dolomitic	
	216-235	19		Siltstone, light grey, very dolomitic	
	235-298	63		Shale, dark gray, dolomitic	15" hole
	298-306	8		Sandstone, very coarse to fine, lt.gy, dol.	
	306-315	9		Sandstone, fine, light gy, dol., water	
	315-345	30		Sandstone, very fine, light grey, dolomitic; siltstone, light gray, dolomitic	
	345-365	20		Shale, dark gray, silty, dolomitic	
	365-375	10		Siltstone, light gray, sandy, dolomitic	
	375-385	10		Sandstone, very coarse to fine, pink, dol.	
	385-405	20		Siltstone, red, slightly dolomitic	
220	405-419	14		Sandstone, silty to medium, lt.gy; shale, gy.	
	[illegible]	[illegible]		Clay, red, fragments of [illegible]	
PC 16	425-435	10		Clay, red, fragments of decomposed volcanic r	

Formations: Drift (glacial outwash and lake sediments); Eau Claire; pre-Cambrian

Tested at 81 g.p.m. specific capacity = 1.55 g.p.m.

#2 (~~WELL~~)

BADGER ARMY AMMUNITION PLANT WELL

~~WELL NO. 2, BADGER ORDNANCE WORKS, SAUK CO., WIS.~~

27

Layne-Northwest Co., Contractors, 1942

Samples examined by F. T. Thwaites, Nos. 114507-114550

C, SE, SE¼, NW¼, SW¼ sec. 1, T. 10 N., R. 6 E.

Elevation 920' ETM

DRIFT		0-60	60	No samples	
		60-70	10	Sand, medium to silty, gray, dolomitic	
		70-90	20	Gravel, fine, rather sandy	
		90-110	20	Sand, coarse to medium, light gray, dolomitic	12" drive pipe
		110-130	20	Sand, medium to fine, light gray, dolomitic	
		130-140	10	Gravel, sandy, pebbles to 1"	
		140-170	30	Sand, coarse to medium, light gray, dolomitic	
		170-180	10	Gravel, fine, very sandy	170 water
		180-190	10	Gravel, stony, pebbles to 3/4"	
		190-210	20	Sand, coarse to medium, light gray, dolomitic	
		210-250	40	Sand, medium to fine, light gray, slightly dolomitic	
	260	250-260	10	Sand, coarse to medium, light gray, dolomitic	
EAU CLAIRE		260-290	30	Siltstone, gray, dolomitic	273
		290-300	10	Shale, dark gray, slightly dolomitic	
		300-330	30	Sandstone, fine, light gray; shale, gray	
		330-350	20	Siltstone, light gray, dolomitic	12" hole
		350-355	5	Sandstone, fine to medium, lt.gray, dolomitic	
		355-395	40	Sandstone like above; siltstone, lt.gray, pink, dol.; shale, gray; no.samp.380-385	
		395-400	5	No sample	
		400-407	7	Sandstone, fine to medium, lt.gray, very dol.	
		407-430	23	Siltstone, grey, dol; ss, like above; qz.peb.	
	180	430-440	10	Sandstone, coarse to fine, gray, qz. pebbles	
PRE-CAMB.	31	440-471	31	Quartzite, pink	

Formations: Drift, mainly outwash; Eau Claire; pre-Cambrian

Tested at 342 g.p.m. specific capacity = 8.15 g.p.m.

Wel. 6-30M (6-

28

WELL CONSTRUCTOR'S REPORT TO WISCONSIN STATE BOARD OF HEALTH

See Instructions on Reverse Side

1. County Sauk — {Town ☒ / Village ☐ / City ☐} Prairie Du Sac (Check one and give name)

2. Location Sec 25 T10N R6E
Name of street and number of premise or Section, Town and Range numbers

3. Owner ☒ or Agent ☐ John Radlund
Name of individual, partnership or firm

4. Mail Address Prairie Du Sac
Complete address required

5. From well to nearest: Building 2 ft; sewer ____ ft; drain ____ ft; septic tank ____ ft; dry well or filter bed ____ ft; abandoned well ____ ft.

6. Well is intended to supply water for: Home

7. DRILLHOLE:

Dia. (in.)	From (ft.)	To (ft.)	Dia. (in.)	From (ft.)	To (ft.)
6	0	236			

8. CASING AND LINER PIPE OR CURBING:

Dia. (in.)	Kind and Weight	From (ft.)	To (ft.)
6	Std Blk	0	223

9. GROUT:

Kind	From (ft.)	To (ft.)
None		

10. FORMATIONS:

Kind	From (ft.)	To (ft.)
Sand & gravel	0	60
Sand	60	190
Sand & Gravel	190	223
Sandstone	223	236

Construction of the well was completed on: Oct. 8 19 57

The well is terminated 7" inches ☐ above, below ☒ the permanent ground surface.

Was the well disinfected upon completion? Yes X No ____

Was the well sealed watertight upon completion? Yes X No ____

11. MISCELLANEOUS DATA:

Yield test: 7 Hrs. at 10 GPM.

Depth from surface to water-level: 81 ft.

Water-level when pumping: 122 ft.

Water sample was sent to the state laboratory at: Madison (City) on Oct 14 1957

Signature Don O'Connor (Registered Well Driller) Spring Green (Complete Mail Address)

Please do not write in space below

Rec'd ____ No ____

Ans'd ____

Interpretation ____

	10 ml	10 ml	10 ml	10 ml	10 ml
Gas—24 hrs.					
48 hrs.					
Confirm					
B. Coli					

Examiner ____

Wel 6

29

WELL CONSTRUCTOR'S REPORT TO WISCONSIN STATE BOARD OF HEALTH

See Instructions on Reverse Side

1. County Sauk — Town ☒ Village ☐ City ☐ Prairie Du Sac (Check one and give name)

2. Location Sec 26 T 9+10 N ✓ R 6 E
Name of street and number of premise or Section, Town and Range numbers

3. Owner ☒ or Agent ☐ Kinchi Bros.
Name of individual, partnership or firm

4. Mail Address Prairie Du Sac
Complete address required

5. From well to nearest: Building 40 ft; sewer ____ ft; drain ____ ft; septic tank ____ ft; dry well or filter bed ____ ft; abandoned well ____ ft.

6. Well is intended to supply water for: Farm

7. DRILLHOLE:

Dia. (in.)	From (ft.)	To (ft.)	Dia. (in.)	From (ft.)	To (ft.)
4	70	178			

8. CASING AND LINER PIPE OR CURBING:

Dia. (in.)	Kind and Weight	From (ft.)	To (ft.)
4	Steel	0	172
4	Screen	172	178

9. GROUT:

Kind	From (ft.)	To (ft.)
Clay	0	70

10. FORMATIONS:

Kind	From (ft.)	To (ft.)
36" open Hole	0	70
Clay	70	121
Sand	121	142
Clay	142	160
Sand	160	178

11. MISCELLANEOUS DATA:

Yield test: 2 Hrs. at 6 GPM.

Depth from surface to water-level: 75 ft.

Water-level when pumping: 75 ft.

Water sample was sent to the state laboratory at: Not Complete (City) on ____ 19__

Construction of the well was completed on: 1/5 1959

The well is terminated 8 inches ☒ above, below ☐ the permanent ground surface.

Was the well disinfected upon completion? Yes ✓ No ____

Was the well sealed watertight upon completion? Yes ✓ No ____

Signature Clayton G Reynolds (Registered Well Driller) Portage (Complete Mail Address)

Please do not write in space below

Rec'd ____ No. ____

Ans'd ____

Interpretation ____

	10 ml	10 ml	10 ml	10 ml	10 ml
Gas—24 hrs.					
48 hrs.					
Confirm					
B. Coli					

Well Construction Report For WISCONSIN UNIQUE WELL NUMBER DF 747

State of Wisconsin
Department of Natural Resources
Private Water Supply — WS/2
Box 7921
Madison, WI 53707

30

Property Owner: Ervin Zanders | Telephone Number: (608) 643-6765
Mailing Address: Rt 1
City: Praire Du Sac | State: Wis | Zip Code: 53578
County of Well Location: Sauk | County Well Location Permit No.: W | Well Completion Date: 4/9/90 (M M / D D / Y Y)

Well Constructor (Business Name): Albin Herbeck | Registration #: 482
Address: Box 136
City: Richland Center | State: Wis | Zip Code: 53581

2. Mark well location in correct 40-acre parcel of section.

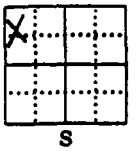

1. Location (Please type or print using a black pen.)
☒ Town ☐ City ☐ Village of Roubaix | Fire # (if available)
Grid or Street Address or Road Name and Number (if available)
Subdivision Name | Lot # | Block #
Gov't Lot # ____ or ¼ of ¼ of Section 25; T 10 N; R ____ ☐ E ☐ W

3. Well Type ☐ New ☒ Replacement ☐ Reconstruction
of unique well # ____ constructed in 19 ____.
Reason for new, replaced or reconstructed well? need water

4. Well serves 1 # of homes and/or Farm
(ex: barn, restaurant, church, school, industry, etc.)
High Capacity Well? ☐ Yes ☒ No
High Capacity Property? ☐ Yes ☒ No

☐ Drilled ☐ Driven Point ☐ Jetted ☐ Other ____

5. Well Located on Highest Point of Property, Consistent with the General Layout and Surroundings? ☒ Yes ☐ No If no, explain on back side
Well Located in Floodplain? ☐ Yes ☒ No
Distance In Feet From Well To Nearest:

____ 1. Landfill	____ 9. Downspout/Yard Hydrant	12+	____ 17. Wastewater Sump
5+ 2. Building Overhang	____ 10. Privy	55+	18. Paved Animal Barn Pen
20+ 3. Septic or Holding Tank	____ 11. Foundation Drain to Clearwater	55+	19. Animal Yard or Shelter
55+ 4. Sewage Absorption Unit	____ 12. Foundation Drain to Sewer	51+	20. Silo — Type ____
12+ 5. Nonconforming Pit	____ 13. Building Drain		____ 21. Barn Gutter
____ 6. Buried Home Heating Oil Tank	☐ Cast Iron or Plastic ☐ Other		____ 22. Manure Pipe ☐ Gravity ☐ Pressure
____ 7. Buried Petroleum Tank	____ 14. Building Sewer ☐ Gravity ☐ Pressure		☐ Cast Iron or Plastic ☐ Other
____ 8. Shoreline/Swimming Pool	☐ Cast Iron or Plastic ☐ Other		____ 23. Other Manure Storage ____
	____ 15. Collector or Street Sewer		Other NR 112 Waste Source
	____ 16. Clearwater Sump		____ 24. ____

6. Drillhole Dimensions

Dia. (in.)	From (ft.)	To (ft.)
10	surface	20
6	20	307
Dirt	11 & drive	

Method of constructing upper enlarged drillhole only.
☐ 1. Rotary — Mud Circulation
☐ 2. Rotary — Air
☐ 3. Rotary — Foam
☐ 4. Reverse Rotary
☐ 5. Cable-tool Bit ____ in. dia.
☒ 6. Temp. Outer Casing 10 in. dia. Removed? ☐ Yes ☐ No
If no, explain ____
☐ 7. Other ____

7. Casing, Liner, Screen

Dia. (in.)	Material, Weight, Specification Mfg. & Method of Assembly	From (ft.)	To (ft.)
6	Sch 40 18.97 P. E.	surface	279
	Pitless		
	Astm A 53		
	6 5/8 O. D. 250 ERW.		
Dia. (in.)	screen type and material	From	To

8. Grout or Other Sealing Material

Method / Kind of Sealing Material	From (ft.)	To (ft.)	Sacks Cement
Clay slurry	surface	279	

DNR USE ONLY

9. Geology

Type, Caving/Noncaving, Color, Hardness, Etc.	From (ft.)	To (ft.)
	surface	
Topsoil		1
silty clay	1	15
Sand & gravel	15	270
sandstone	270	300
shale	300	307
110.4' BGS.		

10. Static Water Level
____ ft. above ground level
____ ft. below ground surface

11. Pump Test
Pumping Level 115 ft. below surface
Pumping at 12 GPM for 8 hours

12. Well Is:
☒ Above ☐ Below Grade
8+ in.
Developed? ☒ Yes ☐ No
Disinfected? ☒ Yes ☐ No
Capped? ☒ Yes ☐ No

13. Did you permanently seal all unused, noncomplying, or unsafe wells?
☐ Yes ☒ No If no, explain Owner responsibil

14. Signature of Point Driver or Registered Driller | Date Signed 9C
Signature of Drill Rig Operator | Date Signed

Make any more comments on reverse side about geology, etc.

WELL CONSTRUCTION REPORT

30

WELL CONSTRUCTOR'S REPORT TO WISCONSIN STATE BOARD OF HEALTH

See Instructions on Reverse Side

JAN 22 1946

1. County Sauk — Town / ~~Village~~ / ~~City~~ Prairie Du Sac

2. Location NW ¼ of NW ¼ of Sec 25 T 10 N R 6 E

3. Owner or Agent Leo Zander

4. Address Prairie Du Sac, Wis. R.D.

5. From well to nearest: Building 5 ft; sewer Non ft; drain Non ft; septic tank Non ft; dry well or filter bed Non ft; abandoned well in Use ft.

6. Well is intended to supply water for: Dairy Farm

7. DRILLHOLE OR EXCAVATION:

Dia. (in.)	From (ft.)	To (ft.)
6	0	229

8. CASING AND LINER PIPE OR CURBING:

Dia. (in.)	Kind	From (ft.)	To (ft.)
6	Std Weight		
	Steel Pipe	0	229

9. GROUT:

Kind	From (ft.)	To (ft.)
Clay Fill	0	20

10. FORMATIONS:

Kind	Thickness (ft.)	Total Depth (ft.)
Top Soil & Clay	0	25
Sand & Some Gravel	25	115
Blue Clay	115	145
River Sand	145	215
Sand & Some Gravel	215	226
Gravel	226	229

11. MISCELLANEOUS DATA:

Yield test: 2 Hrs. at 10 GPM.

Depth from surface to water: 110 ft.

Water-level when pumping: 114 ft.

Water sample sent to laboratory at Madison on 9/18 19 45

Construction of the well was completed on 9/16 19 45

The well is terminated 7 ft in Pit inches ~~(above)~~ (below) the permanent grade.

Was the well disinfected upon completion? Yes Yes No

Was the well sealed watertight upon completion? Yes Yes No

Signature Geo Reynolds
Registered Well Driller

Portage Wis
Complete Mail Address

31

WELL CONSTRUCTOR'S REPORT NOV 27 1974
FORM 3300-15

NOTE
WHITE COPY – DIVISION'S COPY
GREEN COPY – DRILLER'S COPY
YELLOW COPY – OWNER'S COPY

STATE OF WISCON
DEPARTMENT OF NATURAL
Box 450
Madison, Wisconsin 53701

1. COUNTY: Sauk
CHECK ONE: [X] Town [ ] Village [ ] City
NAME: Sumpter

2. LOCATION – ¼ Section: NE 1/4 SE 1/4 | Section: 34 | Township: 10N | Range: 6E
OR – Grid or street no: | Street name:
AND – If available subdivision name, lot & block no.:

3. OWNER AT TIME OF DRILLING: Erwin Kiemle
ADDRESS: Rte 1 Box 52
POST OFFICE: Prairie Du Sac Wis

4. Distance in feet from well to nearest: (Record answer in appropriate block)

BUILDING	SANITARY SEWER C.I.	SANITARY SEWER TILE	FLOOR DRAIN C.I.	FLOOR DRAIN TILE	FOUNDATION DRAIN SEWER CONNECTED	FOUNDATION DRAIN INDEPENDENT	WASTE WATER DRAIN C.I.	WASTE WATER DRAIN TILE
8 ft	20 ft		24 ft			none	25 ft	

CLEAR WATER DRAIN C.I.	CLEAR WATER DRAIN TILE	SEPTIC TANK	PRIVY	SEEPAGE PIT	ABSORPTION FIELD	BARN	SILO	ABANDONED WELL	SINK HOLE
18 ft		50 ft		75 ft					

OTHER POLLUTION SOURCES (Give description such as dump, quarry, drainage well, stream, pond, lake, etc.)

5. Well is intended to supply water for: Home

6. DRILLHOLE

Dia. (in.)	From (ft.)	To (ft.)	Dia. (in.)	From (ft.)	To (ft.)
10	Surface	10			
6	10	79			

7. CASING, LINER, CURBING, AND SCREEN

Dia. (in.)	Kind and Weight	From (ft.)	To (ft.)
6"	New Stand Blk Steel 19.18# per ft	Surface	76
6"	Johnston Stainless Screen 15 Slot 3 ft long	76	79

8. GROUT OR OTHER SEALING MATERIAL

Kind	From (ft.)	To (ft.)
Drill Cuttings	Surface	10

9. FORMATIONS

Kind	From (ft.)	To (ft.)
Sand	Surface	25
Sand & Gravel	25	70
Gravel	70	79

10. TYPE OF DRILLING MACHINE USED
[X] Cable Tool [ ] Direct Rotary [ ] Reverse Rotary
[ ] Rotary – air w/drilling mud [ ] Rotary – hammer with drilling mud & air [ ] Jetting with [ ] Air [ ] Water

Well construction completed on July 1 1974
Well is terminated 10 inches [X] above [ ] below final grade
Well disinfected upon completion [X] Yes [ ] No
Well sealed watertight upon completion [X] Yes [ ] No

11. MISCELLANEOUS DATA
Yield test: 18 Hrs. at 25 GPM
Depth from surface to normal water level 40 ft.
Depth to water level when pumping 40 ft.

Water sample sent to Madison laboratory on: Oct 1 1974

Your opinion concerning other pollution hazards, information concerning difficulties encountered, and data relating to nearby wells, screens, seals, type of casing joints, method of finishing the well, amount of cement used in grouting, blasting, sub-surface pumprooms, access pits, etc., should be given on reverse side.

SIGNATURE: LaVerne Welch Registered Well Driller
COMPLETE MAIL ADDRESS: 245 Park Ave Prairie Du Sac

Please do not write in space below

COLIFORM TEST RESULT	GAS – 24 HRS.	GAS – 48 HRS.	CONFIRMED	REMARKS

MAY 02 1978

State of Wisconsin
Department of Natural Resources
Box 7921
Madison, Wisconsin 53707

NOTE:
White Copy - Division's Copy
Green Copy - Driller's Copy
Yellow Copy - Owner's Copy

WELL CONSTRUCTOR'S REPO 32
Form 3300-15 Rev 12

COUNTY: Sauk
CHECK (✓) ONE: ☑ Town ☐ Village ☐ City
Name: Prairie Du Sac

✓ SW ¼ Section NE¼ Section 25 ☑ Township T9N Range R7E

2. LOCATION
OR - Grid or Street No. Street Name: T10N R6E
AND - If available subdivision name, lot & block No.: Lot 10, Windings

3. NAME ☑ OWNER ☐ AGENT AT TIME OF DRILLING CHECK (✓) ONE: Bill Aotta
ADDRESS: R1
POST OFFICE: Prairie Du Sac, Wis.

4. Distance in feet from well to nearest: (Record answer in appropriate block)

Building	Sanitary Bldg. Drain C.I.	Sanitary Bldg. Drain Other	Sanitary Bldg. Sewer C.I.	Sanitary Bldg. Sewer Other	Floor Drain Connected To: C.I. Sewer	Floor Drain Connected To: Other Sewer	Storm Bldg. Drain C.I.	Storm Bldg. Drain Other	Storm Bldg. Sewer C.I.	Storm Bldg. Sewer Other
30	—		42	—	—		—		—	

Street Sewer San.	Street Sewer Storm	Other Sewers C.I.	Other Sewers Other	Foundation Drain Connected to: Sewer / Clearwater Dr.	Sewage Sump / Clearwater Sump	Sewage Sump C.I.	Sewage Sump Other	Clearwater Sump	Septic Tank	Holding Tank	Sewage Absorption Unit: Seepage Pit / Seepage Bed / Seepage Trench
—	—	—				—		—	98	—	110

Privy	Pet Waste Pit	Pit: Nonconforming Existing: Well / Pump / Tank	Subsurface Pumproom Nonconforming Existing	Barn Gutter	Animal Barn Pen	Animal Yard	Silo With Pit	Glass Lined Storage Facility	Silo w/o Pit	Earthen Silage Storage Trench Or Pit
—	—	X	—	—	—	—	—	—	—	—

Temporary Manure Stack	Watertight Liquid Manure Tank	Solid Manure Storage Structure	Subsurface Gasoline or Oil Tank	Waste Pond or Land Disposal Unit (Specify Type)	Other (Give Description)
—	—	—	—	—	—

5. Well is intended to supply water for: House

6. DRILLHOLE

Dia. (in.)	From (ft.)	To (ft.)	Dia. (in.)	From (ft.)	To (ft.)
10	Surface	20	6	20	278

7. CASING, LINER, CURBING AND SCREEN

Dia. (in.)	Material, Weight, Specification & Method of Assembly	From (ft.)	To (ft.)
6	19.45 lbs. per ft T&C. U.S.S. A53	Surface	255

8. GROUT OR OTHER SEALING MATERIAL

Kind	From (ft.)	To (ft.)
Clay slurry	Surface	20

9. FORMATIONS

Kind	From (ft.)	To (ft.)
sand & gravel	Surface	255
sandstone	255	279

10. TYPE OF DRILLING MACHINE USED
☑ Cable Tool ☐ Rotary-air w/drilling mud ☐ Rotary-w/drilling mud ☐ Rotary-hammer w/drilling mud & air ☐ Rotary-hammer & air ☐ Reverse Rotary ☐ Jetting with ☐ Air ☐ Water

Well construction completed on 5- - 1977

11. MISCELLANEOUS DATA
Yield Test: 24 Hrs. at 10 GPM
Depth from surface to normal water level 115 Ft.
Depth of water level when pumping 118 Ft. Stabilized ☑ Yes ☐ No

Well is terminated 8 inches ☑ above ☐ below final grade
Well disinfected upon completion ☑ Yes ☐ No
Well sealed watertight upon completion ☑ Yes ☐ No

Water sample sent to State Lab. of Hygiene laboratory on 4-16 1978

Your opinion concerning other pollution hazards, information concerning difficulties encountered, and data relating to nearby wells, screens, seals, method of finishing the well, amount of cement used in grouting, blasting, etc., should be given on reverse side.

Signature: Tony Prenn Registered Well Driller
Complete Mail Address: R2 Spring Green Wisc. 53588

MAY 09 1978 MAY 02 1978

State of Wisconsin
Department of Natural Resources
Box 7921
Madison, Wisconsin 53707

NOTE:
White Copy - Division's Copy
Green Copy - Driller's Copy
Yellow Copy - Owner's Copy

WELL CONSTRUCTOR'S REPORT 33

Form 3300-15 Rev 12-76

1. COUNTY: Sauk — CHECK (✓) ONE: ☑ Town ☐ Village ☐ City — Name: Prairie Du Sac

2. LOCATION: SW¼ NE¼ Section 25 Township T12N Range R6E
OR – Grid or Street No. Street Name: T10N R6E
AND – If available subdivision name, lot & block No.: Lot 8 - Wendorf's sub Div

3. NAME ☑ OWNER ☐ AGENT AT TIME OF DRILLING CHECK (✓) ONE: Dennis Spake
ADDRESS: R1
POST OFFICE: Prairie Du Sac Wisc

4. Distance in feet from well to nearest: (Record answer in appropriate block)

Building	Sanitary Bldg. Drain C.I.	Sanitary Bldg. Drain Other	Sanitary Bldg. Sewer C.I.	Sanitary Bldg. Sewer Other	Floor Drain Connected To: C.I. Sewer	Floor Drain Connected To: Other Sewer	Storm Bldg. Drain C.I.	Storm Bldg. Drain Other	Storm Bldg. Sewer C.I.	Storm Bldg. Sewer Other
90										

Street Sewer San.	Street Sewer Storm	Other Sewers C.I.	Other Sewers Other	Foundation Drain Connected to: Sewer	Foundation Drain Connected to: Sewage Sump	Foundation Drain Connected to: Clearwater Dr.	Foundation Drain Connected to: Clearwater Sump	Sewage Sump C.I.	Sewage Sump Other	Clearwater Sump	Septic Tank	Holding Tank	Sewage Absorption Unit
											105		Seepage Pit; Seepage Bed 90; Seepage Trench

Privy	Pet Waste Pit	Pit: Nonconforming Existing	Subsurface Pumproom Nonconforming Existing	Barn Gutter	Animal Barn Pen	Animal Yard	Silo With Pit	Glass Lined Storage Facility	Silo w/o Pit	Earthen Silage Storage Trench Or Pit
		Well; Pump; Tank								

Temporary Manure Stack	Watertight Liquid Manure Tank	Solid Manure Storage Structure	Subsurface Gasoline or Oil Tank	Waste Pond or Land Disposal Unit (Specify Type)	Other (Give Description)

5. Well is intended to supply water for: House

6. DRILLHOLE

Dia. (in.)	From (ft.)	To (ft.)	Dia. (in.)	From (ft.)	To (ft.)
10	Surface	20	6	26	307

7. CASING, LINER, CURBING AND SCREEN

Dia. (in.)	Material, Weight, Specification & Method of Assembly	From (ft.)	To (ft.)
6 5/8	J.P. -280 Well	Surface	285
	A53 - 18.97 lb. per ft.		
	Flend. U.S.S.		

8. GROUT OR OTHER SEALING MATERIAL

Kind	From (ft.)	To (ft.)
Clay slurry	Surface	20

9. FORMATIONS

Kind	From (ft.)	To (ft.)
sand & Gravel	Surface	285
sandstone	285	307

10. TYPE OF DRILLING MACHINE USED

☑ Cable Tool ☐ Rotary-air w/drilling mud ☐ Rotary-w/drilling mud
☐ Rotary-hammer w/drilling mud & air ☐ Rotary-hammer & air ☐ Reverse Rotary
☐ Jetting with ☐ Air ☐ Water

Well construction completed on 9-13 1922

11. MISCELLANEOUS DATA

Yield Test: 12 Hrs. at 10 GPM
Depth from surface to normal water level 90 Ft.
Depth of water level when pumping 96 Ft. Stabilized ☑ Yes ☐ No

Well is terminated 10 inches ☑ above ☐ below final grade
Well disinfected upon completion ☐ Yes ☐ No
Well sealed watertight upon completion ☑ Yes ☐ No

Water sample sent to State Lab. of Hygiene laboratory on 4-16 1928

Your opinion concerning other pollution hazards, information concerning difficulties encountered, and data relating to nearby wells, screens, seals, method of finishing the well, amount of cement used in grouting, blasting, etc., should be given on reverse side.

Signature: [signature] Registered Well Driller

Complete Mail Address: R2 Sauk City Wisc

DEC 14 1977

34

State of Wisconsin
Department of Natural Resources
Box 450
Madison, Wisconsin 53701

JAN 4 1978

NOTE:
White Copy - Division's Copy
Green Copy - Driller's Copy
Yellow Copy - Owner's Copy

WELL CONSTRUCTOR'S REPORT
Form 3300-15
Rev. 10-75

UNTY: Sauk

CHECK (✓) ONE: ☒ Town ☐ Village ☐ City

Name: Prairie Du Sac

2. LOCATION: ✓ ¼ Section: SW¼NW; Section: 25; Township: 10N; Range: 6E

OR – Grid or Street No. / Street Name:

AND – If available subdivision name, lot & block No.: The Windings Lot 4

3. NAME ☒ OWNER ☐ AGENT AT TIME OF DRILLING CHECK (✓) ONE: Edward Wagner

ADDRESS: 5213 Odana Rd.

POST OFFICE: Madison, Wis

Distance in feet from well to nearest: (Record answer in appropriate block)

Building	Sanitary Bldg. Drain C.I.	Sanitary Bldg. Drain Other	Sanitary Bldg. Sewer C.I.	Sanitary Bldg. Sewer Other	Floor Drain Connected To: C.I. Sewer	Floor Drain Connected To: Other Sewer	Storm Bldg. Drain C.I.	Storm Bldg. Drain Other	Storm Bldg. Sewer C.I.	Storm Bldg. Sewer Other
8 ft	25 ft				30 ft					

Street Sewer San.	Street Sewer Storm	Other Sewers C.I.	Other Sewers Other	Foundation Drain Connected to: Sewer	Sewage Sump	Clearwater Dr.	Clearwater Sump	Sewage Sump C.I.	Sewage Sump Other	Clearwater Sump	Septic Tank	Holding Tank	Sewage Absorption Unit: Seepage Pit	Seepage Bed	Seepage Trench
											75 ft		100 ft		

Privy	Pet Waste Pit	Pit: Nonconforming Existing: Well	Pump	Tank	Subsurface Pumproom Nonconforming Existing	Barn Gutter	Animal Barn Pen	Animal Yard	Silo With Pit	Glass Lined Storage Facility	Silo w/o Pit	Earthen Silage Storage Trench Or Pit

Temporary Manure Stack	Watertight Liquid Manure Tank	Solid Manure Storage Structure	Subsurface Gasoline or Oil Tank	Waste Pond or Land Disposal Unit (Specify Type)	Other (Give Description)

5. Well is intended to supply water for: Home

DRILLHOLE

Dia. (in.)	From (ft.)	To (ft.)	Dia. (in.)	From (ft.)	To (ft.)
10	Surface	20			
	20	256			

7. CASING, LINER, CURBING AND SCREEN

Dia. (in.)	Material, Weight, Specification & Method of Assembly	From (ft.)	To (ft.)
6"	New Stand Blk Steel	Surface	244
7.45	# per ft T&C.		
	STMA 53 Sumitomo		
	Metal Ltd.		

8. GROUT OR OTHER SEALING MATERIAL

Kind	From (ft.)	To (ft.)
Drill Cuttings	Surface	20

9. FORMATIONS

Kind	From (ft.)	To (ft.)
Sand Gravel & Clay	Surface	20
Sand & Gravel	20	125
Sand	125	200
Sand & Gravel	200	215
Sand Rock	215	256

10. TYPE OF DRILLING MACHINE USED

☒ Cable Tool ☐ Rotary-air w/drilling mud ☐ Rotary-w/drilling mud ☐ Rotary-hammer w/drilling mud & air ☐ Rotary-hammer & air ☐ Reverse Rotary ☐ Jetting with ☐ Air ☐ Water

Well construction completed on Sept 16 1976

Well is terminated 10 inches ☒ above ☐ below final grade

Well disinfected upon completion ☒ Yes ☐ No

Well sealed watertight upon completion ☒ Yes ☐ No

11. MISCELLANEOUS DATA

Yield Test: 12 Hrs. at 20 GPM

Depth from surface to normal water level 110 Ft.

Depth of water level when pumping 115 Ft. Stabilized ☐ Yes ☒ No

Water sample sent to Madison laboratory on March 7 1977

opinion concerning other pollution hazards, information concerning difficulties encountered, and data relating to nearby wells, screens, seals, method of finishing the well, amount of cement used in grouting, blasting, etc., should be given on reverse side.

Signature: [illegible]

Complete Mail Address: [illegible]

35

WELL CONSTRUCTOR'S REPORT NOV 27 1974
FORM 3300-15

NOTE
WHITE COPY – DIVISION'S COPY
GREEN COPY – DRILLER'S COPY
YELLOW COPY – OWNER'S COPY

STATE OF WISCONSIN
DEPARTMENT OF NATURAL RESOURCES
Box 450
Madison, Wisconsin 53701

1. COUNTY: Sauk
CHECK ONE: [X] Town [ ] Village [ ] City
NAME: Prairie Du Sac

2. LOCATION – ¼ Section: SE 1/4 NW 1/4 | Section: 25 | Township: 10 N | Range: 6 E
OR – Grid or street no. | Street name
AND – If available subdivision name, lot & block no.: Windings Lot 5

3. OWNER AT TIME OF DRILLING: Jon Gruber
ADDRESS: 204 - 7th St.
POST OFFICE: Prairie Du Sac

4. Distance in feet from well to nearest: (Record answer in appropriate block)

BUILDING	SANITARY SEWER C. I.	SANITARY SEWER TILE	FLOOR DRAIN C. I.	FLOOR DRAIN TILE	FOUNDATION DRAIN SEWER CONNECTED	FOUNDATION DRAIN INDEPENDENT	WASTE WATER DRAIN C. I.	WASTE WATER DRAIN TILE
28 ft	35 ft		48 ft		none		45 ft	

CLEAR WATER DRAIN C. I.	CLEAR WATER DRAIN TILE	SEPTIC TANK	PRIVY	SEEPAGE PIT	ABSORPTION FIELD	BARN	SILO	ABANDONED WELL	SINK HOLE
40 ft		50 ft		75 ft					

OTHER POLLUTION SOURCES (Give description such as dump, quarry, drainage well, stream, pond, lake, etc.)

5. Well is intended to supply water for: Home

6. DRILLHOLE

Dia. (in.)	From (ft.)	To (ft.)	Dia. (in.)	From (ft.)	To (ft.)
10	Surface	20			
6	20	272			

7. CASING, LINER, CURBING, AND SCREEN

Dia. (in.)	Kind and Weight	From (ft.)	To (ft.)
6"	New Stand Bck Steel 19.18# per ft.	Surface	260

8. GROUT OR OTHER SEALING MATERIAL

Kind	From (ft.)	To (ft.)
Drill Cuttings	Surface	20

9. FORMATIONS

Kind	From (ft.)	To (ft.)
Coming Sand Gravel Clay	Surface	60
Sand & Clay	60	120
Sand	120	160
Sand Gravel	160	230
Sand Rock	230	272

10. TYPE OF DRILLING MACHINE USED
[X] Cable Tool [ ] Direct Rotary [ ] Reverse Rotary
[ ] Rotary – air w/drilling mud [ ] Rotary – hammer with drilling mud & air [ ] Jetting with [ ] Air [ ] Water

Well construction completed on July 17 1974

Well is terminated 10 inches [X] above [ ] below final grade

Well disinfected upon completion [X] Yes [ ] No

Well sealed watertight upon completion [X] Yes [ ] No

11. MISCELLANEOUS DATA
Yield test: 20 Hrs. at 25 GPM
Depth from surface to normal water level 110 ft.
Depth to water level when pumping 115 ft.

Water sample sent to Madison laboratory on: Sept 5 19

Your opinion concerning other pollution hazards, information concerning difficulties encountered, and data relating to nearby wells, screens, seals type of casing joints, method of finishing the well, amount of cement used in grouting, blasting, sub-surface pumprooms, access pits, etc., should be given on reverse side.

SIGNATURE: LeVerne Welsch Registered Well Driller
COMPLETE MAIL ADDRESS: 245 Park Ave Prairie Du Sac

Please do not write in space below

COLIFORM TEST RESULT	GAS – 24 HRS.	GAS – 48 HRS.	CONFIRMED	REMARKS

36

State of Wisconsin
Department of Natural Resources
Box 450
Madison, Wisconsin 53701

JAN 4 1978

NOTE:
White Copy - Division's Copy
Green Copy - Driller's Copy
Yellow Copy - Owner's Copy

DEC 14 1977

WELL CONSTRUCTOR'S REPORT
Form 3300-15
Rev. 10-75

COUNTY: Sauk
CHECK (✓) ONE: ☒ Town ☐ Village ☐ City
Name: Prairie Du Sac

1. LOCATION: ¼ Section SE¼ | Section SE¼ 25 | Township 10N | Range 6E
OR – Grid or Street No. | Street Name
AND – If available subdivision name, lot & block No.

3. NAME ☒ OWNER ☐ AGENT AT TIME OF DRILLING CHECK (✓) ONE
Maynard Schulz
ADDRESS: RR.
POST OFFICE: Prairie Du Sac, Wis

Distance in feet from well to nearest: (Record answer in appropriate block)	Building	Sanitary Bldg. Drain C.I.	Sanitary Bldg. Drain Other	Sanitary Bldg. Sewer C.I.	Sanitary Bldg. Sewer Other	Floor Drain Connected To: C.I. Sewer	Floor Drain Connected To: Other Sewer	Storm Bldg. Drain C.I.	Storm Bldg. Drain Other	Storm Bldg. Sewer C.I.	Storm Bldg. Sewer Other
	6ft	40ft		30ft		25ft					

Street Sewer San.	Street Sewer Storm	Other Sewers C.I.	Other Sewers Other	Foundation Drain Connected to: Sewer / Clearwater Dr.	Sewage Sump / Clearwater Sump	Sewage Sump C.I.	Sewage Sump Other	Clearwater Sump	Septic Tank	Holding Tank	Sewage Absorption Unit: Seepage Pit / Seepage Bed / Seepage Trench
									50ft		75 ft

Privy	Pet Waste Pit	Pit: Nonconforming Existing: Well / Pump / Tank	Subsurface Pumproom Nonconforming Existing	Barn Gutter	Animal Barn Pen	Animal Yard	Silo With Pit	Glass Lined Storage Facility	Silo w/o Pit	Earthen Silage Storage Trench Or Pit

Temporary Manure Stack	Watertight Liquid Manure Tank	Solid Manure Storage Structure	Subsurface Gasoline or Oil Tank	Waste Pond or Land Disposal Unit (Specify Type)	Other (Give Description)

5. Well is intended to supply water for: Home

DRILLHOLE

Dia. (in.)	From (ft.)	To (ft.)	Dia. (in.)	From (ft.)	To (ft.)
10	Surface	20			
	20	256			

7. CASING, LINER, CURBING AND SCREEN

Dia. (in.)	Material, Weight, Specification & Method of Assembly	From (ft.)	To (ft.)
6"	New Stand Blk	Surface	238
Steel	T&C. 19.45# per ft.		
1st MA 53.	Sumitomo Metal Ltd		

8. GROUT OR OTHER SEALING MATERIAL

Kind	From (ft.)	To (ft.)
Drill Cuttings	Surface	20

9. FORMATIONS

Kind	From (ft.)	To (ft.)
Sand + Gravel	Surface	75
Sand	75	200
Sand Rock	200	256

10. TYPE OF DRILLING MACHINE USED

☒ Cable Tool ☐ Rotary-air w/drilling mud ☐ Rotary-w/drilling mud ☐ Rotary-hammer w/drilling mud & air ☐ Rotary-hammer & air ☐ Reverse Rotary ☐ Jetting with ☐ Air ☐ Water

Well construction completed on May 12 1977

Well is terminated 10 inches ☒ above ☐ below final grade

Well disinfected upon completion ☒ Yes ☐ No

Well sealed watertight upon completion ☒ Yes ☐ No

11. MISCELLANEOUS DATA

Yield Test: 15 Hrs. at 25 GPM

Depth from surface to normal water level 100 Ft.

Depth of water level when pumping 100 Ft. Stabilized ☒ Yes ☐ No

Water sample sent to Madison laboratory on Apr. 4 1977

[illegible] opinion concerning other pollution hazards, information concerning difficulties encountered, and data relating to nearby wells, screens, seals, method of [illegible]ing the well, amount of cement used in grouting, blasting, etc., should be given on reverse side.

Signature: [illegible] Registered Well Driller

Complete Mail Address: 245 [illegible] Prairie Du Sac

37

STATE OF WISCONSIN

WELL CONSTRUCTOR'S REPORT — DEPARTMENT OF RESOURCE DEVELOPMENT

1. COUNTY: Sauk — CHECK ONE: ☒ Town ☐ Village ☐ City — NAME: Prairie du Sac

2. LOCATION (Number and Street or ¼ section, section, township and range. Also give subdivision name, lot and block numbers when available.)
NW1/4 Sec 25 T10N R6E

3. OWNER AT TIME OF DRILLING: Ted Meyer

4. OWNER'S COMPLETE MAIL ADDRESS: 434 S Washington Ave Edgerton, Wis

5. Distance in feet from well to nearest: (Record answer in appropriate block)

BUILDING	SANITARY SEWER C. I.	SANITARY SEWER TILE	FLOOR DRAIN C. I.	FLOOR DRAIN TILE	FOUNDATION DRAIN SEWER CONNECTED	FOUNDATION DRAIN INDEPENDENT	WASTE WATER DRA C. I.	WASTE WATER DRA TILE
50 ft	75 ft		70 ft		none		70 ft	

CLEAR WATER DRAIN C. I.	CLEAR WATER DRAIN TILE	SEPTIC TANK	PRIVY	SEEPAGE PIT	ABSORPTION FIELD	BARN	SILO	ABANDONED WELL	SINK HOLE
60 ft		60		75					

OTHER POLLUTION SOURCES (Give description such as dump, quarry, drainage well, stream, pond, lake, etc.)

6. Well is intended to supply water for: Home

7. DRILLHOLE

Dia. (in.)	From (ft.)	To (ft.)	Dia. (in.)	From (ft.)	To (ft.)
6	Surface	265			

8. CASING, LINER, CURBING, AND SCREEN

Dia. (in.)	Kind and Weight	From (ft.)	To (ft.)
6"	New Stand Bell Steel J-C 19.45 #/ft	Surface	253

9. GROUT OR OTHER SEALING MATERIAL

Kind	From (ft.)	To (ft.)
	Surface	

10. FORMATIONS

Kind	From (ft.)	To (ft.)
Sand Gravel	Surface	50
Sand	50	125
Sand & Gravel	125	200
Sand Rock	200	265

SEP 25 1969

11. MISCELLANEOUS DATA
Yield test: 15 Hrs. at 15 GPM
Depth from surface to normal water level 95 ft.
Depth to water level when pumping 95 ft.

Well construction completed on June 16 19 69
Well is terminated 12 inches ☒ above ☐ below final grade
Well disinfected upon completion ☒ Yes ☐ No
Well sealed watertight upon completion ☒ Yes ☐ No

Water sample sent to Madison laboratory on: June 17 19 69

Your opinion concerning other pollution hazards, information concerning difficulties encountered, and data relating to near wells, screens, seals, type of casing joints, method of finishing the well, amount of cement used in grouting, blasting, surface pumprooms, access pits, etc., should be given on reverse side.

SIGNATURE: LaVerne Welsch — Registered Well Driller — COMPLETE MAIL ADDRESS: 245 Park Ave Prairie du Sac

Please do not write in space below

COLIFORM TEST RESULT	GAS — 24 HRS.	GAS — 48 HRS.	CONFIRMED	REMARKS

JAN 3 0 1978

38

State of Wisconsin
Department of Natural Resources
Box 450
Madison, Wisconsin 53701

NOTE:
White Copy – Division's Copy
Green Copy – Driller's Copy
Yellow Copy – Owner's Copy

WELL CONSTRUCTOR'S REPORT
Form 3300-15
Rev. 10-75

COUNTY: Sauk
CHECK (✓) ONE: ☒ Town ☐ Village ☐ City
Name: Prairie Du Sac

1. LOCATION: ¼ Section NE¼ SE¼ | Section 25 | Township 10N | Range 6E
OR – Grid or Street No. | Street Name
AND – If available subdivision name, lot & block No.

3. NAME ☒ OWNER ☐ AGENT AT TIME OF DRILLING CHECK (✓) ONE: Ray Onstine
ADDRESS: RR Prairie Du Sac, Wis
POST OFFICE

4. Distance in feet from well to nearest: (Record answer in appropriate block)

Building	Sanitary Bldg. Drain C.I.	Sanitary Bldg. Drain Other	Sanitary Bldg. Sewer C.I.	Sanitary Bldg. Sewer Other	Floor Drain Connected To: C.I. Sewer	Floor Drain Connected To: Other Sewer	Storm Bldg. Drain C.I.	Storm Bldg. Drain Other	Storm Bldg. Sewer C.I.	Storm Bldg. Sewer Other
6 ft	30 ft		35 ft		none					

Street Sewer San.	Street Sewer Storm	Other Sewers C.I.	Other Sewers Other	Foundation Drain Connected to: Sewer / Clearwater Dr.	Sewage Sump / Clearwater Sump	Sewage Sump C.I.	Sewage Sump Other	Clearwater Sump	Septic Tank	Holding Tank	Sewage Absorption Unit: Seepage Pit / Seepage Bed / Seepage Trench
									50 ft		75 ft

Privy	Pet Waste Pit	Pit: Nonconforming Existing: Well / Pump / Tank	Subsurface Pumproom Nonconforming Existing	Barn Gutter	Animal Barn Pen	Animal Yard	Silo With Pit	Glass Lined Storage Facility	Silo w/o Pit	Earthen Silage Storage Trench Or Pit

Temporary Manure Stack	Watertight Liquid Manure Tank	Solid Manure Storage Structure	Subsurface Gasoline or Oil Tank	Waste Pond or Land Disposal Unit (Specify Type)	Other (Give Description)

5. Well is intended to supply water for: Home

6. DRILLHOLE

Dia. (in.)	From (ft.)	To (ft.)	Dia. (in.)	From (ft.)	To (ft.)
18	Surface	20			
	20	248			

7. CASING, LINER, CURBING AND SCREEN

Dia. (in.)	Material, Weight, Specification & Method of Assembly	From (ft.)	To (ft.)
6"	New Stand Bel Steel	Surface	233
	19.45# per ft. T&C.		
	ASTM A53		
	Sumitomo Metals Ltd		

8. GROUT OR OTHER SEALING MATERIAL

Kind	From (ft.)	To (ft.)
Drill Cuttings	Surface	20

9. FORMATIONS

Kind	From (ft.)	To (ft.)
Topsoil	Surface	3
Sand	3	75
Sand & Gravel	75	210
Sand Rock	210	248

10. TYPE OF DRILLING MACHINE USED

☒ Cable Tool ☐ Rotary-air w/drilling mud ☐ Rotary-w/drilling mud ☐ Rotary-hammer w/drilling mud & air ☐ Rotary-hammer & air ☐ Reverse Rotary ☐ Jetting with ☐ Air ☐ Water

Well construction completed on Aug 11 1977

Well is terminated 10 inches ☒ above ☐ below final grade

Well disinfected upon completion ☒ Yes ☐ No

Well sealed watertight upon completion ☒ Yes ☐ No

11. MISCELLANEOUS DATA

Yield Test: 15 Hrs. at 20 GPM

Depth from surface to normal water level 110 Ft.

Depth of water level when pumping 110 Ft. Stabilized ☒ Yes ☐ No

Water sample sent to Madison laboratory on Aug 12 1977

Opinion concerning other pollution hazards, information concerning difficulties encountered, and data relating to nearby wells, screens, seals, method of finishing the well, amount of cement used in grouting, blasting, etc., should be given on reverse side.

Signature: [illegible]

Complete Mail Address: [illegible]

State of Wisconsin
Department of Natural Resources
Box 7921
Madison, Wisconsin 53707

NOTE:
White Copy — Division's Copy
Green Copy — Driller's Copy
Yellow Copy — Owner's Copy

WELL CONSTRUCTOR'S REPC 39
Form 3300-15 Rev. 1
1982

1. COUNTY: Sauk
CHECK (✓) ONE: ☒ Town ☐ Village ☐ City
Name: Prairie Du Sac

2. LOCATION: Section: Govt Lots 2 Section: No. 25 Township: 10 Range: 6E
OR – Grid or Street No. Street Name
AND – If available subdivision name, lot & block No.: Windings

3. NAME ☒ OWNER ☐ AGENT AT TIME OF DRILLING CHECK (✓) ONE: Roger Howard
ADDRESS: RR.
POST OFFICE: Prairie Du Sac, Wis

4. Distance in feet from well to nearest: (Record answer in appropriate block)

Building	Sanitary Bldg. Drain C.I.	Sanitary Bldg. Drain Other	Sanitary Bldg. Sewer C.I.	Sanitary Bldg. Sewer Other	Floor Drain Connected To: C.I. Sewer	Floor Drain Connected To: Other Sewer	Storm Bldg. Drain C.I.	Storm Bldg. Drain Other	Storm Bldg. Sew C.I.	Storm Bldg. Sew Other
30 ft	50 ft		54 ft		60 ft					

Street Sewer San.	Street Sewer Storm	Other Sewers C.I.	Other Sewers Other	Foundation Drain Connected to: Sewer / Clearwater Dr.	Sewage Sump / Clearwater Sump	Sewage Sump C.I.	Sewage Sump Other	Clearwater Sump	Septic Tank	Holding Tank	Sewage Absorption Unit: Seepage Pit / Seepage Bed / Seepage Trench
									100'		125'

Privy	Pet Waste Pit	Pit: Nonconforming Existing: Well / Pump / Tank	Subsurface Pumproom Nonconforming Existing	Barn Gutter	Animal Barn Pen	Animal Yard	Silo With Pit	Glass Lined Storage Facility	Silo w/o Pit	Earthen Silage Storage Trench Or Pit

Temporary Manure Stack	Watertight Liquid Manure Tank	Solid Manure Storage Structure	Subsurface Gasoline or Oil Tank	Waste Pond or Land Disposal Unit (Specify Type)	Other (Give Description)

5. Well is intended to supply water for: Home

6. DRILLHOLE

Dia. (in.)	From (ft.)	To (ft.)	Dia. (in.)	From (ft.)	To (ft.)
10	Surface	15			
6	15	275			

7. CASING, LINER, CURBING AND SCREEN

Dia. (in.)	Material, Weight, Specification & Method of Assembly	From (ft.)	To (ft.)
6"	New Stand Pipe Steel	Surface	264
19.45# per ft T & C.			
Sumitomo Metals			
	ASTMA 53		

8. GROUT OR OTHER SEALING MATERIAL

Kind	From (ft.)	To (ft.)
Drill Cuttings	Surface	15

9. FORMATIONS

Kind	From (ft.)	To (ft.)
Sand Gravel Clay	Surface	30
Sand & Gravel	30	125
Sand	125	225
Sand Rock	225	275

* See 4-22-82 letter in W.D. file

10. TYPE OF DRILLING MACHINE USED
☒ Cable Tool ☐ Rotary-air w/drilling mud ☐ Rotary-w/drilling mud ☐ Rotary-hammer w/drilling mud & air ☐ Rotary-hammer & air ☐ Reverse Rotary ☐ Jetting with ☐ Air ☐ Water

Well construction completed on April 29 1980

11. MISCELLANEOUS DATA
Yield Test: 12 Hrs. at 20 GPM
Depth from surface to normal water level 110 Ft.
Depth of water level when pumping 110 Ft. Stabilized ☒ Yes ☐ No

Well is terminated 10 inches ☒ above ☐ below final grade
Well disinfected upon completion ☒ Yes ☐ No
Well sealed watertight upon completion ☒ Yes ☐ No

Water sample sent to Madison laboratory on April 30 1980

Your opinion concerning other pollution hazards, information concerning difficulties encountered, and data relating to nearby wells, screens, seals, method of finishing the well, amount of cement used in grouting, blasting, etc., should be given on reverse side.

Signature: LaVerne Welsh Registered Well Driller
Complete Mail Address: 205 Park Ave Prairie Du Sac

JAN 3 0 1978

40

State of Wisconsin
Department of Natural Resources
Box 450
Madison, Wisconsin 53701

NOTE:
White Copy – Division's Copy
Green Copy – Driller's Copy
Yellow Copy – Owner's Copy

WELL CONSTRUCTOR'S REP(
Form 3300-15
Rev. 10-75

UNTY: Sauk

CHECK (✓) ONE: ☒ Town ☐ Village ☐ City Name: Prairie Du Sac

1. LOCATION: N1/2, N1/2 | ¼ Section: NW¼ NW¼ | Section: 25 | Township: 10N | Range: 6E

OR – Grid or Street No. | Street Name

AND – If available subdivision name, lot & block No.: Wendings

3. NAME ☒ OWNER ☐ AGENT AT TIME OF DRILLING CHECK (✓) ONE: Fred Kamps

ADDRESS

POST OFFICE: Sauk City, Wis

4. Distance in feet from well to nearest: (Record answer in appropriate block)

Building	Sanitary Bldg. Drain C.I.	Sanitary Bldg. Drain Other	Sanitary Bldg. Sewer C.I.	Sanitary Bldg. Sewer Other	Floor Drain Connected To: C.I. Sewer	Floor Drain Connected To: Other Sewer	Storm Bldg. Drain C.I.	Storm Bldg. Drain Other	Storm Bldg. Sewer C.I.	Storm Bldg. Sewer Other
10 ft	48 ft		55 ft		40 ft					

Street Sewer San.	Street Sewer Storm	Other Sewers C.I.	Other Sewers Other	Foundation Drain Connected to: Sewer / Clearwater Dr.	Sewage Sump / Clearwater Sump	Sewage Sump C.I.	Sewage Sump Other	Clearwater Sump	Septic Tank	Holding Tank	Sewage Absorption Unit: Seepage Pit / Seepage Bed / Seepage Trench
									60 ft		75 ft

Privy	Pet Waste Pit	Pit: Nonconforming Existing: Well / Pump / Tank	Subsurface Pumproom Nonconforming Existing	Barn Gutter	Animal Barn Pen	Animal Yard	Silo With Pit	Glass Lined Storage Facility	Silo w/o Pit	Earthen Silage Storage Trench Or Pit

Temporary Manure Stack	Watertight Liquid Manure Tank	Solid Manure Storage Structure	Subsurface Gasoline or Oil Tank	Waste Pond or Land Disposal Unit (Specify Type)	Other (Give Description)

5. Well is intended to supply water for: Home

DRILLHOLE

Dia. (in.)	From (ft.)	To (ft.)	Dia. (in.)	From (ft.)	To (ft.)
10	Surface	20			
	20	267			

7. CASING, LINER, CURBING AND SCREEN

Dia. (in.)	Material, Weight, Specification & Method of Assembly	From (ft.)	To (ft.)
6"	New Stand Bed Steel	Surface	256
	9.45# per ft T&C		
	ASTM A53		
	Sumitoma Metal Ltd		

8. GROUT OR OTHER SEALING MATERIAL

Kind	From (ft.)	To (ft.)
Drill Cuttings	Surface	20

9. FORMATIONS

Kind	From (ft.)	To (ft.)
Topsoil	Surface	6
Sand Gravel	6	75
Sand & Clay	75	125
Sand	125	225
Sand Rock	225	267

10. TYPE OF DRILLING MACHINE USED

☒ Cable Tool ☐ Rotary-air w/drilling mud ☐ Rotary-w/drilling mud ☐ Rotary-hammer w/drilling mud & air ☐ Rotary-hammer & air ☐ Reverse Rotary ☐ Jetting with ☐ Air ☐ Water

Well construction completed on Aug 18 1977

Well is terminated 10 inches ☒ above ☐ below final grade

Well disinfected upon completion ☒ Yes ☐ No

Well sealed watertight upon completion ☒ Yes ☐ No

11. MISCELLANEOUS DATA

Yield Test: 15 Hrs. at 25 GPM

Depth from surface to normal water level 100 Ft.

Depth of water level when pumping 110 Ft. Stabilized ☒ Yes ☐ No

Water sample sent to Madison laboratory on Aug 19 1977

opinion concerning other pollution hazards, information concerning difficulties encountered, and data relating to nearby wells, screens, seals, method of finishing the well, amount of cement used in grouting, blasting, etc., should be given on reverse side.

gnature: [illegible] Well Driller

Complete Mail Address: [illegible]

WELL CONSTRUCTOR'S REPORT
FORM 3300-15

NOV 2 1 1975

41

STATE OF WISCONSI
DEPARTMENT OF NATURAL R
Box 450
Madison, Wisconsin 53701

NOTE
WHITE COPY - DIVISION'S COPY
GREEN COPY - DRILLER'S COPY
YELLOW COPY - OWNER'S COPY

1. COUNTY: Sauk
CHECK ONE: [X] Town [ ] Village [ ] City
NAME: Prairie Du Sac

2. LOCATION – ¼ Section: NE¼ SW¼ Section: 25 Township: 10N Range: 6E
OR – Grid or street no.: [illegible]
Street name:
AND – If available subdivision name, lot & block no.: Kahl's Add Winding Lot 2

3. OWNER AT TIME OF DRILLING: Doug Volker
ADDRESS: RFD
POST OFFICE: Prairie Du Sac

4. Distance in feet from well to nearest: (Record answer in appropriate block)

BUILDING	SANITARY SEWER C. I.	SANITARY SEWER TILE	FLOOR DRAIN C. I.	FLOOR DRAIN TILE	FOUNDATION DRAIN SEWER CONNECTED	FOUNDATION DRAIN INDEPENDENT	WASTE WATER DRAIN C. I.	WASTE WATER DRAIN TILE
10 ft	25 ft		30 ft		none		25 ft	

CLEAR WATER DRAIN C. I.	CLEAR WATER DRAIN TILE	SEPTIC TANK	PRIVY	SEEPAGE PIT	ABSORPTION FIELD	BARN	SILO	ABANDONED WELL	SINK HOLE
40 ft		50 ft		75 ft					

OTHER POLLUTION SOURCES (Give description such as dump, quarry, drainage well, stream, pond, lake, etc.)

5. Well is intended to supply water for: Home

6. DRILLHOLE

Dia. (in.)	From (ft.)	To (ft.)	Dia. (in.)	From (ft.)	To (ft.)
10	Surface	15			
6	15	258			

7. CASING, LINER, CURBING, AND SCREEN

Dia. (in.)	Kind and Weight	From (ft.)	To (ft.)
6"	New Stand Bek Steel 19.18# per ft T&C	Surface	248

8. GROUT OR OTHER SEALING MATERIAL

Kind	From (ft.)	To (ft.)
Drill Cuttings	Surface	15

9. FORMATIONS

Kind	From (ft.)	To (ft.)
Topsoil	Surface	5
Sand Gravel Clay	5	15
Sand	15	85
Sand & Gravel	85	175
Sand Rock	175	25[illegible]

10. TYPE OF DRILLING MACHINE USED
[X] Cable Tool [ ] Direct Rotary [ ] Reverse Rotary
[ ] Rotary – air w/drilling mud [ ] Rotary – hammer with drilling mud & air [ ] Jetting with [ ] Air [ ] Wa

Well construction completed on April 8 1975

Well is terminated 8 inches [X] above [ ] below final gr

Well disinfected upon completion [X] Yes [ ] No

Well sealed watertight upon completion [X] Yes [ ] Jc

11. MISCELLANEOUS DATA
Yield test: 15 Hrs. at 25 GPM
Depth from surface to normal water level 88 ft.
Depth to water level when pumping 88 ft.

Water sample sent to Madison laboratory on: April 9 1975

Your opinion concerning other pollution hazards, information concerning difficulties encountered, and data relating to nearby wells, screens, s s, type of casing joints, method of finishing the well, amount of cement used in grouting, blasting, sub-surface pumprooms, access pits, etc., should be given on reverse side.

SIGNATURE: LaVerne Welsch Registered Well Driller
COMPLETE MAIL ADDRESS: 245 Park Ave Prairie Du Sac

Please do not write in space below

COLIFORM TEST RESULT	GAS – 24 HRS.	GAS – 48 HRS.	CONFIRMED	REMARKS

42

WELL CONSTRUCTOR'S REPORT

FORM 3300-15

APR 1 4 1978

NOTE
WHITE COPY - DIVISION'S COPY
GREEN COPY - DRILLER'S COPY
YELLOW COPY - OWNER'S COPY

STATE OF WISCONSIN
DEPARTMENT OF NATURAL RESOURCES
Box 450
Madison, Wisconsin 53701

COUNTY: Sauk

CHECK ONE: ☒ Town ☐ Village ☐ City

NAME: Prairie Du Sac

LOCATION – ¼ Section: NW¼ | Section: 25 | Township: T10N | Range: R6E

OR – Grid or street no.: | Street name:

SUBD – If available subdivision name, lot & block no.:

3. OWNER AT TIME OF DRILLING: Bill Castle

ADDRESS: RT

POST OFFICE: Prairie Du Sac

4. Distance in feet from well to nearest: (Record answer in appropriate block)

BUILDING	SANITARY SEWER C. I.	SANITARY SEWER TILE	FLOOR DRAIN C. I.	FLOOR DRAIN TILE	FOUNDATION DRAIN SEWER CONNECTED	FOUNDATION DRAIN INDEPENDENT	WASTE WATER DRAIN C. I.	WASTE WATER DRAIN TILE
30	45	—	—	—	—	—	—	—

CLEAR WATER DRAIN C. I.	CLEAR WATER DRAIN TILE	SEPTIC TANK	PRIVY	SEEPAGE PIT	ABSORPTION FIELD	BARN	SILO	ABANDONED WELL	SINK HOLE
—	—	48	—	—	58	—	—	—	—

OTHER POLLUTION SOURCES (Give description such as dump, quarry, drainage well, stream, pond, lake, etc.): none

Well is intended to supply water for: House

6. DRILLHOLE

Dia. (in.)	From (ft.)	To (ft.)	Dia. (in.)	From (ft.)	To (ft.)
10	Surface	20	6	20	263

9. FORMATIONS

Kind	From (ft.)	To (ft.)
sand + gravel	Surface	237
sandstone	237	263

7. CASING, LINER, CURBING, AND SCREEN

Dia. (in.)	Kind and Weight	From (ft.)	To (ft.)
6	19.45 lbs. USS A53 galvanized	Surface	239

GROUT OR OTHER SEALING MATERIAL

Kind	From (ft.)	To (ft.)
clay slurry	Surface	20

10. TYPE OF DRILLING MACHINE USED

☒ Cable Tool ☐ Direct Rotary ☐ Reverse Rotary
☐ Rotary – air w/drilling mud ☐ Rotary – hammer with drilling mud & air ☐ Jetting with ☐ Air ☐ Water

Well construction completed on: 10-3 19 76

MISCELLANEOUS DATA

Yield test: 48 Hrs. at 15 GPM

Well is terminated 9 inches ☒ above ☐ below final grade

Depth from surface to normal water level: 78 ft.

Well disinfected upon completion ☒ Yes ☐ No

Depth to water level when pumping: 84 ft.

Well sealed watertight upon completion ☒ Yes ☐ No

Water sample sent to State Lab. of Hygiene laboratory on: 3-29 1977

Your opinion concerning other pollution hazards, information concerning difficulties encountered, and data relating to nearby wells, screens, seals, type of casing joints, method of finishing the well, amount of cement used in grouting, blasting, sub-surface pumprooms, access pits, etc., should be given on reverse side.

SIGNATURE: Doug Prem Registered Well Driller

COMPLETE MAIL ADDRESS: Rt. Spring Green, Wis.

Please do not write in space below

COLIFORM TEST RESULT	GAS – 24 HRS.	GAS – 48 HRS.	CONFIRMED	REMARKS

WELL CONSTRUCTOR'S REPORT
FORM 3300-15

DEC 16 1974

43

STATE OF WISCO
DEPARTMENT OF NATURAL
Box 450
Madison, Wisconsin 53701

NOTE
WHITE COPY – DIVISION'S COPY
GREEN COPY – DRILLER'S COPY
YELLOW COPY – OWNER'S COPY

1. COUNTY: Sauk
CHECK ONE: ☒ Town ☐ Village ☐ City
NAME: Prairie Du Sac

2. LOCATION – ¼ Section: SE 1/4 | Section: 25 | Township: 10N | Range: 6E
OR – Grid or street no. | Street name:
AND – If available subdivision name, lot & block no.: Wisconsin

3. OWNER AT TIME OF DRILLING: Larry Boelke
ADDRESS:
POST OFFICE: Sauk City, Wis

4. Distance in feet from well to nearest: (Record answer in appropriate block)

BUILDING	SANITARY SEWER C. I.	SANITARY SEWER TILE	FLOOR DRAIN C. I.	FLOOR DRAIN TILE	FOUNDATION DRAIN / SEWER CONNECTED	FOUNDATION DRAIN / INDEPENDENT	WASTE WATER DRAIN C. I.	WASTE WATER DRAIN TILE
8 ft	20 ft		25 ft		none		20 ft	

CLEAR WATER DRAIN C. I.	CLEAR WATER DRAIN TILE	SEPTIC TANK	PRIVY	SEEPAGE PIT	ABSORPTION FIELD	BARN	SILO	ABANDONED WELL	SINK HOLE
18 ft		75 ft		100 ft					

OTHER POLLUTION SOURCES (Give description such as dump, quarry, drainage well, stream, pond, lake, etc.)

5. Well is intended to supply water for: Home

6. DRILLHOLE

Dia. (in.)	From (ft.)	To (ft.)	Dia. (in.)	From (ft.)	To (ft.)
10	Surface	20			Caving Sand Gravel & Clay
6	20	263			

7. CASING, LINER, CURBING, AND SCREEN

Dia. (in.)	Kind and Weight	From (ft.)	To (ft.)
6"	New Steel Blk Steel	Surface	256
	19.18 # per ft		

9. FORMATIONS

Kind	From (ft.)	To (ft.)
Sand Gravel & Clay	Surface	40
Sand & Gravel	40	110
Sand & Clay	110	160
Sand	160	225
Sand Rock	225	263

8. GROUT OR OTHER SEALING MATERIAL

Kind	From (ft.)	To (ft.)
Drill Cuttings	Surface	20

10. TYPE OF DRILLING MACHINE USED
☒ Cable Tool ☐ Direct Rotary ☐ Reverse Rotary
☐ Rotary – air w/drilling mud ☐ Rotary – hammer with drilling mud & air ☐ Jetting with ☐ Air ☐ Wa

Well construction completed on: Oct 1 1974

11. MISCELLANEOUS DATA
Yield test: 18 Hrs. at 25 GPM
Depth from surface to normal water level: 105 ft.
Depth to water level when pumping: 105 ft.

Well is terminated: 10 inches ☒ above ☐ below final gra
Well disinfected upon completion: ☒ Yes ☐ No
Well sealed watertight upon completion: ☒ Yes ☐ .Jc

Water sample sent to: Madison laboratory on: Oct 3 197

Your opinion concerning other pollution hazards, information concerning difficulties encountered, and data relating to nearby wells, screens, seals type of casing joints, method of finishing the well, amount of cement used in grouting, blasting, sub-surface pumprooms, access pits, etc., should be given on reverse side.

SIGNATURE: LaVerne Helsch Registered Well Driller
COMPLETE MAIL ADDRESS: 245 Park Ave Prairie Du Sac

Please do not write in space below

COLIFORM TEST RESULT	GAS – 24 HRS.	GAS – 48 HRS.	CONFIRMED	REMARKS

44

WELL CONSTRUCTOR'S REPORT
FORM 3300-15

NOTE
WHITE COPY – DIVISION'S COPY
GREEN COPY – DRILLER'S COPY
YELLOW COPY – OWNER'S COPY

DEC 16 1974

STATE OF WISCONSIN
DEPARTMENT OF NATURAL RESOURCES
Box 450
Madison, Wisconsin 53701

COUNTY: Sauk	CHECK ONE: [X] Town [ ] Village [ ] City — NAME: Prairie Du Sac
LOCATION: SE 1/4 — 1/4 Section: NW 1/4 — Section: 25 — Township: 10N — Range: 6E	3. OWNER AT TIME OF DRILLING: Robert G. Conger
OR – Grid or street no. — Street name	ADDRESS: Rte 2
D – If available subdivision name, lot & block no.: Windings Lot 4	POST OFFICE: Lodi Wis

4. Distance in feet from well to nearest: (Record answer in appropriate block)

BUILDING	SANITARY SEWER C.I.	SANITARY SEWER TILE	FLOOR DRAIN C.I.	FLOOR DRAIN TILE	FOUNDATION DRAIN SEWER CONNECTED	FOUNDATION DRAIN INDEPENDENT	WASTE WATER DRAIN C.I.	WASTE WATER DRAIN TILE
18 ft	30 ft		28 ft		none		23 ft	

CLEAR WATER DRAIN C.I.	CLEAR WATER DRAIN TILE	SEPTIC TANK	PRIVY	SEEPAGE PIT	ABSORPTION FIELD	BARN	SILO	ABANDONED WELL	SINK HOLE
25 ft		75 ft		100 ft					

OTHER POLLUTION SOURCES (Give description such as dump, quarry, drainage well, stream, pond, lake, etc.)

Well is intended to supply water for: Home

6. DRILLHOLE

Dia. (in.)	From (ft.)	To (ft.)	Dia. (in.)	From (ft.)	To (ft.)
10	Surface	20			
6	20	280			

7. CASING, LINER, CURBING, AND SCREEN

Dia. (in.)	Kind and Weight	From (ft.)	To (ft.)
	New Stand Blk Steel 19.18# per ft	Surface	272

9. FORMATIONS

Kind	From (ft.)	To (ft.)
Caving Sand Gravel Clay	Surface	85
Clay + Sand	85	125
Sand	125	250
Sand Rock	250	280

GROUT OR OTHER SEALING MATERIAL

Kind	From (ft.)	To (ft.)
Drill Cuttings	Surface	20

10. TYPE OF DRILLING MACHINE USED

[X] Cable Tool [ ] Direct Rotary [ ] Reverse Rotary
[ ] Rotary – air w/drilling mud [ ] Rotary – hammer with drilling mud & air [ ] Jetting with [ ] Air [ ] Water

Well construction completed on Feb 28 1974

Well is terminated 8 inches [X] above [ ] below final grade

Well disinfected upon completion [X] Yes [ ] No

Well sealed watertight upon completion [X] Yes [ ] No

MISCELLANEOUS DATA

Yield test: 18 Hrs. at 25 GPM

Depth from surface to normal water level 115 ft.

Depth to water level when pumping 125 ft.

Water sample sent to Madison laboratory on: Mar 27 1974

Your opinion concerning other pollution hazards, information concerning difficulties encountered, and data relating to nearby wells, screens, seals type of casing joints, method of finishing the well, amount of cement used in grouting, blasting, sub-surface pumprooms, access pits, etc., should be given on reverse side.

SIGNATURE	COMPLETE MAIL ADDRESS
Verne Welsch Registered Well Driller	245 Park Ave Prairie Du Sac

Please do not write in space below

COLIFORM TEST RESULT	GAS – 24 HRS.	GAS – 48 HRS.	CONFIRMED	REMARKS

45

DEC 05 1973

WELL CONSTRUCTOR'S REPORT
FORM 3300-15

DEC 11 1973

NOTE
WHITE COPY – DIVISION'S COPY
GREEN COPY – DRILLER'S COPY
YELLOW COPY – OWNER'S COPY

STATE OF WISCONSIN
DEPARTMENT OF NATURAL RESOURCES
Box 450
Madison, Wisconsin 53701

1. COUNTY: Sauk

CHECK ONE: [X] Town [ ] Village [ ] City

NAME: Prairie Du Sac

2. LOCATION: SE 1/4 | ¼ Section: NW 1/4 | Section: 25 | Township: 10N | Range: 6E

OR – Grid or street no. | Street name

AND – If available subdivision name, lot & block no.: The Windings Lot 24

3. OWNER AT TIME OF DRILLING: Jerome Ernst

ADDRESS: 193 Interlaken Rd.

POST OFFICE: Fairmont, Minn.

4. Distance in feet from well to nearest: (Record answer in appropriate block)

BUILDING	SANITARY SEWER C. I.	SANITARY SEWER TILE	FLOOR DRAIN C. I.	FLOOR DRAIN TILE	FOUNDATION DRAIN SEWER CONNECTED	FOUNDATION DRAIN INDEPENDENT	WASTE WATER DRAIN C. I.	WASTE WATER DRAIN TILE
7 ft	30 ft		35 ft		none		25 ft	

CLEAR WATER DRAIN C. I.	CLEAR WATER DRAIN TILE	SEPTIC TANK	PRIVY	SEEPAGE PIT	ABSORPTION FIELD	BARN	SILO	ABANDONED WELL	SINK HOLE
20 ft		40		75					

OTHER POLLUTION SOURCES (Give description such as dump, quarry, drainage well, stream, pond, lake, etc.)

5. Well is intended to supply water for: Home

6. DRILLHOLE

Dia. (in.)	From (ft.)	To (ft.)	Dia. (in.)	From (ft.)	To (ft.)
10	Surface	10			
6	10	270			

7. CASING, LINER, CURBING, AND SCREEN

Dia. (in.)	Kind and Weight	From (ft.)	To (ft.)
6"	New Stand	Surface	260
	Bek Steel		

8. GROUT OR OTHER SEALING MATERIAL

Kind	From (ft.)	To (ft.)
Drill Cuttings	Surface	10

9. FORMATIONS

Kind	From (ft.)	To (ft.)
Sand & Clay	Surface	15
Caving Sand Gravel & Clay	15	60
Sand	60	125
Sand & Gravel Clay	125	245
Sand Rock	245	270

10. TYPE OF DRILLING MACHINE USED

[X] Cable Tool [ ] Direct Rotary [ ] Reverse Rotary
[ ] Rotary – air w/drilling mud [ ] Rotary – hammer with drilling mud & air [ ] Jetting with [ ] Air [ ] Water

Well construction completed on Nov 29 1973

Well is terminated 10 inches [X] above [ ] below final grade

Well disinfected upon completion [X] Yes [ ] No

Well sealed watertight upon completion [X] Yes [ ] No

11. MISCELLANEOUS DATA

Yield test: 15 Hrs. at 20 GPM

Depth from surface to normal water level 112 ft.

Depth to water level when pumping 125 ft.

Water sample sent to Madison laboratory on: Nov 30 1973

Your opinion concerning other pollution hazards, information concerning difficulties encountered, and data relating to nearby wells, screens, seals type of casing joints, method of finishing the well, amount of cement used in grouting, blasting, sub-surface pumprooms, access pits, etc., should be given on reverse side.

SIGNATURE: LaVerne Welsch Registered Well Driller

COMPLETE MAIL ADDRESS: 245 Park Ave Prairie Du Sac

Please do not write in space below

COLIFORM TEST RESULT	GAS – 24 HRS.	GAS – 48 HRS.	CONFIRMED	REMARKS

46

DEC 16 1974

ELL CONSTRUCTOR'S REPORT
FORM 3300-15

NOTE
WHITE COPY – DIVISION'S COPY
GREEN COPY – DRILLER'S COPY
YELLOW COPY – OWNER'S COPY

STATE OF WISCONSI
DEPARTMENT OF NATURAL F
Box 450
Madison, Wisconsin 53701

[redacted]TY Sauk | CHECK ONE: ☒ Town ☐ Village ☐ City | NAME Prairie Du Sac

LOCATION: ¼ Section SE 1/4 | ¼ Section NW 1/4 | Section 35 | Township 10N | Range 6E

OR – Grid or street no | Street name

3. OWNER AT TIME OF DRILLING: Duane Engh

ADDRESS: R.R

D – If available subdivision name, lot & block no.: Windings Lot 27

POST OFFICE: Prairie Du Sac

4. Distance in feet from well to nearest: (Record answer in appropriate block)

BUILDING	SANITARY SEWER C. I.	SANITARY SEWER TILE	FLOOR DRAIN C. I.	FLOOR DRAIN TILE	FOUNDATION DRAIN SEWER CONNECTED	FOUNDATION DRAIN INDEPENDENT	WASTE WATER DRAIN C. I.	WASTE WATER DRAIN TILE
30 ft	58 ft	[redacted]	60 ft				53 ft	

CLEAR WATER DRAIN C. I.	CLEAR WATER DRAIN TILE	SEPTIC TANK	PRIVY	SEEPAGE PIT	ABSORPTION FIELD	BARN	SILO	ABANDONED WELL	SINK HOLE
23 ft		100 ft			125 ft				

OTHER POLLUTION SOURCES (Give description such as dump, quarry, drainage well, stream, pond, lake, etc.)

Well is intended to supply water for: Home

6. DRILLHOLE

Dia. (in.)	From (ft.)	To (ft.)	Dia. (in.)	From (ft.)	To (ft.)
10	Surface	20			
5	20	288			

7. CASING, LINER, CURBING, AND SCREEN

Dia. (in.)	Kind and Weight	From (ft.)	To (ft.)
[redacted]	New Steel Rek'	Surface	270
	Steel 19.15 lb per ft		
	ft I.D.		

9. FORMATIONS

Kind	From (ft.)	To (ft.)
Caving Sand Gravel Clay + boulders	Surface	65
Sand + Gravel	65	120
Sand + clay	120	160
Sand	160	240
Sand Rock	240	288

8. GROUT OR OTHER SEALING MATERIAL

Kind	From (ft.)	To (ft.)
Drill Cuttings	Surface	20

10. TYPE OF DRILLING MACHINE USED

☒ Cable Tool ☐ Direct Rotary ☐ Reverse Rotary
☐ Rotary – air w/drilling mud ☐ Rotary – hammer with drilling mud & air ☐ Jetting with ☐ Air ☐ Water

Well construction completed on October 21 19 74

11. MISCELLANEOUS DATA

Yield test: 15 Hrs. at 25 GPM

Well is terminated 10 inches ☒ above ☐ below final grade

Depth from surface to normal water level 100 ft.

Well disinfected upon completion ☒ Yes ☐ No

Depth to water level when pumping 110 ft.

Well sealed watertight upon completion ☒ Yes ☐ No

Water sample sent to Madison laboratory on: October 23 1974

Your opinion concerning other pollution hazards, information concerning difficulties encountered, and data relating to nearby wells, screens, seals, type of casing joints, method of finishing the well, amount of cement used in grouting, blasting, sub-surface pumprooms, access pits, etc., should be given on reverse side.

[redacted]URE Verna Welsch Registered Well Driller

COMPLETE MAIL ADDRESS: 345 Park Ave Prairie Du Sac

Please do not write in space below

COLIFORM TEST RESULT	GAS – 24 HRS.	GAS – 48 HRS.	CONFIRMED	REMARKS

State of Wisconsin
Department of Natural Resources
Box 7921
Madison, Wisconsin 53707

OCT 14 1977

NOTE:
White Copy - Division's Copy
Green Copy - Driller's Copy
Yellow Copy - Owner's Copy

WELL CONSTRUCTOR'S REPORT

Form 3300-15 Rev 12-76

47

1. COUNTY: Sauk
CHECK (✓) ONE: ☑ Town ☐ Village ☐ City Name: Prairie Du Sac

2. LOCATION: ¼ Section: SW SE; Section: 25; Township: 10; Range: 6
OR – Grid or Street No.: ; Street Name:
AND – If available subdivision name, lot & block No.:

3. NAME ☐ OWNER ☐ AGENT AT TIME OF DRILLING CHECK (✓) ONE: Loyd Mueller
ADDRESS: Rt. 1
POST OFFICE: Prairie Du Sac, Wis 5357

4. Distance in feet from well to nearest: (Record answer in appropriate block)

Building	Sanitary Bldg. Drain C.I.	Sanitary Bldg. Drain Other	Sanitary Bldg. Sewer C.I.	Sanitary Bldg. Sewer Other	Floor Drain Connected To: C.I. Sewer	Floor Drain Connected To: Other Sewer	Storm Bldg. Drain C.I.	Storm Bldg. Drain Other	Storm Bldg. Sewer C.I.	Storm Bldg. Sewer Other
19	~~67~~		67		52					

Street Sewer San.	Street Sewer Storm	Other Sewers C.I.	Other Sewers Other	Foundation Drain Connected to: Sewer	Foundation Drain Connected to: Sewage Sump	Foundation Drain Connected to: Clearwater Dr.	Foundation Drain Connected to: Clearwater Sump	Sewage Sump C.I.	Sewage Sump Other	Clearwater Sump	Septic Tank	Holding Tank	Sewage Absorption Unit: Seepage Pit	Seepage Bed	Seepage Trench
											65			95	

Privy	Pet Waste Pit	Pit: Nonconforming Existing: Well	Pump	Tank	Subsurface Pumproom Nonconforming Existing	Barn Gutter	Animal Barn Pen	Animal Yard	Silo With Pit	Glass Lined Storage Facility	Silo w/o Pit	Earthen Silage Storage Trench Or Pit
						122		130			123	

Temporary Manure Stack	Watertight Liquid Manure Tank	Solid Manure Storage Structure	Subsurface Gasoline or Oil Tank	Waste Pond or Land Disposal Unit (Specify Type)	Other (Give Description)

5. Well is intended to supply water for: farm

6. DRILLHOLE

Dia. (in.)	From (ft.)	To (ft.)	Dia. (in.)	From (ft.)	To (ft.)
6	Surface	163			

7. CASING, LINER, CURBING AND SCREEN

Dia. (in.)	Material, Weight, Specification & Method of Assembly	From (ft.)	To (ft.)
6	new steel ASTM A53 19.45 T+C Jones & Laughlin	Surface	160
6	Johnston ne 25 slot SS 704 screen	160	163

8. GROUT OR OTHER SEALING MATERIAL

Kind	From (ft.)	To (ft.)
	Surface	

9. FORMATIONS

Kind	From (ft.)	To (ft.)
sand & gravel	Surface	163

10. TYPE OF DRILLING MACHINE USED
☑ Cable Tool ☐ Rotary-air w/drilling mud ☐ Rotary-w/drilling mud ☐ Rotary-hammer w/drilling mud & air ☐ Rotary-hammer & air ☐ Reverse Rotary ☐ Jetting with Air Water

Well construction completed on Sept 20 1977

11. MISCELLANEOUS DATA
Yield Test: 3 Hrs. at 28 GPM
Depth from surface to normal water level 87 Ft.
Depth of water level when pumping 91 Ft. Stabilized ☑ Yes ☐ No

Well is terminated 10 inches ☑ above ☐ below final grade
Well disinfected upon completion ☑ Yes ☐ No
Well sealed watertight upon completion ☑ Yes ☐ No

Water sample sent to Madison laboratory on Sept. 28 1977

Your opinion concerning other pollution hazards, information concerning difficulties encountered, and data relating to nearby wells, screens, seals, method of finishing the well, amount of cement used in grouting, blasting, etc., should be given on reverse side.

Signature: William J Smith Registered Well Driller

Complete Mail Address: Rt. 4 Baraboo, Wis 53913

WISCONSIN UNIQUE WELL NUMBER CK 018

Department of Natural Resources
Private Water Supply — WS/2
Box 7921
Madison, WI 53707

47

Property Owner: Jean Mueller — Telephone Number:
Mailing Address: Hwy 78
City: Prairie du Sac — State: WI — Zip Code:
County of Well Location: Sauk — County Well Location Permit No.: W — Well Completion Date: 11 28 90 (M M D D Y Y)

1. Location (Please type or print using a block pen.)
☒ Town ☐ City ☐ Village of Prairie du Sac — Fire # (if available):
Grid or Street Address or Road Name and Number (if available): Hwy 78
Subdivision Name: — Lot #: — Block #:
Gov't Lot # ___ or NW ¼ of SW ¼ of Section 25 ; T 10 N; R 6 ☒ E ☐ W

Well Constructor (Business Name): WATER WELLS INC. — Registration #: 3
Address: 6400 Lake Road
City: Windsor — State: WI — Zip Code: 53598

2. Mark well location in correct 40-acre parcel of section.
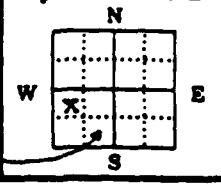

3. Well Type ☐ New ☒ Replacement ☐ Reconstruction
of unique well # ___ constructed in 19 ___
Reason for new, replaced or reconstructed well? Present well contaminated

4. Well serves 1 # of homes and/or ___ (ex: barn, restaurant, church, school, industry, etc.)
High Capacity Well? ☐ Yes ☐ No
High Capacity Property? ☐ Yes ☐ No

☒ Drilled ☐ Driven Point ☐ Jetted ☐ Other ___

5. Well Located on Highest Point of Property, Consistent with the General Layout and Surroundings? ☒ Yes ☐ No If no, explain on back side.
Well Located in Floodplain? ☐ Yes ☒ No
Distance In Feet From Well To Nearest:

30	1. Landfill	60	9. Downspout/Yard Hydrant
60	2. Building Overhang		10. Privy
60	3. Septic or Holding Tank		11. Foundation Drain to Clearwater
60	4. Sewage Absorption Unit		12. Foundation Drain to Sewer
	5. Nonconforming Pit	65	13. Building Drain ☐ Cast Iron or Plastic ☐ Other
	6. Buried Home Heating Oil Tank	65	14. Building Sewer ☐ Gravity ☐ Pressure ☐ Cast Iron or Plastic ☐ Other
	7. Buried Petroleum Tank		15. Collector or Street Sewer
	8. Shoreline/Swimming Pool		16. Clearwater Sump

	17. Wastewater Sump	
	18. Paved Animal Barn Pen	
140	19. Animal Yard or Shelter	
130	20. Silo — Type	
140	21. Barn Gutter	
	22. Manure Pipe ☐ Gravity ☐ Pressure ☐ Cast Iron or Plastic ☐ Other	
	23. Other Manure Storage	
	Other NR 112 Waste Source	
	24.	

6. Drillhole Dimensions

Dia. (in.)	From (ft.)	To (ft.)
10	surface	274
6	274	356

Method of constructing upper enlarged drillhole only.
☒ 1. Rotary — Mud Circulation
☐ 2. Rotary — Air
☐ 3. Rotary — Foam
☐ 4. Reverse Rotary
☐ 5. Cable-tool Bit ___ in. dia.
☐ 6. Temp. Outer Casing ___ in. dia. Removed? ☐ Yes ☐ No If no, explain ___
☐ 7. Other ___

9. Geology Type, Caving/Noncaving, Color, Hardness, Etc.

DNR USE ONLY	Type, Caving/Noncaving, Color, Hardness, Etc.	From (ft.)	To (ft.)
	Fine gravel, coarse sand	surface	120
	Medium gravel	120	145
	Fine -medium gravel	145	224
	Gray limestone w/clay layer	224	274
	Sandy limestone	274	356

Casing, Liner, Screen

Dia. (in.)	Material, Weight, Specification Mfg. & Method of Assembly	From (ft.)	To (ft.)
6	Std. steel PE new	surface	274
	18.97 lbs .280 wall		
	Saw-hill ASTMA-53		
Dia. (in.)	screen type and material	From	To

8. Grout or Other Sealing Material
Method: Halliburton

Kind of Sealing Material	From (ft.)	To (ft.)	# Sacks Cement
Neat cement	surface	274.	85

10. Static Water Level
___ ft. above ground level
130 ft. below ground surface

11. Pump Test
Pumping Level 260 ft. below surface
Pumping at 20 GPM for 1 hours

12. Well is:
24 in. ☒ Above ☐ Below Grade
Developed? ☒ Yes ☐ No
Disinfected? ☒ Yes ☐ No
Capped? ☒ Yes ☐ No

13. Did you permanently seal all unused, noncomplying, or unsafe wells?
☐ Yes ☒ No If no, explain still in use

14. Signature of Point Driver or Registered Driller — Date Signed
Signature of Drill Rig Operator — Date Signed

Make additional comments on reverse side about geology, etc.

WELL CONSTRUCTOR

WELL CONSTRUCTION REPORT
Form 3300-77A Rev. 9-88

Well Construction Report for

WISCONSIN UNIQUE WELL NUMBER [redacted]018[redacted]

Department of Natural Resources
Private Water Supply – WS/2
Box 7921
Madison, WI 53707

47

Property Owner: Jean Mueller — Telephone Number:
Mailing Address: Hwy 78
City: Prairie du Sac — State: WI — Zip Code: 53578
County of Well Location: Sauk — Permit No.: 25 W — Well Completion Date: 2 / 20 / 91 (M M D D Y Y)

Well Constructor (Business Name): WATER WELLS INC. — Registration #: 3
Address: 6400 Lake Road
City: Windsor — State: WI — Zip Code: 53598

2. Mark well location in correct 40-acre parcel of section.

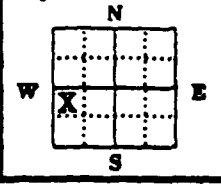

1. Location (Please type or print using a black pen.)
☒ Town ☐ City ☐ Village of Prairie du Sac — Fire # (if available)
Grid or Street Address or Road Name and Number (if available): Hwy 78
Subdivision Name — Lot # — Block #
Gov't Lot # ____ or NW ¼ of SW ¼ of Section 25 ; T 10 N; R 6 ☒ E ☐ W

3. Well Type ☐ New ☐ Replacement ☒ Reconstruction
of unique well # ____ constructed in 19 ____
Reason for new, replaced or reconstructed well?
to lower iron content

4. Well serves 1 # of homes and/or ____
(ex: barn, restaurant, church, school, industry, etc.)
High Capacity Well? ☐ Yes ☒ No
High Capacity Property? ☐ Yes ☒ No

☒ Drilled ☐ Driven Point ☐ Jetted ☐ Other ____

5. Well Located on Highest Point of Property, Consistent with the General Layout and Surroundings? ☒ Yes ☐ No If no, explain on back side.
Well Located in Floodplain? ☐ Yes ☐ No

Distance In Feet From Well To Nearest:

____ 1. Landfill	60	9. Downspout/Yard Hydrant	____ 17. Wastewater Sump
30 2. Building Overhang	____	10. Privy	____ 18. Paved Animal Barn Pen
60 3. Septic or Holding Tank	____	11. Foundation Drain to Clearwater	140 19. Animal Yard or Shelter
60 4. Sewage Absorption Unit	____	12. Foundation Drain to Sewer	130 20. Silo – Type ____
____ 5. Nonconforming Pit	65	13. Building Drain ☒ Cast Iron or Plastic ☐ Other	140 21. Barn Gutter
____ 6. Buried Home Heating Oil Tank	65	14. Building Sewer ☒ Gravity ☐ Pressure ☒ Cast Iron or Plastic ☐ Other	____ 22. Manure Pipe ☐ Gravity ☐ Pressure ☐ Cast Iron or Plastic ☐ Other
____ 7. Buried Petroleum Tank	____	15. Collector or Street Sewer	____ 23. Other Manure Storage – Other NR 113 Waste Source
____ 8. Shoreline/Swimming Pool	____	16. Clearwater Sump	____ 24. ____

6. Drillhole Dimensions

Dia. (in.)	From (ft.)	To (ft.)
	surface	
6	356	513
5	513	523

Method of constructing upper enlarged drillhole only.
☒ 1. Rotary – Mud Circulation
☐ 2. Rotary – Air
☐ 3. Rotary – Foam
☐ 4. Reverse Rotary
☐ 5. Cable-tool Bit ____ in. dia.
☐ 6. Temp. Outer Casing ____ in. dia. Removed? ☐ Yes ☐ No If no, explain ____
☐ 7. Other ____

DNR USE ONLY

9. Geology Type, Caving/Noncaving, Color, Hardness, Etc.

From (ft.)	To (ft.)	
surface		
356	500	Shaley limestone
500	523	Sandstone, white

7. Casing, Liner, Screen

Dia. (in.)	Material, Weight, Specification Mfg. & Method of Assembly	From (ft.)	To (ft.)
		surface	
5	Std. steel PE new	264	513
	14.62 lbs, .258 wall		
	Sawhill		

Dia. (in.)	screen type and material	From	To

8. Grout or Other Sealing Material

Method NA — Kind of Sealing Material	From (ft.)	To (ft.)	# Sacks Cement
5 X 6 K Packer- top	surface		
and bottom			

10. Static Water Level
____ ft. above ground level
28 ft. below ground surface

11. Pump Test
Pumping Level 523 ft. below surface
Pumping at 100 GPM for 2 hours

12. Well Is:
10 in. ☒ Above ☐ Below Grade
Developed? ☒ Yes ☐ No
Disinfected? ☒ Yes ☐ No
Capped? ☒ Yes ☐ No

13. Did you permanently seal all unused, noncomplying, or unsafe wells? ☒ Yes ☐ No If no, explain to be abandoned

14. Signature of Print Driver or Registered Driller — Date Signed 2/28/91
Signature of Drill Rig Operator — Date Signed 2/28/91

Make additional comments on reverse side about geology, etc.

WELL OWNER

WELL CONSTRUCTION REPORT
Form 3300-77A Rev. 9-88

WISCONSIN UNIQUE WELL NUMBER UK 019

Department of Natural Resources
Private Water Supply – WS/2
Box 7921
Madison, WI 53707

47

Property Owner: Viola Gruber | Telephone Number:
Mailing Address: Hwy 78
City: Prairie du Sac | State: WI | Zip Code: 5
County of Well Location: Sauk | County Well Location Permit No.: W | Well Completion Date: 11/28/90 (M M D D Y Y)

Well Constructor (Business Name): WATER WELLS INC. | Registration #: 3
Address: 6400 Lake Road
City: Windsor | State: WI | Zip Code: 53598

2. Mark well location in correct 40-acre parcel of section.

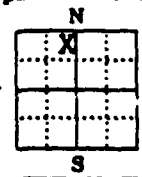

1. Location (Please type or print using a black pen.)
☒ Town ☐ City ☐ Village of Prairie du Sac | Fire # (if available)
Grid or Street Address or Road Name and Number (if available): Hwy 78
Subdivision Name | Lot # | Block #
Gov't Lot # ___ or NE ¼ of NW ¼ of Section 36 T 9 N; R 10 ☒ E ☐ W

3. Well Type ☐ New ☒ Replacement ☐ Reconstruction
of unique well # ___ constructed in 19 ___
Reason for new, replaced or reconstructed well? present well contaminated

4. Well serves ___ # of homes and/or farm (ex: barn, restaurant, church, school, industry, etc.)
High Capacity Well? ☐ Yes ☒ No
High Capacity Property? ☐ Yes ☒ No

☒ Drilled ☐ Driven Point ☐ Jetted ☐ Other ___

5. Well Located on Highest Point of Property, Consistent with the General Layout and Surroundings? ☒ Yes ☐ No If no, explain on back side.
Well Located in Floodplain? ☐ Yes ☒ No
Distance In Feet From Well To Nearest:

10	1. Landfill	160	9. Downspout/Yard Hydrant
	10. Privy		17. Wastewater Sump
	11. Foundation Drain to Clearwater		18. Paved Animal Barn Pen
10	2. Building Overhang		12. Foundation Drain to Sewer	50	19. Animal Yard or Shelter
220	3. Septic or Holding Tank	200	13. Building Drain		20. Silo – Type
230	4. Sewage Absorption Unit		☒ Cast Iron or Plastic ☐ Other		21. Barn Gutter
140	5. Nonconforming Pit	215	14. Building Sewer ☐ Gravity ☐ Pressure		22. Manure Pipe ☐ Gravity ☐ Pressure
	6. Buried Home Heating Oil Tank		☒ Cast Iron or Plastic ☐ Other		☐ Cast Iron or Plastic ☐ Other
	7. Buried Petroleum Tank		15. Collector or Street Sewer		23. Other Manure Storage
	8. Shoreline/Swimming Pool		16. Clearwater Sump		Other NR 112 Waste Source
					24.

6. Drillhole Dimensions

Dia. (in.)	From (ft.)	To (ft.)
10	surface	276
6	276	335

Method of constructing upper enlarged drillhole only.
☒ 1. Rotary – Mud Circulation 276
☐ 2. Rotary – Air
☐ 3. Rotary – Foam
☐ 4. Reverse Rotary
☐ 5. Cable-tool Bit ___ in. dia.
☐ 6. Temp. Outer Casing ___ in. dia. Removed? ☐ Yes ☐ No If no, explain ___
☐ 7. Other ___

Casing, Liner, Screen

Dia. (in.)	Material, Weight, Specification Mfg. & Method of Assembly	From (ft.)	To (ft.)
6	std, steel new	surface	
	18.97 lbs, ASTMA-53		
	Grade B .280 wall		
	Sawhill		
a. (in.)	screen type and material	From	To

8. Grout or Other Sealing Material
Method halliburton

Kind of Sealing Material	From (ft.)	To (ft.)	# Sacks Cement
Neat cement	surface	276	84

Make additional comments on reverse side about geology, etc.

DNR USE ONLY	9. Geology Type, Caving/Noncaving, Color, Hardness, Etc.	From (ft.)	To (ft.)
	clay	surface	5
	fine gravel & coarse sand	5	63
	coarse -med. gravel	63	126
	coarse sand and gravel	126	160
	med. gravel and sand	160	226
	limestone	226	276
	limestone w/ shale layers	276	325
	hard limestone	325	335

10. Static Water Level
133 ft. above ground level / ft. below ground surface

11. Pump Test
Pumping Level 265 ft. below surface
Pumping at 30 GPM for 1 hours

12. Well is:
24 in. ☒ Above ☐ Below Grade
Developed? ☒ Yes ☐ No
Disinfected? ☒ Yes ☐ No
Capped? ☒ Yes ☐ No

13. Did you permanently seal all unused, noncomplying, or unsafe wells?
☐ Yes ☒ No If no, explain still in use

14. Signature of Point Driver or Registered Driller | Date Signed
Signature of Drill Rig Operator | Date Signed

WELL CONSTRUCTOR

WELL CONSTRUCTION REPORT
Form 3300-77A Rev. 9-88

Well Construction Report For
WISCONSIN UNIQUE WELL NUMBER [illegible]

State of Wisconsin
Department of Natural Resources
Private Water Supply Section
Box 7921
Madison, WI 53707

47

Owner: Vern Gruber Telephone Number: 608
Mailing Address: Hwy 78
City: Prairie [illegible] State: WI Zip Code: 53578
County of Well Location: Sauk
Well Completion Date: 2/27/91 (M M D D Y Y)

Well Constructor (Firm Name): WATER WELLS INC Registration #: 3
Address: 6400 Lake Road
City: Windsor State: WI Zip Code: 53598

2. Mark well location in correct 40-acre parcel of section.

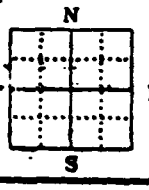

1. Location (Please type or print)
XX Town ☐ City ☐ Village of Prairie du Sac
Fire # (if available)
Grid or Street Address or Road Name and Number (if available): Hwy 78
Subdivision Name Lot # Block #
Gov't Lot # ____ or NE ¼ of NW ¼ of Section 36 T 9 N; R 10 XX E ☐ W

3. Well Type ☐ New ☐ Replacement ☒ Reconstruction
of unique well # ____ constructed in 19 ____
Reason for new, replaced or reconstructed well? to lower iron content

4. Well serves 1 # of homes and/or farm (ex: barn, restaurant, church, school, industry, etc.)
High Capacity Well? ☐ Yes ☐ No ☒
High Capacity Property? ☐ Yes ☒ No

☒ Drilled ☐ Driven Point ☐ Jetted ☐ Other ____

5. Well Located on Highest Point of Property, Consistent with the General Layout and Surroundings? ☒ Yes ☐ No If no, explain on back side.
Well Located in Floodplain? ☐ Yes ☒ No
Distance In Feet From Well To Nearest:

____ 1. Landfill	160 9. Downspout/Yard Hydrant	____ 17. Wastewater S	
10 2. Building Overhang	____ 10. Privy	____ 18. Paved Animal Barn Pen	
220 3. Septic or Holding Tank	____ 11. Foundation Drain to Clearwater	50 19. Animal Yard or Shelter	
230 4. Sewage Absorption Unit	____ 12. Foundation Drain to Sewer	____ 20. Silo — Type ____	
140 5. Nonconforming Pit	200 13. Building Drain ☒ Cast Iron or Plastic ☐ Other	____ 21. Barn Gutter	
____ 6. Buried Home Heating Oil Tank	215 14. Building Sewer ☒ Gravity ☐ Pressure ☒ Cast Iron or Plastic ☐ Other	____ 22. Manure Pipe, ☐ Gravity ☐ Cast Iron or Plastic	
____ 7. Buried Petroleum Tank	____ 15. Collector or Street Sewer	____ 23. Other Manure Storage Other NR 113 Waste Source	
____ 8. Shoreline/Swimming Pool	____ 16. Clearwater Sump	____ 24. ____	

6. Drillhole Dimensions

Dia. (in.)	From (ft.)	To (ft.)
	surface	
6	335	515
5	515	534

Method of constructing upper enlarged drillhole only.
☒ 1. Rotary — Mud Circulation
☐ 2. Rotary — Air
☐ 3. Rotary — Foam
☐ 4. Reverse Rotary
☐ 5. Cable-tool Bit ____ in. dia.
☐ 6. Temp. Outer Casing ____ in. dia. Removed? ☐ Yes ☐ No If no, explain ____
☐ 7. Other ____

Casing, Liner, Screen

Dia. (in.)	Material, Weight, Specification, Mfg. & Method of Assembly	From (ft.)	To (ft.)
5"	Std. steel PE new	surface	
	14.62 lbs. 250 wall	255	515
	Sawhill		
Dia. (in.)	screen type and material	From	To

Grout or Other Sealing Material

Method NA — Kind of Sealing Material	From (ft.)	To (ft.)	# Sacks Cement
5 X 6 K Packers- top	surface		
& bottom of liner			

9. Geology — Type, Caving/Noncaving, Color, Hardness, Etc.

From (ft.)	To (ft.)	
335	495	Limestone w/ shale layers
495	520	Sandstone
520	532	Sandstone changing to quartzite
532	534	Quartzite

10. Static Water Level: ____ ft. above ground level; 34 ft. below ground surface

11. Pump Test: Pumping Level 534 ft. below surface; Pumping at 150± GPM for 2 hours

12. Well Is: 10 in. ☒ Above ☐ Below Grade
Developed? ☒ Yes ☐ No
Disinfected? ☒ Yes ☐ No
Capped? ☒ Yes ☐ No

13. Did you permanently seal all unused, noncomplying, or unsafe wells? ☒ Yes ☐ No If no, explain to be abandoned

14. Signature of Point Driver or Registered Driller: [signature] Date Signed: 2/28/91
Signature of Drill Rig Operator: [signature] Date Signed: 2/28/91

Use additional comments on reverse side about geology, etc.

WELL OWNER

WELL CONSTRUCTION REPORT
Form 3300-77A Rev. 9-88

WELL CONSTRUCTION REPORT
WISCONSIN STATE BOARD OF HEALTH
WELL CONSTRUCTION DIVISION

DEC 18 1944

48

Note: Section 31 of the Wisconsin Well Construction Code, having the force and effect of law, provides that within thirty days after completion of every well the driller shall submit a report covering all essential details of construction to the State Board of Health on a form provided by the Board.

Owner Wis Power & Light Co — Driller Geo Reynolds

Street or RFD ____ — Post Office Portage

Post Office Prarie Du Sac — Date 12/16/44 — Permit No. 5

LOCATION OF PREMISES

Sauk (County) — Prarie Du Sac (Town)

At the Dam

Describe further by subdivision, plat, district, lake, lot.

block, nearest principal highway, etc., whichever apply.

The square below represents a section of land divided into 40 acre tracts. Mark the position of the premises in the section.

NW, SW, SE sec. 25

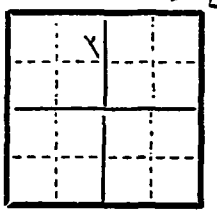

Sec. No. 36

Twp. North 10

Range 6 { E / W

DIAGRAM OF PREMISES

See Well Construction Report bulletin. In making the diagram in the space below consider 10 ft. as the distance between lines. Be sure to indicate NORTH.

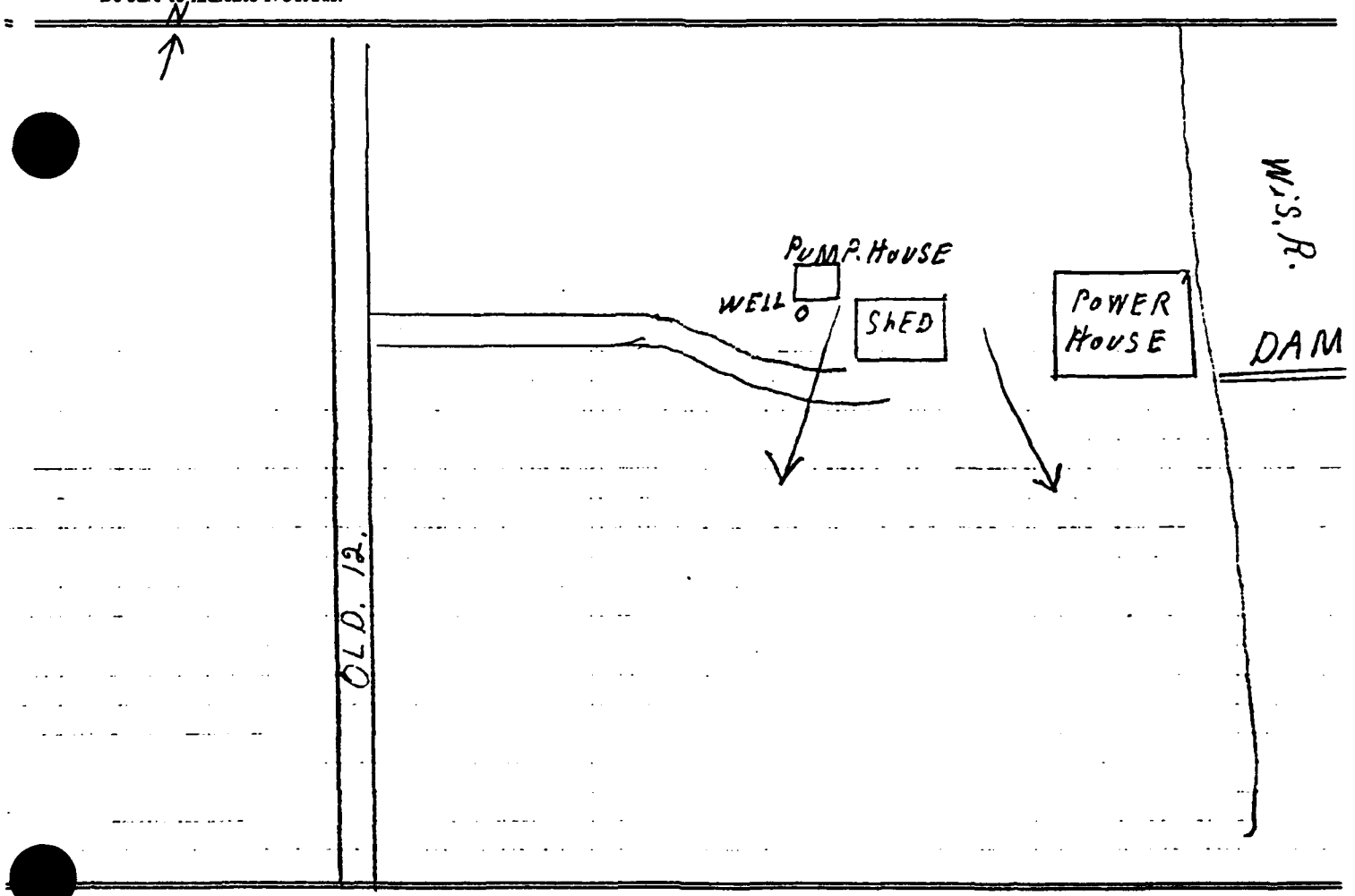

Additional copies of this form may be obtained in lots of 12 for 25c. Send remittance with order to State Board of Health, Well Construction Division, Madison, Wis.

WELL LOG *and* REPORT

For method of making report, refer to bulletin entitled "Well Construction Report," 7-5-39. Accuracy is essential.

In this column indicate the kind of casing, liner, shoe and other accessories used.

Cased to 118 foot with 6 inch Std Casing with Forged Steel Drive Shoe

WELL DIAGRAM
Use a red line to show casing or liner pipe. Use black for drill or borehole.

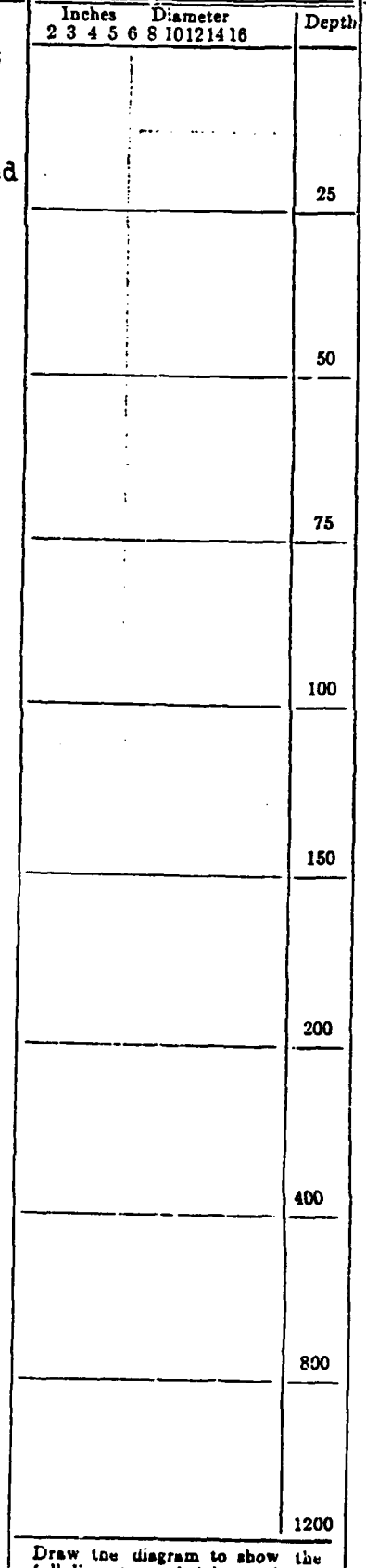

Draw the diagram to show the full diameter and right section of

In this column state the kind of formations penetrated, their thickness in feet and if water bearing.

0 to 16 ft top soil

water at 16 foot

16 to 30 ft Sand & gravel

30 " 80 " River Sand

80 " 95 " Clay and streaks of sand

95 " 110 Sand and some Gravel

110 " 113 Red Clay

113 " 118 Gravel

Record of FINAL Pumping test

Duration of test
Hours 4

Pumping rate
G.P.M. 15

Depth of pump in well. Ft. 30

Standing water-level (from surface)
Ft. 16

Water-level when pumping Ft. 16

Water. End of test.
Clear Clear
Cloudy
Turbid

Was the well sterilized?
Yes Yes No

To which laboratory was sample sent?
Madison
Date 11/7/44

Was the well sealed on completion?
Yes Yes No

How high did you leave the casing-pipe above grade?
8 inches in Pit

Well was completed
Date 9/30/44

Well Constructor
Geo. Reynolds

WELL CONSTRUCTION REPORT
WISCONSIN STATE BOARD OF HEALTH
WELL CONSTRUCTION DIVISION

DEC 18 1944

49

Note: Section 31 of the Wisconsin Well Construction Code, having the force and effect of law, provides that within thirty days after completion of every well the driller shall submit a report covering all essential details of construction to the State Board of Health on a form provided by the Board.

Owner Darwin John Ferry

Driller Geo Reynolds

Street or RFD R.F.D

Post Office Portage

Post Office Prairie Du Sac

Date 12/16/44 Permit No. 5

LOCATION OF PREMISES

Sauk
County

Prairie Du Sac
Town

Describe further by subdivision, plat, district, lake, lot.

block, nearest principal highway, etc., whichever apply.

The square below represents a section of land divided into 40 acre tracts. Mark the position of the premises in the section.

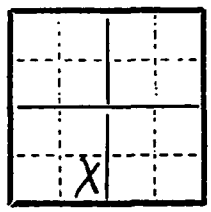

Sec. No. 25

Twp. North 10 ✓

Range 6 { E ✓ W

DIAGRAM OF PREMISES

See Well Construction Report bulletin. In making the diagram in the space below consider 10 ft. as the distance between lines. Be sure to indicate NORTH.

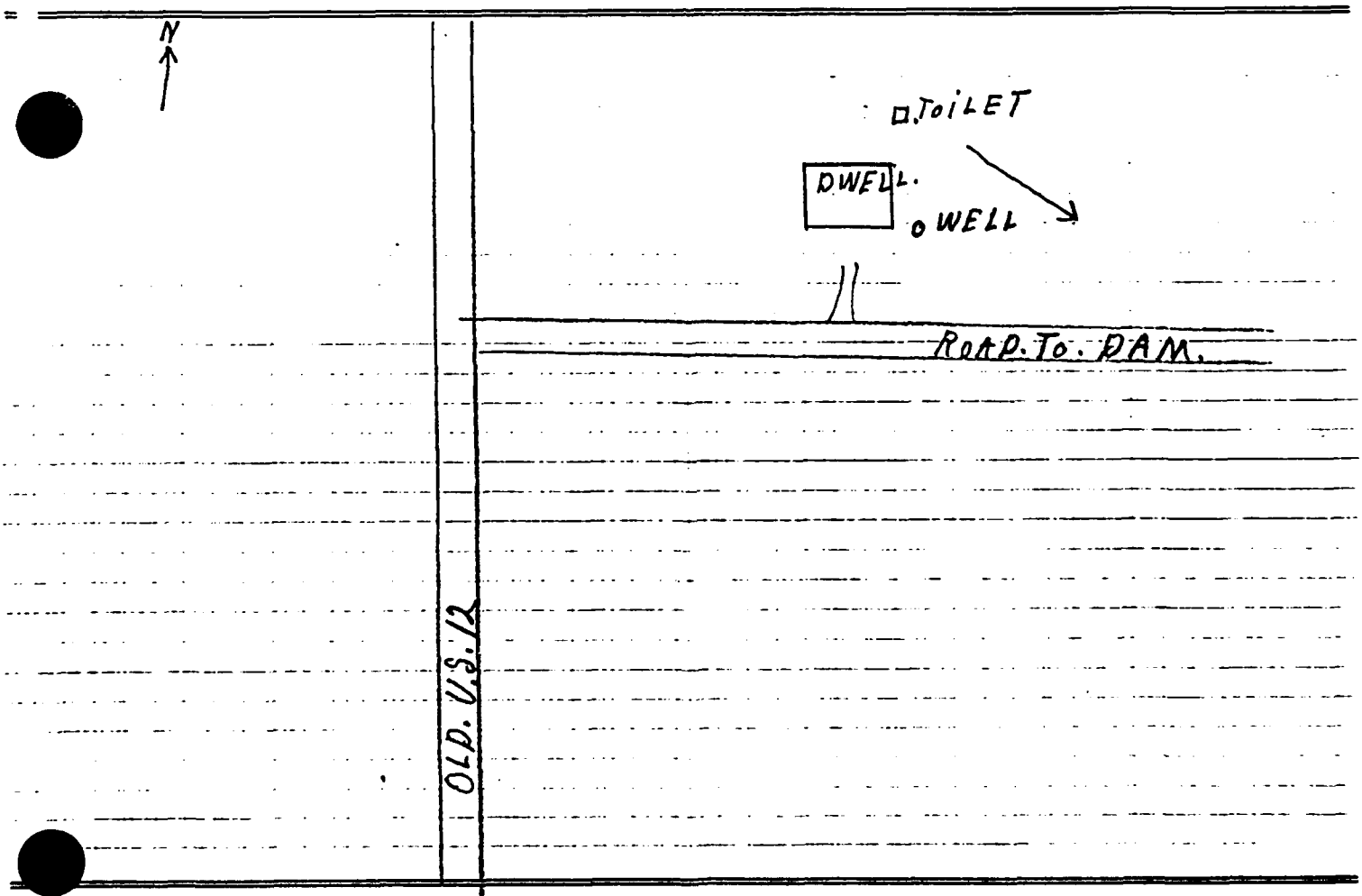

Additional copies of this form may be obtained in lots of 12 for 25c. Send remittance with order to State Board of Health, Well Construction Division, Madison, Wis.

WELL LOG *and* REPORT

For method of making report, refer to bulletin entitled "Well Construction Report," 7-5-39. Accuracy is essential.

In this column indicate the kind of casing, liner, shoe and other accessories used.

Cased to 178 foot with 6 inch Std Casing with Forged Drive Shoe

WELL DIAGRAM
Use a red line to show casing or liner pipe. Use black for drill or borehole.

Inches Diameter
2 3 4 5 6 8 10 12 14 16

Depth
25
50
75
100
150
200
400
800
1200

Draw the diagram to show the full diameter and right section of well only.

In this column state the kind of formations penetrated, their thickness in feet and if water bearing.

0 to 25 ft Top Soil
25 " 60 " Sand Gravel and some Bolders
60 " 110 River Sand
110 "140 Blue Clay
140 " 165 Sand
165 " 175 Sand & some Gravel
175 " 178 Gravel

Water at 80 ft

Record of FINAL Pumping test

Duration of test
Hours 2

Pumping rate
G.P.M. 6

Depth of pump in well. Ft. 100

Standing water-level (from surface)
Ft. 80

Water-level when pumping Ft. 84

Water. End of test.
Clear Clear
Cloudy
Turbid

Was the well sterilized?
Yes Yes No

To which laboratory was sample sent?
Madison
Date 10/16/44

Was the well sealed on completion?
Yes Yes No

How high did you leave the casing-pipe above grade?
8 inches

Well was completed
Date 10/12/44

Well Constructor
Geo. Reynolds
Signature

WELL CONSTRUCTION REPORT
WISCONSIN STATE BOARD OF HEALTH
WELL CONSTRUCTION DIVISION

JUL 20 1942

50

Note: Section 31 of the Wisconsin Well Construction Code, having the force and effect of law, provides that within thirty days after com tion of every well the driller shall submit a report covering all essential details of construction to the State Board of Health on a form provi by the Board.

Owner George.Worth — Driller Geo.Reynolds

Street or RFD R.F.D — Post Office Portage Wis

Post Office Prarie Du Sac Wis — Date 6/29/42 — Permit No. 38

LOCATION OF PREMISES

Sauk (County) — Prarie du Sac (Town)

Describe further by subdivision, plat, district, lake, lot.

block, nearest principal highway, etc., whichever apply.

The square below represents a section of land divided into 40 acre tracts. Mark the position of the premises in the section.

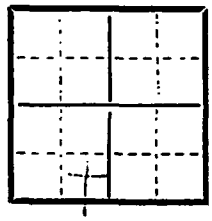

Sec. No. 25

Twp. No. 10

Range 6 E W

DIAGRAM OF PREMISES

See Well Construction Report bulletin. In making the diagram in the space below consider 10 ft. as the distance between lines. Be sure to indicate NORTH.

N. ?

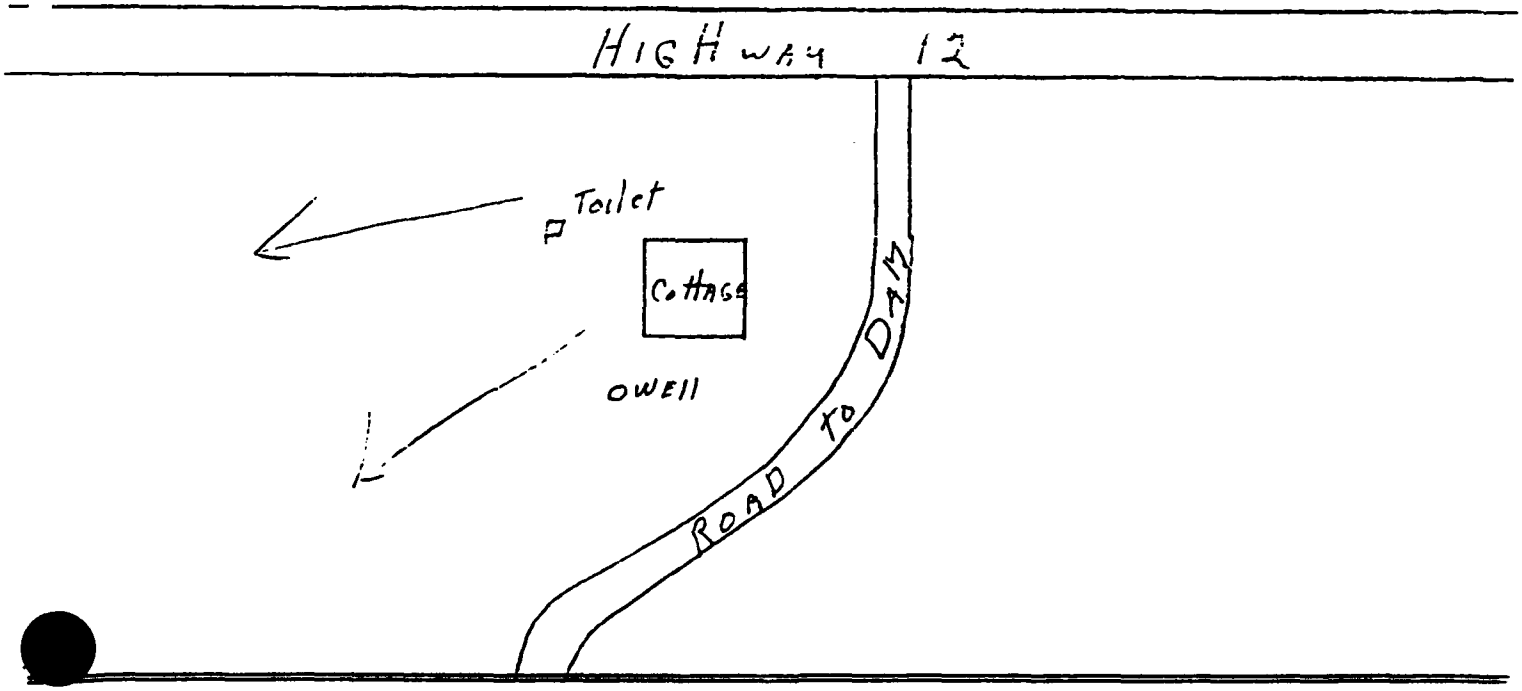

Additional copies of this form may be obtained in lots of 12 for 25c. Send remittance with order to State Board of Health, Well Construction Division, Madison, Wis.

WELL LOG *and* REPORT

For method of making report, refer to bulletin entitled "Well Construction Report." 7-5-39.

In this column indicate the kind of casing, liner, shoe and other accessories used.	WELL DIAGRAM Use a red line to show casing or liner pipe. Use black for drill or borehole. Inches Diameter 2 3 4 5 6 8 10 12 14 16 18 — Depth	In this column state the kind of formations penetrated, their thickness in feet and if water bearing.
Cased with 6 inch Std Water Well Spec to 88 ft	25	0 to 26 ft Sand and Clay Mixed
	50	Water at 26 ft 80 ft 26 to Sand and a little Gravel
	75	80 to 86 ft Quite Gravelry
6 inch Forged Steel Drive Shoe	100	86 to 88 Gravel
	150	
	200	
	400	
	800	
	1200	

Draw the diagram to show the right half only

Record of FINAL Pumping test

Duration of test
Hours 2

Pumping rate
G.P.M. 10

Depth of pump in well. Ft. 60

Standing water-level (from surface)
Ft. 26

Water-level when pumping Ft. 26

Water. End of test.
Clear Clear
Cloudy
Turbid

Was the well sterilized?
Yes Yes No

To which laboratory was sampl sent?
Madison
Date 3/20/42

Was the well sealed on completion?
Yes Yes No

How high did you leave th casing-pipe above grade?
8 inches

Well was completed
Date 3/3/42

Well Constructor
Geo Reynolds
Signature

State of Wisconsin
Department of Natural Resources
Box 7921
Madison, Wisconsin 53707

NOTE:
White Copy - Division's Copy
Green Copy - Driller's Copy
Yellow Copy - Owner's Copy

WELL CONSTRUCTOR'S REPORT
Form 3300-15 Rev. 12-7

FEB 12 1978 51

COUNTY: Sauk
CHECK (✓) ONE: ☒ Town ☐ Village ☐ City
Name: Merrimac

1. LOCATION: NW¼ Section 245¼ | Section 17 | Township 10N | Range 7E
OR – Grid or Street No. | Street Name
AND – If available subdivision name, lot & block No.: Lot 20 Summer Oak Cove

3. NAME ☒ OWNER ☐ AGENT AT TIME OF DRILLING CHECK (✓) ONE: John Kassner
ADDRESS: 119 Monona Ave
POST OFFICE: Madison Wis 53703

4. Distance in feet from well to nearest: (Record answer in appropriate block)

Building	Sanitary Bldg. Drain C.I.	Sanitary Bldg. Drain Other	Sanitary Bldg. Sewer C.I.	Sanitary Bldg. Sewer Other	Floor Drain Connected To: C.I. Sewer	Floor Drain Connected To: Other Sewer	Storm Bldg. Drain C.I.	Storm Bldg. Drain Other	Storm Bldg. Sewer C.I.	Storm Bldg. Sewer Other
100 ft	110 ft		115 ft		125					

Street Sewer San.	Street Sewer Storm	Other Sewers C.I.	Other Sewers Other	Foundation Drain Connected to: Sewer	Sewage Sump	Clearwater Dr.	Clearwater Sump	Sewage Sump C.I.	Sewage Sump Other	Clearwater Sump	Septic Tank	Holding Tank	Sewage Absorption Unit: Seepage Pit / Seepage Bed / Seepage Trench
											100		125 ft

Privy	Pet Waste Pit	Pit: Nonconforming Existing: Well / Pump / Tank	Subsurface Pumproom Nonconforming Existing	Barn Gutter	Animal Barn Pen	Animal Yard	Silo With Pit	Glass Lined Storage Facility	Silo w/o Pit	Earthen Silage Storage Trench Or Pit

Temporary Manure Stack	Watertight Liquid Manure Tank	Solid Manure Storage Structure	Subsurface Gasoline or Oil Tank	Waste Pond or Land Disposal Unit (Specify Type)	Other (Give Description)

5. Well is intended to supply water for: Home

6. DRILLHOLE

Dia. (in.)	From (ft.)	To (ft.)	Dia. (in.)	From (ft.)	To (ft.)
10	Surface	20			
6	20	180			

7. CASING, LINER, CURBING AND SCREEN

Dia. (in.)	Material, Weight, Specification & Method of Assembly	From (ft.)	To (ft.)
6	New Stdrd Blk Steel	Surface	177
	T&C 1945# per ft		
	ASTM A53 Sumitomo Metal Ltd		
	3 ft Johnson Stainless Steel Screen		
	Installed - 15 Slot	177	180

8. GROUT OR OTHER SEALING MATERIAL

Kind	From (ft.)	To (ft.)
Drill Cuttings	Surface	20

9. FORMATIONS

Kind	From (ft.)	To (ft.)
Topsoil	Surface	3
Sand & Gravel	3	75
Sand	75	170
Gravel & Sand	170	180

10. TYPE OF DRILLING MACHINE USED

☒ Cable Tool ☐ Rotary-air w/drilling mud ☐ Rotary-w/drilling mud ☐ Rotary-hammer w/drilling mud & air ☐ Rotary-hammer & air ☐ Reverse Rotary ☐ Jetting with ☐ Air ☐ Water

Well construction completed on Aug 25 1977

Well is terminated 10 inches ☒ above ☐ below final grade

Well disinfected upon completion ☒ Yes ☐ No

Well sealed watertight upon completion ☒ Yes ☐ No

11. MISCELLANEOUS DATA

Yield Test: 12 Hrs. at 20 GPM

Depth from surface to normal water level 40 Ft.

Depth of water level when pumping 50 Ft. Stabilized ☒ Yes ☐ No

Water sample sent to Madison laboratory on Aug 25 1977

Your opinion concerning other pollution hazards, information concerning difficulties encountered, and data relating to nearby wells, screens, seals, method of finishing the well, amount of cement used in grouting, blasting, etc., should be given on reverse side.

Signature: LaVerne Welsch Registered Well Driller

Complete Mail Address: 245 Park Ave Prairie Du Sac

State of Wisconsin
Department of Natural Resources
Box 450
Madison, Wisconsin 53701

NOTE: OCT 20 19[illegible]

White Copy – Division's Copy
Green Copy – Driller's Copy
Yellow Copy – Owner's Copy

WELL CONSTRUCTOR'S REPOI

Form 3300-15
Rev. 10-75

52

1. COUNTY: SAUK
CHECK (✓) ONE: ☒ Town ☐ Village ☐ City
Name: MERRIMAC

2. LOCATION: ¼ Section: NW¼ Section: 17 Township: TION Range: R7E
OR – Grid or Street No. Street Name:
AND – If available subdivision name, lot & block No.: SUGAR OAK COVE LOT 35

3. NAME ☒ OWNER ☐ AGENT AT TIME OF DRILLING CHECK (✓) ON
RICHARD J. WATERS
ADDRESS: 806 10th AVE.
POST OFFICE: ROCHELLE, ILL. 61068

4. Distance in feet from well to nearest: (Record answer in appropriate block)

Building	Sanitary Bldg. Drain		Sanitary Bldg. Sewer		Floor Drain Connected To:		Storm Bldg. Drain		Storm Bldg. S
	C.I.	Other	C.I.	Other	C.I. Sewer	Other Sewer	C.I.	Other	C.I. Othe
65									

Street Sewer		Other Sewers		Foundation Drain Connected to:		Sewage Sump		Clearwater Sump	Septic Tank	Holding Tank	Sewage Absorption Unit	
San.	Storm	C.I.	Other	Sewer	Sewage Sump	C.I.	Other				Seepage Pit	
				Clearwater Dr.	Clearwater Sump				90		Seepage Bed	160
											Seepage Trench	

Privy	Pet Waste Pit	Pit: Nonconforming Existing	Subsurface Pumproom Nonconforming Existing	Barn Gutter	Animal Barn Pen	Animal Yard	Silo With Pit	Glass Lined Storage Facility	Silo w/o Pit	Earthen Silage Storage Trench Or Pit
		Well								
		Pump								
		Tank								

Temporary Manure Stack	Watertight Liquid Manure Tank	Solid Manure Storage Structure	Subsurface Gasoline or Oil Tank	Waste Pond or Land Disposal Unit (Specify Type)	Other (Give Description)

5. Well is intended to supply water for: HOME

6. DRILLHOLE

Dia. (in.)	From (ft.)	To (ft.)	Dia. (in.)	From (ft.)	To (ft.)
10"	Surface	20'	6"	20'	196'

7. CASING, LINER, CURBING AND SCREEN
Material, Weight, Specification & Method of Assembly

Dia. (in.)	Material, Weight, Specification & Method of Assembly	From (ft.)	To (ft.)
6"	NEW 13CK STEEL	Surface	196'
	PIPE 19.45 LBS. PER		
	FT. ASTM A-53		
	THREADED & COUPLED		

8. GROUT OR OTHER SEALING MATERIAL

Kind	From (ft.)	To (ft.)
CLAY SLURRY	Surface	20'

9. FORMATIONS

Kind	From (ft.)	To (ft.)
CLAY	Surface	20'
SAND	20'	120'
SAND & GRAVEL	120'	190'
GRAVEL	190'	196'

10. TYPE OF DRILLING MACHINE USED

☒ Cable Tool	☐ Rotary-hammer w/drilling mud & air	☐ Jetting with
☐ Rotary-air w/drilling mud	☐ Rotary-hammer & air	☐ Air ☐ Water
☐ Rotary-w/drilling mud	☐ Reverse Rotary	

Well construction completed on 10/13 19 77

11. MISCELLANEOUS DATA
Yield Test: 24 Hrs. at 12 GPM
Depth from surface to normal water level 50 Ft.
Depth of water level when pumping 58 Ft. Stabilized ☒ Yes ☐ No

Well is terminated 12 inches ☒ above ☐ below final grade
Well disinfected upon completion ☒ Yes ☐ No
Well sealed watertight upon completion ☒ Yes ☐ No

Water sample sent to MADISON laboratory on 10/18 19 7[illegible]

Your opinion concerning other pollution hazards, information concerning difficulties encountered, and data relating to nearby wells, screens, seals, method of finishing the well, amount of cement used in grouting, blasting, etc., should be given on reverse side.

Signature: [illegible]

Complete Mail Address: [illegible]

State of Wisconsin
Department of Natural Resources
Private Water Supply
Box 7921
Madison, Wisconsin 53707

NOTE:
White Copy - Division's Copy
Green Copy - Driller's Copy
Yellow Copy - Owner's Copy

WELL CONSTRUCTOR'S REPO

Form 3300-15 Rev. 5-8

53

SEP 2 9 1986

COUNTY: Sauk

CHECK (✓) ONE: ☑ Town ☐ Village ☐ City

Name: Merrimac

1. LOCATION: ¼ Section or Gov't. Lot: NW | Section: 17 | Township: ~~11N~~ 7E | Range

OR - Grid or Street No. | Street or Road Name: FION

AND - If available subdivision name, lot & block No.

3. NAME ☐ OWNER ☑ AGENT AT TIME OF DRILLING CHECK (✓) ONE: Prairie Plumbing (Wayne Hubbell)

ADDRESS: 8lde Phillips

POST OFFICE: Sauk City, WI | ZIP CODE: 53583

4. Distance in feet from well to nearest: (Record answer in appropriate block) — Building: 12

Sanitary Bldg. Drain		Sanitary Bldg. Sewer		Floor Drain Connected To:		Storm Bldg. Drain		Storm Bldg. Sewer	
C.I.	Other	C.I.	Other	C.I. Sewer	Other Sewer	C.I.	Other	C.I.	Other

Street Sewer		Other Sewers		Foundation Drain Connected to:		Sewage Sump		Clearwater Sump	Septic Tank	Holding Tank	Sewage Absorption Unit	Manure Hopper or Retention or Pneumatic Tank
San.	Storm	C.I.	Other	Sewer	Clearwater Dr.	Sewage Sump	Clearwater Sump	C.I. Other			Seepage Pit Seepage Bed Seepage Trench	

Privy	Pet Waste Pit	Pit: Nonconforming Existing	Subsurface Pumproom Nonconforming Existing	Barn Gutter	Animal Barn Pen	Animal Yard	Silo With Pit	Glass Lined Storage Facility	Silo w/o Pit	Earthen Silage Storage Trench Or Pit	Earthen Manure Basin
		Well Pump Tank									

Temporary Manure Stack or Platform	Watertight Liquid Manure Tank or Basin	Manure Pressure Pipe	Subsurface Gasoline or Oil Tank	Waste Pond or Land Disposal Unit (Specify Type)	Manure Storage Basin Concrete Floor Only Concrete Floor and Partial Concrete Walls	Other (Describe)

5. Well is intended to supply water for: Home

6. DRILLHOLE

Dia. (in.)	From (ft.)	To (ft.)	Dia. (in.)	From (ft.)	To (ft.)
8	Surface	145			
[redacted]	145	150			

7. CASING, LINER, CURBING AND SCREEN — Material, Weight, Specification

Dia. (in.)	Mfg. & Method of Assembly	From (ft.)	To (ft.)
6	Std black pipe, .280 wall, welded jts, A-53 KHC	Surface	145

8. GROUT OR OTHER SEALING MATERIAL

Kind	From (ft.)	To (ft.)
mud + cuttings	Surface	145
[redacted]		

9. FORMATIONS

Kind	From (ft.)	To (ft.)
sand + gravel	Surface	31
sand	31	145
sand + gravel	145	150
#20 slot stainless steel screen installed	145	150

10. TYPE OF DRILLING MACHINE USED

☐ Cable Tool ☒ Rotary-air w/drilling mud ☐ Rotary-w/drilling mud ☐ Rotary-hammer w/drilling mud & air ☐ Rotary-hammer & air ☐ Reverse Rotary ☐ Jetting with ☐ Air ☐ Water

Well construction completed on 9/13 1986

11. MISCELLANEOUS DATA

Yield Test: 3 Hrs. at 21 GPM

Depth from surface to normal water level 40 Ft.

Depth of water level when pumping 63 Ft. Stabilized ☒ Yes ☐ No

Well is terminated 18 inches ☒ above ☐ below final grade

Well disinfected upon completion ☒ Yes ☐ No

Well sealed watertight upon completion ☒ Yes ☐ No

Water sample sent to Madison laboratory on 9/15 1986

Any opinion concerning other pollution hazards, information concerning difficulties encountered, and data relating to nearby wells, screens, seals, method of finishing the well, amount of cement used in grouting, blasting, etc., should be given on reverse side.

Signature: [signature] Registered Well Driller

Business Name and Complete Mailing Addr: SAM'S ROTARY DRILLERS
ROUTE 2
RANDOLPH WISCONSIN 53956

FEB 2 8 1980

State of Wisconsin
Department of Natural Resources
Box 7921
Madison, Wisconsin 53707

NOTE:
White Copy - Division's Copy
Green Copy - Driller's Copy
Yellow Copy - Owner's Copy

WELL CONSTRUCTOR'S REPOR
Form 3300-15 Rev. 12-7

54

1. COUNTY: Sauk

CHECK (✓) ONE: ☒ Town ☐ Village ☐ City Name: Merrimac

2. LOCATION: ¼ Section: SW¼ NW¼ Section: 17 Township: 17 Range: 7E

OR – Grid or Street No. Street Name: TION

AND – If available subdivision name, lot & block No.: Summer Oak Cones Lot 29

3. NAME ☒ OWNER ☐ AGENT AT TIME OF DRILLING CHECK (✓) ONE: George Staas

ADDRESS: Rte 1

POST OFFICE: Pearl City, Ill Larry Roeche, Contr

4. Distance in feet from well to nearest: (Record answer in appropriate block)

Building	Sanitary Bldg. Drain C.I.	Sanitary Bldg. Drain Other	Sanitary Bldg. Sewer C.I.	Sanitary Bldg. Sewer Other	Floor Drain Connected To: C.I. Sewer	Floor Drain Connected To: Other Sewer	Storm Bldg. Drain C.I.	Storm Bldg. Drain Other	Storm Bldg. Sewer C.I.	Storm Bldg. Sewer Other
8 ft	30 ft		35 ft		25 ft					

Street Sewer San.	Street Sewer Storm	Other Sewers C.I.	Other Sewers Other	Foundation Drain Sewer	Foundation Drain Clearwater Dr.	Connected to: Sewage Sump	Connected to: Clearwater Sump	Sewage Sump C.I.	Sewage Sump Other	Clearwater Sump	Septic Tank	Holding Tank	Sewage Absorption Unit: Seepage Pit / Seepage Bed / Seepage Trench
											50 ft		75 ft

Privy	Pet Waste Pit	Pit: Nonconforming Existing: Well / Pump / Tank	Subsurface Pumproom Nonconforming Existing	Barn Gutter	Animal Barn Pen	Animal Yard	Silo With Pit	Glass Lined Storage Facility	Silo w/o Pit	Earthen Silage Storage Trench Or Pit

Temporary Manure Stack	Watertight Liquid Manure Tank	Solid Manure Storage Structure	Subsurface Gasoline or Oil Tank	Waste Pond or Land Disposal Unit (Specify Type)	Other (Give Description)

5. Well is intended to supply water for: Home

6. DRILLHOLE

Dia. (in.)	From (ft.)	To (ft.)	Dia. (in.)	From (ft.)	To (ft.)
10	Surface	20			
6	20	100			

7. CASING, LINER, CURBING AND SCREEN

Dia. (in.)	Material, Weight, Specification & Method of Assembly	From (ft.)	To (ft.)
6"	New Stand Bell Steel	Surface	97
19.45 #per ft	LC		
ASTM A53	Sumitomo Metal		
3 ft	Johnson Stainless Screen 15 Slot		
Installed at		97	100 ft

8. GROUT OR OTHER SEALING MATERIAL

Kind	From (ft.)	To (ft.)
Drill Cutting	Surface	20

9. FORMATIONS

Kind	From (ft.)	To (ft.)
Clay	Surface	10
Sand & Gravel	10	50
Sand	50	90
Sand & Gravel	90	100

10. TYPE OF DRILLING MACHINE USED

☒ Cable Tool ☐ Rotary-air w/drilling mud ☐ Rotary-w/drilling mud ☐ Rotary-hammer w/drilling mud & air ☐ Rotary-hammer & air ☐ Reverse Rotary ☐ Jetting with ☐ Air ☐ Water

Well construction completed on Sept 27 1979

Well is terminated 10 inches ☒ above ☐ below final grade

Well disinfected upon completion ☒ Yes ☐ No

Well sealed watertight upon completion ☒ Yes ☐ No

11. MISCELLANEOUS DATA

Yield Test: 15 Hrs. at 25 GPM

Depth from surface to normal water level 50 Ft.

Depth of water level when pumping 50 Ft. Stabilized ☒ Yes ☐ No

Water sample sent to Madison laboratory on Sept 28 1979

Your opinion concerning other pollution hazards, information concerning difficulties encountered, and data relating to nearby wells, screens, seals, method of finishing the well, amount of cement used in grouting, blasting, etc., should be given on reverse side.

Signature: L. Verne Wolsch Registered Well Driller

Complete Mail Address: 245 Park Ave Prairie Du Sac

State of Wisconsin
Department of Natural Resources
Private Water Supply
Box 7921
Madison, Wisconsin 53707

NOTE:
White Copy — Division's Copy
Green Copy — Driller's Copy
Yellow Copy — Owner's Copy

WELL CONSTRUCTOR'S REPORT
Form 3300-15 Rev. 2-7 55
JUN 29 1987

COUNTY: SAUK
CHECK (✓) ONE: ☒ Town ☐ Village ☐ City
Name: MERRIMAC

2. LOCATION
¼ Section or Gov't. Lot: NE, NE ✓ Section: 17 Township: 10N Range: 7E
OR – Grid or Street No.: 58304A
Street or Road Name: INSPERATION DR
AND – If available subdivision name, lot & block No.: MERRIMAC WI

3. NAME ☒ OWNER ☐ AGENT AT TIME OF DRILLING CHECK (✓) ONE
DR JOHN DEGIOVANNI
ADDRESS: 75 PRAIRIE AV.
POST OFFICE: PRAIRIE DU SAC
ZIP CODE: WI 53578

4. Distance in feet from well to nearest: (Record answer in appropriate block)

Building	Sanitary Bldg. Drain C.I.	Sanitary Bldg. Drain Other	Sanitary Bldg. Sewer C.I.	Sanitary Bldg. Sewer Other	Floor Drain Connected To: C.I. Sewer	Floor Drain Connected To: Other Sewer	Storm Bldg. Drain C.I.	Storm Bldg. Drain Other	Storm Bldg. Sewer C.I.	Storm Bldg. Sewer Other
85										

Street Sewer San.	Street Sewer Storm	Other Sewers C.I.	Other Sewers Other	Foundation Drain Connected to: Sewer / Clearwater Dr.	Sewage Sump / Clearwater Sump	Sewage Sump C.I.	Sewage Sump Other	Clearwater Sump	Septic Tank	Holding Tank	Sewage Absorption Unit: Seepage Pit / Seepage Bed / Seepage Trench	Manure Hopper or Retention or Pnuematic Tank
									100		150	

Privy	Pet Waste Pit	Pit: Nonconforming Existing: Well / Pump / Tank	Subsurface Pumproom Nonconforming Existing	Barn Gutter	Animal Barn Pen	Animal Yard	Silo With Pit	Glass Lined Storage Facility	Silo w/o Pit	Earthen Silage Storage Trench Or Pit	Earthen Manure Basin

Temporary Manure Stack or Platform	Watertight Liquid Manure Tank or Basin	Manure Pressure Pipe	Subsurface Gasoline or Oil Tank	Waste Pond or Land Disposal Unit (Specify Type)	Manure Storage Basin / Concrete Floor Only / Concrete Floor and Partial Concrete Walls	Other (Describe)

5. Well is intended to supply water for: Home

6. DRILLHOLE

Dia. (in.)	From (ft.)	To (ft.)	Dia. (in.)	From (ft.)	To (ft.)
10"	Surface	20'	6"	20'	204'

7. CASING, LINER, CURBING AND SCREEN

Dia. (in.)	Material, Weight, Specification Mfg. & Method of Assembly	From (ft.)	To (ft.)
6"	NEW BLK STEEL PIPE	Surface	204
	19.45 LBS. PER FT. TYPE		
	EW-USPCO ASTM A-120		
	HYDRO-TESTED 1200 PSI		
	VALLEY STEEL		

8. GROUT OR OTHER SEALING MATERIAL

Kind	From (ft.)	To (ft.)
PUDDLED CLAY	Surface	20

9. FORMATIONS

Kind	From (ft.)	To (ft.)
TOP SOIL	Surface	8'
GRAVEL	8'	68'
SAND & GRAVEL	68'	196'
GRAVEL	196'	204'

10. TYPE OF DRILLING MACHINE USED
☒ Cable Tool ☐ Rotary-air w/drilling mud ☐ Rotary-w/drilling mud ☐ Rotary-hammer w/drilling mud & air ☐ Rotary-hammer & air ☐ Reverse Rotary ☐ Jetting with ☐ Air ☐ Water

Well construction completed on JUNE 11 1987

11. MISCELLANEOUS DATA
Yield Test: 24 Hrs. at 40 GPM
Depth from surface to normal water level 60 Ft.
Depth of water level when pumping 62 Ft. Stabilized ☒ Yes ☐ No

Well is terminated 12 inches ☒ above ☐ below final grade
Well disinfected upon completion ☒ Yes ☐ No
Well sealed watertight upon completion ☒ Yes ☐ No

Water sample sent to MADISON laboratory on JUNE 25 1987

Your opinion concerning other pollution hazards, information concerning difficulties encountered, and data relating to nearby wells, screens, seals, method of [illegible]ing the well, amount of cement used in grouting, blasting, etc., should be given on reverse side.

Signature: Byron K. Wickham Registered Well Driller
Business Name and Complete Mailing Address: WICKHAM WATER SERVICE W10558 HWY J LODI WI 53555

WELL CONSTRUCTOR'S REPORT
FORM 3300-15

NOTE
WHITE COPY – DIVISION'S COPY
GREEN COPY – DRILLER'S COPY
YELLOW COPY – OWNER'S COPY

STATE OF WISCON
DEPARTMENT OF NATURAL
Box 450
Madison, Wisconsin 53701

56

1. COUNTY: Sauk
CHECK ONE: [X] Town [ ] Village [ ] City
NAME: Merrimac

2. LOCATION – ¼ Section: SW 1/4 NW 1/4 | Section: 17 | Township: 10N | Range: 7E
OR – Grid or street no. | Street name
AND – If available subdivision name, lot & block no.: Summer Oak Cove

3. OWNER AT TIME OF DRILLING: Ed Johnson
ADDRESS: 39 Lake Wisconsin Drive
POST OFFICE: Merrimac, Wis

4. Distance in feet from well to nearest: (Record answer in appropriate block)

BUILDING	SANITARY SEWER C. I.	SANITARY SEWER TILE	FLOOR DRAIN C. I.	FLOOR DRAIN TILE	FOUNDATION DRAIN SEWER CONNECTED	FOUNDATION DRAIN INDEPENDENT	WASTE WATER DRAIN C. I.	WASTE WATER DRAIN TILE
12 ft	40 ft		35 ft		none		30 ft	

CLEAR WATER DRAIN C. I.	CLEAR WATER DRAIN TILE	SEPTIC TANK	PRIVY	SEEPAGE PIT	ABSORPTION FIELD	BARN	SILO	ABANDONED WELL	SINK HOLE
25 ft		75 ft		100 ft					

OTHER POLLUTION SOURCES (Give description such as dump, quarry, drainage well, stream, pond, lake, etc.)

5. Well is intended to supply water for: Home

6. DRILLHOLE

Dia. (in.)	From (ft.)	To (ft.)	Dia. (in.)	From (ft.)	To (ft.)
10	Surface	20			
6	20	175			

7. CASING, LINER, CURBING, AND SCREEN

Dia. (in.)	Kind and Weight	From (ft.)	To (ft.)
6"	New Stand Blk Steel	Surface	172
	19.45# per ft T+C		
	ASTM A 53 Sumitomo Metal Ltd		
	4 ft Johnson Stainless Screen Installed 15 Slot		
	172 - 175 ft		

8. GROUT OR OTHER SEALING MATERIAL

Kind	From (ft.)	To (ft.)
Drill Cutting	Surface	20

9. FORMATIONS

Kind	From (ft.)	To (ft.)
Sand Gravel Clay	Surface	40
Sand	40	150
Sand & Gravel	150	175

10. TYPE OF DRILLING MACHINE USED
[X] Cable Tool [ ] Direct Rotary [ ] Reverse Rotary
[ ] Rotary – air w/drilling mud [ ] Rotary – hammer with drilling mud & air [ ] Jetting with [ ] Air [ ] Wa

Well construction completed on: Sept 20 1976
Well is terminated: 12 inches [X] above [ ] below final gra
Well disinfected upon completion: [X] Yes [ ] No
Well sealed watertight upon completion: [X] Yes [ ] o

11. MISCELLANEOUS DATA
Yield test: 15 Hrs. at 25 GPM
Depth from surface to normal water level: 50 ft.
Depth to water level when pumping: 50 ft.

Water sample sent to: Madison laboratory on: Sept 21 197

Your opinion concerning other pollution hazards, information concerning difficulties encountered, and data relating to nearby wells, screens, seals, type of casing joints, method of finishing the well, amount of cement used in grouting, blasting, sub-surface pumprooms, access pits, etc., should be given on reverse side.

SIGNATURE: LaVerne Welsch Registered Well Driller
COMPLETE MAIL ADDRESS: 245 Park Ave Prairie Du Sac

Please do not write in space below

COLIFORM TEST RESULT	GAS – 24 HRS.	GAS – 48 HRS.	CONFIRMED	REMARKS

57

State of Wisconsin
Department of Natural Resources
Box 7921
Madison, Wisconsin 53707

NOTE:
White Copy - Division's Copy
Green Copy - Driller's Copy
Yellow Copy - Owner's Copy

WELL CONSTRUCTOR'S P
Form 3300-15 Rev. 12-76

FEB 1 2 1979

UNTY: Sauk

CHECK (✓) ONE: ☒ Town ☐ Village ☐ City

Name: Merrimac

2. LOCATION: ¼ Section SW¼ NW¼ Section 17 Township 10N Range 7E

OR – Grid or Street No. / Street Name

AND – If available subdivision name, lot & block No.: Summer Cat Cones Lot 27

3. NAME ☒ OWNER ☐ AGENT AT TIME OF DRILLING CHECK (✓) ONE: Harry Eichmann

ADDRESS: 244 N Williams Drive Palatine, Ill

POST OFFICE: (Sid Selzi, Contractor)

4. Distance in feet from well to nearest: (Record answer in appropriate block)

Building	Sanitary Bldg. Drain C.I.	Sanitary Bldg. Drain Other	Sanitary Bldg. Sewer C.I.	Sanitary Bldg. Sewer Other	Floor Drain Connected To: C.I. Sewer	Floor Drain Connected To: Other Sewer	Storm Bldg. Drain C.I.	Storm Bldg. Drain Other	Storm Bldg. Sewer C.I.	Storm Bldg. Sewer Other
10 ft	25 ft		31 ft		47 ft					

Street Sewer San.	Street Sewer Storm	Other Sewers C.I.	Other Sewers Other	Foundation Drain Connected to: Sewer	Foundation Drain Connected to: Sewage Sump	Foundation Drain Connected to: Clearwater Dr.	Foundation Drain Connected to: Clearwater Sump	Sewage Sump C.I.	Sewage Sump Other	Clearwater Sump	Septic Tank	Holding Tank	Sewage Absorption Unit: Seepage Pit	Seepage Bed	Seepage Trench
											75 ft			100 ft	

Privy	Pet Waste Pit	Pit: Nonconforming Existing: Well	Pump	Tank	Subsurface Pumproom Nonconforming Existing	Barn Gutter	Animal Barn Pen	Animal Yard	Silo With Pit	Glass Lined Storage Facility	Silo w/o Pit	Earthen Silage Storage Trench Or Pit

Temporary Manure Stack	Watertight Liquid Manure Tank	Solid Manure Storage Structure	Subsurface Gasoline or Oil Tank	Waste Pond or Land Disposal Unit (Specify Type)	Other (Give Description)

5. Well is intended to supply water for: Home

6. DRILLHOLE

Dia. (in.)	From (ft.)	To (ft.)	Dia. (in.)	From (ft.)	To (ft.)
10	Surface	20			
	20	191			

7. CASING, LINER, CURBING AND SCREEN

Dia. (in.)	Material, Weight, Specification & Method of Assembly	From (ft.)	To (ft.)
6"	New Stand Blk Steel	Surface	188
9.45	Per ft T & C		
3	ft Johnson Stainless Screen		
Installed	15 Slot	188	191

8. GROUT OR OTHER SEALING MATERIAL

Kind	From (ft.)	To (ft.)
Drill Cuttings	Surface	20

9. FORMATIONS

Kind	From (ft.)	To (ft.)
Clay & Sand	Surface	35
Sand 3	35	120
Sand & Gravel	120	175
Gravel	175	191

10. TYPE OF DRILLING MACHINE USED

☒ Cable Tool ☐ Rotary-air w/drilling mud ☐ Rotary-w/drilling mud ☐ Rotary-hammer w/drilling mud & air ☐ Rotary-hammer & air ☐ Reverse Rotary ☐ Jetting with ☐ Air ☐ Water

Well construction completed on Aug 16 1978

Well is terminated 10 inches ☒ above ☐ below final grade

Well disinfected upon completion ☒ Yes ☐ No

Well sealed watertight upon completion ☒ Yes ☐ No

11. MISCELLANEOUS DATA

Yield Test: 15 Hrs. at 25 GPM

Depth from surface to normal water level 60 Ft.

Depth of water level when pumping 60 Ft. Stabilized ☒ Yes ☐ No

Water sample sent to Madison laboratory on Aug 21 1978

opinion concerning other pollution hazards, information concerning difficulties encountered, and data relating to nearby wells, screens, seals, method of ning the well, amount of cement used in grouting, blasting, etc., should be given on reverse side.

Signature: LaVerne Holsch Registered Well Driller

Complete Mail Address: 245 Park Ave Prairie Du Sac

State of Wisconsin
Department of Natural Resources
Box 7921
Madison, Wisconsin 53707

NOTE:
White Copy - Division's Copy
Green Copy - Driller's Copy
Yellow Copy - Owner's Copy

FEB 2 8 1
WELL CONSTRUCTOR'S REPOR
Form 3300-15 Rev. 12-

58

1. COUNTY: Sauk
CHECK (✓) ONE: ☐ Town ☐ Village ☐ City
Name: MERRIMAC

2. LOCATION: ¼ Section: SW¼ NW¼ Section: 17 Township: 10N Range: 7E
OR - Grid or Street No. / Street Name
AND - If available subdivision name, lot & block No.: Summer Oak Coves

3. NAME ☒ OWNER ☐ AGENT-AT-TIME-OF-DRILLING CHECK (✓) ONE: Ed Johnson
ADDRESS: 39 Lake Wisc. Drive
POST OFFICE: Merrimac, Wis

4. Distance in feet from well to nearest: (Record answer in appropriate block)

Building	Sanitary Bldg. Drain C.I.	Sanitary Bldg. Drain Other	Sanitary Bldg. Sewer C.I.	Sanitary Bldg. Sewer Other	Floor Drain Connected To: C.I. Sewer	Floor Drain Connected To: Other Sewer	Storm Bldg. Drain C.I.	Storm Bldg. Drain Other	Storm Bldg. Sewer C.I.	Storm Bldg. Sewer Other
30 ft	45 ft		54 ft		65 ft					

Street Sewer San.	Street Sewer Storm	Other Sewers C.I.	Other Sewers Other	Foundation Drain Connected to: Sewer	Sewage Sump	Clearwater Dr.	Clearwater Sump	Sewage Sump C.I.	Sewage Sump Other	Clearwater Sump	Septic Tank	Holding Tank	Sewage Absorption Unit: Seepage Pit	Seepage Bed	Seepage Trench
											80 ft				110 ft

Privy	Pet Waste Pit	Pit: Nonconforming Existing: Well	Pump	Tank	Subsurface Pumproom Nonconforming Existing	Barn Gutter	Animal Barn Pen	Animal Yard	Silo With Pit	Glass Lined Storage Facility	Silo w/o Pit	Earthen Silage Storage Trench Or Pit

Temporary Manure Stack	Watertight Liquid Manure Tank	Solid Manure Storage Structure	Subsurface Gasoline or Oil Tank	Waste Pond or Land Disposal Unit (Specify Type)	Other (Give Description)

5. Well is intended to supply water for: Home

6. DRILLHOLE

Dia. (in.)	From (ft.)	To (ft.)	Dia. (in.)	From (ft.)	To (ft.)
10	Surface	20			
6	20	179			

7. CASING, LINER, CURBING AND SCREEN

Dia. (in.)	Material, Weight, Specification & Method of Assembly	From (ft.)	To (ft.)
6"	New Stand Blk Steel	Surface	176
19.45# per ft T&C			
ASTM A53 Sumitomo Metal			
3 ft Johnson Stainless Screen			
	Installed	176	179

8. GROUT OR OTHER SEALING MATERIAL

Kind	From (ft.)	To (ft.)
Drill Cuttings	Surface	20

9. FORMATIONS

Kind	From (ft.)	To (ft.)
Clay	Surface	10
Sand Gravel Clay	10	80
Sand & Gravel	80	165
Gravel	165	179
15 Slot		

10. TYPE OF DRILLING MACHINE USED
☒ Cable Tool ☐ Rotary-air w/drilling mud ☐ Rotary-w/drilling mud ☐ Rotary-hammer w/drilling mud & air ☐ Rotary-hammer & air ☐ Reverse Rotary ☐ Jetting with ☐ Air ☐ Water

Well construction completed on Nov 24 1979

11. MISCELLANEOUS DATA
Yield Test: 15 Hrs. at 30 GPM
Depth from surface to normal water level 55 Ft.
Depth of water level when pumping 60 Ft. Stabilized ☐ Yes ☐ No

Well is terminated 10 inches ☒ above ☐ below final grade
Well disinfected upon completion ☒ Yes ☐ No
Well sealed watertight upon completion ☒ Yes ☐ No

Water sample sent to Madison laboratory on Nov 26 1979

Your opinion concerning other pollution hazards, information concerning difficulties encountered, and data relating to nearby wells, screens, seals, method of finishing the well, amount of cement used in grouting, blasting, etc., should be given on reverse side.

Signature: LaVerne Welch Registered Well Driller
Complete Mail Address: 245 Park Ave Prairie Du Sac

59

WELL CONSTRUCTOR'S REPORT
FORM 3300 - 15

NOTE
WHITE COPY - DIVISION'S COPY
GREEN COPY - DRILLER'S COPY
YELLOW COPY - OWNER'S COPY

STATE OF WISCONSIN
DEPARTMENT OF NATURAL RESOURCES
Box 450
Madison, Wisconsin 53701

1. COUNTY: Sauk

CHECK ONE: ☒ Town ☐ Village ☐ City

NAME: Merrimac

2. LOCATION – ¼ Section: NE¼ NE¼ | Section: 18 | Township: 10N | Range: 7E

OR – Grid or street no. | Street name

A) - If available subdivision name, lot & block no.

3. OWNER AT TIME OF DRILLING: George Kilpatrick

ADDRESS: Rte 1

POST OFFICE: Merrimac, Wis.

4 Distance in feet from well to nearest: (Record answer in appropriate block)

BUILDING	SANITARY SEWER C. I.	SANITARY SEWER TILE	FLOOR DRAIN C. I.	FLOOR DRAIN TILE	FOUNDATION DRAIN SEWER CONNECTED	FOUNDATION DRAIN INDEPENDENT	WASTE WATER DRAIN C. I.	WASTE WATER DRAIN TILE
15ft	38ft		40ft		none		30ft	

CLEAR WATER DRAIN C. I.	CLEAR WATER DRAIN TILE	SEPTIC TANK	PRIVY	SEEPAGE PIT	ABSORPTION FIELD	BARN	SILO	ABANDONED WELL	SINK HOLE
6		75ft		100ft					

OTHER POLLUTION SOURCES (Give description such as dump, quarry, drainage well, stream, pond, lake, etc.)

5 Well is intended to supply water for: Home

6 DRILLHOLE

Dia. (in.)	From (ft.)	To (ft.)	Dia. (in.)	From (ft.)	To (ft.)
10	Surface	10			
6	10	100			

9. FORMATIONS

Kind	From (ft.)	To (ft.)
Caving Sand Gravel Clay	Surface	35
Sand + Gravel	35	90
Gravel	90	100

CASING, LINER, CURBING, AND SCREEN

Dia. (in.)	Kind and Weight	From (ft.)	To (ft.)
6"	New Steel 19.18 #'s per ft	Surface	97
3 ft	Johnson Stainless Screen	97	100ft
Installed from			

15 Slot-6"

GROUT OR OTHER SEALING MATERIAL

Kind	From (ft.)	To (ft.)
Hall Cuttings	Surface	10

10. TYPE OF DRILLING MACHINE USED

☒ Cable Tool ☐ Direct Rotary ☐ Reverse Rotary
☐ Rotary – air w/drilling mud ☐ Rotary – hammer with drilling mud & air ☐ Jetting with ☐ Air ☐ Water

Well construction completed on: Sept 11 1974

Well is terminated: 10 inches ☒ above ☐ below final grade

Well disinfected upon completion: ☒ Yes ☐ No

Well sealed watertight upon completion: ☒ Yes ☐ No

. MISCELLANEOUS DATA

Yield test: 25 Hrs. at 25 GPM

Depth from surface to normal water level: 64 ft.

Depth to water level when pumping: 72 ft.

Water sample sent to: Madison laboratory on: Sept 13 1974

Your opinion concerning other pollution hazards, information concerning difficulties encountered, and data relating to nearby wells, screens, seal ype of casing joints, method of finishing the well, amount of cement used in grouting, blasting, sub-surface pumprooms, access pits, etc., should given on reverse side.

SIGNATURE: L. Verne Helsch Registered Well Driller

COMPLETE MAIL ADDRESS: 245 Park Ave Prairie Du Sac

Please do not write in space below

COLIFORM TEST RESULT	GAS – 24 HRS.	GAS – 48 HRS.	CONFIRMED	REMARKS

60

State of Wisconsin
Department of Natural Resources
Private Water Supply
Box 7921
Madison, Wisconsin 53707

NOTE:
White Copy - Division's Copy
Green Copy - Driller's Copy
Yellow Copy - Owner's Copy

WELL CONSTRUCTOR'S RE
Form 3300-15 Re...

1. COUNTY: Sauk
CHECK (✓) ONE: ☒ Town ☐ Village ☐ City
Name: Merrimac

2. LOCATION: ¼ Section or Gov't. Lot: SW¼ NW¼ ✓ Section: 17 Township: 10N Range: 7E
OR – Grid or Street No. | Street or Road Name
AND – If available subdivision name, lot & block No.: Summer Oak Coves

3. NAME ☒ OWNER ☐ AGENT AT TIME OF DRILLING CHECK (✓) ON: Vernon Giles
ADDRESS: RR.
POST OFFICE: Merrimac, Wi. ZIP CODE

4. Distance in feet from well to nearest: (Record answer in appropriate block)

Building	Sanitary Bldg. Drain C.I.	Sanitary Bldg. Drain Other	Sanitary Bldg. Sewer C.I.	Sanitary Bldg. Sewer Other	Floor Drain Connected To: C.I. Sewer	Floor Drain Connected To: Other Sewer	Storm Bldg. Drain C.I.	Storm Bldg. Drain Other	Storm Bldg. Sewer C.I.	Storm Bldg. Sewer Othe
8 ft	30 ft		37 ft		28 ft					

Street Sewer San.	Street Sewer Storm	Other Sewers C.I.	Other Sewers Other	Foundation Drain Connected to: Sewer / Clearwater Dr.	Sewage Sump / Clearwater Sump	Sewage Sump C.I.	Sewage Sump Other	Clearwater Sump	Septic Tank	Holding Tank	Sewage Absorption Unit: Seepage Pit / Seepage Bed / Seepage Trench	Manure Hopper or Retention or Pnuematic Tank
									401		Seepage Bed 75'	

Privy	Pet Waste Pit	Pit: Nonconforming Existing: Well / Pump / Tank	Subsurface Pumproom Nonconforming Existing	Barn Gutter	Animal Barn Pen	Animal Yard	Silo With Pit	Glass Lined Storage Facility	Silo w/o Pit	Earthen Silage Storage Trench Or Pit	Earthen Manure Basin

Temporary Manure Stack or Platform	Watertight Liquid Manure Tank or Basin	Manure Pressure Pipe	Subsurface Gasoline or Oil Tank	Waste Pond or Land Disposal Unit (Specify Type)	Manure Storage Basin / Concrete Floor Only / Concrete Floor and Partial Concrete Walls	Other (Describe)

5. Well is intended to supply water for: Home

6. DRILLHOLE

Dia. (in.)	From (ft.)	To (ft.)	Dia. (in.)	From (ft.)	To (ft.)
10	Surface	20			
6	20	235			

7. CASING, LINER, CURBING AND SCREEN
Material, Weight, Specification

Dia. (in.)	Mfg. & Method of Assembly	From (ft.)	To (ft.)
6"	New Stand Bell Steel	Surface	216
19.45	Lyw ft T&C.		
	Sumitomo Metals ASTM A53		

8. GROUT OR OTHER SEALING MATERIAL

Kind	From (ft.)	To (ft.)
Drill Cuttings	Surface	20

9. FORMATIONS

Kind	From (ft.)	To (ft.)
Sand Gravel & Clay	Surface	40
Sand	40	12[illegible]
Sand & Gravel	120	175
Sand Rock	175	235

10. TYPE OF DRILLING MACHINE USED
☒ Cable Tool ☐ Rotary-air w/drilling mud ☐ Rotary-w/drilling mud ☐ Rotary-hammer w/drilling mud & air ☐ Rotary-hammer & air ☐ Reverse Rotary ☐ Jetting with ☐ Air ☐ Water

Well construction completed on June 14 1982

11. MISCELLANEOUS DATA
Yield Test: 15 Hrs. at 25 GPM
Depth from surface to normal water level 45 Ft.
Depth of water level when pumping 55 Ft. Stabilized ☒ Yes ☐ No

Well is terminated 12 inches ☒ above ☐ below final grade
Well disinfected upon completion ☒ Yes ☐ No
Well sealed watertight upon completion ☒ Yes ☐ No

Water sample sent to Madison laboratory on June 16 19[illegible]

Your opinion concerning other pollution hazards, information concerning difficulties encountered, and data relating to nearby wells, screens, seals, method of finishing the well, amount of cement used in grouting, blasting, etc., should be given on reverse side.

Signature: La Verne Welsch Registered Well Driller
Business Name and Complete Mailing Address: 245 Park Ave Prairie Du Sac

WELL CONSTRUCTOR'S REPORT
Wel-6

APR 3 0 1975

WHITE COPY – DIVISION'S COPY
GREEN COPY – DRILLER'S COPY
YELLOW COPY – OWNER'S COPY

STATE OF WISCONSI
DEPARTMENT OF NATURAL RESOURCES
Box 450
Madison, Wisconsin 53701

67

1 COUNTY: Sauk | CHECK ONE: ☒ Town ☐ Village ☐ City | NAME: Merrimac

2 LOCATION (Number and Street or ¼ section, section, township and range. Also give subdivision name, lot and block numbers when available.)
SW ¼ of NW ¼ SEC 17 T10N R7E LOT 34 Summer Oak Cove's

3 OWNER AT TIME OF DRILLING
Ned Phipps

4 OWNER'S COMPLETE MAIL ADDRESS
RT 1 Merrimac, WI.

5. Distance in feet from well to nearest: (Record answer in appropriate block)

BUILDING	SANITARY SEWER C. I.	SANITARY SEWER TILE	FLOOR DRAIN C. I.	FLOOR DRAIN TILE	FOUNDATION DRAIN SEWER CONNECTED	FOUNDATION DRAIN INDEPENDENT	WASTE WATER DRAIN C. I.	WASTE WATER DRAIN TILE
35								

CLEAR WATER DRAIN C. I.	CLEAR WATER DRAIN TILE	SEPTIC TANK	PRIVY	SEEPAGE PIT	ABSORPTION FIELD	BARN	SILO	ABANDONED WELL	SINK HOLE
		65			85				

6 OTHER POLLUTION SOURCES (Give description such as dump, quarry, drainage well, stream, pond, lake, etc.)

7 Well is intended to supply water for: Home

7. DRILLHOLE

Dia. (in.)	From (ft.)	To (ft.)	Dia. (in.)	From (ft.)	To (ft.)
8"	Surface	20'	4"	20'	213'

8. CASING, LINER, CURBING, AND SCREEN

Dia. (in.)	Kind and Weight	From (ft.)	To (ft.)
4"	Back Steel	Surface	209
	11lb Per Ft		
	Threaded New		

9 GROUT OR OTHER SEALING MATERIAL

Kind	From (ft.)	To (ft.)
Puddled Clay	Surface	20'

10. FORMATIONS

Kind	From (ft.)	To (ft.)
Clay	Surface	65'
Sand	65'	200'
Sand Rock	200'	213'

Well construction completed on 4/17 1975

11 MISCELLANEOUS DATA
Yield test: 48 Hrs. at 10 GPM

Depth from surface to normal water level 55' ft.

Depth to water level when pumping 65' ft.

Well is terminated 12 inches ☒ above ☐ below final grade

Well disinfected upon completion ☒ Yes ☐ No

Well sealed watertight upon completion ☒ Yes ☐ No

Water sample sent to Madison laboratory on: 4/21 1975

Your opinion concerning other pollution hazards, information concerning difficulties encountered, and data relating to nearby wells, screens, seals, type of casing joints, method of finishing the well, amount of cement used in grouting, blasting, sub-surface pumprooms, access pits, etc., should be given on reverse side.

SIGNATURE: Milton Hoyt
Byron Workman Registered Well Driller

COMPLETE MAIL ADDRESS: RT 2 Lodi, Wisc. 53555

Please do not write in space below

COLIFORM TEST RESULT	GAS – 24 HRS	GAS – 48 HRS.	CONFIRMED	REMARKS

State of Wisconsin
Department of Natural Resources
Box 7921
Madison, Wisconsin 53707

NOTE:
White Copy - Division's Copy
Green Copy - Driller's Copy
Yellow Copy - Owner's Copy

WELL CONSTRUCTOR'S REPORT
Form 3300-15 Rev. 12-76

62

APR 1 1982

1. COUNTY: Sauk.

CHECK (✓) ONE: ☒ Town ☐ Village ☐ City Name: Merrimac (south part)

2. LOCATION: ¼ Section: Lot 5 (NW¼) | Section: 17 | Township: 10 N | Range: 7E

OR – Grid or Street No. | Street Name: PERMAN. WELL # 85825

AND – If available subdivision name, lot & block No.: Lot 5 & 6

3. NAME ☐ OWNER ☒ AGENT AT TIME OF DRILLING CHECK (✓) ONE: Summer Oak Cove Condo.

ADDRESS: R.R. | WELL # 1

POST OFFICE: Prairie du Sac

4. Distance in feet from well to nearest: (Record answer in appropriate block)

Building	Sanitary Bldg. Drain C.I.	Sanitary Bldg. Drain Other	Sanitary Bldg. Sewer C.I.	Sanitary Bldg. Sewer Other	Floor Drain Connected To: C.I. Sewer	Floor Drain Connected To: Other Sewer	Storm Bldg. Drain C.I.	Storm Bldg. Drain Other	Storm Bldg. Sewer C.I.	Storm Bldg. Sewer Other
175 ft										

Street Sewer San.	Street Sewer Storm	Other Sewers C.I.	Other Sewers Other	Foundation Drain Connected to: Sewer	Sewage Sump	Clearwater Dr.	Clearwater Sump	Sewage Sump C.I.	Sewage Sump Other	Clearwater Sump	Septic Tank	Holding Tank	Sewage Absorption Unit
											300 ft		Seepage Pit
													Seepage Bed 150'
													Seepage Trench

Privy	Pet Waste Pit	Pit: Nonconforming Existing	Subsurface Pumproom Nonconforming Existing	Barn Gutter	Animal Barn Pen	Animal Yard	Silo With Pit	Glass Lined Storage Facility	Silo w/o Pit	Earthen Silage Storage Trench Or Pit
		Well								
		Pump								
		Tank								

Temporary Manure Stack	Watertight Liquid Manure Tank	Solid Manure Storage Structure	Subsurface Gasoline or Oil Tank	Waste Pond or Land Disposal Unit (Specify Type)	Other (Give Description)
					Sauk Co. Misc. #14

5. Well is intended to supply water for: Condominium Units

6. DRILLHOLE

Dia. (in.)	From (ft.)	To (ft.)	Dia. (in.)	From (ft.)	To (ft.)
10	Surface	60			
6	60	320			

7. CASING, LINER, CURBING AND SCREEN

Dia. (in.)	Material, Weight, Specification & Method of Assembly	From (ft.)	To (ft.)
10	A53 New Steel Gr B Plain End. 40.48# per ft.	Surface	60
6"	New Steel Beb Steel 19.45# per ft. Screw Joint. Stainless Metal Astra 5B	Surface	210

8. GROUT OR OTHER SEALING MATERIAL

Kind	From (ft.)	To (ft.)
Cement	Surface	60
6 gals water 94 lbs cement ratio		

9. FORMATIONS

Kind	From (ft.)	To (ft.)
Topsoil	Surface	4
Sand & Gravel	4	125
Sand	125	185
Sand Rock	185	320

APPROVAL DATE: JUNE 8, 1981
FILE LOCATION: PUBLIC WATER SUPPLY (OTM)
cc: TO STATE GEOLOGIST

10. TYPE OF DRILLING MACHINE USED

☒ Cable Tool
☐ Rotary-air w/drilling mud
☐ Rotary-w/drilling mud
☐ Rotary-hammer w/drilling mud & air
☐ Rotary-hammer & air
☐ Reverse Rotary
☐ Jetting with Air ☐ Water

Well construction completed on: July 16 19 81

Well is terminated 12 inches ☒ above ☐ below final grade

Well disinfected upon completion ☒ Yes ☐ No

Well sealed watertight upon completion ☒ Yes ☐ No

11. MISCELLANEOUS DATA

Yield Test: 18 Hrs. at 60 GPM

Depth from surface to normal water level 60 Ft.

Depth of water level when pumping 85 Ft. Stabilized ☒ Yes ☐ No

Water sample sent to sp. cap = 60/25 = 2.4 gpm/ft Madison laboratory on Sept 1 19 81

Your opinion concerning other pollution hazards, information concerning difficulties encountered, and data relating to nearby wells, screens, seals, method finishing the well, amount of cement used in grouting, blasting, etc., should be given on reverse side.

Signature: L. Vern Holst

cc: S.D PRIV. WS-OTM
SGS
WELL LOG BOOK
Registered Well Driller

Complete Mail Address: 245 Park Ave Prairie du Sac, Wi

63

State of Wisconsin
Department of Natural Resources
Private Water Supply
Box 7921
Madison, Wisconsin 53707

NOTE:
White Copy — Division's Copy
Green Copy — Driller's Copy
Yellow Copy — Owner's Copy

WELL CONSTRUCTOR'S RE
Form 3300-15 Rev 2-79

COUNTY: Sauk | CHECK (✓) ONE: ☒ Town ☐ Village ☐ City | Name: Herrmann

2. LOCATION: ¼ Section or Gov't. Lot: Gov't Lot 6 | Section: 17 | Township: 10N | Range: 7E
OR – Grid or Street No. | Street or Road Name:
AND – If available subdivision name, lot & block No.: Summer Oak Cove

3. NAME ☒ OWNER ☐ AGENT AT TIME OF DRILLING CHECK (✓) ONE: Roger Heidenreich
ADDRESS: Rte #1
POST OFFICE: Prairie Du Sac, Wis | ZIP CODE:

4. Distance in feet from well to nearest: (Record answer in appropriate block)

Building	Sanitary Bldg. Drain C.I.	Sanitary Bldg. Drain Other	Sanitary Bldg. Sewer C.I.	Sanitary Bldg. Sewer Other	Floor Drain Connected To: C.I. Sewer	Floor Drain Connected To: Other Sewer	Storm Bldg. Drain C.I.	Storm Bldg. Drain Other	Storm Bldg. Sewer C.I.	Storm Bldg. Sewer Other
8ft	32ft		45ft		35ft					

Street Sewer San.	Street Sewer Storm	Other Sewers C.I.	Other Sewers Other	Foundation Drain Connected to: Sewer	Foundation Drain Connected to: Sewage Sump	Sewage Sump C.I.	Sewage Sump Other	Clearwater Sump	Septic Tank	Holding Tank	Sewage Absorption Unit	Manure Hopper or Retention or Pneumatic Tank
				Clearwater Dr.	Clearwater Sump				60'		Seepage Pit; Seepage Bed 90'; Seepage Trench	

Privy	Pet Waste Pit	Pit: Nonconforming Existing: Well; Pump; Tank	Subsurface Pumproom; Nonconforming Existing	Barn Gutter	Animal Barn Pen	Animal Yard	Silo With Pit	Glass Lined Storage Facility	Silo w/o Pit	Earthen Silage Storage Trench Or Pit	Earthen Manure Basin

Temporary Manure Stack or Platform	Watertight Liquid Manure Tank or Basin	Manure Pressure Pipe	Subsurface Gasoline or Oil Tank	Waste Pond or Land Disposal Unit (Specify Type)	Manure Storage Basin; Concrete Floor Only; Concrete Floor and Partial Concrete Walls	Other (Describe)

5. Well is intended to supply water for: Home

6. DRILLHOLE

Dia. (in.)	From (ft.)	To (ft.)	Dia. (in.)	From (ft.)	To (ft.)
20	Surface	15			
6	15	235			

7. CASING, LINER, CURBING AND SCREEN
Material, Weight, Specification Mfg. & Method of Assembly

Dia. (in.)	Material, Weight, Specification Mfg. & Method of Assembly	From (ft.)	To (ft.)
6"	New Steel Bell Steel 19.45# per ft J & C. Sumitoma Metal A53	Surface	225

8. GROUT OR OTHER SEALING MATERIAL

Kind	From (ft.)	To (ft.)
Drill Cuttings	Surface	15

9. FORMATIONS

Kind	From (ft.)	To (ft.)
Sand	Surface	125
Sand + Gravel	125	190
Sand Rock	190	235

10. TYPE OF DRILLING MACHINE USED
☒ Cable Tool; ☐ Rotary-air w/drilling mud; ☐ Rotary-w/drilling mud; ☐ Rotary-hammer w/drilling mud & air; ☐ Rotary-hammer & air; ☐ Reverse Rotary; ☐ Jetting with Air / Water

Well construction completed on: Mar 23 19 82

11. MISCELLANEOUS DATA
Yield Test: 15 Hrs. at 25 GPM
Depth from surface to normal water level: 57 Ft.
Depth of water level when pumping: 65 Ft. Stabilized ☒ Yes ☐ No

Well is terminated 10 inches ☒ above ☐ below final grade
Well disinfected upon completion ☒ Yes ☐ No
Well sealed watertight upon completion ☒ Yes ☐ No

Water sample sent to: Madison laboratory on: Mar 25 19 82

Your opinion concerning other pollution hazards, information concerning difficulties encountered, and data relating to nearby wells, screens, seals, method of finishing the well, amount of cement used in grouting, blasting, etc., should be given on reverse side.

Signature: [illegible]
Business Name and Complete Mailing Address: 245 [illegible]

FEB 6 1970

WELL CONSTRUCTOR'S REPORT

Wel–6

WHITE COPY – DIVISION'S COPY
GREEN COPY – DRILLER'S COPY
YELLOW COPY – OWNER'S COPY

STATE OF WISCONSI
DEPARTMENT OF NATURAL R
Box 450
Madison, Wisconsin 53701

64

1. COUNTY: Sauk | CHECK ONE: ☒ Town ☐ Village ☐ City | NAME: Merrimac

2. LOCATION (Number and Street or ¼ section, section, township and range. Also give subdivision name, lot and block numbers when available.)
✓ NW NE 1/4 Sec 5 T 10 N R 7 E

3. OWNER AT TIME OF DRILLING: Ted Sanders

4. OWNER'S COMPLETE MAIL ADDRESS: Merrimac, Wis

5. Distance in feet from well to nearest: (Record answer in appropriate block)

BUILDING	SANITARY SEWER C. I.	SANITARY SEWER TILE	FLOOR DRAIN C. I.	FLOOR DRAIN TILE	FOUNDATION DRAIN SEWER CONNECTED	FOUNDATION DRAIN INDEPENDENT	WASTE WATER DRAIN C. I.	WASTE WATER DRAIN TILE
6 ft		15 ft	20 ft		none		25	

CLEAR WATER DRAIN C. I.	CLEAR WATER DRAIN TILE	SEPTIC TANK	PRIVY	SEEPAGE PIT	ABSORPTION FIELD	BARN	SILO	ABANDONED WELL	SINK HOLE
20		75 ft		100 ft					

OTHER POLLUTION SOURCES (Give description such as dump, quarry, drainage well, stream, pond, lake, etc.)

6. Well is intended to supply water for: Home

7. DRILLHOLE

Dia. (in.)	From (ft.)	To (ft.)	Dia. (in.)	From (ft.)	To (ft.)
6	Surface	120			

8. CASING, LINER, CURBING, AND SCREEN

Dia. (in.)	Kind and Weight	From (ft.)	To (ft.)
6"	New Stand BLK. Steel 19.45 # per ft	Surface	114
5 ft	Johnson Stainless Screen – 15 Slot		

9. GROUT OR OTHER SEALING MATERIAL

Kind	From (ft.)	To (ft.)
	Surface	

10. FORMATIONS

Kind	From (ft.)	To (ft.)
Sand & Gravel	Surface	100
Gravel	100	120

Well construction completed on Oct 16 19 69

Well is terminated 12 inches ☒ above ☐ below final grade

Well disinfected upon completion ☒ Yes ☐ No

Well sealed watertight upon completion ☒ Yes ☐ No

11. MISCELLANEOUS DATA

Yield test: 20 Hrs. at 15 GPM

Depth from surface to normal water level 88 ft.

Depth to water level when pumping 88 ft.

Water sample sent to Madison laboratory on: Oct 17, 69

Your opinion concerning other pollution hazards, information concerning difficulties encountered, and data relating to new wells, screens, seals, type of casing joints, method of finishing the well, amount of cement used in grouting, blasting, subsurface pumprooms, access pits, etc., should be given on reverse side.

SIGNATURE: LaVerne Nelsch Registered Well Driller

COMPLETE MAIL ADDRESS: 245 Park Ave Prairie du Sac

Please do not write in space below

COLIFORM TEST RESULT	GAS – 24 HRS.	GAS – 48 HRS.	CONFIRMED	REMARKS

DEC 14 1977

State of Wisconsin
Department of Natural Resources
Box 450
Madison, Wisconsin 53701

NOTE:
White Copy - Division's Copy
Green Copy - Driller's Copy
Yellow Copy - Owner's Copy

WELL CONSTRUCTOR'S R
Form 3300-15
Rev. 10-75

65

1. COUNTY: Sauk
CHECK (✓) ONE: ☒ Town ☐ Village ☐ City
Name: Merrimac

2. LOCATION: ¼ Section: NE 1/4 | Section: NE 1/4 | Township: 5 10 N | Range: 7E
OR – Grid or Street No. | Street Name
AND – If available subdivision name, lot & block No.

3. NAME ☒ OWNER ☐ AGENT AT TIME OF DRILLING CHECK (✓) ONE
Nesbert Ravong
ADDRESS: 50 210 Chase Ave
POST OFFICE: Lombard, Ill.

Distance in feet from well to nearest: (Record answer in appropriate block)	Building	Sanitary Bldg. Drain C.I.	Sanitary Bldg. Drain Other	Sanitary Bldg. Sewer C.I.	Sanitary Bldg. Sewer Other	Floor Drain Connected To: C.I. Sewer	Floor Drain Connected To: Other Sewer	Storm Bldg. Drain C.I.	Storm Bldg. Drain Other	Storm Bldg. Sewer C.I.	Storm Bldg. Sewer Other
	10 ft	30 ft		40 ft		25 ft					

Street Sewer Dan.	Street Sewer Storm	Other Sewers C.I.	Other Sewers Other	Foundation Drain Connected to: Sewer / Clearwater Dr.	Sewage Sump / Clearwater Sump	Sewage Sump C.I.	Sewage Sump Other	Clearwater Sump	Septic Tank	Holding Tank	Sewage Absorption Unit: Seepage Pit / Seepage Bed / Seepage Trench
									40 ft		75 ft

Privy	Pet Waste Pit	Pit: Nonconforming Existing: Well / Pump / Tank	Subsurface Pumproom Nonconforming Existing	Barn Gutter	Animal Barn Pen	Animal Yard	Silo With Pit	Glass Lined Storage Facility	Silo w/o Pit	Earthen Silage Storage Trench Or Pit

Temporary Manure Stack	Watertight Liquid Manure Tank	Solid Manure Storage Structure	Subsurface Gasoline or Oil Tank	Waste Pond or Land Disposal Unit (Specify Type)	Other (Give Description)

5. Well is intended to supply water for: Home

DRILLHOLE

Dia. (in.)	From (ft.)	To (ft.)	Dia. (in.)	From (ft.)	To (ft.)
10	Surface	20			
[illegible]	20	241			

CASING, LINER, CURBING AND SCREEN

Dia. (in.)	Material, Weight, Specification & Method of Assembly	From (ft.)	To (ft.)
6"	New Stand Beh Steel	Surface	241
	19.45# per ft T&C		
	ASTM A 53 Sumitomo Metal		

9. FORMATIONS

Kind	From (ft.)	To (ft.)
Sand & Gravel	Surface	60
Sand	60	150
Sand & Gravel	150	230
Gravel	230	241

8. GROUT OR OTHER SEALING MATERIAL

Kind	From (ft.)	To (ft.)
Drill Cuttings	Surface	20

10. TYPE OF DRILLING MACHINE USED

☒ Cable Tool ☐ Rotary-air w/drilling mud ☐ Rotary-w/drilling mud ☐ Rotary-hammer w/drilling mud & air ☐ Rotary-hammer & air ☐ Reverse Rotary ☐ Jetting with ☐ Air ☐ Water

Well construction completed on May 14 1977

Well is terminated 10 inches ☒ above ☐ below final grade

Well disinfected upon completion ☒ Yes ☐ No

Well sealed watertight upon completion ☒ Yes ☐ No

1. MISCELLANEOUS DATA

Yield Test: 15 Hrs. at 25 GPM

Depth from surface to normal water level 80 Ft.

Depth of water level when pumping 80 Ft. Stabilized ☒ Yes ☐ No

Water sample sent to Madison laboratory on May 16 1977

[illegible] opinion concerning other pollution hazards, information concerning difficulties encountered, and data relating to nearby wells, screens, seals, method of finishing the well, amount of cement used in grouting, blasting, etc., should be given on reverse side.

Signature: [illegible]

Complete Mail Address: [illegible]

State of Wisconsin
Department of Natural Resources
Private Water Supply
Box 7921
Madison, Wisconsin 53707

NOTE:
White Copy — Division's Copy
Green Copy — Driller's Copy
Yellow Copy — Owner's Copy

WELL CONSTRUCTOR'S REPORT

Form 3300-15 [illegible] Rc

66

1. COUNTY: Sauk
CHECK (✓) ONE: ☒ Town ☐ Village ☐ City
Name: Merrimac

2. LOCATION: ¼ Section or Gov't. Lot: NW¼ SW¼ ✓ Section: 8 Township: 10N Range: 7E
OR – Grid or Street No. Street or Road Name
AND – If available subdivision name, lot & block No.

3. NAME ☒ OWNER ☐ AGENT AT TIME OF DRILLING CHECK (✓) ON: Arnold Weynand
ADDRESS: R.R.
POST OFFICE: Merrimac, Wis
ZIP CODE

4. Distance in feet from well to nearest: (Record answer in appropriate block)

Building	Sanitary Bldg. Drain C.I.	Sanitary Bldg. Drain Other	Sanitary Bldg. Sewer C.I.	Sanitary Bldg. Sewer Other	Floor Drain Connected To: C.I. Sewer	Floor Drain Connected To: Other Sewer	Storm Bldg. Drain C.I.	Storm Bldg. Drain Other	Storm Bldg. Sewer C.I.	Storm Bldg. Sewer Other
75 ft	90 ft		110 ft		none					

Street Sewer San.	Street Sewer Storm	Other Sewers C.I.	Other Sewers Other	Foundation Drain Connected to: Sewer / Clearwater Dr.	Sewage Sump / Clearwater Sump	Sewage Sump C.I.	Sewage Sump Other	Clearwater Sump	Septic Tank	Holding Tank	Sewage Absorption Unit: Seepage Pit / Seepage Bed / Seepage Trench	Manure Hopper or Retention or Pnuematic Tank
									100'		125'	

Privy	Pet Waste Pit	Pit: Nonconforming Existing: Well / Pump / Tank	Subsurface Pumproom Nonconforming Existing	Barn Gutter	Animal Barn Pen	Animal Yard	Silo With Pit	Glass Lined Storage Facility	Silo w/o Pit	Earthen Silage Storage Trench Or Pit	Earthen Manure Basin

Temporary Manure Stack or Platform	Watertight Liquid Manure Tank or Basin	Manure Pressure Pipe	Subsurface Gasoline or Oil Tank	Waste Pond or Land Disposal Unit (Specify Type)	Manure Storage Basin: Concrete Floor Only / Concrete Floor and Partial Concrete Walls	Other (Describe)

5. Well is intended to supply water for: Home

6. DRILLHOLE

Dia. (in.)	From (ft.)	To (ft.)	Dia. (in.)	From (ft.)	To (ft.)
10	Surface	15			
6	15	184			

7. CASING, LINER, CURBING AND SCREEN
Material, Weight, Specification

Dia. (in.)	Mfg. & Method of Assembly	From (ft.)	To (ft.)
6"	New Stand Blk Steel 19.45# per ft S&C Sumitomo Metal ASTM A53	Surface	181
5" I.D. 4-1-81 3'	Johnson Stainless Screen		
	Installed 15 slot	181	184

8. GROUT OR OTHER SEALING MATERIAL

Kind	From (ft.)	To (ft.)
Drill Cuttings	Surface	15

9. FORMATIONS

Kind	From (ft.)	To (ft.)
Clay & Sand	Surface	10 ft
Sand & Gravel	10	95
Sand	95	170
Gravel	170	184

10. TYPE OF DRILLING MACHINE USED
☒ Cable Tool ☐ Rotary-air w/drilling mud ☐ Rotary-w/drilling mud ☐ Rotary-hammer w/drilling mud & air ☐ Rotary-hammer & air ☐ Reverse Rotary ☐ Jetting with ☐ Air ☐ Water

Well construction completed on Dec 19 1980

11. MISCELLANEOUS DATA
Yield Test: 17 Hrs. at 20 GPM
Depth from surface to normal water level 35 Ft.
Depth of water level when pumping 35 Ft. Stabilized ☒ Yes ☐ No

Well is terminated 10 inches ☒ above ☐ below final grade
Well disinfected upon completion ☒ Yes ☐ No
Well sealed watertight upon completion ☒ Yes ☐ No

Water sample sent to Madison laboratory on Dec 22 1980

Your opinion concerning other pollution hazards, information concerning difficulties encountered, and data relating to nearby wells, screens, seals, method of finishing the well, amount of cement used in grouting, blasting, etc., should be given on reverse side.

Signature: La Verne Welsh Registered Well Driller
Business Name and Complete Mailing Address: 245 Park Ave Prairie Du Sac

67

State of Wisconsin
Department of Natural Resources
Private Water Supply
Box 7921
Madison, Wisconsin 53707

NOTE:
White Copy - Division's Copy
Green Copy - Driller's Copy
Yellow Copy - Owner's Copy

WELL CONSTRUCTOR'S RE

Form 3300-15 Rev. 2-79

COUNTY: Sauk
CHECK (✓) ONE: ☐ Town ☐ Village ☐ City
Name: Merrimac

2. LOCATION: ¼ Section or Gov't. Lot: NW | Section: 8 | Township: 10N | Range: 7E
OR – Grid or Street No. | Street or Road Name: Hwy 78
AND – If available subdivision name, lot & block No.

3. NAME ☐ OWNER ☐ AGENT AT TIME OF DRILLING CHECK (✓) ONE: ABC Builders
ADDRESS: 6213 Monona Dr.
POST OFFICE: Monona, Wisc ZIP CODE: 53716

4. Distance in feet from well to nearest: (Record answer in appropriate block)

Building	Sanitary Bldg. Drain C.I.	Sanitary Bldg. Drain Other	Sanitary Bldg. Sewer C.I.	Sanitary Bldg. Sewer Other	Floor Drain Connected To: C.I. Sewer	Floor Drain Connected To: Other Sewer	Storm Bldg. Drain C.I.	Storm Bldg. Drain Other	Storm Bldg. Sewer C.I.	Storm Bldg. Sewer Other
15										

Street Sewer San.	Street Sewer Storm	Other Sewers C.I.	Other Sewers Other	Foundation Drain Connected to: Sewer	Foundation Drain Connected to: Sewage Sump	Foundation Drain Connected to: Clearwater Dr.	Foundation Drain Connected to: Clearwater Sump	Sewage Sump C.I.	Sewage Sump Other	Clearwater Sump	Septic Tank	Holding Tank	Sewage Absorption Unit: Seepage Pit	Sewage Absorption Unit: Seepage Bed	Sewage Absorption Unit: Seepage Trench	Manure Hopper or Retention or Pnuematic Tank
											None			None		

Privy	Pet Waste Pit	Pit: Nonconforming Existing: Well	Pump	Tank	Subsurface Pumproom: Nonconforming Existing	Barn Gutter	Animal Barn Pen	Animal Yard	Silo With Pit	Glass Lined Storage Facility	Silo w/o Pit	Earthen Silage Storage Trench Or Pit	Earthen Manure Basin

Temporary Manure Stack or Platform	Watertight Liquid Manure Tank or Basin	Manure Pressure Pipe	Subsurface Gasoline or Oil Tank	Waste Pond or Land Disposal Unit (Specify Type)	Manure Storage Basin / Concrete Floor Only / Concrete Floor and Partial Concrete Walls	Other (Describe)

5. Well is intended to supply water for: House

6. DRILLHOLE

Dia. (in.)	From (ft.)	To (ft.)	Dia. (in.)	From (ft.)	To (ft.)
8	Surface	105			
6	105	111			

7. CASING, LINER, CURBING AND SCREEN
Material, Weight, Specification

Dia. (in.)	Mfg. & Method of Assembly	From (ft.)	To (ft.)
6	Std Black Pipe, .280 Wall, Weld JTS, A-53	Surface	105
6"	S.S. Screen	105	111

8. GROUT OR OTHER SEALING MATERIAL

Kind	From (ft.)	To (ft.)
mud cuttings	Surface	111

9. FORMATIONS

Kind	From (ft.)	To (ft.)
Clay	Surface	10
sand & gravel	10	35
sand	35	76
gravel & Clay	76	90
gravel	90	111

10. TYPE OF DRILLING MACHINE USED
☐ Cable Tool ☑ Rotary-hammer w/drilling mud & air ☐ Jetting with
☐ Rotary-air w/drilling mud ☐ Rotary-hammer & air ☐ Air ☐ Water
☐ Rotary-w/drilling mud ☐ Reverse Rotary

Well construction completed on: Sept 10 1981

11. MISCELLANEOUS DATA
Yield Test: 2 Hrs. at 15 GPM
Depth from surface to normal water level: 45 Ft.
Depth of water level when pumping: 84 Ft. Stabilized ☑ Yes ☐ No

Well is terminated 12 inches ☑ above ☐ below final grade
Well disinfected upon completion ☑ Yes ☐ No
Well sealed watertight upon completion ☑ Yes ☐ No

Water sample sent to: Madison laboratory on: Sept 11 1981

Your opinion concerning other pollution hazards, information concerning difficulties encountered, and data relating to nearby wells, screens, seals, method of finishing the well, amount of cement used in grouting, blasting, etc., should be given on reverse side.

Signature: [signature]

Business Name and Complete Mailing Address:
SAM'S ROTARY DRILLERS
ROUTE 2
RANDOLPH, WISCONSIN 53958

State of Wisconsin
Department of Natural Resources
Box 7921
Madison, Wisconsin 53707

NOTE:
White Copy - Division's Copy
Green Copy - Driller's Copy
Yellow Copy - Owner's Copy

WELL CONSTRUCTOR'S REPORT

Form 3300-15 Rev. 12-76

FEB 1 2 1979

68

1. COUNTY: Sauk
CHECK (✓) ONE: ☒ Town ☐ Village ☐ City
Name: Merrimac

2. LOCATION: Sw1/4 Nw1/4 (Section) 8 (Section) ✓ 10N (Township) 7E (Range)
OR – Grid or Street No. Street Name
AND – If available subdivision name, lot & block No.

3. NAME ☒ OWNER ☐ AGENT AT TIME OF DRILLING CHECK (✓) ONE
Allen Zurbacken
ADDRESS: 160 Grove St.
POST OFFICE: Merrimac, Wis

4. Distance in feet from well to nearest: (Record answer in appropriate block)

Building	Sanitary Bldg. Drain C.I.	Sanitary Bldg. Drain Other	Sanitary Bldg. Sewer C.I.	Sanitary Bldg. Sewer Other	Floor Drain Connected To: C.I. Sewer	Floor Drain Connected To: Other Sewer	Storm Bldg. Drain C.I.	Storm Bldg. Drain Other	Storm Bldg. Sewer C.I.	Storm Bldg. Sewer Other
10 ft	25 ft		39 ft		40 ft					

Street Sewer San.	Street Sewer Storm	Other Sewers C.I.	Other Sewers Other	Foundation Drain Connected to: Sewer / Clearwater Dr.	Sewage Sump / Clearwater Sump	Sewage Sump C.I.	Sewage Sump Other	Clearwater Sump	Septic Tank	Holding Tank	Sewage Absorption Unit: Seepage Pit / Seepage Bed / Seepage Trench
									70 ft		90 ft

Privy	Pet Waste Pit	Pit: Nonconforming Existing: Well / Pump / Tank	Subsurface Pumproom Nonconforming Existing	Barn Gutter	Animal Barn Pen	Animal Yard	Silo With Pit	Glass Lined Storage Facility	Silo w/o Pit	Earthen Silage Storage Trench Or Pit

Temporary Manure Stack	Watertight Liquid Manure Tank	Solid Manure Storage Structure	Subsurface Gasoline or Oil Tank	Waste Pond or Land Disposal Unit (Specify Type)	Other (Give Description)

5. Well is intended to supply water for: Home

6. DRILLHOLE

Dia. (in.)	From (ft.)	To (ft.)	Dia. (in.)	From (ft.)	To (ft.)
10	Surface	20			
6	20	176			

7. CASING, LINER, CURBING AND SCREEN

Dia. (in.)	Material, Weight, Specification & Method of Assembly	From (ft.)	To (ft.)
6"	New Stone Pk Steel	Surface	173
19.45# per ft	T&C		
ASTM A53	Sumitomo Metals		
3 ft	Johnson Stainless Screen		
Installed	15 Slot	173	176

8. GROUT OR OTHER SEALING MATERIAL

Kind	From (ft.)	To (ft.)
Drill Cuttings	Surface	20

9. FORMATIONS

Kind	From (ft.)	To (ft.)
Sand & Clay	Surface	18
Sand	18	130
Sand & Gravel	130	168
Gravel	168	176

10. TYPE OF DRILLING MACHINE USED
☒ Cable Tool ☐ Rotary-air w/drilling mud ☐ Rotary-w/drilling mud ☐ Rotary-hammer w/drilling mud & air ☐ Rotary-hammer & air ☐ Reverse Rotary ☐ Jetting with ☐ Air ☐ Water

Well construction completed on Aug 23 1978

11. MISCELLANEOUS DATA
Yield Test: 18 Hrs. at 25 GPM
Depth from surface to normal water level 50 Ft.
Depth of water level when pumping 60 Ft. Stabilized ☒ Yes ☐ No

Well is terminated 10 inches ☒ above ☐ below final grade
Well disinfected upon completion ☒ Yes ☐ No
Well sealed watertight upon completion ☒ Yes ☐ No

Water sample sent to Madison laboratory on Aug 24 1978

Your opinion concerning other pollution hazards, information concerning difficulties encountered, and data relating to nearby wells, screens, seals, method of finishing the well, amount of cement used in grouting, blasting, etc., should be given on reverse side.

Signature: LaVerne Welsch Registered Well Driller
Complete Mail Address: 245 Park Ave Prairie Dr. Sa.

State of Wisconsin
Department of Natural Resources
Private Water Supply
Box 7921
Madison, Wisconsin 53707

NOTE:
White Copy - Division's Copy
Green Copy - Driller's Copy
Yellow Copy - Owner's Copy

WELL CONSTRUCTOR'S REPOR 69

Form 3300-15 Rev. 2-7

FEB 1 1984

COUNTY: SAUK

CHECK (✓) ONE: ☒ Town ☐ Village ☐ City

Name: MERRIMAC

1/4 Section or Gov't. Lot ✓ | Section | Township | Range

2. LOCATION: SE 1/4 of NW 1/4 8 10N 7E

OR – Grid or Street No. | Street or Road Name

AND – If available subdivision name, lot & block No.: WEIGANDS POINT SUB.

3. NAME ☒ OWNER ☐ AGENT AT TIME OF DRILLING CHECK (✓) ONE: FRANCIS BREY

ADDRESS: WEIGAND'S BAY

POST OFFICE | ZIP CODE

4. Distance in feet from well to nearest: (Record answer in appropriate block)

Building	Sanitary Bldg. Drain C.I.	Sanitary Bldg. Drain Other	Sanitary Bldg. Sewer C.I.	Sanitary Bldg. Sewer Other	Floor Drain Connected To: C.I. Sewer	Floor Drain Connected To: Other Sewer	Storm Bldg. Drain C.I.	Storm Bldg. Drain Other	Storm Bldg. Sewer C.I.	Storm Bldg. Sewer Other
4'										

Street Sewer San.	Street Sewer Storm	Other Sewers C.I.	Other Sewers Other	Foundation Drain Connected to: Sewer	Foundation Drain Connected to: Sewage Sump	Foundation Drain Connected to: Clearwater Dr.	Foundation Drain Connected to: Clearwater Sump	Sewage Sump C.I.	Sewage Sump Other	Clearwater Sump	Septic Tank	Holding Tank	Sewage Absorption Unit	Seepage Pit	Seepage Bed	Seepage Trench	Manure Hopper or Retention or Pnuematic Tank
										NOT		IN					

Privy	Pet Waste Pit	Pit: Nonconforming Existing	Subsurface Pumproom Nonconforming Existing	Barn Gutter	Animal Barn Pen	Animal Yard	Silo With Pit	Glass Lined Storage Facility	Silo w/o Pit	Earthen Silage Storage Trench Or Pit	Earthen Manure Basin
		Well									
		Pump									
		Tank									

Temporary Manure Stack or Platform	Watertight Liquid Manure Tank or Basin	Manure Pressure Pipe	Subsurface Gasoline or Oil Tank	Waste Pond or Land Disposal Unit (Specify Type)	Manure Storage Basin	Concrete Floor Only	Concrete Floor and Partial Concrete Walls	Other (Describe)

5. Well is intended to supply water for: HOME

6. DRILLHOLE

Dia. (in.)	From (ft.)	To (ft.)	Dia. (in.)	From (ft.)	To (ft.)
6	Surface	85'			

CASING, LINER, CURBING AND SCREEN
Material, Weight, Specification

Dia. (in.)	Mfg. & Method of Assembly	From (ft.)	To (ft.)
6	P.E. NEW PIPE	Surface	82
	ASTM A-120		
	18.97 LBS/FT. 1200psi		
	VALLEY STEEL PIPE		
6	JOHNSON SCREEN	82	85'

8. GROUT OR OTHER SEALING MATERIAL

Kind	From (ft.)	To (ft.)
NONE	Surface	—

9. FORMATIONS

Kind	From (ft.)	To (ft.)
COARSE SAND & GRAVEL	Surface	85'

10. TYPE OF DRILLING MACHINE USED

☒ Cable Tool ☐ Rotary-air w/drilling mud ☐ Rotary-w/drilling mud ☐ Rotary-hammer w/drilling mud & air ☐ Rotary-hammer & air ☐ Reverse Rotary ☐ Jetting with ☐ Air ☐ Water

Well construction completed on 7-31 19 83

11. MISCELLANEOUS DATA

Yield Test: 48 Hrs. at 20 GPM

Depth from surface to normal water level 20 Ft.

Depth of water level when pumping 25' Ft. Stabilized ☒ Yes ☐ No

Well is terminated 12 inches ☒ above ☐ below final grade

Well disinfected upon completion ☒ Yes ☐ No

Well sealed watertight upon completion ☒ Yes ☐ No

Water sample sent to S.L.H. laboratory on 8-8- 19 83

Any opinion concerning other pollution hazards, information concerning difficulties encountered, and data relating to nearby wells, screens, seals, method of disinfecting the well, amount of cement used in grouting, blasting, etc., should be given on reverse side.

Signature: Terry L. Marshall Registered Well Driller

Business Name and Complete Mailing Address: Marshall Well Drilling Co. Inc. Wis. Dells, Wis. 53965

State of Wisconsin
Department of Natural Resources
Private Water Supply
Box 7921
Madison, Wisconsin 53707

NOTE:
White Copy — Division's Copy
Green Copy — Driller's Copy
Yellow Copy — Owner's Copy

WELL CONSTRUCTOR'S REPOR 7.
Form 3300-15 Rev. 2-

1. COUNTY Sauk — CHECK (✓) ONE: ☒ Town ☐ Village ☐ City — Name Merrimac

2. LOCATION — ¼ Section or Gov't. Lot: NE ¼ NW ¼ — Section: 8 — Township: 10N — Range: 7E
OR – Grid or Street No. | Street or Road Name
AND – If available subdivision name, lot & block No.

3. NAME ☒ OWNER ☐ AGENT AT TIME OF DRILLING CHECK (✓) ON: Dairy Forage Center
ADDRESS: R.R. Prairie Du Sac, Wi
POST OFFICE: Larry Lenz, Contractor — ZIP CODE:

4. Distance in feet from well to nearest: (Record answer in appropriate block)

Building	Sanitary Bldg. Drain C.I.	Sanitary Bldg. Drain Other	Sanitary Bldg. Sewer C.I.	Sanitary Bldg. Sewer Other	Floor Drain Connected To: C.I. Sewer	Floor Drain Connected To: Other Sewer	Storm Bldg. Drain C.I.	Storm Bldg. Drain Other	Storm Bldg. Sewer C.I.	Storm Bldg. Sewer Other
10 ft	20 ft		32 ft		40 ft					

Street Sewer San.	Street Sewer Storm	Other Sewers C.I.	Other Sewers Other	Foundation Drain Connected to: Sewer / Clearwater Dr.	Sewage Sump / Clearwater Sump	Sewage Sump C.I.	Sewage Sump Other	Clearwater Sump	Septic Tank	Holding Tank	Sewage Absorption Unit: Seepage Pit / Seepage Bed / Seepage Trench	Manure Hopper or Retention or Pnuematic Tank
									40'		75'	

Privy	Pet Waste Pit	Pit: Nonconforming Existing: Well / Pump / Tank	Subsurface Pumproom Nonconforming Existing	Barn Gutter	Animal Barn Pen	Animal Yard	Silo With Pit	Glass Lined Storage Facility	Silo w/o Pit	Earthen Silage Storage Trench Or Pit	Earthen Manure Basin

Temporary Manure Stack or Platform	Watertight Liquid Manure Tank or Basin	Manure Pressure Pipe	Subsurface Gasoline or Oil Tank	Waste Pond or Land Disposal Unit (Specify Type)	Manure Storage Basin / Concrete Floor Only / Concrete Floor and Partial Concrete Walls	Other (Describe)

5. Well is intended to supply water for: Home

6. DRILLHOLE

Dia. (in.)	From (ft.)	To (ft.)	Dia. (in.)	From (ft.)	To (ft.)
10	Surface	15			
6	15	270			

7. CASING, LINER, CURBING AND SCREEN
Material, Weight, Specification

Dia. (in.)	Mfg. & Method of Assembly	From (ft.)	To (ft.)
6"	New Stand Pk Steel Sumitomo Metals ASTM 953 19.45# per ft Tel.	Surface	256

8. GROUT OR OTHER SEALING MATERIAL

Kind	From (ft.)	To (ft.)
Drill Cuttings	Surface	15

9. FORMATIONS

Kind	From (ft.)	To (ft.)
Clay & Sand	Surface	10
Sand & Gravel	10	75
Sand	75	125
Sand & Gravel	125	235
Sand Rock	235	270

10. TYPE OF DRILLING MACHINE USED
☒ Cable Tool ☐ Rotary-air w/drilling mud ☐ Rotary-w/drilling mud ☐ Rotary-hammer w/drilling mud & air ☐ Rotary-hammer & air ☐ Reverse Rotary ☐ Jetting with ☐ Air ☐ Water

Well construction completed on Oct 21 1980

11. MISCELLANEOUS DATA
Yield Test: 18 Hrs. at 20 GPM
Depth from surface to normal water level 90 Ft.
Depth of water level when pumping 90 Ft. Stabilized ☒ Yes ☐ No

Well is terminated 10 inches ☒ above ☐ below final grade
Well disinfected upon completion ☒ Yes ☐ No
Well sealed watertight upon completion ☒ Yes ☐ No

Water sample sent to Madison laboratory on Oct 22 1980

Your opinion concerning other pollution hazards, information concerning difficulties encountered, and data relating to nearby wells, screens, seals, method of finishing the well, amount of cement used in grouting, blasting, etc., should be given on reverse side.

Signature: LaVerne Welsch — Registered Well Driller
Business Name and Complete Mailing Address: 245 Park Ave Prairie Du Sac

State of Wisconsin
Department of Natural Resources
Private Water Supply
Box 7921
Madison, Wisconsin 53707

NOTE:
White Copy — Division's Copy
Green Copy — Driller's Copy
Yellow Copy — Owner's Copy

WELL CONSTRUCTOR'S REPORT 71
Form 3300-15 Rev. 2-

COUNTY Sauk

CHECK (✓) ONE: ☒ Town ☐ Village ☐ City Name Merrimac

2. LOCATION ¼ Section or Gov't. Lot: SE ¼ NW ¼ Section: 8 Township: 10N Range: 7E

OR – Grid or Street No. | Street or Road Name

AND – If available subdivision name, lot & block No.

3. NAME ☒ OWNER ☐ AGENT AT TIME OF DRILLING CHECK (✓) ONE
F.H. Humbert

ADDRESS RR

POST OFFICE Mineral Point, Wis ZIP CODE

4. Distance in feet from well to nearest: (Record answer in appropriate block)

Building	Sanitary Bldg. Drain C.I.	Sanitary Bldg. Drain Other	Sanitary Bldg. Sewer C.I.	Sanitary Bldg. Sewer Other	Floor Drain Connected To: C.I. Sewer	Floor Drain Connected To: Other Sewer	Storm Bldg. Drain C.I.	Storm Bldg. Drain Other	Storm Bldg. Sewer C.I.	Storm Bldg. Sewer Other
15 ft	45 ft		50 ft		40 ft					

Street Sewer San.	Street Sewer Storm	Other Sewers C.I.	Other Sewers Other	Foundation Drain Connected to: Sewer / Clearwater Dr.	Sewage Sump / Clearwater Sump	Sewage Sump C.I.	Sewage Sump Other	Clearwater Sump	Septic Tank	Holding Tank	Sewage Absorption Unit: Seepage Pit / Seepage Bed / Seepage Trench	Manure Hopper or Retention or Pnuematic Tank
									75'		100'	

Privy	Pet Waste Pit	Pit: Nonconforming Existing: Well / Pump / Tank	Subsurface Pumproom Nonconforming Existing	Barn Gutter	Animal Barn Pen	Animal Yard	Silo With Pit	Glass Lined Storage Facility	Silo w/o Pit	Earthen Silage Storage Trench Or Pit	Earthen Manure Basin

Temporary Manure Stack or Platform	Watertight Liquid Manure Tank or Basin	Manure Pressure Pipe	Subsurface Gasoline or Oil Tank	Waste Pond or Land Disposal Unit (Specify Type)	Manure Storage Basin / Concrete Floor Only / Concrete Floor and Partial Concrete Walls	Other (Describe)

. Well is intended to supply water for: Home

5. DRILLHOLE

Dia. (in.)	From (ft.)	To (ft.)	Dia. (in.)	From (ft.)	To (ft.)
10	Surface	20			
[illegible]	20	245			

6. CASING, LINER, CURBING AND SCREEN

Dia. (in.)	Material, Weight, Specification Mfg. & Method of Assembly	From (ft.)	To (ft.)
6"	New Stand Bell Steel 19.45# per ft Tr C Sumitomo Metal A53	Surface	240

7. GROUT OR OTHER SEALING MATERIAL

Kind	From (ft.)	To (ft.)
Drill Cuttings	Surface	20

9. FORMATIONS

Kind	From (ft.)	To (ft.)
Sand + Clay	Surface	15
Sand + Gravel	15	125
Sand	125	175
Sand Rock	175	245

10. TYPE OF DRILLING MACHINE USED

☒ Cable Tool ☐ Rotary-air w/drilling mud ☐ Rotary-w/drilling mud ☐ Rotary-hammer w/drilling mud & air ☐ Rotary-hammer & air ☐ Reverse Rotary ☐ Jetting with ☐ Air ☐ Water

Well construction completed on Apr 27 1982

Well is terminated 12 inches ☒ above ☐ below final grade

Well disinfected upon completion ☒ Yes ☐ No

Well sealed watertight upon completion ☒ Yes ☐ No

11. MISCELLANEOUS DATA

Yield Test: 18 Hrs. at 25 GPM

Depth from surface to normal water level 45 Ft.

Depth of water level when pumping 60 Ft. Stabilized ☒ Yes ☐ No

Water sample sent to Madison laboratory on Apr 28 1982

[illegible] opinion concerning other pollution hazards, information concerning difficulties encountered, and data relating to nearby wells, screens, seals, method of [illegible]ning the well, amount of cement used in grouting, blasting, etc., should be given on reverse side.

Signature: L. Verne Welsch Registered Well Driller

Business Name and Complete Mailing Address: 245 Park Ave Prairie Du Sac

WELL CONSTRUCTION REPORT
WISCONSIN STATE BOARD OF HEALTH
WELL CONSTRUCTION DIVISION

72

JAN 8 1944

Note: Section 31 of the Wisconsin Well Construction Code, having the force and effect of law, provides that within thirty days after completion of every well the driller shall submit a report covering all essential details of construction to the State Board of Health on a form provided by the Board.

Owner Badger Ordnance Works Tract No 25-1 Driller Geo Reynolds

Street or RFD Tract No 25-1 Post Office Portage

Post Office Baraboo Wis Date 1/6/44 Permit No.

LOCATION OF PREMISES

Sauk County Merrimac Town

Describe further by subdivision, plat, district, lake, lot.

block, nearest principal highway, etc., whichever apply.

The square below represents a section of land divided into 40 acre tracts. Mark the position of the premises in the section.

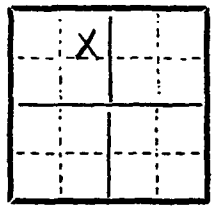

Sec. No. 8

Twp. North 10-11

Range 6 7 E W

T10N R7E

DIAGRAM OF PREMISES

See Well Construction Report bulletin. In making the diagram in the space below consider 10 ft. as the distance between lines. Be sure to indicate NORTH.

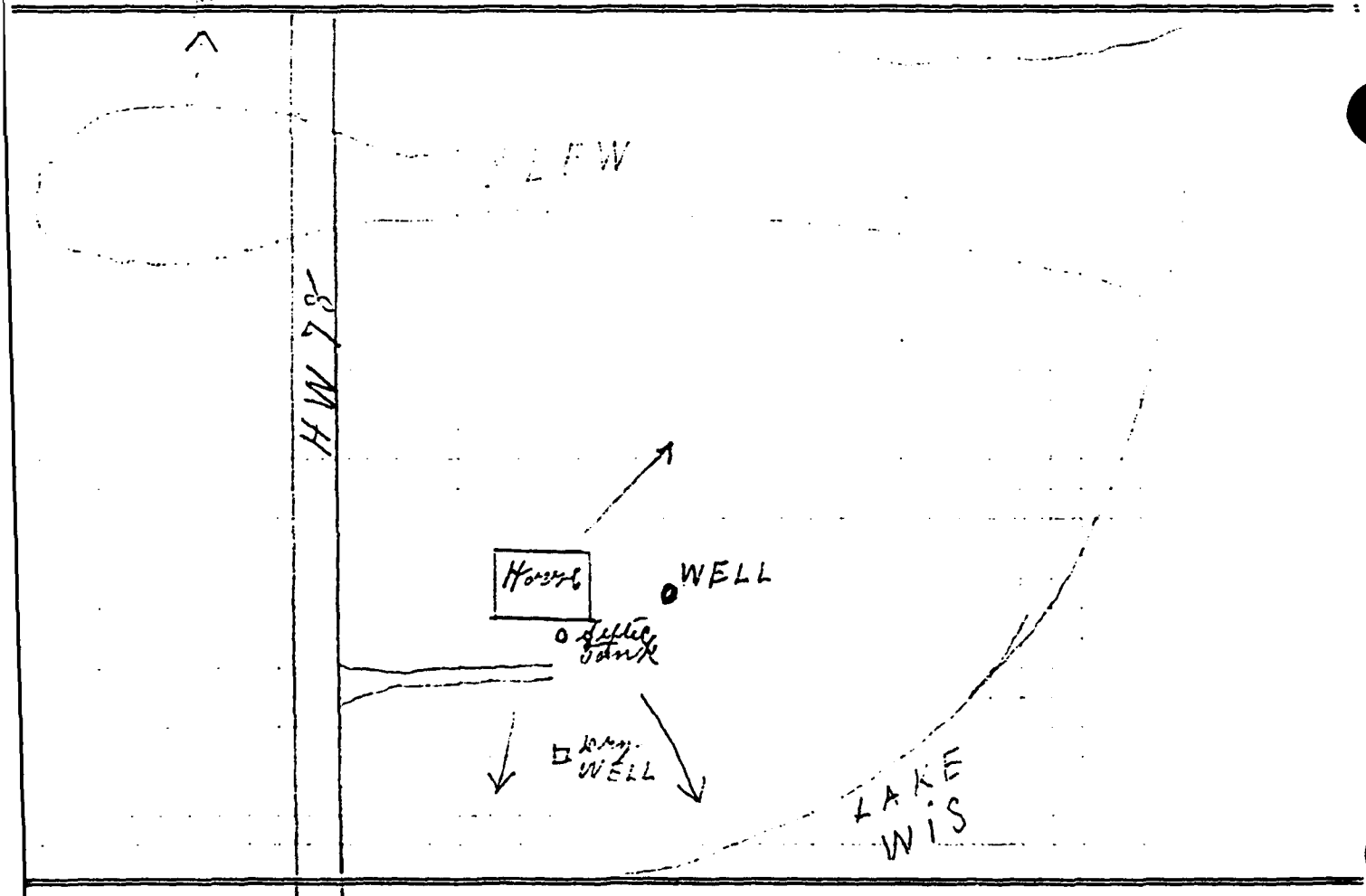

Additional copies of this form may be obtained in lots of 12 for 25c. Send remittance with order to State Board of Health, Well Construction Division, Madison, Wis.

WELL LOG *and* REPORT

For method of making report, refer to bulletin entitled "Well Construction Report," 7-5-39. Accuracy is essential.

In this column indicate the kind of casing, liner, shoe and other accessories used.

Cased to 171 ft
with 6 inch Well
Drillers Spec
with Forged Steel
Drive Shoe

WELL DIAGRAM
Use a red line to show casing or liner pipe. Use black for drill or borehole.

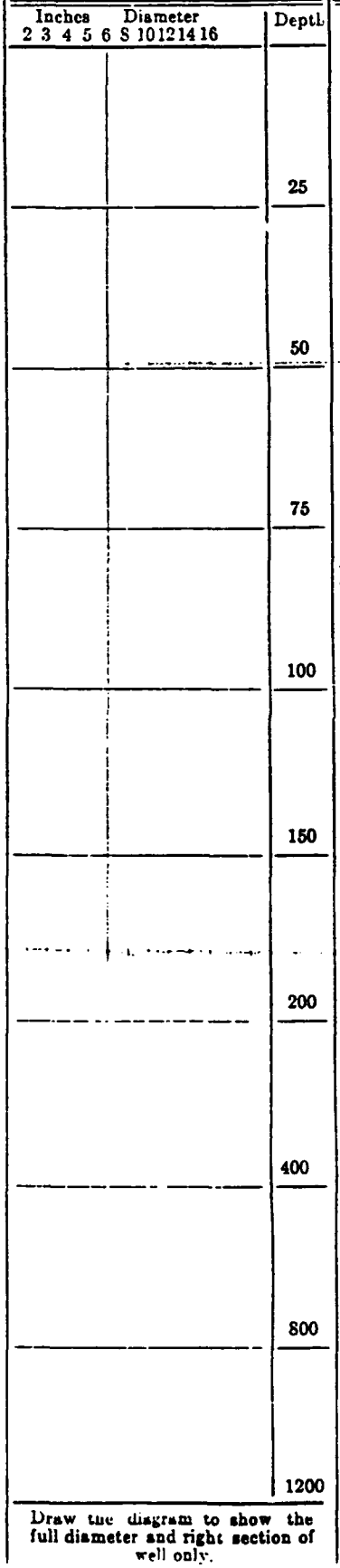

Draw the diagram to show the full diameter and right section of well only.

In this column state the kind of formations penetrated, their thickness in feet and if water bearing.

0 to 20 ft Sand & Gravel
with a little
Clay
20 to 80 ft Savey Sand
Gravel Mixed & a little
Clay
Water at 50 ft
80 to 165 ft River
Sand with a little
fine Gravel
165 to171 Gravel

Record of FINAL Pumping test

Duration of test
Hours 2

Pumping rate
G.P.M. 15

Depth of pump in well. Ft. 93

Standing water-level (from surface)
Ft. 51

Water-level when pumping Ft. 66

Water. End of test.
Clear Clear
Cloudy
Turbid

Was the well sterilized?
Yes Yes No

To which laboratory was sample sent?
Madison
Date 12/7/43

Was the well sealed on completion?
Yes Yes No

How high did you leave the casing-pipe above grade?
10 inches

Well was completed
Date 12/7/43

Well Constructor
Geo Reynolds
Signature

WELL CONSTRUCTION REPORT
WISCONSIN STATE BOARD OF HEALTH
WELL CONSTRUCTION DIVISION

73

JAN. 1944

Note: Section 31 of the Wisconsin Well Construction Code, having the force and effect of law, provides that within thirty days after completion of every well the driller shall submit a report covering all essential details of construction to the State Board of Health on a form provided by the Board.

Owner Badger Ordnance Works — Driller Geo Reynolds

Street or RFD Tract No 8-1 — Post Office Portage Wis

Post Office Baraboo Wis — Date 1/6/44 — Permit No.

LOCATION OF PREMISES

Sauk (County) — Merrimac (Town)

Describe further by subdivision, plat, district, lake, lot.

block, nearest principal highway, etc., whichever apply.

The square below represents a section of land divided into 40 acre tracts. Mark the position of the premises in the section.

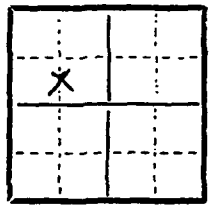

Sec. No. 5

Twp. North 10-11

Range 6 7 E W

T10N R7E

DIAGRAM OF PREMISES

See Well Construction Report bulletin. In making the diagram in the space below consider 10 ft. as the distance between lines. Be sure to indicate NORTH.

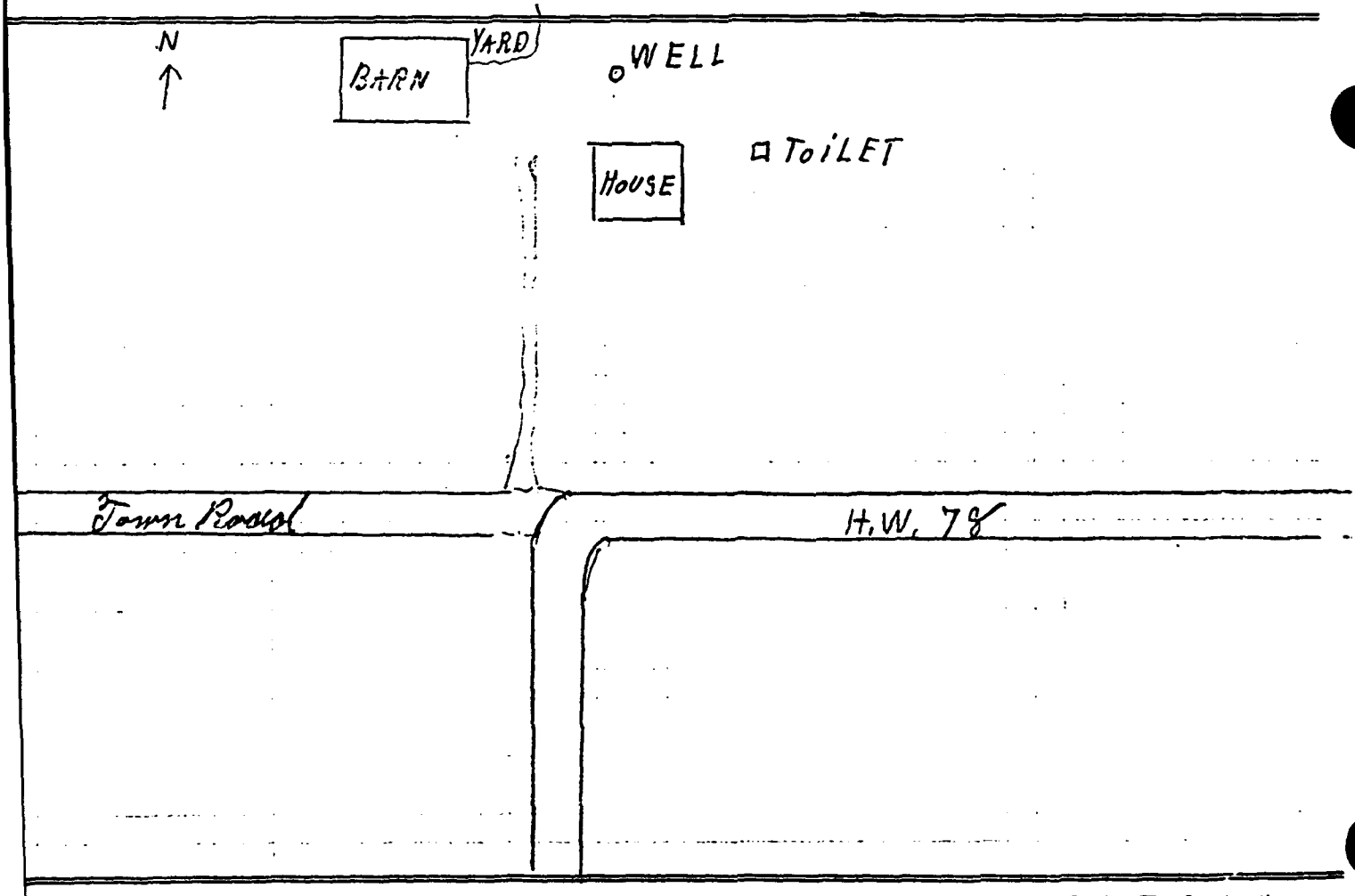

Additional copies of this form may be obtained in lots of 12 for 25c. Send remittance with order to State Board of Health, Well Construction Division, Madison, Wis.

WELL LOG *and* REPORT

For method of making report, refer to bulletin entitled "Well Construction Report." 7-5-39. Accuracy is essential.

[redacted] column indicate the kind [redacted], liner, shoe and other accessories used.

Cased to 187 ft
with 6 inch Well
Drillers Spec
with a Forged Steel
Drive Shoe

WELL DIAGRAM
Use a red line to show casing or liner pipe. Use black for drill or borehole.

Inches Diameter
2 3 4 5 6 8 10 12 14 16

Depth

25
50
75
100
150
200
400
800
1200

Draw the diagram to show the full diameter and right section of well only.

In this column state the kind of formations penetrated, their thickness in feet and if water bearing.

0 to 5 ft Top Soil
5 to 20 ft Sand
20 to 30 " Sand & Gravel
30 " 35 " Savey Sand
and Stone
35 " 70 " Sand Hardpan
sone Stone

Water at 78 ft

70 to 100 Sand & Gravel
Some Bolders
100 to 175 River Sand
a little Gravel
175 to 185 Sand
185 to 187 Gravel

Record of FINAL Pumping test

Duration of test
Hours 2

Pumping rate
G.P.M. 15

Depth of pump in well. Ft. 120

Standing water-level (from surface)
Ft. 78

Water-level when pumping Ft. 86

Water. End of test.
Clear. Clear
Cloudy
Turbid

Was the well sterilized?
Yes Yes No

To which laboratory was sample sent?
Madison
Date 12/15/43

Was the well sealed on completion?
Yes Yes No

How high did you leave the casing-pipe above grade?
8 inches

Well was completed
Date 12/15/43

Well Constructor
Geo Reynolds
Signature

74

WELL CONSTRUCTOR'S REPORT — WISCONSIN STATE BOARD OF HEALTH

RECEIVED MAY 23 1966

1. COUNTY: Sauk — CHECK ONE: ☒ Town ☐ Village ☐ City — NAME: Merrimac

2. LOCATION (Number and Street or ¼ section, section, township and range. Also give subdivision name, lot and block numbers when available.)
✓ E½, NE, SE — Sec. 5 T10N R7E

3. OWNER AT TIME OF DRILLING: Mrs. Louis Beddman

4. OWNER'S COMPLETE MAIL ADDRESS: Merrimac, Wis

5. Distance in feet from well to nearest: (Record answer in appropriate block)

BUILDING	SANITARY SEWER C. I.	SANITARY SEWER TILE	FLOOR DRAIN C. I.	FLOOR DRAIN TILE	FOUNDATION DRAIN SEWER CONNECTED	FOUNDATION DRAIN INDEPENDENT	WASTE WATER DRAIN C. I.	WASTE WATER DRAIN TILE
40								

CLEAR WATER DRAIN C. I.	CLEAR WATER DRAIN TILE	SEPTIC TANK	PRIVY	SEEPAGE PIT	ABSORPTION FIELD	BARN	SILO	ABANDONED WELL	SINK HOLE
		60		75		100		30	

OTHER POLLUTION SOURCES (Give description such as dump, quarry, drainage well, stream, pond, lake, etc.)

6. Well is intended to supply water for: Farm & Home

7. DRILLHOLE

Dia. (in.)	From (ft.)	To (ft.)	Dia. (in.)	From (ft.)	To (ft.)
6	Surface	95			

8. CASING, LINER, CURBING, AND SCREEN

Dia. (in.)	Kind and Weight	From (ft.)	To (ft.)
6	Stand Bck	Surface	95

9. GROUT OR OTHER SEALING MATERIAL

Kind	From (ft.)	To (ft.)
	Surface	

10. FORMATIONS

Kind	From (ft.)	To (ft.)
Topsoil	Surface	6
Sand Gravel Clay	6	70
Sand & Gravel	70	95

Well construction completed on Nov 9 1965

Well is terminated 20 inches ☒ above ☐ below final grade

Well disinfected upon completion ☒ Yes ☐ No

Well sealed watertight upon completion ☒ Yes ☐ No

11. MISCELLANEOUS DATA

Yield test: 10 Hrs. at 15 GPM

Depth from surface to normal water level 27 ft.

Depth to water level when pumping 27 ft.

Water sample sent to Madison laboratory on: Feb 17 1966

Your opinion concerning other pollution hazards, information concerning difficulties encountered, and data relating to nearby wells, screens, seals, type of casing joints, method of finishing the well, amount of cement used in grouting, blasting, sub-surface pumprooms, access pits, etc., should be given on reverse side.

SIGNATURE: LaVerne Welsch — Registered Well Driller

COMPLETE MAIL ADDRESS: 245 Park Ave Prairie Du

Please do not write in space below

COLIFORM TEST RESULT	GAS — 24 HRS.	GAS — 48 HRS.	CONFIRMED	REMARKS

State of Wisconsin
Department of Natural Resources
Box 7921
Madison, Wisconsin 53707

NOTE:
White Copy - Division's Copy
Green Copy - Driller's Copy
Yellow Copy - Owner's Copy

WELL CONSTRUCTOR'S REPORT
Form 3300-15 Rev. 12-76

75

FEB 1 2 1979

COUNTY: Sauk

CHECK (✓) ONE: ☒ Town ☐ Village ☐ City

Name: Merrimac

LOCATION: ¼ Section: NW¼ SW¼ | Section: 5 | Township: 10N | Range: 7E

OR – Grid or Street No. / Street Name:

AND – If available subdivision name, lot & block No.:

3. NAME ☒ OWNER ☐ AGENT AT TIME OF DRILLING CHECK (✓) ONE: Dave Purcell

ADDRESS: Rte 1

POST OFFICE: Merrimac, Wis

4. Distance in feet from well to nearest: (Record answer in appropriate block)

Building	Sanitary Bldg. Drain C.I.	Sanitary Bldg. Drain Other	Sanitary Bldg. Sewer C.I.	Sanitary Bldg. Sewer Other	Floor Drain Connected To: C.I. Sewer	Floor Drain Connected To: Other Sewer	Storm Bldg. Drain C.I.	Storm Bldg. Drain Other	Storm Bldg. Sewer C.I.	Storm Bldg. Sewer Other
8 ft	25 ft		37 ft		40 ft					

Street Sewer San.	Street Sewer Storm	Other Sewers C.I.	Other Sewers Other	Foundation Drain Connected to: Sewer	Foundation Drain Connected to: Sewage Sump	Foundation Drain Connected to: Clearwater Dr.	Foundation Drain Connected to: Clearwater Sump	Sewage Sump C.I.	Sewage Sump Other	Clearwater Sump	Septic Tank	Holding Tank	Sewage Absorption Unit
											60 ft		Seepage Pit
													Seepage Bed 75 ft
													Seepage Trench

Privy	Pet Waste Pit	Pit: Nonconforming Existing	Subsurface Pumproom	Barn Gutter	Animal Barn Pen	Animal Yard	Silo With Pit	Glass Lined Storage Facility	Silo w/o Pit	Earthen Silage Storage Trench Or Pit
		Well	Nonconforming Existing							
		Pump								
		Tank								

Temporary Manure Stack	Watertight Liquid Manure Tank	Solid Manure Storage Structure	Subsurface Gasoline or Oil Tank	Waste Pond or Land Disposal Unit (Specify Type)	Other (Give Description)

Well is intended to supply water for: Home

5. DRILLHOLE

Dia. (in.)	From (ft.)	To (ft.)	Dia. (in.)	From (ft.)	To (ft.)
10	Surface	20			
6	20	128			

6. CASING, LINER, CURBING AND SCREEN

Dia. (in.)	Material, Weight, Specification & Method of Assembly	From (ft.)	To (ft.)
6"	New Standard Black Steel	Surface	128
7.45	# per ft T&C		
ASTM A53	Seamless Metal		

7. GROUT OR OTHER SEALING MATERIAL

Kind	From (ft.)	To (ft.)
Drill Cuttings	Surface	20

9. FORMATIONS

Kind	From (ft.)	To (ft.)
Sand & Clay	Surface	20
Sand	20	120
Gravel	120	128

10. TYPE OF DRILLING MACHINE USED

☒ Cable Tool ☐ Rotary-air w/drilling mud ☐ Rotary-w/drilling mud ☐ Rotary-hammer w/drilling mud & air ☐ Rotary-hammer & air ☐ Reverse Rotary ☐ Jetting with: ☐ Air ☐ Water

Well construction completed on: Dec 7 19 78

11. MISCELLANEOUS DATA

Yield Test: 15 Hrs. at 25 GPM

Depth from surface to normal water level: 95 Ft.

Depth of water level when pumping: 95 Ft. Stabilized ☒ Yes ☐ No

Well is terminated: 10 inches ☒ above ☐ below final grade

Well disinfected upon completion: ☒ Yes ☐ No

Well sealed watertight upon completion: ☒ Yes ☐ No

Water sample sent to: Madison laboratory on: Dec 8 19 78

Opinion concerning other pollution hazards, information concerning difficulties encountered, and data relating to nearby wells, screens, seals, method of sealing the well, amount of cement used in grouting, blasting, etc., should be given on reverse side.

Signature: LaVerne Helseth Registered Well Driller

Complete Mail Address: 245 Park Ave Prairie Du Sac

FEB 28 1979

State of Wisconsin
Department of Natural Resources
Box 7921
Madison, Wisconsin 53707

NOTE:
White Copy - Division's Copy
Green Copy - Driller's Copy
Yellow Copy - Owner's Copy

WELL CONSTRUCTOR'S REPORT 76
Form 3300-15 Rev. 12-76

1. COUNTY: Sauk
CHECK (✓) ONE: ☒ Town ☐ Village ☐ City
Name: Merrimac

2. LOCATION: ✓ E 1/2 ¼ Section: NE 1/4 NE 1/4 Section: 5 Township: 10N Range: 7E
OR – Grid or Street No. / Street Name
AND – If available subdivision name, lot & block No.

3. NAME ☒ OWNER ☐ AGENT AT TIME OF DRILLING CHECK (✓) ONE: Neal Reddeman
ADDRESS: 930 Cambridge
POST OFFICE: Crystal Lake, Ill

4. Distance in feet from well to nearest: (Record answer in appropriate block)

Building	Sanitary Bldg. Drain C.I.	Sanitary Bldg. Drain Other	Sanitary Bldg. Sewer C.I.	Sanitary Bldg. Sewer Other	Floor Drain Connected To: C.I. Sewer	Floor Drain Connected To: Other Sewer	Storm Bldg. Drain C.I.	Storm Bldg. Drain Other	Storm Bldg. Sewer C.I.	Storm Bldg. Sewer Other
17 ft	40 ft		30 ft		35 ft					

Street Sewer San.	Street Sewer Storm	Other Sewers C.I.	Other Sewers Other	Foundation Drain Connected to: Sewer / Clearwater Dr.	Sewage Sump / Clearwater Sump	Sewage Sump C.I.	Sewage Sump Other	Clearwater Sump	Septic Tank	Holding Tank	Sewage Absorption Unit: Seepage Pit / Seepage Bed / Seepage Trench
									75 ft		~~100 ft~~ 100 ft

Privy	Pet Waste Pit	Pit: Nonconforming Existing: Well / Pump / Tank	Subsurface Pumproom Nonconforming Existing	Barn Gutter	Animal Barn Pen	Animal Yard	Silo With Pit	Glass Lined Storage Facility	Silo w/o Pit	Earthen Silage Storage Trench Or Pit

Temporary Manure Stack	Watertight Liquid Manure Tank	Solid Manure Storage Structure	Subsurface Gasoline or Oil Tank	Waste Pond or Land Disposal Unit (Specify Type)	Other (Give Description)

5. Well is intended to supply water for: Home

6. DRILLHOLE

Dia. (in.)	From (ft.)	To (ft.)	Dia. (in.)	From (ft.)	To (ft.)
10	Surface	15			
6	15	112			

7. CASING, LINER, CURBING AND SCREEN

Dia. (in.)	Material, Weight, Specification & Method of Assembly	From (ft.)	To (ft.)
6"	New Stand Bel Steel	Surface	109
19.45# per ft T&C			
Sumitoma Metal Lmtd			
ASTM A53			
3 ft Johnson Stainless Screen 15 Slot			

8. GROUT OR OTHER SEALING MATERIAL

Kind	From (ft.)	To (ft.)
Drill Cuttings	Surface	15

9. FORMATIONS

Kind	From (ft.)	To (ft.)
Sand & Gravel	Surface	30
Sand	30	80
Sand & Gravel	80	112

Installed from 109-112

10. TYPE OF DRILLING MACHINE USED
☒ Cable Tool ☐ Rotary-air w/drilling mud ☐ Rotary-w/drilling mud ☐ Rotary-hammer w/drilling mud & air ☐ Rotary-hammer & air ☐ Reverse Rotary ☐ Jetting with ☐ Air ☐ Water

Well construction completed on May 26 1979

11. MISCELLANEOUS DATA
Yield Test: 15 Hrs. at 20 GPM
Depth from surface to normal water level 70 Ft.
Depth of water level when pumping 70 Ft. Stabilized ☒ Yes ☐ No

Well is terminated 10 inches ☒ above ☐ below final grade
Well disinfected upon completion ☒ Yes ☐ No
Well sealed watertight upon completion ☒ Yes ☐ No

Water sample sent to Madison laboratory on May 29 1979

Your opinion concerning other pollution hazards, information concerning difficulties encountered, and data relating to nearby wells, screens, seals, method of finishing the well, amount of cement used in grouting, blasting, etc., should be given on reverse side.

Signature: L. Vern Welsch Registered Well Driller
Complete Mail Address: 245 Park Ave Prairie Du Sac

State of Wisconsin
Department of Natural Resources
Private Water Supply
Box 7921
Madison, Wisconsin 53707

NOTE:
White Copy — Division's Copy
Green Copy — Driller's Copy
Yellow Copy — Owner's Copy

WELL CONSTRUCTOR'S REPO
Form 3300-15 Rev 77

FR 1982

COUNTY Sauk

CHECK (✓) ONE: ☒ Town ☐ Village ☐ City

Name Rhinerman

1a Section or Gov't. Lot ✓ Section Township Range

2. LOCATION SW¼ SW¼ 5 10N 7E

OR – Grid or Street No. Street or Road Name

AND – If available subdivision name, lot & block No.

3. NAME ☒ OWNER ☐ AGENT AT TIME OF DRILLING CHECK (✓) ONE
Daniel Fussell

ADDRESS RR.

POST OFFICE Merrimac, Wis ZIP CODE

4. Distance in feet from well to nearest: (Record answer in appropriate block)

Building	Sanitary Bldg. Drain		Sanitary Bldg. Sewer		Floor Drain Connected To:		Storm Bldg. Drain		Storm Bldg. Sewer	
	C.I.	Other	C.I.	Other	C.I. Sewer	Other Sewer	C.I.	Other	C.I.	Other
15 ft	30 ft		35 ft		none					

Street Sewer		Other Sewers		Foundation Drain Connected to:		Sewage Sump		Clearwater Sump	Septic Tank	Holding Tank	Sewage Absorption Unit	Manure Hopper or Retention or Pneumatic Tank
San.	Storm	C.I.	Other	Sewer	Sewage Sump	C.I.	Other					
				Clearwater Dr.	Clearwater Sump				750		Seepage Pit Seepage Bed 100' Seepage Trench	

Privy	Pet Waste Pit	Pit: Nonconforming Existing	Subsurface Pumproom Nonconforming Existing	Barn Gutter	Animal Barn Pen	Animal Yard	Silo With Pit	Glass Lined Storage Facility	Silo w/o Pit	Earthen Silage Storage Trench Or Pit	Earthen Manure Basin
		Well Pump Tank									

Temporary Manure Stack or Platform	Watertight Liquid Manure Tank or Basin	Manure Pressure Pipe	Subsurface Gasoline or Oil Tank	Waste Pond or Land Disposal Unit (Specify Type)	Manure Storage Basin Concrete Floor Only Concrete Floor and Partial Concrete Walls	Other (Describe)

5. Well is intended to supply water for: Trailer Home

6. DRILLHOLE

Dia. (in.)	From (ft.)	To (ft.)	Dia. (in.)	From (ft.)	To (ft.)
10	Surface	15			
	15	112			

7. CASING, LINER, CURBING AND SCREEN
Material, Weight, Specification

Dia. (in.)	Mfg. & Method of Assembly	From (ft.)	To (ft.)
6"	Stand Blk Steel	Surface	109
To C.	19.45 # per ft		
AST MA53	Seamless Welded		
Johnson slotted	screen Installed		
10 Slot.		109	112

8. GROUT OR OTHER SEALING MATERIAL

Kind	From (ft.)	To (ft.)
Drill Cuttings	Surface	15

9. FORMATIONS

Kind	From (ft.)	To (ft.)
Sandy Clay	Surface	10
Sand & Gravel	10	105
Gravel	105	112

10. TYPE OF DRILLING MACHINE USED

☒ Cable Tool ☐ Rotary-air w/drilling mud ☐ Rotary-w/drilling mud ☐ Rotary-hammer w/drilling mud & air ☐ Rotary-hammer & air ☐ Reverse Rotary ☐ Jetting with Air ☐ Water

Well construction completed on July 29 19 80

11. MISCELLANEOUS DATA

Yield Test: 10 Hrs. at 20 GPM

Depth from surface to normal water level 32 Ft.

Depth of water level when pumping 32 Ft. Stabilized ☒ Yes ☐ No

Well is terminated 10 inches ☒ above ☐ below final grade

Well disinfected upon completion ☒ Yes ☐ No

Well sealed watertight upon completion ☒ Yes ☐ No

Water sample sent to Madison laboratory on July 30 19 80

Your opinion concerning other pollution hazards, information concerning difficulties encountered, and data relating to nearby wells, screens, seals, method of finishing the well, amount of cement used in grouting, blasting, etc., should be given on reverse side.

Signature Lyle Wayne Hoffman Registered Well Driller

Business Name and Complete Mailing Address 245 Park Ave Prairie Du Sac, Wis.

State of Wisconsin
Department of Natural Resources
Private Water Supply
Box 7921
Madison, Wisconsin 53707

NOTE:
White Copy - Division's Copy
Green Copy - Driller's Copy
Yellow Copy - Owner's Copy

WELL CONSTRUCTOR'S REPORT

Form 3300-15 Rev. 2 78

JAN 25 1984

1. COUNTY: Sauk
CHECK (✓) ONE: ☒ Town ☐ Village ☐ City
Name: Merrimac

2. LOCATION: ¼ Section or Govt. Lot: ~~NW¼ SE¼~~ Section: 5 Township: 10N Range: 7E
OR – Grid or Street No. Street or Road Name: ✓ SW¼
AND – If available subdivision name, lot & block No.

3. NAME ☒ OWNER ☐ AGENT AT TIME OF DRILLING CHECK (✓) ON: Orwin Cilertson
ADDRESS: RR.
POST OFFICE: Merrimac, Wis. ZIP CODE:

4. Distance in feet from well to nearest: (Record answer in appropriate block)

Building	Sanitary Bldg. Drain C.I.	Sanitary Bldg. Drain Other	Sanitary Bldg. Sewer C.I.	Sanitary Bldg. Sewer Other	Floor Drain Connected To: C.I. Sewer	Floor Drain Connected To: Other Sewer	Storm Bldg. Drain C.I.	Storm Bldg. Drain Other	Storm Bldg. Sewer C.I.	Storm Bldg. Sewer Other
69 ft	75		84		none					

Street Sewer San.	Street Sewer Storm	Other Sewers C.I.	Other Sewers Other	Foundation Drain Connected to: Sewer / Clearwater Dr.	Sewage Sump / Clearwater Sump	Sewage Sump C.I.	Sewage Sump Other	Clearwater Sump	Septic Tank	Holding Tank	Sewage Absorption Unit: Seepage Pit / Seepage Bed / Seepage Trench	Manure Hopper or Retention or Pnuematic Tank
									75'		Seepage Bed 100'	

Privy	Pet Waste Pit	Pit: Nonconforming Existing: Well / Pump / Tank	Subsurface Pumproom / Nonconforming Existing	Barn Gutter	Animal Barn Pen	Animal Yard	Silo With Pit	Glass Lined Storage Facility	Silo w/o Pit	Earthen Silage Storage Trench Or Pit	Earthen Manure Basin

Temporary Manure Stack or Platform	Watertight Liquid Manure Tank or Basin	Manure Pressure Pipe	Subsurface Gasoline or Oil Tank	Waste Pond or Land Disposal Unit (Specify Type)	Manure Storage Basin / Concrete Floor Only / Concrete Floor and Partial Concrete Walls	Other (Describe)

5. Well is intended to supply water for: Home

6. DRILLHOLE

Dia. (in.)	From (ft.)	To (ft.)	Dia. (in.)	From (ft.)	To (ft.)
10	Surface	20			
6	20	290			

7. CASING, LINER, CURBING AND SCREEN
Material, Weight, Specification

Dia. (in.)	Mfg. & Method of Assembly	From (ft.)	To (ft.)
6"	New Stone Bell Steel	Surface	277
19.18# per ft J&C A120			
w/o coup			
	A.F. Sied (Union, J:L, Sumi or DK)		

8. GROUT OR OTHER SEALING MATERIAL

Kind	From (ft.)	To (ft.)
Drill Cuttings	Surface	20

9. FORMATIONS

Kind	From (ft.)	To (ft.)
Sand Gravel Clay	Surface	25
Sand & Gravel	25	120
Sand	120	195
Sand & Gravel	195	24
Sand Rock	240	290

10. TYPE OF DRILLING MACHINE USED
☒ Cable Tool ☐ Rotary-air w/drilling mud ☐ Rotary-w/drilling mud ☐ Rotary-hammer w/drilling mud & air ☐ Rotary-hammer & air ☐ Reverse Rotary ☐ Jetting with ☐ Air ☐ Water

Well construction completed on Sept 13 1984

Well is terminated 12 inches ☒ above ☐ below final grade

Well disinfected upon completion ☒ Yes ☐ No

Well sealed watertight upon completion ☒ Yes ☐ No

11. MISCELLANEOUS DATA
Yield Test: 14 Hrs. at 25 GPM
Depth from surface to normal water level 80 Ft.
Depth of water level when pumping 87 Ft. Stabilized ☒ Yes ☐ No

Water sample sent to Madison laboratory on Sept 14 1983

Your opinion concerning other pollution hazards, information concerning difficulties encountered, and data relating to nearby wells, screens, seals, method of finishing the well, amount of cement used in grouting, blasting, etc., should be given on reverse side.

Signature: [signature] Registered Well Driller

Business Name and Complete Mailing Address: 245 Park Ave Prairie Du Sac

Bx 84 LS119 APR - 5 1971 79

WELL CONSTRUCTOR'S REPORT

Wel-6

WHITE COPY – DIVISION'S COPY
GREEN COPY – DRILLER'S COPY
YELLOW COPY – OWNER'S COPY

STATE OF WISCONSIN
DEPARTMENT OF NATURAL RE
Box 450
Madison, Wisconsin 53701

1. COUNTY: Sauk
CHECK ONE: ☒ Town ☐ Village ☐ City
NAME: Prairie Du Sac

2. LOCATION (Number and Street or ¼ section, section, township and range. Also give subdivision name, lot and block numbers when available.)
SW1 NW 1/4 NE 1/4 Sec 26 T10 R6E

3. OWNER AT TIME OF DRILLING: Norman Kens

4. OWNER'S COMPLETE MAIL ADDRESS: RR Prairie Du Sac

5. Distance in feet from well to nearest: (Record answer in appropriate block)

BUILDING	SANITARY SEWER C. I.	SANITARY SEWER TILE	FLOOR DRAIN C. I.	FLOOR DRAIN TILE	FOUNDATION DRAIN SEWER CONNECTED	FOUNDATION DRAIN INDEPENDENT	WASTE WATER DRAIN C. I.	WASTE WATER DRAIN TILE
15 ft	30 ft		30 ft		none		35 ft	

CLEAR WATER DRAIN C. I.	CLEAR WATER DRAIN TILE	SEPTIC TANK	PRIVY	SEEPAGE PIT	ABSORPTION FIELD	BARN	SILO	ABANDONED WELL	SINK HOLE
50 ft		75		100		100 ft	115 ft	40 ft Sand point	

6. OTHER POLLUTION SOURCES (Give description such as dump, quarry, drainage well, stream, pond, lake, etc.)

7. Well is intended to supply water for: Farm & Home

7. DRILLHOLE

Dia. (in.)	From (ft.)	To (ft.)	Dia. (in.)	From (ft.)	To (ft.)
6	Surface	275			

8. CASING, LINER, CURBING, AND SCREEN

Dia. (in.)	Kind and Weight	From (ft.)	To (ft.)
[illegible]	New Stand Bek.	Surface	255
Steel	19.45 # per ft		

9. GROUT OR OTHER SEALING MATERIAL

Kind	From (ft.)	To (ft.)
	Surface	

10. FORMATIONS

Kind	From (ft.)	To (ft.)
Sand	Surface	40
Sand & Gravel	40	235
Sand Rock	237	270
Soap Stone	270	275

Well construction completed on Oct 22 1970

Well is terminated 12 inches ☒ above ☐ below final grade

Well disinfected upon completion ☒ Yes ☐ No

Well sealed watertight upon completion ☒ Yes ☐ No

11. MISCELLANEOUS DATA

Yield test: 12 Hrs. at 20 GPM

Depth from surface to normal water level 85 ft.

Depth to water level when pumping 85 ft.

Water sample sent to Madison laboratory on: Oct 23 1970

Your opinion concerning other pollution hazards, information concerning difficulties encountered, and data relating to nearby wells, screens, seals, type of casing joints, method of finishing the well, amount of cement used in grouting, blasting, subsurface pumprooms, access pits, etc., should be given on reverse side.

SIGNATURE: Verne Welsch Registered Well Driller

COMPLETE MAIL ADDRESS: 245 Park Ave Prairie Du Sac

Please do not write in space below

COLIFORM TEST RESULT	GAS — 24 HRS.	GAS — 48 HRS.	CONFIRMED	REMARKS

STATE OF WISCONSIN

WELL CONSTRUCTOR'S REPORT

DEPARTMENT OF RESOURCE DEVELOPMENT

SUMAT 80

1. COUNTY: Sauk
CHECK ONE: ☒ Town ☐ Village ☐ City
NAME: Prairie Du Sac ?

2. LOCATION (Number and Street or ¼ section, section, township and range. Also give subdivision name, lot and block numbers when available.)
SE 1/4 Sec 24 T10N v R6E

3. OWNER AT TIME OF DRILLING
Darwin Zick

4. OWNER'S COMPLETE MAIL ADDRESS
Prairie Du Sac, Wis

5. Distance in feet from well to nearest: (Record answer in appropriate block)

BUILDING	SANITARY SEWER C. I.	SANITARY SEWER TILE	FLOOR DRAIN C. I.	FLOOR DRAIN TILE	FOUNDATION DRAIN SEWER CONNECTED	FOUNDATION DRAIN INDEPENDENT	WASTE WATER DRAIN C. I.	WASTE WATER DRAIN TILE
8	15		15		none		20	

CLEAR WATER DRAIN C. I.	CLEAR WATER DRAIN TILE	SEPTIC TANK	PRIVY	SEEPAGE PIT	ABSORPTION FIELD	BARN	SILO	ABANDONED WELL	SINK HOLE
30		30		60					

OTHER POLLUTION SOURCES (Give description such as dump, quarry, drainage well, stream, pond, lake, etc.)

6. Well is intended to supply water for: Home

7. DRILLHOLE

Dia. (in.)	From (ft.)	To (ft.)	Dia. (in.)	From (ft.)	To (ft.)
~~6~~	Surface	~~[illegible]~~	~~[illegible]~~		
6	280				

8. CASING, LINER, CURBING, AND SCREEN

Dia. (in.)	Kind and Weight	From (ft.)	To (ft.)
6"	New Stand Blk	Surface	264
	Steel 19.45# per ft		

9. GROUT OR OTHER SEALING MATERIAL

Kind	From (ft.)	To (ft.)
	Surface	

10. FORMATIONS

Kind	From (ft.)	To (ft.)
Sand Gravel & Clay	Surface	50
Sand & Gravel	50	250
Sand Rock	250	280

11. MISCELLANEOUS DATA

Yield test: 15 Hrs. at 15 GPM

Depth from surface to normal water level 100 ft.

Depth to water level when pumping 100 ft.

Well construction completed on Aug 27 1968

Well is terminated 14 inches ☒ above ☐ below final grade

Well disinfected upon completion ☒ Yes ☐ No

Well sealed watertight upon completion ☒ Yes ☐ No

Water sample sent to Madison laboratory on: Aug 28 1968

Your opinion concerning other pollution hazards, information concerning difficulties encountered, and data relating to nearby wells, screens, seals, type of casing joints, method of finishing the well, amount of cement used in grouting, blasting, sub-surface pumprooms, access pits, etc., should be given on reverse side.

SIGNATURE: LaVerne Welsch Registered Well Driller

COMPLETE MAIL ADDRESS: 245 Park Ave Prairie Du

Please do not write in space below

COLIFORM TEST RESULT	GAS — 24 HRS.	GAS — 48 HRS.	CONFIRMED	REMARKS

81

State of Wisconsin
Department of Natural Resources
Private Water Supply
Box 7921
Madison, Wisconsin 53707

NOTE:
White Copy - Division's Copy
Green Copy - Driller's Copy
Yellow Copy - Owner's Copy

WELL CONSTRUCTOR'S REP
Form 3300-15 Rev

MAR - 2 1983

1. COUNTY: Sauk
CHECK (✓) ONE: ☒ Town ☐ Village ☐ City
Name: Sumpter

2. LOCATION: ¼ Section or Gov't. Lot ✓ SE¼ SE¼ | Section 24 | Township 10N | Range 6E
OR – Grid or Street No. | Street or Road Name
AND – If available subdivision name, lot & block No.

3. NAME ☒ OWNER ☐ AGENT AT TIME OF DRILLING CHECK (✓) ONE
Robert Henry
ADDRESS: Rte 1
POST OFFICE: Prairie Du Sac, Wi
ZIP CODE: 53578

4. Distance in feet from well to nearest: (Record answer in appropriate block)

Building	Sanitary Bldg. Drain C.I.	Sanitary Bldg. Drain Other	Sanitary Bldg. Sewer C.I.	Sanitary Bldg. Sewer Other	Floor Drain Connected To: C.I. Sewer	Floor Drain Connected To: Other Sewer	Storm Bldg. Drain C.I.	Storm Bldg. Drain Other	Storm Bldg. Sewer C.I.	Storm Bldg. Sewer Other
8 ft	18 ft		23 ft		26 ft					

Street Sewer San.	Street Sewer Storm	Other Sewers C.I.	Other Sewers Other	Foundation Drain Connected to: Sewer	Sewage Sump	Clearwater Dr.	Clearwater Sump	Sewage Sump C.I.	Sewage Sump Other	Clearwater Sump	Septic Tank	Holding Tank	Sewage Absorption Unit: Seepage Pit / Seepage Bed / Seepage Trench	Manure Hopper or Retention or Pnuematic Tank
											60'		75'	

Privy	Pet Waste Pit	Pit: Nonconforming Existing: Well / Pump / Tank	Subsurface Pumproom Nonconforming Existing	Barn Gutter	Animal Barn Pen	Animal Yard	Silo With Pit	Glass Lined Storage Facility	Silo w/o Pit	Earthen Silage Storage Trench Or Pit	Earthen Manure Basin

Temporary Manure Stack or Platform	Watertight Liquid Manure Tank or Basin	Manure Pressure Pipe	Subsurface Gasoline or Oil Tank	Waste Pond or Land Disposal Unit (Specify Type)	Manure Storage Basin / Concrete Floor Only / Concrete Floor and Partial Concrete Walls	Other (Describe)

5. Well is intended to supply water for: Home

6. DRILLHOLE

Dia. (in.)	From (ft.)	To (ft.)	Dia. (in.)	From (ft.)	To (ft.)
[illegible]	Surface	20			
6"	20	75			

7. CASING, LINER, CURBING AND SCREEN

Dia. (in.)	Material, Weight, Specification Mfg. & Method of Assembly	From (ft.)	To (ft.)
6"	New Stand Bel Steel	Surface	72
19.45	per ft T & C. Sumitomo Metal A53		
3'	Johnson Stainless Screen installed 15 slot from	72'	75'

8. GROUT OR OTHER SEALING MATERIAL

Kind	From (ft.)	To (ft.)
Drill Cuttings	Surface	20

9. FORMATIONS

Kind	From (ft.)	To (ft.)
Sand & Gravel	Surface	65
Gravel	65	75

10. TYPE OF DRILLING MACHINE USED
☒ Cable Tool ☐ Rotary-air w/drilling mud ☐ Rotary-w/drilling mud ☐ Rotary-hammer w/drilling mud & air ☐ Rotary-hammer & air ☐ Reverse Rotary ☐ Jetting with ☐ Air ☐ Water

Well construction completed on Oct 15 1982

11. MISCELLANEOUS DATA
Yield Test: 15 Hrs. at 25 GPM
Depth from surface to normal water level 35 Ft.
Depth of water level when pumping 25 Ft. Stabilized ☒ Yes ☐ No

Well is terminated 12 inches ☒ above ☐ below final grade
Well disinfected upon completion ☒ Yes ☐ No
Well sealed watertight upon completion ☒ Yes ☐ No

Water sample sent to Madison laboratory on Oct 19 1982

Your opinion concerning other pollution hazards, information concerning difficulties encountered, and data relating to nearby wells, screens, seals, method of finishing the well, amount of cement used in grouting, blasting, etc., should be given on reverse side.

Signature [illegible]
Business Name and Complete Mailing Address [illegible]

82

State of Wisconsin
Department of Natural Resources
Private Water Supply
Box 7921
Madison, Wisconsin 53707

NOTE:
White Copy – Division's Copy
Green Copy – Driller's Copy
Yellow Copy – Owner's Copy

WELL CONSTRUCTOR'S REPORT

Form 3300-15 Rev. 2-79

JAN 25 1984

1. COUNTY: Sauk
CHECK (✓) ONE: ☒ Town ☐ Village ☐ City
Name: Sumpter

2. LOCATION: ¼ Section or Gov't. Lot: SC 1/4 SC 1/4 ✓ | Section: 24 | Township: 10N | Range: 6E
OR – Grid or Street No. | Street or Road Name
AND – If available subdivision name, lot & block No.: Lot 18 & 19 Grubers Grove

3. NAME ☒ OWNER ☐ AGENT AT TIME OF DRILLING CHECK (✓) ONE: Dale Kelley
ADDRESS: Rte 1
POST OFFICE: Prairie Du Sac, Wis
ZIP CODE:

4. Distance in feet from well to nearest: (Record answer in appropriate block)

Building	Sanitary Bldg. Drain C.I.	Sanitary Bldg. Drain Other	Sanitary Bldg. Sewer C.I.	Sanitary Bldg. Sewer Other	Floor Drain Connected To: C.I. Sewer	Floor Drain Connected To: Other Sewer	Storm Bldg. Drain C.I.	Storm Bldg. Drain Other	Storm Bldg. Se C.I.	Storm Bldg. Se Other
60 ft	75 ft		86 ft		none					

Street Sewer San.	Street Sewer Storm	Other Sewers C.I.	Other Sewers Other	Foundation Drain Connected to: Sewer / Clearwater Dr.	Sewage Sump / Clearwater Sump	Sewage Sump C.I.	Sewage Sump Other	Clearwater Sump	Septic Tank	Holding Tank	Sewage Absorption Unit: Seepage Pit / Seepage Bed / Seepage Trench	Manure Hopper Retention or Pnuematic Tank
									60'		75'	

Privy	Pet Waste Pit	Pit: Nonconforming Existing: Well / Pump / Tank	Subsurface Pumproom Nonconforming Existing	Barn Gutter	Animal Barn Pen	Animal Yard	Silo With Pit	Glass Lined Storage Facility	Silo w/o Pit	Earthen Silage Storage Trench Or Pit	Earthen Manure Ba

Temporary Manure Stack or Platform	Watertight Liquid Manure Tank or Basin	Manure Pressure Pipe	Subsurface Gasoline or Oil Tank	Waste Pond or Land Disposal Unit (Specify Type)	Manure Storage Basin / Concrete Floor Only / Concrete Floor and Partial Concrete Walls	Other (Describe)

5. Well is intended to supply water for: Home

6. DRILLHOLE

Dia. (in.)	From (ft.)	To (ft.)	Dia. (in.)	From (ft.)	To (ft.)
12	Surface	20			
6	20	187			

7. CASING, LINER, CURBING AND SCREEN

Dia. (in.)	Material, Weight, Specification Mfg. & Method of Assembly	From (ft.)	To (ft.)
6"	New Stand Bell Steel	Surface	184
19.18# per ft T.C. A120			
W/O coup	A.F. Siedemann (Union, Jil, Sumi, or DK)		
3"	Johnson Stainless	184	187
Screen 15 slot			

8. GROUT OR OTHER SEALING MATERIAL

Kind	From (ft.)	To (ft.)
Drill Cuttings	Surface	20

9. FORMATIONS

Kind	From (ft.)	To (ft.)
Topsoil	Surface	3
Sand & Gravel	3	[illegible]
Sand	75	160
Sand & Gravel	160	180
Gravel	180	187

10. TYPE OF DRILLING MACHINE USED

☒ Cable Tool ☐ Rotary-air w/drilling mud ☐ Rotary-w/drilling mud ☐ Rotary-hammer w/drilling mud & air ☐ Rotary-hammer & air ☐ Reverse Rotary ☐ Jetting with ☐ Air ☐ Water

Well construction completed on Oct 29 1983

11. MISCELLANEOUS DATA

Yield Test: 15 Hrs. at 25 GPM

Depth from surface to normal water level 30 Ft.

Depth of water level when pumping 30 Ft. Stabilized ☒ Yes ☐ No

Well is terminated 12 inches ☒ above ☐ below final grade

Well disinfected upon completion ☒ Yes ☐ No

Well sealed watertight upon completion ☒ Yes ☐ No

Water sample sent to Madison laboratory on Nov 28 1983

Your opinion concerning other pollution hazards, information concerning difficulties encountered, and data relating to nearby wells, screens, seals, method of finishing the well, amount of cement used in grouting, blasting, etc., should be given on reverse side.

Signature: [illegible]

Business Name and Complete Mailing Address: [illegible]

83

WELL CONSTRUCTOR'S REPORT TO WISCONSIN STATE BOARD OF HEALTH
See Instructions on Reverse Side

1. County Sauk. Town ☒ Village ☐ City ☐ Sumpter
Check one and give name

2. Location N.W. 1/4 of S.E. 1/4 of Sec. 24. T. 11 R. 6. E
Name of street and number of premise or Sec. Tn. and R. numbers

3. Owner ☒ or Agent ☐ Mrs. Albert Buelow, Estate
Name of individual, partnership or firm

4. Mail Address Prairie Du Sac. Wis.
Complete address required

5. From well to nearest: Building 4 ft; sewer 0 ft; drain 0 ft; septic tank 0 ft; dry well or filter bed 0 ft; abandoned well 40 ft.

6. Well is intended to supply water for: Farm.

RECEIVED MAY 14 1951 BUREAU SAN. ENG.

7. DRILLHOLE:

Dia. (in.)	From (ft.)	To (ft.)
8	0	80
6	80	288

8. CASING AND LINER PIPE OR CURBING:

Dia. (in.)	Kind	From (ft.)	To (ft.)
6	Seamless Steel pipe.	0	288

9. GROUT:

Kind	From (ft.)	To (ft.)
clay	0	80

10. FORMATIONS:

Kind	From (ft.)	To (ft.)
clay	0	10
clay and gravel	10	80
Sand	80	285
gravel bed	285	288

11. MISCELLANEOUS DATA:

Yield test: 8 Hrs. at 3 GPM.

Depth from surface to water: 108 ft.

Water-level when pumping: 115 ft.

Water sample sent to laboratory at Madison on May 11 1951

Signature Wm H Smith
Registered Well Driller

Construction of the well was completed on May 10 1951

The well is terminated 14 inches ☒ above, below ☐ the permanent ground surface.

Was the well disinfected upon completion? Yes X No

Was the well sealed watertight upon completion? Yes X No

Baraboo Wis
Complete Mail Address
1035 Walnut St.

84

State of Wisconsin
Department of Natural Resources
Private Water Supply
Box 7921
Madison, Wisconsin 53707

NOTE:
White Copy - Division's Copy
Green Copy - Driller's Copy
Yellow Copy - Owner's Copy

WELL CONSTRUCTOR'S REPORT
Form 3300-15 Rev. 2-79

JUN 12 1981

1. COUNTY: Sauk
CHECK (✓) ONE: ☐ Town ☐ Village ☐ City
Name: Prairie Du Sac

2. LOCATION
¼ Section or Gov't. Lot: NE
Section: 25 Township: 10N Range: 6E
OR - Grid or Street No. | Street or Road Name:
AND - If available subdivision name, lot & block No.: Lot 15 The Winding Sub

3. NAME ☐ OWNER ☐ AGENT AT TIME OF DRILLING CHECK (✓) ON
Klopotec Dev. Co.
ADDRESS: 3137 Nor-del Hill
POST OFFICE: Verona WI ZIP CODE: 53593

4. Distance in feet from well to nearest: (Record answer in appropriate block)

Building	Sanitary Bldg. Drain		Sanitary Bldg. Sewer		Floor Drain Connected To:		Storm Bldg. Drain		Storm Bldg. Sewer	
	C.I.	Other	C.I.	Other	C.I. Sewer	Other Sewer	C.I.	Other	C.I.	Other
12'										

Street Sewer		Other Sewers		Foundation Drain Connected to:		Sewage Sump		Clearwater Sump		Septic Tank	Holding Tank	Sewage Absorption Unit	Manure Hopper Retention or Pneumatic Tank
San.	Storm	C.I.	Other	Sewer	Sewage Sump	C.I.	Other			none yet		Seepage Pit / Seepage Bed 1-1-81 / Seepage Trench	
				Clearwater Dr.	Clearwater Sump								

Privy	Pet Waste Pit	Pit: Nonconforming Existing	Subsurface Pumproom	Barn Gutter	Animal Barn Pen	Animal Yard	Silo With Pit	Glass Lined Storage Facility	Silo w/o Pit	Earthen Silage Storage Trench Or Pit	Earthen Manure Ba
		Well / Pump / Tank	Nonconforming Existing								

Temporary Manure Stack or Platform	Watertight Liquid Manure Tank or Basin	Manure Pressure Pipe	Subsurface Gasoline or Oil Tank	Waste Pond or Land Disposal Unit (Specify Type)	Manure Storage Basin / Concrete Floor Only / Concrete Floor and Partial Concrete Walls	Other (Describe)

5. Well is intended to supply water for: House

6. DRILLHOLE

Dia. (in.)	From (ft.)	To (ft.)	Dia. (in.)	From (ft.)	To (ft.)
8	Surface	249			

7. CASING, LINER, CURBING AND SCREEN
Material, Weight, Specification

Dia. (in.)	Mfg. & Method of Assembly	From (ft.)	To (ft.)
6'	PE	Surface	249
	ASTM A53		
	.280 wall		
	7-1-81		

8. GROUT OR OTHER SEALING MATERIAL

Kind	From (ft.)	To (ft.)
mud cuttings	Surface	249

9. FORMATIONS

Kind	From (ft.)	To (ft.)
clay	Surface	5
boulder + gravel	5	35
sand + gravel	35	110
sand	110	189
sand + gravel	189	212
gravel	212	249
well bottomed in gravel		

10. TYPE OF DRILLING MACHINE USED
☐ Cable Tool ☑ Rotary-hammer w/drilling mud & air ☐ Jetting with
☐ Rotary-air w/drilling mud ☐ Rotary-hammer & air ☐ Air ☐ Water
☐ Rotary-w/drilling mud ☐ Reverse Rotary

Well construction completed on June 8 19 81

11. MISCELLANEOUS DATA
Yield Test: 48 Hrs. at 20 GPM
Depth from surface to normal water level 135 Ft.
Depth of water level when pumping 175 Ft. Stabilized ☑ Yes ☐ No

Well is terminated 12 inches ☑ above ☐ below final grade
Well disinfected upon completion ☑ Yes ☐ No
Well sealed watertight upon completion ☑ Yes ☐ No

Water sample sent to Madison laboratory on 6-9 19 8.

Your opinion concerning other pollution hazards, information concerning difficulties encountered, and data relating to nearby wells, screens, seals, method of finishing the well, amount of cement used in grouting, blasting, etc., should be given on reverse side.

Signature: [signature]

Business Name and Complete Mailing Address

State of Wisconsin
Department of Natural Resources
Private Water Supply
Box 7921
Madison, Wisconsin 53707

NOTE:
White Copy – Division's Copy
Green Copy – Driller's Copy
Yellow Copy – Owner's Copy

AUG 7 1987

WELL CONSTRUCTOR'S REPORT
Form 3300-15 Rev. 3-87

85

COUNTY: Sauk

CHECK (✓) ONE: ☑ Town ☐ Village ☐ City

Name: Prairie du Sac

2. LOCATION: ¼ Section or Gov't. Lot: NW ✓ | Section: 25 | Township: 10N | Range: 6E

3. NAME ☐ OWNER ☑ AGENT AT TIME OF DRILLING CHECK (✓) ONE: Prairie Plumbing

OR – Grid or Street No. | Street or Road Name

ADDRESS: 866 Phillips

AND – If available subdivision name, lot & block No.: Lot 30 The Windings

POST OFFICE: Sauk City, WI

ZIP CODE: 53583

4. Distance in feet from well to nearest: (Record answer in appropriate block)

Building	Sanitary Bldg. Drain C.I.	Sanitary Bldg. Drain Other	Sanitary Bldg. Sewer C.I.	Sanitary Bldg. Sewer Other	Floor Drain Connected To: C.I. Sewer	Floor Drain Connected To: Other Sewer	Storm Bldg. Drain C.I.	Storm Bldg. Drain Other	Storm Bldg. Se C.I.	Storm Bldg. Se Other
12										

Street Sewer San.	Street Sewer Storm	Other Sewers C.I.	Other Sewers Other	Foundation Drain Connected to: Sewer	Sewage Sump	Clearwater Dr.	Clearwater Sump	Sewage Sump C.I.	Sewage Sump Other	Clearwater Sump	Septic Tank	Holding Tank	Sewage Absorption Unit: Seepage Pit / Seepage Bed / Seepage Trench	Manure Hopper o Retention or Pnuematic Tank

Privy	Pet Waste Pit	Pit: Nonconforming Existing: Well / Pump / Tank	Subsurface Pumproom Nonconforming Existing	Barn Gutter	Animal Barn Pen	Animal Yard	Silo With Pit	Glass Lined Storage Facility	Silo w/o Pit	Earthen Silage Storage Trench Or Pit	Earthen Manure Bas

Temporary Manure Stack or Platform	Watertight Liquid Manure Tank or Basin	Manure Pressure Pipe	Subsurface Gasoline or Oil Tank	Waste Pond or Land Disposal Unit (Specify Type)	Manure Storage Basin / Concrete Floor Only / Concrete Floor and Partial Concrete Walls	Other (Describe)

5. Well is intended to supply water for: Home

6. DRILLHOLE

Dia. (in.)	From (ft.)	To (ft.)	Dia. (in.)	From (ft.)	To (ft.)
8	Surface	190			
6	190	198			

7. CASING, LINER, CURBING AND SCREEN

Dia. (in.)	Material, Weight, Specification Mfg. & Method of Assembly	From (ft.)	To (ft.)
6	Std black pipe, .280 wall, weld jts, A-53 KHC	Surface	190

8. GROUT OR OTHER SEALING MATERIAL

Kind	From (ft.)	To (ft.)
mud + Cuttings	Surface	190

9. FORMATIONS

Kind	From (ft.)	To (ft.)
Sand + Clay	Surface	15
Sand + gravel	15	198
#20 slot stainless steel screen installed	190	198

10. TYPE OF DRILLING MACHINE USED

☐ Cable Tool ☐ Rotary-air w/drilling mud ☐ Rotary-w/drilling mud ☑ Rotary-hammer w/drilling mud & air ☐ Rotary-hammer & air ☐ Reverse Rotary ☐ Jetting with ☐ Air ☐ Water

Well construction completed on 7-8 1987

11. MISCELLANEOUS DATA

Yield Test: 3 Hrs. at 21 GPM

Depth from surface to normal water level 125 Ft.

Depth of water level when pumping 149 Ft. Stabilized ☑ Yes ☐ No

Well is terminated 18 inches ☑ above ☐ below final grade

Well disinfected upon completion ☑ Yes ☐ No

Well sealed watertight upon completion ☑ Yes ☐ No

Water sample sent to Madison laboratory on 7-9 1987

Your opinion concerning other pollution hazards, information concerning difficulties encountered, and data relating to nearby wells, screens, seals, method of finishing the well, amount of cement used in grouting, blasting, etc., should be given on reverse side.

Signature: [signature] Registered Well Driller

Business Name and Complete Mailing Address: SAM'S ROTARY DRILLERS ROUTE 2 RANDOLPH, WISCONSIN 53956

Wel 6

86

WELL CONSTRUCTOR'S REPORT TO WISCONSIN STATE BOARD OF HEALTH

See Instructions on Reverse Side

1. County SAUK — Town ☐ Village ☒ City ☐ PRAIRE DU SAC (Check one and give name)

2. Location SEC 25 T 9+10 N ✓ R6E (Name of street and number of premise or Section, Town and Range numbers)

3. Owner ☒ or Agent ☐ CHARLES JOHNSON (Name of individual, partnership or firm)

4. Mail Address R.R. PRAIRE DU SAC (Complete address required)

5. From well to nearest: Building 40 ft; sewer ____ ft; drain ____ ft; septic tank 100 ft; dry well or filter bed 120 ft; abandoned well ____ ft.

6. Well is intended to supply water for: COTTAGE

7. DRILLHOLE:

Dia. (in.)	From (ft.)	To (ft.)	Dia. (in.)	From (ft.)	To (ft.)
4	0	122	8"	0	40

8. CASING AND LINER PIPE OR CURBING:

Dia. (in.)	Kind and Weight	From (ft.)	To (ft.)
4	Steel	0	116
4	SCREEN	116	122

9. GROUT:

Kind	From (ft.)	To (ft.)
Clay Puddled	0	40

10. FORMATIONS:

Kind	From (ft.)	To (ft.)
Topsoil	0	5
Clay & Gravel	5	90
Sand & Gravel	90	122

RECEIVED AUG 31 1959 ENVIRONMENTAL SANITATION

Construction of the well was completed on: 8/10 1954

The well is terminated 8 inches ☐ above, below ☐ the permanent ground surface.

Was the well disinfected upon completion? Yes ✓ No ____

Was the well sealed watertight upon completion? Yes ✓ No ____

11. MISCELLANEOUS DATA:

Yield test: 4 Hrs. at 8 GPM.

Depth from surface to water-level: 90 ft.

Water-level when pumping: 90 ft.

Water sample was sent to the state laboratory at: MADISON (City) on 8/27 1954

Signature Clayton G Reynolds (Registered Well Driller) Geo Reynolds & Son (Complete Mail Address) Portage Wisc

Please do not write in space below

Rec'd ____ No. ____

Ans'd ____

Interpretation ____

	10 ml	10 ml	10 ml	10 ml	10 ml
Gas—24 hrs.					
48 hrs.					
Confirm					
B. Coli					

87

WELL CONSTRUCTOR'S REPORT TO WISCONSIN STATE BOARD OF HEALTH

See Instructions on Reverse Side

RECEIVED
AUG 11 1949
SAN. ENG. BUREAU

1. County SAUK { Town ☒ / Village ☐ / City ☐ } of PRAIRE DU SACK. Check one and give name

2. Location N.W. ¼ of S.E. ¼ OF SEC. 25. T. 10. N. R 6 E.
Name of street and number of premise or Sec. Tn. and R. numbers

3. Owner ☒ or Agent ☐ RUDOLPH MILLER.
Name of individual, partnership or firm

4. Mail Address PRAIRE DU SACK.
Complete address required

5. From well to nearest: Building 4 ft; sewer 8 ft; drain 0 ft; septic tank 50 ft; dry well or filter bed 70 ft; abandoned well 0 ft.

6. Well is intended to supply water for: Private Home

7. DRILLHOLE:

Dia. (in.)	From (ft.)	To (ft.)
8	0	30
6	30	166

8. CASING AND LINER PIPE OR CURBING:

Dia. (in.)	Kind	From (ft.)	To (ft.)
6	Standard Weight		
	Steel Pipe	0	166

9. GROUT:

Kind	From (ft.)	To (ft.)
CLAY	0	30

10. FORMATIONS:

Kind	From (ft.)	To (ft.)
Clay and SAND	0	30
SAND	30	164
GRAVEL	164	166

11. MISCELLANEOUS DATA:

Yield test: 10 Hrs. at 8 GPM.

Depth from surface to water: 80 ft.

Water-level when pumping: 85 ft.

Water sample sent to laboratory at Madison on August 10 19 49

Signature Wm H Smith
Registered Well Driller

Construction of the well was completed on August 6 19 49

The well is terminated 70 inches ☐ above, below ☒ the permanent ground surface.

Was the well disinfected upon completion? Yes x No

Was the well sealed watertight upon completion? Yes x No

Baraboo Wis
Complete Mail Address

1035 Walnut St.

DEC 20 1971

88

WELL CONSTRUCTOR'S REPORT
FORM 3300-15

NOTE
WHITE COPY – DIVISION'S COPY
GREEN COPY – DRILLER'S COPY
YELLOW COPY – OWNER'S COPY

STATE OF WISCON
DEPARTMENT OF NATURAL RESOURCES
Box 450
Madison, Wisconsin 53701

1. COUNTY: Sauk

CHECK ONE: ☒ Town ☐ Village ☐ City

NAME: Sumpter

2. LOCATION – ¼ Section: SE 1/4 NE 1/4 | Section: 24 | Township: 10N | Range: 6E

OR – Grid or street no. | Street name

AND – If available subdivision name, lot & block no.

3. OWNER AT TIME OF DRILLING: Oscar Conrad

ADDRESS: R.R.

POST OFFICE: Prairie Du Sac Wis.

4. Distance in feet from well to nearest: (Record answer in appropriate block)

BUILDING	SANITARY SEWER C. I.	SANITARY SEWER TILE	FLOOR DRAIN C. I.	FLOOR DRAIN TILE	FOUNDATION DRAIN SEWER CONNECTED	FOUNDATION DRAIN INDEPENDENT	WASTE WATER DRA C. I.	WASTE WATER DRA TILE
10 Ft	45 Ft		50 Ft			more	40 Ft	

CLEAR WATER DRAIN C. I.	CLEAR WATER DRAIN TILE	SEPTIC TANK	PRIVY	SEEPAGE PIT	ABSORPTION FIELD	BARN	SILO	ABANDONED WELL	SINK HOLE
50 Ft		75		85					

OTHER POLLUTION SOURCES (Give description such as dump, quarry, drainage well, stream, pond, lake, etc.)

5. Well is intended to supply water for: Home

6. DRILLHOLE

Dia. (in.)	From (ft.)	To (ft.)	Dia. (in.)	From (ft.)	To (ft.)
10	Surface	15			
6	15	80			

7. CASING, LINER, CURBING, AND SCREEN

Dia. (in.)	Kind and Weight	From (ft.)	To (ft.)
6"	New Standard Pitt Steel 19.18 # per ft	Surface	77
3 ft	Johnson Stainless Screen 15 Slot with 4 ft 5" pipe on top of screen		

8. GROUT OR OTHER SEALING MATERIAL

Kind	From (ft.)	To (ft.)
	Surface	

9. FORMATIONS

Kind	From (ft.)	To (ft.)
Clay	Surface	10
Sand & Gravel	10	70
Gravel	70	77

10. TYPE OF DRILLING MACHINE USED

☒ Cable Tool ☐ Direct Rotary ☐ Reverse Rotary
☐ Rotary – air w/drilling mud ☐ Rotary – hammer with drilling mud & air ☐ Jetting with ☐ Air ☐ Wa

Well construction completed on: Dec 9 19 71

Well is terminated 10 inches ☒ above ☐ below final gra

Well disinfected upon completion ☒ Yes ☐ N

Well sealed watertight upon completion ☒ Yes ☐

11. MISCELLANEOUS DATA

Yield test: 15 Hrs. at 20 GPM

Depth from surface to normal water level: 40 ft.

Depth to water level when pumping: 40 ft.

Water sample sent to: Madison laboratory on: Dec 10 19 7

Your opinion concerning other pollution hazards, information concerning difficulties encountered, and data relating to nearby wells, screens, seal type of casing joints, method of finishing the well, amount of cement used in grouting, blasting, sub-surface pumprooms, access pits, etc. uld be given on reverse side.

SIGNATURE: LeVern Hilbert Registered Well Driller

COMPLETE MAIL ADDRESS: 345 Park Ave Prairie Du Sac

Please do not write in space below

COLIFORM TEST RESULT	GAS – 24 HRS.	GAS – 48 HRS.	CONFIRMED	REMARKS

89

State of Wisconsin
Department of Natural Resources
Private Water Supply
Box 7921
Madison, Wisconsin 53707

NOTE:
White Copy - Division's Copy
Green Copy - Driller's Copy
Yellow Copy - Owner's Copy

WELL CONSTRUCTOR'S R
Form 3300-15 Rev. 2-79

FEB 2 1 1986

COUNTY: Sauk

CHECK (✓) ONE: ☒ Town ☐ Village ☐ City

Name: Sumpter

2. LOCATION: ¼ Section or Gov't. Lot: NE¼ NE¼ | Section: 24 | Township: 10N | Range: 6E

OR – Grid or Street No. | Street or Road Name

AND – If available subdivision name, lot & block No: Gruber's Grove

3. NAME ☒ OWNER ☐ AGENT AT TIME OF DRILLING CHECK (✓) ONE: Mrs. Evelyn Jones

ADDRESS: R.R.

POST OFFICE: Prairie Du Sac, Wi ZIP CODE: 53578

4. Distance in feet from well to nearest: (Record answer in appropriate block)

Building	Sanitary Bldg. Drain		Sanitary Bldg. Sewer		Floor Drain Connected To:		Storm Bldg. Drain		Storm Bldg. Sew
	C.I.	Other	C.I.	Other	C.I. Sewer	Other Sewer	C.I.	Other	C.I. Other
6ft			20ft		none				

Street Sewer		Other Sewers		Foundation Drain Connected to:		Sewage Sump		Clearwater Sump	Septic Tank	Holding Tank	Sewage Absorption Unit	Manure Hopper or Retention or Pneumatic Tank
San.	Storm	C.I.	Other	Sewer	Sewage Sump	C.I.	Other		500		Seepage Pit	
				Clearwater Dr.	Clearwater Sump						Seepage Bed 75'	
											Seepage Trench	

Privy	Pet Waste Pit	Pit: Nonconforming Existing	Subsurface Pumproom Nonconforming Existing	Barn Gutter	Animal Barn Pen	Animal Yard	Silo With Pit	Glass Lined Storage Facility	Silo w/o Pit	Earthen Silage Storage Trench Or Pit	Earthen Manure Basin
		Well									
		Pump									
		Tank									

Temporary Manure Stack or Platform	Watertight Liquid Manure Tank or Basin	Manure Pressure Pipe	Subsurface Gasoline or Oil Tank	Waste Pond or Land Disposal Unit (Specify Type)	Manure Storage Basin: Concrete Floor Only / Concrete Floor and Partial Concrete Walls	Other (Describe)

5. Well is intended to supply water for: Home

5. DRILLHOLE

Dia. (in.)	From (ft.)	To (ft.)	Dia. (in.)	From (ft.)	To (ft.)
	Surface	15			
6	15	69			

7. CASING, LINER, CURBING AND SCREEN
Material, Weight, Specification

Dia. (in.)	Mfg. & Method of Assembly	From (ft.)	To (ft.)
6"	New Steel Bell Steel	Surface	66
19.45 # per ft T&C.			
ASTM A-53			
3' Johnson Stainless Screen			
5 slot Installed		66	69

8. GROUT OR OTHER SEALING MATERIAL

Kind	From (ft.)	To (ft.)
Hand Cutting	Surface	15

9. FORMATIONS

Kind	From (ft.)	To (ft.)
Sandy Gravel	Surface	60
Gravel	60	69

10. TYPE OF DRILLING MACHINE USED

☒ Cable Tool ☐ Rotary-air w/drilling mud ☐ Rotary-w/drilling mud ☐ Rotary-hammer w/drilling mud & air ☐ Rotary-hammer & air ☐ Reverse Rotary ☐ Jetting with Air ☐ Water

Well construction completed on April 9 19 85

11. MISCELLANEOUS DATA

Yield Test: 20 Hrs. at 20 GPM

Depth from surface to normal water level 25 Ft.

Depth of water level when pumping 25 Ft. Stabilized ☒ Yes ☐ No

Well is terminated 12 inches ☒ above ☐ below final grade

Well disinfected upon completion ☒ Yes ☐ No

Well sealed watertight upon completion ☒ Yes ☐ No

Water sample sent to Madison laboratory on April 11 19 85

Your opinion concerning other pollution hazards, information concerning difficulties encountered, and data relating to nearby wells, screens, seals, method of finishing the well, amount of cement used in grouting, blasting, etc., should be given on reverse side.

Signature

Business Name and Complete Mailing Address

FEB 28 1980

State of Wisconsin
Department of Natural Resources
Box 7921
Madison, Wisconsin 53707

NOTE:
White Copy – Division's Copy
Green Copy – Driller's Copy
Yellow Copy – Owner's Copy

WELL CONSTRUCTOR'S REPORT 9C
Form 3300-15 Rev. 12-7

1. COUNTY: Sauk
CHECK (✓) ONE: ☑ Town ☐ Village ☐ City
Name: SUMPTER (SOUTH P[illegible])

2. LOCATION: ✓ SE, SE | ¼ Section: [illegible] | Section: 24 | Township: 10N | Range: 6E
OR – Grid or Street No. / Street Name
AND – If available subdivision name, lot & block No.: Grubers Grove

3. NAME ☒ OWNER ☐ AGENT AT TIME OF DRILLING CHECK (✓) ONE: Don Bauer
ADDRESS
POST OFFICE: Sturtevant, Wis

4. Distance in feet from well to nearest: (Record answer in appropriate block)

Building	Sanitary Bldg. Drain C.I.	Sanitary Bldg. Drain Other	Sanitary Bldg. Sewer C.I.	Sanitary Bldg. Sewer Other	Floor Drain Connected To: C.I. Sewer	Floor Drain Connected To: Other Sewer	Storm Bldg. Drain C.I.	Storm Bldg. Drain Other	Storm Bldg. Sewer C.I.	Storm Bldg. Sewer Other
8 ft	20 ft		35 ft		none					

Street Sewer San.	Street Sewer Storm	Other Sewers C.I.	Other Sewers Other	Foundation Drain Connected to: Sewer / Clearwater Dr.	Sewage Sump / Clearwater Sump	Sewage Sump C.I.	Sewage Sump Other	Clearwater Sump	Septic Tank	Holding Tank	Sewage Absorption Unit: Seepage Pit / Seepage Bed / Seepage Trench
									50 ft		75 ft

Privy	Pet Waste Pit	Pit: Nonconforming Existing: Well / Pump / Tank	Subsurface Pumproom Nonconforming Existing	Barn Gutter	Animal Barn Pen	Animal Yard	Silo With Pit	Glass Lined Storage Facility	Silo w/o Pit	Earthen Silage Storage Trench Or Pit

Temporary Manure Stack	Watertight Liquid Manure Tank	Solid Manure Storage Structure	Subsurface Gasoline or Oil Tank	Waste Pond or Land Disposal Unit (Specify Type)	Other (Give Description)

5. Well is intended to supply water for: Home

6. DRILLHOLE

Dia. (in.)	From (ft.)	To (ft.)	Dia. (in.)	From (ft.)	To (ft.)
10	Surface	20			
6	20	65			

7. CASING, LINER, CURBING AND SCREEN

Dia. (in.)	Material, Weight, Specification & Method of Assembly	From (ft.)	To (ft.)
6"	New Store Bck Steel Sumtison Metals	Surface	62
19.45	Per ft T&C ASTM X53		
3 ft	Johnson Stainless Screen		
	Installed 15 Slot from 62-65 ft		

8. GROUT OR OTHER SEALING MATERIAL

Kind	From (ft.)	To (ft.)
Drill Cuttings	Surface	20

9. FORMATIONS

Kind	From (ft.)	To (ft.)
Clay	Surface	7
Sand	7	50
Sand & Gravel	50	6[illegible]

10. TYPE OF DRILLING MACHINE USED
☒ Cable Tool ☐ Rotary-air w/drilling mud ☐ Rotary-w/drilling mud ☐ Rotary-hammer w/drilling mud & air ☐ Rotary-hammer & air ☐ Reverse Rotary ☐ Jetting with ☐ Air ☐ Water

Well construction completed on Sept 18 1979

11. MISCELLANEOUS DATA
Yield Test: 12 Hrs. at 30 GPM
Depth from surface to normal water level 14 Ft.
Depth of water level when pumping 20 Ft. Stabilized ☒ Yes ☐ No

Well is terminated 12 inches ☒ above ☐ below final grade
Well disinfected upon completion ☒ Yes ☐ No
Well sealed watertight upon completion ☒ Yes ☐ No

Water sample sent to Madison laboratory on Sept 19 19[illegible]

Your opinion concerning other pollution hazards, information concerning difficulties encountered, and data relating to nearby wells, screens, seals, method of finishing the well, amount of cement used in grouting, blasting, etc., should be given on reverse side.

Signature: LaVerne Hielsch Registered Well Driller
Complete Mail Address: 245 Park Ave Prairie Du Sac

State of Wisconsin
Department of Natural Resources
Box 7921
Madison, Wisconsin 53707

NOTE:
White Copy – Division's Copy
Green Copy – Driller's Copy
Yellow Copy – Owner's Copy

WELL CONSTRUCTOR'S REPORT 91
Form 3300-15 Rev. 12-76
FEB 12 1979

COUNTY: Sauk
CHECK (✓) ONE: ☒ Town ☐ Village ☐ City Name: Sumpter

1. LOCATION: ¼ Section: SW¼ SE¼ Section: 24 Township: 10N Range: 6E
OR – Grid or Street No. Street Name
AND – If available subdivision name, lot & block No.: Gruber's Grove

3. NAME ☒ OWNER ☐ AGENT AT TIME OF DRILLING CHECK (✓) ONE: Wilfred Leidig
ADDRESS: R.R.
POST OFFICE: Prairie Du Sac, Wis

4. Distance in feet from well to nearest: (Record answer in appropriate block)

Building	Sanitary Bldg. Drain C.I.	Sanitary Bldg. Drain Other	Sanitary Bldg. Sewer C.I.	Sanitary Bldg. Sewer Other	Floor Drain Connected To: C.I. Sewer	Floor Drain Connected To: Other Sewer	Storm Bldg. Drain C.I.	Storm Bldg. Drain Other	Storm Bldg. Sewer C.I.	Storm Bldg. Sewer Other
6 ft	40 ft		60 ft		30 ft					

Street Sewer San.	Street Sewer Storm	Other Sewers C.I.	Other Sewers Other	Foundation Drain Connected to: Sewer	Sewage Sump	Clearwater Dr.	Clearwater Sump	Sewage Sump C.I.	Sewage Sump Other	Clearwater Sump	Septic Tank	Holding Tank	Sewage Absorption Unit: Seepage Pit	Seepage Bed	Seepage Trench
											50 ft			15 ft	

Privy	Pet Waste Pit	Pit: Nonconforming Existing: Well	Pump	Tank	Subsurface Pumproom Nonconforming Existing	Barn Gutter	Animal Barn Pen	Animal Yard	Silo With Pit	Glass Lined Storage Facility	Silo w/o Pit	Earthen Silage Storage Trench Or Pit

Temporary Manure Stack	Watertight Liquid Manure Tank	Solid Manure Storage Structure	Subsurface Gasoline or Oil Tank	Waste Pond or Land Disposal Unit (Specify Type)	Other (Give Description)

5. Well is intended to supply water for: Home

6. DRILLHOLE

Dia. (in.)	From (ft.)	To (ft.)	Dia. (in.)	From (ft.)	To (ft.)
10	Surface	20			
	20	150			

7. CASING, LINER, CURBING AND SCREEN

Dia. (in.)	Material, Weight, Specification & Method of Assembly	From (ft.)	To (ft.)
6"	New Stand Pel Steel	Surface	150'
7.45	Jeeft T&C		
	ASTM H 53 Sumtom		
	Metals Ltmd		

8. GROUT OR OTHER SEALING MATERIAL

Kind	From (ft.)	To (ft.)
Drill Cuttings	Surface	20

9. FORMATIONS

Kind	From (ft.)	To (ft.)
Topsoil	Surface	4
Sand & Gravel	4	75
Sand	75	140
Gravel & Sand	140	150

10. TYPE OF DRILLING MACHINE USED

☒ Cable Tool ☐ Rotary-air w/drilling mud ☐ Rotary-w/drilling mud ☐ Rotary-hammer w/drilling mud & air ☐ Rotary-hammer & air ☐ Reverse Rotary ☐ Jetting with ☐ Air ☐ Water

Well construction completed on Oct 10 1977

11. MISCELLANEOUS DATA

Yield Test: 12 Hrs. at 25 GPM

Depth from surface to normal water level 18 Ft.

Depth of water level when pumping 25 Ft. Stabilized ☒ Yes ☐ No

Well is terminated 10 inches ☒ above ☐ below final grade

Well disinfected upon completion ☒ Yes ☐ No

Well sealed watertight upon completion ☒ Yes ☐ No

Water sample sent to Madison laboratory on Oct 11 1977

Your opinion concerning other pollution hazards, information concerning difficulties encountered, and data relating to nearby wells, screens, seals, method of finishing the well, amount of cement used in grouting, blasting, etc., should be given on reverse side.

Signature: LaVerne Wiebrecht Registered Well Driller

Complete Mail Address: 245 Park Ave Prairie Du Sac Wis

State of Wisconsin
Department of Natural Resources
Box 7921
Madison, Wisconsin 53707

NOTE:
White Copy – Division's Copy
Green Copy – Driller's Copy
Yellow Copy – Owner's Copy

WELL CONSTRUCTOR'S REPO[illegible] 9
Form 3300-15 Rev. 12-[illegible]

SUMPTER

FEB 12 1979

1. COUNTY: Sauk

CHECK (✓) ONE: ☒ Town ☐ Village ☐ City

Name: Prairie Du Sa[illegible]

2. LOCATION: ✓ (SE, SE) ¼ Section: Sw¼ SE¼ Section: 24 Township: 10N Range: 6E

OR – Grid or Street No. / Street Name ☑

AND – If available subdivision name, lot & block No.: Grubers Grove

3. NAME ☒ OWNER ☐ AGENT AT TIME OF DRILLING CHECK (✓) ON: Jim Rans

ADDRESS:

POST OFFICE: Elgin, Ill.

4. Distance in feet from well to nearest: (Record answer in appropriate block)

Building	Sanitary Bldg. Drain C.I.	Sanitary Bldg. Drain Other	Sanitary Bldg. Sewer C.I.	Sanitary Bldg. Sewer Other	Floor Drain Connected To: C.I. Sewer	Floor Drain Connected To: Other Sewer	Storm Bldg. Drain C.I.	Storm Bldg. Drain Other	Storm Bldg. Sew C.I.	Storm Bldg. Sew Othe
18 ft	34 ft				none					

Street Sewer San.	Street Sewer Storm	Other Sewers C.I.	Other Sewers Other	Foundation Drain Connected to: Sewer	Sewage Sump	Clearwater Dr.	Clearwater Sump	Sewage Sump C.I.	Sewage Sump Other	Clearwater Sump	Septic Tank	Holding Tank	Sewage Absorption Unit: Seepage Pit / Seepage Bed / Seepage Trench
											75 ft		85 ft

Privy	Pet Waste Pit	Pit: Nonconforming Existing: Well / Pump / Tank	Subsurface Pumproom Nonconforming Existing	Barn Gutter	Animal Barn Pen	Animal Yard	Silo With Pit	Glass Lined Storage Facility	Silo w/o Pit	Earthen Silage Storage Trench Or Pit

Temporary Manure Stack	Watertight Liquid Manure Tank	Solid Manure Storage Structure	Subsurface Gasoline or Oil Tank	Waste Pond or Land Disposal Unit (Specify Type)	Other (Give Description)

5. Well is intended to supply water for: Home

6. DRILLHOLE

Dia. (in.)	From (ft.)	To (ft.)	Dia. (in.)	From (ft.)	To (ft.)
10	Surface	20			
6	20	87			

7. CASING, LINER, CURBING AND SCREEN

Dia. (in.)	Material, Weight, Specification & Method of Assembly	From (ft.)	To (ft.)
6"	New Stand Bck Stud	Surface	84
19.45 # per ft	T&C		
ASTM A-53	Sumitomo Metal		
Lmtd	A 3 ft Johnson Stainless Screen 15 Slot		
Installed		84	87

8. GROUT OR OTHER SEALING MATERIAL

Kind	From (ft.)	To (ft.)
Drill Cuttings	Surface	20

9. FORMATIONS

Kind	From (ft.)	To (ft.)
Topsoil	Surface	3
Sand & Clay	3	30
Sand	30	[illegible]
Sand & Gravel	80	87

10. TYPE OF DRILLING MACHINE USED

☒ Cable Tool ☐ Rotary-air w/drilling mud ☐ Rotary-w/drilling mud ☐ Rotary-hammer w/drilling mud & air ☐ Rotary-hammer & air ☐ Reverse Rotary ☐ Jetting with ☐ Air ☐ Water

Well construction completed on July 7 1978

Well is terminated 10 inches ☒ above ☐ below final grade

Well disinfected upon completion ☒ Yes ☐ No

Well sealed watertight upon completion ☒ Yes ☐ No

11. MISCELLANEOUS DATA

Yield Test: 15 Hrs. at 25 GPM

Depth from surface to normal water level 40 Ft.

Depth of water level when pumping 40 Ft. Stabilized ☒ Yes ☐ No

Water sample sent to Madison laboratory on Aug 16 [illegible]

Your opinion concerning other pollution hazards, information concerning difficulties encountered, and data relating to nearby wells, screens, seals, method of finishing the well, amount of cement used in grouting, blasting, etc., should be given on reverse side.

Signature: LeVerne Welsch Registered Well Driller

Complete Mail Address: 245 Park Ave Prairie Du Sa

Wel. 6-30M ((

WELL CONSTRUCTOR'S REPORT TO WISCONSIN STATE BOARD OF HEALTH

See Instructions on Reverse Side

93

1. County SAUK — Town ☒ / Village ☐ / City ☐ SUMPTER (Check one and give name)

2. Location Lot 13 GRUBERS GROVE E½ SE Sec 24 TION R6E (Name of street and number of premise or Section, Town and Range numbers)

3. Owner ☒ or Agent ☐ ROBERT J PRIEBE (Name of individual, partnership or firm)

4. Mail Address R#1 PRAIRIE DU SAC WISCONSIN (Complete address required)

5. From well to nearest: Building 4 ft; sewer ____ ft; drain ____ ft; septic tank 40 ft; dry well or filter bed ____ ft; abandoned well ____ ft.

6. Well is intended to supply water for: Home

RECEIVED
APR 18 1957
ENVIRONMENTAL SANITATION

7. DRILLHOLE:

Dia. (in.)	From (ft.)	To (ft.)	Dia. (in.)	From (ft.)	To (ft.)
2	0	76			

8. CASING AND LINER PIPE OR CURBING:

Dia. (in.)	Kind and Weight	From (ft.)	To (ft.)
2	rch gal pipe		

9. GROUT:

Kind	From (ft.)	To (ft.)

10. FORMATIONS:

Kind	From (ft.)	To (ft.)
sand no water	0	30
clay Hard pan no Water	30	40
	40	65
fine sand Water Bearing		
gravel Water Bearing	65	76

11. MISCELLANEOUS DATA:

Yield test: 1 Hrs. at 14 GPM.

Depth from surface to water-level: 26 ft.

Water-level when pumping: 36 ft.

Water sample was sent to the state laboratory at: Madison (City) on 4-17 1957

Construction of the well was completed on: 4-15 1957

The well is terminated 16 inches ☒ above, below ☐ the permanent ground surface.

Was the well disinfected upon completion? Yes X No ____

Was the well sealed watertight upon completion? Yes X No ____

Signature L Martinson — Registered Well Driller

Wis Dells Wis — Complete Mail Address

Please do not write in space below

Rec'd ____ No. ____

Ans'd ____

Interpretation ____

	10 ml	10 ml	10 ml	10 ml	10 ml
Gas—24 hrs.					
48 hrs.					
Confirm					
B. Coli					

Examiner ____

State of Wisconsin
Department of Natural Resources
Box 7921
Madison, Wisconsin 53707

NOTE:
White Copy – Division's Copy
Green Copy – Driller's Copy
Yellow Copy – Owner's Copy

WELL CONSTRUCTOR'S REPOR 94
Form 3300-15 Rev. 12-

1. COUNTY: Sauk
CHECK (✓) ONE: ☒ Town ☐ Village ☐ City
Name: Merrimac

2. LOCATION: ¼ Section: NE¼ SW¼ | Section: 19 | Township: 10 N | Range: 7E
OR – Grid or Street No. / Street Name:
AND – If available subdivision name, lot & block No.:

3. NAME ☒ OWNER ☐ AGENT AT TIME OF DRILLING CHECK (✓) ONE
Lake Wis Boat Club
ADDRESS: R.R.
POST OFFICE: Prairie Du Sac

4. Distance in feet from well to nearest: (Record answer in appropriate block)	Building	Sanitary Bldg. Drain C.I.	Sanitary Bldg. Drain Other	Sanitary Bldg. Sewer C.I.	Sanitary Bldg. Sewer Other	Floor Drain Connected To: C.I. Sewer	Floor Drain Connected To: Other Sewer	Storm Bldg. Drain C.I.	Storm Bldg. Drain Other	Storm Bldg. Se C.I.	Storm Bldg. Se Other
	50 ft	60 ft		60 ft		none					

Street Sewer San.	Street Sewer Storm	Other Sewers C.I.	Other Sewers Other	Foundation Drain Connected to: Sewer	Foundation Drain Connected to: Sewage Sump	Foundation Drain Connected to: Clearwater Dr.	Foundation Drain Connected to: Clearwater Sump	Sewage Sump C.I.	Sewage Sump Other	Clearwater Sump	Septic Tank	Holding Tank	Sewage Absorption Unit
											750 gal		Seepage Pit Seepage Bed 100 ft Seepage Trench

Privy	Pet Waste Pit	Pit: Nonconforming Existing	Subsurface Pumproom Nonconforming Existing	Barn Gutter	Animal Barn Pen	Animal Yard	Silo With Pit	Glass Lined Storage Facility	Silo w/o Pit	Earthen Silage Storage Trench Or Pit
		Well Pump Tank								

Temporary Manure Stack	Watertight Liquid Manure Tank	Solid Manure Storage Structure	Subsurface Gasoline or Oil Tank	Waste Pond or Land Disposal Unit (Specify Type)	Other (Give Description)

5. Well is intended to supply water for: Boat Club.

6. DRILLHOLE

Dia. (in.)	From (ft.)	To (ft.)	Dia. (in.)	From (ft.)	To (ft.)
10	Surface	20			
6	20	64			

7. CASING, LINER, CURBING AND SCREEN

Dia. (in.)	Material, Weight, Specification & Method of Assembly	From (ft.)	To (ft.)
6"	New Steel Bell Type Surface		64
19.45#	Cupt I & C		
ASTM A53	Sumitomo		
	Metals		

8. GROUT OR OTHER SEALING MATERIAL

Kind	From (ft.)	To (ft.)
Drill Cuttings	Surface	20

9. FORMATIONS

Kind	From (ft.)	To (ft.)
Clay	Surface	10
Sand & Gravel	10	60
Gravel	60	64

10. TYPE OF DRILLING MACHINE USED
☒ Cable Tool ☐ Rotary-air w/drilling mud ☐ Rotary-w/drilling mud ☐ Rotary-hammer w/drilling mud & air ☐ Rotary-hammer & air ☐ Reverse Rotary ☐ Jetting with ☐ Air ☐ Water

Well construction completed on: July 4 19 78

11. MISCELLANEOUS DATA
Yield Test: 15 Hrs. at 25 GPM
Depth from surface to normal water level: 18 Ft.
Depth of water level when pumping: 25 Ft. Stabilized ☒ Yes ☐ No

Well is terminated 10 inches ☒ above ☐ below final grade
Well disinfected upon completion ☒ Yes ☐ No
Well sealed watertight upon completion ☒ Yes ☐ No

Water sample sent to: Madison laboratory on July 5 19

Your opinion concerning other pollution hazards, information concerning difficulties encountered, and data relating to nearby wells, screens, seals, method of finishing the well, amount of cement used in grouting, blasting, etc., should be given on reverse side.

Signature: L. Verne Wahl, Registered Well Driller
Complete Mail Address: 245 Park Ave Prairie Du Sac

95

WELL CONSTRUCTOR'S REPORT TO WISCONSIN STATE BOARD OF HEALTH

See Instructions on Reverse Side

1. County Sauk — Town ☒ / Village ☐ / City ☐ — Sumpter (Check one and give name)

2. Location Sec. 24 T 10 N R 6 E
Name of street and number of premise or Section, Town and Range numbers

3. Owner ☒ or Agent ☐ Paul Wilkinson
Name of individual, partnership or firm

4. Mail Address R.F.D. Praire du Sac
Complete address required

5. From well to nearest: Building 4 ft; sewer ____ ft; drain ____ ft; septic tank 50 ft; dry well or filter bed ____ ft; abandoned well ____ ft.

6. Well is intended to supply water for: Cottage

7. DRILLHOLE:

Dia. (in.)	From (ft.)	To (ft.)	Dia. (in.)	From (ft.)	To (ft.)
4	0	62			

8. CASING AND LINER PIPE OR CURBING:

Dia. (in.)	Kind	From (ft.)	To (ft.)
4	Steel	0	56
4	Screen	56	62

9. GROUT:

Kind	From (ft.)	To (ft.)

10. FORMATIONS:

Kind	From (ft.)	To (ft.)
Sand	0	20
Clay	20	50
Sand & gravel	50	62

RECEIVED
JAN 7 1957
ENVIRONMENTAL SANITATION

Construction of the well was completed on: 7/22 19 55

The well is terminated 8 inches ☒ above, below ☐ the permanent ground surface.

Was the well disinfected upon completion? Yes X No

Was the well sealed watertight upon completion? Yes X No

11. MISCELLANEOUS DATA:

Yield test: ____ Hrs. at ____ GPM.

Depth from surface to water-level: 10 ft.

Water-level when pumping: 10 ft.

Water sample was sent to the state laboratory at: Madison (City) on 7/25 1955

Signature Geo. Reynoldson (Registered Well Driller) Portage Wisc (Complete Mail Address)

Please do not write in space below

Rec'd ____ No. ____

Ans'd ____

Interpretation ____

	10 ml	10 ml	10 ml	10 ml	10 ml
Gas—24 hrs.					
48 hrs.					
Confirm					
B. Coli					

Examiner ____

STATE OF WISCONSIN

WELL CONSTRUCTOR'S REPORT

DEPARTMENT OF RESOURCE DEVELOPMENT

96 W

1. COUNTY: St Croix — CHECK ONE: ☒ Town ☐ Village ☐ City — NAME: Somerset

2. LOCATION (Number and Street or ¼ section, section, township and range. Also give subdivision name, lot and block numbers when available.)
Sec 24 T 1C N R 16 E

3. OWNER AT TIME OF DRILLING
Donald Gattshall

4. OWNER'S COMPLETE MAIL ADDRESS
429 - 7th St Prairie Du Lac, Wis

5. Distance in feet from well to nearest: (Record answer in appropriate block)

BUILDING	SANITARY SEWER C. I.	SANITARY SEWER TILE	FLOOR DRAIN C. I.	FLOOR DRAIN TILE	FOUNDATION DRAIN SEWER CONNECTED	FOUNDATION DRAIN INDEPENDENT	WASTE WATER DR C.T.	WASTE WATER DR TILE
7								

CLEAR WATER DRAIN C. I.	CLEAR WATER DRAIN TILE	SEPTIC TANK	PRIVY	SEEPAGE PIT	ABSORPTION FIELD	BARN	SILO	ABANDONED WELL	SINK HOLE
		50		75					

OTHER POLLUTION SOURCES (Give description such as dump, quarry, drainage well, stream, pond, lake, etc.)

6. Well is intended to supply water for: Home

7. DRILLHOLE

Dia. (in.)	From (ft.)	To (ft.)	Dia. (in.)	From (ft.)	To (ft.)
6	Surface	63			

8. CASING, LINER, CURBING, AND SCREEN

Dia. (in.)	Kind and Weight	From (ft.)	To (ft.)
6	Stand Blk 17.05 Lb	Surface	63
6 ft 15 Slot	Johnson Stainless Steel Screen		

9. GROUT OR OTHER SEALING MATERIAL

Kind	From (ft.)	To (ft.)
	Surface	

10. FORMATIONS

Kind	From (ft.)	To (ft.)
Sand & Gravel	Surface	63

Well construction completed on Sept 25 19[illegible]

Well is terminated 14 inches ☒ above ☐ below final grade

Well disinfected upon completion ☒ Yes ☐ No

Well sealed watertight upon completion ☒ Yes ☐ No

11. MISCELLANEOUS DATA

Yield test: 20 Hrs. at 15 GPM

Depth from surface to normal water level 25 ft.

Depth to water level when pumping 25 ft.

Water sample sent to Madison laboratory on: Dec 7 19[illegible]

Your opinion concerning other pollution hazards, information concerning difficulties encountered, and data relating to nearby wells, screens, seals, type of casing joints, method of finishing the well, amount of cement used in grouting, blasting, s[illegible] surface pumprooms, access pits, etc., should be given on reverse side.

SIGNATURE: LaVerne Helsch — Registered Well Driller

COMPLETE MAIL ADDRESS: 245 Park Ave Prairie Du Sa[illegible]

Please do not write in space below

COLIFORM TEST RESULT	GAS — 24 HRS.	GAS — 48 HRS.	CONFIRMED	REMARKS

97

WELL CONSTRUCTOR'S REPORT

FORM 3300 - 15

NOV 21 1973

NOTE
WHITE COPY - DIVISION'S COPY
GREEN COPY - DRILLER'S COPY
YELLOW COPY - OWNER'S COPY

STATE OF WISCONSIN
DEPARTMENT OF NATURAL RESOURCES
Box 450
Madison Wisconsin 53701

COUNTY: Pierce

CHECK ONE: ☒ Town ☐ Village ☐ City

NAME: Prescott

1. LOCATION — NE 1/4 SE 1/4 Section 35 Township 1 N Range 6 E
OR Grid or street no / Street name

AND If available subdivision name, lot & block no

3. OWNER AT TIME OF DRILLING: Herman Zeglin
ADDRESS: Water St.
POST OFFICE: Maiden Rock, Wis.

4. Distance in feet from well to nearest: (Record answer in appropriate block)

BUILDING	SANITARY SEWER C.I.	SANITARY SEWER TILE	FLOOR DRAIN C.I.	FLOOR DRAIN TILE	FOUNDATION DRAIN SEWER CONNECTED	FOUNDATION DRAIN INDEPENDENT	WASTE WATER DRAIN C.I.	WASTE WATER DRAIN TILE
30 ft	50 ft		none		none		70 ft	

CLEAR WATER DRAIN C.I.	CLEAR WATER DRAIN TILE	SEPTIC TANK	PRIVY	SEEPAGE PIT	ABSORPTION FIELD	BARN	SILO	ABANDONED WELL	SINK HOLE
15 ft		75		1 Mc.					

OTHER POLLUTION SOURCES (Give description such as dump, quarry, drainage well, stream, pond, lake, etc.)

6. Well is intended to supply water for: Home

5. DRILLHOLE

Dia. (in.)	From (ft.)	To (ft.)	Dia. (in.)	From (ft.)	To (ft.)
10	Surface	10			
6	10	194			

7. CASING, LINER, CURBING, AND SCREEN

Dia. (in.)	Kind and Weight	From (ft.)	To (ft.)
"	New Steel Bell Steel 19.18# per ft.	Surface	189
	5 ft Johnson Stainless		
	15 Slot Screen Installed		

8. GROUT OR OTHER SEALING MATERIAL

Kind	From (ft.)	To (ft.)
Drill Cuttings	Surface	10

9. FORMATIONS

Kind	From (ft.)	To (ft.)
Sand Gravel Clay	Surface	75
Sand	75	140
Sand Gravel	140	185
Gravel	185	194

10. TYPE OF DRILLING MACHINE USED

☒ Cable Tool ☐ Direct Rotary ☐ Reverse Rotary
☐ Rotary – air w drilling mud ☐ Rotary – hammer with drilling mud & air ☐ Jetting with ☐ Air ☐ Water

Well construction completed on Oct 10 1973

11. MISCELLANEOUS DATA

Yield test: 15 Hrs. at 25 GPM

Depth from surface to normal water level 70 ft.

Depth to water level when pumping 70 ft.

Well is terminated 10 inches ☒ above ☐ below final grade

Well disinfected upon completion ☒ Yes ☐ No

Well sealed watertight upon completion ☒ Yes ☐ No

Water sample sent to Madison laboratory on: Oct 11 1973

Your opinion concerning other pollution hazards, information concerning difficulties encountered, and data relating to nearby wells, screens, use type of casing joints, method of finishing the well, amount of cement used in grouting, blasting, sub-surface pumprooms, access pits, etc., should be given on reverse side

SIGNATURE: LaVerne Welsch Registered Well Driller

COMPLETE MAIL ADDRESS: 345 Fair Ave Prescott Wis.

Please do not write in space below

COLIFORM TEST RESULT	GAS 24 HRS.	GAS 48 HRS.	CONFIRMED	REMARKS

REV. 3-71

98

STATE OF WISCONSIN

WELL CONSTRUCTOR'S REPORT — DEPARTMENT OF RESOURCE DEVELOPMENT — W

1. COUNTY: Sauk — CHECK ONE: ☒ Town ☐ Village ☐ City — NAME: Prairie Du Sac

2. LOCATION (Number and street or ¼ section, section, township and range. Also give subdivision name, lot and block numbers when available.): SW 1/4 Sec 35 T10N R6E

3. OWNER AT TIME OF DRILLING: Curt Mueller

4. OWNER'S COMPLETE MAIL ADDRESS: Prairie Du Sac, Wis

5. Distance in feet from well to nearest: (Record answer in appropriate block)

BUILDING	SANITARY SEWER C.I.	SANITARY SEWER TILE	FLOOR DRAIN C.I.	FLOOR DRAIN TILE	FOUNDATION DRAIN SEWER CONNECTED	FOUNDATION DRAIN INDEPENDENT	WASTE WATER DRAIN C.I.	WASTE WATER DRAIN TILE
75 ft			100 ft		none		125 ft	

CLEAR WATER DRAIN C.I.	CLEAR WATER DRAIN TILE	SEPTIC TANK	PRIVY	SEEPAGE PIT	ABSORPTION FIELD	BARN	SILO	ABANDONED WELL	SINK HOLE
125 ft		100		125					

OTHER POLLUTION SOURCES (Give description such as dump, quarry, drainage well, stream, pond, lake, etc.)

6. Well is intended to supply water for: Mueller Chemical Co.

7. DRILLHOLE

Dia. (in.)	From (ft.)	To (ft.)	Dia. (in.)	From (ft.)	To (ft.)
6	Surface	247			

8. CASING, LINER, CURBING, AND SCREEN

Dia. (in.)	Kind and Weight	From (ft.)	To (ft.)
6"	New Stand Blk. Steel T&C 19.45 # per ft	Surface	209

9. GROUT OR OTHER SEALING MATERIAL

Kind	From (ft.)	To (ft.)
	Surface	

10. FORMATIONS

Kind	From (ft.)	To (ft.)
Sand	Surface	180
Sand Rock	180	23[illegible]
Blue Soap Stone	235	247

RECEIVED SEP 25 1969 Dept. Nat. [illegible]

RECEIVED SEP 25 1969

11. MISCELLANEOUS DATA

Yield test: 20 Hrs. at 20 GPM

Depth from surface to normal water level: 80 ft.

Depth to water level when pumping: 80 ft.

Well construction completed on Aug 5 1969

Well is terminated 14 inches ☒ above ☐ below final grade

Well disinfected upon completion ☒ Yes ☐ N

Well sealed watertight upon completion ☒ Yes ☐ N

Water sample sent to Madison laboratory on Aug 7 1969

Your opinion concerning other pollution hazards, information concerning difficulties encountered, and data relating to near wells, screens, seals, type of casing joints, method of finishing the well, amount of cement used in grouting, blasting, su surface pumprooms, access pits, etc., should be given on reverse side.

SIGNATURE: LaVerne Welsch Registered Well Driller

COMPLETE MAIL ADDRESS: 245 Park Ave. Prairie Du Sac

Please do not write in space below

COLIFORM TEST RESULT	GAS — 24 HRS.	GAS — 48 HRS.	CONFIRMED	REMARKS

RECE 99
SEP 26 '49
BUREAU SAN. ENG.

WELL CONSTRUCTOR'S REPORT TO WISCONSIN STATE BOARD OF HEALTH

See Instructions on Reverse Side

1. County Sauk { Town / Village / City Prairie Du Sac "
2. Location 1 mi N. of the Village of P. S½ S½ Sec 24 T10N R6E
3. Owner or Agent Pete Weber
4. Address R.R. 1 Prairie Du Sac
5. From well to nearest: Building 10 ft; sewer ____ ft; drain ____ ft; septic tank ____ ft; dry well or filter bed 150 ft; abandoned well 200 ft.
6. Well is intended to supply water for: Farm

7. DRILLHOLE OR EXCAVATION:

Dia. (in.)	From (ft.)	To (ft.)
6	0	300
5	300	321

8. CASING AND LINER PIPE OR CURBING:

Dia. (in.)	Kind	From (ft.)	To (ft.)
6	Std. Black Pipe	0	281
5	Line Pipe	301	321

9. GROUT:

Kind	From (ft.)	To (ft.)
None		

10. FORMATIONS:

Kind	Thickness (ft.)	Total Depth (ft.)
Top Soil	40	40
Quicksand	226	266
Soft Sandstone (caving)	21	281
Sandstone	20	301
Very Soft Limestone	20	321
A 5" liner set from	0	301-321

11. MISCELLANEOUS DATA:

Yield test: ____ Hrs. at ____ GPM.

Depth from surface to water: 90 ft.

Water-level when pumping: ____ ft.

Water sample sent to laboratory at ____ on ____ 19____

Construction of the well was completed on July 19 1949

The well is terminated 14 inches (above) (below) the permanent grade.

Was the well disinfected upon completion? Yes ____ No X

Was the well sealed watertight upon completion? Yes ____ No X

Signature Louis P. O'Connor
Registered Well Driller

Spring Green
Complete Mail Address

WELL CONSTRUCTOR'S REPORT
FORM 3300-15

MAR 3 0 1976

NOTE
WHITE COPY – DIVISION'S COPY
GREEN COPY – DRILLER'S COPY
YELLOW COPY – OWNER'S COPY

STATE OF WISCO
DEPARTMENT OF NATURA
Box 450
Madison, Wisconsin

10C

1. COUNTY: Sauk

CHECK ONE: ☒ Town ☐ Village ☐ City

NAME: Prairie Du Sac

2. LOCATION – NE ¼ SW ¼ Section 25 Township 10N Range 6E

OR – Grid or street no. | Street name

AND – If available subdivision name, lot & block no.

3. OWNER AT TIME OF DRILLING: Emma Gruber (Edward)

ADDRESS: Rte 1

POST OFFICE: Prairie Du Sac

4. Distance in feet from well to nearest: (Record answer in appropriate block)

BUILDING	SANITARY SEWER C. I.	SANITARY SEWER TILE	FLOOR DRAIN C. I.	FLOOR DRAIN TILE	FOUNDATION DRAIN SEWER CONNECTED	FOUNDATION DRAIN INDEPENDENT	WASTE WATER DRAIN C. I.	WASTE WATER DRAIN TILE
18 ft	25 ft		20 ft		none		30 ft	

CLEAR WATER DRAIN C. I.	CLEAR WATER DRAIN TILE	SEPTIC TANK	PRIVY	SEEPAGE PIT	ABSORPTION FIELD	BARN	SILO	ABANDONED WELL	SINK HOLE
25 ft		35 ft		55 ft		100 ft		15 ft Sandpoint	

OTHER POLLUTION SOURCES (Give description such as dump, quarry, drainage well, stream, pond, lake, etc.)

5. Well is intended to supply water for: Farm & Home

6. DRILLHOLE

Dia. (in.)	From (ft.)	To (ft.)	Dia. (in.)	From (ft.)	To (ft.)
10	Surface	10			
6	10	240			

7. CASING, LINER, CURBING, AND SCREEN

Dia. (in.)	Kind and Weight	From (ft.)	To (ft.)
6"	New Steel Bell Steel T&C. 19.45 lb/ft ASTM A53	Surface	232

9. FORMATIONS

Kind	From (ft.)	To (ft.)
Topsoil	Surface	4
Sand	4	75
Sand Gravel	75	140
Sand	140	170
Sand Rock	170	24

8. GROUT OR OTHER SEALING MATERIAL

Kind	From (ft.)	To (ft.)
Drill Cuttings	Surface	10

10. TYPE OF DRILLING MACHINE USED

☒ Cable Tool ☐ Direct Rotary ☐ Reverse Rotary
☐ Rotary – air w/drilling mud ☐ Rotary – hammer with drilling mud & air ☐ Jetting with ☐ Air ☐ Wat

Well construction completed on Aug 23 19 75

11. MISCELLANEOUS DATA

Yield test: 15 Hrs. at 25 GPM

Depth from surface to normal water level 92 ft.

Depth to water level when pumping 92 ft.

Well is terminated 10 inches ☒ above ☐ below final gra

Well disinfected upon completion ☒ Yes ☐ No

Well sealed watertight upon completion ☒ Yes ☐

Water sample sent to Madison laboratory on: Aug 25 19 7

Your opinion concerning other pollution hazards, information concerning difficulties encountered, and data relating to nearby wells, screens, seals, type of casing joints, method of finishing the well, amount of cement used in grouting, blasting, sub-surface pumprooms, access pits, etc., should be given on reverse side.

SIGNATURE: LeVerne Shelasky Registered Well Driller

COMPLETE MAIL ADDRESS: 345 Park Ave Prairie Du S

Please do not write in space below

COLIFORM TEST RESULT	GAS – 24 HRS.	GAS – 48 HRS.	CONFIRMED	REMARKS

101

WELL CONSTRUCTOR'S REPORT TO WISCONSIN STATE BOARD OF HEALTH
See Instructions on Reverse Side

1. County SAUK' (Town ☐ Village ☐ City ☐) PRAIRE DU SAC
Check one and give name

2. Location SEC 35 T9+10N R6E
Name of street and number of premise or Section, Town and Range numbers

3. Owner ☒ or Agent ☐ John McEly
Name of individual, partnership or firm

4. Mail Address R.R. PRAIRE DU SAC
Complete address required

5. From well to nearest: Building 50 ft; sewer ... ft; drain ... ft; septic tank 100 ft; 100 dry well or filter bed ... ft; abandoned well ... ft.

6. Well is intended to supply water for: FARM

7. DRILLHOLE:

Dia. (in.)	From (ft.)	To (ft.)	Dia. (in.)	From (ft.)	To (ft.)
4	0	141			

8. CASING AND LINER PIPE OR CURBING:

Dia. (in.)	Kind and Weight	From (ft.)	To (ft.)
4	Steel	0	136
4	Screen	136	141

9. GROUT:

Kind	From (ft.)	To (ft.)
Cement	65	45

10. FORMATIONS:

Kind	From (ft.)	To (ft.)
Open Well	0	65
SAND	65	130
SAND & GRAVEL	130	141
Open Well		
Filled with Clay		

RECEIVED AUG 31 1959 ENVIRONMENTAL SANITATION

Construction of the well was completed on: 8/25 1959

11. MISCELLANEOUS DATA:

Yield test: 4 Hrs. at 8 GPM

Depth from surface to water-level: 60 ft.

Water-level when pumping: 60 ft.

Water sample was sent to the state laboratory at: MADISON (City) on 8/27 1959

The well is terminated 10 inches ☒ above, below ☐ the permanent ground surface.

Was the well disinfected upon completion? Yes ... No ...

Was the well sealed watertight upon completion? Yes ... No ...

Signature [signature] Registered Well Driller — Portage Wisc. Complete Mail Address

Please do not write in space below

Rec'd. ... No. ...

Ans'd ...

Interpretation ...

	10 ml	10 ml	10 ml	10 ml	10 ml
Gas—24 hrs.					
48 hrs.					
Confirm					
B. Coli					

Examiner ...

Rueter Farm

102

WELL CONSTRUCTOR'S REPORT TO WISCONSIN STATE BOARD OF HEALTH

See Instructions on Reverse Side

1. County Sauk (Town ☒ Village ☐ City ☐) Prairie Du Sac
Check one and give name

2. Location Sec 35 [illegible] R6E
Name of street and number of premise or Section, Town and Range numbers

3. Owner ☐ or Agent ☐ John [illegible] (Carl Rueter Farm)
Name of individual, partnership or firm

4. Mail Address R. Prairie Du Sac
Complete address required

5. From well to nearest: Building 6 ft; sewer ____ ft; drain ____ ft; septic tank 35 ft; dry well or filter bed 60 ft; abandoned well 100 ft.

6. Well is intended to supply water for: Farm

7. DRILLHOLE:

Dia. (in.)	From (ft.)	To (ft.)	Dia. (in.)	From (ft.)	To (ft.)
6	0	196			

8. CASING AND LINER PIPE OR CURBING:

Dia. (in.)	Kind and Weight	From (ft.)	To (ft.)
6	Std Blk	0	196

9. GROUT:

Kind	From (ft.)	To (ft.)
None		

10. FORMATIONS:

Kind	From (ft.)	To (ft.)
Sand	0	110
Sand & Fine Gravel	110	130
Sand	130	190
Gravel	190	196

RECEIVED
OCT 19 1956
ENVIRONMENTAL SANITATION

11. MISCELLANEOUS DATA:

Yield test: 2 Hrs. at 22 P.M.

Depth from surface to water-level: 50

Water-level when pumping: 70 ft.

Water sample was sent to the state laboratory at: Madison (City) on Oct 18 1956

Construction of the well was completed on: Oct. 13 1956

The well is terminated 26 inches ☒ above, below ☐ the permanent ground surface.

Was the well disinfected upon completion? Yes X No ____

Was the well sealed watertight upon completion? Yes X No ____

Signature Don O'Connor (Registered Well Driller) Spring Green (Complete Mail Address)

Please do not write in space below

Rec'd ____ No. ____

Ans'd [illegible]

Interpretation [illegible]

	10 ml	10 ml	10 ml	10 ml	10 ml
Gas—24 hrs.					
48 hrs.					
Confirm					
B. Coli					

Examiner ____

[illegible] WELL NO. 1, [illegible] CITY, WIS.
SW [illegible] sec. 12, T. 9 N., R. 5 E. Elevation 751
Mead and Hunt, Engineers Varner Well Drilling Co., Contractors, 19
Samples examined by F. T. Thwaites, Nos. 135704-135802.
550' W. of Well No. 1

DRIFT	0-25	25	Sand and gravel, no samples	24" pipe cement
	25-35	10	Gravel, fine to coarse, sandy	40
	35-115	80	Sand, medium to coarse, light gray, glacial	16" pipe
28	115-128	13	Sand, medium to very coarse, some pebbles	128
EAU CLAIRE	128-145	17	Sandstone, fine, yel-gray to gray, dolomitic	
	145-175	30	Shale, blue-gray, dolomitic	15" hole
	175-180	5	Dolomite, sandy, silty, light gray	
	180-250	70	Shale, gray, dolomitic	
	250-265	15	Siltstone, sandy, very dolomitic, gray	257
	265-290	25	Sandstone, fine to medium, light gray, dolomitic	
2	290-300	10	Siltstone, light gray, dolomitic	
	300-335	35	Sandstone, fine to medium, light gray, dolomitic	
	335-360	25	Sandstone, medium to coarse, light gray, dolomitic	12¼" hole
	360-385	25	Sandstone, fine to medium, light gray	
	385-440	55	Sandstone, very fine, silty, light gray, dolomitic	
	440-455	15	Sandstone, medium, light gray	
	455-465	10	Sandstone, medium to coarse, light gray	
	465-515	50	Sandstone, fine, light gray	
2	515-530	15	Sandstone, no samples	
	530-532	2	Granite, light gray	

ormations: Drift (glacial outwash); Eau Claire; Mt. Simon; pre-Cambrian
at ral flow; no pump test Closed in head = +52.8' Flow at +5 after 16 hours = 308 g.p.m.
Specific capacity = 6.55 g.p.m./ft.

APPENDIX E

BOREHOLE GEOPHYSICAL SURVEY

This Page Intentionally Left Blank.

APPENDIX E: BOREHOLE GEOPHYSICAL SURVEY

Appendix E presents the results of a borehole geophysical logging program conducted at Badger Army Ammunition Plant by COLOG, Inc. of Golden, Colorado for the RI program. This appendix is organized to present detailed descriptions of the borehole geophysical logging methods; field operation procedures; quality assurance, log processing, and log interpretation principles; and a summary of key features noted on individual boreholes. Finally, the geophysical logs are presented for each boring evaluated.

E.1 TECHNIQUES

The five geophysical techniques used at BAAP are natural gamma, non-focused gamma density, dual gamma-gamma (G-G) density, neutron, and induction. These techniques are described in the following paragraphs.

E.1.1 Natural Gamma

The gamma measurement detects gamma ray radiation that occurs naturally in all rocks. This log, recorded in counts per seconds, detects relative changes in natural radiation and is commonly used for lithologic identification and stratigraphic correlation. Naturally occurring radiation comes from three principal areas: potassium 40, which occurs with all potassium minerals; thorium 232, which is associated with biotite, sphene, and zircon type minerals; and uranium 238. The typical radial depth of investigation from the center of the well of the natural gamma probe is approximately 10 to 12 inches. In general, the gamma radiation level was low in the BAAP wells, indicating a low percentage of radioactive clay minerals in the subsurface layers penetrated by the boreholes.

E.1.2 Non-focused Gamma-Gamma Density

The 4 pi G-G density log is a qualitative measurement of density made using a non-focused probe with a source-to-detector spacing of 20 inches and a radioactive source of 100 millicuries of cesium 137. This measurement responds to changes in the electron density immediately surrounding the probe in all directions. It is affected by well construction, drilling disturbances, and formation changes. It is extremely sensitive to fluid in the well and is an excellent indicator of the water level in a casing. This log provides information on changes in formation parameters, such as porosity, and commonly reflects well construction and completion features. Because this tool is not internally focused, it should

not be as affected by localized channeling or other conditions in one direction from the well bore as a focused density measurement may be.

E.1.3 Dual Gamma-Gamma Density

The dual G-G density measurement is a quantitative density measurement using a focused probe. This probe has two receivers (radiation detectors) at approximately 8 and 14 inches from a radioactive source (100 milli-curies of cesium 137). This probe is decentralized in the well with a single-arm caliper, and consequently senses the formation in one direction from the well or borehole. The near receiver has a shallower depth of investigation than the far receiver and should be more affected by construction and completion features of the well. This logging technique provided some quantitative densities relating to the completion of the well and to the formation.

E.1.4 Neutron

The neutron log consists of a l-curie americum 241 (beryllium activated) radioactive source and a thermal neutron detector (He+3). The source-to-detector spacing is approximately 14 inches and the log is non-focused. Thermal neutrons are absorbed primarily by hydrogen, chlorine, and boron with water and the PVC casing being the primary sources of these elements in the BAAP boreholes. Since the PVC casing is nearly uniform in thickness, the changes in the neutron log should be almost entirely related to changes in water content or saturation in and around the well borehole. The neutron log provided additional information on lithology by showing low response counts per second opposite clay layers (higher porosity) in contrast to higher count rates opposite sands and gravels (lower porosity). Well completion may also affect the neutron log response if the backfill or grout varies appreciably in diameter.

E.1.5 Induction

The induction measurements were collected using a Geonics EM39 logging system and included a quadrature component of the induced electromagnetic field. Measurements can be converted to bulk electrical conductivity, and an in-phase component converted to magnetic susceptibility. The tool uses a transmitter coil, a receiver coil, and a focusing coil. It operates at 39.2 Khz and can penetrate through PVC casing into the vadose and saturated zone. The focusing coil causes measurement sensitivity to peak at the distance of about 12 inches from the borehole axis. Therefore, significant borehole effects should not occur when used in boreholes that range from 2 to 8 (or 9) inches in diameter. Due to the nature

of the conductivity measurement, it is not possible to accurately resolve resistivity in environments greater than about 200 ohm-m.

This tool measures a bulk conductivity that is the result of electrical properties of both the geologic materials and the resistant groundwater. In general, conductivity will increase as clay content, fluid content, and the ionic strength of water individually increase. Because of these relationships, it may be difficult to identify contaminated groundwater in sediments that contain variable amounts of clay. In these environments, comparison of the conductivity log to the natural gamma log may enable discrimination between clayey sediments and zones of contaminated groundwater. However, it is important to note that very small variations in clay content may result in large changes in conductivity. These small variations in clay content may exceed the resolution of the gamma log.

E.2 Field Operation Procedures

The wells were logged at a maximum rate of 20 feet per minute, and the digital sample interval was set at 0.5 feet. Analog records were collected simultaneously with the digital records, but were used only as assurance of correct tool performance. The digital data were processed for the final log generation and interpretation.

Digital data processing consisted of correcting depth offsets of the different probe configurations, filtering of the radioactive measurements, converting conductivity in ms/m to ohm-m, combining individual probe runs to a single file, and eliminating the induction data above the bottom of the steel surface casing.

All probes and the logging cable were steam cleaned between probe runs to minimize cross-contamination potential from the logging process.

E.3 Quality Assurance

All of the radioactive logging probes and modules conformed to U.S. Bureau of Mines (USBM) calibration standards and were validated in test holes at the Denver Federal Center prior to mobilizing on this program. All of the probes performed within the manufacturers specifications in these wells. The EM-39 was checked both in Colog's office and in the field with a Q-coil, a specialized calibration standard, and performed within the manufacturer's specifications.

The same equipment was utilized for logging all wells. All data were recorded in the simplest form and then corrected, filtered, and processed. Additionally, an audit trail (file) was automatically made that showed the changes made to the raw data. Logging trip reports and daily logs were filled out for each hole and each day in the field. These records document all equipment serial numbers, when they were used, borehole conditions, weather conditions, logging speed, sample interval, engineer(s), witness(es), and digital file names.

The raw analog and digital data were checked for correct tool operation as each borehole was being logged. Field prints of the digital data were made on-site, prior to moving the equipment off the borehole, and checked for inconsistencies. All of the digital data were backed up onto a secondary storage media prior to moving the equipment off the borehole. Paper log prints of the processed well logs were made in the field and copies of the digital data were provided to Jordan prior to demobilization from BAAP.

Depth values were all referenced to the top of the Schedule 80 PVC casing of each well. The distance to ground level from this casing top is noted on the log header. Potential depth errors, which are the difference (in feet), when the probe was rezeroed at the casing top of each well after completion of the logging run, were recorded for each probe. The maximum difference was 0.9 feet in several of the deeper Propellant Burning Ground wells and was much less than this for most of the other wells.

The first well (DBN-89-04B) and final well (SPN-89-05B) were logged twice with all probes. These logs were checked for repeatability prior to demobilization from each of these wells. Correlation between the different logs and similar response in all of the boreholes also served to check the accuracy and consistency of the log data.

E.4 LOG PROCESSING

Processing report forms were filled out as the raw data were processed. The forms may be used to reconstruct the processing steps including filters used, sample intervals, trace cutoff depths at fluid level, any merge points, and any log calculations.

All of the log data were recorded in the simplest form and then corrected, filtered, and processed. Additionally, an audit trail (file) was created that shows all changes made to the raw data.

The initial processing step for all of the raw data files was to remove any duplicate depths and any obviously bad data. The next step was to select a constant sample interval (0.5 ft.),

filter the data as necessary to remove random noise, depth align the log traces, and convert the log values to numbers based on instrument calibration. Filtering was accomplished by applying an appropriate equation systematically throughout the entire depth interval of a log to smooth-out statistically non-representative peaks and lows, particularly characteristic of natural gamma radiation logs.

Additionally, many of the log values were recorded in several different formats, and these duplicate traces were deleted from the final files after checking for consistency.

The dual receiver gamma-gamma density log was compensated in the standard manner, but the compensated log did not appear to be correct below water level. The logs were then replotted separately as individual apparent densities for the short-spaced detectors (SSD) and the long-spaced detectors (LSD). This presentation was determined to be more useful for interpretation.

As a final processing step, the separate log files from each run were merged into one master data file, reconciling the individual logs to a common depth scale. These log composites facilitated interpretation by presenting all of the log data from each well at a vertical scale of one inch equals 15 feet where they were compared and evaluated together.

E.5 Log Interpretation Principles

Interpretation of geophysical logs was accomplished by noting the various unit values of baseline response on each log and by assessing the continuity of anomalies from one log to another. The geophysical logs were then judged for formation representativeness based upon each probe's depth of investigation and apparent well construction effects.

Well construction and uniformity or competency of the borehole annulus and grout backfill may significantly affect radioactive logs, especially the SSD log. The induction log is generally not greatly affected by the well itself. Realistically, most of the log anomalies would be attributable to geologic or groundwater changes in the formation, if well construction features were uniform along the entire borehole.

E.6 Summary of Logging Results

The following summaries were prepared by Colog in order to identify key features noted in each geophysical log. This is followed by a discussion of stratigraphic correlation between

wells in the Deterrent Burning Ground and Existing Landfill area. This includes an interpretation of the surface elevation of the clay/silt bed (Figure E-1). Finally, the geophysical logs for each individual well are presented.

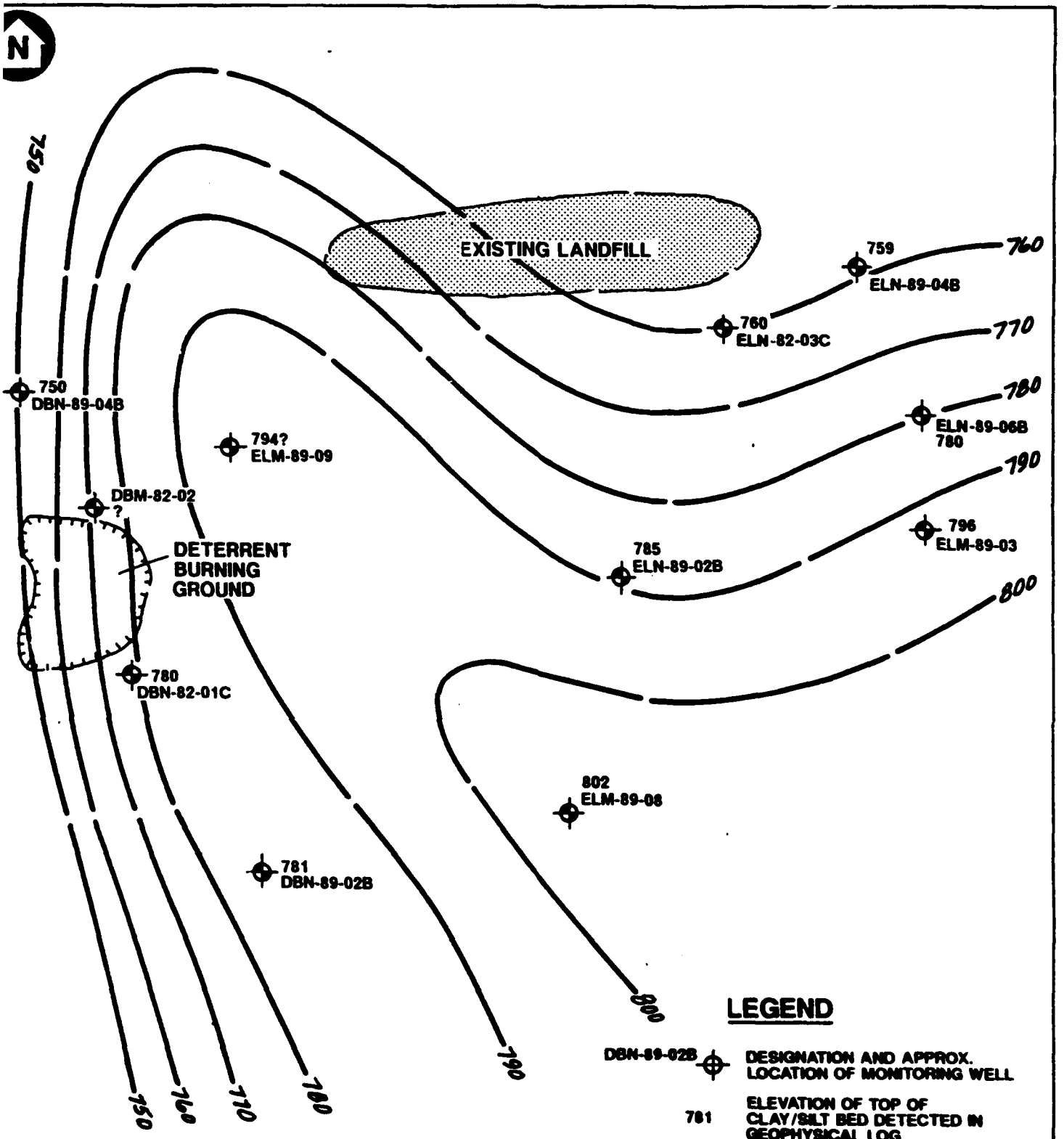

SOURCE: COLOG, INC., 1989 REPORT ON GEOPHYSICAL LOGGING AT BAAP.

APPROX. SCALE

0 250 500 FEET

FIGURE E-1
TOP OF CLAY/SILT BED
DETERRENT BURNING GROUND/
EXISTING LANDFILL
BADGER ARMY AMMUNITION PLANT

ECJORDANCO

SUMMARY OF KEY FEATURES ON INDIVIDUAL HOLES

Abbreviations :

Fluid Level - F.L.
Bentonite Seal - Seal
Concrete cap - Conc. Cap
Clay/Silt Bed - CSB
Gravel or Sand Pack - G.P.
Conductive zone - Cond.
Special Notes - S.N.

Deterrent Burning Ground

Well DBN-82-01C

F.L. = 128'; G.P. = 151'-TD and 120-130'; seal 130-151'; Conc. Cap 17-25'; Voids in Grout = 4-5' & 14-17'; CSB = 124-142'; S.N. = Cond. = 120-142' of which 120-124' may be contaminates upon CSB. The upper gravel pack may be partially to heavily saturated even though it is above F.L. This is based upon similar apparent LSD density with the lower saturated G.P. and neutron log anomalies.

Well DBN-89-04B

F.L. = 141'; G.P. = 177'-TD; Seal 173-177'; Voids in Grout = 118-124'; CSB = 163-174'; Cond. = 135-162' may be conductive plume on top of CSB; S.N. = LSD of CSB = 2.0 gm/cc & LSD of GP = 2.0 gm/cc.

Well DBM-82-02

F.L. = 135'; G.P. = 123'-TD; Seal 112-123'; Conc. Cap 18-24'; Void in Grout = near surf.; no CSB noted; Cond. FL-TD.

Well DBN-89-02B

F.L. = 107'; G.P. = 139'-TD; Seal = 130-139'; No voids in Grout detected; CSB = 104-109' & 134-138'; possibly CSB 39-44' & 62-78'; S.N. = Gamma ray is significantly higher in this well overall than in other wells by 30% or more. No well construction diagram available.

Existing Landfill Area

ELN-89-02B

F.L. = 142'; G.P. = 157'-TD; seal not obvious may be poor at 147-155' & 156-157'; voids in grout = 65-80' & 125-135'; Fine-grained " perched moisture" = 94-102' which correlates with 98-110' in well ELN-89-06B; Fine-grained "perched moisture" also from 40-50'; more dense = 37-42', 50-58', and 103-114'.

ELN-89-04B

F.L. = 149'; G.P. = 189'-TD; Seal 186-189'; voids in grout 70-80' (note probable channeling of cement shown as difference between 4 pi and LSD responses) & 125-137'; CSB = 48-53', 169-173', 178-184', & 193-195'; more dense 35-54', 84-98', 108-109', & 117-120'; Cond. = 12-18', 27-33', and 135-188' increasing with depth. The upper two conductive zones may be "fine-grained perched moisture" or related to contamination.

ELM-89-03

F.L. = 138'; G.P. = 115-TD and is saturated below F.L.; Seal = 110-115 & ?117-120'; no large air voids in grout; CSB = 120-124'-?138'; possible CSB = 100-110' w/ slight increase in neutron & 32-46' w/ decrease in neutron cps and increase in LSD; slightly cond. 28-50' ? silty or contaminates?

ELN-89-06B

F.L. = 130'; G.P. = 172'-TD; Seal = 157-172'; voids in grout = 23-52', 69-82', & 128-129'; CSB = ?130-155'; Fine-grained " perched moisture" = 98-110' (which correlates w/ similar zone form 94-110' in ELN-89-02B); more dense 112-128'; cond. = 153-159'?

ELN-82-03C

F.L. = 148'; G.P. = 150'-TD; seal not obvious may be 130-140'?; no large air filled voids detected in grout; CSB = 160-164'; Gamma ray increase 164'-TD; more dense 80-110' (LSD is greater than 1.7 gm/cc); Cond. 143-164' which may indicate contaminates perched on CSB.

ELN-82-02C

F.L. = 138'; G.P. = 147'-TD; Seal = 130-147'; Small void or channel in grout may occur 14-17'; CSB = 72-78', 83-87'; Cond. 133-TD ?contaminates; more dense per LSD 60-110'.

ELM-89-08

F.L. = 127'; G.P. = 125'-TD; seal 118-125'; void in grout 8-29'; CSB = 105-108' & 117-120'? which may be due to bentonite in seal; silty 108-117' the gamma ray is not consistent with boring log which indicates cobbles in this area which may be supported by the neutron log.

ELN-89-09

No well const. diagram was available for this well; F.L. = 140'; G.P. = 140'-TD and is saturated; seal is not obvious; void in grout surf-25'; CSB = 128-132'; Cond. 122-130' possible contaminates on CSB & cond. 137'-TD with a low gamma ray?; more dense 30-55'.

Propellent Burning Ground

PBN-89-10D

F.L. = 111'; G.P. = 199-212' and fill 212-TD?; seal is not obvious from log responses ? 192-199'; Void in grout 13-40' & 107-110'; silty 80-112? from GR; fine-grained "perched moisture" 32-45'; Cond. = 109-170' and 187-202' which are characterized as low neutron cps and low gamma cps which may be very fine sand w/ no clay or silt?; more dense 55-71', 78-83', 87-91', 93-99', 154-157', 167-190', & 199-212'; No obvious correlation between the boring sample description log and the well logs.

PBN-89-01D

F.L. = 102'; G.P. = 119'-TD; Seal is not obvious; CSB = 68-82' characterized by low neutron, conductive, high gamma, and low apparent density; well is overall conductive with 190-215' being more conductive; may be gravels at 167-188'; no obvious voids in grout; there is no obvious correlation between the boring sample description log and the well logs.

PBN-89-04C

F.L. = 90'; G.P. = 168-TD?; seal is not indicated from logs, but seal is suppose to be located in an apparent gravel zone; void in grout = 37-50'; fine-grained perched moisture = 19-30' & 65-71'; more dense from 140-169'; overall this well has a good correlation with the boring log description and the induction conductivities, e.g. 71-88' = gravel & low cond., 122-139 = fn-med. sand w/ higher cond., 139-153' = gravel w/ low cond.

PBN-89-03C

F.L. = 75'; G.P. = 140'-TD; seal = 137-140'; CSB = 133-145'; More dense 28-65' & 80-125'; cond. = 0-7' & 16-25'; there is a good correlation between apparent lithology and the induction log, eg. 98-101 = gravel, 139-TD = gravel, both with very low apparent conductivity.

PBN-89-02C

F.L. = 126'; G.P. = 170-TD;, Seal 164-168' note construction diagram indicates seal at 175-182'; gamma ray from 88-125' correlates with well PBN-89-03C from 40-72'; Cond. above 17', 126-175' with 148-153 and 160-170 very high which may be contaminates; gravel indicated from induction at 100-120'.

PBN-89-11

Boring log describes this well as an auger well versus reverse air for the other wells; F.L. = 107'; G.P. = 106-TD & 87-96' which appear saturated, 96-107' may be dry; seal = 75-80'? neutron and density logs suggests that the seal maybe dry or only partially hydrated; CSB = 75-83'; fine-grained perched moisture = 57-78', near surface conductive from surf. - 16'; Void in grout 48-58'; more dense form 20-27' & 87-95'.

PBN-89-12B

F.L. = 89'; G.P. 129'-TD; Seal = 112-129'; CSB = 52-62' & 78-88' w/ high LSD; no obvious voids in grout; Cond. 100-130'; more dense above 15', 53-63', & 78-87'.

PBN-82-03C

F.L. = 87'; G.P. = 101-'TD; Seal 65-101'; Second G.P. = 53-65'; void in grout = 10-15', there are no cond. zones; CSB = 54-85'; more dense 18-28'.

PBN-82-05C

F.L. = 105'; G.P. = 103'-TD; seal is not apparent from log response; void in grout 7-9' & partial void 87-104'; no conductive zones; more dense 20-45' & 73-80'.

PBN-82-01C

F.L. = 108', G.P. = 108'-TD; seal appears good from 88-101' and poor from 68-88' & 101-107'; no conductive zones; CSB = 77-100' more dense from 9-11' & 125-128'.

PBM-89-09

F.L. = 107'; G.P. = 107-TD saturated and 104-107' dry; no apparent seal; CSB = 87-95'; fine-grained perched moisture = 43-46' & 77-83', cond. 12-18' may be related to near surface moisture; more dense 16-20', 42-45', 52-64' 70-77' 82-105'.

Landfill No. 1

LON-89-02B

F.L. = 147'; G.P. = 174'-TD; Seal? possibly 152-163 & 163-174' as opposed to construction diagram which indicated 177-183'; CSB = 65-75' ? 118-130' & 140-150'; Cond. = 143-188' which may be contaminates; no obvious air filled voids in grout; more dense 23-66', 89-91', 107-176', & 147-150'.

LOM-89-01

F.L. = 142'; G.P. = 142'-TD which is saturated and 130-142' which is dry; Seal may not be hydrated at 121-126' based on high apparent densities or 125-130 based upon gamma cps increase; CSB = 120-130' silty 112-120'; Cond. 140'-TD., no obvious voids in grout.

Settling Ponds

SPN-89-04C

F.L. = 38'; G.P. = 100'-TD; Seal 94-97' ?97-100 seal/sand mix; CSB = 80-90' w/ high density 81-85'; very cond. 60-99'; ?silty 24-33'; more dense 13-19' & 23-27'; ? gravel 43-49'; overall conductivity is higher indicating finer grained material than wells at north end of project area.

SPN-89-05B

F.L. = 40'; G.P. = 71'-TD; Seal is not obvious may be 65-71'; no obvious air filled voids in grout; CSB 43-46'?; Cond. = 52-62' and 63-70 w/ very low neutron cps and LSD = 1.5 gm/cc maybe very fine grained material?

SPN-89-03C

F.L. = 52'; G.P. = 122-128'; Seal = 115-122'?; void in grout = 43-47', no obvious CSB; Cond. above 12', 18-20', & 52-87'; more dense 30-43', 43-52', and 100-115'. Overall fine grained material throughout well.

SPN-89-01C

FL. = 65'; G.P. = 109-117'; Seal 104-109' but poor?; Low density 65-71 similar to response for seal; void in grout = 59-64'; more dense 32-37', 40-59', very dense 50-59'; cond. 25-40' w/ low neutron may be fine-grained "perched moisture"; Cond. 63-107' ? contamination?

SPN-89-02C

F.L. = 57'; G.P. is not obvious; no seal is indicated; CSB = 79-83' or maybe silty; Cond. 57-100' and very cond. 77-80'; fine-grained "perched moisture" = 40-46'; overall fine-grained background.

STRATIGRAPHIC CORRELATION BETWEEN WELLS

The gamma ray and the induction logs are the least affected by well completion and borehole effects, and are therefore the basis of which stratigraphic correlation were made. The induction logs appear to respond to other features including but not limited to clay or silt content such as possible contamination and or partial saturation of the formation above fluid level.

It seems likely that most of the wells in the Deterrent Burning Area and in the Area of the Existing Landfill could be correlated based upon the gamma ray log. The depth to a correlatable bed follow:

		elev. well riser	elev. marker
DBN-82-01C	125'	905	780
DBN-89-04B	162'	920	758
DBN-89-02B	106'?	887	781
ELN-82-03C	160'	920?	760?
ELM-89-03	120'	916	796
ELM-89-08	104'?	906	802
ELN-89-06B	128'	908	780
ELN-89-04B	168'	927	759
ELN-89-02B	135'	920	785
ELM-89-09	128'	922	794

DBN-82-02 may correlate with DBN-89-04B at 54', 76' and 85' in each well. The deeper CSB used to tie these other wells in is not apparent in DBN-82-02.

An apparent structure map of the top of this clay bed is included with this report as Figure E-1.

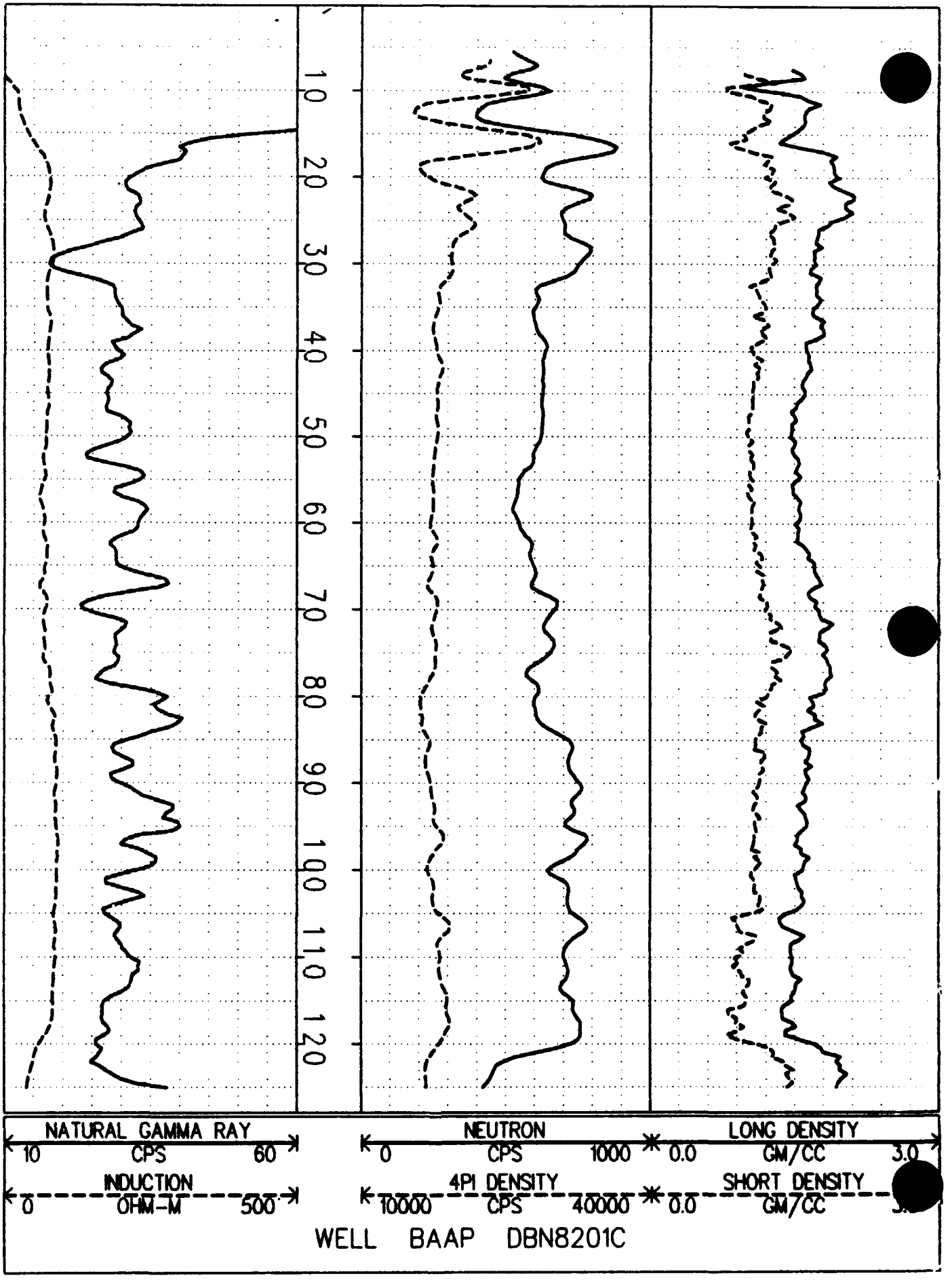
10
20
30
40
50
60
70
80
90
100
110
120
NATURAL GAMMA RAY
10 CPS 60
INDUCTION
0 OHM-M 500
NEUTRON
0 CPS 1000
4PI DENSITY
10000 CPS 40000
LONG DENSITY
0.0 GM/CC 3.0
SHORT DENSITY
0.0 GM/CC
WELL BAAP DBN8201C

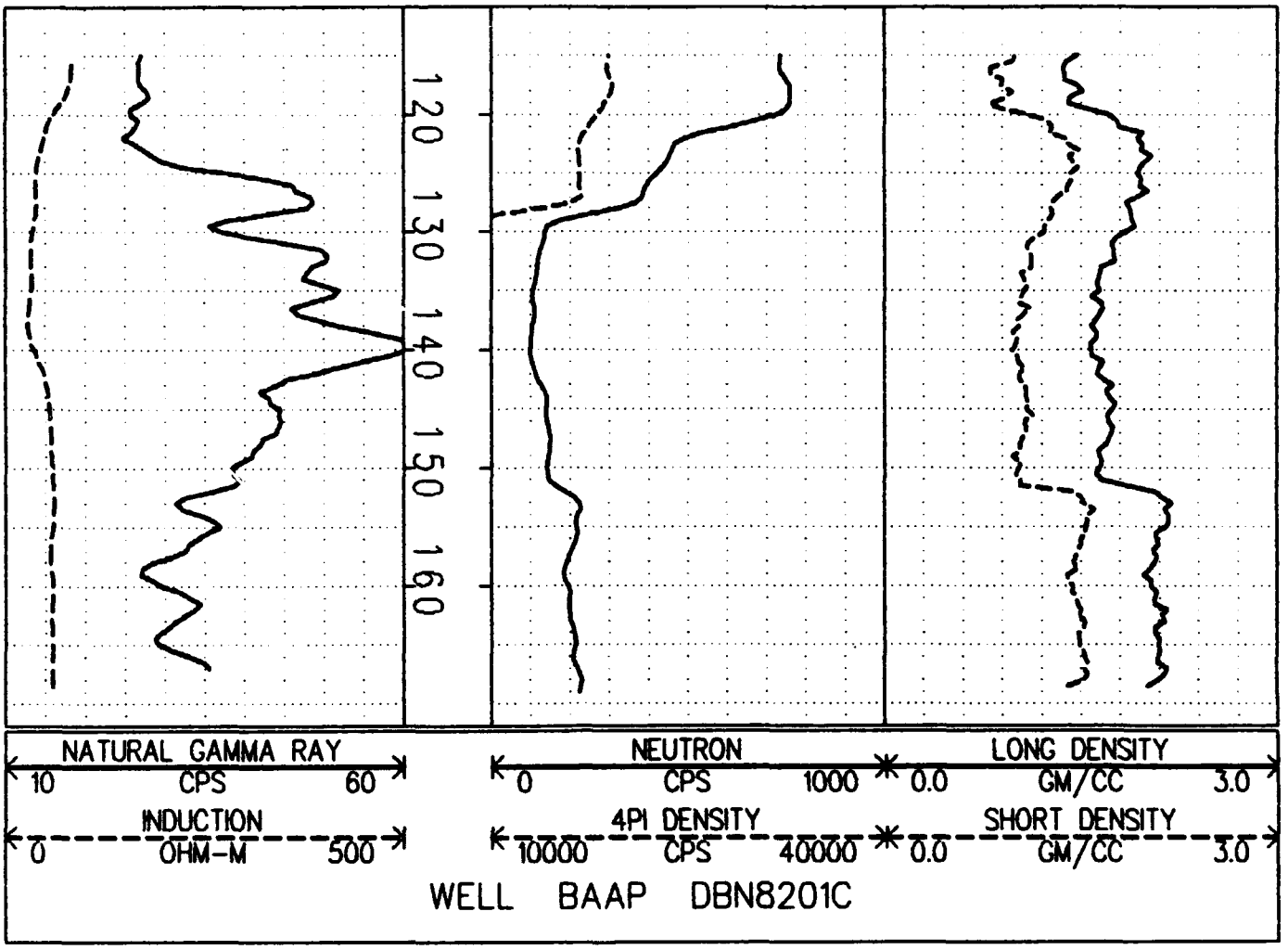
120
130
140
150
160
NATURAL GAMMA RAY
10 CPS 60
INDUCTION
0 OHM-M 500
NEUTRON
0 CPS 1000
4PI DENSITY
10000 CPS 40000
LONG DENSITY
0.0 GM/CC 3.0
SHORT DENSITY
0.0 GM/CC 3.0
WELL BAAP DBN8201C

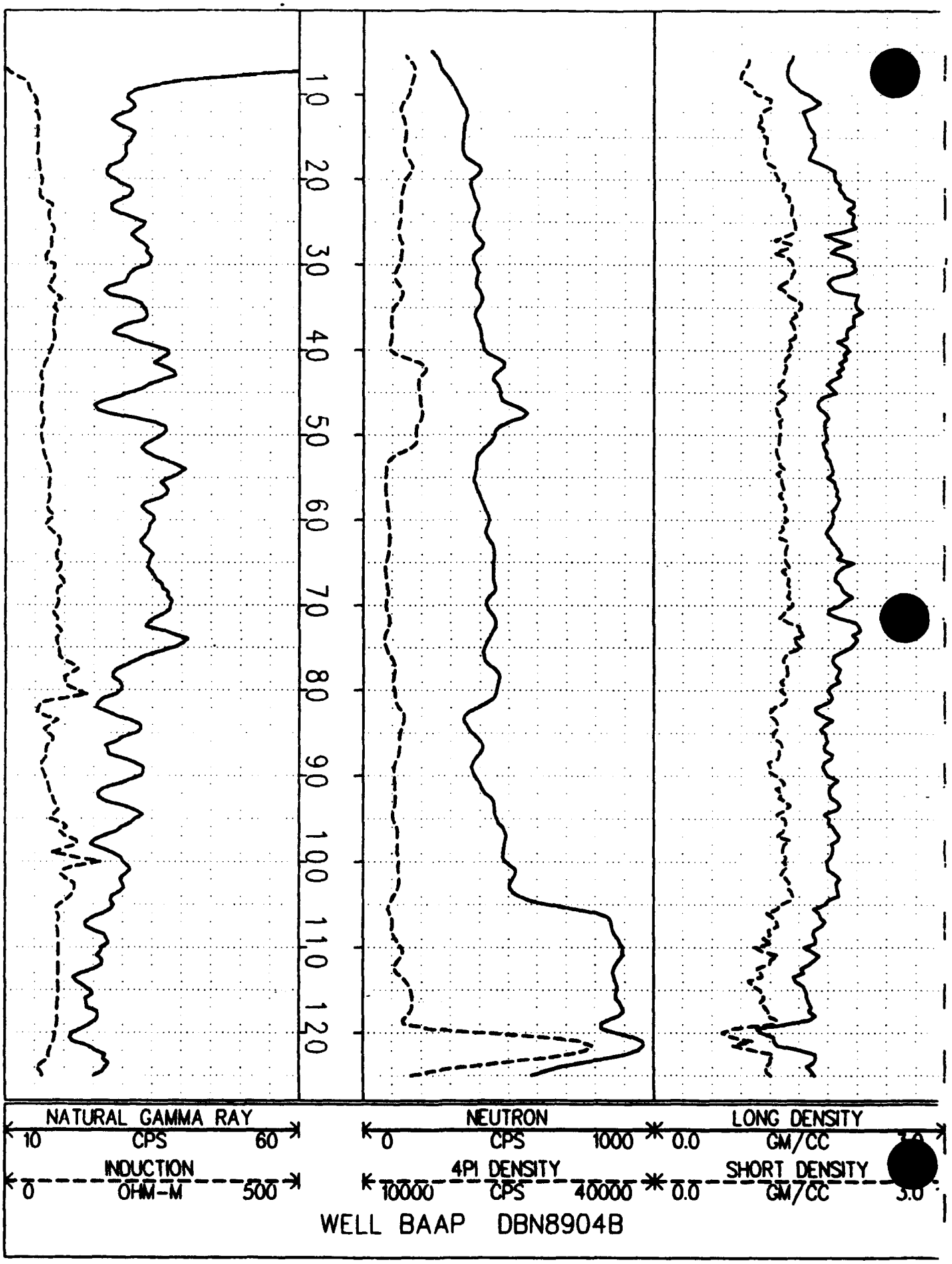
10
20
30
40
50
60
70
80
90
100
110
120
NATURAL GAMMA RAY
10
CPS
60
INDUCTION
0
OHM-M
500
NEUTRON
0
CPS
1000
4PI DENSITY
10000
CPS
40000
LONG DENSITY
0.0
GM/CC
3.0
SHORT DENSITY
0.0
GM/CC
3.0
WELL BAAP DBN8904B

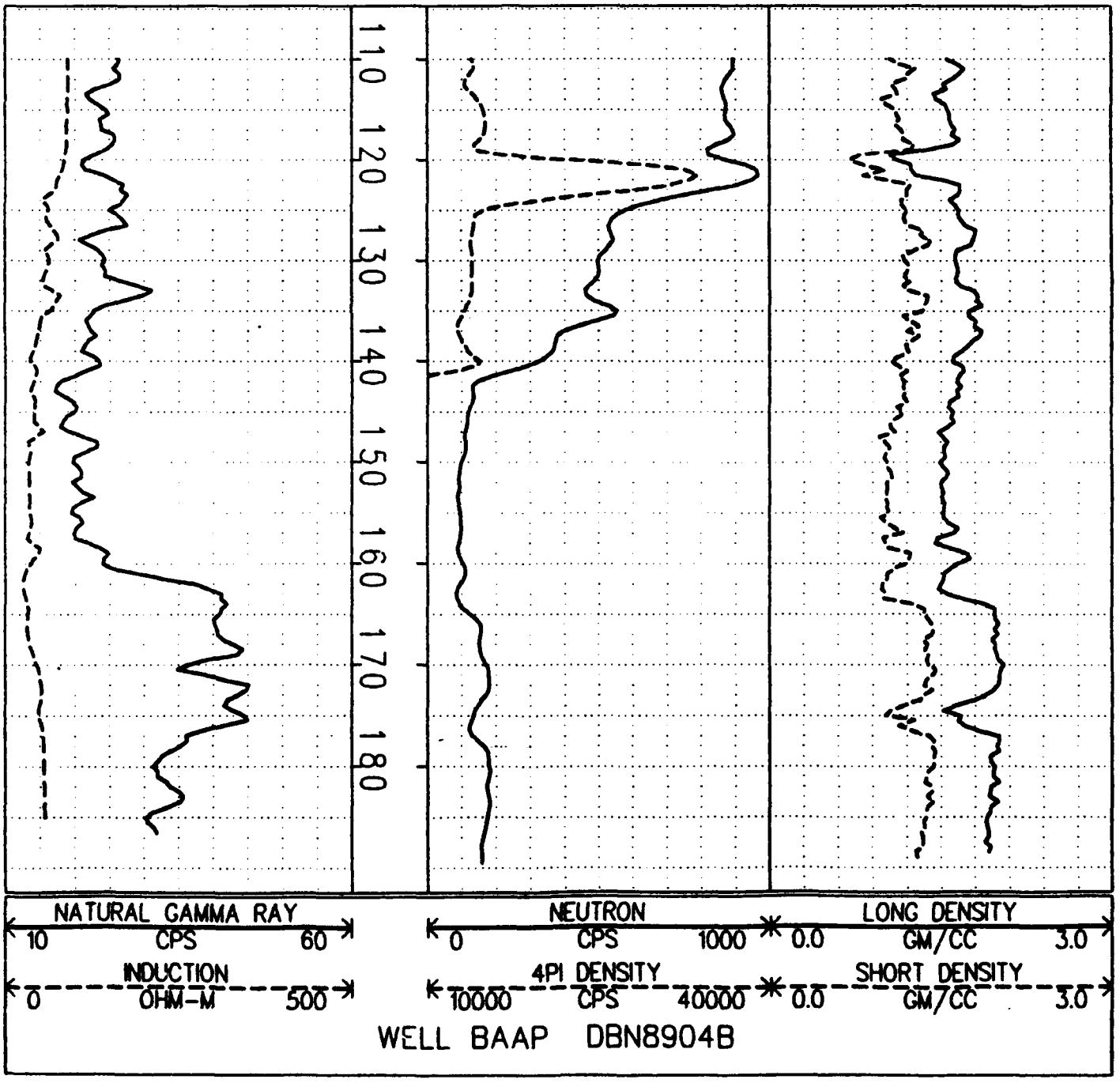
110 120 130 140 150 160 170 180
NATURAL GAMMA RAY
10 CPS 60
INDUCTION
0 OHM-M 500
NEUTRON
0 CPS 1000
4PI DENSITY
10000 CPS 40000
LONG DENSITY
0.0 GM/CC 3.0
SHORT DENSITY
0.0 GM/CC 3.0
WELL BAAP DBN8904B

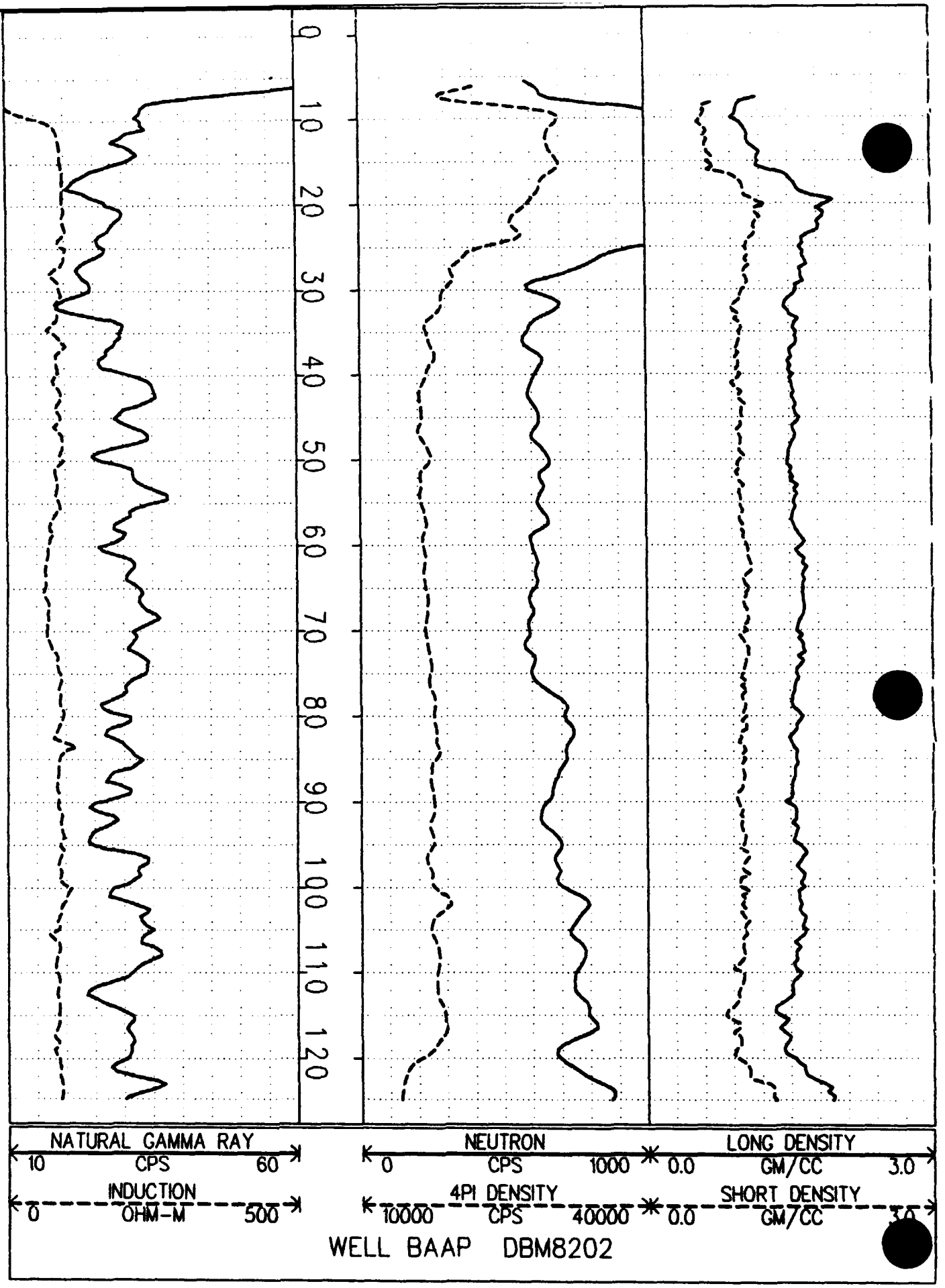
0
10
20
30
40
50
60
70
80
90
100
110
120
NATURAL GAMMA RAY
10 CPS 60
INDUCTION
0 OHM-M 500
NEUTRON
0 CPS 1000
4PI DENSITY
10000 CPS 40000
LONG DENSITY
0.0 GM/CC 3.0
SHORT DENSITY
0.0 GM/CC 3.0
WELL BAAP DBM8202

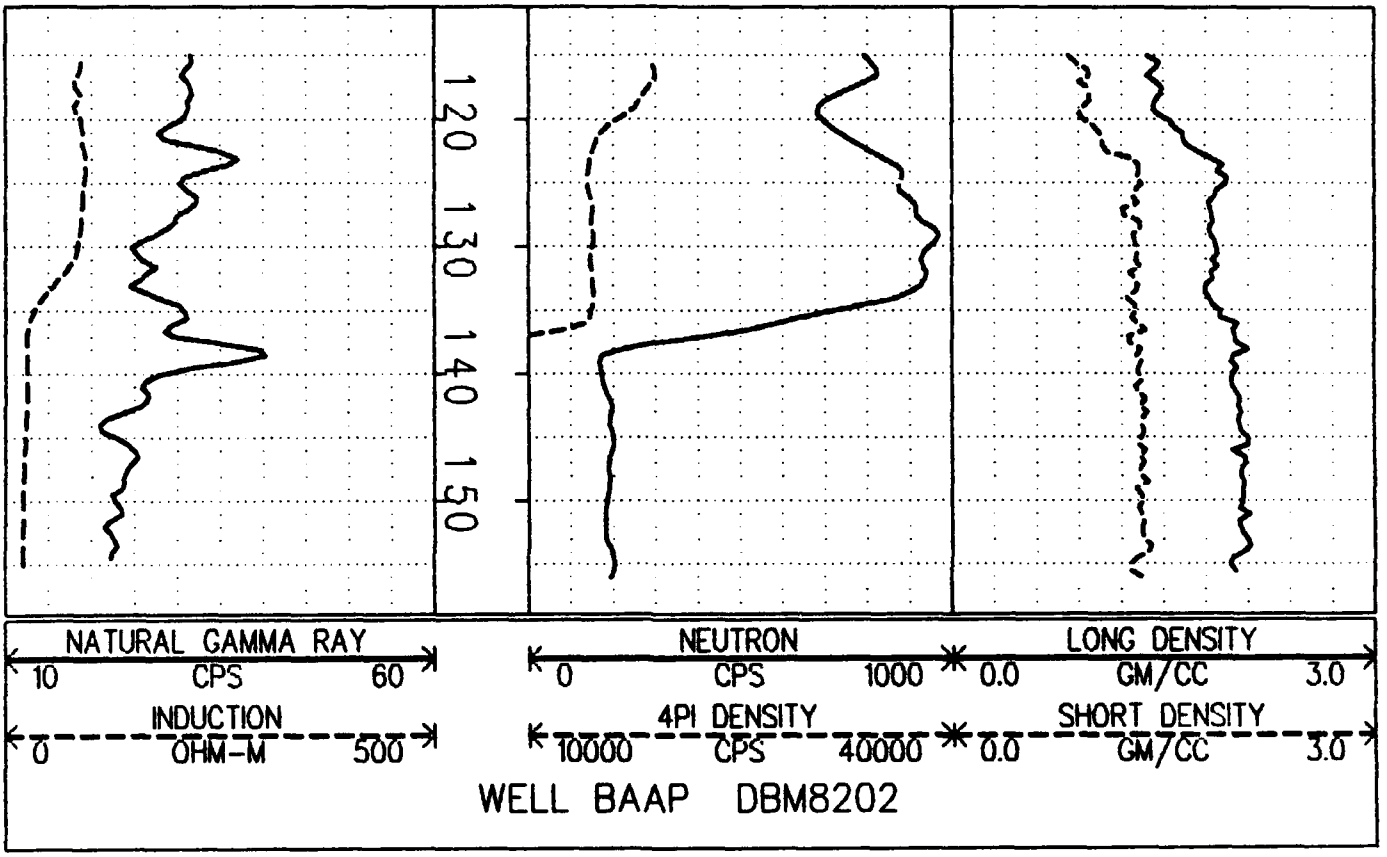
120
130
140
150
NATURAL GAMMA RAY
10
CPS
60
INDUCTION
0
OHM-M
500
NEUTRON
0
CPS
1000
4PI DENSITY
10000
CPS
40000
LONG DENSITY
0.0
GM/CC
3.0
SHORT DENSITY
0.0
GM/CC
3.0
WELL BAAP DBM8202

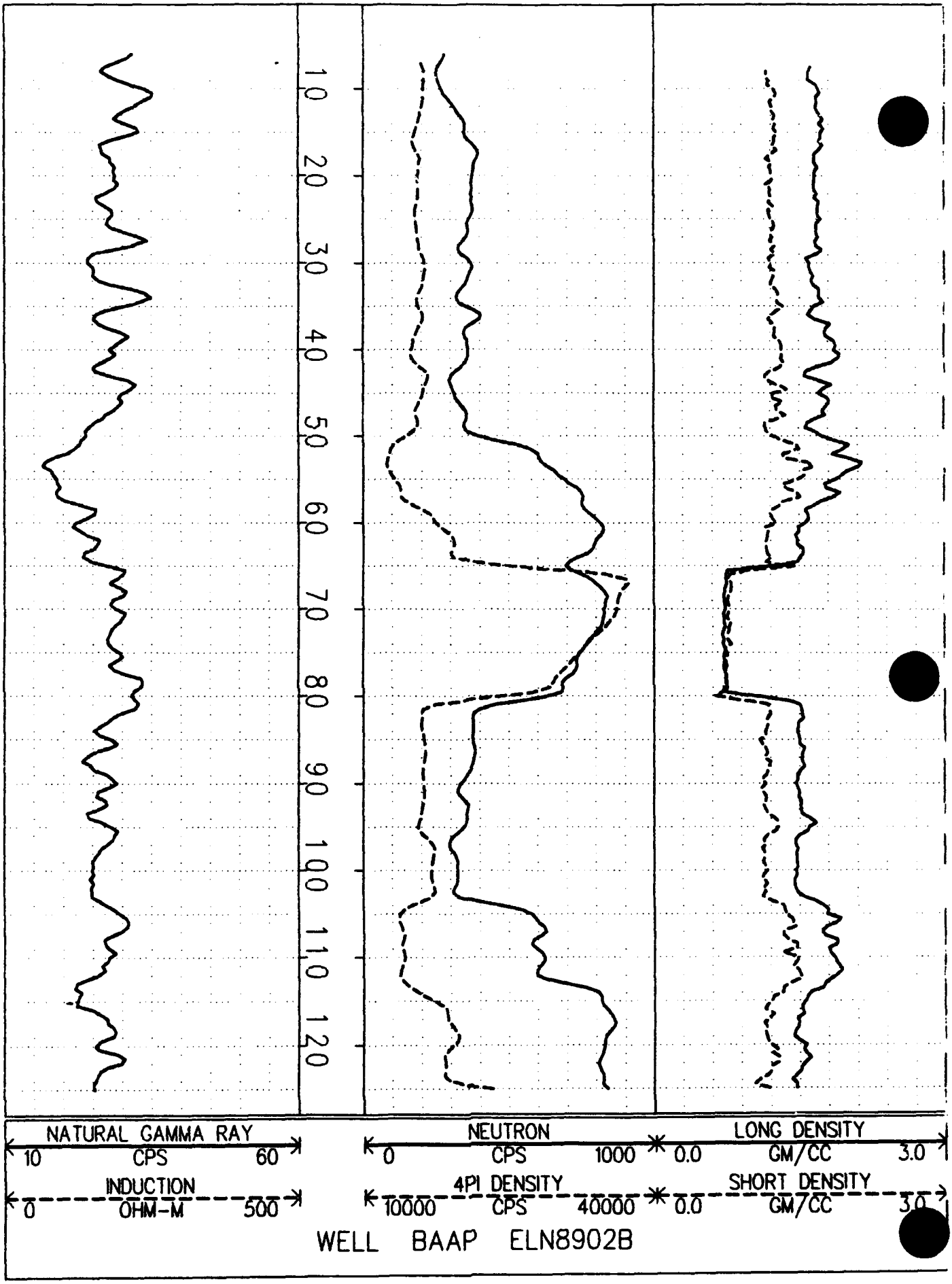
10
20
30
40
50
60
70
80
90
100
110
120
NATURAL GAMMA RAY
10
CPS
60
INDUCTION
0
OHM-M
500
NEUTRON
0
CPS
1000
4PI DENSITY
10000
CPS
40000
LONG DENSITY
0.0
GM/CC
3.0
SHORT DENSITY
0.0
GM/CC
3.0
WELL BAAP ELN8902B

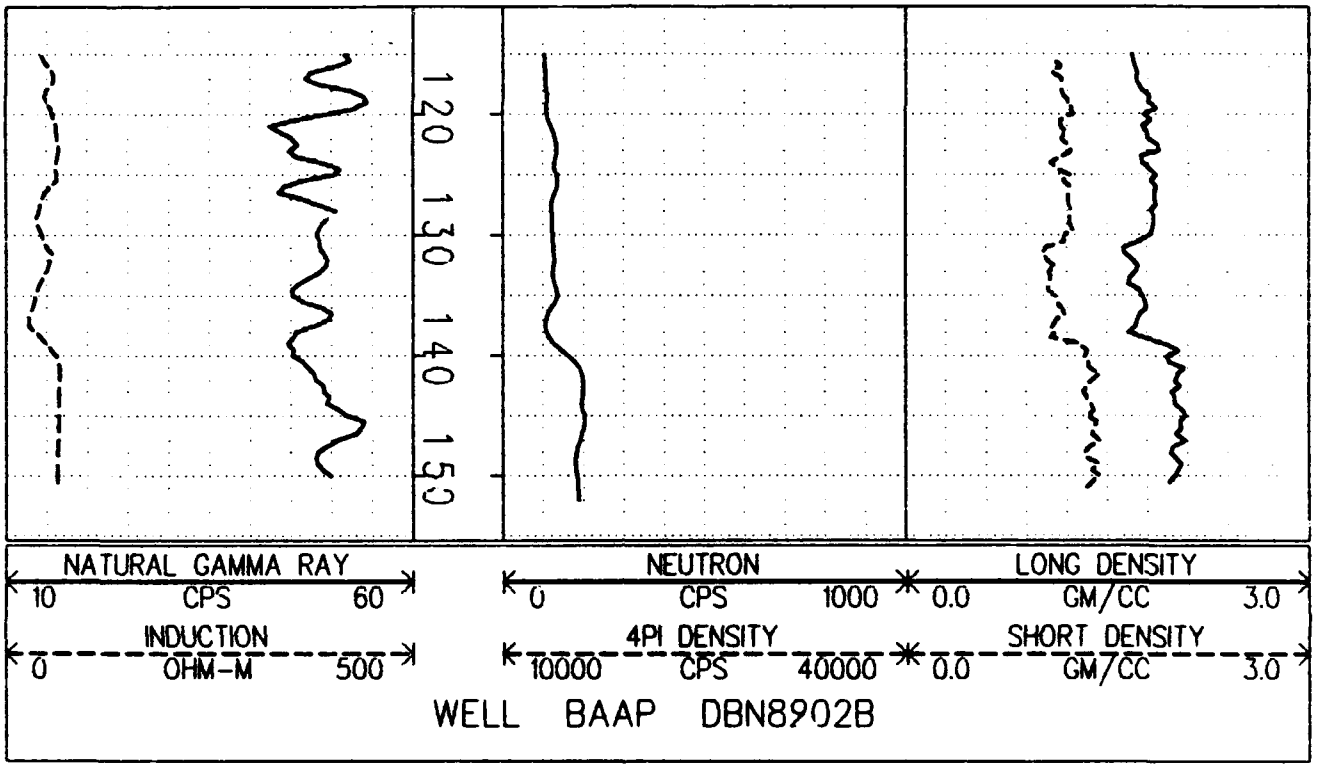
120
130
140
150
NATURAL GAMMA RAY
10
CPS
60
INDUCTION
0
OHM-M
500
NEUTRON
0
CPS
1000
4PI DENSITY
10000
CPS
40000
LONG DENSITY
0.0
GM/CC
3.0
SHORT DENSITY
0.0
GM/CC
3.0
WELL BAAP DBN8902B

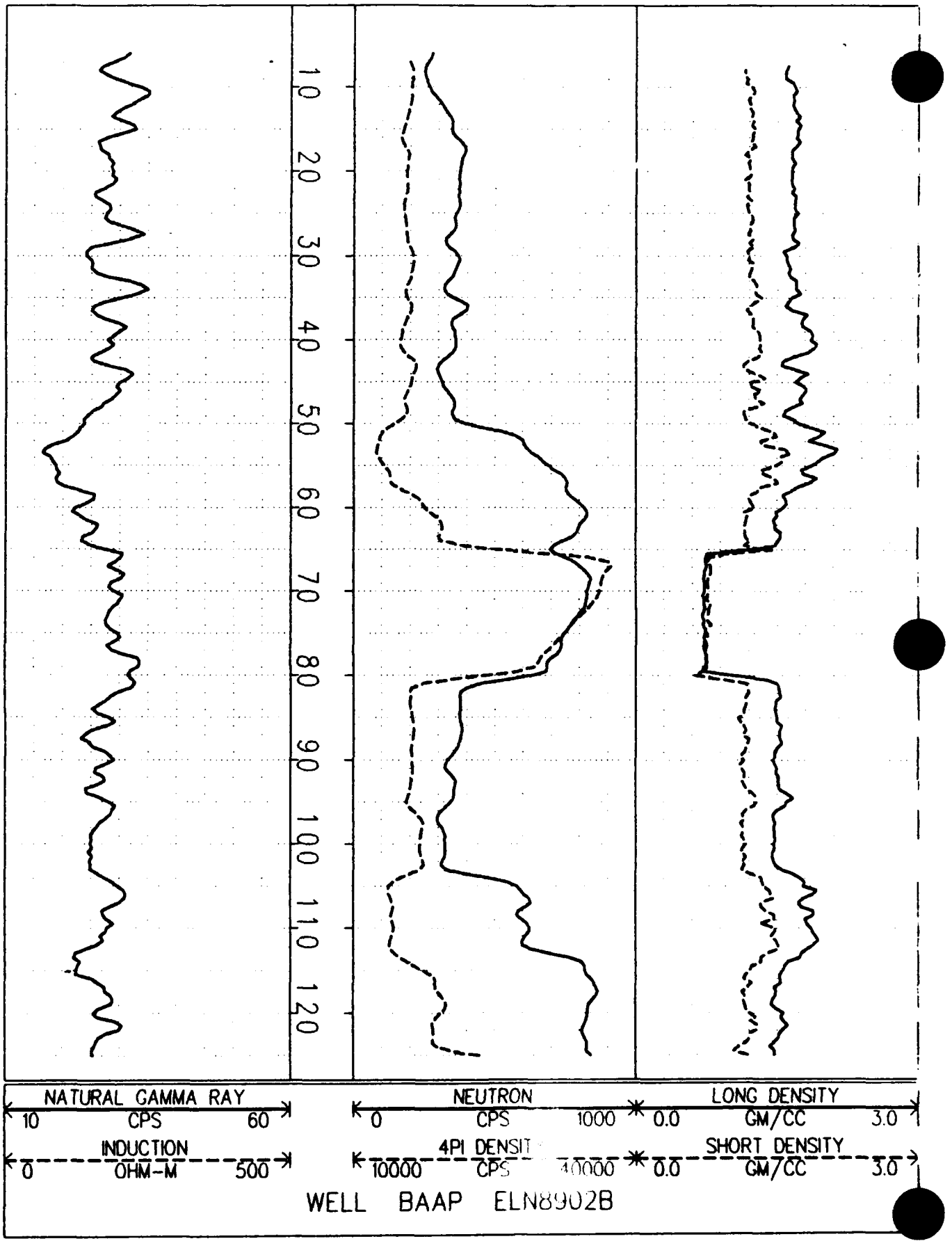
10
20
30
40
50
60
70
80
90
100
110
120
NATURAL GAMMA RAY
10 CPS 60
INDUCTION
0 OHM-M 500
NEUTRON
0 CPS 1000
4PI DENSIT
10000 CPS 30000
LONG DENSITY
0.0 GM/CC 3.0
SHORT DENSITY
0.0 GM/CC 3.0
WELL BAAP ELN8902B

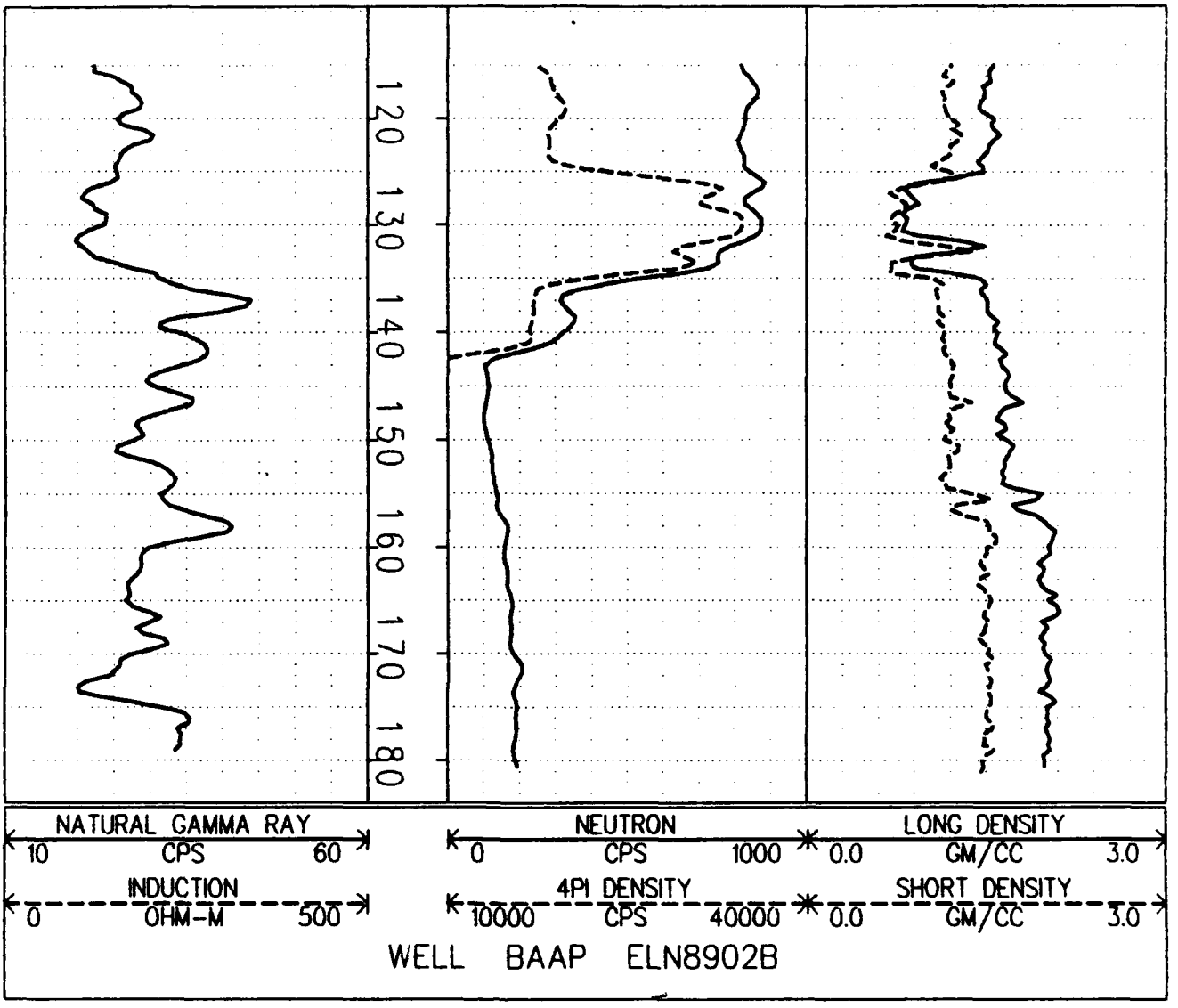
120
130
140
150
160
170
180
NATURAL GAMMA RAY
10 CPS 60
INDUCTION
0 OHM-M 500
NEUTRON
0 CPS 1000
4PI DENSITY
10000 CPS 40000
LONG DENSITY
0.0 GM/CC 3.0
SHORT DENSITY
0.0 GM/CC 3.0
WELL BAAP ELN8902B

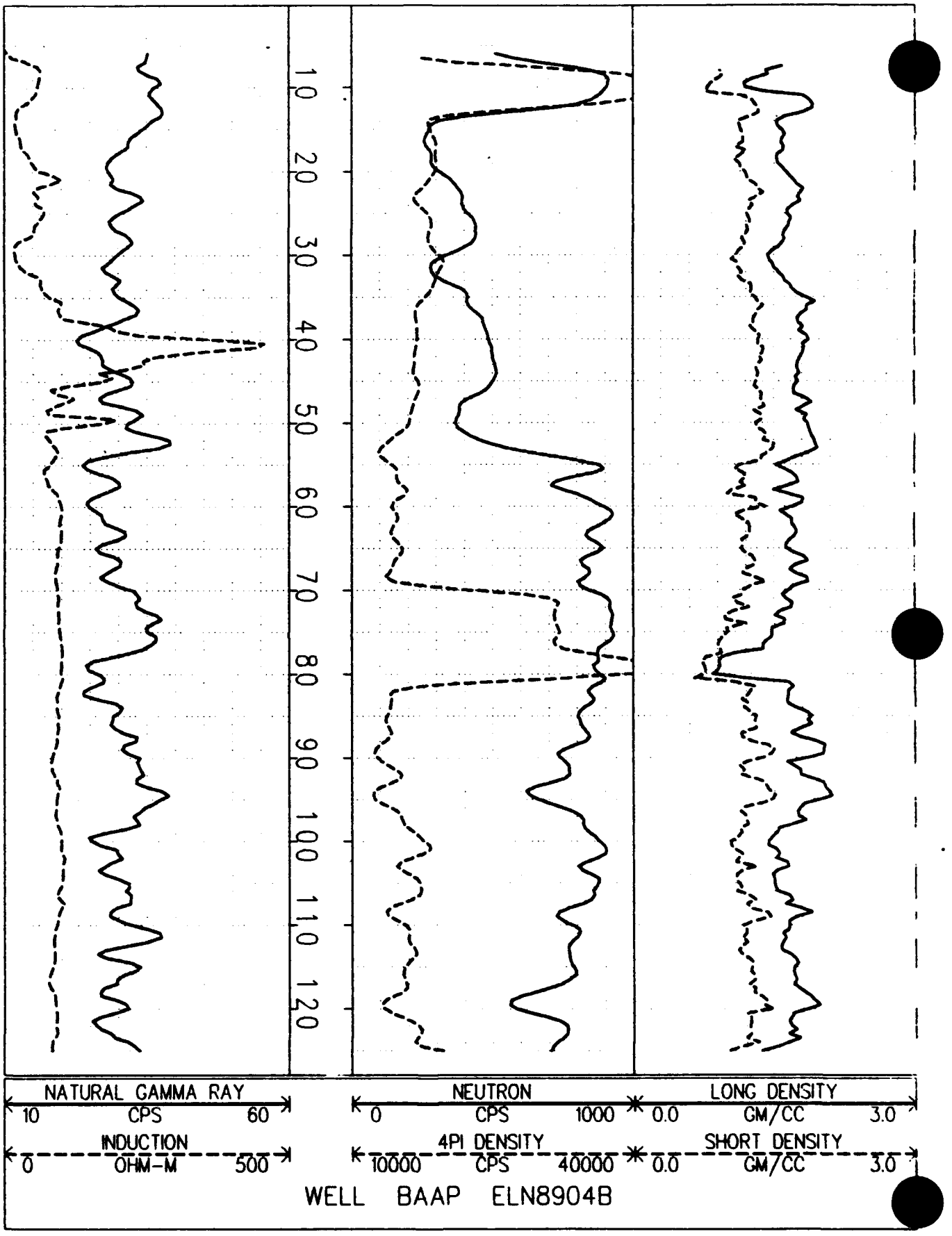
10
20
30
40
50
60
70
80
90
100
110
120
NATURAL GAMMA RAY
10 CPS 60
INDUCTION
0 OHM-M 500
NEUTRON
0 CPS 1000
4PI DENSITY
10000 CPS 40000
LONG DENSITY
0.0 GM/CC 3.0
SHORT DENSITY
0.0 GM/CC 3.0
WELL BAAP ELN8904B

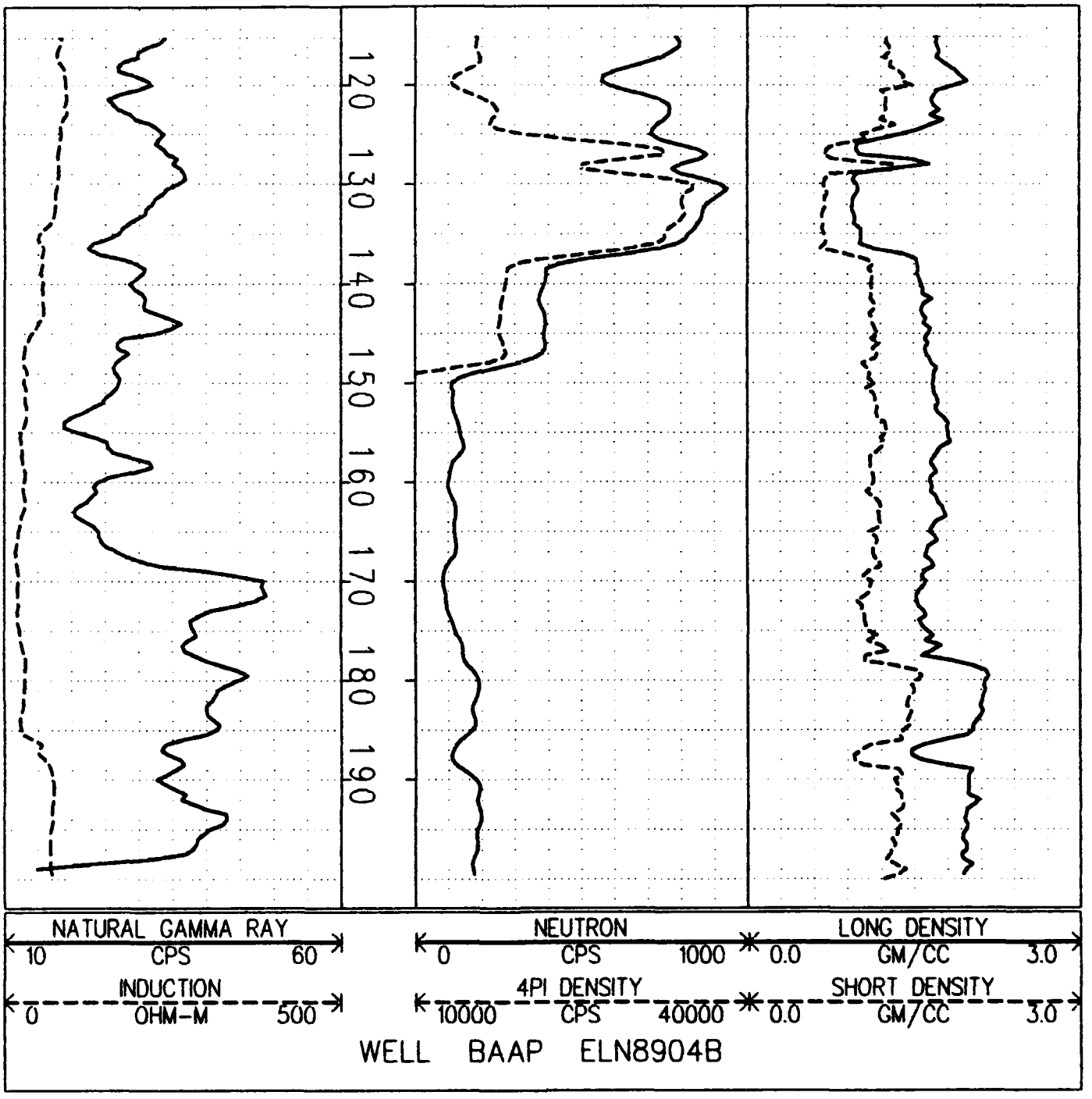
120
130
140
150
160
170
180
190
NATURAL GAMMA RAY
10 CPS 60
INDUCTION
0 OHM-M 500
NEUTRON
0 CPS 1000
4PI DENSITY
10000 CPS 40000
LONG DENSITY
0.0 GM/CC 3.0
SHORT DENSITY
0.0 GM/CC 3.0
WELL BAAP ELN8904B

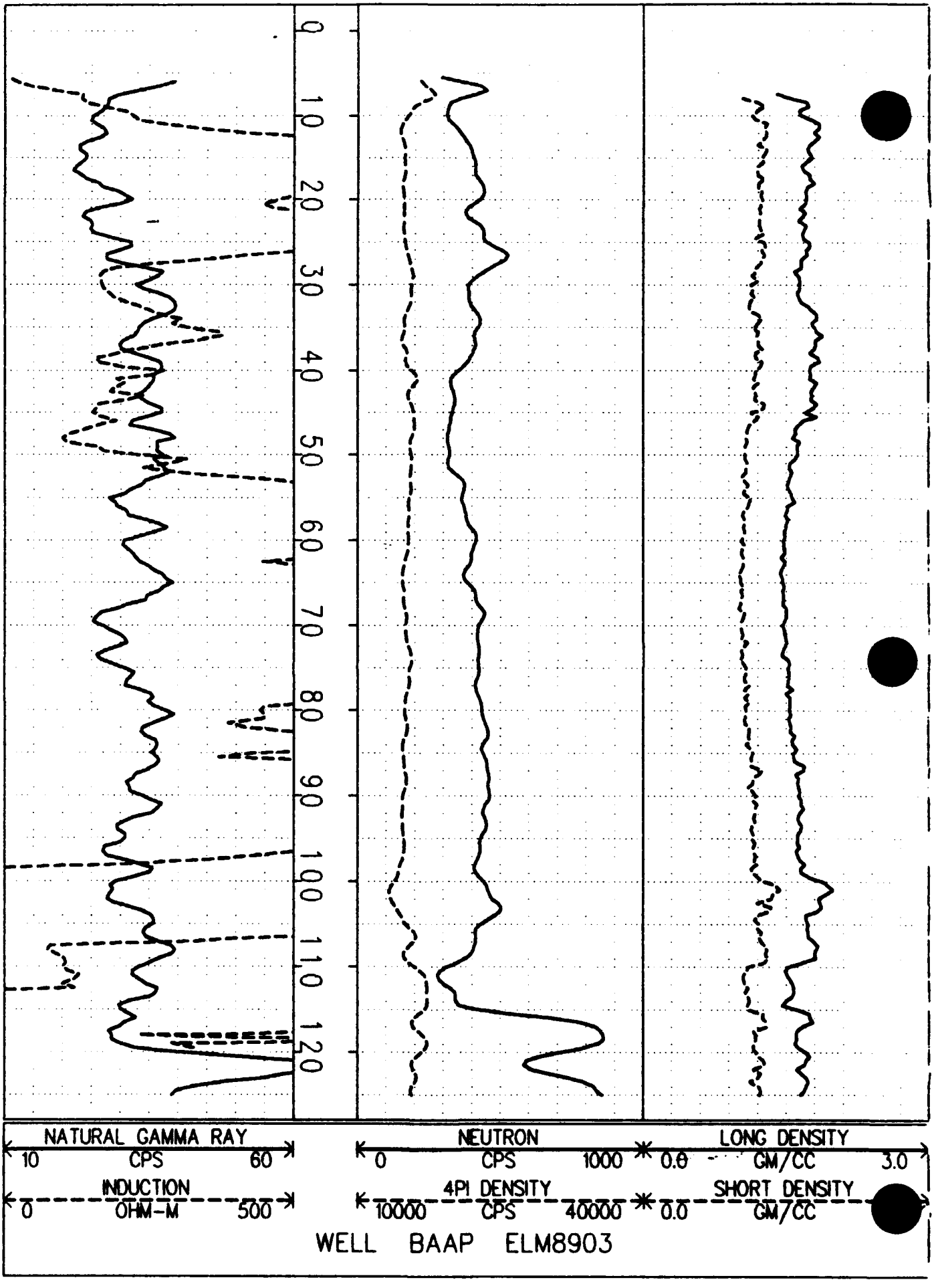
0
10
20
30
40
50
60
70
80
90
100
110
120
NATURAL GAMMA RAY
10 CPS 60
INDUCTION
0 OHM-M 500
NEUTRON
0 CPS 1000
4PI DENSITY
10000 CPS 40000
LONG DENSITY
0.0 GM/CC 3.0
SHORT DENSITY
0.0 GM/CC
WELL BAAP ELM8903

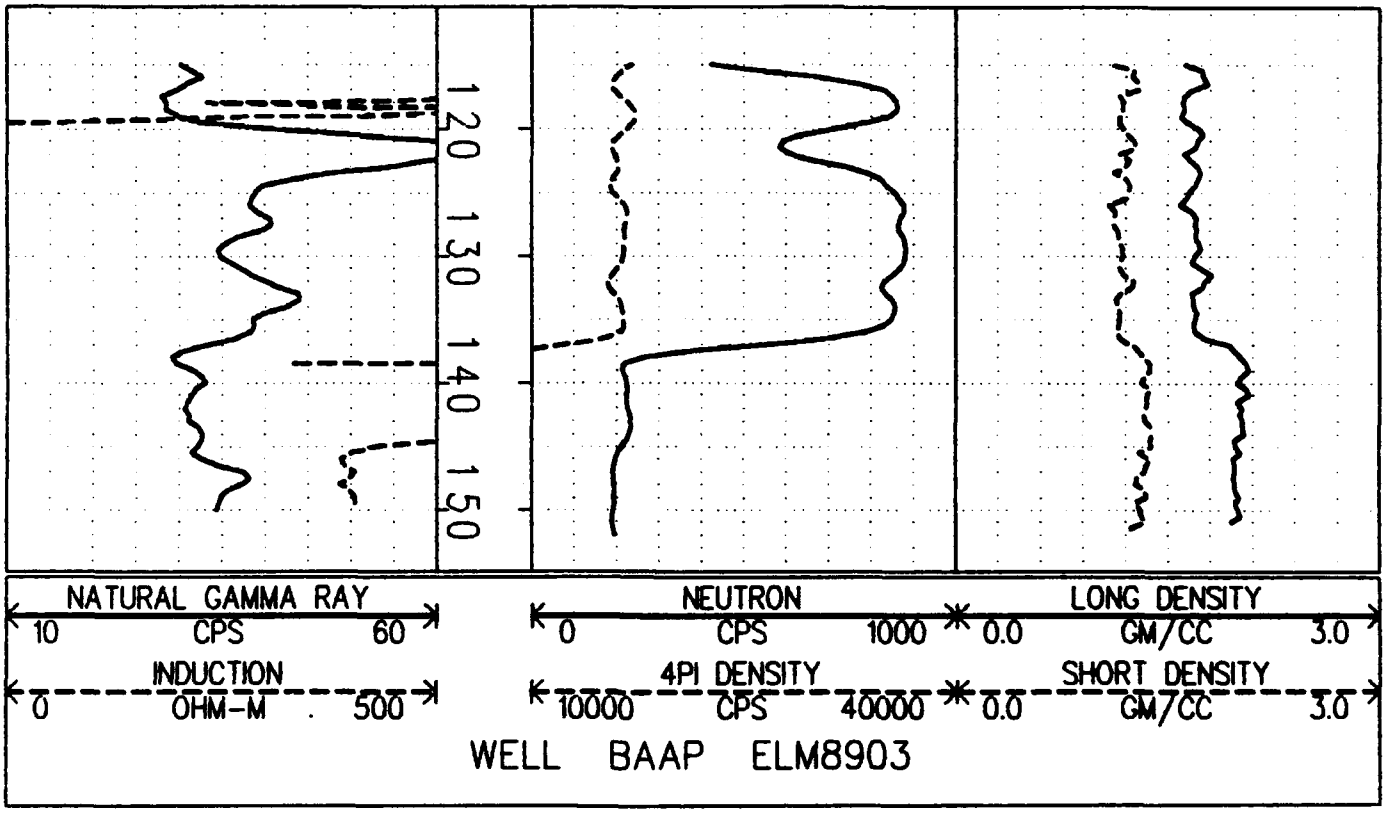
120
130
140
150
NATURAL GAMMA RAY
10 CPS 60
INDUCTION
0 OHM-M 500
NEUTRON
0 CPS 1000
4PI DENSITY
10000 CPS 40000
LONG DENSITY
0.0 GM/CC 3.0
SHORT DENSITY
0.0 GM/CC 3.0
WELL BAAP ELM8903

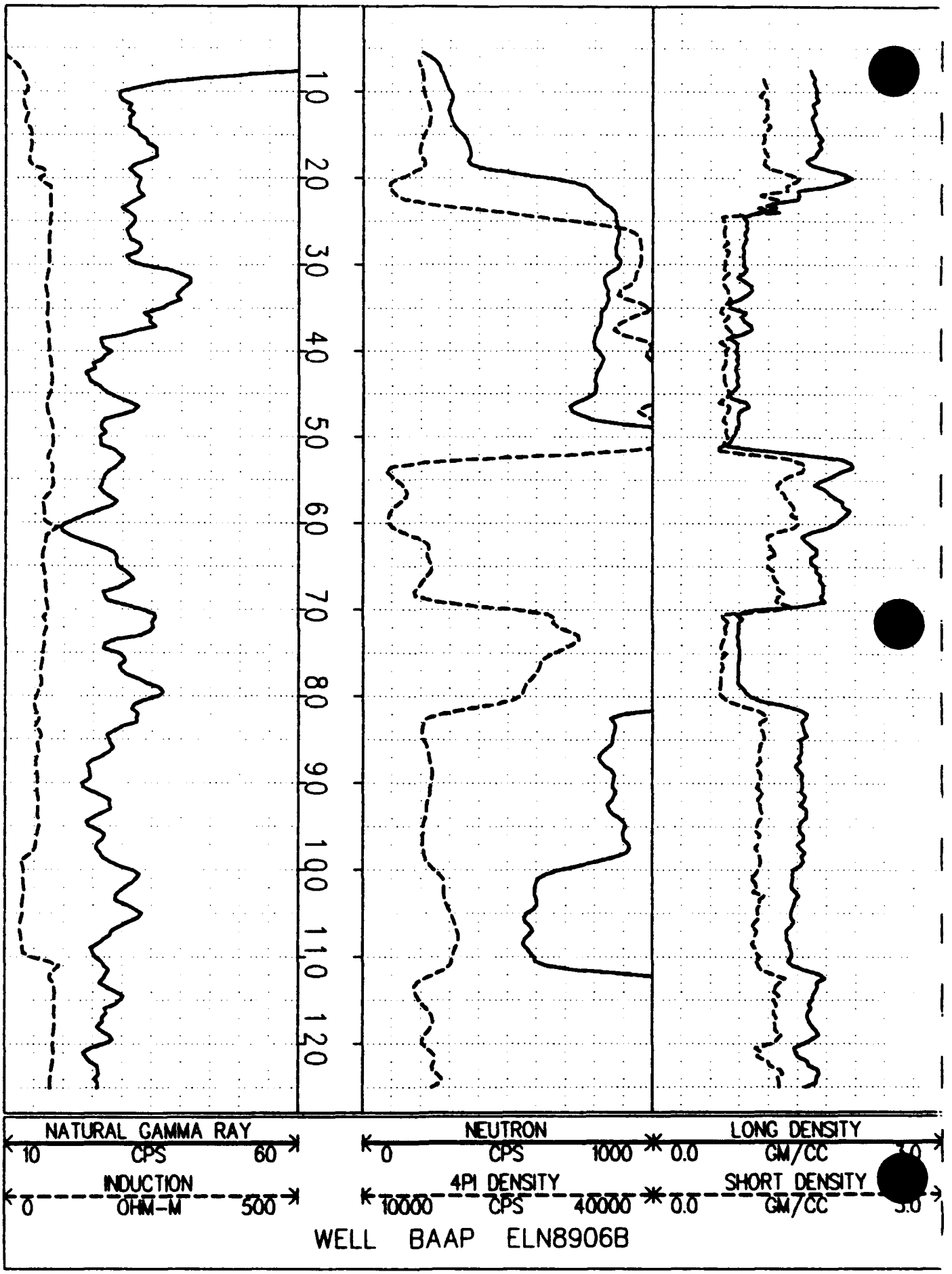
10
20
30
40
50
60
70
80
90
100
110
120
NATURAL GAMMA RAY
10 CPS 60
INDUCTION
0 OHM-M 500
NEUTRON
0 CPS 1000
4PI DENSITY
10000 CPS 40000
LONG DENSITY
0.0 GM/CC 3.0
SHORT DENSITY
0.0 GM/CC 3.0
WELL BAAP ELN8906B

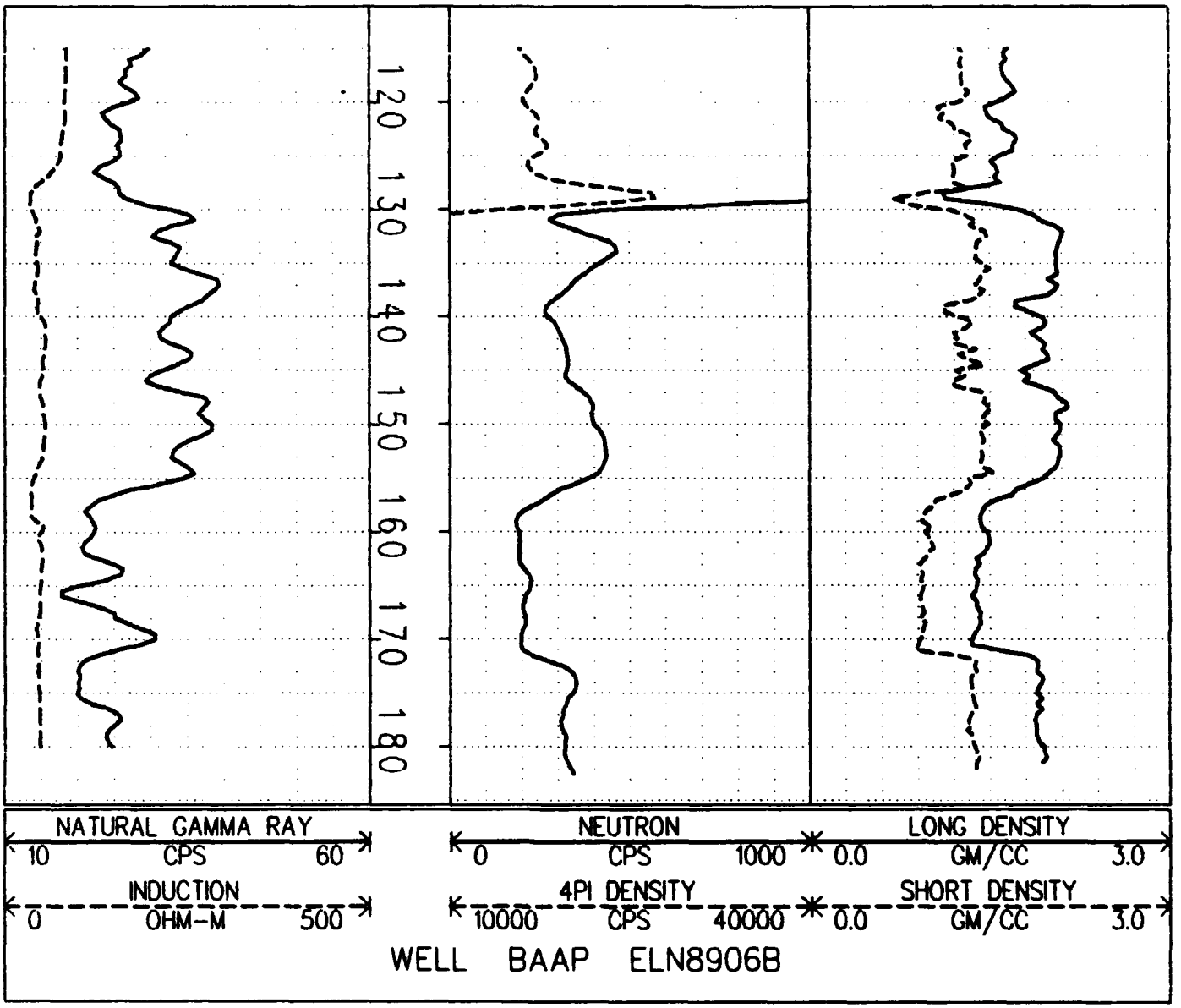
120
130
140
150
160
170
180
NATURAL GAMMA RAY
10 CPS 60
INDUCTION
0 OHM-M 500
NEUTRON
0 CPS 1000
4PI DENSITY
10000 CPS 40000
LONG DENSITY
0.0 GM/CC 3.0
SHORT DENSITY
0.0 GM/CC 3.0
WELL BAAP ELN8906B

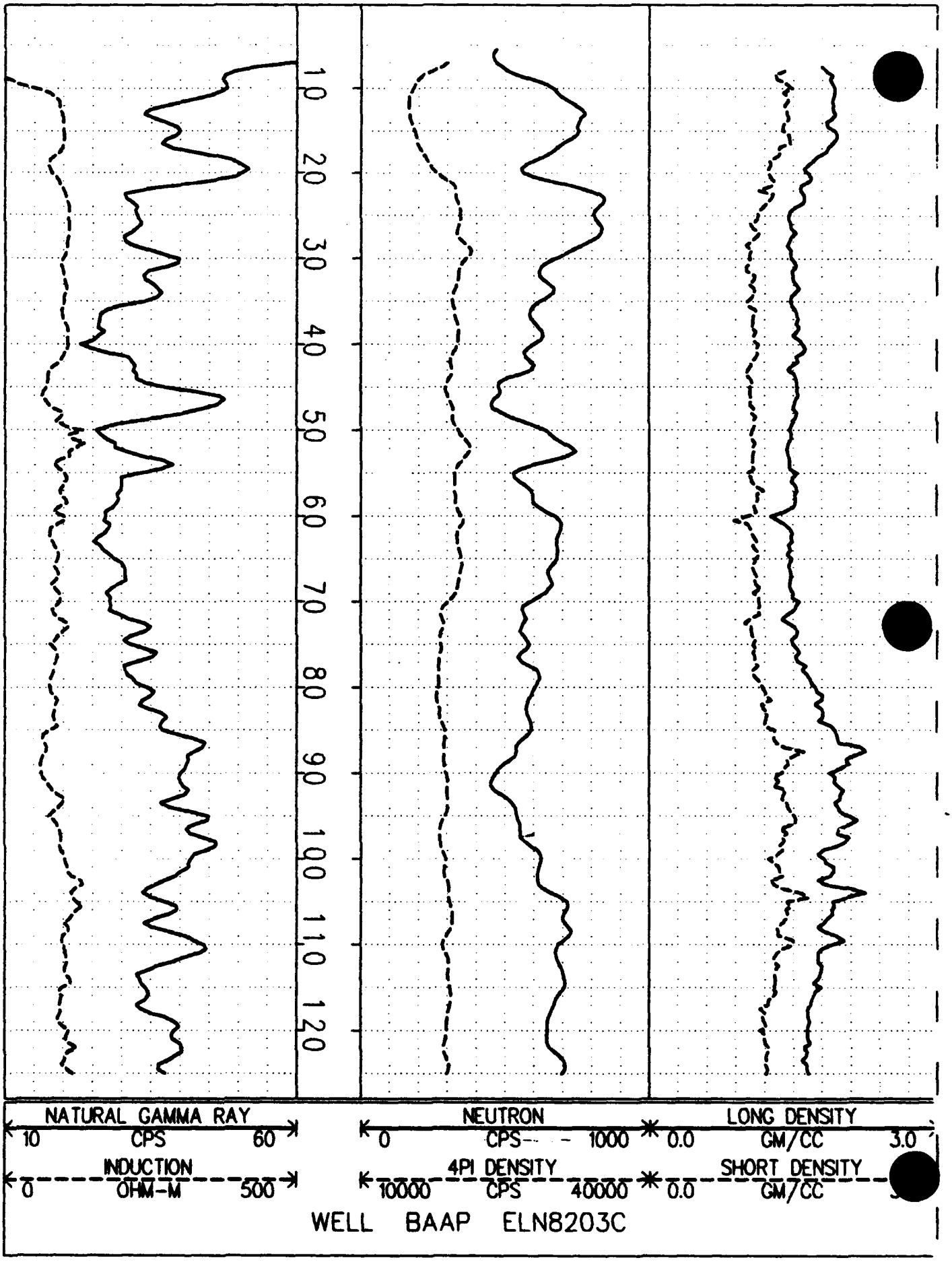
10
20
30
40
50
60
70
80
90
100
110
120
NATURAL GAMMA RAY
10 CPS 60
INDUCTION
0 OHM-M 500
NEUTRON
0 CPS - 1000
4PI DENSITY
10000 CPS 40000
LONG DENSITY
0.0 GM/CC 3.0
SHORT DENSITY
0.0 GM/CC
WELL BAAP ELN8203C

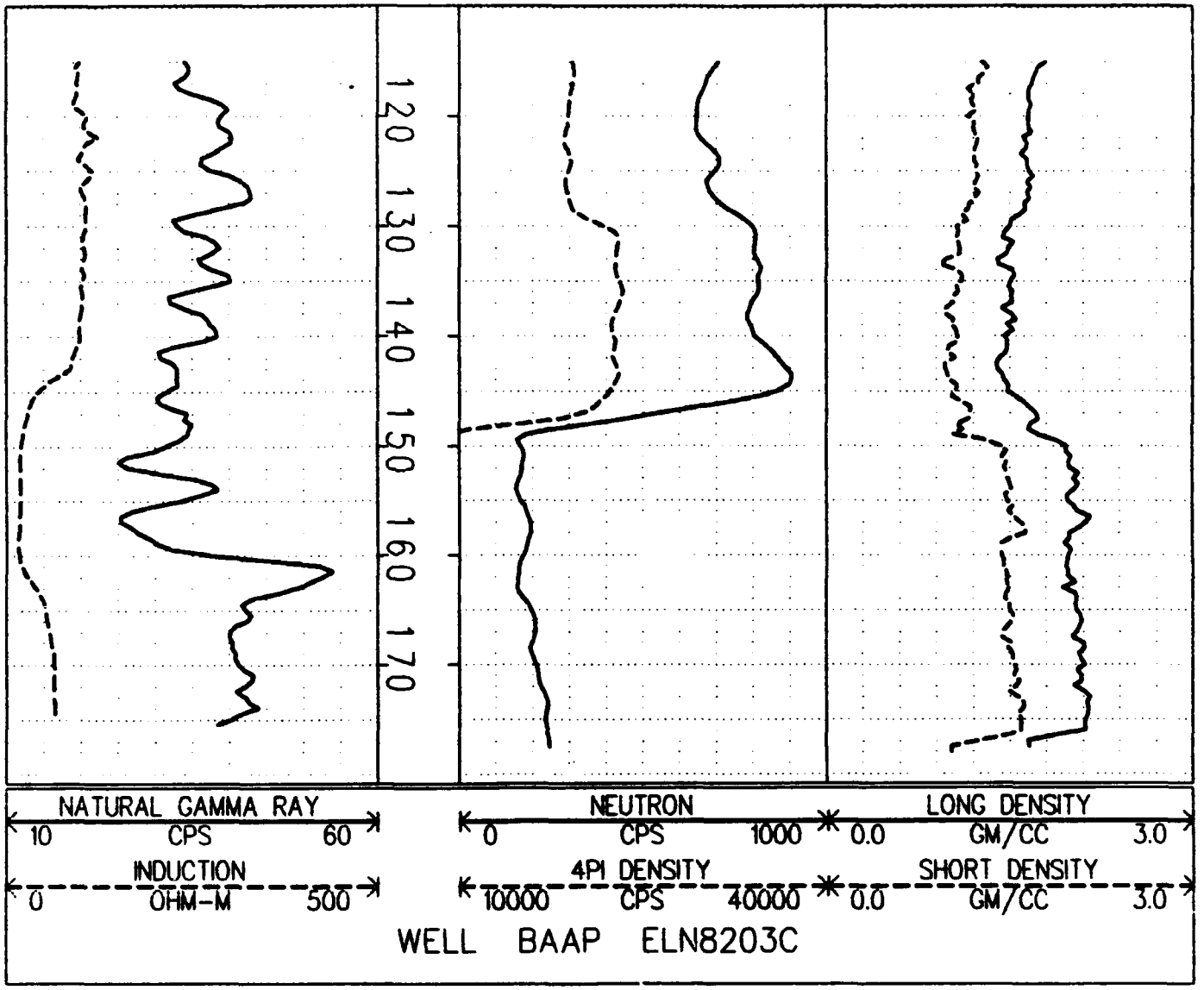
120
130
140
150
160
170
NATURAL GAMMA RAY
10 CPS 60
INDUCTION
0 OHM-M 500
NEUTRON
0 CPS 1000
4PI DENSITY
10000 CPS 40000
LONG DENSITY
0.0 GM/CC 3.0
SHORT DENSITY
0.0 GM/CC 3.0
WELL BAAP ELN8203C

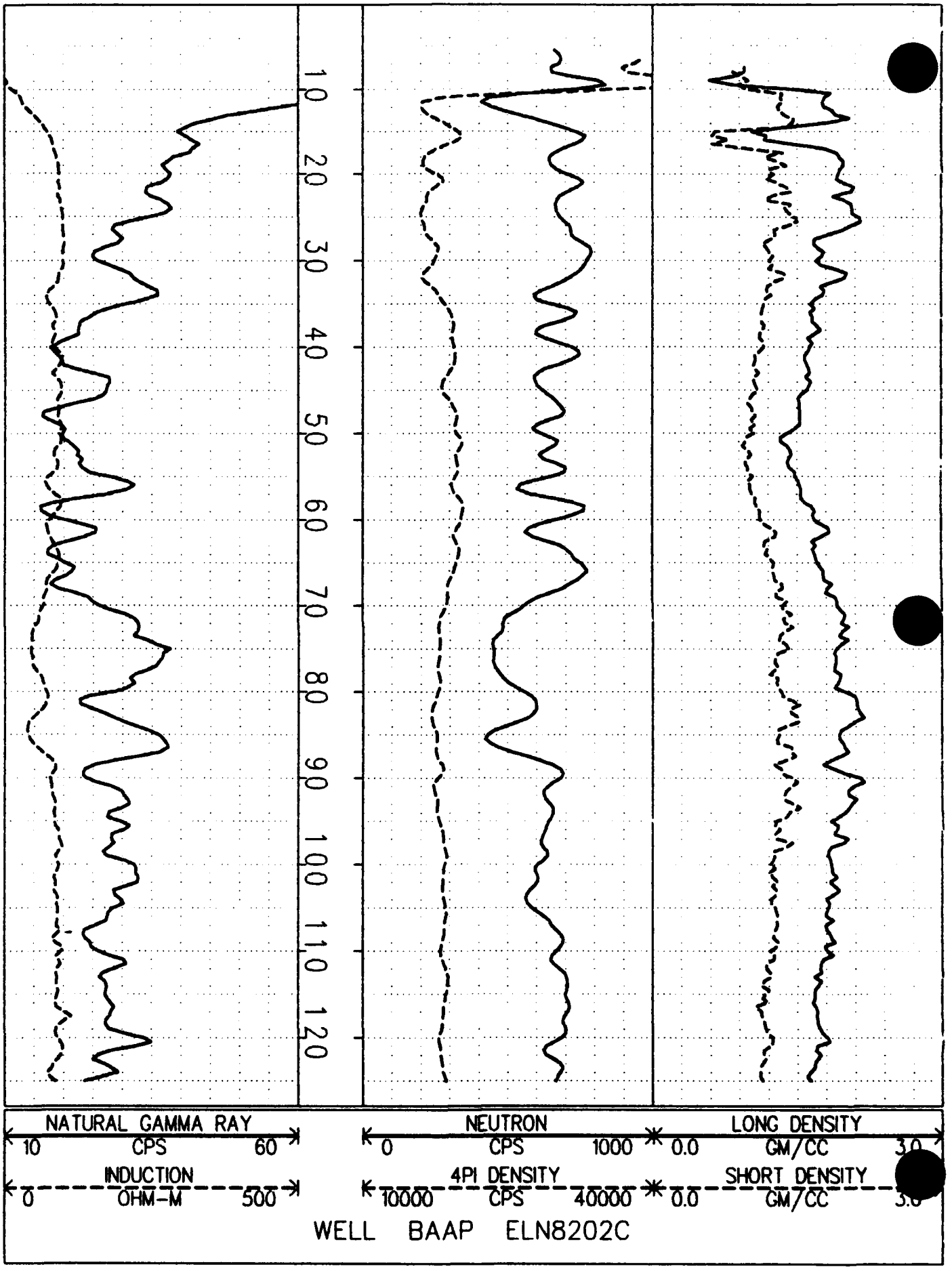
10
20
30
40
50
60
70
80
90
100
110
120
NATURAL GAMMA RAY
10 CPS 60
INDUCTION
0 OHM-M 500
NEUTRON
0 CPS 1000
4PI DENSITY
10000 CPS 40000
LONG DENSITY
0.0 GM/CC 3.0
SHORT DENSITY
0.0 GM/CC 3.0
WELL BAAP ELN8202C

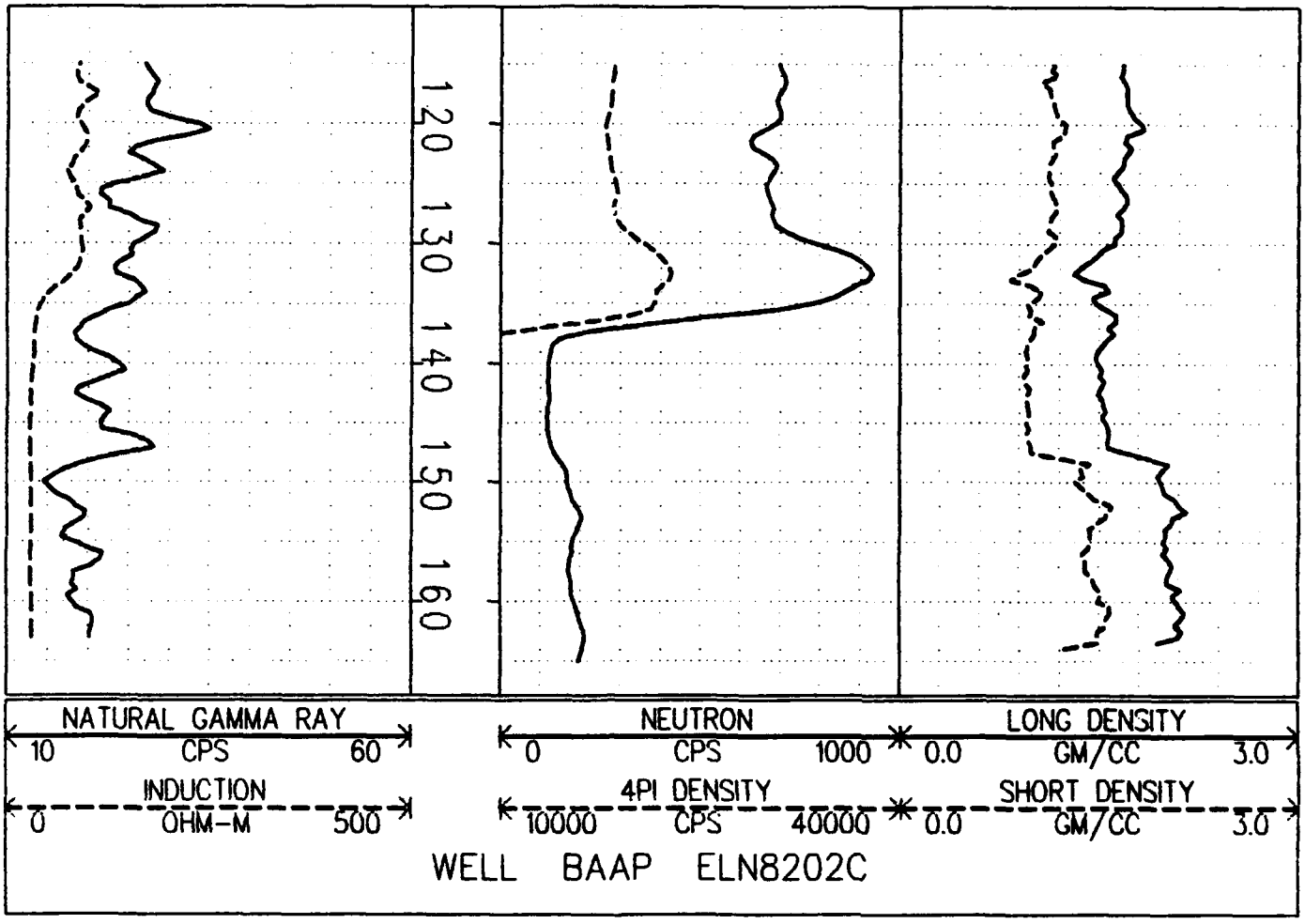
120
130
140
150
160
NATURAL GAMMA RAY
10
CPS
60
INDUCTION
0
OHM-M
500
NEUTRON
0
CPS
1000
4PI DENSITY
10000
CPS
40000
LONG DENSITY
0.0
GM/CC
3.0
SHORT DENSITY
0.0
GM/CC
3.0
WELL BAAP ELN8202C

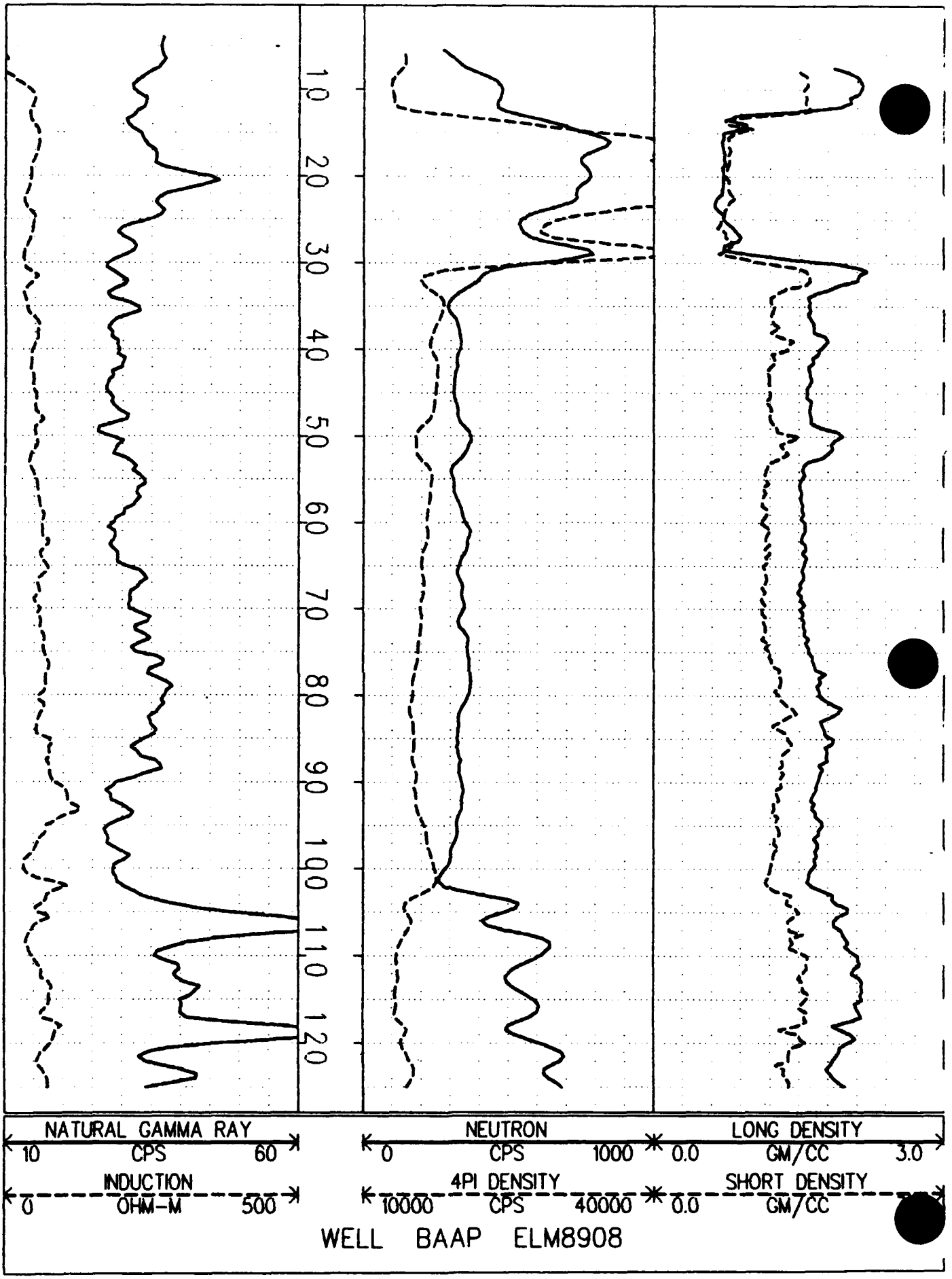
10
20
30
40
50
60
70
80
90
100
110
120
NATURAL GAMMA RAY
10 CPS 60
INDUCTION
0 OHM-M 500
NEUTRON
0 CPS 1000
4PI DENSITY
10000 CPS 40000
LONG DENSITY
0.0 GM/CC 3.0
SHORT DENSITY
0.0 GM/CC
WELL BAAP ELM8908

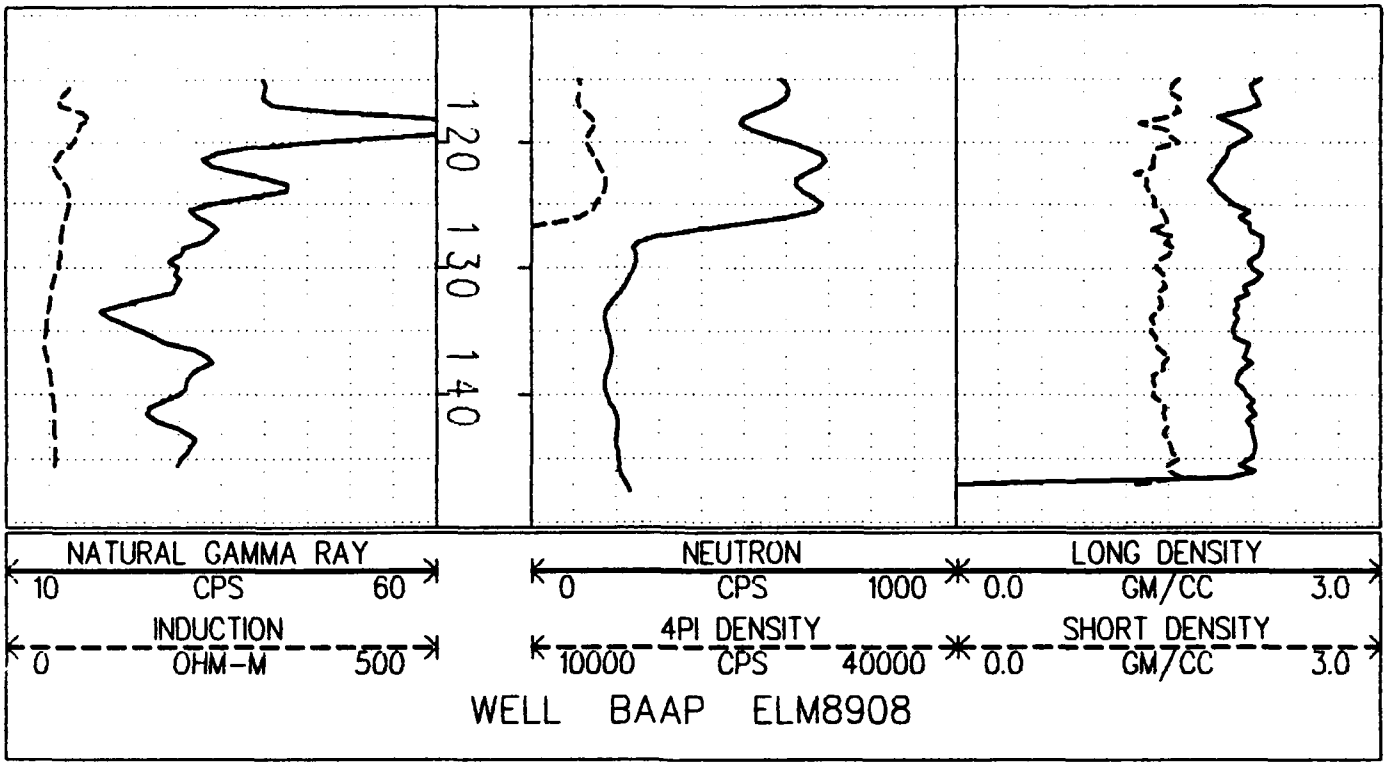
120
130
140
NATURAL GAMMA RAY
10 CPS 60
INDUCTION
0 OHM-M 500
NEUTRON
0 CPS 1000
4PI DENSITY
10000 CPS 40000
LONG DENSITY
0.0 GM/CC 3.0
SHORT DENSITY
0.0 GM/CC 3.0
WELL BAAP ELM8908

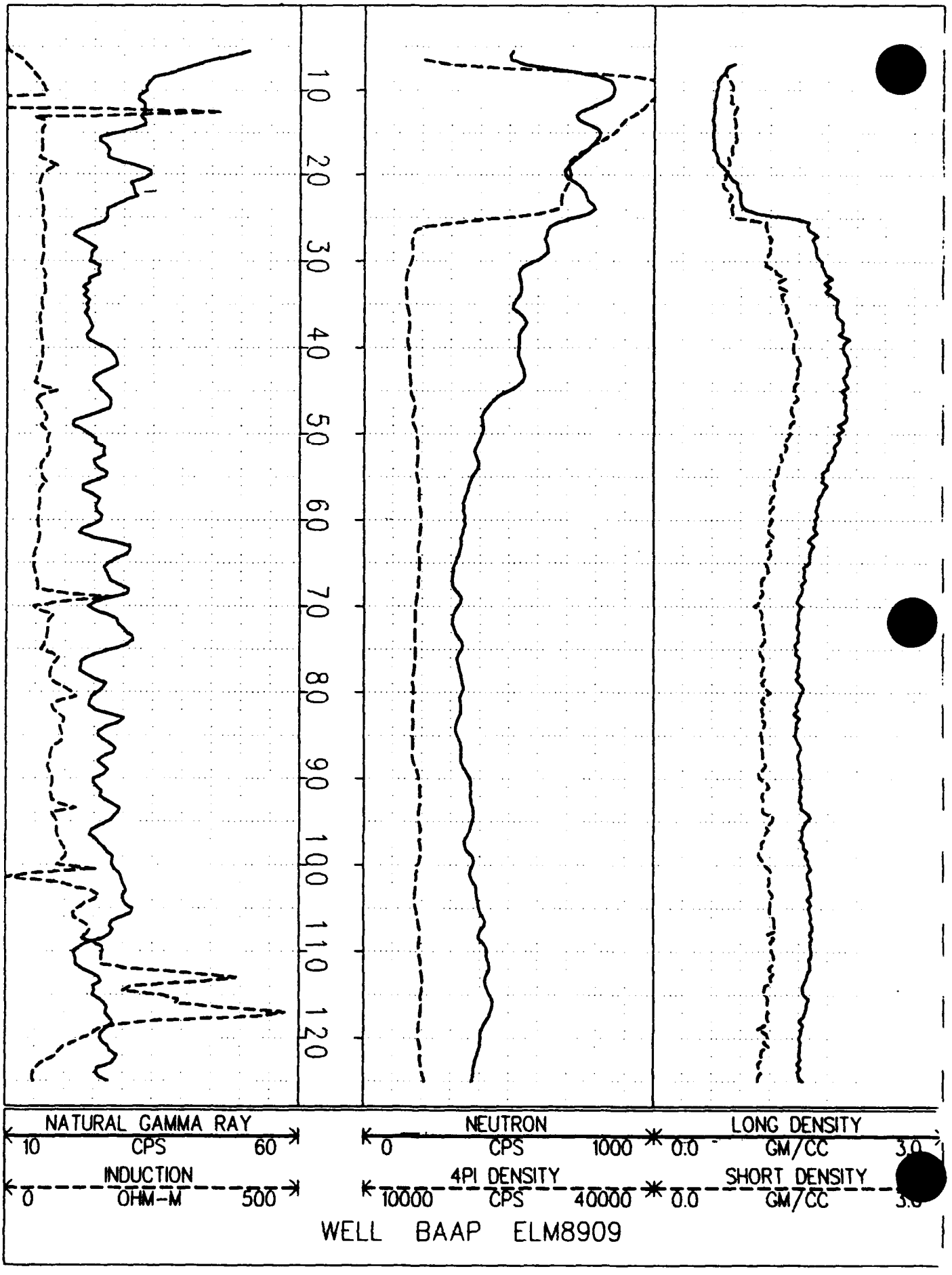
10
20
30
40
50
60
70
80
90
100
110
120
NATURAL GAMMA RAY
10 CPS 60
INDUCTION
0 OHM-M 500
NEUTRON
0 CPS 1000
4PI DENSITY
10000 CPS 40000
LONG DENSITY
0.0 GM/CC 3.0
SHORT DENSITY
0.0 GM/CC 3.0
WELL BAAP ELM8909

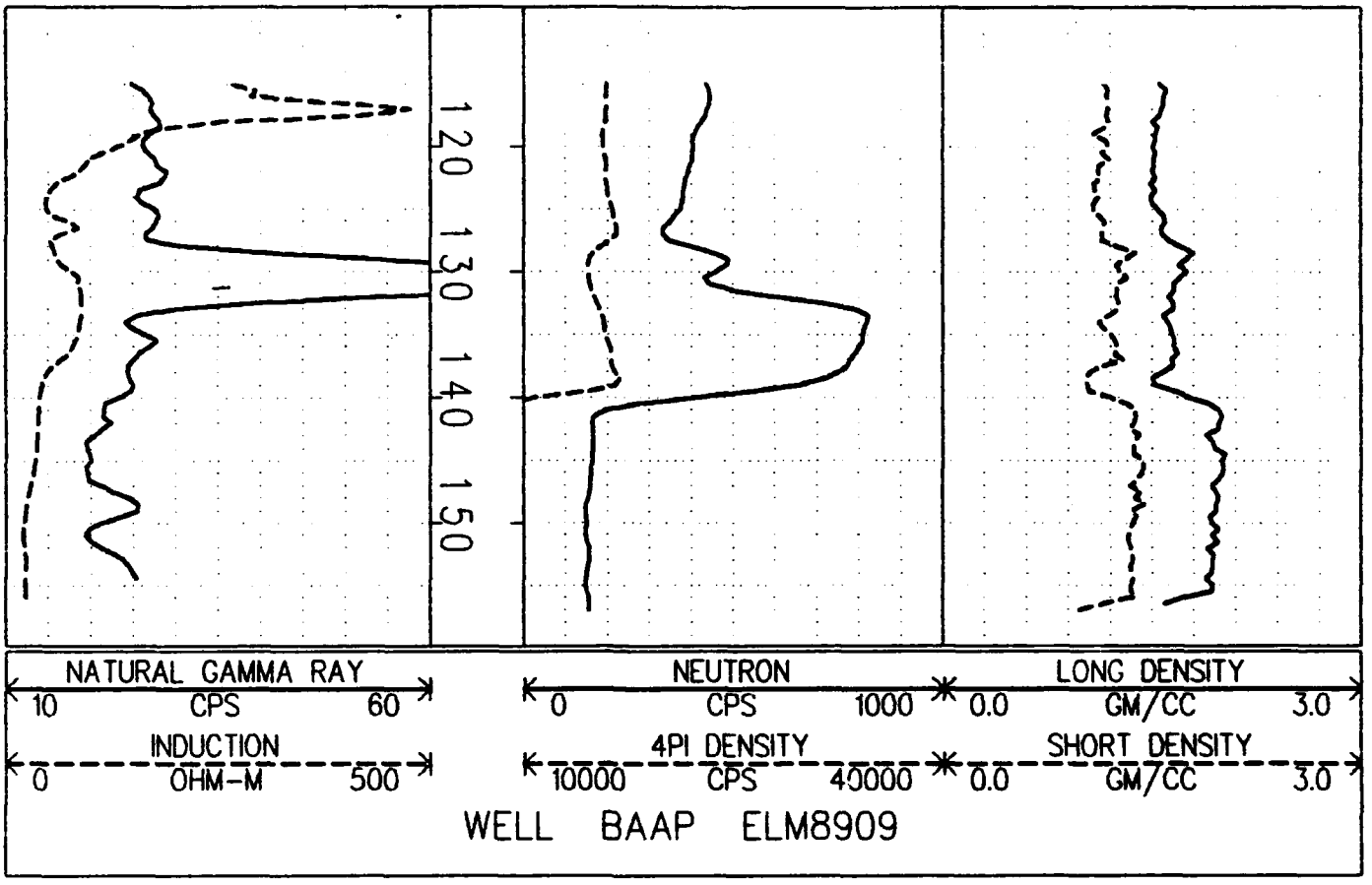
120
130
140
150
NATURAL GAMMA RAY
10 CPS 60
INDUCTION
0 OHM-M 500
NEUTRON
0 CPS 1000
4PI DENSITY
10000 CPS 40000
LONG DENSITY
0.0 GM/CC 3.0
SHORT DENSITY
0.0 GM/CC 3.0
WELL BAAP ELM8909

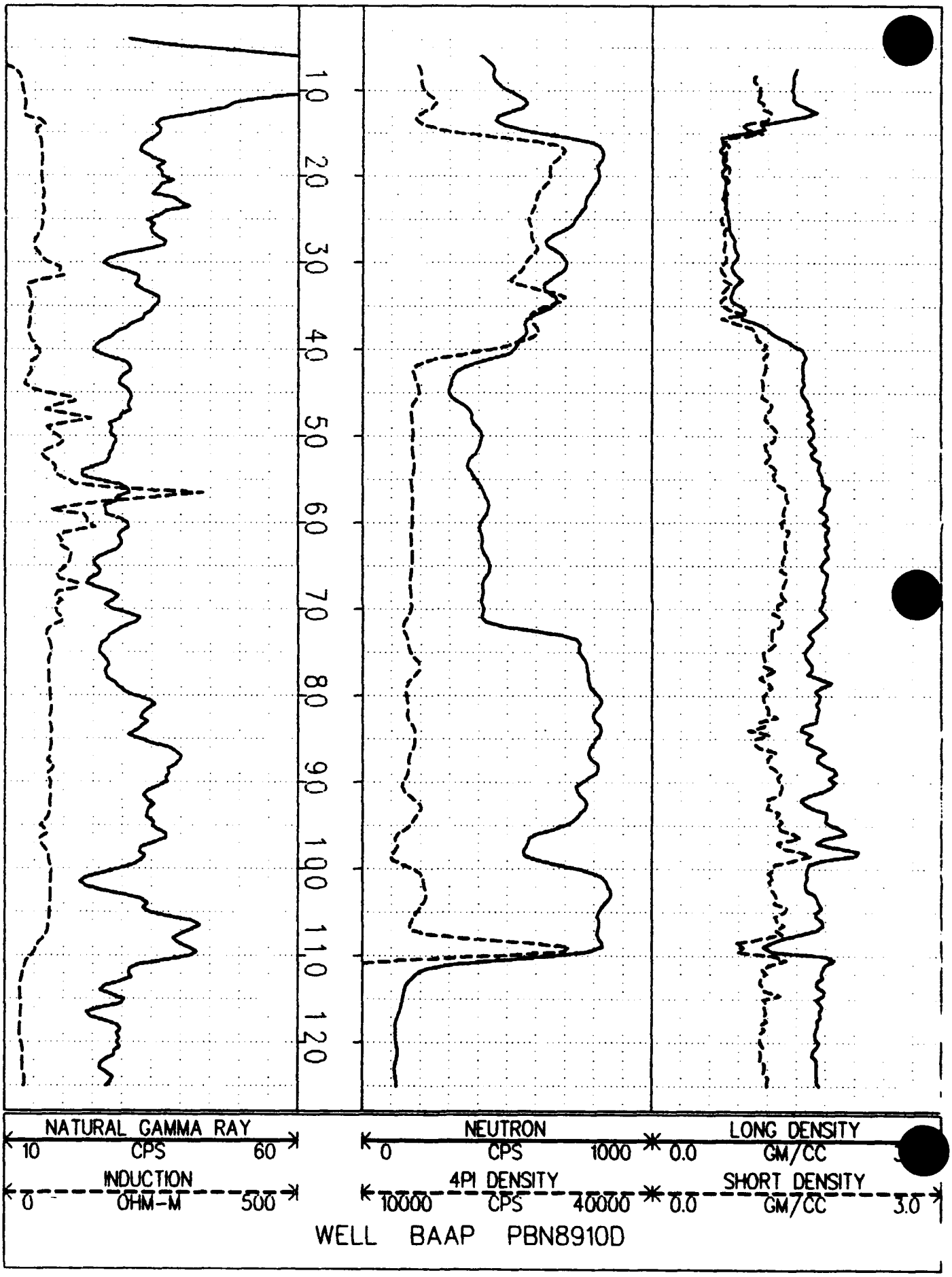
10
20
30
40
50
60
70
80
90
100
110
120
NATURAL GAMMA RAY
10 CPS 60
INDUCTION
0 OHM-M 500
NEUTRON
0 CPS 1000
4PI DENSITY
10000 CPS 40000
LONG DENSITY
0.0 GM/CC
SHORT DENSITY
0.0 GM/CC 3.0
WELL BAAP PBN8910D

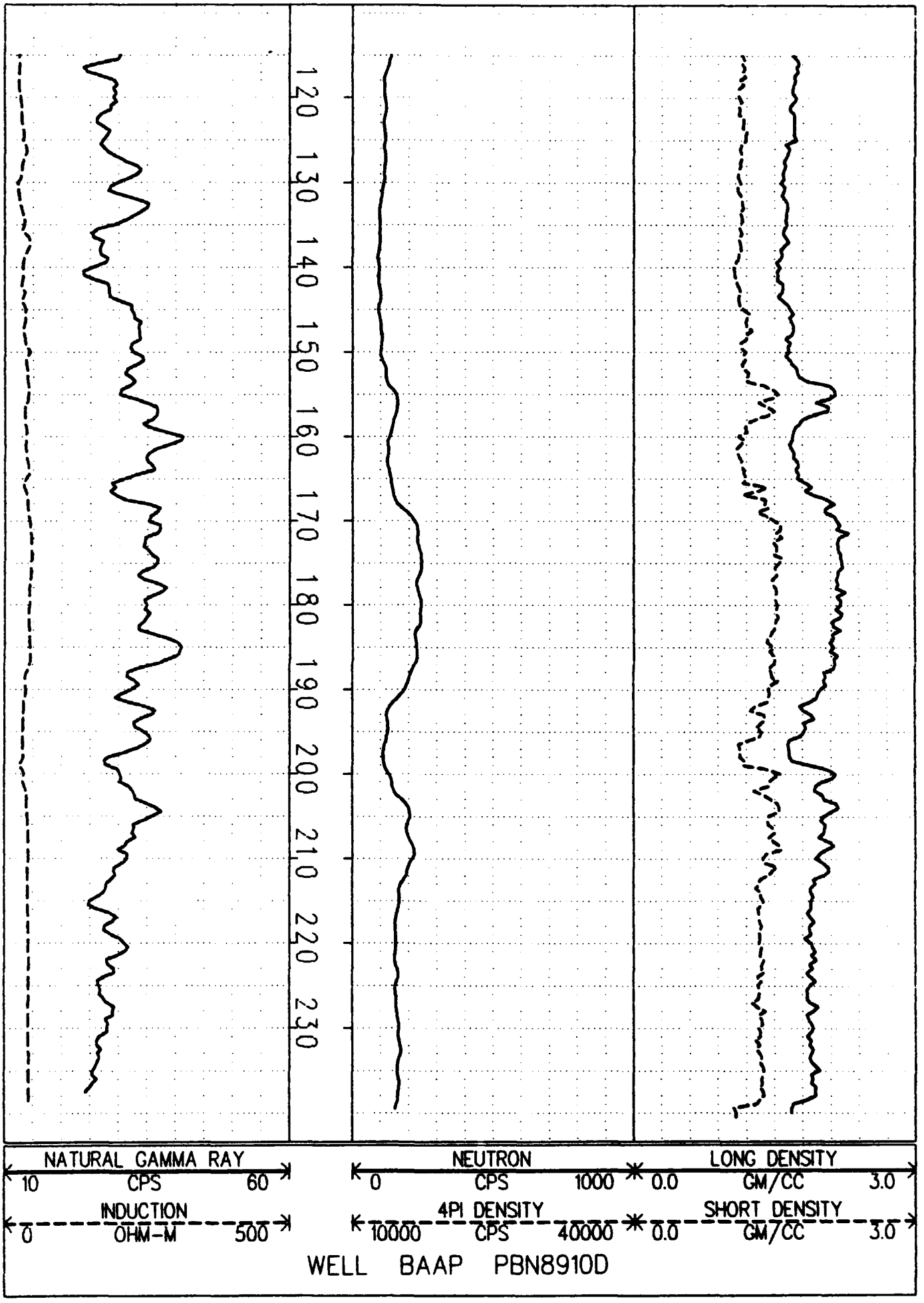
120
130
140
150
160
170
180
190
200
210
220
230
NATURAL GAMMA RAY
10
CPS
60
INDUCTION
0
OHM-M
500
NEUTRON
0
CPS
1000
4PI DENSITY
10000
CPS
40000
LONG DENSITY
0.0
GM/CC
3.0
SHORT DENSITY
0.0
GM/CC
3.0
WELL BAAP PBN8910D

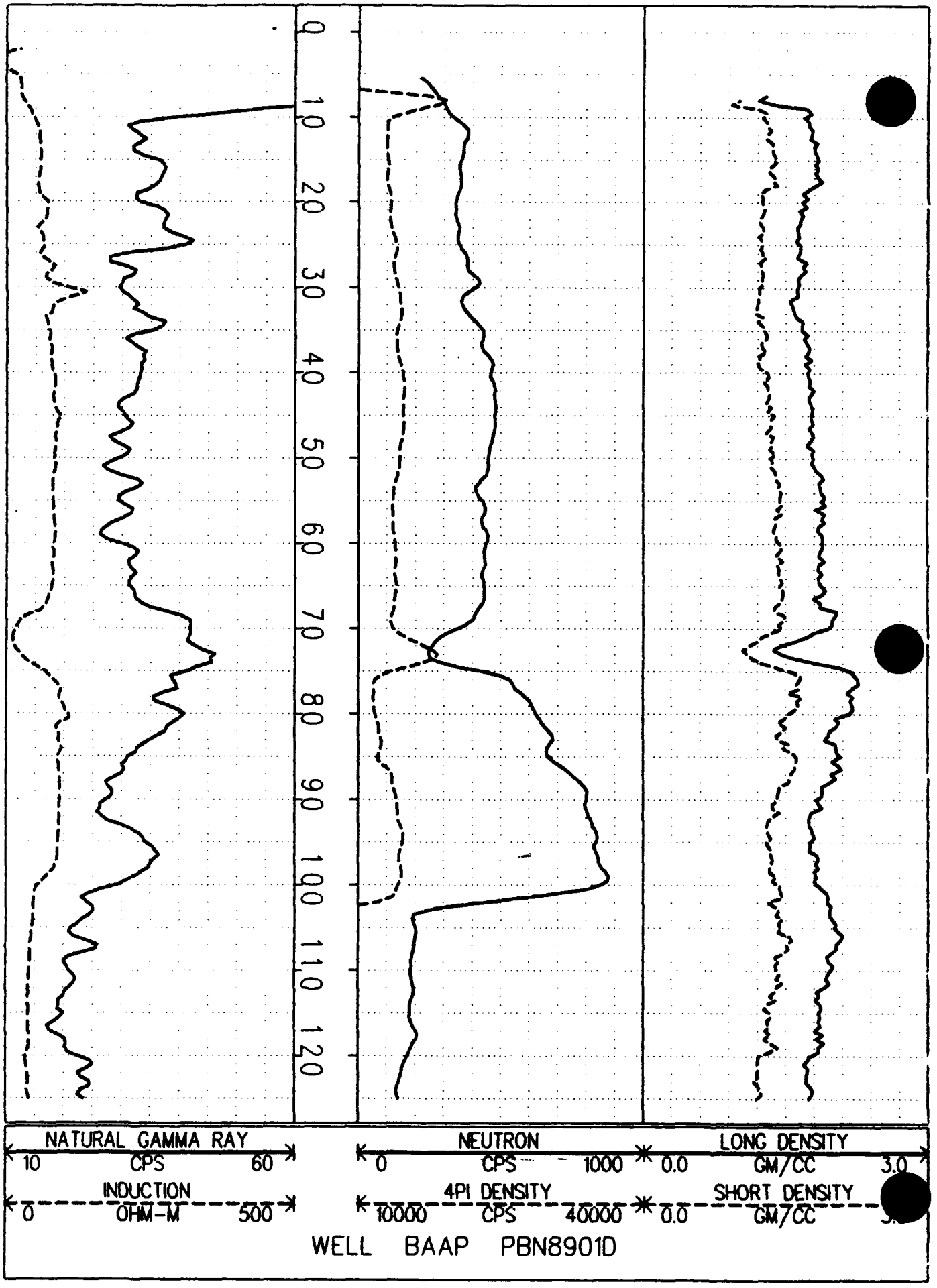
0
10
20
30
40
50
60
70
80
90
100
110
120
NATURAL GAMMA RAY
10 CPS 60
INDUCTION
0 OHM-M 500
NEUTRON
0 CPS 1000
4PI DENSITY
10000 CPS 40000
LONG DENSITY
0.0 GM/CC 3.0
SHORT DENSITY
0.0 GM/CC
WELL BAAP PBN8901D

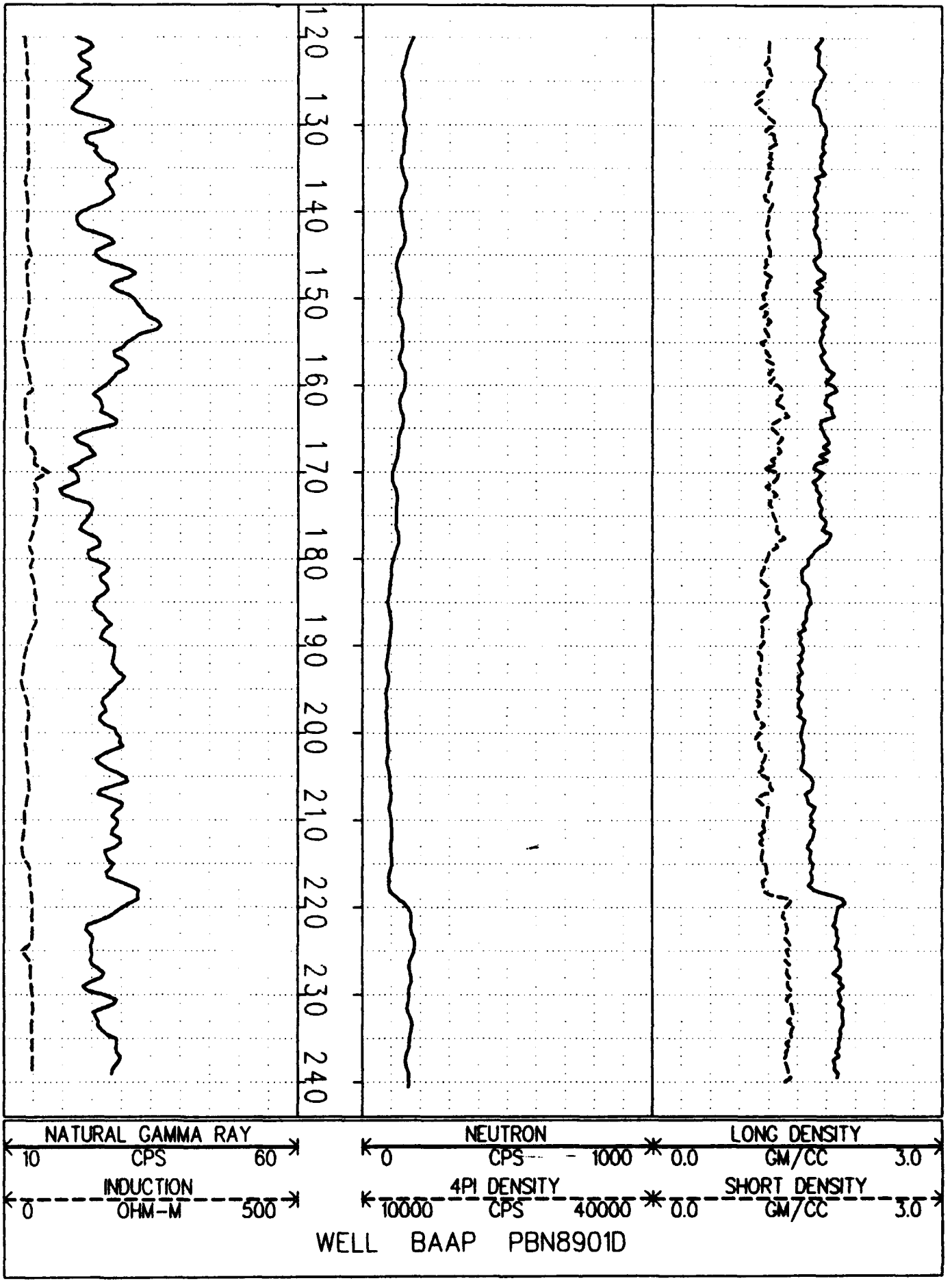
120 130 140 150 160 170 180 190 200 210 220 230 240
NATURAL GAMMA RAY
10 CPS 60
INDUCTION
0 OHM-M 500
NEUTRON
0 CPS - 1000
4PI DENSITY
10000 CPS 40000
LONG DENSITY
0.0 GM/CC 3.0
SHORT DENSITY
0.0 GM/CC 3.0
WELL BAAP PBN8901D

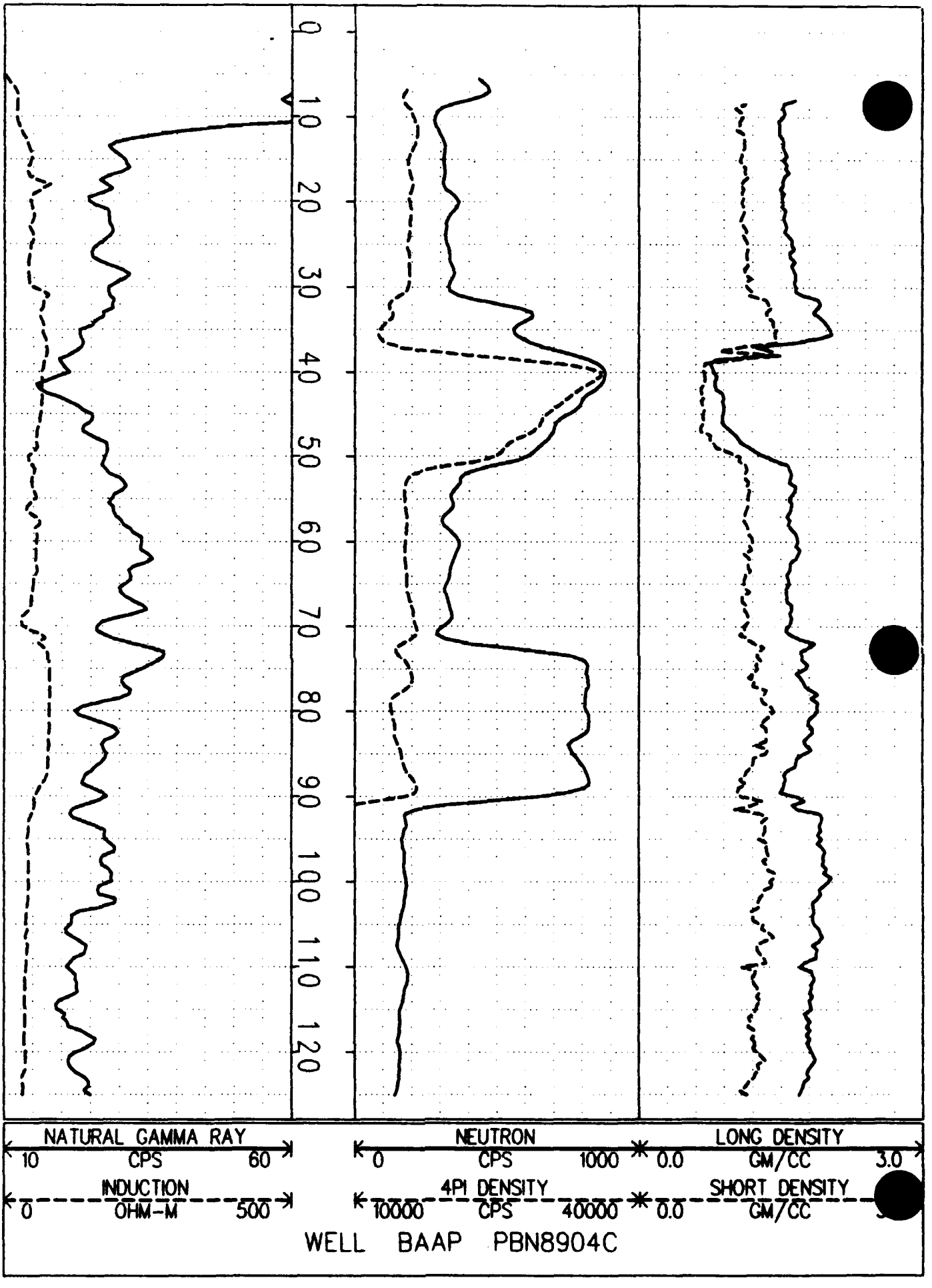
0
10
20
30
40
50
60
70
80
90
100
110
120
NATURAL GAMMA RAY
10 CPS 60
INDUCTION
0 OHM-M 500
NEUTRON
0 CPS 1000
4PI DENSITY
10000 CPS 40000
LONG DENSITY
0.0 GM/CC 3.0
SHORT DENSITY
0.0 GM/CC
WELL BAAP PBN8904C

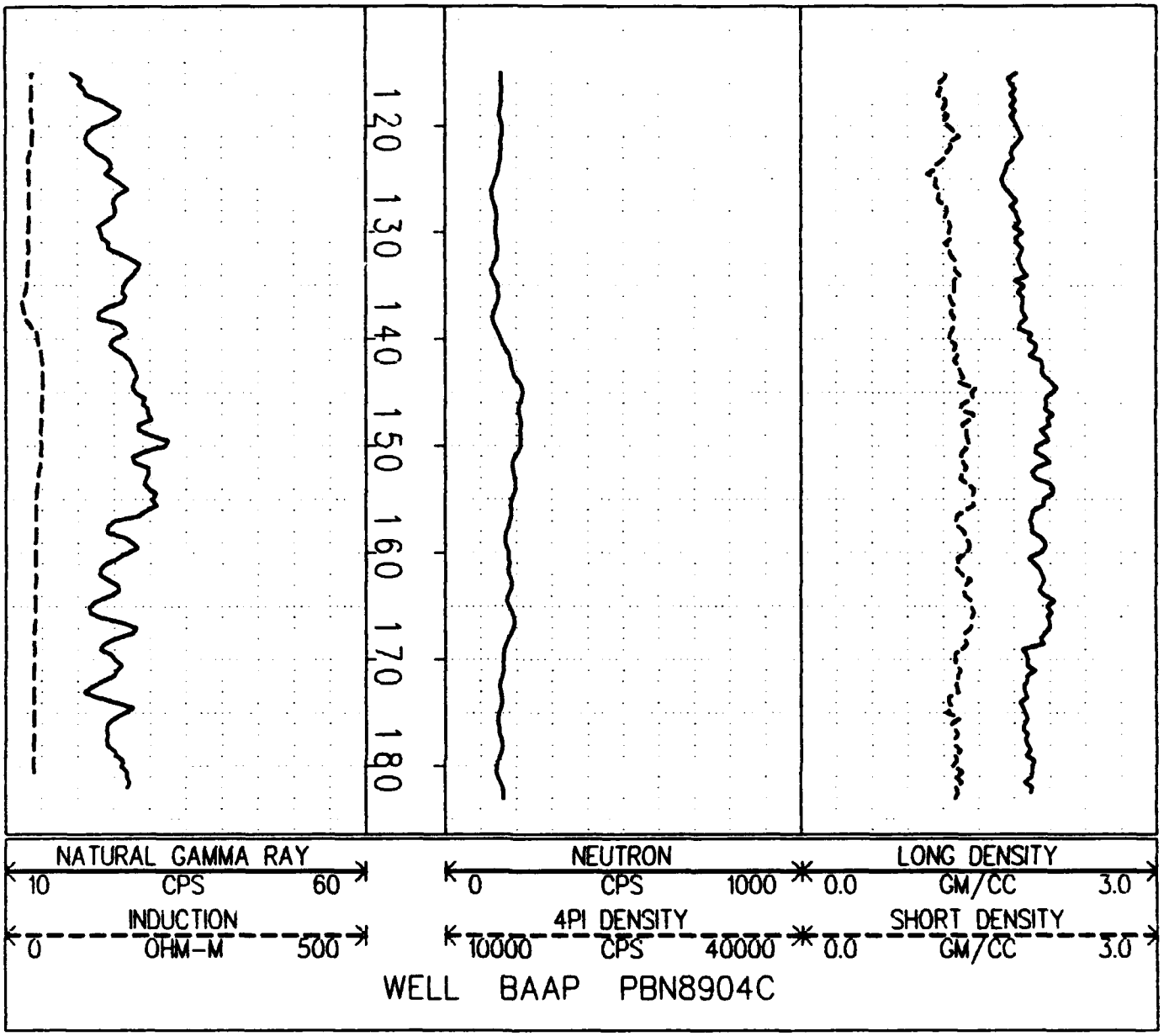
120
130
140
150
160
170
180
NATURAL GAMMA RAY
10
CPS
60
INDUCTION
0
OHM-M
500
NEUTRON
0
CPS
1000
4PI DENSITY
10000
CPS
40000
LONG DENSITY
0.0
GM/CC
3.0
SHORT DENSITY
0.0
GM/CC
3.0
WELL BAAP PBN8904C

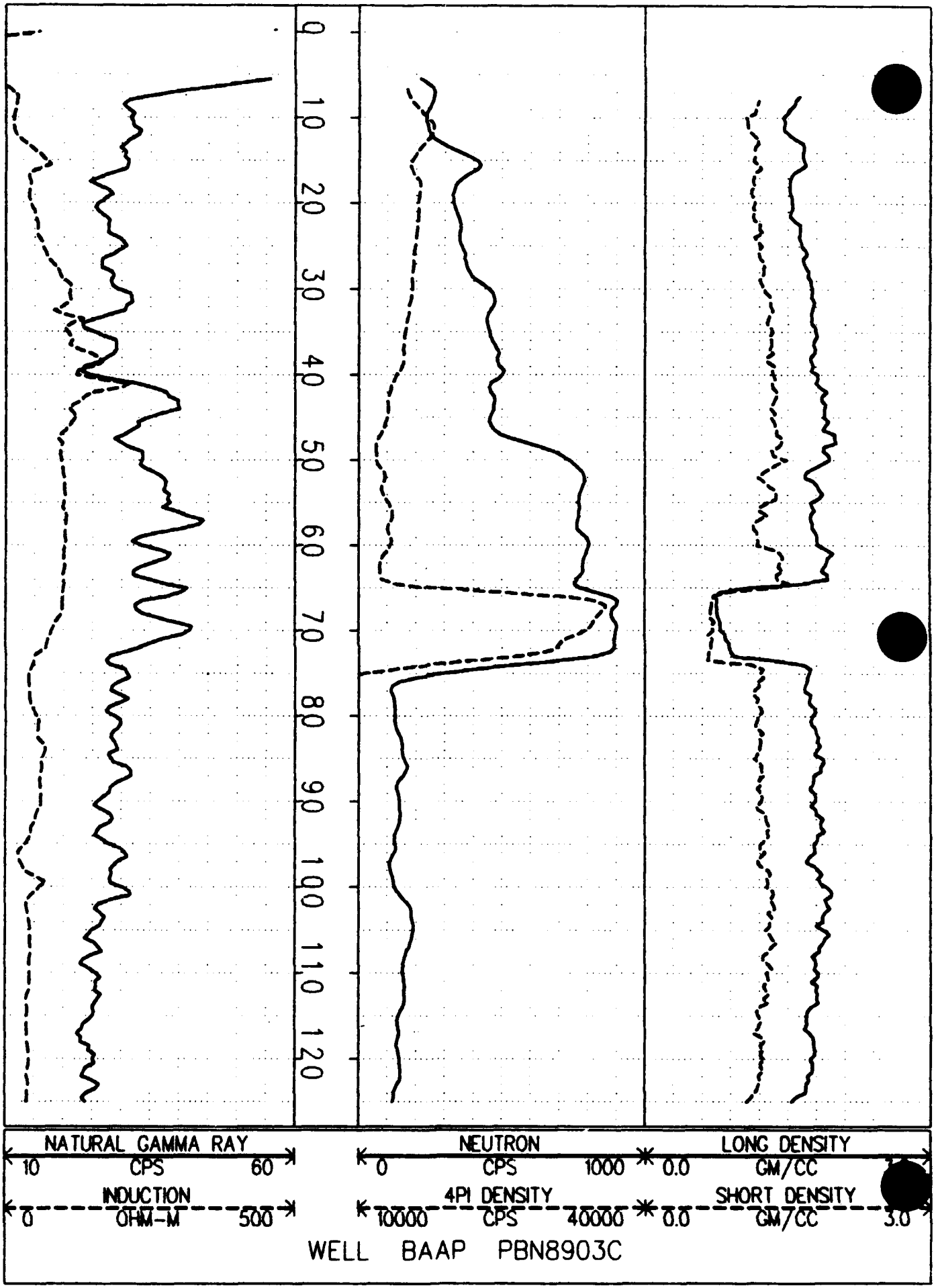
0
10
20
30
40
50
60
70
80
90
100
110
120
NATURAL GAMMA RAY
10
CPS
60
INDUCTION
0
OHM-M
500
NEUTRON
0
CPS
1000
4PI DENSITY
10000
CPS
40000
LONG DENSITY
0.0
GM/CC
SHORT DENSITY
0.0
GM/CC
3.0
WELL BAAP PBN8903C

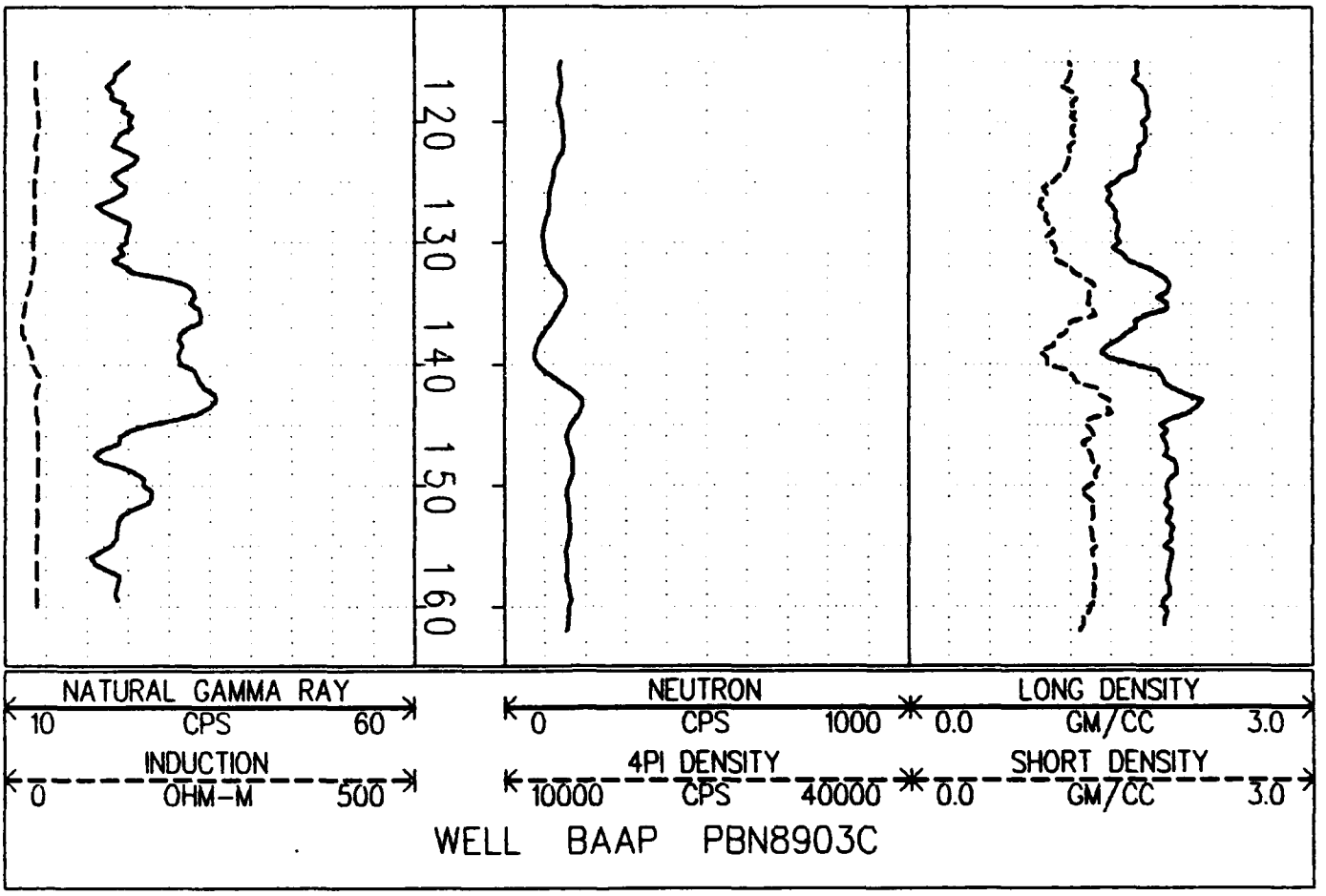
120
130
140
150
160
NATURAL GAMMA RAY
10 CPS 60
INDUCTION
0 OHM-M 500
NEUTRON
0 CPS 1000
4PI DENSITY
10000 CPS 40000
LONG DENSITY
0.0 GM/CC 3.0
SHORT DENSITY
0.0 GM/CC 3.0
WELL BAAP PBN8903C

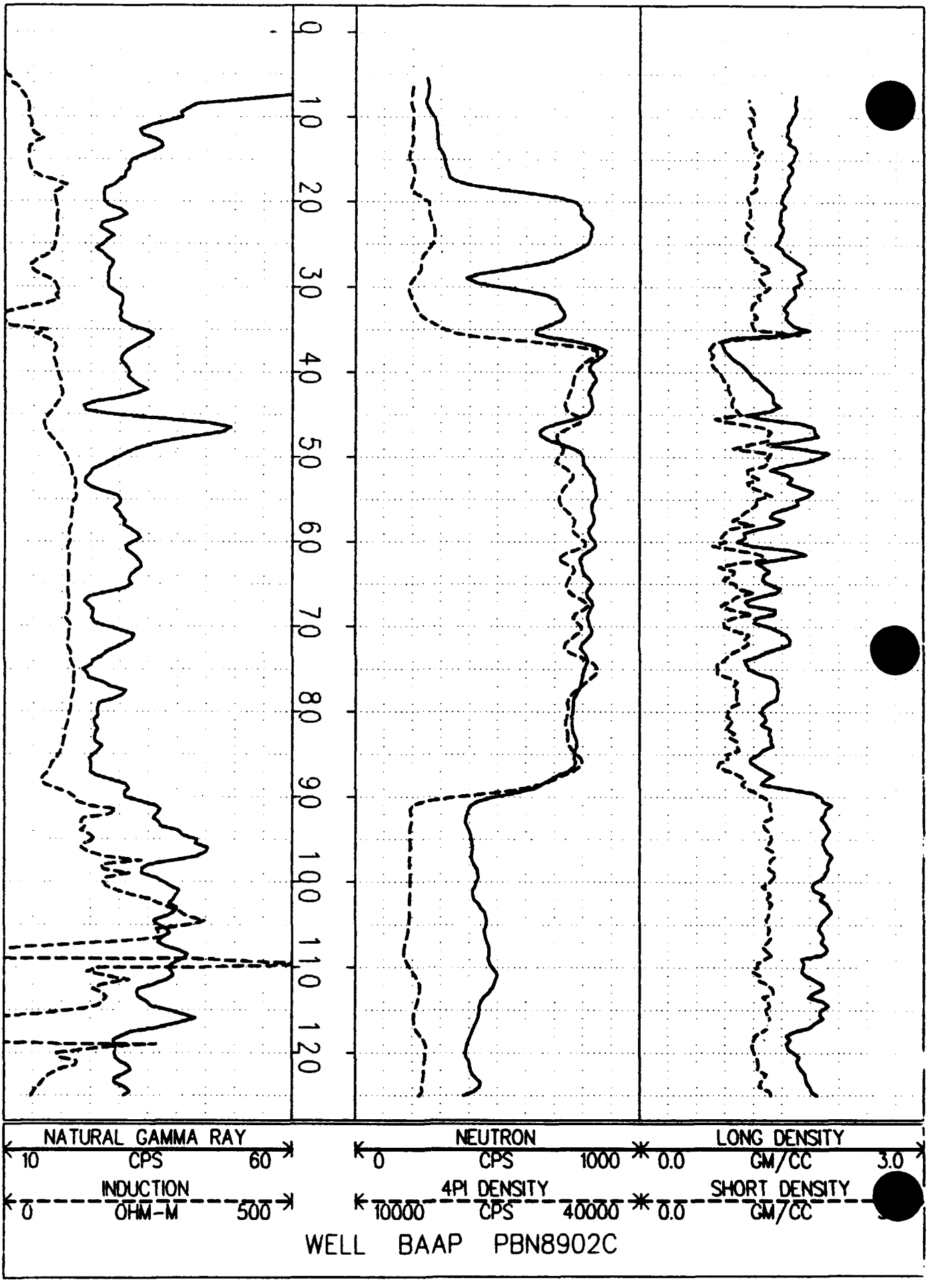
0
10
20
30
40
50
60
70
80
90
100
110
120
NATURAL GAMMA RAY
10 CPS 60
INDUCTION
0 OHM-M 500
NEUTRON
0 CPS 1000
4PI DENSITY
10000 CPS 40000
LONG DENSITY
0.0 GM/CC 3.0
SHORT DENSITY
0.0 GM/CC
WELL BAAP PBN8902C

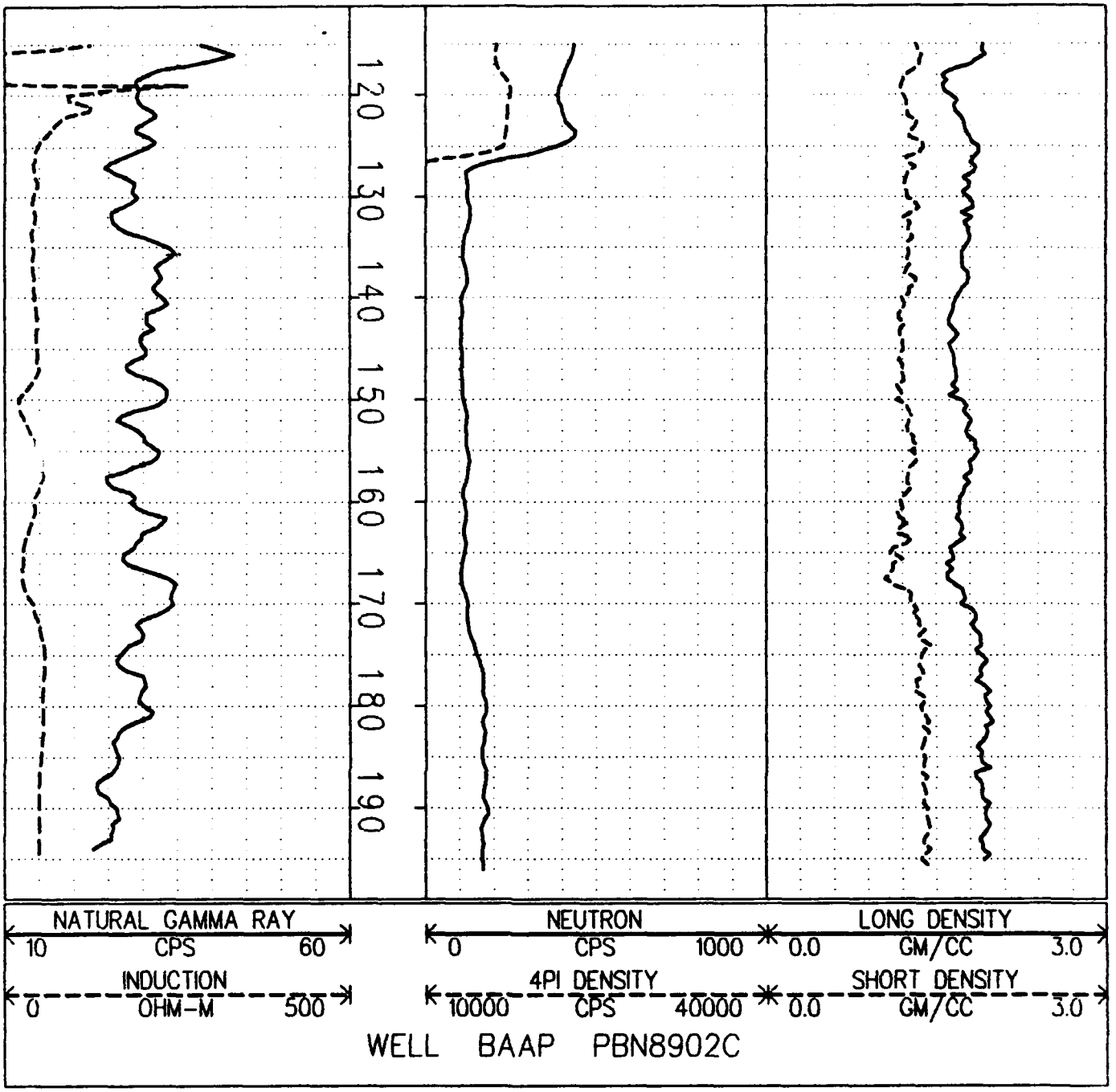
120
130
140
150
160
170
180
190
NATURAL GAMMA RAY
10 CPS 60
INDUCTION
0 OHM-M 500
NEUTRON
0 CPS 1000
4PI DENSITY
10000 CPS 40000
LONG DENSITY
0.0 GM/CC 3.0
SHORT DENSITY
0.0 GM/CC 3.0
WELL BAAP PBN8902C

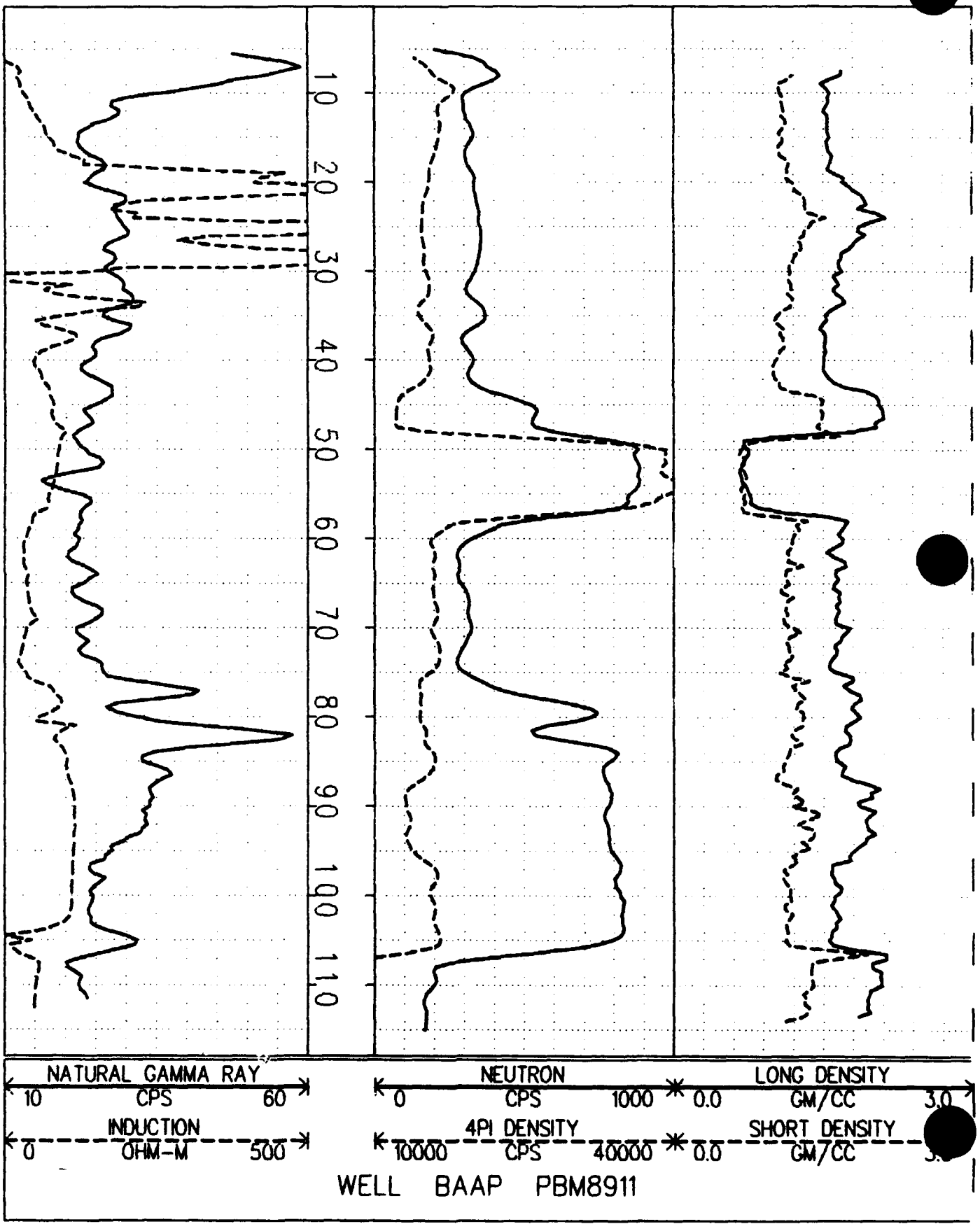

WELL BAAP PBM8911

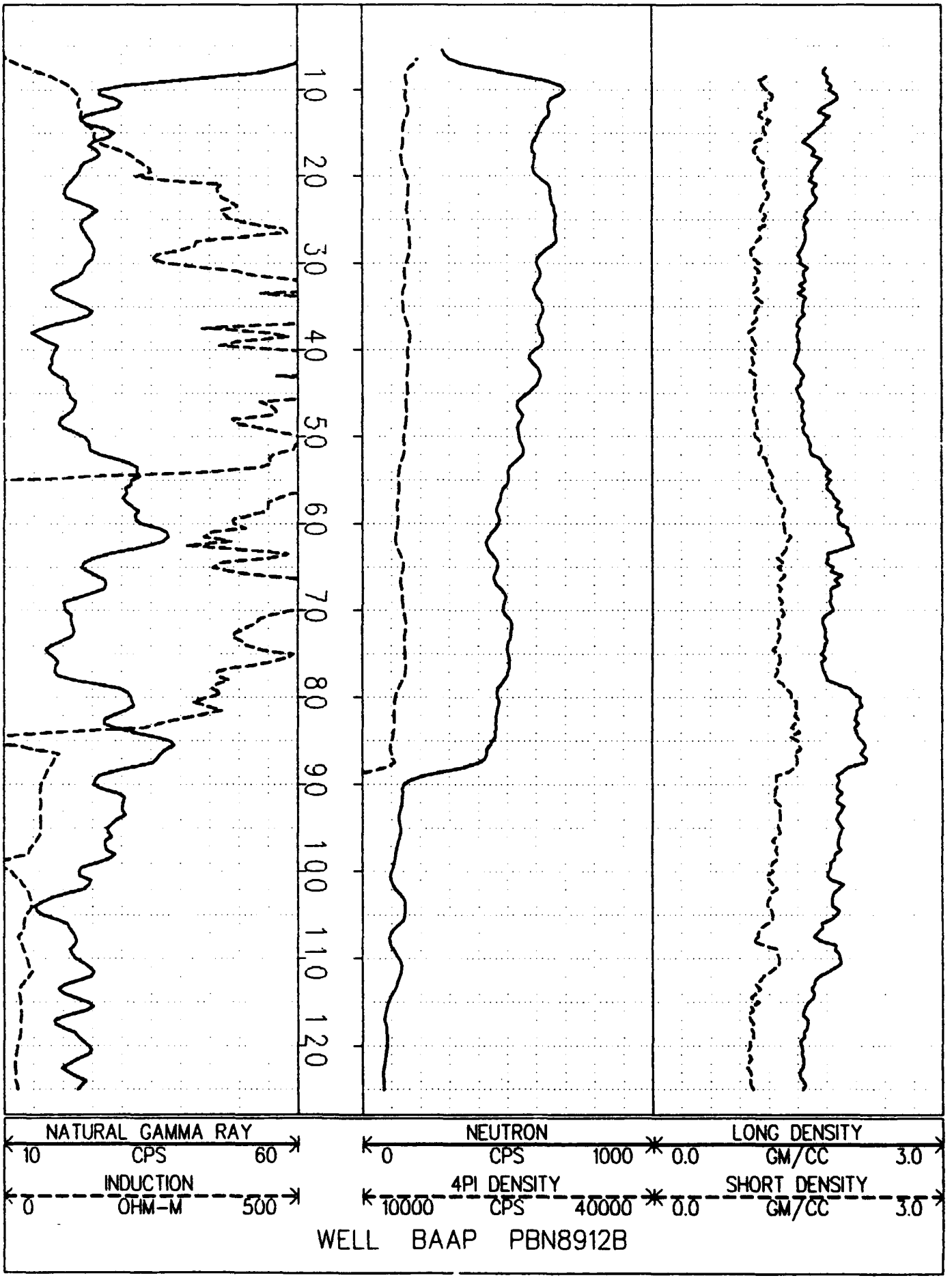
10
20
30
40
50
60
70
80
90
100
110
120
NATURAL GAMMA RAY
10
CPS
60
INDUCTION
0
OHM-M
500
NEUTRON
0
CPS
1000
4PI DENSITY
10000
CPS
40000
LONG DENSITY
0.0
GM/CC
3.0
SHORT DENSITY
0.0
GM/CC
3.0
WELL BAAP PBN8912B

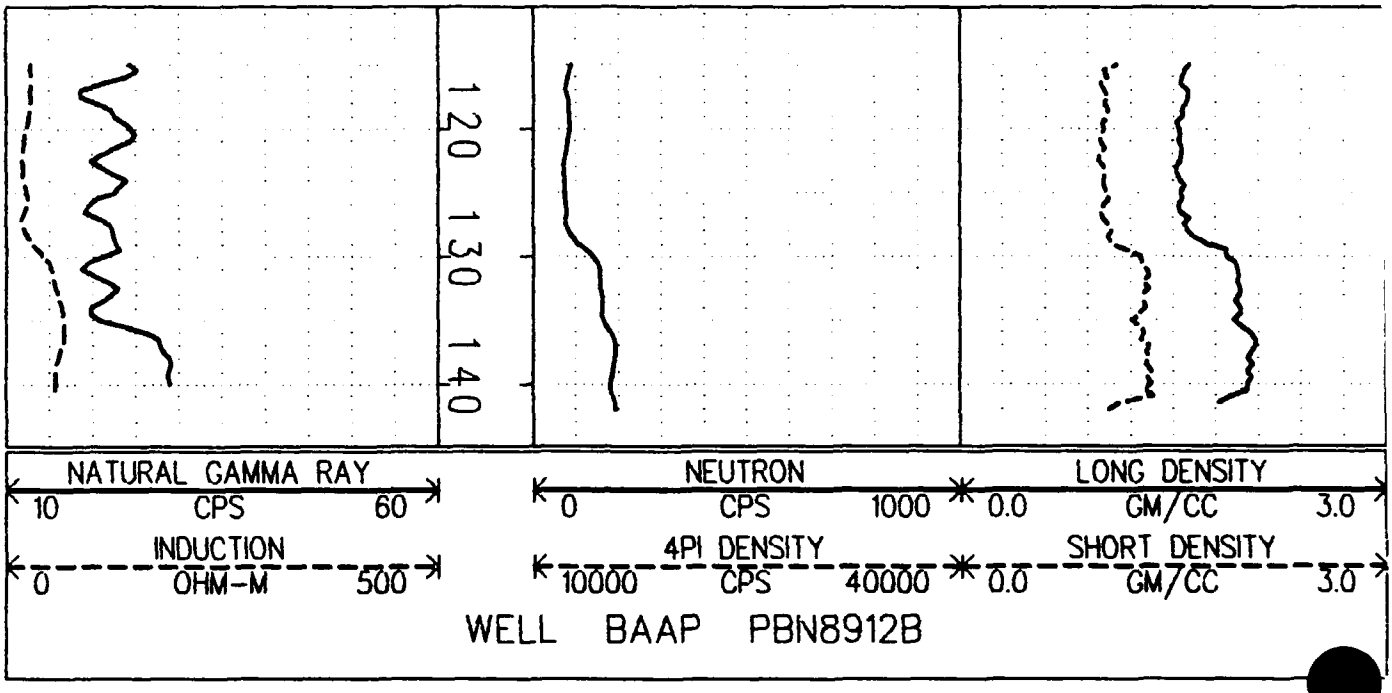
120
130
140
NATURAL GAMMA RAY
10 CPS 60
INDUCTION
0 OHM-M 500
NEUTRON
0 CPS 1000
4PI DENSITY
10000 CPS 40000
LONG DENSITY
0.0 GM/CC 3.0
SHORT DENSITY
0.0 GM/CC 3.0
WELL BAAP PBN8912B

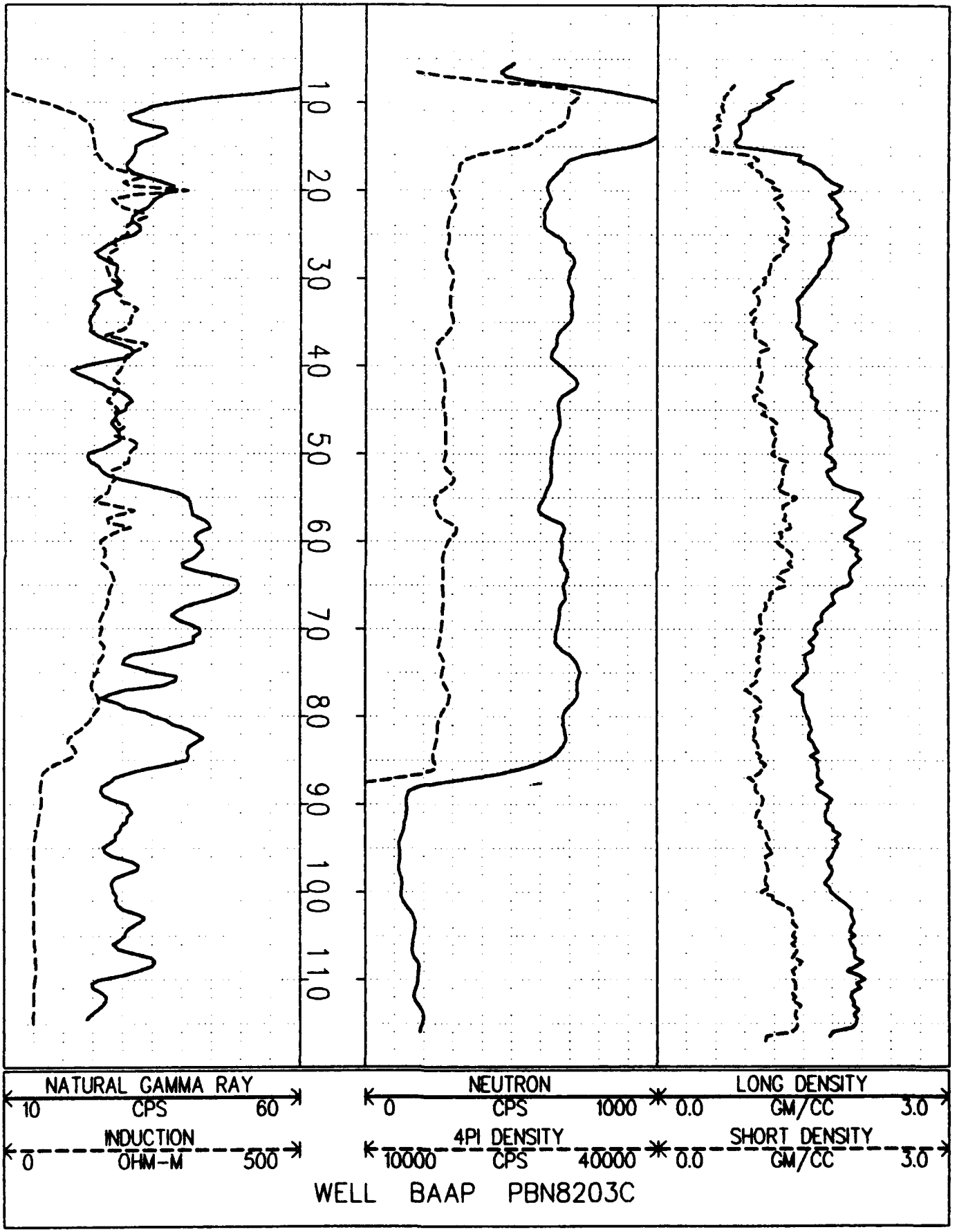
10
20
30
40
50
60
70
80
90
100
110
NATURAL GAMMA RAY
10 CPS 60
INDUCTION
0 OHM-M 500
NEUTRON
0 CPS 1000
4PI DENSITY
10000 CPS 40000
LONG DENSITY
0.0 GM/CC 3.0
SHORT DENSITY
0.0 GM/CC 3.0
WELL BAAP PBN8203C

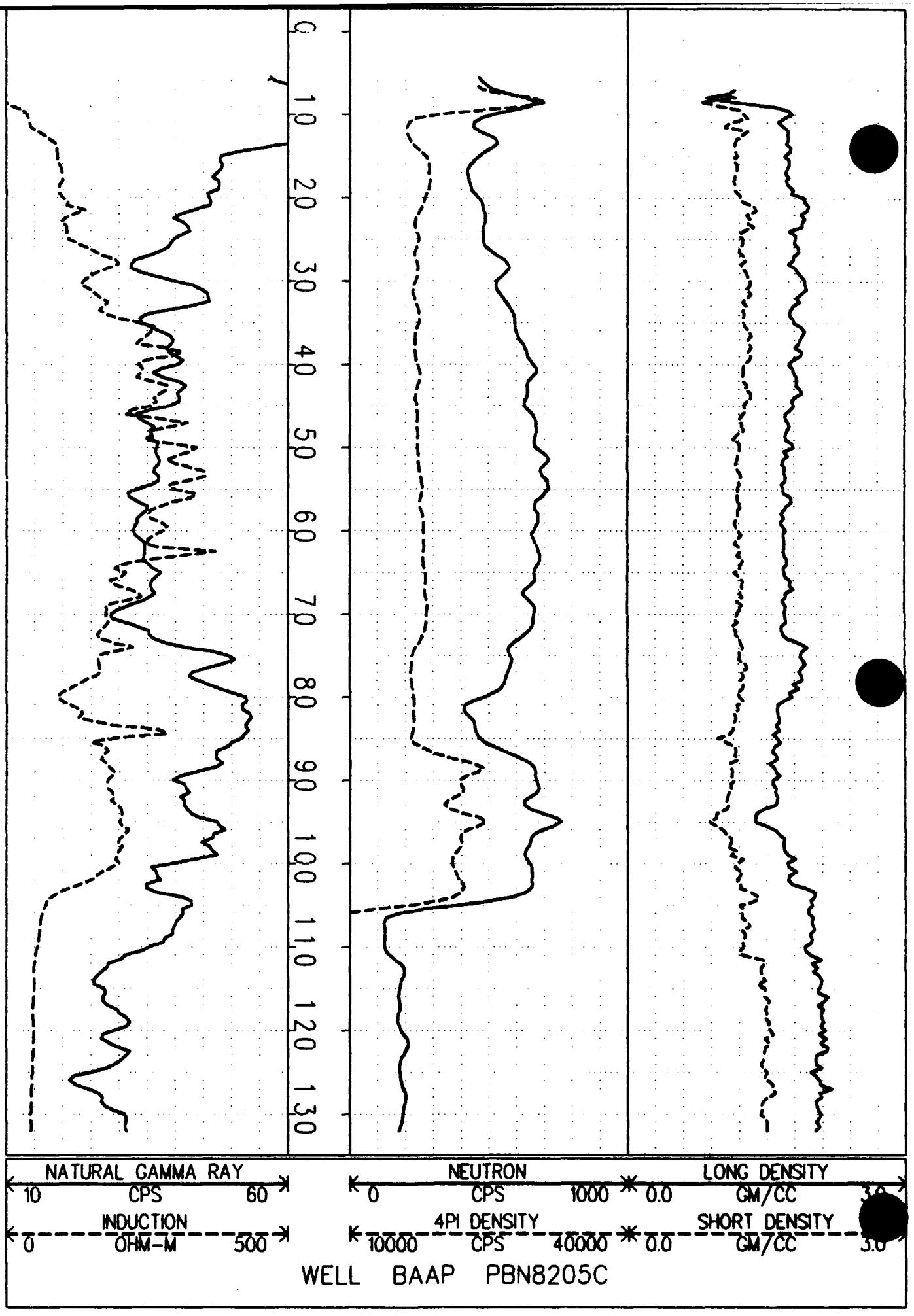
0
10
20
30
40
50
60
70
80
90
100
110
120
130
NATURAL GAMMA RAY
10
CPS
60
INDUCTION
0
OHM-M
500
NEUTRON
0
CPS
1000
4PI DENSITY
10000
CPS
40000
LONG DENSITY
0.0
GM/CC
3.0
SHORT DENSITY
0.0
GM/CC
3.0
WELL BAAP PBN8205C

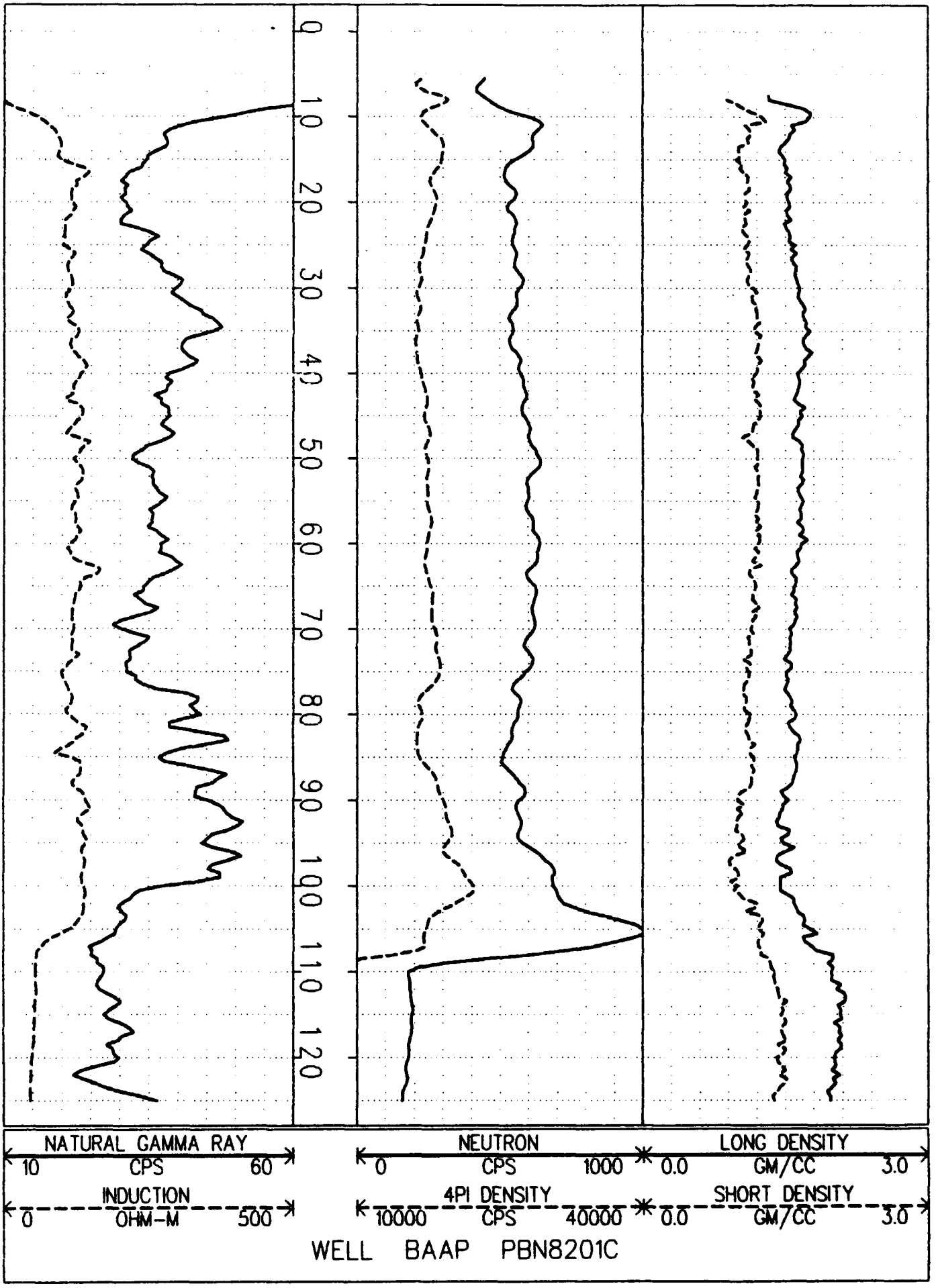
0
10
20
30
40
50
60
70
80
90
100
110
120
NATURAL GAMMA RAY
10 CPS 60
INDUCTION
0 OHM-M 500
NEUTRON
0 CPS 1000
4PI DENSITY
10000 CPS 40000
LONG DENSITY
0.0 GM/CC 3.0
SHORT DENSITY
0.0 GM/CC 3.0
WELL BAAP PBN8201C

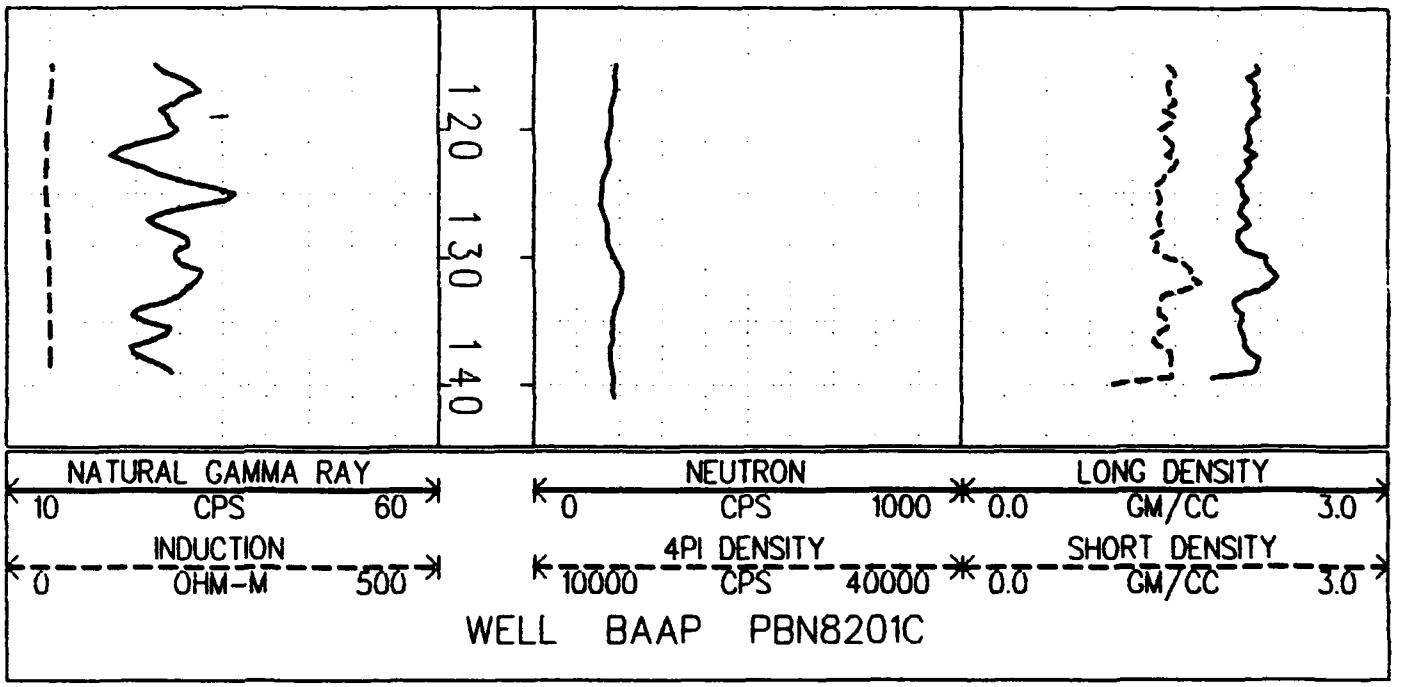
120
130
140
NATURAL GAMMA RAY
10
CPS
60
INDUCTION
0
OHM-M
500
NEUTRON
0
CPS
1000
4PI DENSITY
10000
CPS
40000
LONG DENSITY
0.0
GM/CC
3.0
SHORT DENSITY
0.0
GM/CC
3.0
WELL BAAP PBN8201C

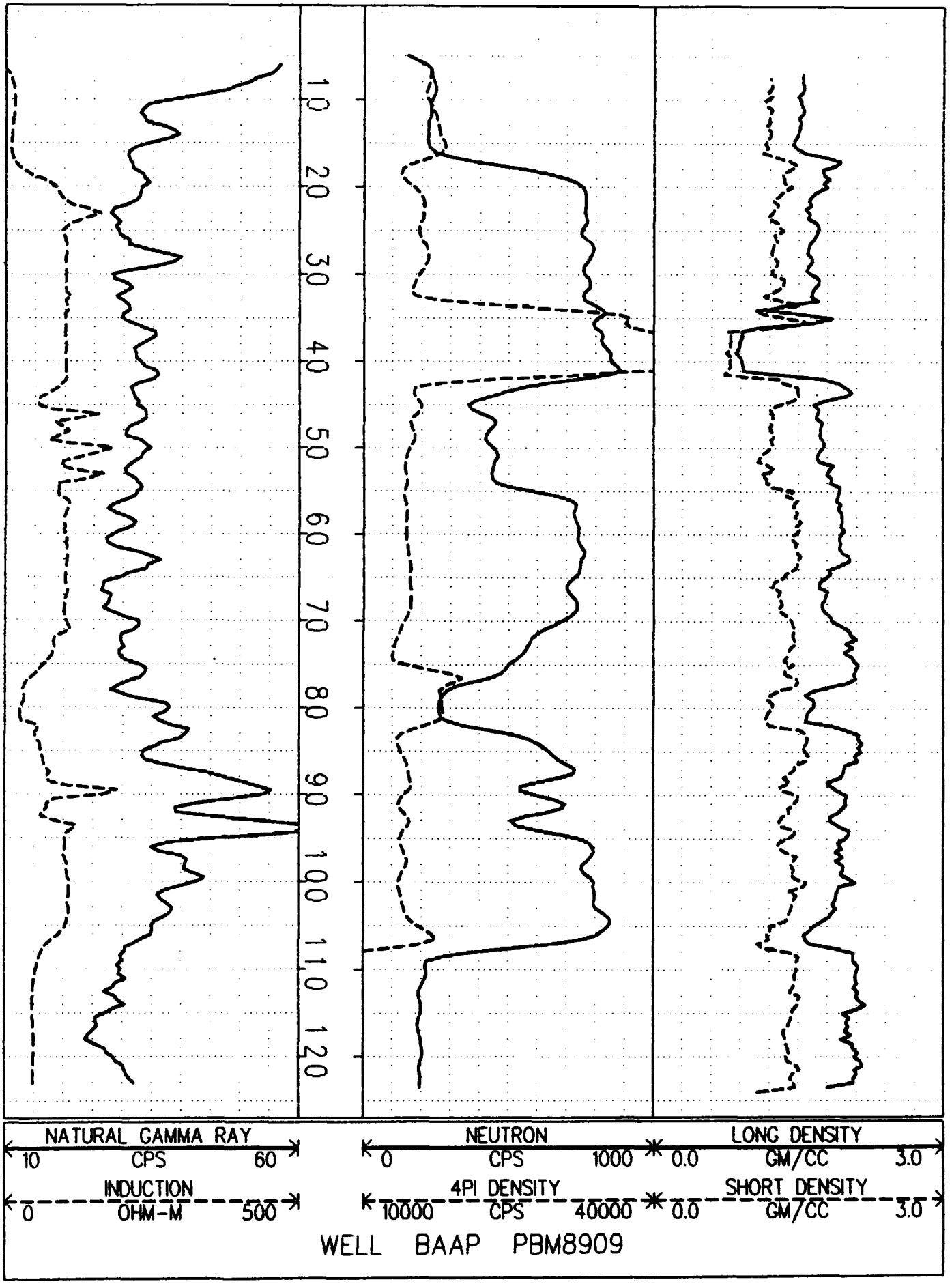
10
20
30
40
50
60
70
80
90
100
110
120
NATURAL GAMMA RAY
10 CPS 60
INDUCTION
0 OHM-M 500
NEUTRON
0 CPS 1000
4PI DENSITY
10000 CPS 40000
LONG DENSITY
0.0 GM/CC 3.0
SHORT DENSITY
0.0 GM/CC 3.0
WELL BAAP PBM8909

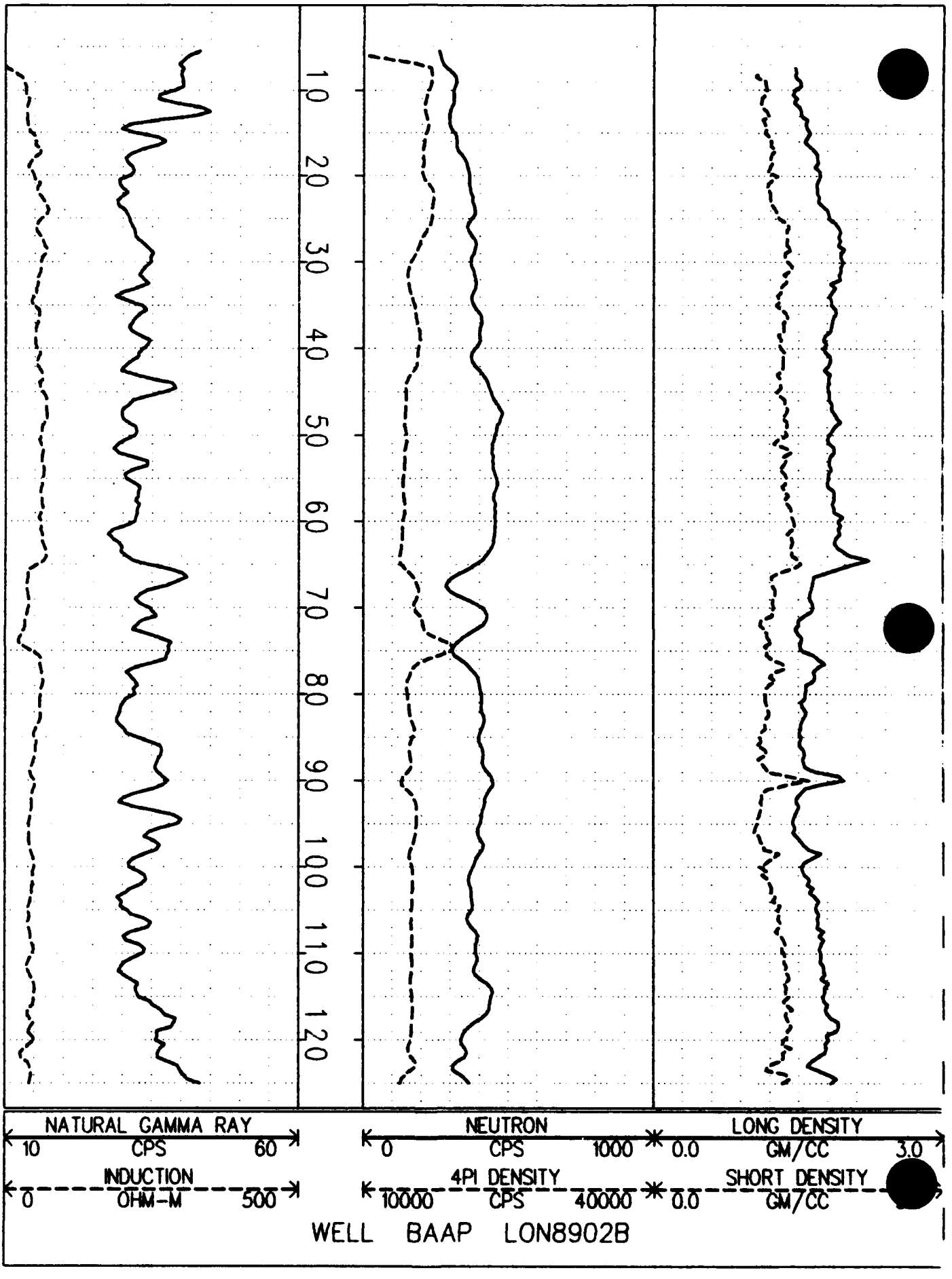
10
20
30
40
50
60
70
80
90
100
110
120
NATURAL GAMMA RAY
10
CPS
60
INDUCTION
0
OHM-M
500
NEUTRON
0
CPS
1000
4PI DENSITY
10000
CPS
40000
LONG DENSITY
0.0
GM/CC
3.0
SHORT DENSITY
0.0
GM/CC
WELL BAAP LON8902B

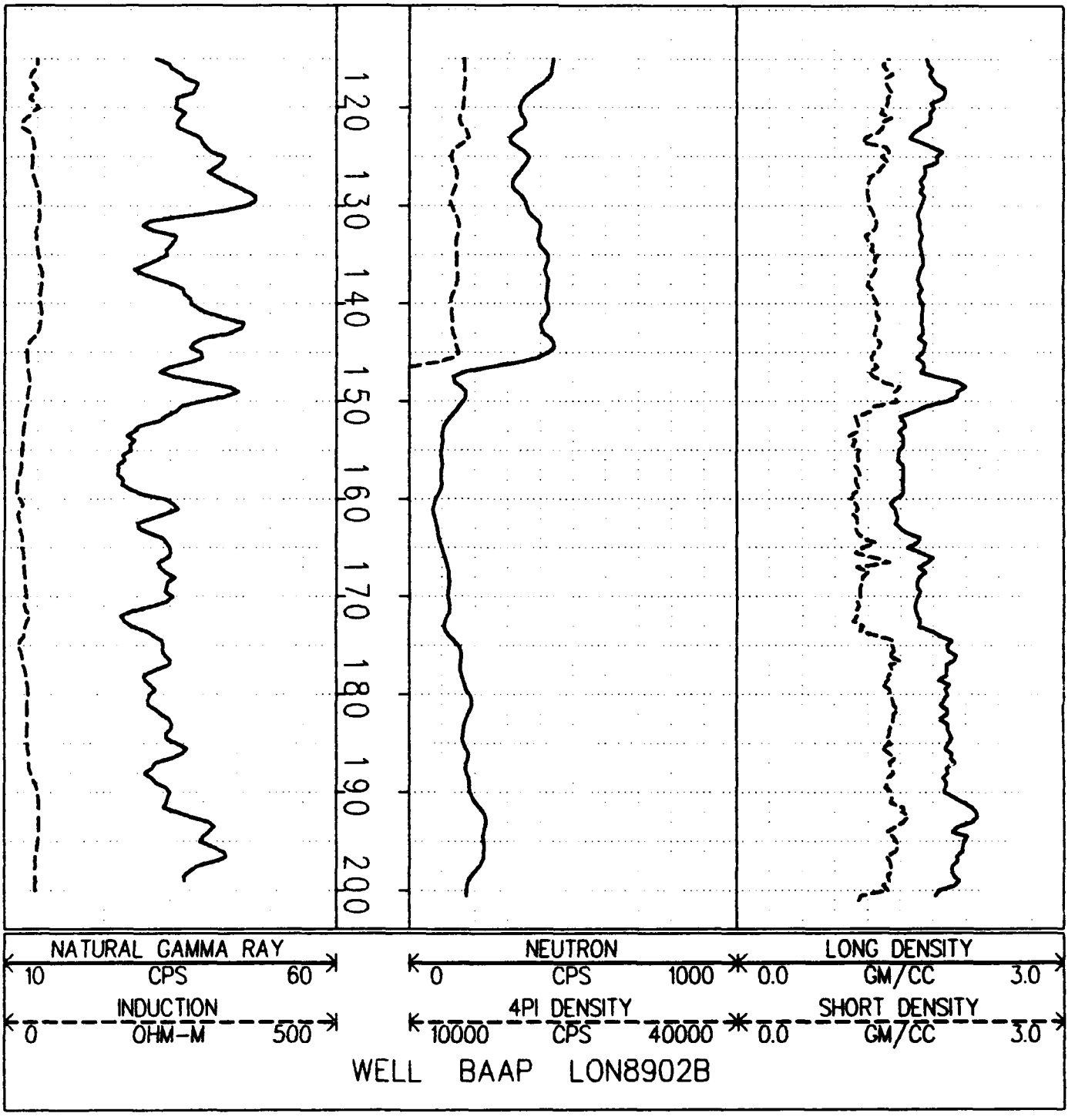
120
130
140
150
160
170
180
190
200
NATURAL GAMMA RAY
10 CPS 60
INDUCTION
0 OHM-M 500
NEUTRON
0 CPS 1000
4PI DENSITY
10000 CPS 40000
LONG DENSITY
0.0 GM/CC 3.0
SHORT DENSITY
0.0 GM/CC 3.0
WELL BAAP LON8902B

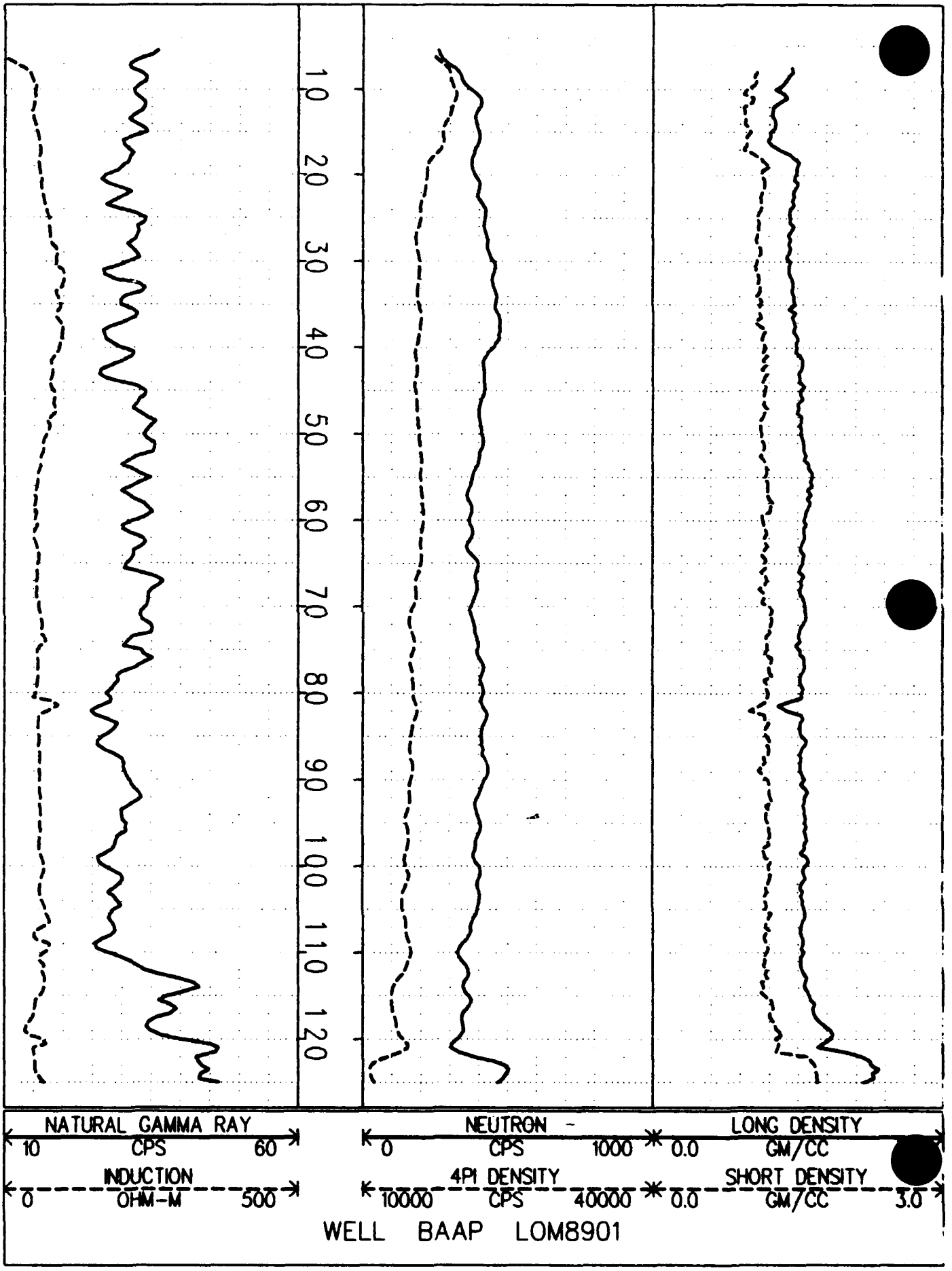
10
20
30
40
50
60
70
80
90
100
110
120
NATURAL GAMMA RAY
10 CPS 60
INDUCTION
0 OHM-M 500
NEUTRON
0 CPS 1000
4PI DENSITY
10000 CPS 40000
LONG DENSITY
0.0 GM/CC
SHORT DENSITY
0.0 GM/CC 3.0
WELL BAAP LOM8901

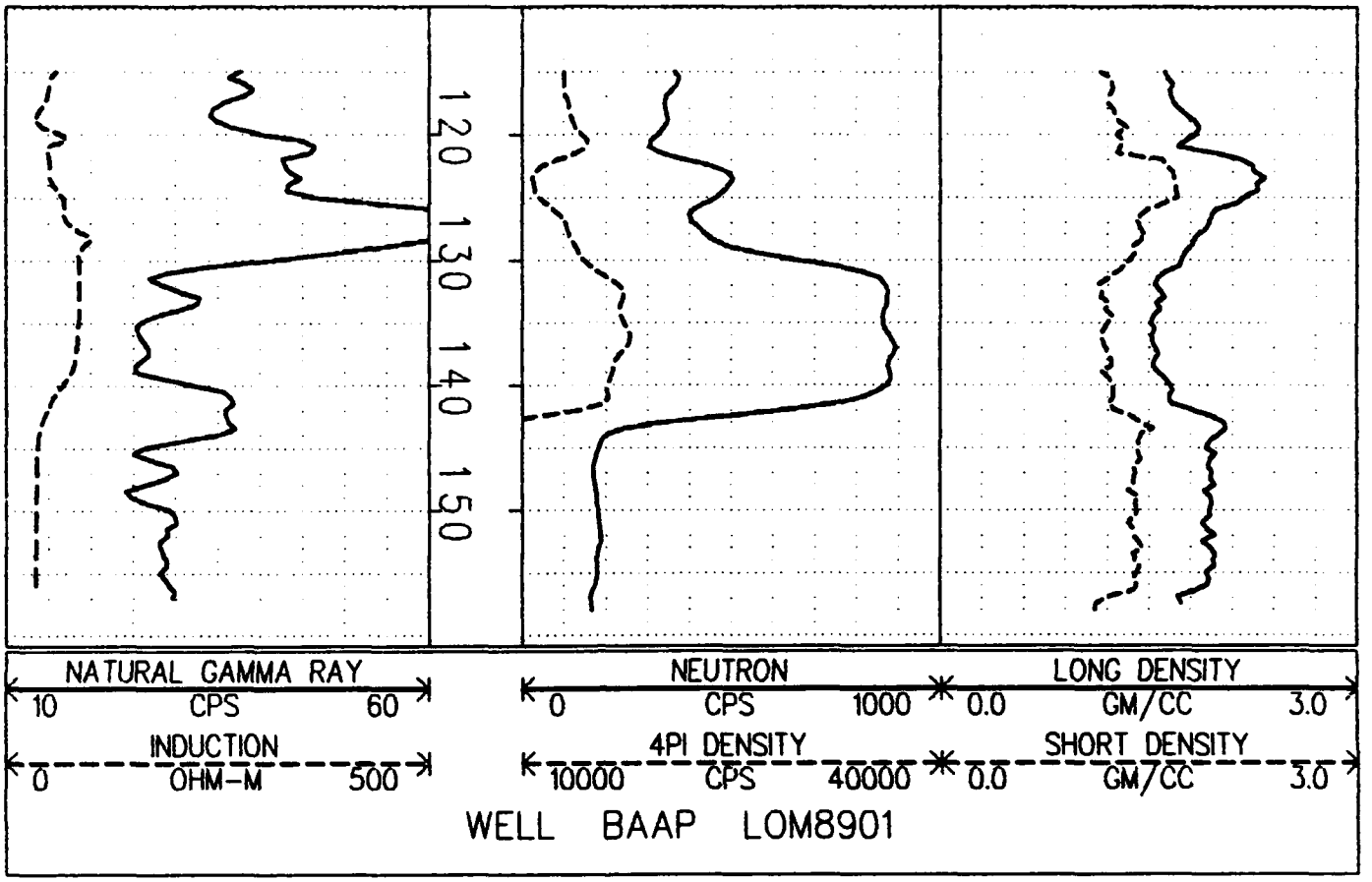
120
130
140
150
NATURAL GAMMA RAY
10 CPS 60
INDUCTION
0 OHM-M 500
NEUTRON
0 CPS 1000
4PI DENSITY
10000 CPS 40000
LONG DENSITY
0.0 GM/CC 3.0
SHORT DENSITY
0.0 GM/CC 3.0
WELL BAAP LOM8901

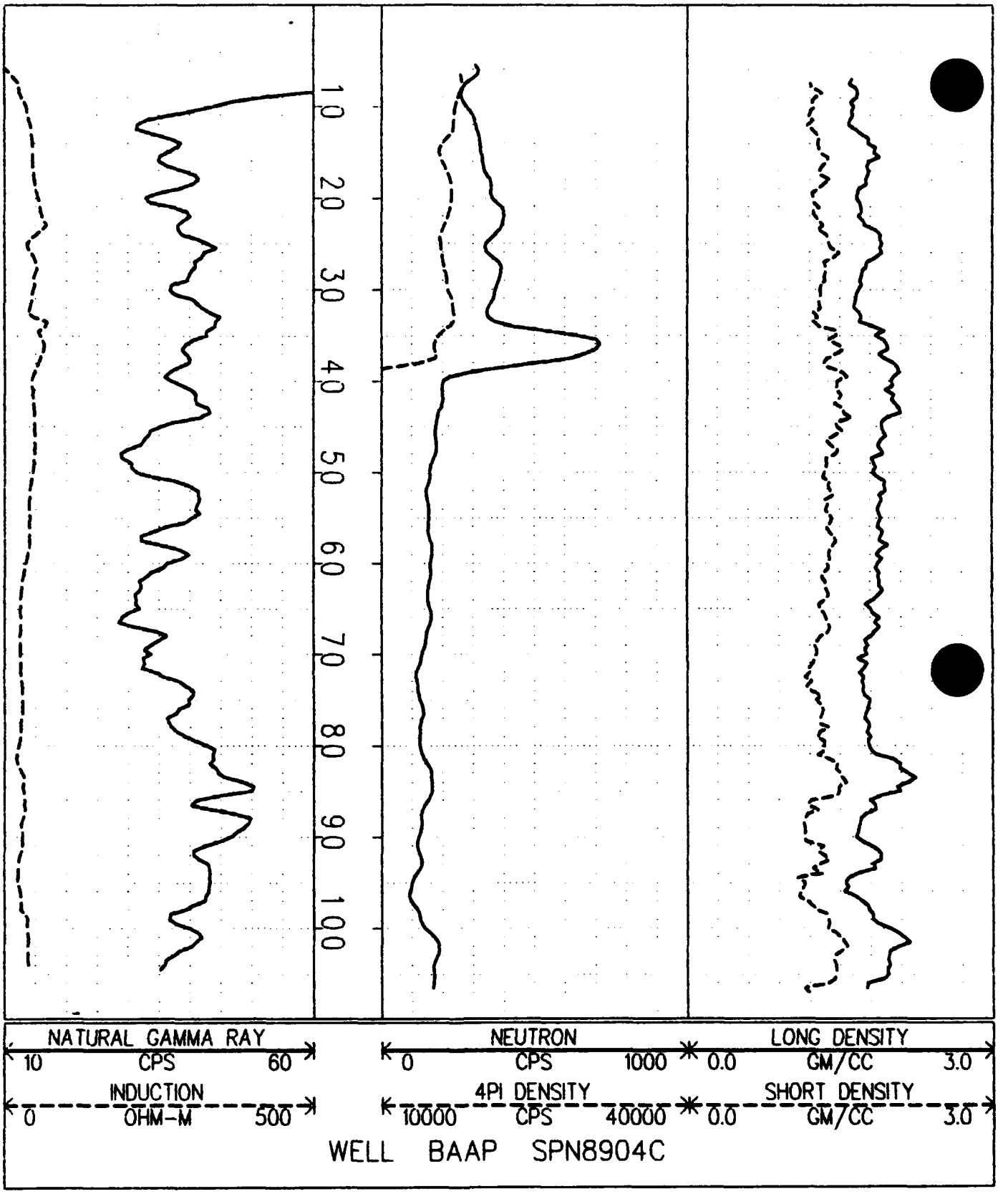
10
20
30
40
50
60
70
80
90
100
NATURAL GAMMA RAY
10 CPS 60
INDUCTION
0 OHM-M 500
NEUTRON
0 CPS 1000
4PI DENSITY
10000 CPS 40000
LONG DENSITY
0.0 GM/CC 3.0
SHORT DENSITY
0.0 GM/CC 3.0
WELL BAAP SPN8904C

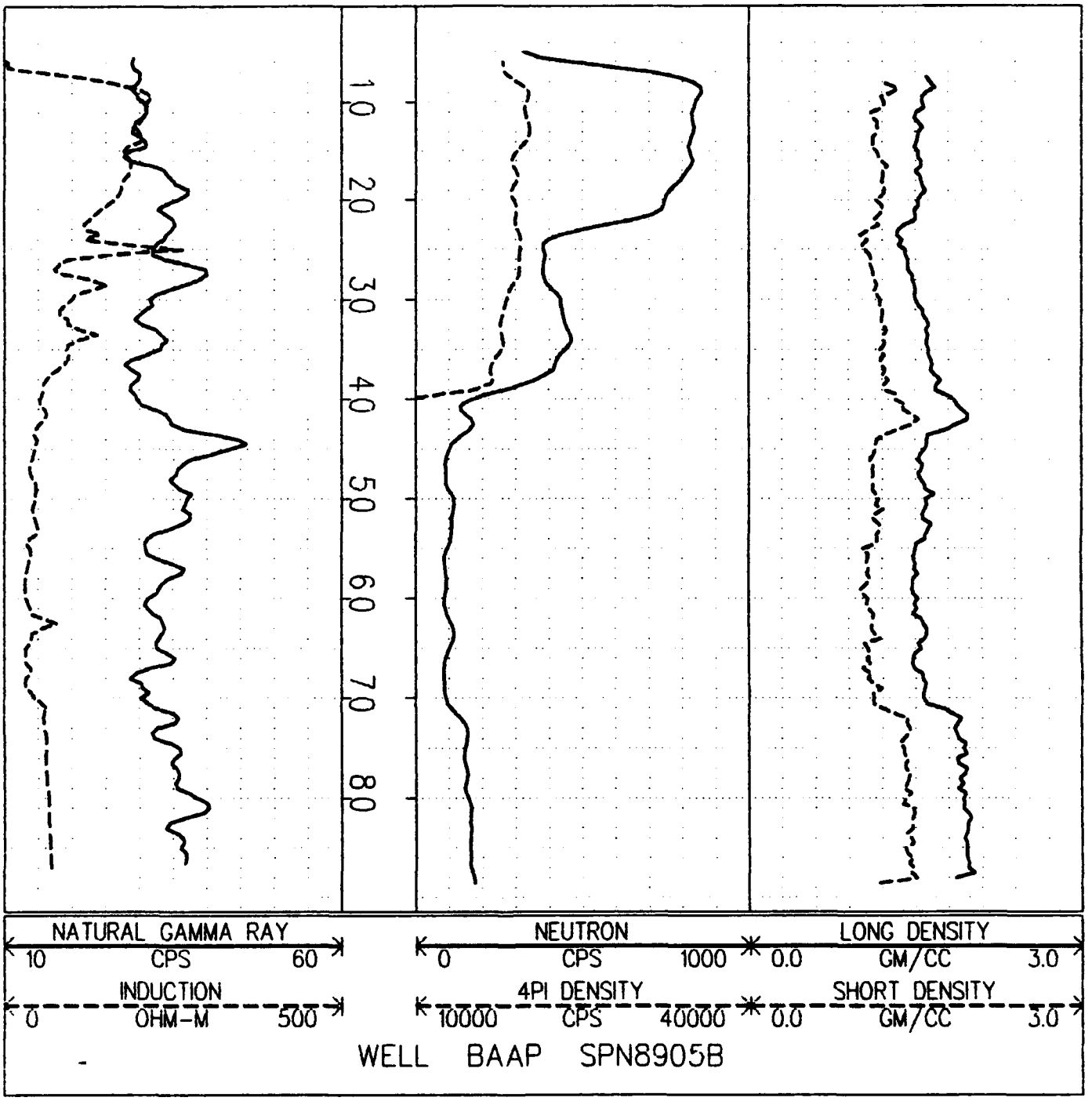
10
20
30
40
50
60
70
80
NATURAL GAMMA RAY
10 CPS 60
INDUCTION
0 OHM-M 500
NEUTRON
0 CPS 1000
4PI DENSITY
10000 CPS 40000
LONG DENSITY
0.0 GM/CC 3.0
SHORT DENSITY
0.0 GM/CC 3.0
WELL BAAP SPN8905B

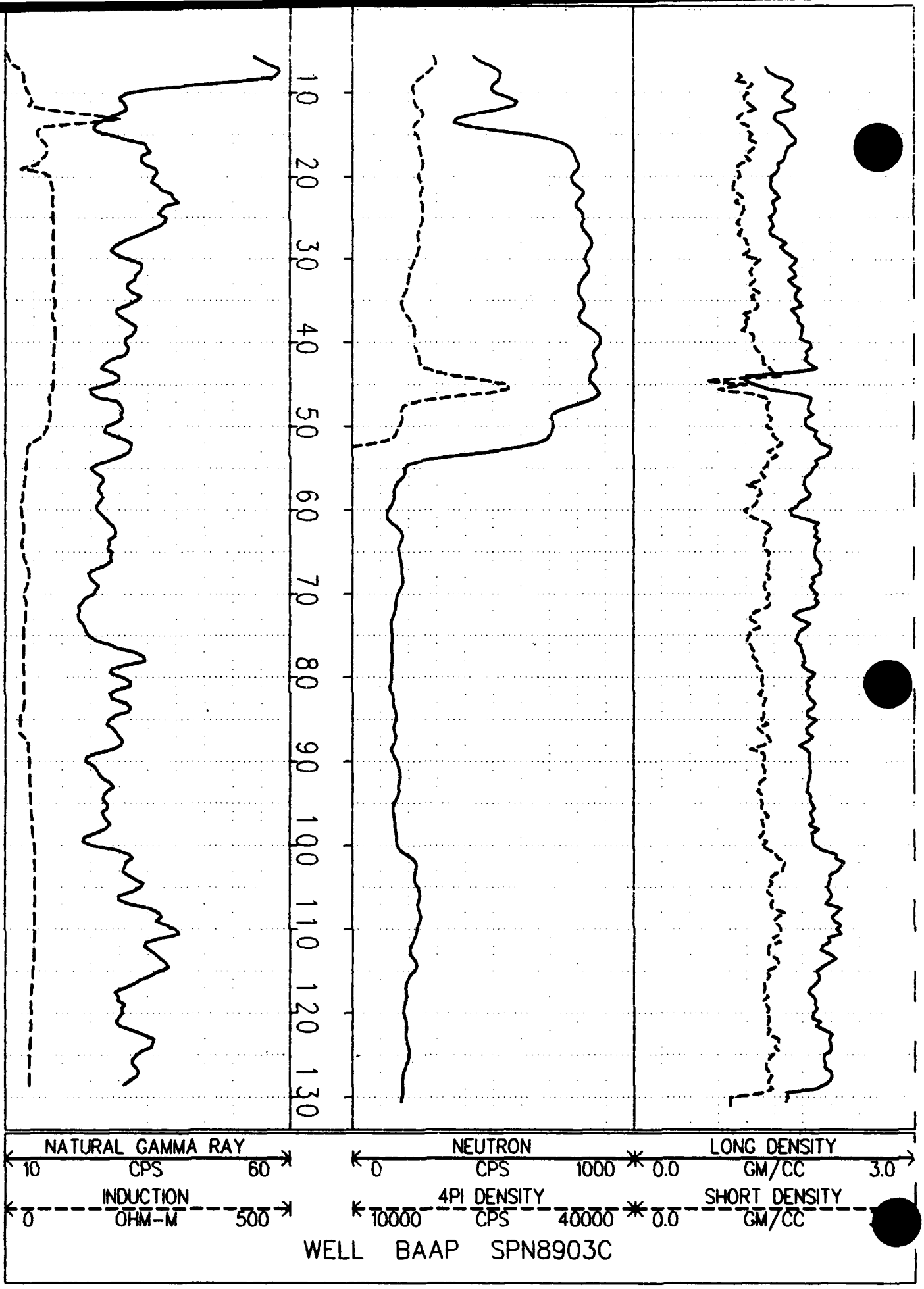
10
20
30
40
50
60
70
80
90
100
110
120
130
NATURAL GAMMA RAY
10 CPS 60
INDUCTION
0 OHM-M 500
NEUTRON
0 CPS 1000
4PI DENSITY
10000 CPS 40000
LONG DENSITY
0.0 GM/CC 3.0
SHORT DENSITY
0.0 GM/CC
WELL BAAP SPN8903C

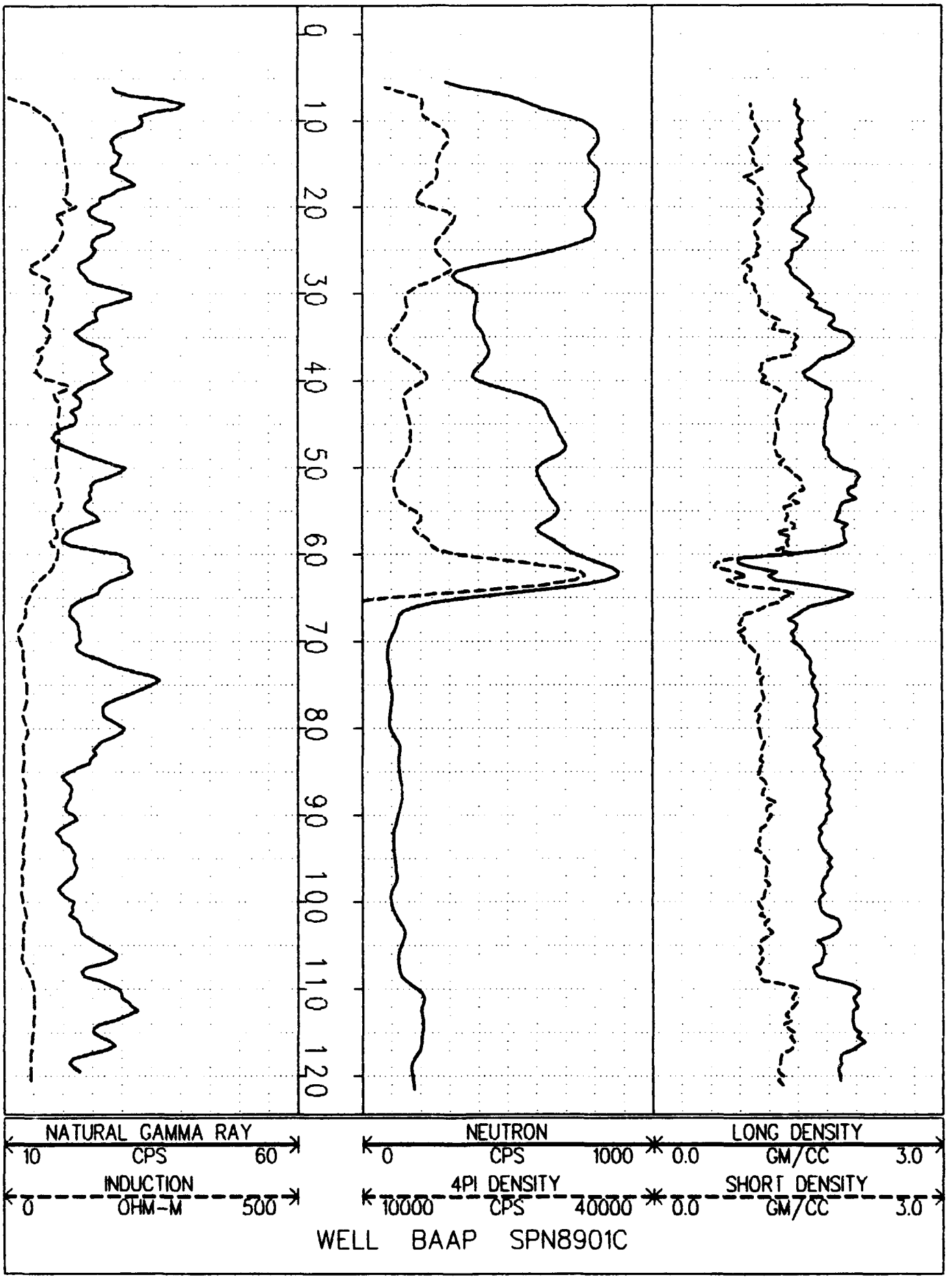
0
10
20
30
40
50
60
70
80
90
100
110
120
NATURAL GAMMA RAY
10 CPS 60
INDUCTION
0 OHM-M 500
NEUTRON
0 CPS 1000
4PI DENSITY
10000 CPS 40000
LONG DENSITY
0.0 GM/CC 3.0
SHORT DENSITY
0.0 GM/CC 3.0
WELL BAAP SPN8901C

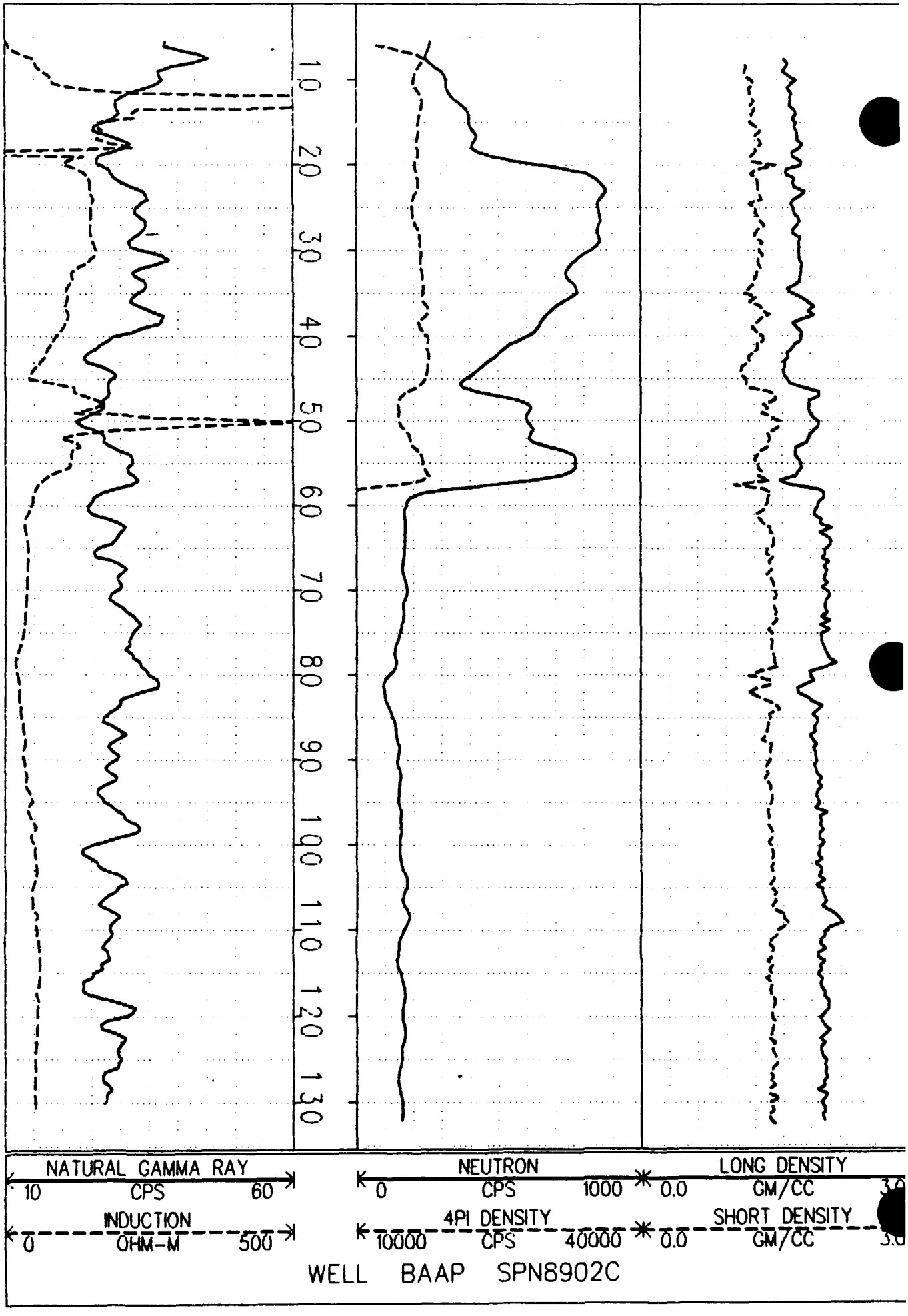
10
20
30
40
50
60
70
80
90
100
110
120
130
NATURAL GAMMA RAY
10
CPS
60
INDUCTION
0
OHM-M
500
NEUTRON
0
CPS
1000
4PI DENSITY
10000
CPS
40000
LONG DENSITY
0.0
GM/CC
SHORT DENSITY
0.0
GM/CC
WELL BAAP SPN8902C

APPENDIX F

HORIZONTAL AND VERTICAL SURVEY

This Page Intentionally Left Blank.

1989 BORING AND MONITORING WELL SURVEY DATA

This Page Intentionally Left Blank.

VIERBICHER ASSOCIATES
INCORPORATED

ARCHITECTURE • PLANNING • ENGINEERING • LAND SURVEYING

FINAL REPORT
FOR
SURVEYING SERVICES
MONITORING WELL AND SOIL BORING LOCATIONS
BADGER ARMY AMMUNITION PLANT
SAUK COUNTY WISCONSIN

The services required for this project includes the horizontal and vertical locations for various monitoring wells and soil borings at Badger Army Ammunition Plant. The horizontal positions have been determined relative to the Universal Transverse Mercator (UTM) system per the NAD 27. The vertical locations are based on Mean Sea Level (MSL) from the 1929 General Adjustment.

The horizontal and vertical control shall be taken from existing control monuments and traverse control currently existing within the Army Ammunition Plant. This control information has been provided by the Army Ammunition Plant.

HORIZONTAL FIELD SURVEY

The horizontal location has been taken from the existing control or has been extended from said control into the survey areas. The equipment that was utilized for the horizontal control was a Lietz SET-4 electronic total station in combination with a Lietz SDR-22 electronic data collector. The grid factor for distances was keyed into the collector at a value of 0.9998919 this provides for an automatic reduction to grid distances required for geographic computations. The output produced by the data collector is based on Wisconsin State Plane Coordinates. A copy of the field notes generated by the data collector is attached as Appendix A.

VERTICAL FIELD SURVEY

The vertical location has also been taken from the existing control or has been extended from said control into the survey areas. The equipment that was used for the vertical survey was a Lietz B-1 automatic level. A copy of the field notes for the vertical survey is attached as Appendix B.

940 E. MAIN STREET
REEDSBURG, WI 53959
(608) 524-6468

6701 SEYBOLD ROAD
MADISON, WI 53719
(608) 274-3898

OFFICE COMPUTATIONS - REPORT GENERATION

The state plane coordinates determined by the data collector report was input into a batch file named ECJORDPC. The file was then run through a program provided by National Ocean Service - National Geodetic Survey named GPPCGP. This program converts State Plane Coordinates to geographic positions (latitudes and longitude). The output from this run was placed in a batch file named ECJORDGP. Finally this geographic position file was input through a National Ocean Service - National Geodetic Survey named UTMS. This converts the geographic position to the Universal Transverse Mercator System coordinates. The output file is named ECJORDUT. The printout from this file list the UTM's for the wells and borings. A copy of the files generated are attached as Appendix C. The input format is detailed in the front of Appendix C. The report chart was then developed by integrating the vertical positions with the final UTM positions.

SURVEYOR'S CERTIFICATE

I, John L. Brey, Registered Land Surveyor, hereby certify that the above described location survey and the enclosed documentation are correct to the best of my knowledge and belief.

Dated this 5th day of July, 1989.

John L. Brey, RLS-1319
Vierbicher Associates, Inc.
940 East Main Street
Reedsburg, WI 53959

MONITORING WELL AND SOIL BORING LOCATIONS
BADGER ARMY AMMUNITION PLANT

PROPELLANT BURNING GROUND

MONITORING WELL	UTM NORTHING (Y) METER	UTM EASTING (X) METER	ELEVATIONS GROUND SURFACE	ELEVATIONS WELL RISER	ELEVATIONS TOP PROTECTIVE CASING	MONITORING WELL
PBN-89-01-B	4,802,308.1	277,105.4	870.0	872.33	872.47	PBN-89-01-B
P [illegible]-89-01-C	4,802,306.7	277,129.7	875.5	878.06	878.30	PBN-89-01-C
P [illegible]-89-01-D	4,802,307.9	277,112.9	871.5	874.05	874.43	PBN-89-01-D
PBN-89-02-B	4,802,305.1	277,312.0	897.6	900.25	900.41	PBN-89-02-B
P [illegible]-89-02-C	4,802,307.0	277,290.9	894.5	897.04	897.18	PBN-89-02-C
P [illegible]-89-03-B	4,802,334.4	276,880.1	844.9	847.80	847.81	PBN-89-03-B
PBN-89-03-C	4,802,333.9	276,890.7	844.1	846.87	847.02	PBN-89-03-C
P [illegible]-89-04-B	4,801,782.3	277,097.8	856.9	859.23	859.40	PBN-89-04-B
P [illegible]-89-04-C	4,801,775.2	277,107.6	857.7	859.70	860.51	PBN-89-04-C
PBM-89-05	4,802,323.1	276,741.2	852.3	855.58	855.70	PBM-89-05
P [illegible]-89-06	4,802,328.9	277,473.6	883.7	886.37	886.50	PBM-89-06
P [illegible]-89-07	4,801,794.0	276,910.3	846.6	849.36	849.56	PBM-89-07
PBM-89-08	4,801,728.3	277,305.0	885.5	888.56	888.72	PBM-89-08
P [illegible]-89-09	4,803,218.5	277,275.5	880.6	883.48	883.64	PBM-89-09
P[illegible]10-A	4,802,838.7	277,270.4	886.8	889.65	889.79	PBN-89-10-A
PBN[illegible]-10-B	4,802,839.4	277,282.1	889.1	891.81	891.94	PBN-89-10-B
P [illegible]-89-10-C	4,802,838.4	277,259.1	884.7	887.00	887.04	PBN-89-10-C
P[illegible]-89-10-D	4,802,835.9	277,236.0	880.9	884.25	847.39	PBN-89-10-D
PBM-89-11	4,803,527.2	277,261.9	881.6	884.41	884.49	PBM-89-11
P [illegible]-89-12-A	4,801,376.7	277,058.9	852.6	855.66	855.71	PBN-89-12-A
P[illegible]-89-12-B	4,801,368.5	277,058.5	852.6	856.04	856.33	PBN-89-12-B
LOM-89-01	4,803,093.4	277,471.9	915.9	917.86	918.18	LOM-89-01
L [illegible]-89-02-A	4,802,958.1	277,468.6	918.5	920.59	920.74	LON-89-02-A
LON-89-02-B	4,802,960.5	277,477.6	918.9	921.13	921.26	LON-89-02-B
LON-89-03-A	4,802,959.3	277,521.8	919.2	922.14	922.29	LON-89-03-A
L [illegible]-89-03-B	4,802,959.1	277,510.9	919.5	921.99	922.19	LON-89-03-B
SOIL BORINGS						SOIL BORING
PBB-89-01	4,802,665.3	277,172.2	875.5			PBB-89-01
P[illegible]-89-02	4,802,603.3	277,144.9	873.8			PBB-89-02
P [illegible]-89-03	4,802,607.1	277,090.6	868.2			PBB-89-03
PBB-89-04	4,802,980.1	277,211.2	872.6			PBB-89-04
P[illegible]-89-05	4,802,989.4	277,259.8	879.9			PBB-89-05
P [illegible]-89-06	4,803,075.7	277,276.2	881.9			PBB-89-06
PBB-89-07	4,803,041.6	277,249.9	878.6			PBB-89-07
P[illegible]-89-10	4,802,820.8	277,218.5	878.1			PBB-89-10

MONITORING WELL AND SOIL BORING LOCATIONS
BADGER ARMY AMMUNITION PLANT
DETERRENT BURNING GROUND

MONITORING WELL	UTM NORTHING (Y) METER	UTM EASTING (X) METER	ELEVATIONS GROUND SURFACE	ELEVATIONS WELL RISER	ELEVATIONS TOP PROTECTIVE CASING	MONITORING WELL
DBM-89-01	4,805,556.1	279,611.3	893.6	895.99	896.17	DBM-89-01
DBN-89-02-A	4,805,558.4	279,769.2	884.8	887.10	887.25	DBN-89-02-
DBN-89-02-B	4,805,549.6	279,764.0	884.8	886.90	887.07	DBN-89-02-B
DBM-89-03	4,805,597.8	279,806.8	896.4	898.85	898.99	DBM-89-03
DBN-89-04-A	4,805,874.1	279,605.0	917.5	919.89	920.07	DBN-89-04
DBN-89-04-B	4,805,881.4	279,599.6	917.7	920.14	920.30	DBN-89-04-B
DBM-89-05	4,805,625.7	279,535.2	897.9	900.43	900.58	DBM-89-05
SOIL BORINGS						SOIL BORING
DBB-89-01	4,805,698.3	279,647.6	899.5			DBB-89-01
DBB-89-02	4,805,745.4	279,652.7	897.9			DBB-89-02
DBB-89-03	4,805,780.1	279,585.9	897.8			DBB-89-03
EXISTING LANDFILL						
MONITORING WELL						MONITORING WELL
ELM-89-01	4,805,783.8	279,844.9	920.5	922.73	922.88	ELM-89-01
ELN-89-02-A	4,805,748.3	279,992.0	919.4	921.10	921.85	ELN-89-02-A
ELN-89-02-B	4,805,747.6	280,007.9	918.0	920.19	921.36	ELN-89-02-
ELM-89-03	4,805,777.0	280,214.9	914.0	916.28	916.45	ELM-89-03
ELN-89-04-A	4,805,979.2	280,159.8	924.1	926.28	926.43	ELN-89-04-A
ELN-89-04-B	4,805,957.7	280,172.7	924.8	926.63	926.80	ELN-89-04-
ELM-89-05	4,806,115.1	280,061.1	898.2	900.95	901.06	ELM-89-05
ELM-89-06-B	4,805,864.6	280,212.4	906.1	908.22	908.87	ELM-89-06
ELM-89-07	4,805,587.2	280,112.7	913.7	916.19	916.25	ELM-89-07
ELM-89-08	4,805,593.1	279,972.7	903.0	906.04	906.21	ELM-89-08
ELM-89-09	4,805,843.9	279,744.6	919.6	921.79	922.82	ELM-89-09
SETTLING PONDS SPOILS DISPOSAL AREA						
SPN-89-01-C	4,800,906.7	276,414.4	827.8	830.04	830.20	SPN-89-01-
SPN-89-02-A	4,800,904.7	276,684.4	820.8	823.67	823.76	SPN-89-02-A
SPN-89-02-B	4,800,902.4	276,690.1	820.3	823.53	823.66	SPN-89-02-
SPN-89-02-C	4,800,903.2	276,702.8	820.0	822.60	822.64	SPN-89-02-
SPN-89-03-B	4,800,953.7	276,907.0	815.1	818.09	818.21	SPN-89-03-B
SPN-89-03-C	4,803,992.4	277,006.8	815.3	818.25	818.65	SPN-89-03-
SPN-89-04-B	4,800,868.5	277,211.6	801.6	804.21	804.42	SPN-89-04-
SPN-89-04-C	4,800,868.3	277,242.8	800.7	803.17	803.36	SPN-89-04-C
SPN-89-05-A	4,800,838.1	279,011.3	801.6	804.25	804.48	SPN-89-05-
SPN-89-05-B	4,800,834.8	279,006.9	801.6	804.02	804.21	SPN-89-05-

APPENDIX B

VERTICAL CONTROL SURVEY FIELD NOTES

This Page Intentionally Left Blank.

1

EC Jordan
BAAP
Vent Central
5/4/89
Schroeder
[illegible]

PVC wells shot on highest point (excluding sawcut irregularity)

Steel Casings shot on North Edge

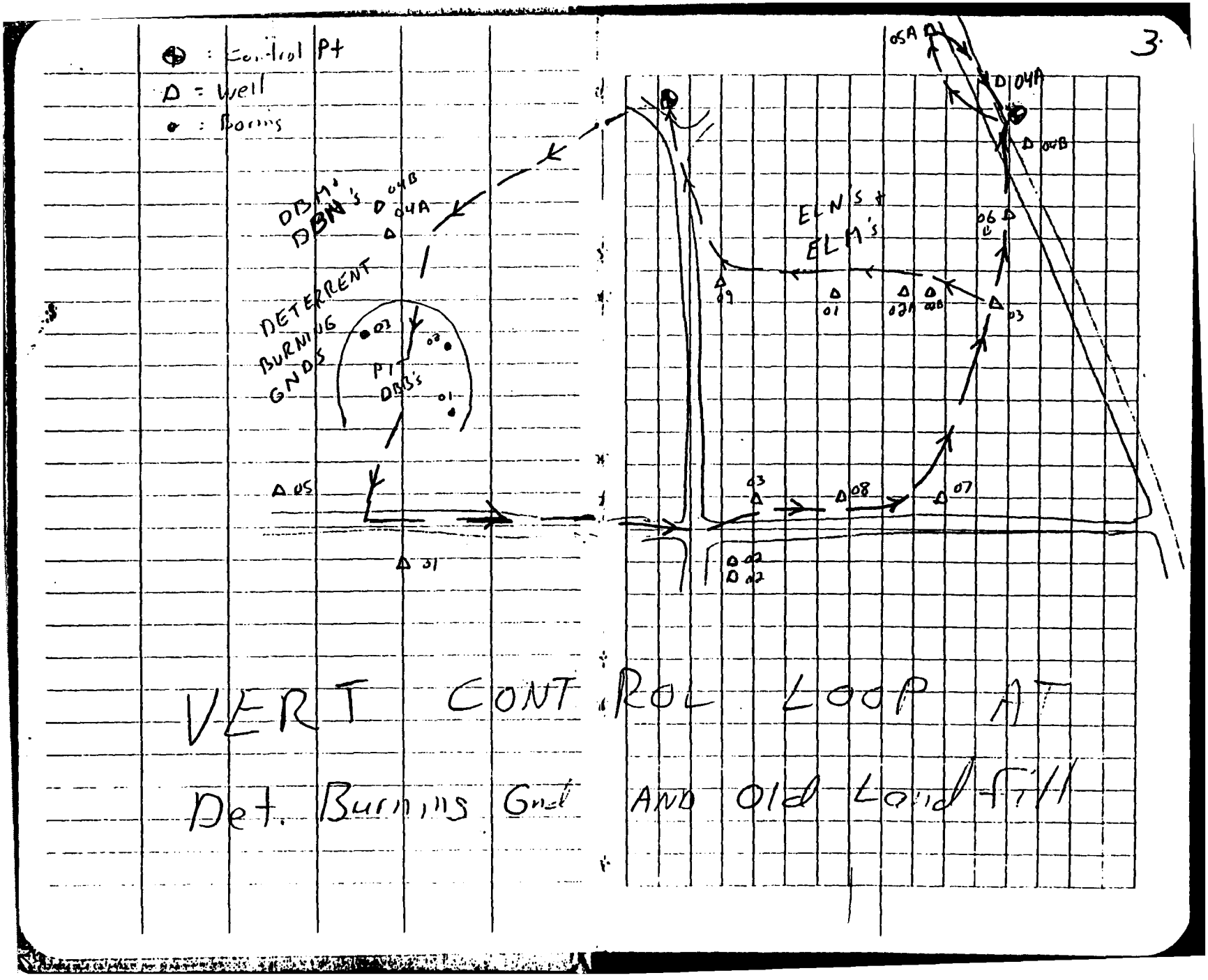

VERT CONTROL LOOP AT Det. Burning Gnd AND Old Landfill

STA		BS	HI	FS	Elev
Disk @ N 20,000 E 17,500		0.59	923.01		922.42
TP 1		4.24	922.11	5.14	917.87
DBN 89-04A	GND			4.56	917.5
" "	PVC			2.22	919.89
" "	Steel Casing			2.04	920.07
DBN 89-04B	Gnd			4.41	917.7
" " "	PVC			1.97	920.14
" " "	Steel Casing			1.81	920.30
TP 2		0.23	914.93	7.41	914.70
TP 3		0.40	902.87	12.46	902.47
DBB 89-03	Gnd			5.06	897.8
DBB 89-02	Gnd			4.93	897.9
DBB 89-01	Gnd			3.33	899.5
TP 4		1.32	903.15	1.04	901.83
DBM 89-05	Gnd			5.29	897.9
" " "	PVC			2.72	900.43
" " "	Steel Casing			2.57	900.58
DBM 89-01	Gnd			9.55	893.6
" " "	PVC			7.16	895.99
" " "	Steel Casing			6.98	896.17
TP 5		0.88	893.65	10.38	892.77
DBN 89-02A	Gnd			8.85	884.8
" " "	PVC			6.55	887.10
	Casing			6.40	887.25

STA		BS	HI	FS	Elev
DBN 89-02B	Gnd			8.83	884.8
" "	PVC			6.75	886.90
" "	Steel Casing			6.58	887.07
TP 6		11.39	899.735	5.305	888.345
DBM 89-03	Gnd			3.35	896.4
" "	PVC			0.89	898.845
" "	Steel Casing			0.745	898.99
TP 7		12.09	906.355	~~5.465~~ 5.47	894.265
ELM 89-08	Gnd			3.35	903.0
" "	PVC			0.32	906.035
" "	Steel Casing			0.145	906.21
TP 8		11.69	917.885	0.16	906.195
TP 9		2.48	918.01	2.355	915.53
ELM 89-07	Gnd			4.33	913.7
" "	PVC			1.82	916.19
" "	Steel Casing			1.765	916.245
TP 10		7.16	917.71	~~2.455~~ 7.46	910.55
ELM 89-03	Gnd			3.75	914.0
" "	PVC			1.43	916.28
" "	Steel Casing			1.26	916.45
TP 11		8.15	919.23	6.63	911.08
ELN 89-06B	Gnd			13.13	906.1
" " "	PVC			11.01	908.22
" "	Steel Casing			10.36	908.87
TP 12		9.64	928.67	0.20	919.03

STA		BS	HI	FS	Elev
ELN 8904 B	Gnd			3.90	924.8
" " "	PVC			2.04	926.63
" " "	Steel Casing			1.87	926.80
ELN 8904A	Gnd			4.57	924.1
" " "	PVC			2.39	926.28
" " "	Steel Casing			2.24	926.43
Disk @ N 20,000 E 15,000				4.04	924.63
Disk @ N 20,000 E 15,000		1.79	926.42		924.63
TP 13		0.20	915.91	10.71 ~~10.208~~	915.71
TP 14		7.65	910.34	13.22	902.69
ELM 89-05	GND			12.10	898.2
" "	PVC			9.39	900.95
" "	Steel Casing			9.28	901.06
TP 15		10.14	920.285	0.195	910.145
TP 16		7.80	927.745	0.34	919.945
Disk @ N 20,000 E 15,000				3.115	924.63
		Σ: 27.58		27.575	
ELM 89-03	Steel Casing	2.25	918.70		916.45
TP 17		9.02 ~~9.015~~	924.74	2.98	915.72
ELN 8902B	GND			6.75	918.0
" "	PVC			4.55	920.19
" "	Steel Casing			3.385	921.355

STA		BS	HI	FS	Elev
ELN 8902 A	GND			5.32	919.4
"	PVC			3.64	921.10
"	Steel Casing			2.89	921.85
TP 18		8.59	926.15	7.18	917.56
ELM 8901	GND			5.67	920.5
" "	PVC			3.425	922.725
" "	Steel Casing			3.27	922.88
TP 19		5.065 ~~5.06~~	925.535	5.68	920.47
ELM 8909	GND			5.93	919.6
" "	PVC			3.75	921.785
" "	Steel Casing			2.715	922.82
TP 20		6.42	926.00	5.955 ~~5.96~~	919.58
Disk @ N 20,000 E 13,500				3.58	922.42

SOUTH PERIMETER AREA WELLS

STA		BS	HI	FS	E
Steel Casing S 1108		6.84	791.02		784.18
TP 21		9.75	800.37	0.40	790.62
TP 22		11.10	810.77	0.70	799.67
SPN 8905A	GND			9.19	801.6
" " "	PVC			6.52	804.25
" " "	Steel Casing			6.29	804.48
SPN 8905B	GND			9.22	801.6
" " "	PVC			6.75	804.02
" "	Steel Casing			6.56	804.21
TP 23		~~6.915~~ 6.92	816.76	~~0.935~~ 0.93	809.84
Steel Casing S 1107				4.67	812.09
APOLLO		3.36	807.47		804.11
SPN 8904B	Gnd			5.84	801.6
" "	PVC			3.26	804.21
" "	Steel Casing			3.05	804.42
SPN 8904C	Gnd			5.72	800.7
" "	PVC			4.30	803.17
" "	Steel Casing			4.11	803.36
S 1118	Steel Casing			3.77	803.70

STA		BS	HI	FS	E
TP16 : Sw Cor Conc Wall @ Gate Post 13 (From 1988)		2.21	824.225		822.015
TP 24		2.99	815.58	11.635	812.59
TP 25		8.79	822.50	1.87	813.71
[redacted]				[redacted]	
SPN 8903B	Gnd			7.43	815.1
" "	PVC			4.41	818.09
" "	Steel Casing			4.29	818.21
SPN 8903C	Gnd			7.23	815.3
" "	PVC			4.25	818.25
" "	Steel C.			3.85	818.65
TP 26		6.83	822.51	6.82	815.68
TP 27		7.01	826.02	3.50	819.01
SPN 8902C	Gnd			5.98	820.0
" "	PVC			3.425	822.595
" "	Steel Casing			3.38	822.64
SPN 8902B	Gnd			5.76	820.3
" "	PVC			2.49	823.53
" "	Steel Casing			2.365	823.655
SPN 8902A	Gnd			5.21	820.8
" "	PVC			2.35	823.67
" "	Steel Casing			2.26	823.76
TP 28		7.32	829.55	3.79	822.23
TP 29		6.64	832.15	4.04	825.51

STA		BS	HI	FS	Elev
SPN 8901	C Gnd			4.38	827.8
" "	PVC			2.11	830.04
" "	Steel Casing			1.95	830.20
Steel Casing	S1133			~~3.07~~ 3.23	82892.
Steel Casing	S1101			0.62	831.53

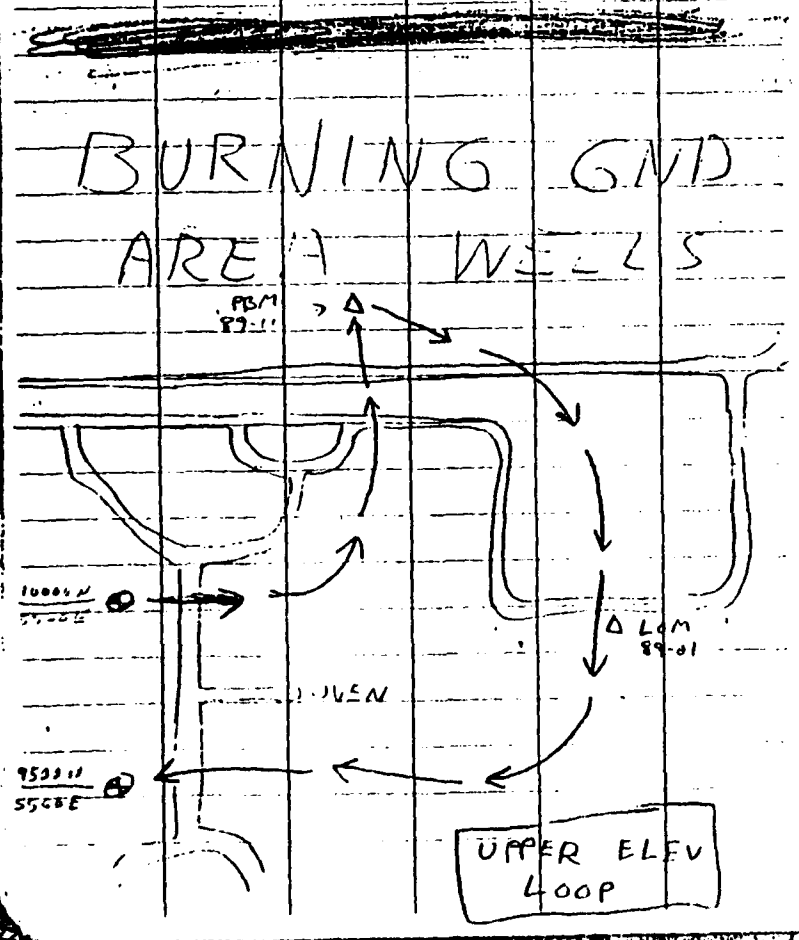

STA		BS	HI	FS	Elev
Disc	10000N 5500E	11.59	869.29		857.70
TP 30		12.61	881.48	0.415	868.84
PBB 8904	Gnd			8.84	872.6
PBB 8905	Gnd			1.60	879.9
PBB 8907	Gnd			2.91	878.6
PBB 8906	Gnd			(-0.4)	881.9
TP 31		6.97	885.42	3.03	878.45
PBM 8909	Gnd			4.87	880.6
" "	PVC			1.94	883.48
" "	Steel Casing			1.78	883.64
TP 32		2.245	887.48	0.185	885.235
TP 33		6.60	889.89	4.19	883.29
PBM 8911	Gnd			8.34	881.6
" "	PVC			5.18	884.41
" "	Steel Casing	11.29	895.78	5.10	884.49
TP 34		10.785	906.435	0.13	895.65
TP 35		12.19	918.535	0.09	906.345
TP 36		4.87	921.595	1.81	916.725
TP 37		9.89	922.93	2.55	913.04
TP 38		2.05	921.69	3.29	919.64
LOM 8901	Gnd			5.74	915.9
" "	PVC			3.83	917.86
" "	Steel Casing			3.51	918.18
TP 39		7.08	920.01	8.76	912.93

STA		BS	HI	FS	Elev
TP 40		8.93	926.27	2.67	917.34
LON 8903 A	Gnd			7.02	919.2
" " "	PVC			4.13	922.14
" " "	Steel Casing			3.98	922.29
LON 8903 B	Gnd			6.78	919.5
" " "	PVC			4.28	921.99
" " "	Steel Casing			4.08	922.19
LON 8902 B	Gnd			7.35	918.9
" " "	PVC			5.14	921.13
" " "	Steel Casing			5.01	921.26
LON 8902 A	Gnd			7.81	918.46
" " "	PVC			5.68	920.59
" " "	Steel Casing			5.535	920.735
TP 41		0.83	921.045	6.055	920.215
TP 42		0.505	908.45	13.10	907.945
TP 43		0.64	895.91	13.187	895.27
PBN 8910 B	Gnd			[illegible]	889.1
" " "	PVC			4.10	891.81
" " "	Steel Casing			3.97	891.94
PBN 8910 A	Gnd			9.10	886.8
" " "	PVC			6.265	889.645
" " "	Steel Casing			6.125	889.785
PBN 8910 C	Gnd			11.16	884.7
" " "	PVC			8.91	887.00
" " "	Steel Casing			8.87	887.04

STA		BS	HI	FS	Elev
TP 44		[illegible]	885.14	[illegible]	884.54
PBN 8910 D	Gnd			4.22	880.9
" " "	PVC			0.89	884.25
" " "	Steel Casing			[illegible]	884.385
PBB 89-10	Gnd			7.02	878.1
TP 45		0.80	874.84	1.10	874.04
TP 46		3.53	870.14	8.23	866.61
[illegible] 5500 E				9.57	860.57
PBN 8205 C	Steel Casing	0.81	878.97		878.165
S1185	Steel Casing	0.57			878.385
PBB 89-02	Gnd			5.19	873.8
PBB 89-03	Gnd			10.80	868.2
PBB 89-01	Gnd			3.44	875.5

ST	A	BS	HI	FS	Elev
PBM 8502 A	Steel Casing	6.22	905.49		899.27
PBM 8902 C	Gnd			10.97	894.5
" " "	PVC			8.45	897.04
" " "	Steel Casing			8.315	897.175
PBM 8902 B	Gnd			7.93	897.6
" " "	PVC			5.21	900.25
" " "	Steel Casing			5.065	900.405
TP 47		0.305	895.655	10.11	895.35
PBM 8906	Gnd			11.97	883.7
" "	PVC			9.29	886.365
"	Steel Casing	8.69	895.185	9.16	886.495
TP 48		10.45	904.915	0.72	894.465
PBM 8502 A	Steel Casing	0.37	899.64	5.645	899.27
TP 49		~~1.275~~ 1.285	889.695	~~11.27~~ 11.22	888.42
PBM 8503	Steel Casing			~~3.30~~ 3.31	886.385
TP 50		1.40	879.555	11.541	878.155
PBM 8901 C	Gnd			4.02	875.5
" " "	PVC			1.50	878.055
" " "	Steel Casing			1.26	878.295
PBM 8901 D	Gnd			8.04	871.5
" " "	PVC			5.51	874.045
" " "	Steel Casing			5.13	874.425
PBM 8901 B	Gnd			9.55	870.0
" " "	PVC			7.23	872.325
" " "	Steel Casing			7.09	872.465

ST	A	BS	HI	FS	Elev
PBM 8501 A	Steel Casing			~~4.805~~ 4.77	874.75
TP 51		0.10	866.555	13.10	866.455
TP 52		1.51	856.20	11.867	854.69
PBM 8502	Steel Casing	~~1.97~~ 1.93	851.40	~~6.725~~ 6.73	849.47
PBM 8903 C	Gnd			7.28	844.1
" "	PVC			4.53	846.87
" "	Steel Casing			4.38	847.02
PBM 8903 B	Gnd			6.52	844.9
" "	PVC			3.60	847.80
" "	Steel Casing			3.59	847.81
PBM 8503 A	Steel Casing	5.25	856.565	~~8.328~~ 8.085	851.315
PBM 8905	Gnd			4.23	852.3
"	PVC			0.99	855.575
" "	Steel Casing	1.21	856.735	0.87	855.695
PBM 8503 A	Steel Casing			5.62	851.315

STA		BS	HI	FS	Elev
PBM 8506	Steel Casing	9.11	857.565		848.455
TP 53		12.25	870.005	[illegible]	857.255
TP 54		14.03	883.635	0.40 ~~0.395~~	869.605
1926 VAL ± 5560 N / 1000 E ± 8954		6.02	888.875	0.78 ~~0.775~~	882.855
PBM 8908	Gnd			3.40	885.5
" "	PVC			0.32	888.555
" "	Steel Casing			0.16	888.715
TP 55		0.17	879.635	9.43 ~~9.435~~	879.445
TP 56		2.40	868.325	11.71	867.925
PBN 8904 C	Gnd			10.60	857.7
" " "	PVC			8.625	859.70
" " "	Steel Casing			7.81	860.51
PBN 8904 B	Gnd			11.43	856.9
" "	PVC			9.10	859.225
" "	Steel Casing			8.93	859.395
PBN 8904 A		0.28	860.375	8.23 ~~8.225~~	860.095
TP 57		2.42	851.995	10.80	849.575
PBM 8907	Gnd			5.11	846.6
" "	PVC			2.64	849.355
" "	Steel Casing			2.44	849.555
1925 VAL ± 5017 N / 1000 E ± 8925		7.65	854.665	4.68	847.015
TP 58		7.81	859.985	2.89	852.095
TP 59		9.00	865.655	3.33	856.655
PBM 8505	Steel Casing			0.69	864.965

STA		BS	HI	FS	Elev
PBM 8506	Steel Casing	5.18	853.635		848.455
TP 60		1.46	852.675	2.42	851.215
TP 61		3.14	858.23	1.585	851.09
PBN 8912 A	Gnd			5.60	852.6
" "	PVC			2.57	855.66
" "	Steel Casing			2.52	855.71
PBN 8912 B	Gnd			5.69	852.6
" "	PVC			2.19	856.04
" "	Steel Casing	1.31	857.635	1.305	856.325
TP 62		5.79	853.515	9.91 ~~9.905~~	847.725
PBN 8516	Steel Casing			5.06	848.455

← Rec 860.56

Hartz Locations

Old Landfill / Det. Unit

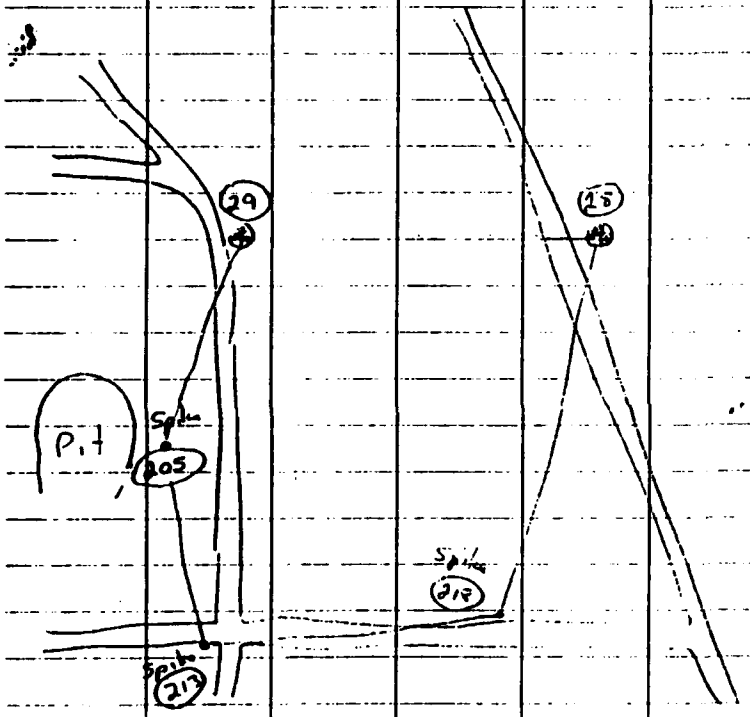

S Permeta Rd

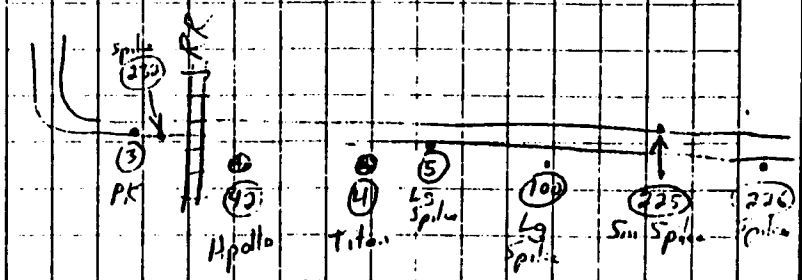

BURNING GROUNDS

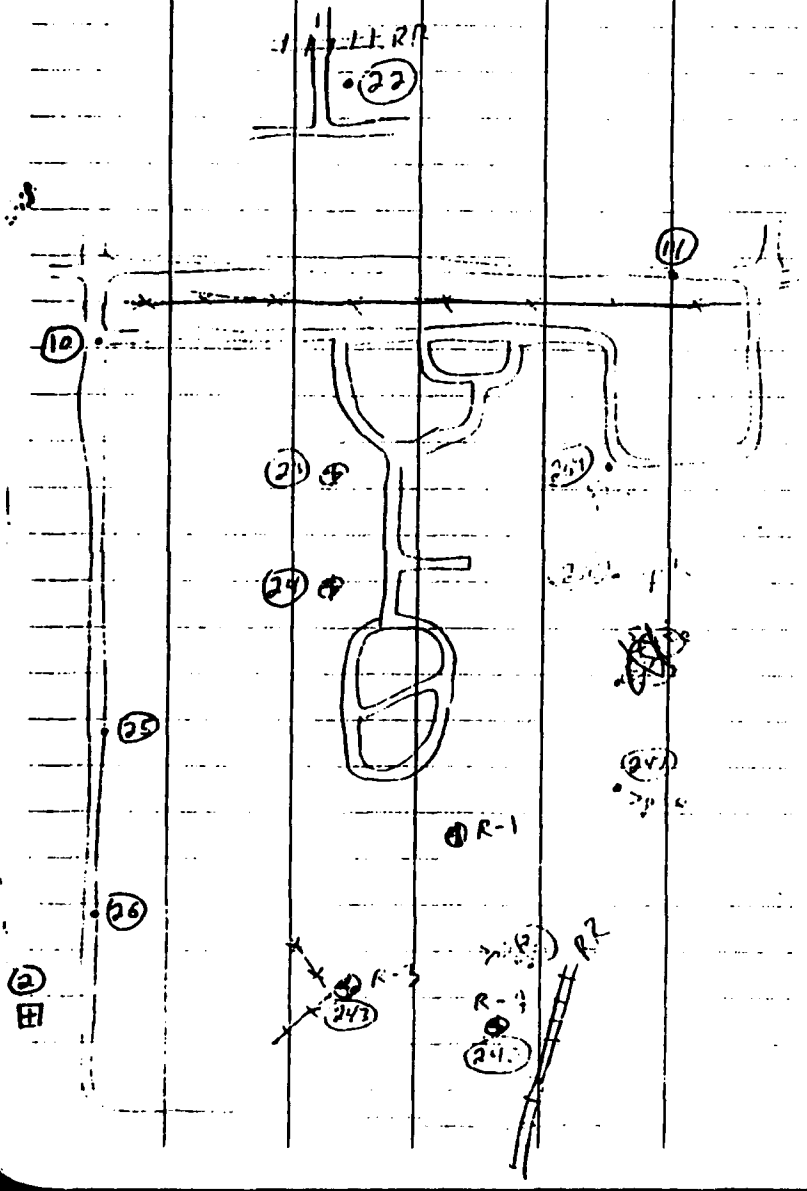

This Page Intentionally Left Blank.

APPENDIX C

COMPUTER INPUT - OUTPUT FILES

This Page Intentionally Left Blank.

State Plane Coordinate Record (*81* record) **

CC01-06	Sequence Number	(OPTIONAL)
CC07-10	Data Code (IE: *81*)	
CC11-13	Station Serial Number	(OPTIONAL)
CC14	Blank	
CC15-44	Station Name	
CC45-54	X Coordinate, in feet, to three decimal places, decimal point implied between CC51-52 (XXXXXXXxxx)	
CC55-65	Y Coordinate, in feet, to three decimal places, decimal point implied between CC62-63 (YYYYYYYyyy)	
CC66-69	State and Zone code (SSZZ)	
CC70-75	Elevation of mark above MSL, in meters, decimal point implied between CC73-74 (EEEEee)	(OPTIONAL)
CC76	Elevation code	(OPTIONAL)
CC77-78	State or Country Code	(OPTIONAL)
CC79-80	Station Order and Type	(OPTIONAL)

Geodetic Position Record (IE: *80* record) **

CC01-06	Sequence Number	(OPTIONAL)
CC07-10	Data Code (IE: *80*)	
CC11-13	Station Serial Number	(OPTIONAL)
CC14	Blank	
CC15-44	Station Name	
CC45-55	Geodetic Latitude: Deg-Min-Sec, to 5 decimal places, decimal point implied between CC50-51 (DDMMSSssssss)	
CC56	Direction of Latitude: N or S	
CC57-68	Geodetic Longitude: Deg-Min-Sec, to 5 decimal places, decimal point implied between CC63-64 (DDDMMSSssssss)	
CC69	Direction of Longitude: E or W	
CC70-75	Elevation of mark above MSL, in meters, decimal point implied between CC73-74 (EEEEee)	(OPTIONAL)
CC76	Elevation code	(OPTIONAL)
CC77-78	State or Country Code	(OPTIONAL)
CC79-80	Station Order and Type	(OPTIONAL)

000010*81*	PBN-89-01-B	2066556775	4893960484803
000020*81*	PBN-89-01-C	2066636871	4893943544803
000030*81*	PBN-89-01-D	2066581611	4893962314803
000040*81*	PBN-89-02-B	2067234356	4894106794803
000050*81*	PBN-89-02-C	2067165143	4894143624803
000060*81*	PBN-89-03-B	2065815461	4894556024803
000070*81*	PBN-89-03-C	2065850277	4894554304803
000080*81*	PBN-89-04-B	2066594115	4876715764803
000090*81*	PBN-89-04-C	2066626847	4876497224803
000100*81*	PBM-89-05	2065361425	4894021814803
000110*81*	PBM-89-06	2067761407	4895077814803
000120*81*	PBM-89-07	2065978089	4876880844803
000130*81*	PBM-89-08	2067279533	4875191964803
000140*81*	PBM-89-09	2067007009	4924003974803
000150*81*	PBN-89-10-A	2067035338	4911548134803
000160*81*	PBN-89-10-B	2067073406	4911584934803
000170*81*	PBN-89-10-C	2066998283	4911524484803
000180*81*	PBN-89-10-D	2066922641	4911413664803
000190*81*	PBM-89-11	2066926004	4934103464803
000200*81*	PBN-89-12-A	2066514440	4863376004803
000210*81*	PBN-89-12-B	2066513920	4863105974803
000220*81*	LDM-89-01	2067665663	4920134664803
000230*81*	LDN-89-02-A	2067670909	4915695934803
000240*81*	LDN-89-02-B	2067700120	4915783414803
000250*81*	LDN-89-03-A	2067845115	4915797654803
000260*81*	LDN-89-03-B	2067809341	4915777754803
000270*81*	PBB-89-01	2066733855	4905746344803
000280*81*	PBB-89-02	2066651677	4903684854803
000290*81*	PBB-89-03	2066473108	4903744394803
000300*81*	PBB-89-04	2066824513	4916110154803
000310*81*	PBB-89-05	2066982758	4916473784803
000320*81*	PBB-89-06	2067026129	4919322774803
000330*81*	PBB-89-07	2066944163	4918173514803
000340*81*	PBB-89-10	2066867194	4910899464803
000350*81*	DBM-89-01	2074387734	5003378924803
000360*81*	DBN-89-02-A	2074905068	5003641504803
000370*81*	DBN-89-02-B	2074889003	5003347944803
000380*81*	DBM-89-03	2075023543	5004977904803
000390*81*	DBN-89-04-A	2074329532	5013796734803
000400*81*	DBN-89-04-B	2074311038	5014028524803
000410*81*	DBM-89-05	2074130252	5005572044803
000420*81*	DBB-89-01	2074490086	5008084314803
000430*81*	DBB-89-02	2074501167	5009635144803
000440*81*	DBB-89-03	2074277995	5010691464803
000450*81*	ELM-89-01	2075126739	5011118234803
000460*81*	ELN-89-02-A	2075613011	5010128674803
000470*81*	ELN-89-02-B	2075685078	5010123744803
000480*81*	ELM-89-03	2076340181	5011331664803
000490*81*	ELN-89-04-A	2076135647	5017894314803
000500*81*	ELN-89-04-B	2076180467	5017204854803
000510*81*	ELM-89-05	2075796343	5022234924803
000520*81*	ELM-89-06	2076321781	5014200344803

000530*81*	ELM-89-07	2076027644	5004989234803
000540*81*	ELM-89-08	2075568068	5005019414803
000550*81*	ELM-89-09	2074790649	5012970814803
000560*81*	SPN-89-01-C	2064457030	4847211204803
000570*81*	SPN-89-02-A	2065342485	4847464804803
000580*81*	SPN-89-02-B	2065361485	4847394534803
000590*81*	SPN-89-02-C	2065402750	4847437044803
000600*81*	SPN-89-03-B	2066066335	4849332904803
000610*81*	SPN-89-03-C	2066035198	4949054024803
000620*81*	SPN-89-04-B	2067074674	4846899854803
000630*81*	SPN-89-04-C	2067177105	4846928364803
000640*81*	SPN-89-05-A	2072977522	4848025374803
000650*81*	SPN-89-05-B	2072963296	4847911854803

000010*80*000 PBN-89-01-B	43203303039N089445930254W
000020*80*000 PBN-89-01-C	43203301128N089445821869W
000030*80*000 PBN-89-01-D	43203303146N089445896643W
000040*80*000 PBN-89-02-B	43203315472N089445013244W
000050*80*000 PBN-89-02-C	43203319317N089445106893W
000060*80*000 PBN-89-03-B	43203364047N089450933212W
000070*80*000 PBN-89-03-C	43203363775N089450886097W
000080*80*000 PBN-89-04-B	43201599614N089445886728W
000090*80*000 PBN-89-04-C	43201577931N089445842525W
000100*80*000 PBM-89-05	43203312608N089451547859W
000110*80*000 PBM-89-06	43203409799N089444299601W
000120*80*000 PBM-89-07	43201617737N089450720245W
000130*80*000 PBM-89-08	43201447061N089444959870W
000140*80*000 PBM-89-09	43210269186N089445308683W
000150*80*000 PBN-89-10-A	43205038801N089445275436W
000160*80*000 PBN-89-10-B	43205042322N089445223901W
000170*80*000 PBN-89-10-C	43205036576N089445325595W
000180*80*000 PBN-89-10-D	43205025855N089445428012W
000190*80*000 PBM-89-11	43211266984N089445414195W
000200*80*000 PBN-89-12-A	43200292283N089445999953W
000210*80*000 PBN-89-12-B	43200255589N089450000766W
000220*80*000 LOM-89-01	43205885029N089444418822W
000230*80*000 LON-89-02-A	43205446586N089444413557W
000240*80*000 LON-89-02-B	43205455138N089444373987W
000250*80*000 LON-89-03-A	43205456107N089444177744W
000260*80*000 LON-89-03-B	43205454250N089444226169W
000270*80*000 PBB-89-01	43204466639N089445685818W
000280*80*000 PBB-89-02	43204263263N089445797871W
000290*80*000 PBB-89-03	43204266674N089450039510W
000300*80*000 PBB-89-04	43205490330N089445558900W
000310*80*000 PBB-89-05	43205525479N089445544528W
000320*80*000 PBB-89-06	43205806753N089445284720W
000330*80*000 PBB-89-07	43205693482N089445396124W
000340*80*000 PBB-89-10	43204975231N089445503263W
000350*80*000 DBM-89-01	43222086023N089431283194W
000360*80*000 DBN-89-02-A	43222110239N089430582638W
000370*80*000 DBN-89-02-B	43222081297N089430604523W
000380*80*000 DBM-89-03	43222241843N089430421618W
000390*80*000 DBN-89-04-A	43223115209N089431357185W
000400*80*000 DBN-89-04-B	43223138163N089431382205W
000410*80*000 DBM-89-05	43222303495N089431630814W
000420*80*000 DBB-89-01	43222550447N089431142475W
000430*80*000 DBB-89-02	43222703589N089431126767W
000440*80*000 DBB-89-03	43222808664N089431428456W
000450*80*000 ELM-89-01	43222847993N089430279079W
000460*80*000 ELN-89-02-A	43222748619N089425621134W
000470*80*000 ELN-89-02-B	43222747956N089425550639W
000480*80*000 ELM-89-03	43222864980N089424636003W
000490*80*000 ELN-89-04-A	43223513883N089424909887W
000500*80*000 ELN-89-04-B	43223445631N089424849521W
000510*80*000 ELM-89-05	43223943764N089425367303W
000520*80*000 ELM-89-06	43223148389N089424659580W

000530*80*000 ELM-89-07 43222239583N089425062117W
000540*80*000 ELM-89-08 43222244116N089425684343W
000550*80*000 ELM-89-09 43223032099N089430733293W
000560*80*000 SPN-89-01-C 43194691588N089452790153W
000570*80*000 SPN-89-02-A 43194714078N089451592045W
000580*80*000 SPN-89-02-B 43194707082N089451566366W
000590*80*000 SPN-89-02-C 43194711161N089451510518W
000600*80*000 SPN-89-03-B 43194896479N089450611934W
000610*80*000 SPN-89-03-C 43212746331N089450613887W
000620*80*000 SPN-89-04-B 43194653171N089445248650W
000630*80*000 SPN-89-04-C 43194655681N089445110051W
000640*80*000 SPN-89-05-A 43194745941N089433261711W
000650*80*000 SPN-89-05-B 43194734774N089433281009W

1

FINAL COORDINATE LISTING
FOR 1-89521

NATIONAL GEODETIC SURVEY
GP TO UTMs PROGRAM VERSION 1.0
1927 DATUM

STATION NAME	LATITUDE (NORTH)	LONGITUDE (WEST)	NORTHING(Y) METER	EASTING(X) METER	ZONE	CONVERGENCE D M S	SCALE FACTOR	ELEV (M)	GEOID HT(M
PBN-89-01-B	43 20 33.03039	089 44 59.30254	4802308.091	277105.359	16	-1 53 17.26	1.00021117		
PBN-89-01-C	43 20 33.01128	089 44 58.21869	4802306.697	277129.745	16	-1 53 16.51	1.00021104		
PBN-89-01-D	43 20 33.03146	089 44 58.96643	4802307.374	277112.928	16	-1 53 17.03	1.00021113		
PBN-89-02-B	43 20 33.15472	089 44 50.13244	4802305.122	277311.971	16	-1 53 10.96	1.00021004		
PBN-89-02-C	43 20 33.19317	089 44 51.06893	4802307.003	277290.922	16	-1 53 11.60	1.00021015		
PBN-89-03-B	43 20 33.64047	089 45 9.33212	4802334.361	276880.142	16	-1 53 24.17	1.00021241		
PBN-89-03-C	43 20 33.63775	089 45 8.36097	4802333.927	276890.748	16	-1 53 23.85	1.00021235		
PBN-89-04-B	43 20 15.99614	089 44 58.86728	4801781.255	277097.837	16	-1 53 16.36	1.00021121		
PBN-89-04-C	43 20 15.77921	089 44 58.42525	4801775.238	277107.571	16	-1 53 16.05	1.00021116		
PBN-89-05	43 20 33.12608	089 45 15.47859	4802323.060	276741.217	16	-1 53 28.38	1.00021317		
PBN-89-06	43 20 34.09799	089 44 42.99601	4802328.932	277473.621	16	-1 53 6.09	1.00020915		
PBN-89-07	43 20 15.17737	089 45 7.20245	4801794.035	276910.322	16	-1 53 22.10	1.00021224		
PBN-89-08	43 20 14.47061	089 44 49.59870	4801728.315	277305.006	16	-1 53 9.94	1.00021008		
PBN-89-09	43 21 2.69186	089 44 53.08683	4803218.546	277275.469	16	-1 53 14.02	1.00021024		
PBN-89-10-A	43 20 50.38801	089 44 52.75436	4802333.720	277270.448	16	-1 53 13.86	1.00021027		
PBN-89-10-B	43 20 50.42822	089 44 51.82901	4802339.424	277282.087	16	-1 53 13.01	1.00021020		
PBN-89-10-C	43 20 50.36576	089 44 53.25595	4802332.406	277259.132	16	-1 53 13.71	1.00021033		
PBN-89-10-D	43 20 50.25855	089 44 54.29012	4802335.856	277235.963	16	-1 53 14.41	1.00021045		
PBN-89-11	43 21 12.66984	089 44 54.14195	4803527.153	277261.358	16	-1 53 15.09	1.00021031		
PBN-89-12-A	43 20 2.82239	089 44 59.99953	4801375.881	277058.943	16	-1 53 16.68	1.00021143		
PBN-89-12-B	43 20 2.85563	089 45 0.00756	4801368.459	277058.489	16	-1 53 16.68	1.00021143		
LON-89-01	43 20 58.85028	089 44 44.18822	4803093.433	277471.912	16	-1 53 7.77	1.00020916		
LON-89-02-A	43 20 54.46586	089 44 44.13557	4802958.133	277468.545	16	-1 53 7.58	1.00020918		
LON-89-02-B	43 20 54.55138	089 44 43.73987	4802960.478	277477.641	16	-1 53 7.31	1.00020913		
LON-89-03-A	43 20 54.56107	089 44 41.77744	4802959.323	277521.835	16	-1 53 5.96	1.00020889		
LON-89-03-B	43 20 54.54250	089 44 42.26169	4802959.109	277510.913	16	-1 53 6.30	1.00020895		
PBB-89-01	43 20 44.66639	089 44 56.35818	4802663.251	277172.231	16	-1 53 15.98	1.00021080		
PBB-89-02	43 20 42.63263	089 44 57.97871	4802603.341	277144.933	16	-1 53 16.68	1.00021095		
PBB-89-03	43 20 42.63674	089 45 0.39510	4802607.112	277090.590	16	-1 53 18.34	1.00021125		
PBB-89-04	43 20 54.90330	089 44 55.58900	4802980.122	277211.216	16	-1 53 15.47	1.00021059		
PBB-89-05	43 20 55.25479	089 44 53.44583	4802989.375	277259.826	16	-1 53 14.01	1.00021032		
PBB-89-06	43 20 58.06753	089 44 52.84720	4803075.705	277276.163	16	-1 53 13.69	1.00021023		
PBB-89-07	43 20 56.93482	089 44 53.96124	4803041.587	277249.930	16	-1 53 14.42	1.00021038		
PBB-89-10	43 20 49.75231	089 44 55.03263	4802820.799	277218.505	16	-1 53 14.91	1.00021055		
DBN-89-01	43 22 20.86023	089 43 12.83194	4805556.074	279611.292	16	-1 52 7.81	1.00019750		
DBN-89-02-A	43 22 21.10239	089 43 5.82638	4805558.402	279769.203	16	-1 52 3.00	1.00019664		
DBN-89-02-B	43 22 20.81297	089 43 6.04523	4805549.634	279763.987	16	-1 52 3.14	1.00019667		
DBN-89-03	43 22 22.41843	089 43 4.21618	4805597.821	279806.766	16	-1 52 1.94	1.00019644		
DBN-89-04-A	43 22 31.15209	089 43 13.57185	4805874.126	279605.001	16	-1 52 8.68	1.00019753		

DBN-89-04-B	43	22	31.38165	089	43	13.82205	4805881.392	279599.601	16	-1	52	8.86	1.00019756
DBN-89-05	43	22	23.03495	089	43	16.30814	4805625.719	279535.246	16	-1	52	10.28	1.00019791
DBB-89-01	43	22	25.50447	089	43	11.42475	4805698.318	279647.637	16	-1	52	7.00	1.00019730
DBB-89-02	43	22	27.03589	089	43	11.26767	4805745.448	279652.713	16	-1	52	6.95	1.00019728
DBB-89-03	43	22	28.08664	089	43	14.28456	4805780.079	279585.875	16	-1	52	9.06	1.00019764
ELN-89-01	43	22	28.47993	089	43	2.79079	4805783.776	279844.941	16	-1	52	1.17	1.00019623
ELN-89-02-A	43	22	27.48619	089	42	56.21134	4805748.293	279992.015	16	-1	51	56.61	1.00019544
ELN-89-02-B	43	22	27.47956	089	42	55.50639	4805747.572	280007.874	16	-1	51	56.13	1.00019535
ELN-89-03	43	22	28.64980	089	42	46.36003	4805776.973	280214.891	16	-1	51	49.88	1.00019423

1

FINAL COORDINATE LISTING
FOR 1-89521

NATIONAL GEODETIC SURVEY
GP TO UTMs PROGRAM VERSION 1.0
1927 DATUM

STATION NAME	LATITUDE (NORTH)	LONGITUDE (WEST)	NORTHING(Y) METER	EASTING(X) METER	ZONE	CONVERGENCE D M S	SCALE FACTOR	ELEV (M)	GEOID HT(M)
ELN-89-04-A	43 22 35.13883	089 42 49.09887	4805979.168	280159.769	16	-1 51 51.98	1.00019453		
ELN-89-04-B	43 22 34.45631	089 42 48.49521	4805957.670	280172.669	16	-1 51 51.55	1.00019446		
ELN-89-05	43 22 39.43764	089 42 53.67303	4806115.140	280061.149	16	-1 51 55.28	1.00019506		
ELN-89-06	43 22 31.48389	089 42 46.59580	4805864.578	280212.430	16	-1 51 50.14	1.00019424		
ELN-89-07	43 22 32.39583	089 42 50.62117	4805887.156	280112.712	16	-1 51 52.59	1.00019478		
ELN-89-08	43 22 32.44116	089 42 56.84343	4805893.115	279972.720	16	-1 51 56.87	1.00019554		
ELN-89-09	43 22 30.22099	089 43 7.33293	4805843.306	279744.571	16	-1 52 4.36	1.00019678		
SPN-89-01-C	43 19 46.91588	089 45 27.30153	4800906.702	276414.360	16	-1 53 35.30	1.00021497		
SPN-89-02-A	43 19 47.14078	089 45 15.32045	4800904.726	276684.427	16	-1 53 27.07	1.00021348		
SPN-89-02-B	43 19 47.07082	089 45 15.66366	4800902.377	276690.139	16	-1 53 26.39	1.00021345		
SPN-89-02-C	43 19 47.11161	089 45 15.10518	4800903.220	276702.758	16	-1 53 25.51	1.00021338		
SPN-89-03-B	43 19 48.96479	089 45 6.11934	4800953.714	276907.023	16	-1 53 20.40	1.00021226		
SPN-89-03-C	43 21 27.46331	089 45 6.13887	4803992.444	277006.829	16	-1 53 23.85	1.00021171		
SPN-89-04-B	43 19 46.53171	089 44 52.48650	4800868.533	277211.586	16	-1 53 10.95	1.00021059		
SPN-89-04-C	43 19 46.55681	089 44 51.10051	4800868.280	277242.827	16	-1 53 10.00	1.00021042		
SPN-89-05-A	43 19 47.45941	089 43 32.61711	4800838.148	279011.338	16	-1 52 16.11	1.00020076		
SPN-89-05-B	43 19 47.34774	089 43 32.31009	4800834.845	279006.879	16	-1 52 16.24	1.00020079		

[illegible] HORIZONTAL AND VERTICAL CONTROL
JANUARY, 1989

ITEM MONITORING WELL	WISCONSIN STATE PLANE COORDINATES NORTHING Y	EASTING X	GRID BADGER PLANT COORDINATES NORTHING	EASTING	ELEVATION HIGH PT PROTECTIVE CASE	HIGH PT INNER CASE	GROUND	ITEM MONITORING WELL
Southern Perimeter								
S1101	484732.3.	2064450.7	2803.2	3556.1	831.53	830.21	828.2	S1101
S1102	484691.9	2067598.2	2812.7	6703.8	809.52	809.13	807.7	S1102
S1103	484687.8	2067590.8	2808.4	6696.5	809.17	809.13	807.5	S1103
S1105	484792.2	2071088.8	2968.2	10192.4	840.36	839.08	837.8	S1105
S1106	484793.1	2071101.0	2969.2	10204.6	839.82	839.72	838.1	S1106
S1107	484860.1	2072643.5	3060.6	11745.8	812.09	812.08	810.3	S1107
S1108	484751.5	2073314.8	2962.6	12418.8	784.18	782.74	781.3	S1108
S1133	484744.6	2064454.8	2815.6	3560.0	828.92	828.29	828.2	S1133
S1147	484926.7	2066046.9	3022.9	5149.0	817.39	817.14	815.7	S1147
S1148	484690.1	2067097.1	2802.9	6203.6	803.70	803.69	802.1	S1148
S1149	485126.2	2068010.8	3253.4	7109.5	807.77	807.64	806.1	S1149
S1152A	484581.3	2067590.9	2701.9	6698.3	813.68	813.58	810.5	S1152A
S1152B	484581.4	2067583.5	2701.9	6690.9	813.30	813.15	810.3	S1152B
Northwest Perimeter								
S1109	488535.6	2064509.9	6607.0	3555.2	856.81	856.58	855.1	S1109
S1127	503377.9	2063312.3	21428.5	2123.0	880.39	880.35	878.3	S1127
S1128	504036.5	2062711.3	22077.5	1511.7	879.37	879.31	877.2	S1128
West Perimeter								
S1123	494499.0	2062374.6	12535.9	1325.8	868.87	868.79	866.8	S1123
S1126	500011.3	2063331.3	18062.6	2195.2	876.98	876.95	874.7	S1126
Existing Landfill								
S-85-1153	501452.9	2076372.2	19710.3	15211.6	908.12	908.00	906.4	S-85-1153
Magazine Area								
S1115	490444.8	2070338.9	8608.1	9353.3	863.86	863.37	860.9	S1115
S1116	490446.2	2070357.4	8609.9	9371.7	864.06	862.31	860.4	S1116

MID-STATE [illegible] STATES, INC.
[illegible] CORPORATION
HORIZONTAL AND VERTICAL CONTROL
JANUARY, 1989

ITEM MONITORING WELL	WISCONSIN STATE PLANE COORDINATES NORTHING Y	EASTING X	GRID BADGER PLANT COORDINATES NORTHING	EASTING	ELEVATION HIGH PT PROTECTIVE CASE	HIGH PT INNER CASE	GROUND	ITEM MONITORING WELL
North Perimeter								
S1129	503569.4	2068120.7	21696.1	6927.7	913.13	913.12	911.2	S1129
S1130	504811.9	2071640.8	22994.1	10427.8	943.61	941.18	940.4	S1130
S1131	504812.7	2071623.7	22994.6	10410.6	943.40	942.17	939.9	S1131
S1132	502462.4	2072996.7	20666.3	11820.6	915.48	915.41	913.6	S1132
S1151	503686.2	2073451.7	21897.2	12256.2	893.54	893.43	891.6	S1151
Acid Spill Area								
NAN 81-01-A	498446.0	2070131.1	16605.1	9018.9	913.18	913.50*	910.8	NAN 81-01-A
NAN 81-01-D	498446.9	2070123.5	16605.8	9011.3	912.57	912.32	910.7	NAN 81-01-D
NAN 81-02-B	498486.8	2070255.1	16647.8	9142.2	914.51	914.99*	913.4	NAN 81-02-B
NAN 81-03-B	498429.9	2070286.1	16591.4	9174.2	914.89	915.21*	913.7	NAN 81-03-B
NAN 81-03-C	498413.1	2070282.9	16574.6	9171.3	914.71	915.02*	913.8	NAN 81-03-C
Southeast and Eastern Perimeter								
S1110	486475.5	2073300.4	4686.2	12377.1	813.15	813.12	810.6	S1110
S1111	487412.1	2075844.8	5662.9	14906.4	848.91	848.82	846.8	S1111
S1112	490048.1	2076744.1	8312.8	15763.9	838.31	838.29	836.4	S1112
S1114	491600.3	2079572.1	9909.5	18567.0	822.09	821.37	820.1	S1114
S1121	496294.1	2079125.3	14595.7	18046.1	815.85	815.43	813.9	S1121
Nitroglycerin Area								
S1119	496200.3	2072981.6	14404.8	11904.6	879.71	879.69	878.0	S1119
S1124	497865.2	2073549.8	16078.4	12446.4	879.94	879.83	878.2	S1124
S1125	496506.7	2067952.6	14631.5	6871.3	897.94	895.74	894.7	S1125
S1150	496771.1	2069331.6	14917.7	8246.0	897.54	897.50	895.6	S1150

* Note the PVC casing is up from Steel casing and the elevations are on top of the pipe with the PVC cover removed.

[illegible], INC.
[illegible]
HORIZONTAL AND VERTICAL CONTROL
JANUARY, 1989

ITEM MONITORING WELL	WISCONSIN STATE PLANE COORDINATES NORTHING Y	EASTING X	GRID BADGER PLANT COORDINATES NORTHING	EASTING	ELEVATION HIGH PT PROTECTIVE CASE	HIGH PT INNER CASE	GROUND	ITEM MONITORING WELL
Rocket Area								
S1118	492932.3	2072319.0	11126.6	11293.8	875.08	874.99	872.9	S1118
S1120	493311.7	2075595.6	11557.8	14563.9	879.89	879.76	877.4	S1120
New Landfill								
NLN 82-02-A	495646.2	2077609.1	13923.9	16540.2	863.96	864.02	861.9	NLN 82-02-A
NLN 82-02-B	495644.6	2077621.3	13922.5	16552.5	863.85	863.84	861.8	NLN 82-02-B
NLN 82-02-C	495636.0	2077614.7	13913.8	16546.1	864.12	864.08	861.9	NLN 82-02-C
NLN 82-03-A	494952.2	2077079.7	13221.9	16021.9	883.97	883.95	881.8	NLN 82-03-A
NLN 82-03-B	494944.2	2077068.6	13213.4	16011.0	885.13	885.14	882.7	NLN 82-03-B
NLN 82-03-C	494952.7	2077066.0	13221.9	16008.2	884.96	884.75	882.7	NLN 82-03-C
NLN 82-04-A	494910.1	2077407.2	13184.7	16350.0	892.96	892.94	891.0	NLN 82-04-A
NLN 82-04-B	494897.4	2077411.2	13172.1	16354.2	893.61	893.57	891.6	NLN 82-04-B
NLN 82-04-C	494899.9	2077400.8	13174.4	16343.8	893.80	893.81	891.6	NLN 82-04-C

VERIFIED AS-BUILTS, INC.
(E.III CORRECTION)
HORIZONTAL AND VERTICAL CONTROL
MAY 1988

* REVISED AS OF 16 JANUARY, 1989
GRID PLANT COORDINATES
NEW SCHUETTE

ITEM MONITORING WELL	POINT #	WISCONSIN STATE PLANE COORDINATES NORTHING Y	EASTING X	GRID BADGER PLANT COORDINATES *NORTHING	*EASTING	ELEVATION HIGH PT. PROTECTIVE CASE	HIGH PT. INNER CASE	GROUND	ITEM MONITORING WELL	POINT #
S1134	76	501499.5	(2075517.0)	19743.4	14355.8	921.81	921.81	919.9	S1134	76
S1135	72	501589.5	2076130.3	19843.1	14967.6	926.03	925.99	923.8	S1135	72
S1136	80	502209.1	2074922.4	20443.6	13750.0	912.70	912.58	910.4	S1136	80
S1153	71	501453.1	2076372.2	19710.6	15211.6	908.12	908.02	905.1	S1153	71
ELN 82-01-A	81	502378.9	2074747.7	20610.6	13572.7	905.03	905.02	902.5	ELN 82-01-A	81
ELN 82-01-B	82	502396.3	2074753.9	20628.0	13578.7	904.72	904.75	902.1	ELN 82-01-B	82
ELN 82-01-C	83	502387.1	2074754.3	20618.9	13579.1	905.08	905.06	902.5	ELN 82-01-C	83
ELN 82-02-A	84	501918.2	2075972.6	20169.3	14804.7	915.98	916.00	913.8	ELN 82-02-A	84
ELN 82-02-B	85	501907.5	2075970.2	20158.6	14802.5	916.65	916.62	914.2	ELN 82-02-B	85
ELN 82-02-C	86	501913.2	2075976.0	20164.4	14808.2	916.20	916.19	913.9	ELN 82-02-C	86
ELN 82-03-A	73	501515.1	2075871.7	19764.9	14710.2	927.70	927.68	925.2	ELN 82-03-A	73
ELN 82-03-B	74	501500.7	2075859.9	19750.1	14698.6	927.43	927.45	925.1	ELN 82-03-B	74
ELN 82-03-C	75	501515.6	2075858.2	19764.9	14696.7	926.94	926.93	925.0	ELN 82-03-C	75
ELN 82-04-A	77	501782.2	2074921.8	20016.7	13756.2	923.74	923.72	921.4	ELN 82-04-A	77
ELN 82-04-B	78	501785.4	2074908.8	20019.7	13743.1	924.22	924.18	921.5	ELN 82-04-B	78
ELN 82-04-C	79	501799.3	2074913.6	20033.7	13747.7	923.74	923.73	921.2	ELN 82-04-C	79
DBN 82-01	87	500845.1	2074682.8	19075.9	13532.1	918.72	918.72	916.7	DBN 82-01	87
DBN 82-02	88	501146.6	2074472.6	19374.1	13317.1	920.15	920.16	917.8	DBN 82-02	88
DBN 82-01-A	89	500707.3	2074435.6	18934.2	13287.1	907.36	907.36	904.7	*DBN 82-01-C	89
DBN 82-01-B	90	500710.7	2074447.1	18937.8	13298.5	907.83	907.80	905.2	DBN 82-01-B	90
S1122	91	500700.4	2074442.8	18927.5	13294.4	907.16	907.16	904.6	S1122	91
NAN 81-04-A	68	498335.5	2070483.1	16500.2	9372.6	925.42	925.22	923.3	NAN 81-04-A	68
NAN 81-04-B	69	498335.1	2070492.8	16499.9	9382.3	925.60	925.91	923.7	NAN 81-04-B	69
NAN 81-04-C	70	498335.1	2070475.2	16499.7	9364.7	924.94	925.25	923.0	NAN 81-04-C	70
NLN 82-01-A	95	495554.6	2077028.6	13823.2	15961.3	890.67	890.67	888.3	NLN 82-01-A	95
NLN 82-01-B	96	495564.7	2077022.0	13833.2	15954.5	891.28	891.29	888.6	NLN 82-01-B	96
NLN 82-01-C	97	495551.0	2077019.8	13819.5	15952.5	890.54	890.52	888.2	NLN 82-01-C	97
NLN 82-05-A	92	494908.7	2077680.8	13187.7	16623.6	899.94	899.90	897.6	NLN 82-05-A	92
NLN 82-05-B	93	494903.8	2077694.0	13183.0	16636.9	899.36	899.32	896.9	NLN 82-05-B	93
NLN 82-05-C	94	494916.2	2077691.0	13195.4	16633.7	898.28	898.20	896.3	NLN 82-05-C	94
* S1113	99	491608.6	2079571.2	9918.0	18566.0	823.08	821.56	820.0	S1113	99
* S1104	98	484801.5	2071094.2	2977.6	10197.8	839.72	839.21	837.7	S1104	98

* Formerly noted as DBN 82-01-A

This Page Intentionally Left Blank.

VIERBICHER ASSOCIATES, INC.

ARCHITECTURE • ENGINEERING

PLANNING • LAND SURVEYING

REEDSBURG, WISCONSIN

REPORT FOR
PROFESSIONAL SURVEYING SERVICES
HORIZONTAL AND VERTICAL
LOCATION SURVEY

BADGER ARMY AMMUNITION PLANT

Task Order Memorandum 002
U.S. Army Toxic and Hazardous Materials Agency
(USATHA)

Prepared for:

E.C. Jordan Co.
261 Commercial Street
P.O. Box 7050
Portland, Maine 04112

Prepared by:

Vierbicher Associates, Inc.
940 East Main Street
Reedsburg, WI 53959

January 2, 1990

FINAL REPORT
FOR
SURVEYING SERVICES
TASK ORDER MEMORANDUM 002
MONITORING WELL AND SOIL BORING LOCATIONS
BADGER ARMY AMMUNITION PLANT
SAUK COUNTY WISCONSIN
USATHAMA - E.C. JORDAN CO.

The services required for this project includes the horizontal and vertical locations for various monitoring wells and soil borings at Badger Army Ammunition Plant. The horizontal positions have been determined relative to the Universal Transverse Mercator (UTM) system per the NAD 27. The vertical locations are based on Mean Sea Level (MSL) from the 1929 General Adjustment.

The horizontal and vertical control shall be taken from existing control monuments and traverse control currently existing within the Army Ammunition Plant. This control information has been provided by the Army Ammunition Plant.

HORIZONTAL FIELD SURVEY

The horizontal location has been taken from the existing control or has been extended from said control into the survey areas. The equipment that was utilized for the horizontal control was a Lietz SET-4 electronic total station in combination with a Lietz SDR-22 electronic data collector. The grid factor for distances was keyed into the collector at a value of 0.9998919 this provides for an automatic reduction to grid distances required for geographic computations. The output produced by the data collector is based on Wisconsin State Plane Coordinates. A copy of the field notes generated by the data collector is attached as Appendix A. Due to equipment malfunction of the data collector some of the horizontal field data was gathered by manual field notes. These field notes are included under Appendix B. Multiple readings of horizontal angles and distances were taken to comply with required accuracies. This data was keyed into and adjusted through a surveying computation software program. The results of these computations are included under Appendix C.

VERTICAL FIELD SURVEY

The vertical location has also been taken from the existing control or has been extended from said control into the survey areas. The equipment that was used for the vertical survey was a Lietz B-1 automatic level. A copy of the field notes for the vertical survey is attached as Appendix B.

OFFICE COMPUTATIONS - REPORT GENERATION

The state plane coordinates determined by the data collector report was input into a batch file named ECJOR2PC. The file was then run through a program provided by National Ocean Service - National Geodetic Survey named GPPCGP. This program converts State Plane Coordinates to geographic positions (latitudes and longitude). The output from this run was placed in a batch file named ECJOR2GP. Finally this geographic position file was input through a National Ocean Service - National Geodetic Survey named UTMS. This converts the geographic position to the Universal Transverse Mercator System coordinates. The output file is named ECJOR2UT. The printout from this file list the UTM's for the wells and borings. A copy of the files generated are attached as Appendix D. The input format is detailed in the front of Appendix D. The report chart was then developed by integrating the vertical positions with the final UTM positions.

SURVEYOR'S CERTIFICATE

I, John L. Brey, Registered Land Surveyor, hereby certify that the above described location survey and the enclosed documentation are correct to the best of my knowledge and belief.

Dated this 2nd day of January, 1990.

John L. Brey, RLS-1319
Vierbicher Associates, Inc.
940 East Main Street
Reedsburg, WI 53959

MONITORING WELL AND SOIL BORING LOCATIONS
BADGER ARMY AMMUNITION PLANT
TASK ORDER MEMORANDUM # 2

OLEUM PLANT AND POND

MONITORING WELL OR SOIL BORING	UTM NORTHING (Y) METER	UTM EASTING (X) METER	ELEVATIONS GROUND SURFACE	ELEVATIONS WELL RISER	ELEVATIONS TOP PROTECTIVE CASING	MONITORING WELL OR SOIL BORING
OPB-89-01	4,806,589.3	278,473.5	929.1			OPB-89-01
OPB-89-02	4,806,712.2	279,061.7	875.3			OPB-89-02
OPB-89-03	4,806,681.2	279,113.9	870.1			OPB-89-03
OPB-89-04	4,806,655.3	279,098.0	872.4			OPB-89-04
OPB-89-05	4,806,681.0	279,160.4	883.6			OPB-89-05
OPB-89-06	4,806,613.5	278,662.1	932.8			OPB-89-06
OPB-89-07	4,806,605.1	278,621.4	932.8			OPB-89-07
OPB-89-08	4,806,600.5	278,584.4	933.3			OPB-89-08
OPB-89-09	4,806,585.6	278,519.9	932.2			OPB-89-09
OPB-89-10	4,806,671.3	278,565.8	932.8			OPB-89-10
OPB-89-11	4,806,629.2	278,566.2	932.8			OPB-89-11
OPB-89-12	4,806,539.6	278,586.0	925.6			OPB-89-12
OPB-89-13	4,806,516.3	278,471.9	929.6			OPB-89-13
OPM-89-01	4,806,487.9	278,550.8	924.3	925.99	926.23	OPM-89-01
OPM-89-02	4,806,578.0	279,241.0	877.6	879.46	879.61	OPM-89-02
OPM-89-03	4,806,289.5	278,932.9	928.2	929.75	929.98	OPM-89-03
	NITROGLCERINE POND					
NPM-89-01	4,804,671.6	279,174.7	861.5	862.77	863.03	NPM-89-01
	ROCKET PASTE AREA					
RPM-89-01	4,803,845.3	279,502.4	886.2	888.65	888.83	RPM-89-01
RPM-89-02	4,803,851.0	279,100.8	873.0	874.76	874.95	RPM-89-02
	OLD ACID AREA					
OAB-89-01	4,805,863.8	276,115.0	873.5			OAB-89-01
OAB-89-02	4,805,805.0	276,121.7	876.8			OAB-89-02
OAB-89-03	4,805,804.8	279,050.1	875.0			OAB-89-03
OAM-89-01	4,805,744.0	276,076.2	872.2	874.38	874.47	OAM-89-01
OAM-89-02	4,805,673.4	276,115.5	872.4	874.91	875.14	OAM-89-02
	OLD FUEL OIL TANK					
FTB-89-01	4,805,640.9	276,062.2	874.4			FTB-89-01
FTM-89-01	4,305,592.7	276,061.9	872.4	874.27	874.46	FTM-89-01

This Page Intentionally Left Blank.

APPENDIX A

FIELD DATA PRINTOUT FROM SDR-22

This Page Intentionally Left Blank.

SURF22 V03-01.7 Copyright 1988 by Datacom Group Ltd. All rights reserved.

	19-Dec-89 07:53		
	Angle : Degrees	Dist : Feet	Press: Inch Hg
	Temp : Fahrenht	Coord : N-E-Elv	
	Job id JORDAN		
SCALE	S.F. 0.999891900		
NOTE CP	Sea level crn:N		
NOTE CP	C and R crn : N		
NOTE CP	Atmos crn : Y		
NOTE TS	14-Dec-89 09:43		
INSTR	SET	EDM <No Text>	Serial no 093118
	Theo <No Text>	Serial no 000000	Mount:not applc
	V.obs: Zenith	EDM o/s <Null>	Refl o/s <Null>
	P.C. mm 0.000		
[redacted]0029	Nrth 501768.430	East 2074666.280	Elv <Null>
	Code MON		
KI 0028	Nrth 501744.430	East 2076165.990	Elv <Null>
	Code MON		
NOTE TS	14-Dec-89 10:05		
STN TV 0028	Nrth 501744.430	East 2076165.990	Elv <Null>
	Theo ht <Null>	Code MON	
ATMOS	Press 29.50 inHg	Temp 5.0 F	
F1 0028-0029	Dist <Null>	V.obs 90-11'15"	H.obs 0-00'00"
OBS MD 0028-0300	Dist 2619.070	V.obs <Null>	H.obs <Null>
	Code Mult dist#1		
OBS MD 0028-0300	Dist 2619.070	V.obs <Null>	H.obs <Null>
	Code Mult dist#2		
OBS F1 0028-0300	Dist 2619.070	V.obs 90-30'50"	H.obs 55-25'30"
	Code PK		
TARGET	Target ht 4.700		
[redacted] 0028-0029	Dist <Null>	V.obs 90-10'00"	H.obs 359-59'55"
	Code MON		

S MD 0028-0300	Dist 2619.060 Code Mult dist#1	V.obs <Null>	H.obs <Null>
S MD 0028-0300	Dist 2619.060 Code Mult dist#2	V.obs <Null>	H.obs <Null>
GET	Target ht <Null>		
OBS F1 0028-0300	Dist 2619.060 Code PK	V.obs 90-30'55"	H.obs 55-25'30"
SET TV 0028	Count 002		
S MC 0028-0029	Dist <Null> Code MON	V.ang 90-11'15"	Azmth 270-55'00"
S MC 0028-0300	Dist 2618.992 Code PK	V.ang 90-30'53"	Azmth 326-20'33"
S TV 0300	Nrth 503924.065 Code PK	East 2074714.690	Elv <Null>
S TV 0028-0300	Azmth 326-20'33"	H.obs 55-25'30"	
STN TV 0300	Nrth 503924.065 Theo ht <Null>	East 2074714.690 Code PK	Elv <Null>
NOTE TS	14-Dec-89 10:47		
S F1 0300-0028	Dist <Null> Code MON	V.obs 89-36'20"	H.obs 0-00'00"
S MD 0300-0301	Dist 1296.380 Code Mult dist#1	V.obs <Null>	H.obs <Null>
OBS MD 0300-0301	Dist 1296.400 Code Mult dist#2	V.obs <Null>	H.obs <Null>
OBS F1 0300-0301	Dist 1296.390 Code PK	V.obs 89-41'35"	H.obs 116-37'55"
OBS F1 0300-0028	Dist <Null> Code MON	V.obs 89-33'20"	H.obs 359-59'55"
OBS MD 0300-0301	Dist 1296.380 Code Mult dist#1	V.obs <Null>	H.obs <Null>
OBS MD 0300-0301	Dist 1296.400 Code Mult dist#2	V.obs <Null>	H.obs <Null>
S F1 0300-0301	Dist 1296.390	V.obs 89-41'30"	H.obs 116-38'00"

(SLOPE GROUND DIST)

Horz Dist = 2618.603

Code PK

SFT TV 0300 Count 002

MC 0300-0028 Dist <Null> V.ang 89-34'50" Azmth 146-20'33"
Code MON

MC 0300-0301 Dist 1296.354 V.ang 89-41'33" Azmth 262-58'33"
Code PK

TV 0301 Nrth 503765.557 East 2073428.224 Elv <Null>
Code PK

E TS 14-Dec-89 11:20

STN TV 0301 Nrth 503765.557 East 2073428.224 Elv <Null>
Theo ht <Null> Code PK

SS F1 0301-0300 Dist <Null> V.obs 90-19'45" H.obs 0-00'00"
Code PK

S MD 0301-0302 Dist 395.110 V.obs <Null> H.obs <Null>
Code Mult dist#1

0301-0302 Dist 395.080 V.obs <Null> H.obs <Null>
Code Mult dist#2

F1 0301-0302 Dist 395.095 V.obs 94-12'40" H.obs 169-02'40"
Code OPM8902

TV 0301 Count 002

OBS MC 0301-0300 Dist <Null> V.ang 90-18'45" Azmth 82-58'33"
Code PK

OBS MC 0301-0302 Dist 395.084 V.ang 94-12'40" Azmth 252-01'13"
Code OPM8902

SS F1 0301-0300 Dist <Null> V.obs 90-21'05" H.obs 0-00'00"
Code PK

S MD 0301-0303 Dist 683.450 V.obs <Null> H.obs <Null>
Code Mult dist#1

MD 0301-0303 Dist 683.430 V.obs <Null> H.obs <Null>
Code Mult dist#2

F1 0301-0303 Dist 683.440 V.obs 92-06'40" H.obs 204-36'15"
Code OPB8905

0301 Count 002

3 MC 0301-0300	Dist <Null> Code PK	V.ang 90-21'05"	Azmth 82-58'33"
3 MC 0301-0303	Dist 683.421 Code OPB8905	V.ang 92-06'40"	Azmth 287-34'48"
OBS F1 0301-0300	Dist <Null> Code PK	V.obs 90-20'45"	H.obs 0-00'00"
NOTE TS	14-Dec-89 11:35		
3 MD 0301-0304	Dist 861.080 Code Mult dist#1	V.obs <Null>	H.obs <Null>
3 MD 0301-0304	Dist 861.010 Code Mult dist#2	V.obs <Null>	H.obs <Null>
3 F1 0301-0304	Dist 861.045 Code OPB8904	V.obs 92-09'45"	H.obs 194-41'10"
F TV 0301	Count 002		
OBS MC 0301-0300	Dist <Null> Code PK	V.ang 90-20'45"	Azmth 82-58'33"
OBS MC 0301-0304	Dist 861.021 Code OPB8904	V.ang 92-09'45"	Azmth 277-39'43"
OBS F1 0301-0300	Dist <Null> Code PK	V.obs 90-11'25"	H.obs 0-00'00"
3 MD 0301-0305	Dist 828.930 Code Mult dist#1	V.obs <Null>	H.obs <Null>
3 MD 0301-0305	Dist 825.920 Code Mult dist#2	V.obs <Null>	H.obs <Null>
3 F1 0301-0305	Dist 828.875 Code OPB8903	V.obs 92-04'45"	H.obs 201-06'20"
F TV 0301	Count 002		
OBS MC 0301-0300	Dist <Null> Code PK	V.ang 90-11'25"	Azmth 82-58'33"
OBS MC 0301-0305	Dist 828.852 Code OPB8903	V.ang 92-04'45"	Azmth 284-04'53"
OBS F1 0301-0300	Dist <Null> Code PK	V.obs 90-21'30"	H.obs 0-00'00"
3 MD 0301-0306	Dist 1022.960	V.obs <Null>	H.obs <Null>

Code Mult dist#1

[redacted]o MD 0301-0306 Dist 1022.960 V.obs <Null> H.obs <Null>
Code Mult dist#2

[redacted] F1 0301-0306 Dist 1022.960 V.obs 91-52'35" H.obs 203-54'30"
Code OPB8902

[redacted] TV 0301 Count 002

[redacted] 0301-0300 Dist <Null> V.ang 90-21'30" Azmth 82-58'33"
Code PK

[redacted] 0301-0306 Dist 1022.931 V.ang 91-52'35" Azmth 286-53'03"
Code OPB8902

[redacted] 0301 Count 006

[redacted] MC 0301-0300 Dist <Null> V.ang 90-18'42" Azmth 82-58'33"
Code PK

[redacted] MC 0301-0306 Dist 1022.931 V.ang 91-52'35" Azmth 286-53'03"
Code OPB8902

[redacted]-0305 Dist 828.852 V.ang 92-04'45" Azmth 284-04'53"
Code OPB8903

[redacted] 0301-0304 Dist 861.021 V.ang 92-09'45" Azmth 277-39'43"
Code OPB8904

[redacted] 0301-0303 Dist 683.421 V.ang 92-06'40" Azmth 287-34'48"
Code OPB8905

[redacted] 0301-0302 Dist 395.084 V.ang 94-12'40" Azmth 252-01'13"
Code OPM8902

[redacted] 0306 Nrth 504062.464 East 2072450.018 Elv <Null>
Code OPB8902

[redacted]-0305 Nrth 503967.082 East 2072824.894 Elv <Null>
Code OPB8903

[redacted] 0304 Nrth 503880.261 East 2072575.590 Elv <Null>
Code OPB8904

[redacted] 0303 Nrth 503971.813 East 2072777.234 Elv <Null>
Code OPB8905

[redacted] 0302 Nrth 503643.945 East 2073053.488 Elv <Null>
Code OPM8902

[redacted]-0306 Azmth 286-53'03" H.obs 203-54'30"

N .E TS	14-Dec-89 11:50			
3[illegible] TV 0301-0306	Azmth 286-53'03"	H.obs 203-54'30"		
3[illegible]S F1 0301-0300	Dist <Null> Code PK	V.obs 90-19'30"	H.obs 0-00'00"	
3[illegible] MD 0301-0307	Dist 2785.010 Code Mult dist#1	V.obs <Null>	H.obs <Null>	
3 [illegible] MD 0301-0307	Dist 2785.010 Code Mult dist#2	V.obs <Null>	H.obs <Null>	
3 F1 0301-0307	Dist 2785.010 Code PK	V.obs 89-32'25"	H.obs 179-47'30"	
3 F1 0301-0300	Dist <Null> Code PK	V.obs 90-20'30"	H.obs 359-59'45"	
3 MD 0301-0307	Dist 2785.000 Code Mult dist#1	V.obs <Null>	H.obs <Null>	
3[illegible] MD 0301-0307	Dist 2784.990 Code Mult dist#2	V.obs <Null>	H.obs <Null>	
3[illegible]S F1 0301-0307	Dist 2784.995 Code PK	V.obs 89-32'30"	H.obs 179-47'20"	
NOTE TS	14-Dec-89 12:05			
3 [illegible] F1 0301-0300	Dist <Null> Code PK	V.obs 90-22'05"	H.obs 359-59'50"	
3 [illegible] MD 0301-0307	Dist 2785.010 Code Mult dist#1	V.obs <Null>	H.obs <Null>	
3 [illegible] MD 0301-0307	Dist 2784.980 Code Mult dist#2	V.obs <Null>	H.obs <Null>	
3 [illegible] F1 0301-0307	Dist 2784.995 Code PK	V.obs 89-32'20"	H.obs 179-47'15"	
3[illegible] TV 0301	Count 002			
3[illegible]S MC 0301-0300	Dist <Null> Code PK	V.ang 90-20'42"	Azmth 82-58'33"	
3[illegible] MC 0301-0307	Dist 2784.922 Code PK	V.ang 89-32'25"	Azmth 262-46'03"	
3 [illegible] F1 0301-0300	Dist <Null>	V.obs 90-20'35"	H.obs 0-00'00"	

Code PK

U?? MD 0301-0308 Dist 84.240 V.obs <Null> H.obs <Null>
Code Mult dist#1

??S MD 0301-0308 Dist 84.260 V.obs <Null> H.obs <Null>
Code Mult dist#2

?? F1 0301-0308 Dist 84.250 V.obs 100-20'40" H.obs 80-31'55"
Code S831151

T TV 0301 Count 002

?? MC 0301-0300 Dist <Null> V.ang 90-20'35" Azmth 82-58'33"
Code PK

?? MC 0301-0308 Dist 84.248 V.ang 100-20'40" Azmth 163-30'28"
Code S831151

N? E TS 14-Dec-89 12:20

T TV 0301 Count 003

?? 0301-0300 Dist <Null> V.ang 90-20'38" Azmth 82-58'33"
Code PK

?? MC 0301-0308 Dist 84.248 V.ang 100-20'40" Azmth 163-30'28"
Code S831151

?? MC 0301-0307 Dist 2784.922 V.ang 89-32'25" Azmth 262-46'03"
Code PK

P?? TV 0308 Nrth 503686.097 East 2073451.749 Elv <Null>
Code S831151

?US TV 0307 Nrth 503414.997 East 2070665.847 Elv <Null>
Code PK

?.N TV 0307 Nrth 503414.997 East 2070665.847 Elv <Null>
Theo ht <Null> Code PK

? TE TS 14-Dec-89 13:37

?? TP 0307 Nrth 503414.997 East 2070665.847 Elv <Null>
Theo ht <Null> Code PK

?? TP 0307-0301 Azmth 82-46'03" H.obs 0-00'00"

? ? F1 0307-0301 Dist <Null> V.obs 90-33'35" H.obs 0-00'00"
Code PK

? ?0307-0309 Dist 201.110 V.obs <Null> H.obs <Null>

Code Mult dist#1 GRID DIST = 201.036 AR 54°37'30"
AZ = 137°23'31"

uBS MD 0307-0309 Dist 201.110 V.obs <Null> H.obs <Null>
Code Mult dist#2

JS TP 0309 Nrth 503267.033 East 2070801.943 Elv <Null>
Code OPM8901

.B MD 0307-0310 Dist 246.880 V.obs <Null> H.obs <Null>
Code Mult dist#1

B MD 0307-0310 Dist 246.880 V.obs <Null> H.obs <Null>
Code Mult dist#2 GRID DIST = 246.778 AR 1°14'05"
AZ = 84°00'08"

B TP 0310 Nrth 503440.782 East 2070911.274 Elv <Null>
Code OPB8912

B MD 0307 Dist 141.280 V.obs <Null> H.obs <Null>
Code Mult dist#1

B MD 0307 Dist 141.290 V.obs <Null> H.obs <Null>
Code Mult dist#2

CTB MD 0307 Dist 141.240 V.obs <Null> H.obs <Null>
Code Mult dist#1

ORS MD 0307 Dist 141.240 V.obs <Null> H.obs <Null>
Code Mult dist#2

OBS MD 0307 Dist 141.240 V.obs <Null> H.obs <Null>
Code Mult dist#1

uBS MD 0307 Dist 141.230 V.obs <Null> H.obs <Null>
Code Mult dist#2

.JS MD 0307 Dist 141.240 V.obs <Null> H.obs <Null>
Code Mult dist#1

.S MD 0307 Dist 141.240 V.obs <Null> H.obs <Null>
Code Mult dist#2

TE TS 14-Dec-89 13:52

?PS MD 0307 Dist 141.230 V.obs <Null> H.obs <Null>
Code Mult dist#1

)BS MD 0307 Dist 141.230 V.obs <Null> H.obs <Null>
Code Mult dist#2

)BS MD 0307 Dist 141.230 V.obs <Null> H.obs <Null>
Code Mult dist#1

MD 0307	Dist 141.230 Code Mult dist#2	V.obs <Null>	H.obs <Null>
MD 0307	Dist 141.230 Code Mult dist#1	V.obs <Null>	H.obs <Null>
MD 0307	Dist 141.230 Code Mult dist#2	V.obs <Null>	H.obs <Null>
TP 0311	Nrth <Null> Code OPB8913	East <Null>	Elv <Null>
TP 0307-0301	Azmth 82-46'03"	H.obs <Null>	
F1 0307-0301	Dist <Null> Code PK	V.obs 90-30'05"	H.obs <Null>
TP 0312	Nrth <Null> Code OPB8913	East <Null>	Elv <Null>

nd of Report *

This Page Intentionally Left Blank.

APPENDIX B

HORIZONTAL AND VERTICAL SURVEY FIELD NOTES

This Page Intentionally Left Blank.

E C Jordan
Well + Basins Loc.
12/14/89
Balmy 5°
Schroeder/Elmt K.

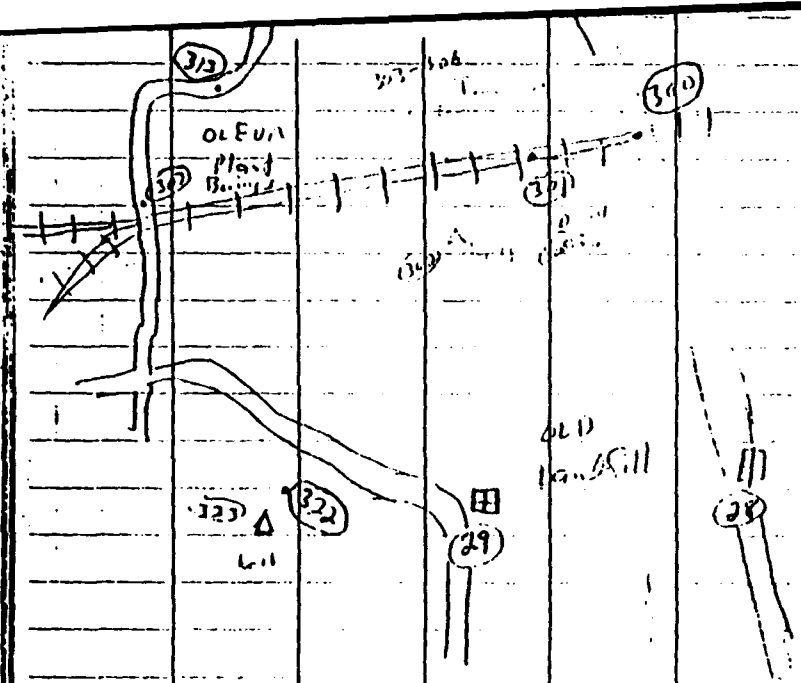

300	PK in E tracks @ W Edge Per Rd		
301	PK in [illegible]		
302	Well	OPM	8902
303	Borings	OPB	8905
304	Borings	OPB	8904
305	Borings	OPB	8903
306	Borings	[illegible]	[illegible]

308	Well	S8B	1151
309	Well	OPM	8901
310	Borings	OPB	8912
311	"	OPB	8913
312	"	OPB	8909
313	PK in Rd Pave toward S Edge (in Bend)		
314	PK in Rd Pave toward S Edge 5200' W of Inters.		
315	Borings	OPB	8910
316	"	OPB	8911
317	"	OPB	8908
318	"	OPB	8907 w/Nail
319	"	OPB	8901
320	"	OPB	8906
321	OR Spike 5' N of N Ditch @ Bend in Pave		
323	[illegible] States Central P		
322	Spike in weeds in [illegible]		
323		OPM	8903
325		RPM	8902
327	[illegible]		

301/307/11	"30"			
301/307/312	200°00		17[illegible]	[illegible]
301/307/313	294°33'00"	229°06'10"	294°33'05	
307/313	748.41	748.42	748.41	Grid 748.330
307/313/314	162°47'30"	325°3[illegible]'05"	162°47'32"	
313/314	640.70	640.71	640.71	Grid 640.637
307/313/315	335°31'	266.05	Grid 266.02	
/316	330°16'	400.83	Grid 400.79	
/317	341°29'	489.41	Grid 489.36	
/318	327°07'00"	487.71	Grid 487.66	
/319	[illegible]°49'	643.94	Grid 643.87	
313/318/320	91°54'	[illegible]	[illegible]	
313/314/321	93°26'40"	186°53'[illegible]	93°26'38"	
314/321	713.37	713.32	713.33	Grid 713.243
314/321/3	203°34'25"	47°08'50"	203°34'25	
321/3	198.23	198.21	198.22	Grid 198.199
[illegible]	201°05'55"	42°11'55"	201°05'51"	
[illegible]	[illegible]	[illegible]	[illegible]	

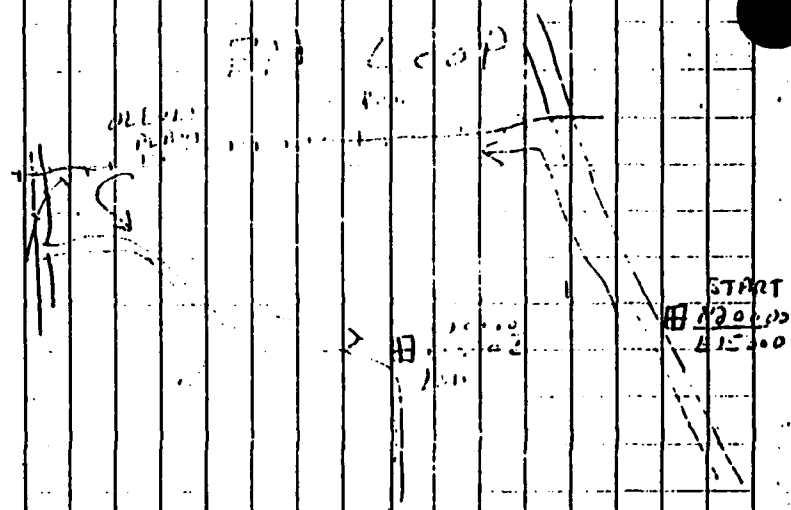

Sta	[illegible]	HI	FS	Elev
Dist N20000 E15000	2.40	927.03		924.63
TP 1	0.38	913.92	13.49	913.54
TP 2	0.26	906.02	14.16	899.76
TP 3	2.62	898.16	10.48	895.54
TP 4	12.04	910.04	0.96	897.20
TP 5	6.32	909.28	7.08	902.96
TP 6	7.53	914.72	2.09	907.19
TP 7	0.39	911.03	4.39	910.33
TP 8			12.34	898.69
TP 9			5.15	905.88

	SIDE		LOOP		
TP 8		0.80	899.49		898.69
S83 1151	[illegible]	1.38	894.94	5.93	893.56/54
TP 10		9.02	890.80	13.16	881.78
~~TP 9~~ OPM 8902	Steel Casing			11.195	879.61
H.P.	PVC			11.31	879.46
	Gnd			13.18	877.6
TP 11		13.78	903.95	0.63	890.17
TP 12		7.15	910.52	0.88	903.07
TP 9				4.64	905.88
	MAIN LOOP				
TP 9 Rail		4.64	910.52		905.88
TP 13 Rail				3.00	907.52
	SIDE LOOP				
TP 13		0.28	907.80		907.52
TP 14		0.64	894.68	13.76	894.04
Boring	OPB 8905	1.36	884.94	11.10	883.58
Boring	OPB 8903			14.82	870.1
Boring	OPB 8902			9.60	875.3
Boring	OPB 8904			12.56	872.4
TP 15		13.40	896.33	2.01	882.93
TP 16		12.99	907.75	1.57	894.76
TP 13 Rail				0.23 ~~0.24~~	907.52
	Side Loop	18.67		28.68	

	MAIN	LOOP			
TP 13		7.73	915.25		907.52
TP 17		8.67	922.945	0.955	914.295
TP 18		7.85	929.20	1.595	921.35
TP 19				2.915	926.285
	SIDE	LOOP			
TP 19		10.30	936.59		926.29
OPB 8906				3.81	932.8
OPB 8907				3.80	932.8
Top 11, [illegible]		3.10	938.10	1.59	935.00
OPB 8908				4.83	933.3
OPB 8911				5.30	932.8
OPB 8910				5.30	932.8
TP 20		6.92	938.65	6.37	931.73
OPB 8909				6.45	932.2
OPB 8901				9.50	929.10
OPB 8913				9.00	929.6
TP 21		5.38	931.13	12.90 ~~8.93~~	925.75
Well OPB 8901	Steel Casing			4.90	926.23
"	PVC			5.14	925.99
"	Gnd			6.78	924.3
Boring OPB 8910				5.53	925.6
TP 22		6.20	932.43	4.90	926.23
TP 19				6.14	926.29

Main Loop

TP 19 Rd		6.14	932.425		926.285
TP 22		8.44	940.005	0.80	931.565
TP 24		9.17	948.035	1.14	938.865
TP 25		4.54	939.505	13.17	934.865
Well OPM 8903	Steel Casing			9.52	929.98
	PVC			9.75	929.75
	Grid			11.26	928.2
TP 26		2.57	936.245	5.93	933.575
TP 27		0.66	922.88	14.025	922.22
TP 28		9.56	924.34	8.10	914.78
S1132 Steel Casing				8.86	915.46 / Rec .48
TP 29		7.09	931.12	0.31	924.03
TP 30		4.38	923.78	11.~~715~~ 72	919.40
TP 31		7.24	926.13	4.89	918.89
Dist N 20,000 E 13,500				3.71	922.42
	Σ	127.92		130.115	

DIFF IN MONS = 2.21 — DIFF. = 2.195 — [CLOSURE = 0.015]

ROCKET / Nitro Area

#324	Well	NPM 8901
#325	Spike on hill - Rocket Area	
#326	Well	RPM 8902
#327	Spike on hill E of N-S Rd	
#328	[illegible]	RPM 8901

.19

Δ (10) Rd on hill

New Landfill

.327

Δ 328

10/9/324	[illegible]	[illegible]	270°30'23"	
9/324	[illegible]		Grid	881.505
10/9/325	69°15'[illegible]	138°30'30"	69°15'15"	
9/325	1551.50	1551.52	1551.50	GRID 1551.339
9/325/326	260°04'30"		722.94	GRID 722.862
9/325/327	114°48'55"	279°37'55"	114°48'57"	
325/327	[illegible]	[illegible]	Grid	722.025
325/[illegible]	[illegible]		258.34	GRID 258.313

BM Loop

STA		BS	HI	FS	Elev
Mercury		3.46	885.82		882.36
TP 32		9.45	887.67	7.60	878.22
TP 33		2.50	887.37	2.80	884.87
TP 34		2.76	881.55	8.58	878.79
Well RPM 8902 PVC				6.79	874.76
" "	Gnd			8.52	873.0
" "	Steel Casing	4.52	879.47	6.60	874.95
TP 35		6.32	883.79	2.00	877.47
TP 36		~~8.47~~ 8.45	888.97	3.24	880.55
Well RPM 8901 PVC				0.32	888.65
" "	Gnd			2.75	886.2
" "	Steel Casing	~~2.445~~ 2.45	891.28	0.14	888.83
TP 37		4.34	889.33	6.29	884.99
TP 38		4.23	885.08	8.48	880.85
TP 39 (Hyd No 19 [illegible])		~~4.205~~ [illegible] 4.01	880.74	8.35	876.73
TP 40	[illegible]	5.50	881.07	5.17	875.57
S1119	Steel Casing Approx top [illegible]			1.37	879.70/.71 Rec
TP 41		5.46	884.51	2.02	879.05
TP 42	[illegible]	~~1.005~~ 1.01	878.89	6.63	877.88
TP 43		3.35	873.09	9.15	869.74
Well NPM 8901 PVC				10.32	862.77
" "	Gnd			11.62	861.5
" "	Steel Casing	13.66	876.69	10.06	863.03

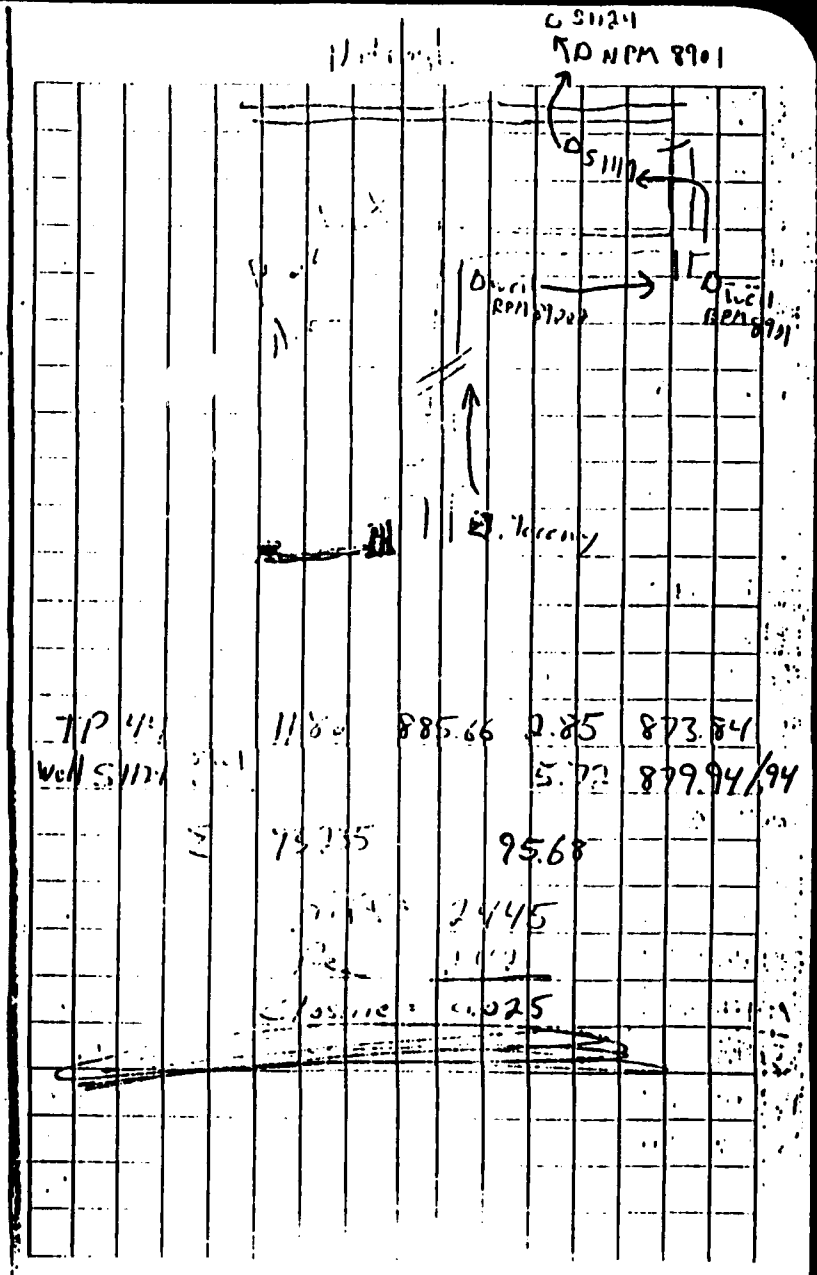

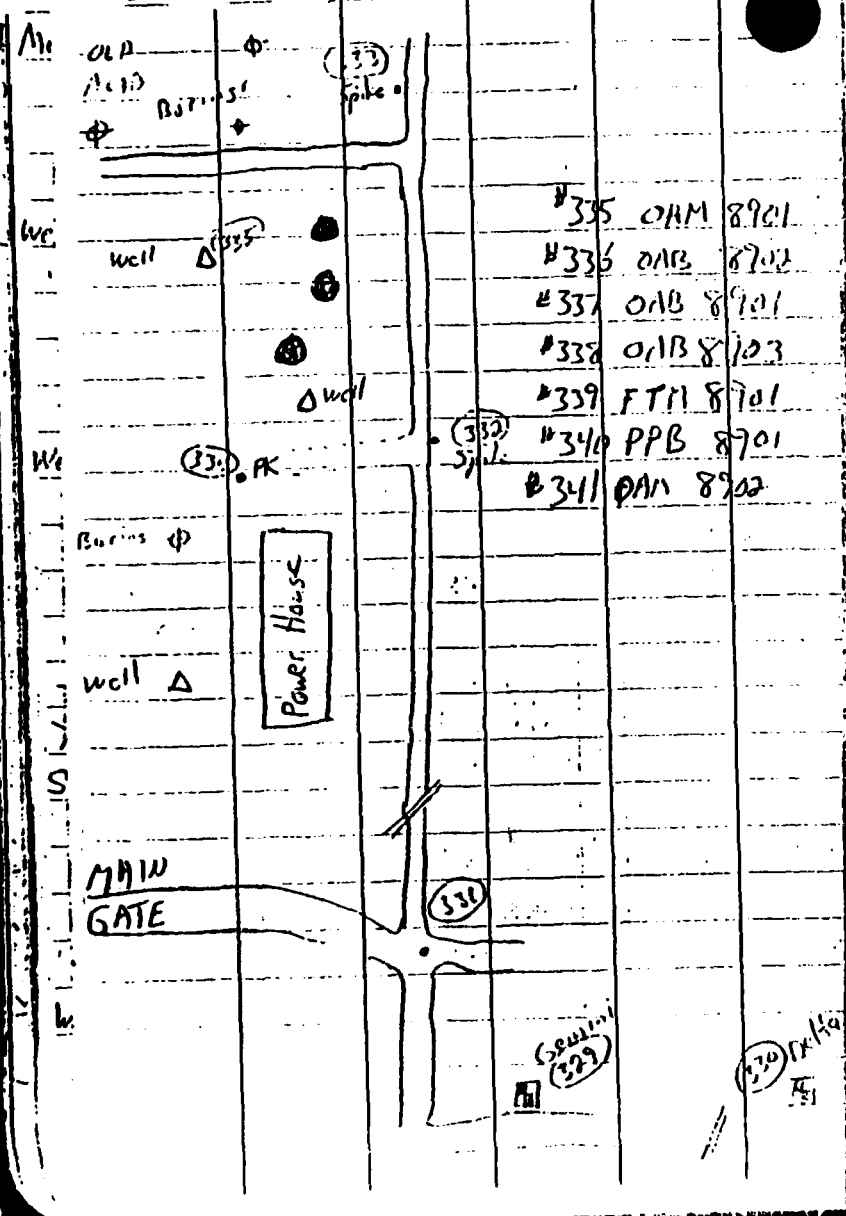

#335 OAM 8901
#336 OAB 8902
#337 OAB 8901
#338 OAB 8903
#339 FTM 8901
#340 PPB 8901
#341 OAM 8902

#329 Genuine
#330 Delta
#331 PK [illegible] N-S Rd
#332 Spike [illegible] N of Rd to Powerhouse
#333 Spike [illegible] N of Rd to west
#334 PK ([illegible]) [illegible] Powerhouse

330/329/331	241°42'05"	123°24'15"	211°12'07"	
329/331	[illegible]	[illegible]	849.91	Grid 849.818
329/331/332	[illegible]30"	56°09'05"	208°04'32"	
331/332	1038.70	[illegible]	1038.69	Grid 1038.578
329/331/333	[illegible]	[illegible]°39'25"	207°19'43"	
331/333	1526.57	1526.58	1526.56	Grid 1526.405
331/332/334	85°46'20"	171°32'50"	85°46'25"	
332/331	381.50	381.[illegible]	381.50	Grid 381.459
331/333/335	59°15'25"		467.47	Grid 467.42
" " /336	82°37'55"		261.92	Grid 261.89
" " /337	118°43'20"		329.18	Grid 329.14
" " /338	85°03'15"		496.39	Grid 496.34
332/334/339	[illegible]		234.20	Grid 234.17
" " /340	[illegible]		95.90	Grid 95.99
" " /341			112.17	Grid 112.16

STA	BS	HI	FS	Elev
Gemini	5.98	880.46		874.48
TP 45	5.92	880.98	5.40	875.06
TP 46	4.08	881.52	3.54	877.44
TP 47	4.19	876.94	8.77	872.75
Well FTM 8901 Steel Casing			2.48	874.46
" " PVC			2.67	874.27
" " Gravel			4.54	872.4
TP 48	4.79	877.24	4.79	872.45
PPB 8901			2.85	874.4
Well OAM 8902 Steel Casing			2.10	875.14
" " PVC			2.33	874.91
" " Gravel			4.85	872.4
Well OAM 8901 PVC			2.86	874.38
" " " Gravel			5.05	872.2
" " " Steel Casing	6.17	880.64	2.77	874.47
OAB 8903			5.66	875.0
OAB 8901			7.11	873.5
OAB 8902			3.87	876.8
TP 49 Rod	4.02	881.77	2.89	877.75
TP 50	5.14	881.27	5.64	876.13
TP 51	5.13 5.25	882.39	4.01	877.26
TP 52 (PK Nail)	3.39	880.43	5.35	877.04
TP 47	5.32	880.38	5.37	875.06
			5.90	874.48

CLOSURE: 0.015

APPENDIX C

SURVEY TRAVERSE COPUTATIONS AND ADJUSTMENTS

This Page Intentionally Left Blank.

					504904.8300	2070001.3100
28					501744.4300	2076165.9900
29					501768.4300	2074666.2800
TART						
28					501744.4300	2076165.9900
	NW	33	39	27.0	2618.886	
300					503924.3004	2074714.5324
RT						
28					501744.4300	2076165.9900
R	NW	33	39	27.0	2618.603	
300					503924.0648	2074714.6892
	SW	82	58	33.0	1296.195	
301					503765.5558	2073428.2225
	SW	82	46	3.0	2784.531	
307					503414.9939	2070665.8468
	NE	17	19	8.0	748.332	
313					504129.2986	2070888.6174
	NE	0	6	40.0	640.637	
314					504770.0344	2070889.3598
R	NW	86	26	42.0	713.243	
321					504814.2603	2070177.9892
	NW	62	52	17.0	198.199	
					504904.6369	2070001.5950
	NW	55	53	13.4	0.344	
3					504904.8300	2070001.3100

RECISION RATIO = 1 : 26141

IPASS RULE ADJUSTMENT

28					501744.4300	2076165.9900
	NW	33	39	30.0	2618.696	
300					503924.1210	2074714.6063
J	SW	82	58	38.2	1296.232	
301					503765.6398	2073428.0986
	SW	82	46	8.2	2784.611	
307					503415.1376	2070665.6347
AJ	NE	17	19	0.4	748.340	
313					504129.5584	2070888.3815
	NE	0	6	33.5	640.651	
314					504770.2079	2070889.6036
	NW	86	26	38.0	713.266	
321					504814.4491	2070177.7105
J	NW	62	52	16.1	198.207	
3					504904.8300	2070001.3100

TART						
300					503924.1210	2074714.6063
	SW	82	58	38.2	1296.232	
					503765.6398	2073428.0986
	SW	72	1	18.2	393.975	
302					503644.0368	2073053.3600
	NW	72	25	6.9	682.883	

	304						503680.3653	2072575.4673
S		NW	75	55	1.8	828.217		
	305						503967.1653	2072624.7737
SS		NW	73	6	51.9	1022.272		
	306						504062.5706	2072449.9000
		SE	16	29	26.8	82.870		
	308						503686.1786	2073451.6221
IN		SW	82	46	8.2	2784.611		
	307						503415.1376	2070665.6347
		SE	42	36	21.8	201.036		
	309						503267.1700	2070801.7268
S		NE	84	0	13.2	246.778		
	310						503440.9173	2070911.0624
SS		SW	63	1	8.1	141.200		
	311						503351.0757	2070539.8034
		NE	7	52	8.2	170.340		
	312						503583.8736	2070688.9555
IN		NE	17	19	0.4	748.340		
	313						504129.5584	2070888.3815
		SE	76	37	47.7	266.020		
	355						504068.0439	2071147.1915
S		SW	12	50	0.4	266.020		
	315						503870.1836	2070829.2938
SS		SW	7	35	0.4	400.790		
	316						503732.2738	2070835.4893
		SE	1	11	59.6	489.360		
	317						503640.3057	2070898.6289
S ART								
	307						503415.1376	2070665.6347
IN		NE	17	19	0.4	748.340		
	313						504129.5584	2070888.3815
		SW	33	8	0.4	643.870		
	319						503590.3818	2070536.4480
TR		SE	15	33	59.6	487.660		
	318						503659.7860	2071019.2488
		NE	76	20	0.4	136.420		
	320						503692.0181	2071151.8063
ART								
	28						501744.4300	2076165.9900
29		NW	89	4	59.4	1499.902		
	29						501768.4300	2074666.2800
R		NW	67	59	2.4	2728.958		
	322						502791.4220	2072136.3195
		SW	24	23	57.6	142.300		
	323						502661.8311	2072077.5362
EA								
	9						496506.0900	2073031.9900
	10						496412.0600	2076909.4500
ART								
	10						496412.0600	2076909.4500
IN		NW	88	36	39.0	3878.600		
	9						496506.0900	2073031.9900
		NE	1	53	44.0	881.505		
	324						497387.1126	2073061.1480
T		SE	19	21	24.0	1551.339		
	325						495042.4426	2073546.1778
S		SW	60	43	6.1	722.862		
	326						494688.8885	2072915.6788
		SE	84	32	27.0	722.025		
	327						494973.7517	2074264.9279

	329				498494.6500	2063570.8600
	330				498467.5100	2065207.1500
					498467.5100	2065207.1500
	329	NW	89 2 59.2	1636.515	498494.6500	2063570.8600
	331	NW	27 20 52.2	849.818	499249.4874	2063180.4612
	332	NE	0 43 39.8	1038.578	500287.9817	2063193.6521
	333	NW	0 1 9.2	1526.405	500775.8923	2063179.9490
	335	SW	59 14 15.8	467.420	500536.8177	2062778.2965
	336	SW	82 36 45.8	261.890	500742.2197	2062920.2328
	337	NW	61 17 49.2	329.140	500933.9682	2062891.2534
	338	SW	85 2 5.8	496.340	500732.9350	2062685.4715
	331	NE	0 43 39.8	1038.578	499249.4874	2063180.4612
	332	SW	86 30 4.8	381.459	500287.9817	2063193.6521
	334	SW	15 45 54.8	234.170	500264.7031	2062812.9041
	[redacted]	SW	45 28 19.8	95.990	500039.3418	2062749.2809
	341	NE	66 7 14.9	112.160	500197.3895	2062744.4718
					500310.1065	2062915.4633
	3				504904.8300	2070001.3100
	9				496506.0900	2073031.9900
	10				496412.0600	2076909.4500
	28				501744.4300	2076165.9900
	29				501768.4300	2074666.2800
	300				503924.1210	2074714.6063
	301				503765.6398	2073428.0986
	302				503644.0368	2073053.3600
	303				503971.9123	2072777.1140
	304				503880.3653	2072575.4673
	305				503967.1653	2072624.7737
	306				504062.5706	2072449.9000
	307				503415.1376	2070665.6347
	308				503686.1786	2073451.6221
	309				503267.1700	2070801.7268
	[redacted]				503440.9173	2070911.0624
					503351.0757	2070539.8034
					503583.8736	2070688.9555
	313				504129.5584	2070888.3815
	314				504770.2079	2070899.6036

316	503782.2738	2070835.4893
317	503640.3057	2070898.6289
318	503659.7860	2071019.2488
319	503590.3818	2070536.4480
320	503692.0181	2071151.8063
321	504814.4491	2070177.7105
322	502791.4220	2072136.3195
323	502661.8311	2072077.5362
324	497387.1126	2073061.1480
325	495042.4426	2073546.1778
326	494688.8885	2072915.6788
327	494973.7517	2074264.9279
328	494717.4583	2074232.6982
329	498494.6500	2063570.8600
330	498467.5100	2065207.1500
331	499249.4874	2063180.4612
332	500287.9817	2063193.6521
333	500775.8923	2063179.9490
334	500264.7031	2062812.9041
335	500536.8177	2062778.2965
336	500742.2197	2062920.2328
337	500933.9682	2062891.2534
338	500732.9350	2062685.4715
339	500039.3418	2062749.2809
340	500197.3895	2062744.4718
341	500310.1065	2062915.4633

ORDINATES STORED IN FILE JORDAN2

DATA DISK #4

APPENDIX D

COMPUTER INPUT - OUTPUT FILES
UTM CONVERSION FILES

This Page Intentionally Left Blank.

)10*81*	OPB-89-01	2070536448	5035903824803
0020*81*	OPB-89-02	2072449900	5040625714803
0030*81*	OPB-89-03	2072624774	5039671654803
140*81*	OPB-89-04	2072575467	5038803654803
050*81*	OPB-89-05	2072777114	5039719124803
000060*81*	OPB-89-06	2071151806	5036920184803
)70*81*	OPB-89-07	2071019249	5036597864803
)80*81*	OPB-89-08	2070899629	5036403064803
0090*81*	OPB-89-09	2070688955	5035838744803
00*81*	OPB-89-10	2070829294	5038701844803
.10*81*	OPB-89-11	2070835489	5037322744803
0120*81*	OPB-89-12	2070911062	5034409174803
0130*81*	OPB-89-13	2070539803	5033510764803
.40*81*	OPM-89-01	2070801727	5032671704803
150*81*	OPM-89-02	2073053360	5036440374803
000160*81*	OPM-89-03	2072077536	5026618314803
70*81*	NPM-89-01	2073061148	4973871134803
.80*81*	RPM-89-01	2074232698	4947174584803
0190*81*	RPM-89-02	2072915679	4946888854803
200*81*	OAB-89-01	2062891253	5009339684803
210*81*	OAB-89-02	2062920233	5007422204803
0220*81*	OAB-89-03	2062685472	5007329354803
0230*81*	OAM-89-01	2062778296	5005368184803
[redacted]	OAM-89-02	2062915463	5003101064803
[redacted]	FTB-89-01	2062744472	5001973904803
0025[redacted]	FTM-89-01	2062749291	5000393424803

010*80*000	OPB-89-01	43225311020N089440483570W
020*80*000	OPB-89-02	43225771317N089433890411W
000030*80*000	OPB-89-03	43225676517N089433654027W
040*80*000	OPB-89-04	43225590942N089433721181W
050*80*000	OPB-89-05	43225680712N089433447714W
000060*80*000	OPB-89-06	43225409466N089435649852W
070*80*000	OPB-89-07	43225378043N089435829492W
080*80*000	OPB-89-08	43225359190N089435992913W
000090*80*000	OPB-89-09	43225304112N089440277084W
000100*80*000	OPB-89-10	43225586465N089440085807W
110*80*000	OPB-89-11	43225450228N089440078015W
120*80*000	OPB-89-12	43225162209N089435976940W
000130*80*000	OPB-89-13	43225074641N089440480058W
140*80*000	OPM-89-01	43224990341N089440125745W
150*80*000	OPM-89-02	43225355965N089433075097W
000160*80*000	OPM-89-03	43224388972N089434400820W
170*80*000	NPM-89-01	43215175820N089433092467W
180*80*000	RPM-89-01	43212535088N089431518573W
000190*80*000	RPM-89-02	43212511181N089433301405W
000200*80*000	OAB-89-01	43222709937N089454846402W
210*80*000	OAB-89-02	43222520462N089454807900W
000220*80*000	OAB-89-03	43222511947N089455125793W
000230*80*000	OAM-89-01	43222317979N089455000865W
240*80*000	OAM-89-02	43222093665N089454816019W
250*80*000	FTB-89-01	43221982811N089455047962W
000260*80*000	FTM-89-01	43221826689N089455042056W

FINAL COORDINATE LISTING
FOR 89800

NATIONAL GEODETIC SURVEY
SP TO UTMs PROGRAM VERSION 1.0
1927 DATUM

STATION NAME	LATITUDE (NORTH)	LONGITUDE (WEST)	NORTHING(Y) METER	EASTING(X) METER	ZONE	CONVERGENCE D M S	SCALE FACTOR	ELEV (M)	GEOID HT(M)
[redacted]-89-01	43 22 53.11020	089 44 4.83570	4806589.292	278473.529	16	-1 52 44.69	1.00020369		
[redacted]-89-02	43 22 57.71317	089 43 38.30411	4806712.177	279061.709	16	-1 52 27.01	1.00020048		
OPB-89-03	43 22 56.76517	089 43 36.54027	4806681.190	279113.944	16	-1 52 25.25	1.00020020		
[redacted]-89-04	43 22 55.90942	089 43 37.21181	4806655.284	279097.969	16	-1 52 25.79	1.00020029		
[redacted]-89-05	43 22 56.80712	089 43 54.47714	4806680.966	279160.411	16	-1 52 23.94	1.00019995		
UPB-89-06	43 22 54.09466	089 43 58.49852	4806610.511	279662.135	16	-1 52 38.99	1.00020266		
[redacted]-89-07	43 22 53.78049	089 43 58.29492	4806605.144	279621.393	16	-1 52 40.21	1.00020288		
[redacted]-89-08	43 22 53.59190	089 43 59.92913	4806600.631	279584.428	16	-1 52 41.33	1.00020308		
[redacted]9-89-09	43 22 53.04112	089 44 2.77084	4806585.637	279519.924	16	-1 52 43.25	1.00020343		
OPB-89-10	43 22 55.86465	089 44 0.85807	4806671.332	279565.824	16	-1 52 42.05	1.00020318		
[redacted]	43 22 54.50228	089 44 0.78015	4806629.245	279566.199	16	-1 52 41.95	1.00020318		
[redacted]	43 22 51.62209	089 43 59.76940	4806539.644	279586.030	16	-1 52 41.15	1.00020307		
OPB-[redacted]3	43 22 50.74541	089 44 4.80058	4806515.342	279471.927	16	-1 52 44.58	1.00020369		
[redacted]-89-01	43 22 49.90941	089 44 1.25745	4806487.905	279550.811	16	-1 52 43.11	1.00020326		
[redacted]-89-02	43 22 53.55965	089 43 30.75097	4806578.038	279240.984	16	-1 52 21.26	1.00019951		
UPH-89-03	43 22 43.88272	089 43 44.00829	4806289.476	279932.393	16	-1 52 30.04	1.00020118		
[redacted]-89-01	43 21 51.75820	089 43 30.92467	4804671.563	279174.749	16	-1 52 19.25	1.00019987		
[redacted]-89-01	43 21 25.35088	089 43 15.18573	4803845.317	279502.425	16	-1 52 7.51	1.00019809		
[redacted]N-89-02	43 21 25.11181	089 43 33.01405	4803851.048	279100.847	16	-1 52 19.76	1.00020027		
OAR-89-01	43 22 37.09937	089 45 48.46402	4805853.753	276115.000	16	-1 53 55.04	1.00021661		
[redacted]-89-02	43 22 35.20462	089 45 48.07900	4805805.012	276121.727	16	-1 53 54.71	1.00021657		
[redacted]-89-03	43 22 35.11947	089 45 51.25793	4805804.757	276050.096	16	-1 53 56.89	1.00021697		
OAM-89-01	43 22 32.17978	089 45 50.00865	4805743.984	276076.228	16	-1 53 55.96	1.00021682		
[redacted]-89-02	43 22 30.93665	089 45 48.16019	4805673.403	276115.536	16	-1 53 54.61	1.00021661		
[redacted]-89-01	43 22 29.82811	089 45 50.47962	4805640.935	276062.200	16	-1 53 56.17	1.00021690		
PTM-89-01	43 22 28.26689	089 45 50.42056	4805592.726	276061.333	16	-1 53 56.08	1.00021690		

This Page Intentionally Left Blank.

1991 BORING, MONITORING WELL, AND PIEZOMETER SURVEY DATA

This Page Intentionally Left Blank.

[redacted]

VIERBICHER
ASSOCIATES

March 12, 1992

Jeffery S. Pickett
Project Manager
ABB Environmental Services, Inc.
261 Commercial Street
P.O. Box 7050
Portland, ME 04112

Dear Mr. Pickett:

Enclosed please find final report for the surveying services Task Order Number 004. The base map we have prepared for the BAAP area will be transmitted under seperate cover. Please call if you have any questions.

Very truly yours,
Vierbicher Associates, Inc.

John L. Brey, RLS
Vice President

▼ ENGINEERING
▼ ARCHITECTURE
▼ SURVEYING
▼ COMMUNITY DEVELOPMENT

▼ 400 VIKING DRIVE
P.O. BOX 379
REEDSBURG, WI 53959
(608) 524-6468
Fax (608) 524-8218

[redacted] RAYOVAC DRIVE
[redacted]TE 2
[redacted]DISON, WI 53711
[redacted]08) 274-3898
Fax (608) 274-5580

REPORT FOR
PROFESSIONAL SURVEYNG SERVICES
HORIZONATL AND VERTICAL
LOCATION SURVEY

BADGER ARMY AMMUNITION PLANT

Task Order Memorandum 004

Prepared for:

ABB Environmental Services, Inc.
261 Commercial Street
P.O. Box 7050
Portland, ME 04112

Prepared by:

Vierbicher Associates, Inc.
400 Viking Drive
P.O. Box 379
Reedsburg, WI 53959

March 6, 1992

FINAL REPORT
FOR
SURVEYING SERVICES
TASK ORDER MEMORANDUM 004
MONITORING WELL AND SOIL BORING LOCATIONS
BADGER ARMY AMMUNITION PLANT
SAUK COUNTY WISCONSIN
ABB ENVIORMENTAL SERVICES, INC.

The services required for this project includes the horizontal and vertical locations for various monitoring wells and soil borings at and adjacent to Badger Army Ammunition Plant. The horizontal positions have been determined relative to the Universal Transverse Mercator (UTM) system per the NAD 27. The vertical locations are based on Mean Sea Level (MSL) from the 1929 General Adjustment.

The horizontal and vertical control was taken from existing control monuments and traverse control currently existing within the Army Ammunition Plant. This control information has been provided by the Army Ammunition Plant.

HORIZONTAL FIELD SURVEY

The horizontal location has been taken from the existing control or has been extended from said control into the survey areas. The equipment that was utilized for the horizontal control was a Lietz SET-4 electronic total station in combination with a Lietz SDR-22 electronic data collector. The grid factor for distances was keyed into the collector at a value of 0.999891900 this provides for an automatic reduction to grid distances required for geographic computations. The output produced by the data collector is based on Wisconsin State Plane Coordinates. Multiple readings of horizontal angles and distances were taken to comply with required accuracies. A copy of the field notes generated by the data collector is attached as Appendix A. This data was keyed into and adjusted through a surveying computation software program.

VERTICAL FIELD SURVEY

The vertical location has also been taken from the existing control or has been extended from said control into the survey areas. The equipment that was used for the vertical survey was a Lietz B-1 automatic level. A copy of the field notes for the vertical survey is attached as Appendix B. The report for the elevations determined of the wells and borings is attached as Appendix C.

OFFICE COMPUTATIONS - REPORT GENERATION

The state plane coordinates determined by the data collector report was input into batch files named BAAPBORE.PAC and BAAPWELL.PAC. The files were then run through a program provided by the Bureau of Land Management named BLMSPC27. This program converts State Plane Coordinates to geographic positions (latitudes and longitude). The output from these runs were placed in batch files named BAAPBORE.LAT and BAAPBORE.LAT. Finally these geographic position files were then run through a program provided by the Bureau of Land Management named BLMUTM27. This converts the geographic position to the Universal Transverse Mercator ~~System~~ coordinates. The output files were named BAAPBORE.UTM and BAAPWELL.UTM. The printout from this file list the UTM's for the wells and borings. A copy of the files generated are attached as Appendix D.

SURVEYOR'S CERTIFICATE

I, John L. Brey, Registered Land Surveyor, hereby certify that the above described location survey and the enclosed documentation are correct to the best of my knowledge and belief.

Dated this 6th day of March, 1992.

John L. Brey, RLS-1319
Vierbicher Associates, Inc.
400 Viking Drive, P.O. Box 379
Reedsburg, WI 53959

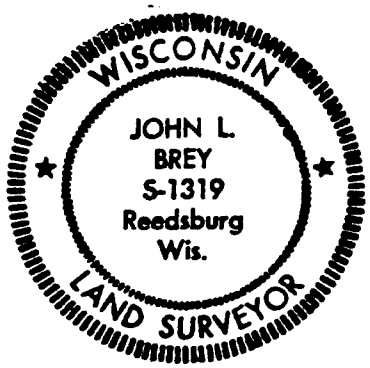

APPENDIX A

HORIZONTAL SURVEY FIELD NOTES
FIELD DATA PRINTOUT FROM SDR-22

This Page Intentionally Left Blank.

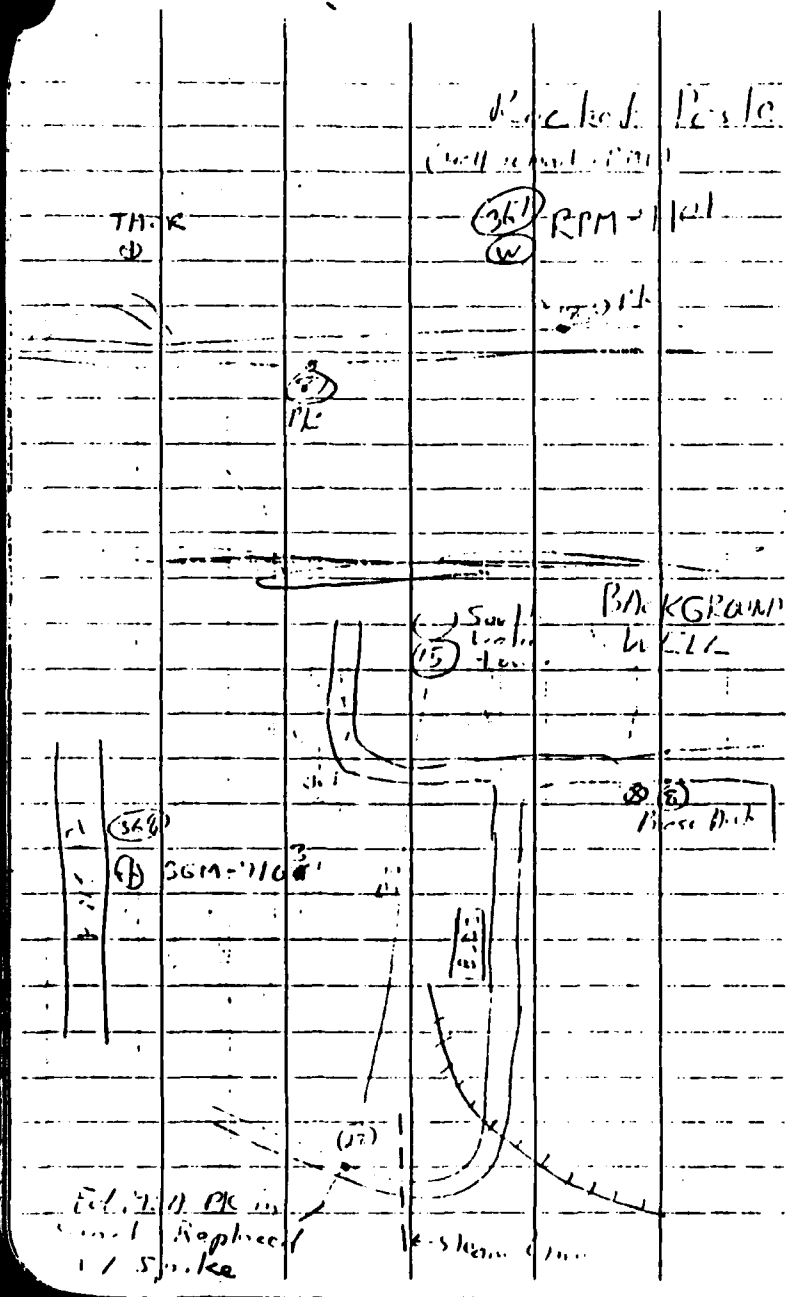
Rocket Paste
RPM-1101
TANK
PK
BACKGROUND WELL
15
Brass Dock
368
SGM-9103
Replaced
Spike

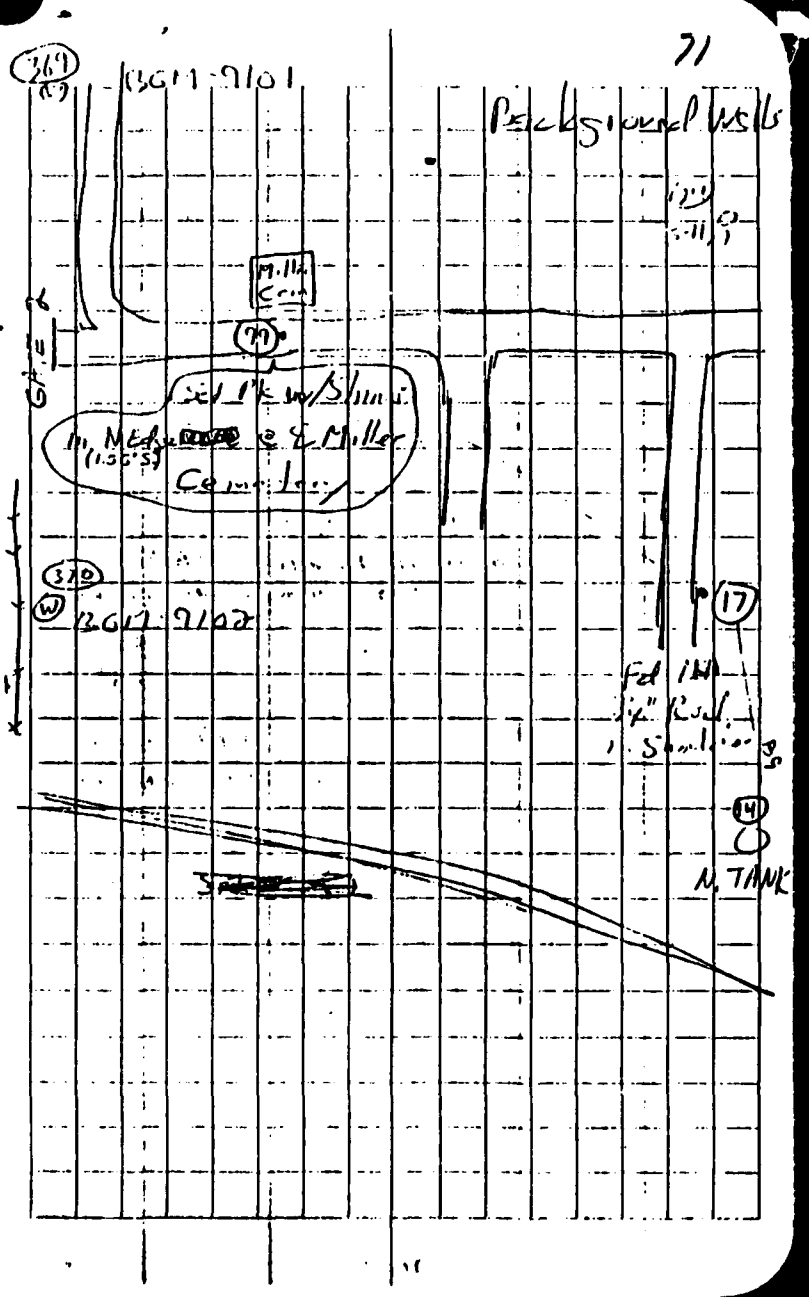
369
SGM-9101
Background Wells
Miller Cem
Set Pk w/Shims
Cemetery
370
SGM-9102
17
N. TANK

BAAP
Horiz Control
2/27/92
Schneider/Chart

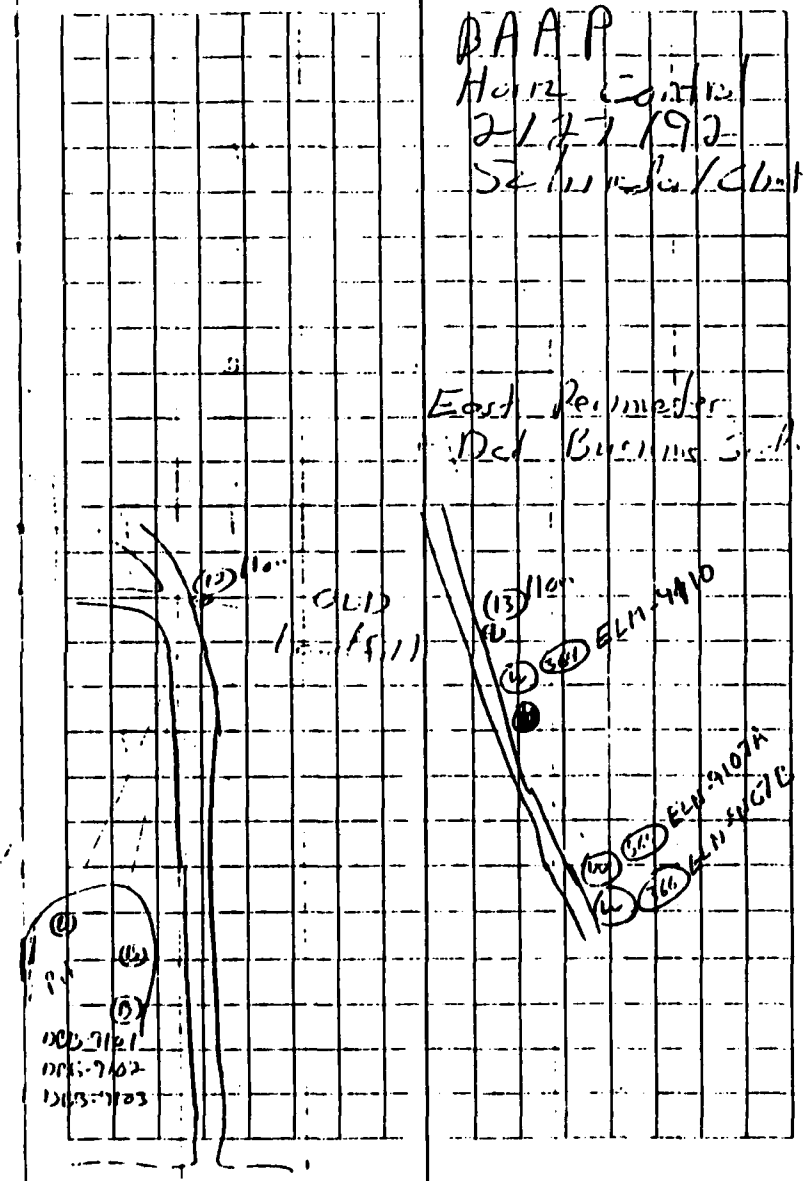

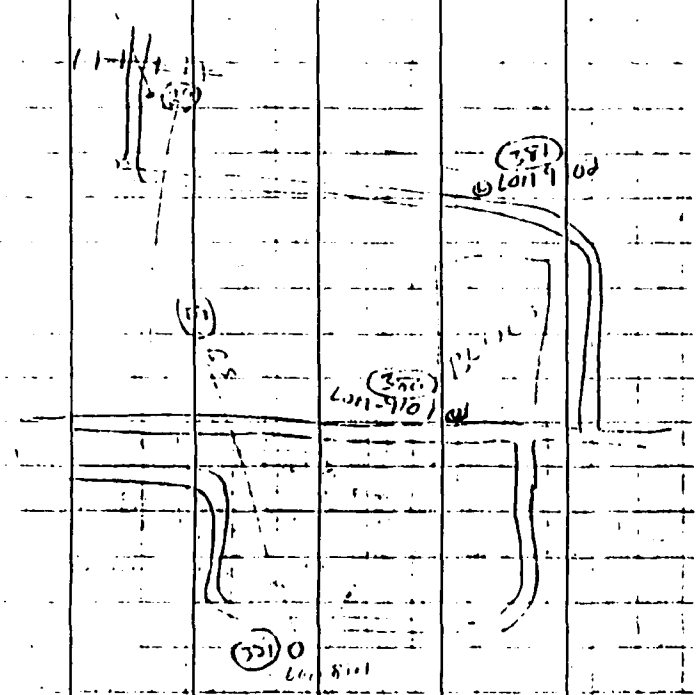
(381)
LOM 9102
(381)
LOM-9101
(331)

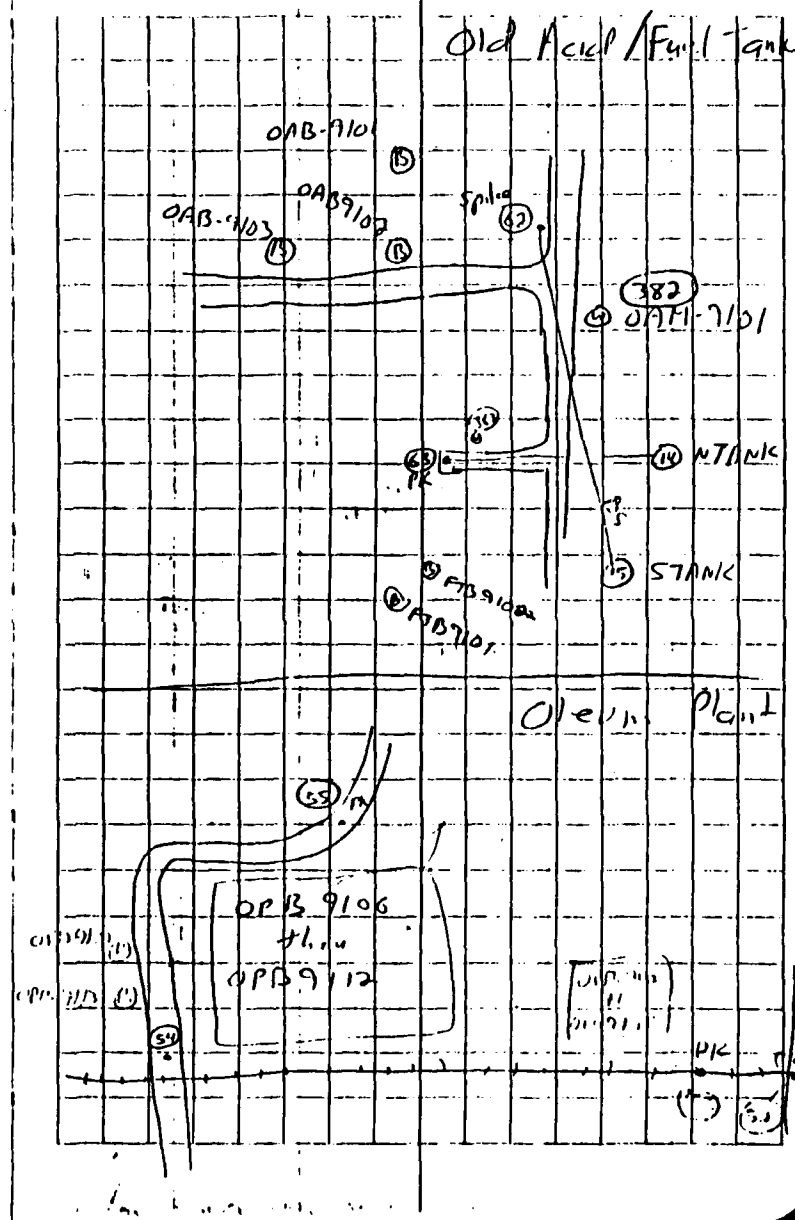
Old Acid/Fuel Tank
OAB-9101
OAB-9103
OAB9102
Spike
(382)
OAM-9101
NTANK
STANK
FTB9102
FTB9101
Oleum Plant
OPB 9106
thru
OPB9112
PK

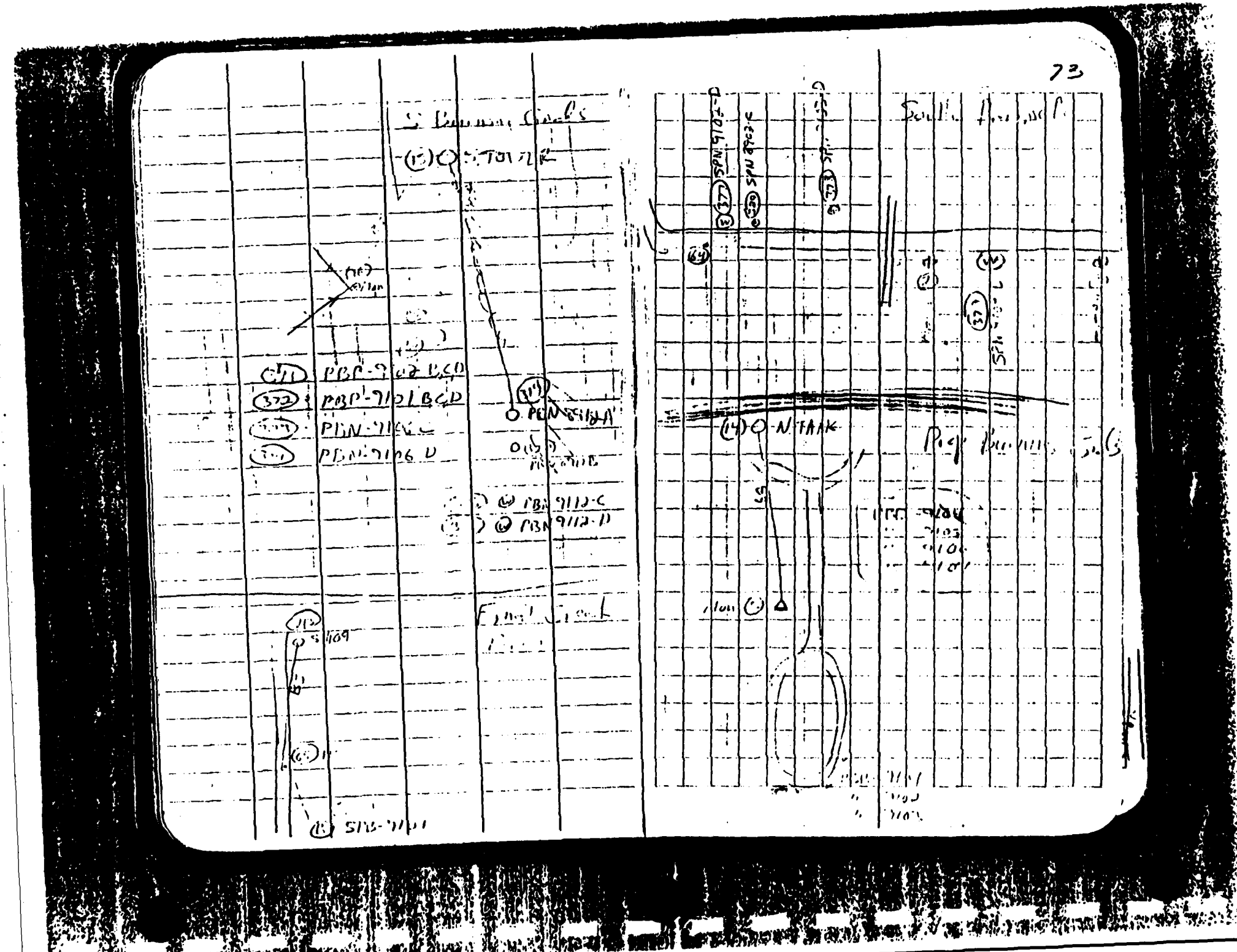

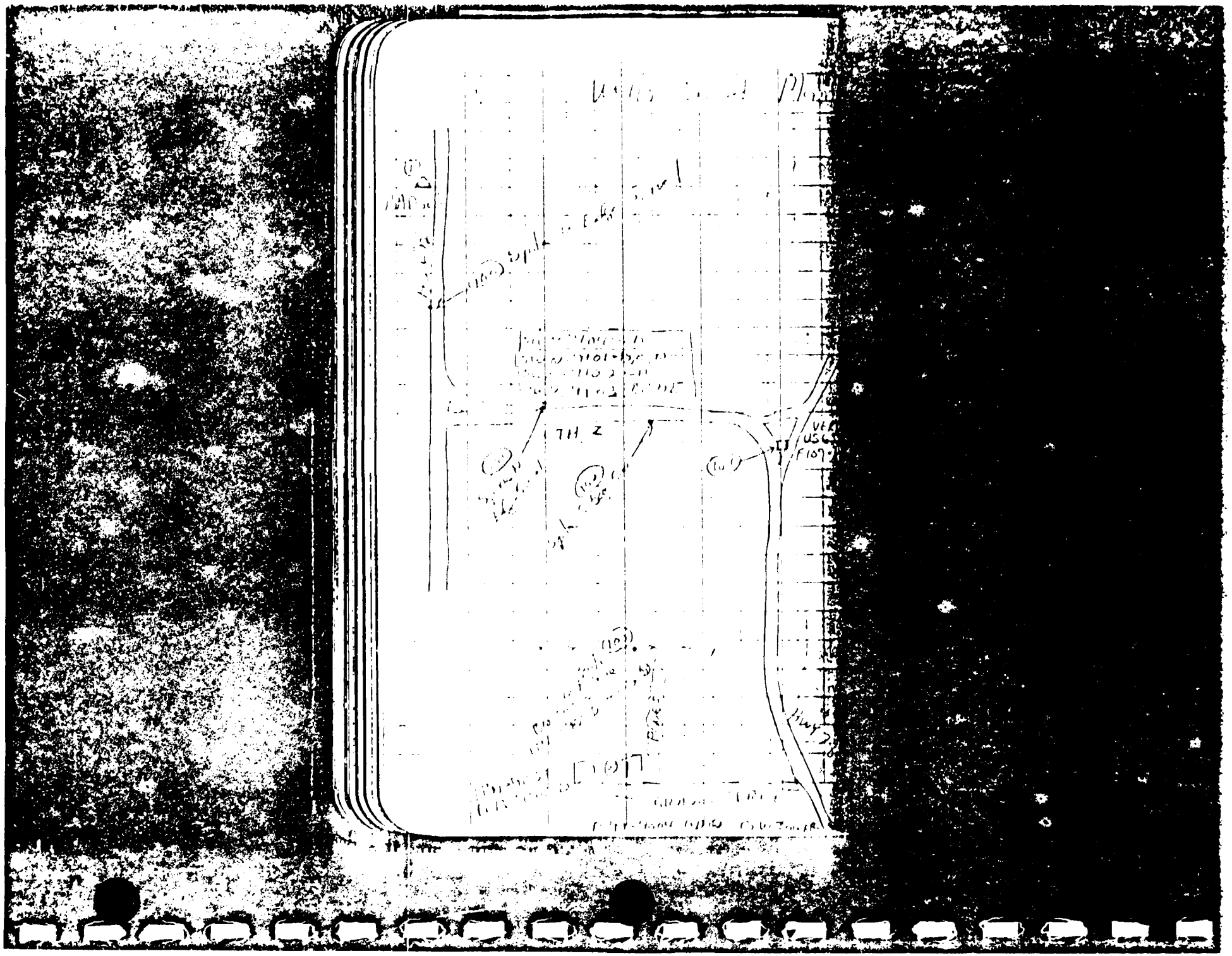

SDR20	V03-05	Copyright 1985-91 by Datacom Software Research Limited.		
		Serial no	26-Feb-92 15:15	
		Angle : Degrees	Dist : Feet	Press : Inch Hg
		Temp : Fahrenht	Coord : N-E-Elv	H.obs : Right
JOB		Job ID BAAP1		
NOTE CP		Sea level crn: N		
NOTE CP		C and R crn: Y		
NOTE CP		Atmos crn: Y		
NOTE TS		26-Feb-92 08:40		
SCALE		S.F. 0.999891900		
NOTE TS		26-Feb-92 08:40		
NOTE		BADGER		
NOTE		LOCATE MON. WELLS		
NOTE		KAV RHK		
NOTE		FB S-23		
POS KI 0001		Nrth 485879.670 Code BADGER	East 2064098.740	Elv <Null>
POS KI 0014		Nrth 500230.170 Code TOWER	East 2063778.760	Elv <Null>
POS KI 0015		Nrth 497573.050 Code TOWER	East 2063737.350	Elv <Null>
NOTE TS		26-Feb-92 10:32		
INSTR		SETcomms Theo <No text> V.obs : Zenith P.C. mm -30.000	EDM <No text> Serial no 000000 Edm o/s <Null>	Serial no 112326 Mount: not applc Refl o/s <Null>
STN TP 0001		Nrth 485879.670 Theo ht <Null>	East 2064098.740 Code BADGER	Elv <Null>
ATMOS		Press 30.00	Temp 30.0	
BKB TP 0001-0014		Azmth 358-43'22"	H.obs 359-59'58"	
OBS MC 0001-0014		Dist <Null> Code TOWER	V ang 90-00'00"	Azmth 358-43'22"
STN TP 0001		Nrth 485879.670 Theo ht <Null>	East 2064098.740 Code BADGER	Elv <Null>
[illegible]		[illegible]	[illegible]	

NOTE TS	26-Feb-92 11:20		
OBS MC 0001-0100	Dist 3065.331 Code NAIL	V ang 90-00'00"	Azmth 179-41'37"
OBS MC 0001-0100	Dist 3065.331 Code NAIL	V ang 90-00'00"	Azmth 179-41'27"
OBS MC 0001-0100	Dist 3065.331 Code NAIL	V ang 90-00'00"	Azmth 179-41'32"
STN TP 0100	Nrth 482814.714 Theo ht (Null)	East 2064115.210 Code NAIL	Elv (Null)
BKB TP 0100-0001	Azmth 359-41'32"	H.obs 359-59'53"	
OBS MC 0100-0001	Dist 3065.329 Code BADGER	V ang 90-00'00"	Azmth 359-41'39"
OBS MC 0100-0001	Dist 3065.329 Code BADGER	V ang 90-00'00"	Azmth 359-41'24"
OBS MC 0100-0001	Dist 3065.329 Code BADGER	V ang 90-00'00"	Azmth 359-41'32"
OBS MC 0100-0101	Dist 4385.498 Code NAIL	V ang 90-00'00"	Azmth 143-08'59"
OBS MC 0100-0101	Dist 4385.498 Code NAIL	V ang 90-00'00"	Azmth 143-08'39"
OBS MC 0100-0101	Dist 4385.498 Code NAIL	V ang 90-00'00"	Azmth 143-08'49"
STN TP 0101	Nrth 479305.921 Theo ht (Null)	East 2066745.190 Code NAIL	Elv (Null)
BKB TP 0101-0100	Azmth 323-08'49"	H.obs 0-00'00"	
OBS MC 0101-0100	Dist 4385.494 Code NAIL	V ang 90-00'00"	Azmth 323-08'49"
NOTE TS	26-Feb-92 11:50		
STN TP 0101	Nrth 479305.921 Theo ht (Null)	East 2066745.190 Code NAIL	Elv (Null)
BKB TP 0101-0100	Azmth 323-08'49"	H.obs 359-59'53"	
OBS MC 0101-0100	Dist 4385.486 Code NAIL	V ang 90-00'00"	Azmth 323-08'57"
OBS MC 0101-0100	Dist 4385.475 Code NAIL	V ang 90-00'00"	Azmth 323-08'42"
OBS MC 0101-0100	Dist 4385.480 Code NAIL	V ang 90-00'00"	Azmth 323-08'49"
OBS MC 0101-0102	Dist 1709.709 Code NAIL	V ang 90-00'00"	Azmth 90-45'07"
OBS MC 0101-0102	Dist 1709.719 Code NAIL	V ang 90-00'00"	Azmth 90-44'57"
OBS MC 0101-0102	Dist 1709.714	V ang 90-00'00"	Azmth 90-45'02"

OBS MC 0101-0383	Dist 42.377 Code SWN-91-02B	V ang 90-00'00"	Azmth 323-50'32"
OBS MC 0101-0384	Dist 77.390 Code SWN-91-02C	V ang 90-00'00"	Azmth 296-19'37"
OBS MC 0101-0385	Dist 1166.899 Code SWN-91-01D	V ang 90-00'00"	Azmth 271-42'37"
OBS MC 0101-0386	Dist 1210.899 Code SWN-91-01C	V ang 90-00'00"	Azmth 271-24'27"
OBS MC 0101-0387	Dist 1234.498 Code SWN-91-01B	V ang 90-00'00"	Azmth 271-14'07"
STN TP 0102	Nrth 479283.531 Theo ht <Null>	East 2068454.580 Code NAIL	Elv <Null>
BKB TP 0102-0101	Azmth 270-45'02"	H.obs 0-00'00"	
OBS MC 0102-0101	Dist 1709.699 Code NAIL	V ang 90-00'00"	Azmth 270-45'02"
STN TP 0102	Nrth 479283.531 Theo ht <Null>	East 2068454.580 Code NAIL	Elv <Null>
BKB TP 0102-0101	Azmth 270-45'02"	H.obs 359-59'55"	
OBS MC 0102-0101	Dist 1709.709 Code NAIL	V ang 90-00'00"	Azmth 270-45'07"
OBS MC 0102-0101	Dist 1709.719 Code NAIL	V ang 90-00'00"	Azmth 270-44'57"
OBS MC 0102-0101	Dist 1709.714 Code NAIL	V ang 90-00'00"	Azmth 270-45'02"
NOTE TS	26-Feb-92 12:22		
OBS MC 0102-0103	Dist 2704.066 Code NAIL	V ang 90-00'00"	Azmth 165-38'52"
OBS MC 0102-0103	Dist 2704.066 Code NAIL	V ang 90-00'00"	Azmth 165-38'42"
OBS MC 0102-0103	Dist 2704.066 Code NAIL	V ang 90-00'00"	Azmth 165-38'47"
OBS MC 0102-0388	Dist 1921.006 Code SWN-91-05B	V ang 90-00'00"	Azmth 99-54'42"
OBS MC 0102-0389	Dist 1942.447 Code SWN-91-05C	V ang 90-00'00"	Azmth 100-42'12"
OBS MC 0102-0390	Dist 1976.438 Code SWN-91-05D	V ang 90-00'00"	Azmth 101-40'22"
OBS MC 0102-0104	Dist 2074.126 Code BM USGS F109 34	V ang 90-00'00"	Azmth 99-49'02"
OBS MC 0102-0391	Dist 805.659 Code SWN-91-04C	V ang 90-00'00"	Azmth 84-47'57"
OBS MC 0102-0392	Dist 761.819	V ang 90-00'00"	Azmth 84-28'27"

OBS MC 0102-0393	Dist 305.219 Code SWN-91-03C	V ang 90-00'00"	Azmth 282-41'02"
OBS MC 0102-0394	Dist 272.409 Code SWN-91-03B	V ang 90-00'00"	Azmth 284-36'57"
OBS MC 0102-0395	Dist 229.008 Code SWN-91-03D	V ang 90-00'00"	Azmth 287-14'42"
OBS MC 0102-0396	Dist 179.314 Code SWN-91-03E	V ang 90-00'00"	Azmth 292-00'22"
NOTE TS	26-Feb-92 12:53		
STN TP 0103	Nrth 476664.159 Theo Nt (Null)	East 2069124.860 Code NAIL	Elv (Null)
BKB TP 0103-0102	Azmth 345-38'47"	H.obs 359-59'55"	
OBS MC 0103-0102	Dist 2704.076 Code NAIL	V ang 90-00'00"	Azmth 345-38'52"
OBS MC 0103-0102	Dist 2704.077 Code NAIL	V ang 90-00'00"	Azmth 345-38'42"
OBS MC 0103-0102	Dist 2704.076 Code NAIL	V ang 90-00'00"	Azmth 345-38'47"
OBS MC 0103-0397	Dist 1440.068 Code PBN-91-01C	V ang 90-00'00"	Azmth 71-22'52"
OBS MC 0103-0398	Dist 1447.600 Code PBM-90-01D	V ang 90-00'00"	Azmth 69-22'17"
OBS MC 0103-0399	Dist 819.270 Code PBN-91-02C	V ang 90-00'00"	Azmth 141-03'37"
OBS MC 0103-0400	Dist 849.054 Code PBN-91-02B	V ang 90-00'00"	Azmth 139-32'12"
OBS MC 0103-0401	Dist 862.572 Code PBM-90-02D	V ang 90-00'00"	Azmth 141-02'27"
OBS MC 0103-0402	Dist 1953.155 Code PBN-91-03C	V ang 90-00'00"	Azmth 176-07'07"
OBS MC 0103-0403	Dist 1959.229 Code PBN-91-03B	V ang 90-00'00"	Azmth 175-25'02"
OBS MC 0103-0404	Dist 1973.009 Code PBM-90-03D	V ang 90-00'00"	Azmth 175-25'57"
OBS MC 0103-0405	Dist 3733.729 Code PBN-90-04D	V ang 90-00'00"	Azmth 156-25'22"
NOTE TS	26-Feb-92 13:24		
OBS MC 0103-0406	Dist 3709.759 Code PBN-90-04B	V ang 90-00'00"	Azmth 157-23'37"
NOTE TS	26-Feb-92 14:30		
NOTE TS	26-Feb-92 14:30		

SURVEY	V03-01	Copyright 1985-91 © Datacom Software Research Limited.		
		Serial no 0000	27-FEB-92 17:31	
		Angle : Degrees	Dist : Feet	Press : Inch Hg
		Temp : Fahrenht	Coord : N-E-Elv	H.obs : Right
JOB		Job ID BAAP2		
NOTE		BAAP WELL AND BORING LOCATIONS		
NOTE		S-21		
SCALE		S.F. 0.9998031900		
NOTE CP		Sea le el crn:N		
NOTE CP		C and R crn : N		
NOTE CP		Atmos crn : Y		
NOTE TS		27-Feb-92 08:53		
NOTE TS		27-Feb-92 09:09		
INSTR		SET Theo (No text) V.obs : Zenith P.C. mm 0.000	EDM (No text) Serial no 000000 Edm o/s (Null)	Serial no 000000 Mount: not applc Refl o/s (Null)
POS KI 0012		Nrth 501768.430 Code MON	East 2074666.280	Elv (Null)
POS KI 0013		Nrth 501744.430 Code MON	East 2076165.990	Elv (Null)
STN TP 0013		Nrth 501744.430 Theo ht (Null)	East 2076165.990 Code MON	Elv (Null)
ATMOS		Press 29.00	Temp 40.0	
NOTE TS		27-Feb-92 09:27		
BKB TP 0013-0012		Azmth 270-55'01"	H.obs 0-00'00"	
OBS F1 0013-0012		Dist (Null) Code BS	V.obs 90-05'05"	H.obs 0-00'00"
OBS MC 0013-0364		Dist 134.820 Code ELM-9110	V ang 90-55'55"	Azmth 145-05'51"
OBS MC 0013-0365		Dist 1412.138 Code ELN-9107-A	V ang 91-07'05"	Azmth 146-28'41"
OBS MC 0013-0366		Dist 1461.248 Code ELN-9107-B	V ang 91-08'55"	Azmth 146-30'31"
NOTE TS		27-Feb-92 09:47		

[illegible]	[illegible] Theo ht (Null)	[illegible] Code MON	[illegible]
BKB TP 0012-0013	Azmth [illegible] 90-00'01"	H.obs 0-00'01"	
OBS F1 0012-0013	Dist (Null) Code BS	V.obs 89-54'00"	H.obs 0-00'05"
OBS MC 0012-1025	Dist 814.399 Code DBB-9102	V ang 90-34'55"	Azmth 191-42'[illegible]"
OBS MC 0012-1026	Dist 795.209 Code DBB-9103	V ang 90-38'00"	Azmth 206-02'46"
NOTE TS	27-Feb-92 10:09		
OBS MC 0012-1027	Dist 979.456 Code DBB-9101	V ang 90-08'05"	Azmth 190-41'41"
NOTE TS	27-Feb-92 10:04		
POS KI 0007	Nrth 492792.030 Code THOR	East 2074449.280	Elv (Null)
POS KI 0006	Nrth 492715.810 Code MERCURY	East 2073164.040	Elv (Null)
POS KI 0040	Nrth 492525.950 Code MSA PNT	East 2075305.390	Elv (Null)
POS KI 0041	Nrth 492531.440 Code MSA PNT	East 2077371.630	Elv (Null)
POS KI 0087	Nrth 492497.400 Code PK	East 2075409.640	Elv (Null)
POS KI 0086	Nrth 492505.600	East 2076989.440	Elv (Null)
STN SO 0007	Nrth 492792.030 Theo ht (Null)	East 2074449.280 Code MON	Elv (Null)
BKB SO 0007-0006	Azmth 266-36'22"	H.obs 359-59'55"	
OBS F1 0007-0006	Dist (Null) Code BS	V.obs 76-10'55"	H.obs 359-59'53"
NOTE TS	27-Feb-92 11:34		
STN SO 0087	Nrth 492497.400 Theo ht (Null)	East 2075409.640 Code MON	Elv (Null)
BKB SO 0087-0007	Azmth 287-03'20"	H.obs 0-00'00"	
OBS F1 0087-0007	Dist (Null) Code BS	V.obs 85-51'00"	H.obs 0-00'00"
NOTE TS	27-Feb-92 12:02		
STN TP 0086	Nrth 492505.600 Theo ht (Null)	East 2076989.440 Code PK	Elv (Null)
BKB TP 0086-0087	Azmth 269-42'09"	H.obs 0-00'00"	
OBS F1 0086-0087	Dist (Null) Code BS	V.obs 89-31'45"	H.obs 0-00'00"

NOTE TS	[illegible]		
OBS MC 0028-0368	Dist [illegible] Code BGM-9103	[illegible]	Azmth 327-[illegible]
NOTE TS	27-Feb-92 13:01		
POS KI 0028	Nrth 494312.160 Code MSA PNT	East 2063102.280	Elv (Null)
POS KI 0008	Nrth 495394.540 Code BRASS DISK	East 2063652.910	Elv (Null)
POS KI 0216	Nrth 494499.030 Code S-1123	East 2062074.570	Elv (Null)
NOTE TS	27-Feb-92 13:29		
STN SO 0028	Nrth 494312.160 Theo ht (Null)	East 2063102.280 Code PK	Elv (Null)
BKB SO 0028-0008	Azmth 26-37'00"	H.obs 0-00'00"	
OBS F1 0028-0008	Dist (Null) Code BS	V.obs 89-58'35"	H.obs 0-00'00"
NOTE TS	27-Feb-92 14:06		
POS KI 0015	Nrth 497573.050 Code S.TOWER	East 2063737.350	Elv (Null)
STN TP 0028	Nrth 494312.160 Theo ht (Null)	East 2063102.280 Code SPIKE	Elv (Null)
BKB TP 0028-0015	Azmth 11-01'14"	H.obs 0-00'00"	
OBS F1 0028-0015	Dist (Null) Code BS	V.obs 87-43'40"	H.obs 0-00'00"
OBS MC 0028-0368	Dist 2616.706 Code BGM-9103	V ang 89-54'35"	Azmth 327-50'54"
POS SO 1028	Nrth 495394.721 Code 0008 Fill (Null)	East 2063652.210	Elv (Null)
NOTE	CHECK ON 8 POOR		
NOTE TS	27-Feb-92 14:22		
POS SO 1029	Nrth (Null) Code 0216 Fill (Null)	East (Null)	Elv (Null)
NOTE	ANGLE CHECK TO 216 RIGHT ON		
POS KI 0214	Nrth 503377.900 Code S-1127	East 2063312.330	Elv (Null)
POS KI 0017	Nrth 502329.560 Code MSA PNT	East 2063232.140	Elv (Null)
NOTE TS	27-Feb-92 14:37		
POS KI 0018	Nrth 503159.870 Code MSA PNT	East 2064663.040	Elv (Null)

	Theo ht <Null>	Code S-112	
BKB SO 0014-0013	Azmth 178-48'45"	H.obs 0-00'00"	
OBS F1 0014-0013	Dist <Null> Code BS	V.obs 88-48'15"	H.obs 0-00'00"
NOTE TS	27-Feb-92 15:10		
POS MI 0014	Nrth 500100.170 Code N.TOWER	East 2063778.760	Elv <Null>
STN SO 0017	Nrth 502329.560 Theo ht <Null>	East 2063232.140 Code MSA ROD	Elv <Null>
BKB SO 0017-0014	Azmth 165-24'21"	H.obs 0-00'00"	
OBS F1 0017-0014	Dist <Null> Code BS	V.obs 86-43'20"	H.obs 0-00'00"
OBS F1 0017-0014	Dist <Null> Code N.TOWER	V.obs 86-43'40"	H.obs 0-00'00"
OBS MD 0017-0099	Dist 994.260 Code Mult dist#1	V.obs <Null>	H.obs <Null>
OBS MD 0017-0099	Dist 994.260 Code Mult dist#2	V.obs <Null>	H.obs <Null>
OBS F1 0017-0099	Dist 994.260 Code PK	V.obs 90-12'55"	H.obs 117-31'55"
OBS MD 0017-0099	Dist 994.260 Code Mult dist#1	V.obs <Null>	H.obs <Null>
OBS MD 0017-0099	Dist 994.260 Code Mult dist#2	V.obs <Null>	H.obs <Null>
OBS F2 0017-0099	Dist 994.260 Code PK	V.obs 269-46'55"	H.obs 297-31'50"
NOTE TS	27-Feb-92 15:25		
OBS F2 0017-0014	Dist <Null> Code N.TOWER	V.obs 273-14'35"	H.obs 180-00'00"
SET TV 0017	Count 002		
OBS MC 0017-0014	Dist <Null> Code N.TOWER	V ang 86-44'32"	Azmth 165-24'21"
OBS MC 0017-0099	Dist 994.258 Code PK	V ang 90-13'00"	Azmth 282-56'14"
POS TV 0099	Nrth 502552.130 Code PK	East 2062263.230	Elv <Null>
BKB TV 0017-0014	Azmth 165-24'21"	H.obs 0-00'00"	
STN TP 0099	Nrth 502552.130 Theo ht <Null>	East 2062263.230 Code PK	Elv <Null>
BKB TP 0099-0017	Azmth 102-56'14"	H.obs 0-00'00"	

NOTE TS	27-Feb-92 15:40		
OBS MC 0099-0366	Dist 712.094 Code BGM-9101	V ang 90-26'00"	Azmth 340-10'29"
OBS MC 0099-0370	Dist 493.629 Code BGM-9102	V ang 90-17'05"	Azmth 211-26'49"
NOTE TS	27-Feb-92 16:05		
POS KI 0319	Nrth 486337.600 Code PBN 8912-A	East 2066314.440	Elv (Null)
POS KI 0320	Nrth 486310.600 Code PBN 8912-B	East 2066313.920	Elv (Null)
STN SO 0319	Nrth 486337.600 Theo ht (Null)	East 2066314.440	Elv (Null)
BKB SO 0319-0015	Azmth 346-06'59"	H.obs 0-00'05"	
OBS F1 0319-0015	Dist (Null) Code BS	V.obs 89-10'30"	H.obs 0-00'03"
POS KI 0096	Nrth 487682.455 Code MON	East 2065958.520	Elv (Null)
NOTE TS	27-Feb-92 16:26		
STN TP 0096	Nrth 487682.455 Theo ht (Null)	East 2065958.520	Elv (Null)
BKB TP 0096-0015	Azmth 347-20'34"	H.obs 0-00'00"	
OBS F1 0096-0015	Dist (Null) Code BS	V.obs 88-54'35"	H.obs 0-00'00"
OBS MC 0096-0371	Dist 527.669 Code PBP 9102-BCD	V ang 89-41'10"	Azmth 135-59'14"
OBS MC 0096-0372	Dist 742.639 Code PBP 9101-BCD	V ang 89-26'45"	Azmth 127-47'04"
OBS MC 0096-0373	Dist 840.179 Code PBN 9106-C	V ang 89-39'20"	Azmth 133-37'09"
OBS MC 0096-0374	Dist 821.059 Code PBN 9106-D	V ang 89-41'55"	Azmth 134-40'29"
OBS MC 0096-0375	Dist 1507.127 Code PBN 9112-C	V ang 89-53'25"	Azmth 158-38'54"
NOTE TS	27-Feb-92 16:41		
OBS MC 0096-0376	Dist 1530.027 Code PBN 9112-D	V ang 89-55'55"	Azmth 159-15'49"

* END OF REPORT *

SDR2x	V03-017	Copyright 1985-91 by Datacom Software Research Limited.		
		Serial no 0000	28-FEB-92 10:19	
		Angle : Degrees	Dist : Feet	Press : Inch hg
		Temp : Fahrenht	Coord : N-E-Elv	H.obs : Right
JOB		Job ID BAAP3		
NOTE		BAAP WELLS AND BORINGS		
NOTE		3-23		
SCALE		S.F. 0.999891900		
NOTE CP		Sea level crn:N		
NOTE CP		C and R crn : N		
NOTE CP		Atmos crn : Y		
NOTE TS		27-Feb-92 18:26		
NOTE TS		28-Feb-92 08:09		
INSTR		SET	EDM (No text)	Serial no 000000
		Theo (No text)	Serial no 000000	Mount: not applc
		V.obs : Zenith	Edm o/s (Null)	Refl o/s (Null)
		P.C. mm 0.000		
POS KI 0014		Nrth 500230.170	East 2063778.760	Elv (Null)
		Code NTOWER		
POS KI 0015		Nrth 497573.050	East 2063737.350	Elv (Null)
		Code S.TOWER		
POS KI 0213		Nrth 488535.600	East 2064509.900	Elv (Null)
		Code S1109		
POS KI 0065		Nrth 487183.315	East 2064483.360	Elv (Null)
		Code PK		
POS KI 0064		Nrth 484697.850	East 2065054.350	Elv (Null)
		Code PK		
POS KI 0002		Nrth 484682.930	East 2066803.060	Elv (Null)
		Code APOLLO		
POS KI 0003		Nrth 484686.320	East 2068037.990	Elv (Null)
		Code TITAN		
POS KI 0329		Nrth 484743.700	East 2065402.800	Elv (Null)
		Code SPN 8902-C		
POS KI 0052		Nrth 503924.120	East 2074714.610	Elv (Null)
		Code PK		
POS KI 0053		Nrth 503765.640	East 2073428.100	Elv (Null)
		Code PK		

	Code PK		
POS KI 0003	Nrth 504129.560 Code PK	East 2070664.360	Elv (Null)
NOTE TS	28-Feb-92 08:52		
POS KI 0004	Nrth 491898.100 Code MON	East 2066309.050	Elv (Null)
POS KI 0005	Nrth 491398.300 Code MON	East 2066501.000	Elv (Null)
STN TP 0065	Nrth 487183.315 Theo ht (Null)	East 2064483.360 Code PK	Elv (Null)
ATMOS	Press 29.00	Temp 40.0	
NOTE TS	28-Feb-92 09:07		
BKB TP 0065-0213	Azmth 1-07'27"	H.obs 0-00'00"	
OBS F1 0065-0213	Dist (Null) Code BS	V.obs 89-56'00"	H.obs 0-00'00"
OBS MC 0065-1028	Dist 1308.338 Code SPB 9101	V ang 90-57'45"	Azmth 168-53'07"
STN TP 0064	Nrth 484697.850 Theo ht (Null)	East 2065054.350 Code PK	Elv (Null)
BKB TP 0064-0329	Azmth 82-30'14"	H.obs 0-00'00"	
OBS F1 0064-0329	Dist (Null) Code BS	V.obs 90-36'40"	H.obs 0-00'00"
NOTE TS	28-Feb-92 09:22		
OBS MC 0064-0377	Dist 134.930 Code SPN 9102-D	V ang 91-21'30"	Azmth 75-28'29"
OBS MC 0064-0378	Dist 943.948 Code SPN 9103-D	V ang 89-56'45"	Azmth 77-10'29"
NOTE TS	28-Feb-92 09:37		
STN TP 0002	Nrth 484682.930 Theo ht (Null)	East 2066803.060 Code APOLLO	Elv (Null)
BKB TP 0002-0003	Azmth 89-50'34"	H.obs 0-00'00"	
OBS F1 0002-0003	Dist (Null) Code BS	V.obs 88-45'40"	H.obs 0-00'00"
OBS MC 0002-0379	Dist 332.889 Code SPN 9104-D	V ang 90-11'15"	Azmth 88-29'24"
NOTE TS	28-Feb-92 10:00		
STN TP 0005	Nrth 491398.300 Theo ht (Null)	East 2066501.000 Code MON	Elv (Null)
BKB TP 0005-0014	Azmth 342-52'09"	H.obs 0-00'00"	
OBS F1 0005-0014	Dist (Null)	V.obs 89-08'35"	H.obs 0-00'00"

OBS MC 0005-1029	Dist 848.[illegible] Code PBB9101	V ang 89-04'00"	Azmth 164-22'44"
OBS MC 0005-1030	Dist 1021.648 Code PBB9102	V ang 89-04'00"	Azmth 171-42'47"
OBS MC 0005-1031	Dist 1018.148 Code PBB9103	V ang 89-37'10"	Azmth 181-48'29"
OBS MC 0005-1032	Dist 389.879 Code PBB9104	V ang 88-16'05"	Azmth 56-16'54"
OBS MC 0005-1033	Dist 352.209 Code PBB9105	V ang 88-00'30"	Azmth 61-30'09"
NOTE TS	28-Feb-92 10:16		
OBS MC 0005-1034	Dist 749.069 Code PBB9106	V ang 88-27'10"	Azmth 43-48'14"
OBS MC 0005-1035	Dist 613.559 Code PBB9107	V ang 88-24'30"	Azmth 45-31'39"
POS KI 0321	Nrth 492013.500 Code LOM 8901	East 2067665.700	Elv (Null)
POS KI 0069	Nrth 492493.284 Code PK	East 2067871.200	Elv (Null)
STN SO 0321	Nrth 492013.500 Theo ht (Null)	East 2067665.700	Elv (Null)
BKB SO 0321-0015	Azmth 324-45'19"	H.obs 359-59'55"	
OBS F1 0321-0015	Dist (Null) Code BS	V.obs 89-19'00"	H.obs 359-59'55"
NOTE TS	28-Feb-92 10:38		
OBS MC 0321-0380	Dist 605.499 Code LOM 9101	V ang 89-55'15"	Azmth 5-00'44"
NOTE TS	28-Feb-92 10:54		
POS KI 0029	Nrth 493778.510 Code MSA PNT	East 2066523.780	Elv (Null)
STN SO 0029	Nrth 493778.510 Theo ht (Null)	East 2066523.780	Elv (Null)
BKB SO 0029-0015	Azmth 323-42'33"	H.obs 0-00'00"	
OBS F1 0029-0015	Dist (Null) Code BS	V.obs 88-29'50"	H.obs 0-00'00"
OBS MC 0029-0381	Dist 1458.748 Code LOM 9102	V ang 88-41'55"	Azmth 108-07'18"
NOTE TS	28-Feb-92 11:11		
POS KI 0062	Nrth 500775.890 Code SPIKE	East 2063179.950	Elv (Null)
POS KI 0060	Nrth 499949.490	East 2063180.[illegible]0	Elv (Null)

STN SO 0062	Nrth 500775.890 Theo ht <Null>	East 2063179.950 Code SPIKE	Elv <Null>
BKB SO 0062-0015	Azmth 170-07'39"	H.obs 0-00'00"	
OBS F1 0062-0015	Dist <Null> Code BS	V.obs 87-45'25"	H.obs 0-00'00"
OBS MC 0062-1036	Dist 486.769 Code OAB 9103	V ang 89-48'05"	Azmth 288-11'29"
OBS MC 0062-1037	Dist 267.620 Code OAB 9102	V ang 90-03'30"	Azmth 262-05'04"
NOTE TS	28-Feb-92 11:27		
OBS MC 0062-1036	Dist 324.149 Code OAB 9101	V ang 87-47'55"	Azmth 296-57'59"
OBS MC 0062-0382	Dist 191.730 Code OAM 9101	V ang 89-27'50"	Azmth 144-38'24"
POS KI 0063	Nrth 500264.700 Code PK	East 2062812.900	Elv <Null>
NOTE TS	28-Feb-92 11:42		
POS KI 0363	Nrth 500310.100 Code OAM 8902	East 2062915.500	Elv <Null>
STN SO 0063	Nrth 500264.700 Theo ht <Null>	East 2062812.900 Code PK	Elv <Null>
BKB SO 0063-0014	Azmth 92-02'51"	H.obs 0-00'00"	
OBS F1 0063-0014	Dist <Null> Code BS	V.obs 82-15'30"	H.obs 0-00'00"
OBS MC 0063-1039	Dist 114.360 Code FTB 9102	V ang 92-23'30"	Azmth 198-26'26"
OBS MC 0063-1040	Dist 91.160 Code FTB 9101	V ang 91-24'45"	Azmth 228-41'06"
NOTE TS	28-Feb-92 11:59		
STN TP 0055	Nrth 504129.560 Theo ht <Null>	East 2070888.380 Code PK	Elv <Null>
BKB TP 0055-0054	Azmth 197-1' 01"	H.obs 0-00'00"	
OBS F1 0055-0054	Dist <Null> Code BS	V.obs 90-14'10"	H.obs 0-00'00"
OBS MC 0055-1041	Dist 264.310 Code OPB9110	V ang 90-08'10"	Azmth 191-50'21"
OBS MC 0055-1042	Dist 398.489 Code OPB9111	V ang 90-01'15"	Azmth 188-37'31"
OBS MC 0055-1043	Dist 486.679 Code OPB9108	V ang 89-58'30"	Azmth 179-14'56"
[illegible]	[illegible]	[illegible]	[illegible]

OBS MC 0055-1045	Dist 514.869 Code OPB9106	V ang 87-48'05"	Azmth 148-34'40"
NOTE TS	28-Feb-92 12:44		
STN TP 0054	Nrth 501415.140 Theo ht (Null)	East 2070655.630 Code PK	Elv (Null)
BKB TP 0054-0053	Azmth 17-19'01"	H.obs 0-00'00"	
OBS F1 0054-0053	Dist (Null) Code BS	V.obs 89-48'40"	H.obs 0-00'00"
OBS MC 0054-1046	Dist 241.080 Code OPB9112	V ang 91-18'10"	Azmth 83-43'26"
OBS MC 0054-1047	Dist 168.070 Code OPB9109	V ang 89-40'05"	Azmth 8-09'36"
OBS MC 0054-1048	Dist 89.140 Code OPB9101	V ang 89-25'50"	Azmth 279-06'36"
OBS MC 0054-1049	Dist 109.880 Code OPB9113	V ang 90-26'25"	Azmth 240-36'41"
NOTE TS	28-Feb-92 12:45		
STN TP 0053	Nrth 503765.640 Theo ht (Null)	East 2073428.100 Code PK	Elv (Null)
BKB TP 0053-0052	Azmth 82-58'38"	H.obs 0-00'00"	
OBS F1 0053-0052	Dist (Null) Code PK	V.obs 90-16'25"	H.obs 0-00'00"
OBS MC 0053-1050	Dist 778.449 Code OPB9105	V ang 92-09'30"	Azmth 276-19'23"
OBS MC 0053-1051	Dist 831.069 Code OPB9103	V ang 92-13'55"	Azmth 284-29'18"
OBS MC 0053-1052	Dist 863.109 Code OPB9104	V ang 92-01'10"	Azmth 276-48'33"
OBS MC 0053-1053	Dist 996.548 Code OPB9102	V ang 91-57'25"	Azmth 288-40'43"

* END OF REPORT *

This Page Intentionally Left Blank.

APPENDIX B

VERTICAL SURVEY FIELD NOTES

This Page Intentionally Left Blank.

BAAP

OFF POST AREA to South
Well Control
12/9/91
Schroeder/Schmidt
Geology 405

Ground Shot @ Natural Shoulder near well

PVC well Pipe Shot on highest point

Steel well Casing shot on North Edge (Cover off)

Loop #1

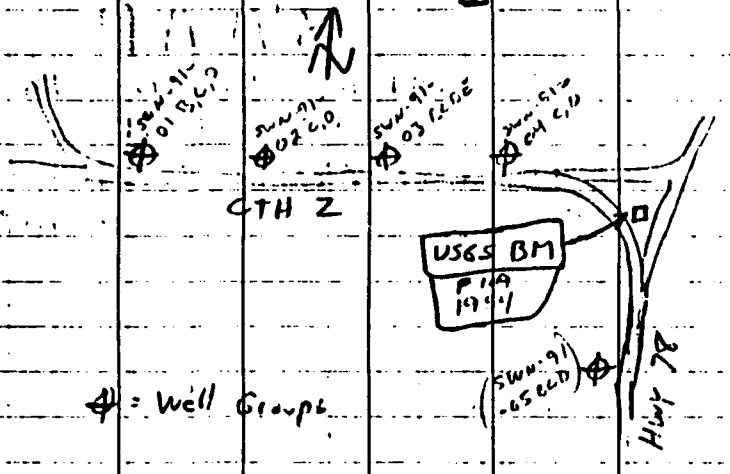

STA		BS	HI	FS	Elev
USGS F 109		5.846	838.61		832.764
SWN-91-05D	GROUND			7.4	831.2
" "	PVC			5.30	833.31
" "	Steel Casing			5.13	833.48
SWN-91-05C	Grnd			7.8	830.8
" "	PVC			5.75	832.86
" "	Steel Casing			5.71	832.94
SWN-91-05B	Grnd			8.1	830.5
" "	PVC			5.941	832.67
" "	Steel Casing			5.81	832.80
TP 1		4.26	838.66	4.31	834.40
TP 2		4.70	838.07	5.31	833.37

STA		BS	HI	FS	27 ELEV
SWN-91-04C	Grnd			5.3	832.8
" "	PVC			3.20	834.87
" "	Steel Casing			3.00	835.07
SWN-91-04D	Grnd			4.6	833.5
" "	PVC			2.79	835.28
" "	Steel Casing	4.91	840.31	2.67	835.40
TP 3		5.96	841.94	4.33	835.98
SWN-91-03E	Grnd			6.9	835.0
" "	PVC			4.56	837.38
" "	Steel Casing			4.38	837.56
SWN-91-03D	Grnd			6.9	835.0
" "	PVC			4.85	837.09
" "	Steel Casing			4.85	837.09
SWN-91-03B	Grnd			7.2	834.7
" "	PVC			5.31	836.63
" "	Steel Casing			5.24	836.70
SWN-91-03C	Grnd			7.3	834.6
" "	PVC			5.21	836.73
" "	Steel Casing	6.12	842.86	5.20	836.74
TP 4		4.70	843.05	4.5	838.35
TP 5		4.55	841.54	6.04	836.99
TP 6		4.89	840.41	5.82	835.72
SWN-91-02D	Grnd			5.9	834.5
" "	PVC			3.80	836.61
" "	Steel Casing			3.65	836.76

STA		BS	HI	FS	Elev
SWN-91-02	C Gnd			6.0	831.4
"	PVC			4.02	836.39
"	Steel Casing			3.81	836.60
TP	7	4.83	839.09	6.15	834.26
TP	8	5.57	839.43	5.23	833.86
SWN-91-01D	Gnd			7.9	831.5
"	PVC			5.86	833.57
"	Steel Casing			5.67	833.76
SWN-91-01C	Gnd			8.4	831.0
"	PVC			5.40	834.03
"	Steel Casing			5.31	834.12
SWN-91-01B	Gnd			8.6	830.8
"	PVC			6.18	833.25
"	Steel Casing	5.75	839.20	5.98	833.45
TP	9	5.69	839.51	5.38	833.82
TP	10	6.09	841.09	4.51	835.00
TP	11	5.23	842.25	4.57	836.52
TP	12	5.66	843.735	4.175	838.075
TP	13	4.69	842.63	5.795	837.94
CHECK SWN-91-01C	(Steel Casing			5.89	836.74
TP	14	4.70	841.55	5.78	836.85
TP	15	4.27	839.69	6.131	835.42
TP	16	4.92	838.16	6.45	833.24
TP	17	5.94	839.36	4.74	833.42
TP	18	5.15	839.555	4.955	834.405

STA		BS	HI	FS	Elev
USGS F109				6.79½	832.764
		114.736		114.736	
	Σ	114.71		114.76	

STA		BS	HI	FS	Elev
SWN-91-01D	Steel Casing	3.54	838.94		835.40
TP 16				5.70	833.24
TP 6		5.19	841.21		835.72
SWN-91-02D	Steel Casing			4.45	836.76
TP 11				4.69	836.52

LOOP #2

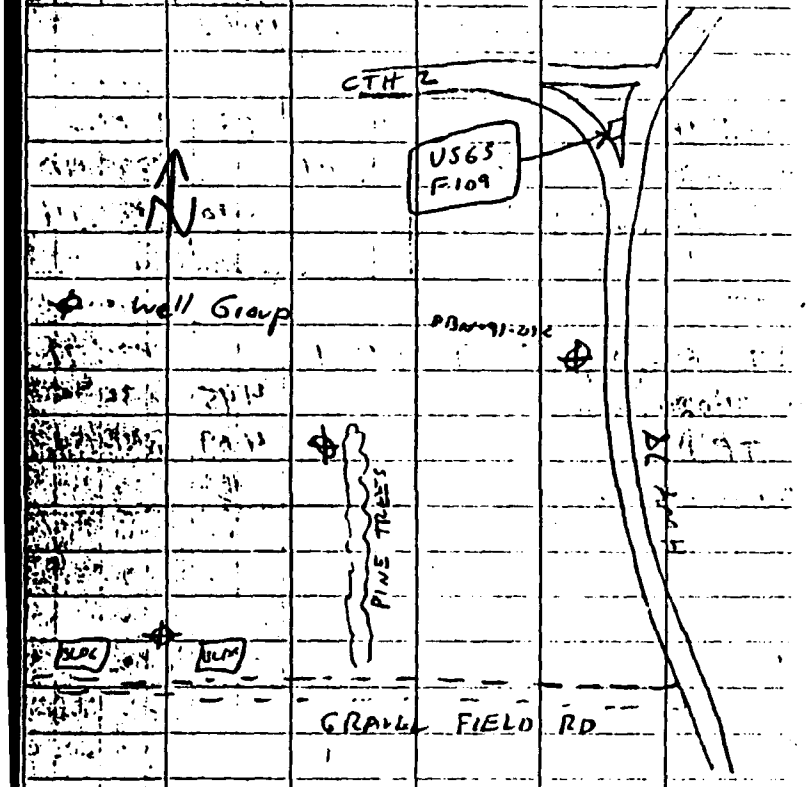

STA	BS	HI	FS	Elev
USGS F109	6.76	839.525		832.761
TP 19	5.60	840.50	4.625	834.90
TP 20	3.87	839.47	4.90	835.60
TP 21	3.58	835.98	7.07	832.40

STA		BS	HI	FS	Elev
PBM-90-01D	Grnd			7.2	828.8
	PVC			4.15	831.53
	Steel Casing			4.66	831.32
PBN-91-01C	Grnd			8.0	828.0
	PVC			5.94	830.041
	Steel Casing	3.41	833.58	5.81	830.17
TP 22		2.99	830.77	5.60	827.98
TP 23		2.73	825.65	8.05	822.92
PBM-90-02D	Grnd			6.9	818.75
	PVC			4.31	821.34
	Steel Casing			4.52	821.13
PBN-91-02B	Grnd			6.6	819.0
	PVC			4.15	821.20
	Steel Casing			4.29	821.36
PBN-91-02C	Grnd			5.7	819.9
	PVC			3.73	821.92
	Steel Casing			3.56	822.09
TP 24		3.74	822.54	7.05	818.60
TP 25		3.86	819.54	6.86	815.68
PBM-90-03D	Grnd			6.4	813.1
	PVC			4.68	814.86
	Steel Casing			4.90	814.641
PBN-91-03B	Grnd			6.8	812.7
	PVC			4.82	814.72
	Steel Casing			4.65	814.89

STA		BS	HI	FS	Elev
PBN-91-03C	Gnd			7.2	812.3
	PVC			5.17	814.37
	Steel Casing	4.68	819.18	5.04	814.59
TP 26		7.08	823.25	3.01	816.17
TP 27		5.82	824.29	4.78	818.47
CHECK PBN-91-02C	Steel Casing			2.20	822.09
TP 28		8.63	832.32	0.60	823.69
TP 29		5.93	831.29	6.96	825.36
TP 30		5.90	834.90	2.29	829.00
TP 31		4.95	835.56	4.29	830.61
CHECK PBN-91-01C	Steel Casing	5.91	836.08	5.39	830.17
TP 32		6.58	839.68	2.98	833.10
TP 33		4.68	840.035	4.325	835.355
TP 34		6.62	840.015	6.64	833.395
USGS F109 1054				7.25	832.765/.84
	Σ =	103.52		103.515	

(Shot for Borings in Natural Gnd)

Burning Ground
Soil Boring Elevs
12/10/91
Pg 35

STA	BS	HI	FS	Elev
ALUM 9500N MON 5500E	10.83	871.40		860.57
TP35	9.99	880.21	1.18	870.22
Boring PBB-91-04			7.5	872.7
TP 36	6.11	885.16	1.16	879.05
Boring PBB-91-05			4.6	880.6
Boring PBB-91-07			6.8	878.4
Boring PBB-91-06			3.1	882.1
TP 37	3.41	880.33	8.30	876.86
TP 38	6.64	880.30	6.67	873.66
Boring PBB-91-01			5.1	875.2
Boring PBB-91-02			6.3	874.0
Boring PBB-91-03			11.4	868.9
TP 39	1.81	872.27	9.84	870.46
~~ALUM 9500N MON 5500E~~ TP40	5.57	870.65	7.49	864.78
ALUM 9500N MON 5500E			10.07	860.58/.57

South Burning Ground Peiz/Monitor well Elevs

STA		BS	HI	FS	Elev
PBM 85-06	Steel Casing	5.47	853.92		848.45
PBN-91-06C	Gnd			7.8	846.1
" "	PVC			5.63	848.29
" "	Steel Casing			5.49	848.43
PBN-91-06D	Gnd			8.1	845.8
" "	PVC			6.42	847.50
" "	Steel Casing			6.23	847.69
PBP-91-01	B,C,D				
" "	Gnd			5.6	848.3
" "	PVC			3.39	850.53
" "	Steel Casing			3.32	850.60
PBP-91-02	B,C,D				
" "	Gnd			6.3	847.6
" "	PVC			3.83	850.09
" "	Steel Casing			3.82	850.10
TP 41		8.56	860.60	1.88	852.04
PBN 85-04A	Steel Casing			0.50	860.10 ok

STA		BS	HI	FS	Elev
PBN-91-12A	Steel Casing	1.31	857.02		855.71
PBN-91-12B	Steel Casing			0.695	856.325/33
PBN-91-12C	Gnd			4.8	852.2
" "	PVC			2.60	854.42
" "	Steel Casing			2.53	854.49
PBN-91-12D	Gnd			5.8	851.2
" "	PVC			3.73	853.29
" "	Steel Casing			3.51	853.48

MON. WELLS N. OF BURNING Grds

STA		BS	HI	FS	ELEV *
LOM 8901	STEEL CASING	6.54	924.75		918.21
TP 42		4.24	921.81	7.18	917.57
LOM-91-01	Gnd			6.3	915.5
"	PVC			4.30	917.51
"	Steel Casing			4.09	917.72
TP 43		1.47	919.43	3.85	917.96
LOM-91-02	Gnd			9.1	910.3
"	PVC			7.13	912.30
"	Steel Casing			7.02	912.41
TP 44		0.62	910.69	9.36	910.07
TP 45		0.47	900.74	10.42	900.27

* Elev Hts Changed - See P. 39

STA		BS	HI	FS	Elev
TP 46		1.38	892.27	9.85	890.89
PBM-89-11	Steel Casing			7.66	884.61 *

* Elev Has Changed - See P.39

Final Creek Soil Borings Elev

(Note S-1133 Has been changed)

STA		BS	HI	FS	Elev
SPN-8901C	Steel Casing	4.19	834.39		830.20
TP 47		9.31	842.70	1.00	833.39
TP 48		1.03	835.52	8.21	834.49
SPB-91-01	Boring			10.6	824.9
TP 49		7.83	842.39	0.96	834.56
TP 50		1.24	834.97	8.66	833.73
SPN-8901C	Steel Casing			4.77	830.20

South Perimeter (Sethlins Pond) Monitor Well Elevs

STA		BS	HI	FS	Elev
SPN 8902 A	Steel Casing	2.14	825.90		823.76
SPN 8902 B	"	2.24			823.66
SPN-91-02D	Gnd			4.3	821.6
" "	PVC			1.87	824.03
" "	Steel Casing			1.78	824.12

STA		BS	HI	FS	Elev
SPN 8903 A	MOVED	3.31	822.07		MOVED
SPN 8903 B	Steel Casing			3.86	818.21
SPN-91-03D	Gnd			5.4	816.7
" "	PVC			2.71	819.36
" "	Steel Casing			2.59	819.48
S 1147	Steel C.			4.68	817.39

STA		BS	HI	FS	Elev
"Apollo" Mon		2.41	806.52		804.11
SPN-91-04D	Gnd			5.7	800.8
" "	PVC			3.94	802.58
" "	Steel Casing			3.60	802.92

Detailed Boring Elev

STA	Boring	BS	HI	FS	Elev
DBN 820	C	0.59	907.755		907.16
S1122				0.71	907.165
DBB-91-01	Boring			8.3	899.7
DBB-91-02	Boring			9.6	898.4
DBB-91-03	Boring			9.6	898.4

East Perimeter Monitor Wells

STA		BS	HI	FS	Elev
Mon 20,000N 15,000E		1.08	925.71		924.63
ELM-91-01	Gal			4.9	920.8
	PVC			2.67	923.04
	Steel Casing			2.55	923.16
TP 51		0.47	915.61	10.57	915.14
TP 52		0.89	908.91	7.59	908.02
TP 53		2.90	901.33	10.48	898.43
ELN-91-07A	Gal			6.0	895.3
	PVC			3.68	897.65
	Steel Casing			3.60	897.73

STA		BS	HI	FS	Elev
ELN 91-07B	Gal			7.4	893.9
	PVC			5.45	895.88
	Steel Casing	6.17	902.16	5.34	895.99
TP 54		10.61	912.28	0.49	901.67
TP 55		9.80	914.98	7.10	905.18
TP 56		7.53	923.79	0.72	916.26
TP 57		7.26	929.21	1.84	921.95
Mon 20,000N 15,000E				4.58	924.63
Σ		48.71		48.71	

Check Exist Wells 12/11/91

STA		BS	HI	FS	Elev
Mon 15,000N 15,000E		14.16	871.86		857.70
TP 58		10.13	881.795	0.195	871.665
TP 59		18.00	898.865	0.93	880.865
TP 60		17.71	916.205	0.13	898.435
TP 61		6.68	922.41	0.875	915.33
Mon 15,000N 15,000E	Steel Casing			3.80	918.21 *
PRM-89-11	Steel Casing	0.07	881.68		881.61 *
TP 62		2.17	873.86	1.31	871.37
TP 63		1.22	865.655	1.125	864.435
Mon 15,000N 15,000E				7.955	857.70

* WELL HAS CHANGED ELEV.

OLEUM POND

Borings Elevs
12/11/91
Sunny 40°

STA		BS	HI	FS	Elev
583+11.51	Steel Casing	14.61	908.17		893.56
TP 64		1.38	907.63	1.92	906.25
TP 65		0.58	884.46	23.75	883.88
OPB-91-02	Boring			10.7	873.8
OPB-91-03	Borings			14.4	870.1
OPB-91-04	Boring			11.3	873.2
OPB-91-05	Borings			6.6	877.9
TP 66		24.67	907.87	1.26	883.20
TP 67		2.90	909.35	1.42	906.45
583+11.51	Steel Casing			15.79	893.56

OLEUM PLANT

Borings Elevs

STA		BS	HI	FS	Elev
OPM 89-01	Steel Casing	12.45	938.68		926.23
OPB-91-13	Borings			8.4	930.3
OPB-91-01	Borings			6.5	932.2
OPB-91-10	Boring			13.2	925.5

STA		BS	HI	FS	Elev
OPB-91-08	Borings			5.5	933.2
TP 68		5.38	938.18	5.50	933.18
OPB-91-07	Boring			6.0	932.5
Hyd #397	@ Side Oleum Mail			3.18	935.00 ✓
OPB-91-06	Borings			5.9	932.6
OPB-91-10	Borings			5.9	932.6
OPB-91-11	Borings			5.6	932.9
TP 69		6.95	938.60	6.83	931.65
OPB-91-09	Borings			6.4	932.2
OPM 89-01	Steel Casing			12.37	926.23

OLD Fuel Tank
+ OLD ACID
Well + Boring Elev

STA		BS	HI	FS	Elev
FTM 89-01	Steel Casing	3.78			874.46
FTB 91-01	Boring			3.5	
FTB 91-02	Boring			5.3	
OPM 89-02	Steel Casing			2.57	.17/N
TP 70		7.60		3.18	
OPM 91-01	Grf			6.8	
" "	PVC			4.82	
	Steel			4.69	

OLEUM POND

Boring Elevs

12/11/91

Sunny 40°

STA		BS	HI	FS	Elev
583 1151	Steel Casing	14.61	908.17		893.56
TP	64	1.38	907.63	1.92	906.25
TP	65	0.58	884.46	23.75	883.88
OPB-91-02	Boring			10.7	873.8
OPB-91-03	Boring			14.4	870.1
OPB-91-04	Boring			11.3	873.2
OPB-91-05	Boring			6.6	877.9
TP	66	24.67	907.87	1.26	883.20
TP	67	2.90	909.35	1.42	906.45
583 1151	Steel Casing			15.79	893.56

STA		BS	HI	FS	Elev
OPB-91-08	Boring			5.5	933.2
TP 68		5.37	938.18	5.50	933.18
OPB-91-07	Boring			6.0	932.5
Hyd #397	E Side Oleum Plant			3.18	935.00 ✓
OPB-91-06	Boring			5.9	932.6
OPB-91-10	Boring			5.9	932.6
OPB-91-11	Boring			5.6	932.9
TP 69		6.95	938.60	6.83	931.65
OPB-91-09	Boring			6.4	932.2
OPM 89-01	Steel Casing			12.37	926.23

Rec PVC to Casing

FTM 89-01	.19	.19
OPM 89-02	.23	.26
OPM 89-01	.09	

OLD Fuel Tank + OLD ACID Well + Boring Elev

OLEUM PLANT

Boring Elevs

STA		BS	HI	FS	Elev
OPM 89-01	Steel Casing	12.45	938.68		926.23
OPB-91-13	Boring			8.4	930.3
OPB-91-01	Boring			6.5	932.2
OPB-91-12	Boring			13.2	925.5

STA		BS	HI	FS	Elev
FTM 89-01	Steel Casing	3.28	877.74		874.46
FTB 91-01	Boring			3.5	874.2
FTB 91-02	Boring			5.3	872.4
OAM 89-02	Steel Casing			2.57	875.17/Reg. 14
TP 70		7.60	881.86	3.48	874.26
OAM 91-01	Grid			6.8	875.1
" "	PVC			4.82	877.04
" "	Steel Casing			4.69	877.17

STA	BS	HI	FS	Elev
OAB-91-01 Boring			8.3	873.6
OAB-91-02 Boring			5.3	876.6
OAB-91-03 Boring			7.3	874.6
TP 71			5.875	875.985
OAM 89-01 Steel Casing			7.385	874.475/41
" " PVC			7.495	874.365/38

Rocket Pistol
Main Well Elevs
12/13/91
Schreiber/Schmidt

STA	BS	HI	FS	Elev
THOR	6.17	884.41		878.24
TP 72	6.95	888.65	2.71	881.70
TP 73	2.04	888.33	2.36	886.29
TP 74	4.03	882.13	10.23	878.10
TP 75	3.35	879.87	5.61	876.52
RPM-91-01 GW			8.1	871.8
" " PVC			5.91	873.96
" " Steel Casing	5.71	879.85	5.73	874.14
TP 76	4.95	882.09	2.71	877.14
TP 77	9.63	888.55	3.17	878.92

STA	BS	HI	FS	Elev
TP 78	2.78	888.52	2.81	885.74
TP 79	3.66	884.00	8.18	880.34
THOR			5.76	878.24
E	49.87		49.38	

Background Wells

STA	BS	HI	FS	Elev
Gemini	5.46	879.41		874.48
TP 80	5.41	880.61	4.80	875.141
TP 81	4.89	880.78	4.62	875.98
TP 82	4.15	878.41	6.52	874.26
TP 83	5.21	877.11	6.51	871.90
TP 84	4.45	873.51	8.06	869.05
TP 85	4.84	873.05	5.32	868.19
TP 86	4.95	872.51	5.19	867.56
TP 87	4.87	871.91	5.17	867.04
TP 88	4.03	867.79	6.15	865.76
TP 89	4.06	867.76	6.09	863.70
BGM-91-03 GW			6.7	861.1
" " PVC			4.20	863.56
" " Steel Casing	4.96	868.64	4.04	863.68

STN	BS	HI	FS	EL
TP 90	6.15	870.945	3.845	864.795
TP 89			5.185	865.76
TP 91	5.35	872.075	4.20	866.745
TP 92	5.43	872.725	4.798	867.305
TP 93	5.45	873.365	4.818	867.915
TP 85			5.175	868.19
TP 94	6.10	874.575	4.89	868.475
TP 95	5.62	877.335	2.86	871.715
TP 96	6.51	877.67	4.175	873.16
TP 82			5.41	874.26
TP 97	5.98	881.45	4.20	875.47
TP 98	3.94	877.23	6.16	875.29
GEIINY			4.75	874.48
Σ	107.77		101.81	
TP 71	2.72	878.705		875.985
TP 99	5.80	879.81	4.675	874.01
TP 100	4.96	881.63	3.14	876.67
TP 101	2.28	877.36	4.55	877.08
BGM-91-02			5.0	874.4
PVC			2.75	876.61
Steel Casing			2.63	876.73

STN	BS	HI	FS	EL
TP 103	4.87	880.385	3.845	875.515
TP 104			6.365	874.02
Survey Bench Mark on Concrete Wall of Culvert BGM-91-01	5.01	879.06		
BGM 91-01 GJ			5.3	873.8
" " PVC			3.05	876.01
" " Steel Casing	3.92	880.67	2.71	876.15
TP 104	6.60	881.655	5.615	875.055
TP 102			5.41	875.515
TP 105	7.47	883.035	4.09	877.565
TP 106	4.40	881.98	5.45	877.58
TP 107	5.12	879.59	7.51	874.17
TP 108	7.54	879.615	7.525	872.065
TP 111			3.63	875.985
TP 112	4.73	878.985	5.36	874.255
FM 89-01 Casing			4.53	874.46
TP 112	6.02		6.04	

APPENDIX C

REPORT OF BORING AND WELL ELEVATIONS

This Page Intentionally Left Blank.

DEEP SOIL BORINGS
TASK ORDER MEMORANDUM 004
BADGER ARMY AMMUNITION PLANT
BARABOO, WISCONSIN

PROPELLANT BURNING GROUND	GROUND ELEVATION
PBB-91-01	875.2
PBB-91-02	874.0
PBB-91-03	868.9
PBB-91-04	872.7
PBB-91-05	880.6
PBB-91-06	882.1
PBB-91-07	878.4

DETERRENT BURNING GROUND	GROUND ELEVATION
DBB-91-01	899.7
DBB-91-02	898.4
DBB-91-03	898.4

OLEUM PLANT AND POND	GROUND ELEVATION
OPB-91-01	932.2
OPB-91-02	873.8
OPB-91-03	870.1
OPB-91-04	873.2
OPB-91-05	877.9
OPB-91-06	932.6
OPB-91-07	932.5
OPB-91-08	933.2
OPB-91-09	932.2
OPB-91-10	932.6
OPB-91-11	932.9
OPB-91-12	925.5
OPB-91-13	930.3

OLD ACID PLANT	GROUND ELEVATION
OAB-91-01	873.6
OAB-91-02	876.6
OAB-91-03	874.6

OLD FUEL TANK	GROUND ELEVATION
FTB-91-01	874.2
FTB-91-02	872.4

FINAL CREEK	GROUND ELEVATION
SPB-91-01	824.9

MONITORING WELLS
TASK ORDER MEMORANDUM 004
BADGER ARMY AMMUNITION PLANT
BARABOO, WISCONSIN

PROPELLANT BURNING GROUND	GROUND	TOP PVC	TOP STEEL CASE
PBP-91-01B,C,D	848.3	850.53	850.60
PBP-91-02B,C,D	847.6	850.09	850.10
PBN-91-06C	846.1	848.29	848.43
PBN-91-06D	845.8	847.50	847.69
PBN-91-12C	852.2	854.42	854.49
PBN-91-12D	851.2	853.29	853.48

BACKGROUND WELLS	GROUND	TOP PVC	TOP STEEL CASE
BGM-91-01	873.8	876.01	876.15
BGM-91-02	874.4	876.61	876.73
BGM-91-03	861.1	863.56	863.68

LANDFILL NUMBER 1	GROUND	TOP PVC	TOP STEEL CASE
LOM-91-01	915.5	917.51	917.72
LOM-91-02	910.3	912.30	912.41

ROCKET PASTE AREA	GROUND	TOP PVC	TOP STEEL CASE
RPM-91-01	871.8	873.96	874.14

OLD ACID AREA	GROUND	TOP PVC	TOP STEEL CASE
OAM-91-01	875.1	877.04	877.17

MONITORING WELLS
TASK ORDER MEMORANDUM 004
BADGER ARMY AMMUNITION PLANT
BARABOO, WISCONSIN

OFF-POST (SOUTH)	GROUND	TOP PVC	TOP STEEL CASE
SWN-91-01B	830.8	833.25	833.45
SWN-91-01C	831.0	834.03	834.12
SWN-91-01D	831.5	833.57	833.76
SWN-91-02C	834.4	836.39	836.50
SWN-91-02D	834.5	836.61	836.76
SWN-91-03B	834.7	836.63	836.70
SWN-91-03C	834.6	836.73	836.74
SWN-91-03D	835.0	837.09	837.09
SWN-91-03E	835.0	837.38	837.56
SWN-91-04C	832.8	834.87	835.07
SWN-91-04D	833.5	835.28	835.40
SWN-91-05B	830.5	832.67	832.80
SWN-91-05C	830.8	832.86	832.94
SWN-91-05D	831.2	833.31	833.48
PBN-91-01C	828.0	830.04	830.17
PBN-91-02B	819.0	821.20	821.36
PBN-91-02C	819.9	821.92	822.09
PBN-91-03B	812.7	814.72	814.89
PBN-91-03C	812.3	814.37	814.50

EAST PERIMETER	GROUND	TOP PVC	TOP STEEL CASE
ELM-91-01	920.8	923.04	923.16
ELN-91-07A	895.3	897.65	897.73
ELN-91-07B	893.9	895.88	895.99

SETTLING PONDS	GROUND	TOP PVC	TOP STEEL CASE
SPN-91-02D	821.6	824.03	824.12
SPN-91-03D	816.7	819.36	819.48
SPN-91-04D	800.8	802.58	802.92

This Page Intentionally Left Blank.

APPENDIX D

COMPUTER INPUT - OUTPUT FILES
UTM CONVERSION FILES

This Page Intentionally Left Blank.

FINAL REPORT
FOR
SURVEYING SERVICES
TASK ORDER MEMORANDUM 004
MONITORING WELL AND SOIL BORING LOCATIONS
BADGER ARMY AMMUNITION PLANT
SAUK COUNTY WISCONSIN
ABB ENVIORMENTAL SERVICES, INC.

File name BAAPBORE.PAC

PT#	SPCNORTH	SPCEAST	BORING NAME
1025	500961.270	2074498.980	DBB-91-02
1026	501069.935	2074286.302	DBB-91-03
1027	500805.557	2074484.413	DBB-91-01
1028	485899.663	2064735.354	SPB-91-01
1029	490581.385	2066729.411	PBB-91-01
1030	490382.505	2066648.942	PBB-91-02
1031	490380.681	2066468.877	PBB-91-03
1032	491614.627	2066825.144	PBB-91-04
1033	491661.611	2066986.009	PBB-91-05
1034	491938.716	2067019.311	PBB-91-06
1035	491827.973	2066938.659	PBB-91-07
1036	500760.527	2062693.406	OAB-91-03
1037	500739.035	2062914.880	OAB-91-02
1038	500922.773	2062891.258	OAB-91-01
1039	500156.307	2062776.757	FTB-91-02
1040	500204.535	2062744.451	FTB-91-01
1041	503870.874	2070834.153	OPB-91-10
1042	503735.578	2070828.617	OPB-91-11
1043	503642.923	2070894.759	OPB-91-08
1044	503661.706	2071025.803	OPB-91-07
1045	503690.512	2071156.591	OPB-91-06
1046	503441.488	2070905.203	OPB-91-12
1047	503582.495	2070689.627	OPB-91-09
1048	503429.253	2070577.619	OPB-91-01
1049	503361.220	2070569.893	OPB-91-13
1050	503851.315	2072654.936	OPB-91-05
1051	503973.403	2072624.071	OPB-91-03
1052	503867.911	2072571.612	OPB-91-04
1053	504084.610	2072484.591	OPB-91-02

FINAL REPORT
FOR
SURVEYING SERVICES
TASK ORDER MEMORANDUM 004
MONITORING WELL AND SOIL BORING LOCATIONS
BADGER ARMY AMMUNITION PLANT
SAUK COUNTY WISCONSIN
ABB ENVIORMENTAL SERVICES, INC.

File name BAAPWELL.UTM

PT#	UTM X	UTM Y
364	280190.8089	4805930.5975
365	280393.1803	4805597.9546
366	280400.7882	4805585.0655
367	280273.9626	4803202.5298
368	275706.7004	4804534.1244
369	275875.1268	4806570.5201
370	275858.3083	4806238.1932
371	277011.8472	4801672.8951
372	277078.1326	4801647.4768
373	277083.2667	4801609.2761
374	277075.8658	4801610.2543
375	277056.1078	4801358.8392
376	277053.6778	4801350.6192
377	276636.2593	4800901.9472
378	276878.8333	4800946.8280
379	277230.2389	4800868.3892
380	277494.6528	4803276.6484
381	277560.6761	4803490.3386
382	276233.0362	4805763.3833
383	277044.9667	4799242.3841
384	277031.4510	4799242.9020
385	276697.2102	4799255.1066
386	276683.6988	4799254 0072
387	276676.4504	4799253.3129
388	278145.7420	4799084.6608
389	278150.3845	4799075.3122
390	278158.1554	4799063.0984
391	277818.0579	4799219.6000
392	277804.6152	4799220.5199
393	277482.8014	4799229.8185
394	277493.2336	4799229.9684

File name BAAPWELL.UTM

PT#	UTM X	UTM Y
395	277506.8990	4799229.2187
396	277522.8761	4799228.4304
397	278169.1700	4798525.8455
398	278166.6995	4798541.2581
399	277898.2367	4798200.9090
400	277909.1368	4798197.8496
401	277906.2314	4798190.4024
402	277767.2698	4797805.5211
403	277774.6355	4797803.9475
404	277774.6604	4797799.7432
405	278165.8816	4797341.6980
406	278145.3133	4797341.6185

FINAL REPORT
FOR
SURVEYING SERVICES
TASK ORDER MEMORANDUM 004
MONITORING WELL AND SOIL BORING LOCATIONS
BADGER ARMY AMMUNITION PLANT
SAUK COUNTY WISCONSIN
ABB ENVIORMENTAL SERVICES, INC.

File name BAAPWELL.PAC

PT#	SPCNORTH	SPCEAST	BORING NAME
364	501633.875	2076243.121	ELM-91-10
365	500567.393	2076945.706	ELN-91-07-A
366	500526.042	2076972.164	ELN-91-07-B
367	492701.473	2076837.451	RPM-91-01
368	496527.572	2061709.772	BGM-91-03
369	503222.285	2062021.624	BGM-91-01
370	502131.008	2062005.703	BGM-91-02
371	487302.969	2066325.149	PBP-91-02-BCD
372	487227.467	2066545.416	PBP-91-01-BCD
373	487102.858	2066566.748	PBN-91-06-C
374	487105.192	2066542.374	PBN-91-06-D
375	486278.774	2066507.250	PBN-91-12-C
376	486251.544	2066500.254	PBN-91-12-D
377	484731.682	2065184.930	SPN-91-02-D
378	484907.386	2065974.748	SPN-91-03-D
379	484691.702	2067135.832	SPN-91-04-D
380	492616.683	2067718.600	LOM-91-01
381	493324.904	2067909.813	LOM-91-02
382	500618.892	2063289.990	OAM-91-01
383	479340.138	2066720.190	SWN-91-02D
384	479340.243	2066675.827	SWN-91-02C
385	479340.858	2065578.814	SWN-91-01D
386	479335.662	2065534.656	SWN-91-01C
387	479332.532	2065510.979	SWN-91-01B
388	478952.873	2070346.914	SWN-91-05B
389	478922.777	2070363.233	SWN-91-05C
390	478883.658	2070390.144	SWN-91-05D
391	479356.563	2069256.922	SWN-91-04C
392	479357.994	2069212.751	SWN-91-04D
393	479350.548	2068156.809	SWN-91-03C
394	479352.269	2068190.986	SWN-91-03B

File name BAAPWELL.PAC

PT#	SPCNORTH	SPCEAST	BORING NAME
395	479351.422	2068235.867	SWN-91-03D
396	479350.721	2068288.330	SWN-91-03E
397	477123.935	2070489.558	PBN-91-01C
398	477174.164	2070479.644	PBM-90-01D
399	476026.926	2069639.775	PBN-91-02C
400	476018.182	2069675.864	PBN-91-02B
401	475993.429	2069667.218	PBM-90-02D
402	474715.484	2069257.076	PBN-91-03C
403	474711.194	2069281.405	PBN-91-03B
404	474697.416	2069281.982	PBM-90-03D
405	473242.118	2070618.302	PBN-90-04D
406	473239.434	2070550.892	PBN-90-04B

FINAL REPORT
FOR
SURVEYING SERVICES
TASK ORDER MEMORANDUM 004
MONITORING WELL AND SOIL BORING LOCATIONS
BADGER ARMY AMMUNITION PLANT
SAUK COUNTY WISCONSIN
ABB ENVIORMENTAL SERVICES, INC.

File name BAAPBORE.LAT

PT#	LATITUDE	LONGITUDE
1025	43° 22′ 27.013803"	89° 43′ 11.297380"
1026	43° 22′ 28.094162"	89° 43′ 14.172050"
1027	43° 22′ 25.476271"	89° 43′ 11.501695"
1028	43° 19′ 58.548728"	89° 45′ 24.089321"
1029	43° 20′ 44.733203"	89° 44′ 56.918050"
1030	43° 20′ 42.771195"	89° 44′ 58.015157"
1031	43° 20′ 42.758516"	89° 45′ 0.452103"
1032	43° 20′ 54.935997"	89° 44′ 55.580327"
1033	43° 20′ 55.395279"	89° 44′ 53.401254"
1034	43° 20′ 58.131334"	89° 44′ 52.939210"
1035	43° 20′ 57.039898"	89° 44′ 54.035297"
1036	43° 22′ 25.391785"	89° 45′ 51.149455"
1037	43° 22′ 25.173307"	89° 45′ 48.151603"
1038	43° 22′ 26.988797"	89° 45′ 48.464379"
1039	43° 22′ 19.421416"	89° 45′ 50.044075"
1040	43° 22′ 19.898680"	89° 45′ 50.479627"
1041	43° 22′ 55.871311"	89° 44′ 0.792244"
1042	43° 22′ 54.535135"	89° 44′ 0.873063"
1043	43° 22′ 53.617871"	89° 43′ 59.981419"
1044	43° 22′ 53.799252"	89° 43′ 58.206089"
1045	43° 22′ 54.079633"	89° 43′ 56.433787"
1046	43° 22′ 51.627920"	89° 43′ 59.848717"
1047	43° 22′ 53.027479"	89° 44′ 2.761796"
1048	43, 22′ 51.517397"	89° 44′ 4.285140"
1049	43° 22′ 50.845661"	89° 44′ 4.392692"
1050	43° 22′ 55.619918"	89° 43′ 36.136971"
1051	43° 22′ 56.826809"	89° 43′ 36.549513"
1052	43° 22′ 55.786536"	89° 43′ 37.264567"
1053	43° 22′ 57.929735"	89° 43′ 38.433367"

FINAL REPORT
FOR
SURVEYING SERVICES
TASK ORDER MEMORANDUM 004
MONITORING WELL AND SOIL BORING LOCATIONS
BADGER ARMY AMMUNITION PLANT
SAUK COUNTY WISCONSIN
ABB ENVIORMENTAL SERVICES, INC.

File name BAAPWELL.LAT

PT#	LATITUDE	LONGITUDE
364	43° 22′ 33.598720"	89° 42′ 47.650894"
365	43° 22′ 23.040846"	89° 42′ 38.187925"
366	43° 22′ 22.631505"	89° 42′ 37.831641"
367	43° 21′ 5.350812"	89° 42′ 40.022595"
368	43° 21′ 43.608993"	89° 46′ 4.626993"
369	43° 22′ 49.725864"	89° 46′ 0.151890"
370	43° 22′ 38.947484"	89° 46′ 0.408808"
371	43° 20′ 12.363249"	89° 45′ 2.521740"
372	43° 20′ 11.610977"	89° 44′ 59.544281"
373	43° 20′ 10.379542"	89° 44′ 59.260689"
374	43° 20′ 10.403318"	89° 44′ 59.590406"
375	43° 20′ 2.241564"	89° 45′ 0.099201"
376	43° 20′ 1.972812"	89° 45′ 0.194967"
377	43° 19′ 46.999197"	89° 45′ 18.052735"
378	43° 19′ 48.711624"	89° 45′ 7.359549"
379	43° 19′ 46.546841"	89° 44′ 51.658971"
380	43° 21′ 4.806834"	89° 44′ 43.446852"
381	43° 21′ 11.796363"	89° 44′ 40.829501"
382	43° 22′ 23.976078"	89° 45′ 43.077398"
383	43° 18′ 53.700016"	89° 44′ 57.500211"
384	43° 18′ 53.702370"	89° 44′ 58.100285"
385	43° 18′ 53.740731"	89° 45′ 12.939070"
386	43° 18′ 53.690697"	89° 45′ 13.536584"
387	43° 18′ 53.660471"	89° 45′ 13.856977"
388	43° 18′ 49.764243"	89° 44′ 8.459756"
389	43° 18′ 49.466463"	89° 44′ 8.240311"
390	43° 18′ 49.079228"	89° 44′ 7.877984"
391	43° 18′ 53.785491"	89° 44′ 23.186283"
392	43° 18′ 53.800986"	89° 44′ 23.783705"
393	43° 18′ 53.759719"	89° 44′ 38.067276"
394	43° 18′ 53.775681"	89° 44′ 37.604907"

File name BAAPWELL.LAT

PT#	LATITUDE	LONGITUDE
395	43° 18′ 53.765953"	89° 44′ 36.997857"
396	43° 18′ 53.757435"	89° 44′ 36.288242"
397	43° 18′ 31.694712"	89° 44′ 6.608878"
398	43° 18′ 32.191152"	89° 44′ 6.740810"
399	43° 18′ 20.885659"	89° 44′ 18.148908"
400	43° 18′ 20.798173"	89° 44′ 17.661193"
401	43° 18′ 20.553947"	89° 44′ 17.779177"
402	43° 18′ 7.943899"	89° 44′ 23.380070"
403	43° 18′ 7.900775"	89° 44′ 23.051233"
404	43° 18′ 7.764667"	89° 44′ 23.044011"
405	43° 17′ 53.348561"	89° 44′ 5.034610"
406	43° 17′ 53.324168"	89° 44′ 5.946299

FINAL REPORT
FOR
SURVEYING SERVICES
TASK ORDER MEMORANDUM 004
MONITORING WELL AND SOIL BORING LOCATIONS
BADGER ARMY AMMUNITION PLANT
SAUK COUNTY WISCONSIN
ABB ENVIORMENTAL SERVICES, INC.

File name BAAPBORE.UTM

PT#	UTM X	UTM Y
1025	279652.0224	4805744.7910
1026	279588.4143	4805780.2316
1027	279645.8766	4805697.5075
1028	276512.0765	4801262.7447
1029	277170.9505	4802667.3599
1030	277144.2528	4802607.6454
1031	277089.3691	4802609.0632
1032	277211.4441	4802981.1272
1033	277260.9727	4802993.6795
1034	277274.1567	4803077.7451
1035	277248.3692	4803044.8870
1036	276052.8161	4805813.0798
1037	276120.0614	4805804.1029
1038	276114.8788	4805860.3450
1039	276071.5869	4805628.0661
1040	276062.2724	4805643.1149
1041	278567.3118	4806671.4921
1042	278564.1413	4806630.3300
1043	278583.2777	4806601.3740
1044	278623.4109	4806605.6598
1045	278663.5761	4806613.0023
1046	278584.2508	4806539.8851
1047	278520.1142	4806585.2121
1048	278484.3064	4806539.7498
1049	278481.2063	4806519.1058
1050	279121.8632	4806645.5646
1051	279113.7980	4806683.1014
1052	279096.6576	4806651.5349
1053	279072.5201	4806718.5142

This Page Intentionally Left Blank.

1990 OFF-POST MONITORING WELLS AND HIGH CAPACITY WELLS SURVEY DATA

This Page Intentionally Left Blank.

FINAL REPORT
FOR
SURVEYING SERVICES
TASK ORDER MEMORANDUM 003
VERTICAL ELEVATION DETERMINATION OF WELLS
AND BENCHMARKS
ADJACENT TO
BADGER ARMY AMMUNITION PLANT
SAUK COUNTY WISCONSIN
USATHAMA - E.C. JORDAN CO.

The services required for this project includes the vertical locations for various high capacity irrigation wells and other types of wells located adjacent to Badger Army Ammunition Plant. In addition temporary benchmarks were established at specified points adjacent to the Wisconsin River. The vertical locations are based on Mean Sea Level (MSL) from the 1929 General Adjustment.

VERTICAL FIELD SURVEY

The vertical location has also been taken from the existing U.S.G.S. control point F-109. Having an elevation of 832.76. This was the control that was also utilized for the vertical control run into the ammunition plant on previous surveys. The equipment that was used for the vertical survey was a Pentax automatic level. A copy of the field notes for the vertical survey is attached as Appendix A.

OFFICE COMPUTATIONS - REPORT GENERATION

The field data obtained was reviewed for closure and adjustment. The loops run were found to fall within specified third order. It is noted that the elevation we had determined in looping through U.S.G.S. control point G-109 was different than the published elevation. However Wisconsin Department of Transportation vertical control work performed in this area concurred with our elevation.

SURVEYOR'S CERTIFICATE

I, John L. Brey, Registered Land Surveyor, hereby certify that the above described location survey and the enclosed documentation are correct to the best of my knowledge and belief.

Dated this 15th day of October, 1990.

John L. Brey
Vierbicher Associates, Inc.
400 Viking Drive
Reedsburg, WI 53959

FINAL REPORT
FOR
SURVEYING SERVICES
TASK ORDER MEMORANDUM 003
VERTICAL ELEVATION DETERMINATION OF WELLS
AND BENCHMARKS
ADJACENT TO
BADGER ARMY AMMUNITION PLANT
SAUK COUNTY WISCONSIN
USATHAMA - E.C. JORDAN CO.

WELL 1A	828.05
WELL 1B	823.91
WELL 2A	825.25
WELL 2B	832.18
WELL 2C	823.03
WELL 3A	814.20
WELL 3B	836.78
WELL 3C	832.98
WELL 4	826.43
WELL 5A	758.61
WELL 5B	828.03
WELL 6A	818.72
WELL 6B	780.98
WELL 7A	748.60
WELL 7B	746.26
WELL 7C	746.16
WELL 7D	746.02
WELL 7E	748.51
WELL 7F	748.47
WELL 7G	748.34

WELL 8	850.85
WELL 9A	754.35
WELL 9B	759.97
WELL 10	820.44
WELL 11	785.87
WELL 12	815.54
WELL 14	775.85
WELL 15	755.49
WELL 16A	835.00
WELL 16B	837.27
WELL 16C	836.27
WELL 17	866.31
WELL 18A	753.78
WELL 18B	754.66
WELL 18C	761.00
TBM 1	738.04
TBM 2	780.71
TBM 3	736.44
TBM 4	762.91
TBM 5	753.34
TBM 6	730.81

BENCHMARK @ FARM ON "Z"
835.88

FINAL REPORT
FOR
SURVEYING SERVICES
TASK ORDER MEMORANDUM 003
VERTICAL ELEVATION DETERMINATION OF WELLS
AND BENCHMARKS
ADJACENT TO
BADGER ARMY AMMUNITION PLANT
SAUK COUNTY WISCONSIN
USATHAMA - E.C. JORDAN CO.

WELL NUMBER	GROUND SURFACE	TOP WELL RISER	TOP PROTECTIVE CASING
PBM-90-01D	829.0	831.53	831.31
PBM-90-02D	818.7	821.32	821.02
PBM-90-03D	812.9	814.79	814.56
PBN-90-04B	828.0	830.00	830.00
PBN-90-04D	828.0	829.95	829.71

ELEVATIONS AT DISCHARGE FOR INTERIM REMEDIAL MEASURES
10" EFFLUENT LINE

WATER ELEVATION 10/01/90	772.86
0.00 AT STAFF GAUGE	769.56
BENCHMARK NORTH RIM MANHOLE	795.25

APPENDIX A

This Page Intentionally Left Blank.

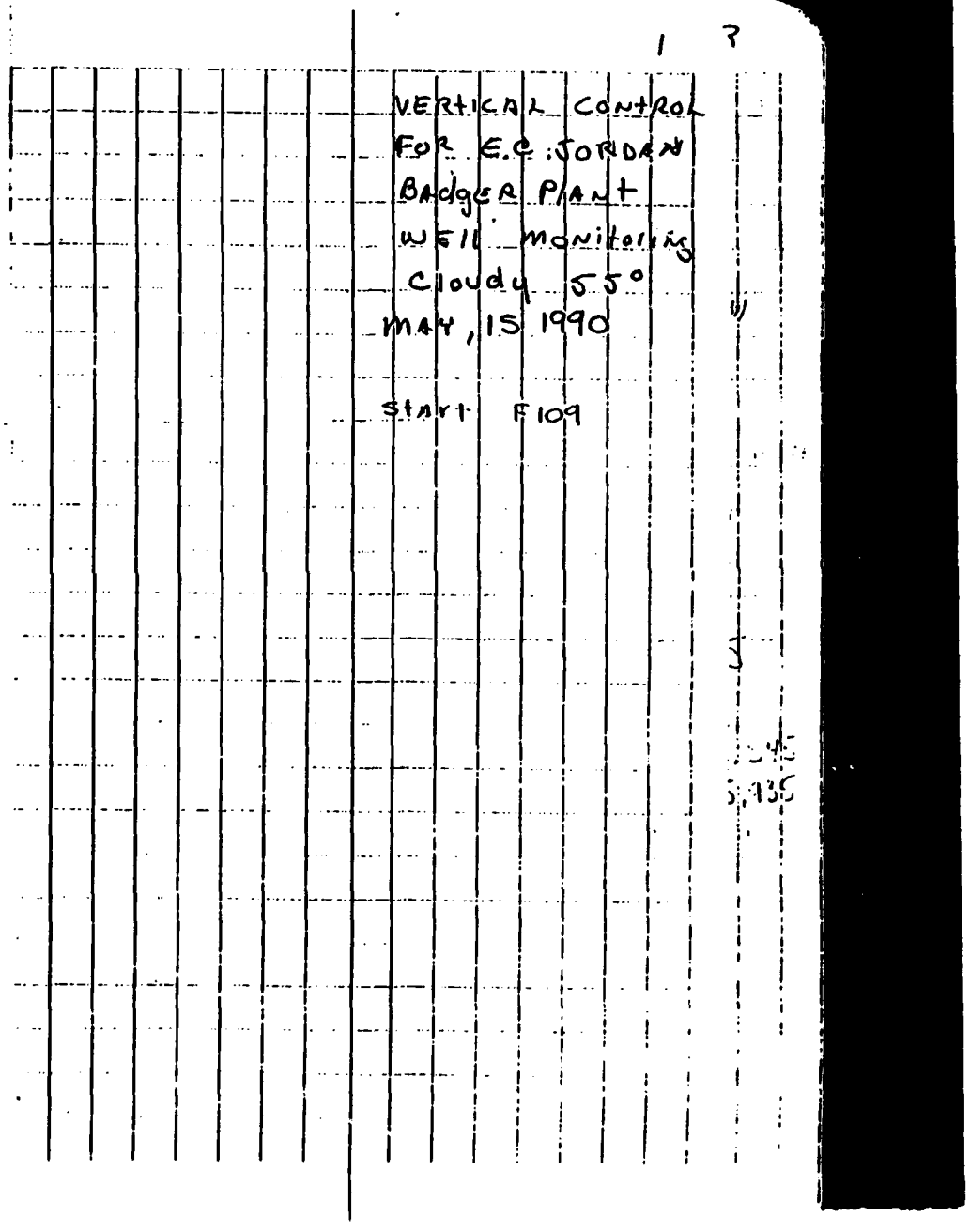
VERTICAL CONTROL
FOR E.C. JORDAN
BADGER PLANT
WELL monitoring
Cloudy 55°
MAY, 15 1990
start F109

STA.	BS	HI	FS	ELEV.	
6109					
BM 817	1.[illegible]	818.05		817.14	
WELL 3A			4.69	813.36	PAINT SPOT S-W COR
TP#1	6.07		4.30	813.75	
	5.77	820.66	4.01	814.04	
TBM A			5.14	814.675	
TP #2	9.08	822.215	6.68	813.135	
	9.13	822.215	6.73	813.085	
TP #2	8.45	828.865	1.80	820.415	
	8.27	828.855	1.63	820.585	
		828.86			
WELL #2A			4.43	824.43	
TBM #A	12.94	827.615		814.675	
TP#3	10.85	837.445	1.02	826.595	
	11.47	837.455	1.63	825.985	
		837.45			
TP#4	7.11	839.01	5.55	831.90	
	[illegible].36	839.00	4.81	832.61	

817.14 813.75 5.44 ℄
814.04 5.73 RE
817.77
4.55 [illegible]

N. top culvert FE to well #2A

828.805
TBM #[illegible].13 814.675
14.[illegible]
2.26 [illegible] 8[illegible].[illegible]45
2.07 ℄ 825.735

	BS	IH 839.00	FS	ELEV	
TP #5	4.27	837.86	5.41	833.59	
	4.10	837.86	5.24	833.76	
TP #6	8.05	838.88	7.03	830.83	N. CULV.
	5.93	838.88	4.91	832.95	
WELL 3B			3.0	835.88	
WELL 3C			6.80	832.08	
TP #7	6.02	841.11	3.79	835.09	
	5.76	841.11	3.54	835.34	
TP #8	4.20	841.66	3.65	837.46	RE
	4.16	841.66	3.55	837.56	E
TP #9	4.02	839.48	6.20	835.46	
	3.74	839.48	5.92	835.74	
TP #10	3.49	836.13	6.64	832.64	
	3.23	836.16	6.55	832.93	
		836.145			
TP #11	7.45	838.815	4.78	831.365	
	6.47	838.825	3.79	832.355	
		838.82			

DENZER Rd

NORTH DENZER Rd

SOUTH DENZER Rd

		838.82		
BMF109			7.02	831.80
				(832.76)
[illegible] 109	4.66	[illegible]		[illegible]
tP# 12	4.06	838.84	2.04	834.78
	3.93	838.[illegible]	1.90	834.92
		[illegible]		
well #4			[illegible]	826.43
tP# 13	4.88	834.9[illegible]	8.74	830.11
	4.66	834.98	8.53	830.3[illegible]
		834.925		
tP# 14	4.46	833.095	[illegible]	[illegible]
	3.62	833.095	5.51	829.175
tP# 15	5.01	832.595	5.51	827.585
	4.76	832.595	5.26	827.835
tP#16	5.39	834.695	3.23	829.365
	5.05	834.695	2.95	829.645
TBMB			4.07	830.625
tP#17	1.09	829.225	6.56	828.135
	0.90	829.225	6.37	828.325

ADJ

TBM-B
RR SPK in PP S. of Field Ent.
Field Rd West of BUS. "12".

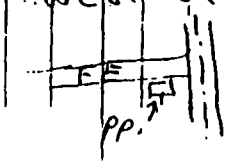

		829.225				
tp #18	1.39	816.135	14.48	814.745		
	1.21	816.145	14.29	814.935		
		816.14				
tp #19	0.92	803.82	13.24	802.90		Located Curb + Gutter West side of Water St. Residence #977
	0.50	803.82	12.82	803.32		
tp #20	0.79	792.38	12.23	791.59		
	0.46	792.38	11.90	791.92		
Well #1			6.59	785.79		Paint spot on foundation of S. entrance of well house
tp #21	5.42	792.95	4.85	787.53		
	5.17	792.95	4.60	787.78		
	8.12	791.91	9.16	783.79	stamped 783.88	Monument BM # 784 (E:109)
TP 22	7.19	791.91	8.23	784.72		Curb just East of BM # 784
Chis. "D" N-W Cor. Hwy "60"			6.46	785.45		
tp #23	0.77	788.56	4.12	787.79		
	1.03	788.56	4.38	787.53		

		788.56		
tp#24	4.83	782.81	10.58	777.98
	5.20	782.81	10.95	777.61
tp#25	5.12	781.34	6.59	776.22
	4.87	781.34	6.34	776.47
tp#26	5.11	780.81	5.64	775.70
	5.59	780.81	6.12	775.22
tp#27	7.58	782.38	6.01	774.80
	7.19	782.38	5.62	775.19
WELL#GB			1.51	780.87
tp# 28	1.38	776.51	7.25	775.13
	3.55	776.51	9.42	772.96
tp#29	6.22	778.84	3.89	772.62
	8.91	778.84	6.58	769.93
tp#30	5.01	779.10	4.75	774.09
	5.34	779.10	5.08	773.76
tp#31	6.17	778.97	6.30	772.80
	6.58	778.97	6.71	772.39

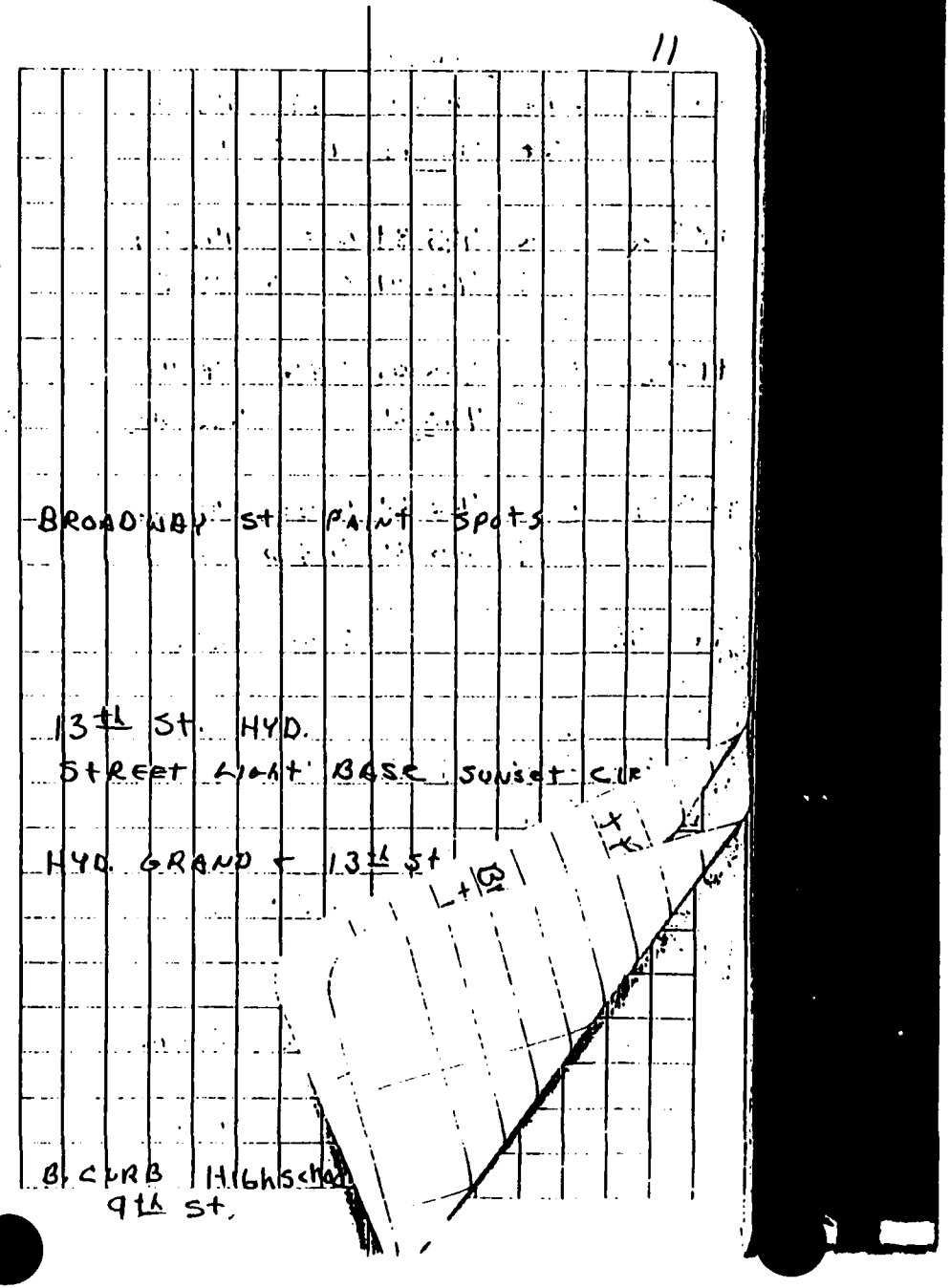

		778.97			
tp #32	5.12	780.12	3.97	775.00	
	5.48	780.12	4.33	774.64	
tp #33	4.62	775.89	8.25	771.87	
	4.35	775.89	8.58	771.54	
tp #34	1.08	768.01	8.96	776.93	
	1.45	768.01	9.33	776.56	
tp #39	2.77	766.10	4.68	763.33	
	5.55	766.10	7.46	760.55	
tp #35	1.58	759.43	8.25	757.85	
	2.03	759.43	8.70	757.40	
tp #36	5.01	757.56	6.88	752.55	
	5.09	757.56	6.96	752.47	
tp #37	5.86	758.12	5.30	752.26	
	6.21	758.12	5.65	751.91	
				757.19	
Bm #757 (SAUK) top nut			0.93	~~756.63~~	757.36
HYD @ Bm #757			2.88	755.24	

B-109

N.E. WASH. ST. & DALLAS ST. CURB

MONROE ST. (EAST SIDE OF ST.)

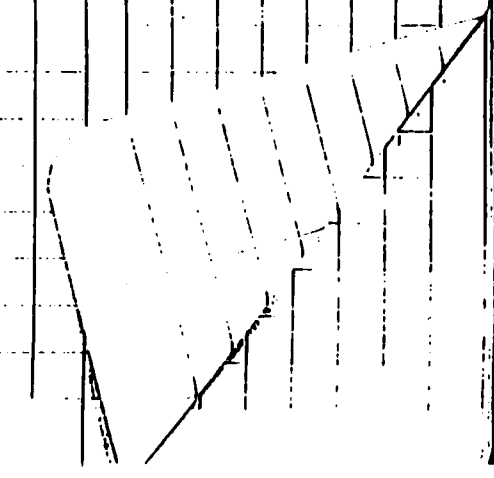

STA.	BS	HI.	FS	ELEV.	
BM DOT 47	6.85	837.37		830.52	
TP #1	0.78	830.19	7.96	829.41	
DOT B-46			6.66	823.53	823.76
RE. (TP)			2.87	827.32	825.98
TP #2	2.96	824.80	8.35	821.84	
TBM A			9.38	815.42	
TBM A	9.21	824.63		815.42	
TP #1	8.10	829.93	2.80	821.83	
TP #2	9.77	837.02	1.68	828.25	
BM #47			6.52	830.50	

.23

MAY 17, 1990
CRC/BK
RAIN 55°
EC JORDEN cont.
ENG # 888 J. WINDY

STA.	BS	HI	FS	ELEV.	
BMF109	8.27	792.15		783.88	E-109 MON. Stamped 783.88
DISK SW.HWY60"			6.87	785.28	DSK stamped SW COR.
tp#1	3.09	787.96	7.28	784.87	HWY "60" BRidge
tp#2	2.07	781.90	8.13	779.83	
tp#3	7.45	783.68	5.67	776.23	
tp#4	1.58	776.02	9.24	774.44	
tp#5	11.77	775.92	11.82	764.20	WATER St. NORTH OF GRAND
tp#6	6.18	780.74	1.41	774.56	GRAND AVE
tp#7	4.60	779.41	5.93	774.81	FIRST St. W. of MARION PK.
WELL#14			3.56	775.85	S. ENTRANCE FLOOR ELEV. OF WELL HOUSE
tp#5	5.19	769.39		764.20	
tp#8	3.31	763.37	9.33	760.06	
tp#9	4.57	762.60	5.34	758.03	E. OF SAUK CITY LIMITS SIGN. ON TRACK #9

		762.60		
tp# 10	4.69	762.03	5.26	757.34
tp# 11	1.83	752.61	11.25	750.78
tp# 12	3.82	746.21	10.22	742.39
tp# 13	8.04	747.84	6.41	739.80
+BM# 3			11.40	736.44 ⊗
tp# 10	5.18	762.52		757.34
tp# 14	5.81	763.20	5.13	757.39
tp# 15	6.10	762.34	6.96	756.24
tp# 16	5.63	759.38	8.59	753.75
tp# 17	6.12	760.51	4.99	759.39
				759.48
DISK			1.03	~~759.21~~ 757.45
+BM# 4	3.1	3.6	0.92	762.59
				762.91

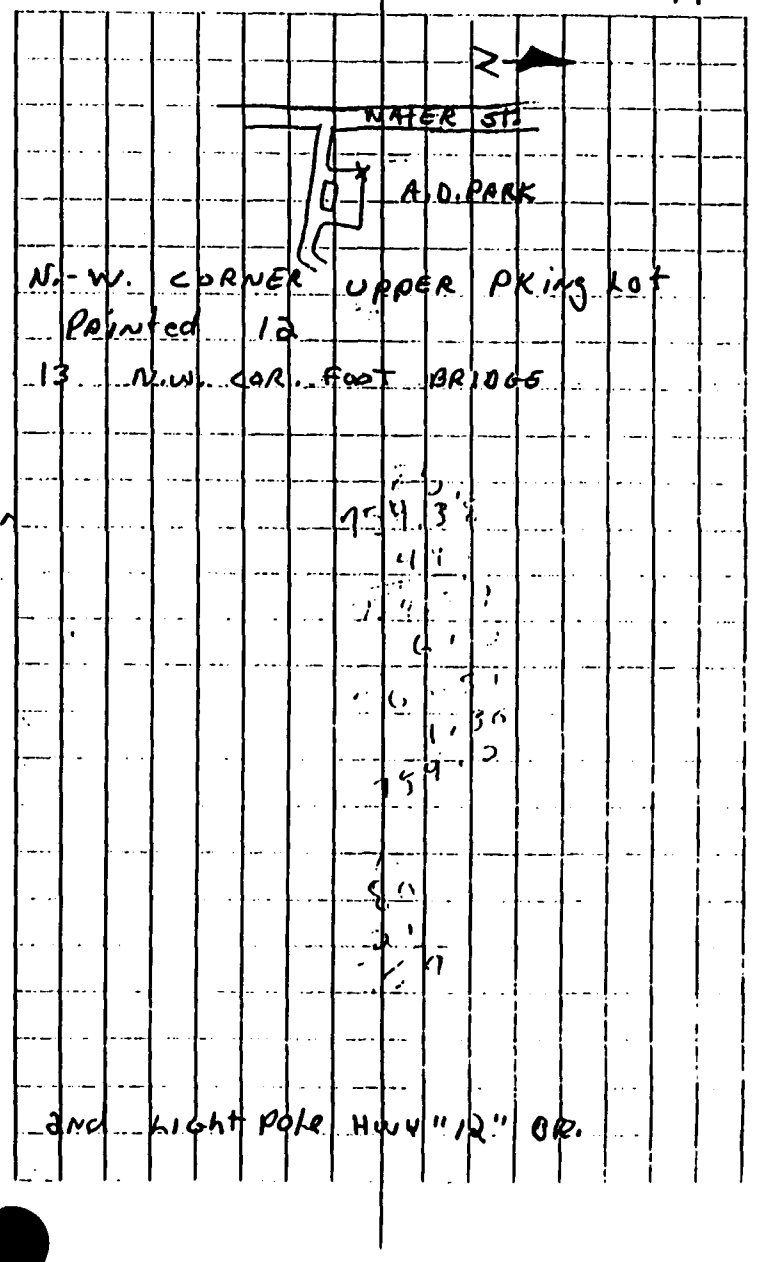

BM check

Bot. BM					
66	4.32	759.05		754.73	
tp#1	4.31	758.90	4.46	754.59	
BM 67			4.07	754.83	754.82

	BS	well 16 HI	FS	ELEV.
Elog	4.71	837.47		832.76
well ("C") 16			1.20	836.27
well ("A") 16			2.47	835.00
tp # 1	6.75	838.82	5.40	832.07
well ("B") 16			1.55	837.27
well ("B") 16	1.51	838.78		837.27
tp # 1	7.04	839.08	6.74	832.04
F 107			6.33	832.75

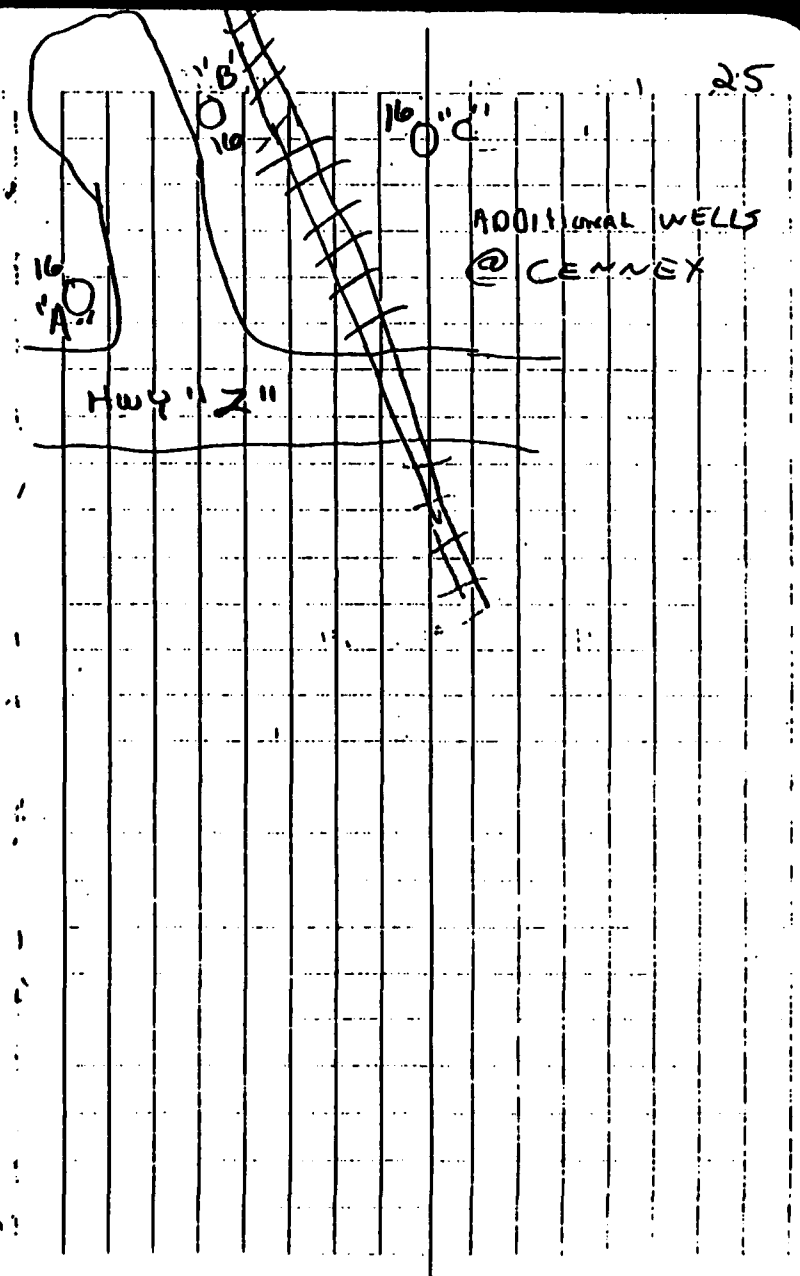

						ADJ
		820.06				
TBM "A"	4.44	819.775		814.675	815.62	815.52
+P# 1A	6±2ft	~~819.685~~	5.70	813.415	814.36	
		820.63 ✓				DOT
6109			3.33	816.355	817.30	817.14
+P# 2	5.63	~~822.225~~	3.09	816.595	817.54	
		823.17				
+P# 3	5.51	~~823.535~~	4.20	818.025	818.97	
		824.48				DOT
BM # ~~44~~ 44			5.98	817.555	818.50	818.29
		824.39				
BM # 44	5.89	~~823.145~~		817.655	818.50	
	3.65	~~821.455~~	5.64	817.805	818.75	
		822.40				
+P# 1A	2.67	819.025	5.10	816.355	817.30	
		819.97				
+P# 2	5.85	819.295	5.58	813.445	814.39	
		820.24				
+BM "A"			4.63		815.71	

27

MAY 18, 1990
CAC/BK
EC, JORDAN
ADJOINING WELLS
ENG # 888
SUNNY, BREEZY
60°

well #15

ASTA.	BS	HI	FS	ELEV.	
+ top wire	7.14				
B-109	6.93	759.03		752.10	
B-WIRE	6.72		5.69		
+BM #5			5.69	753.34	
top w	6.19				
+BM #5	5.80	759.14		753.34	
B-W	5.41		7.04		
B-109			7.04	752.10	
	7.34				
B-109	5.84	757.94		752.10	
	9.34				
	5.80	759.95	3.79	754.15	
+P #1	6.19	759.95	4.18	753.76	
well #15			4.46	755.49	
well #15	4.60	760.09		75549	
	3.44	757.82	5.71	754.38	
	3.83	757.82	6.10	753.99	
			5.72		
B.109			5.72	752.10	✓

DISK stamped B.109. 1934 SAW, OACKWALL

WELL 7A, B, C, D

Sta.	BS	HI	FS	ELEV.	
top N	9.71			742.0	
BM #742	7.26	749.26			
Bott. N.	4.81				
DISK			5.55	743.71	
TBM #C			5.52	743.74	
tp# 1	10.46	754.07	5.65	743.61	
	10.10	754.07	5.29	743.97	
tp#2	9.26	756.56	1.77	752.30	
	3.86	756.56	1.37	752.70	
tp# 3	4.63	754.46	6.73	749.83	
	4.23	754.46	6.33	750.23	
WELL #7A			5.86	748.60	
tp#4	3.22	751.06	6.62	747.84	
	2.62	751.06	6.02	748.44	
tp# 5	6.23	752.82	4.47	746.59	
	5.82	752.82	4.06	747.00	
WELL #7B			6.56	746.26	←
#7C			6.66	746.16	←
#10			10.82	746.00	←

DISK stamped 20 ADP 1956 USGS 200' WEST OF BRIDGE 25' NORTH OF ℄ ITTENBACH SILL, NORTH R/W, 4 SOUTH-FENCE 50' EAST OF F.E. Dot set SW About. Point MARK SOUTH EDGE CENTER OF BRidge @ R STREAM

SK4-1

SK4-2

SK4 3

well 9B

STA.	BS.	HI	FS	ELEV.	
top	7.28				
Dot BM# 67	5.15	759.97		754.82	RR SPK in PP
Bott.	3.02				
well #9B			0.00	759.97	
top					
BM# 67	0.20	760.17		759.97	
Bott.			5.35	754.82	
		Dot ✓			
BM# 62	9.73			757.75	RR SPK in PP.
	8.22	765.97			
	6.71				
			5.04		
BM# 61			3.50	762.47	RR SPK in 30" TREE
			1.96		
	4.65				
#61	3.09			762.47	RR SPK in 30" TREE
	1.53	765.56	9.31		
#62			7.81	757.75	RR SPK in PP
			6.31		

154

well # SA

	6.57			
BM #62	5.26	763.01		757.75
	3.95		6.66	
11			5.16	757.85
			3.66	
tp #1	6.24			
	4.78	762.63		
	3.32			
			6.69	
WELL #SA			4.02	758.61
			1.35	
	6.61			
WELL #SA	3.93	762.54		758.61
	1.25			
	6.63		6.33	
tp #2	5.38	763.16	4.76	757.78
	4.13		3.19	
			6.92	
BM #62			5.41	757.75
			3.90	

WELL 9A

Dat	3.86			
Bm#67	4.29	759.11		754.82
	2.72			
			5.92	
tp#1	5.91		5.44	753.67
	5.62	759.29	4.96	
	5.33			
			5.37	
WELL#9A			4.94	754.35
			4.51	
	5.38			
well#9A	4.92	759.27	5.83	754.35
	4.46		5.56	753.71
			5.29	
tp#2	5.68			
	5.18	758.89		
	4.68			
			5.62	
Bm#67			4.07	754.82
			2.52	

RR SPK in PP

WELL # 7-E, F, G

top N	11.73			
BM# 742	10.32	752.32		742.00
Bott. N	8.91			
			6.13	
WELL# 7E			3.81	748.51
			1.49	
			6.21	
well # 7F			3.86	748.47
			1.51	
			6.34	
well # 7G			3.98	748.34
			1.62	
	4.66			
WELL# 7G	2.45	750.79		748.34
	0.24			
			10.35	
BM# 742			8.79	742.00
			7.23	

	SK3 - 1
	SK3 - 2
	SK3 - 3
	SK3 - 3

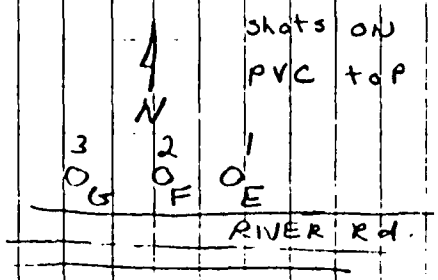

MAY 21, 1990
EQ. JORDAN
ADJ. WELLS
CRC/BK
SUNNY 60°

		+BM # 6		
top wire	6.74			
BM # A-109	4.42	750.107		745.687
B-wire	2.10			
tp #1	8.06	751.337	6.83	743.277
	7.44	751.337	6.21	743.897
tp #2	5.61	752.497	4.45	746.887
	5.51	752.497	4.35	746.987
tp #3	11.36	761.367	2.49	750 007
	11.17	761.367	2.30	750.197
tp #4	0.68	753.457	8.59	752.777
	0.55	753.457	8.46	752.907
tp #5	4.81	747.397	10 87	742.587
	4.64	747.397	10 70	742.762
tp #6	8.55	753.577	2.37	745.207
	8.37	753.577	2.19	745.207
tp #7	4.88	749.237	9.22	742.357
	4.93	749.237	9.27	744 307

TBM #6 (cont.)

		749.237		
TP #8	3.20	746.677	5.76	743.477
	3.01	746.677	5.57	743.667
TP #9	7.52	749.147	5.05	741.627
	7.02	749.147	4.55	742.127
TP #10	1.48	746.637	3.99	745.157
	1.46	746.637	3.99	745.177
TP #11	5.26	744.787	7.11	739.527
	4.97	744.787	6.82	739.817
TP #12	5.09	744.267	5.61	739.177
	4.47	744.267	4.99	739.797
TBM #6			13.46	730.807
			13.46	

WELL #17

	13.16			
BM #F109	10.71	843.47		832.76
	8.26			
tp #1	13.80	856.64	0.63	842.84
	13.46	856.64	0.29	843.18
tp #2	4.47	860.84	0.27	856.37
	4.41	860.84	0.21	856.43
tp # 3	4.72	862.79	2.77	858.07
	4.46	862.79	2.45	858.39
tp #4	10.02	866.96	5.85	856.94
	9.80	866.96	5.63	857.16
well #17			0.65	866.31

		tBM #1		
	8.84			
well #11	7.35	793.14		785.79
	5.86			
tp #1	1.96	787.87	7.23	785.91
	1.60	787.87	6.87	786.27
tp #2	1.76	775.76	13.87	774.0
	1.37	775.76	13.48	774.39
tp #3	8.91	763.72	12.95	762.81
	0.90	763.72	12.74	763.62
tp #4	0.68	751.32	13.08	750.64
	1.18	751.32	13.58	750.14
tp #5	3.37	745.61	9.08	742.24
	3.86	745.61	9.57	741.75
Paint "X"			7.57	738.04
above H_2O				

WELL #6A

	1.86				
TBm "B"	1.86	832.485		830.625	
tpt 1	3.25	826.405	9.33	823.155	
	3.27	826.405	9.35	823.135	
well #6A			7.69	818.715	
			7.69		

BM set FARM HW 41 Z"

	4.77				
TP #8 (P.4)	4.09	841.65		837.56	℄
	3.41				
BM set			5.77	835.88	
	6.18				
BM set	5.61	841.49		835.88	
	5.04				
tp #8 (P.4)			3.93	837.56	℄

Paint spot ℄

Blue paint spot on N.W. corner concrete well 20'(+-) North of stall #6 Building.

+BM # 2

DOT DISK	2.81	788.09		785.28	HWY "60" Bridge S.W cor.
+BM # 2			7.38	780.71	
+BM # 2	7.24	788.95		780.71	
DOT DISK			2.67	785.28	HWY "60" Bridge S.W cor.

Well # 12

	14.34				
Dot BM # 55	12.89	821.69		808.80	Chis "D" on E. CCCP S. of Berry Patch
	11.44				
tp # 1	3.98	819.42	6.25	815.44	
	3.77	819.42	6.04	815.65	
well # 12			0.88	815.54	

Well # 2B (Podunk)

Dot BM # 50	7.54	834.71		808.78	Chis "D" CCCP US HWY "12"
	5.93				
	4.32				
	5.61		6.44		
+P # 1	4.04	834.07	4.68	830.03	
	2.47		2.92		

		834.07		
	5.98		5.15	
TP#2	4.60	825.21	3.46	830.61
	3.22		1.77	
			0.27	
well#2B			3.46	
			1.77	
	5.24			
well#2B	2.64			
	0.04			
TP#3	5.52		6.30	
	3.63		4.45	
	2.15		2.61	
TP#4	6.32		5.53	
	4.76		4.06	
	3.20		2.59	
BM#50			7.58	
			6.17	
			4.77	

MAY 22 1990
E.C. JORDAN
ADJOIN. WELLS
#888
CRC/BK
SUNNY 65°

Well #5B

Pedone

D.O.T	6.51				
Bm #50	5.12	833.90		828.78	
	3.73				
	8.08		5.94		
tp #1	6.74	836.27	4.37	829.53	
	5.40		2.80		
			11.44		
Well #5B			8.05	828.22	
			4.66		
	11.50				
well #5B	8.12	836.34		828.22	
	4.74				
	5.74		8.91		
tp #2	4.82	834.08	7.08	829.26	
	3.90		5.25		
			6.72		
Dot Bm #50			5.16	828.92	
			3.60		828.78

Chis "□" CCCP HWY "12"

.14

WELL #18A

	5.68			
well #15	4.14	759.63		755.49
	2.68			
tp #1	3.07	758.47	4.23	755.40
	5.23	758.47	6.39	753.24
well #18A			5.91	
			4.69	753.78
			3.46	

BEHIND WIS. DAIRIES

TOP NUT HYD. FRANKLIN St & PAULINA St. CURB

		WELL 18 B		
BM* SAUK CITY	0.63			757.357
1934	0.50	757.857		
	0.38		3.33	
well #18B			3.20	754.657
			3.07	
	3.40			
well #18B	3.27	757.927		754.657
	3.15			
BM # SAUK CITY			0.69	
			0.57	757.357
			0.45	
		well 18C		
	2.52			
BM HYD	2.17	765.50		763.33
	1.82			
			4.85	
well #18C	4.75		4.50	761.00
	4.40	765.40	4.15	761.00
	4.05			
			2 42	
BM # HYD			2.07	763.33
			1.72	

MADISON AND VAN BUREN ST.

HYD. DALLAS & WASHINGTON ST's.

WELL #10

	6.97			
+BM#A	5.41	820.93		815.52
	3.85			
	7.46		5.77	
+P#1	5.93	822.51	4.35	816.58
	4.39		2.93	
	6.15		7.21	
+P#2	4.57	821.45	5.63	816.88
	2.99		4.05	
	6.31		3.09	
+P#3	4.22	823.71	1.96	819.49
	2.13		0.83	
	6.92		6.90	
+P#4	6.01	824.00	5.72	817.99
	5.10		4.54	
	5.78		4.46	
+P#5 well #10	3.63	824.07	3.56	820.44
	1.48		2.66	
	10.46		5.15	
+P#6	8.89	829.17	3.79	820.28
	7.32		2.43	
	8.55		6.69	
+P#7	6.99	831.20	4.96	824.21
	5.43		3.23	

		831.20		
tp#8	5.24		10.07	
well #2C	3.43	826.66	7.97	823.23
	1.62		5.87	
	5.02		12.04	
tp#9	2.71	819.24	10.13	816.53
	0.40		8.22	
	9.11		11.31	
tp#10	5.70	815.77	9.17	810.07
	4.29		7.03	
	10.49		3.69	
tp#11	9.46	823.19	2.04	813.73
	8.43		0.39	
	7.36		0.11 @ GR. 823.08 + .83	to SLAB
tp#12 well #1B	5.61	829.52		823.91 @ SLAB
	3.86			
	9.49		6.16	
tp#13	7.84	833.03	4.33	825.19
	6.19		2.50	
	8.39		6.03	
tp#14	6.79	835.64	4.18	828.85
	5.21		2.33	
	6.27		9.66	
tp#15	5.10	832.45	8.29	827.35
	3.95		6.92	

		832.5		
TP#16	7.00		6.31	
well#1A	4.82	832.87	4.40	828.05
	2.64		2.49	
			6.97	
TP#17	7.34	833.57	4.94	827.93
	5.44		2.91	
	3.94			
			6.91	
TP#18	7.45	834.61	4.76	828.81
	5.80		2.61	
	4.15			
	4.81		6.12	
TP#19	2.56	832.80	4.27	830.24
	0.31		2.62	
			9.77	
TP#20	6.23	829.90	8.19	824.61
	5.29		6.61	
	4.35			
			10.59	
well#10			9.34	820.56
			8.89	820.63

1.71

.07

MAY 30, 1990
E.C. JORDAN
CRC/BK

		21" # 5		
DOT CADUCK BM# 42	9.52 8.08 6.64	852.94		844.86
TP#1	6.61	858.18	0.77	852.17
well #8			10.61 7.93 5.25	850.85
	10.41 7.73 5.05	858.58		850.85
TP #2	0.66	852.47	6.77	851.21
BM# 110			7.58	844.89

MAY 30, 1990
EC JORDAN
CRC/BK

	1.30			
[illegible]	2.99	834.77		828.78
	1.66			
	6.06		6.17	
tp #1	4.74	834.71	4.80	829.97
	3.42		3.43	
	7.47		6.61	
tp #2	6.14	835.70	5.15	829.56
	4.81		3.69	
	9.03		9.23	
tp #3	7.97	834.70	5.97	829.73
	6.91		4.71	
			6.87	
well #2C			5.52	832.18
			4.17	
	6.81			
well #2B	5.13	839.61		832.18
	4.05			
	7.23		9.32	
tp #7	6.40	836.01	8.00	829.61
	5.07		6.68	
	7.61		8.06	
tp #5	6.24	835.49	6.76	829.25
	4.87		5.46	
	6.26		9.03	
tp #6	5.12	834.90	5.71	829.78
	3.96		4.59	

		834.10			
[illegible]			7.58 6.06 4.71	828.81	.06

Well SB

Apt Emf #50	6.44 4.96 3.48	833.74		[illegible]	
TP#1	8.76 7.53 6.30	836.79	5.90 4.48 3.06	829.26	
TP#2	5.57 4.65 3.71	833.14	7.81 8.30 6.79	828.49	
Mon #SB			6.24 5.11 3.95	828.03	
Well #SB	6.56 5.14 3.72	833.17		828.03	
TP#3	8.26 7.10 5.94	836.18	5.35 4.09 2.83	829.08	
TP#4	6.01 4.97 3.93	833.81	8.81 7.34 5.87	828.84	

		833.81			
			6.35		
Dot BM #50			4.99	828.82	(.64)
			3.63		

SEPT. 28th 1990
E.C. JORDEN
ADJOINING WELLS
CRC/BK
CLOUDY 65°

WELL CODE	MAP NO.
#1 NEAR RH @ R/W	19
#2 BACK ON GRAVEL RD. END OF PINE ROW	20
#3 BACK ON GRAVEL RD. BETWEEN Shed + CORN CRIB	21
#4 EAST NEAR WATER TOWER	22"A"
#5 WEST	22"B"

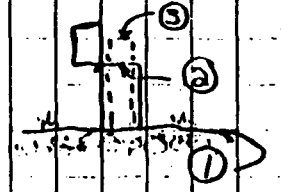

1 GROUND
2 top Protective casing below mark on PVC.
3 top of PVC PIPE

TBM "B" 830.62 RR spike in PP.
818.72 well #6A

STA.	BS	IT	FS	ELEV.
F-109	9.53			832.76
	6.81	839.60		
	4.15		6.12	
TP#1			4.23	835.37
	5.36		2.34	
	3.26	838.63		
	1.16			
			9.84	
TP#2	7.92	836.06	8.03	830.60
	5.46		6.22	
	3.08			
WELL#19		①	7.07	828.99
		②	4.75	831.31
		③	4.53	831.53
	6.49		8.07	
TP#3	4.44	834.17	6.33	827.73
	2.40		4.58	
	9.03		11.01	
TP#4	7.39	832.35	9.21	824.96
	5.75		7.41	
		①	13.61	818.74
WELL#20		②	11.33	821.02
		③	11.03	821.32
	9.75		15.82	
TP#5	5.63	823.84	14.14	818.21
	3.51		12.36	

Location of well #19

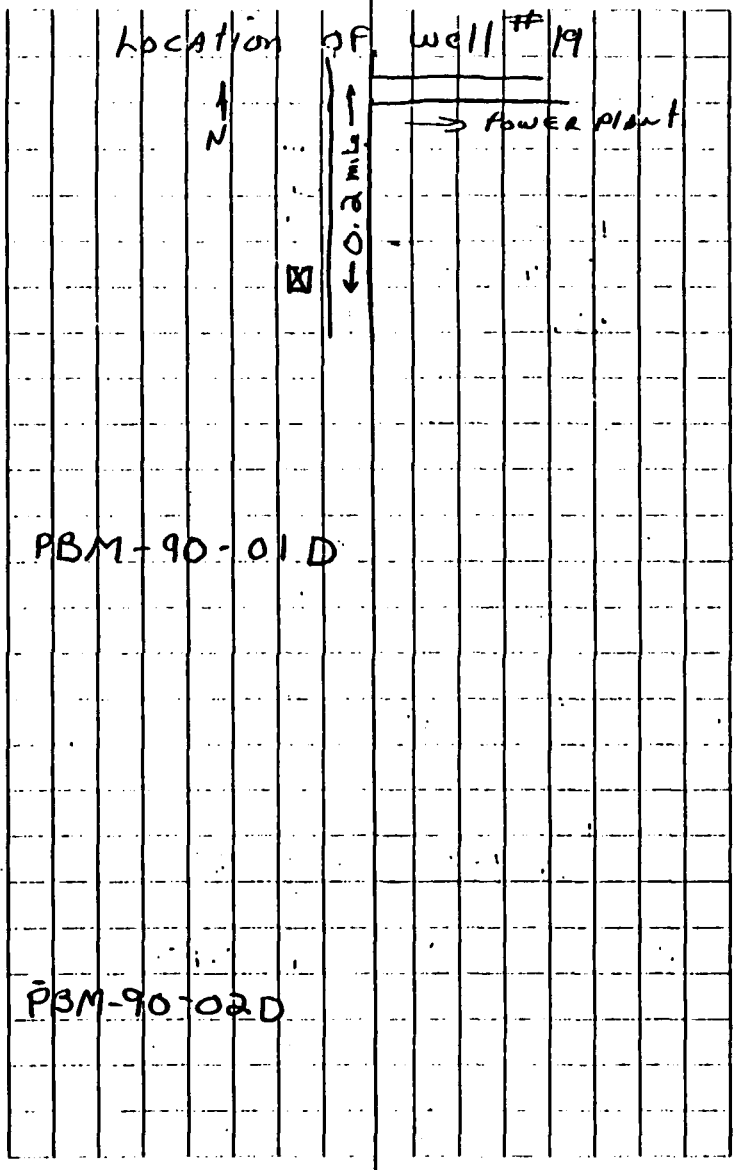

		823.84		
tp#6	7.36 1.91 2.46	824.25	6.18 4.50 2.82	819.34
tp#7	4.36 3.68 3.00	820.41	8.89 7.52 6.15	816.73
well#21		①	7.52	812.89
		②	5.85	814.56
		③	5.62	814.79
tp# 8	8.61 7.11 6.61	826.11	7.21 1.41 0.61	819.00
tp#9	7.17 5.85 4.53	829.36	3.97 2.60 1.23	823.51
tp#10	9.80 8.41 7.08	835.76	3.19 2.01 0.83	827.35
tp#11	5.06 3.87 2.69	833.63	7.29 6.00 4.72	829.76
well#22B		①	5.60	828.03
		②	3.63	830.00
		③	3.63	830.00

Location of wells 20, 21

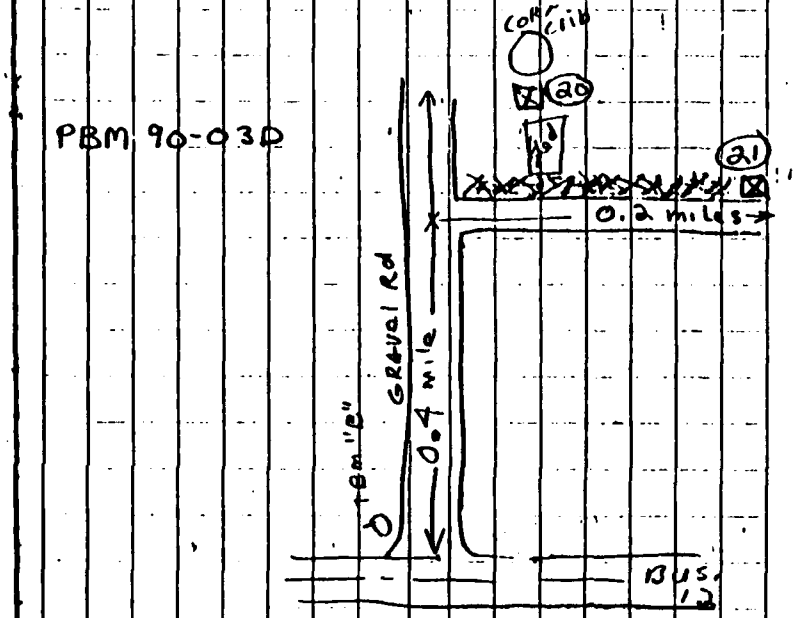

STA.	BS	HI	FS	ELEV.
WELL #22A		①	5.67	827.96
		②	3.92	829.71
		③	3.68	829.95
TP# 12	5.86 4.48 3.10	830.42	9.10 7.69 6.28	825.94
TP# 13	8.10 6.76 5.42	833.82	4.52 3.36 2.21	827.06
TP# 14	7.97 6.64 5.32	836.01	6.31 4.45 2.60	829.37
SPK. IN PP TOP OF B TP 15	6.26 5.16 4.06	836.00	5.85 5.17 4.50	830.84
TP# 16	5.99 4.73 3.48	833.63	8.53 7.10 5.68	828.90
TP# 17	7.11 5.79 4.47	833.72	7.47 5.70 3.93	827.93
TP# 18	8.47 6.96 5.45	836.04	6.45 4.64 2.84	829.08
TP# 19	6.71 5.54 4.32	836.20	7.03 5.38 3.74	830.66
TP# 20	9.64 7.95 6.26	839.64	5.85 4.51 3.18	831.69
TP# 21	6.43 5.20 3.97	840.55	5.66 4.39 2.92	835.35

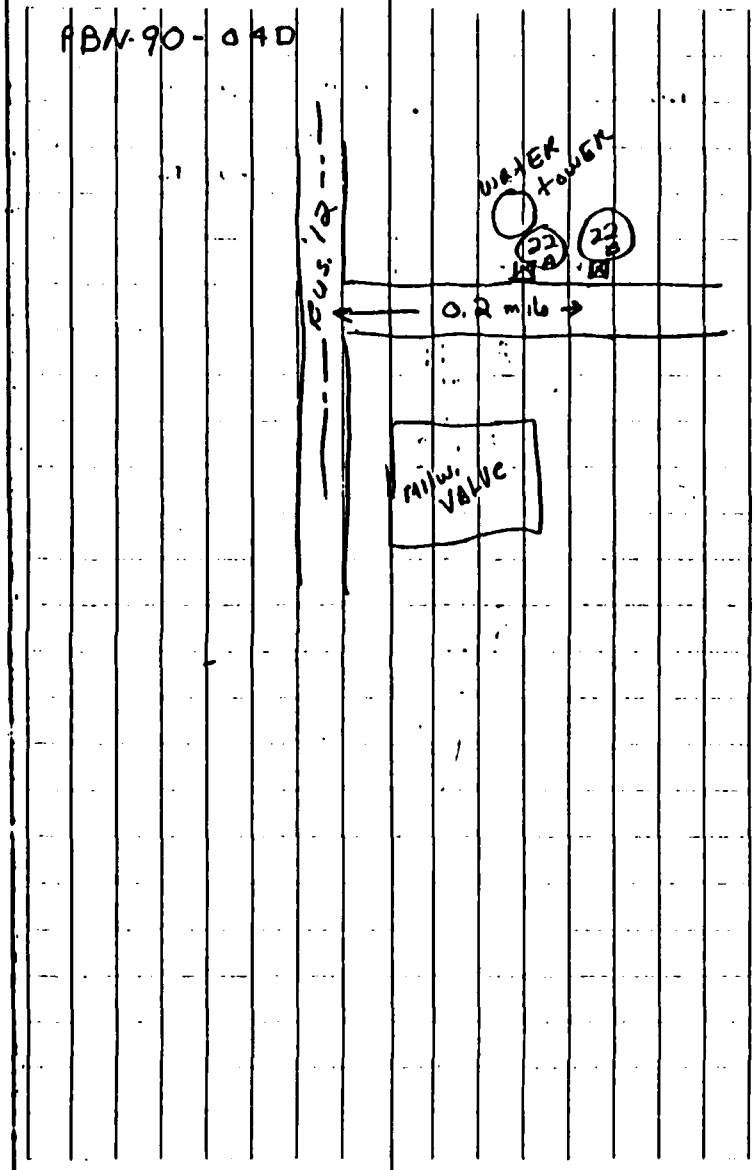

		840.55		
	4.84	835.60	7.03	834.83
	3.77		5.72	
1pt 22	2.70		4.41	
Bm# F109			6.87	
832.76			5.85	832.75
			4.83	

Oct. 1, 1990
E.C. JORDON
ADJOINING WELLS
CRC/ H.S.
SUNNY. 65°
9:00 AM
BENCH LOOP TO
WATER GAGE

STA.	BS	HT	FS	ELEV.
	15.88 15.25 14.62	115.25		100.00
tp#1	1.84 1.45 1.06	101.27	16.69 15.43 14.18	99.82
tp#2	1.45 1.15 0.85	86.00	17.05 16.42 15.79	84.85
tp#3 Bonus Ave	1.59	73.54	14.57 14.05 13.53	71.95
tp#4	13.09 12.07 11.05	84.13	2.19 1.48 0.77	72.06
tp#5	16.21 15.93 14.65	98.53	1.88 1.03 0.19	83.10
tp#6	15.95 14.78 13.62	112.64	0.91 0.67 0.42	97.86
tp#7	15.09 13.42 11.75	124.48	2.83 1.58 0.33	111.06
tp#8	12.04 11.03 10.02	126.36	11.17 9.15 7.13	115.33
tp#9	8.74 7.11 5.48	131.66	3.48 1.81 0.14	124.55
tp#10	15.11 13.24 11.37	143.17	3.09 1.73 0.36	129.93

GATE # 9 CENTER ground hatch
(CONCRETE PAINTED ORANGE)

tp#11	10.53 8.78 7.23	150.83	2.95 1.72 9.49	141.45
tp#12	2.24 1.83 1.42	136.20	17.05 15.86 14.69	134.37
tp#13	0.65 0.53 0.42	120.60	16.36 16.13 15.90	120.07
tp#14	1.47 1.20 0.92	105.81	16.29 15.99 15.68	104.61
tp#15	0.38 0.18 0.06	91.05	15.25 14.94 14.63	90.87
NORTH RIM MH TBM#10			10.71 10.67 10.4	80.38
tp#16	0.29 0.21 0.13	74.79	16.65 16.47 16.28	74.58
H2O			16.80	57.99
H2O marker 3, 30'				
TBM#10	16.26 15.86 15.49	96.24		80.38
tp#1A	17.17 16.82 16.47	112.38	0.87 0.74 0.62	95.50
tp#2A	17.06 16.79 16.58	128.44	0.81 0.67 0.53	111.65

MANHOLE RIM (NORTH)

STA	BS	HT	FS	ELEV
tp# 3A	16.85 16.10 14.98	143.06	0.95 0.80 0.65	127.64
tp# 4A	12.15 10.49 8.83	151.45	2.98 2.10 1.32	140.96
tp# 5A	6.44 4.13 1.77	140.89	16.57 14.69 12.81	136.76
tp# 6A	5.66 3.99 2.33	129.50	17.29 15.38 13.32	125.51
p# 7 A	11.02 9.04 7.06	124.44	18.71 16.10 13.49	115.40
tp# 8A	2.47 1.37 0.26	113.56	14.31 12.26 10.21	112.19
tp# 9 A	0.68 0.43 0.19	97.66	17.17 16.33 15.51	97.23
tp# 10A	2.39 1.44 0.51	82.96	17.07 16.14 15.20	81.52
tp# 11A	5.71 4.17 2.60	71.50	17.11 15.63 14.15	67.33
tp# 12A	16.54 15.88 15.21	85.88	2.43 1.50 0.57	70.00
tp# 13A	17.61 16.58 15.55	101.62	1.15 0.84 0.52	85.04
tp# 14A	16.46 15.94 14.42	115.30	2.06 1.76 1.47	99.86

29

	FS	ELEV @ gate 9
tp# 15A	15.98	
GATE	15.37	99.98
# 9	14.67	

STA.	BS	HT	FS	ELEV.
	1.85			
gate 9	1.60	101.58		99.98
	1.32			
	SHOT			
①	GROUND		6.15	95.43
②	PROTECTIVE CASE		4.36	97.22
③	PVC RISER		4.37	97.21
SPN 8905B				
①				
②			12.21	89.37
③			12.41	89.17
SPN 8905A				
①				
②			11.97	89.61
③			12.18	89.40
tp# 16	PVC	12.18	10.58	89.40
GATE 9			1.59	99.99

REPORT FOR
PROFESSIONAL SURVEYING SERVICES
HORIZONTAL AND VERTICAL
LOCATION SURVEY

BADGER ARMY AMMUNITION PLANT

Task Order Memorandum 002
U.S. Army Toxic and Hazardous Materials Agency
(USATHA)

Prepared for:

E.C. Jordan Co.
261 Commercial Street
P.O. Box 7050
Portland, Maine 04112

Prepared by:

Vierbicher Associates, Inc.
940 East Main Street
Reedsburg, WI 53959

January 2, 1990

FINAL REPORT
FOR
SURVEYING SERVICES
TASK ORDER MEMORANDUM 002
MONITORING WELL AND SOIL BORING LOCATIONS
BADGER ARMY AMMUNITION PLANT
SAUK COUNTY WISCONSIN
USATHAMA - E.C. JORDAN CO.

The services required for this project includes the horizontal and vertical locations for various monitoring wells and soil borings at Badger Army Ammunition Plant. The horizontal positions have been determined relative to the Universal Transverse Mercator (UTM) system per the NAD 27. The vertical locations are based on Mean Sea Level (MSL) from the 1929 General Adjustment.

The horizontal and vertical control shall be taken from existing control monuments and traverse control currently existing within the Army Ammunition Plant. This control information has been provided by the Army Ammunition Plant.

HORIZONTAL FIELD SURVEY

The horizontal location has been taken from the existing control or has been extended from said control into the survey areas. The equipment that was utilized for the horizontal control was a Lietz SET-4 electronic total station in combination with a Lietz SDR-22 electronic data collector. The grid factor for distances was keyed into the collector at a value of 0.9998919 this provides for an automatic reduction to grid distances required for geographic computations. The output produced by the data collector is based on Wisconsin State Plane Coordinates. A copy of the field notes generated by the data collector is attached as Appendix A. Due to equipment malfunction of the data collector some of the horizontal field data was gathered by manual field notes. These field notes are included under Appendix B. Multiple readings of horizontal angles and distances were taken to comply with required accuracies. This data was keyed into and adjusted through a surveying computation software program. The results of these computations are included under Appendix C.

VERTICAL FIELD SURVEY

The vertical location has also been taken from the existing control or has been extended from said control into the survey areas. The equipment that was used for the vertical survey was a Lietz B-1 automatic level. A copy of the field notes for the vertical survey is attached as Appendix B.

OFFICE COMPUTATIONS - REPORT GENERATION

The state plane coordinates determined by the data collector report was input into a batch file named ECJOR2PC. The file was then run through a program provided by National Ocean Service - National Geodetic Survey named GPPCGP. This program converts State Plane Coordinates to geographic positions (latitudes and longitude). The output from this run was placed in a batch file named ECJOR2GP. Finally this geographic position file was input through a National Ocean Service - National Geodetic Survey named UTMS. This converts the geographic position to the Universal Transverse Mercator System coordinates. The output file is named ECJOR2UT. The printout from this file list the UTM's for the wells and borings. A copy of the files generated are attached as Appendix D. The input format is detailed in the front of Appendix D. The report chart was then developed by integrating the vertical positions with the final UTM positions.

SURVEYOR'S CERTIFICATE

I, John L. Brey, Registered Land Surveyor, hereby certify that the above described location survey and the enclosed documentation are correct to the best of my knowledge and belief.

Dated this 2nd day of January, 1990.

John L. Brey, RLS-1319
Vierbicher Associates, Inc.
940 East Main Street
Reedsburg, WI 53959

MONITORING WELL AND SOIL BORING LOCATIONS
BADGER ARMY AMMUNITION PLANT
TASK ORDER MEMORANDUM # 2

OLEUM PLANT AND POND

MONITORING WELL OR SOIL BORING	UTM NORTHING (Y) METER	UTM EASTING (X) METER	ELEVATIONS GROUND SURFACE	WELL RISER	TOP PROTECTIVE CASING	MONITORING WELL OR SOIL BORING
OPB-89-01	4,806,589.3	278,473.5	929.1			OPB-89-01
OPB-89-02	4,806,712.2	279,061.7	875.3			OPB-89-02
OPB-89-03	4,806,681.2	279,113.9	870.1			OPB-89-03
OPB-89-04	4,806,655.3	279,098.0	872.4			OPB-89-04
OPB-89-05	4,806,681.0	279,160.4	883.6			OPB-89-05
OPB-89-06	4,806,613.5	278,662.1	932.8			OPB-89-06
OPB-89-07	4,806,605.1	278,621.4	932.8			OPB-89-07
OPB-89-08	4,806,600.5	278,584.4	933.3			OPB-89-08
OPB-89-09	4,806,585.6	278,519.9	932.2			OPB-89-09
OPB-89-10	4,806,671.3	278,565.8	932.8			OPB-89-10
OPB-89-11	4,806,629.2	278,566.2	932.8			OPB-89-11
OPB-89-12	4,806,539.6	278,586.0	925.6			OPB-89-12
OPB-89-13	4,806,516.3	278,471.9	929.6			OPB-89-13
OPM-89-01	4,806,487.9	278,550.8	924.3	925.99	926.23	OPM-89-01
OPM-89-02	4,806,578.0	279,241.0	877.6	879.46	879.61	OPM-89-02
OPM-89-03	4,806,289.5	278,932.9	928.2	929.75	929.98	OPM-89-03
	NITROGLCERINE POND					
NPM-89-01	4,804,671.6	279,174.7	861.5	862.77	863.03	NPM-89-01
	ROCKET PASTE AREA					
RPM-89-01	4,803,845.3	279,502.4	886.2	888.65	888.83	RPM-89-01
RPM-89-02	4,803,851.0	279,100.8	873.0	874.76	874.95	RPM-89-02
	OLD ACID AREA					
OAB-89-01	4,805,863.8	276,115.0	873.5			OAB-89-01
OAB-89-02	4,805,805.0	276,121.7	876.8			OAB-89-02
OAB-89-03	4,805,804.8	279,050.1	875.0			OAB-89-03
OAM-89-01	4,805,744.0	276,076.2	872.2	874.38	874.47	OAM-89-01
OAM-89-02	4,805,673.4	276,115.5	872.4	874.91	875.14	OAM-89-02
	OLD FUEL OIL TANK					
FTB-89-01	4,805,640.9	276,062.2	874.4			FTB-89-01
FTM-89-01	4,805,592.7	276,061.9	872.4	874.27	874.46	FTM-89-01

This Page Intentionally Left Blank.

APPENDIX A

FIELD DATA PRINTOUT FROM SDR-22

This Page Intentionally Left Blank.

S 522 V03-01.7	Copyright 1988 by Datacom Group Ltd. All rights reserved. 19-Dec-89 07:53 Angle : Degrees Temp : Fahrenht	Dist : Feet Coord : N-E-Elv	Press: Inch Hg
J 3	Job id JORDAN		
SCALE	S.F. 0.999891900		
N TE CP	Sea level crn:N		
N TE CP	C and R crn : N		
NuTE CP	Atmos crn : Y		
N TE TS	14-Dec-89 09:43		
INSTR	SET Theo <No Text> V.obs: Zenith P.C. mm 0.000	EDM <No Text> Serial no 000000 EDM o/s <Null>	Serial no 093118 Mount:not applc Refl o/s <Null>
P : KI 0029	Nrth 501768.430 Code MON	East 2074666.280	Elv <Null>
KI 0028	Nrth 501744.430 Code MON	East 2076165.990	Elv <Null>
N TE TS	14-Dec-89 10:05		
STN TY 0028	Nrth 501744.430 Theo ht <Null>	East 2076165.990 Code MON	Elv <Null>
AtMOS	Press 29.50 inHg	Temp 5.0 F	
D : FI 0028-0029	Dist <Null>	V.obs 90-11'15"	H.obs 0-00'00"
DBS MD 0028-0300	Dist 2619.070 Code Mult dist#1	V.obs <Null>	H.obs <Null>
DBS MD 0028-0300	Dist 2619.070 Code Mult dist#2	V.obs <Null>	H.obs <Null>
DbS FI 0028-0300	Dist 2619.070 Code PK	V.obs 90-30'50"	H.obs 55-25'30"
T..GET	Target ht 4.700		
D : FI 0028-0029	Dist <Null> Code MON	V.obs 90-10'00"	H.obs 359-59'55"

C S MD 0028-0300	Dist 2619.060 Code Mult dist#1	V.obs <Null>	H.obs <Null>
C S MD 0028-0300	Dist 2619.060 Code Mult dist#2	V.obs <Null>	H.obs <Null>
T SET	Target ht <Null>		
OBS F1 0028-0300	Dist 2619.060 Code PK	V.obs 90-30'55"	H.obs 55-25'30"
SET TV 0028	Count 002		
C S MC 0028-0029	Dist <Null> Code MON	V.ang 90-11'15"	Azmth 270-55'00"
C S MC 0028-0300	Dist 2618.992 Code PK	V.ang 90-30'53"	Azmth 326-20'33"
F S TV 0300	Nrth 503924.065 Code PK	East 2074714.690	Elv <Null>
E S TV 0028-0300	Azmth 326-20'33"	H.obs 55-25'30"	
SIN TV 0300	Nrth 503924.065 Theo ht <Null>	East 2074714.690 Code PK	Elv <Null>
N TE TS	14-Dec-89 10:47		
C S F1 0300-0029	Dist <Null> Code MON	V.obs 89-36'20"	H.obs 0-00'00"
C S MC 0300-0301	Dist 1296.380 Code Mult dist#1	V.obs <Null>	H.obs <Null>
OBS MD 0300-0301	Dist 1296.400 Code Mult dist#2	V.obs <Null>	H.obs <Null>
OBS F1 0300-0301	Dist 1296.390 Code PK	V.obs 89-41'35"	H.obs 116-37'55"
OBS F1 0300-0028	Dist <Null> Code MON	V.obs 89-33'20"	H.obs 359-59'55"
OBS MD 0300-0301	Dist 1296.380 Code Mult dist#1	V.obs <Null>	H.obs <Null>
C_S MD 0300-0301	Dist 1296.400 Code Mult dist#2	V.obs <Null>	H.obs <Null>
C S F1 0300-0301	Dist 1296.390	V.obs 89-41'30"	H.obs 116-38'00"

(SLOPE GROUND DIST)

Horz Grid Dist
2618.603

Code PK

SET TV 0300 Count 002

C 3 MC 0300-0028 Dist <Null> V.ang 89-34'50" Azmth 146-20'33"
Code MON

C 3 MC 0300-0301 Dist 1296.354 V.ang 89-41'33" Azmth 262-58'33"
Code PK

F 3 TV 0301 Nrth 503765.557 East 2073428.224 Elv <Null>
Code PK

N TE TS 14-Dec-89 11:20

S.N TV 0301 Nrth 503765.557 East 2073428.224 Elv <Null>
Theo ht <Null> Code PK

D_3 F1 0301-0300 Dist <Null> V.obs 90-19'45" H.obs 0-00'00"
Code PK

C 3 MD 0301-0302 Dist 395.110 V.obs <Null> H.obs <Null>
Code Mult dist#1

C 3 MD 0301-0302 Dist 395.080 V.obs <Null> H.obs <Null>
Code Mult dist#2

F1 0301-0302 Dist 395.095 V.obs 94-12'40" H.obs 169-02'40"
Code OPM8902

E F TV 0301 Count 002

OBS MC 0301-0300 Dist <Null> V.ang 90-18'45" Azmth 82-58'33"
Code PK

Obs MC 0301-0302 Dist 395.084 V.ang 94-12'40" Azmth 252-01'13"
Code OPM8902

D_3 F1 0301-0300 Dist <Null> V.obs 90-21'05" H.obs 0-00'00"
Code PK

3 3 MD 0301-0303 Dist 683.450 V.obs <Null> H.obs <Null>
Code Mult dist#1

3 3 MD 0301-0303 Dist 683.430 V.obs <Null> H.obs <Null>
Code Mult dist#2

3 3 F1 0301-0303 Dist 683.440 V.obs 92-06'40" H.obs 204-36'15"
Code OPB8905

3 T TV 0301 Count 002

C 3 MC 0301-0300	Dist <Null> Code PK	V.ang 90-21'05"	Azmth 82-58'33"
C 3 MC 0301-0303	Dist 883.421 Code OPB8905	V.ang 92-06'40"	Azmth 287-34'48"
OPS F1 0301-0300	Dist <Null> Code PK	V.obs 90-20'45"	H.obs 0-00'00"
NOTE TS	14-Dec-89 11:35		
C 3 MD 0301-0304	Dist 861.080 Code Mult dist#1	V.obs <Null>	H.obs <Null>
C 3 MD 0301-0304	Dist 861.010 Code Mult dist#2	V.obs <Null>	H.obs <Null>
C 3 F1 0301-0304	Dist 861.045 Code OPB8904	V.obs 92-09'45"	H.obs 194-41'10"
S 1 TV 0301	Count 002		
OBS MC 0301-0300	Dist <Null> Code PK	V.ang 90-20'45"	Azmth 82-58'33"
OBS MC 0301-0304	Dist 861.021 Code OPB8904	V.ang 92-09'45"	Azmth 277-39'43"
OBS F1 0301-0300	Dist <Null> Code PK	V.obs 90-11'25"	H.obs 0-00'00"
C 3 MD 0301-0315	Dist 828.830 Code Mult dist#1	V.obs <Null>	H.obs <Null>
C 3 MD 0301-0305	Dist 828.920 Code Mult dist#2	V.obs <Null>	H.obs <Null>
C 3 F1 0301-0305	Dist 828.875 Code OPB8903	V.obs 92-04'45"	H.obs 201-06'20"
S 1 TV 0301	Count 002		
OBS MC 0301-0300	Dist <Null> Code PK	V.ang 90-11'25"	Azmth 82-58'33"
OBS MC 0301-0305	Dist 828.852 Code OPB8903	V.ang 92-04'45"	Azmth 284-04'53"
OBS F1 0301-0300	Dist <Null> Code PK	V.obs 90-21'30"	H.obs 0-00'00"
C 3 MD 0301-0306	Dist 1022.960	V.obs <Null>	H.obs <Null>

	Code Mult dist#1		
DBS MD 0301-0306	Dist 1022.960 Code Mult dist#2	V.obs <Null>	H.obs <Null>
DBS F1 0301-0306	Dist 1022.960 Code OPB8902	V.obs 91-52'35"	H.obs 203-54'30"
B F TV 0301	Count 002		
B MC 0301-0300	Dist <Null> Code PK	V.ang 90-21'30"	Azmth 82-58'33"
DFS MC 0301-0306	Dist 1022.931 Code OPB8902	V.ang 91-52'35"	Azmth 286-53'03"
BFT TV 0301	Count 006		
B MC 0301-0300	Dist <Null> Code PK	V.ang 90-18'42"	Azmth 82-58'33"
B MC 0301-0306	Dist 1022.931 Code OPB8902	V.ang 91-52'35"	Azmth 286-53'03"
B MC 0301-0305	Dist 828.852 Code OPB8903	V.ang 92-04'45"	Azmth 284-04'53"
MC 0301-0304	Dist 861.021 Code OPB8904	V.ang 92-09'45"	Azmth 277-39'43"
B MC 0301-0303	Dist 683.421 Code OPB8905	V.ang 92-06'40"	Azmth 287-34'48"
DFS MC 0301-0302	Dist 395.084 Code OPM8902	V.ang 94-12'40"	Azmth 252-01'13"
PDS TV 0306	Nrth 504062.464 Code OPB8902	East 2072450.018	Elv <Null>
PDB TV 0305	Nrth 503967.062 Code OPB8903	East 2072824.894	Elv <Null>
PDS TV 0304	Nrth 503880.261 Code OPB8904	East 2072575.590	Elv <Null>
PDS TV 0303	Nrth 503971.813 Code OPB8905	East 2072777.234	Elv <Null>
P B TV 0302	Nrth 503643.945 Code OPM8902	East 2073053.486	Elv <Null>
B B TV 0301-0306	Azmth 286-53'03"	H.obs 203-54'30"	

Horz Grid
AR 203°54'30"
AR 204°36'15"

C E TS	14-Dec-89 11:50		
E TV 0301-0306	Azmth 286-53'03"	H.obs 203-54'30"	
Bs F1 0301-0300	Dist <Null> Code PK	V.obs 90-19'30"	H.obs 0-00'00"
E MD 0301-0307	Dist 2785.010 Code Mult dist#1	V.obs <Null>	H.obs <Null>
E MD 0301-0307	Dist 2785.010 Code Mult dist#2	V.obs <Null>	H.obs <Null>
E F1 0301-0307	Dist 2785.010 Code PK	V.obs 89-32'25"	H.obs 179-47'30"
E F1 0301-0300	Dist <Null> Code PK	V.obs 90-20'30"	H.obs 359-59'45"
E MD 0301-0307	Dist 2785.000 Code Mult dist#1	V.obs <Null>	H.obs <Null>
E MD 0301-0307	Dist 2784.990 Code Mult dist#2	V.obs <Null>	H.obs <Null>
DS F1 0301-0307	Dist 2784.995 Code PK	V.obs 89-32'30"	H.obs 179-47'20"
OTE TS	14-Dec-89 12:05		
F1 0301-0300	Dist <Null> Code PK	V.obs 90-22'05"	H.obs 359-59'50"
MD 0301-0307	Dist 2785.010 Code Mult dist#1	V.obs <Null>	H.obs <Null>
MD 0301-0307	Dist 2784.980 Code Mult dist#2	V.obs <Null>	H.obs <Null>
F1 0301-0307	Dist 2784.995 Code PK	V.obs 89-32'20"	H.obs 179-47'15"
TV 0301	Count 002		
BS MC 0301-0300	Dist <Null> Code PK	V.ang 90-20'42"	Azmth 82-58'33"
bs MC 0301-0307	Dist 2784.922 Code PK	V.ang 89-32'25"	Azmth 262-46'03"
F1 0301-0300	Dist <Null>	V.obs 90-20'35"	H.obs 0-00'00"

	Code PK		
JbS MD 0301-0308	Dist 84.240 Code Mult dist#1	V.obs <Null>	H.obs <Null>
I B MD 0301-0308	Dist 84.260 Code Mult dist#2	V.obs <Null>	H.obs <Null>
I B F1 0301-0308	Dist 84.250 Code S831151	V.obs 100-20'40"	H.obs 80-31'55"
E T TV 0301	Count 002		
2TS MC 0301-0300	Dist <Null> Code PK	V.ang 90-20'35"	Azmth 82-58'33"
JRS MC 0301-0308	Dist 84.248 Code S831151	V.ang 100-20'40"	Azmth 163-30'28"
NOTE TS	14-Dec-89 12:20		
E T TV 0301	Count 003		
2TS MC 0301-0300	Dist <Null> Code PK	V.ang 90-20'38"	Azmth 82-58'33"
MC 0301-0308	Dist 84.248 Code S831151	V.ang 100-20'40"	Azmth 163-30'28"
JBS MC 0301-0307	Dist 2784.922 Code PK	V.ang 89-32'25"	Azmth 262-46'03"
POS TV 0308	Nrth 503686.097 Code S831151	East 2073451.749	Elv <Null>
PUJ TV 0307	Nrth 503414.997 Code PK	East 2070665.847	Elv <Null>
S I TV 0307	Nrth 503414.997 Theo ht <Null>	East 2070665.847 Code PK	Elv <Null>
N E TS	14-Dec-89 13:37		
STN TP 0307	Nrth 503414.997 Theo ht <Null>	East 2070665.847 Code PK	Elv <Null>
BKB TP 0307-0301	Azmth 82-46'03"	H.obs 0-00'00"	
) ; F1 0307-0301	Dist <Null> Code PK	V.obs 90-33'35"	H.obs 0-00'00"
) ; MD 0307-0309	Dist 201.110	V.obs <Null>	H.obs <Null>

	Code Mult dist#1	GRID DIST = 201.036 AR 54° 37 30" AZ = 137° [illegible]	
OBS MD 0307-0309	Dist 201.110 Code Mult dist#2	V.obs <Null>	H.obs <Null>
[illegible] TP 0309	+0.14 Nrth 503267.033 Code OPM8901	-0.2' East 2070801.943	Elv <Null> [illegible] 137 E [illegible]
[illegible] MD 0307-0310	Dist 246.880 Code Mult dist#1	V.obs <Null>	H.obs <Null>
[illegible] MD 0307-0310	Dist 246.880 Code Mult dist#2	V.obs <Null>	H.obs <Null>
[illegible] TP 0310	-0.14 Nrth 503440.782 Code OPB8912	GRID DIST = 246.778 AR 1° 14'05" AZ = 84° 00'08" East 2070911.274 -0.21	Elv <Null> 25 [illegible] 245 E [illegible]
[illegible] MD 0307	Dist 141.280 Code Mult dist#1	V.obs <Null>	H.obs <Null>
[illegible] MD 0307	Dist 141.290 Code Mult dist#2	V.obs <Null>	H.obs <Null>
[illegible] MD 0307	Dist 141.240 Code Mult dist#1	V.obs <Null>	H.obs <Null>
OPS MD 0307	Dist 141.240 Code Mult dist#2	V.obs <Null>	H.obs <Null>
OBS MD 0307	Dist 141.240 Code Mult dist#1	V.obs <Null>	H.obs <Null>
OBS MD 0307	Dist 141.230 Code Mult dist#2	V.obs <Null>	H.obs <Null>
OBS MD 0307	Dist 141.240 Code Mult dist#1	V.obs <Null>	H.obs <Null>
[illegible] MD 0307	Dist 141.240 Code Mult dist#2	V.obs <Null>	H.obs <Null>
[illegible] TS	14-Dec-89 13:52		
OPS MD 0307	Dist 141.230 Code Mult dist#1	V.obs <Null>	H.obs <Null>
OBS MD 0307	Dist 141.230 Code Mult dist#2	V.obs <Null>	H.obs <Null>
OBS MD 0307	Dist 141.230 Code Mult dist#1	V.obs <Null>	H.obs <Null>

) : MD 0307	Dist 141.230 Code Mult dist#2	V.obs <Null>	H.obs <Null>
) 3 MD 0307	Dist 141.230 Code Mult dist#1	V.obs <Null>	H.obs <Null>
)PS MD 0307	Dist 141.230 Code Mult dist#2	V.obs <Null>	H.obs <Null>
POS TP 0311	Nrth <Null> Code OPB8913	East <Null>	Elv <Null>
BKB TP 0307-0301	Azmth 82-46'03"	H.obs <Null>	
) ' F1 0307-0301	Dist <Null> Code PK	V.obs 90-30'05"	H.obs <Null>
P . TP 0312	Nrth <Null> Code OPB8913	East <Null>	Elv <Null>

* nd of Report *

This Page Intentionally Left Blank.

APPENDIX B

HORIZONTAL AND VERTICAL SURVEY FIELD NOTES

This Page Intentionally Left Blank.

E & J Jordan
Well + Borings Loc.
12/14/89
Bailey 5°
Schroeder/Elmt K.

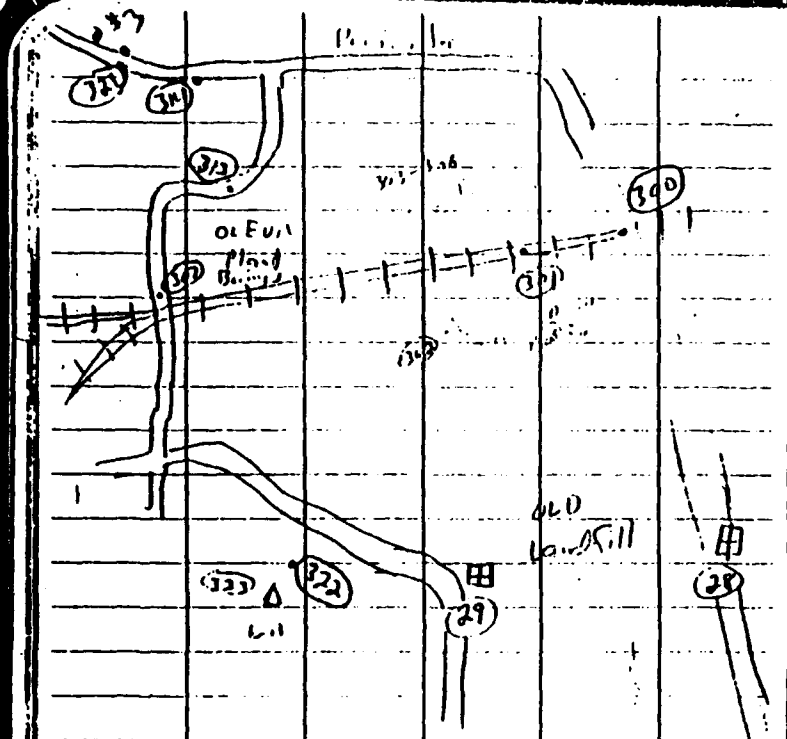

300	PK in E tracks [illegible] Edge Per Rd		
301	PK in [illegible]		
302	Well	OPM	8902
303	Boring	OPB	8905
304	Boring	OPB	8904
305	Boring	OPB	8903
306	Boring	[illegible]	[illegible]

307	PK in E	5' N of Power Line Xing	
308	Well	S83	1151
309	Well	OPM	8901
310	Boring	OPB	8912
311	"	OPB	8913
312	"	OPB	8909
313	PK in Rd Pave toward S Edge (in Bend)		
314	PK in Rd Pave toward S Edge ±200' W of Intersec.		
315	Boring	OPB	8910
316	"	OPB	8911
317	"	OPB	8908
318	"	OPB	8907 w/Nail
319	"	OPB	8901
320	"	OPB	8906
321	Spike 5' N of [illegible]		
#3	Mid States Central P		
322	Spike in weeds on knoll		
323		OPM	8903
326		RPM	8902
327	Spike		

301/307/311	160°15'		141.2	Grid 141.2
301/307/312	283°06'		170.[illegible]	Grid [illegible]
301/307/313	[illegible]	129°06'10"	294°33'05	
307/313	748.41	748.42	748.41	Grid 748.330
307/313/314	162°47'30"	325°33'05"	162°47'32"	
313/314	640.70	640.71	640.71	Grid 640.637
307/313/315	335°31'		266.05	Grid 266.02
/316	330°12'		400.83	Grid 400.79
/317	341°29'		489.41	Grid 489.36
/318	327°07'00"		487.71	Grid 487.66
/319	1[illegible]°49'		643.94	Grid 643.87
313/318/320	91°54'		136.[illegible]	Grid 136.[illegible]
313/314/321	93°26'40"	186°53'15"	93°26'38"	
314/321	713.31	713.32	713.33	Grid 713.243
314/321/3	203°34'25"	47°08'50"	203°34'25"	
321/3	198.23	198.21	198.22	Grid 198.177
28/29/322	201°05'55"	42°11'55"	201°05'57"	
29/322	2729.25	2729.25	2729.26	Grid 2728.958

29/322/323 [illegible] 141.[illegible] Grid 142.30

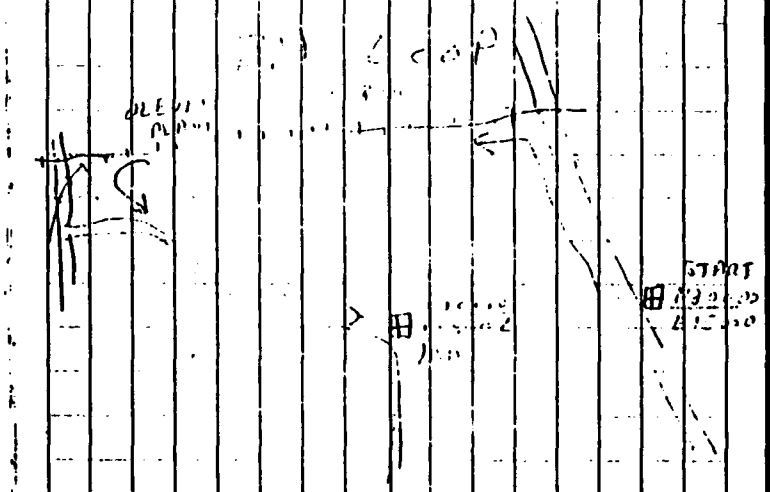

STA		HI	FS	Elev
Dist N20.000 E15.000	2.40	927.03		924.63
TP 1	0.38	913.92	15.49	913.54
TP 2	0.26	906.02	14.16	899.76
TP 3	2.62	898.16	10.48	895.54
TP 4	12.04	910.04	0.96	897.20
TP 5	6.32	909.28	7.08	902.96
TP 6	7.53	914.72	2.09	907.19
TP 7	0.39	911.03	4.39	910.33
TP 8			12.34	898.69
TP 9			5.15	905.88

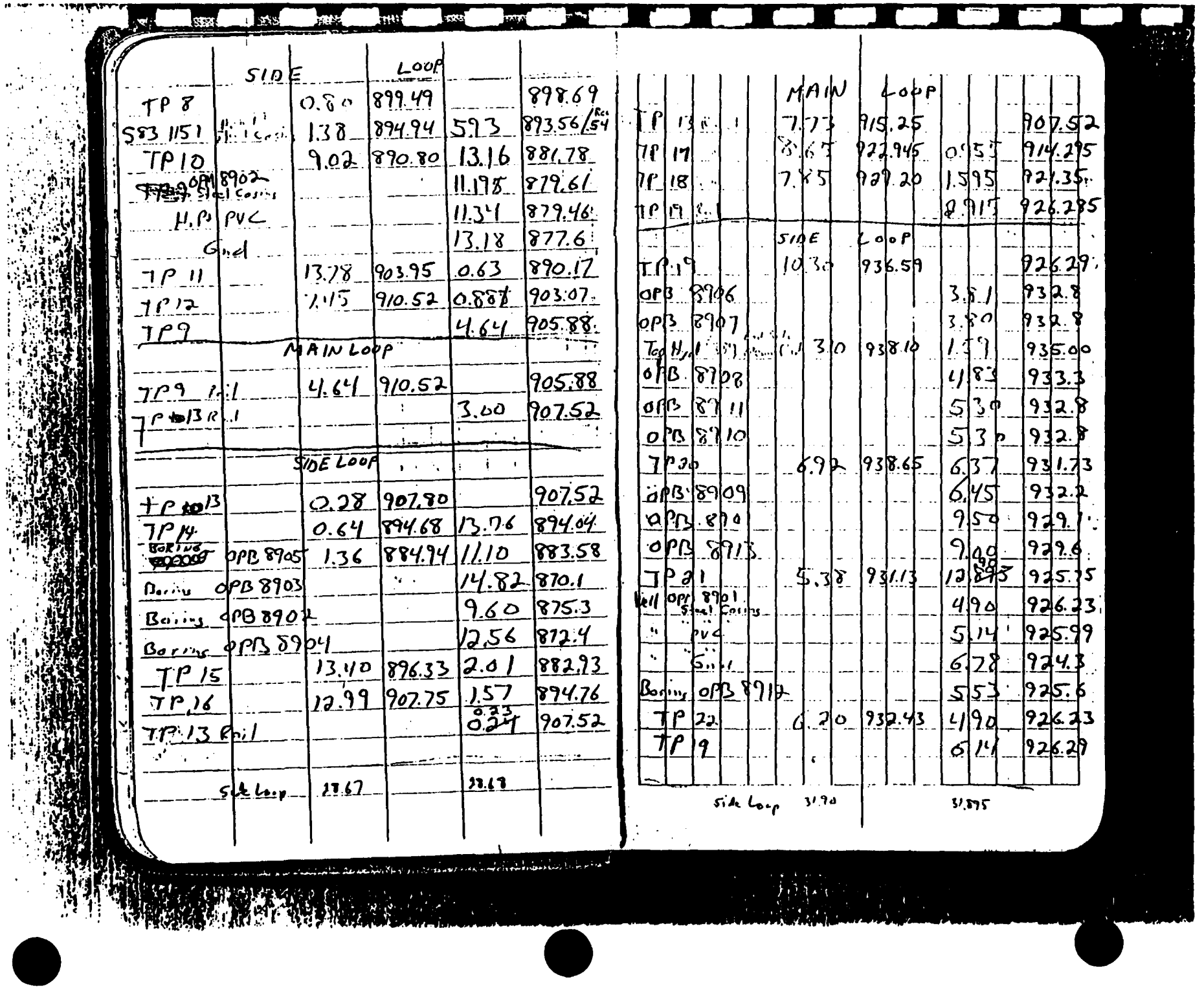

	SIDE LOOP				
TP 8		0.80	899.49		898.69
583 1151		1.38	894.94	5.93	893.56/54 Rec
TP 10		9.02	890.80	13.16	881.78
	OPB 8902 Steel Casing			11.198	879.61
	H.P PVC			11.34	879.46
	Gvel			13.18	877.6
TP 11		13.78	903.95	0.63	890.17
TP 12		1.15	910.52	0.887	903.07
TP 9				4.64	905.88
	MAIN LOOP				
TP 9 R.1		4.64	910.52		905.88
TP to 13 R.1				3.00	907.52
	SIDE LOOP				
TP to 13		0.28	907.80		907.52
TP 14		0.64	894.68	13.76	894.04
BORING	OPB 8905	1.36	884.94	11.10	883.58
Boring	OPB 8903			14.82	870.1
Boring	OPB 8902			9.60	875.3
Boring	OPB 8904			12.56	872.4
TP 15		13.40	896.33	2.01	882.93
TP 16		12.99	907.75	1.57	894.76
TP 13 R.1				0.33 0.23	907.52
	Side Loop	27.67		23.69	

		MAIN	LOOP		
TP 13 R.1		7.73	915.25		907.52
TP 17		8.63	922.945	0.955	914.295
TP 18		7.85	929.20	1.595	921.35
TP 19 R.1				2.915	926.285
		SIDE	LOOP		
TP 19		10.30	936.59		926.29
OPB 8906				3.51	932.8
OPB 8907				3.80	932.8
TP to H.1 R.1		10.30	938.10	1.39	935.00
OPB 8908				4.83	933.3
OPB 8911				5.30	932.8
OPB 8910				5.30	932.8
TP 20		6.92	938.65	6.37	931.73
OPB 8909				6.45	932.2
OPB 8912				9.50	929.1
OPB 8913				9.00	929.6
TP 21		5.38	931.13	12.895	925.75
Well OPB 8901	Steel Casing			4.90	926.23
"	PVC			5.14	925.99
"	Gravel			6.78	924.3
Boring	OPB 8917			5.53	925.6
TP 22		6.20	932.43	4.90	926.23
TP 19				6.14	926.29
	Side Loop	31.90		31.895	

Main Loop

TP 19 Rd		6.14	932.425		926.285
TP 23		8.41	940.005	0.80	931.565
TP 24		9.11	948.035	1.14	938.865
TP 25		4.64	939.505	13.17	934.865
Well OPM 8903	Steel Casing			9.52	929.98
	PVC			9.75	929.75
	Grid			11.26	928.2
TP 26		2.67	936.245	5.93	933.575
TP 27		0.66	922.88	14.025	922.22
TP 28		9.56	924.34	8.10	914.78
S1132	Steel Casing			8.88	915.46 / Rec .48
TP 29		7.09	931.12	0.31	924.03
TP 30		4.38	923.78	11.~~715~~ 72	919.40
TP 31		7.24	926.13	4.89	918.89
Disk N 20,000 E 13,500				3.71	922.42
	Σ	127.92		130.115	

DIFF IN DONS = 2.21 Diff. = 2.195 [CLOSURE = 0.015]

ROCKET / Vitro Area

#324	Well	NPM 8901
#325	Spike on hill - Rocket Area	
#326	Well	RPM 8902
#327	Spike on hill E of N-S Rd	
#328	Well	RPM 8901

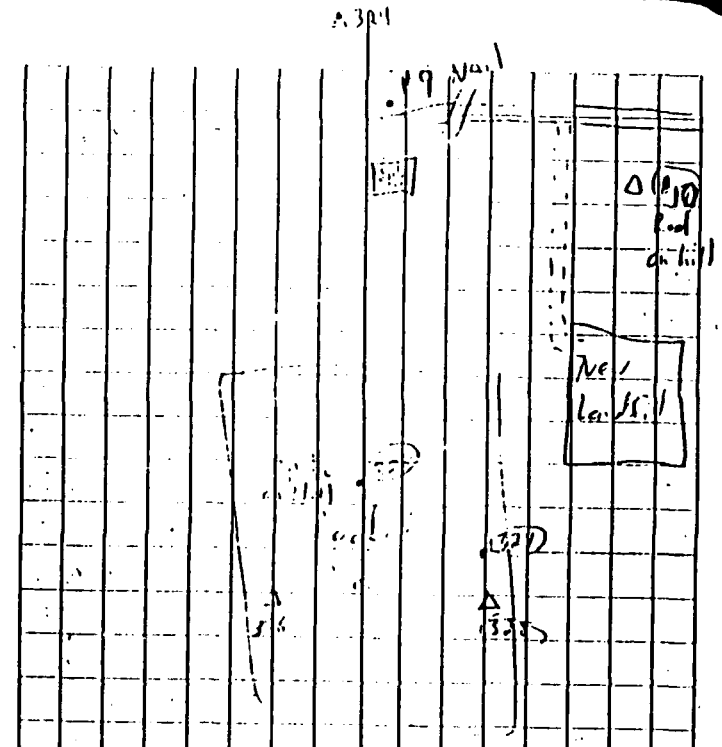

10/9/324	270°30'25"	181°00'45"	270°30'23"	
9/324	881.60		Grid	881.505
10/9/325	69°15'20"	138°30'30"	69°15'15"	
9/325	1551.50	1551.52	1551.50	GRID 1551.339
9/325/326	260°04'30"		722.94	GRID 722.862
9/325/327	114°48'55"	229°37'55"	114°48'57"	
325/327	722.11	722.10	722.10	Grid 722.025
325/327/328	271°42'30"		258.34	GRID 258.312

[illegible] LOOP

STA		BS	HI	FS	Elev
Mercury		3.46	885.82		882.36
TP 32		9.45	887.67	7.60	878.22
TP 33		2.50	887.37	2.80	884.87
TP 34		2.76	881.55	8.58	878.79
Well RPM 8902 PVC				6.79	874.76
" "	Gnd			8.52	873.0
" "	Steel Casing	4.52	879.47	6.60	874.95
TP 35		6.32	883.79	2.00	877.47
TP 36		~~8.47~~ 8.42	888.97	3.24	880.55
Well RPM 8901 PVC				0.32	888.65
" "	Gnd			2.75	886.2
" "	Steel Casing	~~2.445~~ 2.45	891.28	0.14	888.83
TP 37		4.34	889.33	6.29	884.99
TP 38		4.23	885.08	8.48	880.85
TP 39 (Hyd No 49? Small)		~~4.005~~ Flow No 4.01	880.74	8.35	876.73
TP 40	[illegible]	5.50	881.07	5.17	875.57
S1119	Steel Casing				
Approx top - Cast [illegible]				1.37	879.70/.71 Rec
TP 41		5.46	884.51	2.02	879.05
TP 42	[illegible]	~~1.005~~ 1.01	878.89	6.63	877.88
TP 43		3.35	873.09	9.15	869.74
Well NPM 8901 PVC				10.32	862.77
" "	Gnd			11.62	861.5
" "	Steel Casing	13.66	876.69	10.06	863.03

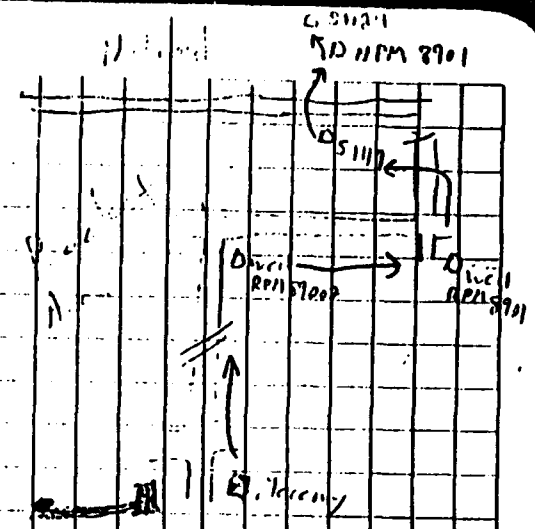

TP 44		11.82	885.66	2.85	873.84
Well S1124	Steel Casing			5.72	879.94/.94
	Σ	93.235		95.68	

Diff = 2.445

Rec 2.42

Closure = 0.025

OLD ACID - FUEL TANK AREAS

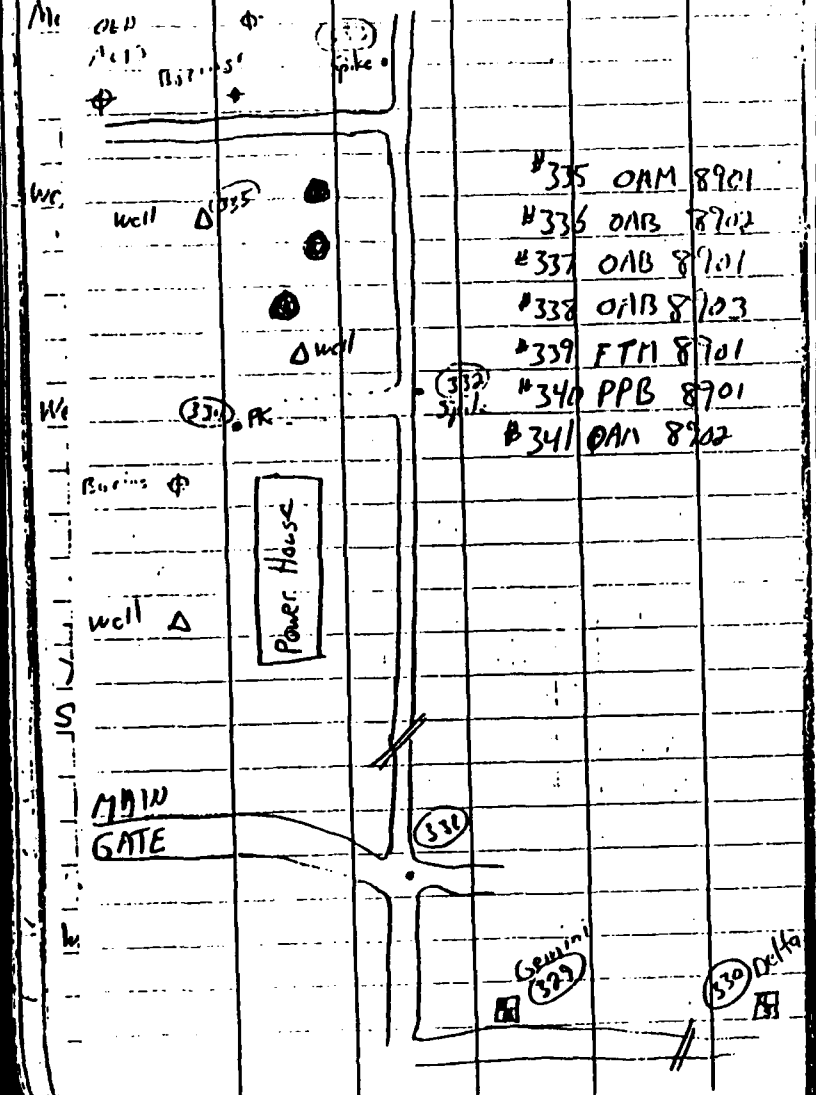

#335 OAM 8901
#336 OAB 8902
#337 OAB 8901
#338 OAB 8903
#339 FTM 8901
#340 PPB 8901
#341 OAM 8902

#329 Gemini
#330 Delta
#331 PK [illegible] N-S Rd
#332 Spike [illegible] Rd to Powerhouse
#333 Spike [illegible] N-S Rd to West
#334 PK ([illegible]) [illegible] Powerhouse

330/329/331	241°42'05"	123°24'15"	211°42'07"		
329/331	849.90	849.9[illegible]	849.91	Grid	849.818
329/331/332	[illegible]30"	56°09'05"	208°01'32"		
331/332	1036.70	1036.65	1038.69	Grid	1038.578
329/331/333	[illegible]	54°39'25"	207°19'43"		
331/333	1526.57	1526.58	1526.56	Grid	1526.405
331/332/334	85°46'20"	171°32'50"	85°46'25"		
332/331	381.50	381.50	381.50	Grid	381.459
331/333/335	59°15'25"		467.47	Grid	467.42
" " /336	82°37'55"		261.92	Grid	261.89
" " /337	118°43'20"		329.18	Grid	329.14
" " /338	85°03'15"		496.39	Grid	496.34
332/334/339	109°15'[illegible]		234.20	Grid	234.17
" " /340	138°58'15"		96.00	Grid	95.99
" " /341	339°37'10"		112.17	Grid	112.16

STA	BS	HI	FS	Elev
Gemini	5.98	880.46		874.48
TP 45	5.92	880.98	5.40	875.06
TP 46	4.08	881.52	3.54	877.44
TP 47	4.19	876.94	8.77	872.75
Well FTM 8901 Steel Casing			2.48	874.46
" " PVC			2.67	874.27
" " Gal			4.54	872.4
TP 48	1.79	877.24	4.79	872.45
PPB 8901			2.85	874.4
Well OAM 8702 Steel Casing			2.10	875.14
" " PVC			2.33	874.91
" " Gal			4.85	872.4
Well OAM 8901 PVC			2.86	874.38
" " Gal			5.05	872.2
" " Steel Casing	6.17	880.64	2.77	874.47
OAB 8903			5.66	875.0
OAB 8701			7.11	873.5
OAB 8902			3.87	876.8
TP 49 Rail	4.02	881.77	2.89	877.75
TP 50	5.14	881.27	5.64	876.13
TP 51	5.13	882.39	4.01	877.26
TP 52 (PK Nail)	3.39	880.43	5.35	877.04
TP 45	5.32	880.38	5.37	875.06
Gemini			5.90	874.48
Σ	54.125		54.11	

CLOSURE: 0.015

APPENDIX C

SURVEY TRAVERSE COPUTATIONS AND ADJUSTMENTS

This Page Intentionally Left Blank.

	3			504904.8300	2070001.3100
E					
	28			501744.4300	2076165.9900
EA					
	29			501768.4300	2074666.2800
START					
	28			501744.4300	2076165.9900
		NW 33 39 27.0	2618.886		
	300			503924.3004	2074714.5324
S ART					
	28			501744.4300	2076165.9900
TR		NW 33 39 27.0	2618.603		
	300			503924.0648	2074714.6892
		SW 82 58 33.0	1296.195		
	301			503765.5558	2073428.2225
TR		SW 82 46 3.0	2784.531		
	307			503414.9939	2070665.8468
		NE 17 19 8.0	748.332		
	313			504129.3986	2070888.6174
		NE 0 6 40.0	640.637		
	314			504770.0344	2070889.8598
TR		NW 86 26 42.0	713.243		
	321			504814.2603	2070177.9892
		NW 62 52 17.0	198.199		
	0			504904.6369	2070001.5950
		NW 55 53 13.4	0.344		
	3			504904.8300	2070001.3100

PRECISION RATIO = 1 : 26141

C MPASS RULE ADJUSTMENT

	28			501744.4300	2076165.9900
		NW 33 39 30.0	2618.696		
	300			503924.1210	2074714.6063
AJ		SW 82 58 38.2	1296.232		
	301			503765.6398	2073428.0986
		SW 82 46 8.2	2784.611		
	307			503415.1376	207 5.6347
AJ		NE 17 19 0.4	748.340		
	313			504129.5584	2070888.3815
		NE 0 6 33.5	640.651		
	314			504770.2079	2070889.6036
AJ		NW 86 26 38.0	713.266		
	321			504814.4491	2070177.7105
AJ		NW 62 52 16.1	198.207		
	3			504904.8300	2070001.3100

START					
	300			503924.1210	2074714.6063
		SW 82 58 38.2	1296.232		
	301			503765.6398	2073428.0986
SP		SW 72 1 18.2	393.975		
	302			503644.0368	2073053.3600
		NW 72 25 6.8	682.883		
	303			503971.9103	2072777.1140

	304					503680.3653	2072575.4673
S		NW	75 55 1.8		828.217		
	305					503967.1653	2072624.7737
SS		NW	73 6 51.9		1022.272		
	306					504062.5706	2072449.9000
S		SE	16 29 26.8		82.870		
	308					503686.1786	2073451.6221
IN		SW	82 46 8.2		2784.611		
	307					503415.1376	2070665.6347
S		SE	42 36 21.8		201.036		
	309					503267.1700	2070801.7268
S		NE	84 0 13.2		246.778		
	310					503440.9173	2070911.0624
SS		SW	63 1 8.1		141.200		
	311					503351.0757	2070539.8034
S		NE	7 52 8.2		170.340		
	312					503583.8736	2070688.9555
IN		NE	17 19 0.4		748.340		
	313					504129.5584	2070888.3815
S		SE	76 37 47.7		266.020		
	355					504068.0439	2071147.1915
S		SW	12 50 0.4		266.020		
	315					503870.1836	2070829.2938
SS		SW	7 35 0.4		400.790		
	316					503732.2738	2070835.4893
S		SE	1 11 59.6		489.360		
	317					503640.3057	2070898.6289
S ART							
	307					503415.1376	2070665.6347
IN		NE	17 19 0.4		748.340		
	313					504129.5584	2070888.3815
S		SW	33 8 0.4		643.870		
	319					503590.3818	2070536.4480
TR		SE	15 33 59.6		487.660		
	318					503659.7860	2071019.2488
T		NE	76 20 0.4		136.420		
	320					503692.0181	2071151.8063
S ART							
	28					501744.4300	2076165.9900
T 29		NW	89 4 59.4		1499.902		
	29					501768.4300	2074666.2800
TR		NW	67 59 2.4		2728.958		
	322					502791.4220	2072136.3195
T		SW	24 23 57.6		142.300		
	323					502661.8311	2072077.5362
EA							
	9					496506.0900	2073031.9900
E							
	10					496412.0600	2076909.4500
S ART							
	10					496412.0600	2076909.4500
IN		NW	88 36 39.0		3878.600		
	9					496506.0900	2073031.9900
SL		NE	1 53 44.0		881.505		
	324					497387.1126	2073061.1480
T		SE	19 21 24.0		1551.339		
	325					495042.4426	2073546.1778
SS		SW	60 43 6.1		722.862		
	326					494688.8885	2072915.6788
T		SE	84 32 27.0		722.025		
	327					494973.7517	2074264.9279
TR		SW	7 10 3.0		258.312		

	329					498494.6500	2063570.8600
	330					498467.5100	2065207.1500
[illegible]T							
[illegible]30						498467.5100	2065207.1500
IN		NW	89	2	59.2	1636.515	
	329					498494.6500	2063570.8600
		NW	27	20	52.2	849.818	
	331					499249.4874	2063180.4612
S[illegible]		NE	0	43	39.8	1038.578	
	332					500287.9817	2063193.6521
T[illegible]		NW	0	1	9.2	1526.405	
	333					500775.8923	2063179.9490
S		SW	59	14	15.8	467.420	
	335					500536.8177	2062778.2965
SS		SW	82	36	45.8	261.890	
	336					500742.2197	2062920.2328
S		NW	61	17	49.2	329.140	
	337					500933.9682	2062891.2534
S[illegible]		SW	85	2	5.8	496.340	
	338					500732.9350	2062685.4715
START							
	331					499249.4874	2063180.4612
I		NE	0	43	39.8	1038.578	
	332					500287.9817	2063193.6521
T		SW	86	30	4.8	381.459	
	334					500264.7031	2062812.9041
SS		SW	15	45	54.8	234.170	
	339					500039.3418	2062749.2809
S		SW	45	28	19.8	95.990	
	340					500197.3895	2062744.4718
[illegible]		NE	66	7	14.9	112.160	
[illegible]41						500310.1065	2062915.4633
_IST							
	3					504904.8300	2070001.3100
	9					496506.0900	2073031.9900
	10					496412.0600	2076909.4500
	28					501744.4300	2076165.9900
	29					501768.4300	2074666.2800
	300					503924.1210	2074714.6063
	301					503765.6398	2073428.0986
	302					503644.0368	2073053.3600
	303					503971.9123	2072777.1140
	304					503880.3653	2072575.4673
	305					503967.1653	2072624.7737
	306					504062.5706	2072449.9000
	307					503415.1376	2070665.6347
	308					503686.1786	2073451.6221
	309					503267.1700	2070801.7268
	310					503440.9173	2070911.0624
	311					503351.0757	2070539.8034
	312					503583.8736	2070688.9555
[illegible]13						504129.5584	2070888.3815
[illegible]4						504770.2079	2070889.6036
[illegible]5						503870.1835	2070628.2328

316	503732.2736	2070635.4893
317	503640.3057	2070898.6289
318	503659.7860	2071019.2488
319	503590.3818	2070536.4480
320	503692.0181	2071151.8063
321	504814.4491	2070177.7105
322	502791.4220	2072136.3195
323	502661.8311	2072077.5362
324	497387.1126	2073061.1480
325	495042.4426	2073546.1778
326	494688.8885	2072915.6788
327	494973.7517	2074264.9279
328	494717.4583	2074232.6982
329	498494.6500	2063570.8600
330	498467.5100	2065207.1500
331	499249.4874	2063180.4612
332	500287.9817	2063193.6521
333	500775.8923	2063179.9490
334	500264.7031	2062812.9041
335	500536.8177	2062778.2965
336	500742.2197	2062920.2328
337	500933.9682	2062891.2534
338	500732.9350	2062685.4715
339	500039.3418	2062749.2809
340	500197.3895	2062744.4718
341	500310.1065	2062915.4633

ORDINATES STORED IN FILE JORDAN2

DATA DISK #4

APPENDIX D

COMPUTER INPUT - OUTPUT FILES
UTM CONVERSION FILES

This Page Intentionally Left Blank.

0 010*81*	OPB-89-01	2070536448	5035903824803
0..020*81*	OPB-89-02	2072449900	5040625714803
000030*81*	OPB-89-03	2072624774	5039671654803
0 040*81*	OPB-89-04	2072575467	5038803654803
0 050*81*	OPB-89-05	2072777114	5039719124803
000060*81*	OPB-89-06	2071151806	5036920184803
0 070*81*	OPB-89-07	2071019249	5036597864803
0 080*81*	OPB-89-08	2070898629	5036403064803
000090*81*	OPB-89-09	2070688955	5035838744803
0^^100*81*	OPB-89-10	2070829294	5038701844803
0 110*81*	OPB-89-11	2070835489	5037322744803
0..120*81*	OPB-89-12	2070911062	5034409174803
000130*81*	OPB-89-13	2070539803	5033510764803
0 140*81*	OPM-89-01	2070801727	5032671704803
0 150*81*	OPM-89-02	2073053360	5036440374803
000160*81*	OPM-89-03	2072077536	5026618314803
0 170*81*	NPM-89-01	2073061148	4973871134803
0 180*81*	RPM-89-01	2074232698	4947174584803
000190*81*	RPM-89-02	2072915679	4946888854803
0^^200*81*	OAB-89-01	2062891253	5009339684803
0 210*81*	OAB-89-02	2062920233	5007422204803
0..220*81*	OAB-89-03	2062685472	5007329354803
000230*81*	OAM-89-01	2062778296	5005368184803
0 240*81*	OAM-89-02	2062915463	5003101064803
0 250*81*	FTB-89-01	2062744472	5001973904803
[illegible]0*81*	FTM-89-01	2062749281	5000393424803

0[illegible]10*80*000	OPB-89-01	43225311020N089440483570W
00[illegible]20*80*000	OPB-89-02	43225771317N089433890411W
000030*80*000	OPB-89-03	43225676517N089433654027W
0[illegible]40*80*000	OPB-89-04	43225590942N089433721181W
0[illegible]50*80*000	OPB-89-05	43225680712N089433447714W
000060*80*000	OPB-89-06	43225409466N089435649852W
0[illegible]70*80*000	OPB-89-07	43225378049N089435829492W
0[illegible]80*80*000	OPB-89-08	43225359190N089435992913W
000090*80*000	OPB-89-09	43225304112N089440277084W
0[illegible]100*80*000	OPB-89-10	43225586465N089440085807W
0[illegible]10*80*000	OPB-89-11	43225450228N089440078015W
00[illegible]20*80*000	OPB-89-12	43225162209N089435976940W
000130*80*000	OPB-89-13	43225074641N089440480058W
0[illegible]40*80*000	OPM-89-01	43224990941N089440125745W
0[illegible]50*80*000	OPM-89-02	43225355965N089433075097W
000160*80*000	OPM-89-03	43224388972N089434400820W
0[illegible]70*80*000	NPM-89-01	43215175820N089433092467W
0[illegible]80*80*000	RPM-89-01	43212535088N089431518573W
000190*80*000	RPM-89-02	43212511181N089433301405W
0[illegible]200*80*000	OAB-89-01	43222709937N089454846402W
0[illegible]10*80*000	OAB-89-02	43222520462N089454807900W
00[illegible]220*80*000	OAB-89-03	43222511947N089455125793W
000230*80*000	OAM-89-01	43222317978N089455000865W
0[illegible]40*80*000	OAM-89-02	43222093665N089454816019W
0[illegible]50*80*000	FTB-89-01	43221982811N089455047962W
000260*80*000	FTM-89-01	43221826689N089455042056W

FINAL COORDINATE LISTING
FOR 89800

NATIONAL GEODETIC SURVEY
GP TO UTMs PROGRAM VERSION 1.0
1927 DATUM

STATION NAME	LATITUDE (NORTH)	LONGITUDE (WEST)	NORTHING(Y) METER	EASTING(X) METER	ZONE	CONVERGENCE D M S	SCALE FACTOR	ELEV (M)	GEOID HT(M)
B-89-01	43 22 53.11020	089 44 4.83570	4806589.292	278473.529	16	-1 52 44.69	1.00020369		
B-89-02	43 22 57.71317	089 43 38.90411	4806712.177	279061.709	16	-1 52 27.01	1.00020048		
OPB-89-03	43 22 56.76517	089 43 36.54027	4806681.190	279113.944	16	-1 52 25.35	1.00020020		
B-89-04	43 22 55.90942	089 43 37.21181	4806655.284	279097.969	16	-1 52 25.79	1.00020029		
B-89-05	43 22 56.80712	089 43 34.47714	4806680.966	279160.411	16	-1 52 23.94	1.00019995		
OPB-89-06	43 22 54.09466	089 43 56.49852	4806613.511	278662.135	16	-1 52 38.99	1.00020266		
OPB-89-07	43 22 53.78049	089 43 58.29492	4806605.144	278621.393	16	-1 52 40.21	1.00020288		
B-89-08	43 22 53.59190	089 43 59.92913	4806600.531	278584.428	16	-1 52 41.33	1.00020308		
B-89-09	43 22 53.04112	089 44 2.77084	4806585.637	278519.924	16	-1 52 43.26	1.00020343		
OPB-89-10	43 22 55.86465	089 44 0.85807	4806671.332	278565.824	16	-1 52 42.05	1.00020318		
B-89-11	43 22 54.50228	089 44 0.78015	4806629.245	278566.199	16	-1 52 41.95	1.00020318		
B-89-12	43 22 51.62209	089 43 59.76940	4806539.644	278586.030	16	-1 52 41.15	1.00020307		
[illegible]	43 22 50.74641	089 44 4.80058	4806516.342	278471.927	16	-1 52 44.58	1.00020363		
[illegible]	43 22 49.90941	089 44 1.25745	4806487.905	278550.811	16	-1 52 42.11	1.00020328		
[illegible]	43 22 53.55965	089 43 30.75097	4806578.038	279240.984	16	-1 52 21.26	1.00019951		
OPM-89-03	43 22 43.88972	089 43 44.00820	4806289.476	278932.893	16	-1 52 30.04	1.00020118		
OPM-89-01	43 21 51.75820	089 43 30.92467	4804671.563	279174.749	16	-1 52 19.25	1.00019987		
M-89-01	43 21 25.35088	089 43 15.18573	4803845.317	279502.435	16	-1 52 7.51	1.00019809		
M-89-02	43 21 25.11181	089 43 33.01405	4803851.048	279100.847	16	-1 52 19.76	1.00020027		
OAB-89-01	43 22 27.09937	089 45 48.46402	4805865.753	276115.090	16	-1 53 55.04	1.00021661		
B-89-02	43 22 25.20462	089 45 48.07900	4805805.012	276121.727	16	-1 53 54.71	1.00021657		
B-89-03	43 22 25.11947	089 45 51.25793	4805804.757	276050.096	16	-1 53 56.89	1.00021697		
OAM-89-01	43 22 23.17978	089 45 50.00865	4805743.984	276076.228	16	-1 53 55.96	1.00021682		
M-89-02	43 22 20.93665	089 45 48.16019	4805673.403	276115.536	16	-1 53 54.61	1.00021661		
M-89-01	43 22 19.82811	089 45 50.47962	4805640.935	276062.200	16	-1 53 56.17	1.00021690		
FTM-89-01	43 22 18.26689	089 45 50.42056	4805592.726	276061.933	16	-1 53 56.08	1.00021690		

This Page Intentionally Left Blank.

FUDS PIEZOMETER AND WELL SURVEY DATA

This Page Intentionally Left Blank.

** NO STAPLES PLEASE**

FACSIMILE HEADER SHEET

"Providing engineering solutions to environmental problems"

US Army Corps of Engineers
St. Paul District

Sent from: ☐ Primary Fax (all offices) (612) 290-2256
☐ Other Fax _____ (number)

From (Name)	Office Symbol	Telephone No.	Releaser's Signature
Terry Jorgenson	ED-GH	612-220-0598	Terry Jorgenson
To (Name)	**Office Symbol**	**Telephone No.**	**# Pages**
Jeff Pitcher	ABB	207-775-5400	6 Including cover

Subject: BAAP - Summary Sheets

Fax Number: 8-207-772-4762

① Vertical Surveys Completed - The attached summary sheets have the adjusted elevations for the 1¼" piezo. risers or 2" monitoring well risers.

② Horizontal Surveys Not yet completed,

③ Call Terry Jorgenson for Technical details or additional info.

CENCS Form 767
15 Feb 90

LIST OF PIEZOMETERS

ST. PAUL COE PIEZOMETER DESIGNATION		ELEVATION OF 1-1/4" STEEL RISER	ELEVATION OF SCREENED ZONE	WATER LEVEL ELEV. AFTER DEVELOPMENT	DATE OF MEASUREMENT
91-38	P	824.76	765.8 to 770.8	773.2	11-18-91
91-39	P	839.82	766.8 to 771.8	773.4	11-19-91
91-40	P	844.57	768.5 to 773.5	773.9	11-19-91
91-41	P	805.27	774.8 to 777.8	776.0	11-19-91
91-42	P	796.77	764.3 to 769.3	774.4	11-19-91
91-43	P	803.38	763.9 to 768.9	774.4	11-19-91
91-44	P	814.06	764.1 to 769.1	775.3	11-19-91
91-45	P	789.29	765.7 to 770.7	774.6	11-19-91
91-46	P	780.31	764.2 to 769.2	775.0	11-20-91
91-47	P	813.85	766.2 to 771.2	775.8	11-20-91
91-48	P	846.25	766.1 to 771.1	776.1	11-20-91
91-55	P	845.12	789.1 to 792.1	797.2	11-21-91
91-56	P	860.51	764.51 to 769.51	775.0	11-20-91
91-57	P	844.90	771.4 to 776.4	777.7	11-20-91
91-58	P	856.13	755.6 to 760.6	765.5	11-20-91
91-59	P	837.34	753.3 to 758.3	759.6	11-15-91

LIST OF MONITORING WELLS

St. Paul COE Monitoring Well Designation	Elevation of 2" Riser	Elevation of 6" Protective Casing	Elevation of Screen Zone
91-49 MW	891.15	891.28	778.8 to 768.8
91-50 MW	891.23	891.43	778.7 to 768.7
91-51 MW	860.69	860.89	779.6 to 769.6
91-52 MW	830.41	830.56	776.0 to 766.0
91-53 MW	828.40	828.19	776.0 to 766.0
91-54 MW	816.20	616.50	776.0 to 766.0

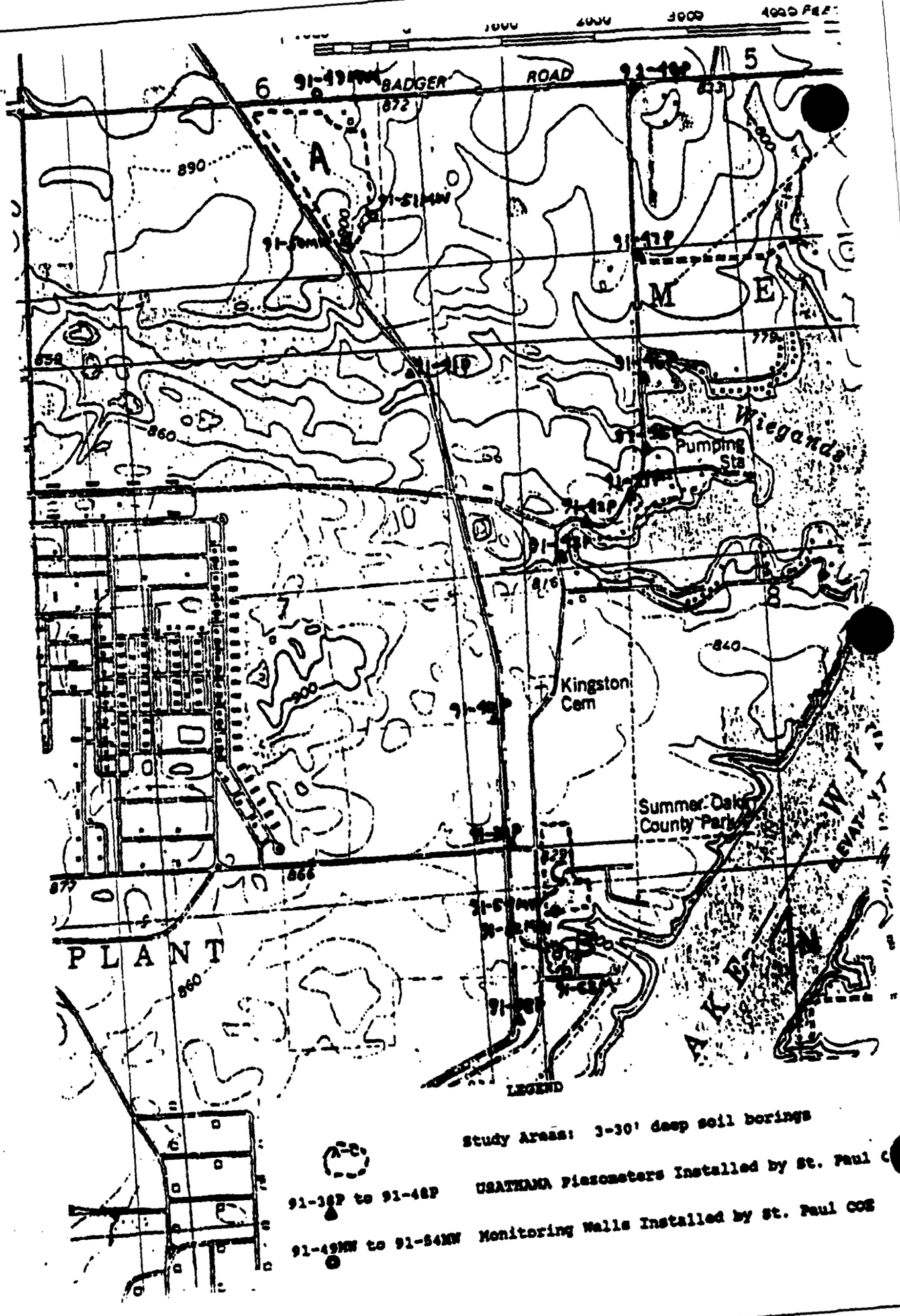
BADGER ROAD
Wiegands
Pumping Sta
Kingston Cem
Summer Oaks County Park
PLANT
LEGEND
Study Areas: 3-30' deep soil borings
91-36P to 91-48P USATHAMA Piezometers Installed by St. Paul C
91-49MW to 91-54MW Monitoring Wells Installed by St. Paul COE

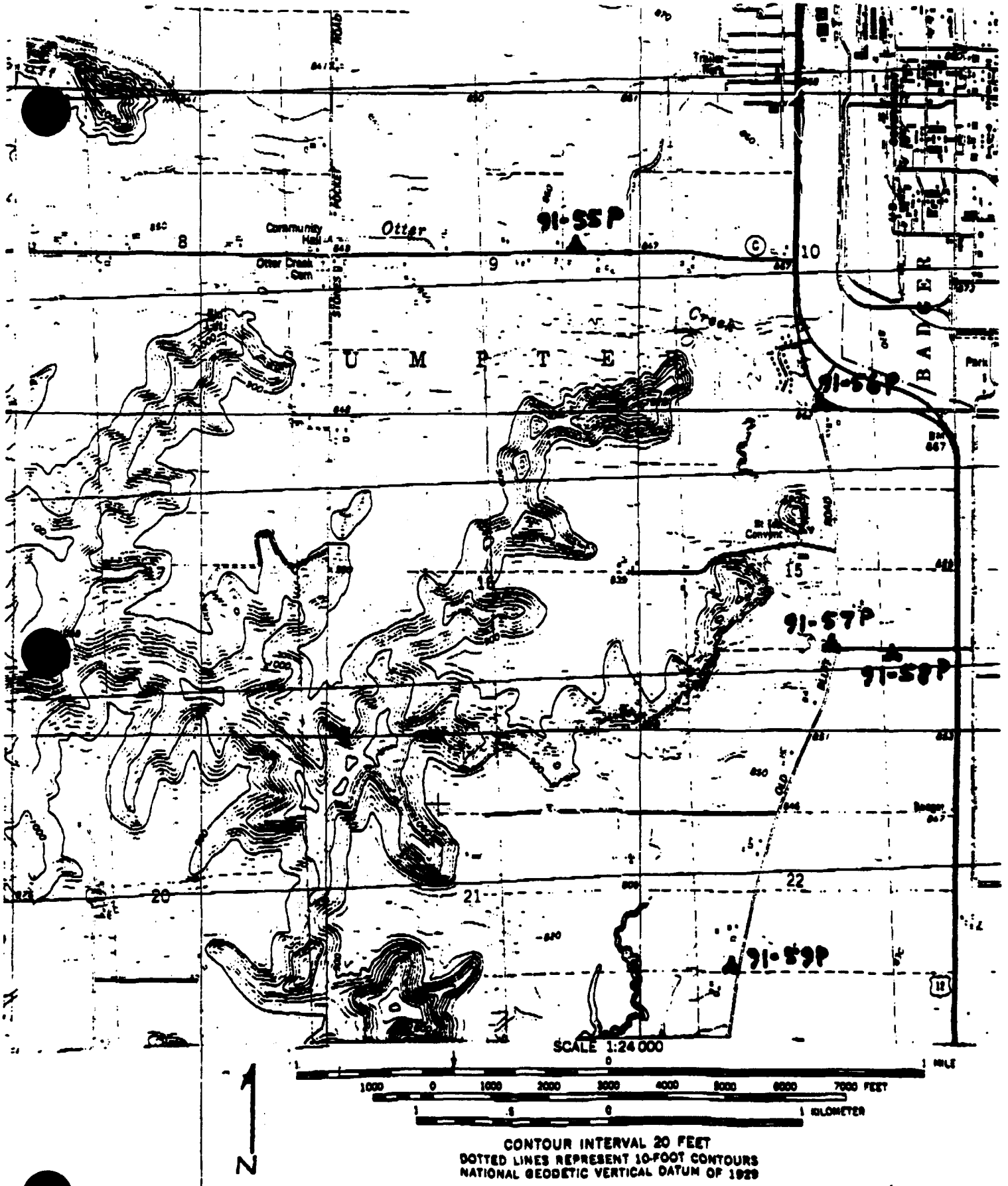

1-55P thru 91-59P Piezometer/Observation Well Locations 1978

AMS 3070 : SW—SERIES V861

This Page Intentionally Left Blank.