BRL-CR 651

(2)

CONTRACTOR REPORT BRL-CR-651

BRL

AD-A232 238

TENSOR TRANSFORMATIONS AND FAILURE CRITERIA FOR THE ANALYSIS OF FIBER COMPOSITE MATERIALS

RICHARD M. CHRISTENSEN
LAWRENCE LIVERMORE NATIONAL LABORATORY

FEBRUARY 1991

DTIC
ELECTE
MAR 11 1991
S B D

APPROVED FOR PUBLIC RELEASE; DISTRIBUTION UNLIMITED.

U.S. ARMY LABORATORY COMMAND

BALLISTIC RESEARCH LABORATORY
ABERDEEN PROVING GROUND, MARYLAND

91 3 05 050

NOTICES

Destroy this report when it is no longer needed. DO NOT return it to the originator.

Additional copies of this report may be obtained from the National Technical Information Service, U.S. Department of Commerce, 5285 Port Royal Road, Springfield, VA 22161.

The findings of this report are not to be construed as an official Department of the Army position, unless so designated by other authorized documents.

The use of trade names or manufacturers' names in this report does not constitute indorsement of any commercial product.

UNCLASSIFIED

REPORT DOCUMENTATION PAGE

Form Approved
OMB No. 0704-0188

Public reporting burden for this collection of information is estimated to average 1 hour per response, including the time for reviewing instructions, searching existing data sources, gathering and maintaining the data needed, and completing and reviewing the collection of information. Send comments regarding this burden estimate or any other aspect of this collection of information, including suggestions for reducing this burden, to Washington Headquarters Services, Directorate for Information Operations and Reports, 1215 Jefferson Davis Highway, Suite 1204, Arlington, VA 22202-4302, and to the Office of Management and Budget, Paperwork Reduction Project (0704-0188), Washington, DC 20503.

1. AGENCY USE ONLY *(Leave blank)*

2. REPORT DATE
February 1991

3. REPORT TYPE AND DATES COVERED
Final, October 1986-March 1987

4. TITLE AND SUBTITLE
Tensor Transformations and Failure Criteria for the Analysis of Fiber Composite Materials

5. FUNDING NUMBERS
PR: 1L1662618AH80

6. AUTHOR(S)
Richard M. Christensen

7. PERFORMING ORGANIZATION NAME(S) AND ADDRESS(ES)
Lawrence Livermore National Laboratory
University of California
Livermore, CA 94550

8. PERFORMING ORGANIZATION REPORT NUMBER

9. SPONSORING/MONITORING AGENCY NAME(S) AND ADDRESS(ES)
U.S. Army Ballistic Research Laboratory
ATTN: SLCBR-DD-T
Aberdeen Proving Ground, MD 21005-5066

10. SPONSORING/MONITORING AGENCY REPORT NUMBER
BRL-CR-651

11. SUPPLEMENTARY NOTES
This work performed under the auspices of the U.S. Department of Energy by the Lawrence Livermore National Laboratory under Contract W-7405-Eng-48.

12a. DISTRIBUTION/AVAILABILITY STATEMENT
Approved For Public Release; Distribution Unlimited.

12b. DISTRIBUTION CODE

13. ABSTRACT *(Maximum 200 words)*

Classical lamination theory for fiber composites is inherently limited to the two-dimensional conditions appropriate to thin shell configurations. A new derivation with appropriate tensor transformations is given which provides a fully three-dimensional lamination theory that is applicable to thick laminates involving "out-of-plane" stress terms. In connection with this work, a new failure criterion is derived for fiber composites, one which involves a minimum number of failure parameters and offers insight into the modes of failure. The key to both derivations is the restriction of five properties form of transversely isotropic media to a special form involving three independent properties. The reduced theoretical forms and the failure criterion are evaluated with respect to standard experimental data for fiber composites.

14. SUBJECT TERMS
Composite Materials, Elasticity, Lamination Theory, 3D Lamination Theory, Anisotropic Elasticity, Failure

15. NUMBER OF PAGES
38

16. PRICE CODE

17. SECURITY CLASSIFICATION OF REPORT	18. SECURITY CLASSIFICATION OF THIS PAGE	19. SECURITY CLASSIFICATION OF ABSTRACT	20. LIMITATION OF ABSTRACT
UNCLASSIFIED	UNCLASSIFIED	UNCLASSIFIED	UL

NSN 7540-01-280-5500

UNCLASSIFIED

Standard Form 298 (Rev 2-89)
Prescribed by ANSI Std 239-18
298-102

INTENTIONALLY LEFT BLANK.

TABLE OF CONTENTS

		Page
	LIST OF FIGURES	v
	ACKNOWLEDGMENT	vii
1.	INTRODUCTION	1
2.	THREE-DIMENSIONAL LAMINATION THEORY	3
3.	RESTRICTED FORMS	16
4.	FAILURE CRITERION	20
5.	EVALUATION	27
6.	DISCUSSION	28
7.	REFERENCES	31
	DISTRIBUTION	33

Accession For
NTIS GRA&I ☑
DTIC TAB ☐
Unannounced ☐
Justification
By
Distribution/
Availability Codes
Dist | Avail and/or Special
A-1

INTENTIONALLY LEFT BLANK.

LIST OF FIGURES

Figure		Page
1.	Coordinate Rotation	7
2.	Dilatational Failure Relation in Equation 37	23
3.	Failure Data and Theory	29

INTENTIONALLY LEFT BLANK.

ACKNOWLEDGMENT

I am most appreciative to Drs. Bruce Burns and William Drysdale of the Ballistic Research Laboratory for their interest and support of this work.

INTENTIONALLY LEFT BLANK.

1. INTRODUCTION

Fiber-reinforced materials continue to be introduced into new applications which demand a high level of mechanical performance. The success of fiber composites in displacing traditional materials relates directly to their high levels of specific properties, namely stiffness and strength. Many of the new applications involve using these materials in thick section forms whereas the traditional methods of fabrication primarily have been limited to thin section forms. The use of fiber composite laminates in very thick forms introduces many problems not encountered in corresponding thin forms. Specifically, the continuum mechanics analysis of structures composed of thick section forms involves fully three-dimensional conditions of analysis, rather than simplifying to a sub-space in terms of the components of stress or strain. Considering the inherent anisotropy of such materials, the complications of three-dimensional analysis are far beyond those encountered with the commonly used simplifying conditions. Equally important is the nature of failure criteria in its most general form, suitable for assessment of three-dimensional stress conditions. Failure criteria for composites have almost always been devised and applied in the vastly simpler cases of certain sub-spaces of the stress tensor, rather than for the full form. The present work aims to provide a lamination theory for determining anisotropic stiffnesses with no restriction to thin section forms. In parallel with that development, a failure criterion will be derived, not postulated, which has application to fully three-dimensional conditions, but still embodies a minimum number of failure parameters to be determined from experiments.

In considering the current state of composite material technology, it should be recognized that classical lamination theory has had a profound effect upon the development of the field. By common usage, the term classical lamination theory, refers to the corresponding analytical procedure for determining structural stiffness under plane stress conditions. The procedure is to be found in all books on composites, from elementary to advanced; it is completely codified and reduced to standard design application. The enormous success of classical lamination theory provides ample motivation for seeking its generalization to three-dimensional forms. Henceforth, the term classical lamination theory will be referred to as two-dimensional lamination theory. The reason why two-dimensional lamination theory cannot be easily extended to three dimensions is quite simple to see. Consider a sequence of fiber-reinforced lamina stacked together to form a laminate, each lamina having a different fiber direction. The stress components on each lamina can be divided into the "in-plane" components and the "out-of-plane" components, three of each. Two-dimensional lamination theory only deals with

the in-plane components. The out-of-plane stress components act between the various lamina. When a particular three-dimensional state of uniform strain is imposed on the laminate for purposes of determining the stiffness, the out-of-plane stress components will in general be different from lamina-to-lamina due to the different fiber orientations in each. These differences in the out-of-plane stress components acting between lamina violate equilibrium conditions, and the problem must be formulated more generally or differently to overcome this difficulty.

This problem just mentioned comes into focus when one considers the application of finite element codes to analyze thick composite laminates. Typically, a single three-dimensional element would be composed of many individual lamina of the composite material. The determination of the stiffness of the individual element is the first step in constructing the stiffness matrix for the entire structure. The individual element stiffness problem then reverts to the three-dimensional lamination problem just discussed. It is possible to formulate an individual boundary value problem for each and every element in the entire three-dimensional grid in order to overcome the above described equilibrium problem. However, this would be the "brute force" approach which would tax even the largest computers. The approach here looks for a more sophisticated method by which to assemble the three-dimensional stiffness characteristics for thick composite laminates. Specifically, the three-dimensional tensor transformations will be examined to search for any special cases which simplify this problem but do not sacrifice physical reality. Just such an opportunity will be shown to exist.

The tensor transformations problem was the original and complete objective of this work. Upon the completion of that work, it was desired to cast the tensor transformations into the simplest possible form, one which would admit direct physical interpretation. In so doing and with no approximation involved, it was found that the stress strain relations for the lamina—and thereby the tensor transformation forms used to obtain the stiffness of the laminate —took a special form which partitioned out the effect of fiber reinforcement to a form far more simple than that involved with merely starting properties appropriate to a transversely isotropic medium. This simplification allowed the use of corresponding forms for failure characterization and led directly to the derivation of a new failure criterion.

It is not necessary to detail the historical background on the generation of failure criteria for composite materials. Many such discussions exist in the literature, and only representative and well known sources will be mentioned here. Hill (1960) generalized the Mises criterion for isotropic

materials to anisotropic materials by expressing the failure criterion in quadratic terms of the stress components but with coefficients taken to vary from term-to-term rather than being identically the same as in isotropy. Goldenblat and Kopnov (1965) expressed the anisotropic failure criterion as a tensor polynomial, with unknown coefficients, the quadratic terms of which would correspond to Hill's form. Tsai and Wu (1971) also employed the tensor polynomial form, and over the intervening years since their first work, they have done extensive experimental evaluations. Hashin (1980) pursued the concept of a piece-wise smooth failure surface combined with some quadratic forms, in recognition of the existence of different and competing modes of failure. The present criterion is fundamentally different from all of these, but in motivation, it is probably closest to that of Hill. The present criterion has an intimate relation to the Mises criterion for isotropic materials, as does Hill's criterion. This new criterion is intended to provide a balance between having a minimum number of parameters to be evaluated from simple experiments while still encompassing the actual physical characteristics of the failure process.

The sequence of developments is as follows. First, the three-dimensional lamination theory will be derived. The keys to the developments are two restrictions which reduce the five independent properties of a transversely isotropic material to a form involving three independent constants. The appropriateness of these restrictions in the case of fiber composites will be evaluated against standard experimental data. Next, the resulting matrix form for the three-dimensional tensor transformations will be shown to admit analytical characterization through a single form which is only slightly more complicated than that of the stress strain relations for isotropic elastic material. This latter form directly opens the door to the derivation of the corresponding failure criterion. Finally, the failure criterion will be evaluated with respect to failure data, and some items of discussion will be given.

2. THREE-DIMENSIONAL LAMINATION THEORY

It is helpful to sketch the procedure of two-dimensional lamination theory before proceeding to the three-dimensional case. Under conditions of plane stress, the three in-plane components of stress in an individual lamina are related to the strains by the linear, elastic matrix relation,

$$[\sigma]_k = [Q]_k[\varepsilon]_k, \tag{1}$$

where index k refers to the kth lamina in the laminate. Matrix $[Q]_k$ gives the two-dimensional stiffness properties specification. Define the stress resultants by the integration procedure,

$$\left(N_x, N_y, N_{xy}\right) = \int_{-h/2}^{h/2} \left[\sigma_{xx}^{(k)}, \sigma_{yy}^{(k)}, \sigma_{xy}^{(k)}\right] dz\,, \tag{2}$$

where the integration is over the entire thickness, encompassing all lamina. Then the laminate stress resultant, strain relation is given by

$$\begin{bmatrix} N_x \\ N_y \\ N_{xy} \end{bmatrix} = \begin{bmatrix} A_{11} & A_{12} & A_{16} \\ A_{21} & A_{22} & A_{26} \\ A_{61} & A_{62} & A_{66} \end{bmatrix} \begin{bmatrix} \varepsilon_{xx}^{o} \\ \varepsilon_{yy}^{o} \\ 2\varepsilon_{xy}^{o} \end{bmatrix}, \tag{3}$$

where

$$A_{ij} = \int_{-h/2}^{h/2} Q_{ij}^{(k)}\, dz\,, \tag{4}$$

with ε_{xx}^{o}, ε_{yy}^{o}, and ε_{xy}^{o} being the middle plane strains, and the coefficients A_{ij} representing the laminate stiffness properties. Laminate coefficients A_{ij} are obtained from lamina properties $Q_{ij}^{(k)}$ by direct integration, which is really just algebraic summation. Conventionally, bending moments and curvatures are included in the general form of two-dimensional lamination theory, with no increase in complication, so long as classical bending theory assumptions are employed. The success of this two-dimensional lamination theory relates to the fact that only in-plane stress components are involved, and thereby the property specification for the laminate follows from that of the lamina through the relation in Equation 4.

If out-of-plane stress components are not taken as vanishing through the plane stress assumption, then the above procedure is not applicable, and more general three-dimensional lamination procedure must be found. That is the problem of interest here. Necessarily then the full three-dimensional effects must be taken into account in formulating the lamination procedure to go from lamina properties to laminate properties. Take axis 1 to be coincident with the fiber direction, and axis 3 to

be normal to the plane of the lamina. For an individual lamina, the macroscopic properties are those of a transversely isotropic medium. Using direct notation, the stress strain relation is given by

$$\sigma_i = C_{ij}\varepsilon_j, \tag{5}$$

where

$$[C_{ij}] = \begin{bmatrix} C_{11} & C_{12} & C_{12} & 0 & 0 & 0 \\ & C_{22} & C_{23} & 0 & 0 & 0 \\ & & C_{22} & 0 & 0 & 0 \\ & & & \frac{C_{22}-C_{23}}{2} & 0 & 0 \\ & & & & C_{66} & 0 \\ & & & & & C_{66} \end{bmatrix} \tag{6}$$

and with the notation

$$\sigma_1 = \sigma_{11} \qquad \varepsilon_1 = \varepsilon_{11}$$
$$\sigma_2 = \sigma_{22} \qquad \varepsilon_2 = \varepsilon_{22}$$
$$\sigma_3 = \sigma_{33} \qquad \varepsilon_3 = \varepsilon_{33}$$
$$\sigma_4 = \sigma_{23} \qquad \varepsilon_4 = 2\,\varepsilon_{23}$$
$$\sigma_5 = \sigma_{13} \qquad \varepsilon_5 = 2\,\varepsilon_{13}$$
$$\sigma_6 = \sigma_{12} \qquad \varepsilon_6 = 2\,\varepsilon_{12}\,.$$

There are five independent properties involved in Equation 6, and they can be related to engineering properties through

$$\begin{aligned} C_{11} &= E_{11} + 4\,\nu_{12}^2 K_{23} \\ C_{12} &= 2K_{23}\,\nu_{12} \\ C_{22} &= \mu_{23} + K_{23} \\ C_{23} &= -\mu_{23} + K_{23} \\ C_{66} &= \mu_{12}, \end{aligned} \tag{7}$$

where E_{11} is the longitudinal or axial modulus, υ_{12} the axial Poisson's ratio, μ_{12} the axial shear modulus, μ_{23} the transverse shear modulus, and K_{23} the plane strain bulk modulus. The plane strain bulk modulus K_{23} can be eliminated in favor of the transverse modulus, E_{22}, through

$$K_{23} = \frac{E_{22}}{4\left(1 - \dfrac{\nu_{12}^2 E_{22}}{E_{11}}\right) - \dfrac{E_{22}}{\mu_{23}}}\,. \tag{8}$$

Next, a coordinate rotation, as shown in Figure 1, will be taken. The appropriate tensor transformed components of C_{ij} are given by C'_{ij},

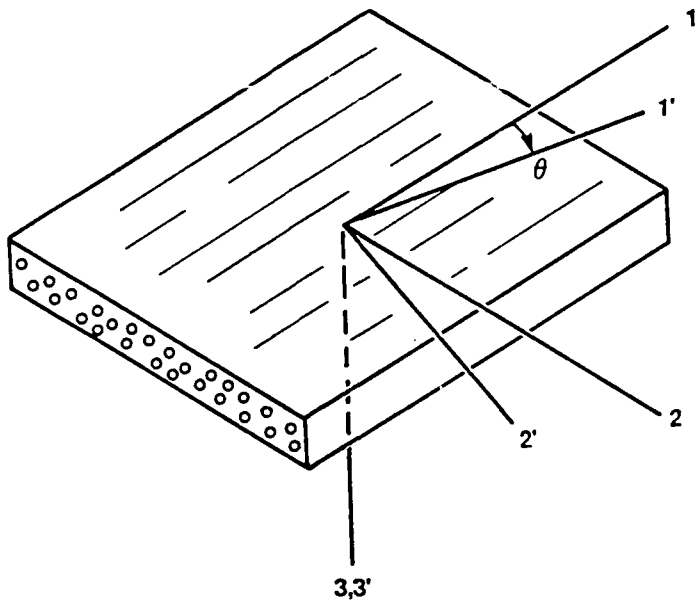

Figure 1. Coordinate Rotation.

$$[C'_{ij}] = \begin{bmatrix} C'_{11} & C'_{12} & C'_{13} & 0 & 0 & C'_{16} \\ C'_{12} & C'_{22} & C'_{23} & 0 & 0 & C'_{26} \\ C'_{13} & C'_{23} & C'_{33} & 0 & 0 & C'_{36} \\ 0 & 0 & 0 & C'_{44} & C'_{45} & 0 \\ 0 & 0 & 0 & C'_{45} & C'_{55} & 0 \\ C'_{16} & C'_{26} & C'_{36} & 0 & 0 & C'_{66} \end{bmatrix} \quad (9)$$

with

$$C'_{11} = m^4 C_{11} + 2m^2n^2 (C_{12} + 2 C_{66}) + n^4 C_{22},$$

$$C'_{12} = m^2n^2 (C_{11} + C_{22} - 4 C_{66}) + (m^4 + n^4) C_{12},$$

$$C'_{13} = m^2 C_{12} + n^2 C_{23},$$

$$C'_{16} = -mn [m^2 C_{11} - n^2 C_{22} - (m^2 - n^2) (C_{12} + 2C_{66})],$$

$$C'_{22} = n^4 C_{11} + 2m^2n^2 (C_{12} + 2C_{66}) + m^4C_{22},$$

$$C'_{23} = n^2C_{12} + m^2C_{23},$$

$$C'_{26} = -mn [n^2 C_{11} - m^2C_{22} + (m^2-n^2) (C_{12} + 2C_{66})],$$

$$C'_{33} = C_{22},$$

$$C'_{36} = mn (C_{23} - C_{12}),$$

$$C'_{44} = m^2\left(\frac{C_{11}-C_{23}}{2}\right) + n^2 C_{66},$$

$$C'_{45} = mn\left(\frac{C_{22}-C_{23}}{2} - C_{66}\right),$$

$$C'_{55} = m^2 C_{66} + n^2\left(\frac{C_{22}-C_{23}}{2}\right),$$

$$C'_{66} = m^2n^2(C_{11} + C_{22} - 2 C_{12}) + 2 mn (m^2-n^2) C_{22} + (m^2-n^2)^2 C_{66}, \qquad (10)$$

where

$$m = \cos\theta,$$

$$n = \sin\theta,$$

with θ being the angle of rotation in the plane of the lamina, plane 1-2.

The out-of-plane terms in the stiffness matrix are contained within the inner dashed region of the matrix in Equation 9. The remaining terms outside the region of the third, fourth, and fifth rows and columns of Equation 9 are those corresponding to classical, two-dimensional lamination theory. The seven coefficients, C'_{13}, C'_{23}, C'_{33}, C'_{36}, C'_{44}, C'_{45}, and C'_{55}, give rise to interlaminar stresses which act between the lamina when a given state of uniform strain is imposed. These coefficients, or constants, depend upon the fiber orientation through the geometric terms m and n in Equation 10. Furthermore, the resulting interlaminar stresses would in general vary from lamina-to-lamina under conditions of uniform strain. One way to overcome this problem would be to allow the strains normal to the plane of the lamina to vary from lamina-to-lamina, which in general would be an extremely complicated procedure for an entire structure. Seeking a simpler approach, the objective at this point is to identify any special cases in which the out-of-plane terms in Equation 10 are independent of fiber orientation. Such a special case would provide full equilibrium conditions under uniform strain and obviate the discontinuous interlaminar stress problem just discussed. It will now be shown that a special case of this type does exist, after which the physical significance of the special case will be examined.

Two restrictions will be imposed. Take the five properties of the transversely isotropic medium as being restricted by

$$\frac{C_{22}-C_{23}}{2} = C_{66}. \tag{11}$$

The seven out-of plane terms in Equation 10 become

$$C'_{13} = m^2 C_{12} + n^2 C_{23},$$

$$C'_{23} = n^2 C_{12} + m^2 C_{23},$$

$$C'_{33} = C_{22},$$

$$C'_{44} = C'_{55} = C_{66},$$

$$C'_{45} = 0,$$

$$C'_{36} = mn\,(C_{23}-C_{12}). \tag{12}$$

It is seen that the three terms C'_{44}, C'_{55}, and C'_{45} and now independent of fiber orientation; C'_{33} was already independent of fiber orientation. This is progress, but the three terms C'_{13}, C'_{23}, and C'_{36} remain dependent upon fiber orientation.

Now take the second restriction,

$$C_{12} = C_{23}, \tag{13}$$

in the five transversely isotropic properties. Using Equation 13, then Equation 12 becomes

$$C'_{13} = C_{12},$$

$$C'_{23} = C_{12},$$

$$C'_{33} = C_{22},$$

$$C'_{44} = C'_{55} = C_{66},$$

$$C'_{45} = 0,$$

$$C'_{36} = 0. \tag{14}$$

Now, the out-of-plane terms in Equation 9 are completely independent of fiber orientation in the lamina, and Equation 9 can be written as

$$
[C'_{ij}] = \begin{bmatrix} C'_{11} & C'_{12} & C_{12} & 0 & 0 & C'_{16} \\ & C'_{22} & C_{12} & 0 & 0 & C'_{26} \\ & & (C_{12}+2C_{66}) & 0 & 0 & 0 \\ & & & C_{66} & 0 & 0 \\ & & & & C_{66} & 0 \\ & & & & & C'_{66} \end{bmatrix} \tag{15}
$$

In properties matrix (Equation 15) the in-plane terms depend on fiber orientation and can be treated in the usual manner of two-dimensional lamination theory. The out-of-plane terms are independent of fiber orientation, and the same out-of-plane terms apply for the laminate as for the lamina. Thus, the two restrictions, Equation 11 and Equation 13, have rendered a tractable three-dimensional lamination procedure (or theory). It remains to investigate the physical significance of these two restrictions.

The two restrictions, Equation 11 and Equation 13, have reduced the five property specification of the transversely isotropic medium down to three constants. It is necessary to express these two restrictions in terms of the engineering properties in order to assess their significance. It is easy to show that the restriction in Equation 11 implies

$$
\mu_{12} = \mu_{23}. \tag{16}
$$

That is, the axial and transverse shear moduli are taken to be equal. The restriction in Equation 13 can be put into either of the forms

$$2K_{23}\,\nu_{12} = -\mu_{23} + K_{23}, \tag{17a}$$

or

$$\nu_{23} = \frac{\nu_{12}\,(1-\frac{\nu_{12}\,E_{22}}{E_{11}})}{1-\nu_{12}}. \tag{17b}$$

The latter restriction (Equation 17b) implies that for a fiber dominated system with $E_{11} \rightarrow \infty$, then for $\nu_{12} = 1/4$, it follows that $\nu_{23} = 1/3$. Thus, restrictions in Equation 16 and Equation 17b can be said to at least be within the realm of physical possibility, and there is nothing inadmissible or physically awkward about them. Furthermore, it can be shown that the restriction in Equation 17 is identically satisfied if the transversely isotropic medium is incompressible. To proceed further with theoretical assessment of the two restrictions requires the use of micro-mechanics which distinguishes the presence of fiber and matrix phases. Taking both phases to be isotropic, it can be shown that the restriction in Equation 16 is satisfied if the fiber suspension is dilute, the fibers are very stiff compared with the matrix phase, and the matrix phase itself is incompressible. The restriction in Equation 17 is satisfied if both phases are incompressible. The identical satisfaction of tne two restrictions in these conditions at least encourages one to believe that the two restrictions may not be too far from being satisfied when the phases are not incompressible nor the suspension dilute.

Probably a more meaningful check on the two restrictions in Equation 16 and Equation 17 can be made by comparing them with actual properties data for composites. To this end, the restriction in Equation 17 can be written in yet another alternate form, using transversely isotropic properties identities, as

$$\mu_{23} = \frac{(1-\nu_{12})E_{22}}{2(1-\frac{\nu_{12}^2 E_{22}}{E_{11}})}. \tag{18}$$

Now transverse shear modulus μ_{23} is difficult to measure, and conventionally it is not reported. Combining restrictions in Equation 16 and Equation 18, however, gives a single form which can be checked against typical data:

$$\mu_{12} = \frac{(1-\nu_{12})E_{22}}{2(1-\frac{\nu_{12}^2 E_{22}}{E_{11}})}. \tag{19}$$

Three examples of graphite-epoxy properties data will be given for checking the restriction in Equation 19. From Drysdale (1986), AS-4 fiber/Epoxy data are given by

$$E_{11} = 157\ GPa,$$

$$E_{22} = 11.8\ GPa,$$

$$\nu_{12} = .28,$$

$$\mu_{12} = 4.57\ GPa.$$

Using the first three properties in Equation 19 gives $\mu_{12} = 4.27$, which compares favorably with the measured value. As another example of a graphite AS6/Epoxy data set, Drysdale (1986),

$$E_{11} = 150\ GPa,$$

$$E_{22} = 10.4\ GPa,$$

$$\nu_{12} = .30,$$

$$\mu_{12} = 3.49\ GPa.$$

The prediction from Equation 19 gives $\mu_{12} = 3.66$, which again compares favorably with the above value. As an example of a data set which compares less well, the following is IM7/Epoxy from Gillespie (1986)

$$E_{11} = 155\ GPa,$$

$$E_{22} = 8.3\ GPa,$$

$$\nu_{12} = .33,$$

$$\mu_{12} = 4.8\ GPa.$$

The value for μ_{12} from Equation 19 is 2.8 *GPa* which is considerably different from above value of 4.8 *GPa*.

Three more examples will be given for different fiber systems. All three of these examples are from properties data sheets compiled by Hahn, Hwang, and Cheng (1981) from industry sources.

For Kevlar 49/Epoxy

$$E_{11} = 81.8\ GPa,$$

$$E_{22} = 5.10\ GPa,$$

$$\nu_{12} = .31,$$

$$\mu_{12} = 1.82\ GPa,$$

while restriction in Equation 19 gives $\mu_{12} = 1.77\ GPa$.

For S-2 Glass/Epoxy

$$E_{11} = 58.8\ GPa,$$

$$E_{22} = 17.5\ GPa,$$

$$\nu_{12} = .27,$$

$$\mu_{12} = 7.28\ GPa,$$

with restriction in Equation 19 giving $\mu_{12} = 6.53\ GPa$.

For Boron/Epoxy

$$E_{11} = 204\ GPa,$$

$$E_{22} = 18.6\ GPa,$$

$$\nu_{12} = .23,$$

$$\mu_{12} = 5.80\ GPa,$$

with restriction in Equation 19 giving $\mu_{12} = 7.23\ GPa$.

These data sets add some degree of confidence that the two restrictions in Equation 11 and Equation 13 or equivalently in Equation 16 and Equation 18 are reasonable forms which do not depart drastically from physical reality, and thereby retain the three-dimensional lamination theory advantage already discussed. Furthermore, it is well known that the two shear moduli, μ_{12} and μ_{23} are not exactly equal, but the net effect in making the equality restriction, Equation 16, is probably quite minor compared with the physical and mechanical effects of properly accounting for the fact that modulus E_{11} is much larger than all of the other moduli. The latter characteristic of a fiber-dominated system has not been disturbed by the two restrictions in Equation 16 and Equation 18.

The three-dimensional lamination theory can now be explicitly stated. The out-of-plane terms in the stiffness matrix in Equation 9 are given by Equation 14 in terms of the original transversely isotropic properties of the lamina. These out-of-plane properties apply to the laminate, as well as the lamina, since these terms are independent of fiber orientation. For the in-plane terms in Equation 9, there is a choice on how to proceed in building up the stiffness matrix of the laminate. The in-plane terms C'_{11}, C'_{12}, C'_{22}, C'_{16}, C'_{26}, *and* C'_{66} can be taken directly from the tensor transformation relations in Equation 10 or they can be taken in reduced form using the two restrictions in Equation 11 and Equation 13. The former procedure is probably preferable if the two restrictions are not at least fairly close to being satisfied. In this procedure, then the in-plane terms are found from the corresponding terms in Equation 9 and Equation 10 using exactly the same lamination procedure as in

two-dimensional theory. The out-of-plane terms necessary employ the two restrictions and are given by Equation 14.

In the case where the in-plane terms are taken to employ the restrictions in Equation 11 and Equation 13, then these terms in Equation 9 are given by

$$
\begin{aligned}
C'_{11} &= m^4 C_{11} + (2m^2n^2 + n^4)\, C_{12} + 2\,(2m^2n^2 + n^4)\, C_{66}, \\
C'_{12} &= m^2n^2 C_{11} + (m^4 + m^2n^2 + n^4) C_{12} - 2m^2n^2 C_{66}, \\
C'_{22} &= n^4 C_{11} + (m^4 + 2m^2n^2) C_{12} + 2\,(m^4 + 2m^2n^2)\, C_{66}, \\
C'_{16} &= m^3 n\,(-C_{11} + C_{12} + 2\, C_{66}), \\
C'_{26} &= mn^3\,(-C_{11} + C_{12} + 2\, C_{66}), \\
C'_{66} &= m^2n^2 C_{11} + [-m^2n^2 + 2mn(m^2 - n^2)] C_{12} \\
&\quad + [m^4 + 4mn\,(m^2 - n^2) + n^4]\, C_{66}.
\end{aligned}
\tag{20}
$$

These terms along with Equation 14 then give the complete tensor transformations to be used in the three-dimensional lamination theory, wherein all terms use the two restrictions, rather than just the out-of-plane terms.

3. RESTRICTED FORMS

The tensor transformations obtained in the preceding section can be manipulated into a much more concise and meaningful form. The two restrictions in Equation 11 and Equation 13 can be used to express the original five transversely isotropic properties, C_{11}, C_{12}, C_{22}, C_{23}, and C_{66} in terms of three engineering properties. By far the most common three engineering properties obtained are E_{11}, E_{22}, and ν_{12}. The final results also will be given in terms of the three properties E_{11}, μ_{12}, and ν_{12}. Either group of three properties can be obtained from only two simple experiments. Using restrictions in Equation 16 and Equation 18 it then follows that the five C_{ij} properties of the transversely isotropic medium are fully specified by the three engineering properties E_{11}, E_{22}, and ν_{12} through

$$C_{11} = E_{11} + \frac{2\nu_{12}^2(1-\nu_{12})E_{22}}{(1-2\nu_{12})(1-\frac{\nu_{12}^2 E_{22}}{E_{11}})},$$

$$C_{12} = C_{23} = \frac{\nu_{12}(1-\nu_{12})E_{22}}{(1-2\nu_{12})\ (1-\frac{\nu_{12}^2 E_{22}}{E_{11}})},$$

$$C_{22} = \frac{(1-\nu_{12})^2 E_{22}}{(1-2\nu_{12})(1-\frac{\nu_{12}^2 E_{22}}{E_{11}})},$$

$$C_{66} = \frac{(1-\nu_{12})E_{22}}{2\ (1-\frac{\nu_{12}^2 E_{22}}{E_{11}})}. \tag{21}$$

These relations can be cast into a more compact form as follows:

$$C_{11} = (E_{11}-E) + (1-\nu_{12})\ \alpha,$$

$$C_{12} = C_{23} = \nu_{12}\ \alpha,$$

$$C_{22} = (1-\nu_{12})\ \alpha,$$

$$C_{66} = \frac{(1-\nu_{12})}{2}\ \alpha, \tag{22}$$

where symbols E and α are given by

$$\alpha = \frac{(1-\nu_{12})\ E_{22}}{(1-2\nu_{12})(1-\frac{\nu_{12}^2\ E_{22}}{E_{11}})},$$

$$E = (1 + \nu_{12})(1 - 2\nu_{12})\,\alpha$$

$$= \frac{(1-\nu_{12}^2)\,E_{22}}{1 - \dfrac{\nu_{12}^2 E_{22}}{E_{11}}}. \tag{23}$$

The forms in Equation 22 should be compared with the comparable forms for a completely isotropic material, i.e.,

$$C_{11} = (1-\nu)\,\overline{\alpha},$$

$$C_{12} = C_{23} = \nu\overline{\alpha},$$

$$C_{22} = (1-\nu)\,\overline{\alpha},$$

$$C_{66} = \frac{(1-2\nu)}{2}\,\overline{\alpha},$$

where

$$\overline{\alpha} = \frac{(1-\nu)\,\overline{E}}{(1-2\nu)(1-\nu^2)} = \frac{\overline{E}}{(1+\nu)(1-2\nu)},$$

and where symbol $\overline{E}$ is an isotropic modulus. Comparing Equation 22 and Equation 24, it is seen that the fiber-reinforced medium is effectively isotropic except for the presence of the $(E_{11}-E)$ term in C_{11} in Equation 22. It then follows that the properties form in Equation 22 can be written in the single comprehensive form

$$\boxed{\sigma_{ij} = \lambda e_{kk}\delta_{ij} + 2\mu e_{ij} + (E_{11}-E)\,\delta_{1i}\delta_{1j}e_{11}}\,, \tag{25}$$

where

$$\lambda = \frac{\nu_{12}(1-\nu_{12})\, E_{22}}{(1-2\nu_{12})(1-\nu_{12}^2 \dfrac{E_{22}}{E_{11}})}, \tag{26a}$$

and

$$\mu = \frac{(1-\nu_{12})\, E_{22}}{2(1-\nu_{12}^2 \dfrac{E_{22}}{E_{11}})}, \tag{26b}$$

with E in Equation 25 given by Equation 23. The properties entering in Equation 25 are completely specified by the three measured properties E_{11}, E_{22}, and ν_{12}.

The results just derived take an even simpler form when expressed in terms of the three properties E_{11}, μ_{12}, and ν_{12}. Using relation in Equation 19 to eliminate E_{22} in Equation 23 and Equation 26, it follows that λ, μ, and E entering Equation 25 are given by

$$E = 2(1 + \nu_{12})\, \mu_{12},$$

$$\lambda = \frac{2\nu_{12}}{1-2\nu_{12}}\, \mu_{12},$$

and

$$\mu = \mu_{12}. \tag{27}$$

It also follows that Poisson's ratio ν corresponding to λ and μ is given by $\nu = \nu_{12}$.

The form in Equation 25 is one of the main results of this work. The transversely isotropic fiber-reinforced medium has properties determined by three measured constants, E_{11}, E_{22}, and ν_{12} or alternatively by E_{11}, μ_{12}, and ν_{12}. Relation in Equation 25 reveals that the fiber composite can be

viewed as an effectively isotropic medium with superimposed one-dimensional reinforcement through the last term in Equation 25. This last term shows that the fiber reinforcement has a direct effect in that strain ε_{11} (with axis 1 in the fiber direction) causes a stress σ_{11} of amount $(E_{11}-E)\,\varepsilon_{11}$, but otherwise the fiber reinforcement is of an indirect effect, as that of an inclusion phase in a matrix phase. This indirect effect manifests itself through the isotropic terms involving λ and μ in Equation 25 which, in turn, are determined by the measured properties E_{11}, E_{22}, and ν_{12} or by μ_{12} and ν_{12}.

The result in Equation 25 now renders the tensor transformations to a trivial form. The moduli of the two isotropic terms in Equation 25 need no tensor transformation, while the last term, the one-dimensional term in Equation 25, has a modulus tensor transformation that involves proportionality to $cos^4\theta$. It is difficult to imagine a simpler mechanical characterization of a fiber reinforced medium. It is emphasized that the simple form in Equation 25 follows directly from the two restrictions in Equation 16 and Equation 18 when applied to the transversely isotropic medium properties form. The approximate validity of these restrictions should be justified in any particular application, as was done in the last section.

4. FAILURE CRITERION

The simple, compact, stress strain form in Equation 25 for the fiber composite is rewritten here as

$$\sigma_{ij} = \delta_{1i}\,\delta_{1j}\,\sigma_{11}^{(1)} + \sigma_{ij}^{(2)}, \tag{28}$$

where

$$\sigma_{11}^{(1)} = (E_{11}-E)\,\varepsilon_{11}, \tag{29a}$$

and

$$\sigma_{ij}^{(2)} = \lambda\,\varepsilon_{kk}\,\delta_{ij} + 2\mu\,\varepsilon_{ij}, \tag{29b}$$

where λ and μ are given by Equation 26 or Equation 27 and E by Equation 23 or Equation 27, depending upon whether E_{11}, E_{22}, and ν_{12} or E_{11}, μ_{12}, and ν_{12} are used as the specified properties. The term $\sigma_{11}^{(1)}$ in Equation 29a represents the direct effect of the fiber reinforcement. The $\sigma_{ij}^{(2)}$

The term $\sigma_{11}^{(1)}$ in Equation 29a represents the direct effect of the fiber reinforcement. The $\sigma_{ij}^{(2)}$ term in Equation 29b represents the effect of fiber/matrix interaction. The decomposition of stress in the constitutive form in Equation 28 and Equation 29 will be assumed to apply for failure. That is, it will be assumed that the direct effect of fiber reinforcement and thereby fiber failure can be decoupled from the type of failure that represents fiber/matrix interaction including the possible effect of the interface. Many failure criteria are said to be equally well formulated in terms of either stress or strain, the choice being arbitrary. In the present case, the parallel option is not available. To proceed further, strain must be used as the basic variable because the decomposition of failure modes just discussed cannot be stated in terms of stress except through the decomposed forms of $\sigma_{11}^{(1)}$ and $\sigma_{ij}^{(2)}$ in Equation 29. No such restriction impedes the use of strain as the failure variable.

Following the decomposition of failure mechanisms procedure just discussed, for fiber failure due to overload, from the one-dimensional form of Equation 29a, the failure criterion is

$$\varepsilon_f^{(-)} \leq \varepsilon_{11} \leq \varepsilon_f^{(+)}, \tag{30}$$

where $\varepsilon_f^{(-)}$ and $\varepsilon_f^{(+)}$ are the compressive and tensile fiber strain failure levels respectively.

For the fiber/matrix interaction failure, the criterion is written as

$$f(\varepsilon_{ij}) \leq 1, \tag{31}$$

where from the isotropic form of Equation 29b the function $f(\ )$ is to be expressed as an isotropic function of the strain tensor. Accordingly, the invariants of the strain tensor are used to write Equation 31 as

$$f(I_1, I_2, I_3) \leq 1, \tag{32}$$

where the three invariants are given by

$$I_1 = \varepsilon_{kk},$$

$$I_2 = \varepsilon_{ij}\,\varepsilon_{ij},$$

$$I_3 = det\,[\varepsilon_{ij}]. \tag{33}$$

An alternate, equally general form of Equation 32 can be written using the invariant of the deviatoric strain tensor, J_2; thus the criterion is

$$f(I_1, J_2, I_3) \leq 1, \tag{34}$$

where

$$J_2 = e_{ij}e_{ij}, \tag{35}$$

with

$$e_{ij} = \varepsilon_{ij} - 1/3\ \delta_{ij}\varepsilon_{kk}.$$

The advantage, of Equation 34 over that of Equation 32 is that first two invariants in Equation 34 distinguish states of dilatation and distortion. Proceeding with a polynomial expansion of Equation 34 gives it explicit form as

$$\alpha I_1 + \beta J_2 + \gamma I_1^2 + \ldots \leq 1, \tag{36}$$

where the next terms are of cubic order and the coefficients α, β, γ, etc. are to be determined from failure data.

Further consideration of the failure criterion in Equation 36 will involve truncation at the explicit level shown. Thus, cubic and higher order terms will be neglected in accordance with infinitesimal strain conditions. Consider further a state of pure dilatation; thus, $J_2 = 0$ and Equation 36 to second order becomes

$$\alpha I_1 + \gamma I_1^2 \leq 1. \tag{37}$$

The form of Equation 37 is shown schematically in Figure 2 for $\alpha > 0$ and $\gamma > 0$. It is seen that this form defines levels of expansive and compressive dilatational failure in terms of $I_1 = \varepsilon_{kk}$. Now isotropic materials do exhibit strange behavior at very high pressure levels, such as phase change and

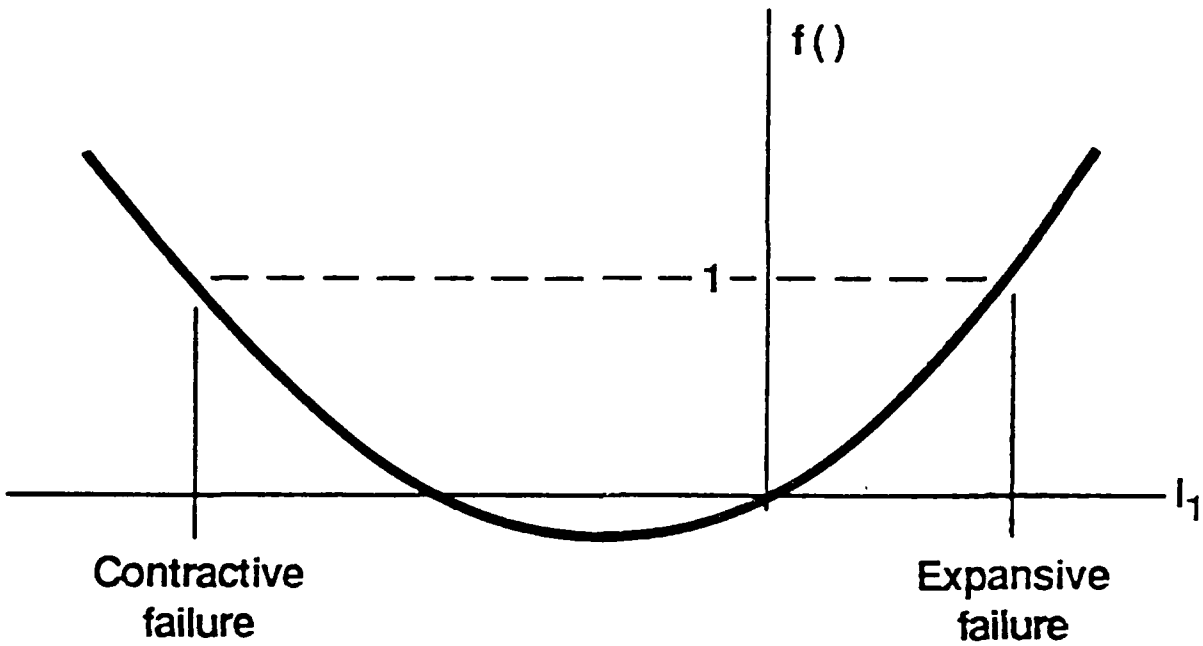

Figure 2. Dilatational Failure Relation in Equation 37.

so forth, but in the range of moderate strains of interest here, there is no evidence that isotropic materials undergo compressive, dilatational structural failure, meaning loss of ability to sustain load. Therefore, the state of compressive dilatational action will be taken as not implying failure insofar as the isotropic fiber/matrix interaction is concerned, and thereby it is required that

$$\gamma = 0.$$

Other sign combinations for α and γ do not alter this conclusion that $\gamma = 0$, which leaves Equation 36 to second order as

$$\alpha I_1 + \beta J_2 \leq 1. \tag{38}$$

Collecting these results, the fiber composite material failure criterion has the final form

$$\left.\begin{array}{l}\text{Direct}\\ \text{Fiber}\\ \text{Failure}\end{array}\right\} \quad \boxed{\varepsilon_f^{(-)} \leq \varepsilon_{11} \leq \varepsilon_f^{(+)}}, \tag{39a}$$

$$\left.\begin{array}{l}\text{Fiber/Matrix}\\ \text{Interaction}\\ \text{Failure}\end{array}\right\} \quad \boxed{\alpha\, \varepsilon_{kk} + e_{ij} e_{ij} \leq k^2}, \tag{39b}$$

where axis 1 is in the fiber direction and ε_{kk} is the volume change with e_{ij} being the deviatoric strain tensor. The relation in Equation 39b has been put into a slightly different form from Equation 38 such that with $\alpha = 0$ in Equation 39b, it takes the standard form of the Mises criterion. Of course, parameter α in Equation 38 is different from α in Equation 39b. Parameter k in Equation 39b is shear strain at failure, while the first term, αI_1, involves the coupling with dilatational effects.

The relations in Equation 39 are the failure criteria derived in accordance with the restricted form of the tensor transformation relations in the last section. Thus, the overall, three-dimensional criterion, which breaks down into two separate criteria, involves four parameters to be determined from experimental data: $\varepsilon_f^{(-)}$, $\varepsilon_f^{(+)}$, α, and k. Three aspects of the tensor transformation forms contributed to the derivation of the failure criterion in Equation 39. First, was the decomposition of direct fiber reinforcement effect in the stress constitutive relation in Equation 25, apart from the indirect part wherein the fiber effect is acting as an inclusion phase rather than as a direct load transfer agent. Second, the indirect effect of the fiber reinforcement part of the stress constitutive relation, in Equation 25, took an extremely simple form that is completely isotropic. The third key ingredient in this derivation was the necessity for using strain as the primitive variable, rather than stress.

The fact that the derivation of the failure criterion in Equation 39 required the use of strain rather than stress as the initial variable does not mean that the final forms in Equation 39 cannot be expressed in terms of stress. At this point it is simply a matter of using the stress strain relations to convert expression in Equation 39 to corresponding forms in terms of stress. The relation in Equation 39a in terms of stress takes the form

$$\varepsilon_f^{(-)} \leq \frac{1}{E_{11}} (\sigma_{11} - \nu_{12}\sigma_{22} - \nu_{12}\sigma_{33}) \leq \varepsilon_f^{(+)}, \tag{40a}$$

and Equation 39b takes the form

$$\begin{aligned}
&\alpha \left[\frac{(1-2\nu_{12})}{E_{11}} \sigma_{11} + \frac{(1-\nu_{21}-\nu_{23})}{E_{22}} (\sigma_{22} + \sigma_{33}) \right] \\
&+ \frac{2}{3} \frac{(1+\nu_{12})^2}{E_{11}^2} \sigma_{11}^2 + \frac{2}{3E_{22}^2} [(1 + \nu_{21} + \nu_{21}^2) + (1-\nu_{21})\nu_{23} \\
&+ \nu_{23}^2] (\sigma_{22}^2 + \sigma_{33}^2) \\
&+ \frac{2}{3E_{11}E_{22}} [(-1-2\nu_{21} + \nu_{23}) + \nu_{12}(-1-2\nu_{21} + \nu_{23})] \sigma_{11}(\sigma_{22} + \sigma_{33})
\end{aligned}$$

$$+ \frac{2}{3E_{22}^2}\left[\left(-1 + 2\nu_{21} + 2\nu_{21}^2\right) - 2\left(2+\nu_{21}\right)\nu_{23} - \nu_{23}^2\right]\sigma_{22}\sigma_{23}$$

$$+ \frac{\sigma_{12}^2}{4\mu_{12}^2} + \frac{\sigma_{23}^2}{4\mu_{23}^2} + \frac{\sigma_{31}^2}{4\mu_{12}^2} \leq k^2 . \tag{40b}$$

In Equation 40a $E_{11}\varepsilon_f^{(-)}$ and $E_{11}\varepsilon_f^{(+)}$ are identified as the compressive and tensile uniaxial stress levels at fiber failure. In obtaining relations in Equation 40 from Equation 39, no use has been made of the restricted property forms used in the preceding section. It probably is best to simply view relations in Equation 39 as the given failure criterion and then use the full stress strain forms for a transversely isotropic medium to obtain Equation 40 from Equation 39, as was done. In the event that not all the properties involved in Equation 40 are directly available from experimental measurement, then the properties restrictions of the preceding sections could be used to fill the mission properties.

It may be noted that the fiber/matrix interaction failure criterion in Equation 40b involves just two experimental parameters, α and k whereas the comparable tensor polynomial form involves eight parameters in order to cope with fully three-dimensional conditions. Another observation is relevant; Hahn, Erikson, and Tsai (1982) have conjectured that the term σ_{11} can be neglected in a failure criterion involving matrix action. The forms in Equation 39b or Equation 40b provide no such rationale, and in this criterion, σ_{11} terms cannot be neglected nor can any of the other stress components under three-dimensional conditions.

Finally, it is emphasized that the failure criterion in Equation 39 must take the partitioned form separating the direct and the indirect effects of fiber reinforcement. The latter part of the criterion, Equation 39b involves fiber/matrix interaction including the complicated effects of the interface. It is quite conceivable that interface failure could be a major aspect of overall composite failure, and this effect is inherently part of the fiber/matrix interaction criterion in Equation 39b.

5. EVALUATION

Data is available with which to test the present failure theory. Swanson, Messick, and Tian (1986) have obtained data from the testing of hoop wound, thin cylindrical shells of the fiber-reinforced material. Axial elongation or contraction, along with torsion, is used to provide superimposed normal stress and shear stress conditions. The normal stress is orthogonal to the fiber direction. Thus, the composite material can fail in a structural sense by the mechanism of fiber/matrix interaction breakdown.

For the present evaluation, axis 2 is taken in the cylindrical axis direction, and under plane stress conditions and with $\sigma_{11} = 0$ since the cylinder is not constrained radially, the criterion in Equation 40b takes the simple form

$$\frac{\alpha(1-\nu_{21}-\nu_{23})}{E_{22}}\sigma_{22} + \frac{\sigma_{12}^2}{4\mu_{12}^2}$$

$$+\frac{2}{3}\left[1+\nu_{21}+\nu_{21}^2+(1-\nu_{21})\nu_{23}+\nu_{23}^2\right]\frac{\sigma_{22}^2}{E_{22}^2} \leq k^2. \tag{41}$$

The properties for the carbon fiber AS4/Epoxy medium are given by Swanson (1986) as

$$E_{11} = 124\ GPa,$$

$$E_{22} = 8.3\ GPa,$$

$$\nu_{12} = .28,$$

$$\mu_{12} = 4.3\ GPa.$$

The properties restriction form in Equation 19 gives a value of $\mu_{12} = 3.0\ GPa$ which, although considerably different from the above value of $4.3\ GPa$, is nevertheless close enough to justify trying the present failure criterion for this medium.

The two parameters α and k are evaluated to fit the failure data of Swanson, Messick, and Tian (1986) at two conditions, $\sigma_{22} = 0$ with $\sigma_{12} \neq 0$ and at $\sigma_{12} = 0$ with σ_{22} positive. The only property involved in Equation 41 which cannot be obtained from the measured properties is ν_{23}. The value of $\nu_{23} = 1/3$ was assumed; the results are not particularly sensitive to this assumption. The data are shown in Figure 3. The values of α and k are found to be

$$\alpha = .0123,$$

and

$$k = .00611.$$

Using these values in Equation 41 then gives the theoretical envelope shown in Figure 3. The fit of the theory to the data is equally good as that given by the tensor polynomial form, which is shown in Swanson, Messick, and Tian (1986); however, one less parameter than is required by the tensor polynomial is available here. Furthermore, the two parameters determined from this simple test allow the prediction of fiber/matrix interaction failure under fully three-dimensional conditions, with no further tests needed.

The two parameters α and k can be used to predict the strain levels at failure under simple shear and under purely dilatational conditions.. It is found than the shear strain at failure is 0.61% directly from k while the dilatational strain at failure is 0.10%. The latter level may be triggered by interface failure between the fiber and matrix phases. These rather low strain levels for fiber/matrix interaction failure could be lower than the fiber strain failure levels in Equation 39a for some fiber composite systems. On the other hand, there could be cases in which the two criteria in Equation 39a and Equation 39b intersect, in which case the failure surface would be only piecewise smooth in contrast to that shown in Figure 3.

6. DISCUSSION

A method has been found by which classical, two-dimensional lamination theory can be extended to the three-dimensional form. No approximations have been introduced anywhere in this work; however, two restrictions on properties have been employed. These two restrictions reduce the five

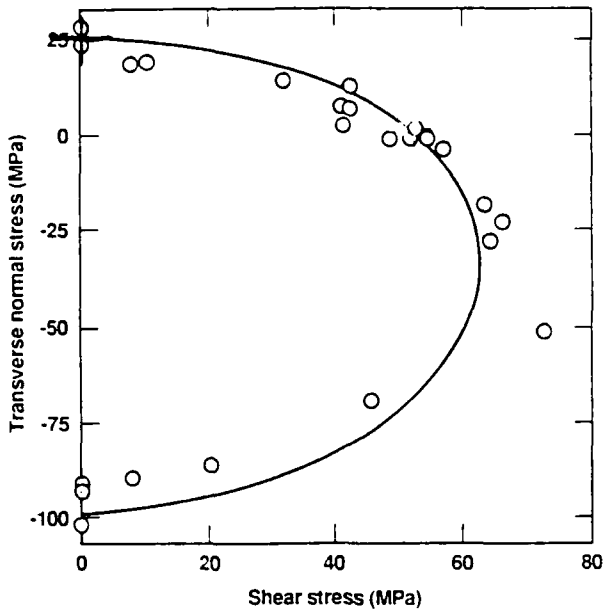

Figure 3. Failure Data and Theory.

independent properties of the fiber type, transversely isotropic medium to three independent properties. These restrictions in Equation 16 and Equation 18 are close to being satisfied by some materials systems, but it also remains possible that they could be strongly violated in some other systems. It remains to establish the (at least approximate) suitability of the restrictions in any particular application. Nevertheless, it appears that for fiber-dominated systems, the reduced three property form still gives a realistic description of the physical behavior. The effect of the properties reduction from five to three does not change the nature of direct fiber reinforcement; it is still specified by a direct property measurement in the fiber direction, E_{11}. However, the properties reduction does affect the indirect nature of fiber reinforcement through fiber/matrix interaction.

When these reduced forms can be taken to apply, a great simplification in constitutive relations occurs. It becomes possible to treat the out-of-plane stress terms which are involved in a lamination sequence as being independent of the fiber orientation in the plane of the lamina. This then allows the in-plane effects to be treated the same as in the two-dimensional theory while the out-of-plane terms take an even simpler form, which is integrated into the procedure. It is not necessary to use the properties restrictions for the in-plane term effects but rather only for the out-of-plane terms. In the case where the properties restrictions are used for both the in-plane and out-of-plane terms, then the stress constitutive relations take a greatly simplified form wherein it is not even necessary to use the

matrix form for properties specification for the anisotropic medium. A single tensorial equation which is only slightly more complicated than that of the isotropic case suffices, namely Equation 25. It is this latter simplified form that led directly to the derivation of the corresponding failure criterion.

The failure criterion in Equations 39 or 40 involves four parameters to be evaluated from experiments. Two of the parameters associate with fiber failure directly, while two of the parameters associate with fiber/matrix interaction and corresponding modes of failure. The latter form represents a generalization of the Mises criterion for application-to-fiber composites. In Section 5 of this work, the theory was tested against data which involves failure specified by fiber/matrix interaction effects. That is to say, when the fiber/matrix interaction failure criterion was exceeded, the structural failure of the composite material ensued. This special case resulted from the fact that only two stress components were present in the test specimen, shear stress σ_{12} and transverse stress σ_{22}. It was possible to fail the composite without failing the fiber phase itself in this case. This simple situation involved with the non-axial testing of a single lamina would not be true otherwise, nor in conditions involved with a laminate.

For a single lamina in a laminate which exceeds the fiber/matrix interaction failure criterion, it does not follow that the laminate would necessarily undergo structural failure. In this realistic condition, the violation of the fiber/matrix interaction criterion should be viewed as a form of damage, involving micro-cracking or yielding and could be quantified as such. Furthermore, this failure criterion which focuses upon failure at the level of the individual lamina should be supplemented by an auxiliary criterion which deals with delamination conditions in a laminate. Also, it should be noted that the present physical/deterministic failure criterion readily admits generalization to conditions of statistical variability. At the first level, it is obvious that separate statistical distribution functions apply to the separate mechanisms for fiber failure and fiber/matrix interaction failure.

One last minor technical matter should be mentioned. Especially in the older composite materials literature, appeal was often made to a model of an isotropic, homogeneous medium reinforced by filaments of vanishing diameter and infinite moduli. The indeterminate filament stiffness would be taken to be finite. That superficial model has no relationship to the present derivation where, for example, relations in Equation 26 or 27 for the fiber/matrix interaction moduli λ and μ imply and allow the presence of finite diameter fibers at finite concentration, as measured by composite properties E_{22} and μ_{12}.

7. REFERENCES

Drysdale, W. Private communication. U.S. Army Ballistic Research Laboratory, Aberdeen Proving Ground, MD, 1986.

Gillespie, J. Private communication. U.S. Army Ballistic Research Laboratory, Aberdeen Proving Ground, MD, 1986.

Goldenblat, I. I., and V. A. Kopnov. "Strength of Glass-Reinforced Plastics in the Complex Stress State," Mekhanika Polimerov. Vol. 7, p. 70, 1965.

Hahn, H. T., J. B. Erikson, and S. W. Tsai. "Characterization of Matrix/Interface-Controlled Strength of Unidirectional Composites," Fracture of Composite Materials. G. C. Sih and V. P. Tamuz, editors, Martinus Nijhoff, p. 197, 1982.

Hahn, H. T., D. G. Hwang, and H. C. Cheng. "Design Data Manual for Composite Materials." URCL-15365, Lawrence Livermore National Laboratory, Livermore, CA, 1981.

Hashin, Z. "Failure Criteria for Unidirectional Fiber Composites," Journal of Applied Mechanics. Vol. 47, p. 329, 1980.

Hill, R. The Mathematical Theory of Plasticity. Oxford University Press, 1960.

Swanson, S. R., M. J. Messick, and Z. Tian. "Failure of Carbon/Epoxy Lamina Under Combined Stress." University of Utah report, submitted for publication, 1986.

Swanson, S. R. Private communication. 1986.

Tsai, S. W., and E. M. Wu. "A General Theory of Strength for Anisotropic Materials," Journal of Composite Materials. Vol. 5, p. 58, 1971.

INTENTIONALLY LEFT BLANK.

No of Copies	Organization
2	Administrator Defense Technical Info Center ATTN: DTIC-DDA Cameron Station Alexandria, VA 22304-6145
1	HQDA (SARD-TR) WASH DC 20310-0001
1	Commander US Army Materiel Command ATTN: AMCDRA-ST 5001 Eisenhower Avenue Alexandria, VA 22333-0001
1	Commander US Army Laboratory Command ATTN: AMSLC-DL Adelphi, MD 20783-1145
2	Commander US Army, ARDEC ATTN: SMCAR-IMI-I Picatinny Arsenal, NJ 07806-5000
2	Commander US Army, ARDEC ATTN: SMCAR-TDC Picatinny Arsenal, NJ 07806-5000
1	Director Benet Weapons Laboratory US Army, ARDEC ATTN: SMCAR-CCB-TL Watervliet, NY 12189-4050
1	Commander US Army Armament, Munitions and Chemical Command ATTN: SMCAR-ESP-L Rock Island, IL 61299-5000
1	Director US Army Aviation Research and Technology Activity ATTN: SAVRT-R (Library) M/S 219-3 Ames Research Center Moffett Field, CA 94035-1000

No of Copies	Organization
1	Commander US Army Missile Command ATTN: AMSMI-RD-CS-R (DOC) Redstone Arsenal, AL 35898-5010
1	Commander US Army Tank-Automotive Command ATTN: AMSTA-TSL (Technical Library) Warren, MI 48397-5000
1	Director US Army TRADOC Analysis Command ATTN: ATRC-WSR White Sands Missile Range, NM 88002-5502
(Class. only) 1	Commandant US Army Infantry School ATTN: ATSH-CD (Security Mgr.) Fort Benning, GA 31905-5660
(Unclass. only) 1	Commandant US Army Infantry School ATTN: ATSH-CD-CSO-OR Fort Benning, GA 31905-5660
1	Air Force Armament Laboratory ATTN: AFATL/DLODL Eglin AFB, FL 32542-5000

Aberdeen Proving Ground

2	Dir, USAMSAA ATTN: AMXSY-D AMXSY-MP, H. Cohen
1	Cdr, USATECOM ATTN: AMSTE-TD
3	Cdr, CRDEC, AMCCOM ATTN: SMCCR-RSP-A SMCCR-MU SMCCR-MSI
1	Dir, VLAMO ATTN: AMSLC-VL-D

No. of Copies	Organization
4	Director Benet Weapons Laboratory US Army, ARDEC ATTN: SMCAR-CCB, G. DiAndrea J. Vasilakis J. Zweig G. Friar Watervliet, NY 12189-5000
5	Commander US Army, ARDEC ATTN: SMCAR-CCH-T, S. Musalli J. Hedderich E. Fennell T. Davidson R. Price Picatinny Arsenal, NJ 07806-5000
1	Commander DARPA ATTN: J. Kelly 1400 Wilson Blvd. Arlington, VA 22209
1	US Army Belvoir RD&E Center ATTN: STRBE-JBC, C. Kominos Fort Belvoir, VA 22060-5606
2	Commander Wright-Patterson Air Force Base ATTN: AFWAML, J. Whitney R. Kim Dayton, OH 45433
2	Materials Technology Laboratory ATTN: SLCMT-MEC, B. Halpin T. Chou Watertown, MA 02172-0001

No. of Copies	Organization
4	Lawrence Livermore National Laboratory ATTN: S. DeTeresa R. M. Christensen J. Lepper PO Box 808 Livermorc, CA 94550
4	Sandia National Laboratory Applied Mechanics Department Division-8241 ATTN: C. W. Robinson G. A. Benedetti K. Perano W. Kawahara PO Box 969 Livermore, CA 94550-0096
2	Battelle Pacific Northwest Laboratory ATTN: M. Smith M. Garnich PO Box 999 Richland, WA 99352
1	Los Alamos National Laboratory ATTN: D. Rabern WX-4 Division, Mail Stop G-787 PO Box 1663 Los Alamos, NM 87545
2	David Taylor Research Center ATTN: R. Rockwell W. Phyillaier Bethesda, MD 20054-5000
1	Amos Alexander Custom Analytical Engineering System, Inc. Star Route Box 4A Flintstone, MD 21530
1	Pennsylvania State University Department of Engineering Science and Mechanics ATTN: T. Hahn 227 Hammond Building University Park, PA 16802

No. of Copies	Organization
2	University of Delaware Center for Composite Materials ATTN: J. Gillespe B. Pipes 201 Spencer Laboratory Newark, DE 19716
1	University of Utah Department of Mechanical & Industrial Engineering ATTN: S. Swanson Salt Lake City, UT 84112
1	Stanford University Department of Aeronautics & Aeroballistics Durant Bldg. Professor Stephen Tsai Stanford, CA 94305

INTENTIONALLY LEFT BLANK.

USER EVALUATION SHEET/CHANGE OF ADDRESS

This Laboratory undertakes a continuing effort to improve the quality of the reports it publishes. Your comments/answers to the items/questions below will aid us in our efforts.

1. BRL Report Number BRL-CR-651 Date of Report FEBRUARY 1991

2. Date Report Received _____

3. Does this report satisfy a need? (Comment on purpose, related project, or other area of interest for which the report will be used.) _____

4. Specifically, how is the report being used? (Information source, design data, procedure, source of ideas, etc.) _____

5. Has the information in this report led to any quantitative savings as far as man-hours or dollars saved, operating costs avoided, or efficiencies achieved, etc? If so, please elaborate. _____

6. General Comments. What do you think should be changed to improve future reports? (Indicate changes to organization, technical content, format, etc.) _____

CURRENT ADDRESS

Name

Organization

Address

City, State, Zip Code

7. If indicating a Change of Address or Address Correction, please provide the New or Correct Address in Block 6 above and the Old or Incorrect address below.

OLD ADDRESS

Name

Organization

Address

City, State, Zip Code

(Remove this sheet, fold as indicated, staple or tape closed, and mail.)

FOLD HERE

DEPARTMENT OF THE ARMY
Director
U.S. Army Ballistic Research Laboratory
ATTN: SLCBR-DD-T
Aberdeen Proving Ground, MD 210 -5066
OFFICIAL BUSINESS

NO POSTAGE
NECESSARY
IF MAILED
IN THE
UNITED STATES

BUSINESS REPLY MAIL
FIRST CLASS PERMIT No 0001, APG, MD

POSTAGE WILL BE PAID BY ADDRESSEE

Director
U.S. Army Ballistic Research Laboratory
ATTN: SLCBR-DD-T
Aberdeen Proving Ground, MD 21005-9989

FOLD HERE