DTIC FILE COPY

AD-A218 173

FROM: AFIT/CI 2 Feb 90

SUBJ: Review of Thesis/Disseration for Public Release

TO: PA

Request you review the attached for public release prior to being sent to DTIC.

ERNEST A. HAYWOOD, 1st Lt, USAF
Executive Officer
Civilian Institution Programs

1 Atch
Thesis
~~Dissertation~~
by Brittenham

1st Ind, AFIT/PA

08 FEB 1990

TO: CI

Approved/~~Disapproved~~ for public release.
Log Number: 89-177

Harriet D Moultrie

HARRIET D. MOULTRIE, Capt, USAF
Director, Office of Public Affairs

PA Log Number 90-02-10

DTIC
ELECTE
FEB 22 1990
S E D

SECURITY CLASSIFICATION OF THIS PAGE

REPORT DOCUMENTATION PAGE

Form Approved
OMB No. 0704-0188

1a. REPORT SECURITY CLASSIFICATION UNCLASSIFIED	1b. RESTRICTIVE MARKINGS NONE
2a. SECURITY CLASSIFICATION AUTHORITY 2b. DECLASSIFICATION / DOWNGRADING SCHEDULE	3. DISTRIBUTION / AVAILABILITY OF REPORT APPROVED FOR PUBLIC RELEASE; DISTRIBUTION UNLIMITED.
4. PERFORMING ORGANIZATION REPORT NUMBER(S)	5. MONITORING ORGANIZATION REPORT NUMBER(S) AFIT/CI/CIA- 89-177
6a. NAME OF PERFORMING ORGANIZATION AFIT STUDENT AT Ohio State Univ 6b. OFFICE SYMBOL (If applicable)	7a. NAME OF MONITORING ORGANIZATION AFIT/CIA
6c. ADDRESS (City, State, and ZIP Code)	7b. ADDRESS (City, State, and ZIP Code) Wright-Patterson AFB OH 45433-6583
8a. NAME OF FUNDING / SPONSORING ORGANIZATION 8b. OFFICE SYMBOL (If applicable)	9. PROCUREMENT INSTRUMENT IDENTIFICATION NUMBER
8c. ADDRESS (City, State, and ZIP Code)	10. SOURCE OF FUNDING NUMBERS PROGRAM ELEMENT NO. / PROJECT NO. / TASK NO / WORK UNIT ACCESSION NO.

11. TITLE (Include Security Classification) (UNCLASSIFIED)

AUTOMATED OF DIE AND MOLD POLISHING: A PRELIMINARY INVESTIGATION

12. PERSONAL AUTHOR(S)
RODNEY KENT BRITTENHAM

13a. TYPE OF REPORT	13b. TIME COVERED	14. DATE OF REPORT (Year, Month, Day)	15. PAGE COUNT
THESIS/~~DISSERTATION~~	FROM _____ TO _____	1989	132

16. SUPPLEMENTARY NOTATION
APPROVED FOR PUBLIC RELEASE IAW AFR 190-1
ERNEST A. HAYGOOD, 1st Lt, USAF
Executive Officer, Civilian Institution Programs

17. COSATI CODES			18. SUBJECT TERMS (Continue on reverse if necessary and identify by block number)
FIELD	GROUP	SUB-GROUP	

19. ABSTRACT (Continue on reverse if necessary and identify by block number)

20. DISTRIBUTION / AVAILABILITY OF ABSTRACT ☒ UNCLASSIFIED/UNLIMITED ☐ SAME AS RPT. ☐ DTIC USERS	21. ABSTRACT SECURITY CLASSIFICATION UNCLASSIFIED
22a. NAME OF RESPONSIBLE INDIVIDUAL ERNEST A. HAYGOOD, 1st Lt, USAF	22b. TELEPHONE (Include Area Code) (513) 255-2259 22c. OFFICE SYMBOL AFIT/CI

DD Form 1473, JUN 86 Previous editions are obsolete. SECURITY CLASSIFICATION OF THIS PAGE

AFIT/CI "OVERPRINT"

THESIS ABSTRACT

FOR

Brittenham, Rodney Kent
Captain, United States Air Force

SCHOOL: The Ohio State University **DEGREE:** M.S.

YEAR: 1989 **PAGES:** 132

TITLE OF THESIS: Automation of Die and Mold Polishing: A Preliminary Investigation

Dies and molds are a crucial component in the net shaping manufacturing of metals and polymers. Much effort has been expended in optimizing the utilization, but the highly manual effort of polishing die and molds is still a World War II technology employing highly skilled tradesmen in a manual, monotonous task. Automating this process will free the die/moldmaker for intricate or complex jobs that require his/her skill. (EG)

The automated die and mold polishers on the market do not utilize an existing machine, but a new piece of equipment must be purchased to provide a rigid structure with which to hold the polishing apparatus. The cost effectiveness of purchasing a high dollar value piece of capital equipment is not practical in all situations.

This thesis investigates the use of a three axis milling machine with a constant polishing force pneumatically exerted onto the workpiece. This technique produced a surface finish with an average arithmetic average, R_a of approximately 0 microinches after 100 passes with Trim Sol coolant. However, difficulties encountered with the existing fixture require additional hardware modifications.

A

THESIS ABSTRACT

THE OHIO STATE UNIVERSITY
GRADUATE SCHOOL

NAME: Brittenham, Rodney Kent QUARTER/YEAR: Autumn 1989

DEPARTMENT: Industrial and Systems Engineering DEGREE: M.S.

ADVISOR'S NAME: Taylan Altan

TITLE OF THESIS: Automation of Die and Mold Polishing: A Preliminary Investigation

The polishing of dies and molds is a manual, monotonous task. Automating this process will free the die/moldmaker for intricate or complex jobs that require his/her skill. The automated die and mold polishers on the market do not utilize an existing machine as the structure to hold the polishing apparatus.

This thesis investigates the use of a three axis milling machine with a constant polishing force pneumatically exerted onto the workpiece. This technique produced a surface finish with an average arithmetic average, R_a of approximately 0 microinches after 100 passes with Trim Sol coolant. However, difficulties encountered with the existing fixture require additional hardware modifications.

Accession For
NTIS GRA&I ☒
DTIC TAB ☐
Unannounced ☐
Justification
By
Distribution/
Availability Codes
Dist | Avail and/or Special
A-1

DTIC COPY INSPECTED 6

B

Advisor's Signature

Co-Advisor's Signature

AUTOMATION OF DIE AND MOLD POLISHING:

A PRELIMINARY INVESTIGATION

A Thesis

Presented in Partial Fulfillment of the Requirements for

the degree Master of Science in

the Graduate School of the Ohio State University

by

Rodney Kent Brittenham, B.S.M.E.

* * * * *

The Ohio State University

1989

Master's Examination Committee:

Taylan Altan

Gary P. Maul

Approved by

T. Altan

Advisor
College of Engineering

Gary P. Maul

Co-Advisor
College of Engineering

ACKNOWLEDGEMENTS

I express sincere appreciation to Dr. Taylan Altan and Dr. Gary P. Maul for their guidance and insight through out this research. The technical assistance of Shelby Davis is gratefully acknowledged. Gratitude is expressed to Steve Byorth and All City Parts for their support in supplying abrasives and assistance on tooling concepts. Also, I want to thank my wife, Debra. Without her ceaseless support and assistance this thesis would have been a nearly impossible undertaking.

VITA

[redacted]	[redacted]
1984	B.S., University of Nebraska, Lincoln, Nebraska
1985-1988	Manufacturing Manager, United States Air Force, Wright-Patterson Air Force Base, Ohio
1988-Present	Industrial Engineer, Ohio State University

FIELDS OF STUDY

Major Field: Manufacturing with emphasis on Manufacturing Systems Engineering

TABLE OF CONTENTS

ACKNOWLEDGEMENTS ii

VITA iii

LIST OF TABLES vi

LIST OF FIGURES vii

LIST OF PLATES viii

CHAPTER PAGE

I. INTRODUCTION 1

II. LITERATURE REVIEW 3
2.1. Terminology Baseline 3
2.2. Workpiece Factors Affecting the Automation of Polishing 5
2.2.1. Machining and Grinding Method . 5
2.2.2. Material of the Die or Mold . . 5
2.2.3. Purpose of the Die or Mold . . . 6
2.2.4. Shape of the Die or Mold 6
2.3. Manufacturing of a D-2 Steel Stamping Die for Automobile Bumpers 6
2.3.1. Machining 7
2.3.2. Grinding 10
2.3.3. Polishing 11
2.4. Other Methods and Tools Utilized in Manufacturing a Die or Mold 12
2.4.1. Electro-Discharge Machining . . 12
2.4.2. Advances in Milling 13
2.4.3. Finishing Tools 14
2.4.4. Other Potential Tools 25
2.5. Postulation on the Physics of the Polishing Process 27

III. EXISTING POLISHING MACHINES 31
3.1. Articulated Arm Polishing Machines . . 32
3.1.1. Aida 32
3.1.2. Showa Seiki 37
3.2. "Machine Tool" Polishing Machines . . . 42
3.2.1. Hitachi 43

3.2.2. Nagase 48
3.2.3. Seva 54
3.2.4. Tokiwa Seiki 65
3.3. Other Potential Machines 69

IV. HARDWARE DESCRIPTION 71

V. EXPERIMENTATION 88
5.1. Experimental Factorial Design 88
5.2. Experimental Data 92

VI. ANALYSIS OF DATA 99

VII. CONCLUSIONS/RECOMMENDATIONS 102

VIII. SUMMARY 107

APPENDICES

A. SURFACE QUALITY PARAMETERS 116

B. SOURCES OF SUPPLIES 120

BIBLIOGRAPHY. 129

LIST OF TABLES

Table 1 Diamond/CBN Cross Reference Sizing Table . . . 26

Table 2 Aida DPR-5 Die Polisher Specifications 35

Table 3 Showa Seiki Polishing Machine Specifications . 40

Table 4 Nagase "Flex-Polisher" Machine Specifications 51

Table 5 Tokiwa Seiki Polishing Machine Dimensions . . 67

Table 6 Tokiwa Seiki Polishing Machine Specifications 68

Table 7 2^5 Factorial Design 90

Table 8 Randomized Testing Arrangement 91

Table 9 Surface Quality Parameters 95

Table 10 Surface Quality Parameters 96

LIST OF FIGURES

Figure 1 Assorted Rotary Finishing Tools 17

Figure 2 Reciprocating Abrasive Stones 21

Figure 3 Aida DPR-5 Die Polisher Dimensions 34

Figure 4 Showa Seiki Die Polishing Machine Dimensions 39

Figure 5 Hitachi Die Polishing Machine 44

Figure 6 Hitachi Elastic Polishing Tool 46

Figure 7 Hitachi Rubber Cylinder Polishing Tool . . . 46

Figure 8 Nagase "Flex-Polisher" Machine Dimensions . . 50

Figure 9 Nagase Polishing Tools 51

Figure 10 Seva Standard Polishing Machine Dimensions . 59

Figure 11 Seva "Fixed Parts" Machine Dimensions . . . 62

Figure 12 Seva Big Size Polishing Machine Dimensions . 64

Figure 13 Tokiwa Seiki Polishing Machine Dimensions . 67

Figure 14 Profiler 76

Figure 15 Assembled Experimental Hardware 76

Figure 16 Illustration of the Assembled Hardware . . . 78

Figure 17 Listing of Experimental Hardware 79

Figure 18 Pneumatic Control Schematic 81

Figure 19 Proportion-Air Valve Operating Schematic . . 83

Figure 20 Two Experimental Rotary Tools 84

Figure 21 Surface Comparison 118

LIST OF PLATES

Plate I	Aida DPR-5 Die Polisher	33
Plate II	Showa Seiki Die Polishing Machine	38
Plate III	Nagase "Flex-Polisher" Machine	49
Plate IV	Seva Standard Polishing Machine	55
Plate V	Seva "Fixed Parts" Polishing Machine	56
Plate VI	Seva Big Size Polishing Machine	57
Plate VII	Tokiwa Seiki Polishing Machine	66
Plate VIII	Pneumatic Control Panel	80
Plate IX	Hardware Modification	87

CHAPTER I. INTRODUCTION

Many U.S. tool and die shops use the same manual polishing methods developed over one-half century ago. Hence, polishing of dies and molds is still a manual, highly skilled, monotonous task performed under dirty and noisy conditions. The hand finishing of the die or mold requires up to 35% of the total production time.[1] Therefore, automation of die and mold polishing should reduce production time and produce a more consistent, i.e. higher quality product.

On the other hand, it is difficult to automate the manual skills necessary for die and mold polishing. These skills are developed to such a degree that each craftsmen would perform identical jobs in a different manner. Furthermore, "a high degree of technique, even 'art', is required in [die or] mold surface polishing, it takes many years for most good polishers to acquire their high level of proficiency."[2] From this observation, it becomes obvious why a philosophy has developed that polishing is completed by "black magic."

Even with the "magic" of polishing, several manufacturers have attempted to capture the die/mold makers polishing skills. These manufacturers assert that their automated machines provide significant time savings compared to manual

polishing. In addition to any reduction in labor hours, the automated process should allow for use of the skilled craftsmen to manually polish only the intricate and precise areas of a die or mold that demand his skill.

Overall, the polishing process can be summarized by stating: "[a] good process finish is often key to increased sales [where a] poor process finish causes loss of sales, assembly failures, possible law suits, rejects, field repairs, etc."[3] Hence, the interest in automating die and mold polishing.

This thesis contains five main sections. Sequentially, these sections are: Literature Review, Existing Polishing Machines, Hardware Description, Experimentation, Analysis of Data, Conclusions/Recommendations and Summary.

CHAPTER II. LITERATURE REVIEW

The Literature Review contains five subsections. These are: terminology baseline, a discussion of the workpiece factors affecting the automation of polishing, an example of the manufacture of a D-2 steel sheet metal stamping die for an automobile bumper, a discussion of other methods and tools utilized in manufacturing dies and molds, and postulations regarding the physics of polishing. In addition, Appendix A discusses six variables used in measuring the die or mold surface finish quality.

2.1. Terminology Baseline.

A quick review of the terminology is necessary to establish a common baseline for the remainder of the thesis. First, the terms die and mold are used to refer to the tools used for net shape manufacturing of metals and polymers, respectively. In addition:

> finishing will be taken to mean any operation performed on a workpiece after it is brought to a rough-machined condition on an NC mill or machining center. These operations include both grinding and polishing. Grinding, for the lack of a better term, denotes the removal of metal for the purpose of changing the shape of the workpiece. Thus scallop removal would be considered grinding, even if were performed with a carbide burr. Polishing will be taken to mean metal removal for the purpose of improving the surface finish. In terms of the amount of material removed, in the present context

> grinding would involve a dimensional change on the order of several thousandths of an inch, while polishing would entail metal removal on the order of ten-thousandths of an inch.[4]

We must, also, define three surface quality factors. These are: a specific smoothness, waviness, and a specific dimensional accuracy. Specific smoothness is measured by average roughness, (R_a). It is traditionally measured by a profilometer and is defined as the "arithmetic average height of roughness irregularities measured from a mean line within the sampling length (L)."[5]

Waviness is a cyclic variation from a flat surface. If it is unintentionally introduced into a die, the die may not mate as accurately, thereby, potentially creating a wavy part. This can be highly undesirable. For example, waviness in an automobile's outer body sheet metal is not aesthetically pleasing and devalues the automobile. In a mold, unintentional waviness can adversely affect the flow of the polymer. For injection molding, waviness may even affect the ability to fill the mold.

Dimensional accuracy is self explanatory. The die or mold must be manufactured to the proper dimensional specifications or the result could be incorrectly sized parts, non-working dies or molds, etc. Along with the common definitions, the following discussions are designed to provide a basic understanding of die and mold polishing.

2.2. Workpiece Factors Affecting the Automation of Polishing.

Four factors that affect die or mold polishing are the machining and grinding method (preprocessing methods), material, purpose, and shape of the die or mold.[6] These affects are discussed below.

2.2.1. Machining and Grinding Method.

The affect of the preprocessing method is most evident by reviewing the process itself. For this reason, this factor is discussed in the following subsections of the Literature Review: the Manufacturing of a D-2 Steel Stamping Die for Automobile Bumpers and Other Methods and Tools Utilized in Manufacturing a Die or Mold.

2.2.2. Material of the Die or Mold.

This thesis only discusses the use of ferrous based alloys, even though, materials such as beryllium copper are used as mold materials and may be polished.[7] This limitation is applied since the majority of materials utilized in die and mold making are steel. The different processes and treatments performed on the die or mold steels affect the polishability. For instance, H-13, P-20, or A-2 moldmaking steels have good polishability; while other steels are not as easily polished.[8] Good polishability may result from steels with higher hardness since these steels are more easily polished.[9] However, the exact rationale of what makes one steel more polishable than another is unknown and not the focus of this thesis.

2.2.3. Purpose of the Die or Mold.

The purpose or application of the die or mold strongly affects the polishing. Different applications require different surface finishes. For example, in injection molding, a mold requires a finer (smaller R_a value) finish than a sheet metal stamping die. This is due to the plastics ability to reproduce nearly every aspect of a mold, including imperfections, while the metal does not.[10] Within a die the surface finish requirements are not always the same; for instance, a sheet metal forming draw die does not require the same surface finish throughout the entire die.[11]

2.2.4. Shape of the Die or Mold.

The shape of a die or mold is important when automating the polishing process. If the shape is a flat plane, a uncomplicated polishing system can be implemented. However, if the shape is quite complex or has ribs, a more accommodating system will be required to polish the surface.

2.3. Manufacturing of a D-2 Steel Stamping Die for Automobile Bumpers.

Before attempting to automate the polishing process, it is important to understand the manual method. For this reason, this section discusses the process observed in manufacturing a D-2 steel stamping die for automobile bumpers. However, it is essential to note that this is one case and that individual shops may perform the task differently. Also,

the polishing process does vary from person to person and for each condition.

Sequentially, this section briefly describes the methods and tools employed in machining, grinding, and polishing of the die. While items, such as die design and the casting of the metal indirectly influence the manufacturing process, they are not addressed in this thesis. Hence, the discussion begins with the processes prior to polishing the die because of their direct influence on the polishing process.

2.3.1. Machining.

There are several techniques available to manufacture a die or mold. These are: "manual machining, copy milling or turning, numerical control (NC) machining, electrodischarge machining (EDM), electrochemical machining (ECM), hobbing and casting."[12] The three methods used in manufacturing the D-2 steel stamping die are copy milling, NC machining, and EDM. EDM is not used extensively, hence, this topic is discussed in the section entitled "Other Methods and Tools Utilized in Manufacturing Dies and Molds."

Copy milling and NC machining are both milling processes used in the manufacture of the D-2 steel stamping die. Milling of the die is performed by a 3-axis milling machine equipped with a flat-endmill, followed by a ball-endmill. The specific endmill used for each die depends on several factors, such as the material characteristics of the die, geometry of the die, and the surface finish desired. In general, the flat

endmill is used to "hog-out" material in an expedient manner whereas the ball-endmill leaves a better surface finish which minimizes grinding during the finishing process.

After decades of use, the process of copy milling is often referred to by the name of the machine's manufacturer, "such as Keller, Deckel, and Hydrotel."[13] Initially in this process, a relief model is created of plaster, wood or other material that is easily shaped to the desired geometry. The model is then placed under a tracing arm equipped with a sensor (e.g. electronic or hydraulic). The milling machine then uses the sensor information to mill a duplicate into the die or mold block. As Rohan plainly states, it "work[s] on a tracer principle something like hardware-store key duplicators and work[s] off handmade patterns."[14]

This method of die manufacture has the advantage of retaining a model that may be used to produce several identical dies. However, a major disadvantage of older copy milling machines is inaccuracy generated by the vibration in the tracing head as it traverses the model. To counteract these inaccuracies, additional material is typically left on the die. This material must be removed in later processing. In newer copymilling machines, this problem is minimized and is generally not a factor.[15]

Another method of milling, NC machining, has the following advantages over copymilling:[16]

- Storage of templates or models is eliminated.

- Changes on dies are easier to make because these changes involve modifications in the computer program statements used to generate the NC tapes.
- Relatively little skill is required of the diemaker.
- The actual machining time is reduced.
- Accuracy and repeatability are increased.*

Furthermore, NC machining can reduce costs and production time considerably.[17]

At the conclusion of milling, the "rough-cut" die has scallops and indexing (pickfeed) marks with an approximate average surface roughness (R_a) greater than or equal to 50 micrometers (μm) which is approximately 2,000 microinches (μin).[18] The workpiece has an additional .0015" to .005" material over the desired finished dimensions.[19]

While the milling discussion is brief, the influence of the steps preceding finishing on the surface quality should not be underestimated. The surface quality can be affected by many factors, for example, "parameters of the machining conditions, quality of the tool, errors of the shape and non-uniformity of the mechanical properties of the material of the blank, vibrations of the machine-fixture-tool-workpiece system, etc."[20] Hence, the processes performed on the workpiece prior to the finishing steps are critical in

---

* To optimize the advantages of NC machining, the die or mold geometry should be downloaded from a Computer-Aided Design/Computer Aided Manufacturing (CAD/CAM) system.

establishing finishing time and the ability to attain the desired surface finish.

While the mill can produce a highly refined surface, this depends upon the machine and conditions under which the milling is accomplished. For example, a 5-axis CNC mill using a flat-endmill provides a better surface finish than a 3-axis milling machine with a ball-endmill. A surface with minimal scallops and machining marks can be generated by minimizing the pickfeed or machine index during milling. However, to achieve such a surface finish, additional machining passes with small indexing is required. Milling in this manner is time consuming and usually more expensive than the manual cost of finishing the surface.

2.3.2. Grinding.

Once the D-2 steel stamping die has been machined, it is sent to the diemaker.[21] Grinding is performed by personnel from a labor pool with a minimal amount of training or by apprentice diemakers. While grinding is not a polishing step, it is used to teach apprentice polishers the "feel-of-the-metal."[22]

The grinding process begins with the application of blue layout or other similar metal dyes. The dye is painted across the entire die surface. At this point, the die is "roughed out" or ground by heavy duty electrical grinders equipped with abrasive wheels. It is important to grind perpendicular to the direction of the machining marks so the workpiece has a

ground surface with blue dye only at the bottom of the scallops. The remaining blue dye aids in removing the machining marks and shaping the geometry of the workpiece. The bottom of the machining marks is the true, desired surface.[23] If ground in the same direction, the grinding wheel may remove all the dye. This indicates that excessive material may have been removed and the workpiece is not properly shaped.[24] The remaining blue dye aids in removing the machining marks and shaping the geometry of the workpiece. Upon successful completion of grinding, the D-2 steel stamping die is sent to be polished.

2.3.3. Polishing.

Polishing of the die is performed by using three different grit "boat" stones. These large stones are used in a reciprocating motion. The stones are used in progressively finer grits with the last stone employing an oil lubricant.

Stones are first used on the female die. As this die is being polished, the male die is ground and polished. The two dies are "spotted" together by applying a spotting dye to the female cavity, which is then mated to the male die. This results in the points of contact being dyed or spotted on the male die. The spotting process is repeated until the entire male die is dyed when contact is made with the female die.

There are a variety of tools used during the spotting process. An overview of the tools is presented in the section entitled "Other Methods and Tools Utilized in Manufacturing

Dies and Molds." However, it should be understood that it is common for the craftsman to manufacture a needed tool which is not commercially available. In summary, the process described is one case of manufacturing a D-2 steel stamping die.

2.4. Other Methods and Tools Utilized in Manufacturing a Die or Mold.

This subsection will outline the following for use in die and mold manufacture: Electro-Discharge Machining (EDM), advances in milling, and finishing tools.

2.4.1. Electro-Discharge Machining.

EDM is a nontraditional machining process that is being employed more frequently in die and mold manufacturing. There are several advantages to this method of die and mold manufacturing. For instance, since the metal removal is performed by electrical spark erosion from a reverse image electrode, this method can be employed on the hardest steels that are difficult to machine. Also, the reverse image electrode is commonly manufactured from copper or carbon which is easier to machine and shape than the die or mold steels. Thus, very intricate dies and molds can be manufactured from electrically conductive materials.[25] Another advantage is the ability of EDM to create surface finishes to .2 μm, R_a. This may reduce or eliminate polishing in some applications of die or mold manufacturing.[26]

EDM does have significant disadvantages. For instance, the resultant surface finish is textured and may not be acceptable for some applications, therefore, the resultant textured surface must be polished. EDM, also, is relatively slow in its metal removal rate. Hence, this process is used primarily for small dies and molds composed of difficult to machine metals.

2.4.2. Advances in Milling.

The most obvious improvement to the current method of the manufacturing of a D-2 steel stamping die is to increase the degrees of freedom of the milling machine. Thus, employment of a four or five-axis milling machine would increase conformance of the tool's path to the desired contour of the workpiece, except the bottom. (Noting that the five-axis milling machine should have better conformance than the four-axis machine.) Additional conformance, hereafter called compliance, allows the tool to accurately contact the surface as needed, e.g. instead of attempting to mill a slope with a vertical cutter, the cutter may attain the slope desired and minimize the machining marks.

Another improvement to the current method would be to use direct downloading of the calculated cutter path locations from the computer or CAD/CAM system to the NC milling machine. This would allow for rapid transfer of information between the customer and the tool and die manufacturer. The data sent by the customer could be directly downloaded to the NC equipment.

This method minimizes the interaction between the programmer and the NC machine and should, also, minimize human error. Obviously, the ability to design on the CAD/CAM system is beneficial. Additional information on this subject is available in "Design and Manufacture of Dies and Molds: State of the Technology" by Amit Bagchi and John Sherwood, ERC/NSM-87-4 Report, February 1987.

2.4.3. Finishing Tools.

As mentioned previously, the finishing process consists of two steps, grinding and polishing. As implied, it is common for these two steps to blend together at their demarcation line. For this reason, the following finishing tools are not designated for use in grinding or polishing except when their use is limited to only one of the processes.

One finishing tool already discussed is the heavy duty grinder. This tool is primarily used to grind large workpieces and is not common to all die and mold manufacturing due to its large size and ability to remove large amounts of metal. On the other hand, in grinding operations where light metal removal or close control of the grinder is required, a lightweight hand grinder is appropriate.[27]

In addition, two other grinders are used in finishing applications. These are the flexible shaft hand and air powered grinders. The flexible shaft grinder is

> smaller and easier to handle. It is better suited for detailing in small, confined areas and can be equipped with angle heads that permit the polisher to get into corners that would be difficult with a

> larger type hand grinder. Flex[ible] shaft driven tools provide more torque in the lower speed ranges, hence it makes them ideal for use with polishing brushes and felt bobs.[28]

The air powered grinder should be utilized when rapid metal removal is required. This grinder is capable of significantly higher speeds, hence, caution must be exercised during use to avoid excessive material removal. For this reason, this grinder is not suitable for use during final polishing.

A wide variety of tools may be employed with the lightweight hand, flexible shaft, and air powered grinders. The appropriate tool depends upon the quantity of metal removal required. As shown in Figure 1, there is a variety of rotary tools. These tools range from carbide rotary cutters to felt bobs.

High speed steel and carbide rotary cutters, sometimes called burs, are rigid tools capable of high material removal rates.[29] One advantage of a carbide tool is its superior wear characteristics. Furthermore, rotary burs are particularly suited for material removal from difficult to reach areas that are inaccessible with a large grinder. However, this tool is not usually capable of achieving the final surface finish, hence, polishing is completed by other methods.

Abrasive tools form a wide range of different sizes and styles. All tools shown in Figure 1 are abrasive except for the carbide rotary cutters, the brass and bristle brushes, and felt bobs. However, brushes can be impregnated with

abrasives and felt bobs are used with diamond compounds. Additional abrasive tools include abrasive square and cross pads, slotted cloth discs, and sheets.[30] Most of these tools are manufactured by bonding a specific grit of abrasive, to a backing of fabric or paper. There is a wide variety of combinations of particles, backings, and adhesive bonding agents, hence, there are many different abrasive finishing tools to assist the die or mold polisher.

The abrasives are typically composed of two substances, aluminum oxide or silicon carbide.

> Aluminum oxide, a natural abrasive, is extremely tough and each grain holds it's sharpness very well.... Silicon Carbide, which is man-made is an extremely sharp abrasive but is quite brittle. As it is used, the abrasive particles will shatter and new sharp edges will be exposed.[31]

These substances are graded by a grit number. The grit number is given by the number of mesh openings "per linear inch in the screens or sieves that are use[d] to grade the abrasive particles."[32] * Obviously, the larger the grit number, the "finer" the mesh so the smaller the particles.

> The selection of the grit is important since the resulting finish is directly related to the coarseness or fineness of the grit used. A note of caution is in order with regard to grit selection. Starting with too fine a grit can waste stones [or any abrasive product] and time. Coarser grits should be used for roughing with increasingly finer grits used as the surface nears final shape and size.[33]

---

* For allowable size limits for aluminum oxide and silicon carbide abrasives, consult Gesswein's <u>Mold Polishing Fundamentals for Beginners</u>.

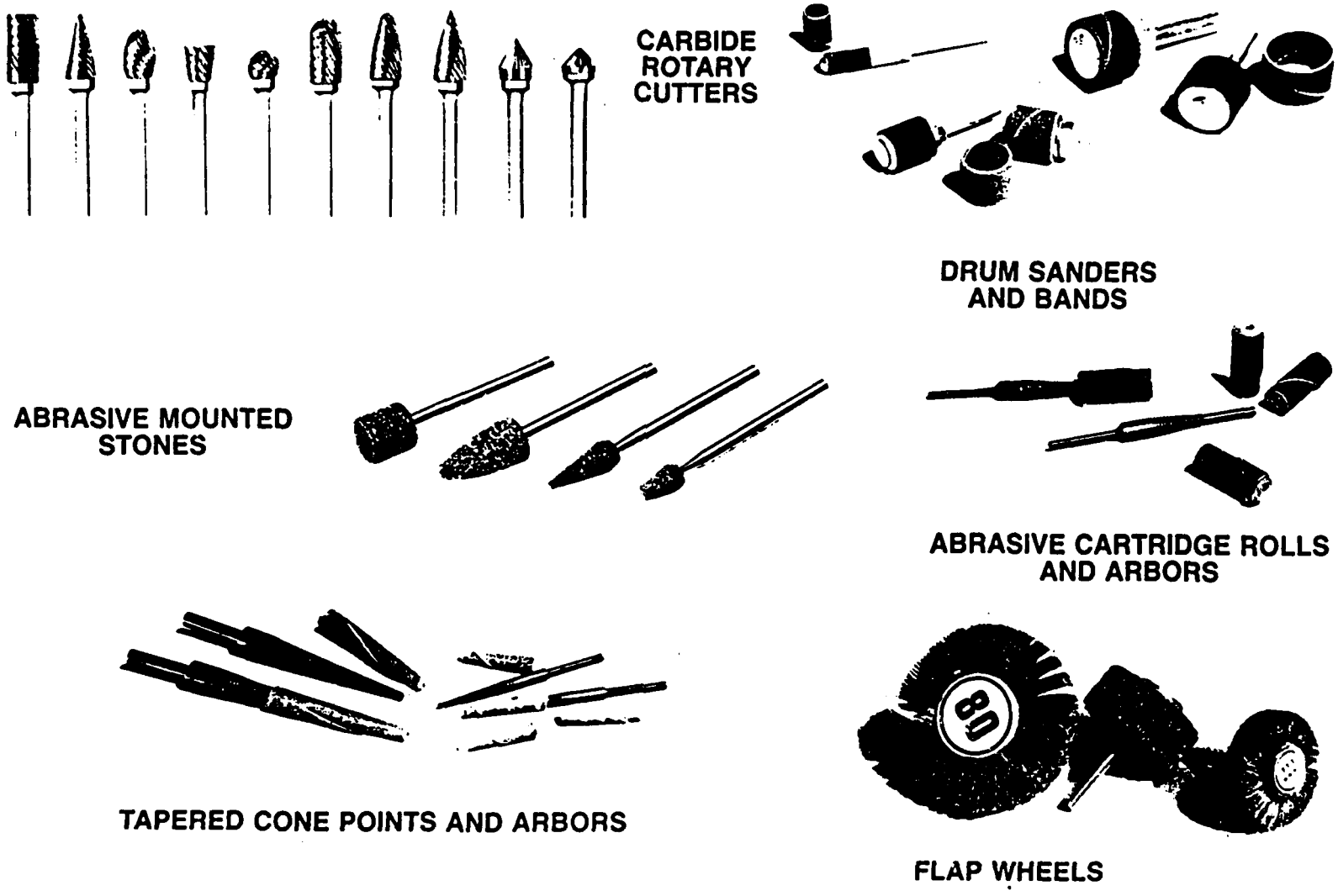

Figure 1 Assorted Rotary Finishing Tools[34]

Figure 1 (Continued)

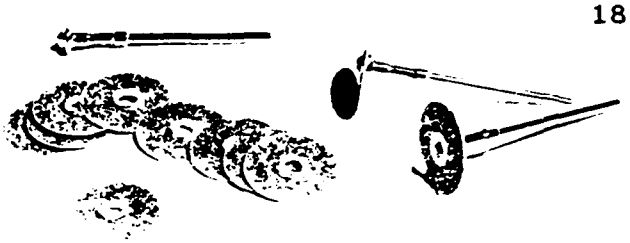

THIN, SNAP-ON ABRASIVE DISCS

RUBBER DISC HOLDERS
WITH STICK-ON ABRASIVE DISCS

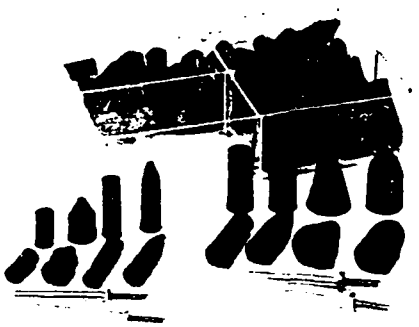

RUBBERIZED ABRASIVE CONES,
POINTS AND WHEELS

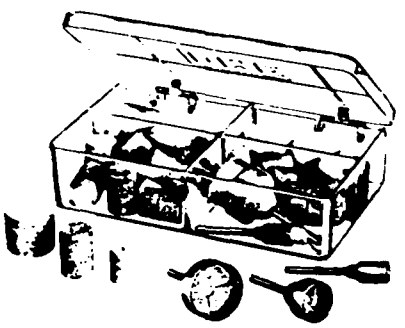

FELT BOBS

BRASS AND BRISTLE BRUSHES

Typically, 60 to 320 grit is used in grinding while stoning, discussed below, starts at 240 grit.[35] However, the grit number actually utilized depends on several factors (e.g. surface condition prior to stoning and/or the skill of die/mold polisher).

A potential disadvantage of abrasive (particularly in aluminum oxide) tools (e.g. discs, rolls, pads, and sheets), is their tendency to "load up" with already removed metal particles. This leads to a gradual reduction in the "working" abrasive grit. For smaller workpieces, this may allow a finer surface finish since the same abrasive tool can continue to be used.[36] However, it is difficult to predict the loading. For larger workpieces, the loading causes the operator to frequently replace worn out or loaded abrasive belts since the same tool can not be used over the entire workpiece.[37] One inventive method to prevent loading is to attach the sheet or drum to an air inflated cylinder; the flexibility of the wheel prevents glazing and actually allows the abrasive to fracture.[38]

Another abrasive polishing tool used by die and moldmakers are reciprocating abrasive stones, sometimes called rubstones. These stones are shown in Figure 2 and their purpose is similar to the boat stones discussed previously. Rubstones are used to "remove final dips, depressions, waves,

or other imperfections to obtain a flat or properly contoured surface."[39] Stoning, also, removes any burnt areas left by the grinding wheels.

Since stones are composed of abrasive grit bonded together into a rigid matrix.[40] This allows for the stones's grit to be reduced as a more refined finish is required. When the grit is reduced, the direction of "stoning" is usually changed by 45 to 90 degrees from the preceding stone.[41] In this manner, the "scratches" become finer and approaches the desired surface finish.[42]

Stones achieve a textured finish acceptable for most dies or molds. If further surface refinement is necessary, it may be obtained by employing progressively finer diamond, Cubic Boron Nitrate (CBN) or other crystalline compounds. These compounds are capable of achieving a "mirror" finish. While more predominant in molds, diamond compounds have uses in die manufacture, for example, stainless steel bumper dies require a "mirror" finish.

A principal difference between diamond or CBN compounds and the previous abrasive tools is compounds are typically used in a lapping operation. This means the tool itself has no abrasive qualities so the metal removal is performed by

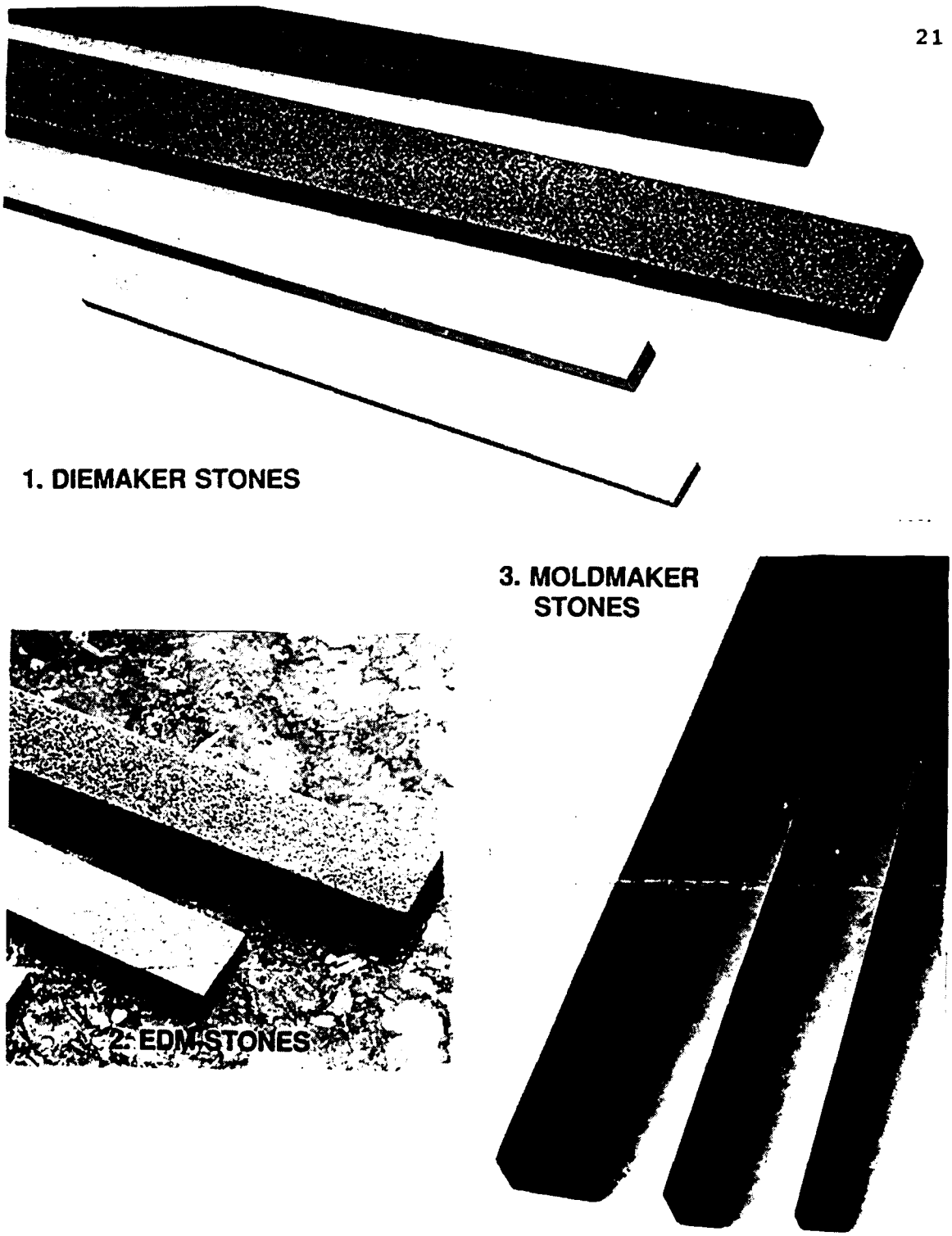

Figure 2 Reciprocating Abrasive Stones[43]

Figure 2 (Continued)

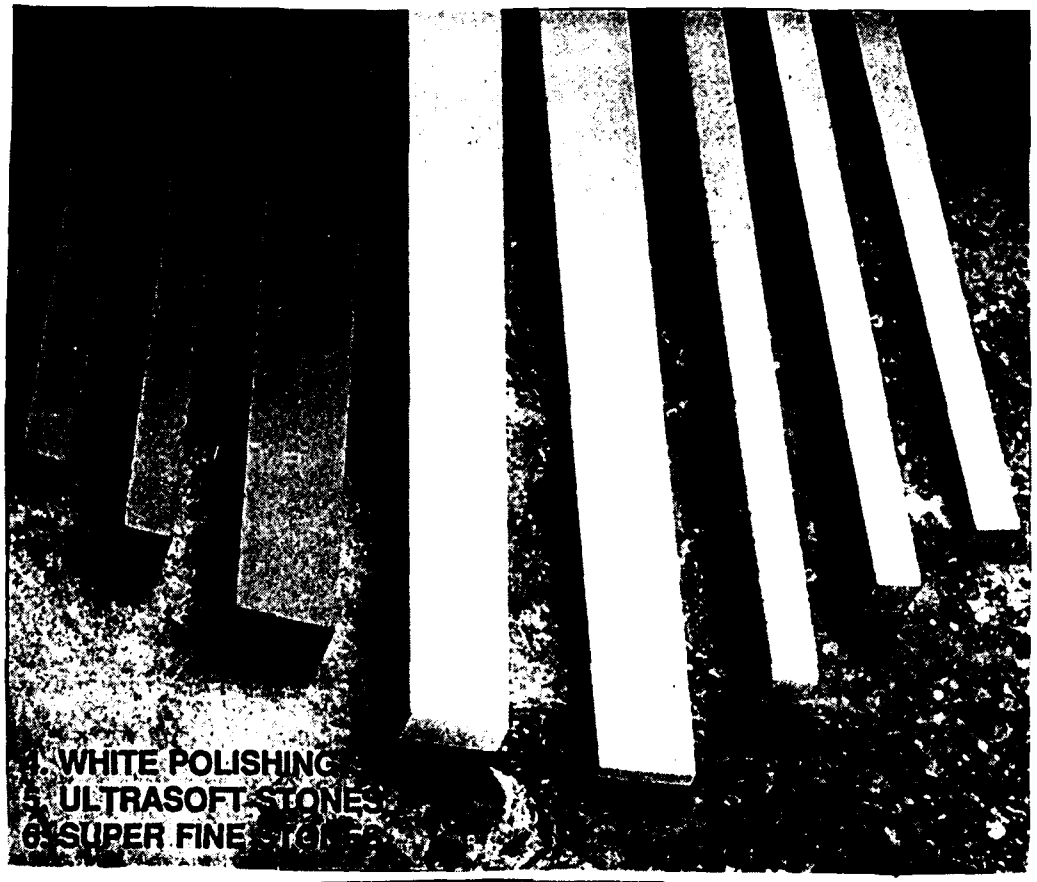

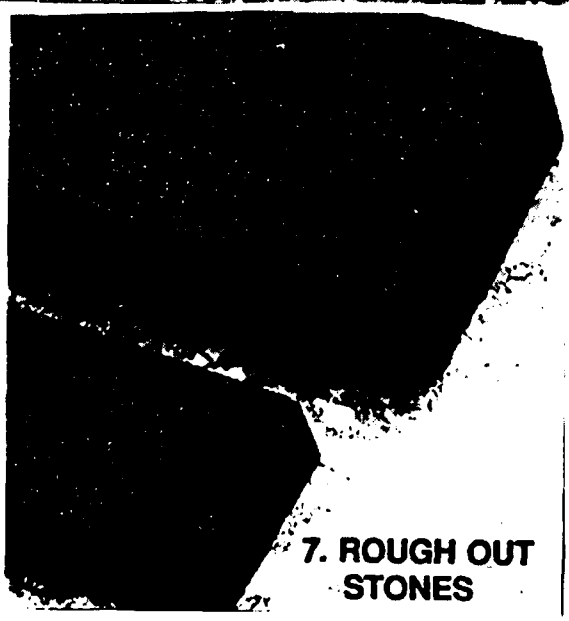

Figure 2 (Continued)

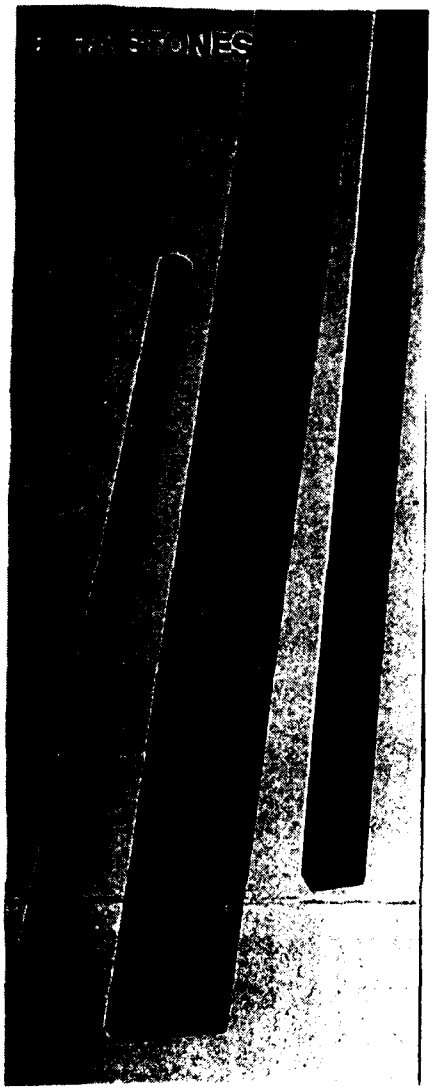

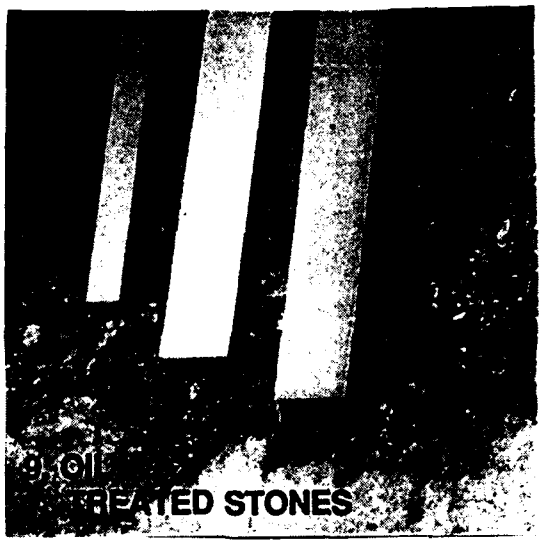

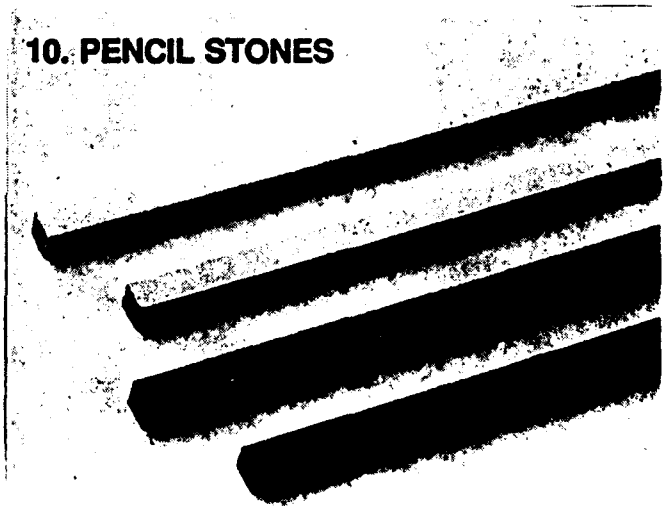

the compounds being ground between the workpiece and the tool.

> The lap, bob, or brush can consist of a variety of materials ranging from cast iron, brass, bristle, or wood to a piece of hard paper. The prime requirement of the lap is that it must be softer than the workpiece and the polishing compound. If this is not so, the workpiece will become charged with the abrasive and the process will be reversed. In general, the harder the implement, the more aggressive the action of the abrasive.[44]

The use of these compounds in the lapping process typically requires a suspension vehicle. The compounds commercially available are often suspended in a proprietary vehicle of either silicon base or oil. However, a vehicle can be made of various oils (e.g. olive, lard, machine, sperm whale, cottonseed, coconut, or a mixtures of these).[45] The vehicle serves as a lubricant to assist the abrasive process and moves the fine metal particles, called fines, out of the immediate working area.

The diamond, CBN or other crystalline abrasives are high quality powders rated as submicron since they are below the 325 to 400 grit range.[46] Furthermore, the particles small size requires a different grading method compared to the grading method used for abrasive particles. One grading method for these compounds is centrifugal force. A problem with this method is the particle shape and surface area can cause improper screening. For this reason, the powders are typically given in ranges; for example, a 45 micron powder is

90% within the 36 to 54 micron (μm) range. As can be seen in Table 1, there are various methods of grading the powders. The typical standard is the fourth column, the U.S. Bureau of Standard grades.

2.4.4. Other Potential Tools.

Another potential tool is the brush. The information from the literature review indicates that there are over 500 different brushes and some are acceptable for polishing. The brushes are divided into six basic categories:[47]

- Radial or wheel
- Cup
- End
- Tube
- Strip
- Wide face or cylindrical

with a variety of filament compositions (brush fill material):

- Metallic
  - Ferrous
  - Non-ferrous
- Nonmetallic
  - Synthetic
  - Vegetable fibers

and with the metallic fill materials overall construction:

- Crimped wire
- Knot or twisted tuft
- Straight
- Multiple strand crimped.

Table 1 Diamond/CBN Cross Reference Sizing Table[48]

PRODUCT DESIGNATIONS 300/STANDARD SERIES	EQUIVALENT DENOMINATIONS	SPECIAL GRADES	GRADE - U.S. BUREAU OF STANDARDS	EQUIVALENT F.E.P.A. DESIGNATIONS	APPROX. MESH SIZE EQUIVALENTS	GENERAL APPLICATIONS RANGE		
0–1/2		1/4–1			60,000			
0–1			1/2		28,000	POLISHING		
0–2		1/2–2	1	M 1.0	14,000			
1–2				M 1.6	13,000			
1–3	1/2–3	2–3		M 2.5	12,000			
2–4	2–5	1–5	3	M 4.0	8,000			
3–6	2–6	4–6			5,000			
4–8			6	M 6.3	3,000			
5–10	6–10				2,200			
6–12		8–12	9	M 10	1,800		LAPPING	
10–15	8–16	8–15			1,400			
10–20		10–18		M 16	1,200			
12–22[B]	12–25	8–22	15		1,100			
15–20					—			
15–25		15–30			1,000			GRINDING
20–30[B]	15–30	20–25		M 25	800			
22–36[A]		25–37	30		700			
30–40[B]	28–41	35–45		M 40	600			
36–54[A]	40–50	30–60	45		500			
40–60					400/500			
54–80		40–80	60	M 63	325/400			
60–100					270/325			

A Available W or D Coated.
B Available W Coated.

L. K. Gillespie has written extensively on the use of brushes in deburring.* In this literature, he also briefly discusses the use of brushes for polishing. He recommends 6,400 to 8,000 surface feet per minute (sfpm) for polishing with a synthetic or natural fiber brush.[49] However, Kalpakjian recommends slightly slower speeds of 5,000 to 7,500 sfpm for abrasive processes.[50] From these two sources, it can be assumed that a range of 6,000 to 7,500 sfpm is acceptable for polishing.

A definite advantage of brushes is their long life and surface conformance. Another advantage is that brushes do not "load up" but constantly present a new cutting surface. However, brushes do not aggressively remove material. This problem may be solved by using coarser grits in abrasively filled nylon brushes.

2.5. Postulation on the Physics of the Polishing Process.

From the literature survey, it became obvious that there is little concerted agreement on the physics of the polishing process. While grinding has been described as an abrasive removal mechanism by Kalpakjian and others,[51] the depth of understanding of polishing is not as great. However, four basic theories of abrasive polishing exist, these are:

---

* For additional information on brushes see Gillespie references in Bibliography.

abrasive wear, material flow, material displacement, and removal of individual molecules.[52] The dominant theories appear to be the molecular removal theory supported by Rabinowicz and the abrasive wear theory supported by Samuels.[53]

Rabinowicz states, "practical experience suggests that in polishing copper, an abrasive size of 3 μm represents approximately the demarcation point between an abrasion and a polishing mechanism."[54] * This indicates that molecular removal is limited to very fine micron range. Whether all metals, specifically steels, have a similar demarcation point is unknown. However, if we assume there is a similar demarcation point for dies and molds, then we can postulate the polishing mechanism for dies and molds.

Earlier it was stated that "in terms of the amount of material removed, in the present context grinding would involve a dimensional change on the order of several thousandths of an inch, while polishing would entail metal removal on the order of ten-thousandths of an inch."[55] Considering this to be true, as well as Rabinowicz's statement that 3 μm (≈120 μin) is the division between abrasive and molecular removal mechanisms, we can assume that we are mostly

---

* Performing a rough conversion of 3 μm, results in approximately 120 μin.

using an abrasive removal mechanism for polishing of dies and molds.* However, caution must be used regarding the assumption that 3 μm is the demarcation line.

One new theory which challenges the molecular removal theory is Brown's speculation that polishing is performed by a plastic shearing mechanism that can be modeled by a physico-chemical interaction that includes aqueous diffusion, internal hydrolysis and ion exchange mechanisms.[56] This new theory and Brown's following statement refutes the abrasive removal mechanism theory:

> My readings on wear had convinced me that wear rates were inverse with hardness and proportionate to particle size. This was simply another way of saying that a deeper gauge with a bigger shovel should remove material faster; *obviously obvious*. Unfortunately, it is those obvious conclusions that are the banana skins on the stairway to wisdom.[57]

He proceeds to describe an experiment with very pure, very soft copper and a very hard, very wear resistant nickel electrode. The task was to remove a few microinches from each material. Instead of the copper abrading away faster than the nickel, the material removal rates for the two were nearly the identical. However, Brown is primarily concerned with the

---

* A 3 μm abrasive is approximately given by a mesh size of 12,000, from Micron Powders General Electric Superabrasives for Grinding, Lapping and Polishing. An 80 grit (or about .0125 size particles) 1" silicone carbide disc yielded an average surface finish of 8 μin in some of my earlier tests. A 3 μm abrasive would only be used in extreme cases where a mirror finish is required.

polishing of optical and laser components and the degree of polishing for these components can be significantly different than the polishing of a die or mold. For instance, a few microinches is a fraction of a micron and dies/molds are rarely polished to such a degree. Therefore, the abrasive removal mechanism theory is the basis of this thesis.

CHAPTER III. EXISTING POLISHING MACHINES

A major factor in automating die and mold polishing is the machine. In particular, the following areas are significant for the machine: the bed or table size, versatility to apply both rotary and reciprocating tools, and ability to position the polishing tool onto the workpiece through simultaneous control of the axes.

Since this thesis is a preliminary study in automating the polishing process, a review of current polishing machines is in order. Currently, there are six machines for die and mold polishing. The manufacturers are: Aida, Hitachi, Showa Seiki, Nagase, and Tokiwa Seiki from Japan; Seva from France; and t.e.m.a. from Italy.

An overview of these machines yields a few generalized characteristics. All but the Hitachi and Tokiwa Seiki use teach control to transfer the geometry to the machine. All the machines can be categorized as either using the "machine tool" approach or an articulated arm approach.[58] Most have the three primary degrees of freedom with additional degrees of freedom provided by programmable rotation or a rotatable table holding the workpiece. This allows for contact between

the workpiece and the die in either rotary or reciprocating motions.

Through a specific review of each machine, their characteristics may be closely examined. This review will begin with the articulated arm polishing machines: Aida and Showa Seiki; then the "machine tool" machines: Hitachi, Nagase, Seva, and Tokiwa Seiki. There is no review of the t.e.ma. due to a lack of information.

3.1. Articulated Arm Polishing Machines.

3.1.1. Aida.

The Aida Die Polisher DPR-5 is a jointed arm robot sold internally in Japan.[59] (See Plate I for an illustration, Figure 4 for the dimensions, and Table 2 for the specifications.) It's planar linkage arm (similar to a pantograph style arm) is simultaneously controlled on the X and Y-axis. However, in order to achieve compliance with a surface, this polisher offers two additional degrees of freedom (rotation about the X and Z-axis) by the movement of the table. A fifth degree of freedom is obtained through the "polishing head, supported on an aircushion, ... travel[ing] a maximum of 40 mm (1.6") in the vertical direction while the tool is in contact with the workpiece."[60] Additionally, the arm can be vertically moved to meet various workpiece heights. Further compliance to a workpiece surface is gained through the use of innovative tools such as the diamond/cast iron sintered wheels. These wheels have a built-in magnet for

Plate I Aida DPR-5 Die Polisher[61]

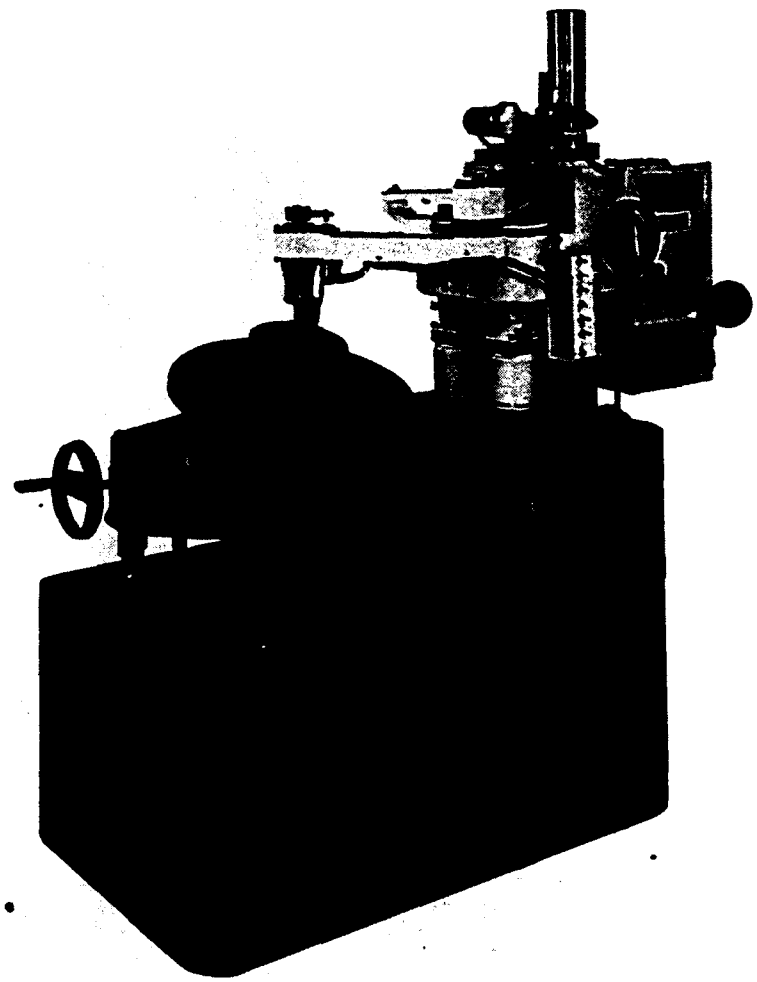

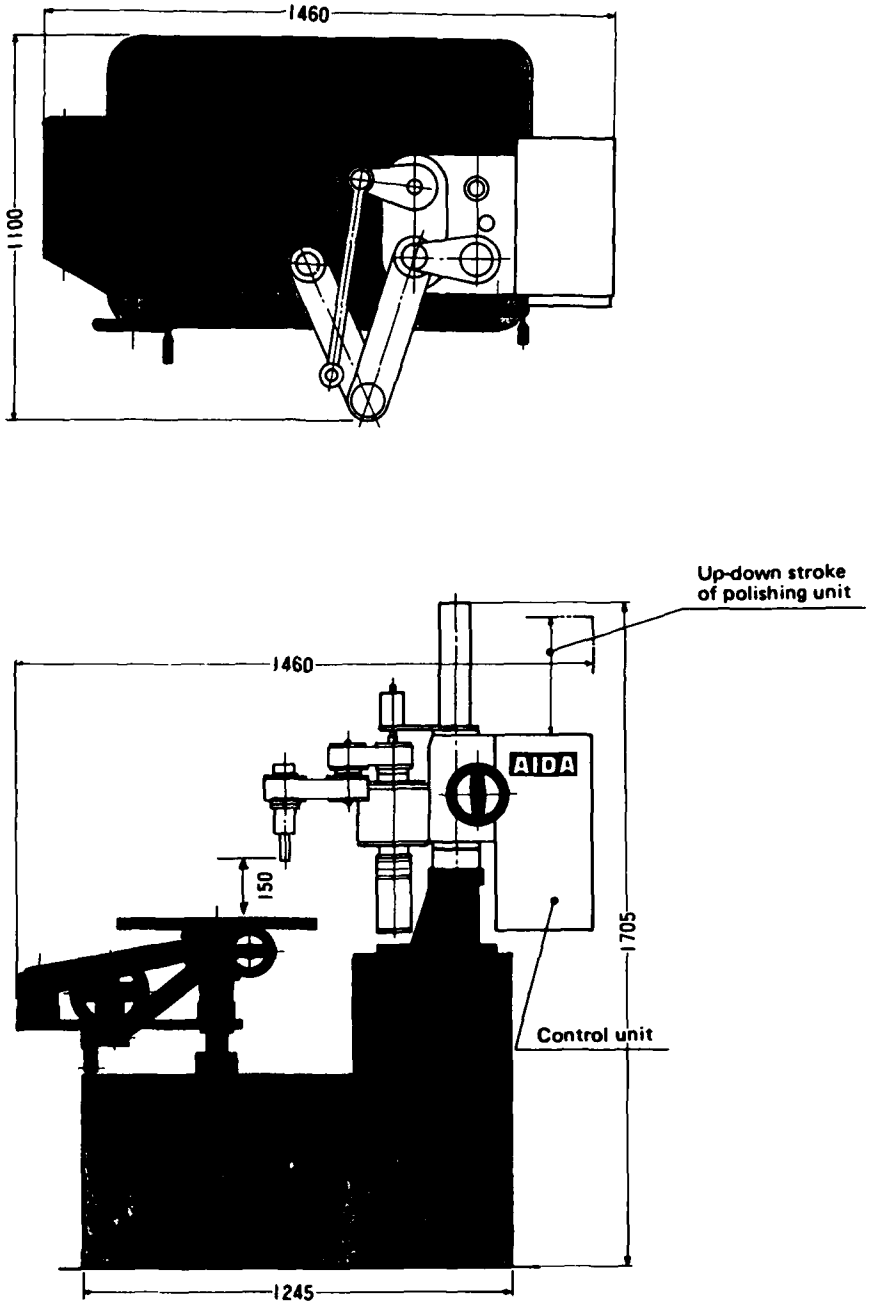

Figure 3 Aida DPR-5 Die Polisher Dimensions[62]

Table 2 Aida DPR-5 Die Polisher Specifications[63]

• SPECIFICATIONS

Model	DPR-5
Operating system	Direct teaching and playback system
Number of controlled axes	Two axes at the same time (on horizontal plane)
Driving system	Pulse motor
Polishing head coverage (on horizontal plane)	ϕ500 mm, or 400 mm x 400 mm (19.7 in. diameter, or 15.7 in. x 15.7 in.)
Up-down of polishing head	Up to 40 mm (1.6 in.) (Actuated by air cylinder)
Up-down of polishing unit	300 mm (11.8 in.) (Manual)
Teaching speed	Up to 200 mm/sec (7.9 in.)
Tool spindle rpm	300 – 1,800 rpm (Stepless)
Max. memory storage time	180 sec
Max. number of repetition	999
Playback speed	Teaching speed x (0.75 to 1.2)
Electric power source	100/110 VAC, 50/60 Hz
Compressed air source	5 kgf/cm^2 (71 psi)
Gross weight	400 kgf (880 lbs)

• WORK TABLE SPECIFICATIONS

Rotation of table	360°
Tilting angle	90°
Slewing angle	90°
Max. weight of work	150 kgf (330 lbs)
Work table area	ϕ500 mm (19.7 in. diameter)

attraction to the workpiece.[64] *

A universal joint transfers the rotary motion to the workpiece. The machine also uses lapping wheels and rubstones. Overall, the machine has the ability to use tools that either reciprocate, oscillate, or rotate. The Aida machine is touted as highly flexible to meet the specific requirements of the job. The polishing time required can be shortened by approximately ¼ to ½ compared to manual polishing. The surface roughness can be refined to 0.05 to 0.1 μm while producing a flatter surface than the manual method.[65]

The designer's goal was to develop a polishing robot that could be taught the surface and method of polishing prior to the actual process. In this manner, the polishing machine learns from the human operator the manner of polishing the die or mold. The purpose is to have the operator evaluate the factors that affect the polishing of the die. This information is provided to the robot via the teach control. It is estimated that this robot is capable of automating 60% or more of the polishing work.[66]

Advantages to this machine include the use of innovative tools and the simplicity of programming. However, the programming method may be a disadvantage. For example, in polishing a complex geometry, extensive teaching will be

---

* For a more complete discussion of this topic, see Masanori Kunieda's articles listed in the bibliography.

required since the geometry can not be downloaded from a CAD/CAM system. An additional disadvantage of the teach concept is the lack of value added to the workpiece during the teaching phase. Furthermore, this machine is unable to improve the process beyond the manner in which the robot was taught. If the operator makes an error or is not instructing the robot appropriately for polishing, the polished workpiece could be suboptimal. If an undesirable workpiece is produced, this could lead to manual rework, a costly outcome.

3.1.2. Showa Seiki.

The Model SMR-100 NC Polisher manufactured by Showa Seiki and imported to the United States by Charmilles. (See Plate II for the illustration, Figure 4 for the dimensions, and Table 3 for the specifications.) This polisher, similar to the Aida, is a jointed arm, teach control machine. However, this machine is capable of simultaneously controlling the 3 linear axes. The Z-axis control is preset by the operator and obtained by the feedback of a load cell positioned in the polishing head actuating an air cylinder.[67] (The arm is automatically balanced to eliminate any side loading on the motor). In order to achieve additional compliance to the workpiece, the polishing head rotates about a planar axis and is preset by the operator at a proper angle to contact the workpiece. Additional compliance is obtained by using ball jointed diamond/cast iron sintered wheels, jointed axis

Plate II Showa Seiki Die Polishing Machine[68]

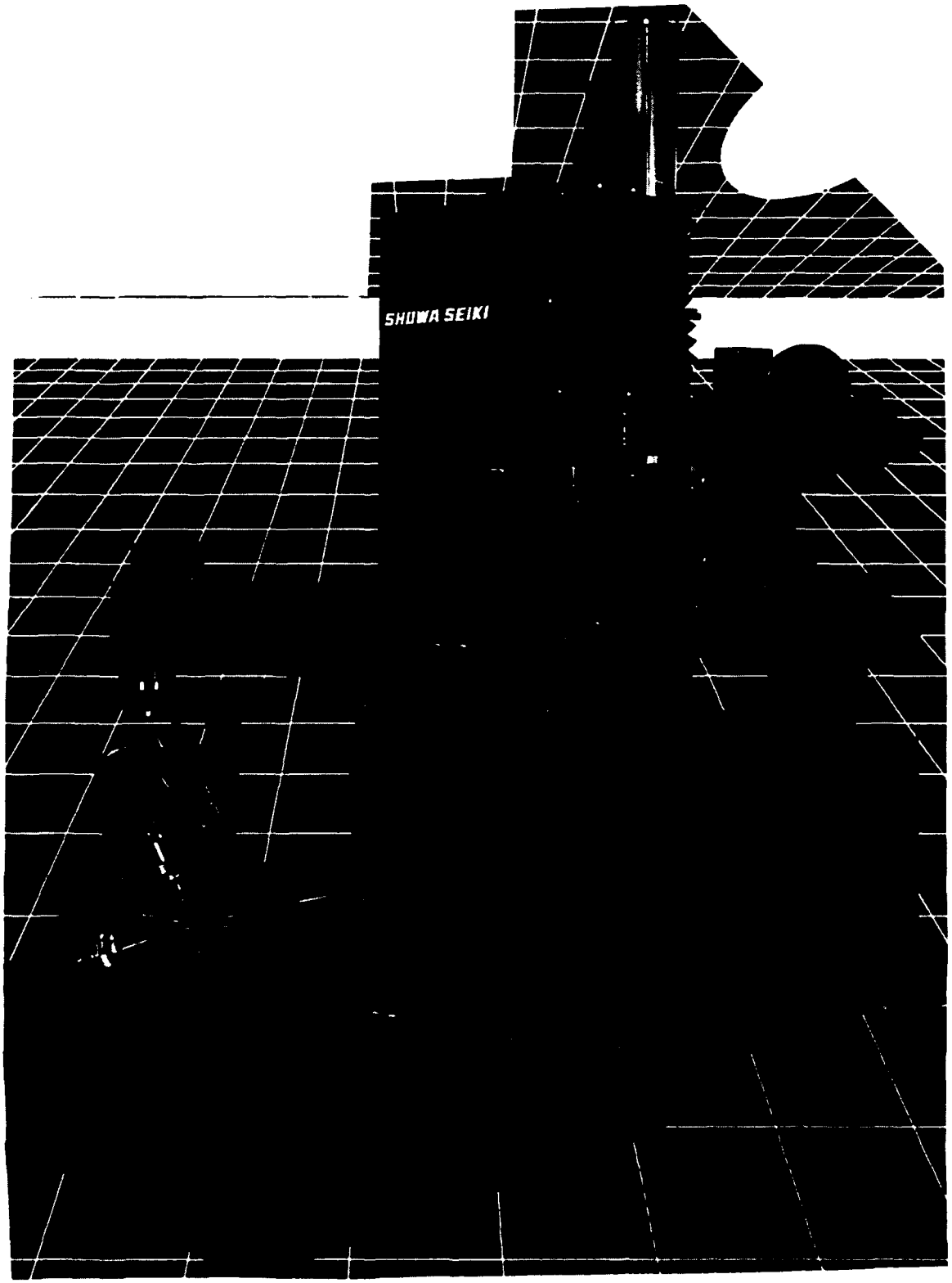

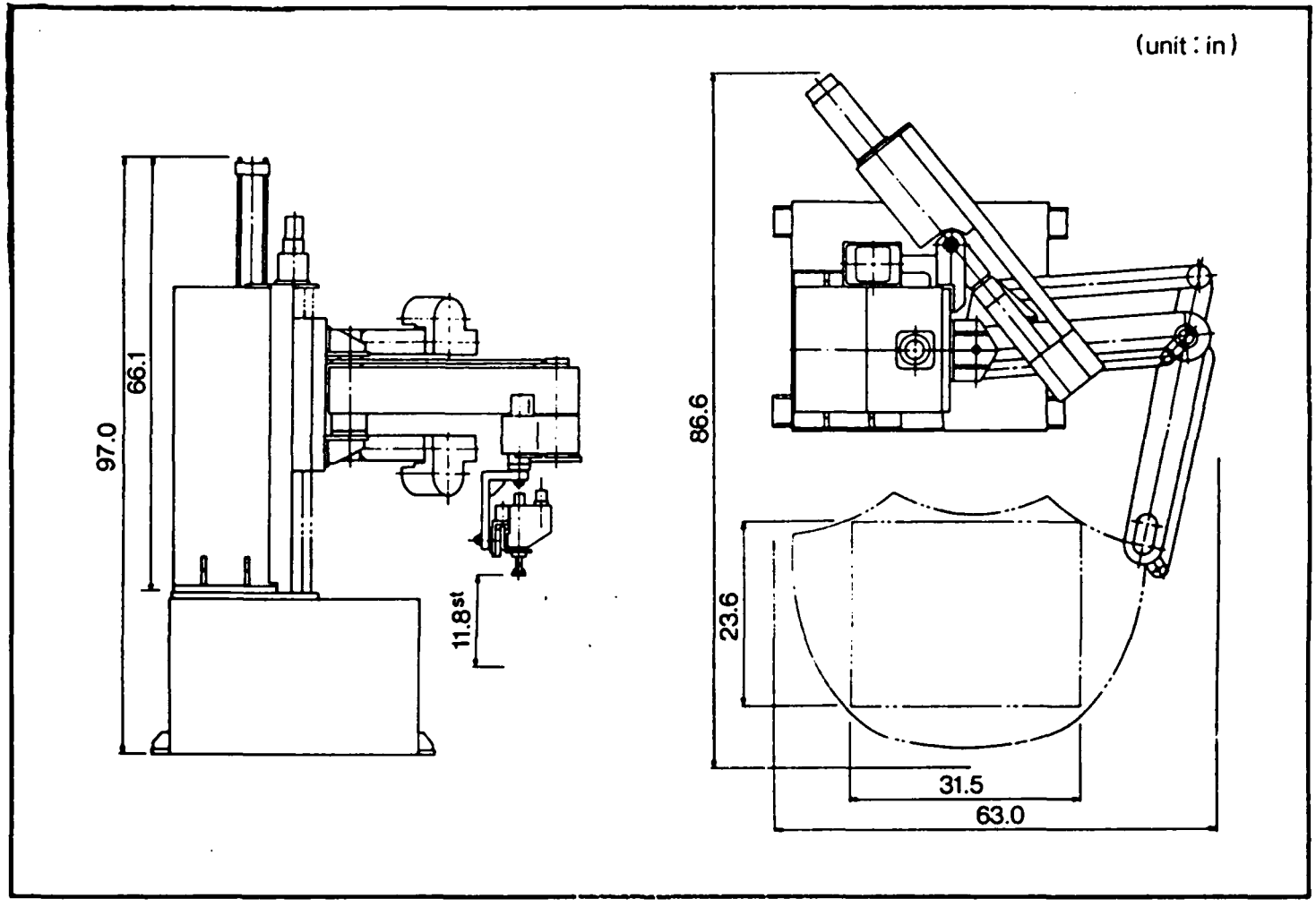

Figure 4 Showa Seiki Die Polishing Machine Dimensions[69]

Table 3 Showa Seiki Polishing Machine Specifications[70]

Item	Specifications
Horizontal travels	31.5W × 23.6D in
Vertical travel	11.8 in
Programming	Direct programming Simple programming ├ Outline programming └ Point programming (2, 3, 4, 5···points)
Arm speed during programming	Max. 5.9 in/sec In case of simple programming: Set by digital switch on control panel
Arm speed during polishing	0.2 to 1.3 times as fast as the programming speed
Number of polishing cycles	1 to 999 times
Number of axes under simultaneous control	Three
Drive method	Servomotor
Reciprocating speed	Max. 2,250 cycles/min
Rotary grinder speed	Max. 2,250 RPM
Power requirement	AC220V ± 10%, 3φ
Max. power consumption	3 KVA
Air pressure	70 psi
Max. air consumption	19 cfm
Weight of equipment	1765 lb
Dimensions of controller	23.6W × 27.6D × 66.9H in
Weight of controller	485 lb

reciprocating, and spring loaded stone holders. Unlike the Aida, the Showa Seiki does not employ oscillating tools, but employs the rotary and reciprocating motions.[71]

Similar to the Aida, this manufacturer asserts increased efficiency from the machine. In this case, "two to five times as efficient as hand polishing, and produces a more consistent finished surface than an experienced polisher."[72] Obviously though, the efficiency is dependent upon the complexity of the surface geometry. Charmilles, the importer, uses a series of three alphabetical definitions ("A", "B", and "C") to describe the difficulty of a polishing job.[73] The "A" job is highly applicable to automated polishing. The geometry of this job is a large flat or gently curved surface. The "B" job requires the head of the polishing machine to be repositioned once or twice during the polishing. The geometry of the "B" job is more complex than the "A" job. The "C" job requires multiple repositionings, specialized tooling, etc. The "C" job is not applicable to a polishing machine. Hence, the efficiency of an "A" job can be estimated as 5 times while a "B" job is probably twice as efficient as manual polishing.

Programming of the Showa Seiki employs two different methods of transferring geometry for teach control. These methods are outline and point programming. Both methods require operator input for the direction to polish (X or Y), the amount of normal force exerted onto the workpiece, the amount of time to polish, and the pitch distance (also called index or pickfeed).

The outline method requires the operator to define the profile of the surface to be polished. Whereas, the point method requires the operator to program 2 to 256 points to define the surface; typically, 6 or 8 points will define the surface. If a large number of points are programmed to define a surface, then the set-up time is excessive and this complex a surface would more logically be polished manually. The advantages of this machine include the use of innovative tooling, simultaneous control of three axes, and simplistic programming. However, as mentioned previously in the Aida discussion, the teach control method may be a disadvantage. As explained for the Aida, if a complex geometry requires polishing, no capability exists to download the geometry from a CAD/CAM system. Instead the operator must use teach control to describe the surface as it may already exist in the CAD/CAM system. Furthermore, this machine, like the Aida, is unable to improve the process beyond the manner in which the operator teaches the machine.

3.2. "Machine Tool" Polishing Machines.

The primary difference between the jointed arm and the "machine tool" approaches is the method of obtaining the X and Y degrees of freedom. In the jointed arm approach, the arm moves horizontally to yield these two degrees of freedom; in the "machine tool" approach, the table or bed holding the workpiece moves in the X and Y linear directions. In addition, the "machine tool" approach includes gantry style machines even though their three linear degrees of freedom are obtained by moving the polishing head

on a gantry frame. As a result of including the gantry style, there are four polishing machines in the "machine tool" approach. The first to be discussed is the Hitachi.

3.2.1. Hitachi.

The Hitachi polishing machine is used internally by Hitachi for polishing molds and is touted as producing a superior quality surface with a 50 to 75% reduction in polishing time.[74] From the illustration in Figure 5, the basic design of this machine is to mount a polishing head to a rigid machine tool structure. Three degrees of freedom are obtained as follows: the travel of the bed for the X and Y-axis,[75] and the travel of a hydraulic servo drive for the Z-axis. The hydraulic servo drive is controlled by a spring to yield a constant "contact load."[76] An additional degree of freedom is obtained by using an optional table rotating about the X-axis.

This machine has several new or differently employed concepts from the articulated arm approach discussed earlier. These concepts are: a photo electric tracing mechanism to control the polishing head, an oscillating polishing head, and an elastic tool (See Figure 6 for an illustration of the elastic tool).

The first concept, the photo electric tracing mechanism, is placed above a die's drawing on a 700 mm by 1,000 mm separate table; the head traces predetermined lines already placed on the drawing at a maximum speed of 600 mm per minute.[77] The tracer head travels the X and Y directions using a pair of motors, one for each

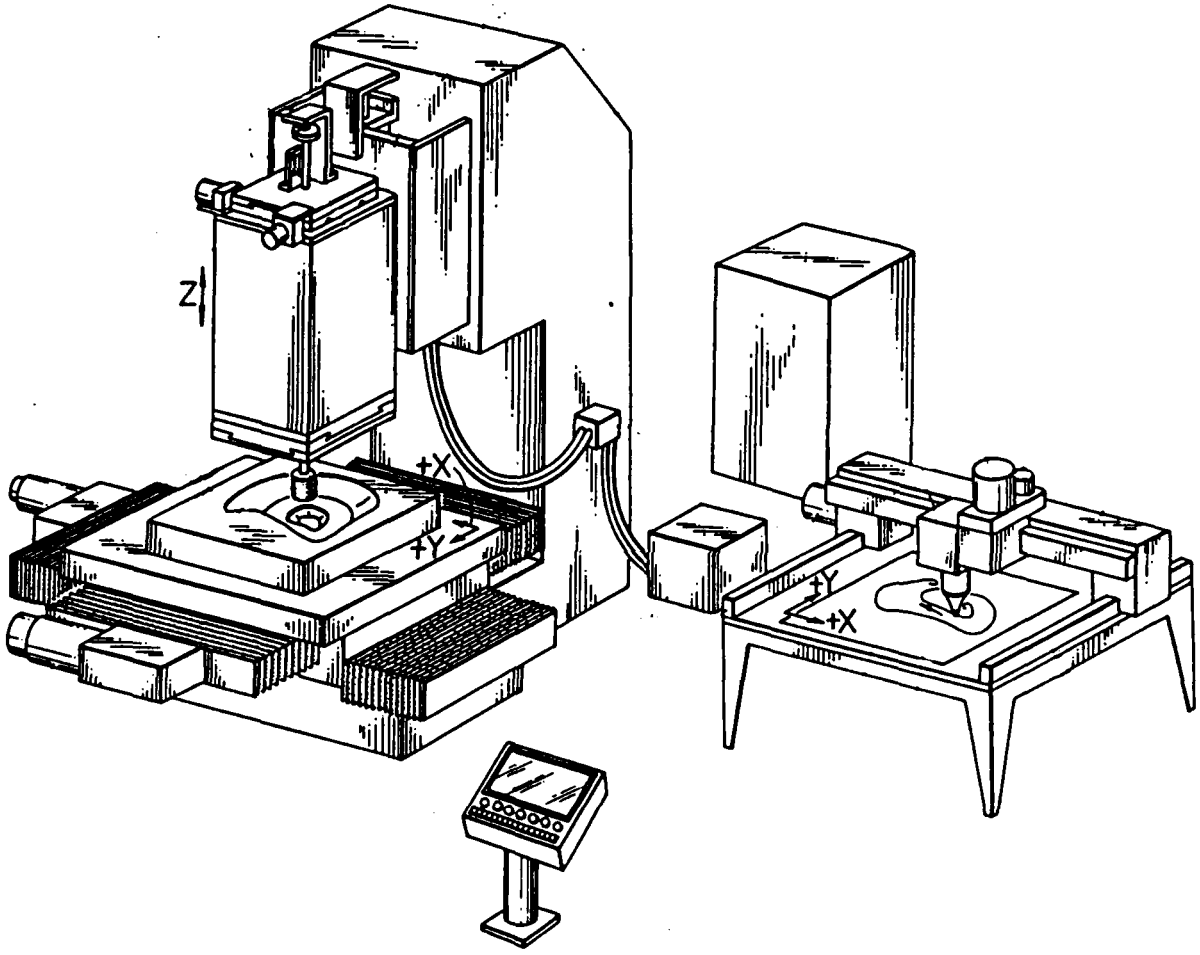

Figure 5 Hitachi Die Polishing Machine[77]

direction. This concept may not be applicable for all situations in a typical tool and die shop since dirt could obscure the tracing heads ability to follow the line. For this reason, the tracing table should be located in a remote location from the polishing machine.

The second concept, the oscillating polishing motion, uses two electric motors mounted at the top of the polishing head assembly, one motor drives the X-axis of the polishing head, the second drives the Y-axis. The combination of these two motors moves the polishing tool in a 60 rpm oscillation (basically a planetary motion).[79]

The third concept employed by this machine is the elastic tool. This tool is described as:

> non-woven fabric which is formed into a columnar shape by arranging irregularly fibrous materials such as nylon threads and fixing them together. The nylon threads used for the formation of this non-woven fabric has a thickness of, for example, 210 to 420 deniers. The non-woven fabric thus formed exhibits a specific weight of 0.25 or larger, and an apparent rubber hardness of 30 to 70 duro.[80]

This non-woven fabric column is adhesively affixed to a shaft which is turned by a DC motor at 3,600 revolutions per minute (rpm). The elastic polishing tool is used to gain compliance to the workpiece surface up to 90 degree tilt, which is an aggressive angle for a polishing machine. The elastic tool mimics brushes such as Brite-Rite or Scotch-Brite. Hence, this tool should exhibit the superior wear characteristics of a brush.

Figure 6 Hitachi Elastic Polishing Tool[81]

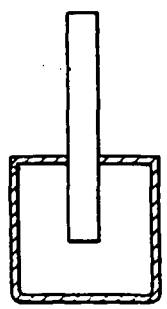

Figure 7 Hitachi Rubber Cylinder Polishing Tool[82]

Another tool is a rubber cylinder with a fibrous material molded around this shape (See Figure 7, on previous page, for the illustration of the rubber cylinder). This tool is similar to those manually made by craftsman in the die and mold polishing trade. The tool is essentially a redesign of a felt bob used for lapping, hence, it is assumed that this is a lapping tool employing loose abrasives.

The advantages the Hitachi polishing machine include the photo electric tracing mechanism, an oscillating polishing head, and innovative tooling. The photo electric tracing mechanism allows for simple geometry transfer to the polishing machine since complex programming is not required. However, this method of geometry transfer may not work if the tracing table is housed under normal shop conditions.

The oscillating polishing head yields a superior surface quality compared to a non-oscillating head.[83] The experimentation performed by Noto, et. al. established the optimum polishing angle for an oscillating tool at 45 degrees to the workpiece.[84] * These experiments were performed for the elastic tool and an oil stone.

---

* Another source for this information is K. Noto, T. Kawai, and M. Watanabe, "Tool Oscillation on Tilt Angle Control for Curved Surface Polishing," Bulletin of Japan Society of Precision Engineering, 15, No.4 (December 1981), pp. 276.

3.2.2. Nagase.

The Nagase "Flex-Polisher" machine uses a gantry approach to hold the polishing head above the workpiece. (See Plate III for the illustration, Figure 8 for the dimensions, and Table 4 for the specifications.) The rigidity of this double column approach provides vibration free polishing.[85] Also, the rigidity of this machine allows for achieving a 16 μm R_a finish, however, the conditions of this assertion are unknown.

The "Flex-Polisher" is available in four models. The main difference in the four models is the size; the allowable workpiece "footprint" ranging from 1.5 meters x 1 meter weighing 8 tons to 3 meters x 1.6 meters weighing 15 tons. The allowable workpiece height is .7 meters. An optional package allows for an extension to 1.2 meters.

This machine uses three DC motors to maneuver the polishing head about the primary axes. The X and Y-axis are obtained by the dove-tail slides contained in the crossbar and the overhead beam. The vertical, Z-axis, is obtained by moving the vertical column containing the polishing head. These three axes are simultaneously controlled.

A fourth degree of freedom is obtained by the rotation of the polishing head about the "C" axis. The amount of rotation is taught by the operator to the machine. This movement is accomplished by a double acting air cylinder

Plate III Nagase "Flex-Polisher" Machine[86]

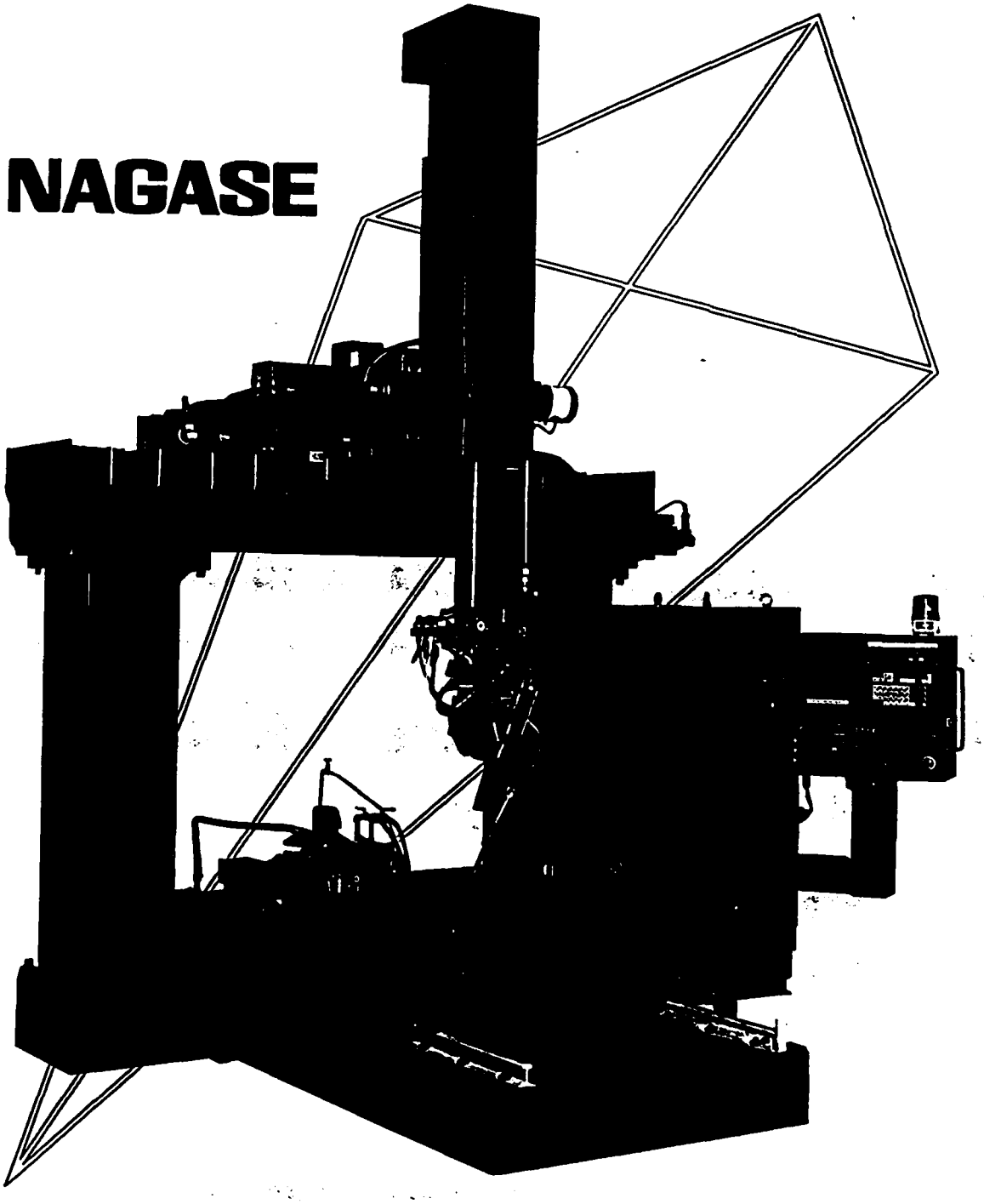

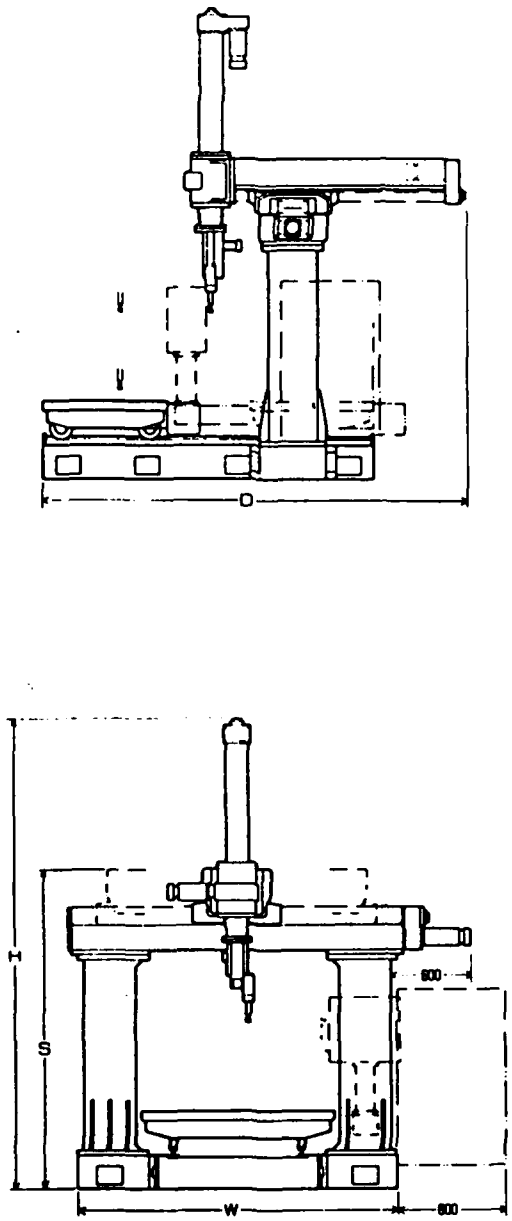

Figure 8 Nagase "Flex-Polisher" Machine Dimensions[87]

Table 4 Nagase "Flex-Polisher" Machine Specifications[88]

●SPECIFICATIONS

Model		FP-1510	FP-2010	FP-2513	FP-3016
Table size	mm	1500×1000	2000×1000	2500×1300	3000×1600
Max. work height	mm	700			
Max. work weight	ton	8	10	10	15
Table feedrate	mm/min.	2000			
Axis stroke (X/Y/Z)	mm	1500/600/600	2000/600/600	2500/600/600	3000/600/600
Axis feedrate (X/Y/Z)	mm/sec.	2.5-50			
Max. rpm of drive motor	rpm	2300			
Max. oscillation speed	recipro./min.	2000			
Swivel angle of C axis	degree	+/− 200			
Max. Swivel speed of C axis	sec./swivel	10			
Teaching time	min.	10			
Max. consumption power	KW	8	8	8	10
Air consumption	liter/min.	400			
Control system		3-axis simultaneous, teaching in 4-axis dimensions, play-back function			
Dimensions H	mm	3800			
Dimensions S	mm	2500			
Dimensions W	mm	2500	3000	3500	4000
Dimensions D	mm	3400	4000	4300	4600

●OPTIONS

Max. work height	mm	1200
Column vertical travel	mm, mm/sec.	500.8
Teaching time	min.	20
Swivel angle	degree	+/− 45 in X axis direction +/− 30 in Y axis direction

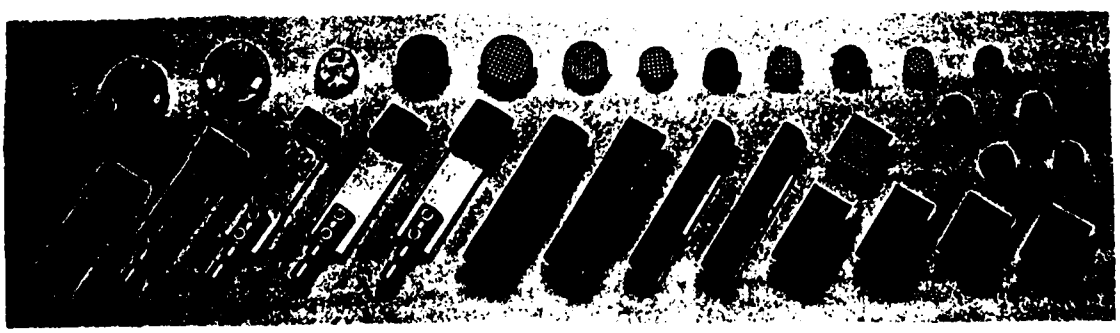

Figure 9 Nagase Polishing Tools[89]

forcing the upper end of the polishing head away from the vertical column. An additional double acting cylinder is collinear to the polishing tool spindle. This cylinder maintains a constant pressure resulting in a constant force against the workpiece. Since the polishing head can swivel ± 200 degrees about the "C" axis, this allows access to difficult to reach areas. Additional freedom of movement may be acquired by an option that allows for ± 45 degree swivel about the X-axis and ± 30 degree swivel about the Y-axis.

Tooling for this machine is divided into two separate groups, rotary and reciprocating. The rotary tools are divided into two styles employing a universal joint to allow compliance to any surface. The first style, is basically a three lobed stone approach. In other words, three stones are affixed to a flat plate. (See Figure 9 on previous page.) The second style is a round disc comprised of a fixed and determined number of contact points. (See Figure 9). This allows coolant to easily flow among the contact points to remove metal particles.

The reciprocating tools are composed of three styles. The first is essentially a piece of abrasive paper wrapped around the end of a flat plate, similar to tooling created by craftsmen of the polishing trade. The second style is abrasive stones, and the third style is a square pad with a fixed and determined number of contact points.

The teach control referred to earlier is performed by joystick. This machine can be programmed to skip over obstacles or protrusions that do not need polishing. "This feature allows one teaching to cover many interrupted, independent areas."[90] Teaching time is approximately 20 minutes.[91]

The one new concept that the Nagase polishing machine employs is the gantry approach. The machine's ability to accommodate large workpieces is advantageous since the manual polishing of large workpieces could take several days or months. Also, by employing a machine of this size on large dies or molds, the craftsman is freed from the monotonous work. In this manner, the worker can spend more productive time on smaller, more intricate dies and molds that require his/her skill.

A disadvantage to this machine is the $200,000 cost in a turnkey situation.[92] This is significantly higher than the smaller machines, but if a large die or mold requires polishing, a large machine is needed. A minor disadvantage is the size of the polishing head. The head has an approximate 6" diameter which could limit its ability to access small deep cavities.[93] However, an extension could be fitted to the tooling or a smaller polishing head could be used.

3.2.3. Seva.

The Seva polishing machine is available in three different styles. The first is a machine tool style, called a Standard polishing machine. The second is similar to the Standard polishing machine except the polishing head is not affixed above a table or bed but extends out over the floor. This style is called a "Fixed Parts" type polishing machine. The third style, the Big Size polishing machine, uses a gantry approach similar to the Nagase. (See Plates IV, V, and VI for illustrations of each polishing machine style produced by Seva.)

Each machine will be discussed separately. However, three common areas among the machines will be addressed below. These are the use of a pneumatic damping stone-holder, an oscillating electric drive motor, and positioning mode. The pneumatic stone holder is designed to exert a constant force through the tool onto the workpiece. An electric motor is used to drive the oscillating polishing tool through an eccentric motion.

There are three positioning modes: by joystick located on the control panel, by automatic positioning, or by copying position. The joystick is used for adjusting the position of the polishing head in the transversal and longitudinal directions (X and Y-axis). The automatic positioning method

Plate IV Seva Standard Polishing Machine[94]

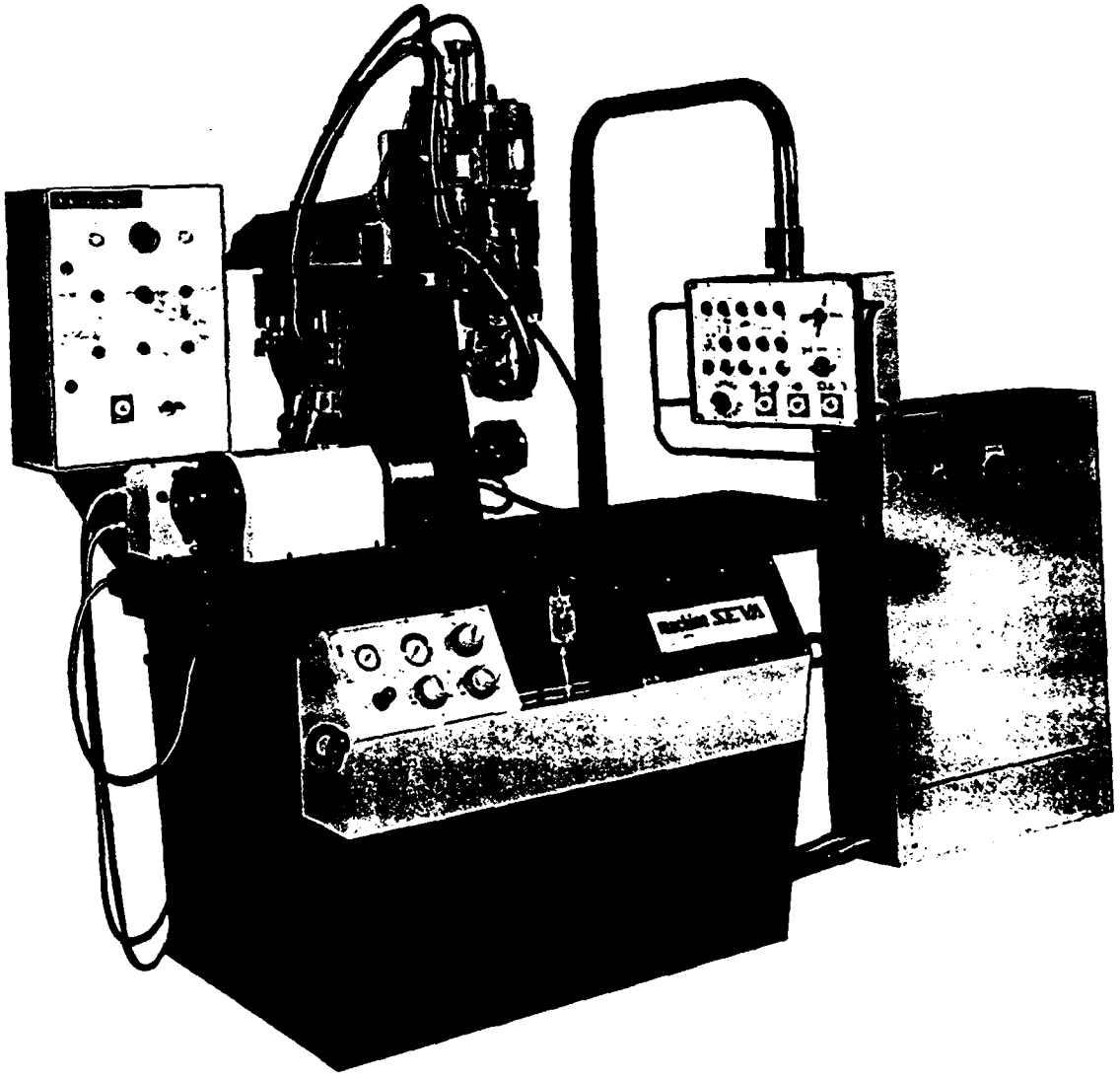

Plate V Seva "Fixed Parts" Polishing Machine[95]

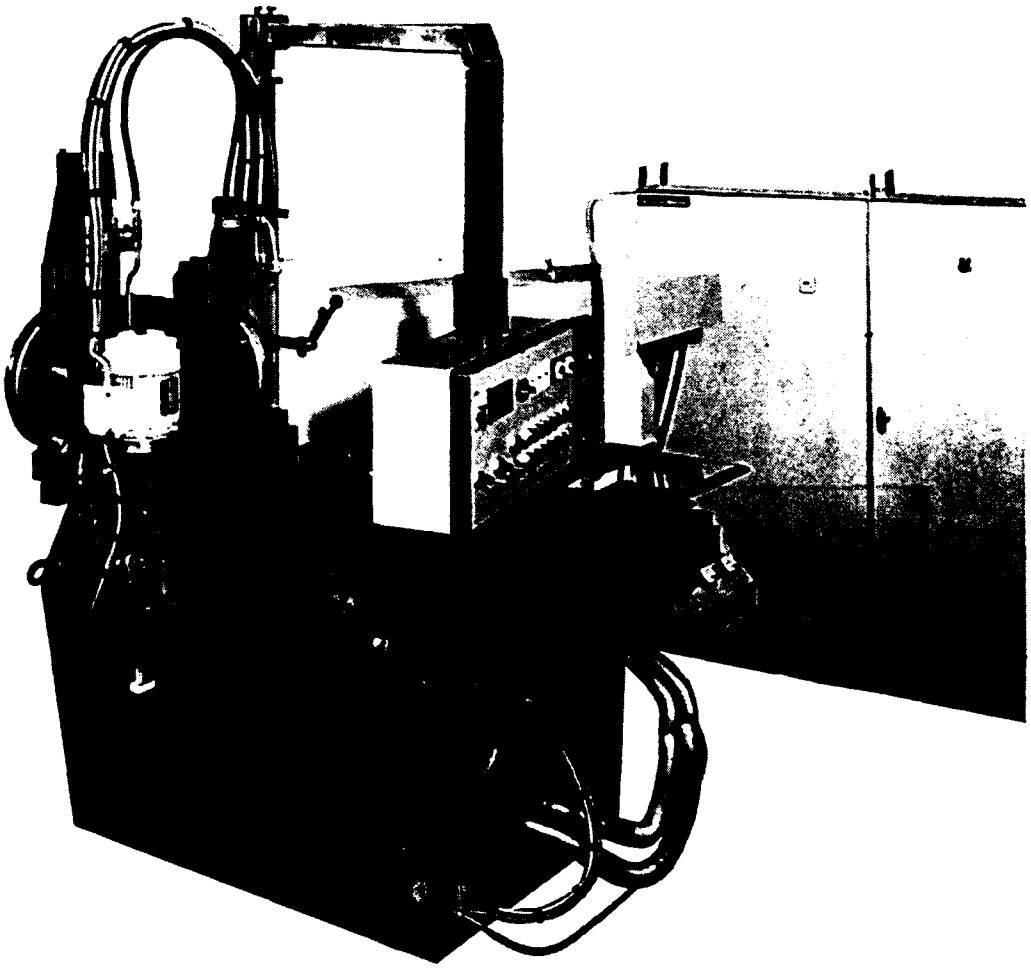

Plate VI Seva Big Size Polishing Machine[96]

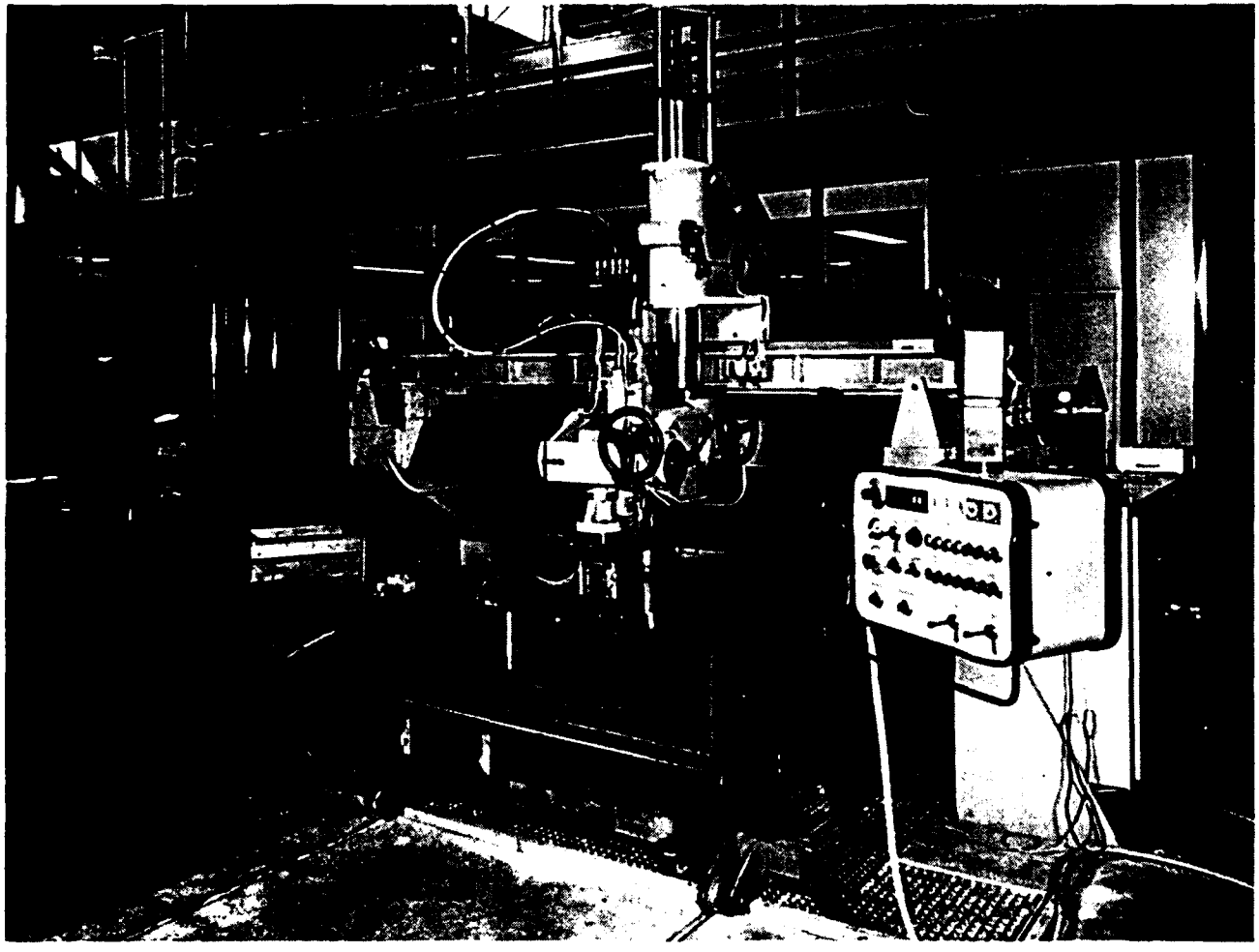

moves "the oscillating tool...along approximately parallel tracks, each one differing from the preceding one by a small step. The main movement and the stroke due to the running steps are limited by stops."[97] The step, sometimes called index or pickfeed, is dependent upon a timer and speed adjustment set by the operator. More detail regarding the copying position method of polishing is contained in the Standard polishing machine discussion.

The Standard polishing machine yields one degree of freedom from the horizontal movement of the table on needle roller slideways. The sliding head block, holding the polishing head above the table, yields an additional degree of freedom from it's movement is perpendicular to the direction of the table travel.[98] This movement is performed by a double acting hydraulic cylinder. A third degree of freedom is acquired by vertical movement of the polishing head. Additionally, the ± 45 degree rotation of the polishing head about the connection point to the head block assists in achieving contact with any point on the workpiece surface. This machine with its four degrees can accommodate a part size of 600 mm x 300 mm x 160 mm (≈24" x ≈12" x ≈6.25"). (See Figure 10 for a dimensional illustration of the machine's movement capability.)

Additional options are available for this machine. Seva states: "the details given relating to these machines (principle of operation, size...) are only given for

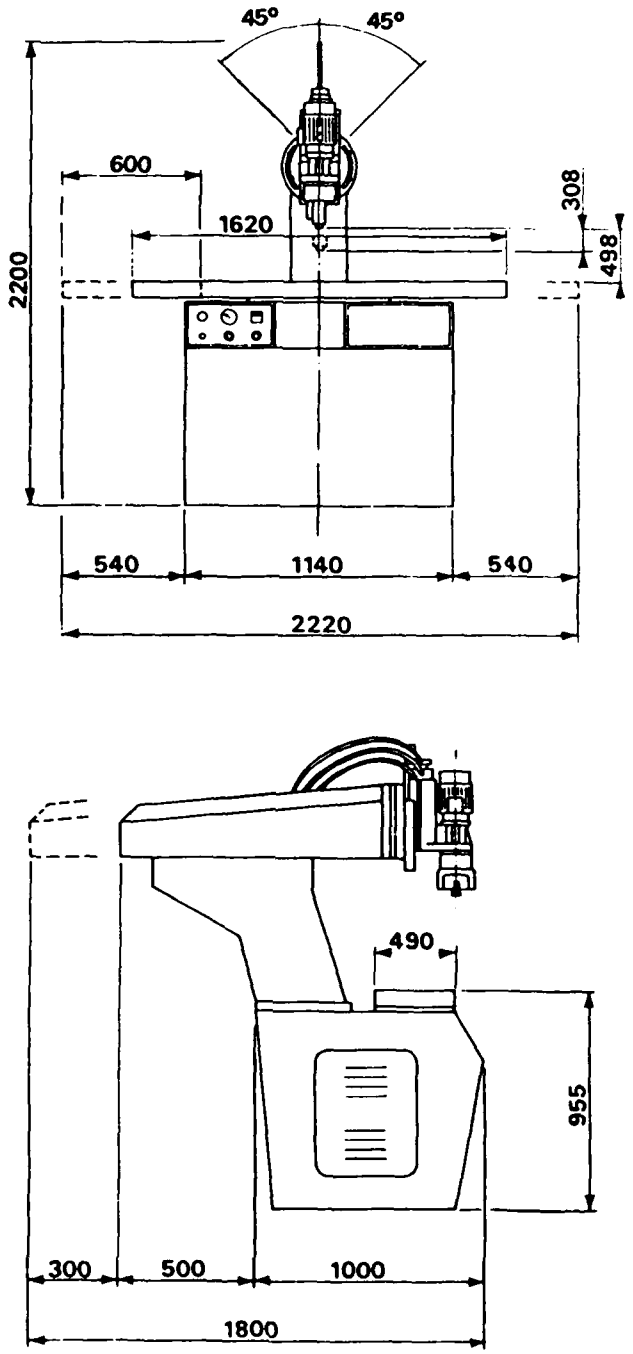

Figure 10 Seva Standard Polishing Machine Dimensions[99]

information and without obligation for ourselves. Every modification aiming at developing or improving those machines can [be] performed."[100] Hence, the assumption can be made that Seva will build a machine for any given situation.

Two of the optional devices listed in the sales brochure should be mentioned. The first optional device is an infrared copying device, the second is a rotating chuck. The copying device is used "when on a part, the areas to be polished are not delimited by a rectangular contour but by some shape, it is not longer possible to define the course of the tool through table or slide stops."[101] The infrared photocells detect the difference between a pattern composed of nonreflective black drawing paper and a mirrored background. In this manner, as the scanning head traverses the mirrored surface, it communicates to the polishing head the shape being polished and when to change directions. A possible difficulty arises when using such precision equipment in a manufacturing environment. How clean must the mirror be? Would foreign material present on the mirror, or a chip on the black surface, affect the performance of this optional device?

The second optional device, the rotating chuck, is designed to rotate the workpiece so that polishing can be performed on curved surfaces, such as cones or cylinders. There are three different rotating chucks that may be utilized. One chuck continuously turns the workpiece, the second alternates the rotation of the workpiece and the third

chuck has a variable speed selection. All of these chucks are secured to the machine table. They hold the workpiece horizontal and rotate the workpiece about its center line. Hence, this optional device is made for relatively small workpieces.

The "Fixed Parts" style polishing machine is designed for larger dies and molds. As stated earlier, this machine is similar to the Standard machine except the head block horizontal slide is mounted onto the table so that the polishing head is suspended over free space. In this manner, the workpiece is not secured to the table but would rest on the floor or a platform in front of the machine. This machine obtains the degrees of freedom in the same manner as the Standard machine except the horizontal table travel is obtained by hydraulically moving the head block.

Since, this machine does not have a bed or table, it is not limited by the weight of the workpiece. Unlimited weight allowance is important since this machine handles workpieces as large as 700 mm x 600 mm (≈27.5" x ≈24"). The machine is, also, limited by the proximity of the workpiece placement; it can not be closer than 220 mm (≈9"). Also, the workpiece height from the floor must be between 640 mm (≈26") and 1090 mm (≈44.5"). (See Figure 11 for a dimensional illustration.) However, height of a workpiece can be factored out as a limitation because the workpiece could be placed in a pit to compensate for excessive height.

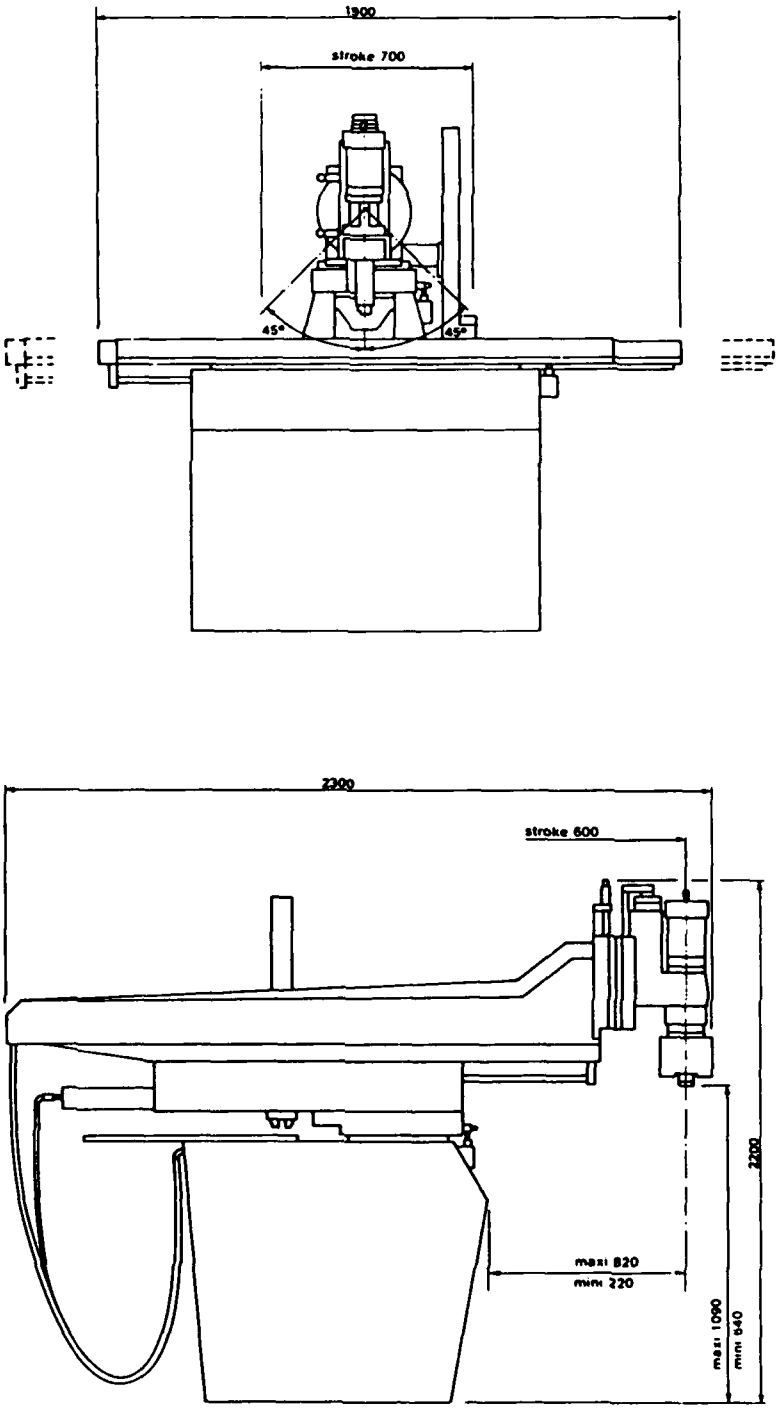

Figure 11 Seva "Fixed Parts" Machine Dimensions[102]

The third style of polishing machine manufactured by Seva is the Big Size polishing machine. It is designed to accommodate workpieces larger than the two previous Seva machines. This machine accommodates workpieces 1500 mm x 1200 mm x 800 mm (≈59" x ≈47" x ≈31.5"). (See Figure 12 for a dimensional illustration.)

The degrees of freedom are obtained in the same manner as the Nagase. The design consists of two columns with a crossbar beam mounted atop these columns. The beam has a carriage mounted that holds the polishing head above the machine bed. The movements of the beam and cross carriage are driven by high performance ballscrews on a double system composed of rods and ball bushings. "The screws are driven by DC motors with electronic speed variator."[103] Another degree of freedom is obtained by vertical movement of the polishing head. In addition, as shown in Figure 12, the polishing head rotates mechanically by a crank and wheel-worm system ± 45 degrees in the frontal plane and ± 30 degrees in the plane perpendicular to the frontal plane.

Overall, these three machines offer versatility to meet the needs of nearly any part situation.

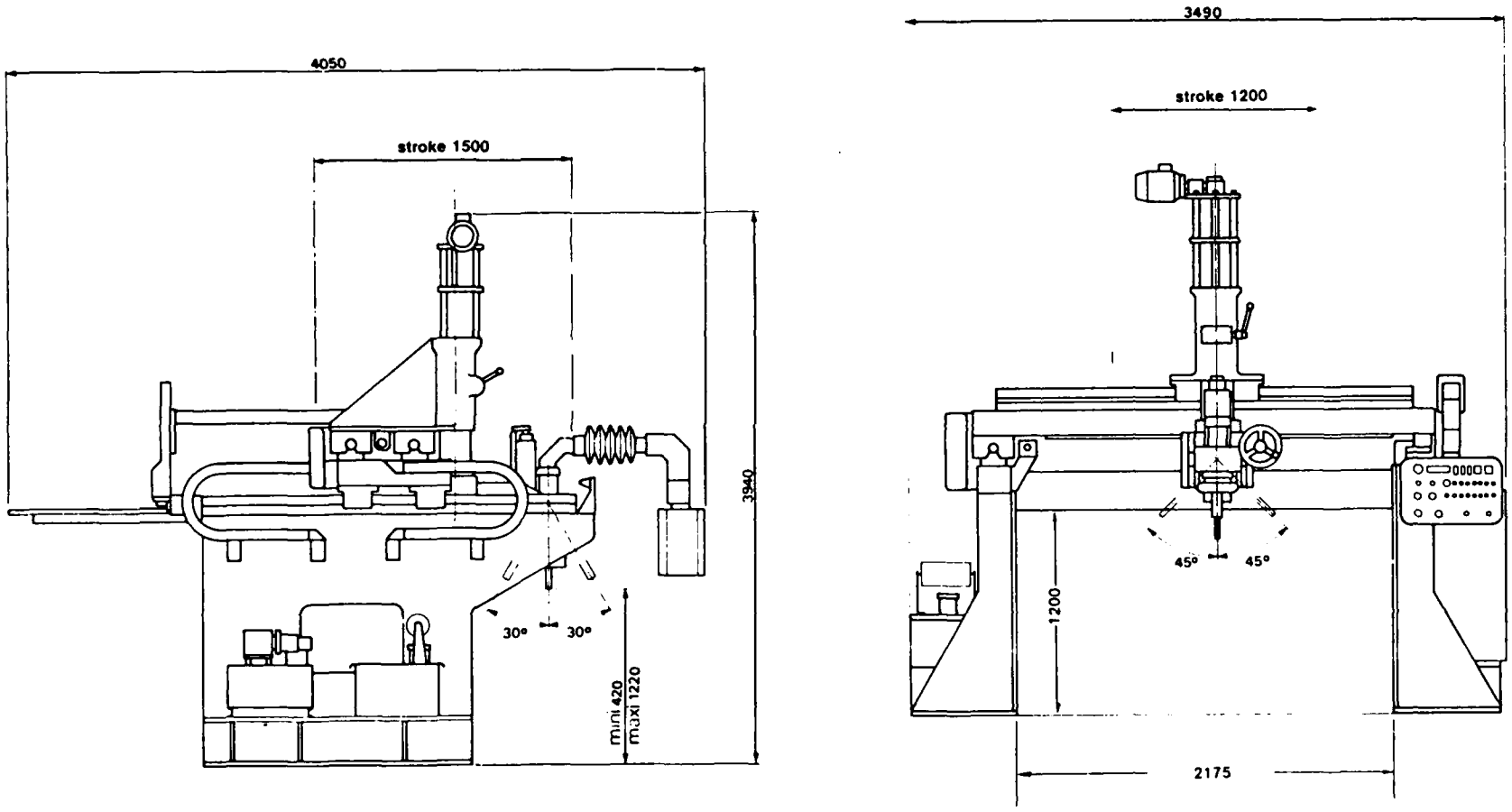

Figure 12 Seva Big Size Polishing Machine Dimensions[104]

3.2.4. Tokiwa Seiki.

Tokiwa Seiki has three models for their mold polishing machine. (See Plate VII for the illustration, Figure 13 for the dimensions, Table 5 for the dimensions and Table 6 for the specifications.) Overall, the three models are essentially one style of a highly manual "ultra-precision grinding machine."* Their principal difference is the size of the maximum workpiece each model can accommodate.[105] Hence, the Tokiwa Seiki models will be discussed as one machine.

The Tokiwa Seiki polishing machine emulates the "machine tool" approach with the table traveling in the X and Y directions. The table is actually a compound table consisting of two discoidal slide tables that travel horizontally and rotate freely about the Z-axis.[106] This results in the table freely rotating and traversing the X-Y plane. The fourth degree of freedom (Z-axis) is obtained by using a worm (saddle) wheel to adjust the tool height above the work table. A constant vertical force is attained using weights to offset a spring lever. An additional degree of freedom may be achieved by using a 60 degree tilting swivel head or an optional tilting rotary table.[107]

The "floating" worktable is a unique feature of this machine not utilized by the other manufacturers. The high

---

* By highly manual, it is meant that the stationary polishing tool is driven in a planetary motion as the workpiece is moved under it.

Plate VII Tokiwa Seiki Polishing Machine[108]

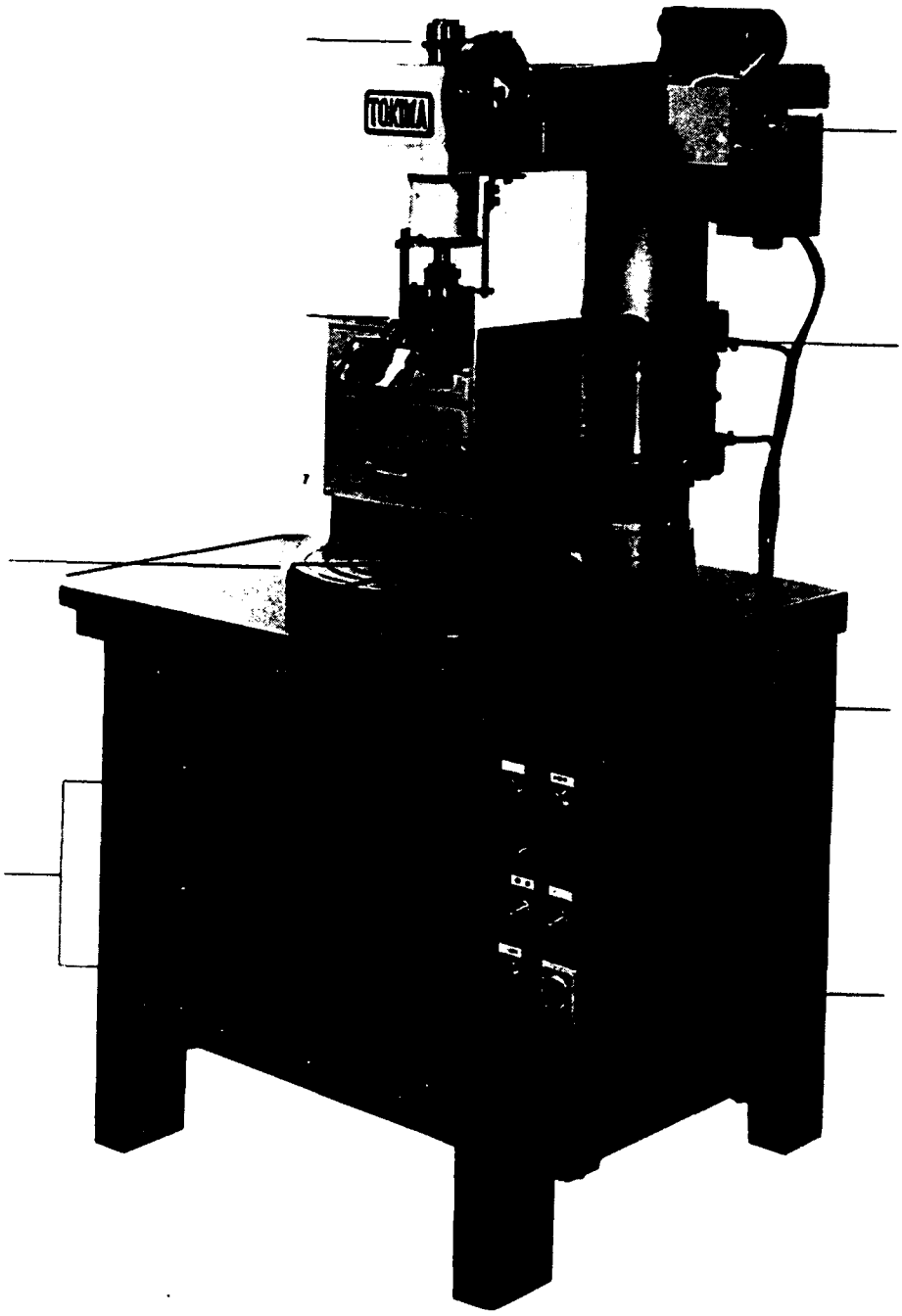

Table 5 Tokiwa Seiki Polishing Machine Dimensions[109]

Dimensions, mm (in)	EPM-1B	EPM-1C	EPM-2A
1	807 (31.772)	807 (31.772)	924 (36.378)
2	813 (32.008)	868 (34.173)	1025 (40.354)
3	—	78 (3.071)	—
4	220 (8.661)	220 (8.661)	—
5	390 (15.354)	440 (17.323)	510 (20.079)
6	680 (26.772)	680 (26.772)	795 (31.299)
7	650 (25.590)	670 (26.378)	770 (30.315)
8	Ø250 (9.842)	Ø330(12.992)	Ø330 (12.992)
9	200 (7.874)	250 (9.842)	—
10	700 (27.559)	700 (27.559)	710 (27.953)
11 (Max)	1369 (53.898)	1369 (53.898)	1671 (65.787)

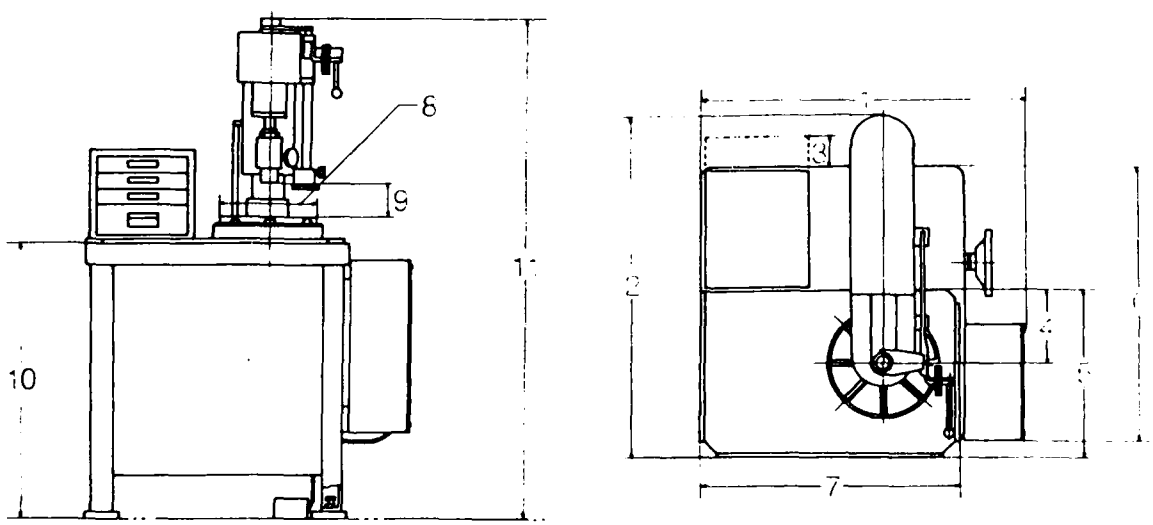

Figure 13 Tokiwa Seiki Polishing Machine Dimensions[110]

Table 6 Tokiwa Seiki Polishing Machine Specifications[111]

SPECIFICATIONS	EPM-B	EPM-C	EPM-D
Maximum work size:			
Length, mm (in)	550 (21.654)	800 (31.496)	900 (35.433)
Width, mm (in)	400 (15.748)	500 (19.685)	600 (23.622)
Height, mm (in)	150 (5.905)	150 (5.905)	300 (11.811)
Mold holder floating range, mm (in) (any direction in 360°)	68 (2.677)	100 (3.937)	100 (3.937)
Mold holder repositioning range			
Left to right, mm (in)	190 (7.480)	330 (12.992)	380 (14.960)
Front to back, mm (in)	220 (8.661)	145 (5.708)	215 (8.464)
Spindle vertical travel, mm (in)	28 (1.102)	28 (1.102)	40 (1.574)
Saddle vertical adjustment, mm (in)	150 (5.905)	150 (5.905)	300 (11.811)
Motors, 220-240V, 3Ø	0.2KW (¼ h.p.) 50/60 Hz	0.2KW (¼ h.p.) 50/60 Hz	0.2 and 0.4KW (¼ & ½ h.p.) 50/60 Hz
Spindle speeds, RPM	1,400, 1,900 and 2,400		
Swivel range of spindle head	60°		
Spindle eccentricity adjustment, mm (in)	0~1 (0.0 to 0.040)		

STANDARD EQUIPMENT for all three sizes includes weights, tool holders and spacers, work clamps, magnifying lens and mounting, and a starter set of round and square abrasive tools, wooden tools and diamond compounds.

degree of movement possible from this table is necessary since the polishing machine is highly manual. The use of weights for achieving the constant downward force is simple and effective. There is no complex mechanism to wear out or to repair.

The cost of the Tokiwa Seiki machine ranges from $23,000 to $50,000 depending upon the model and options chosen.[112] However, this machine is limited to polishing small molds. Milross, the distributor, asserts that the Tokiwa Seiki

machine reduces the polishing time by 50%.[113] Another advantage claimed is the minimal amount of training required. It is estimated that in two weeks of training, the unskilled worker can utilize the machine for most tasks.

3.3. Other Potential Machines.

In automating the polishing process, a study was accomplished on existing commercial machines. However, the articulated arm and "machine tool" approaches are not the only possible designs for a polishing machine. One other possibility is using a robotic arm for polishing. However,

> it is very difficult to automate the operations of grinding and polishing a sculptured surface with the help of a robot, because a complicated control is required in order that a polishing tool can follow a curved surface. However, even with the complicated control, a glossy surface could not be achieved because of the vibration and positioning error of the robot, which are generally larger than those of milling machines.[114]

A method of overcoming these problems is to use passive compliance to the workpiece versus active compliance through complicated software control. This can be accomplished using a magnetic sensor with a 3-lobed, magnetic, cast-iron sintered, diamond tool that contours to the surface of the die or mold. This method, also, overcomes the lack of stability in the robotic arms and can be programmed to maintain a specific force onto the die surface. Additional attempts to overcome lack of stability and accuracy is to utilize complex algorithms in a force sensing wrist, Instrumented Remote Center of Compliance (IRCC), to guide the

robotic arm.[115] * However, as previously mentioned, employment of complex algorithms is undesirable.

If a robotic arm polisher is feasible, it is debatable as to whether or not the average tool and die shop can afford a robotic polishing machine. Considering that the majority of tool and die shops in the U.S. are small, less than 30 employees, the capital required to purchase an expensive machine, such as a robot, may be difficult to justify.

The review of the existing machines shows that there are machines to handle most tool and die polishing situations. However, with the capability demonstrated this thesis is designed to test the modification of an existing machine to meet the needs of the tool and die industry to automate die and mold polishing. The next major section, Hardware Description, demonstrates how some of this information is utilized in building the hardware for the experimentation.

---

* For a more complete discussion of this topic, see Kazerooni and Daniel Whitney articles listed in the bibliography.

CHAPTER IV. HARDWARE DESCRIPTION

Before discussing the hardware, it is important to realize that this unfunded project used available hardware to construct a polishing apparatus. With a minimal amount of money the Parker Series 14R air regulators and the pencil stones were procured. The remainder of the hardware was graciously donated to OSU or obtained from the Industrial Engineering Shop.

Initially, the concept of an automated die and mold polisher may appear simplistic. However, as with many concepts, it only appears simplistic until it is understood. For this reason, the hardware and concepts demonstrated in this thesis are only intended to initially investigate the subject and to provide a basis for more refined research.

The method used to control the polishing machine is important. There are two methods of controlling a polishing tool, "passive mechanical compliance built into the manipulator or an active compliance implemented in the software control loop, force control."[116] In the case of a robotic polishing machine, using active compliance requires extensive research for the complex software control algorithms for the robotic arm. Since robotic arms have instability,

this thesis pursues the use of passive mechanical compliance with an existing machine to provide high stability and accuracy.

Passive mechanical compliance is achieved through the two methods discussed in the Existing Polishing Machines section, articulated arm and "machine tool." The use of an existing machine as the basis for a polishing machine provides benefits by limiting capital outlays for equipment, increasing machine utilization, and proving the validity of automated die and mold polishing using this approach.

Since the typical die and mold shop utilizes few articulated arm machines, the "machine tool" approach appears the proper course of action. Polishing stability may be achieved by using the rigidity of a milling machine. Furthermore, with Computer Numerical Control (CNC) a mill may be controlled with great accuracy and repeatability.

For this experiment, several milling machines were available. One common component among these machines is the precision table which provides the X and Y degrees of freedom. Since this study is for concept exploration, a small, simple arrangement was designed. A Kearney and Trecker milling machine was chosen for the experimentation. The Kearney and Trecker (K and T) Model CE is a column and knee type plain milling machine. It contains the standard three linear axes in the knee. The longitudinal axis has either a manual or powered table feed with preset speed controlled by a direction

changing lever. The other two directions are manipulated for distance but not speed by manual cranks or levers that power the table at one speed. The X axis has a fixed number of selectable table speeds from fractions of a inch per minute (in./min.) to 25 in./min.

This model is capable of vertical or horizontal milling. The milling is accomplished by a horizontal spindle affixed to the column and an overarm containing a vertical spindle. The overarm when employed is secured above the table by two horizontal support shafts. When not employed, the overarm may be pivoted to the side of the machine. For this experimentation, the overarm is not employed, the horizontal support shafts are extended and provide support for our bracketry.

One advantage to a primarily manual, three degree of freedom, milling machine besides availability is the avoidance of complex and difficult to model compliance mechanisms or interface with a CNC controller. Hence, only the polishing concept is a factor in the study.

One disadvantage to a three degree of freedom milling machine is noncompliance with a complex surface. Assuming a complex shape, such as a bi-directional, three dimensional sine wave, three linear degrees of freedom will allow access to any point on the horizontal surface. However, the polishing tool will not be compliant to the surface. Compliance is necessary for the tool to remove metal in a

consistent manner. Hence, additional flexibility must be obtained from the tool.

Initially, informal tests were performed on different tools to observe whether the additional flexibility may be obtained directly from the tooling. These tools were supplied in a modified Standard Abrasives "Specialty Products (SP-1) Test Kit." The test kit included E-Z tapered cartridge rolls, E-Z Stik PSA (Pressure Sensitive Adhesive) discs, tapered cone point, E-Z abrasive square and cross pads, E-Z resin bond spiral bands, E-Z slotted cloth discs, Brite-Rite E-Z unitized wheel, and Brite-Rite E-Z buff and blend wheel.

From informal testing, the most promising tool for compliance using an air powered grinder on an H-13 die steel workpiece, is the Brite-Rite unitized wheel. The wheel's "sponge-like" ability to absorb rotations about the shaft end allows partial surface conformance. In addition, Gillespie indicates non-metallic radial or wheel brushes offer the necessary compliance.[117] From this observation, these wheels (also called brushes) were pursued in subsequent tests to produce the desired R_a. However, the Brite-Rite brushes, also, act as a sponge regarding force feedback causing difficulties in the initial experimental apparatus. In a different situation this tool might be ideal. However, the use of this wheel, in a linear motion coinciding with the direction of rotation, will linearly scratch the surface since the imbedded

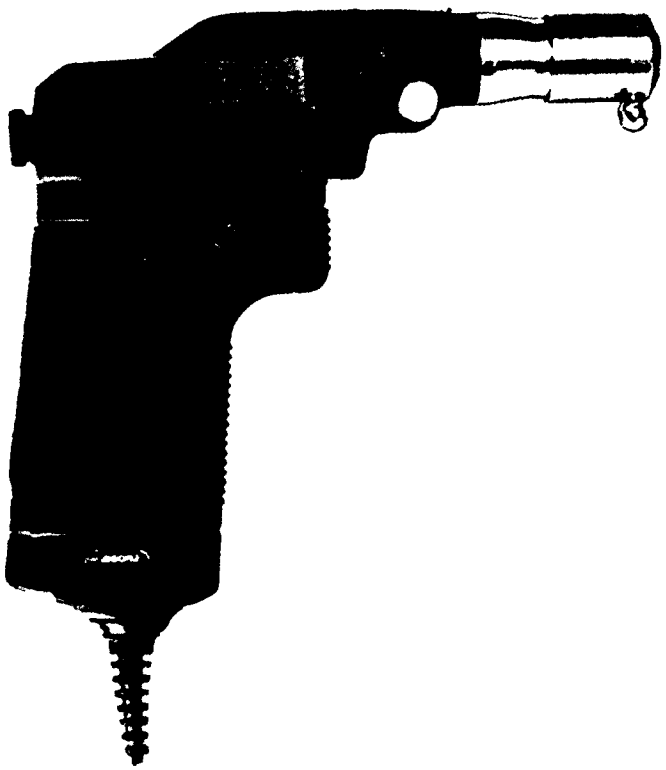

Figure 14 Profiler

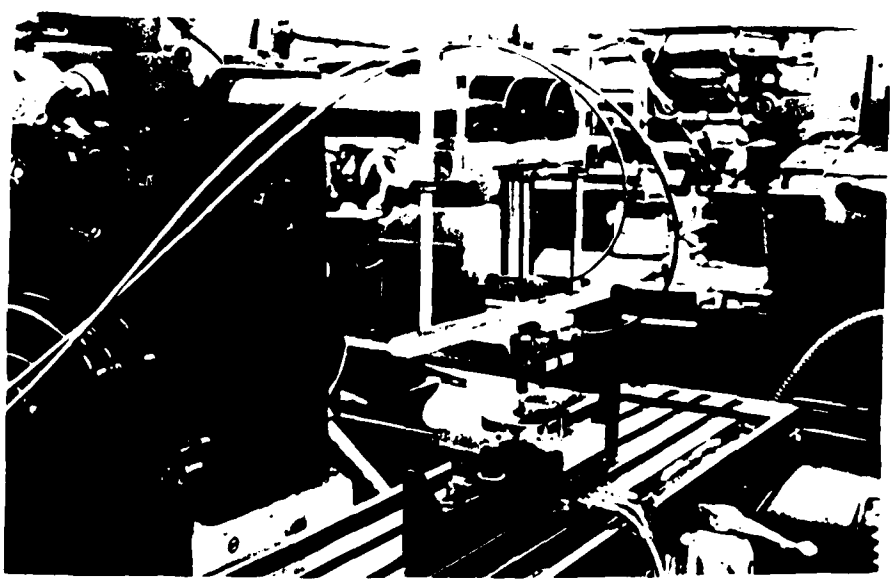

Figure 15 Assembled Experimental Hardware

Figure 16. Figure 17, the Listing of Hardware, provides more detailed information about the specific components used in the assembly. The following describes the hardware assembly.

As mentioned earlier, the Kearney and Trecker milling machine is used to support a system of bracketry holding an air cylinder and two linear bearings, one on each side of the horizontal support shafts. Attached to the end of the shaft of the single action, spring extension air cylinder is a custom-made "three-fingered hand" designed to hold motors which turn the tool. In this case, the hand holds the DOTCO right angle drill/grinder, hereafter referred to as an air motor. (The "hand" can also hold other tools, such as a profiler.) In the configuration shown in Plate IX, the DOTCO air motor uses rotary tools. Also, by rotating the air motor within the hand, radial tools may be used.

The two vertical shafts used with the linear bearings are constructed from drill rod and constrained by the bearings to a vertical motion. This limits the motion against the air cylinder rod to vertical. This is important since informal tests demonstrated a deflection problem under loading of the air cylinder rod. This is due to the rod's small diameter (5/16" diameter) which limited the effectiveness of the polishing apparatus and raised doubts regarding the validity of these tests.

abrasive is not uniform across the wheel.

Since these tools do not satisfactorily provide compliance, another method was pursued. From the description of the polishing machines on the market, universal or ball joints are used to provide compliance. Since this is the current strategy in the industry, a modified universal joint will be used to obtain a limited fourth degree of freedom in the experimental testing.

Knowing that five degrees of freedom are required to polish with compliance, one additional degree of freedom must be obtained. This degree of freedom is necessary to polish any angled surface exceeding the universal joint's freedom of movement (e.g., the sides of a mold). The simplest manner to obtain the fifth degree of freedom is to use a tilting table. Another method is to change tools, such as applying a profiler. (See Figure 14 for an illustration of a profiler.) However the profiler, in using a reciprocating motion, may have difficulty blending the surface when tools utilizing other motions are used in the finishing process. In subsequent studies of die and mold polishing, it is suggested that a tilting table be used with the hardware described below in order to have an additional degree of freedom to assist in polishing surfaces.

Employing the concepts discussed earlier, the experimental hardware is assembled as shown in Figure 15 and

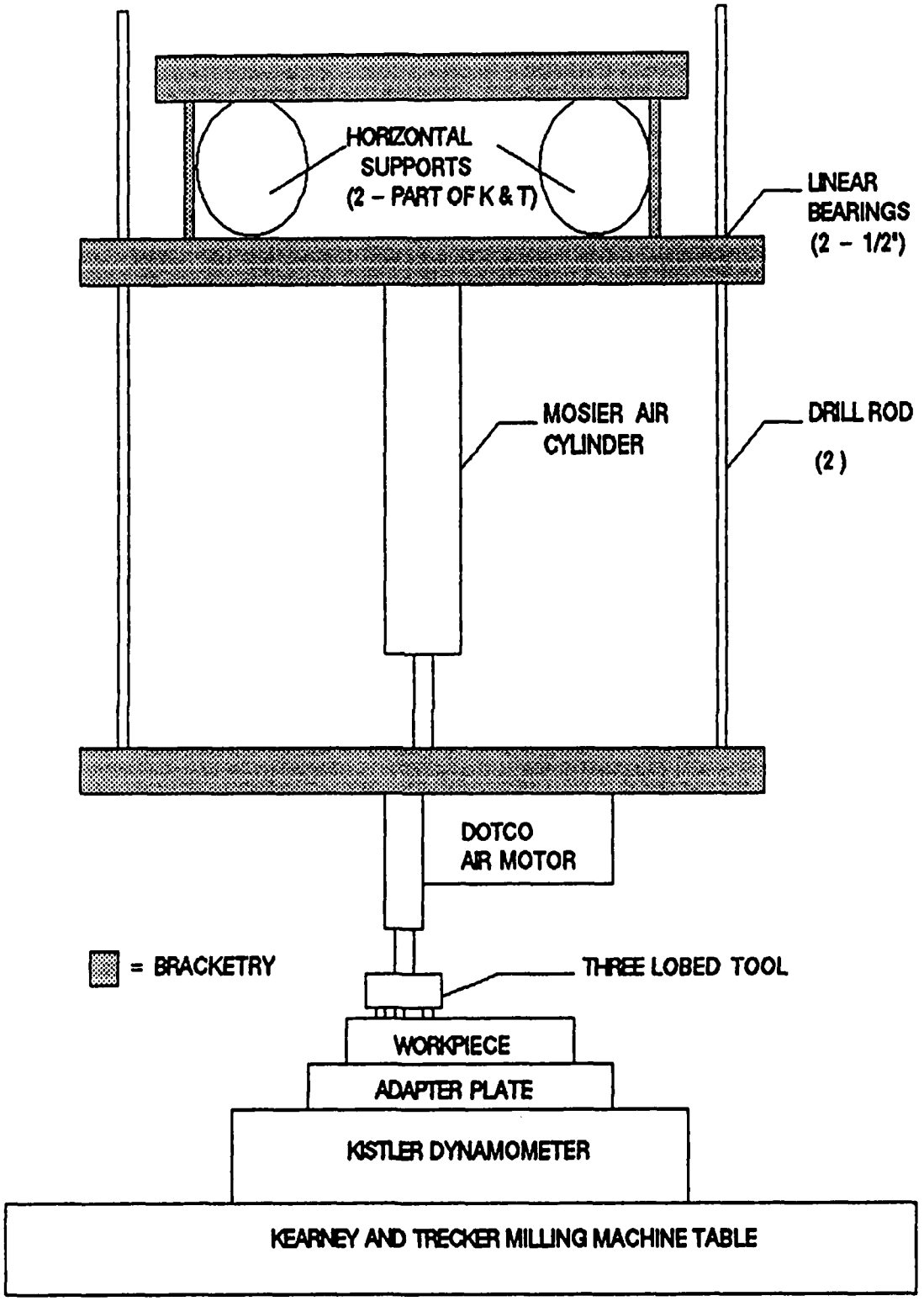

Figure 16 Illustration of the Assembled Hardware

Off-The-Shelf Hardware
- DOTCO drill/grinder Model 10L1200B with ¼" collet - Proportion-Air Valve Model BB1ME100 - Kistler Dynamometer Model 9257A/ with 3-5001 Kistler Charge Amplifier - Gould Strip Chart Recorder Model 2400 - Mosier Tiny Tim Air Cylinder; spring extension, 1 1/8" Bore x 2" Stroke; Model T FC-5/16-SC-1 1/8x2 - Kearney and Trecker Milling Machine Model CE
Custom Hardware
- Aluminum dynamometer adapter plate - Support bracketry w/ two linear bearings
Hardware for Modification
- Mosier Tiny Tim Air Cylinder; double acting 1 1/8" Bore x 3 3/16" Stroke; Model EF TR-5/16-1 1/8x3 3/16 - Trim Sol Coolant

Figure 17 Listing of Experimental Hardware

The force exerted onto the workpiece will be controlled by the arrangement shown in Plate VIII and Figure 18, Pneumatic Control Schematic. The air is supplied by the shop

Plate VIII Pneumatic Control Panel

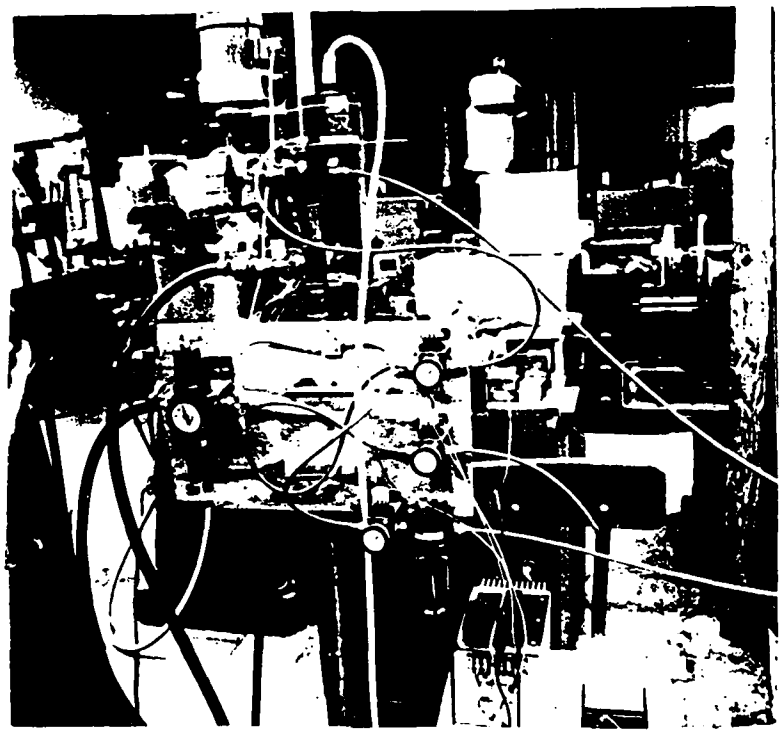

air compressor at a maximum of 80 pounds per square inch (psi). The maximum air pressure is controlled by the large filter and regulator to the left. The three other lines control the air motor and the Proportion-Air Valve. Each line may be individually regulated by the mini-regulators. The line controlling the air motor has a two way switch to turn the motor on and off without readjusting the air pressure. In addition, this line contains an in-line oiler that lubricates the air motor. This is set by the controlling screw of the oiler at approximately one drop per minute. (One

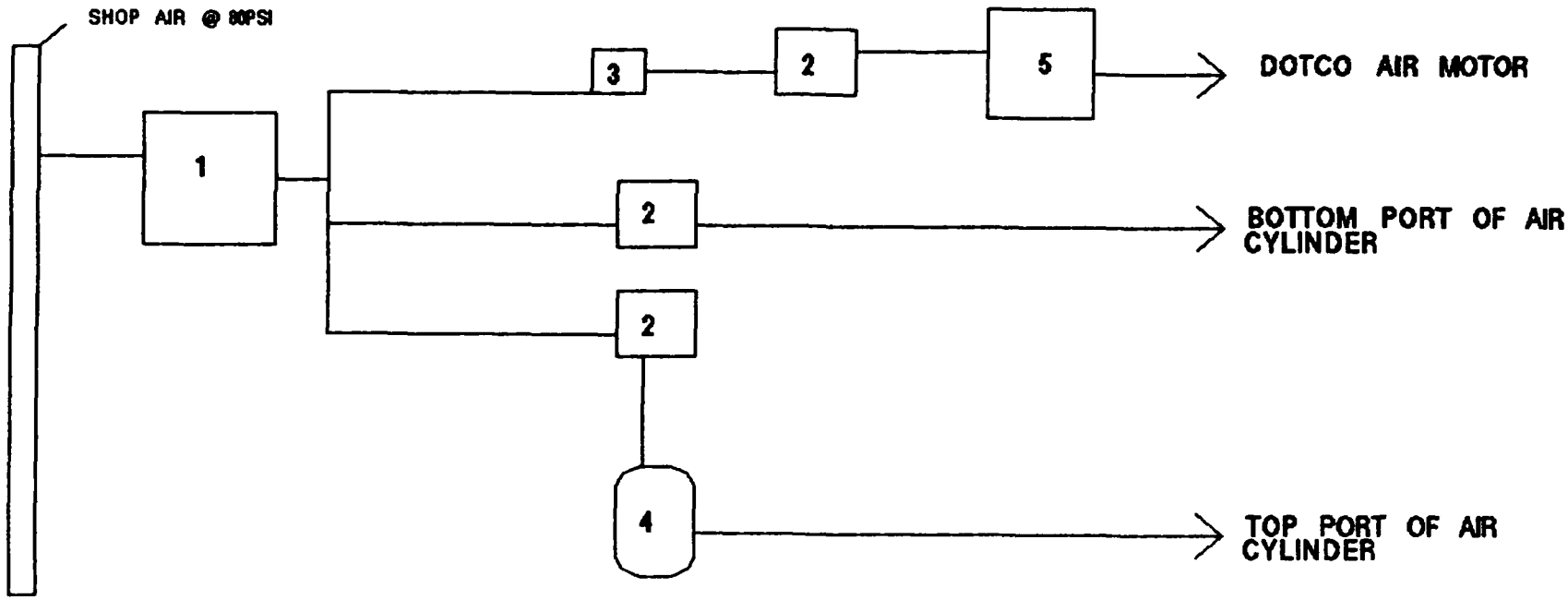

LEGEND

NUMBER	DESCRIPTION
1	PARKER FILTER/REGULATOR MODEL 06E25A18AA
2	PARKER REGULATOR WITH GAUGE MODEL 14R113FB
3	HUMPHREY TAC2 MANUAL AIR VALVE MODEL 31V
4	PROPORTION-AIR VALVE MODEL BB1ME100
5	PARKER AIR LINE LUBRICATOR MODEL 06L21BC

Figure 18 Pnuematic Control Schematic

problem with an in-line oiler is oil leakage onto the workpiece during polishing.) The other operational line shown in this picture controls the back pressure against the spring. In this manner, the amount of vertical force may be controlled by the Proportion-Air Valve. The Valve is electrically sent a 0 to 10 volt signal regarding the pressure to maintain. This signal is controlled by a potentiometer. The Valve is able to adjust the pressure from 0 to 100 psi in 50 millisecond. In this experimentation, the voltage was read by an analog voltmeter that provided an approximate reading to set the pressure. (A diagram of the Proportion-Air Valve operations is supplied in Figure 19.)

This experiment uses a rotary tool to polish the workpiece. Since the workpiece is secured by two setscrews into the adapter plate of the dynamometer which is clamped to the milling machine table, the longitudinal travel of the table moves the workpiece under the polishing head at a preset speed. The use of setscrews in the workpiece holder/adapter plate allows easy adjustment, removal and replacement of the workpiece. The Kistler Dynamometer senses the three linear forces exerted by the tool onto the workpiece and through the Kistler Charge Amplifier, outputs this data onto a strip chart.

Two different tools were fabricated for use as a compliant tool. (See Figure 20 for an illustration of these

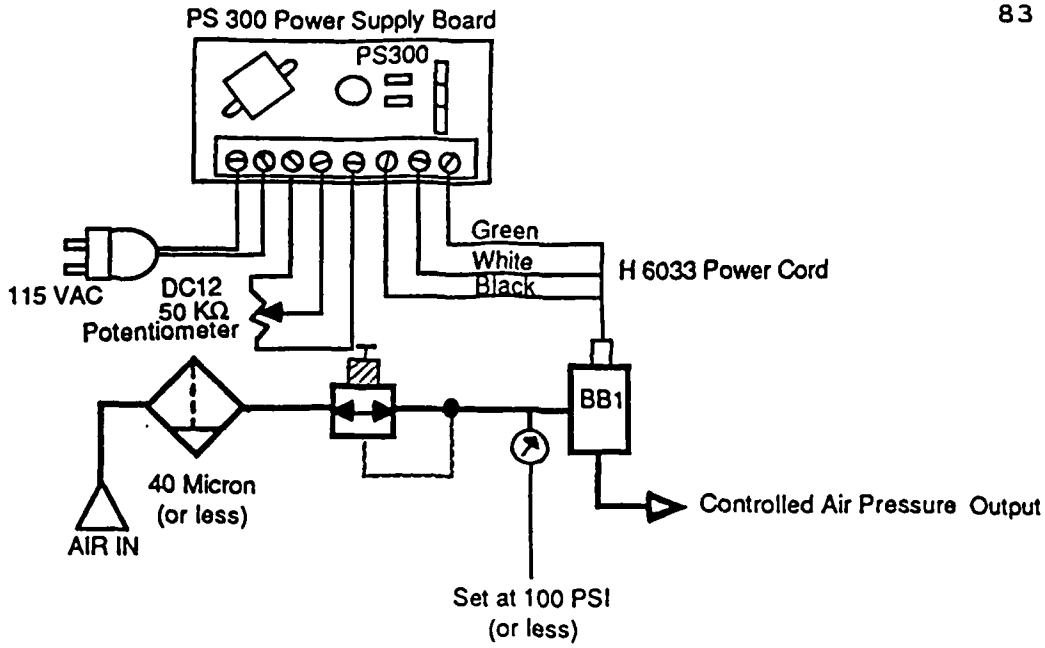

Figure 19 Proportion-Air Valve Operating Schematic[118]

two tools.) The general characteristic followed for these tools is a three lobed approach similar to tools used with existing polishing machines. Since three unrestrained contact points will conform to any surface, this approach appeared the most appropriate. However, existing machines use these tools for final polishing since they are composed of diamond compounds sintered into a metallic matrix. In this case, the experimental tools were designed to hold three pencil stones of 220 grit allowing compliance to flat and slightly angled or curved surfaces.

The first tool holds three stones vertically while attempting compliance through a universal joint. A brass ring

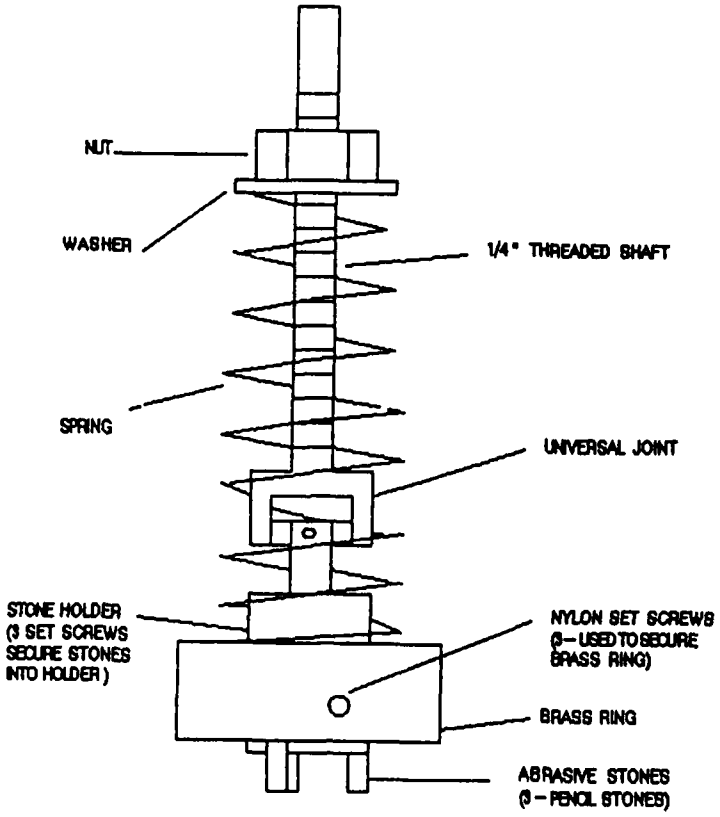

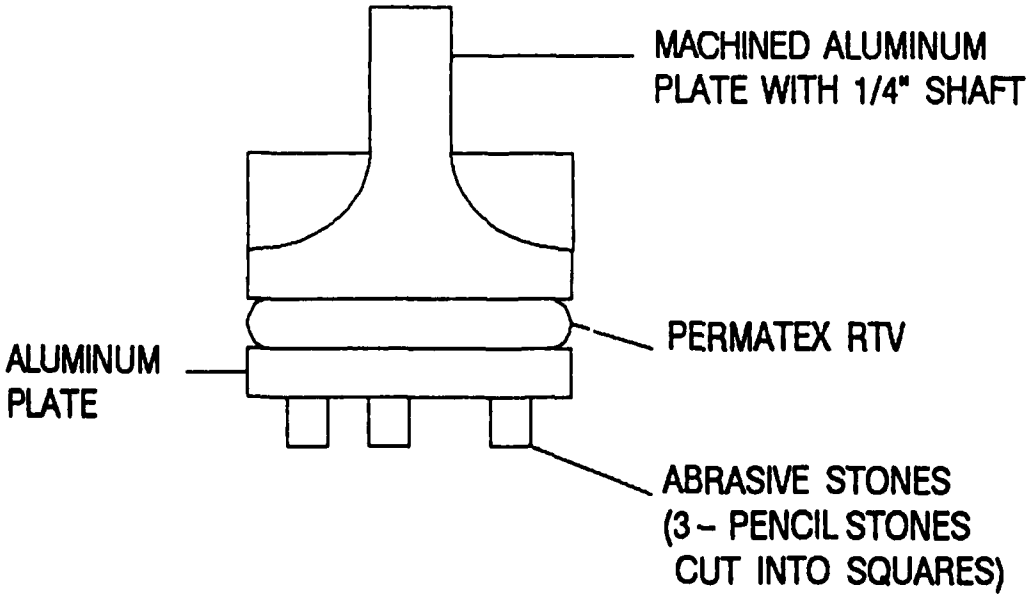

Figure 20 Two Experimental Rotary Tools

encompassing the holder serves, along with set screws for each stone, to keep the stones in place. In addition, the ring lowers the center of gravity. In order to achieve compliance to any surface, the universal joint is used in the shaft between the tool and the holder. To limit the flexibility of the universal joint, a compressible spring is employed around the joint. Overall, this tool satisfactory rotated in a lathe at a speed of 1,750 rpms, a speed slightly slower than the existing commercially available polishing machines, but had considerable vibration at the significantly higher speed of the DOTCO air grinder/polisher, approximately 10,000 rpms.

Since this tool did not perform at higher speeds, another tool was constructed of two aluminum plates with a universal joint encased by Permatex black RTV silicon adhesive sealant Part No 16B. Initially, the silicon is a gel but after curing becomes semihard. In this state, the substance is rubbery and provides a springy, flexible joint. The pencil stones were cut to approximately a square shape (5/32" x 5/32" x 5/32") and epoxied onto the bottom aluminum plate. This is the experimental tool used in the research.

As a result of the experiments described in the Experimentation section, the hardware was modified. This is hereafter referred to as the hardware modification. The modification was to exchange the air cylinder and to add flood coolant.

The air cylinder exchange resulted in the application of a double acting cylinder. Hence our formerly unused air line shown in Figure 16 was used. The application of a constant 25 psi was fed into the lower half of the air cylinder with the upper half of the air cylinder connected to the Proportion-Air Valve. In this manner, the Proportion-Air Valve is used to control the downward force exerted by the air cylinder. By manually reading the strip chart recorder and adjusting the voltage, the air pressure is controlled so an approximate constant force is exerted onto the tool.

The other modification was to employ Trim Sol (water soluble oil) as a flood coolant. Trim Sol is a "chemical emulsion concentrate containing a stable chlorine additive as a friction reducing lubricant."[119] The purpose was to flood the workpiece to dissipate heat, remove the fines to prevent loading, and to eliminate the dripping of lubricant oil from the air motor onto the workpiece. See Plate IX for a picture of the hardware modification.

It should be noted that the ability of this "polishing machine" to automate all polishing situations is not realistic. Some manual processing will be required, though the amount of automated versus manual polishing is unknown. Some dies or molds will probably continue to be manually finished; these are highly complex cavities. The use of the Kearney and Trecker for this research is acceptable, but

further studies may require more advanced equipment such as a CNC machine. Overall, the experimentation will be used to verify the hardware design.

Plate IX Hardware Modification

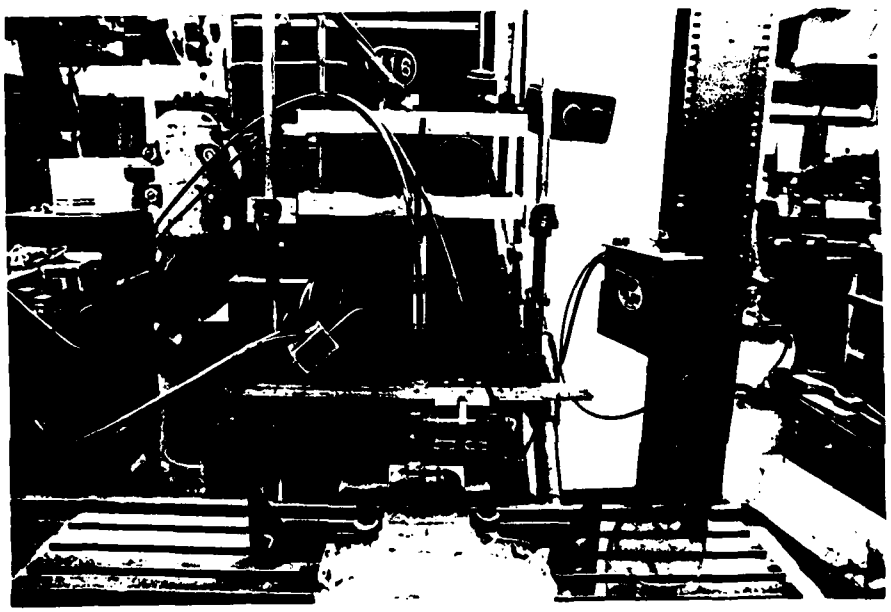

CHAPTER V. EXPERIMENTATION

The literature review was pursued to determine if an automated die or mold polisher exists. Although six polishing machines have been invented, it appears no manufacturer uses existing equipment to automate polishing. This raises a some questions. First, is it feasible to polish with existing equipment? Does the existing equipment have the proper degrees of freedom or is there a manner to achieve the required degrees of freedom? Can the control of the spindle be precise enough to allow precision polishing? Does the current machine tool have a low modulus of elasticity so the machine will be able to maintain very close tolerances (μin)? How will the polishing progress be measured?

This research attempts to answer such questions. The ability of the hardware to perform is inherent for successful experimentation. The experiment's focus is to evaluate some factors of the experimental tool to polish a workpiece. This section presents the factorial design for the experiments and the resulting data.

5.1. Experimental Factorial Design.

There are many factors that may affect the polishing of dies and molds. Experimentation was established for a

randomized 2^5 factorial design. The factorial design allows for a few runs to yield "major trends and so determine a promising direction for further experimentation."[120] In this case, 5 factors of the polishing apparatus and experimental tool were analyzed for their affect on the workpiece surface finish. This thesis concentrates on attaining the desired surface finish in terms of roughness and will neglect waviness and dimensional changes.

For the experimentation, the following five factors were chosen to be evaluated: force exerted by the tool onto the workpiece (F1 = 1.2 lbs, F2 = 2.25 lbs), direction of the scallops (G1 = perpendicular travel to scallops, G2 = parallel travel to the scallops), angle of the workpiece (A1 = 0 degrees off horizontal, A2 = 10 degrees off horizontal), rate of travel of the table (R1 = 9 in./min. R2 = 4 in./min.) and number of cycles (C1 = 50 passes across the workpiece, C2 = 100 passes across the workpiece, where a pass is defined as traveling from one side of the workpiece to another). (See Table 7 for the set up of the 2^5 factorial design.) In addition, Table 8 presents a randomized arrangement to test the factors. The randomization is designed to minimize untested factors that may influence the experiment. By resorting the testing data, the results may be analyzed using Yates algorithm. This determines the main effects and interactions that influence die and mold polishing.[121]

Table 7 2^5 Factorial Design

			R1		R2	
			A1	A2	A1	A2
G1	C1	F1	1	A	R	RA
		F2	F	FA	FR	FRA
	C2	F1	C	CA	CR	CRA
		F2	CF	CFA	CFR	CFRA
G2	C1	F1	G	GA	GR	GRA
		F2	GF	GFA	GFR	GFRA
	C2	F1	GC	GCA	GCR	GCRA
		F2	GCF	GCFA	GCFR	GCFRA

Where: F : F1 = 1.2 lbs, F2 = 2.25 lbs

G : G1 = perpendicular to scallops, G2 = parallel to scallops

A : A1 = 0 degrees off horizontal, A2 = 10 degrees off horizontal

R : R1 = 9 in./min., R2 = 4 in./min.

C : C1 = 50 passes, C2 = 100 passes

Table 8 Randomized Testing Arrangement

RUN NUMBER	RANDOM NUMBER	CODES	DIRECTION OF MILLING	CYCLES (1 WAY PASS)	FORCE (POUNDS)	ANGLE (DEGREES)	SPEED ("/MIN)
1	0.001665	GCFRA	VERT	50	2.25	10	9
2	0.028124	CF	HORT	50	2.25	0	4
3	0.031564	CA	HORT	50	1.12	0	9
4	0.050365	C	HORT	50	1.12	0	4
5	0.089874	GFRA	VERT	100	2.25	10	9
6	0.095551	GRA	VERT	100	1.12	10	9
7	0.141286	CR	HORT	50	1.12	10	4
8	0.203200	GCFR	VERT	50	2.25	10	4
9	0.208189	GCF	VERT	50	2.25	0	4
10	0.232873	FA	HORT	100	2.25	0	9
11	0.258471	RA	HORT	100	1.12	10	9
12	0.266044	GFA	VERT	100	2.25	0	9
13	0.293822	GR	VERT	100	1.12	10	4
14	0.350631	GA	VERT	100	1.12	0	9
15	0.353784	CFRA	HORT	50	2.25	10	9
16	0.359762	CRA	HORT	50	1.12	10	9
17	0.417096	CFR	HORT	50	2.25	10	4
18	0.423988	FR	HORT	100	2.25	10	4
19	0.426868	GC	VERT	50	1.12	0	4
20	0.478468	A	HORT	100	1.12	0	9
21	0.554973	GF	VERT	100	2.25	0	4
22	0.659253	GCA	VERT	50	1.12	0	9
23	0.766115	GCFA	VERT	50	2.25	0	9
24	0.790204	GFR	VERT	100	2.25	10	4
25	0.797146	G	VERT	100	1.12	0	4
26	0.801876	F	HORT	100	2.25	0	4
27	0.803359	GCR	VERT	50	1.12	10	4
28	0.817607	R	HORT	100	1.12	10	4
29	0.827561	GCRA	VERT	50	1.12	10	9
30	0.934085	FRA	HORT	100	2.25	10	9
31	0.950840	CFA	HORT	50	2.25	0	9
32	0.967357	1	HORT	100	1.12	0	4

Some other factors that should be studied in future research on this experimental hardware are: different grit stones, coolant off or on, different rpms of the motor, different workpiece surface finish prior to polishing, the use of orbital or reciprocating motions, size of stones, different workpiece steels, and different silicon or other substances for compliance. If all these factors would be studied at one time, a 2^{13} experimental design would result. This is 8192 experimental runs. Since each run takes approximately 30 minutes, we have 4096 hours of testing or about 512 eight hour days.*

5.2. Experimental Data.

Prior to modifying the hardware, the experimental sequence was initiated. The 1018 steel workpiece approximately 4" in diameter was milled with a 1½" diameter flat endmill then a 3/8" ball endmill resulting in an approximate R_a = 1,500 μin.** The workpiece was designed to simulate a milled surface, approximately 2,000 μin.[122] Since this experiment uses stones as the tool, a 220 grit pencil

---

* For further information on methods to reduce testing time, e.g. half replication, see Box, Hunter and Hunter listed in the Bibliography.

** This R_a was measured by the Surfanalyzer 4000 perpendicular to the milling direction. When measured parallel to the milling direction, the average R_a is significantly lower at 73 μin. It should be noted that the R_a is not constant across the workpiece.

stone was utilized in the rotary tool to prepare the surface for polishing and to polish, if possible. Two runs were made to verify the assumption that this was feasible.

The first run was performed with 50 passes, perpendicular to the milling direction, with 1.12 lbs. force, no angle, and 9 in./min. table travel. The resulting surface finish was an average R_a = 162 μin. on one end of the run and 190 μin. on the other. The second run was performed to verify the results; however, the lubricating oil for the air motor dripped onto the workpiece several times. It was observed that vibration in the system was reduced after the oil dripped onto the workpiece. Furthermore, when the stones contacted the oil, they began to "load up". The resulting average R_a was 59 μin. at one end and 61 μin. at the other. While the tool decreased R_a, excessive wear of the pencil stones was observed. For this reason, the utilization of the ball endmill was ceased.

Hence, the workpiece surface was milled with the flat 1½" endmill to closely represent the surface after grinding (i.e., only shallow machining marks remained). The R_a of this workpiece varied from 66 to 104 μin. when measured perpendicular to the milling direction versus 62 to 141 μin. parallel. The variability is due to the severity of the cutter marks on the surface. For simplicity, the beginning surface will be assumed to be about 100 μin.

In addition to the initial surface finish change, the hardware was modified as described in the section entitled "Hardware Description." This included the exchange of a single action air cylinder for a double action air cylinder and the addition of Trim Sol coolant. The result of these changes was a dramatic reduction in the R_a value. A run accomplished with 50 passes, perpendicular to the milling direction, with 1.12 lbs. force, no angle, and 9 in./min. table travel resulted in a mirror finish with an average R_a of 1 μin. By increasing the number of passes to 100, the average R_a was 0 μin. Table 9 summarizes the surface quality parameters of this pair of runs.

However, the surface showed milling scallops after polishing. Using the philosophy of manual polishing, this is caused by too fine a grit stone on the initial pass. A coarser stone should be utilized prior to the 220 grit to remove the milling scallops. Also, the rotary tool leaves "machining" marks of its own. These crosshatch marks are similar to machining marks resulting from use of the flat endmill, however, these marks are not visually noticeable.By using the profilometer, it was found that these marks do not appear to affect the surface roughness. However, additional studies are required to validate this finding. Again, using the philosophy of manual polishing, the utilization of a finer stone could remove these marks.

Table 9 Surface Quality Parameters

Run 1: F1, G1, A1, R1, C1

Parameter	Maximum	Average	Minimum
R_a	2	1	0
R_q	3	2	2
R_y	18	6	6
R_z	12	6	6

Run 2: F1, G1, A1, R1, C2

Parameter	Maximum	Average	Minimum
R_a	1	0	0
R_q	3	2	0
R_y	12	6	6
R_z	6	6	6

To generate additional data regarding the benefit to using Trim Sol coolant with this tool and polishing apparatus, a pair of tests were performed, one with and one without coolant. The testing was performed with 30 passes, parallel to the milling direction, with 1.12 lbs. force, no angle, and 5¼ in./min. table travel. (The limitation of 30 passes was due to a hardware difficulty.) The resulting data is summarized below in Table 10.

Table 10 Surface Quality Parameters

Run 1, without coolant

Parameter	Maximum	Average	Minimum
R_a	13	8	6
R_q	19	11	9
R_y	122	55	43
R_z	73	49	37

Run 2, with coolant

Parameter	Maximum	Average	Minimum
R_a	2	1	0
R_q	3	2	2
R_y	18	6	6
R_z	12	6	6

It can be observed from the data that the use of coolant reduces R_a as well as the other parameters that measure the surface roughness.

The testing was limited to 30 passes in the last two runs when the polishing tool "lifted off" the workpiece. Suspected causes include either the dynamometer charge amplifier's signal drifting and/or inadequate rigidity within the

hardware. The drifting of the amplifier's signal would have resulted in a false reading to the strip chart recorder. Since the force registering on the strip chart recorder is read by the operator who is manually adjusting the air pressure in the top half of the double action air cylinder, any inaccurate readings would result in an inappropriate response. Hence, if the signal drifted to indicate more force than actually applied, then the air pressure would be lessened. If this cycle continued, the pressure would be inadequate to offset the constant pressure maintained in the bottom of the air cylinder resulting in a lifting of the tool from the workpiece.

A suspected cause of this problem is the relatively light loads encountered on a dynamometer designed for forces in the ± 1,100 lbs. Since the force was barely a fraction of the total range available, it is possible that the dynamometer had difficultly accurately reading the forces involved. One solution pursued was to boost the signal amplification from the dynamometer and reduce the amplification to the strip chart recorder. This did not solve the drifting problem. Another solution was to double the force applied to the workpiece. However, the air motor stalled at the higher force.

In retrospect, the same problem was observed during the unmodified hardware experiments. Shortly before the "lift-off" the signal stabilized and did not follow the usual

characteristics of increasing in one direction and decreasing in the other (this is due to the milling machine table not being level with the overarm).

It is also possible that the hardware is not sufficiently rigid for the polishing task. This would cause deflection in the bracketry and the air cylinder rod. This deflection would cause higher than normal frictional forces resulting in the pressure in the top portion of the air cylinder being improperly set. (The frictional forces would not allow the polishing "head" to travel vertically, thereby the dynamometer would register a static force not representative of the actual dynamic conditions.) During the polishing of the workpiece, the vibrations and material removal/stone wear would reduce the frictional forces allowing the state of the system to stabilize with inadequate air pressure in the top of the air cylinder. With inadequate pressure, the polishing head would "lift-off" the workpiece. However, this last theory does not account for the dynamometer registering more force. Hence, it is suspected that the problems either lie in the dynamometer, as suggested earlier, or in a combination of these two theories. Suggested hardware modifications to assist in solving these problems are contained in the Conclusions/Recommendations section.

CHAPTER VI. ANALYSIS OF DATA

Data is available from the tests involving the 3/8" ball nose cutter, the 50 and 100 passes of the apparatus, and the 30 passes with and without coolant. The data from the 3/8" ball nose mill will not be analyzed since the stones exhibited excessive wear and the conditions are more representative of surface preparation than polishing. Hence, the meaningful data is shown in Tables 9 and 10. While the data available is not extensive, it can be analyzed. However, further testing must be accomplished to verify or discount the concepts and results presented.

From the parameters in Tables 9 and 10, (R_a, arithmetic average; R_q, root mean square; R_y, maximum peak to valley height; R_z, average distance between the five highest peaks and the five deepest valleys) the best surface will have the lowest values of the four listed parameters. Hence, the best surface finish occurred with the highest number of passes, 100, with coolant at the higher table feed rate.

The ability of the polishing apparatus to yield an average R_a = 0 μin. finish from 100 passes is remarkable. The other surface quality parameters are equally good. However,

the additional 50 passes did not yield a significant difference in surface finish based upon the original finish of approximately R_a = 100 μin. Hence, it may not be logical to pursue the additional 50 passes. Also, as was discussed in the "Experimental Data" section, the usage of coarser grit stones initially and the use of a finer grit stone after the 220 grit may affect the surface finish.

The application of Trim Sol coolant to the process appears to make a significant difference in the ability of this polishing apparatus to yield an average R_a in the 1 μin. range. It can be stated that the coolant/lubricant yields a superior surface finish compared to no coolant.

The limited number of passes, 30, at the 5¼ in./min. yielded the same surface quality parameters as 50 passes at 9 in./min. By analyzing the data available, the two passes may be compared on the amount of passes x linear surface covered per unit time. For the smaller number of passes, this value is 157.5 passes x in./min. or 13.125 passes x feet/min. The higher number of passes yielded 450 passes x in./min. which is 37.5 passes x feet/min. This initial data would indicate that the "speed" at which the tool passes over the workpiece is not a factor of the resultant surface finish.

Overall, the polishing apparatus was estimated by Shelby Davis to be capable of cutting the bench time for polishing a flat surface by 60%. It is imperative that this data be

treated as preliminary and not accepted as a validated finding. Further experimentation needs to be completed to determine with certainty the affect of different factors on the polishing process. Also, it is important that these preliminary conclusions be researched regarding the affect of surface "speed" and coolant.

CHAPTER VII. CONCLUSIONS/RECOMMENDATIONS

There are several conclusions and recommendations that must be made. To begin with, the polishing apparatus is capable of polishing a specimen as described in this thesis. The hardware, as currently configured, has difficulty in maintaining a constant force upon the workpiece. This problem must be resolved to satisfactorily perform under more consistent conditions. The data presented is preliminary and extensive additional testing will be required to pursue the issues raised in this thesis regarding the automation of die and mold polishing. In addition, extensive recommendations for improvements can be made to assist in future studies.

First, a dynamometer designed for the forces to be measured must be obtained. This would assist in properly the measuring the forces exerted onto the workpiece. Furthermore, this may eliminate the suspected signal drifting described earlier.

An electric motor would be valuable for adjusting the rpms. While current commercial machines operate at a spindle speed around 3,000 rpm, the spindle speed presented in the testing is estimated to be approximately 10,000 rpm. An electric motor allows slower spindle speeds that closely mimic

those used by the industry. Hence, future experimentation would be limited to slower speeds. If an adjustable switch is used to control a higher rpm motor, then more versatile experimentation may develop. Furthermore, the electric motor would not require the lubricating oil that caused loading during the initial testing described earlier; however, the electric motor could be dangerous when the polishing is performed with flood coolant. In short, a remote or waterproof electric motor whose spindle speed is controllable in a range from 0 - 10,000 or 0 - 15,000 rpm would be valuable.

Once a proper dynamometer is obtained, a programmable controller (PC) would simplify the feedback from the dynamometer to the Proportion-Air Valve. This simplifies the operation of the polishing apparatus and would allow for accurate maintenance of a constant force exerted onto the workpiece. Furthermore, the PC would be able to collect data on the forces encountered in all three directions to allow adjustment of the polishing "head" on a sloped surface. In the long run, the PC may allow for refinement of the operating parameters of the apparatus. This could eliminate the dynamometer by allowing a substituting a preset value of the air pressure.

Steels other than the 1018 must be pursued. 1018 is a "soft" steel that is not representative of the "hard" alloy steels typically utilized by the die and mold industry. Since

harder steels reportedly have better polishability, then the harder steels may require significantly higher amounts of time to polish. Also, hard steels may attain a R_a that is smaller than the resultant R_a attained in this experimentation.

The drill rod utilized for the linear bearings should be replace with case hardened rod so the bearings will operate more smoothly. Even with the limited experimentation, the current rod was obviously being scored by the linear bearings. The wear could attribute to the problems described earlier with the lack of bracketry rigidity.

Ideally, two Proportion-Air valves could control the pressure in the air cylinder at a constant value. By having a Valve for each side of the cylinder the desired air pressure may be controlled without the dynamometer or PC. (However, the coupling of two Valve in the same cylinder could lead to instability in maintaining a constant force. This problem must be studied, probably with assistance of Proportion-Air, Inc, before purchasing an additional valve.

The stones used for this experimentation are known as "diemaker" pencil stones. These stones are not explicitly designed for use with coolant or oils. Hence, it is recommended that stones designed for use with oils be investigated. The proper tool may allow for quicker cutting action while still attaining a 0 - 1 μin. average R_a.

Another area that should be investigated is the use of coolant/lubricants. While the Trim Sol appears to influence the polishing so that a superior finish is yielded, other coolant/lubricants may yield equivalent surface finishes with better conditions.

Other substances to replace the Permatex RTV should be explored. These substances may have the desireable characteristics such as flexibility without excessive freedom so that whipping would be possible. However, it is important that the substitute be impervious to the interaction of coolant/lubricant, if utilized.

Another recommendation is to obtain a cylinder suited for this application. A cylinder with a longer collar to prevent deflection and with a rod with greater stiffness could be valuable to successful continuation of this polishing concept. Additionally, a hydraulically dampened air cylinder has significant possibilities.

Additional testing of Brite-Rite brushes and Brite-Rite E-Z buff and blend quick change discs should be pursued for use with the polishing apparatus. These tools have the ability to comply with a surface and yield a good surface finish.

Overall, several recommendations have been discussed. However, the system should be formally designed to account for the loadings involved before pursing any of the suggestions. Unfortunately, this thesis was accomplished with little

financial support so that the majority of the hardware was borrowed and in some cases, inadequate for the application.

CHAPTER VIII. SUMMARY

This thesis discussed the automation of die and mold polishing. Manual polishing was researched to reveal factors affecting the automation of this operation and tools/processes utilized to successfully manufacture a die or mold. Also, the research revealed that polishing is an abrasive process and as such should be treated in this manner when automating.

While there are six foreign manufacturers of die and mold polishing machines, none employ an existing machine as the polishing machine structure. This thesis demonstrated a low budget approach to automated die and mold polishing by using an existing milling machine. The machine achieved an average R_a = 0-1 μin in 30 passes over the workpiece. In addition, the experimentation suggests that the usage of coolant may have a significant positive affect on the ability of this system to produce a high quality finish. However, the hardware experienced difficulties that require modification.

Overall, this thesis presents a low cost approach to automating die and mold polishing. Further research in this area should be attempted due to the benefits to the die and mold polishing industry.

END NOTES

1. Isamu Komatsu, Polishing Robot for Die and Mold, pp. 2/9.

2. Gesswein, Mold Polishing Fundamentals for Beginners (Bridgeport, Connecticut.: Paul H. Gesswein & Company, Inc., 1985).

3. Danny C. McCoy and Atlas Hsie, "Robot Applications in Buffing, Polishing, Grinding and Deburring," Robots 8 Conference, Society of Manufacturing Engineers Report No. MS84-360 (Dearborn, Michigan: Society of Manufacturing Engineers, June 1984).

4. Blaine W. Lilly, Preliminary Studies in Automated Finishing of Dies and Molds, Report No. ERC/NSM-87-10 (Columbus, Ohio: Engineering Research Center for Net Shape Manufacturing, Ohio State University, August 1987), pp. 2.

5. Federal Products Corporation, Operating Instructions for Surfanalyzer System 4000 (Providence, Rhode Island: Federal Products Corporation), pp. 1-4.

6. Komatsu, pp. 3/9.

7. Gesswein, Mold Polishing Fundamentals for Beginners, pp. II-3.

8. Ibid., pp. II-2.

9. Shelby Davis, Discussions at Baker Systems Engineering Building at Ohio State University, Columbus, Ohio, March - November 1989.

10. Ibid.

11. J. Hull, "Die Surface Measurement and Analysis," Masters Thesis, Rensselaer Polytechnic Institute, Troy, New York, August 1986, pp. 52.

12. Taylan Altan, Soo-Ik Oh, and Harold L. Gegel. Metal Forming: Fundamentals and Applications (Metals Park, Ohio: American Society of Metals, 1983), pp 305.

13. Lilly, pp. 5.

14. Thomas M. Rohan, "A Craft is Shaken Up: New Look in Auto Diemaking Cuts Time, Costs," Industry Week, 4 March 1985, pp. 32.

15. Jack Swartz, Tour of Superior Tool and Die, Columbus, Ohio, September 1989.

16. Altan, pp. 302.

17. Rohan, pp. 33.

18. K. Saito and T. Miyoshi, "Dual-Axis Micro-Grinding Tool Finishing the Free-Form Metal Surface of a Mold Cavity," Proceedings of the 5th International Conference of Production Engineering, Tokyo, Japan, 1984, pp. 275.

19. Mike Morrison, Tour of Superior Die Tool, Columbus, Ohio, September 1989.

20. V. A. Valetov. "Microgeometery of a Surface and its Operational Properties," Soviet Engineering Research, 6, No. 4 (1986), pp. 27.

21. Lilly, pp. 6.

22. Gesswein, Mold Polishing Fundamentals for Beginners, pp. III-3.

23. M. Weber, "The Design and Processes of an Automatic Die Finishing System," Masters Thesis, Rensselaer Polytechnic Institute, Troy, New York, August 1986, pp. 7.

24. Swartz.

25. Rod Brittenham, "The Use of Electro Discharge Machining for Die and Mold Manufacture," unpublished paper at Ohio State University, Columbus, Ohio, 1989, Appendix F.

26. U. Baumgartner, "ED Sinking-Polishing in Toolmaking," Industrial And Production Engineering, July 1985, pp. 64.

27. Gesswein, Mold Polishing Fundamentals for Beginners, pp. III-9.

28. Ibid., pp. III-7.

29. Lilly, pp. 68.

30. Standard Abrasives - The Leader in Specialty Abrasives, Catalog No. SA 1989 (Chatsworth, California: Standard Abrasives, 1989), pp. 9, 11, and 14.

31. Gesswein, Gesswein Catalog No. 39 (Bridgeport, Connecticut: Gesswein, 1987). pp. 5.

32. Gesswein, Mold Polishing Fundamentals for Beginners, pp. III-25.

33. Ibid., pp. III-10.

34. Ibid., pp. III-5 and III-6.

35. Ibid., pp. V-2 and V-3.

36. Davis.

37. Joe Saad, "High-Production Polishing and Buffing," Products Finishing, January 1980, pp. 34.

38. Fred Johnson, Personal phone call to Nu-Matic Grinders, Cleveland, Ohio, August 1989.

39. Gesswein, Mold Polishing Fundamentals for Beginners, pp. V-3.

40. Ibid., pp. III-27.

41. Davis.

42. Gesswein, Mold Polishing Fundamentals for Beginners, pp. VI-6.

43. Gesswein, Finishing Stones, Poster, (Bridgeport, Connecticut: Gesswein, 1987).

44. Gesswein, Mold Polishing Fundamentals for Beginners, pp. VI-1 and VI-2.

45. Ibid., pp. VI-2.

46. Peter Wortendyke, Personal phone call to G.E. Superabrasives, Columbus, Ohio, July 1989.

47. L. K. Gillespie, Deburring Technology for Improved Manufacturing (Dearborn, Michigan: Society of Manufacturing Engineers, 1981), pp. 359-360.

48. G. E. Superabrasives, Micron Powders: General Electric Superabrasives for Grinding, Lapping and Polishing, G. E. Superabrasives Catalog No. SMD 41-476(714) (Columbus, Ohio: G. E. Superabrasives).

49. Gillespie, pp. 367.

50. Serope Kalpakjian, Manufacturing Processes for Engineering Materials (Reading, Massachusetts: Addison-Wesley, 1984), pp. 563.

51. Ibid., pp. 562.

52. E. Rabinowicz, "The Nature of Polished and Burnished Surfaces, Proceedings of the 1973 International Conference on Surface Technology (Dearborn, Michigan: Society of Manufacturing Engineers, 1973), pp. 24.

53. R. L. Aghan and L. E. Samuels, "Mechanisms of Abrasive Polishing," Wear, 16, 1970, pp. 293.

54. E. Rabinowicz, "On the Mechanism of Polishing With Abrasives," Wear, 18, No. 2 (August 1971), pp. 170.

55. Lilly, pp. 2.

56. Norman J. Brown, "Some Speculations on the Mechanisms of Abrasive Grinding and Polishing," Precision Engineering, 9, No. 3 (July 1987), pp. 129.

57. Ibid.

58. Lilly, pp. 5.

59. Nako, Personal phone call to AIDA USA, Elk Grove Village, Illinois, August 1989.

60. Lilly, pp. 12.

61. Aida Engineering Ltd., Aida Die Polisher DPR-5, Aida Engineering, Ltd. Catalog No. 850810.SI, (Sagamihara City, Japan, 1985).

62. Ibid.

63. Ibid.

64. Komatsu, pp. 6/9.

65. Ibid.

66. Ibid.

67. Tom Anderson, Personal phone call to Charmilles Technologies Corporation, Mount Prospect, Illinois, September 1989.

68. Showa Precision Machinery, Robo-Polisher, Model SMR-100, Showa Precision Machinery Catalog No. August 88-4000, (Amagasaki, Japan, August 1988).

69. Ibid.

70. Ibid.

71. Ibid.

72. Ibid.

73. Anderson.

74. K. Noto, T. Kawai, and M. Watanabe, Die Polishing Machine (Tokyo, Japan: Hitachi), pp. 4.

75. K. Noto and T. Kawai, United States Patent No. 4,268,999 (Tokyo, Japan: Hitachi, Limited, 26 May 1981), col. 2.

76. Noto, Kawai, and Watanabe, Die Polishing Machine, pp. 2.

77. Noto, Kawai and Watanabe, Die Polishing Machine, pp. 3.

78. Noto and Kawai, United States Patent No. 4,268,999.

79. Noto, Kawai and Watanabe, Die Polishing Machine, pp. 2.

80. Noto and Kawai, United States Patent No. 4,268,999, col. 9.

81. Ibid., sheet 10.

82. Ibid.

83. Noto, Kawai and Watanabe, Die polishing Machine, pp. 1.

84. K. Noto, T. Kawai, and M. Watanabe, "The Effect of Tool Oscillation on the Characteristics of Curved Surface Polishing, Annals of the CIRP, 31, No. 1 (1982), pp. 230.

85. Nagase Machinery Corporation, Mould and Die Polishing Machine - Flex Polisher, Nagase Machinery Corporation Catalog No. OK 87102000 (Gifu, Japan).

86. Ibid.

87. Ibid.

88. Ibid.

89. Ibid.

90. Ibid.

91. John Kuieck, Personal phone call to Prime Technology, Inc., Grand Rapids, Michigan, 20 October 1989.

92. Ibid.

93. Ibid.

94. Seva, Seva Polishing Machine, Seva Catalog, France.

95. Ibid.

96. Ibid.

97. Ibid.

98. Ibid.

99. Ibid.

100. Ibid.

101. Ibid.

102. Ibid.

103. Ibid.

104. Ibid.

105. Milross Controls, Inc., Milross Automated Mold Polishing System, Milross Controls, Inc., Catalog No. 4/87-5M (Southampton, Pennsylvania, 1987).

106. Ysohihiko Ono, United States Patent No. 4,563,837, (Kanagawa, Japan: Tokiwa Seiki Industrial Company, Ltd., 14 January 1986), col. 2.

107. Ibid.

108. Milross Controls, Inc.

109. Ibid.

110. Ibid.

111. Ibid.

112. Ibid.

113. "Automation Speeds Mold Polishing Frees Up Skilled Moldmakers," Plastics Technology, June 1988, pp. 21.

114. Masanori Kunieda and Takeo Nakagawa. "Robot-Polishing of Curved Surface with Magneto-Pressed Tool and Magnetic Force Sensor," Proceedings of the 25th International Machine Tool Design and Research Conference Birmingham, England, 22 - 24 April 1985, pp. 193.

115. K. Srinivasan, Robot Assisted Die Polishing (A Progress Report), Report No. ERC/NSM-88-36 (Columbus, Ohio: Engineering Research Center for Net Shape Manufacturing, Ohio State University, October 1988), pp. 27.

116. Matthew T. Mason, "Compliance and Force Control for Computer Controlled Manipulators," IEEE Transactions on Systems, Man and Cybernetics, SMC-11, No. 6 (1981), pp. 418.

117. L. K. Gillespie, "Deburring Capabilities and Limitations," Society of Manufacturing Engineering (Dearborn, Michigan: Society of Manufacturing Engineers, 1976), pp. 300.

118. Proportion-Air, Inc. Operating Instructions for Proportion-Air Valve (McCordsville, Indiana: Proportion-Air, Inc.), pp. 18.

119. Master Chemical Corporation, Trim Sol product container (Perrysburg Ohio: Master Chemical Corporation).

120. George E. P. Box, William G. Hunter, and J. Stuart Hunter, Statistics for Experimenters: An Introduction to Design, Data Analysis, and Model Building (New York: John Wiley and Sons, 1978), pp. 306.

121. Ibid., pp 323.

122. Saito and Miyoshi, pp. 275.

APPENDIX A SURFACE QUALITY PARAMETERS

There are over 50 different parameters available to describe surface finish.[1] Some these are: R_a, arithmetic average; R_q, root mean square; R_y, maximum peak to valley height; R_z, average distance between the five highest peaks and the five deepest valleys; t_p, bearing length ratio; and P_c, peak count. The profilometer used in this experimentation is capable of measuring these six parameters.* However, for this thesis, the bearing length ratio and peak count are not used.

The most commonly used parameter, R_a, can mathematically be represented by the following formula:

$$R_a = 1/L \int_0^L | y | \, dx$$

where y is the distance from the centerline.[2]

R_z is also known as the "ten-point height." This

---

* According to V.A. Valetov these may not even be enough. For a full description of the microgeometry of a surface may require 3-15 criteria.

parameter is "measured from a line parallel to the mean line and not crossing the roughness profile."[3]

The P_c parameter is valuable since it measures the number of "profile excursions through a selected bandwidth symmetrical to the mean line in a one-inch or one-centimeter length"[4] which is helpful in understanding the number of peaks.

R_q "is more sensitive to occasional peaks and valleys, making it a valuable complement to R_a. While R_a is the arithmetic average, R_q is the geometric average height of roughness component irregularities measured from the mean line within the sampling length."[5]

R_y is similar to R_{max}, R_t, R_{tm} in its ability to measure the maximum peak-to-valley height parallel from the mean line. It is the "most sensitive indicator of high peaks and deep scratches."[6] Which is fortunate because arguments have been made that R_a may not adequately describe the surface.[7] As Figure 19 shows, a surface may be less desirable yet have the same R_a value.

As can be seen, the top portion of Figure 21 presents a more desireable surface. In this case:

> The result will be a secure, durable assembly, assuring a long, trouble-free life. The surface in Example "B," however, indicates that there will be much less surface contact area with the bearing. The peaks will deform slightly during assembly.

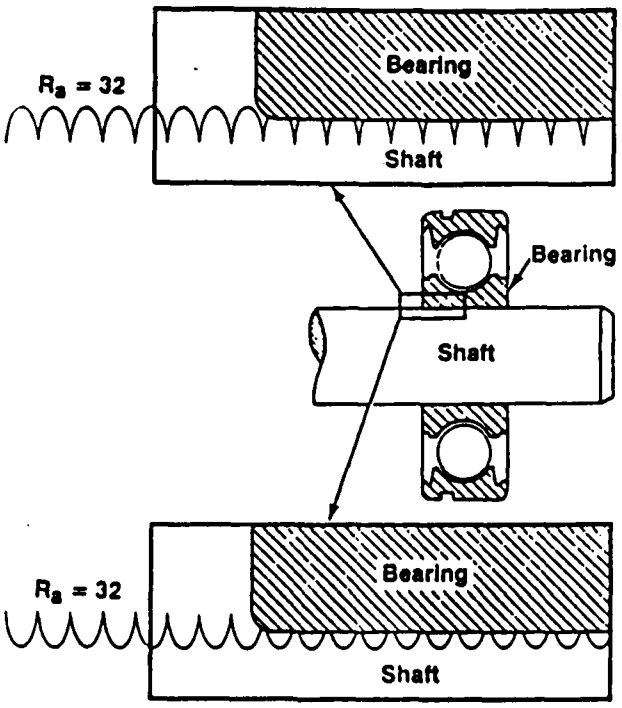

Figure 21 Surface Comparison[8]

> The initial tight fit will gradually loosen in use, causing premature failure.[9]

Hence, the commonly used R_a and root mean square (rms) do not adequately describe a surface finish as functionally acceptable. For this reason, Hull used additional parameters to describe die surfaces.[10] However, this thesis is not a discussion of the merits of R_a. Hence, this thesis will use R_a as the performance measure, but will provide the other parameters for use in data analysis, as appropriate.

END NOTES

1. Alex Tabenkin, "Understanding Surface Finish," Production, 93, No. 4 (April 1984), pp. 62.

2. Federal Products Corporation, Operating Instructions for Surfanalyzer System 4000 (Providence, Rhode Island: Federal Products Corporation), pp. 1-4.

3. Ibid., pp. 1-8 - 1-9.

4. Ibid., pp. 1-10.

5. Ibid., pp. 1-7.

6. Ibid., pp. 1-8.

7. J. Hull, "Die Surface Measurement and Analysis," Master Thesis, Rensselaer Polytechnic Institute, Troy, New York, August 1986, pp. 17.

8. Federal Products Corporation, pp. 1-6.

9. Tabenkin, pp. 60.

10. Hull, pp. 17.

APPENDIX B SOURCES OF SUPPLIES

This appendix contains sources of supplies to aid in future research in automating die and mold polishing.

1. ABRASIVES

1.1 Abrasive Tools

1.1.1 Standard Abrasives Corporation
9351 Deering Avenue
Chatsworth, California 91311
(818) 718 - 7070
Fax (818) 718 - 1171
Orders (800) 423 - 5444
Product: Wide range of abrasive products

Local Representative: Steve Byorth
All City Parts
1417 Oakland Park
Columbus, Ohio 43224
(614) 267 - 8304

1.1.2. Abrasives, Inc.
4936 Kendrich Street
Grand Rapids, Michigan 49508
(616) 942 - 8955
Fax (616) 942 - 2108
Product: Distributor of tooling

Point of Contact: Howard Frishman
4936 Kendrich SE
Grand Rapids, Michigan 49508
(616) 942 - 8955

1.1.3. Sterling Abrasive Products Company
Mounted Wheel Division
13182 38th Street North
Clearwater, Florida 34622
(813) 577 - 5435
(800) 334 - 5817 (except Florida)
Product: Mounted points and wheels

Local Representative: Steve Byorth
All City Parts
1417 Oakland Park
Columbus, Ohio 43224
(614) 267 - 8304

1.2. Brush Manufacturers

1.2.1. 3 - M Bldg Service and Cleaning Products Division
3 - M Center
St. Paul, Minnesota 55144 - 1000
Product: Scotch - Brite Surface Conditioning

Local Representative: Michael J. Delaney
Ross - Willoughby Company
Industrial Division
1400 Goodale Blvd
Columbus, Ohio 43212
Sales (614) 486 - 4311

Ohio Wats (800) 282 - 8979
Fax (614) 486 - 7331

1.2.2. Herold Industrial Brushes
Herold - Partco Manufacturing, Inc.
5310 I - West 161st
P.O. Box 9870
Cleveland, Ohio 44142
(216) 267 - 8600
Fax (216) 267 - 5161
Product: Industrial brushes

1.2.3. OSBORN Manufacturing
5401 Hamilton Avenue
Cleveland, Ohio 44114 - 3997
(216) 361 - 1900
Fax (216) 361 - 1913
Product: Power brushes

Local Representative: (513) 421 - 6207

1.2.4. Danline, Inc.
137 North Michigan Avenue
Kenilworth, New Jersey 07033
(201) 245 - 5900
(800) 552 - 7874
Product: Brushes

1.2.5. IBC - Industrial Brush Corporation
P.O. Box 2608
Pomona, California 91769
(714) 591 - 9341
(800) 228 - 6146 (except California)
Fax (714) 627 - 8916
Product: Industrial brushes

1.3. Die and Moldmaker Tools

1.3.1. Gesswein
Main Office
P.O. Box 3998
255 Hancock Avenue
Bridgeport, Connecticut 06605
(203) 366 - 5400
Fax (203) 366 - 3953
Product: Wide range of tools

West Coast Office
876 West Wilson Avenue
Glendale, California 91203
(818) 240 - 7113

Orders (800) 243 - 4466
(800) 232 - 2311 (except California)
(800) 243 - 1204 (AK, AZ, HI, NV, OR, WA)

1.3.2. D-M-E Company
World Headquarters
29111 Stephenson Highway
Madison Heights (Detroit), Michigan 48071
(313) 398 - 6000
Fax (313) 398 - 6000 Ext 375
General U. S. Sales Fax (313) 398 - 6174
Product: Wide range of tools

Local Representative: Mo Spees
D-M-E Company
558 Leo Street
Dayton, Ohio 45404
(513) 461 - 3980

1.4. Compounds

1.4.1. General Electric Company
6325 Huntley Road
P.O. Box 568
Worthington, Ohio 43085
(614) 438 - 2448
Fax (614) 438 - 2888
Product: Micron powders

Point of Contact: Peter Wortendyke
(614) 438 - 2448

1.4.2. Engis Corporation
Hyprez Division
8035 Austin Avenue
Morton Grove, Illinois 60053
(312) 966 - 5600
Product: Diamond compounds and equipment

2. DIE/MOLD POLISHING MACHINES

2.1. Aida Engineering, Ltd.
2-10, Ohyama-Cho
Sagamihara City
Kanagawa - Pref. 229
Japan
Phone 0427 - 72 - 5231
Fax 0427 - 58 - 1169

2.2. Tokiwa Seiki
Industrial Company, Ltd.
Kanagawa, Japan

U.S. Distributor: Milross Controls, Inc.
Mold Polishing Department
511 Second Street Pike
Southampton, Pennsylvania 18966
(215) 355 - 0200
(800) 541 - 9944 (except PA)
Fax (215) 355 - 6326

2.3. Showa Precision Machinery Company, Ltd.
Amagasaki, Japan

U.S. Distributor: Methods Machinery Company
140 Rockside Center
5990 West Creek Road
Cleveland, Ohio 44131 - 2153
(216) 642 - 8830
Fax (216) 642 - 8831

Importer: Charmilles Technologies Corp. of America
555 Business Center Drive
Mount Prospect, Illinois 60056
(312) 699 - 8840
Point of Contact: Tom Anderson

2.4. Seva PAM
BP 176_71 105 Chalon_Sur_Saone
Cedex France
Phone: 85.46.80.26

U.S. Distributor: Souillac Industries
7575 Trans - Canada
Rm 305
St Laurent, Quebec
Canada H4T 1V6

Point of Contact: Patrice Souillac
(514) 337 - 0980

2.5. Hitachi, Ltd.
Production Engineering Research Laboratory
292 Yoshida - Machi, Totsuka - Ku
Yokohama 244, Japan
Phone: Yokohama (045) 881 - 1241

2.6. Nagase Machinery Corporation
Gifu, Japan

Export Agent: Pioneer Trading Company
1 - 88 - 2 Okawa, Akanabe
Gifu City 500, Japan
Fax: 0582 - 73 - 7102

U.S. Point of Contact: Prime Technology, Inc.
4936 Kendrich SE
Grand Rapids, Michigan 49508
(616) 942 - 2104
(800) 882 - 8196
Fax (616) 942 - 2108

3. PNEUMATIC EQUIPMENT

3.1. American Pneumatic Cylinders
American Cylinder Company
Peotone, Illinois 60468
(312) 258 - 3935
Fax (312) 258 - 3980
Product: Cylinders

Local Representative: Erich South
Mosier Fluid Power
2220 West Dorothy Lane
Dayton, Ohio 45439
Columbus No. (614) 228 - 3428
Fax (513) 293 - 1846

3.2. Mosier Industries, Inc.
325 Carr Drive
P.O. Box 189
Brookville, Ohio 45309
(513) 833 - 4033
Fax (513) 833 - 4205
Product: Cylinders, brakes, and valves

Local Representative: Erich South
Mosier Fluid Power
2220 West Dorothy Lane
Dayton, Ohio 45439
Columbus No. (614) 228 - 3428
Fax (513) 293 - 1846

3.3. Humphrey Products Company
P.O. Box 2008
Kalamazoo, Michigan 49003
(616) 381 - 5500
Fax (616) 381 - 4113
Product: Valves and cylinders

Local Representative: Eagle Equipment Corporation
666 Brooksedge Blvd.
Westerville, Ohio 43081
(614) 882 - 9200

3.4. Parker
Pneumatic Division
Otsego, Michigan 49078
Product: Valves, cylinders and regulators

Local Representative: Eagle Equipment Corporation
666 Brooksedge Blvd.
Westerville, Ohio 43081
(614) 882 - 9200

3.5. Rockwell Tools
Product: Various tools including driller/tapper

Local Representative: Buckeye Tool Dayton
(513) 299 - 3579

3.6. Gardner Denver
A Cooper Industries Division
Cooper Air Tools
P.O. Box 1410
Lexington, South Carolina 29072

Local Representative: Erich South
Mosier Fluid Power
2220 West Dorothy Lane
Dayton, Ohio 45439
Columbus No. (614) 228 - 3428
Fax (513) 293 - 1846

3.7. Dotco
A Cooper Industries Division
P.O. Box 182
Hicksville, Ohio 43526
(419) 542 - 7711

Local Representative: Erich South
Mosier Fluid Power
2220 West Dorothy Lane
Dayton, Ohio 45439
Columbus No. (614) 228 - 3428
Fax (513) 293 - 1846

3.8. Norgren
5400 South Delaware
Littleton, Colorado 80120 - 1663
(303) 794 - 2611
Fax (303) 795 - 9487
Product: Fittings, controls, misc equipment

Local Representative: Erich South
Mosier Fluid Power
2220 West Dorothy Lane
Dayton, Ohio 45439
Columbus No. (614) 228 - 3428
Fax (513) 293 - 1846

3.9. Proportion Air, Inc.
One Proportion-Air Drive
McCordsville, Indiana 46055
(317) 335 - 2602
Fax (317) 335 - 3853
Product: Proportion-Air Valves

Local Distributor: B. W. Rogers Company
Akron, Ohio
(216) 762 - 0251

4. ELECTRICAL/ELECTRONIC EQUIPMENT

4.1. Omron Electronics, Inc.
One East Commerce Drive
Schaumburg, Illinois 60173
(708) 843 - 7900
Fax (708) 843 - 7787
Product: Misc controls, programmable controllers

Local Representative: Erich South
Mosier Fluid Power
2220 West Dorothy Lane
Dayton, Ohio 45439
Columbus No. (614) 228 - 3428
Fax (513) 293 - 1846

4.2. Micro Switch
Freeport, Illinois 61032
(815) 235 - 6600
Product: Misc controls, switches, etc.

Local Representative: Eagle Equipment Corporation
666 Brooksedge Blvd.
Westerville, Ohio 43081
(614) 882 - 9200

4.3. Kistler Instrument Corporation
75 John Glenn Drive
Amherst, New York 14120
(716) 691 - 5100
Product: Dynamometer
Point of Contact: Jim Thorpe

Local Representative: WKM Associates
Dayton, Ohio
(513) 434 - 7500

4.4. Federal Products Corporation
1144 Eddy Street
P.O. Box 9400
Providence, Rhode Island 02940 - 9400
(401) 781 - 9300
Fax (401) 941 - 5280
Product: Profilometer

Local Representative: Jim Ehault
Federal Products Corporation
9772 Princeton Road
Cincinnati, Ohio 45246
(513) 874 - 0815

4.5. Standard Power
Acme Electric
Power Products Group
Salt Lake City, Utah
Product: Power supplies

5. OHIO STATE UNIVERSITY SERVICES

5.1. Thin Section Laboratory
Rm 239 Fontana
Ohio State University
Columbus, Ohio
Point of Contact: Curtis Lay
Phone: (614) 292 - 9751
Service: Diamond bladed saw for cutting stones

BIBLIOGRAPHY

Aghan, R. L. and L. E. Samuels. "Mechanisms of Abrasive Polishing." Wear, 1970, pp. 293-301.

Aida Die Polisher DPR - 5. Aida Engineering, Ltd. Catalog No. 850810.SI. Sagamihara City, Japan: Aida Engineering, Ltd. 1985.

Altan, Taylan, Soo-Ik Oh, and Harold L. Gegel. Metal Forming: Fundamentals and Applications. Metals Park, Ohio: American Society of Metals, 1983.

"Automation Speeds Mold Polishing Frees Up Skilled Moldmakers." Plastics Technology, June 1988, pp. 21-23.

Baumgartner, U. "ED Sinking-Polishing in Toolmaking." Industrial and Production Engineering, July 1985, pp. 64-70.

Box, George E. P., William G. Hunter and J. Stuart Hunter. Statistics for Experimenters: An Introduction to Design, Data Analysis, and Model Building. New York: John Wiley and Sons, 1978.

Brittenham, Rodney K. "The Use of Electro Discharge Machining for Die and Mold Manufacture." Unpublished paper. Ohio State University, 1989.

Brown, Norman J. "Some Speculations on the Mechanisms of Abrasive Grinding and Polishing." Precision Engineering, 9, No. 3 (July 1987), pp. 129-138.

Gesswein. Mold Polishing Fundamentals for Beginners (Bridgeport, Connecticut: Paul H. Gesswein & Company, Inc., 1985).

Gesswein. Catalog No. 39. Bridgeport, Connecticut: Gesswein, 1987.

Gillespie, L. K. Deburring Capabilities and Limitations. Dearborn, Michigan: Society of Manufacturing Engineers, 1976.

Gillespie, L. K. Deburring Technology for Improved Manufacturing. Dearborn, Michigan: Society of Manufacturing Engineers, 1981.

Hull, J. "Die Surface Measurement and Analysis." Masters Thesis. Rensselaer Polytechnic Institute, August 1986.

Kalpakjian, Serope. Manufacturing Processes for Engineering Materials. Reading, Massachusetts: Addison-Wesley, 1984.

Kazerooni, H. and J. Guo. "Design and Control of the Active Compliant End Effector." Proceedings of the 1987 American Control Conference, vol. 2 (10 - 12 June 1977).

Kazerooni, H., P. K. Houpt and T. B. Sheridan. "Design Method for Robust Compliant Motion for Manipulators." Proceedings of the 1987 American Control Conference, vol. 2 (10 - 12 June 1977).

Komatsu, Isamu. Polishing Robot for Die and Mold.

Kunieda, Masanori and Takeo Nakagawa. "Robot Polishing of Curved Surface with Magneto-Pressed Tool and Magnetic Force Sensor." Proceedings of the 25th International Machine Tool Design and Research Conference. Birmingham, England, 22 - 24 April 1985, pp. 193 - 200.

Kunieda, Masanori, Toshiro Higuchi and Takeo Nakagawa. "Curved Surface Polishing Robot Installed with a Magnetically Pressed Polishing Tool." Bulletin of Japanese Society of Precision Engineering, 19, No. 1 (March 1985), pp. 69-70.

Kunieda, Masanori, Toshiro Higuchi and Takeo Nakagawa. "Development of a Polishing Robot for Free Form Surface." Proceedings of the 5th International Conference on Production Engineering, March 1985, pp. 265-272.

Lilly, Blaine W. Preliminary Studies in Automated Finishing of Dies and Molds. Engineering Research Center for Net Shape Manufacturing Report No. ERC/NSM-87-10. Columbus, Ohio: ERC/NSM, Ohio State University, August 1987.

Mason, Matthew T. "Compliance and Force Control for Computer Controlled Manipulators." IEEE Transactions on Systems, Man and Cybernetics, SMC-11, No. 6 (1981), pp. 418-432.

McCoy, Danny C. and Atlas Hsie. "Robot Applications in Buffing, Polishing, Grinding and Deburring." Robots 8 Conference, Society of Manufacturing Engineers Report No. MS84-360, June 1984, pp. 1-12.

McDonald, Anthony C. Robot Technology: Theory, Design and Applications. Englewood Cliffs, New Jersey: Prentice-Hall, 1986.

Micron Powders: General Electric Superabrasives for Grinding, Lapping, and Polishing. G. E. Superabrasives Catalog No. SMD 41-476(714). Columbus, Ohio: G. E. Superabrasives.

Milross Automated Mold Polishing System. Milross Controls, Inc., Catalog No. 4/87-5M. Southampton, Pennsylvania, 1987.

Mould and Die Polishing Machine - Flex Polisher. Nagase Machinery Corporation Catalog No. OK87102000. Gifu, Japan: Nagase Machinery Corporation.

Mould and Die Polishing Machine - Flex Polisher. Nagase Machinery Corporation Catalog No. OK 87102000. Gifu, Japan: Nagase Machinery Corporation.

Noto, K., T. Kawai and M. Watanabe. Die Polishing Machine. Tokyo, Japan: Hitachi.

Noto K., T. Kawai and M. Watanabe. "The Effect of Tool Oscillation on the Characteristics of Curved Surface Polishing." Annals of the CIRP, 31, No. 1 (1982), pp. 275-276.

Noto K., T. Kawai and M. Watanabe. "Tool Oscillation on Tilt Angle Control for Curved Surface Polishing." Bulletin of Japanese Society of Precision Engineering, 15, No. 4 (December 1981), pp. 229-232.

Noto, K. and T. Kawai. United States Patent No. 4,268,999. Tokyo, Japan: Hitachi, 26 May 1981.

Ono, Ysohihiko. United States Patent No. 4,563,837. Kanagawa, Japan: Tokiwa Seiki Industrial Company, Ltd., 14 January 1986.

Operating Instructions for Surfanalyzer System 4000. Providence, Rhode Island: Federal Products Corporation.

Pillon, Marcel O. United States Patent No. 4,197,786. Nancy, France: Pont-A-Mousson SA, 15 April 1980.

Rabinowicz, E. "The Nature of Polished and Burnished Surfaces." Proceedings of the 1973 International Conference on Surface Technology, 1973, pp. 23-38.

Rabinowicz, E. "On the Mechanism of Polishing With Abrasives." Wear, 18, No. 2 (1971), pp. 169-170.

Robo-Polisher, Model SMR-100. Showa Precision Machinery Catalog No. August 88-4000. Amagasaki, Japan: Showa Precision Machinery, August 1988.

Rohan, Thomas M. "A Craft is Shaken Up: New Look in Auto Diemaking Cuts Time, Costs." Industry Week, 4 March 1985, pp. 32-35.

Saad, Joe. "High Production Polishing and Buffing." Products Finishing, January 1980, pp. 34-41.

Saito, Katsumasa and Takashi Hiyoshi. "Dual-Axis Micro-Grinding Tool Finishing the Free-Form Metal Surface of a Mold Cavity." Proceedings of the 5th International Conference of Production Engineering, 1984, pp. 271-277.

Seva Polishing Machine. Seva Catalog. France: Seva.

Srinivasan, K. Robot Assisted Die Polishing (A Progress Report). Engineering Research Center for Net Shape Manufacturing Report No. ERC/NSM-88-36. Columbus, Ohio: ERC/NSM, Ohio State University, October 1988.

Standard Abrasives - The Leader in Specialty Abrasives. Standard Abrasives Catalog No. SA 1989. Chatsworth, California: Standard Abrasives, 1989.

Tabenkin, Alex. "Understanding Surface Finish." Production, 93, No. 4 (April 1984), pp. 60-62.

Valetov, V. A. "Microgeometry of a Surface and its Operational Properties." Soviet Engineering Research, 6, No. 4 (1986), pp. 26-28.

Weber, M. "The Design and Processes of an Automatic Die Finishing System." Masters Thesis. Rensselaer Polytechnic Institute, August 1989.

Whitney, D. E. "Force Feedback Control of Manipulator Fine Motion." American Society of Mechanical Engineering Journal of Dynamic Systems Measurement and Control, 1977, pp. 91-97.

Whitney, D. E. "Historical Prospective and State of the Art in Robot Force Control." 1985 IEEE Conference on Robotics and Automation, 1985, pp. 262-268.

Whitney, D. E. and J. L. Nevins. "What is the Remote Center Compliance (RCC) and What Can It Do?" 9th International Symposium on Industrial Robots, 12 -15 March 1979, pp. 135 -152.