(4)

MARYLAND

COLLEGE PARK CAMPUS

THE PLATE PARADOX FOR HARD AND SOFT SIMPLE SUPPORT

AD-A207 800

I. Babuška
Institute for Physical Science and Technology
and
Department of Mathematics
University of Maryland
College Park, MD 20742

and

J. Pitkaranta
Department of Mathematics
University of Maryland
College Park, MD 20742
and
Institute of Mathematics, Helsinki
University of Technology
SF-02150
Finland

MD88-34-IB-JP
TR88-34
BN-1082

DTIC
ELECTE
MAY 11 1989
S D
H

August 1988

INSTITUTE FOR PHYSICAL SCIENCE AND TECHNOLOGY

SECURITY CLASSIFICATION OF THIS PAGE (When Data Entered)

REPORT DOCUMENTATION PAGE

READ INSTRUCTIONS BEFORE COMPLETING FORM

1. REPORT NUMBER
BN-1082

2. GOVT ACCESSION NO.

3. RECIPIENT'S CATALOG NUMBER

4. TITLE (and Subtitle)
The Plate Paradox for Hard and Soft Simple Support

5. TYPE OF REPORT & PERIOD COVERED
Final life of the contract

6. PERFORMING ORG. REPORT NUMBER

7. AUTHOR(s)
I. Babuska[1] and J. Pitkaranta

8. CONTRACT OR GRANT NUMBER(s)
[1]ONR N00014-85-K0169
NSF DMS-85-16191

9. PERFORMING ORGANIZATION NAME AND ADDRESS
Institute for Physical Science and Technology
University of Maryland
College Park, MD 20742

10. PROGRAM ELEMENT, PROJECT, TASK AREA & WORK UNIT NUMBERS

11. CONTROLLING OFFICE NAME AND ADDRESS
Department of the Navy
Office of Naval Research
Arlington, VA 22217

12. REPORT DATE
August 1988

13. NUMBER OF PAGES
50

14. MONITORING AGENCY NAME & ADDRESS (if different from Controlling Office)

15. SECURITY CLASS. (of this report)

15a. DECLASSIFICATION/DOWNGRADING SCHEDULE

16. DISTRIBUTION STATEMENT (of this Report)

Approved for public release: distribution unlimited

17. DISTRIBUTION STATEMENT (of the abstract entered in Block 20, if different from Report)

18. SUPPLEMENTARY NOTES

19. KEY WORDS (Continue on reverse side if necessary and identify by block number)

20. ABSTRACT (Continue on reverse side if necessary and identify by block number)

The paper studies the plate bending problem with hard and soft simple support. It shows that in case of hard support, the plate paradox that is known to occur in the Kirchhoff model is also present in the three-dimensional model and the Reissner-Mindlin model. The paradox consists of the fact that on a sequence of convex polygonal domains converging to a circle, the solutions of the corresponding plate bending problems with a fixed uniform load to not converge to the solution of the limit problem. The paper also shows that the paradox is not present when soft simple support is assumed. Some practicel aspects are briefly discussed.

DD FORM 1 JAN 73 1473 EDITION OF 1 NOV 65 IS OBSOLETE
S/N 0102-LF-014-6601

SECURITY CLASSIFICATION OF THIS PAGE (When Data Entered)

THE PLATE PARADOX FOR HARD AND SOFT SIMPLE SUPPORT

by

I. Babuška[1]
Institute for Physical Science and Technology
and
Department of Mathematics
University of Maryland
College Park, MD 20742

and

J. Pitkäranta[2]
Department of Mathematics
University of Maryland
College Park, MD 20742
and
Institute of Mathematics, Helsinki
University of Technology
SF-02150 Espoo
Finland

MD88-34-IB-JP
TR88-34
BN-1082
August 1988

[1]Partially supported by the Office of Naval Research under Contract N00014-85-K0169 and by the National Science Foundation under Grant DMS-85-16191.

[2]Supported by the Finnish Academy and Department of Mathematics, University of Maryland.

Abstract

The paper studies the plate bending problem with hard and soft simple support. It shows that in case of hard support, the plate paradox that is known to occur in the Kirchhoff model is also present in the three-dimensional model and the Reissner-Mindlin model. The paradox consists of the fact that on a sequence of convex polygonal domains converging to a circle, the solutions of the corresponding plate bending problems with a fixed uniform load do not converge to the solution of the limit problem. The paper also shows that the paradox is not present when soft simple support is assumed. Some practical aspects are briefly discussed.

Accession For

A-1

1. Introduction.

The Kirchhoff model of a plate is usually accepted as a good approximation to the three-dimensional model for thin plates. In the case of simply supported polygonal plates, however, the Kirchhoff model is known to suffer from unphysical phenomena that can lead to a large error of the model in some situations. In particular, the following paradox, referred to as the plate paradox below, occurs [2], [4]: Consider a sequence $\{\omega_n\}$ of convex polygonal domains approaching a circle. For each n let w_n be the transverse deflection corresponding to the Kirchhoff model of the plate bending problem where the plate occupies the region ω_n, is simply supported on $\partial\omega_n$ and is subject to a uniform load $p(x) \equiv 1$. Further, let w_c be the solution to the limit problem, i.e., that on the circle. Then as $n \to \infty$, the sequence $\{w_n\}$ converges pointwise, but the limit w_∞ is different from w_c. For example, at the center of the circle the error of w_∞ is about 40%. Some other related plate paradoxes are given by Mazja [14], [14]. Practical implications occur for example in the finite element method when the domain is approximated by a polygon with the side length $h \to 0$. For further aspects see also [8], [18], [21], [23], [25].

It is often assumed that the plate paradox is caused by the assumption of vanishing vertical shear strains that is implicit in the Kirchhoff model. This was supported e.g. by a note (see [3]) that the paradox is not present when the Reissner-Mindlin model instead of the Kirchhoff model is used. The aim of this paper is to locate the source of the paradox more precisely: We show that it is the way the <u>boundary conditions</u> are imposed in the Kirchhoff model that causes the paradox, and not the overall assumption of vanishing shear strains.

In the three-dimensional model of the plate, the boundary condition of

simple support is imposed typically by requiring that the vertical component of the displacement (or at least its average in the vertical direction) vanishes on the edge of the plate. On the other hand, in the Kirchhoff model one effectively imposes the more restrictive condition that all tangential displacements must vanish on the edge. Of course, it is possible to impose such "hard" boundary conditions also in other plate models, e.g. in the Reissner-Mindlin model (cf. [22]) or in the three-dimensional model itself. We show that in such a case, the plate paradox occurs in both the Reissner-Mindlin model and in the three-dimensional model. On the the other hand, we also show that the paradox does not occur in these models in case of "soft" support where only the vertical displacements are restricted on the edge of the plate. Hence, we are led to the conclusion that the paradox is caused by the hard boundary conditions which are intrinsic for the Kirchhoff model.

Our results are based upon energy estimates relating the three-dimensional model and the Reissner-Mindlin model to the Kirchhoff model. Such estimates can be derived by combining the energy and complementary energy principles associated to the plate bending problem, and they were in fact applied early by Morgenstern [16], [17], to prove that the Kirchhoff model is the correct asymptotic limit of the three-dimensional model as the thickness of the plate tends to zero. Although the assumption of a smooth domain is implicit in Morgenstern's work, one can easily extend the analysis techniques of [16] to more general situations. In particular, we show here that in a sequence of convex polygonal domains converging to a circle, the relative error of the Kirchhoff model, when compared to the three-dimensional model with hard support, is uniformly of order $O(h^{1/2})$ in the energy norm, where h is the thickness of the plate. Moreover, we show by similar techniques that the gap between Reissner-Mindlin and Kirchhoff models is uniformly of

order $\mathcal{O}(h)$ under the same assumptions. Finally, we show that on a smooth domain, the three models are at most $\mathcal{O}(h^{1/2})$ apart. Hence we conclude that the plate paradox must occur in the hard-support models if h is fixed and sufficiently small.

Let us mention that our results are in parallel with recent benchmark calculations [7]. These calculations confirm in particular that the error of the Kirchhoff model with respect to the three-dimensional model is primarily due to the assumed hard boundary conditions on simply supported polygonal plates. For example, in case of a uniformly loaded square plate of thickness h = side length/100, the relative error of the Kirchhoff model in energy norm is ~11% when compared to the three-dimensional model with soft support and ~2% when compared to the hard-support model [7]. This example also shows that the error of the Kirchhoff model may be quite large even for relatively thin plates of simple shape.

The above results show that imposing various boundary conditions that are seemingly close, such as the hard and soft simple support, can influence the solution in the entire domain and not only in the boundary layer. Very likely such effects occur also for other boundary conditions for both plates and shells. Therefore, since <u>any</u> boundary condition is anyway an idealization of reality, finding the "correct" boundary conditions is an important and sometimes difficult part of building a dimensionally reduced model. For example, it can happen that both the soft and hard simple support are poor approximations of the real "simple" support.

The plan of the paper is as follows. Section 2 gives the preliminaries and basic formulations of the plate problems. Section 3 elaborates on the variational formulations of the plate problems and presents various energy estimates. Section 4 addresses the problem of the plate paradox. Finally,

Appendices A, B, C present some auxiliary results needed in Sections 3 and 4.

2. Preliminaries.

Consider an elastic plate of thickness h which occupies the region $\Omega = \omega\times(-h/2,h/2)$ where $\omega \in \mathbb{R}^2$ is a Lipschitz bounded domain. We assume that the plate is subject to given normal tractions p (i.e., the load) on $\omega\times\{-h/2\}$ and $\omega\times\{h/2\}$ and that it is simply supported on $\partial\omega\times(-h/2,h/2)$ in such a way that if $\underline{u} = (u_1,u_2,u_3)$ is the displacement field, then

$$u_3(x) = 0, \quad x \in \partial\omega\times(-h/2,h/2) \tag{2.1}$$

and the other two conditions are natural boundary conditions describing homogenous (zero) components of tractions. This condition will be called later the soft simple support. Assuming for the moment that no other geometric boundary conditions other than (2.1) are imposed, the plate bending problem can be formulated as: Find the displacement field $\underline{u}_0$ which minimizes the quadratic functional of the total energy

$$F(\underline{u}) = \frac{1}{2}\int_\Omega \{\lambda(\operatorname{div}\underline{u})^2 + \mu\sum_{i,j=1}^{3}[\varepsilon_{ij}(\underline{u})]^2\}dx_1dx_2dx_3 - \int_\omega p\frac{1}{2}[u_3(\cdot,\tfrac{h}{2}) + u_3(\cdot,-\tfrac{h}{2})]dx_1dx_2 \tag{2.2}$$

in the Sobolev space $[H^1(\Omega)]^3$ under the boundary condition (2.1). Here $\underline{\varepsilon} = \{\varepsilon_{ij}\}_{i,j=1}^3$, $\varepsilon_{ij} = \frac{1}{2}\left(\frac{\partial u_i}{\partial x_j},\frac{\partial u_j}{\partial x_i}\right)$ is the strain tensor and λ and μ are the Lamé coefficients of the material, i.e.,

$$\lambda = \frac{E\nu}{(1+\nu)(1-2\nu)}, \quad \mu = \frac{E}{1+\nu},$$

where E is the Young modulus and ν is the Poisson ratio, $0 \le \nu \le 1/2$. We also assumed that the surface traction p is symmetrically distributed with regard to the planar surfaces of the plate, i.e., we consider a pure bending problem.

So far we have assumed a special model of the simple support based on simple geometric constraint (2.1). Of course, there are many other possibilities. We will discuss later another model - the hard simple support and discuss the effects of these models of the simple support on the solution.

It is well known that if $h/\mathrm{diam}(\omega)$ is small, the three-dimensional plate bending problem can be formulated in variuos dimensionally reduced forms, see e.g. [1], [11], [22]. We consider here two representatives of such formulations which are used in practice; the Kirchhoff model and the Reissner-Mindlin model (cf. [22] and he refences therein.

In general when ω is fixed and $h \to 0$ then the three-dimensional formulation and the dimensionally reduced models converge to the same limit, provided that the load p is appropriately scaled (see below). Hence for sufficiently thin plates the models give practically the same solutions. However, as will be seen later, what is "sufficiently thin" can depend strongly on ω, i.e., the convergence can be very slow in some situations.

In the Kirchhoff model, we approximate the three-dimensional solution as

$$\underline{u}_0(x_1,x_2,x_3) \cong -x_3 \frac{\partial w_K}{\partial x_1}(x_1,x_2), -x_3 \frac{\partial w_K}{\partial x_2}(x_1,x_2), w_K(x_1,x_2))$$

where w_K minimizes the energy

$$(2.3) \qquad F_K(w) = \frac{1}{2}\int_\omega \{\nu(\Delta w)^2 + (1-\nu)\sum_{i,j=1}^{2}\left(\frac{\partial^2 w}{\partial x_i \partial x_j}\right)^2\} dx_1 dx_2 - \int_\omega f w dx_1 dx_2$$

in the Sobolev space $H^2(\omega)$ under the boundary condition

(2.4) $$w = 0 \quad \text{on} \quad \partial\omega.$$

Here f is related to p as

(2.5) $$f = p/D, \quad D = \frac{Eh^3}{12(1-\nu^2)}.$$

When comparing different plate models with fixed ω and variable h we will assume below that f (and not p) is fixed. This assures that the different models have the same (non-trivial) limit as $h \to 0$. For example, defining the average transverse deflection in the three-dimensional model as

$$w_0 = \frac{1}{h}\int_{-h/2}^{h/2} u_3(\cdot, x_3)dx_3,$$

one can show (under fairly general assumptions on ω, see [10], [11], [16], [17] and section 3 below) that $\|w_0 - w_K\|_{L_2(\omega)} \to 0$ as $h \to 0$.

In the Reissner-Mindlin model, one approximates $\underline{u}_0$ by

$$\underline{u}_0(x_1, x_2, x_3) \approx (-x_3\theta_{R,1}(x_1, x_2), -x_3\theta_{R,2}(x_1, x_2), w_R(x_1, x_2))$$

where $(w_R, \underline{\theta}_R)$ minimizes the energy

(2.6) $$F_R(w, \underline{\theta}) = \frac{1}{2}\int_\omega \{\nu(\operatorname{div} \underline{\theta})^2 + (1-\nu)\sum_{i,j=1}^{2} [\varepsilon_{ij}(\underline{\theta})]^2\}dx_1dx_2$$
$$+ \frac{1}{2}(\kappa/h^2)\int_\omega |\underline{\theta} - \underline{\underline{\nabla}} w|^2 dx_1dx_2 - \int_\omega fw dx_1dx_2$$

in the Sobolev space $[H^1(\omega)]^3$ under the boundary condition (2.4). Here $\kappa = 6(1-\nu)\kappa_0$ where $\kappa_0 = O(1)$ is an additional shear correction factor which may take various values in practice.

We point out that the Kirchhoff approximation to $\underline{u}_0$ satisfies in addition to (2.1) the boundary condition

$$(2.7) \qquad (u_1 t_1 + u_2 t_2)(x) = 0, \quad x \in \partial\omega \times (-h/2, h/2),$$

where $\underline{t} = (t_1, t_2)$ denotes the tangent to $\partial\omega$. This suggests that one should also consider the original plate bending problem under such more restrictive geometric boundary conditions. Below we will refer to the boundary conditions (2.1), (2.7) and their counterpart in the Reissner-Mindlin model, i.e., (2.4) together with

$$(2.8) \qquad \theta_1 t_1 + \omega_2 t_2 = 0 \quad \text{on} \quad \partial\omega$$

as the hard simple support in contrast to the conditions (2.1), (2.4) which will be labeled as soft simple support. Hence when using the Kirchhoff model we have in mind the hard (and not soft) simple support. We will see later that the incapability of the Kirchhoff model to represent soft simple support can be a severe deficiency of the model on polygonal domains.

3. Variational formulations of the plate bending problem. Energy estimates.

In the first three subsections below and in the related Appendix A, we summarize first some basic characteristics of variational formalisms and energy principles associated to the plate bending problem in its various forms. These results are basically known, but we present them here for the reader's convenience. In subsection 3.4 we prove some energy estimates relating the Kirchhoff model to both the Reissner-Mindlin model and the three-dimensional model, using the results of the previous subsections.

We assume that the plate occupies the region $\Omega = \omega \times (-h/2, h/2)$ where ω is a Lipschitz bounded domain. Our particular interest is in the cases where ω is either a convex polygon or a smooth domain.

We denote by $H^s(\omega)$, resp. $H^s(\Omega)$, the usual Sobolev spaces with index $s > 0$. The seminorm and norm of the spaces $[H^s(\omega)]$ or $[H^s(\omega)]^k$ are denoted by $|\cdot|_{s,\omega}$ and $\|\cdot\|_{s,\omega}$, resp. $|\cdot|_{s,\Omega}$ and $\|\cdot\|_{s,\Omega}$. By $(\cdot,\cdot)$ we mean the inner product of $[L_2(\omega)]^k$ or $[L_2(\Omega)]^k$, and by $\langle\cdot,\cdot\rangle$ the pairing of a space and its dual. The dual space of $H_0^1(\omega)$ will be needed often below and is denoted by $H^{-1}(\omega)$.

3.1. The three-dimensional model.

Let us denote by N the space of horizontal rigid displacements of the plate:

$$N = \{(\alpha_1 x_1+\alpha_3 x_2,\ \alpha_2 x_2-\alpha_3 x_1, 0),\quad \alpha_i \in \mathbb{R},\quad i = 1,2,3\}.$$

We define the space of (geometrically) admissible displacements in case of soft simple support as

$$U = \{\underline{u} \in [H^1(\Omega)]^3 : u_3 = 0 \text{ on } \partial\omega\times(-h/2,h/2),\quad (\underline{u},\underline{v}) = 0 \quad \forall\ \underline{v} \in N\} \tag{3.1a}$$

and in case of hard simple support, as

$$\begin{aligned} U = \{\underline{u} \in [H^1(\Omega)]^3 : \ & u_3 = t_1u_1 + t_2u_2 = 0 \text{ on } \partial\omega\times(-h/2,h/2), \\ & (\underline{u},\underline{v}) = 0 \quad \forall\ \underline{v} \in N\}. \end{aligned} \tag{3.1b}$$

(For simplicity, we remove here all the horizontal rigid displacements also in case of hard support.) We let further $\mathcal{H}$ stand for the space of stress or strain tensors defined as

$$\mathcal{H} = \{\underline{\underline{\sigma}} = (\sigma_{ij})_{i,j=1}^3 : \sigma_{ij} \in L_2(\Omega),\quad \sigma_{ij} = \sigma_{ji}\},$$

and introduce a linear mapping $S : \mathcal{H}\longrightarrow\mathcal{H}$ representing a scaled stress-strain relationship of a linear elastic material

$$(S\underline{\underline{\tau}})_{i,j} = D^{-1}[\lambda\ \mathrm{tr}(\underline{\underline{\tau}})\delta_{ij} + \mu\ \tau_{ij}],$$

where λ and μ are the Lamé coefficients and the scaling factor D is as in (2.5). Then S is one-to-one and

$$(S^{-1}\underline{\underline{\tau}})_{i,j} = \frac{D}{E}[(1+\nu)\tau_{ij} - \nu\ \mathrm{tr}(\underline{\underline{\tau}})\delta_{ij}]. \tag{3.2}$$

Moreover, S and S^{-1} are self-adjoint if $\mathcal{H}$ is supplied with the natural inner product

$$(\underline{\underline{\sigma}},\underline{\underline{\tau}})_{\mathcal{H}} = \sum_{i,j=1}^{3} (\sigma_{ij},\tau_{ij}).$$

Let us further define the bilinear forms

$$\mathcal{A}(\underline{u},\underline{v}) = (\underline{\underline{\varepsilon}}(\underline{u}), S\underline{\underline{\varepsilon}}(\underline{v}))_{\mathcal{H}}\ , \quad \underline{u},\underline{v} \in U,$$

and

$$\mathcal{B}(\underline{\underline{\sigma}},\underline{\underline{\tau}}) = (\underline{\underline{\sigma}}, S^{-1}\underline{\underline{\tau}})_{\mathcal{H}}\ , \quad \underline{\underline{\sigma}},\underline{\underline{\tau}} \in \mathcal{H},$$

and the linear functional

$$Q(\underline{v}) = \frac{1}{2}\int_{\omega} f[v_3(\cdot,h/2) + v(\cdot,-h/2)]dx_1dx_2,$$

where it is assumed that $f \in L_2(\omega)$, to imply that Q is a bounded linear functional on U (by standard trace inequalities).

In the above notation, the <u>energy principle</u> states that the displacement field $\underline{u}_0$ due to the load $f = Dp \in L_2(\omega)$ is determined as the solution to the minimization problem: Find $\underline{u}_0 \in U$ which minimizes in U the functional

$$\mathcal{F}(\underline{u}) = \frac{1}{2}\mathcal{A}(\underline{u},\underline{u}) - Q(\underline{u}).$$

The existence and uniqueness of $\underline{u}_0$ is due to the following coercivity inequality known as the Korn inequality (cf. [19]).

Lemma 3.1. If U is defined by (3.1a), there is a positive constant c such that

$$\mathcal{A}(\underline{u},\underline{u}) \geq c\|\underline{u}\|^2_{1,\Omega}, \quad \underline{u} \in U. \tag{3.3}$$

□

We point out that the constant in (3.3) depends on ω (and h), though it is positive for any given Lipschitz domain. In Appendix B we show that the constant in (3.3) remains uniformly positive over a certain family of domains, a result needed in Section 5 below.

Given f and the corresponding displacement field $\underline{u}_0$, let $\underline{\underline{\sigma}}_0 = S\underline{u}_0$ be the corresponding (scaled) stress field. The pair $(\underline{u},\underline{\underline{\sigma}}) = (\underline{u}_0,\underline{\underline{\sigma}}_0)$ is then the solution to the variational problem: Find $(\underline{u},\underline{\underline{\sigma}}) \in U\times\mathcal{H}$ such that

$$\mathcal{B}(\underline{\underline{\sigma}},\underline{\underline{\tau}}) - (\underline{\underline{\varepsilon}}(\underline{u}),\underline{\underline{\tau}})_{\mathcal{H}} = 0, \quad \underline{\underline{\tau}} \in \mathcal{H}, \tag{3.4a}$$

$$(\underline{\underline{\sigma}},\underline{\underline{\varepsilon}}(\underline{v})) = Q(\underline{v}), \quad \underline{v} \in U. \tag{3.4b}$$

It can be easily verified following [5], [9] (see Appendix A), that the solution to (3.3) exists and is unique.

We mention finally that according to the complementary energy principle, $\underline{\underline{\sigma}}_0$ is found alternatively as the solution to the minimization problem [19]: Find $\underline{\underline{\sigma}}_0 \in \mathcal{H}$ that minimizes in $\mathcal{H}$ the functional

$$\mathcal{G}(\underline{\underline{\sigma}}) = \frac{1}{2}\mathcal{B}(\underline{\underline{\sigma}},\underline{\underline{\sigma}})$$

under the constraint (3.4b).

In Section 4 below we need the following corollary of the two energy principles (cf. [16]).

Lemma 3.2. For any $(\underline{u},\underline{\underline{\sigma}}), \in U\times\mathcal{H}$ such that $\underline{\underline{\sigma}}$ satisfies (3.4b), the following identity holds:

$$\frac{1}{2}\mathcal{A}(\underline{u}_0-\underline{u},\underline{u}_0-\underline{u}) + \frac{1}{2}\mathcal{B}(\underline{\underline{\sigma}}_0-\underline{\underline{\sigma}},\underline{\underline{\sigma}}_0-\underline{\underline{\sigma}}) = \mathcal{F}(\underline{u}) + \mathcal{G}(\underline{\underline{\sigma}}).$$

<u>Proof</u>. It follows from the energy principle that

$$\mathcal{A}(\underline{u}_0,\underline{v}) = Q(\underline{v}), \quad \underline{v} \in U,$$

and from the complementary energy principle that

$$\mathcal{B}(\underline{\underline{\sigma}}_0,\underline{\underline{\tau}}) = 0, \ \underline{\underline{\tau}} \in \mathcal{H} : (\underline{\underline{\tau}},\underline{\underline{\varepsilon}}(\underline{v}))_{\mathcal{H}} = Q(\underline{v}), \quad \forall\ \underline{v} \in U.$$

Therefore in particular, $\mathcal{A}(\underline{u}_0,\underline{u}) = Q(\underline{u})$ and $\mathcal{B}(\underline{\underline{\sigma}}_0,\underline{\underline{\sigma}}) = \mathcal{B}(\underline{\underline{\sigma}}_0,\underline{\underline{\sigma}}_0)$, and hence

$$\begin{aligned}\frac{1}{2}\mathcal{A}(\underline{u}_0-\underline{u},\underline{u}_0-\underline{u}) + \frac{1}{2}\mathcal{B}(\underline{\underline{\sigma}}_0-\underline{\underline{\sigma}},\underline{\underline{\sigma}}_0-\underline{\underline{\sigma}}) &= [\tfrac{1}{2}\mathcal{A}(\underline{u},\underline{u}) - \mathcal{A}(\underline{u}_0,\underline{u}) + \tfrac{1}{2}\mathcal{B}(\underline{\underline{\sigma}},\underline{\underline{\sigma}})] \\ &\quad + [\tfrac{1}{2}\mathcal{A}(\underline{u}_0,\underline{u}_0) + \tfrac{1}{2}\mathcal{B}(\underline{\underline{\sigma}}_0,\underline{\underline{\sigma}}_0) - \mathcal{B}(\underline{\underline{\sigma}}_0,\underline{\underline{\sigma}})] \\ &= [\mathcal{F}(\underline{u}) + \mathcal{G}(\underline{\underline{\sigma}})] + [\tfrac{1}{2}\mathcal{A}(\underline{u}_0,\underline{u}_0) - \tfrac{1}{2}\mathcal{B}(\underline{\underline{\sigma}}_0,\underline{\underline{\sigma}}_0)] \\ &= \mathcal{F}(\underline{u}) + \mathcal{G}(\underline{\underline{\sigma}}). \qquad \square\end{aligned}$$

3.2. The Reissner-Mindlin model.

In the Reissner-Mindlin model geometrically admissible displacements $(w,\underline{\theta})$ span the space $H_0^1(\omega)\times V$, where either

(3.5a) $$V = [H^1(\omega)]^2$$

or

(3.5b) $$V = \{\underline{\theta} \in [H^1(\omega)]^2 : t_1\theta_1 + t_2\theta_2 = 0 \ \text{ on } \ \partial\omega\}$$

corresponding to soft and hard boundary conditions, respectively. We let $\mathcal{K}$ stand for the space of momentum and curvature tensors:

$$\mathcal{K} = \{\underline{\underline{m}} = (m_{ij})_{i,j=1}^2, \quad m_{ij} \in L_2(\omega), \quad m_{12} = m_{21}\},$$

and supply $\mathcal{K}$ with the natural inner product

$$(\underline{\underline{m}},\underline{\underline{k}})_{\mathcal{K}} = \sum_{i,j=1}^{2} (m_{ij},k_{ij}).$$

Further, we introduce the linear mapping $T : \mathcal{K}\longrightarrow\mathcal{K}$ as defined by

$$(T\underline{\underline{k}})_{ij} = \nu\ \mathrm{tr}(\underline{\underline{k}})\delta_{ij} + (1-\nu)k_{ij}, \quad \underline{\underline{k}} \in \mathcal{K}.$$

The inverse of T is given by

$$(T^{-1}\underline{\underline{k}})_{ij} = \frac{1}{1-\nu}k_{ij} - \frac{\nu}{1+\nu}\ \mathrm{tr}(\underline{\underline{k}})\delta_{ij}, \tag{3.6}$$

and obviously T and T^{-1} are self-adjoint.

We introduce finally the bilinear forms

$$\mathcal{A}_R(w,\underline{\theta};z,\underline{\varphi}) = (\underline{\underline{\varepsilon}}(\underline{\theta}),T\underline{\underline{\varepsilon}}(\underline{\varphi})) + (\kappa/h^2)(\underline{\theta}-\underline{\nabla}w,\underline{\varphi}-\underline{\nabla}z), \quad w,z \in H_0^1(\omega),\ \underline{\theta},\underline{\varphi} \in V,$$

and

$$\mathcal{B}_R(\underline{\underline{m}},\underline{\gamma};\underline{\underline{k}},\underline{\zeta}) = (\underline{\underline{m}},T^{-1}\underline{\underline{k}})_{\mathcal{K}} + (h^2/\kappa)(\underline{\gamma},\underline{\zeta}), \quad \underline{\underline{m}},\underline{\underline{k}} \in \mathcal{K};\ \underline{\gamma},\underline{\zeta} \in [L_2(\omega)]^2,$$

where $\underline{\underline{\varepsilon}}(\underline{\theta}) = (\varepsilon_{ij}(\underline{\theta}))_{i,j=1}^2$ and κ are as in (2.6).

In the above notation, the Reissner-Mindlin formulation of the plate bending problem, as stated according to the energy principle, is to find the pair $(w_R,\underline{\theta}_R) \in H_0^1(\omega)\times V$ that minimizes in $H_0^1(\omega)\times V$ the functional

$$\mathcal{F}_R(w,\underline{\theta}) = \frac{1}{2}\mathcal{A}_R(w,\underline{\theta};w,\underline{\theta}) - \langle f,w\rangle$$

for a given $f \in H^{-1}(\omega)$.

The existence and uniqueness of $(w_R,\underline{\theta}_R)$ is the consequence of the following lemma, which is proved in Appendix B in a bit more general form (see Lemma B.2 of Appendix B.)

<u>Lemma 3.3</u>. There is a positive constant c such that

$$(\underline{\underline{\varepsilon}}(\underline{\theta}),T\underline{\underline{\varepsilon}}(\underline{\theta}))_{\mathcal{K}} + \|\underline{\theta} - \underline{\underline{\nabla}}w\|^2_{0,\omega} \geq c(\|\underline{\theta}\|^2_{1,\omega} + \|w\|^2_{1,\omega}), \quad \underline{\theta} \in [H^1(\omega)]^2, \quad w \in H^1_0(\omega). \ \square$$

<u>Remark 3.1</u>. Regarding the validity of Lemma 3.3 uniformly over a sequence of domains, see Appendix B. (Such a result is needed in Section 5 below.) $\square$

The analogy of the variational formulation (3.4) is stated for the Reissner-Mindlin model as: Find $(w,\underline{\theta},\underline{\underline{m}},\underline{\gamma}) \in H^1_0(\omega)\times V\times\mathcal{K}\times[L_2(\omega)]^2$ such that

$$(\underline{\underline{m}},T^{-1}\underline{\underline{k}})_{\mathcal{K}} - (\underline{\underline{\varepsilon}}(\underline{\theta}),\underline{\underline{k}})_{\mathcal{K}} = 0, \quad \underline{\underline{k}} \in \mathcal{K}, \tag{3.7a}$$

$$(h^2/\kappa)(\underline{\underline{\gamma}},\underline{\underline{\zeta}}) - (\underline{\theta}-\underline{\underline{\nabla}}w,\zeta) = 0, \quad \underline{\underline{\zeta}} \in [L_2(\omega)]^2, \tag{3.7b}$$

$$(\underline{\underline{m}},\underline{\underline{\varepsilon}}(\underline{\varphi}))_{\mathcal{K}} + (\underline{\gamma},\underline{\varphi}) = 0, \quad \underline{\varphi} \in V, \tag{3.7c}$$

$$-(\underline{\gamma},\underline{\underline{\nabla}}z) = \langle f,z\rangle, \quad z \in H^1_0(\omega). \tag{3.7d}$$

The (unique, see Appendix A) solution to this problem is $(w_R,\underline{\theta}_R,\underline{\underline{m}}_R,\underline{\gamma}_R)$, where $\underline{\underline{m}}_R = T\underline{\underline{\varepsilon}}(\underline{\theta}_R)$ and $\gamma_R = (\kappa/h^2)(\underline{\theta}_R-\underline{\underline{\nabla}}w_R)$ have the physical meaning of momentum and (vertical) shear stress field, respectively, both being scaled by a factor D^{-1}.

We note finally that the pair $(\underline{\underline{m}}_R,\underline{\gamma}_R)$ can be obtained alternatively as the solution to the following minimization problem (the complementary energy principle): Find $(\underline{\underline{m}}_R,\underline{\gamma}_R) \in \mathcal{K}\times[L_2(\omega)]^2$ which minimizes in $\mathcal{K}\times[L_2(\omega)]^2$ the functional

$$\mathcal{G}_R(\underline{\underline{m}},\underline{\gamma}) = \tfrac{1}{2}\mathcal{B}_R(\underline{\underline{m}},\underline{\gamma};\underline{\underline{m}},\underline{\gamma})$$

under the constraints (3.7c) and (3.7d).

Upon combining the two energy principles we obtain in analogy with Lemma 3.2 the following:

<u>Lemma 3.4</u>. For any $(w,\underline{\theta}) \in H^1_0(\omega)\times V$ and for any $(\underline{\underline{m}},\underline{\gamma}) \in \mathcal{K}\times[L_2(\omega)]^2$ satis-

fying (3.7c) and (3.7d) the following identity holds:

$$\frac{1}{2}\mathcal{A}_R(w_R-w,\underline{\theta}_R-\underline{\theta};w_R-w,\underline{\theta}_R-\underline{\theta})+\frac{1}{2}\mathcal{B}_R(\underline{\underline{m}}_R-\underline{\underline{m}},\underline{\gamma}_R-\underline{\gamma};\underline{\underline{m}}_R-\underline{\underline{m}},\underline{\gamma}_R-\underline{\gamma}) = \mathcal{F}_R(w,\underline{\theta})+\mathcal{G}_R(\underline{\underline{m}},\underline{\gamma}). \quad \square$$

3.3. The Kirchhoff model.

Upon introducing the space

$$W = \{z \in H^2(\omega) : z = 0 \text{ on } \partial\omega\},$$

the plate bending problem according to the Kirchhoff model is formulated as: Given $f \in W'$ (= dual space of W), find $w_K \in W$ which minimizes in W the energy functional

$$\mathcal{F}_K(w) = \frac{1}{2}(\underline{\underline{\varepsilon}}(\underline{\underline{\nabla}}w),T\underline{\underline{\varepsilon}}(\underline{\underline{\nabla}}w))_{\mathcal{K}} - \langle f,w\rangle,$$

where T and $(\cdot,\cdot)_{\mathcal{K}}$ are the same as in the Reissner-Mindlin model. The existence and uniqueness of $w_{\mathcal{K}}$ in the consequence of the coercivity inequality

$$(\underline{\underline{\varepsilon}},(\underline{\underline{\nabla}}w),T\underline{\underline{\varepsilon}}(\underline{\underline{\nabla}}w))_{\mathcal{K}} \geq c\|w\|^2_{2,\omega}, \quad w \in W,$$

which itself is an easy consequence of Lemma 3.3. Note that $w_{\mathcal{K}}$ is uniquely defined in particular if $f \in H^{-1}(\omega)$, and note also that the pair $(w_K,\underline{\theta}_K)$, where $\underline{\theta}_K = \underline{\underline{\nabla}}w_K$, minimizes the Reissner functional $\mathcal{F}_R$ over the subspace $Z \subset H^1_0(\omega)\times V$ defined by

$$Z = \{(w,\underline{\theta}) \in W\times V : \theta = \underline{\underline{\nabla}}w\}.$$

For the Kirchhoff model, the analogy of the mixed variational formulation (3.7) is the following: Given $f \in W'$, find $(w,\underline{\theta},\underline{\underline{m}},\underline{\gamma}) \in W\times V\times\mathcal{K}\times V'$ (where V' is the dual space of V) such that

(3.8a) $$(\underline{\underline{m}},T^{-1}\underline{\underline{k}})_{\mathcal{K}} - (\underline{\underline{\varepsilon}}(\underline{\theta}),\underline{\underline{k}})_{\mathcal{K}} = 0, \quad \underline{\underline{k}} \in \mathcal{K},$$

(3.8b) $$\langle \underline{\theta} - \underline{\underline{\nabla}} w, \zeta \rangle = 0, \quad \underline{\zeta} \in V',$$

(3.8c) $$(\underline{\underline{m}}, \underline{\underline{\varepsilon}}(\underline{\varphi}))_{\mathcal{K}} + \langle \underline{\gamma}, \underline{\varphi} \rangle = 0, \quad \underline{\varphi} \in V,$$

(3.8d) $$-\langle \underline{\gamma}, \underline{\underline{\nabla}} z \rangle = \langle f, z \rangle, \quad z \in W.$$

<u>Lemma 3.5</u>. The variational problem (3.8) is well-posed and the unique solution is $(w, \underline{\theta}, \underline{\underline{m}}, \underline{\gamma}) = (w_K, \underline{\theta}_K, \underline{\underline{m}}_K, \underline{\gamma}_K)$ where $\underline{\theta}_K = \underline{\underline{\nabla}} w_K$, $\underline{\underline{m}}_K = T\underline{\underline{\varepsilon}}(\underline{\theta}_K)$ and $\underline{\gamma}_K$ is defined by (3.8c), i.e.,

(3.9) $$\langle \underline{\gamma}_K, \underline{\varphi} \rangle = -(\underline{\underline{m}}_K, \underline{\underline{\varepsilon}}(\underline{\varphi}))_{\mathcal{K}}, \quad \underline{\varphi} \in V.$$

<u>Proof</u>. If $(w, \underline{\theta}, \underline{\underline{m}}, \underline{\gamma}) = (w_K, \underline{\theta}_K, \underline{\underline{m}}_K, \underline{\gamma}_K)$, equations (3.8a,b,c) hold trivially. Moreover, since w_K minimizes $\mathcal{F}_K$ in W, one has $(\underline{\underline{m}}_K, \underline{\underline{\varepsilon}}(\underline{\underline{\nabla}} z))_{\mathcal{K}} = (\underline{\underline{\varepsilon}}(\underline{\underline{\nabla}} w_K), T\underline{\underline{\varepsilon}}(\underline{\underline{\nabla}} z))_{\mathcal{K}} = \langle f, z \rangle \ \forall\, z \in W$, so by (3.9), (3.8d) holds as well. The well-posedness is proved in Appendix A. □

<u>Remark 3.2</u>. Note that although w_K, $\underline{\theta}_K$ and $\underline{\underline{m}}_K$ obviously do not depend on the way the space V is defined in (3.5), $\underline{\gamma}_K$ certainly does (see below). Hence in this (somewhat weak) sense the "soft" and "hard" formulations are still separate even in the Kirchhoff model. □

We need below the following specific result related to the case where ω is a convex polygon.

<u>Lemma 3.6</u>. Let w_K be defined as above assuming that ω is a convex polygon and that $f \in H^{-1}(\omega)$. Further, let $\rho \in H_0^1(\omega)$ and $\psi \in H_0^1(\omega)$ be such that

(3.10a) $$(\underline{\underline{\nabla}} \rho, \underline{\underline{\nabla}} \xi) = (\psi, \xi), \quad \xi \in H_0^1(\omega),$$

(3.10b) $$(\underline{\underline{\nabla}} \psi, \underline{\underline{\nabla}} \xi) = \langle f, \xi \rangle, \quad \xi \in H_0^1(\omega).$$

Then $\rho = w_K$ and $\psi = -\Delta w_K$.

Proof. From (3.10a,b) it is obvious that $\psi = -\Delta\rho \in H_0^1(\omega)$, so it suffices to show that $\rho = w_K$. First, since $\psi \in H^1(\omega)$ and since ω is a convex polygon, it follows from (3.10a) that $\rho \in H^2(\omega)$ and $\rho \in H^3(\tilde{\omega})$, $\bar{\tilde{\omega}} \subset \bar{\omega} - \cup A_i$, A_i being the vertices of ω; i.e., $\rho \in W$ (cf. [13]). Moreover, since $\rho = \Delta\rho = 0$ a.e. on $\partial\omega$ and since $\partial\omega$ consists of straight line segments only, it follows that $\frac{\partial^2\rho}{\partial t^2} = \frac{\partial^2\rho}{\partial n^2} = 0$ a.e. on $\partial\omega$. Therefore and noting also that $\frac{\partial z}{\partial t} = 0$ a.e. on $\partial\omega$ if $z \in W$, it follows integrating by parts that

$$(\underline{\underline{\nabla}}\psi, \underline{\underline{\nabla}}z) = -(\underline{\underline{\nabla}}(\Delta\rho), \underline{\underline{\nabla}}z) = -\nu(\underline{\underline{\nabla}}(\Delta\rho), \underline{\underline{\nabla}}z) - (1-\nu)\sum_{i,j=1}^{2}\left[\frac{\partial^3\rho}{\partial x_i\partial^2 x_j^2}, \frac{\partial z}{\partial x_i}\right]$$

$$= (\underline{\underline{\varepsilon}}(\underline{\underline{\nabla}}\rho), T\underline{\underline{\varepsilon}}(\underline{\underline{\nabla}}z)) - \int_{\partial\omega}\left[\nu\Delta\rho + (1-\nu)\frac{\partial^2\rho}{\partial n^2}\right]\frac{\partial z}{\partial n}ds$$

$$= (\varepsilon(\underline{\underline{\nabla}}\rho), T\underline{\underline{\varepsilon}}(\underline{\underline{\nabla}}z)), \quad z \in W.$$

Hence by (3.10b), $(\underline{\underline{\varepsilon}}(\underline{\underline{\nabla}}\rho), T\underline{\underline{\varepsilon}}(\nabla z)) = \langle f, z\rangle$, $\forall\, z \in W$, so ρ minimizes $\mathcal{F}_K$ in W and accordingly, $\rho = w_K$. □

We can now prove the following result which will be needed in the next subsection.

Lemma 3.7. Let ω be either a convex polygon or a smooth domain, and let $(w, \underline{\theta}, \underline{\underline{m}}, \underline{\gamma}) = (w_K, \underline{\theta}_K, \underline{\underline{m}}_K, \underline{\gamma}_K) \in W\times V\times\mathcal{K}\times V'$ be the solution to (3.8) for a given $f \in H^{-1}(\omega)$, and with V defined by (3.5b). Then $\underline{\gamma}_K = -\underline{\underline{\nabla}}(\Delta w_K) \in [L_2(\omega)]^2$ and $(w_K, \underline{\theta}_K, \underline{\underline{m}}_K, \underline{\gamma}_K)$ is a solution to equations (3.7) with $h = 0$ in (3.7b). Moreover, if ω is a convex polygon then $\|\underline{\gamma}_K\|_{0,\omega} = \|f\|_{-1,\omega}$, where

$$\|f\|_{-1,\omega} = \sup_{z\in H_0^1(\omega)} \frac{\langle f, z\rangle}{|z|_{1,\omega}},$$

and if ω is a smooth domain, then $\|\underline{\gamma}_K\|_{0,\omega} \le C\|f\|_{-1,\omega}$ where C depends on ω.

Proof. If $\underline{\gamma}_K \in [L_2(\omega)]^2$ and $f \in H^{-1}(\omega)$, it follows from a simple closure argument that (3.8) remains valid if W is replaced by V and if on the left side $\langle\cdot,\cdot\rangle$ is replaced by $(\cdot,\cdot)$. To prove that $\underline{\gamma}_K = -\underline{\underline{\nabla}}(\Delta w_K)$, we integrate by parts in (3.9) to obtain

$$\langle\underline{\gamma}_K,\underline{\varphi}\rangle = -\int_\omega \underline{\underline{\nabla}}(\Delta w_K)\cdot\underline{\varphi}dx_1dx_2$$

$$+\int_{\partial\omega}\left[\nu\Delta w_K + (1-\nu)\frac{\partial^2 w_K}{\partial n^2}\right]\underline{\varphi}\cdot\underline{n}\ ds$$

$$+\int_{\partial\omega}(1-\nu)\frac{\partial^2 w_K}{\partial n\partial t}\ \underline{\varphi}\cdot\underline{t}\ ds, \quad \underline{\varphi} \in V.$$

Here the first boundary integral vanishes because $\nu\Delta w + (1-\nu)\dfrac{\partial^2 w}{\partial n^2} = 0$ on $\partial\omega$ is the natural boundary condition associated to the problem of minimizing $\mathcal{F}_K$, and the second boundary integral vanishes since $\underline{\varphi}\cdot\underline{t} = 0$, $\underline{\varphi} \in V$, assuming that V is defined by (3.5b). Hence $\underline{\gamma}_K = -\underline{\nabla}(\Delta w_K)$. On the other hand from (3.10) we have $\underline{\gamma}_K \in [L_2(\omega)]^2$ and because of the well-posedness of (3.8) we see that indeed $\underline{\gamma}_K = -\underline{\underline{\nabla}}(\Delta w_K)$.

Having verified that $\underline{\gamma}_K = -\underline{\underline{\nabla}}(\Delta w_K)$ we conclude from Lemma 3.6 that $\underline{\gamma}_K = \underline{\nabla}\psi$ where $\psi \in H_0^1(\omega)$ satisfies (3.10b), so $\|\underline{\gamma}_K\|_{0,\omega} = \|f\|_{-1,\omega}$ as asserted. Finally, if ω is a smooth domain, a standard elliptic regularity estimate implies that $\|\underline{\gamma}_K\|_{0,\omega} \le C\|w\|_{3,\omega} \le C_1\|f\|_{-1,\omega}$. □

Remark 3.3. It is essential for our results in the next section that when ω is a convex polygon, $\|\underline{\gamma}_K\|_{0,\omega}$ is bounded by $\|f\|_{-1,\omega}$ independently of ω, in contrast to the smooth domain where the constant depends on ω. □

3.4. Energy estimates in case of hard support.

Let us define the energy norms

$$|||\underline{u},\underline{\underline{\sigma}}|||^2 = \mathcal{A}(\underline{u},\underline{u}) + \mathcal{B}(\underline{\underline{\sigma}},\underline{\underline{\sigma}}), \quad (\underline{u},\underline{\underline{\sigma}}) \in U\times\mathcal{H}$$

and

$$|||w,\underline{\theta},\underline{\underline{m}},\underline{\gamma}|||_R^2 = \mathcal{A}_R(w,\underline{\theta};w,\underline{\theta}) + \mathcal{B}_R(\underline{\underline{m}},\gamma;\underline{\underline{m}},\underline{\gamma}), \quad (w,\underline{\theta},\underline{\underline{m}},\underline{\gamma}) \in H_0^1(\omega)\times V\times\mathcal{K}\times[L_2(\omega)]^2,$$

where the bilinear forms are as defined in subsections 3.1 and 3.2. Then by Lemma 3.2 we have the identity

$$|||\underline{u}_0-\underline{u},\underline{\underline{\sigma}}_0-\underline{\underline{\sigma}}|||^2 = |||\underline{u},\underline{\underline{\sigma}}|||^2 - 2Q(\underline{u})$$

whenever $\underline{u} \in U$ and $\underline{\underline{\sigma}} \in \mathcal{H}$ satisfies the constraint (3.4b). Similarly by Lemma 3.4

$$(3.12) \qquad |||w_R - w,\ \underline{\theta}_R - \underline{\theta},\ \underline{\underline{m}}_R - \underline{\underline{m}},\ \underline{\gamma}_R - \underline{\gamma}|||_R^2 = |||w,\underline{\theta},\underline{\underline{m}},\underline{\gamma}|||_R^2 - 2\langle f,w\rangle,$$

where $(w,\underline{\theta}) \in H_0^1(\omega)\times V$ and $(\underline{\underline{m}},\underline{\gamma}) \in \mathcal{K}\times[L_2(\omega)]^2$ satisfies constraints (3.7c,d).

Let us first apply (3.12) to estimate the gap between the Reissner "quadruple" $(w_R,\underline{\theta}_R,\underline{\underline{m}}_R,\underline{\gamma}_R)$ and the Kirchhoff "quadruple" $(w_K,\underline{\theta}_K,\underline{\underline{m}}_K,\underline{\gamma}_K)$. By Lemma 3.7, the choice $(w,\underline{\theta},\underline{\underline{m}},\underline{\gamma}) = (w_K,\underline{\theta}_K,\underline{\underline{m}}_K,\underline{\gamma}_K)$ is legitimate in (3.12) under the assumpasusmptions that ω is either a convex polygon or a smooth domain, $f \in H^{-1}(\omega)$ and V is defined by (3.5b), i.e., the case of hard support. Upon simplifying the right side of (3.12) we obtain in this case the identity

$$|||w_R - w_K,\ \underline{\theta}_R - \underline{\theta}_K,\ \underline{\underline{m}}_R - \underline{\underline{m}}_K,\ \underline{\gamma}_R - \underline{\gamma}_K|||_R^2 = (h^2/\kappa)\|\underline{\gamma}_K\|_{0,\omega}^2,$$

which together with Lemma 3.7 leads to the following

<u>Theorem 3.1</u>. Let ω be either a) a convex polygon or b) a smooth domain, let $f \in H^{-1}(\omega)$ and let $(w_R,\underline{\theta}_R,\underline{\underline{m}}_R,\underline{\gamma}_R)$ and $(w_K,\underline{\theta}_K,\underline{\underline{m}}_K,\underline{\gamma}_K)$ be the solution to (3.7) and (3.8), respectively, where V is defined by (3.5b). Then one has

in case a) the identity

$$|||w_R - w_K,\ \underline{\theta}_R - \underline{\theta}_K,\ \underline{\underline{m}}_R - \underline{\underline{m}}_K,\ \underline{\gamma}_R - \underline{\gamma}_K|||_R^2 = (h^2/\kappa)\|f\|_{-1,\omega}^2,$$

where $\|f\|_{-1,\omega}$ is defined as in Lemma 3.7, and in case b) the estimate

$$|||w_R - w_K,\ \underline{\theta}_R - \underline{\theta}_K,\ \underline{\underline{m}}_R - \underline{\underline{m}}_K,\ \underline{\gamma}_R - \underline{\gamma}_K|||_R^2 = C(h^2/\kappa)\|f\|_{-1,\omega}^2,$$

where C depends on ω. □

Remark 3.4. It is easy to verify that

$$|||w_R - w_K,\ \underline{\theta}_R - \underline{\theta}_K,\ \underline{\underline{m}}_R - \underline{\underline{m}}_K,\ \underline{\gamma}_R - \underline{\gamma}_K|||_R^2 \geq E_K - E_R,$$

where E_R and E_K stand for the total energy of the plate in the Kirchhoff model and Reissner-Mindlin model, respectively, i.e.,

$$E_K = \mathcal{F}_R(w_K, \underline{\theta}_K) = -\frac{1}{2}\langle f, w_K\rangle,$$

$$E_R = \mathcal{F}_R(w_R, \underline{\theta}_R) = -\frac{1}{2}\langle f, w_R\rangle.$$

In particular, if ω is a convex polygon, Theorem 3.1 and Lemma 3.6 lead to the relative estimate

$$(E_K - E_R)/E_K \leq C(\omega, f, \nu)h^2/\kappa_0,$$

where κ_0 is the shear correction factor, and

$$C(\omega, f, \nu) = -\frac{1}{6(1-\nu)} \frac{\int_\omega \Delta w_K f\ dx_1 dx_2}{\int_\omega w_K f\ dx_1 dx_2}.$$

For example, if ω is the unit square and $f(x) \equiv 1$, then $C(\omega, f, \nu) = 3.440428/(1-\nu)$. □

Remark 3.5. In case of soft boundary conditions, constraint (3.7c) is more

restrictive and rules out the choice $(\underline{\underline{m}}, \underline{\gamma}) = (\underline{\underline{m}}_K, \underline{\gamma}_K)$ in (3.12). It is still possible to find $(\tilde{\underline{\underline{m}}}_K, \tilde{\underline{\gamma}}_K) \in \mathcal{K}\times[L_2(\omega)]^2$ which is close to $(\tilde{\underline{\underline{m}}}_K, \tilde{\underline{\gamma}}_K)$ away from the boundary and satisfies all the required constraings [16]. With such a construction, it is possible to show that if both f and ω are sufficiently smooth then

$$|||w_R - w_K,\ \underline{\theta}_R - \underline{\theta}_K,\ \underline{\underline{m}}_R - \tilde{\underline{\underline{m}}}_K,\ \underline{\gamma}_R - \tilde{\underline{\gamma}}_K|||_R^2 \le C(\omega, f)h,$$

For other estimates of this type see also [11], the references therein and [20]. □

We apply next (3.11) to bound the difference between the three-dimensional solution and the Kirchhoff solution. To this end, we need to construct a three-dimensional extension $(\underline{u}_K, \underline{\underline{\sigma}}_K) \in U\times\mathcal{H}$ of the Kirchhoff solution $(w_K, \underline{\theta}_K, \underline{\underline{m}}_K, \underline{\gamma}_K)$. Following [16] we define $\underline{u}_K \in U$ as

$$\underline{u}_K = (-x_3\theta_{K,1},\ -x_3\theta_{K,2},\ w_K + \tfrac{1}{2}x_3^2\psi), \tag{3.13}$$

and $\underline{\underline{\sigma}}_K \in \mathcal{H}$ as

$$\begin{aligned} \sigma_{K,ij} &= -\alpha x_3 m_{K,ij}, \quad i,j = 1,2, \\ \sigma_{K,i3} &= \alpha\left[\tfrac{1}{2}x_3^2 - \tfrac{1}{8}h^2\right]\gamma_{K,i}, \quad i = 1,2 \\ \sigma_{K,33} &= \alpha\left[-\tfrac{1}{6}x_3^3 + \tfrac{1}{8}h^2 x_3\right]f, \end{aligned} \tag{3.14}$$

where $\alpha = E/(1-\nu^2)$ and $\psi \in H_0^1(\omega)$ is so far unspecified. It is easy to check that $\underline{\underline{\sigma}}_K$ satisfies (3.4b) so far as U is defined by (3.1b), so (3.11) applies with the choice $(\underline{u}, \underline{\underline{\sigma}}) = (\underline{u}_K, \underline{\underline{\sigma}}_K)$ in this case. After a short computation, the right side of (3.11) can then be expressed as

$$|||\underline{u}_K, \underline{\underline{\sigma}}_K|||^2 - 2Q(\underline{u}_K) = \frac{(1-\nu)^2}{1-2\nu}\int_\omega \left(\psi + \frac{\nu}{1-\nu}\Delta w_K\right)^2 dx_1 dx_2 + \frac{3(1-\nu)}{160}h^2 \int_\omega |\nabla\psi|^2 dx_1 dx_2$$

$$+\frac{1}{5(1-\nu)}h^2\int_\omega (|\underline{\underline{\gamma}}_K|^2+\nu\Delta w_K f)dx_1dx_2$$

$$+\frac{17}{1680(1-\nu^2)}h^4\int_\omega f^2dx_1dx_2.$$

Now if ω is a convex polygon, the choice $\psi = -\frac{\nu}{1-\nu}\Delta w_K$ is legitimate and leads, recalling also that $\|\gamma_K\|^2_{0,\omega} = -\int_\omega \Delta w_K f dx_1dx_2 = \|f\|^2_{-1,\omega}$ (see Lemma 3.6 and Lemma 3.7), to the identity

$$|||\underline{u}_K,\underline{\underline{\sigma}}_K|||^2 - 2Q(\underline{u}_K) = \frac{32-8\nu+3\nu^2}{160(1-\nu)}\|f\|^2_{-1,\omega}.$$

On the other hand if ω is a smooth domain, we can still find for any $\delta > 0$ a $\psi \in H^1_0(\omega)$ so that

$$\int_\omega (\psi+\frac{\nu}{1-\nu}\Delta w_K)^2dx_1dx_2 \le C\delta\nu^2\|\Delta w_K\|^2_{1,\omega}, \tag{3.15a}$$

and

$$\int_\omega |\nabla\psi|^2dx_1dx_2 \le C\delta^{-1}\nu^2\|\Delta w_K\|^2_{1,\omega}. \tag{3.15b}$$

Since $\|\Delta w_K\|_{1,\omega} \le C(\omega)\|f\|_{-1,\omega}$, we obtain in this case, choosing $\delta = \sqrt{1-2\nu}\,h$, the estimate

$$|||\underline{u}_K,\underline{\underline{\sigma}}_K|||^2 - 2Q(\underline{u}_K) \le C(\omega)\frac{\nu^2}{\sqrt{1-2\nu}}\|f\|^2_{-1,\omega} + \frac{17h^4}{1680(1-\nu^2)}\|f\|^2_{0,\omega}.$$

We thus conclude the following:

<u>Theorem 3.2</u>. Assume that ω is either a) a convex polygon or b) a smooth domain, let $f \in L_2(\omega)$, let $(\underline{u}_0,\underline{\underline{\sigma}}_0) \in U\times\mathcal{H}$ be the solution to (3.4) with U defined by (3.1b), and let $(\underline{u}_K,\underline{\underline{\sigma}}_K)$ be defined by (3.13-14) where $(w_K,\underline{\theta}_K,\underline{\underline{m}}_K,\underline{\gamma}_K) \in W\times V\times\mathcal{K}\times V'$ is the solution to (3.8) with V defined by (3.5b) and either $\psi = -\frac{\nu}{1-\nu}\Delta w_K$ (case a)) or ψ satisfies (3.15a,b) with $\delta =$

$\sqrt{1-2\nu}\,h$ (case b)). Then one has in case a) the identity

$$|||\underline{u}_0-\underline{u}_K, \underline{\underline{\sigma}}_0-\underline{\underline{\sigma}}_K|||^2 = C_1(\nu)h^2\|f\|^2_{-1,\omega} + C_2(\nu)h^4\|f\|^2_{0,\omega}$$

and in case b) the estimate

$$|||\underline{u}_0-\underline{u}_K, \underline{\underline{\sigma}}_0-\underline{\underline{\sigma}}_K|||^2 \le C(\omega)[C_3(\nu)h + h^2]\|f\|^2_{-1,\omega} + C_2(\nu)h^4\|f\|^2_{0,\omega},$$

where $\|f\|_{-1,\omega}$ is defined as in Lemma 3.7 and

$$C_1(\nu) = \frac{32-8\nu+3\nu^2}{160(1-\nu)},\quad C_2(\nu) = \frac{17}{1680(1-\nu^2)},\quad C_3(\nu) = \frac{\nu^2}{\sqrt{1-2\nu}}. \qquad \square$$

<u>Remark 3.6</u>. In case of soft boundary conditions it is possible to show that if ω is smooth and f is sufficiently smooth, then

$$|||\underline{u}_0-\underline{u}_K, \underline{\underline{\sigma}}_0-\underline{\underline{\tilde{\sigma}}}_K|||^2 \le C(\omega,f)[1+C_3(\nu)]h$$

where $\underline{\underline{\tilde{\sigma}}}_K$ is close to $\underline{\underline{\sigma}}_K$ away from the boundary strip $\partial\omega\times(-h/2,h/2)$ [11], [16]. $\square$

4. <u>The plate paradox</u>.

Let $\omega_0 \subset \mathbb{R}^2$ be the unit circular domain with the center at the origin, i.e.,

$$\omega^{[0]} = \{(x_1,x_2) : r^2 = x_1^2 + x_2^2 < 1\}.$$

Let further $\omega^{[n]}$, $n = 1,2,\ldots,$ be the sequence of regular $(n+3)$-polygons such that

$$\bar{\omega}^{[n]} \subset \omega^{[n+1]} \subset \bar{\omega}^{[n+1]} \subset \omega^{[0]}$$

and

$$\omega^{[n]} \longrightarrow \omega^{[0]} \quad \text{as} \quad n \longrightarrow \infty$$

in the sense that for any $x \in \omega^{[0]}$ there is $n(x) > 0$ such that $x \in \omega^{[n]}$ for all $n > n(x)$. Finally let $\Omega^{[n]} = \omega^{[n]} \times (-h/2, h/2)$ and $\Omega^{[0]} = \omega^{[0]} \times (-h/2, h/2)$.

Assume now that the unit load is imposed, i.e., $f = p/D = 1$ (see Section 2). Then for fixed thickness h there exists the unique solutions $\underline{u}_0^{[n]}$, $(w_R^{[n]}, \underline{\theta}_R^{[n]})$ and $w_K^{[n]}$, $n = 0, 1, 2, \ldots$, corresponding, respectively, to the three-dimensional, Reissner-Mindlin and Kirchhoff formulation of the plate bending problem with either hard or soft simple support. In Section 4.1 we will show that $w_K^{[n]} \longrightarrow w_K^{[\infty]} \neq w_K^{[0]}$ and give explicit expressions for $w_K^{[\infty]}$ and $w_K^{[0]}$. This is the plate paradox in the Kirchhoff model pointed out in [7], [3]. In Section 4.2 we will show that this paradox occurs also in the Reissner-Mindlin model and in the three-dimensional formulation in case of <u>hard simple support</u>. Finally in Section 4.3 we show that the paradox <u>does not occur</u> in the Reissner-Mindlin and three-dimensional formulations where the soft simple support is imposed. This was briefly noted in [3].

The results clearly show that seemingly minor changes in the boundary conditions can lead to a significant change of the solution on $\Omega^{[n]}$, respectively $\omega^{[n]}$, when n is large. In fact, we will see that there can be significant changes already when $n = 1$.

The main question we will address below in this section is whether as $n \longrightarrow \infty$

$$\underline{u}^{[n]} \longrightarrow \underline{u}^{[0]} \quad \text{for the three-dimensional formulation}$$

$$(w_R^{[n]}, \underline{\theta}_R^{[n]}) \longrightarrow (w_R^{[0]}, \underline{\theta}_R^{[0]}) \quad \text{for the Reissner-Mindlin model}$$

and

$$w_k^{[n]} \longrightarrow w_k^{[0]} \quad \text{for the Kirchhoff model.}$$

4.1. The plate paradox for the Kirchhoff model.

We have shown in Lemma 3.6 that for $n = 1,2,\ldots,$ $w_k^{[n]} = \rho^{[n]}$ and $-\Delta w_k^{[n]} = \psi^{[n]}$ where $\rho^{[n]}$ and $\psi^{[n]}$ satisfy (3.10a,b).

<u>Theorem 4.1</u>. Let $\rho^{[\infty]}, \psi^{[\infty]} \in H_0^1(\omega^{[0]})$ be such that

$$(\underline{\underline{\nabla}}\rho^{[\infty]}, \underline{\underline{\nabla}}\xi) = (\psi^{[\infty]}, \xi), \quad \xi \in H_0^1(\omega^{[0]}) \tag{4.1a}$$

$$(\underline{\underline{\nabla}}\psi^{[\infty]}, \underline{\underline{\nabla}}\xi) = \langle f, \xi\rangle, \quad \xi \in H_0^1(\omega^{[0]}) \tag{4.1b}$$

with $f = 1$. Then as $n \longrightarrow \infty$

$$\|\psi^{[n]} - \psi^{[\infty]}\|_{H^1(\omega^{[0]})} \longrightarrow 0$$

$$\|\varphi^{[n]} - \rho^{[\infty]}\|_{H^1(\omega^{[0]})} \longrightarrow 0.$$

Here we understand $\psi^{[n]}$ and $\varphi^{[n]}$ extend by zero from $\omega^{[n]}$ to $\omega^{[0]}$.

<u>Proof</u>. Let P_n denote the orthogonal projection of $H_0^1(\omega^{[0]})$ onto the subspace $H_0^{1,n}(\omega^{[0]})$. defined by

$$H^{1,n}(\omega^{[0]}) = \{u \in H_0^1(\omega^{[0]}) : u = 0 \text{ on } \omega^{[0]} - \omega^{[n]}\}$$

and let $\hat{\psi}^{[n]}$ and $\hat{\rho}^{[n]}$ denote the extension of $\psi^{[n]}$ and $\rho^{[n]}$, respectively, by zero onto $\omega^{[0]}$. Then $\hat{\psi}^{[n]} = P_n\psi^{[\infty]}$ by (4.1b). From Theorem C.1 it then follows immediately that $\hat{\psi}^{[n]} \longrightarrow \psi^{[\infty]}$ in $H_0^1(\omega^{[0]})$. From (4.1a) we then see that $\rho^{[n]} - P_n\rho^{[\infty]} \longrightarrow 0$ in $H_0^1(\omega^{[0]})$ and therefore repeating the same argument that $\hat{\rho}^{[n]} \longrightarrow \rho^{[\infty]}$ in $H_0^1(\omega^{[0]})$. □

Let us now characterize $\hat{\rho}^{[0]} = w_K^{[0]}$ and $\rho^{[\infty]} = w_K^{[\infty]}$ more explicitly. To this end, note first that $\rho^{[0]}$ is the solution to the problem

(4.2a) $$\Delta\Delta\rho^{[\infty]} = 1 \quad \text{on} \quad \omega^{[0]}$$

(4.2b) $$\rho^{[\infty]} = \Delta\rho^{[\infty]} = 0 \quad \text{on} \quad \partial\omega^{[0]}$$

where D is given by (2.5). On the other hand, it is easy to see that $\rho^{[0]}$ is the solution of the problem

(4.3a) $$\Delta\Delta\rho^{[0]} = 1 \quad \text{on} \quad \omega^{[0]}$$

(4.3b) $$\rho^{[0]} = 0 \quad \text{on} \quad \partial\omega^{[0]}$$

(4.3c) $$\nu\Delta\rho^{[0]} + (1-\nu)\frac{\partial^2\rho^{[0]}}{\partial n^2} = 0.$$

Here, (4.3c) is the standard boundary condition for the simply supported circular plate [see e.g. [24], p. 554]. (4.2) and (4.3) show that

$$\rho^{[\infty]} = C_1^{[\infty]} + C_2^{[\infty]}r^2 + C_3^{[\infty]}r^4,$$

$$\rho^{[0]} = C_1^{[0]} + C_2^{[0]}r^2 + C_3^{[0]}r^4,$$

where $r^2 = x_1^2 + x_2^2$,

$$C_3^{[\infty]} = C_3^{[0]} = \frac{1}{64}$$

and C_1, C_2 are determined from the boundary conditions. By simple computation we get

(4.4a) $$\rho^{[0]}(0,0) = w_K^{[0]}(0,0) = \frac{1}{64}\,\frac{5+\nu}{1+\nu},$$

(4.4b) $$\rho^{[\infty]}(0,0) = w_K^{[\infty]}(0,0) = \frac{3}{64},$$

and hence for $\nu = .3$ we have

$$\frac{w_K^{[0]}(0,0)}{w_K^{[\infty]}(0,0)} = 1.36,$$

i.e., the gap between $w_K^{[0]}$ and $w_K^{[\infty]}$ is 36% at the origin. Analogously for $\nu = .3$

$$\frac{\|w_K^{[0]} - w_K^{[\infty]}\|_{0,\omega^{[0]}}}{\|w_K^{[\infty]}\|_{0,\omega^{[0]}}} = 0.287.$$

<u>Remark 4.1</u>. We have assumed that $\omega^{[n]}$ were regular polygons. As the proof shows, (4.5b) holds also when $\{\omega^{[n]}\}$ is an arbitrary sequence of <u>convex</u> polygons such that $\omega^{[n]} \to \omega^{[0]}$ in the sense described above.

It is essential, however, that $\omega^{[n]}$ are convex polygons. If we replace $\omega^{[n]}$ by $\hat{\omega}^{[n]}$ where $\hat{\omega}^{[n]}$ are nonconvex polygons shown in Figure 4.1, then it was shown in [15] that $\hat{\omega}^{[\infty]}$ satisfies

$$\Delta\Delta\hat{\omega}^{[\infty]} = 1 \quad \text{in} \quad \omega^{[0]}$$

$$\hat{\omega}^{[\infty]} = \frac{\partial\hat{\omega}^{[\infty]}}{\partial n} = 0 \quad \text{in} \quad \partial\omega^{[0]}$$

and hence

$$\hat{\omega}^{[\infty]}(0,0) = \frac{1}{64}. \qquad \square \tag{4.c}$$

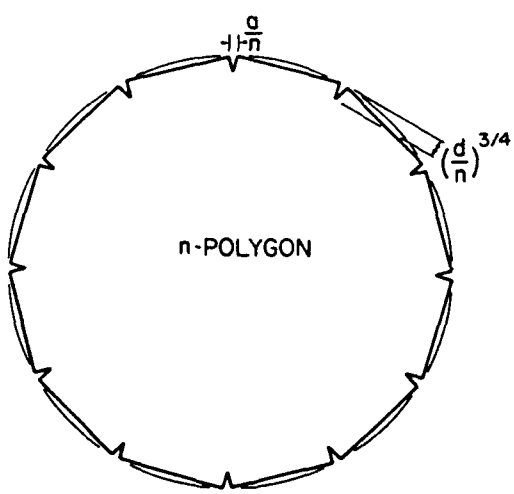

Figure 4.1.

A nonconvex polygon $\omega^{[n]}$.

4.2. The plate paradox for the three-dimensional and Reissner-Mindlin models.

We will analyze in detail the case of Reissner-Mindlin model only. The case of the three-dimensional formulation can be dealt with analogously.

<u>Theorem 4.2</u>. Let h be fixed and sufficiently small, and let $w_R^{[n]}$ be the Reissner-Mindlin solution on $\omega^{[n]}$ corresponding to unit load $f = 1$ on $\omega^{[n]}$ and hard simple support on $\partial\omega^{[n]}$, $n = 0,1,2,\ldots$. Then if $w_R^{[n]}$ is extended by zero onto $\omega^{[0]}$, one has

$$\|w_R^{[n]} - \omega_R^{[0]}\|_{1,\omega^{[0]}} \geq \alpha > 0$$

$$\left|\int_{\omega^{[0]}} \left(w_R^{[n]} - w_R^{[0]}\right) dx_1 dx_2\right| \geq \alpha > 0$$

for all $n \geq n_0$, n_0 large enough.

<u>Proof</u>. By Theorem 3.1 we have

$$|||w_R^{[n]} - w_K^{[n]},\ \underline{\theta}_R^{[n]} - \underline{\theta}_K^{[n]},\ \underline{\underline{m}}_R^{[n]} - \underline{\underline{m}}_K^{[n]}, \underline{\gamma}_R^{[n]} - \underline{\gamma}_K^{[n]}|||_R^2 \leq h^2/\kappa\|f\|^2_{-1,\omega^{[n]}},$$

$$|||w_R^{[0]} - w_K^{[0]},\ \underline{\theta}_R^{[0]} - \underline{\theta}_K^{[0]},\ \underline{\underline{m}}_R^{[0]} - \underline{\underline{m}}_K^{[0]}, \underline{\gamma}_R^{[0]} - \underline{\gamma}_K^{[0]}|||_R^2 \leq Ch^2/\kappa\|f\|^2_{-1,\omega^{[0]}}.$$

Note that $\|f\|_{-1,\omega^{[n]}} \leq C_0$ independently of n. Using Lemma 3.3, and Theorem B.3 we see that

$$\left[\|w_R^{[n]} - w_K^{[n]}\|^2_{1,\omega^{[n]}} + \|\underline{\theta}_R^{[n]} - \underline{\theta}_K^{[n]}\|^2_{1,\omega^{[n]}}\right] \leq Ch^2$$

$$\left[\|w_R^{[0]} - w_K^{[0]}\|^2_{1,\omega^{[0]}} + \|\underline{\theta}_R^{[0]} - \underline{\theta}_K^{[0]}\|^2_{1,\omega^{[0]}}\right] \leq Ch^2,$$

where C is independent of n and h. On the other hand, we have by Theorem 4.1

$$\|w_K^{[n]} - w_K^{[\infty]}\|_{1,\omega^{[0]}} \to 0 \quad \text{as} \quad n \to \infty$$

and

$$\|w_K^{[\infty]} - w_K^{[0]}\|_{1,\omega^{[0]}} > 0$$

This shows that for sufficiently small h there is $\alpha > 0$ such that $\|w_R^{[0]} - w_R^{[n]}\|_{1,\omega^{[n]}} \geq \alpha > 0$ for all $n > n_0$.

Realizing that (in our case for $f = 1$)

$$E_R^{[n]} = -\int_{\omega^{[n]}} w_R^{[n]} dx_1 dx_2, \quad E_R^{[0]} = -\int w_R^{[0]} dx_1 dx_2,$$

$$E_K^{[n]} = -\int w_K^{[n]} dx_1 dx_2, \quad E_R^{[0]} = -\int w_K^{[0]} dx_1 dx_2,$$

we also have

$$\left|\int (w_R^{[0]} - w_R^{[n]}) dx_1 dx_2\right| \geq \alpha > 0 \quad \text{as} \quad n > n_0 \qquad \square$$

Using Theorem 3.2 and analogous arguments we get

<u>Theorem 4.3</u>. Let h be fixed and sufficiently small and let $\underline{u}_0^{[n]} = (u_{01}^{[n]}, u_{02}^{[n]}, u_{03}^{[n]})$ be the three-dimensional solution of the plate bending problem on $\Omega^{[n]}$ corresponding to the load $p = D$ and hard simple support, $n = 0,1,2,\ldots$ Then if $u_{03}^{[n]}$ is extended by zero onto $\Omega^{[0]}$, one has

$$\|u_{03}^{[n]} - u_{03}^{[0]}\|_{1,\Omega^{[0]}} \geq \alpha > 0$$

$$\left|\int_{\omega^{[0]}} (u_{03}^{[n]}(x_1, x_2, h/2) + u_{03}^{[0]}(x_1, x_2, h/2)) dx_1 dx_2\right| \geq \alpha > 0$$

for all $n \geq n_0$, n_0 sufficiently large. $\square$

Theorems 4.2 and 4.3 show that the hard simple support leads not only to

the paradox in the Kirchhoff model but also in the three-dimensional formulation and the Reissner-Mindlin model. (In Section 4.3 we will show that the paradox occurs neither in the three-dimensional formulation nor Reissner-Mindlin model when the simple soft support is imposed.)

The proof employed the fact that the Kirchhoff model approximates very well the Reissner-Mindlin and three-dimensional formulations for the hard support. This shows that the circular plate and polygonal plate solutions are far apart in the entire region and not only in the area close to the boundary, where boundary layer effects occur.

The above results show that plausibly unimportant changes in the boundary conditions could lead to significant changes in the solution through the entire region even if the three-dimensional linear elasticity model is used. We expect that the paradox will occur also in nonlinear formulations. For engineering implications of effects of this type we refer to [6].

4.3. The "nonparadox" in case of soft simple support.

We will prove in this section that in contrast to the hard simple support the solution on $\omega^{[n]}$ converges to the solution on $\omega^{[0]}$ for both the Reissner-Mindlin and the three-dimensional plate model. This is in obvious contrast to the hard simple support. We will elaborate in detail on the case of the Reissner-Mindlin model. The analysis of the three-dimensional model is analogous.

Let us denote

$$\mathcal{D}_n = \omega^{[n+1]} - \omega^{[n]}, \quad n = 1,2,\ldots$$

$$\mathcal{D}_0 = \omega^{[1]}$$

$$\mathcal{D}_n^0 = \omega^{[0]} - \omega^{[n]}, \quad n = 1,2,\ldots,$$

see Figure 4.2.

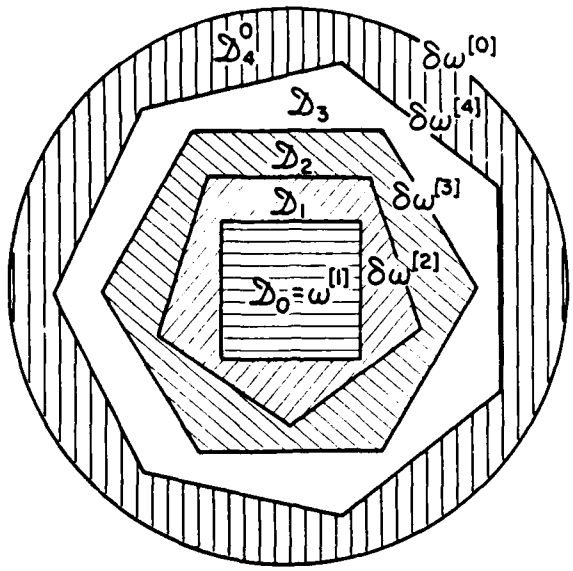

Figure 4 2.

The configuration of the domains $\mathcal{D}_n$, $\mathcal{D}_0$, $\mathcal{D}'_n$.

Let $L = (L_2(\omega^{[0]})^3$, $\underline{u} = (w, \underline{\theta}) \in L$ and

$$\mathcal{S}_0 = \{\underline{u} \in L : w \in H_0^1(\omega^{[0]}),\ \underline{\theta} \in (H^1(\omega^{[0]}))^2\}$$

$$\mathcal{S}_n = \{u \in L : w \in H_0^1(\omega^{[0]}),\ w = 0 \text{ on } \mathcal{D}_n^0,\ \underline{\theta} \in (H^1(\omega^{[0]})^2)\}$$

$$\mathcal{T}_n = \{u \in L : w \in H_0^1(\omega^{[0]}),\ \underline{\theta} \in (H^1(\omega^{[n]}))^2,\ \underline{\theta} \in (H^1(\mathcal{D}_m))^2,\quad m = n, n+1, \ldots\}$$

$$\mathcal{L}_{n,m} = \{u \in L : w \in H_0^1(\omega^{[0]}),\ w = 0 \text{ on } \mathcal{D}_n^0,$$
$$\underline{\theta} \in (H^1(\omega^{[m]}))^2,\ \underline{\theta} \in (H^1(\mathcal{D}_j))^2,\quad j = m, m+1, \ldots\}.$$

We have $\mathcal{S}_n \subset \mathcal{S}_0$, $\mathcal{S}_0 \subset \mathcal{T}_n$ and

$$\mathcal{L}_{n,m} \supset \mathcal{S}_n,\ \mathcal{L}_{n,m} \subset \mathcal{T}_m$$

All the spaces are embedded in $\mathcal{T}_1$. Further, let

$$Z_n = \{u \in L : w \in H^1(\omega^{[n]}),\ \underline{\theta} \in (H^1(\omega^{[n]})^2\}$$

$$\mathring{Z}_n = \{u \in Z_n : w \in H_0^1(\omega^{[n]})\}$$

and

$$\mathcal{A}_R^0(w,\underline{\theta};z,\underline{\varphi}) = \sum_{i=0}^{\infty} \mathcal{A}_R^{\mathcal{D}_i}(\underline{u},\underline{v})$$

where $\mathcal{A}_R^{\omega}$ is given in Section 3.2 for the region ω and $\mathcal{A}_R^{\mathcal{D}_i}$ has the same form but is integrated only over $\mathcal{D}^i$. Analogously we define $\mathcal{A}_R^{\omega^{[n]}}$, etc. We finally supply $\mathcal{T}_1$ with the norm

$$\|\underline{u}\|^2 = \sum_{i=0}^{\infty} \mathcal{A}_R^{\mathcal{D}_i}(\underline{u},\underline{u}).$$

To see that $\|\cdot\|$ is indeed a norm, assume that $\underline{u} = (w,\underline{\theta}) \in \mathcal{T}_1$ and $\|\underline{u}\| = 0$. Then since the first term in the expression for $\mathcal{A}_R^{\mathcal{D}_i}$ is the same as in the case of plane elasticity (where θ_1,θ_2 play the role of the displacements) we have on $\mathcal{D}_j$, $\theta_1 = a_j + c_j x_2$, $\theta_2 = b_j - c_j x_1$ and because $\|\underline{\theta} - \nabla w\|_{0,\mathcal{D}_j} = 0$ we get $c_j = 0$. Hence $w = d_j + a_j x_1 + b_j x_2$ on $\mathcal{D}_j$ and so because $w \in H_0^1(\omega^{[0]})$ we get $w = 0$ and $a_j = b_j = 0$, $j = 0,1,2,\ldots$ (see also Appendix B). Hence $\underline{u} = 0$ and accordingly, $\|\cdot\|$ is a norm on $\mathcal{T}_1$.

For $\underline{u} \in Z_n$ let $\|\underline{u}\|^2_{R,\omega^{[n]}} = \mathcal{A}_R^{\omega^{[n]}}(\underline{u},\underline{u})$. Then by Theorem B.1

(4.5a) $$\inf_{abc} \|\theta_1 - (a+cx_2), \theta_2 - (b-cx_1)\|_{1,\omega^{[n]}} \le C_n \|u\|_{R,\omega^{[n]}}$$

(4.5b) $$\inf_{abcd} \|w - (d+ax_1+bx_2+cx_1x_2)\|_{1,\omega^{[n]}} \le C_n \|u\|_{R,\omega^{[n]}}.$$

Here C_n depends in general on $\omega^{[n]}$.

Assume now that for an $n_0 > 0$

(4.6a) $\qquad f$ has compact support in $\omega^{[n_0]}$,

(4.6b)

$$\int_{\omega^{[n_0]}} f dx_1 dx_2 = \int_{\omega^{[n_0]}} f x_1 dx_1 dx_2 = \; = \int_{\omega^{[n_0]}} f x_2 dx_1 dx_2 = \int_{\omega^{[n_0]}} f x_1 x_2 dx_1 dx_2 = 0$$

and that $n > n_0$, $m > n_0$. Then for $\underline{u} \in \mathcal{T}_n$, $n \geq n_0$,

$$\left| \int_{\omega^{[0]}} f w dx_1 dx_2 \right| = \left| \int_{\omega^{[n_0]}} f w dx_1 dx_2 \right| \leq C_{n_0} \|u\|,$$

and hence for $n, m \geq n_0$, there exist unique $\underline{u}(\mathcal{S}_n) \in \mathcal{S}_n$, $\underline{u}(\mathcal{T}_n) \in \mathcal{T}_n$, $\underline{u}(\mathcal{L}_{n,m}) \in \mathcal{L}_{n,m}$, $\underline{u}(\mathring{Z}_n) \in \mathring{Z}_m$ such that

$$t_R^0(\underline{u}(\mathcal{S}_n), \underline{v}) = \int_{\omega^{[0]}} f z dx_1 dx_2, \quad \forall\, v \in (z, \underline{\varphi}) \in \mathcal{S}_n$$

and analogously for $u(\mathcal{T}_n)$, $u(\mathcal{L}_{n,m})$, $u(\mathring{Z}_n)$. Obviuosly $\underline{u}(\mathcal{S}_0) = \underline{u}_R^{[0]}$ and $\underline{u}(\mathring{Z}_n) = \underline{u}_R^{[n]}$ and $\underline{u}(\mathcal{L}_{n,m}) = \underline{u}(\mathring{Z}_n)$ on $\omega^{[n]}$ and is zero on $\mathcal{D}_n^0$.

Using Theorem C.1 we get

(4.7a) $$\underline{u}_R^{[0]} = \underline{u}(\mathcal{S}_0) = \underline{u}(\mathcal{S}_n) + \underline{\rho}(\mathcal{S}_0, \mathcal{S}_n)$$

(4.7b) $$\|\underline{u}(\mathcal{S}_0)\|^2 = \|\underline{u}(\mathcal{S}_n)\|^2 + \|\underline{\rho}(\mathcal{S}_0, \mathcal{S}_n)\|^2$$

(4.7c) $$\|\underline{\rho}(\mathcal{S}_0, \mathcal{S}_n)\| \to 0 \quad \text{as} \quad n \to \infty$$

(4.8a) $$\underline{u}(\mathcal{T}_n) = \underline{u}(\mathcal{S}_0) + \underline{\rho}(\mathcal{T}_n, \mathcal{S}_0)$$

(4.8b) $$\|\underline{u}(\mathcal{T}_n)\|^2 = \|\underline{u}(\mathcal{S}_0)\|^2 + \|\underline{\rho}(\mathcal{T}_n, \mathcal{S}_0)\|^2$$

(4.8c) $$\|\underline{\rho}(\mathcal{T}_n, \mathcal{S}_0)\| \to 0 \quad \text{as} \quad n \to \infty$$

(4.9a) $$\underline{u}(\mathcal{L}_{n,m}) = \underline{u}(\mathcal{S}_n) + \underline{\rho}(\mathcal{L}_{n,m}, \mathcal{S}_n)$$

(4.9b) $$\|\underline{u}(\mathcal{L}_{n,m})\|^2 = \|\underline{u}(\mathcal{S}_n)\|^2 + \|\underline{\rho}(\mathcal{L}_{n,m}, \mathcal{S}_n)\|^2$$

(4.9c) $$\|\underline{\rho}(\mathcal{L}_{n,m}, \mathcal{S}_n)\| \longrightarrow 0 \quad \text{as} \quad m \longrightarrow \infty.$$

(4.10a) $$\underline{u}(\mathcal{T}_m) = \underline{u}(\mathcal{L}_{n,m}) + \underline{\rho}(\mathcal{T}_m, \mathcal{L}_{n,m})$$

(4.10b) $$\|\underline{u}(\mathcal{T}_m)\|^2 = \|\underline{u}(\mathcal{L}_{n,m})\|^2 + \|\underline{\rho}(\mathcal{T}_m, \mathcal{L}_{n,m})\|^2$$

(4.10c) $$\|\underline{\rho}(\mathcal{T}_m, \mathcal{L}_{n,m})\| \longrightarrow 0 \quad \text{as} \quad n \longrightarrow \infty.$$

Let now $\varepsilon > 0$ and $n > \max(n(\varepsilon), n_0)$. Then we have

$$\|\underline{\rho}(\mathcal{S}_0, \mathcal{S}_n)\|^2 < \varepsilon$$

$$\|\underline{\rho}(\mathcal{T}_n, \mathcal{S}_0)\|^2 < \varepsilon.$$

Using (4.7) - (4.10) we get

$$\begin{aligned}
\|\underline{u}(\mathcal{S}_0)\|^2 + \|\underline{\rho}(\mathcal{T}_m, \mathcal{S}_0)\|^2 &= \|\underline{u}(\mathcal{T}_m)\|^2 = \|\underline{u}(\mathcal{L}_{n,m})\|^2 + \|\underline{\rho}(\mathcal{T}_m, \mathcal{L}_{n,m})\|^2 \\
&= \|\underline{u}(\mathcal{S}_n)\|^2 + \|\underline{\rho}(\mathcal{L}_{n,m}, \mathcal{S}_n)\|^2 + \|\underline{\rho}(\mathcal{T}_n, \mathcal{L}_{n-n})\|^2 \\
&= \|\underline{u}(\mathcal{S}_n)\|^2 - \|\underline{\rho}(\mathcal{S}_0, \mathcal{S}_n)\|^2 + \|\underline{\rho}(\mathcal{L}_{n,m}, \mathcal{S}_n)\|^2 \\
&\quad + \|\underline{\rho}(\mathcal{T}_m, \mathcal{L}_{n,m})\|^2
\end{aligned}$$

and hence for $n, m \geq \max(n(\varepsilon), n_0)$

$$\|\underline{\rho}(\mathcal{T}_m, \mathcal{S}_0)\|^2 + \|\underline{\rho}(\mathcal{S}_0, \mathcal{S}_n)\|^2 = \|\underline{\rho}(\mathcal{L}_{n,m}, \mathcal{S}_n)\|^2 + \|\underline{\rho}(\mathcal{T}_m, \mathcal{L}_{n,m})\|^2 \leq 2\varepsilon$$

which yields

$$\|\underline{\rho}(\mathcal{L}_{n,n}, \mathcal{S}_n)\|^2 \leq 2\varepsilon.$$

Therefore

$$\underline{u}(\mathcal{S}_0) - \underline{u}(\mathcal{L}_{n,n}) = \underline{u}(\mathcal{S}_0) - \underline{u}(\mathcal{S}_n) + \underline{u}(\mathcal{S}_n) - \underline{u}(\mathcal{L}_{n,n}) = \underline{\rho}(\mathcal{S}_0, \mathcal{S}_n) - \underline{\rho}(\mathcal{L}_{n,n}, \mathcal{S}_n)$$

and hence

$$\|\underline{u}(\mathcal{S}_0) - \underline{u}(\mathcal{L}_{n,n})\| \le \varepsilon^{1/2} + \sqrt{2\varepsilon} \le C\varepsilon^{1/2}.$$

Because as we said above $\underline{u}(\mathcal{L}_{n,n}) = \underline{u}_R^{[n]}$ on $\omega^{[n]}$ and $= 0$ on $\mathcal{D}_n^0$, $\underline{u}_R^{[n]} \to \underline{u}_R^{[0]}$ in the space $\mathcal{T}_1$ or in any $\mathcal{T}_m$ for m fixed.

<u>Remark 4.2</u>. Note that until now we did not use Theorem B.3, we used only Theorem B.1. □

So far we have assumed that f satisfies the conditions 4.6. Let us now study the general case. Assume that $f \in L_2(\omega^{[0]})$.

Let us first note that if $\underline{u} = (w, \theta) \in \mathcal{L}_{n,n}$, then $w \in H_0^1(\omega^{[0]})$ and

$$\|w\|_{1,\omega^{[n]}} = \|w\|_{1,\omega^{[n]}} \le C\|\underline{u}\| \tag{4.11}$$

with C independent of n because of Theorem B.3.

For $0 < \Delta < 1/2$ we denote

$$R_\Delta = \{(x_1, x_2) : x_1^2 + x_2^2 > 1 - \Delta\}$$

$$\partial R_\Delta = \{(x_1, x_2) : x_1^2 + x_2^2 = 1 - \Delta\}.$$

Then

$$\|w\|_{0,R_\Delta} \le C\Delta\|w\|_{1,\omega^{[0]}} \le C\Delta\|u\|,$$

$$\|w\|_{0,\partial R_\Delta} \le C\Delta^{1/2}\|w\|_{1,\omega^{[0]}} \le C\Delta^{1/2}\|u\|.$$

Let now

$$f_\Delta = \begin{cases} f & \text{on } R_\Delta \\ 0 & \text{on } \omega^{[0]} - R_\Delta \end{cases}$$

and

$$g_\Delta = (a+bx_1+cx_2+dx_1x_2)\mathcal{O}_\Delta,$$

where $\mathcal{O}_\Delta$ is the Dirac function concentrated on ∂R_Δ and a,b,c,d are such that $f_\Delta + g_\Delta$ satisfies (4.6).

For $n > n_{1,\Delta}$ such that $\bar{\bar{R}}_\Delta \subset \omega^{[n_{1,\Delta}]}$, let $\underline{u}_\Delta(\mathcal{L}_{n,n})$ and $\underline{u}_\Delta(\mathcal{S}_0)$ be the solutions when instead f the function f_Δ is used. Then we get

$$\|\underline{u}_\Delta(\mathcal{L}_{n,n}) - \underline{u}(\mathcal{L}_{n,n})\| \le C\Delta^{1/2},$$

$$\|\underline{u}_\Delta(\mathcal{S}_0) - \underline{u}(\mathcal{S}_0)\| \le C\Delta^{1/2},$$

where C is independent of n and Δ but in general depends on f. Hence we can select Δ so that $C\Delta^{1/2} < \varepsilon$. Further we have shown

$$\|\underline{u}_\Delta(\mathcal{L}_{n,n}) - \underline{u}_\Delta(\mathcal{S}_0)\| < \varepsilon$$

for all $n \ge n_1(\varepsilon)$ and therefore

$$\|\underline{u}(\mathcal{L}_{n,n}) - \underline{u}(\mathcal{S}_0)\| < 3\varepsilon$$

for all $n \ge n_1(\varepsilon)$. Since $\underline{u}(\mathcal{S}_0) = \underline{u}_R^{[0]}$ and $\underline{u}(\mathcal{L}_{n,n}) = \underline{u}_R^{[n]}$, we get

$$\|\underline{u}_R^{[0]} - \underline{u}_R^{[n]}\| \longrightarrow 0 \quad \text{as} \quad n \longrightarrow \infty.$$

Here $\underline{u}_R^{[n]} = (w_R^{[n]}, \underline{\theta}_R^{[n]})$ is understood to be extended by zero on $\mathcal{D}_n^0$ and $\|\cdot\|$ is the norm in $\mathcal{T}_1$ (note that $w_R^{[n]} \in H_0^1(\omega^{[0]})$, but $\underline{\theta}_R^{[n]} \notin H^1(\omega^{[0]})$ although $\theta_R^{[n]} \subset H^1(\omega^{[n]})$). Because the functions in $H^1(\omega^{[0]})$ with compact support are dense in $H_0^1(\omega^0)$, there is $\bar{w}^{[n]} \in H_0^1(\omega^{[n]})$ such that $\|w^{[0]} - \bar{w}^{[n]}\| \le \varepsilon$ for all $n \ge n_2(\varepsilon)$. Hence with $\bar{\underline{u}}^{[n]} = (\bar{w}^{[n]}, \underline{\theta}_R^{[n]}))$ we get

$$\|\bar{\underline{u}}^{[n]} - \underline{u}_R^{[0]}\| \longrightarrow 0 \quad \text{as} \quad n \longrightarrow \infty.$$

Hence using Theorem B.2

$$\|w_R^{[n]} - w_R^{[0]}\|^2_{H^1(\omega^{[n]})} + \|\underline{\theta}^{[n]} - \underline{\theta}_R^{[0]}\|^2_{H^1(\omega^{[n]})} \longrightarrow 0 \quad \text{as} \quad n \longrightarrow \infty.$$

Summarizing we have proven

<u>Theorem 4.4</u>. Let $f \in L_2(\omega^{[0]})$ and let $u_R^{[n]} = (w_R^{[n]}, \underline{\theta}_R^{[n]})$, respectively $u_R^{[0]} = (w_R^{[0]}, \underline{\theta}_R^{[0]})$, be the Reissner-Mindlin solution on $\omega^{[n]}$, respectively $\omega^{[0]}$, for the soft simple support and fixed h. Then

$$\|w_R^{[n]} - w_R^{[0]}\|_{H^1(\omega^{[n]})} + \|\underline{\theta}_R^{[n]} - \underline{\theta}_R^{[0]}\|_{H^1(\omega^{[n]})} \longrightarrow 0 \quad \text{as} \quad n \longrightarrow \infty. \qquad \square$$

We see that in contrast to the hard support there is no plate paradox when the soft support is imposed. Hence the soft simple support is physically more natural than the hard simple support.

<u>Remark 4.3</u>. In Theorem 4.2 we assumed that $f \in L_2(\omega^{[0]})$ while the solutions $\underline{u}_R^{[0]}$ and $\underline{u}_R^{[n]}$ were defined for any $f \in H^{-1}(\omega^{[0]})$, respectively $f \in H^{-1}(\omega^{[n]})$. If f has compact support then Theorem 4.4 holds also for $f \in H^{-1}(\omega^{[0]})$. We can weaken the assumptions on f in Theorem 4.4, e.g., so that $f \in H^{\alpha}(\omega^{[0]})$, $\alpha > -1/2$, but the proof will not hold for $f \in H^{-1}(\omega^{[0]})$.

$\square$

<u>Remark 4.4</u>. We have assumed that $\omega^{[n]}$ is the sequence of regular polygons. This assumption was used only when using Theorem B.3. Hence Theorem 4.4 holds for any regular family of domains (see Appendix B). If f satisfies (4.6) then there is no need for the regularity (see Remark 4.2) of the family of domains under consideration and Theorem 4.4 holds in the full generality. $\square$

<u>Remark 4.5</u>. We have assumed in Theorem 4.5 that $h > 0$ is fixed (i.e., independent of n). We could also consider a two-parameter family of problems where both n and h vary. Then, for n fixed and $h \longrightarrow 0$, $\underline{u}_R^{[n]} \longrightarrow \underline{u}_K^{[n]}$ (and hence for $h \longrightarrow 0$ the difference between soft and hard support disap-

pears). Hence combining the results of this section with Section 4.2, we see that

$$\lim_{n\to\infty}\lim_{h\to 0} \underline{u}_R^{(n)} \neq \lim_{h\to 0}\lim_{n\to\infty} \underline{u}_R^{(n)}. \qquad \square$$

In the quite analogous way as we have proved Theorem 4.4 we can prove

<u>Theorem 4.5</u>. Let h be fixed and $\underline{u}^{[0]}$, respectively $\underline{u}^{[n]}$, be the solution of the three-dimensional plate problem on $\Omega^{[0]}$, respectively $\Omega^{[n]}$, with simple soft support. Assume that the load $p \in L_2(\omega^{[0]})$. Then

$$\|\underline{u}^{[0]} - \underline{u}^{[n]}\|_{1,\Omega^{[n]}} \longrightarrow 0$$

as $n \longrightarrow \infty$. $\square$

<u>Remark 4.6</u>. Remarks 4.3- 4.5 are valid also for the three-dimensional plate model. $\square$

4.5. Some additional considerations.

As we have seen the Kirchhoff model (biharmonic equation) leads to paradoxical behavior for the hard simple support. The same mathematical formulation describes also other problems and hence leads to the same paradoxical behavior.

As an example, we mention the problem of reinforced tube shown in Figure 4.3a,b. The reinforcement is attached by an unextendable tape to the exterior surface. Here we have the paradox consisting of the fact that the stress caused by hydrostatic pressure is different for the polygonal and circular outer surfaces.

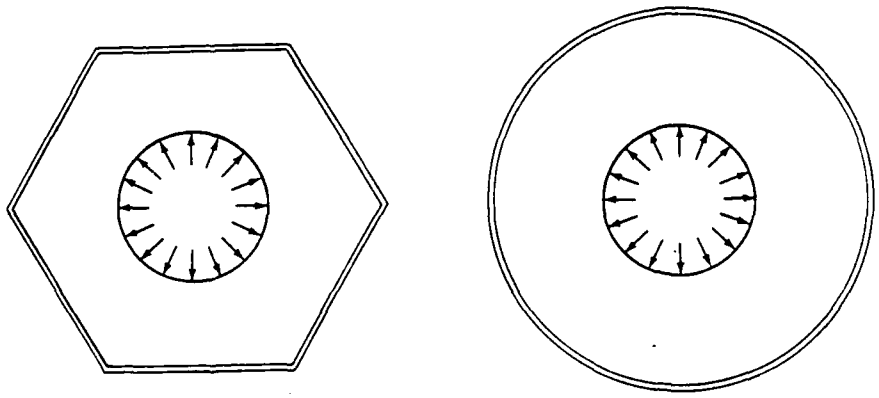

Figure 4.3.

Reinforced polygonal and circular tubes.

Analogous examples can very likely be found in other fields than elasticity where the problem reduces to the biharmonic (or polyharmonic) equation.

We have shown the paradoxical behavior for $n \to \infty$ and h relatively large compared with $1/n$ (see Remark 4.5). Hence the question arises how large will be the difference between the hard and soft support in three-dimensional formulation for n fixed and $h \to 0$. To this end we consider a square plate with side length $= 1$. In Table 4.1 we give the values of

$$\left[\frac{|E_{SOFT}-E_{HARD}|}{|E_{SOFT}|}\right]^{1/2} = \eta(h)$$

and

$$\left[\frac{|E_{HARD}-E_K|}{|E_{HARD}|}\right]^{1/2} = \xi(h).$$

Here by E_{SOFT} and E_{HARD} we denoted the (3-dim) plate energy for the soft and hard support and by E_K the plate energy of the Kirchhoff model for Poisson ratio $\nu = 0$ (see also [7]).

Table 4.1.

%	h = 0.1	h = 0.01
η	34.68	11.69
ξ	20.21	2.03

Appendix A. Well-posedness of variational problems (3.4), (3.7), and (3.8).

We make use of the following basic theorem, see [18].

Theorem A.1. Let H be a Hilbert space and $\mathcal{B}$ be a bilinear form on $H \times H$ which satisfies

$$\text{(A.0)} \qquad \mathcal{B}(u,v) = \mathcal{B}(v,u), \quad u,v \in H,$$

$$\text{(A.1)} \qquad |\mathcal{B}(u,v)| \le C\|u\|_H \|v\|_H, \quad u,v \in H,$$

$$\text{(A.2)} \qquad \sup_{\substack{v \in H \\ \|v\|_H = 1}} \mathcal{B}(u,v) \ge c\|u\|_H \quad \forall\, u \in H,$$

where C and c are positive constants. Then if F is any bounded linear functional on H, there is a unique $u \in H$ satisfying

$$\text{(A.3)} \qquad \mathcal{B}(u,v) = F(v), \quad v \in H. \qquad \square$$

In applying Theorem A.1 to problems (3.4), (3.7), and (3.8), we choose the following notation:

a) Three-dimensional model (Eqs. (3.4)).

$$H = U \times \mathcal{H},$$

$$\mathcal{B}(\underline{u}, \underline{\underline{\sigma}}; \underline{v}, \underline{\underline{\tau}}) = (\underline{\underline{\sigma}} S^{-1} \underline{\underline{\tau}})_{\mathcal{H}} - (\underline{\underline{\varepsilon}}(\underline{u}), \underline{\underline{\tau}})_{\mathcal{H}} - (\underline{\underline{\sigma}}, \underline{\underline{\varepsilon}}(\underline{v}))_{\mathcal{H}},$$

$$F(\underline{v}, \underline{\underline{\tau}}) = -Q(\underline{v}).$$

b) Reissner-Mindlin model (Eqs. (3.7)).

$$H = H_0^1(\omega) \times V \times \mathcal{K} \times [L_2(\omega)]^2,$$

$$\mathcal{B}(w, \underline{\theta}, \underline{\underline{m}}, \underline{\gamma}; z, \underline{\varphi}, \underline{\underline{k}}, \underline{\zeta}) = (\underline{\underline{m}}, T^{-1} \underline{\underline{k}})_{\mathcal{K}} - (\underline{\underline{\varepsilon}}(\underline{\theta}), \underline{\underline{k}})_{\mathcal{K}}$$

$$- (\underline{\underline{\varepsilon}}(\underline{\varphi}), \underline{\underline{m}})_{\mathcal{K}} - (\underline{\theta} - \underline{\underline{\nabla}} w, \underline{\zeta}) - (\underline{\varphi} - \underline{\underline{\nabla}} z, \underline{\gamma}) + (h^2/\kappa)(\underline{\gamma}, \underline{\zeta}),$$

$$F(z,\underline{\varphi},\underline{\underline{k}},\underline{\zeta}) = -\langle f,z\rangle.$$

c) Kirchhoff model (Eqs. (3.8)).

$$H = W\times V\times \mathcal{K}\times V',$$

$$\mathcal{B}(w,\underline{\theta},\underline{\underline{m}},\underline{\gamma};z,\underline{\varphi},\underline{\underline{k}},\underline{\zeta}) = (\underline{\underline{m}},T^{-1}\underline{\underline{k}})_{\mathcal{K}} - (\underline{\underline{\varepsilon}}(\underline{\theta}),\underline{\underline{k}})_{\mathcal{K}}$$

$$- (\underline{\underline{\varepsilon}}(\underline{\varphi}),\underline{\underline{m}})_{\mathcal{K}} - \langle\underline{\theta}-\underline{\underline{\nabla}}w,\underline{\zeta}\rangle - \langle\underline{\varphi}-\underline{\underline{\nabla}}z,\underline{\gamma}\rangle,$$

$$F(z,\underline{\varphi},\underline{\underline{k}},\underline{\zeta}) = -\langle f,z\rangle.$$

Then in each case, $\mathcal{B}$ is symmetric, F is a bounded linear functional on H, and the variational problem takes the general form (A.3). Thus it suffices to show that (A.1) and (A.2) hold.

<u>Theorem A.2</u>. Assume that ω is a bounded Lipschitz domain and that the parameters $\nu, h,$ and κ satisfy

$$0 \le \nu < 1/2, \quad \bar{h} \le h \le \bar{h}^{-1}, \quad \bar{\kappa} \le \bar{\kappa} \le \bar{\kappa}^{-1},$$

where $\bar{h} > 0$ and $\bar{\kappa} > 0$ are given. Then in each of the above three cases there are the constants $C = C(\bar{h},\bar{\kappa})$ and $c = c(\omega,\bar{h},\bar{\kappa})$ such that (A.1) and (A.2) hold.

<u>Proof</u>. In view of (3.2) and (3.6) the mappings $S^{-1} : \mathcal{H}\to\mathcal{H}$ and $T^{-1} : \mathcal{K}\to\mathcal{K}$ are uniformly bounded in the assumed range of ν. It then follows easily that the assertion concerning (A.1) holds, so let us concentrate on showing that (A.2) is true.

a) The three-dimensional model.

Let $(\underline{u},\underline{\underline{\sigma}}) \in U\times\mathcal{H}$ be given and let

$$(\underline{\underline{\sigma}}_0)_{ij} = \frac{1}{3}\mathrm{tr}(\underline{\underline{\sigma}})\delta_{ij}, \quad i,j = 1,2,3.$$

Then $\|\underline{\underline{\sigma}}\|^2_{\mathcal{H}} = \|\underline{\underline{\sigma}} - \underline{\underline{\sigma}}_0\|^2_{\mathcal{H}} + \frac{1}{3}\|\mathrm{tr}(\underline{\underline{\sigma}})\|^2_{0,\Omega}$ and it follows from (3.2) that

(A.4)

$$(\underline{\sigma}, S^{-1}\underline{\sigma})_{\mathcal{H}} = \frac{D}{E}\{(1+\nu)\|\underline{\sigma}-\underline{\sigma}_0\|^2_{\mathcal{H}} + (1-2\nu)\|\underline{\sigma}_0\|^2_{\mathcal{H}}\} \geq \frac{h^3}{12}\|\underline{\sigma}-\underline{\sigma}_0\|^2_{\mathcal{H}}, \quad (0 \leq \nu \leq 1/2).$$

We make use the following lemma which is related to the well-posedness of the Stokes problem. For the proof, cf. [12].

<u>Lemma A.1</u>. There exists $\underline{v}_0 \in U$ and a constant C_1 depending on ω and $\bar{h}$ such that the following inequalities hold:

$$\|\underline{v}_0\|_{1,\Omega} \leq C_1\|tr(\underline{\underline{\sigma}})\|_{0,\Omega}$$

$$(\text{div } \underline{v}_0, tr(\underline{\underline{\sigma}})) \geq \|tr(\underline{\underline{\sigma}})\|^2_{0,\Omega}. \qquad \square$$

With $\underline{v}_0$ as in Lemma A.1 we now set $(\underline{v}, \underline{\underline{\tau}}) = (-\underline{u}-\delta\underline{v}_0, \underline{\underline{\sigma}}-\delta^2\underline{\underline{\varepsilon}}(\underline{u}))$ where δ is a constant to be specified shortly. Then applying (A.4), the inequality $(\tau_1,\tau_2)_{\mathcal{H}} \leq (s/2)\|\tau_1\|^2_{\mathcal{H}} + (1/2s)\|\tau_2\|^2_{\mathcal{H}}$, $(s > 0)$, and Lemma 3.1, we have that

$$\begin{aligned}
\mathcal{B}(\underline{u}, \underline{\underline{\sigma}}; \underline{v}, \underline{\underline{\tau}}) &= (\underline{\underline{\sigma}}, S^{-1}\underline{\underline{\sigma}})_{\mathcal{H}} + \tfrac{1}{3}\delta(tr(\underline{\underline{\sigma}}), \text{div } \underline{v}_0) \\
&\quad + \delta(\underline{\underline{\sigma}}-\underline{\underline{\sigma}}_0, \underline{\underline{\varepsilon}}(\underline{v}_0)) + \delta^2\|\underline{\underline{\varepsilon}}(\underline{u})\|^2_{\mathcal{H}} - \delta^2(\underline{\underline{\sigma}}, S^{-1}\underline{\underline{\varepsilon}}(\underline{u}))_{\mathcal{H}} \\
&\geq \left[\frac{1}{12}\bar{h}^3 - C_2\delta - C_3\delta^2\right]\|\underline{\underline{\sigma}}-\underline{\underline{\sigma}}_0\|^2_{\mathcal{H}} + \left[\frac{1}{6}\delta - C_4\delta^2\right]\|tr(\underline{\underline{\sigma}})\|^2_{0,\Omega} + c_1\delta^2\|\underline{u}\|^2_{1,\Omega} \\
&\geq \min\left\{\frac{1}{12}\bar{h}^3 - C_2\delta - C_3\delta^2, \frac{1}{2}\delta - 3C_4\delta^2, c_1\delta^2\right\}(\|\underline{u}\|^2_{1,\Omega} + \|\underline{\underline{\sigma}}\|^2_{\mathcal{H}}).
\end{aligned}$$

Thus, choosing δ to be a sufficiently small positive number, we have found $(\underline{v}, \underline{\underline{\tau}}) \in U\times\mathcal{H}$ such that $\|\underline{v}, \underline{\underline{\tau}}\|_H \leq C\|\underline{u}, \underline{\underline{\sigma}}\|_H$ and $\mathcal{B}(\underline{u}, \underline{\underline{\sigma}}; \underline{v}, \underline{\underline{\tau}}) \geq c\|\underline{u}, \underline{\underline{\sigma}}\|^2_H$ where C and c depend only on ω and $\bar{h}$. Hence, (A.2) is true in case a) with c depending on ω and $\bar{h}$.

b) The Reissner-Mindlin model.

Given $(w, \underline{\theta}, \underline{\underline{m}}, \underline{\gamma}) \in H^1_0(\omega)\times V\times\mathcal{K}\times[L_2(\omega)]^2$, let $(z, \underline{\varphi}, \underline{\underline{k}}, \underline{\zeta}) =$

$(-w, -\underline{\theta}, \underline{\underline{m}}-\delta\underline{\underline{\varepsilon}}(\underline{\theta}), \underline{\gamma}-\delta(\underline{\theta}-\underline{\underline{\nabla}}w))$ where δ is a constant to be specified. Then noting that by (3.6), $(\underline{\underline{m}}, T^{-1}\underline{\underline{m}}) \geq \|\underline{\underline{m}}\|_{\mathcal{K}}^2/(1+\nu)$, and recalling Lemma 3.3, we have

$$\begin{aligned}
\mathcal{B}(w,\underline{\theta},\underline{\underline{m}},\underline{\gamma};z,\underline{\varphi},\underline{\underline{k}},\underline{\zeta}) &= (\underline{\underline{m}},T^{-1}\underline{\underline{m}})_{\mathcal{K}} + (h^2/\kappa)\|\underline{\gamma}\|_{0,\omega}^2 \\
&\quad + \delta\|\underline{\underline{\varepsilon}}(\underline{\theta})\|_{\mathcal{K}}^2 - \delta(\underline{\underline{m}},T^{-1}\underline{\underline{\varepsilon}}(\underline{\theta}))_{\mathcal{K}} + \delta\|\underline{\theta}-\underline{\underline{\nabla}}w\|_{0,\omega}^2 \\
&\quad - \delta(h^2/\kappa)(\underline{\gamma},\underline{\theta}-\underline{\underline{\nabla}}w) \\
&\geq \left(\frac{1}{1+\nu} - C_1\delta\right)\|\underline{\underline{m}}\|_{\mathcal{K}}^2 + \frac{1}{2}\delta\|\underline{\underline{\varepsilon}}(\underline{\theta})\|_{\mathcal{K}}^2 + \frac{1}{2}\delta\|\underline{\theta}-\underline{\underline{\nabla}}w\|_{0,\omega}^2 \\
&\quad + (h^2/\kappa)(1-C_2\delta h^2/\kappa)\|\underline{\gamma}\|_{0,\omega}^2 \\
&\geq \min\left\{\frac{1}{1+\nu} - C_1\delta, c_1\delta, h^2/\kappa(1-C_2\delta h^2/\kappa)\right\}\times \\
&\quad \times\|w,\underline{\theta},\underline{\underline{m}},\underline{\gamma}\|_H^2.
\end{aligned}$$

Thus if δ is small enough we have found $(z,\underline{\varphi},\underline{\underline{k}},\underline{\zeta}) \in H$ such that $\|z,\underline{\varphi},\underline{\underline{k}},\underline{\zeta}\|_H \leq C\|w,\underline{\theta},\underline{\underline{m}},\underline{\gamma}\|_H$ and $\mathcal{B}(w,\underline{\theta},\underline{\underline{m}},\underline{\gamma};z,\underline{\varphi},\underline{\underline{k}},\underline{\zeta}) \geq c\|w,\underline{\theta},\underline{\underline{m}},\underline{\gamma}\|_H^2$ where the constants depend only on $\omega, \bar{h}$ and $\bar{\kappa}$. These prove the assertion in case b).

c) The Kirchhoff model.

Given $(w,\underline{\theta},\underline{\underline{m}},\underline{\gamma}) \in H$, let $(z,\underline{\varphi},\underline{\underline{k}},\underline{\zeta}) = (-w, -\underline{\theta}-\delta\underline{\varphi}_0, \underline{\underline{m}}-\delta\underline{\underline{\varepsilon}}(\underline{\theta}), \underline{\gamma}-\delta\underline{\zeta}_0)$, where $\underline{\varphi}_0 \in V$ and $\underline{\zeta}_0 \in V'$ are defined so as to satisfy

$$\|\underline{\varphi}_0\|_{1,\omega} = \|\underline{\gamma}\|_{V'};\ \langle\underline{\gamma},\underline{\varphi}_0\rangle = \|\underline{\gamma}\|_{V'}^2,$$

$$\|\underline{\zeta}_0\|_{V'} = \|\underline{\theta}-\underline{\underline{\nabla}}w\|_{1,\omega};\ \langle\underline{\theta}-\underline{\underline{\nabla}}w,\underline{\zeta}_0\rangle = \|\underline{\theta}-\underline{\underline{\nabla}}w\|_{1,\omega}^2,$$

which obviously is possible. As in case b), one then finds that for a sufficiently small δ, $\|z,\underline{\varphi},\underline{\underline{k}},\underline{\zeta}\|_H \leq C\|w,\underline{\theta},\underline{\underline{m}},\underline{\gamma}\|_H$ and $\mathcal{B}(w,\underline{\theta},\underline{\underline{m}},\underline{\gamma};z,\underline{\varphi},\underline{\underline{k}},\underline{\zeta}) \geq c\|w,\underline{\theta},\underline{\underline{m}},\underline{\gamma}\|_H^2$ where C and c depend only on ω, and so the assertion follows in case c). □

Appendix B. The Korn inequality.

Let ω be a bounded Lipschitz domain and define the seminorm

$$|\underline{\theta}|_{E(\omega)} = \left\{\int_\omega \sum_{i,j=1}^{2} |\varepsilon_{ij}(\underline{\theta})|^2 dx_1 dx_2\right\}^{1/2}, \quad \underline{\theta} \in (H^1(\omega))^2,$$

where $\varepsilon_{ij}(\underline{\theta}) = \frac{1}{2}\left(\frac{\partial\theta_i}{\partial x_j} + \frac{\partial\theta_j}{\partial x_i}\right)$ and let

$$|\underline{u}|^2_{R,\omega} = |\underline{\theta}|^2_{E(\omega)} + \|\underline{\theta} - \underline{\nabla} w\|^2_{0,\omega}, \quad \underline{u} = (w, \underline{\theta}), \quad w \in H^1(\omega), \ \underline{\theta} \in (H^1(\omega))^2.$$

Theorem B.1. There is a constant C depending only on ω such that for any $\underline{\theta} \in [H^1(\omega)]^2$

$$\text{(B.1)} \qquad \inf_{abc}\{\|\theta_1 - a - bx_2\|^2_{1,\omega} + \|\theta_2 - c + bx_1\|^2_{1,\omega}\} \le C|\underline{\theta}|^2_{E(\omega)}$$

$$\text{(B.2)} \qquad \inf_{abcd} \|w - (a+bx_1+cx_2+dx_1x_2)\|_{H^1(\omega)} \le C|\underline{u}|_{R,\omega}.$$

Proof. Inequality (B.1) follows immediately from the Korn inequality for plane elasticity, see [19]. Inequality (B.2) follows from (B.1). □

Lemma B.2. There exists a constant C depending on ω such that for any $(w, \underline{\theta}) \in [H^1(\omega)]^3$

$$\|w\|^2_{1,\omega} + \|\underline{\theta}\|^2_{1,\omega} \le C\{|\underline{u}|^2_{R,\omega} + \int_{\partial\omega} w^2 ds\}.$$

Proof. We apply the standard contradiction argument. If the assertion is not true, there is a sequence $\{w_n, \underline{\theta}_n\}$ such that

$$\|w_n, \underline{\theta}_n\|_{1,\omega} = 1$$

and

$$\|\underline{\theta}_n\|_{E(\omega)} \to 0,$$

$$\|\underline{\theta}_n - \underline{\underline{\nabla}} w_n\|_{0,\omega} \to 0, \quad \int_{\partial\omega} w_n^2 ds \to 0$$

as $n \to \infty$. Then by Theorem B.1, $\{\underline{\theta}_n\}$ contains a subsequence (which we denote once more by $\{\underline{\theta}_n\}$) such that $\underline{\theta}_n \to (a-bx_2, c+bx_1)$ in $H^1(\omega)$. Further, since $\|\theta_n - \nabla w_n\|_{0,\omega} \to 0$ there is another subsequence (once more denoted by $\{\underline{\theta}_n, w_n\}$) so that $w_n \to w$ in $H^1(\omega)$. Hence $b = 0$ and $w = ax_1 + cx_2 + d$. Because $\int w_n^2 ds \to 0$ we get $a = c = d = 0$ which contradicts the assumpton $\|w_n, \underline{\theta}_n\|_{1,\omega} = 1$. □

We immediately get

<u>Theorem B.2</u>. There exists a constant C depending only on ω such that for any $\underline{u} = (w, \underline{\theta}) \in H_0^1(\omega) \times [H^1(\omega)]^2$

$$\|w\|_{1,\omega}^2 + \|\underline{\theta}\|_{1,\omega} \le C|\underline{u}|_{R,\omega}^2. \tag{B.3}$$ □

Let us now consider a family $\mathcal{F} = \{\omega\}$ of Lipschitz bounded domains. The family will be called <u>regular</u> if there is a (uniform) constant C so that (B.3) holds for all $\omega \in \mathcal{F}$.

Let us now consider a special family of domains. Let $\omega^{[0]}$ be a unit circle and $\omega^{[n]}$ be a sequence of regular $n+3$-polygons such that

$$\bar{\omega}^{[n]} \subset \bar{\omega}^{[n+1]} \subset \bar{\omega}^{[n+1]} \subset \omega^{[0]},$$

and

$$\omega^{[n]} \to \omega^{[0]} \quad \text{as} \quad n \to \infty$$

in the sense that for any $x \in \omega^{[0]}$ there is $n(x) > 0$ such that $x \in \omega^{[n]}$ for all $n > n(x)$. We let $\mathcal{F}_0 = \{\omega^{[0]}, \omega^{[1]}, \omega^{[2]}, \ldots\}$.

Theorem B.3. The family $\mathcal{F}_0$ is a regular family of domains and hence there exists $C > 0$ such that

$$\|w\|^2_{1,\omega^{[n]}} + \|\underline{\theta}\|^2_{1,\omega^{[n]}} \le C|\underline{u}|^2_{R,\omega^{[n]}}$$

for any $\underline{u} = (w,\underline{\theta}) \in H^1_0(\omega^{[n]})\times[H^1(\omega^{[n]})]^2$., $n = 0,1,2,\ldots$.

Proof. For $n > n_0$ the $\omega^{[n]}$ are star shaped domains and

$$\partial\omega^{[n]} = \{(x_1,x_2) : x_1 = \rho_n(\theta)\cos\theta,$$
$$x_2 = \rho_n(\theta)\sin\theta, \quad 0 \le \theta \le 2\pi\},$$

where $\rho_n(\theta)\longrightarrow 1$ and $\rho_n'(\theta)\longrightarrow 0$ uniformly. Let Q_n be the one-to-one map of $\omega^{[n]}$ onto $\omega^{[0]}$ defined by

$$Q_n(\rho(\theta)\cos\theta,\rho(\theta)\sin\theta) = (\rho(\theta)\cos\theta,\rho(\theta)\sin\theta) \quad \text{for} \quad \rho(\theta) \le 1/2,$$

$$= \left[\frac{1}{2}\,\frac{\rho(\theta)-(1/2)}{\rho_n(\theta)-(1/2)} + \frac{1}{2}\right]\cos\theta,$$

$$\left[\left[\frac{1}{2}\,\frac{\rho(\theta)-(1/2)}{\rho_n(\theta)-(1/2)} + \frac{1}{2}\right]\sin\theta\right] \quad \text{for} \quad \rho(\theta) > 1/2.$$

If $Q_n(x_1,x_2) = (\xi_1,\xi_2)$ then we have $\xi_1 = \xi_1^{[n]}(x_1,x_2)$, $\xi_2^{[n]} = \xi_2(x_1,x_2)$, $x_1 = x_1^{[n]}(\xi_1,\xi_2)$, $x_2 = x_2^{[n]}(\xi_1,\xi_2)$ and $\xi_i^{[n]}\longrightarrow x_i$, $\dfrac{\partial\xi_i}{\partial x_j}\longrightarrow\delta_{ij}$, $x_i^{[n]}\longrightarrow\xi_i$, $\dfrac{\partial x_i}{\partial\xi_j}\longrightarrow\delta_{ij}$, $i,j = 1,2$ as $n\longrightarrow\infty$, uniformly with respect to $(x_1,x_2) \in \omega^{[n]}$ and $(\xi_1,\xi_2) \in \omega^{[0]}$. Let $\underline{u} = (w,\underline{\theta}) \in H^1_0(\omega^{[n]})\times(H^1(\omega^{[n]}))^2$ and let

$$\bar{u} = (\bar{w},\bar{\underline{\theta}}),\ \bar{\underline{u}}(\xi_1,\xi_2) = \underline{u}(x_1(\xi_1,\xi_2),x_2(\xi_1,\xi_2)).$$

Then $\bar{\underline{u}} \in H^1_0(\omega^{[0]})\times(H^1(\omega^{[0]})^2)$ and by Theorem B.2 we have

$$\|\bar{w}\|^2_{1,\omega^{[0]}} + \|\underline{\theta}\|^2_{1,\omega^{[0]}} \le C|\bar{\underline{u}}|^2_{R,\omega^{[0]}}$$

and also

$$\|\bar{w}\|_{1,\omega[0]} = \|w\|_{1,\omega[n]}(1+o(1)),$$

$$\|\bar{\underline{\theta}}\|_{1,\omega[0]} = \|\underline{\theta}\|_{1,\omega[n]}(1+o(1)),$$

$$|\bar{\underline{u}}|_{R,\omega[0]} = |\underline{u}|_{R,\omega[n]} + o(1)(\|w\|_{1,\omega[n]} + \|\underline{\theta}\|_{1,\omega[n]})$$

as $n \longrightarrow \infty$. Hence

$$\|w\|^2_{1,\omega[n]}(1+o(1)) + \|\underline{\theta}\|^2_{1,\omega[n]}(1+o(1))$$

$$\leq C[\,|\underline{u}|^2_{R,\omega[n]} + o(1)(\|w\|^2_{1,\omega[n]} + \|\underline{u}\|^2_{1,\omega[n]})].$$

From this we see that for $n > n_0$ the family is a regular one. Using Theorem B.2 we then see that the whole family $\mathcal{F}_0$ is regular. □

Appendix C. A projection theorem.

Theorem C.1. Let H be a Hilbert space, let $\{H_n\}$ and $\{K_n\}$ be sequences of closed subspaces of H such that $H_n \subset H_{n+1}$ and $K_n \supseteq K_{n+1}$, $n = 1,2,\ldots,$ and let

$$H_0 = \overline{\bigcup_n H_n} \quad \text{and} \quad K_0 = \bigcap_n K_n.$$

Further, let P_n and Q_n, respectively P_0, Q_0 be orthogonal projections onto H_n and K_n respectively H_0, K_0. Then for any $u \in H$

$$\|P_n u - P_0 u\| \longrightarrow 0,$$

$$\|Q_n u - Q_0 u\| \longrightarrow 0$$

as $n \longrightarrow \infty$.

Proof. Observe first that $\|Q_{n+1}u\| = \|Q_{n+1}Q_n u\| \le \|Q_n u\|$, so $\|Q_n u\| \longrightarrow q \ge 0$ monotonically. Further

$$\|Q_n u - Q_{n+j}u\| = \|Q_n u\|^2 - 2(Q_n u, Q_{n+j}u) + \|Q_{n+j}\|^2 = \|Q_n u\|^2 - \|Q_{n+j}u\|^2,$$

so $\{Q_n u\}$ is a Cauchy sequence. So $Q_n u \longrightarrow v$ and $v \in K_n$ for all n. Hence $v \in K_0$ and since $(v,w) = \lim_{n\to\infty} (Q_n u, w) = \lim_{n\to\infty} (u, Q_n w) = (u,w)$ for all $w \in K_0$, it follows that $v = Q_0 u$.

Let us now consider the projection operator $I - P_n = \tilde{Q}_n$. Then $\tilde{Q}_n$ projects H onto H_n^1 and $H_w^1 \supset H_{n+1}^1$. Hence $\tilde{Q}_n u = u - P_n u \longrightarrow u - v \in \bigcap H_n^1$. So $P_n u \longrightarrow v \in H_0$ and by the same argument as before, $v = P_0 u$. □

References

1. Ambarcumjan, S.A., *Theory of anisotropic plates*, sec. ed., Nauka, Moscow, 1987 (Russian).

2. Babuška, I., Stability of the Domain under Perturbation of the Boundary in Fundamental Problems in the Theory of Partial Differential Equations Principally in Connection with the Theory of Elasticity 1,2, Czech. Mat. J. 11 (1961), 75-105, 165-203 (Russian).

3. Babuška, I., The Stability of domains and the question of the formulation of the plate problem, Apl. Mat. J. (1962), 463-467.

4. Babuška, I., The Theory of Small Changes in the Domain of Existence in the Theory of Partial Differential Equations and its Applications, *Differential Equations and Their Applications*, Proc. Conf., Prague, 1962, 13-26, Academic press, New York, 1963.

5. Babuška, I., Aziz, A.K., Survey Lectures on the Mathematical Foundations of the Finite Element Method, in the *Mathematical Foundations of the Finite Element Method with Application to Partial Differential Equations* (A.K. Aziz, ed.), 5-363, Academic Press, New York, 1973.

6. Babuška, I., Uncertainties in Engineering Design: Mathematical Theory and Numerical Experience, in *Optimal Shape - Automated Structural Design* (J. Bennett, M. Botkin, Eds.), P_____ Press, 1986.

7. Babuška, I., Scapolla, T., Benchmark Computation and Performance Evaluation for a Rhombic Plate Bending problem, to appear in Int. J. Num. Meth. Engrg., 1988.

8. Birkhoff, G., *The Numerical Solution of Elliptic Equations*, SIAM, Philadelphia, 1971.

9. Brezzi, F., On the Existence, Uniqueness and Approximation of Saddle Point Problems Arising from Lagrange Multipliers, RAIRO, Ser R.8 (1974), 129-151.

10. Ciarlet, P.G., Destuynder, P., A Justification of the Two-Dimensional Linear Plate Model, J. Mécanique 18 (1979), 315-344.

11. Destuynder, P., *Une Théorie Asymptotique des Plaques minces en Élasticité Linéaire*, Masson, Paris, New York, 1986.

12. Girault, V., Raviart, P.A., *Finite Element Methods for Navier-Stokes Equations. Theory and Algorithms*, Springer, Berlin, Heidelberg, New York, 1986.

13. Grisvard, P., *Elliptic Problems in Nonsmooth Domains*, Pittman, Boston, MA, 1985.

14. Maz'ya, V.G., Nazarov, S.A., About the Sapondzhyn-Babuška Paradox in the Plate Theory, Doklody Akad. Nauk Armenian Rep. 78 (1984), 127-130 (Russian).

15. Maz'ya, V.G., Nazarov, S.A., Paradoxes of Limit Passage in Solutions of Boundary Value Problems involving the Approximation of Smooth Domains by Polygonal Domains, Izv. Akad. Nauk SSSR Ser. Mat. 50 91986), 1156-1177; Math USSR Izvestiya 29 (1987), 511-533 (English translation).

16. Morgenstern, D., Herleitung der Plattentheorie aus der dreidimensionalen Elastizitätstheorie, Arch. Rational Mech. Anal. 4 (1959), 145-152.

17. Morgenstern, D., Szabó, I., *Vorlesungen über Theoretische Mechanik*, Springer, Berlin, Gottingen, Heidelberg, 1961.

18. Murray, N.W., The polygon-circle paradox in thin plate theory. Proc. Cambridge Philos. Soc. 73 (1973), 279-282.

19. Nečas, J., Hlavacek, I., *Mathematical Theory of Elastic and Elasto-Plastic Bodies: An Introduction*, Elsevier Sci. Publ. Comp., Amsterdam, Oxford, New York, 1981.

20. Pitkäranta, J., Analysis of Some Low-Order Finite Element Schemes for Mindlin-Reissner and Kirchhoff Plates, Numer. Mathematik 53 (1988), 237-254.

21. Rajaiah, K., Rao, A.K., On the polygon-circle paradox, Trans. ASME Ser. E J. Appl. Mech. 48 (1981), 195-196.

22. Reissner, E., Reflections on the Theory of Elastic Plates, Developments in Mechanics, Proceedings of the 19th Midwestern Mechanics Conference, The Ohio State University, Sept. 1985, and App. Mech. Rev. 38 (1985), 1453-1464.

23. Rieder, G., On the Plate Paradox of Sapondzhyan and Babuška, Mech. Res. Comm. 1 (1974), 51-53.

24. Saada, A.S., *Elasticity Theory and Applications*, Pergamon Press, New York, 1974.

25. Sapondzhyan, O.M., Bending of a freely supported polygonal plate, Izv. Akad. Nauk Armyan SSR Ser. Fiz-Mat. Estestv. Tekhn Nauk 5 (1952), 29-46.

The Laboratory for Numerical analysis is an integral part of the Institute for Physical Science and Technology of the University of Maryland, under the general administration of the Director, Institute for Physical Science and Technology. It has the following goals:

- To conduct research in the mathematical theory and computational implementation of numerical analysis and related topics, with emphasis on the numerical treatment of linear and nonlinear differential equations and problems in linear and nonlinear algebra.

- To help bridge gaps between computational directions in engineering, physics, etc., and those in the mathematical community.

- To provide a limited consulting service in all areas of numerical mathematics to the University as a whole, and also to government agencies and industries in the State of Maryland and the Washington Metropolitan area.

- To assist with the education of numerical analysts, especially at the postdoctoral level, in conjunction with the Interdisciplinary Applied Mathematics Program and the programs of the Mathematics and Computer Science Departments. This includes active collaboration with government agencies such as the National Bureau of Standards.

- To be an international center of study and research for foreign students in numerical mathematics who are supported by foreign governments or exchange agencies (Fulbright, etc.)

Further information may be obtained from Professor I. Babuška, Chairman, Laboratory for Numerical Analysis, Institute for Physical Science and Technology, University of Maryland, College Park, Maryland 20742.