AD-A190 393 FUNCTIONAL DESCRIPTION FOR THE DEPARTMENT OF THE ARMY 1/9
MOVEMENT MANAGEMENT..(U) INTERNATIONAL BUSINESS
SERVICES INC PRINCE GEORGE VA DEFENSE S.. W ANCKAITIS
UNCLASSIFIED 31 DEC 87 DSDPG-375-049-87-3-VOL-1 F/G 12/7 NL

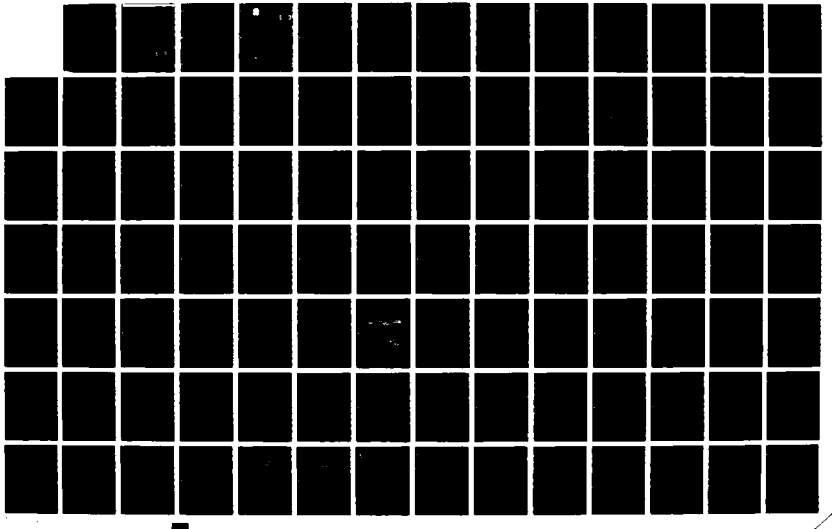

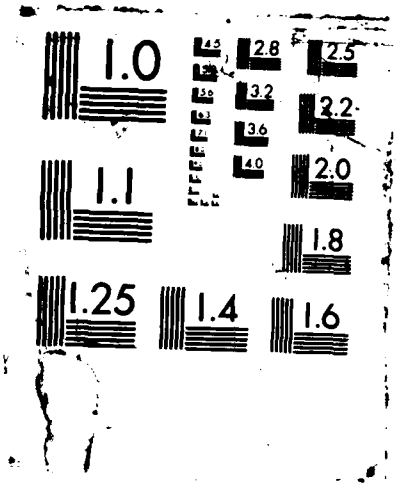
1.0
1.1
1.25
1.4
1.6
1.8
2.0
2.2
2.5
2.8
3.2
3.6
4.0
4.5

AD-A190 393

ADSM 18-LZ4-AKM-BUR-FD
WORKING DRAFT 3.0
DECEMBER 1987

(1)

DSDPG-375-049-87-3

DTIC FILE COPY

FUNCTIONAL DESCRIPTION FOR THE DEPARTMENT OF THE ARMY MOVEMENTS MANAGEMENT SYSTEM - REDESIGN PHASE ONE (DAMMS-R1)

VOLUME I of III

Prepared for:
U.S. Army Logistics Center
Fort Lee, Virginia

Prepared by:
Defense Systems Division
International Business Services, Inc.
a COMARCO Company
4300 Crossings Boulevard
Prince George, Virginia 23875

DTIC
ELECTE
FEB 09 1988
S D
H

Contract:
U.S. Army Logistics Center
DABT60-85-C-0519

31 December 1987

DISTRIBUTION STATEMENT A
Approved for public release:
Distribution Unlimited

UNCLASSIFIED
SECURITY CLASSIFICATION OF THIS PAGE

AD-A190 393

REPORT DOCUMENTATION PAGE

Form Approved OMB No. 0704-0188

1a. REPORT SECURITY CLASSIFICATION: UNCLASSIFIED

1b. RESTRICTIVE MARKINGS:

2a. SECURITY CLASSIFICATION AUTHORITY: USALOGC

2b. DECLASSIFICATION/DOWNGRADING SCHEDULE:

3. DISTRIBUTION/AVAILABILITY OF REPORT: US Army Logistics Center ATTN: ATCL-SDB Fort Lee, Virginia 23801-6000 UNLIMITED

4. PERFORMING ORGANIZATION REPORT NUMBER(S): DSDPG-375049-87-03

5. MONITORING ORGANIZATION REPORT NUMBER(S):

6a. NAME OF PERFORMING ORGANIZATION: International Business Services

6b. OFFICE SYMBOL (If applicable):

7a. NAME OF MONITORING ORGANIZATION: USALOGC

6c. ADDRESS (City, State, and ZIP Code): 4300 Crossings Boulevard Prince George, Virginia 23875

7b. ADDRESS (City, State, and ZIP Code): Fort Lee, Virginia 23801-6000

8a. NAME OF FUNDING/SPONSORING ORGANIZATION: USALOGC

8b. OFFICE SYMBOL (If applicable): ATCL-SDB

9. PROCUREMENT INSTRUMENT IDENTIFICATION NUMBER: DABT60-85-C-0519

8c. ADDRESS (City, State, and ZIP Code): Fort Lee, Virginia 23801-6000

10. SOURCE OF FUNDING NUMBERS

PROGRAM ELEMENT NO.	PROJECT NO.	TASK NO.	WORK UNIT ACCESSION NO.
		LA07-87	

11. TITLE (Include Security Classification): ADSM 18-LZ4-AKM-BUR-FD
Functional Description for the Department of the Army Movements Management System-Redesign Phase One (DAMMS-R1) Volume I of III

12. PERSONAL AUTHOR(S): Mr. William Anckaitis

13a. TYPE OF REPORT	13b. TIME COVERED	14. DATE OF REPORT (Year, Month, Day)	15. PAGE COUNT
Working Draft	FROM _____ TO _____	31 December 1987	

16. SUPPLEMENTARY NOTATION:

17. COSATI CODES			18. SUBJECT TERMS (Continue on reverse if necessary and identify by block number)
FIELD	GROUP	SUB-GROUP	Automated, Database, Query, Reporting, Transportation, Transportation Management, Database Systems.

19. ABSTRACT (Continue on reverse if necessary and identify by block number)

The Functional Description for the Department of the Army Movements Management Systems - Redesign Phase 1 (DAMMS-R1)contains functional information concerning the design and development of the DAMMS-R1 subsystems; Freight, Container, and Transportation Movements Address Subsystem (TMAS). This document also includes information about the Data Model, files sets, and the Data Element Dictionary.

20. DISTRIBUTION/AVAILABILITY OF ABSTRACT
☒ UNCLASSIFIED/UNLIMITED ☐ SAME AS RPT. ☐ DTIC USERS

21. ABSTRACT SECURITY CLASSIFICATION:

22a. NAME OF RESPONSIBLE INDIVIDUAL: Major Olin Rush

22b. TELEPHONE (Include Area Code): (804) 734-2062

22c. OFFICE SYMBOL: ATCL-SDB

DD Form 1473, JUN 86 Previous editions are obsolete.

SECURITY CLASSIFICATION OF THIS PAGE
UNCLASSIFIED

1

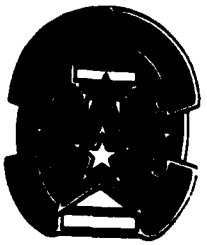

ADSM 18-L24-AKM-BUR-FD
DECEMBER 1987

DTIC
ELECTE
FEB 0 9 1988
S D
H

Automated Data Systems Manual

FUNCTIONAL DESCRIPTION (FD) FOR THE DEPARTMENT OF THE ARMY MOVEMENTS MANAGEMENT SYSTEM - REDESIGN PHASE ONE (DAMMS-R1)

VOLUME 1 OF 3

This publication is not available from the US Army
Adjutant General Publications Center.
Request copies from
Commander, US Army Logistics Center
ATTN: ATCL-SR
Fort Lee, Virginia 23801-6000

DISTRIBUTION STATEMENT A
Approved for public release;
Distribution Unlimited

HEADQUARTERS, DEPARTMENT OF THE ARMY

88 2 2 060

Availability Codes
Dist | Avail and/or Special
A-1

This draft report should be processed. The final version will not be ready until May 89. Per Mr. Wheeler, USALC/ATCL-SDB

FOREWORD

The Department of the Army Movements Management System - Redesign (DAMMS-R) is being developed to provide theaters of operations an automated and interactive transportation system that will support movements management, transportation operations, and asset control functions within the theater. Phase 1 requires the use and interface of mainframe and micro computers. This document will address only the microcomputer aspect of Phase 1. (For reference to the mainframe aspect of Phase 1, refer to DAMMS-CMM DBMS, Final Draft, December 1987.)

The microcomputer portion of Phase 1 utilizes the Tactical Army Combat Service Support Computer System (TACCS) and consists of the Transportation Movements Address Subsystem (TMAS), Container, and Freight subsystems.

This Functional Description (FD) provides the system requirements, performance requirements, design information, user impacts, and basis for developing systems tests for DAMMS-R Phase 1 as of 31 December 1987, excluding the Database Management System (DBMS). It consists of eight sections and five appendices:

a. Section 1 contains general information about the document and Phase 1. Included are project references and unique terms with their definitions.

b. Section 2 contains a summary of Phase 1. Included are the objectives of the system, and a comparison of the existing methods and procedures with the proposed methods and procedures. Summaries of improvements and impacts, and assumptions and constraints affecting system development are also listed.

c. Section 3 contains detailed characteristics of Phase 1. Included are specific performance requirements, accuracy and validity of data requirements, and timing requirements. Input and output requirements, database characteristics, failure contingencies, and security requirements about Phase 1 are also discussed here.

d. Section 4 contains design details for Phase 1. Included are general descriptions of the system functions, accuracy, timing requirements, and flexibility. Descriptions of the required inputs, outputs, and databases are also included.

e. Section 5 describes the environment in which Phase 1 must operate. Included are descriptions of the equipment capabilities required, the support software with which Phase 1 must interface, and other systems and subsystems with which Phase 1 must interface. Also listed is a summary of organizational, operational, and developmental impacts. This section also discusses failure contingencies, security requirements, and assumptions and constraints placed on the development and operation of Phase 1.

f. Section 6 provides information on the sensitivity and classification of the application of Phase 1.

g. Section 7 describes the overall management approach to the development and implementation of Phase 1.

h. Section 8 provides a summary of the cost factors for Phase 1.

i. Appendix I includes the Project Request and the Mission Element Needs Statement (MENS).

j. Appendix II lists the Terms and Abbreviations relevent to the Phase 1.

k. Appendix III provides, by subsystem (Freight, Container and TMAS), the process, input, output, entity, and set descriptions for Phase 1. It also includes all related memos for each subsystem.

l. Appendix IV provides the structure and detail for Phase 1 consolidated database model and module database models.

m. Appendix V contains the Phase 1 Data Element Dictionary (DED).

TABLE OF CONTENTS

Paragraph		Page
	FOREWORD	i
	TABLE OF CONTENTS	iii
1.	GENERAL	1-1
1.1	Purpose of the Functional Description	1-1
1.2	Project References	1-1
1.3	Terms, Abbreviations, and Definitions	1-11
2.	SYSTEM SUMMARY	2-1
2.1	Background	2-1
2.2	Objectives	2-2
2.3	Existing Methods and Procedures	2-3
2.4	Proposed Methods and Procedures	2-15
2.4.1	Summary of Improvements	2-23
2.4.2	Summary of Impacts	2-28
2.4.2.1	User Organization Impacts	2-28
2.4.2.2	User Operational Impacts	2-28
2.4.2.3	User Development Impacts	2-28
2.5	Assumptions and Constraints	2-29
3.	DETAILED CHARACTERISTICS	3-1
3.1	Specific Performance Requirements	3-1
3.1.1	Accuracy and Validity	3-4
3.1.2	Timing	3-5
3.1.3	Capacity Limits	3-5
3.2	Functional Area System Functions	3-5
3.3	Inputs and Outputs	3-5
3.4	Database/Data Bank Characteristics	3-6
3.5	Failure Contingencies	3-6
4.	DESIGN CONSIDERATIONS	4-1
4.1	System Description	4-1
4.2	System Functions	4-4
4.3	Flexibility	4-4
4.4	System Data	4-4
5.	ENVIRONMENT	5-1
5.1	Equipment Environment	5-1
5.2	Support Software Environment	5-1
5.3	Communications Requirements	5-7
5.3.1	Graphic Overview	5-7
5.3.2	Hardware	5-7
5.3.3	Software	5-7
5.4	Interfaces	5-7
5.5	Summary of Impacts	5-11
5.5.1	ADP Organizational Impacts	5-11
5.5.2	ADP Operational Impacts	5-12
5.5.3	ADP Development Impacts	5-12
5.6	Failure Contingencies	5-12

TABLE OF CONTENTS (continued)

Paragraph		Page
5.7	Assumptions and Constraints	5-13
6.	SECURITY	6-1
6.1	Background Information	6-1
6.2	Control Points, Vulnerabilities, and Safeguards	6-1
6.2.1	Control Points	6-1
6.2.2	Vulnerabilities	6-2
6.2.3	Safeguards	6-2
6.3	System Monitoring and Auditing	6-4
6.3.1	Journalizing	6-4
6.3.2	Audit Trail	6-4
7.	SYSTEM DEVELOPMENT PLAN	7-1
8.	COST FACTORS	8-1

FIGURES

Figure		Page
2.3-1.	Existing USAREUR Movements Control System (UMCS)	2-4
2.3-2.	Air Terminal Movement Control Team (ATMCT) Data Flow	2-5
2.3-3.	TMR/STMR Structure Format	2-9
2.3-4.	Existing Theater Communications Connectivity	2-11
2.4-1.	Overview of DAMMS-R Planned Capabilities	2-16
2.4-2.	DAMMS-R1 Interacting Organizations	2-17
2.4-3.	Container Operations Subsystem Overall Data Flow	2-19
2.4-4.	Freight Operations Subsystem Overall Data Flow	2-21
2.4-5.	TMAS Subsystem Overall Data Flow	2-22
4.1-1.	User Organizational Relationship to DAMMS-R1 Components	4-3
5.1-1.	TACCS Workstation Field Components	5-3
5.2-1.	DAMMS-R1 TACCS Fielding Schedule	5-6
5.4-1.	Existing DAMMS Interfaces	5-8

TABLES

Table		Page
2.3-1.	TMICS Report Submission Responsibilities	2-7
5.1-1.	TACCS Workstation Components	5-2
5.1-2.	DAMMS-R1 Hardware	5-4
5.2-1.	DAMMS-R1 Support Software	5-5

TABLE OF CONTENTS (continued)

APPENDICES

Appendix		Page
I.	PROJECT REQUEST	I-1
II.	TERMS, ABBREVIATIONS, and DEFINITIONS	II-1
III.	DAMMS-R Phase 1 Processes, Inputs, Outputs, Entities, Sets, and Memos	III-1
IV.	DAMMS-R Phase 1 Data Model	IV-1
V.	DAMMS-R Phase 1 Data Element Dictionary (DED)	V-1

SECTION 1. GENERAL

1.1 Purpose of the Functional Description. This Functional Description (FD) for the Department of the Army Movement Management System-Redesign Phase 1 (DAMMS-R1) provides:

a. System requirements that serve as a basis for understanding between the user and the system development group.

b. Information on performance requirements, preliminary design, and user impacts, including fixed and continuing costs.

c. A basis for the development of system tests.

1.2 Project References. On 13 September 1983, the Acting Assistant Secretary of the Army (Installations, Logistics and Financial Management) (ASA (IL & FM)) approved the Department of the Army Movement Management System-Redesign (DAMMS-R) Mission Element Need Statement (MENS). It called for a redesign of not only its automation aspects, but the entire DAMMS conceptual requirement. The DAMMS-R MENS and Project Approval are provided in Appendix I of this document.

DAMMS-R fielding has been divided into two phases. Phase 1 (DAMMS-R1), consists of freight, container, movements addressing and code table maintenance subfunctions which are performed at either movement control team (MCT) or movement control agency (MCA) levels. Phase 2 includes such subsystems as unit movements, mode operations, highway regulation, and export freight at all movement control element (MCE) levels. In Europe, DAMMS-R1 replaces those functions and capabilities performed by movements management organizations in the US Army Central Europe (CENEUR) region, which are currently supported by the Transportation Management Information and Control System (TMICS). In Korea, DAMMS-R1 replaces current manual procedures and implements those portions of the system destined for CENEUR which are applicable to Eighth Army operations.

In Europe, TMICS was targeted for replacement by Phase 1 as a solution to certain transportation management movement control problems identified by the Army Audit Agency. TMICS currently supports the peacetime movement management information processing requirements of movement control teams (MCT), corps movement control centers (CMCC), air terminal movement control teams (ATMCT) and the 1st Transportation Movement Control Agency (1st TMCA). TMICS also assists in collecting and processing air breakbulk cargo data at ATMCT and MCT for transmission to DAMMS-CMM. However, TMICS does not meet all transportation management and operations information processing requirements.

The ATMCT and MCT are able to record, process, and retrieve their portion of the movements database using the word processing capabilities of TMICS. Truck terminals/trailer transfer points (TT/TTP), their parent battalions, and group headquarters operations staffs, are able to record, process, and retrieve highway fleet management data. TMCA is able to process and retrieve

commitment data which speeds the process of tasking the TRANSCOM and 37th Transportation Group for military highway assets. Data regarding asset visibility and cargo movement is captured through TMICS and input for processing to DAMMS-CMM.

The functional proponent for Phase 1 is the Deputy Chief of Staff, Logistics (DA DCSLOG), Department of the Army. The proponent agent for Phase 1 is the US Army Logistics Center (USALOGC). The air terminal movement control teams (ATMCT), movement control agency (MCA), movement control centers (MCC), and movement control teams (MCT), will be the Phase 1 functional users and operation centers:

a. Project Request and Significant Correspondence.

The DAMMS-R Mission Element Need Statement (MENS) and Project Approval are provided in Appendix I of this document.

DA DCSLOG letter, 12 June 1986, subject: DA Movement Management System-Redesign (DAMMS-R) and Movement Planning Module (MPM).

Information Systems Engineering Command (ISEC) Memorandum, Standard Army Multi-command Management Information System (STAMMIS) Modernization, United States Army Information Systems Engineering Command (USAISEC), 10 June 1986, unclassified.

DALO-TSM letter, 27 September 1983, subject: DA Movement Management System-Redesign (DAMMS-R) Mission Element Need Statement (MENS), ASA (IL&FM) memorandum dated 27 October 1981, subject: Product Manager Nominations and Charter, unclassified.

DALO-TSM letter, 1 August 1983, DAMMS-R Mission Element Need Statement (MENS), Action Memorandum, unclassified.

DALO-PLS letter, 14 December 1981, subject: Prioritization of Automated Logistics Systems, unclassified.

DALO-PLS letter, 25 March 1981, subject: Department of the Army Movement Management System-Cargo Movement Module (DAMMS-CMM) Phase II and III, unclassified.

HQDA 55-79-1 letter, 4 October 1979, subject: Terminal Operations and Movement Management System (TOMMS) Implementation of DA Movement Management System (DAMMS), unclassified.

DALO-PLS letter, October 1979, subject: Logistics Systems Priorities, unclassified.

DAAC-STE message 121925z, October 1979, subject: Programming for Tactical Management Information System (TACMIS) Requirements, unclassified.

DALO-PLS letter, 26 August 1979, subject: Visibility of Intransit Cargo (VIC) I Prototype Evaluation Test (PET) and Request for System Classification-Decision Memorandum, unclassified.

HQDA 55-78-3 letter, 21 August 1978, subject: Terminal Operations and Movement Management System (TOMMS) Implementation of DA Movement Management System (DAMMS), unclassified.

DALO-PLS letter, 16 August 1978, subject: DA Movement Management System (DAMMS) Army Management Information System (AMIS) Life Cycle Management and Documentation, unclassified.

Headquarters, Department of the Army (HQDA) 55-75-6 letter, 15 October 1975, subject: Terminal Operations and Movement Management System (TOMMS) Implementation of Movement Management System (MMS), unclassified.

USAREUR Regulation 55-355 and USAREUR OPORD 1-84 (U) direct the Commander, TMCA, to provide traffic management, movements control, and related services in CENEUR, unclassified.

USEUCOM Directive 64-1 directs the Commander-in-Chief, USAREUR, to provide traffic management services in CENEUR. DCSLOG, USAREUR, (TRANS) executes technical staff supervision and responsibility over the activities of 1st TMCA for CINCUSAREUR, unclassified.

b. Previously Developed Technical and Project Related Documentation.

TM 38-LZ1-2-1, Detailed Functional System Requirement for Department of the Army Movement and Management Systems-Cargo Movement Module (DAMMS-CMM), change 2, August 1982, unclassified.

TM 38-LZ1-2-2, DFSR for DAMMS Cargo Movements Module (CMM), Appendix G Module Descriptions, Sections I thru XV, 6 May 1983, unclassified.

TM 38-LZ1-2-3, DFSR for DAMMS Cargo Movements Module (CMM), Appendix G Module Descriptions, Sections XVI thru XXIV, 6 May 1983, unclassified.

TM 38-LZ1-2-4, DFSR for DAMMS Cargo Movements Module (CMM), Appendix G Module Descriptions, Sections XXV thru XXXVI, 6 May 1983, unclassified.

TM 38-LZ1-11, Department of the Army Movement Management System-Cargo Movement Module (DAMMS-CMM) Functional Users Manual (FUM), 20 December 1984, unclassified.

Transportation Management, Information and Control System (TMICS) Operators Manual, ADSM 18-4, undated, unclassified.

ADSM 18-LZ4-AKM-BUR-FD/RD, Department of the Army Movements Management System - Redesign, Left-of-Baseline Functional Description/Data Requirements Document (DAMMS-R LOB FD/RD), Working Draft 2.0, May 1987, IBS, Inc., unclassified.

DAMMS-R Communication Requirements Document, 13 November 1987, International Business Services (IBS), Inc., unclassified.

DAMMS-R LOB TMAS PHASE I FUM, Working Draft, March 1987, IBS, Inc., unclassified.

DAMMS-R LOB FD/RD, Working Draft 1.0, October 1986, IBS, Inc., unclassified.

DRILCUE FD, Working Draft 3.0, March 1986, IBS, Inc., unclassified.

c. Standards, Conventions, and Reference Documentation.

DOD 4500.32-R (MILSTAMP), Military Standard Transportation and Movement Procedures, Vol. 1, December 1985, unclassified.

DOD-D-1000, Department of Defense Drawingss, Engineering, and Associated Lists, 13 May 1983, unclassified.

DOD Directive 4410.6, AR 725/50, AFM 67-1, OPNAV INST 4614.1E, Uniform Materiel Movement and Issue Priority System (UMMIPS), TBD, unclassified.

DOD Manual 5200.28-M, Techniques and Procedures for Implementing Deactivating, Testing, and Evaluating Secure Resource-Sharing ADP Systems, January 1973.

DOD Regulation 5200.1-R, DOD Information Security Program, June 1986.

DOD-STD-100, Department of Defense Standard Engineering Drawing Practices, 4 May 1983, unclassified.

DOD-STD-480, Configuration Control, Engineering Changes, Deviations and Waivers, 29 December 1978, unclassified.

DOD-STD-7935.1, Automated Data Systems (ADS) Documentation, 15 February 1985, unclassified.

MIL-STD-130, Military Standard Identification Marking of US Military Property, 2 July 1984, unclassified.

MIL-STD-481, Configuration Control Engineering Changes Deviations and Waivers (Short Form), 18 October 1972, unclassified.

MIL-STD-482, Configuration Status Accounting Data Elements and Related Features, 1 April 1974, unclassified.

MIL-STD-483, United States Air Force Configuration Management Practices for Systems, Equipment, and Munitions, and Computer Programs, 4 June 1985, unclassified.

MIL-STD-490, Specification Practices, 4 June 1985, unclassified.

MIL-STD-1521, Technical Reviews and Audits for System Equipment and Computer Software, 19 December 1985, unclassified.

MIL-STD-188-100, Common Long Haul and Tactical Communications Systems Technical Standards, 17 November 1976, unclassified.

MIL-STD-188-114, Electrical Characteristics of Digital Interface Circuits, 30 September 1985, unclassified.

AR 1-1, Planning, Programming, and Budgeting within the Department of the Army, 9 June 1986, unclassified.

AR 5-5, The Army Studies and Analyses System, 15 October 1981, unclassified.

AR 10-5, Organization and Functions, Department of the Army, 1 December 1980, unclassified.

AR 18-3, Automatic Data Processing Management Information System, April 1974, unclassified.

AR 18-7, Automatic Data Processing Management Review Program, 30 November 1984, unclassified.

AR 18-12-3, Catalog of Standard Data Elements and Codes Army Defense Systems, 15 October 1984, unclassified.

AR 18-22, Army Inventory of Data Systems (AIDS), January 1979, unclassified.

AR 25-1, Information Management, The Army Information Management Program, 18 January 1986, unclassified.

AR 25-5, Information Management, Information Management for the Sustaining Database, 01 March 1986, unclassified.

AR 25-100, Information Management, Life Cycle Management of Information Systems, Review Draft, 21 July 1986, unclassified.

AR 55-355, Defense Traffic Management Regulation, 31 July 1986, unclassified.

AR 70-1, Army Research, Development, and Acquisition, Systems Acquisition Policy and Procedure, 12 November 1986, unclassified.

AR 70-17, System/Program/Project/Product Management, August 1985, unclassified.

AR 70-37, Joint Department of Defense Regulation on Configuration Management, July 1976, unclassified.

AR 105-1, Telecommunications Management, 4 March 1975, unclassified.

AR 105-9, Tactical Communications Support Requirements, 8 August 1977, unclassified.

AR 105-22, Telecommunications Requirements Planning, Developing, and Processing, 1 July 1978, unclassified.

AR 310-25, Dictionary of US Army Terms, May 1986, unclassified.

AR 310-50, Authorized Abbreviation and Brevity Codes, 15 November 1985, unclassified.

AR 335-15, Management Information Control Systems, October 1986, unclassified.

AR 335-30, Periodic Review of Management Information Requirements and Products, TBD, unclassified.

AR 340-2, Maintenance and Disposition of Records in TOE and Certain Other Units of the Army, 7 December 1984, unclassified.

AR 340-8, Army Word Processing Program, 20 July 1977, unclassified.

AR 340-21, The Army Privacy Program, 5 July 1985, unclassified.

AR 380-5, DA Information Security Program Regulation, February 1985.

AR 380-380, Automation Security, March 1987.

AR 530-4, (C) Control of Compromising Emanations (U), January 1986.

AR 700-126, Basic Functional Structure, 11 March 1986, unclassified.

AR 700-127, Integrated Logistics Support (ILS), 16 May 1986, unclassified.

AR 700-130, Logistic Data Element and Codes Development Procedures, 15 March 1980, unclassified.

AR 750-1, Army Materiel Maintenance Concepts and Policies, May 1986, unclassified.

AR 750-43, Test, Measurement, and Diagnostic Equipment (TMDE) 1 March 1984, unclassified.

AR 1000-1, Basic Policies for Systems Acquisition, 1 May 1983, unclassified.

FM 19-30, Physical Security, 1 March 1979.

FM 54-23, Materiel Management Center Corps Support Command, 28 December 1984, unclassified.

FM 54-51, Theater Army Support Group (Draft), July 1984, unclassified.

FM 55-1, Army Transportation Services in a Theater of Operations, 30 November 1984, unclassified.

FM 55-1, Division Transportation Operations, 31 January 1985, unclassified.

FM 55-10, Movement Control in a Theater of Operations, 22 July 1986, unclassified.

FM 55-30, Army Motor Transport Units and Operations, December 1984, unclassified.

FM 55-40, Army Combat Service Support Air Transport Operations, 15 July 1971, unclassified.

FM 55-60, Army Terminal Operations (Coordinating Draft), September 1984, unclassified.

FM 57-1, US Army/US Air Force Doctrine for Airborne Operations, 27 September 1967, unclassified.

FM 63-2, Combat Service Support Operation - Division (How to Support), 21 November 1983, unclassified.

FM 63-4, Combat Service Support Operations - Theater Army Area, Final Draft, 24 September 1984, unclassified.

FM 71-101, Infantry, Airborne, and Air Assault Division Operations, 26 March 1980, unclassified.

FM 100-16, Support Operations, Echelons Above Corps (Final Draft), 16 April 1985, unclassified.

FM 101-5, Staff Organization and Operations, 25 May 1984, unclassified.

FM 101-10-2, Staff Officers Field Manual: Organizational, Technical, and Logistical Data Extracts of Non-Divisional Tables of Organization and Equipment, 15 July 1977, unclassified.

TB 18-100, Army Automation of Life Cycle Management (Draft), 15 August 1981, unclassified.

TB 18-101, Army Automation Planning, Programming, and Evaluation System, (AAPPES), 1 August 1982, unclassified.

TB 18-102, Army Automation Quality Program, Verification and Validation Handbook, Headquarters, DA, May 1984, unclassified.

TB 18-103, Army Automation Software Design and Development, November 1983.

TB 18-104, Testing of Computer Software Systems, 20 August 1982, unclassified.

TB 18-106, Deployment, Operations, and Termination of Automated Data Systems, 26 September 1980, unclassified.

TB 18-108, Army Automation Continuity of Operation Plan (COOP), 01 November 1985, unclassified.

TB 18-110, Army Automation Configuration Management, May 1984, unclassified.

TB 18-111, Technical Documentation, 22 April 1983.

TB 18-112, Training Management for Automated Data Processing (ADP) Systems, 15 November 1983, unclassified.

TB 18-114, Army Automation Computer Performance Measurement and Evaluation, 14 July 1980, unclassified.

TB 18-122, Army Automation Planning Guide for Software Conversion, 26 October 1977, unclassified.

TB 55-46-1, Standard Characteristic (dimension, weight, and cube) for Transportability of Military Vehicles and Other Outsized/Overweight Vehicles, 1 January 1987, unclassified.

TB 55-46-2, Standard Transportability Characteristics (dimensions, weights, and cubes) for Military Vehicles and Equipment, 15 January 1987, unclassified.

Theater Army Transportation Management Operational and Organizational Plan (OOP) (USATSCH), 15 March 1984, unclassified.

TM DEP 11-2010-213-12 (Draft), Operational and Organizational Manual Computer System Tactical Army Combat Computer, ANTP-33 (V), March 1983, unclassified.

TM 11-7010-213-12, Operator and Organizational Maintenance Manual for the TACCS, 27 March 1986, unclassified.

Operational and Organizational (O & O) Plan - Combat Service Support Control Systems, 2 September 1986, unclassified.

Operational and Organizational Plan - Department of the Army Movements Management System - Redesign (DAMMS-R) on the Unit Level Computer (ULC), Working Draft, Card Reference 0800P, undated, unclassified.

Operational and Organizational (O & O) Plan - Tactical Army Combat Service Support Computer System (TACCS), 14 July 1986, unclassified.

Transportation Management, Information and Control System (TMICS) Operators Manual, ADSM 18-4, TBD, unclassified.

USAREUR Regulation 55-1, 19 May 1978 (section six change 9 December 1982), unclassified.

USAREUR Regulation 55-5M, USAREUR Activity Address File and Directory (EURAAF/EURAAD), September 1985, unclassified.

USAREUR Regulation 55-26, Preparation, Review and Submission of AE Forms 3333 (Unit Movement Data), RCS AEAGD-307 (R1), February 1979, unclassified.

USAREUR Regulation 55-45, Terminal Facilities Guide, August

1978, unclassified.

USAREUR Regulation 55-141, USEUCOM Common User Intratheater Air Transportation, June 1979, unclassified.

USAREUR Regulation 55-355, Joint Transportation and Traffic Management Regulation - Central Europe (JTTMR), 30 December 1986, unclassified.

USAREUR Regulation 55-xxx, USAREUR Movements Control System (UMCS) Transportation and Travel for Central Europe (CENEUR), December 1986, unclassified.

USAREUR Transportation Operational & Organizational Plan, Headquarters, United States Army, Europe and Seventh Army APO New York, August 1983, unclassified.

US Army Forces Command (FORSCOM) Reg 55-1, Unit Movement Plans and Reports, July 1973, unclassified.

37th Transportation Group Regulation 55-108, Highway Operations, 15 March 1983, unclassified.

Department of the Army Movement Management System-Redesign (DAMMS-R) Configuration Management Plan (CMP), Final, September 1986, unclassified.

Department of the Army Movement Management System-Redesign (DAMMS-R) Operational and Organizational Plan (Coordinating Draft), 12 June 1985, unclassified.

Department of the Army Movement Management System-Redesign (DAMMS-R) Data Base Management System (DBMS) Functional User's Manual (FUM), Final, October 1986, unclassified.

Department of the Army Movement Management System-Redesign (DAMMS-R) Project Management Plan (PMP), Coordinating Draft 1.1, IBS, Inc., July 1987, unclassified.

Department of the Army Movement Management System-Redesign (DAMMS-R) Standards & Conventions Manual (S&CM), Version 3.0, IBS, Inc., September 1986, unclassified.

Burroughs B20 Systems Custom Installation and Reference Manual, Release 4.0, June 1984, unclassified.

Burroughs B20 Systems Editor, Release 4.0, june 1984, unclassified.

Burroughs B20 Systems Executive WRITEone Word Processing Reference Manual, Release 3.0, September 1983, unclassified.

Burroughs B20 Systems Indexed Sequential Access Method (ISAM) Reference Manual, July 1984, unclassified.

Burroughs B20 Systems Multiplan Reference Manual, Release 2.3, July 1983, unclassified.

Burroughs B20 Systems Operating System (BTOS) Reference Manual, Release 4.0, June 1984, unclassified.

Burroughs B20 Systems Programmer's Guide, Release 4.0, June 1984, unclassified.

Burroughs B20 Systems Standard Software Operations Guide, Release 4.0, June 1984, unclassified.

Burroughs B20 Systems Status Codes Reference Manual, Release 4.0, June 1984, unclassified.

1.3 Terms, Abbreviations, and Definitions. Appendix II contains the terms, abbreviations, and definitions unique to this document.

SECTION 2. SYSTEM SUMMARY

2.1 Background. The DAMMS-R1 Freight and Transportation Movements Address Subsystem (TMAS) are scheduled to be fielded in Korea although no automation of movements management functions exist in that theater of operation at this time. Because the Korean theater of operations performs essentially all movements management functions in a manual mode, the remainder of this document will be directed to the CENEUR theater of operations. The US Army Europe (USAREUR) Movements Control System (UMCS, formerly CMCS) is the composite of the movement control agency (MCA) management of freight movements by commercial rail and barge, military and commercial highway vehicles and containers; passenger movements by commercial and military rail, air, and bus; and contingency and peacetime movements planning. The Transportation Management Information and Control System (TMICS) is the core of the UMCS and is the method by which the MCA manages container, freight, and transportation operations. TMICS interfaces with DAMMS-CMM for surface or air cargo arriving or departing the theater. DAMMS-R Phase 1 will convert the TMICS container and freight operations from word processing equipment to the Tactical Army Combat Service Support Computer System (TACCS). This will provide enhanced management capabilities for these functional areas. Phase 1 will also provide TMAS and enhanced, reformatted estimated time of arrival (ETA) cargo forecast inputs from DAMMS-CMM.

In an effort to automate transportation operations for more efficient and timely control of equipment, materiel, personnel, and data, the 4th Transportation Command (4th TRANSCOM) developed the TMICS. TMICS was implemented in three Phases, with Phase I and II providing for the purchase of 41 word processors, and Phase III procuring radios and facsimile machines.

a. TMICS in its initial concept was to provide a means whereby accountability of 37th Transportation Group semi-trailer assets could be achieved while assisting its units with their administrative burden.

b. Phase II incorporated the implementation of control and reporting of all air breakbulk cargo movements by all parties involved.

c. TMICS also extended its communications network consisting of modulator/demodulators (modems) with commercial telephones to all MCEs, HQ, 37th Transportation Group, Transportation Battalions, TTP, and some company level units within 37th Transportation Group.

Until 1980, the UMCS depended upon TELEX. Because of its limitations, TELEX was replaced with a network of word processing equipment (WPE) in 1979-80 during a purchasing freeze on microcomputers. Initially, WPE was supported by paper tape readers and punchers with software for word processing conversions so the output could be read by humans. The TMICS network, which is based on the integration of word processing systems and communications functions, began to grow in capacity.

In the second phase, a large number of more capable units were acquired and fielded. This acquisition permitted extensive expansion of TMICS capabilities. The new equipment was distributed to the TTPs. The older equipment went to the transportation battalions. Software upgrades to the WP configurations has improved performance of earlier versions. However, the current hardware operates on 8-inch disks which are incompatible with other equipment.

Ocean cargo manifests are received via Automatic Digital Network (AUTODIN) at Headquarters, 4th TRANSCOM. The data processing installation (DPI) supporting 4th TRANSCOM processes these manifests and creates forecasts of import surface cargo arrivals in two formats, DAMMS-CMM ETA Forecast and TMICS ETA Forecast. Both formats are used in producing TMICS-generated transmissions.

Among the components of the system, only the TMICS system is under the direct control of the 4th TRANSCOM. TELEX is a commercial system, and 102d Signal Battalion is responsible for AUTODIN, Defense Data Network (DDN), and Corps/Theater Automation Support Center (CTASC) support to 4th TRANSCOM and 1st TMCA.

2.2 Objectives. The major performance requirements and goals of Phase 1 are as follows:

a. Provide communications for direct input, and generate reports without a second party interruption in the data flow.

b. Increase the accuracy of data by a measurable degree. The system will employ user prompts and help screens to aid in the input of accurate data. The system will also contain edits to further ensure that the data entering the system meets established criteria.

c. Increase the ability of system reporting in matters of timeliness, accuracy, distribution, and flexibility. The system will provide ease of data manipulation to respond to queries and produce reports that can be rapidly disseminated to other system users. Additionally, these reports and queries may be developed using user-defined or pre-defined parameters. This will increase the flexibility and usefulness of the data.

d. Provide same-day visibility to theater movement managers of all movements from port of debarkation to consignee. The ease of data entry will allow for faster and more accurate updates of the database which will improve visibility over all intratheater movements. Movement managers will benefit from this increased visibility by being able to make informed decisions based on more current information.

e. Provide a distributed informational profile of all supply support activities involved in theater distribution. An automated central

repository of locational and logistical management data will be developed to provide interactively updated, accurate, and timely information on all activities involved in the theater distribution system.

f. Decrease formal training time required for operators to learn the system. This will be accomplished by the development of menu-driven software which will provides user prompts and help screens.

g. Reduce operator workload required for system and operational tasks. The system will increase the rate information may be entered into the system, and the rate reports and transactions may be generated by the system.

h. Increase the ability of movement control activities to develop and use unique processing capabilities for local requirements. The distributed database will be capable of accessing selected information. The data can then be used to identify performance trends, potential problem areas, and create reports from active and inactive files.

i. Reduce data redundancy in matters of collection, storage, and manipulation. Information will be captured at the source and will be distributed to system subsystems and other system users on an as needed basis. Additionally, use of a relational database requires the user to enter data less frequently.

2.3 Existing Methods and Procedures. The existing movements management system provides the mechanism for coordinating the activities of import cargo movements management. Current movement policies and procedures are designed to provide timely, cost-effective transportation support within CENEUR. The established movement procedures provide an integrated transportation system based on a movement program. The movement program selectively integrates all military and commercial transportation modes to support the established physical distribution system. Figure 2.3-1 illustrates the existing functional system.

The ports of Rhein Main, Bremerhaven, Rotterdam, and Ramstein currently receive 99% of the cargo shipped to Europe. Except at the port, ocean cargo is under the control of Military Sealift Command (MSC) and air cargo is under the control of Military Airlift Command (MAC). TRANSCOM is responsible for movement of the cargo from the time it reaches the port until it is received by the customer. In the case of containerized cargo, TRANSCOM responsibility ends when the container arrives at the consignee. The consignee is then responsible for distribution after unstuffing of the container. TRANSCOM fulfills the line haul function in the transportation system.

The flow of air data into the air terminal movement control team (ATMCT) is shown in Figure 2.3-2. Visibility is maintained through the timely collection and reporting of significant movement events to managers at the

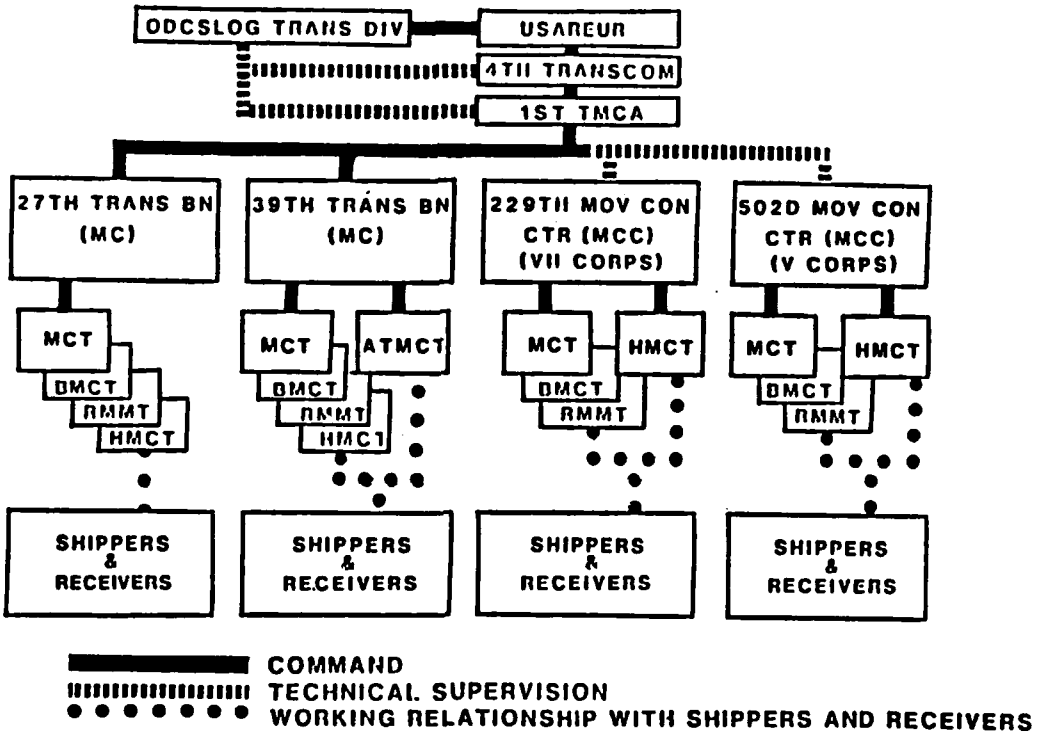

Figure 2.3-1. Existing USAREUR Movements Control System (UMCS).

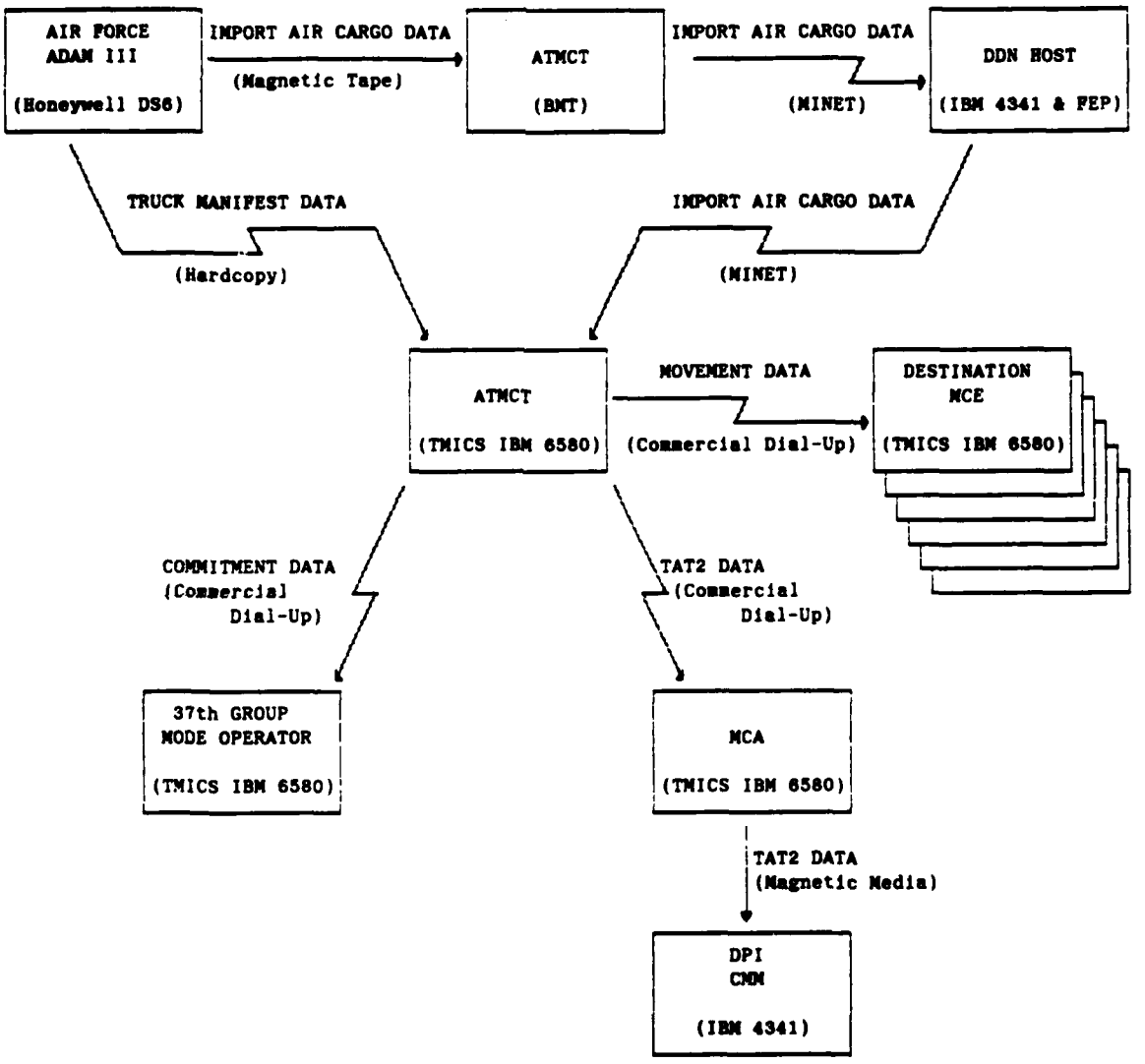

Figure 2.3-2. Air Terminal Movement Control Team (ATMCT) Data Flow.

Movement Control Team (MCT). Table 2.3-1 lists the TMICS report submission responsibilities by organiztion.

All requests for common-user transportation are submitted to the respective MCT, the designated CMCC, or 1st TMCA. The MCT evaluates each request and selects a mode. This mode selection provides the most efficient use of available transport resources while meeting the customer's needs. If commercial mode is selected, the respective MCT prepares a freight warrant for commercial transport and performs necessary ordering actions to satisfy the customer's movement requirement. Fund citations for commercial movements are provided by USAREUR major subordinate commands, USEUCOM component commands, and other US and allied supported organizations.

The existing system is based on the transportation movement release (TMR) process, whose goal is to meet the supply request of the destination customer. The movement of DOD sponsored cargo, for which the 1st TMCA has traffic management and movement control responsibility, is regulated through the use of a TMR or standing TMR (STMR), in accordance with (IAW) USAREUR Regulation 55-355. A TMR is a unique alphanumeric code providing information on a specific cargo movement. A TMR is used primarily for movements that are unprogrammed. An STMR is a series of TMRs issued to provide for recurring programmed moves. Figure 2.3-3 illustrates the structure of the TMR/STMR format.

Upon receipt of properly submitted movement requests, the MCT assigns a TMR number to the request. The TMR number is the means by which the movement managers, mode operators, and customers subsequently identify a given movement. During request processing, the TMR number permits efficient management of request status. Upon allocation of the transport, the TMR facilitates management of the commitment through delivery. Recurring requirements are considered for assignment of a STMR, which assures continuing allocation of transport.

The MCT reviews STMRs monthly to determine validity and recommends cancellation or modification of the STMR as deemed appropriate. Requests for STMR, or changes, are submitted by the customer to the serving MCT in an original and five copies and forwarded by the MCT to reach the 1st TMCA not later than (NLT) the 15th of the month. (This is accomplished in letter format.)

Movement request data and subsequent actions are maintained and recorded by the MCT/ATMCT and 37th Transportation Group. The MCT/ATMCT maintains historical files of TMRs issued. Files are maintained for 12 months after close out of the TMR.

Movement request data and subsequent actions are maintained and recorded by the MCT/ATMCT and 37th Transportation Group on TMICS programs (word processing systems). Manual registers and worksheets are only used when word processing systems are not available, or when systems are down for an extended period of time. Strict adherence to the procedures outlined in the TMICS operators manual is necessary to insure the accuracy of system data.

Table 2.3-1. TMICS Report Submission Responsibilities (1 of 2)

ORGANIZATION	DOCUMENT IDENTIFIER CODE	TRANSACTION
ATMCT	TAT2	TRUCK MANIFEST HEADER
COMMERICAL CARRIERS	TTQ	PORT DEPARTURE OF CARRIER DRAYED CONTAINER
	TTN	DOCUMENTS MISSING
	TTP	CONTAINER MAINTENANCE
MCT	TTB	SUBSEQUENT MOVEMENT EVENT - AIR/SURFACE
	TTF	NEW MOVEMENT EVENT
	TM2	DIVERSION REQUEST
	TM3	STAGING REQUEST
	TMS	STAGING RELEASE REQUEST
	TTS	CONTAINER STAGING AND NOTIFICATION/RELEASE FROM STAGING
	TTU	CONVEYANCE CHANGE
	TTX	CONVEYANCE COST TRANSACTION
	TTP	CONTAINER MAINTENANCE
	TTW	CARGO DISCHARGE - NON DELIVERY
MMC/ COMMODITY MANAGERS	TM2	DIVERSION REQUEST
	TM3	STAGING REQUEST/HOLD REQUEST
	TMS	STAGING RELEASE REQUEST/HOLD DISPOSITION INSTRUCTIONS
	TTB	SUBSEQUENT MOVEMENT EVENT - AIR/SURFACE

Table 2.3-1. TMICS Report Submission Responsibilities (2 of 2)

ORGANIZATION	DOCUMENT IDENTIFIER CODE	TRANSACTION
	TTP	CONTAINER MAINTENANCE
	TTS	CONTAINER STAGING AND NOTIFICATION/RELEASE FROM STAGING
	TTC1	DISCHARGE FROM VESSEL
	TTC2	CARGO DEPARTURE FROM WPOD
	TTM	CHANGE IN TERMS OF CARRIAGE
	TTR	LEASE NOTIFICATION/TERMINATION
TTP	TTB	SUBSEQUENT MOVEMENT EVENT - AIR/SURFACE
	TTU	CONVEYANCE CHANGE
	TTW	CARGO DISCHARGE - NON DELIVERY

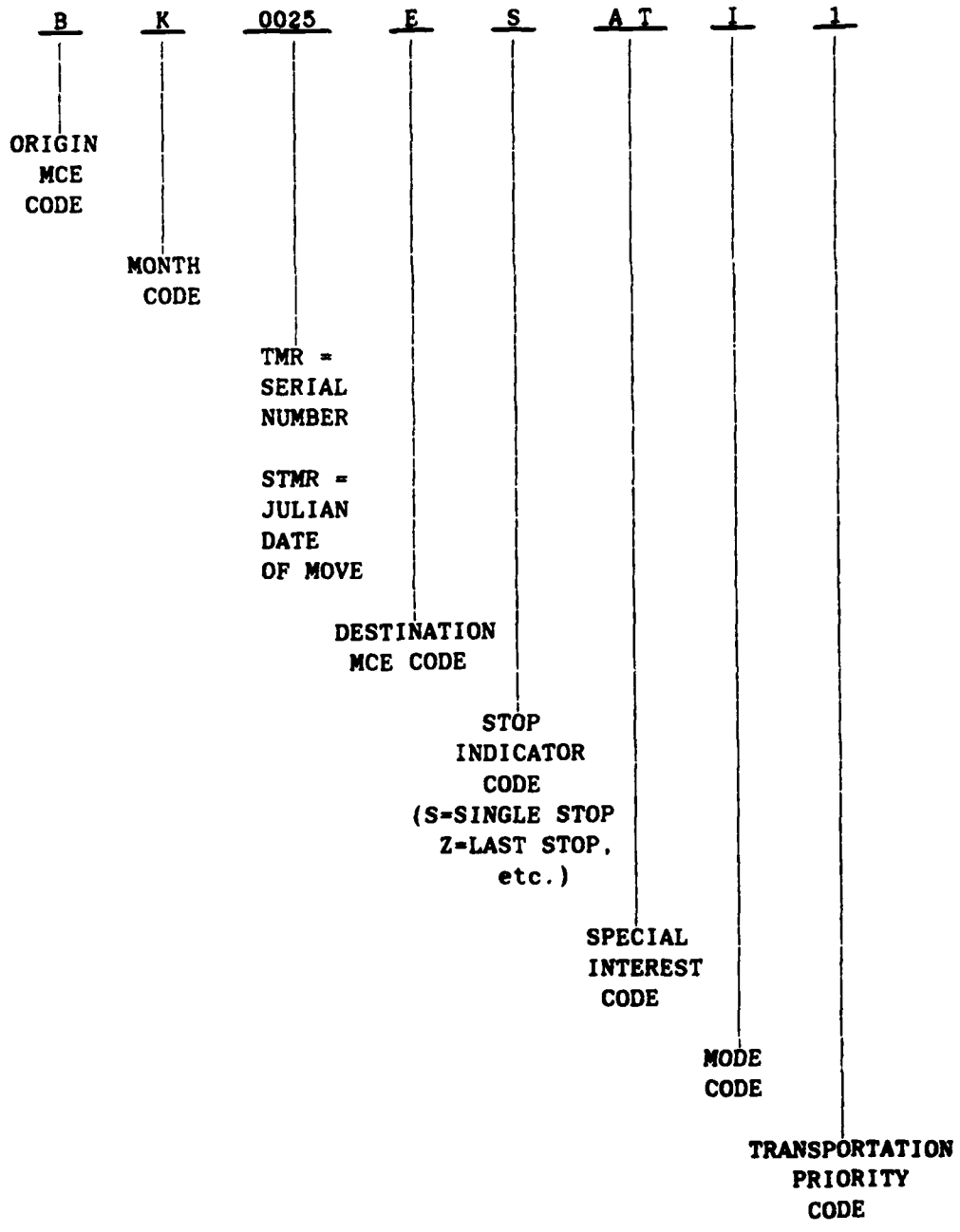

Figure 2.3-3. TMR/STMR Structure Format.

Deviations from standard TMICS operating procedures do not take place except with the written approval of the Chief, MID, 1st TMCA. MCT/ATMCT maintains historical files of issued TMRs. Files are maintained for 12 months after close-out of the TMR. (Manual records must be maintained when word processing systems are not available.)

Each MCT is required to maintain an active log on all containers that are forecasted to them, or that arrive unforecasted in their area of responsibility. Records are maintained in the active log until all subsequent events (TTB data) have been posted and transmitted for input to DAMMS-CMM. The record is then maintained in an inactive log or history file for a period of one year. Containers that are forecasted, but never arrive, are deleted from the active container log after a period of 60 days. Three working days prior to deletion, the MCT sends a notification of deletion to Cdr, 1st TMCA.

a. Organizational/Personnel Responsibilities. the 1st TMCA was formed from the assets of the 4th TRANSCOM Headquarters and the deactivated 3rd Movements Region to provide senior commanders with the ability to selectively manipulate and focus the flow of troops, equipment, and supplies. The 1st TMCA centrally allocates 4th TRANSCOM common-service transport capability, and coordinates movements throughout the central European theater. (An essential aspect of transportation movements management is to have control over movements of materiels and units from ports of embarkation (POE) through ports of debarkation (POD) to the designated staging areas.) All non-corps MCT are assigned to 1st TMCA and are task-organized under a transportation battalion, movements control (MC). ATMCT are directly controlled by 1st TMCA because of the critical nature and flexibility of their mission. Because corps areas are large, 1st TMCA attachs MCT to CMCC to meet the requirements. The 1st TMCA manages all movements information efforts throughout the theater army.

b. Equipment Being Utilized. The existing theater communications connectivity is illustrated in Figure 2.3-4. The network consists of a variety of computer hardware devices and makes use of the AUTODIN/DDN, commercial telephone, and TELEX networks that are present in Europe. Because some of this equipment had no capability to pass data traffic directly, it was necessary to acquire commercial converters and switches for use throughout the network. There were many instances where it was impossible to establish a machine interface, therefore, manual or courier interface was required to pass this data.

   Presently, automated equipment support includes the use of IBM 4341s, BMTs, TELEX, AUTODIN, radios, facsimile machines, IBM Displaywriters, and word processors.

c. Input and Output. Manually processed inputs and outputs are discussed in the following subparagraphs. The volume and frequency

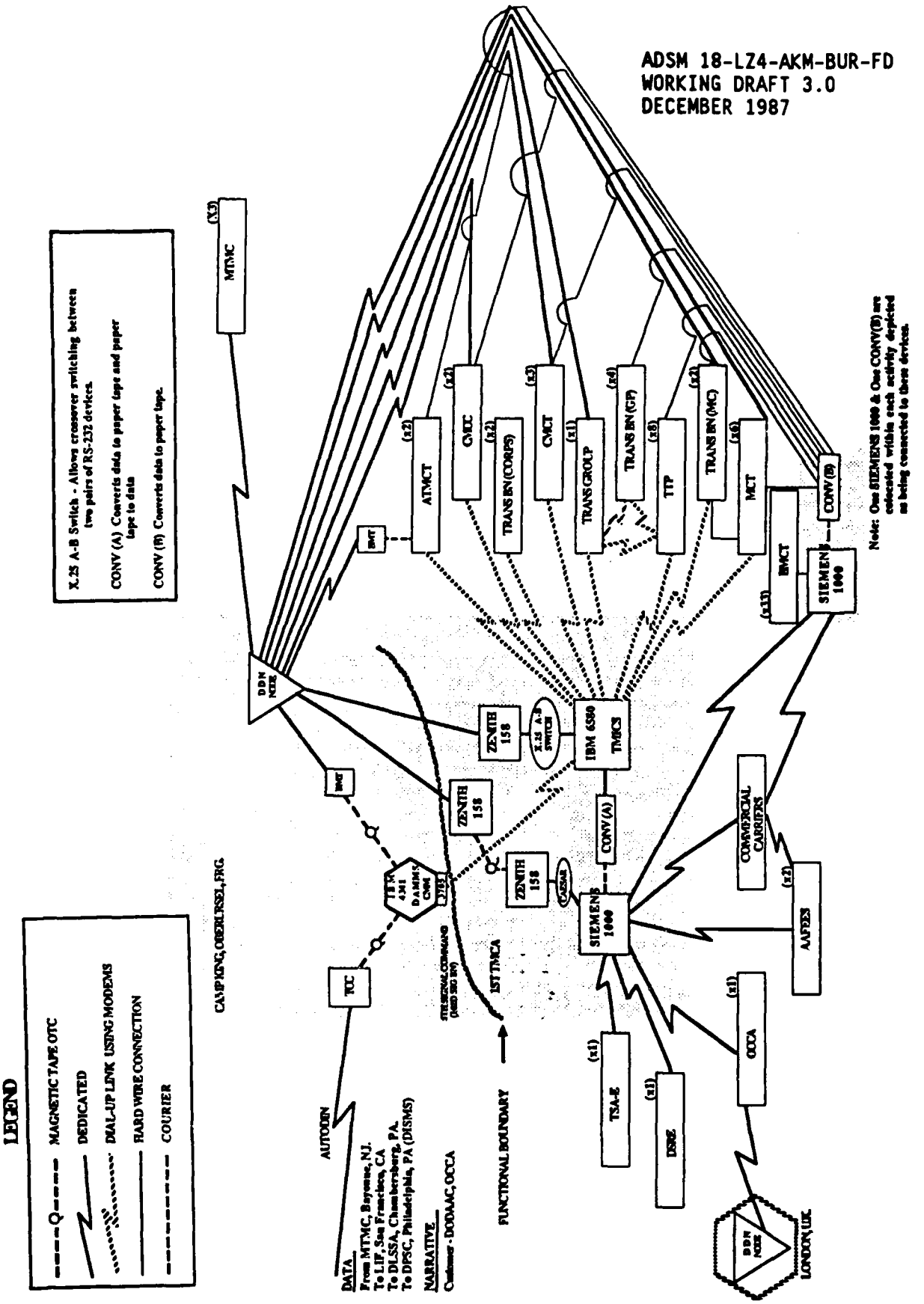

Figure 2.3-4. Existing Theater Communications Connectivity.

of existing inputs and outputs are shown in the DAMMS-R Communication Requirements Document, 13 November 1987, Appendix IV.

(1) Input. The following subparagraphs list the inputs that are received by the various organizations.

(a) MCT Input.

1) Request for transportation from BMCT and MCT.

2) Daily Rail, Barge, and Highway Equipment Situation Report (AE Form 65) from BMCT.

3) Export release request from BMCT.

4) Export traffic release from shipping activity.

5) Nonconfirmation requisition for assets from 37th Group.

6) Cargo forecast ETA from CMM.

7) Request for reconsignment from the customer.

8) Military highway asset forecast from 37th Group.

9) Request for highway clearance.

(b) 37th Group Input.

1) Commitment from MCT.

2) Request for backload approval from MCT.

(c) TTP Input.

1) Commitment from battalion.

(d) ATMCT Input.

1) Request for air export from MCT.

2) TAT(2) truck manifest from the U.S. Air Force aerial port operators.

3) Report of cargo delivery from origin MCT.

(2) Output. This subparagraph is designed to provide an understanding of the system output documents and the responsibilities of field users. The following subparagraphs list the outputs that are sent to the various organizations.

(1) MCT Output.

(a) Commitment to the 37th Group.

(b) Inbound notification to the destination MCT.

(c) Military Trailer Status Report to the 37th Group.

(d) Cancelled commitment to the 37th Group.

(e) Cancelled commitment to the destination MCT.

(f) Cargo Discharge Non-Delivery (TTW) to 1st TMCA.

(g) Change to commitment to the 37th Group.

(h) Containers On-Hand Over Five Days Report to 1st TMCA.

(i) Conveyance Change Notification (TTU) to 1st TMCA.

(j) Daily Breakbulk Surface Report (DBSR) (TTB) to 1st TMCA.

(k) Daily Seavan Status Report (TTB/TTP) to 1st TMCA.

(l) 463L Pallet Report to 1st TMCA.

(m) Empty Container Status Report to 1st TMCA.

(n) New Movement Event (TTF) to 1st TMCA.

(o) Release From Staging (TTS) to 1st TMCA.

(p) Report of Cargo Delivery to origin MCT.

(q) Report of Shipment (REPSHIP) to the destination MCT.

(r) Diversion Authorization Request (TM2) to 1st TMCA.

(s) Hold Authorization Request (TM3) to 1st TMCA.

(t) Hold Disposition Instruction Release (TMS) to 1st TMCA.

(2) 37th Group Output.

(a) Confirmed commitment to the origin MCT.

(b) Nonconfirm requirements for assets to the origin MCT.

(3) TTP Output.

(a) Convey Change Notification (TTU) to 1st TMCA.

(b) Cargo Discharge Non-Delivery (TTW) to 1st TMCA.

(c) Subsequent Movement Event (TTB) to 1st TMCA.

(4) ATMCT Output.

(a) Airlift Clearance Authority (ACA) clearance to MCT.

(b) Air Cargo Movement Report (TAT2) to 1st TMCA.

(c) Commitment to 37th Group.

(d) Inbound notification to the destination MCT.

(e) Tracing action to the MCT from ATMCT.

d. The current system provides no provisions for alternate site operations. The current provision for degraded modes of operation, should the existing system fail, is manual.

e. Because of the inefficiency of the manual procedures and limitations of the existing TMICS, the following deficiencies exist:

(1) The current hardware uses a nine-inch monitor. The monitor display is capable of displaying a maximum of 256 characters per screen consisting of eight 32-character lines. As a result, most entry screens depict only one data field at a time.

(2) A keypunch-style keyboard is currently used. Most operators are not trained in keypunch operations and require training in the use of this specialized keyboard. No separate numeric keypad is provided. Numeric entries require the use of a "numeric" button, which must be held down while the entry is made.

(3) Some of the more advantageous requirements identified in 4th TRANSCOM Regulation 38-1 could not be achieved, due to limitations of using word processing equipment.

(4) Inaccurate data is entered due to the present software's lack of sufficient editing capabilities, user prompts, and help screens.

(5) Insufficient database capabilities prevent response to numerous queries or the capability to produce reports.

(6) Due to batch process procedures and the available lines of communication, intratheater movement visibility is often after the event has occurred.

(7) There is no centrally located repository of locational and logical management data which would provide updated, accurate, and timely information on activities within the theater.

(8) Staff or management must be utilized to train inexperienced and/or newly arrived personnel because the current software is not user friendly.

(9) All data must be entered manually regardless of redundancy.

(10) Performance trends and problem area analyses from active and/or inactive files are done manually.

(11) Limited amounts of equipment at key junctures in the transportation network (i.e., MCT) increase workload and cause the implementation of shift work to insure mission accomplishment.

(12) Lack of dedicated training equipment causes a degeneration of the overall effectiveness of the system.

(13) Maintenance for word processors utilizing contracts through the Equipment Support Center causes down time from two to ten days, creating enormous backlogs.

(14) Failure to incorporate the transportation battalion MC into the TMICS network eliminates any command and control the battalions should have over their subordinate units.

(15) Point-to-point communications are unacceptable in a world where the average message has three addresses.

2.4 Proposed Methods and Procedures. While Figure 2.4-1 depicts the overall view of planned DAMMS-R capabilities, Phase 1 will be a microcomputer-based system that links cargo and container operations of the MCA with the various movement control elements in the theater of operations. Figure 2.4-2 depicts the organizations that are to interact with DAMMS-R. The system will generate message traffic for the theater mode operator organization, commercial carriers, and various interface agencies that receive or expedite the movement of cargo.

The DAMMS-CMM programs reside on the CTASC computer at MCA from which container forecast data is received, container status is reported, and address information is updated. The system will provide management information relating to the movement of containers and breakbulk cargo, as well as current activity address data in TMAS.

Phase 1 will consist of three primary subsystems - container operations, freight operations, and TMAS. The system will operate on TACCS microcomputers at the MCA, the regional and corps MCE. Communications links between the MCA and the MCE, and among MCEs, will be established through the Defense Data Network (DDN).

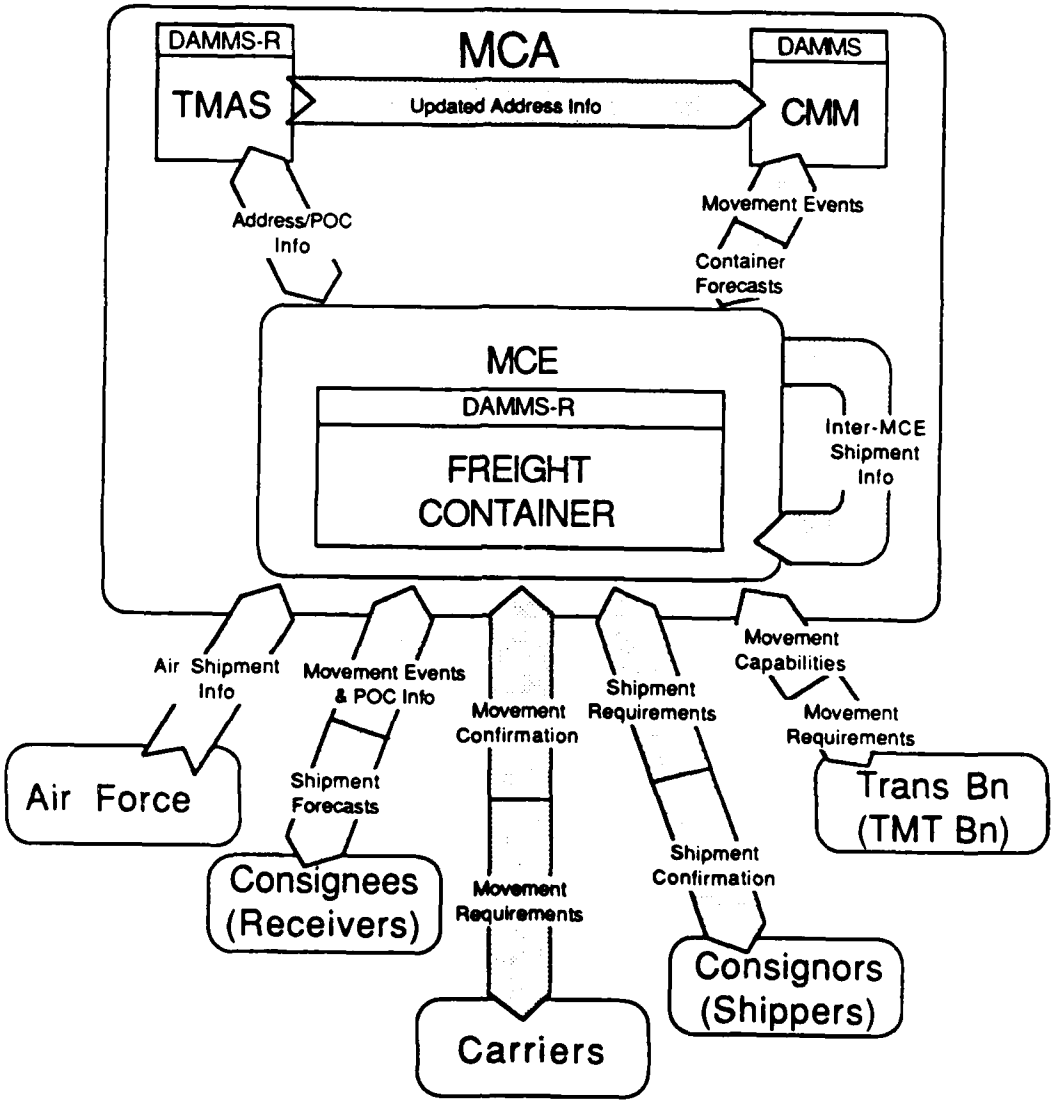

Figure 2.4-1. Overview of DAMMS-R Planned Capabilities.

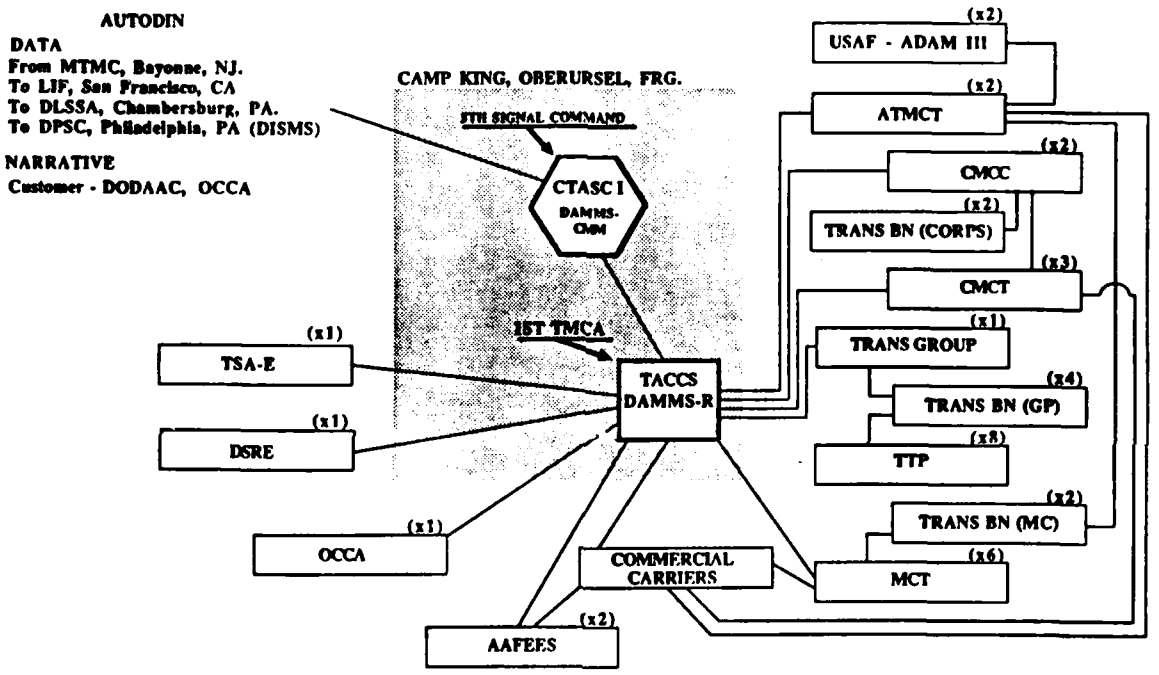

Figure 2.4-2. DAMMS-R1 Interacting Organizations.

The system is designed to replace and/or enhance the current TMICS. DAMMS-R eventually will replace the entire existing system in Europe, including TMICS and CMM. After Phase 1 is operational, DAMMS-R will be extended to the transportation group headquarters, mode and movement control battalions, corps and highway regulating point teams at the respective theater and corps levels. The division transportation office, movement control office, and main support battalion transportation motor transport company at division level will also receive DAMMS-R.

The system will employ a relational database structure with separate databases for each of the three subsystems. The command-wide tables, containing relatively static, common-use data will be maintained at MCA. As changes to the data occur, the tables will be updated by MCA and updated versions will be transmitted to each MCE for replacement. Some tables will be shared among the freight and container subsystems.

a. In container operations, container forecast information will be provided by Military Traffic Management Command (MTMC) automated systems to CMM. From CMM, selected data will be transmitted to theater transportation managers (MCE), mode operators, and supply customers for planning the receipt, discharge, storage, release, and/or shipping of the containers. This forecasted information will become the basis for building the container database at each MCEs and will document the identification and destination data for each container.

   Other records will be created to account for ocean shipping data and shipment discrepancies. These records will enable MCE managers to monitor and report movement of containers from the time that they leave the port of debarkation until those empty containers depart from the ultimate consignee's location.

   In addition, the system will generate transactions to update the CMM database, and the system will produce status reports to assist managers in maximizing the efficient use of containers while minimizing detention charges. When a container movement is complete, selected historical data will be retained and recorded before the record is deleted. The data will be available to audit delayed billing charges, as well as to provide management with the ability to evaluate previous container operations.

   Figure 2.4-3 shows an overall view of the container dataflow. Appendix III contains detailed process structure charts depicting the specific movement events and reports for container operations.

b. Freight operations include import and intra-theater shipment of breakbulk cargo. Freight movement databases will be maintained at each MCE. The primary records will reflect highway movements, vehicle stops, and military highway assets available to support

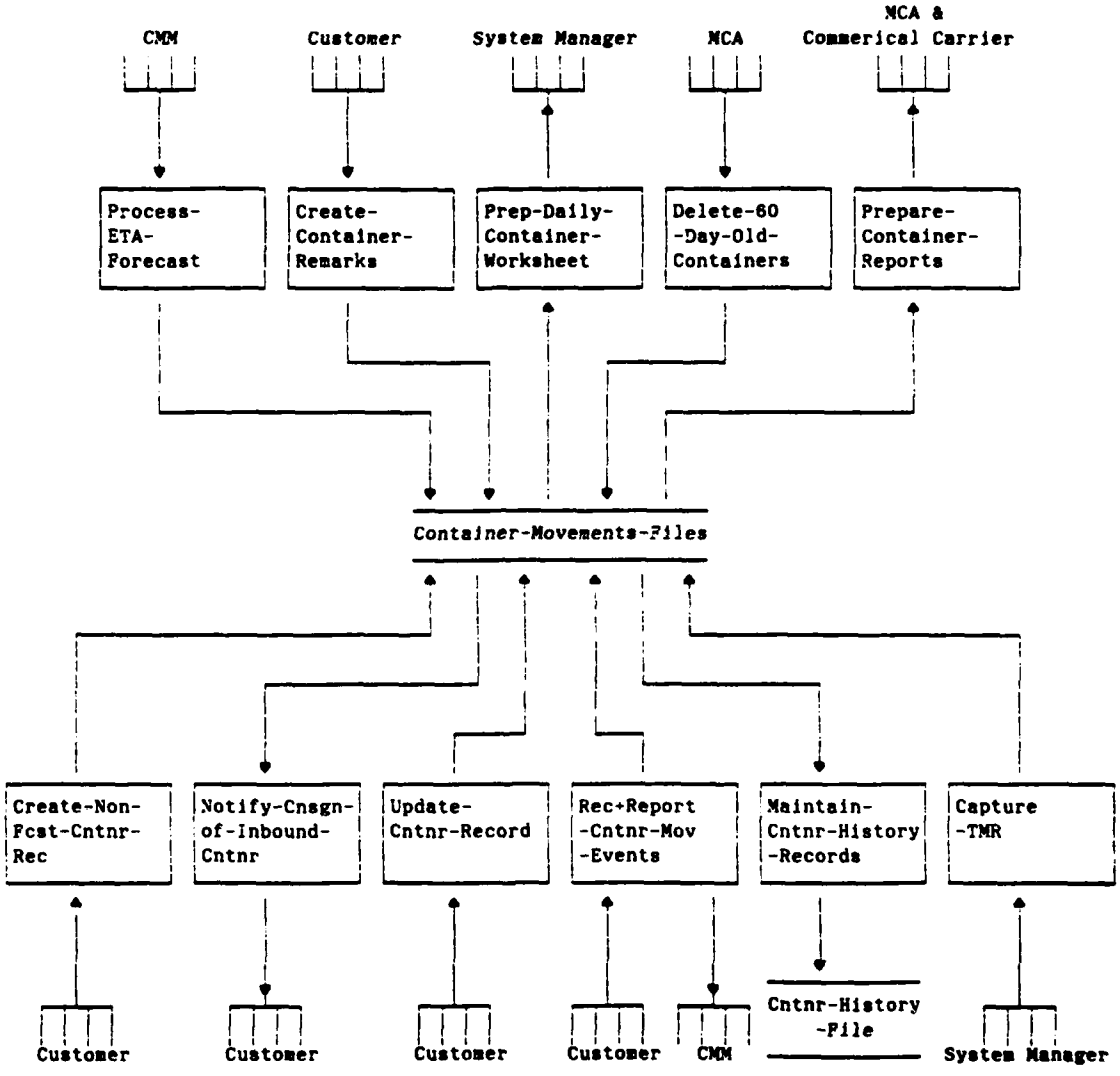

Figure 2.4-3. Container Operations Subsystem Overall Data Flow.

movements. Other records will be created pertaining to rail movements, shipment discrepancies, asset requirements, cargo, air shipments, and the status of Air Force 463L pallets. The main identifier used to track all movements will be the TMR.

For each intra-theater shipment, records will be created and maintained at both the origin and destination MCE. Separate procedures will be involved for heavy lift and ammunition shipments. Recurring requirements (such as mail delivery) that are identified as STMR will be maintained in separate files. For import air shipments, the ATMCT will serve as the origin MCE. As in container operations, movements will be tracked from origin to destination. Several periodic reports will be produced pertaining to the AF 463L pallets and traffic management. Movement events of import cargo will be reported to DAMMS-CMM, and selected information eventually placed in history files.

Figure 2.4-4 shows an overall view of the freight dataflow. Appendix III contains detailed process structure charts depicting the specific movement events and reports.

c. TMAS will be maintained at the MCA. TMAS was originally designated as the Theater Master Address System, and was designed to fulfill the mission requirements of USAREUR Reg 55-5 as well as meet the needs of the theater transportation system. With the transfer of responsibility for the Theater Master Address File/European Activity Address File (EURAAF) from MCA to 200th Theater Army Materiel Management Center, the scope of the TMAS subsystem has been narrowed, but most of the data elements have been retained. TMAS may readily be adapted to support the TMAF/EURAAF mission should the transfer decision be reversed.

The primary files in TMAS will contain data pertaining to each Department of Defense Activity Address Code (DODAAC) in the theater, each supporting activity designated as a ship-to-DODAAC, and each finance element designated as a billing address. Numerous supporting tables will be maintained with address or transportation-related data.

TMAS will be used to create the customer contact files resident at the MCE and ATMCT. These files will be subsets of the activity and freight address files in TMAS. TMAS will also provide data to update the CMM address file. As changes occur in contact data, they will be reported by the customer to his supporting MCE which then updates its database and prepares a transaction to update TMAS. The MCA will update the TMAS database, prepare any required CMM address file change transaction, and transmit new contact files to all MCE locations. Figure 2.4-5 shows an overall view of the proposed dataflow. Appendix III provides detailed process structure charts for TMAS.

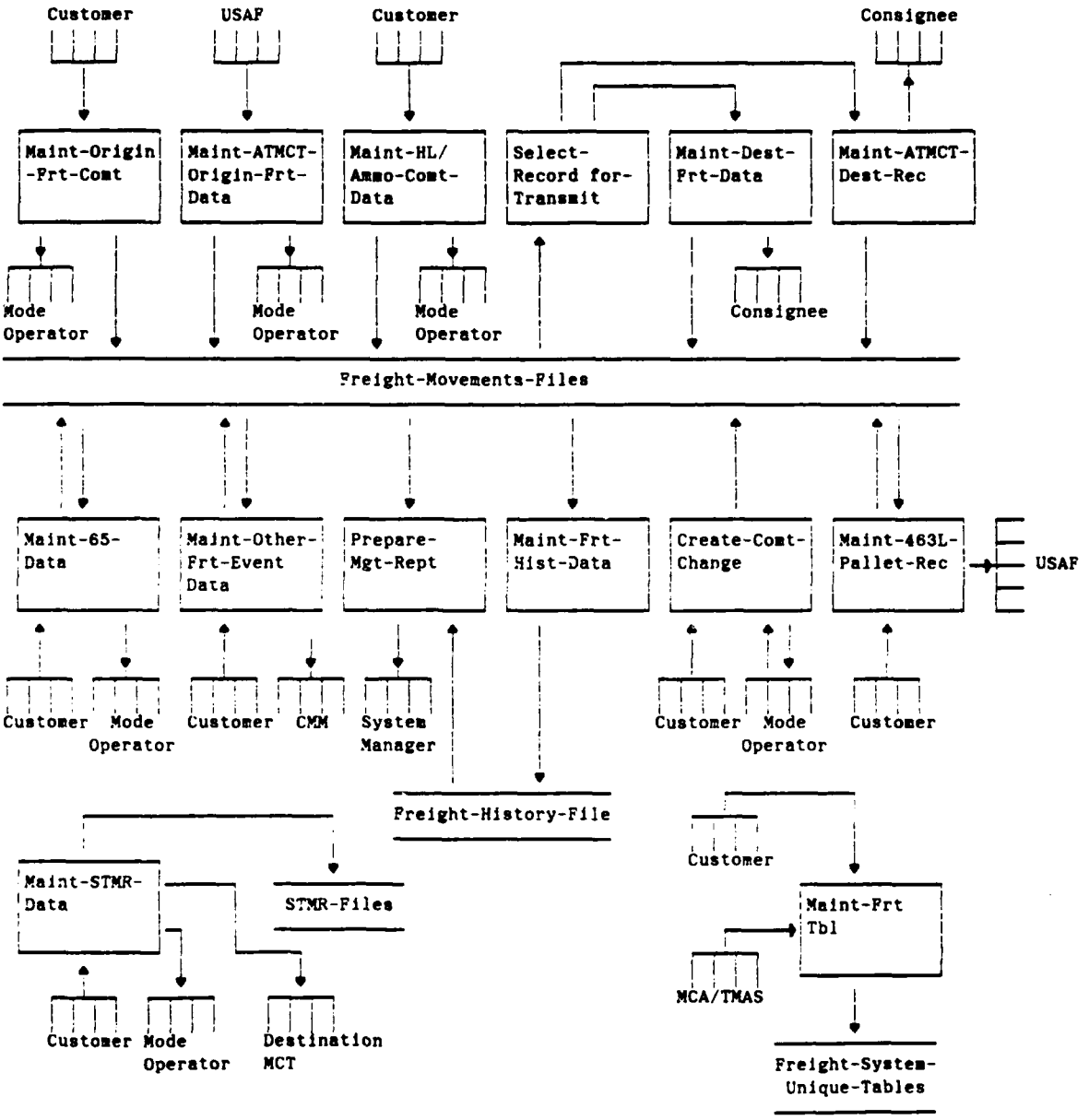

Figure 2.4-4. Freight Operations Subsystem Overall Data Flow.

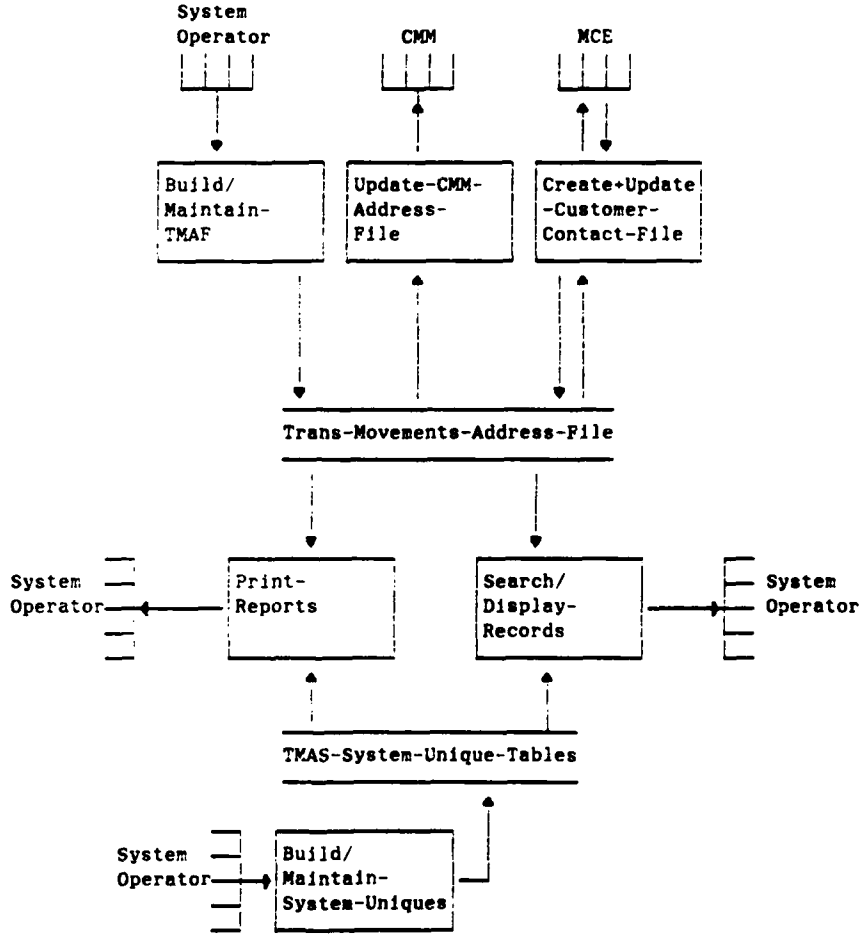

Figure 2.4-5. TMAS Subsystem Overall Data Flow.

2.4.1 Summary of Improvements. The DAMMS-R Phase 1 System will provide an advanced automated capability that is comprehensive, accurate, user-friendly, and timely in the forecasting, scheduling, managing and the controlling of movements. Some of the specific improvements that will be realized are:

(1) Increase in the accuracy of data by a measurable degree. The system will utilize user prompts and help screens to aid in the input of accurate data. The system will also contain edits to further ensure that the data entering the system meets established criteria.

(2) Increase in the ability of system reporting in matters of timeliness, accuracy, distribution and flexibility. Information entered and residing in distributed, relational databases will be edited to improve its accuracy. The system will provide ease of data manipulation to respond to queries and produce reports that can be rapidly disseminated to other system users. Additionally, these reports and queries may be developed using user-defined or pre-defined parameters. This report feature will increase the flexibility and usefulness of the data.

(3) Provision of same-day visibility to theater movement managers of all movements from port of debarkation to consignee. The ease of data entry will allow for faster and more accurate updates of databases which will improve visibility of all intra-theater movements. Movement managers will benefit from this increased visibility by being able to make informed decisions based on more current information.

(4) Provision of a informative profile of all activities occuring or scheduled to occur in the in theater of operation. Databases (automated central repositories) of locational and logistical management data will be developed to provide interactively updated, accurate, and timely information pertaining to all activities involved in the theater of operation.

(5) Decrease in the training time required for system operators. The system will provide user prompts, help screens and menu-driven software to significantly reduce the training time required to familiarize users how to accomplish their responsibilities.

(6) Reduction of operator workload required for system and operational tasks. The system will provide easy to understand prompts and help screens that will increase the rate of information entered into the system and decrease the time required to prepare reports and generate transactions. Addtionally the system will fill in selected fields with data

already residing in the database, thereby reducing the data entry required.

(7) Increase in the ability of movement control activities to develop and use unique processing capabilities for locally specific requirements. The distributed databases will be capable of accessing selected information. The data can then be used to identify performance trends and potential problems, and to create reports from active and inactive files.

(8) Reduction of data redundancy in matters of collection, storage and manipulation. Information will be captured at the source and will then be distributed to system subsystems and other system users on an as-needed basis. The use of relational databases requires the user to enter data less frequently and ensures consistency of the data.

a. Functional Improvements. Phase 1 improvements provided by the three functional subsystems are outlined below:

(1) Container Subsystem. The container subsystem will provide an increased capability to movement management activities to forecast container movements, monitor, and report their status. Specifically, the container subsystem will:

(a) Increase the accuracy of container transaction reporting information to the MCA. Edit criteria will be resident on the micro system to prevent errors at the data entry source.

(b) Reduce operator workload required for system operational tasks. The user-friendly system will provide easily understood user prompts that will increase the speed of data input, preparation of reports and generation of transactions. Additionally, help screens will be available to provide assistance on completing tasks.

(c) Reduce the time between source data capture and management's ability to act and make decisions based on that data. Data will be captured on a daily basis and used to update the distributed container database. Transmission of this data to MCA on a same-day basis will allow managers at that level to make decisions that more accurately reflect the current status of container movements.

(d) Increase the ability to analyze container management data and reduce the amount of time required for these analyses. The system will have resident applications to create standard management information reports. Additionally, ad hoc system queries for data contained in

active container files will be possible. The system will rapidly search container record data fields that have been identified and format this information as required for local use and transmission to other system users.

(e) Provide an automated ability to produce the container worksheet. The system will select and format records onto a hard copy worksheet that will be used to manually enter container records that require additional posted movement information.

(f) Improve the accuracy and speed of preparing and transmitting transactions. The system will be capable of identifying and reporting all daily transactions. Information necessary for reporting will be prepared in the proper DIC format and transmitted in a consolidated report.

(g) Increase capability to create container management information reports. The system will allow for easy preparation and transmission of all required container management information reports. The system will allow the user to select specific data fields and the format in which they will appear in a customized report.

(h) Provide ability to produce historical reports. The system will be capable of accessing historical records/files using pre-defined parameters. This feature will allow movement managers to identify performance trends and potential problem areas.

(i) Reduce the time required to add and delete records from the container log. The system will allow rapid identification of containers that have not been forecasted and provide a screen with a record format to enable the user to create a record. The system will screen records based on all pre-defined and user-defined parameters and identify those records that should be deleted or transferred to an inactive file.

(2) Freight Subsystem. The freight subsystem will provide an advanced automated capability that is more comprehensive, accurate and timely in scheduling, managing and controlling freight movements than the existing system. Specifically, the freight subsystem will:

(a) Provide for an increase in the accuracy of commitment data transmitted to mode operators. The system edit functions will validate user commitment data prior to transmission.

(b) Provide for an increase in the accuracy of commitment data transmitted to destination MCE in freight record format. The system edit functions validate user freight commitment data prior to transmission. The system will allow freight commitments to be collected in destination MCE communication files and then entered into the database.

(c) Provide visibility of all intra-theater freight shipments and assets moving under a transportation movement request (TMR) from origin to destination. The system will allow freight movement and asset data to be stored, distributed and exchanged by all traffic managers within the system.

(d) Provide an automated capability to create, format, store and access traffic management reports. The system will allow traffic managers to employ pre-defined and user-defined parameters for the preparation and access of data needed for traffic management reports.

(e) Increase the ability to provide more efficient motor transport service in response to customer requirements. The system will provide both routine and time-sensitive data to traffic managers on inbound and outbound movements, and will enable theater assets to be utilized more efficiently and lessen the need for tasking commercial assets.

(f) Provide the ability to produce historical reports. The system will be capable of responding to queries on selected data fields, and will allow traffic managers to identify trends and potential problem areas.

(g) Facilitate the process of requesting heavy lift and ammunition assets. The freight module will provide visibility of assets from initial request until offload at consignee. The system will also facilitate requests for oversize/overweight highway clearance requests to the host nation.

(h) Increase visibility of USAF 463L pallets at customer locations. The system will provide an automated capability to create summary reports of pallet information in the movement control team's area of responsibility.

(3) Transportation Movement Address Subsystem (TMAS). TMAS will provide a database that is capable of providing user organizations with updated and accurate address and management information in a timely manner. Specifically, TMAS will:

(a) Maintain highly accurate and accessible TMAS records at all times. Current address file maintenance procedures are inefficient. Multiple files require separate entries and intensive cross-checking using manual means to ensure accuracy. The relational database system will employ an on-line edit and cross-reference edit capability that will ensure that data entries are accomplished accurately and efficiently.

(b) Provide rapid updates of address data in an interactive manner with related supply and transportation systems. Current address data is required by shipping and movement activities to reduce misrouted shipments and transportation costs. The current system is slow, subject to frequent errors and not capable of interacting with other systems. The new system will provide timely and accurate information on mailing, billing and shipping addresses as well as critical supply and transportation management information. This added capability will reduce the need for redundant data collection and manipulation by other systems.

(c) Provide a system that is capable of receiving, processing, posting and disseminating TMAS additions, deletions and changes. The current system is slow, paper driven and must be manually updated when additions, deletions or changes are required. The new system will provide improved methods of data entry, interactive record displays, automated updates of relational data files and will interact with other DAMMS-R systems. The new system will also be capable of receiving, processing and generating command-initiated requests for TMAS additions, deletions and changes. Additionally, the new system will provide an adhoc query capability as well as management reports.

(d) Provide a capability for current, uniform, and consistent customer contact data throughout the theater. Changes to POC, mailing, and freight data will be promptly reported, posted and disseminated to all movement control elements from TMAS.

(e) Provide uniform and consistent data among different address systems. TMAS will ensure that CMM address files are updated simultaneously with consistent, accurate data. File-build techniques within TMAS provide a uniform method of expressing unit-designation data among systems.

b. Improvements of Degree. The following is a summary of upgraded capabilities that Phase 1 will provide:

(1) Increased accuracy.

(2) Reduced data handling.

(3) Improved consistency of data.

(4) More timely information exchange.

(5) Better system-wide control.

c. Timeliness. Phase 1 will permit the timely generation and evaluation of movements quicker and with greater efficiency, in comparison to the present production which uses word processing equipment, thus allowing management more time to be effective in their other duties. The savings result from the simplification of data submission at the request level and the elimination of much of the data manipulation and report generation.

2.4.2 Summary of Impacts. The following subparagraphs describe in general terms the anticipated impacts of the proposed system on the user organization and the operational and developmental environments as well as the equipment and software environments. The associated costs of the proposed system are discussed in Section 8 of this document.

2.4.2.1 User Organizational Impacts. Technical training will provide functional personnel with the necessary information to effectively use the system. User training will take place at the prototype sites prior to and during system installation. The user will need to manage file and system backup and alternate site file storage. All functions can be completed by current staffing at all locations. There will need to be a System Administrator appointed per unit. MCA will need to appoint a Chief System Administrator. These appointments should be made from existing personnel.

2.4.2.2 User Operational Impacts. The current system is slow, subject to frequent errors, and not capable of supporting more extensive planning. The new system will provide quick and accurate information on the loading, moving and receiving of shipments as well as the availability and capability of transportation and transshipping assets. Improved transportation asset utilization will result from quicker and more accurate decisions made in load planning and scheduling. However, there will be procedure changes as a result of the implementation of the TACCS hardware and software. Some conversion time will be necessary before all of the benefits of the system will be realized. There will also be a need for parallel operations to be conducted by some users until the initial system installation is completed.

2.4.2.3 User Development Impacts. There will be minimal impact on personnel regarding development and testing of the Phase 1 software, except for occasional requests by the development team for supporting information and participation in user demonstrations.

An Phase 1 implementation plan will be published which reflects the

procedures to be followed at each end user site to include scheduling of conversion survey(s), user training, data conversion, and conduct of parallel and cut-over operations.

Phase 1 deployment will include hardware and software distribution to Central Europe and South Korea. The deployment plan will be reconciled with the TACCS Materiel Fielding Plan and other guidance relative to deployment based on Army major commands (MACOM) hardware acquisitions.

Phase 1 sites will receive TACCS configured with three remote workstations in addition to the primary workstation. For communications, all sites must have as a minimum a dedicated commercial phone line with a modem and DDN access. Dual modems will be necessary for those sites needing to conduct parallel operations until the initial installation is completed.

2.5 Assumptions and Constraints. The following subparagraphs list the assumptions and constraints relating to the development of Phase 1.

a. Sufficient funding will be allocated for Phase 1.

b. TACCS, capable of handling the volume and meeting the specified requirements, will be available.

c. User sites are currently staffed with adequate personnel.

d. Training for operators will be conducted prior to fielding with key users being trained at USALOGC, Fort Lee, Virginia.

e. Adequate communications will be available.

f. All TACCS in the Phase 1 environment will be operated by transporters who are not data processing professionals.

g. MILSTAMP and data format will be fully applied to all materiel shipments.

h. Transportation management workload will increase incrementally over the expected life cycle of the system.

i. Hardware and software selection must be standardized with current or planned configurations in the same mission area to enhance hardware redundancy, software transportability, and integrated logistics support (ILS).

SECTION 3. DETAILED CHARACTERISTICS

3.1 Specific Performance Requirements. Performance requirements for Phase 1 can be grouped according to subsystem, as follows:

a. Container Subsystem. The goal of the Container Subsystem is to provide an increased capability to movement management activities to forecast containers and monitor and report their status. Specific objectives for the Container Subsystem follow:

(1) Accuracy. The accuracy of container transaction reporting information to the MCA will be increased. Edit criteria will be resident on the micro system to prevent errors at the data entry source. The transmission of container information will have a reduced error level because of the built-in Phase 1 edit function.

(2) Workload. Operator workload required for system and operational tasks will be reduced. The Phase 1 will provide easy to understand user prompts which will speed data input, preparation of reports and generation of transactions. Additionally, help screens will be available to provide assistance on completing tasks.

(3) Decision Makers. The time between source data capture and management's ability to act and make decisions based on that data will be reduced. Data will be captured on a daily basis and used to update the distributed container database. Transmission of this data to the MCA on a same-day basis will allow managers at that level to make decisions that more accurately reflect the current status of container movements.

(4) Analysis. The ability to analyze container management data will be increased. This will reduce the amount of time required for analysis. The system will have resident applications to create standard management information reports. Additionally, ad hoc system queries for data contained in active or inactive container files will be possible. The system will rapidly search container record data fields that have been identified and format this information as required for local use and transmission to other system users.

(5) Automation. An automated ability to produce the container worksheet will be provided. The system will select and format records onto a hard copy worksheet which will be used to manually enter movement event information. The worksheet will consist of all container records that require additional movement information to be posted.

(6) Transmission. The accuracy and speed of preparing and transmitting transactions will be improved. The system will be capable of identifying and reporting all daily transactions. All information necessary for transactional reporting will be prepared in the proper document identifier code (DIC) format and transmitted in a consolidated report.

(7) Reports. Capability to create container management information reports will be increased. The system will allow for easy preparation and transmission of all required container management information reports. Some reports will allow for user-defined parameters to be used. This will be achieved by the system accessing selected data fields and formatting the data according to programmed or user-defined parameters.

(8) Historical Reports. The system will be capable of accessing historical records/files using user-defined parameters. This will allow movement managers to identify performance trends and potential problem areas.

(9) Record Maintenance. The time required to add and delete records from the container log will be reduced. The system will allow rapid identification of containers that have not been forecasted and provide a screen with a record format to enable the user to create a record. The system will screen records based on all predefined and user-defined parameters and identify those records which should be deleted or transferred to a History File.

b. Freight Subsystem. The goal of this subsystem is to provide an advanced automated capability that is more comprehensive, accurate and timely in scheduling, managing, and controlling freight movements. Specific objectives for the Freight Subsystem follow:

(1) Accuracy to Mode. The accuracy of commitment data transmitted to mode operators will be increased. The system edit functions will validate user commitment data prior to transmission.

(2) Accuracy to MCE. The accuracy of commitment data transmitted to destination the MCE in freight record format will be increased. The system edit functions validate user freight commitment data prior to transmission. The system will allow freight commitments to be collected in destination MCT communication files and then transmitted in freight record format to each MCE.

(3) Theater Visibility. All freight shipments and assets moving under a TMR from in-theater origin to in-theater destination will be more visible. The system will allow freight movement

and asset data to be stored, distributed and exchanged by all traffic managers within the system.

(4) Reports. The capability to create, store and access traffic management reports will be automated. The system will allow traffic managers to employ pre-defined and user-defined parameters for the preparation and access of data needed for traffic management reports.

(5) Asset Utilization. The ability to provide more efficient motor transport service in response to customer requirements will be increased. The system will provide both routine and time sensitive data to traffic managers on inbound and outbound movements. This will enable theater assets to be utilized more efficiently and lessen the need for tasking commercial assets.

(6) Historical Reports. The ability to produce historical reports will be provided. The system will be capable of responding to queries on selected data fields. This will allow traffic managers to identify trends and potential problem areas.

(7) File Maintenance. The ability to maintain the freight movement information at a minimum of 95% accuracy will be provided. The system's edit and formatting capabilities will allow the user to record, report and communicate reportable transactions with minimal operator intervention.

c. Theater Master Address Subsystem (TMAS). The goal of TMAS is to build and maintain an automated system that is capable of providing user organizations with updated and accurate address and management information in a timely manner. Specific objectives for the TMAS follow:

(1) File Maintenance. TMAS files will be maintained at a minimum of 95% accuracy at all times. Current address file maintenance procedures are inefficient. Multiple files require separate entries and intensive cross-checking using manual means to ensure accuracy. The new relational database system will employ an on-line edit and cross-reference edit capability that will assure that data entries are accomplished accurately and efficiently.

(2) Address Updates. Rapid updates of address data in an interactive manner with related supply and transportation systems will be provided. Current address data is required by shipping and movement activities to reduce misrouted shipments and transportation costs. The current system is slow, subject to frequent errors and not capable of interacting with other systems. The new system will provide timely and accurate information on mailing, billing and shipping addresses as well

as critical supply and transportation management information. This added capability will reduce the need for redundant data collection and manipulation by other systems.

(3) Capabilities. A system that is capable of receiving, processing, posting and disseminating additions, deletions and changes will be provided. The current system is slow, paper driven and must be manually updated when additions, deletions or changes are required. The new system will provide improved methods of data entry, interactive record displays, automated updates of relational data files and will interact with other DAMMS-R subsystems. It will be capable of receiving, processing and generating command-initiated requests for TMAS file additions, deletions and changes as well as producing ad hoc queries and reports.

3.1.1 Accuracy and Validity. Several accuracy and validity issues affect Phase 1 and are discussed in the following subparagraphs.

a. Types of Accuracy - Several major categories of accuracy impact on Phase 1 functions:

(1) Accurate sequencing of data transactions is vital to the historical analysis and auditing of data, but will not preclude the acceptance of data into Phase 1.

(2) Editing of records and keys by Phase 1 will not be so rigid that records with otherwise usable keys are rejected.

(3) Priority will be given to getting data where it is needed, when it is needed.

(4) Transmission of data must be at least 100% accurate and complete. (Additional appropriate communication software must be acquired to provide this capability.)

b. Types of Validity - Phase 1 should permit data entry into fields only as far as the number of characters the field is designed to hold, and other field characteristics (such as left/right justification, alpha-numeric field configurations, and field-to-field dependency) checks. When required, Phase 1 should test the contents of character arrays. Attempts by the user to enter excess information will cause the system to give an indication to the operator that field characteristics have been violated. Input data validations called for in the specifications for the system must be applied and appropriate error messages displayed on the monitor, when applicable. Specified "help" features must be displayed when required and/or requested, to include narrative descriptions. Data element edit criteria are provided in Appendix V.

3.1.2 Timing. Phase 1 system timing requirements include:

a. File backup should be accomplished within 30-45 minutes each day.

b. Perishability of information depends on the type of data and how it is used.

c. Information flow requirements become more stringent with the implementation of each successive fielding segment. Later, information flow requirements will be reduced to minutes or seconds.

d. Functions requiring single key data retrieval from a database resident on the system should take no more than four seconds from the entry of the request until the results are displayed on a screen.

e. Ad hoc query timing requirements, while not specifically defined, should take no more than two minutes. However, it is typical for complex and/or non-key function ad hoc queries to require more than two minutes for a response.

f. Response time of major functions: generated formats from various databases should be produced and ready for transmission within five seconds after entering the program mode.

g. Interactive on-line inquiries pertaining to stored requirements data, or major data elements, should be satisfied within one minute.

h. Interactive changes (additions, deletions, and changes) to major data elements should be satisfied within 15 seconds.

i. Response time to queries and to updates of data files: Queries on a specific key should result in the record being produced in less than ten seconds. Updates of specific fields on a record would require no more than five seconds.

3.1.3 Capacity Limits. The maximum number of transactions, storage requirements, and other quantifiable information (including capacity limits due to varying modes of operation) regarding Phase 1 will be provided in a later draft of this document.

3.2 Functional Area System Functions. The functions of Phase 1 will be performed within the Container, Freight, and TMAS Subsystems. These functions, when programmed, will provide an automated means to obtain, manipulate, store and distribute information. The functional processes that constitute each subsystem are provided, by subsystem, in Appendix III.

3.3 Inputs and Outputs. System inputs, outputs, and entities, by subsystem, are provided in Appendix III of this document. The relationship

of inputs, outputs, and entities to the appropriate functional processes are also depicted (by data flow diagrams) in the process sections of Appendix III.

3.4 Database/Data Bank Characteristics. Complete database characteristics have not been developed at this time. The files and tables (and their characteristics), that have been developed and identified for development in each subsystem database appear in Appendices IV and V of this document.

3.5 Failure Contigencies. The support to be provided in addressing hardware and software failures is unknown at the time of this writing. System susceptibility to failures and their consequences in terms of system performance are substantially dependent upon the details of mechanization of the system. From a functional standpoint, some technical procedures should be applied whereby, as a minimum, the logical files of the Phase 1 are transferred (dumped) to an off-line, machine processable storage medium (such as magnetic tape or diskettes) at the end of each day's processing. This dump function would provide a backup snapshot of the Phase 1 logical files. This would allow and provide for a periodic checkpoint from which to begin a recovery in the event of disk error, hardware or software failure. Further needs (journals/loss, checkpoint/re-start files, etc.,) in this area will be solidified as Phase 1 specifications/capabilities become known.

a. Back-up. Phase 1 will provide both hardware and software back-up (recovery) capabilities. All terminal activity should be ceased once a day during a time of little or no terminal activity. At that time, the on-line database should be dumped onto tape, providing a copy relevant to that point in time. The database status tapes should be stored for a minimum of seven days to provide the necessary backup files. During normal terminal operation of the system, all changes to the on-line database should be copied onto disk as they occur. Should complete data files, or a portion of them, be inadvertently lost because of improper entry procedures or terminal operator error, the system status could be restored by reloading the appropriate backup tape and manually re-entering the lost data. The system could then be returned to normal operation. The existence of backup tapes would provide positive protection against the possibility of unreadable database status tapes.

b. Fallback. During computer shutdown or malfunction, data will be collected manually. The accumulated data will be formatted after return to full on-line operations. For sustained shutdown or malfunction, movement programming by manual means will be implemented.

c. Degraded Modes of Operation. The priorities for restoring the essential functional processing steps of Phase 1, in the event that full processing capability is not available will be discussed in a later draft of this document.

SECTION 4. DESIGN CONSIDERATIONS

4.1 System Description. At the start of each day, the system administrator performs a start-up procedure to make the system available to other members of the unit. This procedure includes entering the unit's available communications capabilities (voice, MINET, etc.) to the address file. An operator can then logon to the system using a personal identification (ID) code and a password associated with a group ID. The group ID allows access to a selected group of the organizations mission functions (except the System Administration functions).

The operator enters information after he selects a data entry screen. The operator can view all the information stored in the existing files, and can modify this data or use it as is. When all the information has been input or retrieved, the operator enters the screen into the system. When screens are entered, the system updates appropriate databases, and formats communications transactions (COMMTRANS) and stores them in a communications file(s) (COMMFILE).

Phase 1 errors have been grouped into two categories; fatal and non-fatal. A fatal error is one that the system rejects and must be corrected by the operator. A non-fatal error can be corrected by the system or is acceptable to the system. For example, some edits reject items (if the values are not correct), will accept blanks in the same field. The TMICS applications replaced by Phase 1 are expected to fill an invalid entry with blanks.

When COMMTRANS are generated, the system selects the organization to receive the information, and displays the organization identification. The system then prompts the operator to confirm or to override the selection. The system uses the organization identification to select the type of communication (e.g., commercial dial-up, MINET, voice, etc.) needed for this organization. The screen displays this communication type and prompts the operator to accept or modify the selection. The COMMTRANS will be stored so that it can be retrieved for modification of the transaction. At times, the operator will need to make a change to the communications media recorded in the COMMFILE. As an example, when the system completes start-up and the MINET network is available, but has gone down, transactions will need to be routed to another media.

COMMTRANS will be one of three categories:

a. Demand.

b. Coordinating.

(1) Requests for positive inbound clearance.

(2) Receive positive inbound clearance.

(3) Task mode operation.

c. Operational.

These transactions reflect the initiation and coordination of activities between transportation elements, and may require a response before additional activities are completed. Coordinating transactions will be transmitted on a scheduled basis, via the appropriate carrier, using a file transfer capability. An alternate capability for voice coordination is also necessary. For coordinating transactions in the voice mode, the transporter brings to the screen all of the activity for a specific organization. During a telephone conversation with that unit, the transporter negotiates the response to the coordinating transaction and enters this response.

Operational transactions include such items as movement visibility transactions and asset visibility transactions. These transactions always start at the bottom of the organization and flow to the top. As in coordinating transactions, operational transactions will be transmitted periodically using a file transfer capability, with voice communications as the backup. Each unit will transmit its operational transactions to 1st TMCA, where the normal CMM process will be executed.

The operator initiates this transmission (via a screen process) of all items for a particular receiving unit. If a transmission is not completed within five attempts, the system should notify the operator and saves the COMMFILE for later transmission. The above system flow generally represents the flow of coordinating and operational transactions throughout the system.

1st TMCA initiates demand transactions such as hold and divert. A data query of the CMM database is used to determine who to send these transactions. These demand transactions will require immediate communication and action. This will take the format of broadcast items, and will be handled via telephone, TELEX, or radio, depending on availability.

Daily, 1st TMCA will pass address and error rejection data to the major subordinate units. Each major unit will update its files and transmit this information to its subordinate unit(s). Additionally, each major unit will select from its files the latest updated operational information or forecasted movements, assets, schedules, etc. The unit transmits this information to subordinates for the updating of their files. The error items received by these units are converted by a combination of individual screens and processes. They can be converted via a test editor and its change or overlay features. This completes the normal transaction processing cycle for Phase 1, other than backing up the files.

Figure 4.1-1 illustrates the user organizational relationship to the major components of Phase 1.

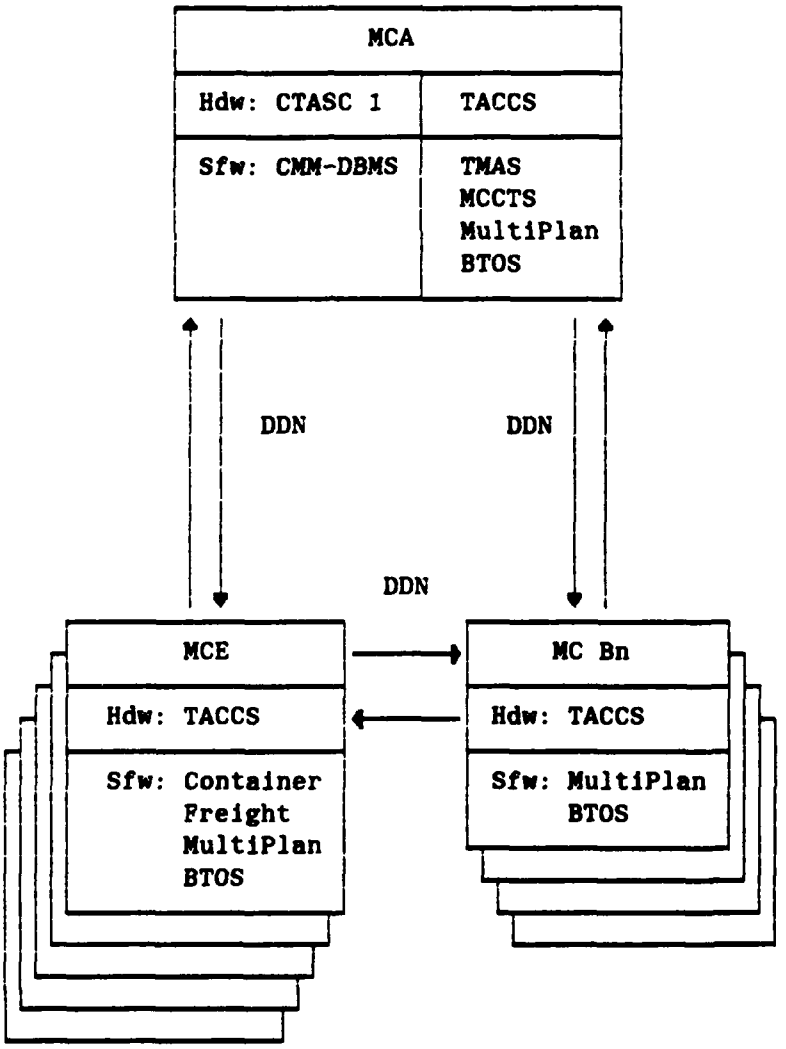

Figure 4.1-1. User Organizational Relationship to DAMMS-R1 Components

4.2 System Functions. Descriptions of the specific performance requirements satisfied by Phase 1 functions will be elaborated upon in such a fashion as to relate to the system environment discussed in Section 5 in a later draft of this document.

4.3 Flexibility. The design of Phase 1 will be with the understanding that incremental enhancements will be made as the Step-Up Lifecycle of DAMMS-R is completed.

4.4 System Data. Appendix III identifies the specific inputs identified for use in Phase 1. Existing screens for each of the subsytems are provided in the Process sections of Appendix III. Appendix IV describes the files and tables that have been developed and identified for development into Phase 1 subsystem databases. Design details dealing with database characteristics that have been developed are also provided in Appendix IV.

SECTION 5. ENVIRONMENT

5.1 Equipment Environment. The Phase 1 system will require the use of a functionally-located, yet mobile, microcomputer workstation. Table 5.1-1 lists the components that are included in a master and a remote workstation. Figure 5.1-1 illustrates that same hardware. Table 5.1-2 lists the system hardware including internal storage requirements and the number required of each hardware item, where applicable.

Phase 1 sites will receive TACCS configured with three remote workstations in addition to the primary workstation. The following subparagraphs provide a description of each of the functional components of the TACCS workstation.

a. Processor. The Logic Module (LM) houses the central processing unit (CPU), which has 1 megabyte of on-board random access memory (RAM), and communications interfaces (DATA COM). The Logic Module also contains one floppy diskette drive, one hard disk drive and one tape cartridge drive.

b. Storage Devices. There are three types of storage devices:

(1) One floppy diskette drive using 5 1/4" floppies containing 630K storage after formatting.

(2) One hard disk drive containing 85 million bytes of memory, where 67 million bytes are actually available for data storage after formatting.

(3) One tape cartridge drive using standard cartridge tapes which contain 24 million bytes of storage after formatting.

c. Output devices. The output devices consist of a dot matrix printer unit (RP-336/TYQ-33(V)), a Bell 212A communications interface modem, and a high-resolution, monochrome monitor.

d. Input devices. The input devices consist of a keyboard, a floppy disk drive, a tape cartridge drive, and Centronics parallel port/RS-232 serial port for on-line processing. It also includes a communications interface (DATA COM) with an FM radio interface, telephone connection with auto/manual dial, 2 modems and connection to Digital Secure Voice Terminal (DSVT).

5.2 Support Software Environment. The Phase 1 software identified in Table 5.2-1 will be fielded to the designated units identified in Figure 5.2-1 at the same time as the TACCS hardware. During Phase 1 of DAMMS-R, the functional users will evaluate the system to determine adequacy and make recommendations for enhancements prior to the system being extended to additional users in Phase 2. It should be understood that Phase 1 may, and will most likely, be fielded for evaluation during tactical/field training exercises to determine wartime oriented developmental requirements for

Table 5.1-1. TACCS Workstation Components (1 of 1).

WORKSTATION TYPE	ITEM	TYPE NUMBER	COMMON NAME
Master Workstation	Monitor Unit	MX-10723/TYQ-33(V)	Monitor
	Keyboard	KY-903/TYQ-33(V)	Keyboard
	Printer Unit	RP-336/TYQ-33(V)	Printer
	Logic Module	MU-857/TYQ-33(V)	LM
Remote Workstation	Remote Logic Module	MU-858/TYQ-33(V)	RLM
	Monitor Unit	MX-10723/TYQ-33(V)	Monitor
	Keyboard	KY-903/TYQ-33(V)	Keyboard

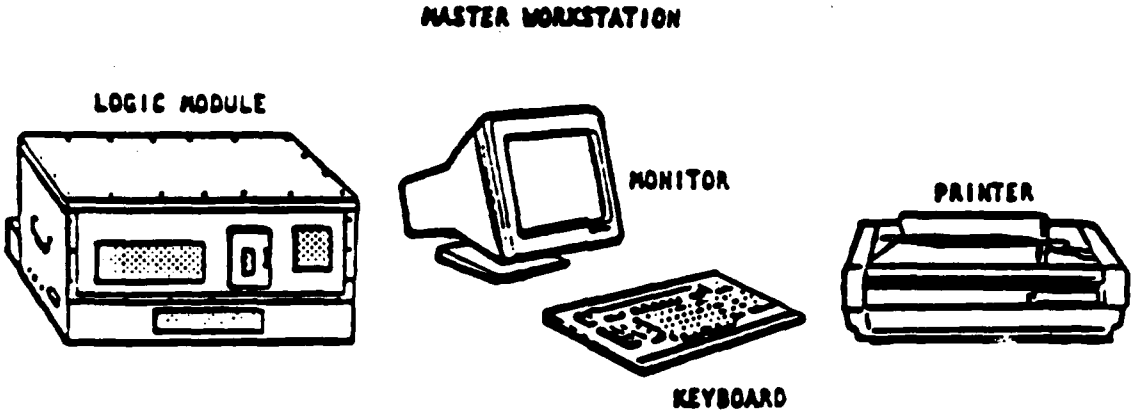

Figure 5.1-1. TACCS Workstation Field Components.

Table 5.1-2. DAMMS-R1 Hardware (1 of 1)

HARDWARE DESCRIPTION	INTERNAL STORAGE	REQUIRED NUMBER	REQUIRED INPUT/ OUTPUT DEVICE
LOGIC MODULE MU-857/TYQ-33(V)	1 MB	23	MONITOR/KEYBOARD/ HARD DISK DRIVE/ FLOPPY DISK DRIVE/TAPE CARTRIDGE DRIVE
MODEM (BELL 212A)	N/A	23	LOGIC MODULE
MODEM (V.23)	N/A	23	LOGIC MODULE
KEYBOARD (KY-903/TYQ-33V)	N/A	299	LOGIC MODULE/ MONITOR/PRINTER
MONITOR MX-10723/TYQ-33(V)	N/A	299	LOGIC MODULE/ KEYBOARD/PRINTER
REMOTE LOGIC MODULE MU-858/TYQ-33(V)	1 MB	69	KEYBOARD/MONITOR/ LOGIC MODULE/ PRINTER
WINCHESTER DISK DRIVE	67 MBYTES (FORMATTED)	23	LOGIC MODULE
FLEXIBLE DISK DRIVE	630K (FORMATTED)	23	LOGIC MODULE
TAPE CARTRIDGE DRIVE	24 MBYTES (FORMATTED)	23	LOGIC MODULE
PRINTER QANTEX MODEL 7020 RP-3361/TYQ-33(V)	N/A	23	LOGIC MODULE/ REMOTE LOGIC MODULE/KEYBOARD/ MONITOR/CENTRONICS PARALLEL PORT/ RS-232 SERIAL PORT

*For information on required TACCS Systems Cables, refer to TM 11-7010-213-12, Table 1-5.

Table 5.2-1. DAMMS-R1 Support Software (1 of 1)

PROGRAM NAME	PROGRAM IDENTIFICATION	RELEASE LEVEL
BURROUGHS 20 OPERATING SYSTEM (BTOS)	TBD	TBD
MultiPlan	TBD	TBD

Organization	TACCS	Remote Terminals
1ST TMCA	4	12
502D MCC	2	6
229th MMC	2	6
MCT Moenchen Gladbach	1	3
MCT Bremerhaven	1	3
MCT Nuernberg	1	3
MCT Stuttgart	1	3
MCT Frankfurt	1	3
MCT Kaiserslautern	1	3
39th Trans Bn (MC)	2	6
27th Trans Bn (MC)	2	6
MCT Rotterdam	1	3
MCT Idar-Oberstein	1	3
ATMCT Ramstein	1	3
ATMCT Rhein Main	1	3
MCT Mannheim	1	3
Europe - Totals	23	69
25th TMCA	4	12
MCT Teajon	1	3
MCT Taegu	1	3
MCT Pyongtaeck	1	3
MCT Seoul	1	3
MCT Bupyeong	1	3
MCT Kumchon	1	3
MCT Uijonbu	1	3
MCT Tongduchon	1	3
MCT Kunsan	1	3
MCT Waegwan	1	3
MCT Chunchon	1	3
MCT Pusan	1	3
MCT 1st Region, Seoul	2	6
MCT 2nd Region, Pusan	2	6
ATMCT Osan	1	3
Korea - Totals	21	63

Figure 5.2-1. DAMMS-R1 TACCS Fielding Schedule.

software applications. Refer to Section 1.2.11 Support Software Documentation for specific information on software documentation.

5.3 Communications Requirements. An essential element of DAMMS-R is the capability to communicate at every echelon with every other DAMMS-R computer/microprocessor within a given Theater of Operations (TOPNS). The communication requirements to support DAMMS-R fielding are identified in the Telecommunications Requirements for the DAMMS-R, dated 13 November 1987. These communication requirements will exist from Phase 1 through Phase 2 with modifications as necessary to support the Air/Land Battle tactical interfaces and as transmission media and equipment technology advances. Data volumes will increase substantially as equipment is fielded to all DAMMS-R using units. Appendix I of the Telecommunications Requirements document contains a listing of the existing transportation units, terminal locations, hardware and software in use in USAREUR. Appendix II of the Telecommunications Requirements document shows the DAMMS-R fielding of TACCS in USAREUR which includes 56 TACCS devices with 69 remotes. There will also be a CTASC 1 located at the TMCA in Oberursel, FRG. Appendix IV lists the Phase 1 message flow requirements by type message, including the length of the message in in bits. This data transfer can be analyzed in conjuction with the Phase 1 Theater Architecture shown in Figure 5.1, (page 18) of the Telecommunications Requirements document to determine the volumes of traffic between each interface.

5.3.1 Graphic Overview. In the Telecommunications Requirements document, figures 3.2 and 5.1 (pages 8 and 18 respectively), depict graphic representations of the existing USAREUR communications connectivity. Appendix IV of the Telecommunications Requirements document contains the data information to be exchanged including the size, frequency, and message title. The tables in Appendix IV also show that the volume of data transfer per transaction varies in length from 1200 bits to nearly 30 Mbs (megabytes).

5.3.2 Hardware. The hardware currently under consideration to support Phase 1 of DAMMS-R is the CTASC 1 and the TACCS. The communications equipment to support this hardware has not been determined at the time of publication of this document but will be identified in the US Army Information Systems Engineering and Integration Communications Plan and Detailed Engineering Plans to be published by USAISC at a later date.

5.3.3 Software. The communications software to support Phase 1 has not been determined at the time of publication of this document but will be determined by the US Army Informations System Engineering and Integration Center, Fort Huachuca, Arizona.

5.4 Interfaces. The system-to-system interfaces of Phase 1 are based upon the fielding of the CTASC 1 and TACCS. The upgrade to the existing DAMMS system interfaces (shown in Figure 5.4-1), are configured to allow for the free flow of data between automated processing devices. The purpose of the system upgrade is to maintain visiblity and influence over intransit cargo to meet command requirements. DAMMS-R will operate within the security considerations outlined in AR 380-380, Automated Systems Security.

Interface Systems	ADP & COMM Device	Security Class
DA Standard Port System-Enhanced (DASP-E)	DAS3 D/C DDN/AUTODIN	UNCLAS
MAC Aerial Port Documentation & Movement System (ADAM III)	Honeywell/ Manual	UNCLAS
Terminal Management On-Line System (TOLS)	BMT/AUTODIN	UNCLAS
Logistic Intelligence File (LIF)	BMT/AUTODIN	UNCLAS
Defense Intrasit Subsistence Management System (DISMIS)	BMT/AUTODIN	UNCLAS
DOD Activity Address Directory (DODAAD)	BMT/AUTODIN	UNCLAS

Figure 5.4-1. Existing DAMMS Interfaces.

a. Operationally, Phase 1 will begin to be deployed in Europe utilizing the existing TMICS with time phased integration of CTASC 1 and TACCS hardware. Operational considerations for DAMMS-R reqire that the system be designed to take full advantage of the TACCS hardware. The ACCS Common hardware (presently in development), will be tactically configured, have modems for dial-up telephone access, possess two wire/four wire direct circuit hook-up, and compatibility for radio voice/data connectivity with existing/future tactical radio system assets. Functional characterization of communication circuits will consist of "direct dial" ANALOG circuits. Modems are required to connect digital devices to the ANALOG (voice grade) lines with transmission speeds governed by the maximum operating speed of the modem used. Modems standards will conform to AT&T/CCITT specifications. The physical characterization of the telecommunications circuit connectivity should require that circuits be:

(1) Two wire/four wire switched or dedicated.

(2) Full duplex transmission capable.

(3) Dial-up telephone access capable. (Host Nation approved modems must be considered in OCONUS areas.)

(4) DDN dail-up access circuitry must be capable of operating with full-duplex, two wire modem utilization.

b. General description of the data transfer requirements varies considerably between DAMMS-R and each interface. Specific data transfer requirements are clarified in the Individual User Interface Requirements documents. DAMMS-R interfaces are identified in the Army Battlefield Interface Concept (ABIC).

c. Text formats required will remain consistant with formats identified in DoD 4500.32R Vol I (MILSTAMP), technical manuals on the Cargo Movements Module (CMM) and the Joint Information Tactical Automated Command and Control System (JINTACCS). Technical manual and JINTACCS standards must be adhered to where applicable. Use of AUTODIN communications formats will remain consistant with the formats specified in JANAP 128, AUTODIN Operating Procedures. Units of measurements are derived from the large body of standards incorporated in CCITT recommendations, Electronics Industries Association (EIA), and the US Government/Military Communications Systems Technical Standards (MIL-STD 188C). Detailed DAMMS-R system engineering design data will incorporate the standards stated therein.

d. The Phase 1 anticipated interfaces are identifed in the following subparagraphs:

(1) <u>CTASC 1 to AUTODIN</u> - The CTASC 1 will perform

centralized operation of the Phase 1 system and through this interface pass narrative traffic to transportation customers and the OCCA, in theater. Data traffic will be exchanged with the LIF and DLSSA providing updated intransit cargo information. Data traffic will be received from the MTMC regarding inbound ship manifests.

(2) CTASC 1 to DDN - The CTASC 1 in its capacity as the centralized operation of the Phase 1 system will act as an electronic mail host for all theater TACCS users/subscribers. This interface is automated.

(3) CTASC 1 to TACCS - The CTASC 1 in its capacity as the centralized processor of the Phase 1 system will receive input and generate output data from the functionally subordinated TACCS users.

(4) TACCS to Intel 310/Wyse PC - During the fielding of Phase 1, the TACCS and the IBM Displaywriter will be required on an interim basis until such time as the TACCS replaces all Displaywriters within the using units. This interface will be automated.

(5) TACCS to TELEX - Phase 1 fielding requires a manual interface between TACCS and Siemens TELEX devices in using units. This interface will effect telecommunications connectivity with commercial carriers that transportation units rely on for contracted services. This interface will be manual, utilizing data to TELEX conversion equipment.

(6) TACCS to DDN - This interface is required to provide interactive computer to computer operations and electronic mailbox service. This interface is automated.

(7) TACCS to ADAM III - ADAM III is a Military Airlift Command (USAF) standard system dedicated to automated data processing on cargo moving through the Aerial Port system. This interface is required to provide air manifest cargo release data for the inclusion into the DAMMS-R Master File. This interface consists of a manual exchange of magnetic media between the ADAM III and the ATMCT.

e. Use of switched circuit operational concepts over dedicated circuit concepts should be considered on all proposed telecommunications connectivity. Multipoint connectivity must be considered in all instances where dedicated circuitry is proposed. All DAMMS-R system interfaces will take into consideration hard wire connectivity where available, common user dial-up access connectivity if available, and tactical radio communications connectivity when required.

5.5 Summary of Impacts. The following subparagraphs summarize the anticipated impacts of the proposed Phase 1 on the ADP organization.

5.5.1 ADP Organizational Impacts. When considered as an integrated part of the overall DAMMS project, Phase 1 will have the following organizational impacts:

a. MCA will:

(1) Be the Chief System Administrator for Phase 1.

(2) Perform project leadership/management functions for further development of Phase 1. Develop functional requirements and forward them to the USALOGC, Fort Lee, Virginia.

(3) Receive training requirements and coordinate, schedule, and conduct Phase 1 sustainment training. Coordinate with the TRANSCOM to assist in training as required.

(4) Conduct staff assistance visits to each Trans Bn (MC)/CMCC, MCE, and ATMCT semi-annually or upon request.

(5) Serve as point of contact for Phase 1 problems (maintain incident log with all pertinent information). Refer hardware and software problems to the TRANSCOM. All communications will be via telephone to prevent delays and to ensure all questions are answered.

b. TRANSCOM will:

(1) Receive Phase 1 hardware and software problem reports from MID, 1st TMCA on the Problem Report Form and take appropriate action. Provide assistance upon request from MID, 1st TMCA in resolving maintenance related problems between Phase 1 users.

c. Trans Bn (MC) and CMCC will:

(1) Implement Phase 1 as directed.

(2) Ensure compliance by subordinate elements. Conduct staff assistance visits to subordinate elements, document findings, and perform follow-up actions.

(3) Ensure that there is an active sustainment training program, and that at least two operators are adequately trained at each site. Coordinate with the MCA for additional training requirements for Phase 1 operators.

(4) Assign member of staff as Phase 1 coordinator and provide the name and phone number of that individual to the MCA.

(5) Establish and monitor Phase 1 equipment expendable supply requisition procedures for subordinate units, to ensure uninterrupted system operation.

(6) Suggest system improvements to the MCA. Suggestions should be applicable to all system locations.

(7) Request assistance from the MCA as needed.

d. MCE/ATMCT will:

(1) Implement Phase 1 as directed by theater army HQ.

(2) Train personnel in the operation of Phase 1 to ensure that at least two adequately trained personnel are available.

(3) Advise MCA, telephonically, of any apparent software or equipment failure, and provide a description of the malfunction.

(4) Request assistance from the MCA, as needed, through the Trans Bn (MC)/CMCC.

(5) Suggest system improvements to the MCA through the Trans Bns (MC)/CMCC coordinator. Suggestions should be applicable to all locations.

5.5.2 ADP Operational Impacts. Due to the configuration of the proposed system, more data may be entered in fewer man hours. There will be less duplication of effort and less system-down and start-up time because the TACCS is not dependent upon other systems. There will also be more accessible and accurate system data due to resident database information storage and system edits, respectively. Implementation of new procedures will result from the flexibility of the menu-driven, data-prompted, user-friendly software that will exist on the TACCS hardware.

5.5.3 ADP Development Impacts. When considered as an integrated part of the overall DAMMS project, Phase 1 will have minimal development impacts on the ADP personnel or environment.

5.6 Failure Contingencies. Normal failures of hardware include power failures and component failures. The specific alternatives to failure relate to what has failed. The following alternatives will cover most, if not all, situations.

a. Restart/Recovery - Restart and recovery in a database environment, especially those which provide interactive access, depend largely upon the utilities and tools provided with the specific database. In general, journals and logs are maintained to provide a means of recovery from machine failure. A transaction log may be employed to record the inquiry or update transactions as well as other

transaction characteristics such as terminal identification, operator identification, time, etc. A system journal file is commonly used to record information pertaining to updates: before and after images of updated records, contents of new or deleted records, errors and/or procedural violations. Restart/checkpoint facilities also exist to bring the database(s) back to the point of failure, and then to restart any application programs which were active at the time of failure. As noted before, specific recovery procedures are therefore dependent upon the physical database implemented and the utilities/tools provided. These procedures will be developed and refined when knowledge of the physical database to be provided by Phase 1 is known.

b. Other - The following communications priorities are recommended for use when an alternate method (i.e., TELEX) must be used for communications:

(1) Vehicle commitments/log maintenance.

(2) Operational reports.

(3) DAMMS input.

(4) Routine messages (not of immediate operational concern).

5.7 Assumptions and Constraints. The following subparagraphs list the assumptions and constraints which will impact the development of Phase 1.

a. Assumptions - The present assumptions relating to the development of Phase 1 are:

(1) MILSTAMP and data formats will not be significantly altered between the present and 1990.

(2) MILSTAMP will fully apply to all materiel shipments during peace.

(3) Not all input, output, and interface requirements can be firmly defined or relied upon to be constant over any lengthy period of time.

(4) Designated computer hardware and telecommunications capabilities can be procured in time to support SAT and system extension.

(5) Transportation management workload will remain relatively constant over the expected life cycle of the system during peacetime operations.

b. Constraints - The present constraints relating to the development of Phase 1 are as follows:

(1) Communications - Communications constraints are identified below:

(a) Objective data telecommunications capabilities will not be extended until the 1990s.

(2) Automation Technology - Technology constraints are identified below:

(a) Phase 1 must be developed to operate on the Army's predetermined standard CSS computer hardware, to include the: CTASC, TACCS, and Unit Level Computer (ULC).

1) These computer systems include the equipment of at least three different manufacturers, each possessing dissimilar architectures and, to one degree or another, are incompatible between each other in terms of communication protocol and data format.

2) Phase 1 software and processing must be designed to conform to the throughput capabilities of the hardware.

(b) Computer operating system and executive software have been largely predetermined, and the operating systems and executive software associated with each type of hardware are vastly different from one another in form and operation.

(c) None of the identified computer systems offer sophisticated graphing or mapping capability for either screen or print display.

(3) System Interfaces - A detailed discussion of the Phase 1 system interfaces is provided in paragraph 5.4 of this document.

SECTION 6. SECURITY

6.1 Background Information. The Department of Army Movements Managements System - Redesign (DAMMS-R) Phase I (Container, TMAS, and ETA subsystems) requires the use and interface of microcomputers and a mainframe. The Freight subsystem, though included in Phase I, will be added later. The TACCS microcomputer will employ a relational database design and will process the Container Operations Subsystem and the Transportation Movements Address System (TMAS). The CTASC mainframe computer at the TMCA will be used to process CMM and reformat ETA forecast data for use by the Container Operations Subsystem on the TACCS at the various MCTs within the theater of operations. The DAMMS-R Phase I system is not intended to process any classified information. However, the Phase I system (CTASC and TACCS) will provide access to records and reports which reflect the overall status of all containers and the addresses of all units. These reports represent a potential security risk since the composite of this unclassified data may provide unauthorized users with information of a sensitive nature. Accordingly, the DAMMS-R Phase I system is tentatively designated as Highly Sensitive pending accreditation by DA DCSLOG in accordance with AR 380-380.

6.2 Control Points Vulnerabilities, and Safeguards. The control points, the vulnerabilities, and the safeguard requirements to reduce the risk at the control points to an acceptable level are described below.

6.2.1 Control Points.

a. Input Control Points.

(1) Origin. Input data will be collected, prepared, and entered in to the system via terminals on the TACCS at the MCT and TMCA. Additionally input will be received via communications in the form of data files.

(2) Data Entry. Data entry, update information, and corrective actions are accomplished at the TACCS master and remote workstations. Input files may be received via communications or manually entered.

(3) Disposition. Floppy diskettes and tapes used as backup will be kept in the immediate work area and will be under lock and key when not in use. Worksheets used to collect data will be retained for a maximum of seven days for backup or until all data entry, update information, and corrective actions have been accomplished. Worksheets will then be destroyed sufficiently to prevent the reconstruction of information.

(4) Error Correction. Input errors for most batch processes are identified on error reports which are corrected by the TACCS operator and reentered into the system. Some errors must be reversed using the Event Correction procedures through the

Master Menu screens. Other errors must be corrected by the TACCS operator by submitting a new transaction and following-up with telephone notification to TMCA. Before being passed to DAMMS-CMM for processing on the CTASC, all transactions must pass certain edit criteria. This edit criteria has been incorporated in various TACCS processes to minimize the errors at the source of entry.

b. Process Control Points.

(1) Accuracy and Completeness. The Phase I system employs hundreds of accuracy checks, automatic prompts, and a complete complement of on-line help instructions. With the built-in Phase I edit functions, container information transmitted from MCTs to CMM should be 100% accurate.

(2) System Interfaces. All interfaces for the Phase I system are described in section 5.4. These interfaces include:

(a) CTASC I to AUTODIN.

(b) CTASC I to DDN.

(c) CTASC I to TACCS.

(d) TACCS to Intel 3100/Wyse PC.

(e) TACCS to TELEX.

(f) TACCS to DDN.

(g) TACCS to ADAM III.

(h) TACCS to TACCS

c. Output Control Points.

(1) Production. Devices authorized to receive output are the printers and terminals at the TACCS site and at CTASC. Output media may be hardcopy reports, diskettes, and/or tapes at the MCT and at TMCA.

(2) Distribution. Distribution of reports, diskettes, and tapes will be limited to authorized system users on a need-to-know basis.

6.2.2 Vulnerabilities. The control points within the system will include edits and checks which minimize error and loss of data. However, all control points are susceptible to the compromise of information.

6.2.3 Safeguards.

a. Administrative Safeguards.

(1) Personnel. All persons using the Phase I system will have had, as a minimum, a favorable background investigation conducted as follows:

(a) U.S. Military - Entrance National Agency Check (ENTNAC).

(b) Host Country Military - ENTNAC equivalent.

(c) Department of the Army Civilians (DAC) - National Agency Check with Inquiries (NACI).

(d) Local Nationals - NACI equivalent.

Access to all information will be strictly on a "need-to-know" basis.

(2) Collection and Preparation. Appropriate measures will be taken to safeguard data during the collection and preparation efforts. Backup files will be transferred to a tape or diskette at the end of each day. It is recommended that backup files be retained for seven days.

(3) Environment Constraints. The system administrator at TCMA will establish specific time frames during which all MCTs will pass data to TMCA.

(4) Distribution. Standard distribution to MCTs and TMCA will be followed. All system users will query the system for mail at the start and end of the duty day.

(5) Access/Permission. The system administrator will generate all passwords and maintain a roster of personnel authorized access to the system. He will exercise control through the use of user names, user ID numbers, and passwords.

b. Physical Safeguards.

(1) Dedicated Equipment. There are no requirements for dedicated equipment to limit access to data. All of the functional components are used in their standard configurations.

(2) Storage and Protection. All storage media (diskettes, tapes, etc.) will be secured in a locked office, building, or shelter during non-duty hours.

c. Technical Safeguards.

(1) User Access.

(a) The system administrator will determine access for a given user and limit the user's access to the minimum level of functions for which the operator has a valid "need-to-know".

(b) The system administrator will affect a mass password change for all users at least every 12 months. An individual password change will always be effected for individuals upon reassignment and/or termination. The level of access afforded all users should be reviewed quarterly for possible change on a "need-to-know" basis.

(2) Process Safeguards. All passwords should be at least six characters in length, and contain only letters and numbers (alphanumeric characters). Spaces and special characters will not be allowed.

(3) Security Identification Requirements. Security identification requirements are not applicable to this system.

6.3 System Monitoring and Auditing. No requirement has been identified for monitoring and auditing the DAMMS-R Phase I system. However, an automated system to examine, monitor, and supervise usage of the system is recommended IAW paragraph 12-4, AR 380-380.

6.3.1 Journalizing. The requirements for journalizing for the DAMMS-R Phase I system will be determined at a later date.

6.3.2 Audit Trail. The requirements for an audit trail for the DAMMS-R Phase I system will be determined at a later date.

SECTION 7. SYSTEM DEVELOPMENT PLAN

This section discusses the overall system management approach to the development and implementation of the proposed computer system.

The DAMMS-R PMP contains specific information detailing DAMMS-R Phase1 system development and management.

The software documentation for Phase 1 will be prepared IAW DOD-STD 7935.1 and TB 18-111.

Section 1.2 contains a complete reference to system documentation.

The time frame and development of DAMMS-R and all supporting documentation to be produced is discussed in detail in the PMP, with specific reference to:

a. Annex L Organization Support.

b. Annex N DAMMS-R Phase 1 Deployment Plan.

c. Annex R Documentation Plan.

Any liaisons and organizations involved in the development of DAMMS-R are also discussed in detail in the PMP, with specific reference to:

a. Section 1, subparagraph 1.3.4 Participating Organizations.

b. Section 3, paragraph 3.2 General Roles, Responsibilities and Tasks.

c. Section 5 POINTS OF CONTACT.

SECTION 8. COST FACTORS

This section provides a summary of cost factors for the proposed system.

For specific information concerning cost factors involved in the development and implementation of Phase 1, refer to the PMP, with specific reference to:

a. Annex D Resources Required.

b. Annex E Economic Analysis.

c. Annex F Cost Reporting.

The PMP also discusses requirements of higher echelons of command, security considerations not provided in Section 6 of this document, telecommunication considerations, and interfaces with other automated systems. System design and development considerations regarding equipment, software, supporting telecommunications requirements, organization, operation, etc., are also discussed in the various sections and annexes of the PMP.

APPENDIX I. PROJECT REQUEST

DAMMS-R PROJECT APPROVAL

Letter DALO-TSM, 27 September 1983, Subject: Department of the Army Movement Management System - Redesign (DAMMS-R) Mission Element Need Statement (MENS).

Letter DALO-TSM, 12 June 1986 Subject: Department of the Army Movements Management System - Redesign and Movements Planning Module.

DEPARTMENT OF THE ARMY
OFFICE OF THE DEPUTY CHIEF OF STAFF FOR LOGISTICS
WASHINGTON, DC 20310

DALO-TSM 27 SEP 1983

SUBJECT: DA MOVEMENTS MANAGEMENT SYSTEM (DAMMS) REDESIGN
MISSION ELEMENT NEED STATEMENT (MENS)

Commander
US Army Logistics Center
ATTN: ATCL-PM-DAMMS
Fort Lee, Virginia 23801

1. Forwarded herewith is the approved DAMMS-Redesign MENS. In addition to approving the MENS, the Assistant Secretary of the Army (Installations, Logistics and Financial Management) (ASA (IL&FM)) has approved the system through Milestone I of the Automated System Life Cycle, and granted a waiver to commence technical design of DAMMS prior to Milestone II approval.

2. Concurrent with this approval, ASA (IL&FM) has requested that consideration be given to development of a subset of DAMMS (a deployable, mini-system) that could be used by the Third US Army. This tasking is in line with the agreement reached between Mr. Echard of the USALOGC and Colonel Miller, Deputy Commander of the 1st COSCOM during the last DAMMS In Process Review (IPR). The basic questions that must be answered when the Milestone II System Decision Paper is submitted (Feb 84) are:

a. Will the system, as described by the DAMMS-Redesign Functional Description, fully support the theater traffic management functions of an undeveloped theater (Tactical communications only)?

b. If the DAMMS-Redesign will only work within a fully developed theater (assuming fully developed communications), then is it feasible to design a deployable DAMMS for Third US Army use?

c. If a deployable DAMMS is necessary to support a Third US Army role, when is the earliest time that a USALOGC and USACSCSGL could commence development of such a system?

DALO-TSM
SUBJECT: DA Movements Management System (DAMMS) Redesign
Mission Element Need Statement (MENS)

3. It is recommended that an interim report on this tasking be presented at the next DAMMS IPR.

FOR THE DEPUTY CHIEF OF STAFF FOR LOGISTICS:

1 Encl

RICHARD G. LARSON
Lieutenant Colonel(P), GS
Acting Chief, Strategic Mobility Division

MISSION ELEMENT NEED STATEMENT (MENS) FOR REDESIGN OF DEPARTMENT OF THE ARMY MOVEMENTS MANAGEMENT SYSTEM

1. MISSION.

a. Mission Area. The Office of The Secretary of Defense (OSD) Mission Area 263 defines land transportation as "those capabilities which maintain, improve and develop transportation of passengers and cargo (including POL & mail) over land.

b. Mission Element Need. There is a need for a theater cargo movements and mode asset management system that will provide timely and accurate information to insure:

(1) Delivery of deploying forces equipment and resupply where and when needed through positive control over all in-theater movements.

(2) Efficient and effective management of US owned or controlled organic, direct, and general support highway and rail assets which constitute the physical means necessary to deliver material when and where needed.

(3) Efficient and effective peacetime movements support and readiness which facilitates a smooth and orderly transition to war.

2. BASIS FOR NEED.

a. Theater movements and mode asset management is characterized by centralized management of transportation resources through decentralized operations. Effective performance of these missions depends upon timely and accurate information processing. In fact, movements control may be characterized as "information brokerage" since the movements manager rarely, if ever, comes in physical contact with the transport means he controls. The movements and mode asset managers must have timely and accurate information on what must be moved, when it must be moved, where it must be moved, and the relative priority of the needed movement. They must also know the current status of the physical distribution infrastructure, transport capability available and current location of enroute movements and available conveyances. It is the amalgamation and assessment of this information that will result in movements control. To absolutely assure a movements control capability, the movements manager must also have the means to rapidly and positively distribute his decisions throughout the theater of operations to various material management and transport operator elements.

b. Movements control does not exist without an assured, survivable means of collecting, processing, distributing and using movements and mode asset information. An appropriate mix of people, communications, hardware, software and procedures must operate within the context of a doctrine which will be effective from the present through the year 2000. General combat service support manpower constraints and the doctrine of extended lines of communication anticipated through at least the remainder of this century

dictate an automated system that emphasizes rapid acquisition and assessment of critical movement and mode asset information. Timeliness is a particularly critical factor of the system if the theater traffic manager is expected to influence the physical distribution of cargo, especially during wartime.

c. With effective movements and mode asset management Theater Army and Corps Commanders will have control over in-theater physical distribution. With either demand or push-based supply management, movements control can ensure delivery of material at the time and place required within the contraints of available supply and transport capability. The absence of effective movements control results in the lack of logistics success.

3. EXISTING AND PLANNED CAPABILITIES TO ACCOMPLISH THIS MISSION.

a. Existing Capabilities.

(1) The current system for tracking cargo movements is the Cargo Movements Module (CMM) Phase I. CMM was originally the command unique Visibility of Intransit Cargo (VIC) System that was designed to satisfy the need for a standard cargo movements system. Initially, VIC was developed as a command unique system designed to be adaptable to world-wide applications. As currently fielded, the CMM does not include intra-theatre and export cargo movement information nor does it satisfy the need for timeliness.

(2) The current Highway Fleet Management (HFM) System is command unique and was primarily designed to satisfy the theater peacetime requirement for mode management. It is operated through a combination of semi-automated and manual processes which do not lend themselves to the theater wartime transportation movement requirements.

b. Planned Capabilities. Currently the DAMMS-CMM system is run in a batch mode. Since DAMMS-CMM data elements have a structured relationship, the employment of a database management system (DBMS) will be considered for incorporation in the development effort, utilizing three levels of hardware and software to accommodate a distributed database concept. The redesigned DAMMS System will be capable of providing the Theater Army Movements Control Agency, Corps/Movements Control Center, Movement Region Commander, and operational level manager an interactive transportation management operational system. Overall system enhancements will provide all levels of transportation managers with the following capabilities:

(1) Concurrent processing of multiple batch, multiple on-line and multiple application programs.

(2) Concurrent batch, on-line, and program inquiry capability necessary for remote job entry and programing support.

(3) All output generated must be routed to multiple users and output media (i.e. print, CRT, and fiche).

(4) Standard recurring reports will be generated for multiple users and the capability must exist for one time reports to be generated in an inquiry mode.

4. ASSESSMENT OF NEED.

a. The DAMMS hardware is currently the IBM 4331 utilizing AUTODIN, TELEX, courier, and mail as external input media. The system is operated as a batch process and is severely limited in its processing capabilities.

b. Obsolete Hardware & Software. DAMMS as redesigned will be an interactive, on-line system. TELEX and AUTODIN are inadequate to provide a timely response to the systems users and will be replaced by Movement Information Network (MINET), considered to be the forerunner of the Defense Data Network (DDN).

c. Vulnerability of existing system. Current host computer and I/O devices are fixed, and do not provide the mobility necessary to provide a degree of survivability in the anticipated volatile battlefield. DAMMS redesigned will utilize a DBMS which will provide the required redundancy necessary to accomodate information flow between transportation managers to insure timely management decisions.

5. CONSTRAINTS.

a. Timing of Need. Systems design should be accelerated to the extent possible to field a working CMM and MMM not later than September, 1986.

b. Logistic Considerations. Capabilities must be supportable and compatible with existing and future logistics concepts. They must also recognize the requirements for systems to be compatible with units being supported.

c. Manpower Considerations. The systems must be designed to minimize the need for highly skilled personnel. Requirements must not exceed the minimum expected skill of maintenance and operating personnel of generically similar equipment existing in the field.

d. Data Distribution Considerations. The systems must be designed to operate in the current and future communications environments.

e. Standardization/Commonality. Hardware and software selection must be standardized with current or planned configurations in the same mission area to enhance hardware redundancy, software transportability, and Integrated Logistics Support (ILS).

f. Training Considerations. Training programs must be developed to provide for a transfer of knowledge from the software and hardware developers to the system users and maintainers. The training package must be designed to be cost effective within the limits of training constraints.

g. Magnitude of Resources. Resources will be redefined after Milestone

II. Initial estimates for OMA dollars is $370K.

6. RESOURCES AND SCHEDULE.

a. Funding Requirements. The USACSC will utilize contractual support in the technical design and programing of the Cargo Movements Module (CMM) and Mode Management Module (MMM).

b. Schedule of Milestones.

Detail Functional Systems Requirement (VIC-Phase I) approved	MAY 73
Detail Functional Systems Requirement released to USACSC for technical design	MAY 75
Updated Economic Analysis (VIC I) Approved	JAN 78
Systems Integration Test Approved	APR 78
Prototype Evaluation Test (PET) Approved	JAN 79
System Name Change from VIC to CMM	APR 79
Systems Change Request & EA (CMM II & III) Approved	FEB 81
Product Manager Charter Approved	JAN 82
MENS	APR 83
System Change Package (SCP) 05 Broadcast	MAY 83
System Change Package (SCP) 06 Broadcast	SEP 83
Cargo Movements Module (CMM) Phase I in Moratorium	FEB 84
FD/RD, EA for Redesign forwarding to DA	FEB 84
Commence Design of Cargo Movements Module (CMM) and Mode Management Module (MMM)	MAR 84

c. Acquisition Strategy. The acquisition strategy will be developed by the Product Manager (PM) as part of the PM Management Plan. This plan will outline procedures for competitive procurement of the software/hardware systems required to fulfill the Army's need to automate its transportation support within a theater of operations.

DEPARTMENT OF THE ARMY
OFFICE OF THE DEPUTY CHIEF OF STAFF FOR LOGISTICS
WASHINGTON, D.C. 20310

ADSM 18-LZ4-AKM-BUR-FD
WORKING DRAFT 3.0
DECEMBER 1987

DALO-TSM

MEMORANDUM THRU DEPUTY CHIEF OF STAFF FOR LOGISTICS
CHIEF OF STAFF, ARMY

FOR ASSISTANT SECRETARY OF THE ARMY (INSTALLATIONS, LOGISTICS AND FINANCIAL MANAGEMENT)

SUBJECT: DA Movements Management System (DAMMS) Redesign Mission Element Need Statement (MENS)--ACTION MEMORANDUM

1. Purpose: The purpose of this memorandum is threefold:

a. To obtain approval of the DAMMS Redesign MENS.

b. To obtain approval of the DAMMS Redesign development effort through Milestone I.

c. To obtain a waiver to commence technical development prior to Milestone II approval.

2. Discussion:

a. The cost of redesigning DAMMS as a distributed, interactive data base will exceed one hundred thousand dollars. As required by AR 18-1, the MENS (Tab A) for the DAMMS Redesign effort is submitted for approval.

b. The DAMMS conceptual development phase, which resulted in holding the approved Functional Description and Economic Analysis in abeyance while determining interactive processing requirements, has been completed and the system is presently between Milestones I and II. Accordingly, it is appropriate to formally declare the DAMMS Redesign development effort as approved through Milestone I of the AR 18-1 Automation Life Cycle.

c. The Functional Description, Requirements Document and Economic Analysis are currently being reworked to reflect interactive processing requirements. The completion date for this effort is estimated to be February 1988. The information needed to commence building the data base

DALO-TSM
SUBJECT: DA Movements Management System (DAMMS) Redesign Mission Element Need Statement (MENS)--ACTION MEMORANDUM

management system (DBMS), specifically the Data Dictionary, Schema, and Data Flow Diagrams, will be completed by September 1983. A time savings of approximately six months can be accomplished by allowing technical development to commence prior to Milestone II approval. This will permit an integrated team of U. S. Army Logistics Center analysts, U. S. Army Computer Systems Command analysts, and a software development contractor to design the DAMMS DBMS using powerful DBMS related software development tools to generate the program code. The waiver will also shorten the learning curve that will be incurred in bringing the contractor up to speed in the DAMMS development requirements. Additionally, the sizing of the Interim Theater ADP Service Center (ITASC) hardware, which was a topic of a recent Assistant Secretary of the Army (Installations, Logistics and Financial Management) inquiry, can be more accurately assessed during the technical development phase. Without the waiver to commence technical development and apply STEP-UP system development methodology (Tab B), the DAMMS development process may stretch well into 1987. Approval of this waiver will result in earlier fielding of DAMMS, thereby reducing system costs and accelerating needed enhancements to theater logistics readiness.

d. The System Decision Paper and Product Manager's Management Plan will be submitted for review and Milestone II approval in late February or early March 1984.

3. Recommendation: That the Assistant Secretary of the Army (Installations, Logistics and Financial Management) approve DAMMS Redesign development through Milestone I and approve the start of technical development prior to formal Milestone II approval.

2 Encl

JIMMY D. ROSS
Brigadier General, GS
Director of Transportation, Energy and Troop Support

OSA (ILE&M) - Concur, Mr. Campo, Ast for Log Systems/78003
OCSA (PA&E) - Concur, LTC Brown, Acq & Spt Prog Anal Div/57737
ODCSOPS - Concur - Mr. Rife, CDR, Control Communication and Equipment/57055

I-10

MAJ C. D. Guillia-s/44252
Typed by Vivian Davis

SUBJECT: DA Movements Management System (DAMMS) Redesign Mission Element Need Statement (MENS) -- ACTION MEMORANDUM

Milestone 1 and interim Milestone II approval granted. Request consideration of development of a subset of DAMMS-R for use in a deployment mode by the Korea. This issue should be addressed in submission of the formal Milestone II SDP in February.

APPROVED: Pat Hillier 19 SEP 1987

Pat Hillier
Acting Assistant Secretary of the Army
(Installations, Logistics and
Financial Management)

DEPARTMENT OF THE ARMY
OFFICE OF THE DEPUTY CHIEF OF STAFF FOR LOGISTICS
WASHINGTON, D.C. 20310-0560

12 JUN 1986

DALO-TSM 86504S2L

SUBJECT: DA Movement Management System - Redesign and Movement Planning Module

Commander
U.S. Army Logistics Center
ATTN: ATCL-S
Fort Lee, Virginia 23801

1. I appreciate the effort your organization has gone through in revalidating deficiencies, prioritizing solutions and coordinating the results with the user community. The time spent was well invested. I believe we now have a viable and affordable program.

2. You are to continue ahead with the development of the DA Movement Management System - Redesign (DAMMS-R) and Movement Planning Module (DAMMS-MPM) as discussed at the meeting held in the Pentagon on 22 May 86. The major points from the meeting:

a. The system's life cycle cost will be approximately $144 million through FY 2006.

b. The cost in any one year, excluding hardware procurement and inflation, should not exceed $7 million.

c. Development and fielding will be done in four phases: left of baseline (LOB) enhancements to DAMMS; initial operating capability (IOC) of DAMMS-R; enhanced operating capability (EOC); and final operating capability (FOC).

d. Expected fielding of each phase, dependent on availability of hardware, will be: LOB to begin and finish in FY 87; IOC to finish in FY 90; EOC to finish in FY 94; and FOC to finish in FY 98.

e. The agreed upon functions/capabilities are enclosed.

DALO-TSM

SUBJECT: DA Movement Management System - Redesign and Movement Planning Module

3. DA DCSLOG will continue to support your work and will strive to keep the effort fully resourced. I look forward to seeing the first phase going to the Software Acceptance Test in FY 87.

FOR THE DEPUTY CHIEF OF STAFF FOR LOGISTICS:

A.R. Keltz

ARTHUR ROBERT KELTZ
Assistant Director for Transportation
Directorate for Transportation,
Energy and Troop Support

Enclosure Withdrawn

APPENDIX II. TERMS, ABBREVIATIONS, and DEFINITIONS

SECTION 1. TERMS, ABBREVIATIONS, and DEFINITIONS

This appendix provides a listing of terms, abbreviations, and definitions unique to this document or subject to interpretation by the user of this document.

1.1 Abbreviations. This paragraph provides a listing of abbreviations unique to this document or subject to interpretation by the user of this document.

Abbreviation	Term
AAC	Activity Address Code
AAD	Activity Address Directory
AAF	Activity Address File
ACofS	Assistant Chief of Staff
ACA	Airlift Clearence Authority
ACT	Actual Costs expended by fiscal year
ADAM	Aerial Port Documentation and Management System
ADP	Automated Data Processing
ADPSSO	Automated Data Processing System Security Officer
ADS	Automated Data Systems
ADSM	Automated Data Systems Manual
AE	Auxiliary Equipment
AF	Air Force
AFR	Air Force Regulation
AFTMO	Air Force Transportation Movement Officer
AIDS	Army Inventory of Data System

Abbreviation	Term
ALOC	Air Line of Communication
AMIS	Army Management Information System
ANTP	Army Nozzle Technology Program
APO	Mailing Address - Aerial Port
AR	Applications Reference/Army Regulation
ASA	Assistant Secretary of the Army
ATD	Advanced Technology Division
ATMCT	Air Terminal Movement Control Team
AUTODIN	Automatic Digital Network
BMT	Bulk Media Terminal
BMCT	Branch Movement Control Team
Bn	Battalion
BPI	Bits Per Inch
BTOS	Burrough's 20 Operating System
CAPS	Consolidated Aerial Port System
CARR	Carrier
CDR	Commander
CENEUR	Central European
CINCUSAREUR	Commander-in-Chief US Army, Europe
CMCC	Corps Movement Control Center
CMM	Cargo Movement Module
CMP	Configuration Management Plan
COD	Cargo Operation Division

Abbreviation	Term
COM	Computer Output Microfilm/Microfiche, Command
COML	Commercial
COMM	Communication
COMMFILE	Communications File
COMMTRANS	Communications Transactions
COR	Contracting Officer's Representative
COSCOM	Corps Support Command
CPT	Word Processing System
CPU	Central Processing Unit
CRT	Cathode Ray Tube
CSS	Combat Service Support
CTASC	Corps/Theater Automation Support Center
DA	Department of the Army
DAMMS	Department of the Army Movement Management System
DAMMS-CMM	Department of the Army Movement Management System-Cargo Movement Module
DAMMS-R	Department of the Army Movement Management System-Redesign
DASPS	DA Standard Port System
DASPS-E	DA Standard Port System-Enhanced
DAS3	Decentralized Automated Service Support System

Abbreviation	Term
DBMS	Database Management System
DBSR	Daily Breakbulk Surface Report
DCL	Development Center, Ft Lee, Va.
DCSLOG	Deputy Chief of Staff for Logistics
DDN	Defense Data Network
DED	Data Element Dictionary
DEP	Draft Equipment Publication
DFSR	Detailed Functional System Requirement
DIC	Document Identifier Code
DIV	Division
DOD	Department of Defense
DODAAC	DOD Activity Address Code
DODAAD	DOD Activity Address Directory
DODAAF	DOD Activity Address File
DPI	Data Processing Installation
DPU	Data Processing Unit
DSRE	Defense Subsistance Region, Europe
ECP	Engineering Change Proposal
EOC	Enhanced Operating Capability
ETA	Estimated Time of Arrival
FCA	Fund Certifying Authorities
FD	Functional Description

Abbreviation	Term
FM	Field Manual
FOC	Final Operating Capabilities
FORSCOM	US Army Forces Command
FP	Functional Proponent
FUM	Functional User's Manual
FY	Fiscal Year
GE	Federal Republic of Germany
GP	Group
HN	Host Nation
HQ	Headquarters
HQDA	Headquarters, Department of Army
HMCT	Highway Movement Control Team
HRPT	Highway Regulation Point Team
I/O	Input/Output
IAW	In Accordance With
IBM	International Business Machines
IBS	International Business Services
ICP	Interim Change Package
ID	Identification
IL	Installation and Logistics
ILS	Integrated Logistics Support
IM	Information Management
Inc.	Incorporated

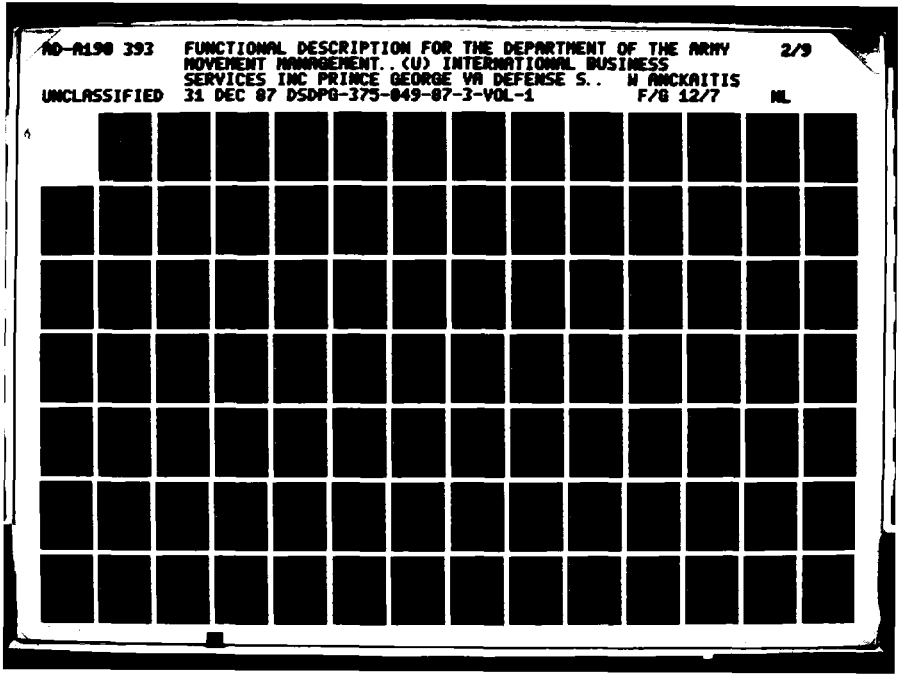
AD-A190 393 FUNCTIONAL DESCRIPTION FOR THE DEPARTMENT OF THE ARMY 2/9
MOVEMENT MANAGEMENT..(U) INTERNATIONAL BUSINESS
SERVICES INC PRINCE GEORGE VA DEFENSE S.. W ANCKAITIS
UNCLASSIFIED 31 DEC 87 DSDPG-375-049-87-3-VOL-1 F/G 12/7 NL

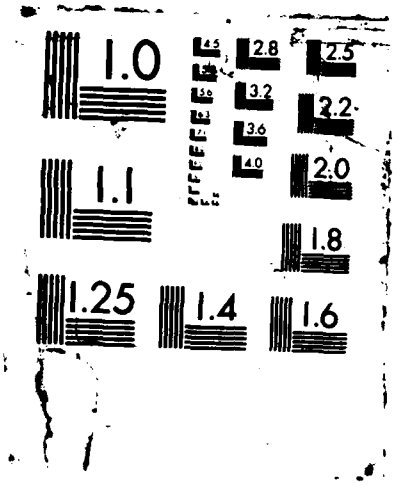
1.0
2.8
2.5
3.2
2.2
3.6
4.0
2.0
1.1
1.8
1.25
1.4
1.6

Abbreviation	Term
INCON	Intransit Inventory Control
INST	Instruction
IOC	Initial Operating Capabilities
IPR	In Process Review
ISEC	Information Systems Engineering Command
ITO	Installation Transportation Officer
JTMA	Joint Traffic Management Agency
JTTMR	Joint Transportation and Traffic Management Regulation
LRU	Less than Release Unit
MAC	Military Airlift Command
MACOM	Major Commands
MC	Maintenance/Message Center
MCA	Movement Control Agency
MCC	Movement Control Center
MCE	Movement Control Elements
MCS	Movement Control System
MCT	Movement Control Team
MENS	Mission Element Need Statement
MI	Military Impediments
MID	Movement Informtation Division
MIL-STD	Military Standard
MILSTAMP	Military Standard Transportation and Movement Procedures

Abbreviation	Term
MILVAN	Military Shipping Container
MMC	Materiel Management Center
MMM	Mode Management Module
MMS	Movements Management System
MODEM	Modulator/Demodulator
MPM	Movement Planning Module
MSC	Military Sealift Command
MTMC	Military Traffic Management Command
NATO	North Atlantic Treaty Organization
NCOIC	Non-Commissioned Officer-In-Charge
NLT	Not Later Than
O&O	Operational and Organizational Plan
OCCA	Ocean Cargo Clearance Authority
ODCSLOG	Office of the Deputy of Chief of Staff for Logistics
OM	Operators Manual
OMA	Operation and Maintenance - Army
OPNAV	Office of the Chief of Naval Operations
OPORD	Operational Order
OSD	Office of the Secretary of Defense
PAM	Priorities and Allocations

Abbreviation	Term
PATB	Procedures, Analysis, and Technical Assistance Branch
PC	Personal Computer
PET	Prototype Evaluation Test
PM	Product Manager
PMM	Passenger Movement Module
PMP	Project Management Plan
POD	Port of Debarkation
POE	Port of Embarkation
POL	Petroleum, Oil, and Lubricants
POMCUS	Prepositioning of Materiel Configured to Unit Sets
PSL/PSA	Problem Statement Language/Problem Statement Analyzer
RCS	Reports Control Symbol
RD	Data Requirements Document
RDD	Required Delivery Date
RDR	Reader
REG	Regulation
REPSHIP	Report of Shipment
RMCT	Regional Movement Control Team
RMMT	Rail Movemement Management Team
ROC	Required Operational Capabilities
RORO	Roll-On and Roll-Off
RU	Release Unit

Abbreviation	Term
SAT	Software Acceptance Test
S&CM	Standards and Conventions Manual
SCP	System Change Package
SEAVANS	Commercial Sea Containers
SEP	System Execution Parameter
SOP	Standard Operating Procedures
SPOD	Sea Port of Debarkation
STAMMIS	Standard Army Multi-command Management Information System
STD	Standard
STMR	Standing Transportation Movement Release
TACCS	Tactical Army Combat Service Support Computer System
TACMIS	Tactical Management Information System
TAT	Truck Manifest Header
TB	Technical Bulletin
TBD	To Be Determined
TCN	Transportation Control Number
TCP	Transportation Control Point
TDA	Table of Distribution and Allowances
TELEX	Telephone Exchange (TTY Equipment)
TIN	Transportation Identification Number

Abbreviation	Term
TM	Technical Manual/Time and Materiels
TMAS	Transportation Movements Address Subsystem
TMCA	1st Transportation Movement Control Agency, USAREUR
TMDE	Test, Measurement, and Diagnostic Equipment
TMICS	Transportation Management and Information System
TMR	Transportation Movement Release
TMS	Transport Management Survey
TM2	Document Identifier Code in military standard transportation and movement procedures, Request for Hold
TM3	Document Identifier Code in military standard transportation and movement procedures, Request for Diversion
TO	Transportation Officer
TOE	Table of Organization and Equipment
TOMMS	Terminal Operations and Movement Management System
TRADOC	Training and Doctrine Command
TRANS	Transportation
TRANSCOM	Transportation Command
TROOP	Transportation Operational and Organizational Plan

Abbreviation	Term
TSA-E	Troop Support Agency, Europe
TSP	Transshipment Point
TT	Truck Terminal
TTB	TTP operated by 326th Transportation Detachment Subsequent Movement Event
TTC	TTP operated by 270th Transportation Detachment/Port Arrival Event/Discharge
TTC1	Used to report the discharge of cargo from a vessel
TTC2	Used to report the cargo departure from a WPOD
TTF	New Movement Event
TTM	Change in Terms of Carriage
TTN	Carrier Notification/Documents Not Received
TTP	Trailer Transfer Points/Container DIC
TTQ	Container ETA/Depart Water Port of Debarkation
TTR	Lease Notification/Termination
TTS	Container Staging Notification
TTU	Conveyance Change Notification
TTW	Cargo Discharge/Non-delivery
TTX	Conveyance Cost Transaction
ULC	Unit Level Computer
UM	User's Manual

Abbreviation	Term
UMCC	USAREUR Movement Control Center
UMMIPS	Uniform Materiel Movement and Issue Priority System
UR	USAREUR Regulation
US	United States (of America; USA)
USAFE	United States Air Force, Europe
USAISEC	United States Army Information Systems Engineering Command
USAISSC	United States Army Information System Software Command
USALOGC	US Army Logistics Center
USAREUR	US Army, Europe
USATSCH	US Army Transportation School
USEUCOM	US, European Command
VIC	Visibility of Intransit Cargo
WPE	Word Processing Equipment
WPOD/E or WPD/E	Water Port of Debarkation/Embarkation

1.2 Key Terms. This section provides a listing of any key terms unique to this document or subject to interpretation by the user of this document.

Term	Definition
Attribute	A property which modifies an object in some way. Usually such a property will expand the reader's understanding of the object or make its determination more precise.
Code...Means	The usually abbreviated symbols assigned as substitutes for longer expressions of the values of some element.
Consists	Specifies the lower level data items found within some complete message (Input, Entity, or Output) or cluster of data (Group).
Creates	A function makes some internal message appear for the first time within the system.
DBMS	Database Management System. A relational computerized collection of data available for retrieval by various users with various needs including file managment, data dictionary, user-controlled logging capability, unload and reload utilities, and roll forward and roll backward utilities (e.g., Oracle, INFORMIX).
Derives	A function produces some data item (i.e., complete message or data component) to be dealt with either within the system or to be sent outside.
Element	A basic unit of information, decomposed to the lowest level of interest or a particular system.

Term	Definition
Employs	Signifies that a process takes in data and carries out a specific function on it.
Entity	A general form (not an instance) of a complete, addressable message that remains within the system.
Fatal Error	A data element, or combination of data elements, which is missing or does not pass the edit criteria. In the DAMMS system, these items should be minimal and will be of the key data field, or of a combination of key data fields. The edit criteria will be identified in the functional specifications. Failure to pass a fatal edit will cause the transaction or record to be rejected.
Generates	A function produces some complete message to be passed beyond the boundaries of the system to the "outside world".
Group	A cluster of informational items, which may be basic units or other clusters of information nested within the cluster being discussed.
Input	A general form (not an instance) of a complete, addressable message that comes into the from some external source.
Interface	An individual, organization, or automated system with which the target system interacts, either by providing information as stimulus to the target system or by absorbing some transformed information as response from it.

Term	Definition
Keyword	A word or phase that signifies some special property by which the objects to which it is assigned can be readily recognized or retrieved.
Maintain	A process exercises a care-taker function on a set or relation.
Media	Refers to the communications carrier (e.g., MINET, DDN, MSE, commercial telephone).
Memo	A record kept within a PSA database containing information that is directive, advisory, or informative (e.g., about the system being specified or the specification process).
Message	A unit of information, at a level equating to a transaction, that is telecommunicated via a packet switching network. In the commercial environment, Telenet would be an example of such a network.
Mode	Refers to the communications method (e.g., voice to voice, dial-up telephone file transfer, packet network). Also refers to the aspect of Army transportation that physically deals the movement of materiels.
Non-Fatal Error	Similar to a fatal error, except that the transaction or record will be accepted into the system.
Output	A general form (not an instance) of a complete, addressable message that leaves the system to be absorbed by some external source.
Process	A function or activity that

Term	Definition
	transforms or manipulates data in some way within the system.
Processor	An individual, organization, or automated system which performs some function or activity on information.
Pull	Departure of shipment from the shipping activity.
Responsible - Problem - Definer	A property which designates the individual to whom one can go for more complete information concerning selected objects in a database.
Set	A collection of Input-, Entity-, or Output-instances stored and/or kept within the system.
Spot	The position or current location of physical assets.
Subject Database	A high level organizational view of data, equating broad views of data to "business" functions regardless of an organization's political structure. This definition is refined in logical and physical database design.
Subparts	Denotes the functions that are subordinate to some higher level process.
Synonym	A secondary name (alias) by which some object is also known.
Updates	Denotes that a process brings some data component or complete message to a current state within the system.
Utilizes	Signifies that a process requires for its own activity the

Term	Definition
	functioning of one or more other processes.
Values	The actual or possible form, quantity, or appearance that some element can have in a system.
Visibility	Being able to account for tangible assets such as men, units, vehicles, cargo, etc.

APPENDIX III. DAMMS-R Phase 1 Processes, Inputs, Outputs, Entities, Sets, and Memos

The information in APPENDIX III has been drawn from the DAMMS-R Phase 1 subsystem databases. Elimination of outdated information within these subsystems will occur as the database is maintained through the system lifecycle.

Process data flow diagrams are presented only for those processes which have been analyzed in detail as of 4 December 1987, and have had initial functional analysis packages forwarded to the system developer.

Data models and data model entities are provided in Appendix IV.

TAB	INDEX	PAGE
CONTAINER		
PROCESSES	Container Process Objects Index	III-3
INPUTS	Container Input Objects Index	III-433
OUTPUTS	Container Output Objects Index	III-459
ENTITIES	Container Entity Objects Index	III-475
SETS	Container Set Objects Index	III-663
MEMOS	Container Memo Objects Index	III-715
FREIGHT		
PROCESSES	Freight Process Objects Index	III-731
INPUTS	Freight Input Objects Index	III-1099
OUTPUTS	Freight Output Objects Index	III-1175
ENTITIES	Freight Entity Objects Index	III-1299
SETS	Freight Set Objects Index	III-1495
MEMOS	Freight Memo Objects Index	III-1575
TMAS		
PROCESSES	TMAS Process Objects Index	III-1605
INPUTS	TMAS Input Objects Index	III-1729
OUTPUTS	TMAS Output Objects Index	III-1751
ENTITIES	TMAS Entity Objects Index	III-1773
SETS	TMAS Set Objects Index	III-1837
MEMOS	TMAS Memo Objects Index	III-1873

INDEX

PARAGRAPH		PROCESSES	PAGE
13	1	Manage-Container-Operations	III-135
39	2	Process-ETA-Forecast	III-368
14	3	Merge-Reformatted-ETA-Forecast ..	III-137
3	3	Correct-Merge-ETA-Forecast-Err ..	III-22
37	3	Prepare-Merge-Error-Rept	III-352
10	2	Maintain-Container-Database	III-93
4	3	Create-Container-Remarks	III-33
5	3	Create-Non-Fcst-Container-Rec ...	III-39
21	3	Prep-Daily-Container-Worksheet ..	III-212
2	3	Capture-TMR	III-8
15	3	Notify-Cnsgn-of-Inbound-Cntnr ...	III-146
46	3	Update-Cntnr-Record	III-397
40	3	Rec+Report-Cntnr-Mov-Events	III-370
31	4	Prep-Rel-fr-Stg/Hold-Req-<TMS> .	III-290
26	4	Prep-Diversion-Request-<TM2> ...	III-252
29	4	Prep-Hold/Stg-Request-<TM3>	III-272
20	4	Prep-Convey-Change-Notif-<TTU> .	III-191
32	4	Prep-SEAVAN-Maint-Bgn/E-<TTP> ..	III-304
33	4	Prep-Svan-Maint-Bgn/E-Corr-ZTP .	III-323
16	4	Prep-Cgo-Dischg/Non-Del-<TTW> ..	III-150
17	4	Prep-Cgo-Non-Dlvr-Corr-<ZTW> ...	III-163
38	4	Prepare-Reconsignment-Request ..	III-355
34	4	Prepare-Cnsgn-Rept-Evnts-<TTB> .	III-329
18	4	Prep-Cnsgn-Rept-Evnts-Corr-ZTB .	III-173
25	4	Prep-Delayed-Delivery-Event	III-238
35	2	Prepare-Container-Reports	III-347
22	3	Prep-Daily-SEAVAN-Status-Rept ...	III-217
28	3	Prep-Empty-Cntnr-Status-Report ..	III-265
19	3	Prep-Cntnr-O/H-Over-5-Day-Rept ..	III-187
23	3	Prep-Dam-Deadlined-Cntnr-Rept ...	III-220
24	3	Prep-Del-60-Day-Old-Cntnr-Rept ..	III-233
8	3	Inquiry/Rept-on-Specific-Cntnr ..	III-70
9	3	Maintain-Cntnr-History-Records ..	III-91
41	4	Sel-Rec-for-Cntnr-History-DB ...	III-372
7	4	History-File-Retrieval	III-63
12	4	Maintain-Stops	III-127
30	3	Prep-Non-ETA-Fcst-Cntnr-Report ..	III-286
36	3	Prepare-Delayed-Delivery-Rept ...	III-349
27	3	Prep-Empty-Aval-Over-5-Day-Rpt ..	III-262
44	2	System-Utilities	III-393
6	3	General-Message-Process	III-55
1	3	AdHoc-Query	III-6
11	3	Maintain-Parameter-Tbl	III-95
42	3	System-Calendar-Function	III-389
43	3	System-Uniques	III-391
45	3	Table-Maintenance	III-395

INDEX (continued)

DATA FLOW DIAGRAMS

FIGURE	PROCESSES	PAGE
1	Capture-TMR	III-7
2	Correct-Merge-ETA-Forecase-Err .	III-21
3	Create-Container-Remarks	III-32
4	Create-Non-Fcst-Container-Rec ..	III-38
5	History-File-Retrieval	III-63
6	Inquiry/Rept-on-Specific-Cntnr .	III-69
7	Maintain-Stops	III-126
8	Merge-Reformatted-ETA-Forecast .	III-136
9	Notify-Cnsgn-of-Inbound-Cntnr ..	III-145
10	Prep-Cgo-Dischg/Non-Del-<TTW> ..	III-149
11	Prep-Cgo-Non-Dlvr-Corr-<ZTW> ...	III-162
12	Prep-Cnsgn-Rept-Evnts-Corr-ZTB .	III-172
13	Prep-Cntnr-O/H-Over-5-Day-Rept .	III-186
14	Prep-Convey-Change-Notif-<TTU> .	III-190
15	Prep-Daily-Container-Worksheet .	III-211
16	Prep-Daily-SEAVAN-Status-Rept ..	III-216
17	Prep-Dam-Deadlined-Cntnr-Rept ..	III-219
18	Prep-Del-60-Day-Old-Cntnr-Rept .	III-232
19	Prep-Delayed-Delivery-Event	III-237
20	Prep-Diversion-Request-<TM2> ...	III-251
21	Prep-Empty-Aval-Over-5-Day-Rpt .	III-261
22	Prep-Empty-Cntnr-Status-Report .	III-264
23	Prep-Hold/Stg-Request-<TM3>	III-271
24	Prep-Non-ETA-Fcst-Cntnr-Report .	III-285
25	Prep-Rel-fr-Stg/Hold-Req-<TMS> .	III-289
26	Prep-SEAVAN-Maint-Bgn/E-<TTP> ..	III-303
27	Prep-Svan-Maint-Bgn/E-Corr-ZTP .	III-322
28	Prepare-Cnsgn-Rept-Evnts-<TTB> .	III-328
29	Prepare-Delayed-Delivery-Rept ..	III-348
30	Prepare-Merge-Error-Rept	III-351
31	Prepare-Reconsignment-Request ..	III-354
32	Sel-Rec-for-Cntnr-History-DB ...	III-371
33	Update-Cntnr-Record	III-396

This page intentionally left blank.

```
1     DEFINE PROCESS                          AdHoc-Query ;
        PART OF:        System-Utilities ;
```

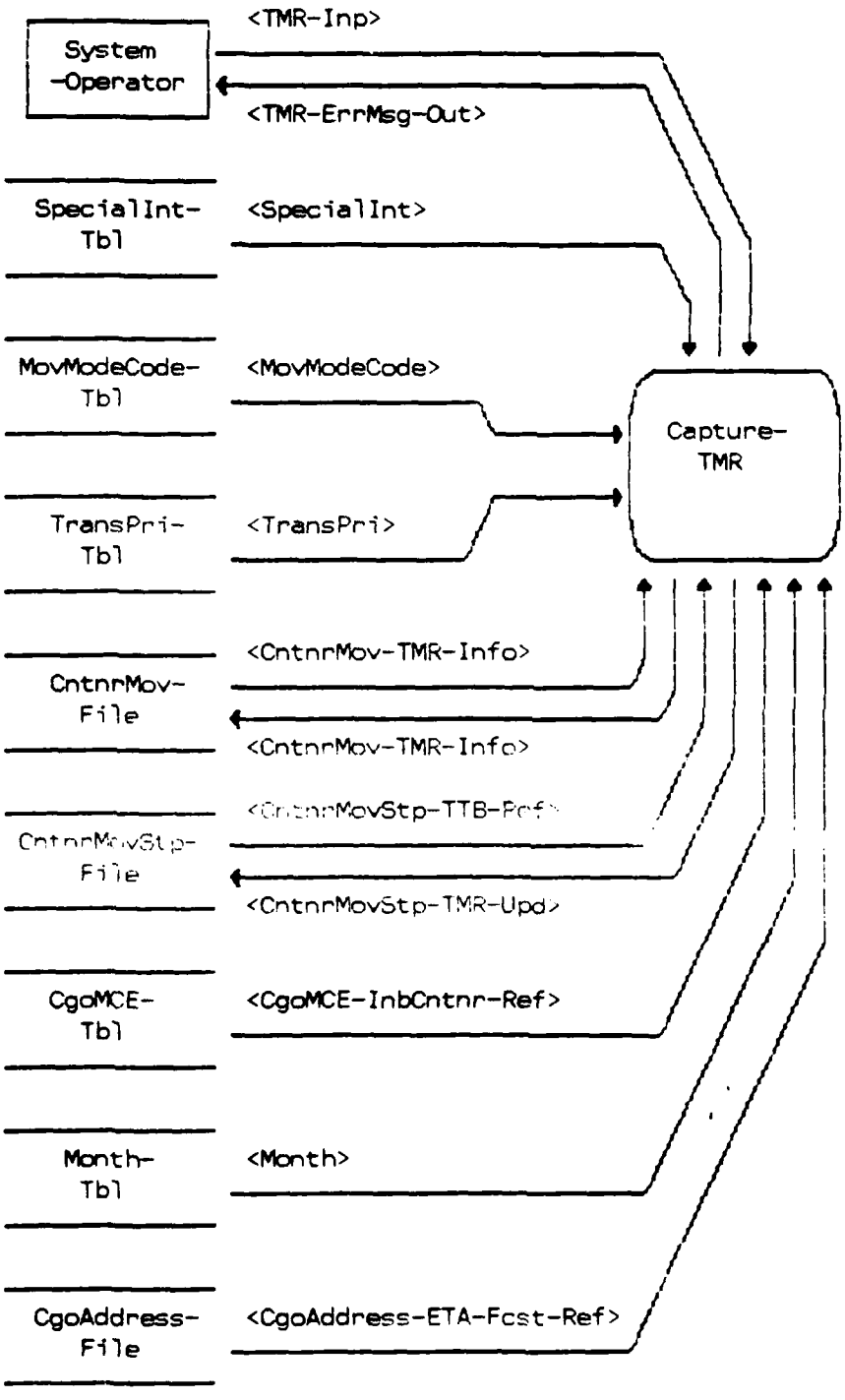

Figure 1. Capture-TMR

```
2    DEFINE PROCESS                          Capture-TMR ;
       DESCRIPTION;
   Capture TMR by Destination/Origin
   This process allows the MCT to update the container database with a
   complete 12 position TMR number and or an 11 position Freight Warrant
   number used to monitor the movement of commercial containers being
   drayed via military assets.
    ;
       KEYWORD IS:     'Container' ;
       SEE MEMO:
            Front-End-Process-Memo ;
       GENERATES:
            TMR-ErrMsg-Out ;
       RECEIVES:
            TMR-Inp ;
       PART OF:        Maintain-Container-Database ;
       PROCEDURE;

   1.)  Upon receipt of advise concerning the issuance of a TMR and or a
   FWTNo for a container moving via military assets, the MCT must enter the
   complete 12 position TMR/11 position FWTNo into the database.


   2.)  FRONT END PROCESS:

   1)
        If:
            User enters CntnrNo
            MATCH:
                   CntnrNo from screen with CntnrNo in CntnrMovStp File
                   IF:
                       NO MATCH:
                       DISPLAY:
                              "Container Number not valid, reenter or
                               exit process."

                   ELSE:
                          Use CntnrNo to access CntnrMovStp.
                          DISPLAY:
                          "CntnrNo CntnrOwn Consignee MultiStpNo StpComp"
                            XXXXX   XXXX     XXXXXX       X

                           System will allow user to course through this
                           scrollable screen to the desired stop.  When the
                           stop is selected, the user will hit "GO" and
                           the first process screen will be displayed.
                       MOVE:
                             CntnrNoPrefix from CntnrMov to Container
                             Number on first process screen.
```

```
DISPLAY:
          First Process Screen

2)
IF:
   User enters CntnrNo + CntnrNoPrefix
MATCH:
       CntnrNo from screen with CntnrNo in CntnrMovStp File
       IF:
           NO MATCH:
           DISPLAY:
                   "Container Number not valid, reenter or
                    exit process."
           EDIT:
                  System will edit CntnrNoPrefix
                  IF:
                       CntnrNoPrefix < > Alphanumeric
                       DISPLAY:
                                Err Msg - "Container number must
                                          be alphanumeric."

       ELSE:
              Use CntnrNo from screen to access CntnrMovStp.
              DISPLAY:
                        "CntnrNo  CntnrOwn Consignee MultiStpNo"
                         XXXXXXXX   XXXX     XXXXXX      X

                 System will allow user to course through this
                 scrollable screen to the desired stop.  When the
                 stop is selected, the user will hit "GO" and the
                 first process screen will be displayed.
               IF:  CntnrNoPrefix in CntnrMov = 000
                    UPDATE:  Screen entered CntnrNoPrefix to
                             CntnrNoPrefix in CntnrMov.

                    MOVE:  CntnrNoPrefix from CntnrMov to Container
                           Number on First Process Screen.
DISPLAY:
          First Process Screen

3)  IF:
       User enters FWTNo
       MATCH:
              FWTNo from screen with FWTNo in CntnrMov File
              IF:
                   NO MATCH:
                   DISPLAY:  Freight Warrant Number entered not
                             valid.  Reenter or exit the process.
              ELSE:
```

Use CntnrNo and CntnrOwnAbbr found in the CntnrMov file to access CntnrMovStp
DISPLAY:
Cntnr Mov Stop data as follows:

CntnrNo	CntnrOwn	Consignee	MultiStpNo
XXXXX	XXXX	XXXXXX	X

System will allow user to course through this scrollable screen to the desired stop. When the stop is selected, the user will hit 'GO' and the first process screen will be displayed.
MOVE:
CntnrNoPrefix from CntnrMov to Container Number on first process screen.

DISPLAY:
First Process Screen

4) IF:
User enters TMRPrefix
MATCH:
TMRPrefix from screen with TMRPrefix in CntnrMov file
IF:
NO MATCH:
DISPLAY: TMRPrefix entered not valid. Reenter or exit the process.
ELSE:
Use CntnrNo and CntnrOwnAbbr found in the CntnrMov file to access CntnrMovStp
DISPLAY:
CntnrMovStp data as follows:

CntnrNo	CntnrOwn	Consignee	MultiStpNo
XXXXX	XXXX	XXXXXX	X

System will allow user to course through this scrollable screen to the desired stop. When the stop is selected, the user will hit 'GO' and the first process screen will be displayed
MOVE:
CntnrNoPrefix from CntnrMov to Container Number on first process screen.

DISPLAY:
First Process Screen

IF:
User enters CntnrTCN.
MATCH:
CntnrTCN from screen with CntnrTCN in CntnrMov.
IF:
No match.
DISPLAY:
"Container TCN not valid. Reenter or exit process."
ELSE:
Select CntnrNo, CntnrOwnAbbr from CntnrMov to access CntnrMovStp.
DISPLAY:
CntnrMovStp data as follows:

Cntnr No	CntnrOwnAbbr Abbr	Consignee	MultiStp No	Stp Comp
XXXXX	XXXX	XXXXXX	X	X
XXXXX	XXXX	XXXXXX	X	X

System will allow user to course through this scrollable screen to the desired stop. When the stop is selected, the user will hit [GO] and the first process screen will be displayed.

MOVE:
CntnrNoPrefix from CntnrMov to Container Number on the first process screen.

3.) IF:
Record is selected
THEN:
Display screen containing data shown from CntnrMov and CntnrMovStp. User must select the TMRNo or FWTNo function key.

```
-----------------------------------------
|   POST TMR/FREIGHT WARRANT NUMBER     |
-----------------------------------------
          | Container | Container|
          |   Number  |   Owner  |
          |-----------------------|
```

```
| XXXXXXXX |   XXXX   |
| XXXXXXXX |   XXXX   |
=======================
   | CLEAR |TMR| FWT |
   | SCREEN|NO | NO  |
   -------------------
```

IF:
TMRNo function key is selected.
THEN:
Display the following screen.

```
-------------------------------------------------------------------------------
|                                POST TMR NUMBER                              |
|-----------------------------------------------------------------------------|
| Container| Consignee|  TMR   | Dest MCE| StpSeq| SpecInt| Mode| Trans |
|  Number  |          | Prefix |  Prefix | Number|   Code | Code| PriCd |
|----------|----------|--------|---------|-------|--------|-----|-------|
| XXXXXXXX |  XXXXXX  | XXXXXX |    X    |   X   |   XX   |  X  |   X   |
| -------- |  XXXXXX  | ------ | --------|   X   | -------| ----| ----- |
===============================================================================
  |CLEAR |     |     |   |FWT|     |  TMR  |     |  |      |     |DEL |
  |SCREEN|     |     |   |NO |     |   NO  |     |  |      |     |    |
  -------------------------------------------------------------------
```

ELSE:
User selects the FWTNo function key.
IF:
FWTNo function key is selected, display the following screen.

```
-------------------------------------------------------------------------------
|                          POST FREIGHT WARRANT NUMBER                        |
|-----------------------------------------------------------------------------|
| Container | Consignee | Freight      |                                      |
|   Number  |           | Warrant No   |                                      |
|-----------|-----------|--------------|--------------------------------------|
|  XXXXXXXX |   XXXXXX  | XXXXXXXXXXX  |                                      |
|  -------- |   XXXXXX  | -----------  |                                      |
===============================================================================
| CLEAR  |     |     |  | FWT |     | TMR |    |  |    |    | DEL |
| SCREEN |     |     |  | NO  |     | NO  |    |  |    |    |     |
-------------------------------------------------------------------
```

ELSE:
User selects CLEAR SCREEN function key and front end screen

is displayed for record selection.

4.) IF:

User selects TMRNo function key and screen is displayed, the CntnrNo and all Consignees will be moved to the screen. If a TMRNo is resident in the database, it too will be displayed on the screen.

IF:

A TMRNo is displayed.

THEN:

A set of function keys will be displayed allowing the user to CLEAR SCREEN, MODIFY, or, DELETE.

IF:

User presses the function key "CLEAR SCREEN", the front end screen will be displayed for record selection. Once a record is selected, the process screen (with function key set) is displayed.

ELSE:

If the DELETE function key is selected, the TMRNo displayed will be deleted from the database.

ELSE:

If the MODIFY function key is selected, the cursor will move to the first position of the TMR Prefix.

THEN:

The user must enter 6 digits (A/N) in this field, press RETURN, and the cursor will move to DestMCEPrefix.

IF:

User does not enter TMRPrefix, and presses RETURN, the cursor will go to DestMCEPrefix.

IF:

The cursor is at DestMCEPrefix, the user may enter the 1 digit (A) prefix of the destination MCE, press RETURN, and the cursor will move to StpSeqNo.

IF:

User does not enter DestMCEPrefix, and presses RETURN, the cursor will go to StpSeqNo.

IF:

The cursor is at StpSeqNo, the user may enter the 1 digit (A) StpSeqNo, press RETURN, and the cursor will move to SpIntCd.

IF:

User does not enter StpSeqNo, and presses RETURN, the cursor will go to SpIntCd.

IF:

The cursor is at SpIntCd, the user may enter the 2 digit (A) SpIntCd, and press RETURN. The system will perform an edit, using SpIntCd table, and if the edit is valid, the cursor will move to ModeCd. If the edit reveals an incorrect SpIntCd

has been entered, display prompt "SpIntCd not valid, press CANCEL and retry".

IF:

User does not enter SpIntCd, and presses RETURN, the cursor will go to ModeCd.

IF:

The cursor is at ModeCd, the user may enter the 1 digit (A) ModeCd, and press RETURN. The system will perform an edit, using ModeCd table, and if the edit is valid, the cursor will move to TransPriCd. If the edit reveals an incorrect ModeCd has been entered, display prompt "ModeCd not valid, press CANCEL and retry".

IF:

User does not enter ModeCd and presses RETURN, the cursor will go to the TransPriCd.

IF:

The cursor is at TransPriCd, the user may enter the 1 digit (N) TransPriCd, and press RETURN. The system will perform an edit, using TransPriCd table, and if valid, the cursor will move to StpSeqNo (in the next line). If the edit reveals an incorrect TransPriCd has been entered, display prompt "Trans-PriCd not valid, press CANCEL and retry".

IF:

User does not enter TransPriCd and presses RETURN, the cursor will go to the StpSeqNo in next line. At this time the user may enter the StpSeqNo "only" for that stop, press RETURN, and the cursor will go to StpSeqNo in the next line. (The complete TMR will only be entered on the first line.)

IF:

User is at the last element, or stop and presses RETURN, then display prompt "Press GO to post data, or RETURN to review". If GO is pressed, the TMR is posted in the database and today's date is posted to DteLstUpdCntnr. The screen will display the record and function key set allowing the user to select the entry of a FWTNo for the same container number.

IF:

FWTNo is selected, the criteria in paragraphs 6 and 7 apply.

IF:

RETURN is pressed, the cursor will move to TMR Prefix and all edits will be performed as described above.

5. ELSE:

If a TMRNo is not displayed.

THEN:

The user must enter 6 digits (A/N) in this field, press RETURN, and the cursor will move to DestMCEPrefix.

IF:

The cursor is at DestMCEPrefix, the user may enter the 1 digit (A) prefix of the destination MCE (this should be

filled in all of the time), press RETURN, and the cursor will move to StpSeqNo.

IF:

The cursor is at StpSeqNo, the user must enter the 1 digit (A) StpSeqNo, press RETURN, and the cursor will move to SpIntCd.

IF:

The cursor is at SpIntCd, the user must enter the 2 digit (A) SpIntCd, press RETURN. The system will perform an edit, using SpIntCd table, and if the edit is valid, the cursor will move to ModeCd. If the edit reveals an incorrect SpIntCd has been entered, display prompt "SpIntCd not valid, press CANCEL and retry".

IF:

The cursor is at ModeCd, the user may enter the 1 digit (A) ModeCd, and press RETURN. The system will perform an edit, using ModeCd table, and if the exit is valid, the cursor will move to TransPriCd. If the edit reveals an incorrect ModeCd has been entered, display prompt "ModeCd not valid, press CANCEL and retry".

IF:

The cursor is at TransPriCd, the user must enter the 1 digit (N) TransPriCd, and press RETURN. The system will perform an edit, using TransPriCd table, and if valid, the cursor will move to StpSeqNo (in the next line). At this time the user may enter the StpSeqNo "only" of that stop, press RETURN, and the cursor will go to StpSeqNo in the next line. The complete TMR will only be entered on the first line. If the edit reveals an incorrect TransPriCd has been entered, display prompt "TransPriCd not valid, press CANCEL and retry".

IF:

User is at the last element and presses RETURN, then display prompt "Press GO to post data, or RETURN to review". If GO is pressed, the TMR is posted in the database and today's date is posted to DteLstUpdCntnr. The screen will display the record and function key set will be displayed allowing the user to select the entry of a FWTNo for the same container number.

IF:

FWTNo is selected, the criteria in paragraphs 6 and 7 apply.

IF:

User presses the function key "CLEAR SCREEN", the front end screen will be displayed for record selection. Once a record is selected, the process screen (with function key set) is displayed.

IF:

TMRNo is again selected, the above statement applies.

6. ELSE:

If FWTNo function key is selected.

THEN:

Display the following screen.

```
                 ------------------------------------------
                 |   POST TMR/FREIGHT WARRANT NUMBER      |
                 |_________________________________________|
                 | Container | Consignee | Freight        |
                 |  Number   |           | Warrant No     |
                 |___________|___________|________________|
                 | XXXXXXXX  |   XXXXXX  | XXXXXXXXXXX    |
                 | --------- |   XXXXXX  |----------------|
=================================================================
| CLEAR |      |    |   |    |    |MODIFY|   |  |    |    |DEL |
| SCREEN|      |    |   |    |    |      |   |  |    |    |    |
-----------------------------------------------------------------
```

IF:

User selects FWTNo function key and screen is displayed, the CntnrNo and all Consignees will be moved to the screen. If a FWTNo is resident in the database, it too will be displayed on the screen.

IF:

A FWTNo is displayed.

THEN:

A set of function keys will be displayed allowing the user to CLEAR SCREEN, MODIFY, or, DELETE.

IF:

User presses the function key "CLEAR SCREEN", the front end screen will be displayed for record selection. Once a record is selected, the process screen is displayed.

ELSE:

DELETE function key is selected, the FWTNo displayed will be deleted from the database.

ELSE:

If the MODIFY function key is selected, the cursor will move to the first position of the FWTNo.

THEN:

User may overtype the FWTNo.

IF:

User overtypes FWTNo, the only edit is for 11 positions.

IF:

User is at the last element and presses RETURN, then display prompt "Press GO to post data, or RETURN to review". If GO is pressed, the FWTNo is posted in the database and today's date is posted to DteLstUpdCntnr. The screen will display the record and function key set allowing the user to select the entry of a TMRNo for the same container

number.

IF:

TMRNo is selected, the criteria in paragraphs 4 and 5 apply.

ELSE:

If a FWTNo is not displayed.

THEN:

The user must enter 11 digits in this field, press GO and the FWTNo is posted in the database and today's date is posted to DteLstUpdCntnr. The front end screen will be displayed for record selection. Once a record is selected, the process screen is displayed.

THEN:

The function key set will be displayed again allowing user to select the entry of another TMRNo or a FWTNo.

IF:

The user has completed all entries, then FINISH key is pressed, and the MENU will be displayed.

SAMPLE SAMPLE SAMPLE

These sample screens show what the info looks like when properly entered.

POST TMR/FREIGHT WARRANT NUMBER			
Container Number	Consignee	Freight Warrant No	
02012345	WK4FUG WK4FRC WK4FUZ WK4NVE	TC-0A123456	



```
            |   WK4GEC   |
=================================================================================
   | CLEAR |      |      |  | FWT |      | TMR |     |  |     |     | DEL |
   | SCREEN|      |      |  | No  |      | No  |     |  |     |     |     |
   ---------------------------------------------------------------------------

-------------------------------------------------------------------------------
|                      POST TMR/FREIGHT WARRANT NUMBER                         |
-------------------------------------------------------------------------------
| Container | Consignee |  TMR  | Dest MCE |StpSeq |SpecInt |Mode|Trans|
|  Number   |           | Prefix|  Prefix  |Number |  Code  |Code|PriCd|
|-----------------------------------------------------------------------------|
| 02012345  |  WK4FUG   | BA0001|    E     |   A   |  CS    | I  |  9  |
|-----------|  WK4FRC   |-------|----------|   B   |--------|----|-----|
            |  WK4FUZ   |                  |   C   |
            |  WK4NVE   |                  |   D   |
            |  WK4GEC   |                  |   Z   |
=================================================================================
   |CLEAR |      |      |  | FWT |      | TMR |     |  |     |     |DEL |
   |SCREEN|      |      |  | No  |      | No  |     |  |     |     |     |
   ---------------------------------------------------------------------------

 ;
    DERIVES:
         CntnrMov-TMR-Info
          USING          DteLstUpdCntnr ;
    DERIVES:
         CntnrMov-TMR-Info
          USING          TMR-Inp ;
    DERIVES:
         CntnrMovStp-TMR-Upd
          USING          MultiStpNo ;
    DERIVES:
         CntnrMovStp-TMR-Upd
          USING          StpSeqNo ;
    DERIVES:
         CntnrMovStp-TMR-Upd
          USING          DestMCEPrefix ;
    DERIVES:
         CntnrMovStp-TMR-Upd
          USING          CntnrMovStp-Ref ;
    DERIVES:
         TMR-ErrMsg-Out
          USING          TMR-Inp ;
    DERIVES:
         TMR-ErrMsg-Out
          USING          Err-Msg ;
    DERIVES:
         TMR-ErrMsg-Out
```

```
      USING          Err-Diag ;
DERIVES:
     TMR-ErrMsg-Out
      USING          CntnrMov-TMR-Info ;
DERIVES:
     DteLstUpdCntnr ;
DERIVES:
     StpSeqNo  USING MultiStpNo ;
DERIVES:
     DestMCEPrefix ;
DERIVES:
     Err-Msg ;
DERIVES:
     Err-Diag ;
MAINTAINS:
     CntnrMov-File
      USING          CntnrMov-TMR-Info ;
MAINTAINS:
     CntnrMovStp-File
      USING          CntnrMovStp-TMR-Upd ;
MAINTAINS:
     CntnrMovStp-File
      USING          CntnrMovStp-Ref ;
EMPLOYS:
     SpecialInt-Tbl ,
     MovModeCode-Tbl ,
     TransPri-Tbl ,
     CgoMCE-Tbl ,
     Month-Tbl ,
     CgoAddress-File ;
USES:          DteLstUpdCntnr
                TO DERIVE CntnrMov-TMR-Info ;
USES:          TMR-Inp
                TO DERIVE CntnrMov-TMR-Info ;
USES:          MultiStpNo
                TO DERIVE CntnrMovStp-TMR-Upd ;
USES:          StpSeqNo
                TO DERIVE CntnrMovStp-TMR-Upd ;
USES:          DestMCEPrefix
                TO DERIVE CntnrMovStp-TMR-Upd ;
USES:          CntnrMovStp-Ref
                TO DERIVE CntnrMovStp-TMR-Upd ;
USES:          TMR-Inp
                TO DERIVE TMR-ErrMsg-Out ;
USES:          Err-Msg
                TO DERIVE TMR-ErrMsg-Out ;
USES:          Err-Diag
                TO DERIVE TMR-ErrMsg-Out ;
USES:          CntnrMov-TMR-Info
```

```
                TO DERIVE TMR-ErrMsg-Out ;
USES:           MultiStpNo
                TO DERIVE StpSeqNo ;
USES:           CntnrMov-TMR-Info
                TO MAINTAIN CntnrMov-File ;
USES:           CntnrMovStp-TMR-Upd
                TO MAINTAIN CntnrMovStp-File ;
USES:           CntnrMovStp-Ref
                TO MAINTAIN CntnrMovStp-File ;
ADDS:           CntnrMov-TMR-Info TO CntnrMov-File ;
ADDS:           CntnrMovStp-TMR-Upd TO CntnrMovStp-File ;
MODIFIES:       CntnrMov-TMR-Info IN CntnrMov-File ;
MODIFIES:       CntnrMovStp-TMR-Upd IN CntnrMovStp-File ;
REFERENCES:     SpecialInt IN SpecialInt-Tbl ;
REFERENCES:     MovModeCode IN MovModeCode-Tbl ;
REFERENCES:     TransPri IN TransPri-Tbl ;
REFERENCES:     CntnrMov-TMR-Info IN CntnrMov-File ;
REFERENCES:     CgoMCE-InbCntnr-Ref IN CgoMCE-Tbl ;
REFERENCES:     Month IN Month-Tbl ;
REFERENCES:     CgoAddress-ETA-Fcst-Ref IN CgoAddress-File ;
REFERENCES:     CntnrMovStp-Ref IN CntnrMovStp-File ;
CREATES:
     CntnrMov ,
     CntnrMovStp ;
RESPONSIBLE PROBLEM DEFINER IS:
                'Zacot' ;
```

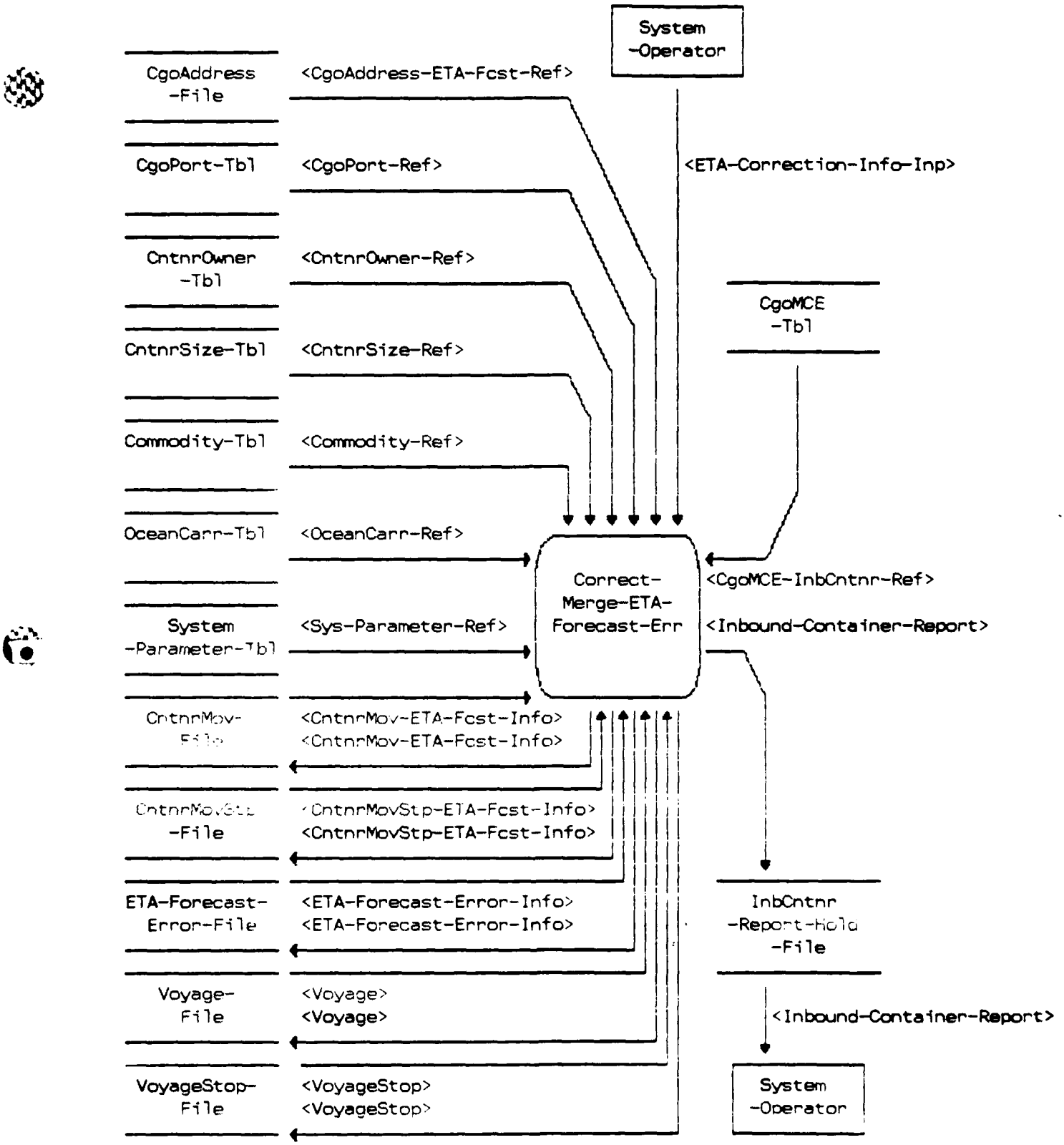

Figure 2. Correct-Merge-ETA-Forecast-Err

```
3    DEFINE PROCESS                          Correct-Merge-ETA-Forecast-Err ;
       DESCRIPTION;
   Correct Merge ETA Forecast Error
   This process provides a means to correct records which were edited out
   during the Merge ETA Forecast Process.  Process will update container
   database with corrected records and produce a printed Notify Consignee
   Report.
    ;
       KEYWORD IS:     'Container' ;
       SEE MEMO:
            TCR-Cor-Merge-Process-Memo ;
       ATTRIBUTE IS:
            SEC-CLASS       'UNCLASSIFIED' ,
            PROCESS-MODE     'INTERACTIVE BATCH' ;
       GENERATES:
            Inbound-Container-Report ;
       RECEIVES:
            ETA-Correction-Info-Inp ;
       PART OF:        Process-ETA-Forecast ;
       PROCEDURE;
```

BREAKDOWN OF 10 POSITION SEQUENCE NO.

PREFIX CODE	"0"	RECORD NOT ADDED TO DATABASE	POS. 1
	"1"	RECORD ADDED TO THE DATABASE	POS. 1
YEAR	"87"	YEAR ERROR SENT TO ERROR FILE	POS. 2-3
JULIAN DATE	"130"	DAY RECORD SENT TO ERROR FILE	POS. 4-6
SEQUENCE NO	"0000"	VALUE INCREASED BY ONE FOR EACH RECORD ADDED THAT DAY	POS. 7-10

The user will have a printout of the Reformatted ETA Forecast Error Report which will identify the Sequence No and all data elements which were received as the Reformatted ETA Forecast. Using this printout user will write correction on the printout and use this process to correct or delete records from the ETA Forecast Error File. There are three sources the user can get data to correct the error report TAMCA, DAMMS ETA Forecast 80cc Format or from the customer when the container arrives.

User will be allowed to key in the desired Sequence No. in the Correct Merge Process Screen or select the desired record by pressing "HELP" and getting the Sequence No Window identified below.

Create Correct Merge Process Screen as shown below:

CORRECT MERGE PROCESS SCREEN

ETA ERRORS	ERROR CODE
Sequence No:	
Container Owner:	
Container No:	
Consignee:	
Voyage Document No:	
POD:	
Container TCN:	
Ocean Carrier Abbr:	
Commodity Code:	
Container Size:	
Date Departed POE:	
Total Stops:	
Multi-Stop No:	
Container No. Prefix:	
POE:	

Create Sequence No. Window as shown below:

Window will allow the user to select a Sequence No. by scrolling through and highlighting the desired record.

SEQUENCE NO. WINDOW

871300001
871310002
871320003

READ: Error Report File Record
THEN: Move the last 9 positions of the Sequence No. to the window shown above. Do not display position 1 of Sequence No.

IF: The user enters a 9 position Sequence No.
THEN: The process will search the Error Report File and display record in the process screen.
IF: The user enters an invalid Sequence No.
THEN: Display "Invalid Sequence No."
IF: The user selects a Sequence No. with the scroll
THEN: Display record on Process Screen.

The top screen elements are key elements for a record to be created in the database.

IF: All key elements are corrected
THEN: Create record in CntnrMov, CntnrMovStp, Voyage and VoyageStop File.
THEN: Create Inbound Container Report record.

IF: Any corrected key element fails edit.
THEN: Do not create record in database.
THEN: Do not save attempted correction.

IF: All key elements are valid but Non-Key elements are invalid.
THEN: Create record in CntnrMov, CntnrMovStp, Voyage and VoyageStop File.
THEN: Leave all invalid Non-Key elements blank in database.
THEN: Create Inbound Container Report record.
THEN: Leave record on Error Report File.
THEN: When subsequence updates to these Non-Key elements correct the errors, update file.

IF: Voyage and VoyageStop records have been created.
THEN: Do not create new records.

IF: A correction involves the updating of the database.
THEN: Prompt "Database Record Updated."

IF: All errors in the record have been corrected.
THEN: Delete record from Error Report File.

IF: User wants to Delete a record from the Error Report File and no record has been created in the database.
THEN: Provide Function Key to Delete Record.

IF: Error record resided on Error Report File for 30 days and no corrections have been made.
THEN: Using position 2-6 of the Sequence No. assigned to each record in the ETA Error Report and the current julian date of the system calendar calculate the number of days record has resided on the report. If calculated value is equal to or greater than 30 then Delete Report from file.

IF: User finishes process.
THEN: Print "Inbound Container Report"

IF: No new records are created in the database.
THEN: Print "Negative Report."

INBOUND CONTAINER REPORT

DATE:

RESP BMCT:

TCN	POE	OCEAN CARRIER ABBR	DATE SAILED WPOE	COMMODITY CODE	MULTI STOP NUMBER	TOTAL STOPS	POD

PAGE _____

CONT OWNER ABBR	CONT SIZE	CONT NUMBER	VOYAGE DOCUMENT NUMBER	CONSIGNEE

Print report as one line per report with a space between each record.

CNTNR NUMBER will consist of the CntnrNoPrefix and the CntnrNo.

IF: Corrected data element is validated.
THEN: Post elements to files as shown below:

ETA FORECAST ELEMENT	DATA BASE FILES
Consignee	CntnrMovStp
CntnrOwnAbbr	CntnrMov/CntnrMovStp
CntnrNoPrefix	CntnrMov
CntnrNo	CntnrMov/CntnrMovStp
VoyDocuNoFltNo	CntnrMov/Voyage/VoyageStop
MultiStpNo	CntnrMovStp
TotStp	CntnrMov
CntnrTCN	CntnrMov
POE	Voyage
OceanCarrAbbr	Voyage
DteDprtPOE	Voyage
CmdtyCd	CntnrMov
CntnrSz	CntnrMov
POD	CntnrMov/VoyageStop

IF: Record is created in database.
THEN: Create DteRecCreat in CntnrMov File using System Calendar Function and post current julian date.
THEN: Update CntnrMovStp record by creating a value "1" and put it in the DupeStpIndex.

IF: MultiStpNo Value is equal to a "Z"
THEN: Copy Consignee Value to CntnrMov File, UltmCnsgn

IF: MultiStpNo is equal to "1" and TotStp equals "01"
THEN: Copy Consignee Value to CntnrMov File, UltmCnsgn

IF: User does not correct or enter a valid CntnrNoPrefix and presses the function key to create a record in the database.
THEN: Generate three zeros and Update CntnrNoPrefix in the CntnrMov record.

IF: The data in an element is corrected.
THEN: Edit as defined below:

CntnrOwnAbbr	MATCH: CntnrOwner Table IF: Blank THEN: Set error code "1" IF: Not on Table THEN: Set error code "2" IF: Invalid THEN: Return Cursor to beginning of element THEN: Allow to go to next element THEN: Do not save Invalid correction
CntnrNo	Must be 5 position Numeric IF: Blank THEN: Set error code "1" IF: Not Equal to Alphanumeric THEN: Set error code "F" IF: Invalid THEN: Return Cursor to beginning of element THEN: Allow to go to next element THEN: Do not save Invalid correction
Consignee	MATCH: CgoAddress, ShipToAAC IF: Blank THEN: Set error code "1" IF: No Match on Table THEN: Set error code "2" IF: Match THEN: Get Value of MCECd, Pos # 1 MCEPrefix and Match with Parameter Table.

IF: Values are equal
THEN: Input is Valid
IF: No Match
THEN: Set error code "X"
IF: Invalid
THEN: Return Cursor to beginning of element
THEN: Allow to go to next element
THEN: Do not save Invalid correction

VoyDocuNoFltNo — Must be 5 Position, Pos #1 equal to Alpha, Pos # 2-5 equal to Numeric

IF: Blank
THEN: Set error code "1"
IF: POS # 1 not equal to Alpha
THEN: Set error code "4"
IF: Pos # 2-5 not equal to Numeric
THEN: Set error code "5"
IF: Pos #1 not equal to Alpha and Pos # 2-5 not equal to Numeric.
THEN: Set error code "6"
IF: Invalid
THEN: Return Cursor to beginning of element
THEN: Allow to go to next element
THEN: Do not save Invalid correction
IF: Value of VoyDocuNoFltNo is equal to the value of VoyDocuNoFltNo in the files Voyage and VoyageStop
THEN: Do Not Create New Record

POD — MATCH: CgoPort Table

IF: Blank
THEN: Set error code "1"
IF: No Match on Table
THEN: Set error code "2"
IF: Invalid
THEN: Return Cursor to beginning of element
THEN: Allow to go to next element
THEN: Do not save Invalid correction

CntnrTCN — 17 Position Alphanumeric, Pos # 11 must equal "V"

IF: Blank
THEN: Set error code "1"
IF: Garbled (e.g. @#$%^&<>?"+_)(*&^)
THEN: Set error code "B"
IF: Value not Alphanumeric
THEN: Set error code "A"
IF: Value of Pos # 11 is not equal to a V
THEN: Set error code "9"
IF: Invalid

```
                        THEN:  Return Cursor to beginning of element
                        THEN:  Allow to go to next element
                        THEN:  Do not save Invalid correction

OceanCarrAbbr           MATCH: OceanCarr Table
                           IF: Blank
                               THEN:  Set error code "1"
                           IF: No Match on Table
                               THEN:  Set error code "2"
                           IF: Invalid
                               THEN:  Return Cursor to beginning of element
                               THEN:  Allow to go to next element
                               THEN:  Do not save Invalid correction

CmdtyCd                 MATCH: Commodity Table
                           IF: Blank
                               THEN:  Set error code "1"
                           IF: No Match on Table
                               THEN:  Set error code "2"
                           IF: Invalid
                               THEN:  Return Cursor to beginning of element
                               THEN:  Allow to go to next element
                               THEN:  Do not save Invalid correction

CntnrSz                 MATCH: CntnrSize Table
                           IF: Blank
                               THEN:  Set error code "1"
                           IF: No Match on Table
                               THEN:  Set error code "2"
                           IF: Invalid
                               THEN:  Return Cursor to beginning of element
                               THEN:  Allow to go to next element
                               THEN:  Do not save Invalid correction

DteDprtWPOE             System Calendar Function Check
                        Valid year, less than current date, last four
                        Positions must be equal to 001 and not greater than
                        366
                           IF: Blank
                               THEN:  Set error code "1"
                           IF: Garbled (e.g. '~!^)
                               THEN:  Set error code "E"
                           IF: Date is greater than current date
                               THEN:  Set error code "D"
                           IF: Last four positions is less than 001 or
                               greater than 366
                               THEN:  Set error code "C"
                           IF: Invalid
                               THEN:  Return Cursor to beginning of
```

element
THEN: Allow to go to next element
THEN: Do not save Invalid correction
IF: DteDprtPOE is received as a 4 position julian date
THEN: Insert first position of calendar year in front of 4 position julian date to create 5 position julian date e.g. change "7235" to "87235".
THEN: Post to Voyage File, DteSailWPOE

TotStp

Must be 2 position, Numeric with value of 01 through 10
IF: Blank
THEN: Set error code "1"
IF: Value not equal to 01 through 10
THEN: Set error code "8"
IF: Invalid
THEN: Return Cursor to beginning of element
THEN: Allow to go to next element
THEN: Do not save Invalid correction

MultiStpNo

Must be 1 Position, with value of 1 through 9 or Z.
IF: Blank
THEN: Set error code "1"
IF: Value not equal to 1 through 9 or Z
THEN: Set error code "7"
IF: Invalid
THEN: Return Cursor to beginning of element
THEN: Allow to go to next element
THEN: Do not save Invalid correction

CntnrNoPrefix

Must be 3 position Alphanumeric
IF: Blank
THEN: Set error code "1"
IF: Not equal to Numeric
THEN: Set error code "3"
IF: Invalid
THEN: Return Cursor to beginning of element
THEN: Allow to go to next element
THEN: Do not save Invalid correction

POE

IF: Blank
THEN: Set error code "1"
IF: Value not equal to Alphanumeric
THEN: Set error code "3"
IF: Invalid

THEN: Return Cursor to beginning of element
THEN: Allow to go to next element
THEN: Do not save Invalid correction

Date Element Error Code

Code	Definition
1	Field cannot be blank
2	No Match on Table/File
3	Data should be alpha/numeric in nature (A-Z, 0-9)
4	First position must be alpha (A-Z)
5	Last 4 positions must be numeric (0-9)
6	Code 4 and 5 above apply
7	Multi Stop Number must equal "1-9" or "Z"
8	Total Stop must be "01-10"
9	Position 11 of the TCN must have a value of "V"
A	TCN should contain alphanumeric data (A-Z, 1-9)
B	Codes 9 and A above apply
C	Date Sail POE must equal (0-9) in the first position and (001-366) in the last three positions
D	Sail Date must be less than the current date
E	Code C and D Above apply
F	Data must be numeric in nature (0-9)
X	Consignee not in MCT area of responsibility

```
END OF PROCESS
;
    MAINTAINS:
         CntnrMov-File ;
    MAINTAINS:
         CntnrMovStp-File ;
    MAINTAINS:
         ETA-Forecast-Error-File ;
    MAINTAINS:
         Voyage-File ;
    MAINTAINS:
         VoyageStop-File ;
    EMPLOYS:
         CntnrSize-Tbl ,
         CgoPort-Tbl ,
         CgoAddress-File ,
         System-Parameter-Tbl ,
         CntnrOwner-Tbl ,
         OceanCarr-Tbl ,
         Commodity-Tbl ,
```

```
        CgoMCE-Tbl ;
ADDS:           ETA-Forecast-Error-Info TO ETA-Forecast-Error-File ;
ADDS:           CntnrMov-ETA-Fcst-Info TO CntnrMov-File ;
ADDS:           Voyage TO Voyage-File ;
ADDS:           VoyageStop TO VoyageStop-File ;
ADDS:           CntnrMovStp-ETA-Fcst-Info TO CntnrMovStp-File ;
MODIFIES:       ETA-Forecast-Error-Info IN ETA-Forecast-Error-File ;
MODIFIES:       CntnrMov-ETA-Fcst-Info IN CntnrMov-File ;
MODIFIES:       Voyage IN Voyage-File ;
MODIFIES:       VoyageStop IN VoyageStop-File ;
MODIFIES:       CntnrMovStp-ETA-Fcst-Info IN CntnrMovStp-File ;
REFERENCES:     ETA-Forecast-Error-Info IN ETA-Forecast-Error-File ;
REFERENCES:     CntnrSize-Ref IN CntnrSize-Tbl ;
REFERENCES:     CgoPort-Ref IN CgoPort-Tbl ;
REFERENCES:     CgoAddress-ETA-Fcst-Ref IN CgoAddress-File ;
REFERENCES:     Sys-Parameter-Ref IN System-Parameter-Tbl ;
REFERENCES:     CntnrOwner-Ref IN CntnrOwner-Tbl ;
REFERENCES:     CntnrMov-ETA-Fcst-Info IN CntnrMov-File ;
REFERENCES:     OceanCarr-Ref IN OceanCarr-Tbl ;
REFERENCES:     Voyage IN Voyage-File ;
REFERENCES:     VoyageStop IN VoyageStop-File ;
REFERENCES:     CntnrMovStp-ETA-Fcst-Info IN CntnrMovStp-File ;
REFERENCES:     Commodity-Ref IN Commodity-Tbl ;
REFERENCES:     CgoMCE-InbCntnr-Ref IN CgoMCE-Tbl ;
REMOVES:        ETA-Forecast-Error-Info FROM ETA-Forecast-Error-File ;
CREATES:
        ETA-Forecast-Error-Info ,
        CntnrMov ,
        Voyage ,
        VoyageStop ,
        CntnrMovStp ;
DESTROYS:
        ETA-Forecast-Error-Info ;
RESPONSIBLE PROBLEM DEFINER IS:
                'Cope' ;
```

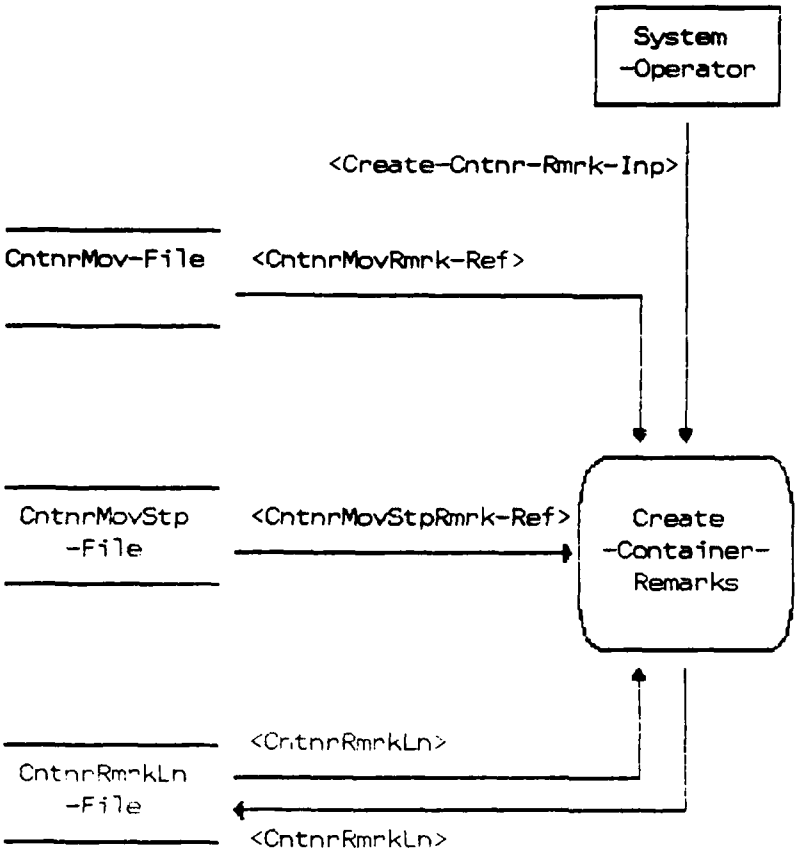

Figure 3. Create-Container-Remarks

4 DEFINE PROCESS Create-Container-Remarks ;
DESCRIPTION;
Create Container Remarks
Container remarks are created on an as-needed basis. Remarks may be created when there is a valid container owner, container number, and voyage document number.

The user must exit the current process and access the remark process to create remarks.

The remarks are tied to the container, and consignee.
;
KEYWORD IS: 'Container' ,
'LOB' ;
SEE MEMO:
TCR-Create-Cntnr-Rmrk-Proc ;
RECEIVES:
Create-Cntnr-Rmrk-Inp ;
PART OF: Maintain-Container-Database ;
PROCEDURE;

1. Select Create Container Remarks from Menu.

2. If user enters:

a. TCN
MATCH: TCN from screen with CntnrTCN in CntnrMov-File.
IF:
NO MATCH:
Screen Prompt, "TCN not valid, try again."

MATCHED:
Get all records with CntnrTCN equal to TCN from screen.

MOVE:
CntnrNo from CntnrMov-File to a scrollable screen.

MOVE:
CntnrOwnAbbr, Consignee, MultiStp-No, and StpCompFlag from CntnrMov-Stp-File using CntnrNo to the scrollable screen.

b. CntnrNo
MATCH:
CntnrNo from screen with CntnrNo in CntnrMov-File.
IF:

NO MATCH:
Screen Prompt, "Container Number not valid, re-enter or exit process."

MATCHED:
Get all records from CntnrMov-File equal to CntnrNo from screen.

MOVE:
CntnrNo from CntnrMov-File to a scrollable screen.

MOVE:
CntnrOwnAbbr, Consignee, MultiStpNo, and StpCompFlag from CntnrMovStp-File using CntnrNo to the scrollable screen.

c. TMRPrefix
MATCH:
TMRPrefix from screen with TMRPrefix in CntnrMov-File.

IF:
NO MATCH:
Screen Prompt, "TMRPrefix not on file - try again."

IF:
MATCHED:
GET all records from CntnrMov-File with TMRPrefix equal to TMRPrefix from screen.

MOVE:
CntnrNo and CntnrOwnAbbr from CntnrMov-File to a scrollable screen.

USE:
CntnrNo and CntnrOwnAbbr from the CntnrMov-File to access CntnrMovStp-File.

MOVE:
CntnrOwnAbbr, Consignee, MultiStpNo, and StpCompFlag from CntnrMovStp-File using CntnrNo to the scrollable screen.

d. FWTNo
MATCH:
FWTNo from screen with FWTNo in CntnrMov-File.
IF:
NO MATCH:

Screen Prompt, "Freight Warrant No not on file - try again."

IF:

MATCHED
GET all records from CntnrMov-File with FWTNo equal to FWTNo from screen.

MOVE:

CntnrNo and CntnrOwnAbbr from CntnrMov-File to a scrollable screen.

USE:

CntnrNo and CntnrOwnAbbr from the CntnrMov-File to access CntnrMovStp-File.

MOVE:

CntnrOwnAbbr, Consignee, MultiStpNo, and StpCompFlag from CntnrMovStp-File using CntnrNo to the scrollable screen.

3. a. DISPLAY:

Select desired entry, then press [GO]/[FINISH]/[CANCEL].

CONTAINER OPERATIONS

AKMI4FS

Cntnr No	Cntnr Own	Consignee	MultiStp No	Stop Complete
XXXXX	XXXX	XXXXXX	X	X
XXXXX	XXXX	XXXXXX	X	X

b. SELECT RECORD

Press [GO].

GET CntnrNoPrefix, VoyDocuNoFltNo and POD for selected record from CntnrMov-File.

MOVE Selected record to the Create Container Remarks screen.

c. DISPLAY:

```
-------------------------------------------------------------

                    CREATE CONTAINER REMARKS

-------------------------------------------------------------

                    Container Number:  XXXXXXXX
                     Container Owner:  XXXX
                           Consignee:  XXXXX
                       Voyage Number:  XXXXX
                                 POD:  XXX

              ----------------------------------------
              ----------------------------------------
              ----------------------------------------
              ----------------------------------------
              ----------------------------------------
-------------------------------------------------------------
Clear    |                 |  Enter                |  Delete
Screen   |                 |  Remark               |
---------|-----------------|-----------------------|------------
```

Function keys will be present only when there are remarks on file.

a. If the Clear Screen function is selected the system will return the operator to the Container Remarks Selection Screen.

b. If the Enter Remarks function key is selected the cursor will go to the Remarks Entry field.

c. If the Delete function key is selected a screen prompt will appear, "Press [GO] to delete, [CANCEL] to deny.

4. Press [FINISH] to exit process.

```
;
MAINTAINS:
     CntnrRmrkLn-File ;
EMPLOYS:
     CntnrMov-File ,
     CntnrMovStp-File ;
ADDS:           CntnrRmrkLn TO CntnrRmrkLn-File ;
MODIFIES:       CntnrRmrkLn IN CntnrRmrkLn-File ;
REFERENCES:     CntnrMovRmrk-Ref IN CntnrMov-File ;
REFERENCES:     CntnrMovStpRmrk-Ref IN CntnrMovStp-File ;
```

```
REFERENCES:     CntnrRmrkLn IN CntnrRmrkLn-File ;
REMOVES:        CntnrRmrkLn FROM CntnrRmrkLn-File ;
CREATES:
     CntnrRmrkLn ;
DESTROYS:
     CntnrRmrkLn ;
RESPONSIBLE PROBLEM DEFINER IS:
                'Blake' ;
```

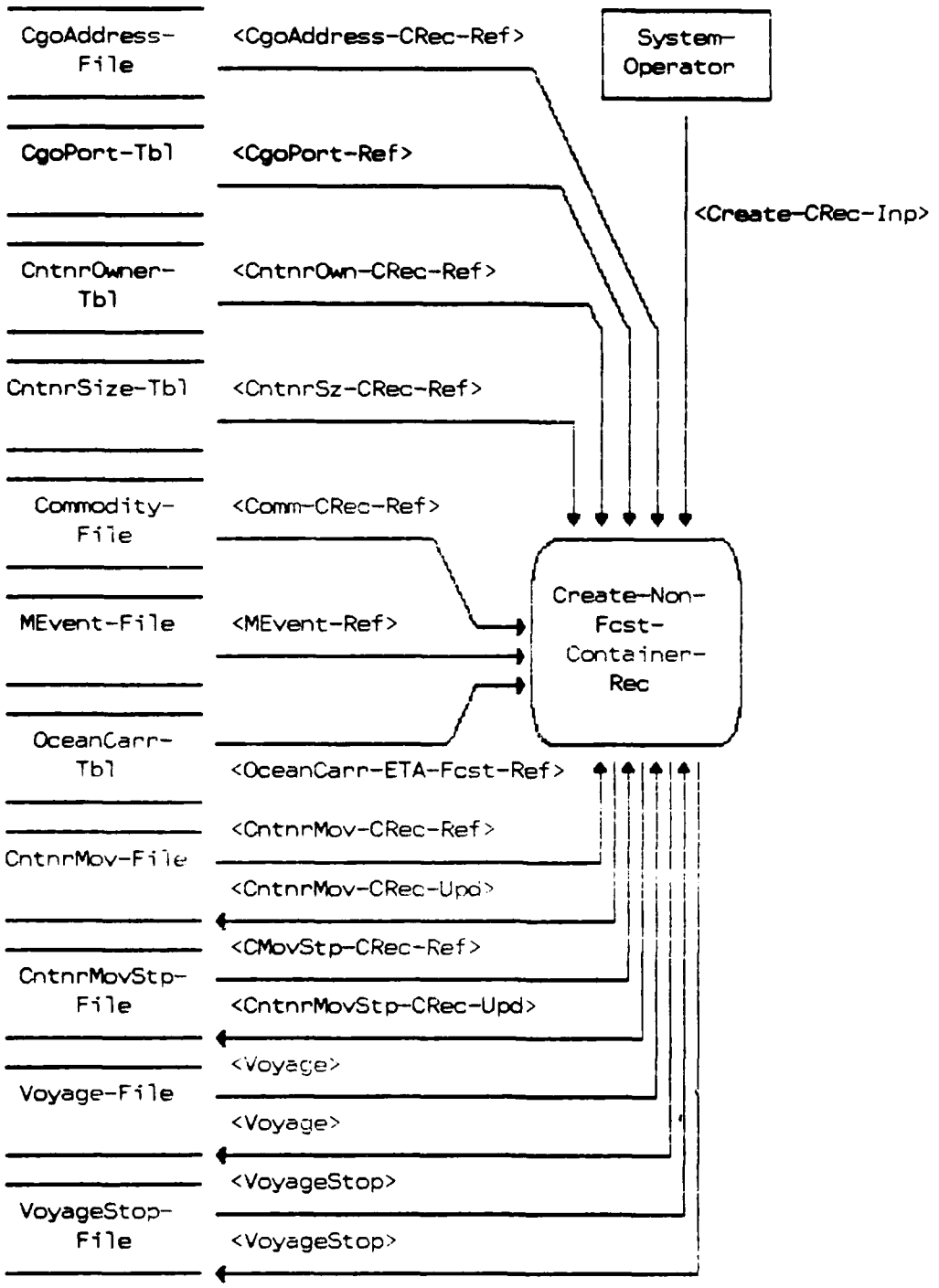

Figure 4. Create-Non-Fcst-Cntainer-Rec

5 DEFINE PROCESS Create-Non-Fcst-Container-Rec ;
DESCRIPTION;
Create Container Record

1. General Description:

This process creates certain container records in the database for reporting subsequent movement events and deriving management information

Depending on the nature of the circumstances, Container Move, Container Move Stop, Voyage, and Voyage Stop records may be created. At the minimum, a Container Move Stop record will be created.

2. Process Objective(s):

Create Cntnr Record process will create container records on the container database. This process will accomplish the following tasks:

a) Create a Container Move Record and a Container Move Stop record (s) if a Container Move Record does not exist.

b) Create a stop record(s) if the Container Move Record does exist.

c) Create a Voyage and/or a Voyage Stop record if those records do not already exist.

d) Provide elements to be used on a Non-Forecasted Container Report.

;
KEYWORD IS: 'Container' ,
'LOB' ;
SEE MEMO:
TotStp-Memo ,
Multi-Stop-No-Memo ,
TCR-Create-Non-Fcst-Cntnr-Memo ;
RECEIVES:
Create-CRec-Inp ;
PART OF: Maintain-Container-Database ;
PROCEDURE;

The user will initiate this process via the movement control menu. The first screen of the process will appear as below:

```
-----------------------------------------AKMIWFD--
!    CREATE NON-FORECASTED CONTAINER RECORD     !
```

```
|                                                |
|        Container Owner:                        |
|           Container No:                        |
|              Consignee:                        |
|     Voyage Document No:                        |
|                   POD:                         |
|------------------------------------------------|
|           Container TCN:                       |
|     Ocean Carrier Abbr:                        |
|         Commodity Code:                        |
|         Container Size:                        |
|      Date Departed POE:                        |
|            Total Stops:                        |
|          Multi-Stop No:                        |
|   Container No. Prefix:                        |
|                   POE:                         |
|________________________________________________|
```

(i) CntnrOwnAbbr - User may enter the CntnrOwnAbbr from the keyboard or press [HELP].

IF:

HELP:

The following screen will be displayed:

```
-----------------------------------------AKMIWFD--
|    CREATE NON-FORECASTED CONTAINER RECORD      |
|                                                |
|        Container Owner:                        |
|           Container No:                        |
|              Consignee:                        |
|     Voyage Document No:                        |
|                   POD:                         |
|------------------------------------------------|
|           Container TCN:                       |
|     Ocean Carrier Abbr:                        |
|         Commodity Code:                        |
|         Container Size:                        |
|      Date Departed POE:                        |
|            Total Stops:                        |
|          Multi-Stop No:                        |
|   Container No. Prefix:                        |
|                   POE:                         |
|________________________________________________|

-------------------------------------------------
| CLEAR  | LIST     | CODE   |                 |
| SCREEN | RECORDS  | TABLE  |                 |
```

|_____|_____|_____|_____|

The user may now select one of the three function keys shown in the set above.

IF:

CLEAR SCREEN:

System will display the opening screen.

IF:

LIST RECORDS:

System will search CntnrMovStp for all movstps whose StpNonFcst = +, and do not have StpCompFlag posted.

DISPLAY:

CONSIGNEE	CONTAINER NO	CONTAINER OWN
XXXXXX	XXXXX	XXXX
XXXXXX	XXXXX	XXXX
XXXXXX	XXXXX	XXXX

The containers on the scrollable screen will be in consignee order, and within Consignee, container number order. The user may select one of these to either modify or delete by moving the highlighted bar to a particular stop and pressing [GO].

IF:

CANCEL:

System will return to first screen.

IF:

GO:

System will display the following screen.

```
-----------------------------------------AKMIWFD--
|    CREATE NON-FORECASTED CONTAINER RECORD      |
|                                                |
|        Container Owner:  XXXX                  |
|           Container No:  XXXXXXXX              |
|              Consignee:  XXXXXX                |
|     Voyage Document No:  XXXXX                 |
|                   POD:  XXX                    |
|------------------------------------------------|
|          Container TCN:  XXXXXXXXXXXXXXXXX    |
|     Ocean Carrier Abbr:  XXXX                  |
|         Commodity Code:  XXX                   |
|         Container Size:  XX                    |
|      Date Departed POE:  XXXXX                 |
```

```
|            Total Stops:  XX                    |
|          Multi-Stop No:  X                     |
|   Container No. Prefix:  XXX                   |
|                    POE:  XXX                   |
|_______________________________________________|

_________________________________________________
|       |         |      |      |      |       |
|       |         |DELETE| ADD  |      | CLEAR |
|MODIFY |         |STOP  | STOP |      | SCREEN|
|_______|_________|______|______|______|_______|
```

IF:

MODIFY:

System will search MEvent for the container and stop entered.

IF:

There are any MEvents

DISPLAY:

"This container and stop have events posted against it. You may not modify it."

ELSE:

The cursor will appear on Container TCN. The system will allow the user to modify any entry in this part of the screen, or enter any element that was left out when the record was built.

IF:

DELETE:

The system will delete the move stop, and follow the CRUD, re: any additional record deletions that may be required.

IF:

CLEAR SCREEN:

Return to first screen.

IF:

ADD STOP:

The following screen will be displayed:

```
-----------------------------------------AKMIWFD--
|    CREATE NON-FORECASTED CONTAINER RECORD      |
|                                                |
|        Container Owner:  XXXXX                 |
|           Container No:  XXXX                  |
|              Consignee:                        |
|     Voyage Document No:  XXXXX                 |
|                    POD:  XXX                   |
|------------------------------------------------|
```

```
|          Container TCN:  XXXXXXXXXXXXXXXXX   |
|     Ocean Carrier Abbr:  XXXX                 |
|         Commodity Code:  XXX                  |
|         Container Size:  XX                   |
|      Date Departed POE:  XXXXX                |
|            Total Stops:  XX                   |
|          Multi-Stop No:                       |
|   Container No. Prefix:  XXX                  |
|                    POE:  XXX                  |
|-----------------------------------------------|
```

At this time, the user will enter Consignee and Multi-Stop number.

Consignee

IF:
It does not match a valid Ship to AAC in CgoAddress file.
DISPLAY:
'INVALID CONSIGNEE, Please reenter or cancel the TXN'. The system will allow the user to reenter the consignee or cancel the transaction.

MATCH:
The system will match CntnrNo, CntnrOwnAbbr and Consignee with CntnrMovStp.

IF:
There is a match.
IF:
There is a TTB-A Event in MEvent for that consignee and container
OR:
There is a positive value for Diversion Indicator.
THEN:
DISPLAY:
The system will display the following information about the existing stop.

"A stop exists for this container. Press [RETURN] to continue."

```
-----------------------------------------AKMIWFD--
|    CREATE NON-FORECASTED CONTAINER RECORD     |
|                                               |
|        Container Owner:  XXXX                 |
|           Container No:  XXXXXXXX             |
|              Consignee:  XXXXXX               |
|     Voyage Document No:  XXXXX                |
```

```
|                    POD:  XXX                    |
|-----------------------------------------------|
|          Container TCN:  XXXXXXXXXXXXXXXXX     |
|     Ocean Carrier Abbr:  XXXX                  |
|         Commodity Code:  XXX                   |
|         Container Size:  XX                    |
|      Date Departed POE:  XXXXX                 |
|            Total Stops:  XX                    |
|          Multi-Stop No:                        |
|   Container No. Prefix:  XXX                   |
|                    POE:  XXX                   |
|_______________________________________________|
```

After [RETURN] is pressed, the cursor will move to Multi-Stp No.

Multi Stop No

The system will allow the user to create up to 10 stops (1-9 and Z).

IF: It is not 1-9 or Z.
DISPLAY: 'Invalid stop number, please enter 1-9 or Z or cancel this TXN'. System will allow the user to reenter the number or cancel the transaction.

IF: It is Z, update Ultimate Consignee with the consignee whose stop number = Z.

IF:
Tot Stop = 1 and Multi Stop No = 1, update Ultimate Consignee.

IF:
A valid MultiStpNo is entered

DISPLAY:
"Press [GO] to create stop or cancel to deny."

IF:
[CANCEL]:
Return to main screen with no processing

IF:
[GO]
System will create additional stop, and increment DupeStpIndex by 1.

IF:
DupeStpIndex > 10
DISPLAY: "You cannot create any more stops."

DISPLAY:
"Duplicate stop created."

System will return to first screen. The system will produce the following outputs.

ELEMENT	FROM	TO
DteLstUpdCntnr	Generated	CntnrMov
UltmCnsgn (o)	Generated	CntnrMov
MultiStpNo	Screen	CntnrMovStp
VanOwner	Screen	CntnrMovStp
VanNumber	Screen	CntnrMovStp
Consignee	Screen	CntnrMovStp
DupeStpIndex	Generated	CntnrMovStp

After these outputs are created the following screen will be redisplayed:

```
-----------------------------------------AKMIWFD--
|    CREATE NON-FORECASTED CONTAINER RECORD      |
|                                                |
|        Container Owner:  XXXX                  |
|           Container No:  XXXXXXXX              |
|              Consignee:  XXXXXX                |
|     Voyage Document No:  XXXXX                 |
|                   POD:  XXX                    |
|------------------------------------------------|
|          Container TCN:  XXXXXXXXXXXXXXXXX     |
|     Ocean Carrier Abbr:  XXXX                  |
|         Commodity Code:  XXX                   |
|         Container Size:  XX                    |
|      Date Departed POE:  XXXXX                 |
|            Total Stops:  XX                    |
|          Multi-Stop No:  X                     |
|   Container No. Prefix:  XXX                   |
|                   POE:  XXX                    |
|________________________________________________|

-------------------------------------------------
|        |       |DELETE| ADD  |       | CLEAR  |
| MODIFY |       | STOP | STOP |       | SCREEN |
|________|_______|______|______|_______|________|
```

IF:

Matched move stop does not have a TTB-A or DivrsnIndic = +.
DISPLAY:
"A stop already exists for this container. You must use it to post events."

IF: There is no match of the entered Consignee and CntnrMovStp.
DISPLAY:
The system will display the following screen and information.

```
-----------------------------------------AKMIWFD--
|    CREATE NON-FORECASTED CONTAINER RECORD      |
|                                                |
|        Container Owner:  XXXX                  |
|           Container No:  XXXXXXXX              |
|              Consignee:  XXXXXX                |
|     Voyage Document No:  XXXXX                 |
|                   POD:  XXX                    |
|------------------------------------------------|
|          Container TCN:  XXXXXXXXXXXXXXXXX     |
|     Ocean Carrier Abbr:  XXXX                  |
|         Commodity Code:  XXX                   |
|         Container Size:  XX                    |
|      Date Departed POE:  XXXXX                 |
|            Total Stops:  XX                    |
|          Multi-Stop No:                        |
|   Container No. Prefix:  XXX                   |
|                   POE:                         |
|________________________________________________|
```

Perform Multi-Stop Validation

User will then press 'GO' and the following output will be produced.

ELEMENT	FROM	TO
DteLstUpdCntnr	Generated	CntnrMov
UltmCnsgn (o)	Generated	CntnrMov
MultiStpNo	Screen	CntnrMovStp
VanOwner	Screen	CntnrMovStp
VanNumber	Screen	CntnrMovStp
Consignee	Screen	CntnrMovStp
DupeStpIndex	Generated	CntnrMovStp

After these outputs are created the following screen will be redisplayed:

```
-----------------------------------------AKMIWFD--
|    CREATE NON-FORECASTED CONTAINER RECORD      |
|                                                |
|        Container Owner:  XXXX                  |
|           Container No:  XXXXXXXX              |
|              Consignee:  XXXXXX                |
|     Voyage Document No:  XXXXX                 |
|                    POD:  XXX                   |
|------------------------------------------------|
|          Container TCN:  XXXXXXXXXXXXXXXXX     |
|     Ocean Carrier Abbr:  XXXX                  |
|         Commodity Code:  XXX                   |
|         Container Size:  XX                    |
|      Date Departed POE:  XXXXX                 |
|            Total Stops:  XX                    |
|          Multi-Stop No:  X                     |
|   Container No. Prefix:  XXX                   |
|                    POE:  XXX                   |
|________________________________________________|

_________________________________________________
|         |         |       |     |       |       |
| MODIFY  |         |DELETE|ADD  |       |CLEAR  |
|         |         |STOP   |STOP|       |SCREEN |
|_________|_________|______|____|_______|_______|
```

IF:
Keyboard entry of CntnrOwnAbbr.
PERFORM:
Table Validation.

(ii) CntnrNo

IF:
It is not alphanumeric:
DISPLAY:
"Container number must be alphanumeric. Please reenter or press [CANCEL] to return to the main screen."
ELSE:
Accept Container number.

System will match the CntnrNo, and CntnrOwnAbbr w/CntnrMov

IF:
There is no match of CntnrOwnAbbr and CntnrNo:

Accept information as described below:

Consignee

IF: It does not match a valid Ship to AAC in CgoAddress file.
DISPLAY: 'INVALID CONSIGNEE, please reenter or cancel the TXN'. The system will allow the user to reenter the consignee or cancel the transaction.

(iv) Voyage Document Number/Flight Number

IF: It is not ANNNN
DISPLAY: 'Incorrect Voyage Number. Please reenter or cancel this TXN'.
ELSE: Allow the user to reenter the code or cancel the transaction.
IF: It is ANNNN
MATCH:
The system will match the Voyage DocuNoFltNo with Voyage file.
IF:
No Match, proceed to (v) below
ELSE:
DISPLAY:
System will display OceanCarrAbbr, DteSailWPOE, POE on the screen from the Voyage file.

(v) POD

IF: It does not pass the table edit.
DISPLAY: 'Invalid Port Code. Please reenter, press 'HELP', or cancel this TXN.'
IF: Help is chosen, the system will display a scrollable screen of Port Codes. User can select 1 and press 'GO'. System will place selected code onto the screen in the appropriate place.
ELSE: System will allow the user to reenter a code or cancel the TXN.

MATCH: VoyDocuNoFltNo + POD with Voyage Stop file.
IF: No Match, a Voyage Stop and a Voyage file will be created by the process.

The following entries are optional. If there is an entry, however, it must meet the edit/validation criteria as follows:

(vi) TCN

IF: It does not contain 17 positions.
DISPLAY: 'Invalid TCN, please reenter or cancel this TXN'. System will allow user to reenter TCN or cancel the transaction.

IF:
Position 11 of the TCN < > to V.
DISPLAY:
Error Msg.

(vii) OceanCarrAbbr - User may enter this from the keyboard or press 'HELP', which will display a list of valid Ocean Carrier codes. User may select from this help screen, press 'GO', and selected carrier will be placed on the screen. He may also enter it from the keyboard as follows:

IF: It does not pass the table edit.
DISPLAY: 'Invalid Ocean Carrier, please reenter, press 'HELP', or cancel this TXN'.
IF: 'HELP' is chosen, the scrollable screen will be made available to him (as was discussed above).
ELSE: System will allow the user to reenter the code or cancel the transaction.

(viii) Commodity Code - User may enter this from the keyboard or press 'HELP', which will display a list of valid codes. User may select from this help screen, press 'GO', and selected carrier will be placed on the screen. He may also enter it from the keyboard as follows:

IF: It does not pass the table edit.
DISPLAY: 'Invalid please reenter, press 'HELP', or cancel this TXN'.
IF: 'HELP' is chosen, the scrollable screen will be made

available to him (as was discussed above).
ELSE: System will allow the user to reenter the code or cancel the transaction.

(ix) Container Size

User may enter this from the keyboard or press 'HELP', which will display a list of valid container sizes. User may select from this help screen, press 'GO', and selected size will be placed on the screen. He may also enter it from the keyboard as follows:

IF: It does not pass the table edit.
DISPLAY: 'Invalid Container Size, please reenter, press 'HELP', or cancel this TXN'.
IF: 'HELP' is chosen, the scrollable screen will be made available to him (as was discussed above).
ELSE: System will allow the user to reenter the code or cancel the transaction.

(x) DteSailWPOE

IF: The VoyDocuNo + POE that was previously entered do not match an existing voyage, or if WPOE in a matched voyage is blank, the user will enter the WPOE from the keyboard.
PERFORM: JULIAN DATE EDIT

ELSE: The WPOE contained in a matched voyage was moved to the screen when voyage and POD was entered.

(xi) Tot Stop

Stop Indicator must be 01-10

IF:
TotStp is present in CntnrMov, display it on the screen
ELSE:
Accept TotStp from screen.
PERFORM:
Numeric Edit.

(xii) Multi Stop No

The system will allow the user to create up to 10 stops (1-9 and Z).
IF: It is not 1-9 or Z.
DISPLAY: 'Invalid stop number, please enter 1-9 or Z or cancel this TXN'. System will allow the user to reenter the number or cancel the transaction.
IF: It is Z, update Ultimate Consignee with the consignee whose stop number = Z.
IF:
Tot Stop = 1 and Multi Stop No = 1, update Ultimate Consignee.

(xiii) Cntnr No Prefix

IF:
Operator does not enter a prefix, zero fill CntnrNoPrefix
IF:
Operator enters prefix, and it is not alphanumeric
DISPLAY:
Error Msg

(xiv) POE

IF: The VoyDocuNo that was previously entered does not match an existing voyage, or if POE in a matched voyage is blank, the user will enter the POE from the keyboard.

IF: It is not 3 positions alphanumeric.

DISPLAY: 'Invalid Port Code, please cancel or reenter code'. System will allow the user to cancel or reenter the transaction.
ELSE: The POE contained in a matched voyage was moved to the screen when voyage was entered.

User will then press 'GO' and the following outputs will be produced.

ELEMENT	FROM	TO

MultiStpNo	Screen	CntnrMovStp
VanOwner	Screen	CntnrMovStp
VanNumber	Screen	CntnrMovStp
Consignee	Screen	CntnrMovStp
UltmCnsgn (o)	Generated	CntnrMov
CntnrNoPrefix	Screen	CntnrMov
VanOwner	Screen	CntnrMov
VanNumber	Screen	CntnrMov
VoyDocuNoFltNo	Screen	CntnrMov
POD	Screen	CntnrMov
TypeCarrierCode	Screen	CntnrMov
OceanCarrAbbr	Screen	Voyage
DteRecCreat	Generated	CntnrMov
StpNonFcst	Generated	CntnrMovStp

After these outputs are created the following screen will be displayed:

```
-----------------------------------------AKMIWFD--
|    CREATE NON-FORECASTED CONTAINER RECORD      |
|                                                |
|        Container Owner:  XXXXX                 |
|           Container No:  XXXX                  |
|              Consignee:  XXXXXX                |
|     Voyage Document No:  XXXXX                 |
|                    POD:  XXX                   |
|------------------------------------------------|
|          Container TCN:  XXXXXXXXXXXXXXXXX     |
|     Ocean Carrier Abbr:  XXXX                  |
|         Commodity Code:  XXX                   |
|         Container Size:  XX                    |
|      Date Departed POE:  XXXXX                 |
|            Total Stops:  XX                    |
|          Multi-Stop No:  X                     |
|   Container No. Prefix:  XXX                   |
|                    POE:  XXX                   |
|________________________________________________|

_________________________________________________
|        |        |        |        |        |        |
|MODIFY  |        | DELETE| ADD    |        |CLEAR   |
|        |        |  STOP  | STOP   |        |SCREEN  |
|________|________|________|________|________|________|
```

IF:

There is a match of CntnrOwnAbbr and CntnrNo.

```
            THEN:
                  Perform section  ________.

;
   MAINTAINS:
        CntnrMov-File ;
   MAINTAINS:
        CntnrMovStp-File ;
   MAINTAINS:
        Voyage-File ;
   MAINTAINS:
        VoyageStop-File ;
   EMPLOYS:
        CntnrSize-Tbl ,
        CntnrOwner-Tbl ,
        CgoAddress-File ,
        Commodity-Tbl ,
        CgoPort-Tbl ,
        OceanCarr-Tbl ,
        MEvent-File ;
   ADDS:          CntnrMov-CRec-Upd TO CntnrMov-File ;
   ADDS:          CntnrMovStp-CRec-Upd TO CntnrMovStp-File ;
   ADDS:          Voyage TO Voyage-File ;
   ADDS:          VoyageStop TO VoyageStop-File ;
   REFERENCES:    CntnrMov-CRec-Ref IN CntnrMov-File ;
   REFERENCES:    CntnrSz-CRec-Ref IN CntnrSize-Tbl ;
   REFERENCES:    CMovStp-CRec-Ref IN CntnrMovStp-File ;
   REFERENCES:    CntnrOwn-CRec-Ref IN CntnrOwner-Tbl ;
   REFERENCES:    CgoAddress-CRec-Ref IN CgoAddress-File ;
   REFERENCES:    Voyage IN Voyage-File ;
   REFERENCES:    VoyageStop IN VoyageStop-File ;
   REFERENCES:    Comm-CRec-Ref IN Commodity-Tbl ;
   REFERENCES:    CgoPort-Ref IN CgoPort-Tbl ;
   REFERENCES:    OceanCarr-ETA-Fcst-Ref IN OceanCarr-Tbl ;
   REFERENCES:    MEvent-Ref IN MEvent-File ;
   CREATES:
        CntnrMov ,
        CntnrMovStp ,
        Voyage ,
        VoyageStop ;
   RESPONSIBLE PROBLEM DEFINER IS:
                  'Mitchem' ;
```

6 DEFINE PROCESS General-Message-Process ;
DESCRIPTION;
General Message Process
General Message Process provides the user the capability to create and save message traffic. Messages which are created by other processes can be Displayed, Edited, Renamed, Printed, Deleted and one message can be appended to another message.
;
KEYWORD IS: 'Container' ,
'Freight' ,
'TMAS' ;
SEE MEMO:
TCR-General-Message-Process ;
ATTRIBUTE IS:
SEC-CLASS 'UNCLASSIFIED' ,
PROCESS-MODE 'INTERACTIVE BATCH' ;
PART OF: System-Utilities ;
PROCEDURE;

General Message process will function as a word processer with function keys to assist user to identify the desired function.

Process will be selectable from the main menu.

NOTE: As other process create message traffic, each message created a unique message number using a predefined alpha abbreviation for the message name and using the system calendar function to assign a Year, Month, Date, Hour, Minutes and Seconds message number to make that message number unique.

IF: Used selects General Message Process from main Menu
THEN: Go to the Message Directory and build a names list of all messages resident in the directory
THEN: Advise user of status of process
PROMPT: Please wait...Building name list from Message Directory.
THEN: Display screen below

Please press the desired function Key

You have entered Message File Processing

SELECT desired entry from the

Function Keys below

F1	F2	F3	F4	F5	F6	F7	F8	F9	F10
EXIT	HELP	EDIT/ CREATE	COPY	RENAME	FLOPPY COPIES	PRINT	VIEW	MERGE FILES	DELETE

IF: F1 Pressed
THEN: Exit to Main Menu

IF: F2 Pressed
THEN: Display Screen Below

Press [CANCEL] to remove HELP screen

HELP FOR FUNCTION KEYS

F1 - EXITS the process.
F2 - DISPLAYs this Help Screen.
F3 - EDITs a file if it already exist, CREATEs a new file if it does not already exist.
F4 - COPIES the first file name entered to the new file name you provide. The first file remains unchanged.
F5 - RENAMEs the first file name entered to the new file name you provide. The first file no longer exist by the old name.
F6 - FLOPPY COPIES Allows you to copy from or to a Floppy Disk.
F7 - PRINTs the file entered.
F8 - Allows you to VIEW the file, but no changes can be made.
F9 - MERGEs two individual files into one. The first file name entered will be added to the second file name entered. the first file remain unchanged and the second file now contains both files.
F10 - DELETEs the file entered. After delete, the file cannot be retrieved.

HELP	- Within a process, displays available file list.
CANCEL	- Erases screen and cancels the current process.
FINISH & GO	- Performs the current process and exits current process.
RETURN, SCROLL, PAGE AND ARROW KEYS	- Within HELP, allows you to view other available files.

IF: F3 is pressed
THEN: Display the screen below

```
-----------------------------------------
                EDIT/CREATE
-----------------------------------------

   Enter File Name (30 Characters or Less)

    FILE NAME:_____________________________

-----------------------------------------
```

IF: User wants to create a message
    THEN: Allow the Input of a File Name
    THEN: PROMPT: Enter File Name and press "GO" or Press HELP to select File
IF: User Presses "GO" after entering file Name
    THEN: Search Message Directory
IF: Found Display requested Message
IF: Not Found, Display Blank Screen and allow creation of new message.
IF: User creates a message using the General message process
    THEN: Message will be added to the message directory and be displayed with all other message the next time user "Presses" the HELP Key
IF: HELP Key Pressed
    THEN: Display "AVAILABLE MESSAGE FILE" window as shown Below:

```
-----------------------------------------
                EDIT/CREATE
-----------------------------------------

   Enter File Name (30 Characters or Less)

    FILE NAME:_____________________________

-----------------------------------------


-----------------------------------------
        AVAILABLE MESSAGE FILES
-----------------------------------------

 DDL870831095034
 DELDLV870911135420
-----------------------------------------
```

AVAILABLE MESSAGE FILES Window will be a scrollable file, user will be able to use Arrow Keys or Next/Previous Page Keys. As user scrolls through the file the message name the cursor is on will be displayed on the File Name Line.

IF: F4 is Pressed
THEN: Display Screen Below:

```
-------------------------------------------
                   COPY
-------------------------------------------

  Enter File Names (30 Characters or Less)

 OLD NAME: _____________________________
 NEW NAME: _____________________________

-------------------------------------------
```

IF: User keys in Old and New File Names
THEN: Search Message Directory for Old Name
IF: Available, Copy to New Name File and leave Old File in it original was .
IF: Old File Not Found
THEN: "PROMPT" File not Found. Press [GO] to continue.
IF: HELP is pressed
THEN: Display "AVAILABLE MESSAGE FILES" Window, allow scroll.
THEN: Make Select for OLD File NAME by pressing "GO"
THEN: Key In New File Name
THEN: Copy data from Old Name to New Name and leave Old File in its original was.

IF: F5 is Pressed
THEN: Display the following screen

```
-------------------------------------------
                  RENAME
-------------------------------------------

  Enter File Names (30 Characters or Less)

 OLD NAME: _____________________________
 NEW NAME: _____________________________

-------------------------------------------
```

IF: User keys in Old and New File Names
THEN: Search Message Directory for Old Name
IF: Available, rename old File Name to be the New File Name, the Old File Name will no longer exist.

IF: Old File Not Found
THEN: "PROMPT" File not Found. Press [GO] to continue.
IF: HELP is pressed
THEN: Display "AVAILABLE MESSAGE FILES" Window, allow scroll.
THEN: Make Select for OLD File NAME by pressing "GO"
THEN: Key In New File Name
THEN: Rename old File Name to be the New File Name, the Old File Name will no longer exist.

IF: F6 is Pressed
THEN: Display the Screen below:

You have entered FLOPPY DISKETTE File Processing.

Insert Floppy Diskette Containing the Message Directory.

SELECT desired entry from the Function Keys below.

****

IMPORTANT: 1. To use this procedure, you must have a formatted diskette and,
2. This diskette must contain a directory named MESSAGES. If, not, exit this process (Press F1) and consult the procedures to format a diskette and create a directory.

****

F1	F2	F3	F4	F5	F6	F7	F8	F9	F10
Exit	HELP		Cpy to Floppy			Cpy Fr Floppy			

IF: No formatted diskette with MESSAGES Directory exist.
THEN: Press Exit (F1) Twice and "GO" and "FINISH"
THEN: Key in "AKMADMIN", Press "GO"
THEN: Select "Floppy Functions", Press "GO" and Follow PROMPTS to Initialize Diskette when complete Exit to main Menu.
THEN: Select "BTOS Enviroment" which will provide a Command Line, Key in "C D", Press "RETURN", this will provide a Create Directory, on the New Directory Name Key in "MESSAGES" press "GO". Prompt will tell you when new directory has been created .
THEN: Exit process and "LOGO"
THEN: Key in "MCS", Select "Mov Con Utilities", Right Arrow to General Message, Press "GO".
THEN: Press (F6)

IF: F4 is Pressed
    THEN: Display the screen below
IF: HELP pressed when on File Name
    THEN: Display Message Directory
IF: On Floppy File
    THEN: Allow user to enter File Name

```
-------------------------------------------
       COPY FILE TO FLOPPY DISKETTE
-------------------------------------------

  Enter File Names (30 Characters or Less)

 File Name  : _____________________________
 Floppy File: _____________________________

-------------------------------------------
```

IF: F7 is Pressed
    THEN: Display the screen below
IF: On Floppy File
    THEN: Allow user to enter File Name
IF: HELP pressed when on File Name
    THEN: Display Message Directory

NOTE TO LOUIS THIS DOES NOT SEEM TO BE CORRECT, SHOULD NOT BE A HELP KEY ON THIS FUNCTION.

```
-------------------------------------------
       COPY FILE FROM FLOPPY DISKETTE
-------------------------------------------

  Enter File Names (30 Characters or Less)

 Floppy File: _____________________________
 File Name  : _____________________________

-------------------------------------------
```

IF: F7 is pressed
    THEN: Display the screen below
IF: HELP pressed when on File Name
    THEN: Display Message Directory

```
-------------------------------------------
                  PRINT
-------------------------------------------
```



```
                Enter File Names (30 Characters or Less)

                File Name  : _____________________________

               ------------------------------------------
```

```
IF: F8 is pressed
    THEN: Display the screen below
IF: HELP pressed when on File Name
    THEN: Display Message Directory
```

```
               ------------------------------------------
                                VIEW
               ------------------------------------------

                Enter File Names (30 Characters or Less)

                File Name  : _____________________________

               ------------------------------------------
```



```
IF: F9 is pressed
    THEN: Display the screen below
IF: HELP pressed when on File Name
    THEN: Display Message Directory
```

```
               ------------------------------------------
                                MERGE
               ------------------------------------------

                Enter File Names (30 Characters or Less)

                File Name  : _____________________________

               ------------------------------------------
-------------------------------------------------------------------

 ;
    RESPONSIBLE PROBLEM DEFINER IS:
                    'Cope' ;
```



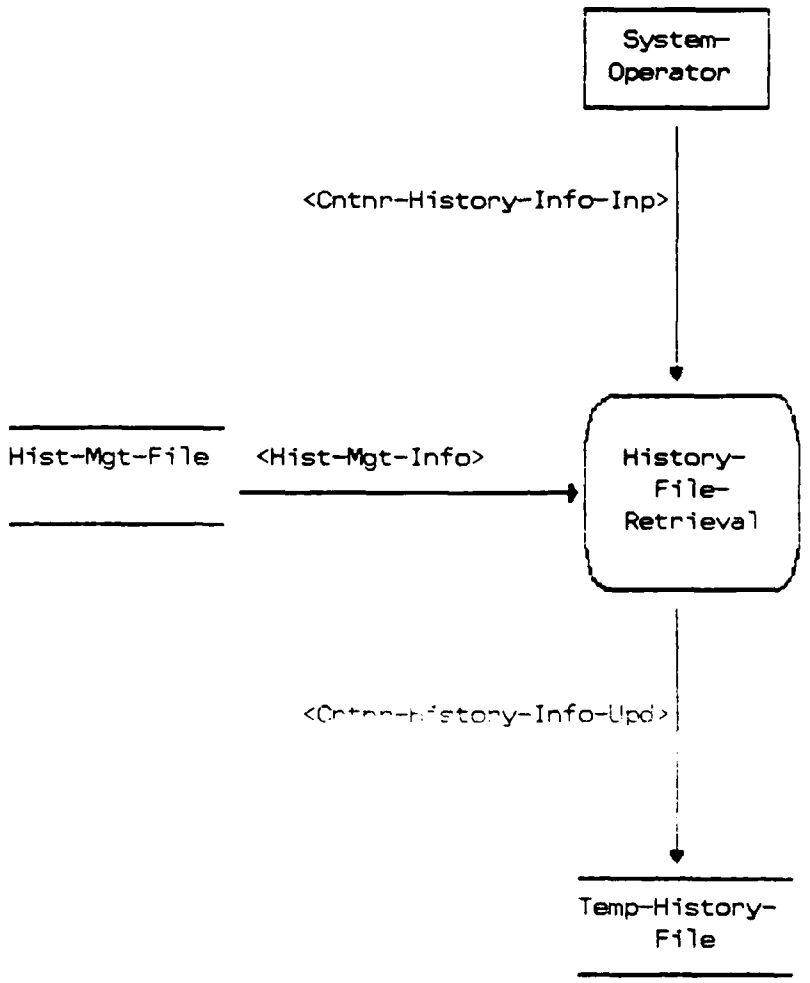

Figure 5. History-File-Retrieval

7 DEFINE PROCESS History-File-Retrieval ;
DESCRIPTION;
History File Retrieval
This process is selected when the user wants to utilize the AD HOC Query process using the History File records. The process allows the user to load history data (Floppy Disks) into the system to run the AD HOC Query process.
;
KEYWORD IS: 'Container' ,
'LOB' ;
SEE MEMO:
TCR-Hist-File-Retrieval-Memo ;
ATTRIBUTE IS:
MEDIA 'FLOPPY DISK' ;
RECEIVES:
Cntnr-History-Info-Inp ;
PART OF: Maintain-Cntnr-History-Records ;
PROCEDURE;

The History Record format is contained in the Select Record for Container History Process.

The key data elements for the History record are as follows:

DteRecCreate
CntnrNo
Consignee
CntnrTCN
VoyDocuNoFltNo
POD
CmdtyCd
CntnrDam
RecngnCfmNoncfm
DivrsnIndic
DteHoldStart
StpNonFcst
(6) EvntDte - (see * on type of EvntDte)
OceanCarrAbbr
TMR

NOTE: All other data elements in the History record are secondary keys.

When the user initially enters the process from the menu, the process will automatically delete all data that is resident in the systems temp history file.

THEN: Display, "Press GO if this is the master station, else press FINISH."

NOTE: This process must be run on the master station.

The system will display a screen to allow the user to enter the dates of the records to be used in the AD HOC Query process.

Example screen and prompts for user entered dates:

ENTER THE JULIAN DATES OF THE RECORDS TO BE USED IN AD HOC QUERY, DO NOT EXCEED 31 DAYS. PRESS CANCEL TO MAKE CORRECTIONS, FINISH TO EXIT, OR GO TO CONTINUE

FROM JULIAN DATE	TO JULIAN DATE
XXXXX	XXXXX

The system must edit the dates entered to insure they are numeric characters only, and do not exceed 31 calendar days. The TO date can't be greater than the Dte Curr. TO date can't be less than FROM date. The cursor must move to the FROM or TO, or the TO, to the FROM date when pressed. The user can backspace to correct dates.

IF: The user presses CANCEL. Delete data filled in on screen

THEN: Display initial prompt.

IF: The user enters an invalid date, display:

1) "Invalid date (if not 5 position AN), press CANCEL and reenter date"
2) "TO date cannot be greater than or equal to today's date"
3) "FROM date cannot be greater than or equal to today's date"

THEN: Press GO

IF: The user enters more than 31 days, display "Maximum number of days is 31, press CANCEL to continue, FINISH to exit."

NOTE: This should be a caution in the users manual.

THEN: After the user presses GO, the system will use the user entered dates to search the Hist-Mgt-File for the corresponding month/

year record data. The system will convert the julian date entered by the user to a calendar year/month to search the Hist-Mgt-File.

THEN: The system will read the number of disks value in the matching record and display prompts to instruct the user to load the correct month disks into the system.

IF: The system does not find a matching month/year disk record in the Hist-Mgt-File, display "No record for (Month Entered) on file, correct dates entered or exit process"

IF: The matching disk record data is found in the Hist-Mgt-File:

THEN: The system will display, example: "Load Jan 87 No 1 disk into the system and press GO".

THEN: After the user loads the correct disk into the system, the data will be moved from the disk to the systems temp history storage as follows:

THEN: As records are loaded to the systems temp History Storage, each Data Element Field will be posted with a Data Element Name that will be used as keys to the data in the History Record Field when the AD HOC Process is run. The Data Element Field Data Names will be part of the AD HOC Process Dictionary.

NOTE: See List of History Record Field Data Names.

HISTORY RECORD FIELD DATA NAMES

DATA ELEMENT	HISTORY RECORD NAME	CC #
DteRecCreate	(SAME AS NAME ON LEFT)	1-5
CntnrNoPrefix	"	6-8
CntnrNo	(SAME AS NAME ON LEFT)	6-13
NOTE: Includes CntnrNoPrefix (CC #6-8)		
CntnrOwnAbbr	(SAME AS NAME ON LEFT)	14-17
Consignee	"	18-23
DupeStpIndex	"	24
CntnrTCN	"	25-41
VoyDocuNoFltNo	"	42-46
OriginMCEPrefix	"	47

MthCd	"	48
SerNo	"	49-52
DestMCEPrefix	"	53
StpSeqNo	"	54
SpIntCd	"	55-56
ModeCd	"	57
TransPriCd	"	58
FWTNo	"	59-70
TIN	"	71-78
POD	"	79-81
TotStp	"	82-83
CntnrSz	"	84-85
CmdtyCd	"	86-88
ModeMethShpmtCd	"	89
DteStageStart	"	90-94
DteStageStop	"	95-99
CntnrDam	"	100
MultiStpNo	"	101
DteRecngnReq	"	102-106
RecngnCfmNoncfm	"	107
DteRecngnCfmNoncfm	"	108-112
DivrsnRecngnCnsgn	(RecngnCnsgn)	113-118
DDDteCarrNotif	(SAME AS NAME ON LEFT)	119-123
DDActlSptDte	"	124-128
DDDteCnsgnReqRelDte	"	129-133
DDDteRel	"	134-138
DDLoc	"	139-163
DivrsnIndic	"	164
DivrsnDte	"	165-169
DivrsnRecngnCnsgn	(DivrsnCnsgn)	170-175
DteHoldStart	(SAME AS NAME ON LEFT)	176-180
DteHoldStop	"	181-185
HoldLoc	"	186-210
StpNonFcst	"	211
* EvntDte	Arrival Dte	212-216
EvntDte	Unload Dte	217-221
EvntDte	Unload Discrp Dte	222-226
EvntDte	Notif Carr Dte	227-231
EvntDte	Carr P/U Dte	232-236
* EvntDte	TM2 EvntDte	237-241
AACCurr	TM2 Requestor	242-247
NewEvntLoc	TM2 NewEvntLoc	248-253
RsnDenyCd	TM2 RsnDeny	254-255
* EvntDte	TM3 EvntDte	256-260
AACCurr	TM3 Requestor	261-266
DspoActv	TM3 Releasor	267-272
RsnDenyCd	TM3 RsnDeny	273-274
* EvntDte	TMS EvntDte	275-279
* EvntDte	First Elec On Dte	280-284

EvntDte	First Elec Off Dte	285-289
EvntDte	Second Elec On Dte	290-294
EvntDte	Second Elec Off Dte	295-299
EvntDte	First Gas On Dte	300-304
EvntDte	First Gas Off Dte	305-309
EvntDte	Second Gas On Dte	310-314
EvntDte	Second Gas Off Dte	315-319
* EvntDte	TTW EvntDte	320-324
EvntDte	(SAME AS NAME ON LEFT)	325-329
NewMovNo	"	330-349
OceanCarrAbbr	"	350-353

TMR Prefix 47-52

NOTE: Includes all TMR Prefix elements

TMR 47-58

NOTE: Includes all TMR elements

IF: The wrong disk is entered into the system,
Display: "Wrong diskette mounted, remove diskette."

NOTE: This prompt will appear anytime the user enters the incorrect disk into the system. The system must verify that the disk entered matches the disk prompt instructions, (Year and Month of Disk).

Then the system will continue to provide instruction prompts to the user to load all disks that contain the data required by the user entered dates on the process screen.

Example: If the user entered the following dates on the screen:

FROM JULIAN DATE	TO JULIAN DATE
87001 = (1 JAN 87)	87060 = (1 MAR 87)

And the Hist-Mgt-File contained the following data:

JAN 87/ 2 DISKS/ 200 RECORDS
FEB 87/ 1 DISK/ 100 RECORDS
MAR 87/ 1 DISK/ 50 RECORDS

THEN: The system would display prompts to load the following disks: The next prompt will appear after the user enters the correct disk and presses GO.

"LOAD JAN 87 NO 1 DISK AND PRESS GO"

"LOAD JAN 87 NO 2 DISK AND PRESS GO"
"LOAD FEB 87 NO 1 DISK AND PRESS GO"
"LOAD MAR 87 NO 1 DISK AND PRESS GO"

THEN: The system will move the records that fall between the user entered dates on the screen.

THEN: The system will display, "Records being moved to AD HOC file" as records are being transferred from disks to the systems temp storage.

Example From Above: The system will move all records on the Jan disks, all records on the Feb disk, and only the records on the Mar disk that have a Dte Rec Create data of 87060 (1 Mar 87). The remainder of the records on the Mar disk will not be moved to the systems temp history file.

THEN: The system will display the total number of records within the dates entered, using Dte Rec Create dates that are within the user entered dates.

DISPLAY, Example From Above "302 records moved to AD HOC file from (87001 to 87060)."
NOTE: Only 2 records in Mar disk had Dte Rec Create dates of 1 Mar (87060).

THEN DISPLAY:
Press FINISH to exit to menu and select AD HOC Query process.

NOTE: The users manual must inform the user that he must access the AD HOC process using the AD HOC file name of "History Temp" and directory "AKMdata".
;

```
UPDATES:
     Temp-History-File ;
EMPLOYS:
     Hist-Mgt-File ;
ADDS:          Cntnr-History-Info-Upd TO Temp-History-File ;
REFERENCES:    Hist-Mgt-Info IN Hist-Mgt-File ;
CREATES:
     Cntnr-History-Info-Upd ;
RESPONSIBLE PROBLEM DEFINER IS:
               'Valentine' ;
```

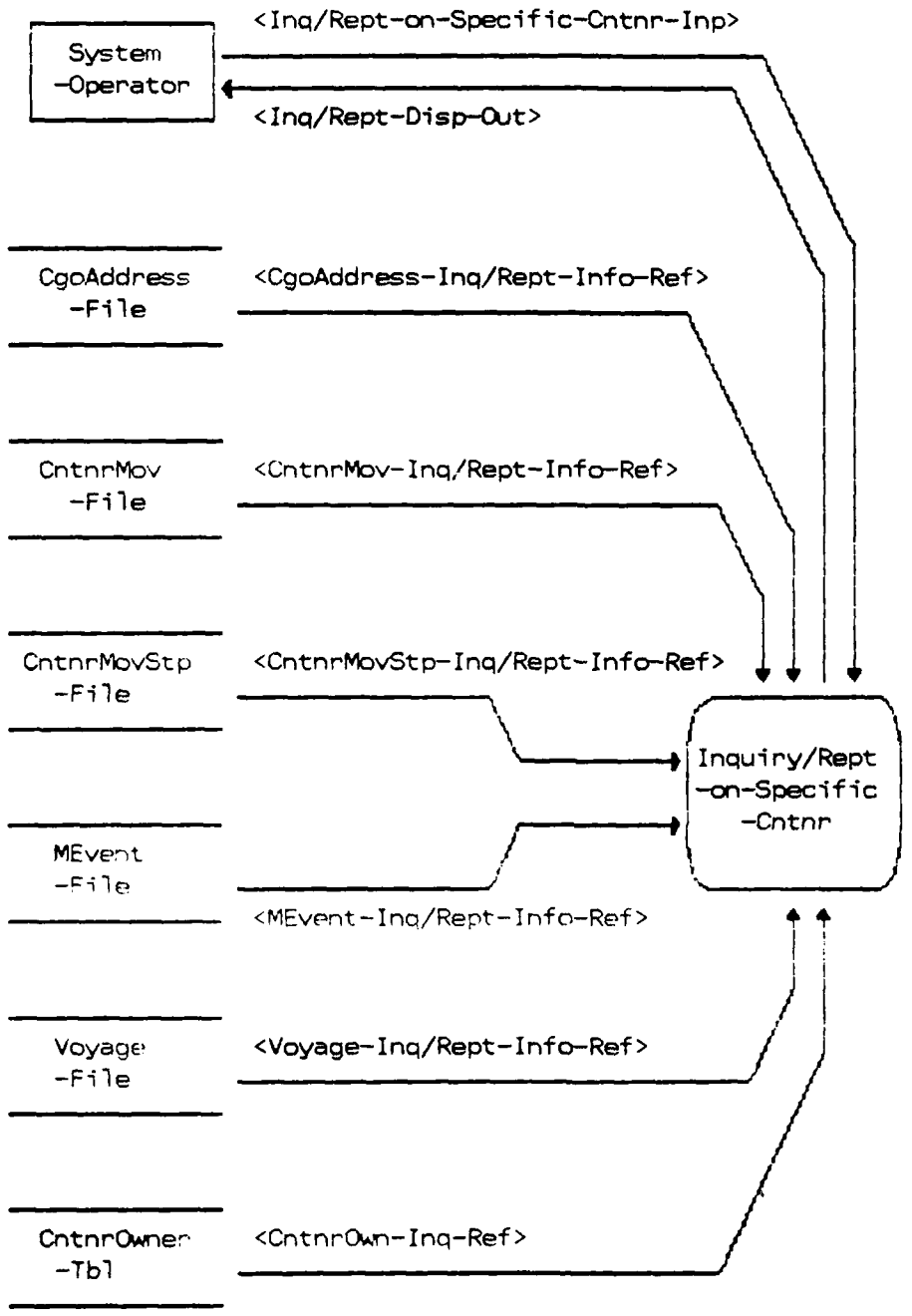

Figure 6. Inquiry/Rept-on-Specfic-Cntnr

8 DEFINE PROCESS Inquiry/Rept-on-Specific-Cntnr ;
DESCRIPTION;
Inquiry/Report on Specific Container
This process allows the user to view and print a predetermined array of database information from the Container Move, Container Move Stop, and Movement Events Files about a specific container.
;
KEYWORD IS: 'Container' ,
'LOB' ;
SEE MEMO:
TCR-Inq/Rept-Spec-Cntnr-Memo ;
GENERATES:
Inq/Rept-Disp-Out ;
RECEIVES:
Inq/Rept-on-Specific-Cntnr-Inp ;
PART OF: Prepare-Container-Reports ;
PROCEDURE;

1.) IF: The user selects the "Container Inquiry" process from the "Master Menu" screen, the system will display the first process screen.

DISPLAY: First Process Screen
System will organize on scrollable screen CntnrMov information so that CntnrOwnAbbr is in alpha order, and within CntnrOwnAbbr order, in CntnrNo sequence. The TCN, VoyDocuNoFltNo, and POD will also be displayed. A prompt will be displayed stating "Select desired entry, then select function."

CONTAINER OWNER	CONTAINER NUMBER	TCN	VOYAGE NO	POD
XXXXX	XXXXX	XXXXXXXXXXXXXXXXX	XXXXX	XXX
XXXXX	XXXXX	XXXXXXXXXXXXXXXXX	XXXXX	XXX
XXXXX	XXXXX	XXXXXXXXXXXXXXXXX	XXXXX	XXX
XXXXX	XXXXX	XXXXXXXXXXXXXXXXX	XXXXX	XXX
XXXXX	XXXXX	XXXXXXXXXXXXXXXXX	XXXXX	XXX

QUIT	BY CNTNR	BY AAC	BY TCN	BY MULTI-STP	BY VOYAGE	BY OWNER	SHOW RECORD

System will display screen as above. At this time, a highlight bar will be on the first line of information. By scrolling the highlight bar, the user may select the

desired container records.

ELSE: The System Operator can press <QUIT> which will display a prompt stating, "Exit to menus? Press <GO> to confirm, <CANCEL> to deny".

IF: The <GO> key is pressed.

THEN: The system will return to the "Master Menu" screens.

2.) IF: The function key <SHOW RECORD> is pressed.

THEN: System will select and display information from CntnrMov about the container highlighted.

MOVE:

CntnrOwnAbbr, CntnrNo, CntnrTCN, ModeCd, CntnrSz, UltmCnsgn, TotStp, StgIndic, CmdtyCd, and DteLst-UpdCntnr, from CntnrMov to the screen.

DISPLAY:

The system will then display the screen below.

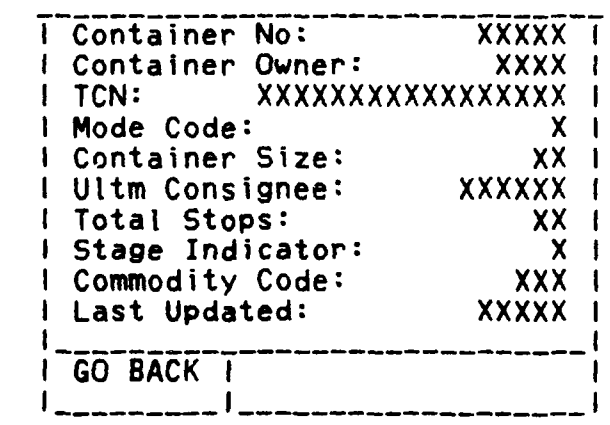

IF: User presses <GO BACK>.

THEN: System will return to the previous screen.

3.) IF: The function key <BY CNTNR> is pressed.

THEN: System will create a window so that user may enter a

CntnrNo as shown below:

DISPLAY: The system will then display the screen below with a prompt stating, "Enter partial Container Number, press <RETURN>, or <CANCEL>".

```
 ____________
|  CntnrNo   |
|    XXXXX   |
|____________|
```

a.) IF:

The user presses the <RETURN> key (Screen Blank):

DISPLAY: System will display the first process screen as below with a prompt stating "Select desired entry, then select function."

CONTAINER OWNER	CONTAINER NUMBER	TCN	VOYAGE NO	POD
XXXXX	XXXXX	XXXXXXXXXXXXXXXX	XXXXX	XXX
XXXXX	XXXXX	XXXXXXXXXXXXXXXX	XXXXX	XXX
XXXXX	XXXXX	XXXXXXXXXXXXXXXX	XXXXX	XXX
XXXXX	XXXXX	XXXXXXXXXXXXXXXX	XXXXX	XXX
XXXXX	XXXXX	XXXXXXXXXXXXXXXX	XXXXX	XXX

QUIT	BY CNTNR	BY AAC	BY TCN	BY MULTI-STP	BY VOYAGE	BY OWNER	SHOW RECORD

NOTE: When the above scrollable screen is displayed the system will organize the information in CntnrNo order, starting with the first container in the database.

b.) IF:

The function key <Show Record> is pressed.

THEN: Perform Show Record procedure in paragraph 2.

c.) IF:

Keyboard Entry.

THEN: Perform partial key lookup of 1-5 digits of CntnrNo.

DISPLAY: System will display first process screen as follows with a prompt stating "Select desired entry, then select function."

CONTAINER OWNER	CONTAINER NUMBER	TCN	VOYAGE NO	POD
XXXXX	XXXXX	XXXXXXXXXXXXXXXX	XXXXX	XXX
XXXXX	XXXXX	XXXXXXXXXXXXXXXX	XXXXX	XXX
XXXXX	XXXXX	XXXXXXXXXXXXXXXX	XXXXX	XXX
XXXXX	XXXXX	XXXXXXXXXXXXXXXX	XXXXX	XXX
XXXXX	XXXXX	XXXXXXXXXXXXXXXX	XXXXX	XXX

QUIT	BY CNTNR	BY AAC	BY TCN	BY MULTI-STP	BY VOYAGE	BY OWNER	SHOW RECORD

NOTE: When the above scrollable screen is displayed, the system will organize the information in CntnrNo, or partial CntnrNo sequence, starting with the CntnrNo or partial CntnrNo entered in the window at the top of the screen.

d.) IF:
The function key <Show Record> is pressed.

THEN: Perform Show Record procedure in paragraph 2.

4.) IF: The function key <BY AAC> is pressed.

THEN: System will create a window so that the user may enter a DODAAC as below:

DISPLAY: The system will then display the screen below with a prompt stating "Enter DODAAC, press <RETURN> or press <HELP> or <CANCEL>.

Consignee
XXXXXX

a.) IF: The user presses the <RETURN> key with the screen blank.

THEN: The system will display a prompt stating, "Field Required. Press <HELP> for a list of,

or <CANCEL>".

b.) IF: The user enters a partial DODAAC or DODAAC which is not contained in the files.

THEN: The system will display a prompt stating, "DODAAC not on file. Press <HELP> for list of DODAACs".

c.) IF: The user presses <HELP> (screen blank)

DISPLAY: System will display the following scrollable screen with a prompt stating "Select desired entry, then select function."

DODAAC	Description
XXXXXX	XXX(35)XXX
XXXXXX	XXXXXXXXXX
XXXXXX	XXXXXXXXXX
XXXXXX	XXXXXXXXXX
XXXXXX	XXXXXXXXXX

Clear Screen	Code Ord	Descr Ord	Select Record

NOTE: When the above scrollable screen is displayed, the system will organize all CgoAddress information in DODAAC alpha-numeric order. User may then scroll through the Cgo-Address information to the desired DODAAC.

d.) IF: The user does not know the DODAAC and presses the function key <Descr Order>.

THEN: The system will display the screen below with a prompt stating "Enter Prefix, if desired, or press <CANCEL> or <FINISH>".

DISPLAY:

PREFIX
XXXXXXXXXXXXXXXX

e.) IF: The user presses <RETURN>

DISPLAY: System will display the following scrollable screen with a prompt stating "Select desired entry, then select function".

DODAAC	Description
XXXXXX	XXX(35)XXX
XXXXXX	XXXXXXXXXX
XXXXXX	XXXXXXXXXX
XXXXXX	XXXXXXXXXX
XXXXXX	XXXXXXXXXX

Clear Screen	Code Ord	Descr Ord	Select Record

NOTE: When the above scrollable screen is displayed, the system will organize all CgoAddress information in description alphanumeric order. User may then scroll through the CgoAddress information to the desired DODAAC.

f.) IF: The user presses function key <Code Ord>.

THEN: The system will display the screen below with a prompt stating "Enter Prefix, if desired, or press <CANCEL> or <FINISH>".

DISPLAY:

PREFIX
XXXXXXXXXX

g.) IF: User presses <RETURN>.

DISPLAY: System will display the following scrollable screen with a prompt stating "Select desired entry, then select function".

DODAAC	Description

	xxxxxx	xxxx(35)xxxx	
	xxxxxx	xxxxxxxxxxx	
	xxxxxx	xxxxxxxxxxx	
	xxxxxx	xxxxxxxxxxx	
	xxxxxx	xxxxxxxxxxx	
Clear Screen	Code Ord	Descr Ord	Select Record

NOTE: When the above scrollable screen is displayed, the system will organize all CgoAddress information in code alphanumeric order. User may then scroll through the CgoAddress information to the desired DODAAC.

h.) IF: User presses <Select Record>.

DISPLAY: System will display the following scrollable screen with a prompt stating "Select desired entry, then select function."

ELSE: The system will display the screen below with the data fields blank and a prompt stating, "No records selected, press <FINISH>/<CANCEL>".

Consignee: XXXXXX	
Container No.	Multi Stop No.
XXXXX	X
XXXXX	X
XXXXX	X
XXXXX	X
XXXXX	X
Go Back	Show Detail

NOTE: System will then display the CntnrNo and MultiStpNo on a scrollable screen in CntnrNo sequence with the

highlight bar on the first line of information:

i.) IF: User highlights the desired container/multi-stop and presses the function key <Show Detail>.

THEN: System will display the following screen.

MOVE:

TMRPrefix, SpIntCd, TransPriCd, ModeCd, CntnrDam, DteStageStart, and DteStageStop, from CntnrMov. DestMCEPrefix, StpSeqNo, Divrsn-Indic, RecngnCfmNonCfm, Divrsn-RecngnCnsgn, DDActlSptDte, Dte-HoldStart, DteHoldStop, from CntnrMovStp, and MovEvntCd, EvntTy, EvntDte from MEvent to the screen.

DISPLAY:

Container No: XXXXXXXX	
TMR:	XXX(12)XXX
Staged:	
Start Date:	XXXXX
Stop Date:	XXXXX
Hold:	
Start Date:	XXXXX
Stop Date:	XXXXX
Diverted to:	XXXXXX
Reconsigned to:	XXXXXX
Damaged/Deadlined:	X
Delayed Delivery: (Y or N)	X
Actual Spot Date:	XXXXX
Consignee:	
Arrival Date:	XXXXX
Empty Date:	XXXXX
Carrier Notified Date:	XXXXX
Carrier Pick-Up Date:	XXXXX

Go Back

j.) IF: User presses <Go Back>.

THEN: System will return to the previous

screen.

k.) IF:

Keyboard Entry with full 6 digits.

DISPLAY:

System will display the following scrollable screen with a prompt stating, "Select desired entry, then select function."

Consignee: XXXXXX	
Container No.	Multi Stop No.
XXXXX	X
XXXXX	X
XXXXX	X
XXXXX	X
XXXXX	X
Go Back	Show Detail

NOTE: System will then display the CntnrNo and MultiStpNo on a scrollable screen as above.

l.) IF: User highlights the desired container/multi-stop and presses <Show Detail>.

THEN: Repeat procedures specified in paragraph 4i.

m.) IF: User presses <Go Back>.

THEN: Repeat procedures specified in paragraph 4j.

n.) IF:

Less than 6 digits are entered:

THEN: Perform partial key look-up on ShiptoAAC in CgoAddress and repeat procedures specified in paragraphs 4a thru 4j.

5.) IF: The function key <By TCN> is pressed.

THEN: System will create a window so that user may enter a CntnrTCN as shown below.

DISPLAY: The system will then display the screen below with a prompt stating "Enter partial TCN, press <RETURN> or <CANCEL>."

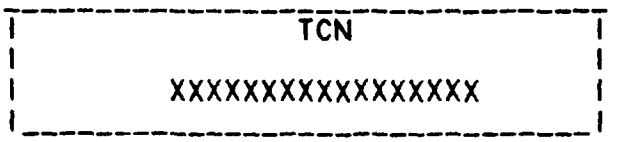

a.) IF:

User presses RETURN (Screen Blank):

DISPLAY: System will redisplay the first process screen with a prompt stating "Select desired entry, then select function."

CONTAINER OWNER	CONTAINER NUMBER	TCN	VOYAGE NO	POD
XXXXX	XXXXX	XXXXXXXXXXXXXXXX	XXXXX	XXX
XXXXX	XXXXX	XXXXXXXXXXXXXXXX	XXXXX	XXX
XXXXX	XXXXX	XXXXXXXXXXXXXXXX	XXXXX	XXX
XXXXX	XXXXX	XXXXXXXXXXXXXXXX	XXXXX	XXX
XXXXX	XXXXX	XXXXXXXXXXXXXXXX	XXXXX	XXX

QUIT	BY CNTNR	BY AAC	BY TCN	BY MULTI-STP	BY VOYAGE	BY OWNER	SHOW RECORD

NOTE: When the above scrollable screen is displayed, the system will organize the Container Move information in CntnrTCN order, starting with the first container in the database.

b.) IF:

The function key <Show Record> is pressed.

THEN: Perform Show Record procedure in paragraph 2.

c.) IF:
Keyboard Entry:

THEN: Perform partial key look-up of 1-17 digits of Container TCN and repeat procedures specified in paragraph 5a and 5b.

6.) IF: The function key <By MultiStpNo> is pressed.

THEN: System will use the CntnrNo and CntnrOwnAbbr highlighted on the first process screen to search CntnrMovStp.

DISPLAY:
System will organize, on a scrollable screen, CntnrMovStp information so that Consignees for all the stops are in MultiStpNo order. A prompt will be displayed stating "Select desired entry, then select function."

Container No:	XXXXX
Consignee	Multi Stop No
XXXXXX	X
XXXXXX	X
XXXXXX	X
XXXXXX	X
XXXXXX	X
Go Back	Show Details

NOTE: When the above screen is displayed, a highlight bar will be on the first line of the information.

IF: User highlights the desired consignee/multi-stop and presses <Show Detail>.

Then: The screen below will be displayed and prompts and procedures specified in paragraph 4i and 4j apply.

```
_____________________________________________
|  Container No:     XXXXX                  |
|____________________________________________|
|  TMR:                          XXX(12)XXX |
|  Staged:                                  |
|    Start Date:                 XXXXX      |
|    Stop Date:                  XXXXX      |
|  Hold:                                    |
|    Start Date:                 XXXXX      |
|    Stop Date:                  XXXXX      |
|  Diverted to:                  XXXXXX     |
|  Reconsigned to:               XXXXXX     |
|  Damaged/Deadlined:            X          |
|  Delayed Delivery: (Y or N)    X          |
|    Actual Spot Date:           XXXXX      |
|  Consignee:                               |
|    Arrival Date:               XXXXX      |
|    Empty Date:                 XXXXX      |
|    Carrier Notified Date:      XXXXX      |
|    Carrier Pick-Up Date:       XXXXX      |
|____________________________________________|
|  Go Back |
|__________|
```

7.) IF: The function key <By Voyage> is pressed.

THEN: System will create a window so that the user may enter a VoyDocuNoFltNo as shown below.

DISPLAY: The system will then display the screen below with a prompt stating "Enter Voyage No, press <RETURN> or press <HELP> or <CANCEL>."

```
_____________
|  Voyage No |
|    XXXXX   |
|____________|
```

a.) IF: The user presses <RETURN> (Screen Blank)

THEN: The system will display a prompt stating, "Required ELement. Must enter, or <CANCEL>".

b.) IF: The user enters a partial Voyage No. and presses the <RETURN> key.

THEN: The system will display a prompt stating,

"Must enter five position Voyage Number."

c.) IF: The user enters a complete Voyage Number and presses <RETURN>.

THEN: System will display the screen below with a prompt stating "Select desired entry, then select function".

CONTAINER OWNER	CONTAINER NUMBER	TCN	VOYAGE NO	POD
XXXXX	XXXXX	XXXXXXXXXXXXXXXXX	XXXXX	XXX
XXXXX	XXXXX	XXXXXXXXXXXXXXXXX	XXXXX	XXX
XXXXX	XXXXX	XXXXXXXXXXXXXXXXX	XXXXX	XXX
XXXXX	XXXXX	XXXXXXXXXXXXXXXXX	XXXXX	XXX
XXXXX	XXXXX	XXXXXXXXXXXXXXXXX	XXXXX	XXX

Container with Voyage Number = XXXXX

QUIT	BY CNTNR	BY AAC	BY TCN	BY MULTI-STP	BY VOYAGE	BY OWNER	SHOW RECORD

NOTE: When the above scrollable screen is displayed, the system will organize the Container Move information in Voyage No alphanumeric order and within Voyage No in POD alphanumeric order.

d.) IF:

The user desires the Ocean Carrier associated with a Voyage and presses <HELP> (Screen Blank).

THEN: System will arrange VoyDocuNoFltNo in Voyage number order and display Ocean Carrier associated with the Voyage on a scrollable screen with a prompt stating "Select desired entry, then select function."

DISPLAY:

Voyage No	Ocean Carr
XXXXX	XXXX



```
                 |    XXXXX    |   XXXX  |
                 |    XXXXX    |   XXXX  |
                 |    XXXXX    |   XXXX  |
                 |    XXXXX    |   XXXX  |
 ________________|_____________|_________|_________
| Clear          |     By      |   By    | Select |
| Screen         |   Voyage    |  Carr   | Record |
|________________|_____________|_________|________|
```

e.) IF: The user wants the information in Ocean Carr order and presses the function key <By Carr>.

THEN: The system will display the screen below with a prompt stating "Enter Prefix, then <RETURN>, or press <CANCEL>, or <FINISH>."

DISPLAY:



```
 ____________________
|      Prefix        |
|       XXXX         |
|____________________|
```

f.) IF: User presses <RETURN> (Screen Blank).

THEN: System will arrange Voyage information in OceanCarrAbbr alphabetic order and display the VoyageNo associated with the carrier on a scrollable screen with a prompt stating "Select desired entry, then select function."

```
                 ____________________________
                 |  Voyage No  |  Ocean  |
                 |             |   Carr  |
                 |_____________|_________|
                 |    XXXXX    |   XXXX  |
                 |    XXXXX    |   XXXX  |
                 |    XXXXX    |   XXXX  |
                 |    XXXXX    |   XXXX  |
                 |    XXXXX    |   XXXX  |
 ________________|_____________|_________|_________
| Clear          |     By      |   By    | Select |
| Screen         |   Voyage    |  Carr   | Record |
|________________|_____________|_________|________|
```

g.) IF: User presses function key <By Voyage>.



Then: The system will display the screen below with a prompt stating "Enter Prefix, then <RETURN>, or press <CANCEL> or <FINISH>".

DISPLAY:

PREFIX
XXXXXXXXXX

h.) IF: User presses <RETURN> (Screen Blank).

THEN: The system will organize the Voyage information in VoyageNo alphanumeric order and display the carrier associated with the VoyageNo on a scrollable screen with a prompt stating "Select desired entry, then select function".

DISPLAY:

Voyage No	Ocean Carr
XXXXX	XXXX
XXXXX	XXXX
XXXXX	XXXX
XXXXX	XXXX
XXXXX	XXXX

Clear Screen	By Voyage	By Carr	Select Record

i.) IF: User highlights a Voyage No and presses <Select Record>.

THEN: The system will display the screen below with a prompt stating, "Select desired entry, then select function".

ELSE: The system will display the screen below with the data fields blank and a prompt stating, "No records selected, press <FINISH>/<CANCEL>".

CONTAINER OWNER	CONTAINER NUMBER	TCN	VOYAGE NO	POD
XXXXX	XXXXX	XXXXXXXXXXXXXXXXX	XXXXX	XXX
XXXXX	XXXXX	XXXXXXXXXXXXXXXXX	XXXXX	XXX
XXXXX	XXXXX	XXXXXXXXXXXXXXXXX	XXXXX	XXX
XXXXX	XXXXX	XXXXXXXXXXXXXXXXX	XXXXX	XXX
XXXXX	XXXXX	XXXXXXXXXXXXXXXXX	XXXXX	XXX

Container with Voyage Number = XXXXX

QUIT	BY CNTNR	BY AAC	BY TCN	BY MULTI-STP	BY VOYAGE	BY OWNER	SHOW RECORD

NOTE: When the above scrollable screen is displayed, the system will organize the Container Move information associated with the Voyage Number, in Container Number sequence.

8.) IF: The function key <By Owner> is pressed.

THEN: The system will create a window so that the user may enter a CntnrOwnAbbr as shown below.

DISPLAY: The system will then display the screen below with a prompt stating, "Enter Cntnr Owner, press <RETURN>, or press <HELP> or <CANCEL>".

Cntnr Owner
XXXX

a.) IF: User presses <RETURN> (Screen Blank)

THEN: The system will display a prompt stating, "Required Element. Must enter, or <CANCEL>".

b.) IF: User enters a partial CntnrOwnAbbr and presses <RETURN>.

THEN: The system will display a prompt stating, "Must enter four position Container Owner".

c.) IF: User enters a complete CntnrOwnAbbr and presses <RETURN>.

AD-A190 393 FUNCTIONAL DESCRIPTION FOR THE DEPARTMENT OF THE ARMY 3/9
MOVEMENT MANAGEMENT..(U) INTERNATIONAL BUSINESS
SERVICES INC PRINCE GEORGE VA DEFENSE S.. W ANCKAITIS
UNCLASSIFIED 31 DEC 87 DSDPG-375-049-87-3-VOL-1 F/G 12/7 NL

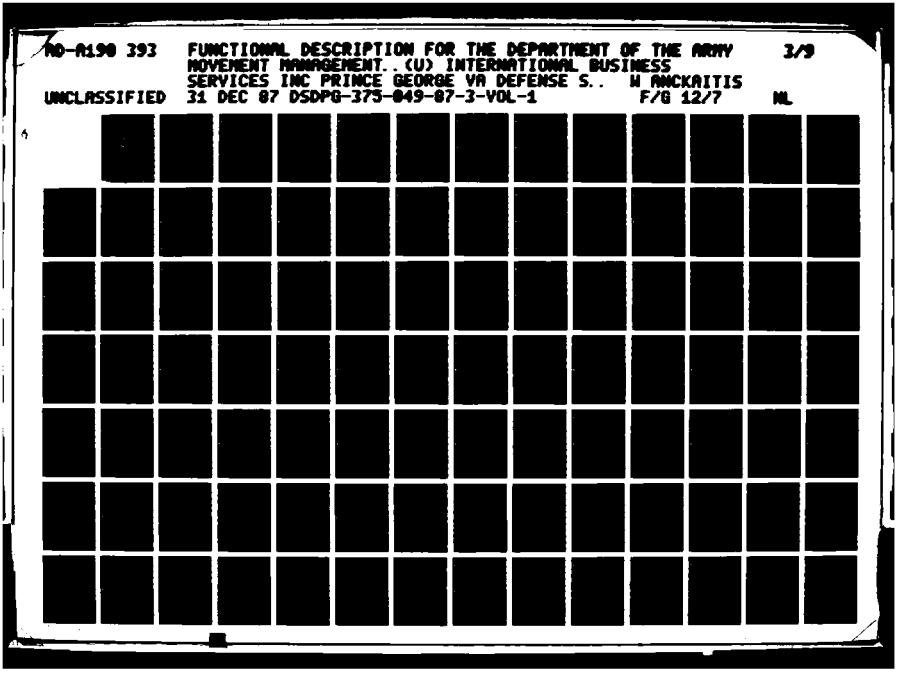

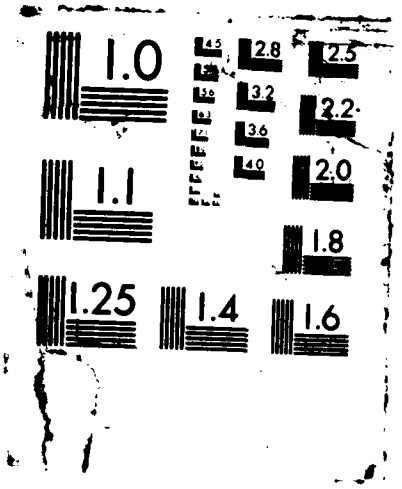
1.0
1.1
1.25
1.4
1.6
1.8
2.0
2.2
2.5
2.8
3.2
3.6
4.0

THEN: The system will display the screen below with a prompt stating, "Select desired entry, then select function".

CONTAINER OWNER	CONTAINER NUMBER	TCN	VOYAGE NO	POD
XXXXX	XXXXX	XXXXXXXXXXXXXXXX	XXXXX	XXX
XXXXX	XXXXX	XXXXXXXXXXXXXXXX	XXXXX	XXX
XXXXX	XXXXX	XXXXXXXXXXXXXXXX	XXXXX	XXX
XXXXX	XXXXX	XXXXXXXXXXXXXXXX	XXXXX	XXX
XXXXX	XXXXX	XXXXXXXXXXXXXXXX	XXXXX	XXX

Container with Container Owner = XXXX

QUIT	BY CNTNR	BY AAC	BY TCN	BY MULTI-STP	BY VOYAGE	BY OWNER	SHOW RECORD

NOTE: When the above scrollable screen is displayed, the system will organize the Container Move information associated with the Container Owner, in Container Number sequence.

d.) IF: User desires a listing of the Container Owners and presses <HELP> (Screen Blank).

THEN: System will display Container Owner Abbreviation and Owner Names on a scrollable screen with a prompt stating, "Select desired entry, then select function".

DISPLAY:

Container Owner Abbr	Name
XXXX	XXXX(25)XXXX
XXXX	XXXXXXXXXXX
XXXX	XXXXXXXXXXX
XXXX	XXXXXXXXXXX
XXXX	XXXXXXXXXXX

Clear	By	By	Select

Screen	Abbr	Name	Record

e.) IF: The user wants the information in CntnrOwnNme order and presses the function key <By Name>.

THEN: The system will display the screen below with a prompt stating, "Enter Prefix, then <RETURN>, or press <CANCEL> or <FINISH>".

DISPLAY:

PREFIX
XXXXXXXXXXXXXXX

f.) IF: The user presses <RETURN> (Screen Blank).

THEN: The system will arrange Container Owner information in CntnrOwnNme alphabetic order and display the CntnrOwnAbbr associated with the CntnrOwnNme on a scrollable screen with a prompt stating "Select desired entry, then select function".

DISPLAY:

Container Owner Abbr	Name
XXXX	XXXX(25)XXXX
XXXX	XXXXXXXXXXX
XXXX	XXXXXXXXXXX
XXXX	XXXXXXXXXXX
XXXX	XXXXXXXXXXX

Clear Screen	By Abbr	By Name	Select Record

g.) IF: The user wants the information in CntnrOwnAbbr order and presses the function key <By Abbr>.

THEN: The system will display the screen below with a prompt stating, "Enter Prefix, then <RETURN>, or press <CANCEL> or <FINISH>".

DISPLAY:

PREFIX
XXXXXXXXXXXXXXX

h.) IF: The user presses <RETURN> (Screen Blank).

THEN: The system will arrange Container Owner information in CntnrOwnAbbr alphabetic order and display the CntnrOwnNme associated with the CntnrOwnAbbr on a scrollable screen with a prompt stating "Select desired entry, then select function".

DISPLAY:

Container Owner Abbr	Name
XXXX	XXXX(25)XXXX
XXXX	XXXXXXXXXXX
XXXX	XXXXXXXXXXX
XXXX	XXXXXXXXXXX
XXXX	XXXXXXXXXXX

Clear Screen	By Abbr	By Name	Select Record

i.) IF: The user highlights a Container Owner and presses <Select Record>.

THEN: The system will display the screen below with a prompt stating, "Select desired entry, then select function".

ELSE: The system will display the screen below with the data fields blank and a prompt stating, "No records selected, press <FINISH>/<CANCEL>".

CONTAINER OWNER	CONTAINER NUMBER	TCN	VOYAGE NO	POD

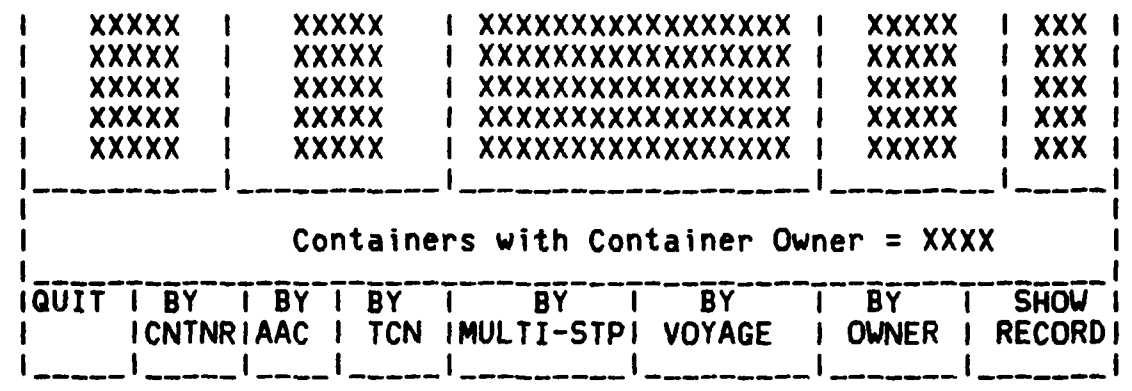

;

```
EMPLOYS:
     CntnrMov-File ,
     CntnrMovStp-File ,
     MEvent-File ,
     Voyage-File ,
     CgoAddress-File ,
     CntnrOwner-Tbl ;
REFERENCES:    CntnrMov-Inq/Rept-Info-Ref IN CntnrMov-File ;
REFERENCES:    CntnrMovStp-Inq/Rept-Info-Ref IN CntnrMovStp-File ;
REFERENCES:    MEvent-Inq/Rept-Info-Ref IN MEvent-File ;
REFERENCES:    Voyage-Inq/Rept-Info-Ref IN Voyage-File ;
REFERENCES:    CgoAddress-Inq/Rept-Info-Ref IN CgoAddress-File ;
REFERENCES:    CntnrOwn-Inq-Ref IN CntnrOwner-Tbl ;
RESPONSIBLE PROBLEM DEFINER IS:
               'Morris' ;
```

```
9    DEFINE PROCESS                          Maintain-Cntnr-History-Records ;
       SUBPART IS:     Sel-Rec-for-Cntnr-History-DB ,
                       History-File-Retrieval ;
       PART OF:        Prepare-Container-Reports ;
```

```
10   DEFINE PROCESS                          Maintain-Container-Database ;
       KEYWORD IS:     'Container' ,
                       'LOB' ;
       SUBPART IS:     Create-Container-Remarks ,
                       Create-Non-Fcst-Container-Rec ,
                       Prep-Daily-Container-Worksheet ,
                       Capture-TMR ,
                       Notify-Cnsgn-of-Inbound-Cntnr ,
                       Update-Cntnr-Record ,
                       Rec+Report-Cntnr-Mov-Events ;
       PART OF:        Manage-Container-Operations ;
```

11 DEFINE PROCESS Maintain-Parameter-Tbl ;
DESCRIPTION;
Maintain Parameter Table
This process allows the System Administrator to review, change, and print parameter values contained in the System Parameter Table.
;
KEYWORD IS: 'Container' ,
'Freight' ,
'LOB' ;
SEE MEMO:
TCR-Maint-Parameter-Tbl-Memo ;
GENERATES:
Maint-Parameter-Tbl-Disp-Out ,
Maint-Param-Tbl-Print-Rept-Out ;
RECEIVES:
Maintain-Parameter-Tbl-Inp ;
PART OF: System-Utilities ;
PROCEDURE;

1.) IF:
The System Administrator selects the "Maintain Parameter Table" process from the "Master Menu" screen, the system will display the first process screen.

DISPLAY:
First Process Screen
The system will then display the screen below with a prompt stating "Enter data in selected field". The cursor will be displayed on the blank space to the right of "Select Options".

==========

SYSTEM PARAMETERS

1 Container Operations
2 Movement Control
3 Freight Operations
4 All Movement Operations
5 Print All Parameters

Select Options: -(1)-

Enter 1, 2, 3, 4, or 5.....Press <GO>

==========

2.) IF:
The value (1) is entered in the "Select Option" space and the

<GO> key is pressed, the "System Parameters" screen will be displayed.

MOVE:

The parameters and values:
Cntnr-History-Sel-Criteria,
Cntnr-Deletion-Criteria, Cntnr-On-Hand-Over-X-Criteria,
Cntnr-Origin-Code, Cntnr-Deletion-Notification,
Origin-MCE-Prefix, Origin-DODAAC, to the screen.

ELSE:

The System Administrator can press the <FINISH> key to exit to the "Master Menu" screen.

DISPLAY:

Container Operations screen.
The system will then display the screen below with a prompt stating, "Select parameter and enter value, Press <HELP> or <FINISH>". The cursor will be displayed on the first value opposite the "Select Record for Container History".

SYSTEM PARAMETERS

NAME	VALUE
Select Record for Container History	45
60 Days Old Deletion Process	55
Containers On Hand Over "X" Days	5
Container Origin Code	F1G
Notification from TMCA of Cntnr Deletion	4
Origin MCE Code	M
Origin DODAAC	WK4FHA

a.) IF:

The <HELP> key is pressed with the cursor on the "Select Record for Container History".

THEN:

The system will display a help screen window containing the following information:

DISPLAY:

Select Record for Container History.

The system will then display the screen below with a prompt stating "Press <CANCEL> to continue".

==========

SELECT RECORD FOR CONTAINER HISTORY

This 2 position number is used to determine when a container record is to be removed from the active file and placed in the Container History File.

Enter number of days. EXAMPLE: 45

==========

IF:

The System Administrator desires to change the "Select Record for Container History" value.

THEN:

The program will allow the System Administrator to change the value by simply using the "Over Type" and/or "Delete" keys and entering the new value. The value entered will be edited to insure that it is numeric and has a field length of two positions.

IF:

The data entered does not meet the edit criteria.

THEN:

The system will display appropriate prompts: "Must be a number....re-enter" or "Must not be greater than 2 positions....re-enter".

IF:

The System Administrator desires to select another value for updating or changing.

THEN:

The program will allow the System Administrator to locate the cursor on any of the other values by pressing a combination of the <RETURN> key or Up and Down Direction Arrow Keys. When any of these keys are pressed, the system will immediately update the System Parameter Table with any changed parameter value.

b.) IF:

The cursor is placed on the "60 Days Old Deletion Process" and

the <HELP> key is pressed.

THEN:

The system will display a help screen window containing the following information:

DISPLAY:

60 Days Old Deletion Process
The system will then display the screen below with a prompt stating "Press <CANCEL> to continue".

==========

60 DAYS OLD DELETION PROCESS

This 2 position number is used to select containers that have been forecasted to arrive, but have not arrived after a pre-determined number of days.

Enter number of days. EXAMPLE: 60

==========

IF:

The System Administrator desires to change the "60 Days Old Deletion Process" value.

THEN:

The program will allow the System Administrator to change the value by simply using the "Over Type" and/or "Delete" keys and entering the new value. The value entered will be edited to insure that it is numeric and has a field length of two positions.

IF:

The data entered does not meet the edit criteria.

THEN:

The system will display appropriate prompts: "Must be a number....re-enter" or "Must not be greater than 2 positions....re-enter".

IF:

The System Administrator desires to select another value for updating or changing.

THEN:

The program will allow the System Administrator to locate the cursor on any of the other values by pressing a combination of the <RETURN> key or Up and Down Direction Arrow Keys. When any of these keys are pressed, the system will immediately update the System Parameter Table with any changed parameter value.

c.) IF:

The cursor is placed on the "Containers On Hand Over "X" Days" and the <HELP> key is pressed.

THEN:

The system will display a help screen window containing the following information:

DISPLAY:

Containers On Hand Over "X" Days
The system will then display the screen below with a prompt stating "Press <CANCEL> to continue"

==========

CONTAINERS ON HAND OVER "X" DAYS

This one position number controls the printing of a report showing containers which have arrived at a stop but have not been discharged.

Enter number of days. EXAMPLE: 5

==========

IF:

The System Administrator desires to change the "Containers On Hand Over "X" Days" value.

THEN:

The program will allow the System Administrator to change the value by simply using the "Over Type" and/or "Delete" keys and entering the new value. The value entered will be edited to insure that it is numeric and has a field length of one position.

IF:

The data entered does not meet the edit criteria.

THEN:

The system will display appropriate prompts: "Must be a number....re-enter" or "Must not be greater than 1 position....re-enter".

IF:

The System Administrator desires to select another value for updating or changing.

THEN:

The program will allow the System Administrator to locate the cursor on any of the other values by pressing a combination of the <RETURN> key or Up and Down Direction Arrow Keys. When any of these keys are pressed, the system will immediately update the System Parameter Table with any changed parameter value.

d.) IF:

The cursor is placed on the "Container Origin Code" and the <HELP> key is pressed.

THEN:

The system will display a help screen window containing the following information:

DISPLAY:

Containers Origin Code
The system will then display the screen below with a prompt stating "Press <CANCEL> to continue".

==========

CONTAINERS ORIGIN CODE

Enter the 3 position container origin code assigned to your activity.

==========

IF:

The System Administrator desires to change the "Containers Origin Code" value.

THEN:

The program will allow the System Administrator to change the value by simply using the "Over Type" and/or "Delete" keys and entering the new value. The value entered will be edited to insure that it

has a field length of three positions and no blank spaces.

IF:

The data entered does not meet the edit criteria.

THEN:

The system will display appropriate prompts: "Code cannot exceed 3 positions....re-enter" or "Field cannot contain blank spaces....re-enter".

IF:

The System Administrator desires to select another value for updating or changing.

THEN:

The program will allow the System Administrator to locate the cursor on any of the other values by pressing a combination of the <RETURN> key or Up and Down Direction Arrow Keys. When any of these keys are pressed, the system will immediately update the System Parameter Table with any changed parameter value.

e.) IF:

The cursor is placed on the "Notification from TMCA of Container Deletion" and the <HELP> key is pressed.

THEN:

The system will display a help screen window containing the following information:

DISPLAY:

Notification from TMCA of Container Deletion
The system will then display the screen below with a prompt stating, "Press <CANCEL> to continue".

==========

NOTIFICATION FROM TMCA OF CONTAINER DELETION

This 1 position number is used to determine the number of days to wait for a reply from 1st TMCA before deleting the container record that has been identified for deletion in the 60 Day Deletion Process.

Enter number of days. EXAMPLE: 5

==========

IF:

The System Administrator desires to change the "Notification from TMCA of Container Deletion" value.

THEN:

The program will allow the System Administrator to change the value by simply using the "Over Type" and/or "Delete" keys and entering the new value. The value entered will be edited to insure that it is numeric and has a field length of one position.

IF:

The data entered does not meet the edit criteria.

THEN:

The system will display appropriate prompts: "Must be a number....re-enter" or "Must not be greater than 1 position....re-enter".

IF:

The System Administrator desires to select another value for updating or changing.

THEN:

The program will allow the System Administrator to locate the cursor on any of the other values by pressing a combination of the <RETURN> key or Up and Down Direction Arrow Keys. When any of these keys are pressed, the system will immediately update the System Parameter Table with any changed parameter value.

f.) IF:

The cursor is placed on the "Origin MCE Code" and the <HELP> key is pressed.

THEN:

The system will display a help screen window containing the following information:

DISPLAY:

Origin MCE Code
The system will then display the screen below with a prompt stating "Press <CANCEL> to continue".

==========

ORIGIN MCE CODE

Enter the 1 position alphabetic
Movements Control Element Code
(MCE Code) assigned to your activity.

==========

IF:

The System Administrator desires to change the "Origin MCE Code" value.

THEN:

The program will allow the System Administrator to change the value by simply using the "Over Type" and/or "Delete" keys and entering the new value. The value entered will be validated against the values found in the CgoMCE Table.

IF:

The value entered matches the MCEPrefix in CgoMCE Tbl.

THEN:

It will be used to update the System Parameter Tbl when the <GO> key is pressed.

IF:

The value entered is not contained in the CgoMCE Tbl.

THEN:

Display a prompt stating "Not a valid code....please re-enter".

IF:

The System Administrator desires to select another value for updating or changing.

THEN:

The program will allow the System Administrator to locate the cursor on any of the other values by pressing a combination of the <RETURN> key or Up and Down Direction Arrow Keys. When any of these keys are pressed, the system will immediately update the System Parameter Table with any changed parameter value.

g.) IF:
The cursor is placed on the "Origin DODAAC" and the <HELP> key is pressed.

THEN:
The system will display a help screen window containing the following information:

DISPLAY:
Origin DODAAC
The system will then display the screen below with a prompt stating "Press <CANCEL> to continue".

==========

ORIGIN DODAAC

Enter the 6 position DODAAC assigned to your activity.

==========

IF:
The System Administrator desires to change the "Origin DODAAC" value.

THEN:
The program will allow the System Administrator to change the value by simply using the "Over Type" and/or "Delete" keys and entering the new value. The value entered will be validated against the values found in the CgoActivity File.

IF:
The value entered matches the AACCurr in CgoActivity File.

THEN:
It will be used to update the System Parameter Tbl when the <GO> key is pressed.

IF:
The value entered is not contained in the CgoActivity File.

THEN:
Display a prompt stating "Not a valid

code....please re-enter".

IF:

The System Administrator desires to select another value for updating or changing.

THEN:

The program will allow the System Administrator to locate the cursor on any of the other values by pressing a combination of the <RETURN> key or Up and Down Direction Arrow Keys. When any of these keys are pressed, the system will immediately update the System Parameter Table with any changed parameter value.

h.) IF:

The System Administrator has completed changing the value(s) in "Container Operations".

THEN:

The System Administrator presses the <FINISH> key. The computer will assign the new value(s) to the appropriate parameter(s) in the System Parameter Table and display the "System Parameters" menu screen (First Process Screen).

THEN:

The System Administrator can press the <FINISH> key which will display the "System Parameters" menu screen (First Process Screen) and a prompt stating "Exit menu? Press <GO> to confirm, or <CANCEL>".

IF:

The System Administrator presses the <GO> key.

THEN:

The system will return to the "Master Menu" screen.

IF:

The System Administrator presses the <CANCEL> key.

THEN:

The system will place the cursor on the blank space to the right of "Select Options".

3.) IF:

The value (2) is entered in the "Select Option" space and the <GO> key is pressed, the "System Parameters" screen will be displayed.

MOVE:

Origin-MCE-Prefix and Origin-DODAAC to the screen.

ELSE:

The System Administrator can press the <FINISH> key to exit to the "Master Menu" screen.

DISPLAY:

Movement Control screen.
The system will then display the screen below with a prompt stating "Select parameter and enter value, Press <HELP> or <FINISH>". The cursor will be displayed on the first value opposite the "Origin MCE Code".

SYSTEM PARAMETERS

NAME	VALUE
Origin MCE Code	M
Origin DODAAC	WK4FHA

a.) IF:

The cursor is placed on the "Origin MCE Code" and the <HELP> key is pressed.

THEN:

The system will display a help screen window containing the following information:

DISPLAY:

Origin MCE Code
The system will then display the screen below with a prompt stating "Press <CANCEL> to continue".

ORIGIN MCE CODE

Enter the 1 position alphabetic Movements Control Element Code (MCE Code) assigned to your activity.

==========

IF:

The System Administrator desires to change the "Origin MCE Code" value.

THEN:

The program will allow the System Administrator to change the value by simply using the "Over Type" and/or "Delete" keys and entering the new value. The value entered will be validated against the values found in the CgoMCE Table.

IF:

The value entered matches the MCEPrefix in CgoMCE Tbl.

THEN:

It will be used to update the System Parameter Tbl when the <GO> key is pressed.

IF:

The value entered is not contained in the Cgo-MCE Tbl.

THEN:

Display a prompt stating "Not a valid code....please re-enter".

IF:

The System Administrator desires to select another value for updating or changing.

THEN:

The program will allow the System Administrator to locate the cursor on any of the other values by pressing a combination of the <RETURN> key or Up and Down Direction Arrow Keys. When any of these keys are pressed, the system will immediately update the System Parameter Table with any changed parameter value.

b.) IF:

The cursor is placed on the "Origin DODAAC" and the <HELP> key is pressed.

THEN:

The system will display a help screen window containing the following information:

DISPLAY:

Origin DODAAC
The system will then display the screen below with a prompt stating "Press <CANCEL> to continue".

==========

ORIGIN DODAAC

Enter the 6 position DODAAC assigned to your activity.

==========

IF:

The System Administrator desires to change the "Origin DODAAC" value.

THEN:

The program will allow the System Administrator to change the value by simply using the "Over Type" and/or "Delete" keys and entering the new value. The value entered will be validated against the values found in the CgoActivity File.

IF:

The value entered matches the AACCurr in CgoActivity File.

THEN:

It will be used to update the System Parameter Tbl when the <GO> key is pressed.

IF:

The value entered is not contained in the CgoActivity File.

THEN:

Display a prompt stating "Not a valid code....please re-enter".

IF:

The System Administrator desires to select another value for updating or changing.

THEN:

The program will allow the System Administrator to locate the cursor on any of the other values by pressing a combination of the <RETURN> key or Up and Down Direction Arrow Keys. When any of these keys are pressed, the system will immediately update the System Parameter Table with any changed parameter value.

c.) IF:

The System Administrator has completed changing the value(s) in "Movement Control".

THEN:

The System Administrator presses the <FINISH> key. The computer will assign the new value(s) to the appropriate parameter(s) in the System Parameter Table and display the "System Parameters" menu screen (First Process Screen).

THEN:

The System Administrator can press the <FINISH> key which will display the "System Parameters" menu screen (First Process Screen) and a prompt stating "Exit menu? Press <GO> to confirm, or <CANCEL>".

IF:

The System Administrator presses the <GO> key.

THEN:

The system will return to the "Master Menu" screen.

IF:

The System Administrator presses the <CANCEL> key.

THEN:

The system will place the cursor on the blank space to the right of "Select Options".

4.) IF:

The value (3) is entered in the "Select Option" space and the

<GO> key is pressed, the "System Parameters" screen will be displayed.

MOVE:

Origin-MCE-Prefix, Origin-DODAAC, Freight-History-Sel-Criteria, Label-Print-Flag, Commitment-Print-Flag, Freight-Origin-Code, and Number-463L-Pallet-Criteria to the screen.

ELSE:

The System Administrator can press the <FINISH> key to exit to the "Master Menu" screen.

DISPLAY:

Freight Operations screen.
The system will then display the screen below with a prompt stating "Select parameter and enter value, Press <HELP> or <FINISH>".
The cursor will be displayed on the first value opposite the "Origin MCE Code".

SYSTEM PARAMETERS

NAME	VALUE
Origin MCE Code	M
Origin DODAAC	WK4FHA
Select Record for Freight History	45
Print Labels	N
Print Commitment	N
Freight Origin Code	AIG
Number of 463L Pallets	25

a.) IF:

The cursor is placed on the "Origin MCE Code" and the <HELP> key is pressed.

THEN:

The system will display a help screen window containing the following information:

DISPLAY:

Origin MCE Code
The system will then display the screen below

with a prompt stating "Press <CANCEL> to continue".

==========

ORIGIN MCE CODE

Enter the 1 position alphabetic Movements Control Element Code (MCE Code) assigned to your activity.

==========

IF:
The System Administrator desires to change the "Origin MCE Code" value.

THEN:
The program will allow the System Administrator to change the value by simply using the "Over Type" and/or "Delete" keys and entering the new value. The value entered will be validated against the values found in the CgoMCE Table.

IF:
The value entered matches the MCEPrefix in CgoMCE Tbl.

THEN:
It will be used to update the System Parameter Tbl when the <GO> key is pressed.

IF:
The value entered is not contained in the CgoMCE Tbl.

THEN:
Display a prompt stating "Not a valid code....please re-enter".

IF:
The System Administrator desires to select another value for updating or changing.

THEN:
The program will allow the System Administrator to locate the cursor on any of the other values by pressing a combination of the <RETURN> key or Up and Down

Direction Arrow Keys. When any of these keys are pressed, the system will immediately update the System Parameter Table with any changed parameter value.

b.) IF:

The cursor is placed on the "Origin DODAAC" and the <HELP> key is pressed.

THEN:

The system will display a help screen window containing the following information:

DISPLAY:

Origin DODAAC
The system will then display the screen below with a prompt stating "Press <CANCEL> to continue".

==========

ORIGIN DODAAC

Enter the 6 position DODAAC assigned to your activity.

==========

IF:

The System Administrator desires to change the "Origin DODAAC" value.

THEN:

The program will allow the System Administrator to change the value by simply using the "Over Type" and/or "Delete" keys and entering the new value. The value entered will be validated against the values found in the CgoActivity File.

IF:

The value entered matches the AACCurr in CgoActivity File.

THEN:

It will be used to update the System Parameter Tbl when the <GO> key is pressed.

IF:

The value entered is not contained in the

CgoActivity File.

THEN:
Display a prompt stating "Not a valid code....please re-enter".

IF:
The System Administrator desires to select another value for updating or changing.

THEN:
The program will allow the System Administrator to locate the cursor on any of the other values by pressing a combination of the <RETURN> key or Up and Down Direction Arrow Keys. When any of these keys are pressed, the system will immediately update the System Parameter Table with any changed parameter value.

c.) IF:
The <HELP> key is pressed with the cursor on the "Select Record for Freight History".

THEN:
The system will display a help screen window containing the following information:

DISPLAY:
Select Record for Freight History.
The system will then display the screen below with a prompt stating "Press <CANCEL> to continue".

==========

SELECT RECORD FOR FREIGHT HISTORY

Enter a 2 position number to indicate the number of days a commitment is retained in the active file after it is completed. Selected records are then sent to the Freight History File.

Enter number of days. EXAMPLE: 45

==========

IF:
The System Administrator desires to change the "Select Record

for Freight History" value.

THEN:

The program will allow the System Administrator to change the value by simply using the "Over Type" and/or "Delete" keys and entering the new value. The value entered will be edited to insure that it is numeric and has a field length of two positions.

IF:

The data entered does not meet the edit criteria.

THEN:

The system will display appropriate prompts: "Must be a number....re-enter" or "Must not be greater than 2 positions....re-enter".

IF:

The System Administrator desires to select another value for updating or changing.

THEN:

The program will allow the System Administrator to locate the cursor on any of the other values by pressing a combination of the <RETURN> key or Up and Down Direction Arrow Keys. When any of these keys are pressed, the system will immediately update the System Parameter Table with any changed parameter value.

d.) IF:

The <HELP> key is pressed with the cursor on the "Print Labels".

THEN:

The system will display a help screen window containing the following information:

DISPLAY:

Print Labels
The system will then display the screen below with a prompt stating "Press <CANCEL> to continue".

==========

PRINT LABELS

Controls the printing of shipping

labels while performing various freight functions.

Enter a "Y" or "N".

==========

IF:

The System Administrator desires to change the "Print Labels" value.

THEN:

The program will allow the System Administrator to change the value by simply using the "Over Type" and/or "Delete" keys and entering the new value. The value entered will be edited to insure that it is either a "Y" or "N".

IF:

The data entered does not meet the edit criteria.

THEN:

The system will display a prompt: "Must be a "Y" or "N"....re-enter".

IF:

The System Administrator desires to select another value for updating or changing.

THEN:

The program will allow the System Administrator to locate the cursor on any of the other values by pressing a combination of the <RETURN> key or Up and Down Direction Arrow Keys. When any of these keys are pressed, the system will immediately update the System Parameter Table with any changed parameter value.

e.) IF:

The <HELP> key is pressed with the cursor on the "Print Commitment".

THEN:

The system will display a help screen window containing the following information:

DISPLAY:

Print Commitment
The system will the display the screen

below with a prompt stating "Press <CANCEL> to continue".

==========

PRINT COMMITMENT

Controls the printing of a commitment while performing various freight functions.

Enter a "Y" or "N".

==========

IF:

The System Administrator desires to change the "Print Commitment" value.

THEN:

The program will allow the System Administrator to change the value by simply using the "Over Type" and/or "Delete" keys and entering the new value. The value entered will be edited to insure that it is either a "Y" or "N".

IF:

The data entered does not meet the edit criteria.

THEN:

The system will display a prompt: "Must be a "Y" or "N"....re-enter".

IF:

The System Administrator desires to select another value for updating or changing.

THEN:

The program will allow the System Administrator to locate the cursor on any of the other values by pressing a combination of the <RETURN> key or Up and Down Direction Arrow Keys. When any of these keys are pressed, the system will immediately update the System Parameter Table with any changed parameter value.

f.) IF:

The cursor is placed on the "Freight Origin Code" and the <HELP> key is pressed.

THEN:

The system will display a help screen window containing the following information:

DISPLAY:

Freight Origin Code
The system will then display the screen below with a prompt stating "Press <CANCEL> to continue".

==========

FREIGHT ORIGIN CODE

Enter the 3 position freight origin code assigned to your activity.

==========

IF:

The System Administrator desires to change the "Freight Origin Code" value.

THEN:

The program will allow the System Administrator to change the value by simply using the "Over Type" and/or "Delete" keys and entering the new value. The value entered will be edited to insure that it has a field length of three positions and no blank spaces.

IF:

The data entered does not meet the edit criteria.

THEN:

The system will display appropriate prompts: "Cannot exceed 3 positions....re-enter." or "Field cannot contain blank spaces.... re-enter".

IF:

The System Administrator desires to select another value for updating or changing.

THEN:

The program will allow the System Administrator to locate the cursor on any of the other values by pressing a combination of the <RETURN> key or Up and Down Direction Arrow Keys. When any of these keys are pressed, the system will immediately update the System

Parameter Table with any changed parameter value.

g.) IF:
The <HELP> key is pressed with the cursor on the "Number of 463L Pallets".

THEN:
The system will display a help screen window containing the following information:

DISPLAY:
Number of 463L Pallets
The system will then display the screen below with a prompt stating "Press <CANCEL> to continue".

==========

NUMBER OF 463L PALLETS

This number is used as a selection criteria for identifying all customers who have a quantity of 463L pallets on hand equal to or greater than the number entered.

For Example: If you enter the value "20", then all customers who have 20 or more 463L pallets will appear on the report.

==========

IF:
The System Administrator desires to change the "Number of 463L Pallets" value.

THEN:
The program will allow the System Administrator to change the value by simply using the "Over Type" and/or "Delete" keys and entering the new value. The value entered will be edited to insure that it is numeric and has a field length of two positions.

IF:
The data entered does not meet the edit criteria.

THEN:
The system will display appropriate prompts: "Must be a number....re-enter" or "Must not be greater than 2 positions....re-enter".

IF:

The System Administrator desires to select another value for updating or changing.

THEN:

The program will allow the System Administrator to locate the cursor on any of the other values by pressing a combination of the <RETURN> key or Up and Down Direction Arrow Keys.

h.) IF:

The System Administrator has completed changing the value(s) in "Freight Operations".

THEN:

The System Administrator presses the <FINISH> key. The computer will assign the new value(s) to the appropriate parameter(s) in the System Parameter Table and display the "System Parameters" menu screen (First Process Screen).

THEN:

The System Administrator can press the <FINISH> key which will display the "System Parameters" menu screen (First Process Screen) and a prompt stating "Exit menu? Press <GO> to confirm, or <CANCEL>".

IF:

The System Administrator presses the <GO> key.

THEN:

The system will return to the "Master Menu" screen.

IF:

The System Administrator presses the <CANCEL> key.

THEN:

The system will place the cursor on the blank space to the right of "Select Options".

5.) IF:

The value (4) is entered in the "Select Option" space and the <GO> key is pressed, the "System Parameters" screen will be displayed.

MOVE:

The parameters and values:
Cntnr-History-Sel-Criteria,
Cntnr-Deletion-Criteria, Cntnr-On-Hand-Over-X-Criteria,
Cntnr-Origin-Code, Cntnr-Deletion-Notification,
Origin-MCE-Prefix, Origin-DODAAC,
Freight-History-Sel-Criteria, Label-Print-Flag,
Commitment-Print-Flag, Freight-Origin-Code, and
Number-463L-Pallet-Criteria to the screen.

THEN:

The System Administrator can press the <FINISH> key which will display the "System Parameters" menu screen (First Process Screen) and a prompt stating "Exit menu? Press <GO> to confirm, or <CANCEL>".

IF:

The System Administrator presses the <GO> key.

THEN:

The system will return to the "Master Menu" screen.

IF:

The System Administrator preses the <CANCEL> key.

THEN:

The system will place the cursor on the blank space to the right of "Select Options".

DISPLAY:

All Movement Operations screen.
The system will then display the screen below with a prompt stating "Select parameter and enter value, Press <HELP> or <FINISH>". The cursor will be displayed on the first value opposite the "Select Record for Container History".

==========

SYSTEM PARAMETERS

NAME VALUE

Select Record for Container History	45
60 Days Old Deletion Process	55
Containers On Hand Over "X" Days	5
Container Origin Code	F1G
Notification from TMCA of Container Deletion	4
Origin MCE Code	M
Origin DODAAC	WK4FHA
Select Record for Freight History	45
Print Labels	N
Print Commitment	N
Freight Origin Code	AIG
Number of 463L Pallets	25

==========

NOTE: Help screens, edits, validations, value changes, and prompts specified for Container Operations (para 2), Movement Control (para 3), and Freight Operations (para 4) will be used for "All Movement Operations".

6.) IF:

The value (5) is entered in the "Select Option" space and the <GO> key is pressed, the system will display a prompt stating "Printing System Parameter Report" and the "System Parameter Report" will be printed.

MOVE:

The parameters and values: Cntnr-History-Sel-Criteria, Cntnr-Deletion-Criteria, Cntnr-On-Hand-Over-X-Criteria, Cntnr-Origin-Code, Cntnr-Deletion-Notification, Origin-MCE-Prefix, Origin-DODAAC, Freight-History-Sel-Criteria, Label-Print-Flag, Commitment-Print-Flag, Freight-Origin-Code, and Number-463L-Pallet-Criteria to the printer.

ELSE:

The System Administrator can press the <FINISH> key which will display the "System Parameters" menu screen (First Process Screen) and a prompt stating "Exit menu? Press <GO> to confirm, or <CANCEL>".

IF:

The System Administrator presses the <GO> key.

THEN:

The system will return to the "Master Menu" screen.

IF:

The System Administrator presses the <CANCEL> key.

THEN:

The system will place the cursor on the blank space to the right of "Select Options".

DISPLAY:

Print All Parameters report.
The system will then print the "System Parameter Report" which contains all parameter names and values contained in the System Parameter Tbl as shown below.

==========

SYSTEM PARAMETER REPORT

DATE XX/XX/XX PAGE X

PARAMETER NAME	PARAMETER VALUE
Select Record for Container History	45
60 Days Old Deletion Process	55
Containers On Hand Over "X" Days	5
Container Origin Code	F1G
Notification from TMCA of Container Deletion	4
Origin MCE Code	M
Origin DODAAC	WK4FHA
Select Record for Freight History	45
Print Labels	N
Print Commitment	N
Freight Origin Code	AIG
Number of 463L Pallets	25

==========

;

```
DERIVES:
     Maint-Param-Tbl-Print-Rept-Out
      USING          Maintain-Parameter-Tbl-Inp ;
DERIVES:
     Maint-Param-Tbl-Print-Rept-Out
      USING          Maint-Param-Sys-Param-Ref ;
```

```
DERIVES:
     Maint-Param-Tbl-Print-Rept-Out
      USING          Maint-Param-CgoMCE-Ref ;
DERIVES:
     Maint-Param-Tbl-Print-Rept-Out
      USING          Maint-Param-CgoActivity-Ref ;
DERIVES:
     Maint-Parameter-Tbl-Disp-Out
      USING          Maintain-Parameter-Tbl-Inp ;
DERIVES:
     Maint-Parameter-Tbl-Disp-Out
      USING          Maint-Param-Sys-Param-Ref ;
DERIVES:
     Maint-Parameter-Tbl-Disp-Out
      USING          Maint-Param-CgoMCE-Ref ;
DERIVES:
     Maint-Parameter-Tbl-Disp-Out
      USING          Maint-Param-CgoActivity-Ref ;
MAINTAINS:
     System-Parameter-Tbl ;
UPDATES:
     Maint-Param-Sys-Param-Upd
      USING          Cntnr-History-Sel-Criteria ;
UPDATES:
     Maint-Param-Sys-Param-Upd
      USING          Cntnr-Deletion-Criteria ;
UPDATES:
     Maint-Param-Sys-Param-Upd
      USING          Cntnr-On-Hand-Over-X-Criteria ;
UPDATES:
     Maint-Param-Sys-Param-Upd
      USING          Cntnr-Origin-Code ;
UPDATES:
     Maint-Param-Sys-Param-Upd
      USING          Cntnr-Deletion-Notification ;
UPDATES:
     Maint-Param-Sys-Param-Upd
      USING          Origin-MCE-Prefix ;
UPDATES:
     Maint-Param-Sys-Param-Upd
      USING          Origin-DODAAC ;
UPDATES:
     Maint-Param-Sys-Param-Upd
      USING          Freight-History-Sel-Criteria ;
UPDATES:
     Maint-Param-Sys-Param-Upd
      USING          Label-Print-Flag ;
UPDATES:
     Maint-Param-Sys-Param-Upd
```

```
      USING          Commitment-Print-Flag ;
UPDATES:
     Maint-Param-Sys-Param-Upd
      USING          Freight-Origin-Code ;
UPDATES:
     Maint-Param-Sys-Param-Upd
      USING          Number-463L-Pallet-Criteria ;
EMPLOYS:
     System-Parameter-Tbl ,
     CgoActivity-File ,
     CgoMCE-Tbl ;
USES:          Maintain-Parameter-Tbl-Inp
                TO DERIVE Maint-Param-Tbl-Print-Rept-Out ;
USES:          Maint-Param-Sys-Param-Ref
                TO DERIVE Maint-Param-Tbl-Print-Rept-Out ;
USES:          Maint-Param-CgoMCE-Ref
                TO DERIVE Maint-Param-Tbl-Print-Rept-Out ;
USES:          Maint-Param-CgoActivity-Ref
                TO DERIVE Maint-Param-Tbl-Print-Rept-Out ;
USES:          Maintain-Parameter-Tbl-Inp
                TO DERIVE Maint-Parameter-Tbl-Disp-Out ;
USES:          Maint-Param-Sys-Param-Ref
                TO DERIVE Maint-Parameter-Tbl-Disp-Out ;
USES:          Maint-Param-CgoMCE-Ref
                TO DERIVE Maint-Parameter-Tbl-Disp-Out ;
USES:          Maint-Param-CgoActivity-Ref
                TO DERIVE Maint-Parameter-Tbl-Disp-Out ;
USES:          Cntnr-History-Sel-Criteria
                TO UPDATE Maint-Param-Sys-Param-Upd ;
USES:          Cntnr-Deletion-Criteria
                TO UPDATE Maint-Param-Sys-Param-Upd ;
USES:          Cntnr-On-Hand-Over-X-Criteria
                TO UPDATE Maint-Param-Sys-Param-Upd ;
USES:          Cntnr-Origin-Code
                TO UPDATE Maint-Param-Sys-Param-Upd ;
USES:          Cntnr-Deletion-Notification
                TO UPDATE Maint-Param-Sys-Param-Upd ;
USES:          Origin-MCE-Prefix
                TO UPDATE Maint-Param-Sys-Param-Upd ;
USES:          Origin-DODAAC
                TO UPDATE Maint-Param-Sys-Param-Upd ;
USES:          Freight-History-Sel-Criteria
                TO UPDATE Maint-Param-Sys-Param-Upd ;
USES:          Label-Print-Flag
                TO UPDATE Maint-Param-Sys-Param-Upd ;
USES:          Commitment-Print-Flag
                TO UPDATE Maint-Param-Sys-Param-Upd ;
USES:          Freight-Origin-Code
                TO UPDATE Maint-Param-Sys-Param-Upd ;
```

```
USES:           Number-463L-Pallet-Criteria
                 TO UPDATE Maint-Param-Sys-Param-Upd ;
ADDS:           Maint-Param-Sys-Param-Upd TO System-Parameter-Tbl ;
REFERENCES:     Maint-Param-CgoActivity-Ref IN CgoActivity-File ;
REFERENCES:     Maint-Param-CgoMCE-Ref IN CgoMCE-Tbl ;
RESPONSIBLE PROBLEM DEFINER IS:
                'Morris' ;
```

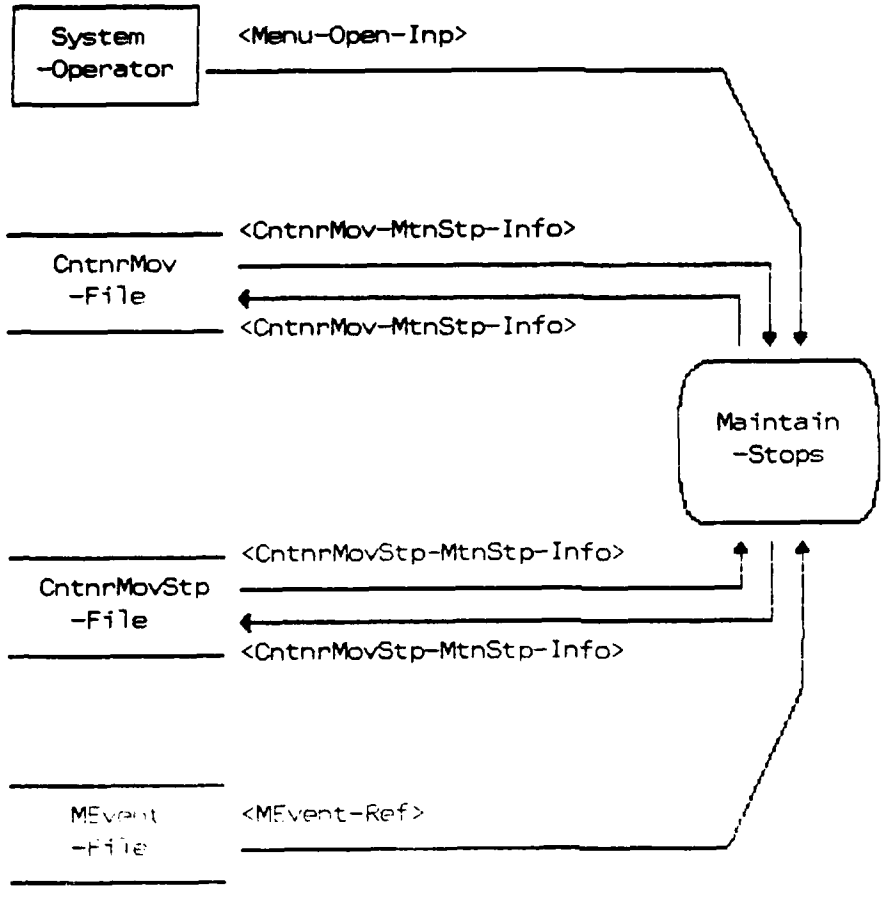

Figure 7. Maintain-Stops

```
12   DEFINE PROCESS                          Maintain-Stops ;
       DESCRIPTION;
     Maintain Stops
     In the event a container is not delivered to a forecasted stop, this
     process updates the container database by allowing the addition, or
     deletion, of a stop complete flag.
      ;
        KEYWORD IS:     'Container' ,
                        'LOB' ;
        SEE MEMO:
             Front-End-Process-Memo ,
             TCR-for-Maintain-Stops-Memo ;
        RECEIVES:
             Menu-Open-Inp ;
        PART OF:        Rec+Report-Cntnr-Mov-Events ;
        PROCEDURE;

     FRONT END PROCESS:

     1)
          If:
              User enters CntnrNo
              MATCH:
                      CntnrNo from screen with CntnrNo in CntnrMovStp File
                      IF:
                          NO MATCH:
                          DISPLAY:
                                  "Container Number not valid, reenter or
                                   exit process."

                      ELSE:
                             Use CntnrNo to access CntnrMovStp.
                             DISPLAY:
                             "CntnrNo CntnrOwn Consignee MultiStpNo StpComp"
                               XXXXX   XXXX     XXXXXX        X

                              System will allow user to course through this
                              scrollable screen to the desired stop.  When the
                              stop is selected, the user will hit "GO" and
                              the first process screen will be displayed.
                          MOVE:
                                CntnrNoPrefix from CntnrMov to Container
                                Number on first process screen.
          DISPLAY:
                     First Process Screen

     2)
          IF:
              User enters CntnrNo + CntnrNoPrefix
```

```
MATCH:
        CntnrNo from screen with CntnrNo in CntnrMovStp File
        IF:
            NO MATCH:
            DISPLAY:
                    "Container Number not valid, reenter or
                     exit process."
            EDIT:
                   System will edit CntnrNoPrefix
                   IF:
                        CntnrNoPrefix < > Alphanumeric
                        DISPLAY:
                                 Err Msg - "Container number must
                                           be alphanumeric."

        ELSE:
               Use CntnrNo from screen to access CntnrMovStp.
               DISPLAY:
                          "CntnrNo  CntnrOwn Consignee MultiStpNo"
                           XXXXXXXX   XXXX     XXXXXX      X

                  System will allow user to course through this
                  scrollable screen to the desired stop.  When the
                  stop is selected, the user will hit "GO" and the
                  first process screen will be displayed.
               IF:  CntnrNoPrefix in CntnrMov = 000
                    UPDATE:  Screen entered CntnrNoPrefix to
                             CntnrNoPrefix in CntnrMov.

                    MOVE:  CntnrNoPrefix from CntnrMov to Container
                           Number on First Process Screen.
DISPLAY:
          First Process Screen

3)  IF:
        User enters FWTNo
        MATCH:
               FWTNo from screen with FWTNo in CntnrMov File
               IF:
                    NO MATCH:
                    DISPLAY:  Freight Warrant Number entered not
                              valid.  Reenter or exit the process.
               ELSE:
                      Use CntnrNo and CntnrOwnAbbr found in the
                      CntnrMov file to access CntnrMovStp
                      DISPLAY:
                                Cntnr Mov Stop data as follows:

                         CntnrNo    CntnrOwn   Consignee   MultiStpNo
```

XXXXX XXXX XXXXXX X

System will allow user to course through this scrollable screen to the desired stop. When the stop is selected, the user will hit 'GO' and the first process screen will be displayed.
MOVE:
CntnrNoPrefix from CntnrMov to Container Number on first process screen.

DISPLAY:
First Process Screen

4) IF:
User enters TMRPrefix
MATCH:
TMRPrefix from screen with TMRPrefix in CntnrMov file
IF:
NO MATCH:
DISPLAY: TMRPrefix entered not valid. Reenter or exit the process.
ELSE:
Use CntnrNo and CntnrOwnAbbr found in the CntnrMov file to access CntnrMovStp
DISPLAY:
CntnrMovStp data as follows:

CntnrNo	CntnrOwn	Consignee	MultiStpNo
XXXXX	XXXX	XXXXXX	X

System will allow user to course through this scrollable screen to the desired stop. When the stop is selected, the user will hit 'GO' and the first process screen will be displayed
MOVE:
CntnrNoPrefix from CntnrMov to Container Number on first process screen.

DISPLAY:
First Process Screen

IF:
User enters CntnrTCN.
MATCH:

CntnrTCN from screen with CntnrTCN in CntnrMov.

IF:
No match.
DISPLAY:
"Container TCN not valid. Reenter or exit process."

ELSE:
Select CntnrNo, CntnrOwnAbbr from CntnrMov to access CntnrMovStp.
DISPLAY:
CntnrMovStp data as follows:

Cntnr No	CntnrOwnAbbr Abbr	Consignee	MultiStp No	Stp Comp
XXXXX	XXXX	XXXXXX	X	X
XXXXX	XXXX	XXXXXX	X	X

System will allow user to course through this scrollable screen to the desired stop. When the stop is selected, the user will hit [GO] and the first process screen will be displayed.

MOVE:
CntnrNoPrefix from CntnrMov to Container Number on the first process screen.

When a stop is selected, [GO] is pressed:

THEN:
The system will display function key set "CLEAR SCREEN, CLOSE STOP, OPEN STOP".

IF:
The user selects function key CLEAR SCREEN,

THEN:
The system will return to the Front End screen for record selection.

IF:
CLOSE STOP is pressed:

THEN:
Search CntnrMov for a date in DteLstUpdCntnr.

IF:
DteLstUpdCntnr is blank,

THEN:
Display a prompt window "Stop cannot be closed in this process. Will be purged from the system during Delete 60 Old Day Cntnr Process. Press [GO] to continue, or [NEXT] to select another stop."

IF:
DteLstUpdCntnr is not blank,

THEN:
Post today's date to DteLstUpd Cntnr, set the StpCompFlag (in CntnrMovStp), and display prompt window "Stop has been closed. Press [GO] to continue, or [NEXT] to select another stop."

IF:
GO is pressed, display Front End screen for record selection.

IF:
[NEXT] is pressed, system will display the scrollable screen for the record just flagged. The user will then scroll to the next stop, in that record, to be flagged.

IF:
OPEN STOP is pressed

THEN:
The system will search CntnrMovStp for DivrsnIndic set with a flag.

IF:
DivrsnIndic is set with the flag,

THEN:
Display a prompt window "This stop was closed based on a diversion authorization and cannot be opened using this process. Press [GO] to continue, or [NEXT] to select another stop".

IF:
[GO] is pressed,

THEN:
Display Front End screen for record selection.

IF:
[NEXT] is pressed

THEN:
Display the scrollable screen for the record just viewed. The user will then scroll to the next stop, in that record, to be opened.

IF:
DivrsnIndic is not set with the flag

THEN:
The system will search MEvent for a TTB E.

IF:
TTB E is found

THEN:
Display a prompt window "This stop was closed based on reported movement events and cannot be opened using this process. Press [GO] to continue, or [NEXT] to select another stop".

IF:
[GO] is pressed,

THEN:
Display Front End screen for record selection.

IF:
[NEXT] is pressed,

THEN:
Display the scrollable screen for the record just viewed. The user will then scroll to the next stop, in that

record, to be opened.

IF:
At the scrollable screen, the user wants to go back to the Front End (open door), press [CANCEL] key.
IF:
User has completed all transactions in this process, press [FINISH] to return to main menu.

;

DERIVES:
Maintain-Stops-Info-Ent ;
RESPONSIBLE PROBLEM DEFINER IS:
'Valentine' ;

```
13   DEFINE PROCESS                          Manage-Container-Operations ;
       KEYWORD IS:    'Container' ,
                      'LOB' ;
       SUBPART IS:    Process-ETA-Forecast ,
                      Maintain-Container-Database ,
                      Prepare-Container-Reports ,
                      System-Utilities ;
```

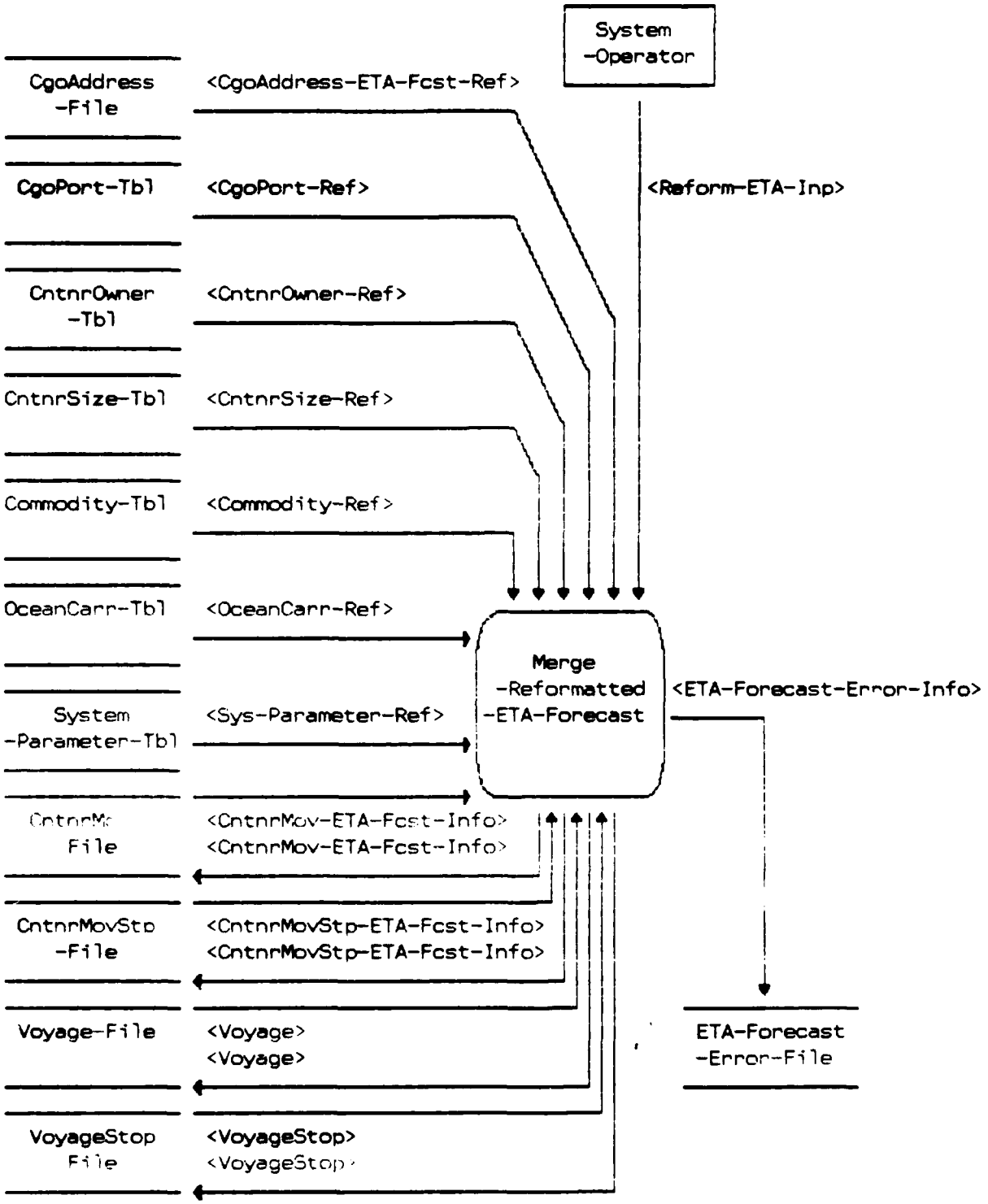

Figure 8. Merge-Reformatted-ETA-Forecast

```
14   DEFINE PROCESS                          Merge-Reformatted-ETA-Forecast ;
       DESCRIPTION;
Merge Reformatted ETA Forecast
This process uses a file created by the CTASC known as the Reformatted
ETA Forecast.  Records in this file create initial visibility within the
TACCS at the MCT level on containers which are scheduled to arrive in
the MCT area of responsibility.  Process will edit each element in a
record and create records in the container database and/or produce the
REFORMATTED ETA FORECAST ERROR FILE which is in two categories
(1) Transactions Added to Database  (2) Transactions Not Added to
Database.
 ;
     KEYWORD IS:     'Container' ;
     SEE MEMO:
          TCR-Merge-Process-Memo ;
     ATTRIBUTE IS:
          SEC-CLASS       'UNCLASSIFIED' ,
          PROCESS-MODE     'INTERACTIVE BATCH' ;
     RECEIVES:
          Reform-ETA-Inp ;
     PART OF:        Process-ETA-Forecast ;
     PROCEDURE;
```

When the process is running the following screen will be displayed. The screen will display to the user the number of records which have been processed.

```
MERGE REFORMATTED ETA FORECAST
=====================================================================

                    ------------------------------------
                    |   MERGE REFORMATTED ETA FORECAST   |
                    |      INTO CONTAINER DATABASE       |
                    |                                    |
                    |                                    |
                    | Creating Container Records         |
                    |                                    |
                    |                                    |
                    | Processing Record    0004          |
                    |                                    |
                    |____________________________________|
```

READ: Each record and validate each element as defined below:

IF: Any Key Element (CntnrOwnAbbr, CntnrNo, VoyDocuNoFltNo, POD, or Consignee) fail edit.
THEN: Do no create record in database.
THEN: Assign appropriate error code.
THEN: Add record to Reformatted ETA Forecast Error File (Tranactions Not Added to Database)

IF: Non-Key Elements (CntnrNoPrefix, MultiStpNo, TotStp, Cntnr-TCN, POE, OceanCarrAbbr, DteDprtPOE, CmdtyCd or CntnrSz) fail edit.
THEN: Assign appropriate error code.

IF: Key Elements are valid but Non-Key Elements are invalid.
THEN: Create record in database with valid elements.
THEN: Leave all invalid elements blank.
THEN: Assign Record Sequence Number to record with Prefix "1".
THEN: Add record to Reformatted ETA Forecast Error File (Transactions Added to Database)

IF: MultiStpNo value is equal to a "Z"
THEN: Copy Consignee Value to CntnrMov File, UltmCnsgn

IF: MultiStpNo is equal to "1" and TotStp equals "01"
THEN: Copy Consignee Value to CntnrMov File, UltmCnsgn

IF: Record is created in database.
THEN: Create DteRecCreat in CntnrMov File using System Calendar Function and post current julian date.
THEN: Update CntnrMovStp record by creating a value "1" and put it in the DupeStpIndex.

IF: Consignee is valid and ~~record~~ is created in database.
THEN: Move MCECd, CgoAddress for valid Consignee,
TO: CntnrMovStp File, DestMCEPrefix and DestMCE-Suffix.

IF: A record exist on database with nonkey errors and a record is received that contains correct data
THEN: Use validated data to update record on database for only the following file/elements. CntnrMov File - Cntnr TCN, POD, Voyage File - DteSailWPOE, POE, OceanCarrAbbr.

CntnrOwnAbbr
(cc 1-4)

MATCH: CntnrOwner Table
IF: Blank
THEN: Set error code "1"
IF: Not Match on Table
THEN: Set error code "2"
IF: Valid or Invalid
THEN: Go to next element

CntnrNoPrefix
(cc 5-7)

Must be 3 position Alphanumeric
IF: Blank
THEN: Set error code "1"
IF: Not Equal to Numeric
THEN: Set error code "3"
IF: Valid or Invalid
THEN: Go to next element

CntnrNo
(cc 8-12)

Must be 5 position Numeric
IF: Blank
THEN: Set error code "1"
IF: Not Equal to Alphanumeric
THEN: Set error code "F"
IF: Valid or Invalid
THEN: Go to next element

VoyDocuNoFltNo
(cc 13-17)

Must be 5 position, Pos #1 equal to Alpha,
Pos # 2-5 equal to Numeric
IF: Blank
THEN: Set error code "1"
IF: Pos # 1 not equal to Alpha
THEN: Set error code "4"
IF: Pos # 2-5 not equal to Numeric
THEN: Set error code "5"
IF: Pos #1 not equal to Alpha and Pos # 2-5
not equal to Numeric.
THEN: Set error code "6"
IF: Valid or Invalid
THEN: Go to next element
IF: Value of VoyDocuNoFltNo is equal to the
value of VoyDocuNoFltNo in the files
Voyage and VoyageStop
THEN: Do Not Create New Record

MultiStpNo
(cc 18)

Must be 1 position, with value of 1 through 9 or
Z.
IF: Blank
THEN: Set error code "1"
IF: Value not equal to 1 through 9 or Z
THEN: Set error code "7"
IF: Valid or Invalid

THEN: Go to next element

TotStp (cc 19-20)
Must be 2 position, Numeric with value of 01 through 10
IF: Blank
THEN: Set error code "1"
IF: Value not equal to 01 through 10
THEN: Set error code "8"
IF: Valid or Invalid
THEN: Go to next element

CntnrTCN (cc 21-37)
17 Position Alphanumeric, Pos # 11 must equal "V"
IF: Blank
THEN: Set error code "1"
IF: Value not equal to alphanumeric and pos #11 is not equal to a "V"
THEN: Set error code "B"
IF: Value not Alphanumeric
THEN: Set error code "A"
IF: Value of Pos # 11 is not equal to a V
THEN: Set error code "9"
IF: Valid or Invalid
THEN: Go to next element

POE (cc 38-40)
IF: Blank
THEN: Set error code "1"
IF: Value not equal to Alphanumeric
THEN: Set error code "3"
IF: Valid or Invalid
THEN: Go to next element

OceanCarrAbbr (cc 41-44)
MATCH: OceanCarr Table
IF: Blank
THEN: Set error code "1"
IF: No Match on Table
THEN: Set error code "2"
IF: Valid or Invalid
THEN: Go to next element

DteDprtPOE (cc 45-48)
System Calendar Function Check
Valid Year, less than current date, last four Positions must be equal to 001 and not greater than 366
IF: Blank
THEN: Set error code "1"
IF: Date is greater than current date and the first position is not equal to (0-9) and the last three is not equal to (001-

366)
THEN: Set error code "E"
IF: Date is greater than current date
THEN: Set error code "D"
IF: Last three positions is less than 001 or greater than 366
THEN: Set error code "C"
IF: Valid or Invalid
THEN: Go to next element
IF: DteDprtPOE is received as a 4 position julian date
THEN: Insert first position of calendar year in front of 4 position julian date to create 5 position julian date e.g. change "7235" to "87235".
THEN: Post to Voyage File, DteSailWPOE

CmdtyCd (cc 49-51)
MATCH: Commodity Table
IF: Blank
THEN: Set error code "1"
IF: No Match on Table
THEN: Set error code "2"
IF: Valid or Invalid
THEN: Go to next element

CntnrSz (cc 52-53)
MATCH: CntnrSize Table
IF: Blank
THEN: Set error code "1"
IF: No Match on Table
THEN: Set error code "2"
IF: Valid or Invalid
THEN: Go to next element

POD (cc 54-56)
MATCH: CgoPort Table
IF: Blank
THEN: Set error code "1"
IF: No Match on Table
THEN: Set error code "2"
IF: Valid or Invalid
THEN: Go to next element

Consignee (cc 57-62)
MATCH: CgoAddress, ShipToAAC
IF: Blank
THEN: Set error code "1"
IF: No Match on Table
THEN: Set error code "2"
IF: Match
THEN: Get value of MCECd, Pos # 1

MCEPrefix and Match with
Parameter Table.

IF: Values are equal
THEN: Input is Valid
IF: No Match
THEN: Set error code "X"

IF: Additional records are in file
THEN: Repeat the editing of the next record until all records in the file have been edited.

WHEN: End of File is Reached.
THEN: Copy records with errors to appropriate Reformatted ETA Error File as defined above.

As records are identified to go to the Reformatted ETA Error File each record will be assigned a sequential sequence number with no number duplication being allowed as shown below:

The Reformatted ETA Error File created in this process will be used by the Prepare Merge Error Report process which will assemble data into a report format and provide a hard copy report to the user.

BREAKDOWN OF 10 POSITION SEQUENCE NO.

PREFIX CODE	"0"	RECORD NOT ADDED TO DATABASE	POS. 1
	"1"	RECORD ADDED TO DATABASE	POS. 1
YEAR	"87"	YEAR ERROR SENT TO ERROR FILE	POS. 2-3
JULIAN DATE	"130"	DAY RECORD SENT TO ERROR FILE	POS. 4-6
SEQUENCE NO	"0000"	VALUE INCREASED BY ONE FOR EACH RECORD ADDED THAT DAY	POS. 7-10

When records are created in the database, data will be posted to the files and elements as identified below:

ETA FORECAST ELEMENT	DATABASE FILES
Consignee	CntnrMovStop
CntnrOwnerAbbr	CntnrMov/CntnrMovStop
CntnrNoPrefix	CntnrMov
CntnrNo	CntnrMov/CntnrMovStop
VoyDocuNoFltNo	CntnrMov/Voyage/VoyageStop
MultiStpNo	CntnrMovStp
TotStp	CntnrMov

CntnrTCN	CntnrMov
POE	Voyage
OceanCarrAbbr	Voyage
DteDptPOE	Voyage
CmdtyCd	CntnrMov
CntnrSz	CntnrMov
POD	CntnrMov/VoyageStop

Data Element Error Code

Code	Definition
1	Field cannot be blank
2	No Match on Table/File
3	Data should be alpha/numeric in nature (A-Z, 0-9)
4	First position must be alpha (A-Z)
5	Last 4 positions must be numeric (0-9)
6	Code 4 and 5 above apply
7	Multi Stop Number must equal "1-9" or "Z"
8	Total Stop must be "01-10"
9	Position 11 of the TCN must have a value of "V"
A	TCN should contain alphanumeric data (A-Z, 1-9)
B	Codes 9 and A above apply
C	Date Sail POE must equal (0-9) in the first position and (001-366) in the last three positions
D	Sail Date must be less than the current date
E	Code C and D above apply
F	Data must be numeric in nature (0-9)
X	Consignee not in MCT area of responsibility

END OF PROCESS
;

MAINTAINS:
CntnrMov-File ;
MAINTAINS:
CntnrMovStp-File ;
MAINTAINS:
Voyage-File ;
MAINTAINS:
VoyageStop-File ;
UPDATES:
ETA-Forecast-Error-File ;
EMPLOYS:
CgoAddress-File ,
CntnrOwner-Tbl ,

```
        System-Parameter-Tbl ,
        OceanCarr-Tbl ,
        CgoPort-Tbl ,
        CntnrSize-Tbl ,
        Commodity-Tbl ;
ADDS:           VoyageStop TO VoyageStop-File ;
ADDS:           Voyage TO Voyage-File ;
ADDS:           CntnrMov-ETA-Fcst-Info TO CntnrMov-File ;
ADDS:           CntnrMovStp-ETA-Fcst-Info TO CntnrMovStp-File ;
ADDS:           ETA-Forecast-Error-Info TO ETA-Forecast-Error-File ;
MODIFIES:       VoyageStop IN VoyageStop-File ;
MODIFIES:       Voyage IN Voyage-File ;
MODIFIES:       CntnrMov-ETA-Fcst-Info IN CntnrMov-File ;
MODIFIES:       CntnrMovStp-ETA-Fcst-Info IN CntnrMovStp-File ;
REFERENCES:     VoyageStop IN VoyageStop-File ;
REFERENCES:     Voyage IN Voyage-File ;
REFERENCES:     CgoAddress-ETA-Fcst-Ref IN CgoAddress-File ;
REFERENCES:     CntnrOwner-Ref IN CntnrOwner-Tbl ;
REFERENCES:     Sys-Parameter-Ref IN System-Parameter-Tbl ;
REFERENCES:     OceanCarr-Ref IN OceanCarr-Tbl ;
REFERENCES:     CgoPort-Ref IN CgoPort-Tbl ;
REFERENCES:     CntnrSize-Ref IN CntnrSize-Tbl ;
REFERENCES:     CntnrMov-ETA-Fcst-Info IN CntnrMov-File ;
REFERENCES:     CntnrMovStp-ETA-Fcst-Info IN CntnrMovStp-File ;
REFERENCES:     Commodity-Ref IN Commodity-Tbl ;
CREATES:
        VoyageStop ,
        Voyage ,
        CntnrMov ,
        CntnrMovStp ,
        ETA-Forecast-Error-Info ;
RESPONSIBLE PROBLEM DEFINER IS:
                'Cope' ;
```

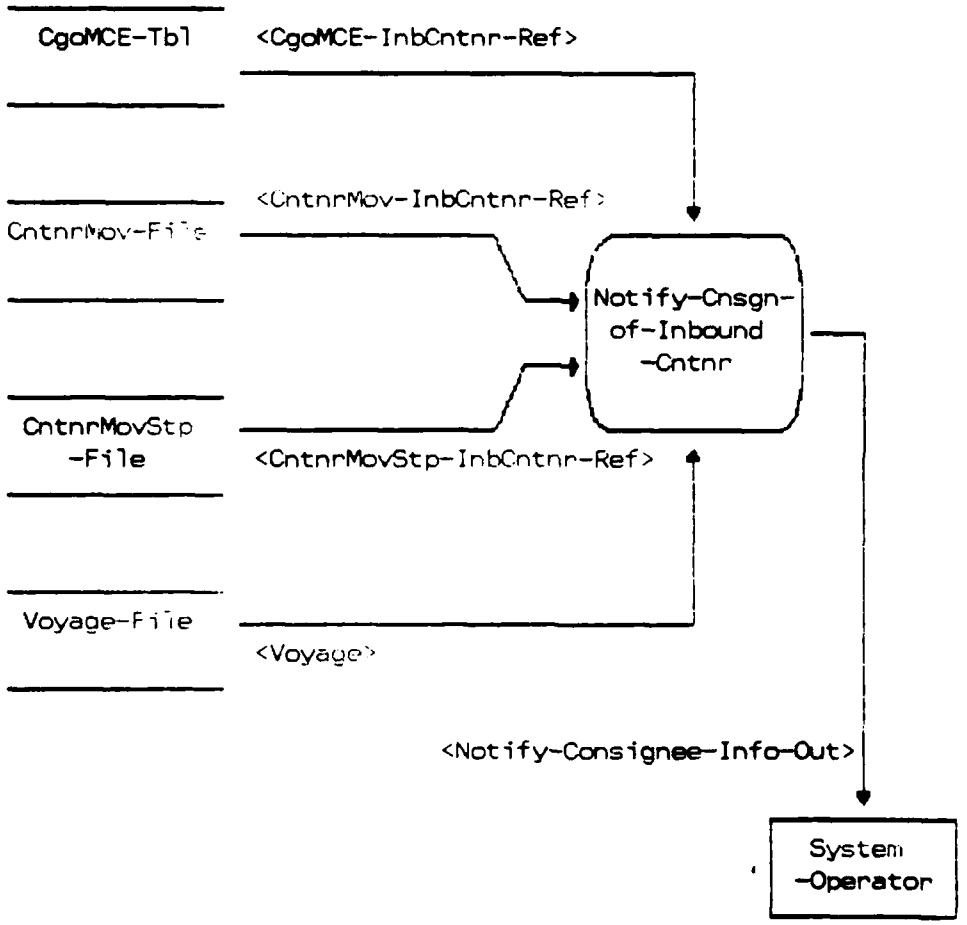

Figure 9. Notify-Cnsgn-of-Inbound-Cntnr

15 DEFINE PROCESS Notify-Cnsgn-of-Inbound-Cntnr ;
DESCRIPTION;
Notify Consignee of Inbound Container
This process produces a listing of containers that are forecasted to customers within an MCT area of responsibility. The process utilizes the container records that were added to the MCT database. The process sorts the container record information by MCESuffix and consignee and prints a report used to telephonically notify customers of forecasted containers.

ASSUMPTIONS:

1. The output report will be sequenced in line format so all containers scheduled for a customer are listed together before the next customers containers are listed.
;

KEYWORD IS: 'Container' ,
'LOB' ;
SEE MEMO:
TCR-Notify-Cnsgn-Inb-Cntnr ;
GENERATES:
Notify-Consignee-Info-Out ;
PART OF: Maintain-Container-Database ;
PROCEDURE;

1. Select "Inbound Container" from the menu.

Press the "GO" key.
Screen Prompt, "Loading Print Inbound Container Report."

2. MATCH: System Date (Machine Date) with DteRecCreat in CntnrMov-File.

IF MATCHED:

GET CntnrOwnAbbr,
CntnrNo,
CntnrNoPrefix,
CntnrTCN,
TotStp,
POD,
VoyDocuNoFltNo,
CntnrSz,
CmdtyCd, FROM CntnrMov-File USING DteRecCreat.

CHECK StpNonFcst in CntnrMovStp-File USING CntnrNo, and CntnrOwnAbbr.

```
                IF StpNonFcst equal "Y" do not select this record
                   for output report.
                   GO to next record.

                IF StpNonFcst equal "Blank" continue procedure.

          GET Consignee,
              MCEPrefix,
              MCESuffix,
              MultiStpNo, FROM CntnrMovStp-File USING CntnrOwnAbbr and
                               CntnrNo.
          GET DteSailWPOE,
              POE,
              OceanCarrAbbr FROM Voyage-File USING VoyDocuNoFltNo.

          GET MCENme from CgoMCE-Table using MCECd.

        REPEAT Process for each record with DteRecCreat equal to System
               Date.

        SORT   Records by MCESuffix (Primary Sort)

               SORT  Records by Consignee within MCESuffix.
                     (Secondary Sort)

               Screen Prompt, "Sort Phase 1 - Record #____."
               Screen Prompt, "Sort Phase 2 - Record #____."
               Screen Prompt, "Processing Record #____."
               Screen Prompt, "Processing Complete."
               Screen Prompt, "____ Records Processed."

        PRINT  NotifyConsigneeInfo-Output   (Page break after each
               MCESuffix).
               Screen Prompt, "The report has been generated and is
               currently printing."

        Screen Prompt, "Returning to system menu."


3.  IF UNMATCHED:  (No record exist)

      PRINT "Negative Report".
  ;
    EMPLOYS:
         CntnrMov-File ,
         CntnrMovStp-File ,
         Voyage-File ,
         CgoMCE-Tbl ;
```

```
REFERENCES:     CntnrMov-InbCntnr-Ref IN CntnrMov-File ;
REFERENCES:     CntnrMovStp-InbCntnr-Ref IN CntnrMovStp-File ;
REFERENCES:     Voyage IN Voyage-File ;
REFERENCES:     CgoMCE-InbCntnr-Ref IN CgoMCE-Tbl ;
RESPONSIBLE PROBLEM DEFINER IS:
                'Blake' ;
```

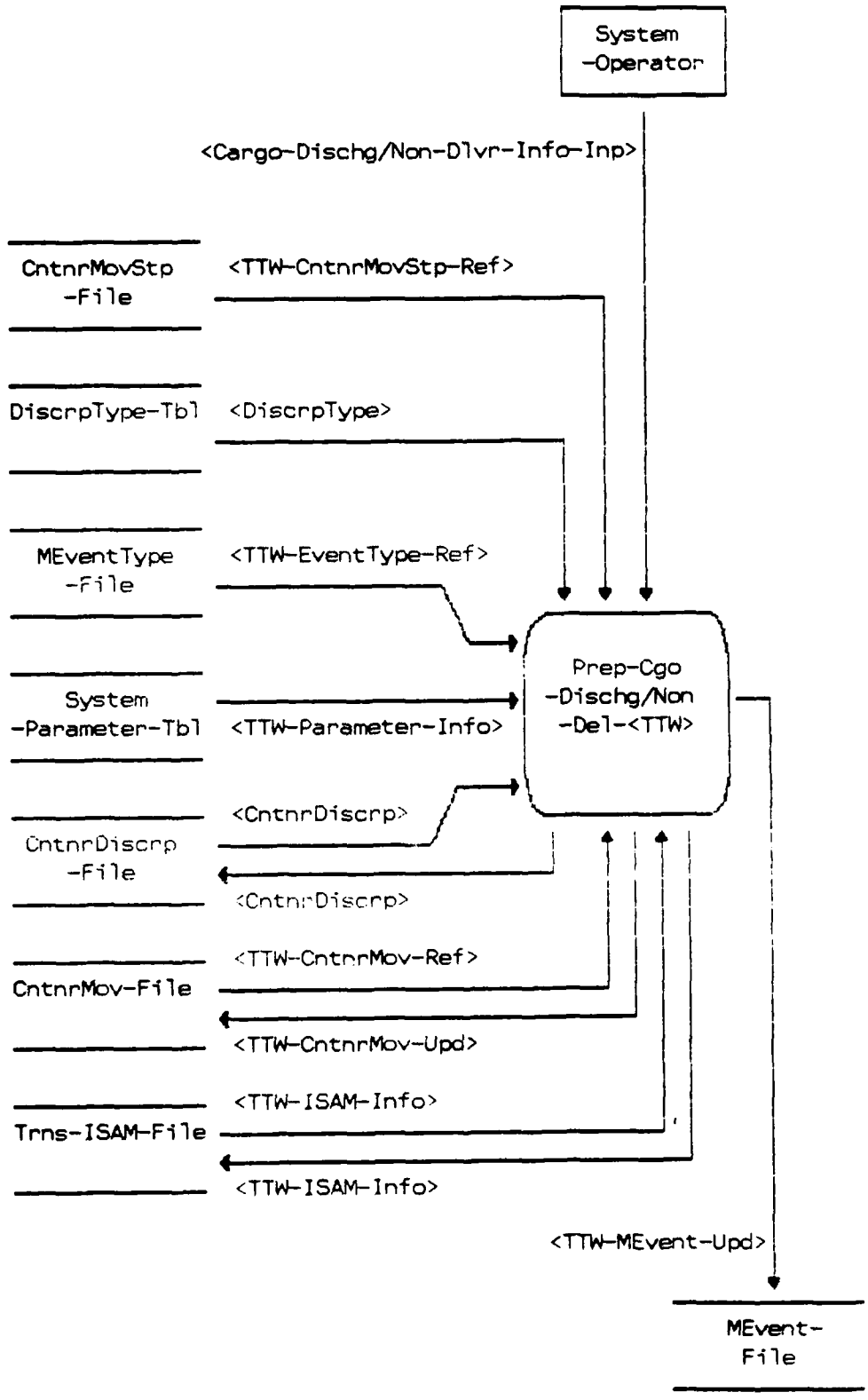

Figure 10. Prep-Cgo-Dischg/Non-Del-<TTW>

```
16   DEFINE PROCESS                          Prep-Cgo-Dischg/Non-Del-<TTW> ;
       DESCRIPTION;
   Prepare Cargo Discharge/Non-Delivery <TTW>
   This process updates the container database with Cargo Discharge/Non-
   Delivery information and a TTW transaction is generated to report by
   cargo TCN the following events:
        1)  Cargo Discharged with discrepancies
        2)  Cargo Discharged without discrepancies
        3)  Non-delivery of cargo
        4)  Unit pickup with discrepancies
        5)  Unit pickup without discrepancies
    ;
       KEYWORD IS:     'Container' ,
                       'LOB' ;
       SEE MEMO:
            Front-End-Process-Memo ,
            TCR-TTW-Process-Memo ,
            TTW-Integration-Memo ;
       RECEIVES:
            Cargo-Dischg/Non-Dlvr-Info-Inp ;
       PART OF:        Rec+Report-Cntnr-Mov-Events ;
       PROCEDURE;

   1)
        If:
            User enters CntnrNo
            MATCH:
                   CntnrNo from screen with CntnrNo in CntnrMovStp File
                   IF:
                       NO MATCH:
                       DISPLAY:
                              "Container Number not valid, reenter or
                               exit process."

                   ELSE:
                          Use CntnrNo to access CntnrMovStp.
                          DISPLAY:
                          "CntnrNo CntnrOwn Consignee MultiStpNo StpComp"
                            XXXXX    XXXX     XXXXXX        X

                           System will allow user to course through this
                           scrollable screen to the desired stop.  When the
                           stop is selected, the user will hit "GO" and
                           the first process screen will be displayed.
                       MOVE:
                             CntnrNoPrefix from CntnrMov to Container
                             Number on first process screen.
        DISPLAY:
                  First Process Screen
```

2)

```
IF:
    User enters CntnrNo + CntnrNoPrefix
MATCH:
       CntnrNo from screen with CntnrNo in CntnrMovStp File
       IF:
           NO MATCH:
           DISPLAY:
                   "Container Number not valid, reenter or
                    exit process."
           EDIT:
                  System will edit CntnrNoPrefix
                  IF:
                       CntnrNoPrefix < > Alphanumeric
                       DISPLAY:
                                Err Msg - "Container number must
                                          be alphanumeric."

       ELSE:
              Use CntnrNo from screen to access CntnrMovStp.
              DISPLAY:
                        "CntnrNo  CntnrOwn Consignee MultiStpNo"
                         XXXXXXXX   XXXX     XXXXXX      X

                 System will allow user to course through this
                 scrollable screen to the desired stop.  When the
                 stop is selected, the user will hit "GO" and the
                 first process screen will be displayed.
              IF:  CntnrNoPrefix in CntnrMov = 000
                   UPDATE:  Screen entered CntnrNoPrefix to
                            CntnrNoPrefix in CntnrMov.

                   MOVE:  CntnrNoPrefix from CntnrMov to Container
                          Number on First Process Screen.
DISPLAY:
          First Process Screen
```

3)

```
IF:
     User enters FWTNo
     MATCH:
            FWTNo from screen with FWTNo in CntnrMov File
            IF:
                 NO MATCH:
                 DISPLAY:  Freight Warrant Number entered not
                           valid.  Reenter or exit the process.
            ELSE:
                   Use CntnrNo and CntnrOwnAbbr found in the
                   CntnrMov file to access CntnrMovStp
```

DISPLAY:
Cntnr Mov Stop data as follows:

CntnrNo	CntnrOwn	Consignee	MultiStpNo
XXXXX	XXXX	XXXXXX	X

System will allow user to course through this scrollable screen to the desired stop. When the stop is selected, the user will hit 'GO' and the first process screen will be displayed.
MOVE:
CntnrNoPrefix from CntnrMov to Container Number on first process screen.

DISPLAY:
First Process Screen

4) IF:
User enters TMRPrefix
MATCH:
TMRPrefix from screen with TMRPrefix in CntnrMov file
IF:
NO MATCH:
DISPLAY: TMRPrefix entered not valid. Reenter or exit the process.
ELSE:
Use CntnrNo and CntnrOwnAbbr found in the CntnrMov file to access CntnrMovStp
DISPLAY:
CntnrMovStp data as follows:

CntnrNo	CntnrOwn	Consignee	MultiStpNo
XXXXX	XXXX	XXXXXX	X

System will allow user to course through this scrollable screen to the desired stop. When the stop is selected, the user will hit 'GO' and the first process screen will be displayed
MOVE:
CntnrNoPrefix from CntnrMov to Container Number on first process screen.

DISPLAY:
First Process Screen

IF:
User enters CntnrTCN.
MATCH:
CntnrTCN from screen with CntnrTCN in CntnrMov.
IF:
No match.
DISPLAY:
"Container TCN not valid. Reenter or exit process."
ELSE:
Select CntnrNo, CntnrOwnAbbr from CntnrMov to access CntnrMovStp.
DISPLAY:
CntnrMovStp data as follows:

Cntnr No	CntnrOwnAbbr Abbr	Consignee	MultiStp No	Stp Comp
XXXXX	XXXX	XXXXXX	X	X
XXXXX	XXXX	XXXXXX	X	X

System will allow user to course through this scrollable screen to the desired stop. When the stop is selected, the user will hit [GO] and the first process screen will be displayed.

MOVE:
CntnrNoPrefix from CntnrMov to Container Number on the first process screen.

PROMPT: "Enter data in selected fields or press [HELP]/[CANCEL]."

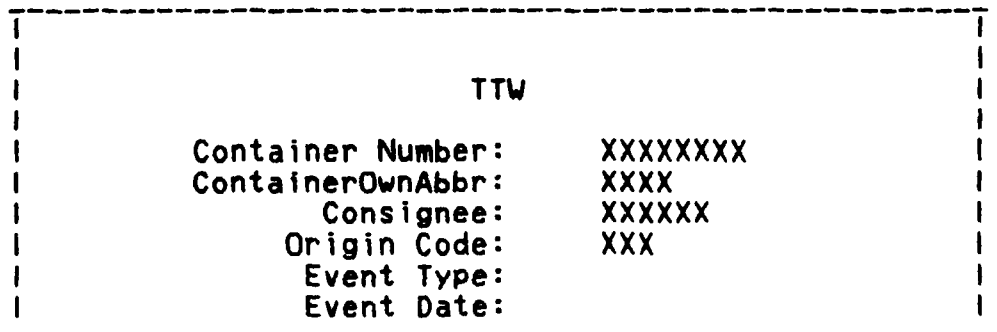

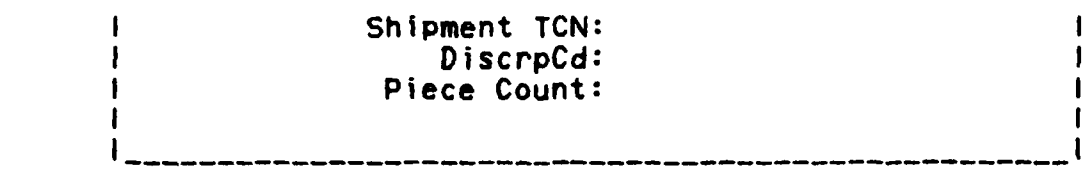

Origin Code - System will default Origin Code value from System-Parameter-Table.

Event Type: User may enter the Event Type from the keyboard press Help, press Return, or Cancel.

IF:
HELP:
System will scroll the contents of the MEvent Type Table in a window. The user will select the code desired by moving the highlight up or down. User will hit 'GO' when the desired code is highlighted. Code will be placed by the system in the appropriate place on the main screen.
PROMPT:
"Select desired entry, the press [GO]/ [FINISH]/[CANCEL]"

IF:
KEYBOARD ENTRY.
PERFORM: Table Validation Routine.
IF: Invalid Entry:
Err Msg: "Invalid code, Press [HELP] for a list of valid codes."

IF:
CANCEL:
Return to main screen.
IF:
Valid Entry:

MATCH: System will search Cntnr Discrp for the Event Type entered.
IF: Event Type entered = Event Type in Cntnr Discrp
DISPLAY:

Container Number XXXXXXXX
Container Owner XXXX

Consignee XXXXXX

Event	EventType	DiscrpCd	Shipment TCN
Shipm	K	A	XXXXXXXXXXXXXXXX
Discr	K	A	XXXXXXXXXXXXXXXX
Piece	K	J	XXXXXXXXXXXXXXXX

Event Date

CLEAR SCREEN				ADD			

PROMPT:
"Select desired event or select function."

User will choose one of three options at this point. Clear Screen, work with one of the events shown, or Add an event.

IF:
CLEAR SCREEN:
System will display first screen.

IF:
Existing Event:
User will move cursor to the desired Event, DiscrpCd, + Shipment TCN, and press 'GO'.

System will match ISAM file

IF:
NO MATCH:
Err Message:
"ISAM has already been sent to CMM."

ELSE:
IF:
MATCH:

System will display all existing CntnrDiscrp information about that container and a func-

tion key set as shown below:

Container Number	XXXXXXXX	
Container Owner	XXXX	
Consignee	XXXXXX	
Origin Code	XXX	
Event Type	X	
ShipmentUTCN	XXXXXXXXXXXXXXXX	
Discrepancy Code	X	(OPTIONAL)
Piece Count	XXXX	
Event Date	XXXXX	

CLEAR SCREEN			MODIFY	DELETE

User will choose one of three options at this point.

IF:

CLEAR SCREEN:

System will display first screen.

IF:

MODIFY:

The cursor will move to Piece Count. The user may change the Piece Count and Discrepancy Code at this point.

IF:

DELETE:

The system will delete the ISAM, CntnrDiscrp File, and the MEvent record (If the TTW was the last event for that event type).

IF:

ADD:

System will clear the HELP window, display the following screen and accept data from the user as follows:

PROMPT:

"Enter date in selected fields or press

[HELP]/[CANCEL]."

Container Number	XXXXXXXX
Container Owner	XXXX
Consignee	XXXXXX
Origin Code	XXX
Event Type	X
Event Date	---
ShipmentUTCN	
Discrepancy Code	
Piece Count	

Event Date:

Perform Date Validation Routine. User will press 'RETURN' to advance cursor to ShipmentTCN.

PROMPT:
"Press [HELP] or enter a 17 position TCN, Press [RETURN] or [FINISH]/[CANCEL]."

ShpmtUTCN:

IF: Keyboard Entry
Perform TCN edit

IF: Return is pressed and the TCN is already present in an existing MEvent.

ERR MSG:
"Record already exists. Reenter or press [FINISH]."

IF:
Valid TCN entered, and Event Type = J, L, cursor will move to Piece Count.

PROMPT:
"Enter a 3 position number. Press [RETURN]/[GO] or [FINISH]/[CANCEL]."

IF:
Valid TCN entered and Event Type = K, U, cursor will move to DiscrpCd.

PROMPT:
"Press [HELP] for a list of valid codes or enter code. Press [RETURN] or [FINISH]/[CANCEL]

DiscrpCd:

IF:
HELP:
System will scroll the contents of the DiscrpType Table in a window. The user will select the code desired by moving the highlight up or down. User will hit 'GO' when the desired code is highlighted. Code will be placed by the system in the appropriate place on the main screen.

IF:
Keyboard Entry.
Perform Table Validation.

IF:
Valid Entry:
Move cursor to Piece Count.

PROMPT:
"Enter a 3 position number. Press [RETURN]/[GO] or [FINISH]/[CANCEL]."

Piece Count: Perform Piece Count Edit

IF:
Piece Count Fails Edit.
DISPLAY:
Err Msg: "Must enter numeric data."

IF:
Valid Entry.
User will press [GO] or [RETURN] to create outputs and move cursor

to EvntDte, where additional TCNs can be processed.

IF:

CANCEL:

System will return to main screen with no processing of information.

IF:

FINISH:

System will return to Event Dte with no processing of information.

ELSE:
IF:

NO EXISTING EVENT:

Perform Add Routine.

MEvent

ELEMENT		FROM	TO
Container Owner		CntnrMovStp	CntnrOwnAbbr
Container Number	*	CntnrMov	CntnrNo
Consignee		CntnrMovStp	Consignee
DIC		Generated	MovEvntCd
Event Type	*	MEventType	EvntTy
Post Date		Generated	PstDte
Event Date		Screen	EvntDte
Origin Code	*	Parameter File/ORICO	OrigCd

NOTE: MEvent is only built ONCE for EventTypes, even though the event for a given container and stop occur more than once (EventType K or T, ... Discharge (Pickup with discrepancies)).

Container Move

Date Last Update		Generated	DteLstUpdCntnr

Container Discrepancy

Shipment Unit TCN	Screen	DiscrpTCN
Discrepancy Code	* CntnrDiscrp	DiscrpCd
Container Owner	CntnrMovStp	CntnrOwnAbbr
Container Number	* CntnrMov	CntnrNo
Consignee	CntnrMovStp	Consignee
Move Event Code	Generated	MovEvntCd
Event Type	* MEventType	EvntTy
DiscrpPc	Screen	ActlPcCnt

NOTE: Cntnr Discrepancy is built for ALL TTW events.

Event those with no discrepancies. The reason for this is that this is the file that is scrolled when the user needs to see what prior TTW Event/Discrepancies have been posted.

ISAM

MovEvntCd	Generated	CC 1-3
OrigCd	* ORICO/Parameter Table	CC 4-6
Filler		CC 7-9
**DiscrpTCN	Screen	CC 10-29
Consignee	CntnrMovStp	CC 30-35
DiscrpCd	* CntnrDiscrp	CC 36-37
DiscrpPc	Screen	CC 38-41
Filler		CC 42-43
EvntTy	* MEventType	CC 44
EvntDte	Screen	CC 45-47
Filler		CC 48-80

* Elements may also be screen entered.

** DiscrpTCN will occupy CC 10-26 of the ISAM, CC 27-29 will be left blank.

;

MAINTAINS:
CntnrDiscrp-File ;
MAINTAINS:
CntnrMov-File ;
MAINTAINS:

```
     Trns-ISAM-File ;
UPDATES:
     MEvent-File ;
EMPLOYS:
     MEventType-Tbl ,
     CntnrMovStp-File ,
     System-Parameter-Tbl ,
     DiscrpType-Tbl ;
ADDS:          TTW-CntnrMov-Upd TO CntnrMov-File ;
ADDS:          TTW-ISAM-Info TO Trns-ISAM-File ;
ADDS:          TTW-MEvent-Upd TO MEvent-File ;
ADDS:          CntnrDiscrp TO CntnrDiscrp-File ;
MODIFIES:      TTW-CntnrMov-Upd IN CntnrMov-File ;
MODIFIES:      TTW-ISAM-Info IN Trns-ISAM-File ;
MODIFIES:      CntnrDiscrp IN CntnrDiscrp-File ;
REFERENCES:    TTW-EventType-Ref IN MEventType-Tbl ;
REFERENCES:    TTW-CntnrMov-Ref IN CntnrMov-File ;
REFERENCES:    DiscrpType IN DiscrpType-Tbl ;
REFERENCES:    TTW-ISAM-Info IN Trns-ISAM-File ;
REFERENCES:    CntnrDiscrp IN CntnrDiscrp-File ;
REFERENCES:    CntnrMovStp-Ref IN CntnrMovStp-File ;
REFERENCES:    Parameter-OrigCd-Ref IN System-Parameter-Tbl ;
CREATES:
     CntnrMov ,
     Trns-ISAM-Data ,
     MEvent ,
     CntnrDiscrp ;
RESPONSIBLE PROBLEM DEFINER IS:
               'Mitchem' ;
```

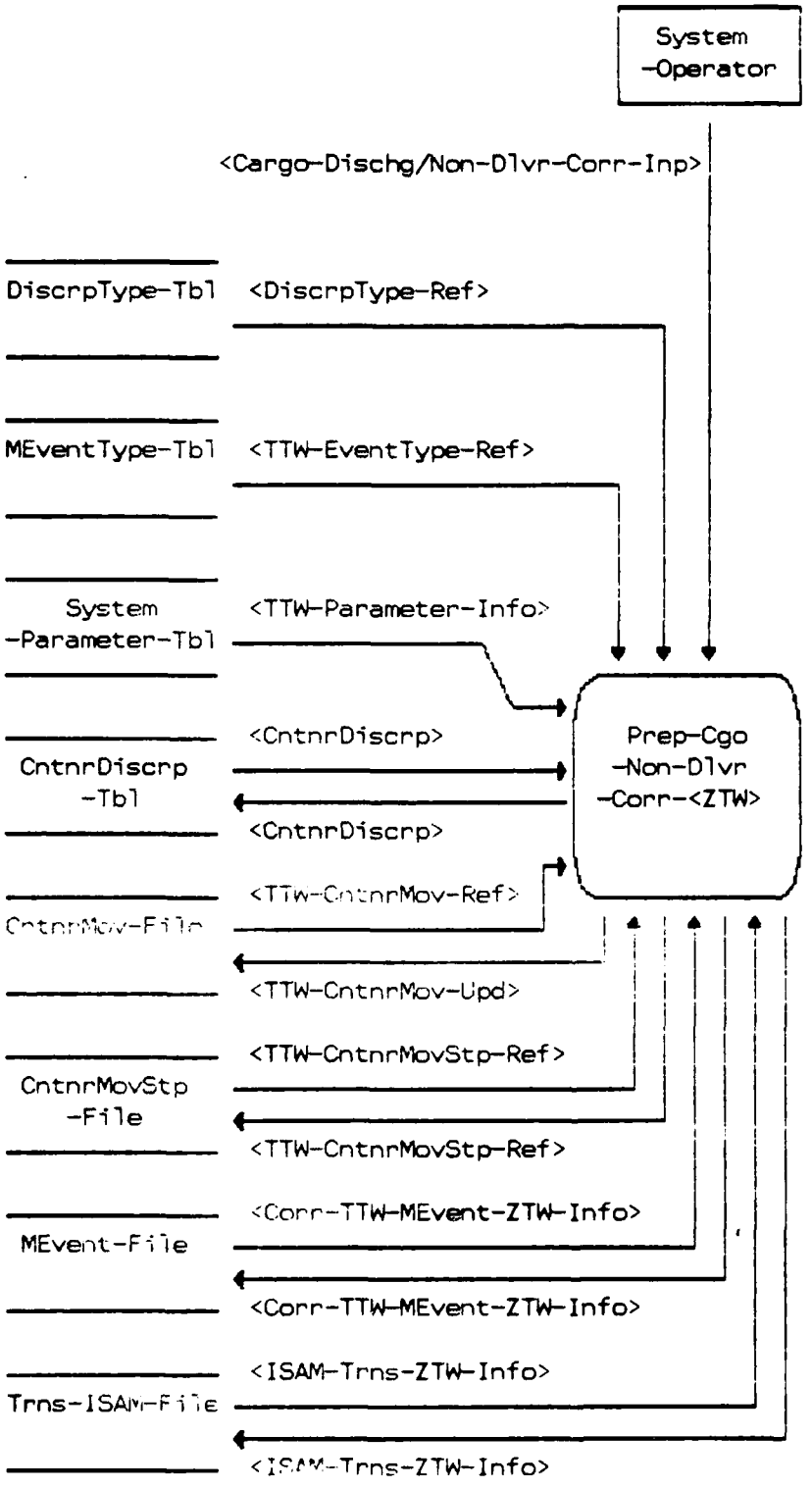

Figure 11. Prep-Cgo-Non-Dlvr-Corr-<ZTW>

```
17   DEFINE PROCESS                          Prep-Cgo-Non-Dlvr-Corr-<ZTW> ;
       DESCRIPTION;
    Prepare Cargo Discharge/Non-Delivery Correction <ZTW>
    This process receives cargo discharge/non-delivery correction informa-
    tion which is used to correct aspects of a previously submitted TTW
    transaction.
     ;
        KEYWORD IS:     'Container' ,
                        'LOB' ;
        SEE MEMO:
             Front-End-Process-Memo ,
             ZTW-Integration-Memo ,
             TCR-ZTW-Process-Memo ;
        RECEIVES:
             Cargo-Dischg/Non-Dlvr-Corr-Inp ;
        PART OF:        Rec+Report-Cntnr-Mov-Events ;
        PROCEDURE;

    1)
         If:
             User enters CntnrNo
             MATCH:
                    CntnrNo from screen with CntnrNo in CntnrMovStp File
                    IF:
                        NO MATCH:
                        DISPLAY:
                                "Container Number not valid, reenter or
                                 exit process."

                    ELSE:
                           Use CntnrNo to access CntnrMovStp.
                           DISPLAY:
                           "CntnrNo CntnrOwn Consignee MultiStpNo StpComp"
                             XXXXX   XXXX     XXXXXX        X

                            System will allow user to course through this
                            scrollable screen to the desired stop.  When the
                            stop is selected, the user will hit "GO" and
                            the first process screen will be displayed.
                        MOVE:
                              CntnrNoPrefix from CntnrMov to Container
                              Number on first process screen.
         DISPLAY:
                   First Process Screen

    2)
         IF:
             User enters CntnrNo + CntnrNoPrefix
         MATCH:
```

```
        CntnrNo from screen with CntnrNo in CntnrMovStp File
        IF:
            NO MATCH:
            DISPLAY:
                    "Container Number not valid, reenter or
                     exit process."
            EDIT:
                   System will edit CntnrNoPrefix
                   IF:
                        CntnrNoPrefix < > Alphanumeric
                        DISPLAY:
                                 Err Msg - "Container number must
                                           be alphanumeric."

        ELSE:
               Use CntnrNo from screen to access CntnrMovStp.
               DISPLAY:
                          "CntnrNo  CntnrOwn Consignee MultiStpNo"
                           XXXXXXXX   XXXX     XXXXXX      X

                  System will allow user to course through this
                  scrollable screen to the desired stop.  When the
                  stop is selected, the user will hit "GO" and the
                  first process screen will be displayed.
               IF:  CntnrNoPrefix in CntnrMov = 000
                    UPDATE:  Screen entered CntnrNoPrefix to
                             CntnrNoPrefix in CntnrMov.

                    MOVE:  CntnrNoPrefix from CntnrMov to Container
                           Number on First Process Screen.
DISPLAY:
          First Process Screen

3)  IF:
        User enters FWTNo
        MATCH:
              FWTNo from screen with FWTNo in CntnrMov File
              IF:
                   NO MATCH:
                   DISPLAY:  Freight Warrant Number entered not
                             valid.  Reenter or exit the process.
              ELSE:
                     Use CntnrNo and CntnrOwnAbbr found in the
                     CntnrMov file to access CntnrMovStp
                     DISPLAY:
                               Cntnr Mov Stop data as follows:

                        CntnrNo    CntnrOwn   Consignee   MultiStpNo
```

XXXXX XXXX XXXXXX X

System will allow user to course through this scrollable screen to the desired stop. When the stop is selected, the user will hit 'GO' and the first process screen will be displayed.
MOVE:
CntnrNoPrefix from CntnrMov to Container Number on first process screen.

DISPLAY:
First Process Screen

4) IF:
User enters TMRPrefix
MATCH:
TMRPrefix from screen with TMRPrefix in CntnrMov file
IF:
NO MATCH:
DISPLAY: TMRPrefix entered not valid. Reenter or exit the process.
ELSE:
Use CntnrNo and CntnrOwnAbbr found in the CntnrMov file to access CntnrMovStp
DISPLAY:
CntnrMovStp data as follows:

CntnrNo	CntnrOwn	Consignee	MultiStpNo
XXXXX	XXXX	XXXXXX	X

System will allow user to course through this scrollable screen to the desired stop. When the stop is selected, the user will hit 'GO' and the first process screen will be displayed
MOVE:
CntnrNoPrefix from CntnrMov to Container Number on first process screen.

DISPLAY:
First Process Screen

IF:
User enters CntnrTCN.
MATCH:
CntnrTCN from screen with CntnrTCN in CntnrMov.

IF:

No match.
DISPLAY:

"Container TCN not valid. Reenter or exit process."

ELSE:

Select CntnrNo, CntnrOwnAbbr from CntnrMov to access CntnrMovStp.
DISPLAY:

CntnrMovStp data as follows:

Cntnr No	CntnrOwnAbbr Abbr	Consignee	MultiStp No	Stp Comp
XXXXX	XXXX	XXXXXX	X	X
XXXXX	XXXX	XXXXXX	X	X

System will allow user to course through this scrollable screen to the desired stop. When the stop is selected, the user will hit [GO] and the first process screen will be displayed.

MOVE:

CntnrNoPrefix from CntnrMov to Container Number on the first process screen.

MOVE:

Origin Code contained in Parameter Table to screen.

DISPLAY:

Process screen as follows:

ZTW

Container Number	XXXXXXXX
Container Own Abbr	XXXX
Consignee	XXXXXX
Origin Code	XXXX
Event Type	
Event Date	
Shipment TCN	
DiscrpCd	
Piece Count	

Event Type:

User will enter the Event Type of the TTW event that needs to be changed.
User may enter the Event Type from the keyboard press Help, press Return, or Cancel.

IF:

HELP:

System will scroll the contents of the MEvent Type Table in a window. The user will select the code desired by moving the highlight up or down. User will hit 'GO' when the desired code is highlighted. Code will be placed by the system in the appropriate place on the main screen.

IF:

KEYBOARD ENTRY.
PERFORM: Table Validation Routine.

MATCH:

System will search MEvent for the Event Type entered (Keyboard or Help Screen Entry).

IF:

NO MATCH:

DISPLAY:

'There is no TTW Event for this process. You cannot do a ZTW Event until a TTW Event exists.

ELSE:

Use primary key of matched MEvent to search CntnrDiscrp.

MATCH:

System will search Cntnr Discrp for the Event Type entered.

IF:

Event Type entered = Event Type in Cntnr Discrp
DISPLAY:

Container Number XXXXXXXX
Container Owner XXXX
Consignee XXXXXX

Event	EventType	DiscrpCd	ShipmentTCN
Shipm	K	A	XXXXXXXXXXXXXXXXX
Discr	K	A	XXXXXXXXXXXXXXXXX
Piece	K	J	XXXXXXXXXXXXXXXXX

```
     |_____________________________________________|
Event Date
```

User will select from this screen via a highlight bar.

MATCH:

The system will match the chosen EventType Discrepancy Code, and ShipmentUTCN for that Container Move Stop with the TTW ISAM.

IF:

NO MATCH of selected Event + ISAM:
DISPLAY:

On the screen information about the event as follows:

Container Number	XXXXXXXX	
Container Owner	XXXX	
Consignee	XXXXXX	
Origin Code		
Event Type	X	
ShipmentUTCN	XXXXXXXXXXXXXXXX	
Discrepancy Code	X	(OPTIONAL)
Piece Count	XXXX	
Event Date	XXXXX	

The user may modify Event Type, DiscrpCd, Piece Count, or Event Date at this time. The cursor will be on Event Type.

Event Type IF:

HELP:

System will scroll the contents of the MEvent Type Table in a window. The user will select the code desired by moving the highlight up or down. User will hit 'GO' when the desired code is highlighted. Code will be placed by the system in the appropriate place on the main screen. Move cursor to DiscrpCd.

IF:

Keyboard Entry.
Perform Table Validation.
Move cursor to DiscrpCd.

IF:
Return.
Leave existing EventType. Move cursor to DiscrpCd.

DiscrpCd: IF:
HELP:
System will scroll the contents of the DiscrpType Table in a window. The user will select the code desired by moving the highlight up or down. User will hit 'GO' when the desired code is highlighted. Code will be placed by the system in the appropriate place on the main screen. Move cursor to Piece Count.

IF:
Keyboard Entry.
Perform Table Validation.
Move cursor to Piece Count.

IF:
Return.
Leave existing Discrepancy Code, move cursor to Piece Count.

Piece Count IF:
Keyboard Entry.
Perform Piece Count edit.
Move cursor to Event Date.

IF:
Return.
Leave existing Piece Count.
Move cursor to Event Date.

Event Date IF:
Keyboard Entry.
Perform Date Validation Routine.

IF:
Return.
Leave existing event date.

After either of the 2 event date options, user will press

'Finish'. Cursor will move to EventType for new ZTW Event processing, and the following outputs will be created:

MEvent

ELEMENT		FROM	TO
Container Owner		CntnrMovStp	CntnrOwnAbbr
Container Number	*	CntnrMov	CntnrNo
Consignee		CntnrMovStp	Consignee
DIC		Existing MEvent	MovEvntCd
Event Type	*	Existing MEvent (o)	EvntTy
Post Date		Generated	PstDte
Event Date	*	Existing MEvent (o)	EvntDte
Origin Code		Parameter File	OrigCd

Container Discrepancy

Shipment Unit TCN		Existing Cntnr Discrepancy	DiscrpTCN
Discrepancy Code	*	Existing Cntnr Discrepancy (o)	DiscrpCd
Container Owner		CntnrMovStp	CntnrOwnAbbr
Container Number	*	CntnrMov	CntnrNo
Consignee		CntnrMovStp	Consignee
Move Event Code		Existing Cntnr Discrepancy	MovEvntCd
Event Type	*	Existing Cntnr Discrepancy (o)	EvntTy
DiscrpPc	*	Existing Cntnr Discrepancy (o)	ActlPcCnt
Event Date	*	Existing Cntnr Discrepancy (o)	Discrp Dte

ISAM

MovEvntCd	Generated	CC 1-3
OrigCd	Parameter Table	CC 4-6
Filler		CC 7-9
DiscrpTCN	Existing Cntnr Discrp	CC 10-29
Consignee	CntnrMovStp	CC 30-35
DiscrpCd	* CntnrDiscrp (o)	CC 36-37
DiscrpPc	* CntnrDiscrp (o)	CC 38-41
Filler		CC 42-43
EvntTy	* CntnrDiscrp (o)	CC 44
EvntDte	* CntnrDiscrp (o)	CC 45-47

Filler CC 48-80

* Elements may also be screen entered.

```
IF:
     MATCH of selected Event + TTW ISAM
     DISPLAY:
               'You cannot do a ZTW.  The TTW for this TXN has not
               yet been sent to CMM.'

 ;
   MAINTAINS:
        CntnrDiscrp-File ;
   MAINTAINS:
        CntnrMov-File ;
   MAINTAINS:
        CntnrMovStp-File ;
   MAINTAINS:
        MEvent-File ;
   MAINTAINS:
        Trns-ISAM-File ;
   EMPLOYS:
        DiscrpType-Tbl ,
        System-Parameter-Tbl ,
        MEventType-Tbl ;
   ADDS:            ISAM-Trns-ZTW-Info TO Trns-ISAM-File ;
   MODIFIES:        Corr-TTW-MEvent-ZTW-Info IN MEvent-File ;
   MODIFIES:        TTW-CntnrMov-Upd IN CntnrMov-File ;
   MODIFIES:        CntnrDiscrp IN CntnrDiscrp-File ;
   MODIFIES:        ISAM-Trns-ZTW-Info IN Trns-ISAM-File ;
   MODIFIES:        CntnrMovStp-Ref IN CntnrMovStp-File ;
   REFERENCES:      DiscrpType-Ref IN DiscrpType-Tbl ;
   REFERENCES:      Corr-TTW-MEvent-ZTW-Info IN MEvent-File ;
   REFERENCES:      TTW-CntnrMov-Ref IN CntnrMov-File ;
   REFERENCES:      CntnrDiscrp IN CntnrDiscrp-File ;
   REFERENCES:      ISAM-Trns-ZTW-Info IN Trns-ISAM-File ;
   REFERENCES:      TTW-EventType-Ref IN MEventType-Tbl ;
   REFERENCES:      CntnrMovStp-Ref IN CntnrMovStp-File ;
   REFERENCES:      Parameter-OrigCd-Ref IN System-Parameter-Tbl ;
   CREATES:
        Trns-ISAM-Data ;
   RESPONSIBLE PROBLEM DEFINER IS:
                    'Mitchem' ;
```

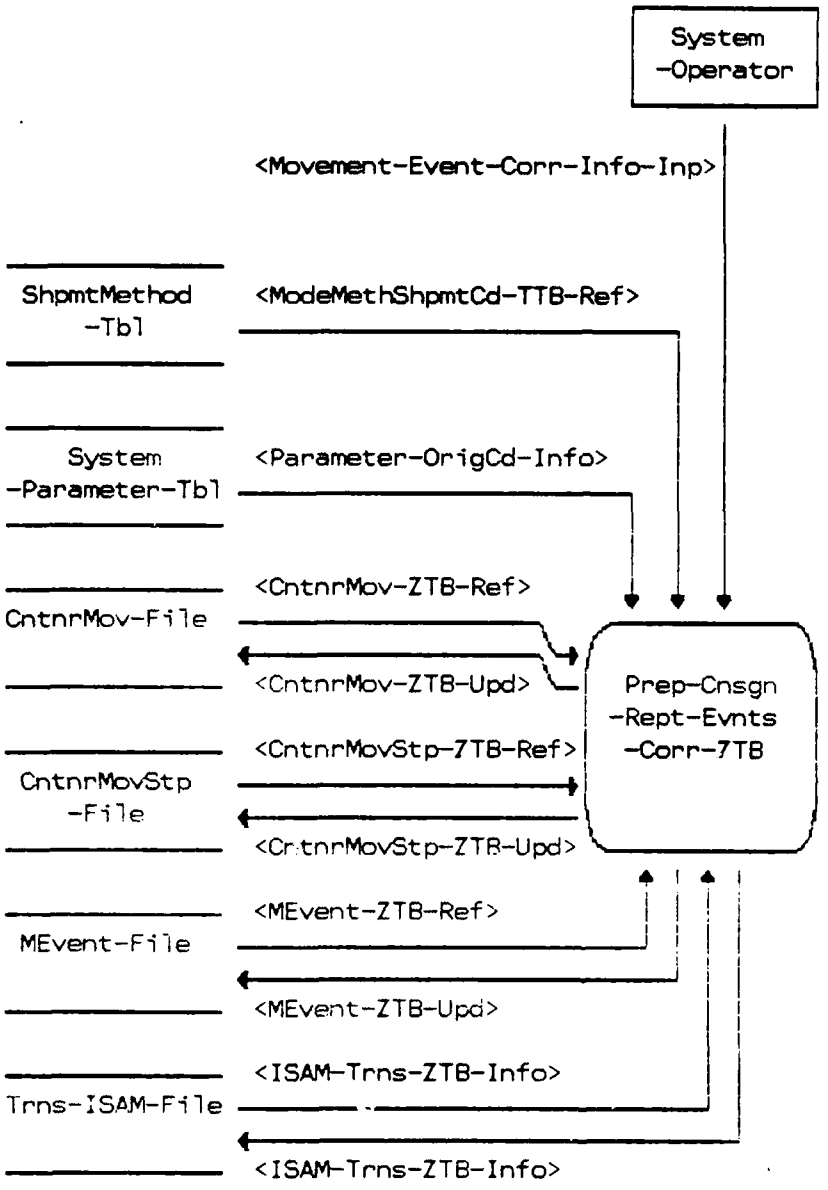

Figure 12. Prep-Cnsgn-Rept-Evnts-Corr-ZTB

```
18   DEFINE PROCESS                          Prep-Cnsgn-Rept-Evnts-Corr-ZTB ;
       DESCRIPTION;
    Prepare Consignee Reported Events Correction <ZTB>
    This process receives consignee reported event correction information
    from the customer and the ZTB transaction information received is used
    to update the container database.
     ;
        KEYWORD IS:     'Container' ,
                        'LOB' ;
        SEE MEMO:
             Front-End-Process-Memo ,
             ZTB-Integration-Memo ,
             TCR-ZTB-Process-Memo ;
        RECEIVES:
             Movement-Event-Corr-Info-Inp ;
        PART OF:        Rec+Report-Cntnr-Mov-Events ;
        PROCEDURE;

    1)
         If:
             User enters CntnrNo
             MATCH:
                     CntnrNo from screen with CntnrNo in CntnrMovStp File
                     IF:
                         NO MATCH:
                         DISPLAY:
                                 "Container Number not valid, reenter or
                                  exit process."

                     ELSE:
                            Use CntnrNo to access CntnrMovStp.
                            DISPLAY:
                            "CntnrNo CntnrOwn Consignee MultiStpNo StpComp"
                              XXXXX   XXXX     XXXXXX        X

                             System will allow user to course through this
                             scrollable screen to the desired stop.  When the
                             stop is selected, the user will hit "GO" and
                             the first process screen will be displayed.
                         MOVE:
                               CntnrNoPrefix from CntnrMov to Container
                               Number on first process screen.
         DISPLAY:
                    First Process Screen

    2)
         IF:
             User enters CntnrNo + CntnrNoPrefix
         MATCH:
```

```
        CntnrNo from screen with CntnrNo in CntnrMovStp File
        IF:
            NO MATCH:
            DISPLAY:
                    "Container Number not valid, reenter or
                     exit process."
            EDIT:
                   System will edit CntnrNoPrefix
                   IF:
                        CntnrNoPrefix < > Alphanumeric
                        DISPLAY:
                                 Err Msg - "Container number must
                                           be alphanumeric."

        ELSE:
               Use CntnrNo from screen to access CntnrMovStp.
               DISPLAY:
                          "CntnrNo  CntnrOwn Consignee MultiStpNo"
                           XXXXXXXX   XXXX     XXXXXX      X

                  System will allow user to course through this
                  scrollable screen to the desired stop.  When the
                  stop is selected, the user will hit "GO" and the
                  first process screen will be displayed.
               IF:  CntnrNoPrefix in CntnrMov = 000
                    UPDATE:  Screen entered CntnrNoPrefix to
                             CntnrNoPrefix in CntnrMov.

                    MOVE:  CntnrNoPrefix from CntnrMov to Container
                           Number on First Process Screen.
DISPLAY:
          First Process Screen

3)  IF:
        User enters FWTNo
        MATCH:
              FWTNo from screen with FWTNo in CntnrMov File
              IF:
                   NO MATCH:
                   DISPLAY:  Freight Warrant Number entered not
                             valid.  Reenter or exit the process.
              ELSE:
                     Use CntnrNo and CntnrOwnAbbr found in the
                     CntnrMov file to access CntnrMovStp
                     DISPLAY:
                               Cntnr Mov Stop data as follows:

                        CntnrNo    CntnrOwn   Consignee   MultiStpNo
```

XXXXX XXXX XXXXXX X

System will allow user to course through this scrollable screen to the desired stop. When the stop is selected, the user will hit 'GO' and the first process screen will be displayed.
MOVE:
CntnrNoPrefix from CntnrMov to Container Number on first process screen.

DISPLAY:
First Process Screen

4) IF:
User enters TMRPrefix
MATCH:
TMRPrefix from screen with TMRPrefix in CntnrMov file
IF:
NO MATCH:
DISPLAY: TMRPrefix entered not valid. Reenter or exit the process.
ELSE:
Use CntnrNo and CntnrOwnAbbr found in the CntnrMov file to access CntnrMovStp
DISPLAY:
CntnrMovStp data as follows:

CntnrNo	CntnrOwn	Consignee	MultiStpNo
XXXXX	XXXX	XXXXXX	X

System will allow user to course through this scrollable screen to the desired stop. When the stop is selected, the user will hit 'GO' and the first process screen will be displayed
MOVE:
CntnrNoPrefix from CntnrMov to Container Number on first process screen.

DISPLAY:
First Process Screen

IF:
User enters CntnrTCN.
MATCH:
CntnrTCN from screen with CntnrTCN in CntnrMov.

IF:
No match.
DISPLAY:
"Container TCN not valid. Reenter or exit process."

ELSE:
Select CntnrNo, CntnrOwnAbbr from CntnrMov to access CntnrMovStp.
DISPLAY:
CntnrMovStp data as follows:

Cntnr No	CntnrOwnAbbr Abbr	Consignee	MultiStp No	Stp Comp
XXXXX	XXXX	XXXXXX	X	X
XXXXX	XXXX	XXXXXX	X	X

System will allow user to course through this scrollable screen to the desired stop. When the stop is selected, the user will hit [GO] and the first process screen will be displayed.

MOVE:
CntnrNoPrefix from CntnrMov to Container Number on the first process screen.

MOVE:
OrigCd from Parameter table to screen.

Prompt: _____

MATCH:
CntnrNo, CntnrOwnAbbr, Consignee from front end process with CntnrNo, CntnrOwnAbbr and Consignee in MEvent.

IF:
NO MATCH:
DISPLAY:
'You must first do a TTB before you can do a ZTB'.

ELSE:
DISPLAY:
System will display all those events/dates, found in the TTB MEvent.

CONTAINER NUMBER: XXXXXXXX

```
                CONTAINER OWNER:  XXXX
                  VOYAGE NUMBER:  XXXXX
                      CONSIGNEE:  XXXXXX
                    ORIGIN CODE:  XXX
          TYPE MOVEMENT NO CODE:  X
               MODE METHOD CODE:  X
             TYPE CARRIER CODE:   X

  EVENT TYPES     A       B       C       D       E

  EVENT DATES   XXXXX   XXXXX   _____   XXXXX   _____
```

In the example provided above, the system either found A, B, and D event dates for that container in MEvent.

At this time, the cursor will be on ModeMethShpmtCd

IF:

HELP:

System will scroll the contents of the Shpmt-Method Table in a window. The user will select the code desired by moving the highlight up or down. User will hit 'GO' when the desired code is highlighted. Code will be placed by the system in the appropriate place on the main screen.

IF: Keyboard Entry.

Perform Table Validation.

IF:

GO:

MATCH:

CntnrNo, CntnrOwnAbbr, Consignee, DIC ZTB with the ISAM file.

IF:

MATCH:

System will overlay the existing ZTB - ISAM with the changed ModeMethShpmtCd and ALL the MEvent dates contained in
---
MEvent and the ModeMethShpmtCd contained in CntnrMov.

ELSE:

NO MATCH:

System will create a ZTB ISAM + overlay the ModeMethShpmtCd in CntnrMov-File. All of the dates found in MEvent will be placed on the ZTB ISAM.

IF:
RETURN:

System will then advance the cursor to the Event and dates, going to the latest event first (E --> D --> C/B --> A)

Event Date(s)

IF:
<HELP>:
System will generate today's date.
IF: <RETURN>
And no date entered. Advance cursor to next earliest date
IF:
Keyboard Entry
IF:
5 zeros (00000) are keyed in, and <RETURN> is pressed:

'Event Date to be deleted. Press <RETURN> to continue, or <CANCEL> to deny.'

IF:
<RETURN>
PERFORM: Date-Validation-Routine <ZTB>
System will delete the MEvent record

MATCH:
System will match the CntnrNo, CntnrOwn-Abbr, and Consignee with the ISAM file

IF:
DIC ZTB exists in the ISAM file for that container, overlay the existing date field (if the processed event = the existant event on the ZTB ISAM) or add the date to the multiple entry portion of the ZTB ISAM.

ELSE:
NO MATCH OF ZTB ISAM:
System will create a ZTB ISAM and place processed date in the appro-

priate CC.
System will then advance to the next earliest date.

ELSE:

If different date is entered for Events 'A', 'B', 'C', or 'E' than what was there before, and <RETURN> is pressed.
PERFORM:

Date-Validation-Routine <ZTB>

MATCH:

System will match the CntnrNo, CntnrOwnAbbr, and Consignee with the ISAM file.

IF:

DIC ZTB exists in the ISAM file for that container, overlay the existing date field (if the processed event = the existant event on the ZTB ISAM) or add the date to the multiple entry portion of the ZTB ISAM.

ELSE:

NO MATCH OF ZTB ISAM:
System will create a ZTB ISAM and place processed date in the appropriate CC. System will then advance to the next earliest date.

ELSE:

If different date for Event 'D' is entered than what was there before
DISPLAY:

'You may not change the 'D' date.
See your System Administrator.

The following updates will be accomplished by this process.

		I	
		ISAM	
ELEMENT		FROM	TO
DIC		Generate	CC 1-3
Origin Code		Parameter Table	CC 4-6
Type Carrier Code		CntnrMov	CC 7
Mode Method Shipment Code	*	CntnrMov	CC 8
Type Movement No Code		Existing MEvent	CC 9
Movement No		Generate	CC 10-29

Consignee		CntnrMovStp	CC 30-35
Voyage Document No		CntnrMov	CC 36-40
Type Event	*	Existing MEvent	CC 48
Date Event	*	Existing MEvent	CC 49-51
Type Event	*	Existing MEvent	CC 52
Date Event	*	Existing MEvent	CC 53-55
Type Event	*	Existing MEvent	CC 56
Date Event	*	Existing MEvent	CC 57-59
Type Event	*	Existing MEvent	CC 60
Date Event	*	Existing MEvent	CC 61-63

II

MEvent Record

ELEMENT		FROM	TO
Event Date	*	Existing MEvent	MEvent
Event Type		Existing MEvent	MEvent
Cntnr Own Abbr		CntnrMovStp	MEvent
Container No	*	CntnrMov	MEvent
Consignee		CntnrMovStp	MEvent
Mov Event Code		Generated	MEvent
Origin Code		Existing MEvent	MEvent
Type Mov No Code		Existing MEvent	MEvent
Post Date		Generated	PstDte

III

Container Move

ELEMENT	FROM	TO
Date Last Update Cntnr	Generated	DteLstUpdCntnr
Mode Meth Shpmt Cd	Screen	ModeMethShpmtCd

* May be screen entered

IF:
Mode Method Code is changed on the ZTB, the system will ensure that ALL dates in the existing MEvent file for that container are put on the ZTB. (either an existing ZTB ISAM or a newly created one).
ELSE:
IF:

Only dates are changed, those dates that are changed will either overlay the ZTB ISAM (if there is one) or appear in the proper fields of a newly created ZTB ISAM.

```
IF:
     E Date

     Prompt:  "Enter different date.  Press [RETURN]/[GO] or
               [FINISH]/[CANCEL]."

     IF:
          Keyboard Entry.
          PERFORM:
                    Julian date edit.
          IF:
               Date entered is valid.
               MATCH:
                         E Event Type with the TTB ISAM file.
               IF:
                    Match.
                    DISPLAY:
                              "TTB record on file.  Use TTB process.
                               Press [RETURN] to continue."
                               Original date values.
               IF:
                    No match.
                    MATCH:
                             Entered E date with existing B or C
                             date.
                    IF:
                         Entered E date < existing B or C date.
                         DISPLAY:
                                   "E date must be equal to or
                                    greater than B or C date."
               IF:
                    [GO] is pushed, exit process and build record.
               IF:
                    [RETURN] is pushed, advance to the D date.

                    Prompt:  "D date can only be deleted.  Press
                              [RETURN]/[GO] or [FINISH]/[CANCEL].
IF:
     D Date:
     IF:
          Entered values < > 0.
          DISPLAY:
                    "Cannot modify D date.  Press [RETURN] to
                     continue."
          IF:
```

```
                Date entered is valid.

                IF:
                     [GO] is pushed, exit process and build record.
                IF:
                     [RETURN] is pushed, advance to the C date or B
                     date, whichever is present.

                     Prompt:  "Enter different date.  Press [RETURN]/
                               [GO] or [FINISH]/[CANCEL]."
     IF:
          [RETURN] is pushed with no zero values, advance cursor to
          the C date or B date, whichever was present in MEvent.

          Prompt:  "Enter different date.  Press [RETURN]/[GO] or
                    [FINISH]/[CANCEL]."
IF:
     C Date:
     IF:
          Keyboard Entry.
          PERFORM:
                    Julian date edit.
          IF:
               Date entered is valid.
               MATCH:
                         C Event Type with the TTB ISAM file.
                         IF:
                              Match.
                              DISPLAY:
                                        "TTB record on file.  Use TTB
                                         process.  Press [RETURN] to
                                         continue."  Original date
                                         values.
               COMPARE:
                         Entered C date with existing A date.
                         IF:
                              Entered C date < existing A date.
                              DISPLAY:
                                        "C date must be greater than
                                         or equal to A date. "
                                         Original date reappears.
               COMPARE:
                         Entered C date with E date.
                         IF:
                              Entered C date > existing E date.
                              DISPLAY:
                                        "C date must be less than
                                         or equal to E date."
                                         Original date reappears.
```

```
                    IF:
                         [GO] is pushed, exit process and build record.
                    IF:
                         [RETURN] is pushed, advance to the A date.

                         Prompt:  "Enter different date.  Press [RETURN]/
                                   [GO] or [FINISH]/[CANCEL]."
          IF:
               [RETURN] is pushed with no entered values, advance
               cursor to A date.

               Prompt:  "Enter different date.  Press [RETURN]/[GO] or
                         [FINISH]/[CANCEL]."
     IF:
          B Date:
          IF:
               Keyboard Entry.
               PERFORM:
                         Julian date edit.
               IF:
                    Date entered is valid.
                    MATCH:
                              B Event Type with the TTB ISAM file.
                              IF:
                                   Match.
                                   DISPLAY:
                                             "TTB record on file use TTB
                                              process.  Original date
                                              values.
                    COMPARE:
                              Entered B date with existing A date.
                              IF:
                                   Entered B date < existing A date.
                                   DISPLAY:
                                             "B date must be greater
                                              than or equal to A date."
                                              Original date reappears.
                    COMPARE:
                              Entered B date with E date.
                              IF:
                                   Entered B date > existing E date.
                                   DISPLAY:
                                             "B date must be less than
                                              or equal to E date."
                                              Original date reappears.
                    IF:
                         [GO] is pushed, exit process and build record.
                    IF:
                         [RETURN] is pushed, advance to the A date.
```



```
                    Prompt:  "Enter different date.  Press [RETURN]/
                              [GO] or [FINISH]/[CANCEL]."
          IF:
               [RETURN] is pushed with no entered values, advance
               cursor to A date.
     IF:
          A Date:
          IF:
               Keyboard Entry.
               PERFORM:
                         Julian date edit.
               IF:
                    Date entered is valid.
                    MATCH:
                              A Event Type with the TTB ISAM file.
                              IF:
                                   Match.
                                   DISPLAY:
                                             "TTB record on file.  Use TTB
                                              process." Original date
                                              values.
                    COMPARE:
                               Entered A date with B or C date.
                               IF:
                                    Entered A date > existing B or C
                                    date.
                                    DISPLAY:
                                              "A date must be equal to or
                                               less than (B)(C) date."
                    IF:
                         [GO] is pushed, exit process and build record.
                    IF:
                         [RETURN] is pushed, wrap around to Mode Meth
                         Shipment Code.
          IF:
               [RETURN] is pushed with no entered values, wrap around
               to Mode Method Shipment Code.

;
     MAINTAINS:
          CntnrMov-File ;
     MAINTAINS:
          CntnrMovStp-File ;
     MAINTAINS:
          MEvent-File ;
     MAINTAINS:
          Trns-ISAM-File ;
     EMPLOYS:
```



```
     System-Parameter-Tbl ,
     ShpmtMethod-Tbl ;
ADDS:          ISAM-Trns-TTB-Info TO Trns-ISAM-File ;
MODIFIES:      ISAM-Trns-TTB-Info IN Trns-ISAM-File ;
MODIFIES:      CntnrMovStp-ZTB-Upd IN CntnrMovStp-File ;
MODIFIES:      CntnrMov-ZTB-Upd IN CntnrMov-File ;
MODIFIES:      MEvent-ZTB-Upd IN MEvent-File ;
REFERENCES:    ISAM-Trns-TTB-Info IN Trns-ISAM-File ;
REFERENCES:    CntnrMov-ZTB-Ref IN CntnrMov-File ;
REFERENCES:    MEvent-ZTB-Ref IN MEvent-File ;
REFERENCES:    ModeMethShpmtCd-TTB-Ref IN ShpmtMethod-Tbl ;
REFERENCES:    CntnrMovStp-Ref IN CntnrMovStp-File ;
REFERENCES:    Parameter-OrigCd-Ref IN System-Parameter-Tbl ;
CREATES:
     Trns-ISAM-Data ;
RESPONSIBLE PROBLEM DEFINER IS:
               'Mitchem' ;
```

AD-A190 393 FUNCTIONAL DESCRIPTION FOR THE DEPARTMENT OF THE ARMY MOVEMENT MANAGEMENT..(U) INTERNATIONAL BUSINESS SERVICES INC PRINCE GEORGE VA DEFENSE S.. W ANCKAITIS

UNCLASSIFIED 31 DEC 87 DSDPG-375-049-87-3-VOL-1 F/G 12/7 NL

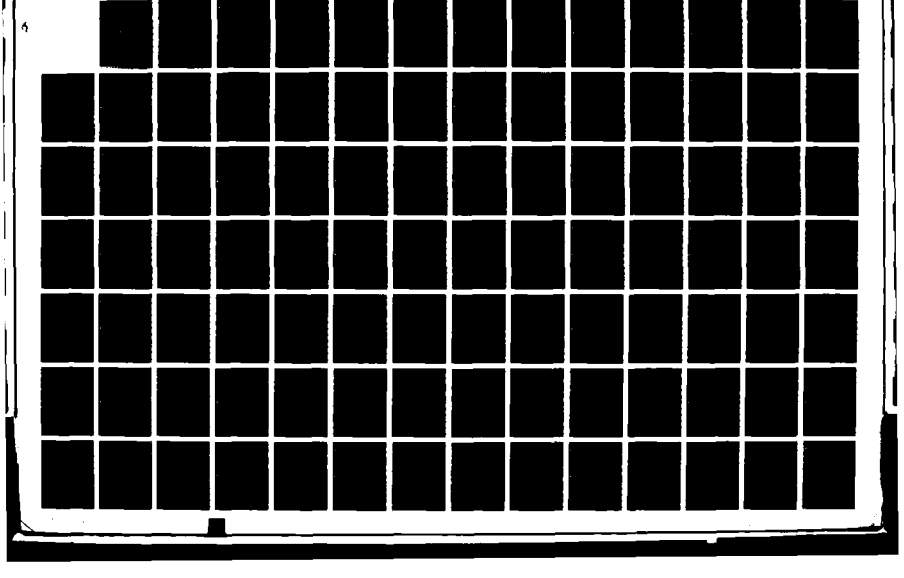

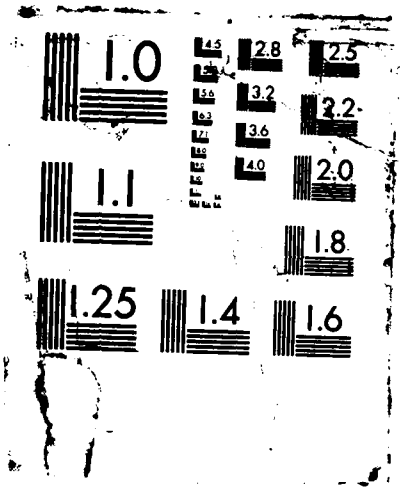
1.0
1.1
1.25
1.4
1.6
1.8
2.0
2.2
2.5
2.8
3.2
3.6
4.0
4.5

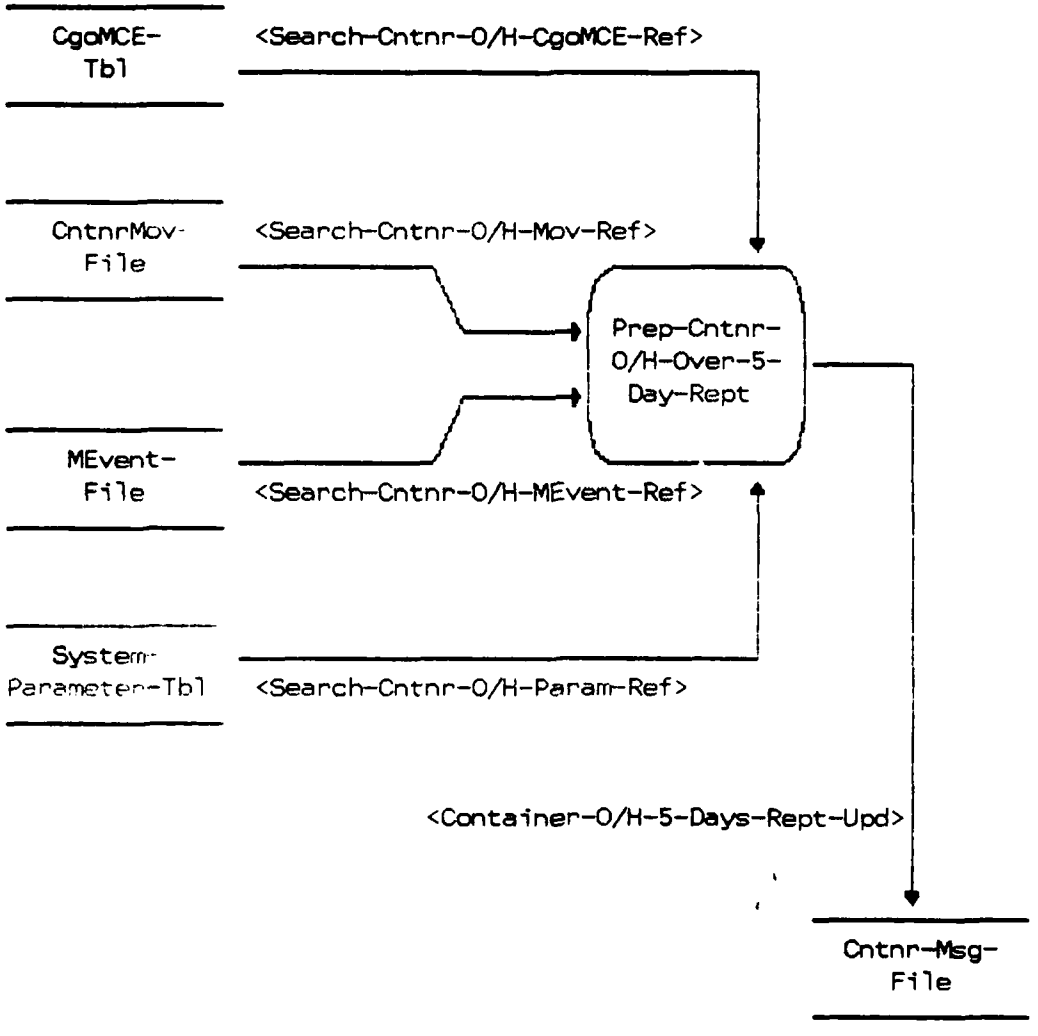

Figure 13. Prep-Cntnr-O/H-Over-5-Day-Rept

19 DEFINE PROCESS Prep-Cntnr-O/H-Over-5-Day-Rept ;
DESCRIPTION;
Prepare Container On Hand Over Five Days Report
This process is initiated daily by the MCT system user. The container database is screened to identify all containers that have been reported arrived at a consignee, but do not have an unstuffed transaction posted for five days after the arrival date. The process will format the information in a message file which is transmitted to TMCA daily.
;
KEYWORD IS: 'Container' ,
'LOB' ;
SEE MEMO:
TCR-Cntnr-O/H-Over-5-Day-Memo ;
PART OF: Prepare-Container-Reports ;
PROCEDURE;

READ: MEvent Record
IF: Movement Event Code not TTB
THEN: Read next record
IF: Movement Event Code = TTB
THEN: Read the EvntTy value in that record.
IF: EvntTy A, and no B, C, D, or E record.
THEN: Read the EvntDte from that TTB A (MEvent) record and compute the difference from that date and the system calendar date. (Dte Curr)
IF: The difference between the dates is less than the value "X" (value of Cntnr O/H over X days) in the parameter table.
THEN: Read next record
IF: The difference between the dates is equal to or greater than the value "X" in the parameter table.
THEN: Store the following data elements from that TTB A (MEvent) record.
Consignee
CntnrOwnAbbr
CntnrNo
EvntDte (last 3 digits)

THEN: Find the matching CntnrMov record (use key data elements) and store the CntnrNoPrefix from that record. The prefix numbers will be formatted before the 5 digit container no.

THEN: Sort the Cntnr record data by Consignee
THEN: Print the Cntnr record data in Consignee sequence in the Msg File.

OUTPUT MESSAGE FILE FORMAT

FROM: C, MCT
TO: CDR, 1st TMCA, ATTN: AEUTR-MCA-C
AEUTR-MCA-CC

SUBJECT: Containers On Hand Loaded Over Five Day Report
The following containers have been on hand loaded at the activity indicated in excess of 5 days.

ACTIVITY	CNTNR OWNER	CNTNR NUMBER	DATE ARRIVED
HE4497	LYKU	00202072	328

NOTE: The reported container data is sequenced by Consignee.

The report header address information will be printed in the message file as shown above.

Then: Use the Origin MCE Prefix in the parameter table to search for the MCENme in the CgoMCE File.

Then move the MCENme to the message file in the field to the right of the "FROM" address header.

If: No records are found that meet the criteria for printing, print "NEGATIVE REPORT" under the header information.

NOTE: Make this file available to the General Message Process.

THEN: Display, the message file name/dte time group on the screen: "(---12---) is your file name, press GO to exit".

NOTE: The users manual must instruct the user to copy down the file name so it can be used to access the report in the general message process.

;

UPDATES:
Cntnr-Msg-File ;
EMPLOYS:
CntnrMov-File ,
MEvent-File ,
CgoMCE-Tbl ,
System-Parameter-Tbl ;

```
ADDS:           Container-O/H-5-Days-Rept-Upd TO Cntnr-Msg-File ;
REFERENCES:     Search-Cntnr-O/H-Mov-Ref IN CntnrMov-File ;
REFERENCES:     Search-Cntnr-O/H-MEvent-Ref IN MEvent-File ;
REFERENCES:     Search-Cntnr-O/H-CgoMCE-Ref IN CgoMCE-Tbl ;
REFERENCES:     Search-Cntnr-O/H-Param-Ref IN System-Parameter-Tbl ;
CREATES:
     Container-O/H-5-Days-Rept-Upd ;
RESPONSIBLE PROBLEM DEFINER IS:
                'Valentine' ;
```

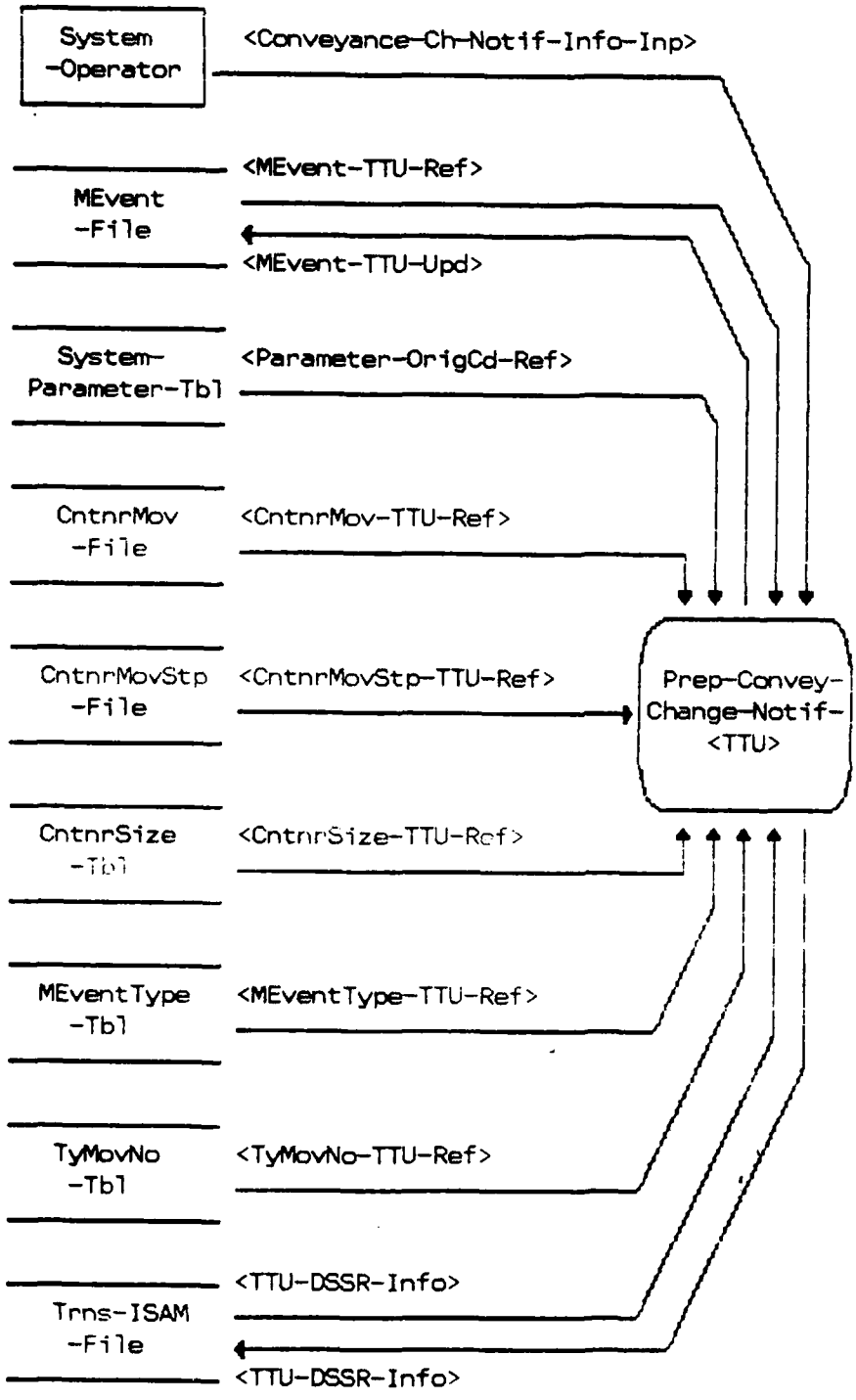

Figure 14. Prep-Convey-Change-Notif-<TTU>

```
20   DEFINE PROCESS                          Prep-Convey-Change-Notif-<TTU> ;
       DESCRIPTION;
    Prepare Conveyance Change Notification <TTU>
    This process updates the container database with Conveyance Change
    Notification information and a TTU transaction is generated to relate
    the "OLD" movement number to the "NEW" movement number when a change
    in conveyance is required.  Updated information is provided under
    the new movement number as the cargo moves towards its destination.
    This process is also used to report damages to a conveyance where no
    actual change in conveyance is required/performed.
     ;
        KEYWORD IS:     'Container' ,
                        'LOB' ;
        SEE MEMO:
             Front-End-Process-Memo ;
        RECEIVES:
             Conveyance-Ch-Notif-Info-Inp ;
        PART OF:        Rec+Report-Cntnr-Mov-Events ;
        PROCEDURE;

    1)
         If:
             User enters CntnrNo
             MATCH:
                    CntnrNo from screen with CntnrNo in CntnrMovStp File
                    IF:
                        NO MATCH:
                        DISPLAY:
                                "Container Number not valid, reenter or
                                 exit process."

                    ELSE:
                           Use CntnrNo to access CntnrMovStp.
                           DISPLAY:
                           "CntnrNo CntnrOwn Consignee MultiStpNo StpComp"
                             XXXXX   XXXX     XXXXXX        X

                            System will allow user to course through this
                            scrollable screen to the desired stop.  When the
                            stop is selected, the user will hit "GO" and
                            the first process screen will be displayed.
                        MOVE:
                              CntnrNoPrefix from CntnrMov to Container
                              Number on first process screen.
         DISPLAY:
                   First Process Screen

    2)
         IF:
```

```
    User enters CntnrNo + CntnrNoPrefix
MATCH:
       CntnrNo from screen with CntnrNo in CntnrMovStp File
       IF:
           NO MATCH:
           DISPLAY:
                   "Container Number not valid, reenter or
                    exit process."
           EDIT:
                  System will edit CntnrNoPrefix
                  IF:
                       CntnrNoPrefix < > Alphanumeric
                       DISPLAY:
                                Err Msg - "Container number must
                                          be alphanumeric."

       ELSE:
              Use CntnrNo from screen to access CntnrMovStp.
              DISPLAY:
                          "CntnrNo  CntnrOwn Consignee MultiStpNo"
                           XXXXXXXX   XXXX     XXXXXX      X

                 System will allow user to course through this
                 scrollable screen to the desired stop.  When the
                 stop is selected, the user will hit "GO" and the
                 first process screen will be displayed.
              IF:  CntnrNoPrefix in CntnrMov = 000
                   UPDATE:  Screen entered CntnrNoPrefix to
                            CntnrNoPrefix in CntnrMov.

                   MOVE:  CntnrNoPrefix from CntnrMov to Container
                          Number on First Process Screen.
DISPLAY:
         First Process Screen

3)  IF:
       User enters FWTNo
       MATCH:
              FWTNo from screen with FWTNo in CntnrMov File
              IF:
                   NO MATCH:
                   DISPLAY:  Freight Warrant Number entered not
                             valid.  Reenter or exit the process.
              ELSE:
                     Use CntnrNo and CntnrOwnAbbr found in the
                     CntnrMov file to access CntnrMovStp
                     DISPLAY:
                               Cntnr Mov Stop data as follows:
```

CntnrNo	CntnrOwn	Consignee	MultiStpNo
XXXXX	XXXX	XXXXXX	X

System will allow user to course through this scrollable screen to the desired stop. When the stop is selected, the user will hit 'GO' and the first process screen will be displayed.
MOVE:
CntnrNoPrefix from CntnrMov to Container Number on first process screen.

DISPLAY:
First Process Screen

4) IF:
User enters TMRPrefix
MATCH:
TMRPrefix from screen with TMRPrefix in CntnrMov file
IF:
NO MATCH:
DISPLAY: TMRPrefix entered not valid. Reenter or exit the process.
ELSE:
Use CntnrNo and CntnrOwnAbbr found in the CntnrMov file to access CntnrMovStp
DISPLAY:
CntnrMovStp data as follows:

CntnrNo	CntnrOwn	Consignee	MultiStpNo
XXXXX	XXXX	XXXXXX	X

System will allow user to course through this scrollable screen to the desired stop. When the stop is selected, the user will hit 'GO' and the first process screen will be displayed
MOVE:
CntnrNoPrefix from CntnrMov to Container Number on first process screen.

DISPLAY:
First Process Screen

IF:
User enters CntnrTCN.

MATCH:
CntnrTCN from screen with CntnrTCN in CntnrMov.
IF:
No match.
DISPLAY:
"Container TCN not valid. Reenter or exit process."
ELSE:
Select CntnrNo, CntnrOwnAbbr from CntnrMov to access CntnrMovStp.
DISPLAY:
CntnrMovStp data as follows:

Cntnr No	CntnrOwnAbbr Abbr	Consignee	MultiStp No	Stp Comp
XXXXX	XXXX	XXXXXX	X	X
XXXXX	XXXX	XXXXXX	X	X

System will allow user to course through this scrollable screen to the desired stop. When the stop is selected, the user will hit [GO] and the first process screen will be displayed.

MOVE:
CntnrNoPrefix from CntnrMov to Container Number on the first process screen.

MATCH: The system will then use CntnrOwnAbbr, CntnrNo and Consignee, to search MEvent to see if there are any existing TTU MEvents.

1) IF: The system finds an existing TTU event (or events).
DISPLAY:

Container Number: XXXXXXXX
Container Owner: XXXX
Voyage Number: XXXXX
Consignee: XXXXXX

Event Type:
Event Date:
Mode Method Code:
Type Carrier Code:

	EventType	Date
NE	3	87036
	4	87132

Type Mov No Code:
Movement Number:
Container Size:

A scrollable screen will be displayed. User may move the cursor through the events with the use of a highlight bar. When the user has the Event Type and Date desired, he will press 'GO' and the system will then search the existing ISAM record for that container, stop, and Event Type. If a match is found the following screen will be displayed:

Container Number: XXXXXXXX
Container Owner: XXXXX
Voyage Number: XXXXX
Consignee: XXXXXX
Event Type: X
Event Date: XXXXX

	NEW	OLD
Mode Method Code:	X	X
Type Carrier Code:	X	X
Type Mov No Code:	X	X
Movement Number:	X	X

Container Size: X

			MODIFY	DELETE			
CLEAR SCREEN							

At this time the user may modify or delete the existing events as follows:

IF: MODIFY
User may change EventType, Event Date, Type Mov No Code (Old), Type Mov No Code (New), Mode Meth Shpmt Cd (New), Type Carrier Code (New).
IF: Mode Meth Shpmt Cd, Ty Carrier Cd do not exist in Cntnr-Mov, then they also may be changed

IF: DELETE
The system will delete the existing ISAM record and the MEvent Record.

2) IF: The system does not find an existing TTU Event.

DISPLAY:

Container Number: XXXXXXXX
Container Owner: XXXXX
Voyage Number: XXXXX
Consignee: XXXXXX
Event Type:
Event Date:

NEW OLD

Mode Method Code:
Type Carrier Code:
Type Mov No Code:
Movement Number:

Container Size:

User will then provide information to the screen as follows:

3) Event Type

IF:
HELP:
System will scroll the contents of the MEvent Type Table in a window. The user will select the code desired by moving the highlight up or down. User will hit 'GO' when the desired code is highlighted. Code will be placed by the system in the appropriate place on the main screen.

IF: Keyboard Entry.
Perform Table Validation

4) Event Date Perform Date-Validation-Routine

5) Old TyMovNoCd System will search MEvent TTB for the container, and place the TyMovNoCd found in that MEvent into the field provided for the old TTU TyMovNoCd.

IF:
No TTB Event exists:

IF:
HELP:
System will scroll the contents of the Type-MovNoCd file in a window. The user will select the code desired by moving the highlight up or down. User will hit 'GO' when the desired code is highlighted. Code will be placed by the system in the appropriate place on the main screen.

IF: Keyboard Entry
IF: TyMovNoCd is not equal to M, F, or V.
DISPLAY: 'You must enter either M, F, or V for the TTU event. Please reenter the correct code, press Help, or cancel this transaction.' System will perform according to user's choice.

System will then search CntnrMov and CntnrMovStp to determine if the movement number represented by the TyMovNoCd can be assembled. (See 7).

6) New Ty Mov No Code

IF: Event Type = C, D, E, or F. This field will be left blank (skipped).

IF: Event Type = 3, 4, 5, 6. This field will be filled by the system with the code that was entered in TyMovNoCd.

7) Old Movement Number System will use the TyMovNoCd entered to assemble the movement number as follows:

IF:
The required elements for a given TyMovNoCd are not present, the system will allow the user to enter the required elements as follows:

IF:
TyMovNoCd = M
PERFORM:
Capture TMR

IF:
TyMovNoCd = F
User will enter the Military Freight Warrant No

followed by the TIN. User will enter a combination of 19 digits/characters/blanks so that the last digit of the TIN is on position 19. System will generate a blank in the 20th position.

IF:

TyMovNoCd = V
System will assemble and display the old movement number as follows:

Fields 10-13 will contain the CntnrOwnAbbr, and fields 14-21 will contain the CntnrNo. System will generate blanks in fields 22-29. System will not allow the user to enter anything in this area.

8) New Movement Number ---------- System will use the code entered for New TyMovNoCd to generate the new movement number as follows:

IF:

New TyMovNoCd = blank, this field will be left blank also (skipped).

IF:

New TyMovNoCd = M
System will display the existing TMR in fields 1-12. User will enter the new TIN so that the last digit is in field 20. Any blanks between the last character of the TMR and the first character of the TIN will be filled in with zeros by the system.

IF: New TyMovNoCd = F
System will display the existing FWTNo in fields 1-11. User will enter the new TIN so that the last digit is in field 19. System will generate blanks in any unused positions between the FWTNo and the TIN and on the last position (#20) of the movement number.

IF: New TyMovNoCd = V
System will assemble and display the new movement number as follows:
Fields 10-13 will contain the CntnrOwnAbbr, and fields 14-21 will contain the CntnrNo. Fields 22-29 will have blanks generaged into them by the system. System will not allow user to enter anything in this area.

9) Mode Meth Shpmt Cd

IF: Mode Meth Shpmt Cd is in CntnrMov, move it to this field on the screen.

IF:

HELP:

System will scroll the contents of the Shpmt Method file in a window. The user will select the code desired by moving the highlight up or down. User will hit 'GO' when the desired code is highlighted. Code will be placed by the system in the appropriate place on the main screen.

IF: Keyboard Entry
Perform Table Validation.

10) New Mode Meth Shpmt Cd

IF: Event Type = C, D, E, or F. This field will be left blank (skipped).

IF: Event Type = 3, 4, 5, 6. This field will be filled by the system with the code that was entered in 9.

11) Ty Carr Cd

IF: TyCarrCd exists in CntnrMov, move it to this field on the screen.

IF:

HELP:

System will scroll the contents of TypeCarrier in a window. The user will select the code desired by moving the highlight up or down. User will hit 'GO', when the desired code is highlighted. Code will be placed in the appropriate place on the screen.

IF:

Keyboard Entry.
Perform Table Validation.

12) New Ty Carr Cd

IF:

EventType = C, D, E, F,
This field will remain blank (skipped).

IF:

EventType = 3, 4, 5, 6, This field will be filled in by the system with the code that was entered in 11.

13) Container Size

IF: CntnrSz is present in CntnrMov, move it to this field on the screen.

IF:

HELP: System will scroll the contents of the Cntnr-Size in a window. The user will select the code desired by moving the highlight bar up or down. User will hit 'GO' when the desired size is highlighted. Size will be placed by the system in the appropriate place on the screen.

IF: Keyboard Entry.
Perform Table Validation.

System will create the following outputs:

Container Move

ELEMENT	FROM	TO
Date Last Update	Generated	DteLstUpdCntnr
Mode Meth Shipment Code	*Shpmt Method	ModeMethShpmtCd
Type Carrier Code	*Type Carrier	TyCarrCd
Container Size	*Cntnr Size	CntnrSz
TIN	Screen	TIN
FWTNo	Screen	FWTNo

MEVENT

ELEMENT	FROM	TO
Container Owner	CntnrMovStp	CntnrOwnAbbr
Container Number	Screen	CntnrNo
Consignee	CntnrMovStp	Consignee
Move Event Code	Generated	MovEvntCd
Event Type	*MEventType	EvntTy

Post Date	Generated	PstDte
New Type Carrier Code	Generated	NewTyCarrCd
New Type Movement Number Code	Generated	NewTyMovNoCd
Origin Code	Parameter Table	CntnrOrigCd
New Mode Meth Shpmt Code	Generated	NewModeMethShpmtCd
Type Movement Number Code	*Type Mov No	TyMovNoCd
Event Date	Screen	EvntDte
New TIN	Screen	NewTIN

ISAM

ELEMENT	FROM	TO
MovEvntCd	Generated	CC 1-3
OrigCd	Parameter Table	CC 4-6
TyCarrCd	*Type Carrier	CC 7
ModeMethShpmtCd	*Shpmt Method	CC 8
TyMovNoCd	*Type Mov No	CC 9
Movement Number	Generated	CC 10-29
Consignee	CntnrMovStp	CC 30-35
NewTyCarrCd	Generated	CC 36
NewModeMethShpmtCd	Generated	CC 37
NewTyMovNoCd	Generated	CC 38
New Movement Number	Generated	CC 39-58
CntnrSz	*CntnrSize/CntnrMov	CC 59-60
Filler		CC 61-63
EvntTy	MEventType	CC 64
EvntDte	Screen	CC 65-67
VoyDocuNoFltNo	CntnrMo	CC 68-72
Filler		CC 73-80

* NOTE: All elements with * may be screen entered.

```
;
   DERIVES:
        EvntDte  USING Conveyance-Ch-Notif-Info-Inp ;
   DERIVES:
        EvntDte  USING CntnrMov-TTU-Ref ;
   DERIVES:
        EvntDte  USING MEvent-TTU-Ref ;
   DERIVES:
        EvntDte  USING EvntDte ;
   DERIVES:
        EvntDte  USING NewMovNo ;
   DERIVES:
```

```
     EvntDte  USING PstDte ;
DERIVES:
     EvntDte  USING NewTyCarrCd ;
DERIVES:
     EvntDte  USING NewModeMethShpmtCd ;
DERIVES:
     EvntDte  USING NewTyMovNoCd ;
DERIVES:
     NewMovNo  USING Conveyance-Ch-Notif-Info-Inp ;
DERIVES:
     NewMovNo  USING CntnrMov-TTU-Ref ;
DERIVES:
     NewMovNo  USING MEvent-TTU-Ref ;
DERIVES:
     NewMovNo  USING EvntDte ;
DERIVES:
     NewMovNo  USING NewMovNo ;
DERIVES:
     NewMovNo  USING PstDte ;
DERIVES:
     NewMovNo  USING NewTyCarrCd ;
DERIVES:
     NewMovNo  USING NewModeMethShpmtCd ;
DERIVES:
     NewMovNo  USING NewTyMovNoCd ;
DERIVES:
     PstDte  USING  Conveyance-Ch-Notif-Info-Inp ;
DERIVES:
     PstDte  USING  CntnrMov-TTU-Ref ;
DERIVES:
     PstDte  USING  MEvent-TTU-Ref ;
DERIVES:
     PstDte  USING  EvntDte ;
DERIVES:
     PstDte  USING  NewMovNo ;
DERIVES:
     PstDte  USING  PstDte ;
DERIVES:
     PstDte  USING  NewTyCarrCd ;
DERIVES:
     PstDte  USING  NewModeMethShpmtCd ;
DERIVES:
     PstDte  USING  NewTyMovNoCd ;
DERIVES:
     Err-Msg  USING Conveyance-Ch-Notif-Info-Inp ;
DERIVES:
     Err-Msg  USING CntnrMov-TTU-Ref ;
DERIVES:
     Err-Msg  USING MEvent-TTU-Ref ;
```

```
DERIVES:
     Err-Msg  USING EvntDte ;
DERIVES:
     Err-Msg  USING NewMovNo ;
DERIVES:
     Err-Msg  USING PstDte ;
DERIVES:
     Err-Msg  USING NewTyCarrCd ;
DERIVES:
     Err-Msg  USING NewModeMethShpmtCd ;
DERIVES:
     Err-Msg  USING NewTyMovNoCd ;
DERIVES:
     Err-Diag  USING Conveyance-Ch-Notif-Info-Inp ;
DERIVES:
     Err-Diag  USING CntnrMov-TTU-Ref ;
DERIVES:
     Err-Diag  USING MEvent-TTU-Ref ;
DERIVES:
     Err-Diag  USING EvntDte ;
DERIVES:
     Err-Diag  USING NewMovNo ;
DERIVES:
     Err-Diag  USING PstDte ;
DERIVES:
     Err-Diag  USING NewTyCarrCd ;
DERIVES:
     Err-Diag  USING NewModeMethShpmtCd ;
DERIVES:
     Err-Diag  USING NewTyMovNoCd ;
DERIVES:
     NewTyCarrCd
      USING          Conveyance-Ch-Notif-Info-Inp ;
DERIVES:
     NewTyCarrCd
      USING          CntnrMov-TTU-Ref ;
DERIVES:
     NewTyCarrCd
      USING          MEvent-TTU-Ref ;
DERIVES:
     NewTyCarrCd
      USING          EvntDte ;
DERIVES:
     NewTyCarrCd
      USING          NewMovNo ;
DERIVES:
     NewTyCarrCd
      USING          PstDte ;
DERIVES:
```

```
     NewTyCarrCd
      USING          NewTyCarrCd ;
DERIVES:
     NewTyCarrCd
      USING          NewModeMethShpmtCd ;
DERIVES:
     NewTyCarrCd
      USING          NewTyMovNoCd ;
DERIVES:
     NewModeMethShpmtCd
      USING          Conveyance-Ch-Notif-Info-Inp ;
DERIVES:
     NewModeMethShpmtCd
      USING          CntnrMov-TTU-Ref ;
DERIVES:
     NewModeMethShpmtCd
      USING          MEvent-TTU-Ref ;
DERIVES:
     NewModeMethShpmtCd
      USING          EvntDte ;
DERIVES:
     NewModeMethShpmtCd
      USING          NewMovNo ;
DERIVES:
     NewModeMethShpmtCd
      USING          PstDte ;
DERIVES:
     NewModeMethShpmtCd
      USING          NewTyCarrCd ;
DERIVES:
     NewModeMethShpmtCd
      USING          NewModeMethShpmtCd ;
DERIVES:
     NewModeMethShpmtCd
      USING          NewTyMovNoCd ;
DERIVES:
     NewTyMovNoCd
      USING          Conveyance-Ch-Notif-Info-Inp ;
DERIVES:
     NewTyMovNoCd
      USING          CntnrMov-TTU-Ref ;
DERIVES:
     NewTyMovNoCd
      USING          MEvent-TTU-Ref ;
DERIVES:
     NewTyMovNoCd
      USING          EvntDte ;
DERIVES:
     NewTyMovNoCd
```

```
        USING           NewMovNo ;
DERIVES:
      NewTyMovNoCd
        USING           PstDte ;
DERIVES:
      NewTyMovNoCd
        USING           NewTyCarrCd ;
DERIVES:
      NewTyMovNoCd
        USING           NewModeMethShpmtCd ;
DERIVES:
      NewTyMovNoCd
        USING           NewTyMovNoCd ;
DERIVES:
      MEvent-TTU-Upd
        USING           Conveyance-Ch-Notif-Info-Inp ;
DERIVES:
      MEvent-TTU-Upd
        USING           CntnrMov-TTU-Ref ;
DERIVES:
      MEvent-TTU-Upd
        USING           MEvent-TTU-Ref ;
DERIVES:
      MEvent-TTU-Upd
        USING           EvntDte ;
DERIVES:
      MEvent-TTU-Upd
        USING           NewMovNo ;
DERIVES:
      MEvent-TTU-Upd
        USING           PstDte ;
DERIVES:
      MEvent-TTU-Upd
        USING           NewTyCarrCd ;
DERIVES:
      MEvent-TTU-Upd
        USING           NewModeMethShpmtCd ;
DERIVES:
      MEvent-TTU-Upd
        USING           NewTyMovNoCd ;
DERIVES:
      TTU-DSSR-Info
        USING           Conveyance-Ch-Notif-Info-Inp ;
DERIVES:
      TTU-DSSR-Info
        USING           CntnrMov-TTU-Ref ;
DERIVES:
      TTU-DSSR-Info
        USING           CntnrMovStp-Ref ;
```

```
DERIVES:
     TTU-DSSR-Info
      USING          MEvent-TTU-Ref ;
DERIVES:
     TTU-DSSR-Info
      USING          Parameter-OrigCd-Ref ;
DERIVES:
     TTU-DSSR-Info
      USING          NewMovNo ;
DERIVES:
     TTU-DSSR-Info
      USING          NewTyCarrCd ;
DERIVES:
     TTU-DSSR-Info
      USING          NewTyMovNoCd ;
DERIVES:
     TTU-DSSR-Info
      USING          NewModeMethShpmtCd ;
USES:          Conveyance-Ch-Notif-Info-Inp
                TO DERIVE EvntDte ;
USES:          CntnrMov-TTU-Ref
                TO DERIVE EvntDte ;
USES:          MEvent-TTU-Ref
                TO DERIVE EvntDte ;
USES:          EvntDte
                TO DERIVE EvntDte ;
USES:          NewMovNo
                TO DERIVE EvntDte ;
USES:          PstDte
                TO DERIVE EvntDte ;
USES:          NewTyCarrCd
                TO DERIVE EvntDte ;
USES:          NewModeMethShpmtCd
                TO DERIVE EvntDte ;
USES:          NewTyMovNoCd
                TO DERIVE EvntDte ;
USES:          Conveyance-Ch-Notif-Info-Inp
                TO DERIVE NewMovNo ;
USES:          CntnrMov-TTU-Ref
                TO DERIVE NewMovNo ;
USES:          MEvent-TTU-Ref
                TO DERIVE NewMovNo ;
USES:          EvntDte
                TO DERIVE NewMovNo ;
USES:          NewMovNo
                TO DERIVE NewMovNo ;
USES:          PstDte
                TO DERIVE NewMovNo ;
USES:          NewTyCarrCd
```

```
                TO DERIVE NewMovNo ;
USES:           NewModeMethShpmtCd
                TO DERIVE NewMovNo ;
USES:           NewTyMovNoCd
                TO DERIVE NewMovNo ;
USES:           Conveyance-Ch-Notif-Info-Inp
                TO DERIVE PstDte ;
USES:           CntnrMov-TTU-Ref
                TO DERIVE PstDte ;
USES:           MEvent-TTU-Ref
                TO DERIVE PstDte ;
USES:           EvntDte
                TO DERIVE PstDte ;
USES:           NewMovNo
                TO DERIVE PstDte ;
USES:           PstDte
                TO DERIVE PstDte ;
USES:           NewTyCarrCd
                TO DERIVE PstDte ;
USES:           NewModeMethShpmtCd
                TO DERIVE PstDte ;
USES:           NewTyMovNoCd
                TO DERIVE PstDte ;
USES:           Conveyance-Ch-Notif-Info-Inp
                TO DERIVE Err-Msg ;
USES:           CntnrMov-TTU-Ref
                TO DERIVE Err-Msg ;
USES:           MEvent-TTU-Ref
                TO DERIVE Err-Msg ;
USES:           EvntDte
                TO DERIVE Err-Msg ;
USES:           NewMovNo
                TO DERIVE Err-Msg ;
USES:           PstDte
                TO DERIVE Err-Msg ;
USES:           NewTyCarrCd
                TO DERIVE Err-Msg ;
USES:           NewModeMethShpmtCd
                TO DERIVE Err-Msg ;
USES:           NewTyMovNoCd
                TO DERIVE Err-Msg ;
USES:           Conveyance-Ch-Notif-Info-Inp
                TO DERIVE Err-Diag ;
USES:           CntnrMov-TTU-Ref
                TO DERIVE Err-Diag ;
USES:           MEvent-TTU-Ref
                TO DERIVE Err-Diag ;
USES:           EvntDte
                TO DERIVE Err-Diag ;
```

```
USES:          NewMovNo
                TO DERIVE Err-Diag ;
USES:          PstDte
                TO DERIVE Err-Diag ;
USES:          NewTyCarrCd
                TO DERIVE Err-Diag ;
USES:          NewModeMethShpmtCd
                TO DERIVE Err-Diag ;
USES:          NewTyMovNoCd
                TO DERIVE Err-Diag ;
USES:          Conveyance-Ch-Notif-Info-Inp
                TO DERIVE NewTyCarrCd ;
USES:          CntnrMov-TTU-Ref
                TO DERIVE NewTyCarrCd ;
USES:          MEvent-TTU-Ref
                TO DERIVE NewTyCarrCd ;
USES:          EvntDte
                TO DERIVE NewTyCarrCd ;
USES:          NewMovNo
                TO DERIVE NewTyCarrCd ;
USES:          PstDte
                TO DERIVE NewTyCarrCd ;
USES:          NewTyCarrCd
                TO DERIVE NewTyCarrCd ;
USES:          NewModeMethShpmtCd
                TO DERIVE NewTyCarrCd ;
USES:          NewTyMovNoCd
                TO DERIVE NewTyCarrCd ;
USES:          Conveyance-Ch-Notif-Info-Inp
                TO DERIVE NewModeMethShpmtCd ;
USES:          CntnrMov-TTU-Ref
                TO DERIVE NewModeMethShpmtCd ;
USES:          MEvent-TTU-Ref
                TO DERIVE NewModeMethShpmtCd ;
USES:          EvntDte
                TO DERIVE NewModeMethShpmtCd ;
USES:          NewMovNo
                TO DERIVE NewModeMethShpmtCd ;
USES:          PstDte
                TO DERIVE NewModeMethShpmtCd ;
USES:          NewTyCarrCd
                TO DERIVE NewModeMethShpmtCd ;
USES:          NewModeMethShpmtCd
                TO DERIVE NewModeMethShpmtCd ;
USES:          NewTyMovNoCd
                TO DERIVE NewModeMethShpmtCd ;
USES:          Conveyance-Ch-Notif-Info-Inp
                TO DERIVE NewTyMovNoCd ;
USES:          CntnrMov-TTU-Ref
```

```
                TO DERIVE NewTyMovNoCd ;
USES:           MEvent-TTU-Ref
                TO DERIVE NewTyMovNoCd ;
USES:           EvntDte
                TO DERIVE NewTyMovNoCd ;
USES:           NewMovNo
                TO DERIVE NewTyMovNoCd ;
USES:           PstDte
                TO DERIVE NewTyMovNoCd ;
USES:           NewTyCarrCd
                TO DERIVE NewTyMovNoCd ;
USES:           NewModeMethShpmtCd
                TO DERIVE NewTyMovNoCd ;
USES:           NewTyMovNoCd
                TO DERIVE NewTyMovNoCd ;
USES:           Conveyance-Ch-Notif-Info-Inp
                TO DERIVE MEvent-TTU-Upd ;
USES:           CntnrMov-TTU-Ref
                TO DERIVE MEvent-TTU-Upd ;
USES:           MEvent-TTU-Ref
                TO DERIVE MEvent-TTU-Upd ;
USES:           EvntDte
                TO DERIVE MEvent-TTU-Upd ;
USES:           NewMovNo
                TO DERIVE MEvent-TTU-Upd ;
USES:           PstDte
                TO DERIVE MEvent-TTU-Upd ;
USES:           NewTyCarrCd
                TO DERIVE MEvent-TTU-Upd ;
USES:           NewModeMethShpmtCd
                TO DERIVE MEvent-TTU-Upd ;
USES:           NewTyMovNoCd
                TO DERIVE MEvent-TTU-Upd ;
USES:           Conveyance-Ch-Notif-Info-Inp
                TO DERIVE TTU-DSSR-Info ;
USES:           CntnrMov-TTU-Ref
                TO DERIVE TTU-DSSR-Info ;
USES:           CntnrMovStp-Ref
                TO DERIVE TTU-DSSR-Info ;
USES:           MEvent-TTU-Ref
                TO DERIVE TTU-DSSR-Info ;
USES:           Parameter-OrigCd-Ref
                TO DERIVE TTU-DSSR-Info ;
USES:           NewMovNo
                TO DERIVE TTU-DSSR-Info ;
USES:           NewTyCarrCd
                TO DERIVE TTU-DSSR-Info ;
USES:           NewTyMovNoCd
                TO DERIVE TTU-DSSR-Info ;
```

```
USES:           NewModeMethShpmtCd
                 TO DERIVE TTU-DSSR-Info ;
ADDS:           MEvent-TTU-Upd TO MEvent-File ;
ADDS:           TTU-DSSR-Info TO Trns-ISAM-File ;
MODIFIES:       TTU-DSSR-Info IN Trns-ISAM-File ;
REFERENCES:     CntnrMov-TTU-Ref IN CntnrMov-File ;
REFERENCES:     CntnrMovStp-Ref IN CntnrMovStp-File ;
REFERENCES:     MEvent-TTU-Ref IN MEvent-File ;
REFERENCES:     CntnrSize-TTU-Ref IN CntnrSize-Tbl ;
REFERENCES:     MEventType-TTU-Ref IN MEventType-Tbl ;
REFERENCES:     Parameter-OrigCd-Ref IN System-Parameter-Tbl ;
REFERENCES:     TyMovNo-TTU-Ref IN TypeMovNo-Tbl ;
REFERENCES:     TTU-DSSR-Info IN Trns-ISAM-File ;
CREATES:
     MEvent ,
     TTU-DSSR-Info ;
RESPONSIBLE PROBLEM DEFINER IS:
                'Zacot' ;
```

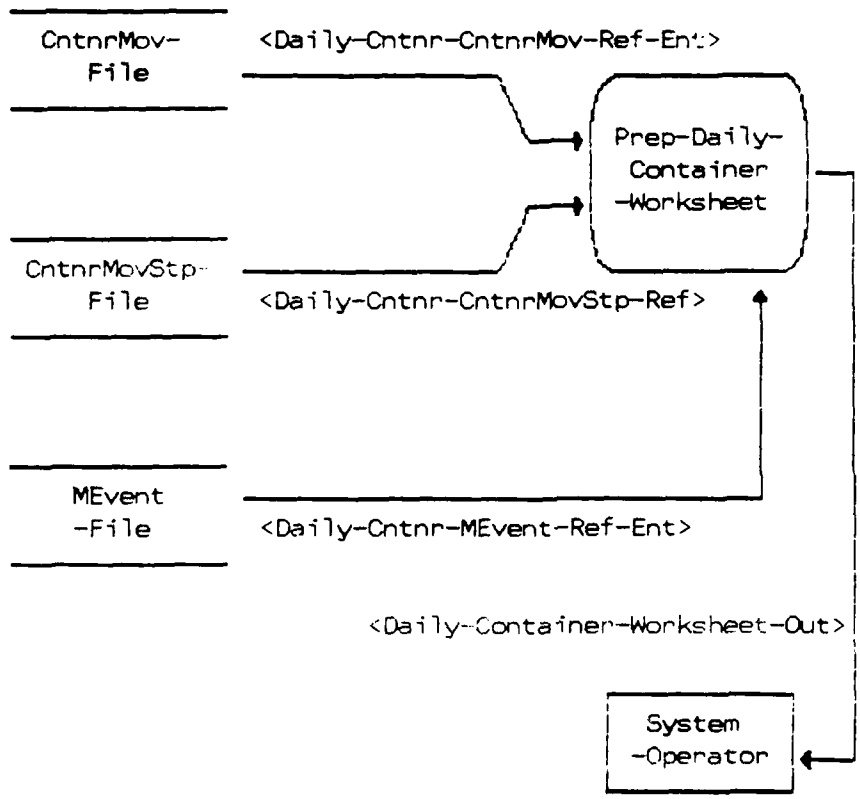

Figure 15. Prep-Daily-Container-Worksheet

21 DEFINE PROCESS Prep-Daily-Container-Worksheet ;
DESCRIPTION;
Prepare Daily Container Worksheet
The Daily Container Worksheet is a report produced as required by the MCT. This process selects, formats and prints all incomplete records and generates a hardcopy worksheet for manual entry of movement information.
;
KEYWORD IS: 'Container' ,
'LOB' ;
SEE MEMO:
TCR-Daily-Cntnr-Worksheet-Memo ;
GENERATES:
Daily-Container-Worksheet-Out ;
PART OF: Maintain-Container-Database ;
PROCEDURE;

1.) The Daily Container Worksheet is a report produced as required by the MCT. This process selects, formats and prints all active records and can be used as a hardcopy worksheet for manual entry of movement event information.

2.) When the user selects this process from the menu, the system will sort all active containers in the database by BMCT, Consignee, and Container Number sequence, and print key items of information as follows:
READ:
CntnrMovStp-File
IF:
StpCompFlag in CntnrMovStp = Y

READ next record

ELSE:
SELECT:
Process the following data from the CntnrMov File, CntnrMov File, CntnrMovStp File(s) associated with that CntnrMov File, and MEvent(s) associated with the Cntnr-MovStp File(s).

CntnrMovStp
==========

Select	Move to on Output
CntnrNo	Last 5 positions of Container Number (CONT NUMBER)

CntnrOwnAbbr	CONT OWNER
Consignee	CONSIGNEE
MultiStpNo	MULTI STOP NUMBER

DETERMINE:

IF:
DDPostDte < Today's Date
and
DDActlSptDte = Blank
GENERATE:
Code: 'DD' and place in RECORD STATUS CODE on Daily Container Worksheet.

IF:
DteHoldStart < Today's Date
and
DteHoldStop = Blank
GENERATE:
Code: 'H' and place in RECORD STATUS CODE on Daily Container Worksheet.

IF:
RecngnCfmNoncfm = C
GENERATE:
Code: 'R' and place in RECORD STATUS CODE on Daily Container Worksheet.

IF:
DivrsnIndic = 'Y'
GENERATE:
Code: 'D' and place in RECORD STATUS CODE on Daily Container Worksheet.

CntnrMov
========

Select	Move to on Output
CntnrNoPrefix	1st 3 positions of Container Number (CONT NUMBER)
VoyageDocuNoFltNo	VOYAGE DOCUMENT NUMBER
CntnrTCN	TCN
ModeMethShpmtCd	MODE METHOD SHIPMENT CODE
	TOTAL STOPS

DETERMINE

IF:
DteStageStart < Today's Date
and
DteStageStop = Blank
GENERATE:
Code = 'S' and place in RECORD STATUS CODE
on Daily Container Worksheet.

MEvent
======

Select	Move to on Output
MovEvntCd = TTB	
EvntTy = A, EvntDte	A DATE
EvntTy = B, EvntDte	B/C DATE
EvntTy = C, EvntDte	B/C DATE
EvntTy = D, EvntDte	D DATE
GENERATE	
EvntTy = E	E DATE

System will sort all selected containers by MCE, and within MCE, Consignee, and within Consignee, CntnrNo.

System will print Daily Cntnr Worksheet in the format provided (see output). 4 blank lines will be left after each line of information. There will be a page break betweem BMCTs. 4 blank lines will be left between container detail lines within consignee, and 5 blank lines between consignee. There will be a page break between MCEs.

System will generate today's date, the page number, and the title "Daily Container Worksheet" for a heading on each page.

;

EMPLOYS:
CntnrMovStp-File ,
CntnrMov-File ,
MEvent-File ;
REFERENCES: Daily-Cntnr-CntnrMovStp-Ref IN CntnrMovStp-File ;
REFERENCES: Daily-Cntnr-CntnrMov-Ref-Ent IN CntnrMov-File ;
REFERENCES: Daily-Cntnr-MEvent-Ref-Ent IN MEvent-File ;

RESPONSIBLE PROBLEM DEFINER IS:
'Mitchem' ;

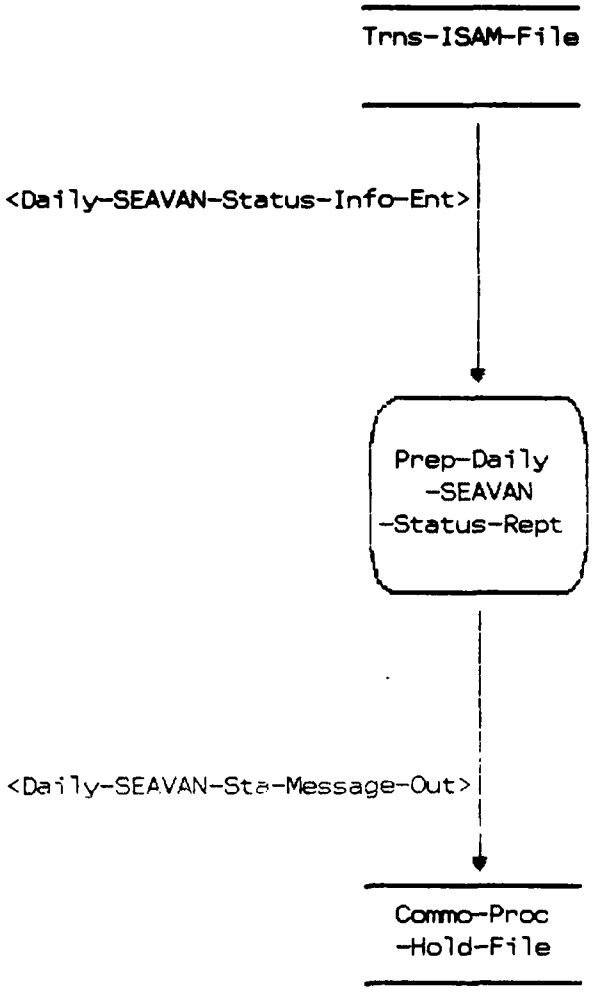

Figure 16. Prep-Daily-SEAVAN-Status-Rept

22 DEFINE PROCESS Prep-Daily-SEAVAN-Status-Rept ;
DESCRIPTION;
Prepare Daily SEAVAN Status Report
This process is initiated daily by the MCT system user. All DIC reporting data that has been entered into the container database that day is identified, formatted by DIC type transaction into the DSSR, and stored in a hold file.
;
KEYWORD IS: 'Container' ,
'LOB' ;
SEE MEMO:
TCR-Daily-SEAVAN-Status-Report ;
PART OF: Prepare-Container-Reports ;
PROCEDURE;

User will access process by use of system menus.

Process will begin by user selection via system prompt.

User will press [GO]

DISPLAY: "LOADING DAILY SEAVAN STATUS REPORT."

SORT:
System will sort the ISAM file so that all the DICs are grouped together. Mov Evnt codes will be in the following order:

TM2
TM3
TMS
TTB
TTP
TTU
TTW
ZTB
ZTP
ZTW

DISPLAY: "DAILY SEAVAN STATUS REPORT IS RUNNING."

CONVERT:
System will convert the Indexed Sequential File into a sequential file.

DELETE:
System will delete the Indexed Sequential File.

```
SEND:
       The sequential file to the COMMO process.

DISPLAY:
          "DSSR File name is DSSRTXNSEQ.  Exiting to ADS Menus."


 ;
    UPDATES:
         Commo-Proc-Hold-File ;
    EMPLOYS:
         Trns-ISAM-File ;
    ADDS:           Daily-SEAVAN-Sta-Message TO Commo-Proc-Hold-File ;
    REFERENCES:     Daily-SEAVAN-Status-Info-Ent IN Trns-ISAM-File ;
    CREATES:
         Daily-SEAVAN-Sta-Message ;
    RESPONSIBLE PROBLEM DEFINER IS:
                    'Mitchem' ;
```

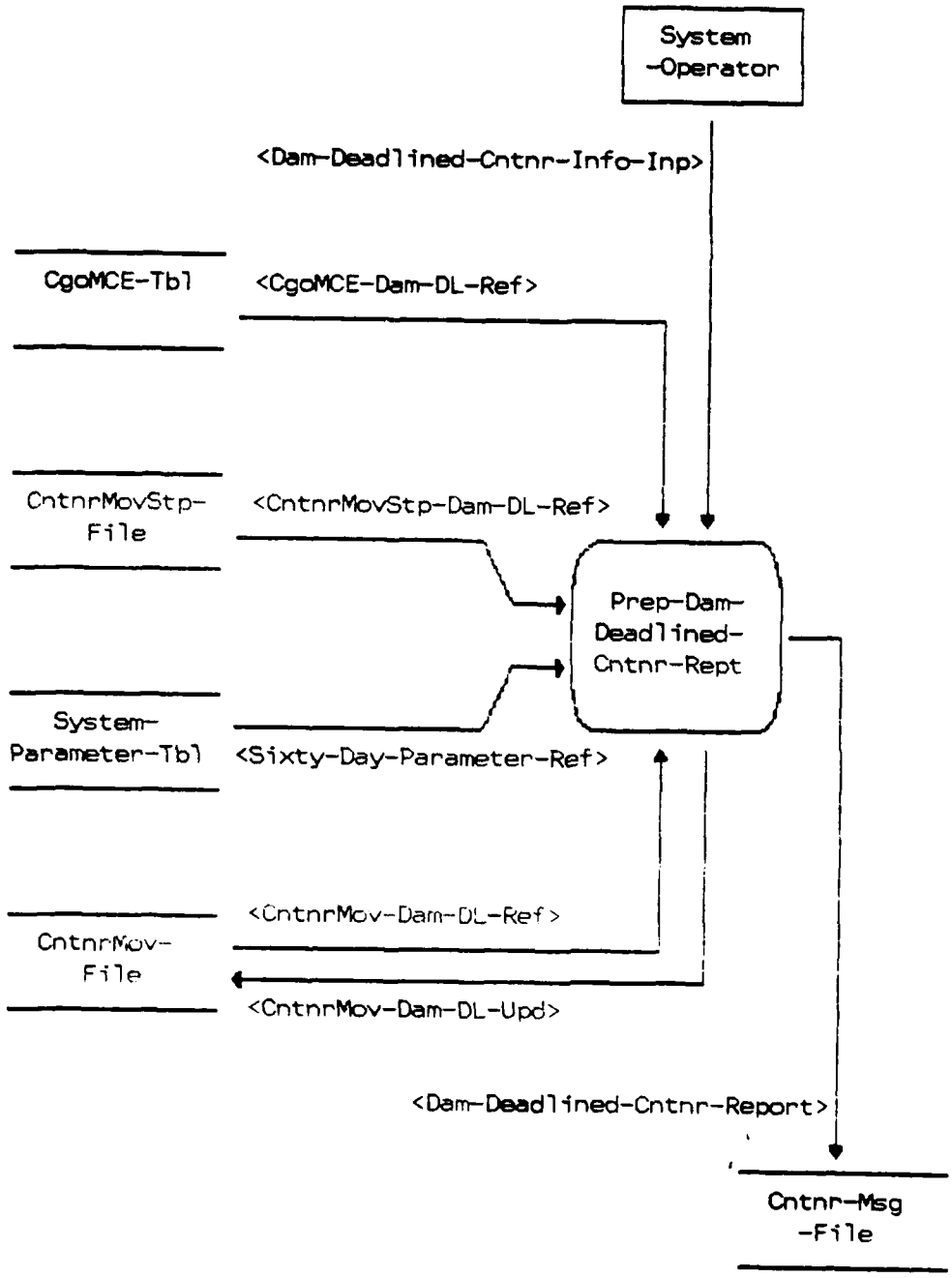

Figure 17. Prep-Dam-Deadlined-Cntnr-Rept

```
23   DEFINE PROCESS                          Prep-Dam-Deadlined-Cntnr-Rept ;
       DESCRIPTION;
   Prepare Damaged Deadlined Container Report
   This process receives damaged deadlined container information
   and generates a message containing pertinent information relative
   to container identification, extent of damage/deadline (e.g.
   who, what, when, where, why, and how).  The process formats the
   required information and transmits it to TMCA.
    ;
      KEYWORD IS:     'Container' ,
                      'LOB' ;
      SEE MEMO:
           Front-End-Process-Memo ,
           TCR-Dam-DL-Cntnr-Rept-Memo ;
      RECEIVES:
           Dam-Deadlined-Cntnr-Info-Inp ;
      PART OF:        Prepare-Container-Reports ;
      PROCEDURE;


           User selects Prepare Damaged/Deadlined Container Report
           from menu.

   1)
        If:
           User enters CntnrNo
           MATCH:
                  CntnrNo from screen with CntnrNo in CntnrMovStp File
                  IF:
                      NO MATCH:
                      DISPLAY:
                              "Container Number not valid, reenter or
                               exit process."

                  ELSE:
                         Use CntnrNo to access CntnrMovStp.
                         DISPLAY:
                         "CntnrNo CntnrOwn Consignee MultiStpNo StpComp"
                           XXXXX    XXXX     XXXXXX        X

                          System will allow user to course through this
                          scrollable screen to the desired stop.  When the
                          stop is selected, the user will hit "GO" and
                          the first process screen will be displayed.
                      MOVE:
                            CntnrNoPrefix from CntnrMov to Container
                            Number on first process screen.
        DISPLAY:
                  First Process Screen
```

2)

```
IF:
    User enters CntnrNo + CntnrNoPrefix
MATCH:
        CntnrNo from screen with CntnrNo in CntnrMovStp File
        IF:
            NO MATCH:
            DISPLAY:
                    "Container Number not valid, reenter or
                     exit process."
            EDIT:
                   System will edit CntnrNoPrefix
                   IF:
                        CntnrNoPrefix < > Alphanumeric
                        DISPLAY:
                                 Err Msg - "Container number must
                                           be alphanumeric."

        ELSE:
              Use CntnrNo from screen to access CntnrMovStp.
              DISPLAY:
                         "CntnrNo  CntnrOwn Consignee MultiStpNo"
                          XXXXXXXX   XXXX     XXXXXX      X

                 System will allow user to course through this
                 scrollable screen to the desired stop.  When the
                 stop is selected, the user will hit "GO" and the
                 first process screen will be displayed.
              IF:  CntnrNoPrefix in CntnrMov = 000
                   UPDATE:  Screen entered CntnrNoPrefix to
                            CntnrNoPrefix in CntnrMov.

                   MOVE:  CntnrNoPrefix from CntnrMov to Container
                          Number on First Process Screen.
DISPLAY:
          First Process Screen
```

3)

```
IF:
     User enters FWTNo
     MATCH:
            FWTNo from screen with FWTNo in CntnrMov File
            IF:
                 NO MATCH:
                 DISPLAY:  Freight Warrant Number entered not
                           valid.  Reenter or exit the process.
            ELSE:
                   Use CntnrNo and CntnrOwnAbbr found in the
                   CntnrMov file to access CntnrMovStp
```

DISPLAY:
Cntnr Mov Stop data as follows:

CntnrNo	CntnrOwn	Consignee	MultiStpNo
XXXXX	XXXX	XXXXXX	X

System will allow user to course through this scrollable screen to the desired stop. When the stop is selected, the user will hit 'GO' and the first process screen will be displayed.
MOVE:
CntnrNoPrefix from CntnrMov to Container Number on first process screen.

DISPLAY:
First Process Screen

4) IF:
User enters TMRPrefix
MATCH:
TMRPrefix from screen with TMRPrefix in CntnrMov file
IF:
NO MATCH:
DISPLAY: TMRPrefix entered not valid. Reenter or exit the process.
ELSE:
Use CntnrNo and CntnrOwnAbbr found in the CntnrMov file to access CntnrMovStp
DISPLAY:
CntnrMovStp data as follows:

CntnrNo	CntnrOwn	Consignee	MultiStpNo
XXXXX	XXXX	XXXXXX	X

System will allow user to course through this scrollable screen to the desired stop. When the stop is selected, the user will hit 'GO' and the first process screen will be displayed
MOVE:
CntnrNoPrefix from CntnrMov to Container Number on first process screen.

DISPLAY:
First Process Screen

IF:
User enters CntnrTCN.
MATCH:
CntnrTCN from screen with CntnrTCN in CntnrMov.
IF:
No match.
DISPLAY:
"Container TCN not valid. Reenter or exit process."
ELSE:
Select CntnrNo, CntnrOwnAbbr from CntnrMov to access CntnrMovStp.
DISPLAY:
CntnrMovStp data as follows:

Cntnr No	CntnrOwnAbbr Abbr	Consignee	MultiStp No	Stp Comp
XXXXX	XXXX	XXXXXX	X	X
XXXXX	XXXX	XXXXXX	X	X

System will allow user to course through this scrollable screen to the desired stop. When the stop is selected, the user will hit [GO] and the first process screen will be displayed.

MOVE:
CntnrNoPrefix from CntnrMov to Container Number on the first process screen.

DISPLAY:
First Process Screen
System will then display the screen below with the "Header" data and the (X) element fields computer entered and a prompt stating "Enter data, press <RETURN>, <NEXT PAGE> to continue, <CANCEL/FINISH>".

MOVE: Using OriginMCEPrefix from System Parameter Tbl to access CgoMCE Tbl and display MCENme in the "FROM" header. The "TO" and "INFO" values will be hard coded into the header as displayed on the screen. The container information is generated by the "Front End" or "Open Door" process and displayed on the screen: CntnrNo, CntnrOwnAbbr, VoyDocuNoFltNo, and CntnrTCN, from CntnrMov File, and Consignee from CntnrMovStp

File.

IF: The OriginMCEPrefix value does not exist in the System Parameter Tbl.

THEN: The system will display a prompt stating, "MCE Code not found, contact System Administrator".

IF: The MCTPrefix does not exist in the CgoMCE Tbl.

THEN: The system will display a prompt stating, "MCE Code not found, update table...try again".

IF: The MCENme does not exist in the CgoMCE Tbl.

THEN: The system will display a prompt stating, "MCE name not found, update table...try again".

```
==========================================================================
                        Damaged/Deadlined Report
--------------------------------------------------------------------------

                                                          (Screen 1 of 3)

                        FROM:   C, MCT-XXXXXXXXXXXXXXXXXXXXXXXXXXXX
                          TO:   CDR, 1ST TMCA
                        INFO:   C, MECOBO-NORTH


                Container Number:   XXXXXXXX
                 Container Owner:   XXXX
                   Voyage Number:   XXXXX
                       Consignee:   XXXXXX
                   Container TCN:   XXXXXXXXXXXXXXXX
          DTG Dam/Dl Occurred:      ----(9)----     (Julian Date + HHMM)
      Location Dam/Dl Occurred:     ---------------(35)-----------------
              Current Location:     ---------------(35)-----------------

==========================================================================
```

NOTE: The cursor at this point will be on "DTG Dam/Dl Occurred". To locate the cursor on another data element, or bypass a nonapplicable data element, will be accomplished by pressing the Direction Arrows or <RETURN> key.

5. IF: The user desires to develop a Damaged/Deadline Report.

   THEN: The user will begin free text entry of data, not to exceed the designated field lengths indicated and without edits or validations, starting with the first applicable data element on the screen above. "Header" and "Container" information cannot be entered or changed in this process.

   ELSE: The user will press the <FINISH> key which will display a prompt stating "Exit to Menu? Press <GO> to confirm - Press <CANCEL> to deny" or press the <CANCEL> key which will return to the "Front End" or "Open Door" screen.

      IF: For example, the user desires to enter the "Location Dam/Dl Occurred".

      THEN: The user will insure that the cursor is located in the blank data field adjacent to the "Location Dam/Dl Occurred" and will enter the appropriate location. The data will be entered and the cursor will move to "Location Dam/Dl Occurred" when the <RETURN> key is pressed.

      IF: The user continues to enter data and completes the entry of the last data element on the screen and presses <RETURN>.

      THEN: The cursor will loop to the first available entry on the screen (e.g. DTG Dam/Dl Occurred).

      IF: The user desires to move to the next screen (e.g. Screen 2 of 3).

      THEN: The user will press the <NEXT PAGE> key and the second process screen will be displayed as shown below.

   DISPLAY: Second Process Screen
   System will then display the screen below with a prompt stating "Enter data, press <RETURN>, <NEXT PAGE> to continue, <CANCEL/FINISH>".

==========

Damaged/Deadlined Report

(Screen 2 of 3)

Driver Identification (Military Drayed Only)

```
                Name:   ---------(20)----------
                Rank:   --(3)--
                Unit:   -------------------(35)---------------
          Unit Ph No:   --------(15)----------

      Extent of Damage
           Container:   ----------------------(50)----------------
             Chassis:   ----------------------(50)----------------
Tractor (If applicable):----------------------(50)----------------
               Cargo:   ----------------------(50)----------------

   Assistance Required
    Carrier Maint Team: -(1)-        (Enter Y or N)
          Claims Team:  -(1)-        (Enter Y or N)
                Other:  --------------------(35)----------------
```

==========

NOTE: The cursor at this point will be on "Name".

6. IF: The user desires to continue development of the Damaged/ Deadline Report.

   THEN: The user will continue free text entry of data, not to exceed the designated field lengths indicated, starting with the first applicable data element on the screen above.

   ELSE: The user will press the <FINISH> key which will display a prompt stating "Exit to Menu? Press <GO> to confirm - Press <CANCEL> to deny" or press the <CANCEL> key which will return to the "Front End" or "Open Door" screen.

      IF: The cursor is on the "Carrier Main Team" or "Claims Team" and an entry is made other than a "Y" for Yes or "N" for No.

      THEN: The system will display a prompt stating "Must be a Y or N...try again".

      IF: The user completes the entry of the last data element on the screen (e.g. Other) and presses <RETURN>.

      THEN: The cursor will loop to the first available entry on the screen (e.g. Name).

IF: The user desires to move to the next screen (e.g. Screen 3 of 3).

THEN: The user will press the <NEXT PAGE> key and the third process screen will be displayed as shown below.

DISPLAY: Third Process Screen
System will then display the screen below with a prompt stating "Enter data, press <RETURN>, <GO> to create report, <CANCEL/FINISH>".

```
==========================================================================
                          Damaged/Deadlined Report
--------------------------------------------------------------------------

                                                          (Screen 3 of 3)

   Report Submitted By
                  Name:   --------(20)----------
                  Rank:   --(3)--
                  Unit:   -------------------(35)---------------
            Unit Ph No:   -------(15)-----------
Description of Damaged/Deadlined Deficiency:

--------------------------------------------------------------------------

-------------------------(150)----------------------------------------

--------------------------------------------------------------------------

Remarks:

-------------------------(150)----------------------------------------

--------------------------------------------------------------------------

--------------------------------------------------------------------------


==========================================================================
```

NOTE: The cursor at this point will be on "Name".

7. IF: The user desires to continue development of the Damaged/ Deadline Report.

THEN: The user will continue free text entry of data, not to exceed the designated field lengths indicated and without edits or validations, starting with the first applicable data element on the screen above.

ELSE: The user will press the <FINISH> key which will display a prompt stating "Exit to Menu? Press <GO> to confirm - Press <CANCEL> to deny" or press the <CANCEL> key which will return to the "Front End" or "Open Door" screen.

IF: The user completes the entry of the last data element on the screen (e.g. Remarks) and presses <RETURN>.

THEN: The cursor will loop to the first available entry on the screen (e.g. Name).

8. IF: The user desires to create the Damaged/Deadlined Container Report.

THEN: The user must first display the third process screen (e.g. Screen 3 of 3) using the <NEXT PAGE> key.

ELSE: The system will display a prompt stating "Screen 3 must be displayed when pressing <GO>...press <RETURN>...try again".

IF: Screen 3 of 3 is displayed and the <GO> key is pressed.

THEN: The system will display a prompt stating "Do you wish to review? Press <PREV PAGE> or <GO> to continue".

IF: The user desires to review the information developed on the previous screens before creating the report.

THEN: The user will press the <PREV PAGE> key and the system will display the previous screens developed in reverse order (e.g. Screen 2 of 3 will be displayed and then Screen 1 of 3).

IF: The user presses the <PREV PAGE> key with Screen 1 of 3 displayed.

THEN: The system will display a prompt stating "No previous page".

IF: Changes are required during the review.

THEN: The user will move the cursor to the changes required

with the Direction Arrow keys. Corrections will be made using the systems "Over Type" and "Delete" keys.

IF: The user presses the <GO> key the second time.

THEN: The system will update the CntnrMov Record by assigning the value "D" to CntnrDam and the current Julian date to DteLstUpdCntnr. The system will format the message below with the appropriated information, assign the report a file number, and send the report to the "General Message" process. (NOTE: The file number is a 15 space system generated alphanumeric code with the first three spaces hard coded "DDL" for Damaged/Deadlined and the remaining 12 spaces made up of a Date Time Group of "YY, MM, DD, HH, MM, SS".) The report file number will be displayed in a prompt for the user's information which states:
"DDLYYMMDDHHMMSS is your file name, Press <GO> to continue".

IF: The user presses the <CANCEL> key.

THEN: The system will return to the "Front End" or "Open Dorr" process.

NOTE: Any additions or modifications required to any of the Damaged/Deadlined Report data, to include "Header" data, can be accomplished in the "General Message Process".

DISPLAY: Message format.

==========

FROM: C, MCT-xxxxxxxxxxxxxxxxxxxxxxxxxxxxxxxxxx
TO: CDR, 1ST TMCA
INFO: C, MECOBO-NORTH

SUBJ: Damaged/Deadlined Container Report

1. Container Identification:
   a. CntnrTCN: xxxxxxxxxxxxxxxx
   b. CntnrOwn: xxxx
   c. VoyDocNo: xxxxx
2. DTG Damaged/Deadline Occurred: xxxxx
3. Dam/DL Occurred At: xxxxxxxxxxxxxxxxxxxxxxxxxxxxxxxx

```
 4.  Current Location:  xxxxxxxxxxxxxxxxxxxxxxxxxxxxxxxxxx
 5.  Driver ID:       Name:  xxxxxxxxxxxxxxxxxxx        Rank:  xxx
     Unit:  xxxxxxxxxxxxxxxxxxxxxxxxxxxxxxxxxx
     Unit Ph:  xxxxxxxxxxxxxxx         (For Mil Drayed Only)
 6.  Brief description of damage or deadline deficiency:
     xxxxxxxxxxxxxxxxxxxxxxxxxxxxxxxxxxxxxxxxxxxxxxxxxxxxxxxxxxxxxxxx
     xxxxxxxxxxxxxxxxxxxxxxxxxxxxxxxxxxxxxxxxxxxxxxxxxxxxxxxxxxxxxxxx
 7.  Extent of Damage:
      a.  Container:  xxxxxxxxxxxxxxxxxx
      b.  Chassis:  xxxxxxxxxxxxxxxxxxxxx
      c.  Tractor (if applicable):
      xxxxxxxxxxxxxxxxxxxxxxxxxxxxxxxxxxxxxxxxxxxxxxxxxxxxxxxxxxxxxxxx
      d.  Cargo:  xxxxxxxxxxxxxxxxxxxxxxxxxxxxxxxxxxxxxxxxxxxxxxxxxxx
 8.  Assistance Required:
      a.  Carrier Maint Team:  x
      b.  Carrier Claims Investigator:  x
      c.  Other:  cxxxxxxxxxxxxxxxxxxxxxxxxxxxxxxxxxx
 9.  Remarks:
     xxxxxxxxxxxxxxxxxxxxxxxxxxxxxxxxxxxxxxxxxxxxxxxxxxxxxxxxxxxxxxxx
     xxxxxxxxxxxxxxxxxxxxxxxxxxxxxxxxxxxxxxxxxxxxxxxxxxxxxxxxxxxxxxxx
10.  Report Submitted By: Name: xxxxxxxxxxxxxxxxxxxx Rank: xxx
     Unit: xxxxxxxxxxxxxxxxxxxxxxx     Unit Ph: xxxxxxxxxxxxxx
```

==========

```
;
    MAINTAINS:
         CntnrMov-File ;
    UPDATES:
         Cntnr-Msg-File ;
    EMPLOYS:
         CntnrMovStp-File ,
         System-Parameter-Tbl ,
         CgoMCE-Tbl ;
    ADDS:          Dam-Deadlined-Cntnr-Report TO Cntnr-Msg-File ;
    MODIFIES:      CntnrMov-Dam-DL-Upd IN CntnrMov-File ;
    REFERENCES:    CntnrMovStp-Dam-DL-Ref IN CntnrMovStp-File ;
    REFERENCES:    Sixty-Day-Parameter-Ref IN System-Parameter-Tbl ;
    REFERENCES:    CgoMCE-Dam-DL-Ref IN CgoMCE-Tbl ;
    REFERENCES:    CntnrMov-Dam-DL-Ref IN CntnrMov-File ;
    CREATES:
         Dam-Deadlined-Cntnr-Report ;
    RESPONSIBLE PROBLEM DEFINER IS:
                   'Morris' ;
```

This page intentionally left blank.

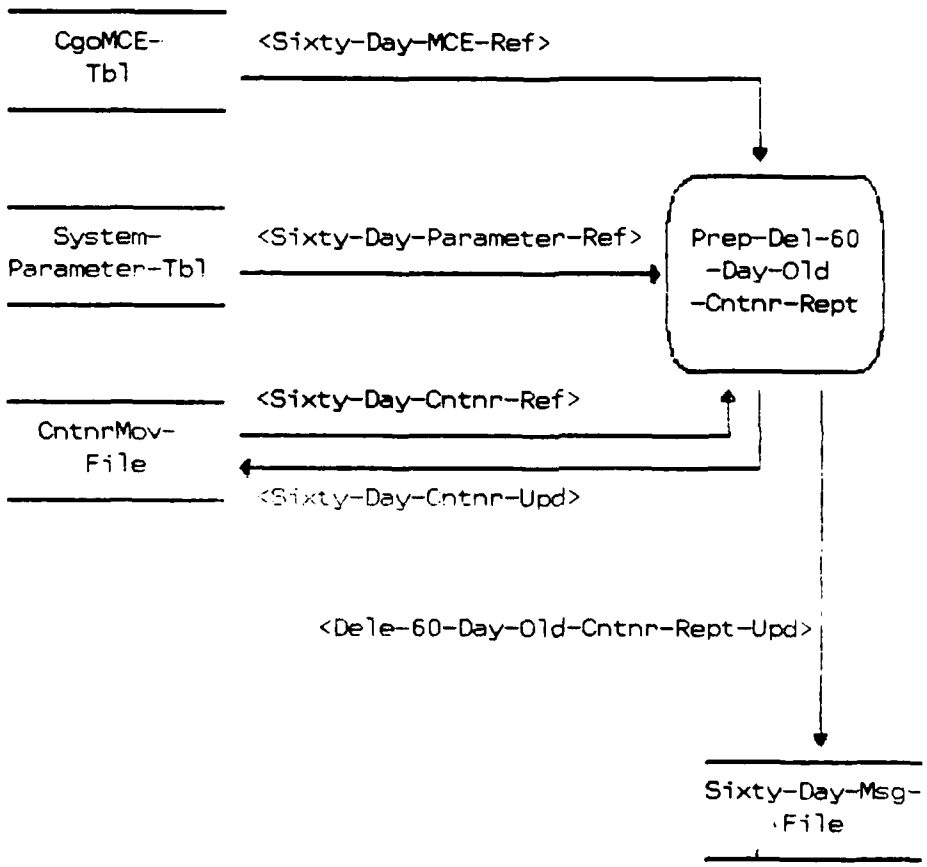

Figure 18. Prep-Del-60-Day-Old-Cntnr-Rept

24 DEFINE PROCESS Prep-Del-60-Day-Old-Cntnr-Rept ;
DESCRIPTION;
Prepare Deletion of 60 Day Old Container Report
At prescribed times all MCTs are required to send delete 60 day container reports to 1st TMCA to identify containers that were forecasted to their area but never arrived. This process is used to identify those container records as candidates for deletion to purge inactive records from the database. The system user (MCT) selects this process from the container master menu. This process identifies container records that have not had any subsequent movement events posted from the date the record was created plus the value (60 Day Old Deletion Process) in the parameter table. The records that are identified as being inactive are flagged in the database and printed in the delete 60 day old container message file which is transmitted to TMCA.

ASSUMPTION: All container transaction processes that report and record subsequent movement events, will update CntnrMov records(DteLstUpdCntnr) which is a key to this process.
;
KEYWORD IS: 'Container' ,
'LOB' ;
SEE MEMO:
TCR-Dele-60-Day-Old-Cntnr-Memo ;
PART OF: Prepare-Container-Reports ;
PROCEDURE;

Read: Each record in the CntnrMov file
IF: DteLstUpdCntnr in a record is blank.
Then: Read, DteRecCreat in that file record, and compare that date to the present date (DteCurr) using the system calendar function.
IF: The difference between those dates is equal to or greater to the value (60 Day Old Deletion Process) in the parameter file.
Then: Update the CntnrMov record (DelFLag) with a "Y" value.
Then: When the value "Y" is updated in a record, update that record with DteLstUpdCntnr with the current date (DteCurr) using the system calendar function.

Else:
IF:
DteLstUpdCntnr in a record has a value.
Then: Search for ___ a value "Y" in the Del Flag field.
IF:
No value "Y" is found

Then: Read next record
IF: Value "Y" is found
Then: Compare the Dte Lst Upd Cntnr with the Dte Curr (same day).
IF: They are different
Then: Read next record
IF: They are equal
Then: Move the record data to the message file.

Then: Update the message file with the data listed below:

DATA ELEMENT	FROM	TO
CntnrOwnAbbr	CntnrMov	MESSAGE FILE
CntnrNoPrefix	CntnrMov	MESSAGE FILE
CntnrNo	CntnrMov	MESSAGE FILE
VoyDocuNoFltNo	CntnrMov	MESSAGE FILE
POD	CntnrMov	MESSAGE FILE

THE FOLLOWING FORMAT WILL BE USED IN THE MESSAGE FILE:

FORMAT: Delete 60 Day Old Container Report

FROM: C, MCT _____
TO: CDR, 1st TMCA AEUTR- MCA IS
AEUTR- MCA- CC

SUBJECT: DELETION OF 60 DAY OLD CONTAINERS.
1. THE FOLLOWING CONTAINERS WERE FORECASTED TO THIS MCT BUT HAVE NOT ARRIVED IN 60 DAYS AND ARE BEING DELETED ON _____ DATE.

CNTNR OWNER CNTNR NUMBER VOYAGE DOCUMENT POD

Else:
IF: DteLstUpdCntnr in a record has a value.
Then: Search for ____ A value "Y" in the Del Flag field.
IF: No value "Y" is found
Then: Read next record
IF: Value "Y" is found
Then: Compare the DteLstUpdCntnr with the DteCurr (same day).

IF: They are different
Then: Read next record
IF: They are equal
Then: Move the record data to the message file.

The header information will be added to the message file as shown above.

Then: The date the record will be deleted (as of date) will be created by reading the parameter table (NOTIFICATION FROM TMCA OF CNTNR DELETION) value and adding it to the present date (DteCurrr) from the system calendar function.
Then: Print the date in headers blank field (____) date area to the right of "DELETED ON" in the message file.
Then: Read the parameter table (Origin MCE Prefix) and search the CgoMCE file for (MCENme)
Then: PRINT that name on the header to the blank field area to the right of "FROM" in the message file.

If: No records meet the criteria to be printed in the message file for transmission to TMCA.

Then: Print "Negative Report" under the message format lines in the message file.

NOTE: Make this file available to the general message process.

THEN: Display, the message file name/dte time group on the screen: "(---12---) is your file name, press GO to exit".

NOTE: The users manual must instruct the user to copy down the file name so it can be used to access the report in the general message process.

;

```
MAINTAINS:
     CntnrMov-File ;
UPDATES:
     Sixty-Day-Msg-File ;
EMPLOYS:
     System-Parameter-Tbl ,
     CgoMCE-Tbl ;
ADDS:          Sixty-Day-Cntnr-Upd TO CntnrMov-File ;
ADDS:          Dele-60-Day-Old-Cntnr-Rept-Upd TO Sixty-Day-Msg-File ;
REFERENCES:    Sixty-Day-Cntnr-Ref IN CntnrMov-File ;
```

```
REFERENCES:     Sixty-Day-Parameter-Ref IN System-Parameter-Tbl ;
REFERENCES:     Sixty-Day-MCE-Ref IN CgoMCE-Tbl ;
CREATES:
     CntnrMov ,
     Dele-60-Day-Old-Cntnr-Rept-Upd ;
RESPONSIBLE PROBLEM DEFINER IS:
                'Valentine' ;
```

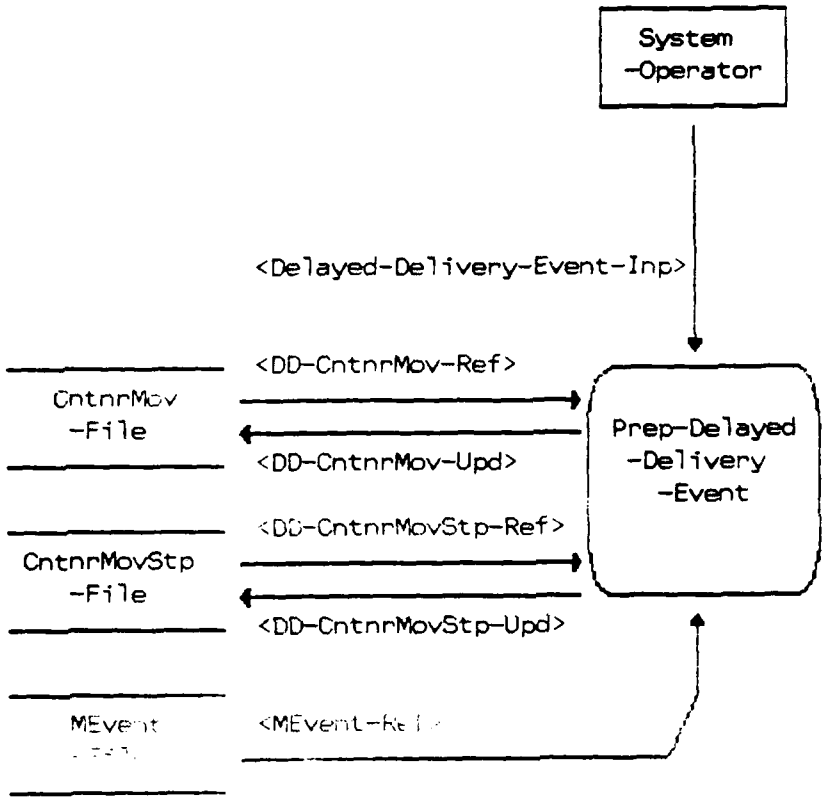

Figure 19. Prep-Delayed-Delivery-Event

```
25   DEFINE PROCESS                          Prep-Delayed-Delivery-Event ;
       DESCRIPTION;
   Prepare Delayed Delivery Event
   This process allows a specific container to be selected from the
   database, and have information regarding a delayed delivery posted to
   it.  The process will allow the user to track the DD request, the
   approval, the delay, and the release.
    ;
       KEYWORD IS:     'Container' ,
                       'LOB' ;
       SEE MEMO:
            Front-End-Process-Memo ,
            TCR-Delayed-Dlvr-Process-Memo ;
       RECEIVES:
            Delayed-Delivery-Event-Inp ;
       PART OF:        Rec+Report-Cntnr-Mov-Events ;
       PROCEDURE;

   1)
        If:
            User enters CntnrNo
            MATCH:
                    CntnrNo from screen with CntnrNo in CntnrMovStp File
                    IF:
                        NO MATCH:
                        DISPLAY:
                                "Container Number not valid, reenter or
                                 exit process."

                    ELSE:
                           Use CntnrNo to access CntnrMovStp.
                           DISPLAY:
                           "CntnrNo CntnrOwn Consignee MultiStpNo StpComp"
                             XXXXX    XXXX      XXXXXX        X

                            System will allow user to course through this
                            scrollable screen to the desired stop.  When the
                            stop is selected, the user will hit "GO" and
                            the first process screen will be displayed.
                        MOVE:
                              CntnrNoPrefix from CntnrMov to Container
                              Number on first process screen.
        DISPLAY:
                   First Process Screen

   2)
        IF:
            User enters CntnrNo + CntnrNoPrefix
        MATCH:
```

```
            CntnrNo from screen with CntnrNo in CntnrMovStp File
            IF:
                NO MATCH:
                DISPLAY:
                        "Container Number not valid, reenter or
                         exit process."
                EDIT:
                       System will edit CntnrNoPrefix
                       IF:
                            CntnrNoPrefix < > Alphanumeric
                            DISPLAY:
                                     Err Msg - "Container number must
                                               be alphanumeric."

            ELSE:
                  Use CntnrNo from screen to access CntnrMovStp.
                  DISPLAY:
                            "CntnrNo  CntnrOwn Consignee MultiStpNo"
                             XXXXXXXX   XXXX     XXXXXX      X

                     System will allow user to course through this
                     scrollable screen to the desired stop.  When the
                     stop is selected, the user will hit "GO" and the
                     first process screen will be displayed.
                  IF:  CntnrNoPrefix in CntnrMov = 000
                       UPDATE:  Screen entered CntnrNoPrefix to
                                CntnrNoPrefix in CntnrMov.

                       MOVE:  CntnrNoPrefix from CntnrMov to Container
                              Number on First Process Screen.
      DISPLAY:
                First Process Screen

3)    IF:
           User enters FWTNo
           MATCH:
                  FWTNo from screen with FWTNo in CntnrMov File
                  IF:
                       NO MATCH:
                       DISPLAY:  Freight Warrant Number entered not
                                 valid.  Reenter or exit the process.
                  ELSE:
                         Use CntnrNo and CntnrOwnAbbr found in the
                         CntnrMov file to access CntnrMovStp
                         DISPLAY:
                                   Cntnr Mov Stop data as follows:

                            CntnrNo    CntnrOwn   Consignee   MultiStpNo
```

XXXXX XXXX XXXXXX X

System will allow user to course through this scrollable screen to the desired stop. When the stop is selected, the user will hit 'GO' and the first process screen will be displayed.
MOVE:
CntnrNoPrefix from CntnrMov to Container Number on first process screen.

DISPLAY:
First Process Screen

4) IF:
User enters TMRPrefix
MATCH:
TMRPrefix from screen with TMRPrefix in CntnrMov file
IF:
NO MATCH:
DISPLAY: TMRPrefix entered not valid. Reenter or exit the process.
ELSE:
Use CntnrNo and CntnrOwnAbbr found in the CntnrMov file to access CntnrMovStp
DISPLAY:
CntnrMovStp data as follows:

CntnrNo	CntnrOwn	Consignee	MultiStpNo
XXXXX	XXXX	XXXXXX	X

System will allow user to course through this scrollable screen to the desired stop. When the stop is selected, the user will hit 'GO' and the first process screen will be displayed
MOVE:
CntnrNoPrefix from CntnrMov to Container Number on first process screen.

DISPLAY:
First Process Screen

IF:
User enters CntnrTCN.
MATCH:
CntnrTCN from screen with CntnrTCN in CntnrMov.

IF:

No match.
DISPLAY:

"Container TCN not valid. Reenter or exit process."

ELSE:

Select CntnrNo, CntnrOwnAbbr from CntnrMov to access CntnrMovStp.
DISPLAY:

CntnrMovStp data as follows:

Cntnr No	CntnrOwnAbbr Abbr	Consignee	MultiStp No	Stp Comp
XXXXX	XXXX	XXXXXX	X	X
XXXXX	XXXX	XXXXXX	X	X

System will allow user to course through this scrollable screen to the desired stop. When the stop is selected, the user will hit [GO] and the first process screen will be displayed.

MOVE:

CntnrNoPrefix from CntnrMov to Container Number on the first process screen.

MATCH:

The system will search CntnrMovStp to see if Delayed Delivery information exists for the container. In the example, no prior Delayed Delivery event for that container has occurred.

IF:

NO MATCH.
The system will accept screen entered information as follows:

Prompt: 'Press [RETURN] to enter data, [CANCEL] to exit process'.

DELAYED DELIVERY

Container Number: XXXXXXXX

Container Owner: XXXX

```
                                  ----
              Voyage Number:      XXXXX
                                  -----
                  Consignee:      XXXXXX
                                  ------

                Carrier POC:
                                  -------------------------
      Date Carrier Notified:      _____

              Consignee POC:
                                  -------------------------
    Date Consignee Notified:      _____

Consignee Req Release Date:       _____

         Container Location:      ______

        Carrier Release POC:
                                  -------------------------
            Date of Release:      _____
```

Operator will press [RETURN] or [CANCEL]
IF:
    [CANCEL]. System will return to main screen with no processing accomplished for the session.

IF:
    [RETURN]
    Prompt: "Enter Carrier POC name'.

DD Carrier POC Notification

User will enter up to 25 characters of free text information describing the carrier POC.

PERFORM:
    Alpha-Numeric Edit

Operator will press [RETURN] or [CANCEL]
IF:
    [CANCEL]. System will return to main screen with no processing accomplished for the session.

IF:
[RETURN] System will advance to the next field.
Prompt: 'Enter 5 position Julian Date'.

DD Date Carrier Notified

User will enter the 5 position date that the carrier was notified to effect the delayed delivery.

PERFORM:
Date-Validation-Routine
IF:
DD Date Carrier Notified > Today's Date
DISPLAY:
Err Msg "Date must be equal or less than today's date"

IF:
VALID DATE:
Operator will press [RETURN] or [CANCEL]
IF:
[CANCEL]. System will return to main screen with no processing accomplished for the session.

IF:
[RETURN] System will advance to the next field.
Prompt: "Enter Consignee POC name"

DD Consignee POC

User will enter up to 25 characters of free text information describing the consignee POC.

Operator will press [RETURN] or [CANCEL]
IF:
[CANCEL]. System will return to main screen with no processing accomplished for the session.
IF:
[RETURN] System will advance to the next field.
Prompt: "Enter a 5 position Julian Date."

DD Date Consignee Notified

User will enter the 5 position date that the consignee was notified to effect the delayed delivery.

PERFORM:
Date-Validation-Routine
IF:
DD Date Consignee Notified > Today's Date
DISPLAY:
Err Msg "Date must be equal or less than today's date."
IF:
Valid date is entered.

Operator will press [RETURN] or [CANCEL]
IF:
[CANCEL]. System will return to main screen with no processing accomplished for the session.
IF:
[RETURN] System will advance to the next field.
Prompt: "Enter a 5 position Julian Date."

DD Date Consignee Req Rel

User will enter the 5 position date of release request as provided by the consignee.

PERFORM:
Date-Validation-Routine

IF:
DD Date Consignee Req Rel < DD Date Carrier Notified.

DISPLAY:
Err Msg _____

IF:
Valid date entry.
Operator will press [RETURN] or [CANCEL]
IF:
[CANCEL]. System will return to main screen with no processing accomplished for the session.
IF:
[RETURN] System will advance to the next field.

Prompt: _____

Container Location

User will enter up to 25 characters of free text information.

Operator will press [RETURN] or [CANCEL]
IF:
[CANCEL]. System will return to main screen with no processing accomplished for the session.
IF:
[RETURN] System will advance to the next field.
Prompt: "Press [GO] to store data [RETURN] to make changes."

IF: [RETURN]
System will wrap cursor around to DD Carr POC Notif
IF:
[GO]
System will move data to appropriate files and match container identification (CntnrNo, CntnrOwnAbbr, Consignee) with TTB-A MEvent.
IF:
NO MATCH:
DISPLAY:
"A TTB-A transaction must be submitted. Press [RETURN] to continue."
User will press [RETURN]
DISPLAY:
"To post release...press [RETURN] or [CANCEL] to exit."
IF:
MATCH:
User will press [RETURN]
DISPLAY: "To post release... press [RETURN] or [CANCEL] to exit."

Operator will press [RETURN] or [CANCEL]
IF:
[CANCEL]. System will return to main screen with no processing accomplished for the session.

IF:
[RETURN] System will advance to the next field.
Prompt: "Enter Carrier POC name."

DD Carrier POC Release Notif

User will enter up to 25 characters of free text information describing the carrier POC who was informed to release the delayed delivery container.

Operator will press [RETURN] or [CANCEL]
IF:
[CANCEL]. System will return to main screen with no processing accomplished for the release session.
IF:
[RETURN] System will advance to the next field.
Prompt: "Enter a 5 position Julian Date."

DD Date of Release

User will enter the 5 position date of actual release.

PERFORM:
Date-Validation-Routine
IF:
DD Date of Release < DD Date Carrier Notified
DISPLAY:
Err Msg "Date must be greater than date carrier notified."

IF:
Valid date, operator will press [RETURN]
DISPLAY:
"Do you wish to post Spot Date? Yes, push [RETURN], No push [GO]."
IF:
[GO]
DISPLAY:
"Release information posted." System will return to main screen.
IF:
[RETURN].
System will advance to next field.
Prompt:
"Enter 5 position Julian Date."

DDActlSptDte

User will enter the 5 position date of actual release.
PERFORM:
Date-Validation-Routine
IF:
DDActlSptDte < DDDteRel
DISPLAY:
"Date must be greater than carrier release date."
IF:
Valid date is entered, user will press [RETURN]
Prompt:
"Press [GO] to store data, [RETURN] to make changes."
IF:
[GO]
DISPLAY:
"Spot information posted."
System will update appropriate files and return to the main screen.
IF:
[RETURN]
System will wrap the cursor to the beginning of the Spot date field, where a different date can be entered.

ELSE:
MATCH OF CntnrMovStp and DD information
System will display information as contained in CntnrMovStp on the screen as follows, and function key set.

DELAYED	DELIVERY
Container Number:	XXXXXXXX
Container Owner:	XXXX
Voyage Number:	XXXXX
Consignee:	XXXXXX
Carrier POC:	XXXXXXXXXXXXXXXXXXXXXXXX

Date Carrier Notif: XXXXX

Consignee POC: XXXXXXXXXXXXXXXXXXXXXXXX

Date Consignee Notif: XXXXX

Consignee Req Rel Date: XXXXX

Container Location: XXXXXX

Carrier Release POC:

Date of Release: _____

Actual Spot Date: _____

RELEASE	SPOT	MODIFY

DELETE		

IF:

MODIFY:

System will allow user to modify any entry EXCEPT - CntnrNo, CntnrOwnAbbr, VoyDocuNoFltNo, Consignee. CntnrMovStp will be overlayed where appropriate.

IF:

DELETE:

System will delete the screen entries as well as the DD information contained in CntnrMovStp.

IF:

RELEASE:

System will accept information as follows:

DD Carr POC Notif Rel

PERFORM:

DD Carr POC Notif Rel Procedure

DD Dte Rel

PERFORM:
DD Dte Rel Procedure

IF:
SPOT:
System will accept information as follows:
PERFORM:
DD Actl Spt Dte.

THE FOLLOWING UPDATES/OUTPUTS
WILL BE CREATED BY THIS PROCESS

The DD-Message-Out will be available for the report process and the message process

I

Container Move Stop

ELEMENT	FROM	TO
Location	Screen	DDLoc
Carrier POC	Screen	DDCarrPOCNotif
Date Carrier Notif	Screen	DDDteCarrNotif
Consignee POC	Screen	DDCnsgnPOCNotif
Date Consignee Notif	Screen	DDDteCnsgnNotif
Consignee Req Rel Date	Screen	DDDteCnsgnReqRelDte
Carrier Release POC	Screen	DDCarrPOCNotifRel
Date of Release	Screen	DDDteRel
PstDte	Screen	DDPstDte

II

Container Move

ELEMENT	FROM	To

Date Last Update Container Generated DteLstUpdCntnr

;

```
MAINTAINS:
     CntnrMov-File ;
MAINTAINS:
     CntnrMovStp-File ;
EMPLOYS:
     MEvent-File ;
MODIFIES:       DD-CntnrMov-Upd IN CntnrMov-File ;
MODIFIES:       DD-CntnrMovStp-Upd IN CntnrMovStp-File ;
REFERENCES:     DD-CntnrMov-Ref IN CntnrMov-File ;
REFERENCES:     DD-CntnrMovStp-Ref IN CntnrMovStp-File ;
REFERENCES:     MEvent-Ref IN MEvent-File ;
RESPONSIBLE PROBLEM DEFINER IS:
                'Mitchem' ;
```

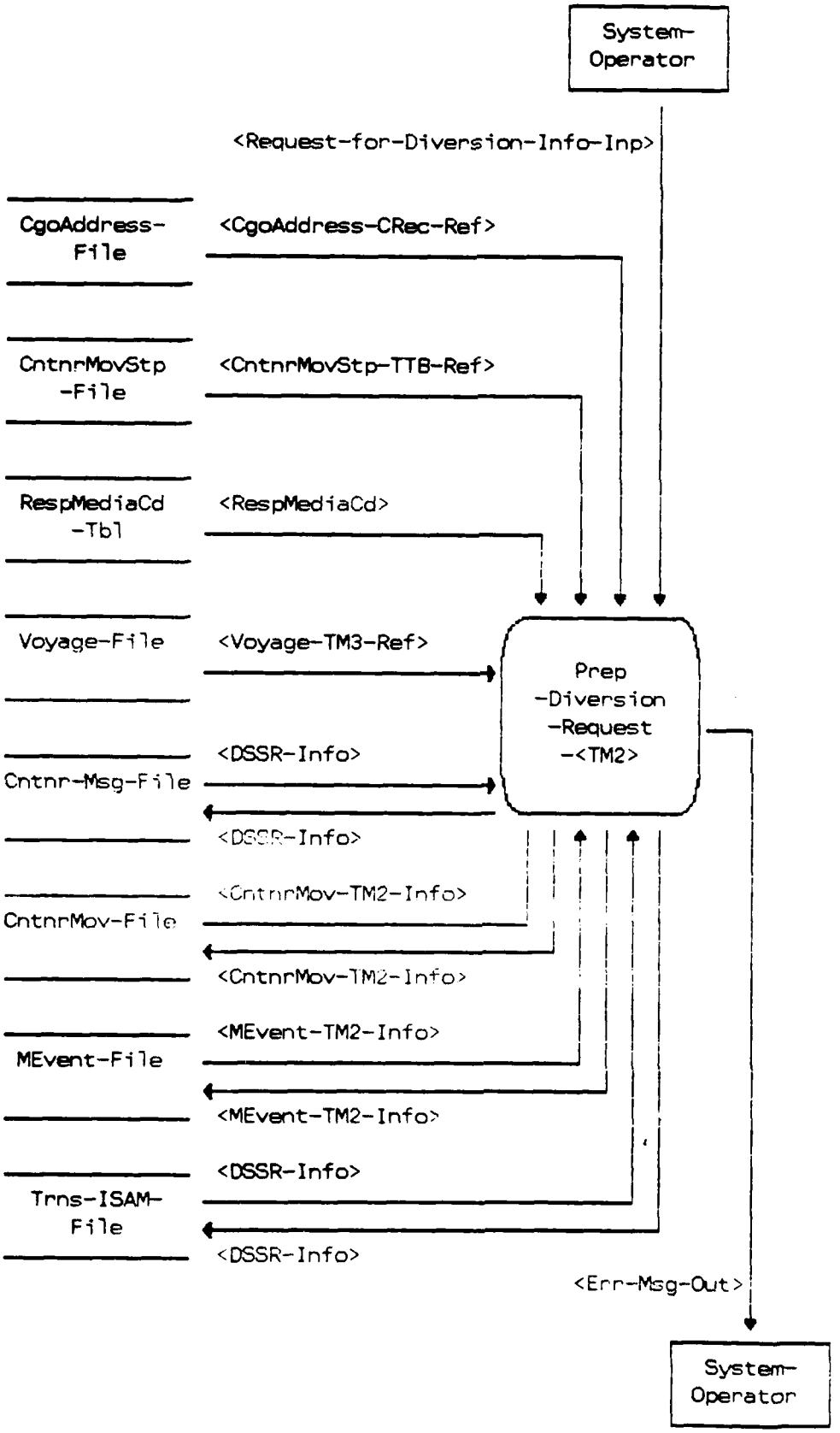

Figure 20. Prep-Diversion-Request-<TM2>

```
26   DEFINE PROCESS                          Prep-Diversion-Request-<TM2> ;
       DESCRIPTION;
   Prepare Diversion Request <TM2>
   This process updates the container database with the diversion request
   information and a TM2 transaction is generated to request a diversion
   on a container.
    ;
       KEYWORD IS:     'Container' ,
                       'LOB' ;
       SEE MEMO:
            TCR-TM2-Process-Memo ,
            Front-End-Process-Memo ;
       GENERATES:
            ErrMsg-Out ;
       RECEIVES:
            Request-for-Diversion-Info-Inp ;
       PART OF:        Rec+Report-Cntnr-Mov-Events ;
       PROCEDURE;

   1.  FRONT END PROCESS:

   1)
        If:
            User enters CntnrNo
            MATCH:
                    CntnrNo from screen with CntnrNo in CntnrMovStp File
                    IF:
                        NO MATCH:
                        DISPLAY:
                                "Container Number not valid, reenter or
                                 exit process."

                    ELSE:
                           Use CntnrNo to access CntnrMovStp.
                           DISPLAY:
                           "CntnrNo CntnrOwn Consignee MultiStpNo StpComp"
                             XXXXX    XXXX     XXXXXX        X

                            System will allow user to course through this
                            scrollable screen to the desired stop.  When the
                            stop is selected, the user will hit "GO" and
                            the first process screen will be displayed.
                        MOVE:
                              CntnrNoPrefix from CntnrMov to Container
                              Number on first process screen.
        DISPLAY:
                   First Process Screen

   2)
```

```
IF:
    User enters CntnrNo + CntnrNoPrefix
MATCH:
       CntnrNo from screen with CntnrNo in CntnrMovStp File
       IF:
           NO MATCH:
           DISPLAY:
                   "Container Number not valid, reenter or
                    exit process."
           EDIT:
                  System will edit CntnrNoPrefix
                  IF:
                       CntnrNoPrefix < > Alphanumeric
                       DISPLAY:
                                Err Msg - "Container number must
                                          be alphanumeric."

       ELSE:
              Use CntnrNo from screen to access CntnrMovStp.
              DISPLAY:
                        "CntnrNo  CntnrOwn Consignee MultiStpNo"
                         XXXXXXXX   XXXX     XXXXXX      X

                 System will allow user to course through this
                 scrollable screen to the desired stop.  When the
                 stop is selected, the user will hit "GO" and the
                 first process screen will be displayed.
              IF:  CntnrNoPrefix in CntnrMov = 000
                   UPDATE:  Screen entered CntnrNoPrefix to
                            CntnrNoPrefix in CntnrMov.

                   MOVE:  CntnrNoPrefix from CntnrMov to Container
                          Number on First Process Screen.
DISPLAY:
          First Process Screen

3)  IF:
      User enters FWTNo
      MATCH:
             FWTNo from screen with FWTNo in CntnrMov File
             IF:
                  NO MATCH:
                  DISPLAY:  Freight Warrant Number entered not
                            valid.  Reenter or exit the process.
             ELSE:
                    Use CntnrNo and CntnrOwnAbbr found in the
                    CntnrMov file to access CntnrMovStp
                    DISPLAY:
                              Cntnr Mov Stop data as follows:
```

CntnrNo	CntnrOwn	Consignee	MultiStpNo
XXXXX	XXXX	XXXXXX	X

System will allow user to course through this scrollable screen to the desired stop. When the stop is selected, the user will hit 'GO' and the first process screen will be displayed.
MOVE:
CntnrNoPrefix from CntnrMov to Container Number on first process screen.

DISPLAY:
First Process Screen

4) IF:
User enters TMRPrefix
MATCH:
TMRPrefix from screen with TMRPrefix in CntnrMov file
IF:
NO MATCH:
DISPLAY: TMRPrefix entered not valid. Reenter or exit the process.
ELSE:
Use CntnrNo and CntnrOwnAbbr found in the CntnrMov file to access CntnrMovStp
DISPLAY:
CntnrMovStp data as follows:

CntnrNo	CntnrOwn	Consignee	MultiStpNo
XXXXX	XXXX	XXXXXX	X

System will allow user to course through this scrollable screen to the desired stop. When the stop is selected, the user will hit 'GO' and the first process screen will be displayed
MOVE:
CntnrNoPrefix from CntnrMov to Container Number on first process screen.

DISPLAY:
First Process Screen

IF:

User enters CntnrTCN.
MATCH:
CntnrTCN from screen with CntnrTCN in CntnrMov.
IF:
No match.
DISPLAY:
"Container TCN not valid. Reenter or exit process."
ELSE:
Select CntnrNo, CntnrOwnAbbr from CntnrMov to access CntnrMovStp.
DISPLAY:
CntnrMovStp data as follows:

Cntnr No	CntnrOwnAbbr Abbr	Consignee	MultiStp No	Stp Comp
XXXXX	XXXX	XXXXXX	X	X
XXXXX	XXXX	XXXXXX	X	X

System will allow user to course through this scrollable screen to the desired stop. When the stop is selected, the user will hit [GO] and the first process screen will be displayed.

MOVE:
CntnrNoPrefix from CntnrMov to Container Number on the first process screen.

2. IF:
Record is selected
THEN:
Display screen containing data shown from CntnrMov and CntnrMovStp.
ELSE:
Display prompt "Record not on file"

IF:
Record found and a MEvent record, with MovEvntCd TM2 and the same keys exist.
THEN:
Move data from MEvent to the screen and display function keys Clear Screen, Modify and Delete.
ELSE:
Create a new MEvent record and DSSR with MovEvntCd TM2.

(SAMPLE SCREEN)

```
|                        DIVERSION REQUEST (TM2)                        |
|_______________________________________________________________________|
|  CONTAINER NUMBER:  XXXXXXXX                                          |
|  CONTAINER OWNER :  XXXX                              POE:  XXX       |
|  VOYAGE NUMBER   :  XXXXX                             POD:  XXX       |
|  CONSIGNOR       :  XXXXXX          DATE DPTD CONSIGNOR:  XXXXX       |
|  CONSIGNEE       :  XXXXXX                MULTI STOP NO:  X           |
|  TCN             :  XXXXXXXXXXXXXXXXX                                 |
|  TAC             :  XXXX                      REQUESTOR:  XXXXXX      |
|  NEW CONSIGNEE   :  XXXXXX                 MANAGER CODE:  X           |
|  RESPONSE CODE   :  X                                                 |
|_______________________________________________________________________|
```

3. IF:

MEvent record exist and function keys are displayed, and user selects the Clear Screen function key.

THEN:

The system will return to the front end screen for record selection.

OR:

User selects delete function key.

THEN:

All screen entered data, i.e. Consignor, Date Departed Consignor, the MEvent and DSSR (if present) data will be deleted.

OR:

If the user selects the Modify function key.

THEN:

System will check for an existing DSSR and if found will allow changes to be made. The cursor will then move to the first data element.

ELSE:

The cursor will first move to Consignor.

IF:

The cursor is at CONSIGNOR, the user may enter CONSIGNOR, if known, and that entry will be edited for any 6 digit alpha-numeric combination. If entered incorrectly, display prompt "CONSIGNOR must be 6 digit alpha/numeric".

IF:

Consignor is blank and entered by the user, then the cursor will move to the next element which is DATE DPTD CONSIGNOR. At this element the user may enter the 5 digit date or press RETURN and bypass this element line. If a date is entered, edit for YYDDD not greater than today's date. If entered

incorrectly display prompt "Date must be equal to or less than today's date". After the user presses RETURN, the cursor will move to the TCN.

ELSE:

If the user does not enter a CONSIGNOR, and presses RETURN, the cursor will move to TCN. The system will display the TCN from CntnrMov.

IF:

At this element line, the user enters a new TCN which does not equal the TCN in CntnrMov, then that new TCN will be stored in ShpmtUTCN in MEvent and during the output process be moved to the DSSR (ISAM). The only edit criteria for a screen entered TCN is 17 digit alpha/numeric field. If entered incorrectly, display prompt "TCN not valid, must be 17 position alpha-numeric".

ELSE:

If the user does not enter the TCN displayed (from CntnrMov) will post to the DSSR (ISAM) and not to ShpmtUTCN.

IF:

User presses return, the cursor will move to the TAC element line. At this line the user may, if filled in, bypass TAC by pressing RETURN, and the cursor will move to New Consignee.

IF:

The field is blank, the user MUST enter a 4 digit TAC. The only edit criteria is for 4 digits alpha/numeric. A HELP key will provide a prompt stating the following: "For a list of valid TAC's consult MILSTAMP VOL II".

IF:

TAC is screen entered, that TAC will be stored in the MEvent NewTAC, and sent to the DSSR. If a TAC was displayed from the database, the same will apply. When the user presses RETURN, the cursor will move to New Consignee.

IF:

At this element line, the user MUST enter the 6 digit DODAAC to which the container is being diverted. When entered, the system will do an edit in CgoAddress to ensure the NEW CONSIGNEE is valid.

IF:

The consignee is not valid, the screen will display a prompt stating "New Consignee not on file, press CANCEL to retry or FINISH to exit". When CANCEL is pressed, the cursor will move to the first position of the DODAAC for reentry. After reentry the same edit will be performed.

ELSE:

If the DODAAC is valid, the cursor will move to the next element line which is RESPONSE CODE.

IF:

At this element line the user MUST enter a valid 1 digit RESPONSE CODE, or press the HELP key for a scrollable window of valid RESPONSE CODES. The user may scroll to the desired RESPONSE CODE (in the window), press GO, and that RESPONSE CODE will be moved to process screen. The user then presses RETURN and the cursor will move to REQUESTOR.

IF:

At this element the user must enter the 6 position DODAAC of the unit requesting the diversion.

IF:

The DODAAC is entered, the system will perform an edit in CgoAddress for validity. If the DODAAC is not on file a prompt stating "DODAAC not on file, press GO to continue, or CANCEL to retry".

IF:

GO is pressed, the system will override the edit (allowing the entry of a psuedo DODAAC, or if CANCEL is pressed, the user may enter a valid DODAAC and the same edit will be performed as for initial entry. The user then presses RETURN and the cursor will move to MANAGER CODE.

IF:

The user enters the Manager Code, the only edit is for 2 digit alpha/numeric field. If entered incorrectly, provide prompt "Manager Code must be alpha/numeric".

IF:

At this point, the user has filled in the screen and is finished with the request, press GO and the data will be sent to the DSSR and made available to the GENERAL MESSAGE PROCESS.

ELSE:

The user presses return, the cursor will move to the first point of entry which is Consignor. At that point the user may scroll, by pressing the RETURN key to the desired line, make changes as needed, then press GO. The files, DSSR, and info to the GENERAL MESSAGE PROCESS will be updated.

NOTE: When the TM2 is sent to the GENERAL MESSAGE PROCESS, make available ON DEMAND in the following format:

FROM: CHIEF MCT _____
TO :
INFO:

INFO:
INFO:
INFO:
INFO:
SUBJ: DIVERSION REQUEST <TM2>

1. Request the following container(s) be diverted as indicated below:

CONTAINER NUMBER	CONSIGNOR	DATE DEPARTED CONSIGNOR	POE	TRACING ACTIVITY DODAAC	TCN
XXXXXXXX	XXXXXX	XXXXXX	XXX	XXXXXX	XXXXXXXXXXXXXXXX

VOYAGE DOCUMENT NUMBER	POD	PREVIOUS SHIPMENT CONSIGNEE	TAC	NEW CONSIGNEE DODAAC
XXXXX	XXX	XXXXXX	XXXX	XXXXXX

The outputs to the GENERAL MESSAGE PROCESS are listed in paragraph 5, item 2.

When GO is pressed, the system will, using system calendar date, update PstDte, in MEvent, and DteLstUpdte in CntnrMov.

TWO
****

(Outputs to GENERAL MESSAGE PROCESS)

Screen Name	Database Name	Message Name
Container Number	CntnrNoPrefix/CntnrNo.	Container Number
Consignor	CnsgnrAAC	Consignor
Date Dptd Consignor	DteDprtCnsgnr	Date Departed Consignor
POE	POE	POE
Requestor	AACCurr(Req)	AACCurr
TCN	CntnrTCN	TCN
Voyage Number	VoyDocuNoFltNo	Voyage Document Number
POD	POD	POD
Consignee	Consignee	Consignee
TAC	TAC	TAC
New Consignee	NewEvntLoc	New Consignee DODAAC

```
;
   MAINTAINS:
        Cntnr-Msg-File ;
   MAINTAINS:
        CntnrMov-File ;
   MAINTAINS:
        MEvent-File ;
   MAINTAINS:
        Trns-ISAM-File ;
   EMPLOYS:
        CntnrMovStp-File ,
        CgoAddress-File ,
        RespMediaCd-Tbl ,
        Voyage-File ;
   ADDS:           DSSR-Info TO Trns-ISAM-File ;
   ADDS:           MEvent-TM2-Info TO MEvent-File ;
   MODIFIES:       DSSR-Info IN Trns-ISAM-File ;
   MODIFIES:       DSSR-Info IN Cntnr-Msg-File ;
   MODIFIES:       CntnrMov-TM2-Info IN CntnrMov-File ;
   MODIFIES:       MEvent-TM2-Info IN MEvent-File ;
   REFERENCES:     CgoAddress-CRec-Ref IN CgoAddress-File ;
   REFERENCES:     RespMediaCd IN RespMediaCd-Tbl ;
   REFERENCES:     Voyage-TM3-Ref IN Voyage-File ;
   REFERENCES:     DSSR-Info IN Trns-ISAM-File ;
   REFERENCES:     DSSR-Info IN Cntnr-Msg-File ;
   REFERENCES:     CntnrMov-TM2-Info IN CntnrMov-File ;
   REFERENCES:     MEvent-TM2-Info IN MEvent-File ;
   REFERENCES:     CntnrMovStp-Ref IN CntnrMovStp-File ;
   CREATES:
        DSSR-Info ,
        MEvent-TM2-Info ;
   RESPONSIBLE PROBLEM DEFINER IS:
                   'Morris' ;
```

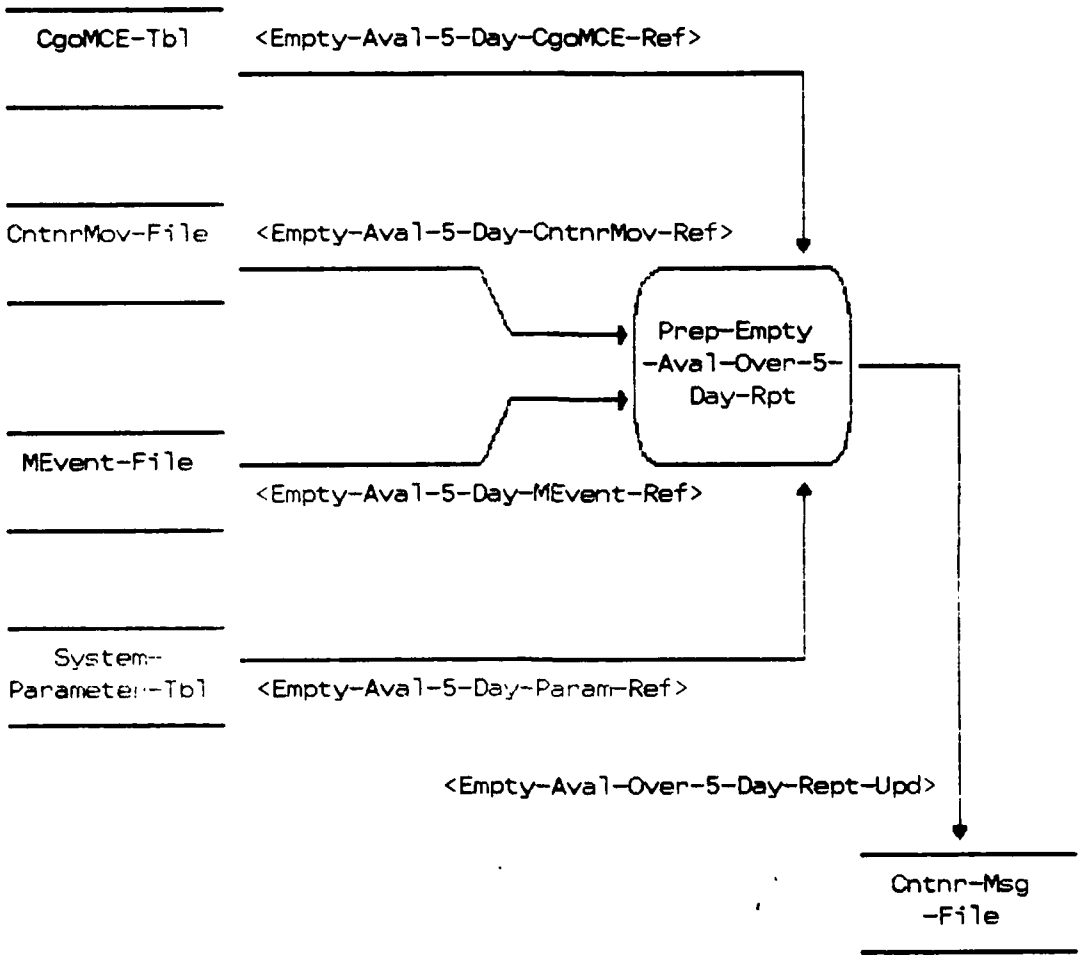

Figure 21. Prep-Empty-Aval-Over-5-Day-Rpt

27 DEFINE PROCESS Prep-Empty-Aval-Over-5-Day-Rpt ;
DESCRIPTION;
Prepare Container Empty Available Over 5 Days Report
This process is initiated daily by the MCT system user. The container database is screened to identify all containers that have been reported arrived, unloaded and reported empty to the carrier at a consignee, but do not have a departed consignee (TTB E) transaction posted for 5 days after the notification to carrier date. The process will format the information in a message file which is transmitted to TAMCA daily.
;
KEYWORD IS: 'Container' ;
SEE MEMO:
TCR-Empty-Aval-Over-5-Day-Rept ;
PART OF: Prepare-Container-Reports ;
PROCEDURE;

READ: MEvent Record
IF: Move Event Code not TTB
THEN: Read next record
IF: Mov Event Code = TTB
THEN: Read the Event Ty value in that record
IF: Event Ty value = A and there is a TTB D and no E record.
THEN: Read the Event Dte from the TTB D record and compute the difference from that date and the System Calendar Date (Dte Curr).
IF: The difference between the dates is less than the value "X" (value of Cntnr O/H over X days) in the Parameter Table.
THEN: Read next record
IF: The difference between the dates is equal to or greater than the value "X" in the Parameter Table.
THEN: Store the following data elements from that TTB D (MEvent) record.

Consignee
Cntnr Own Abbr
Cntnr No
Event Dte (Last 3 Digits)

THEN: Find the matching Cntnr Mov record (Use key data elements) and store the Cntnr No Prefix from that record. The prefix numbers will be formatted before the 5 digit Cntnr No.
THEN: Sort the cntnr record data by consignee
THEN: Print the cntnr record data in consignee sequence in the message file.

CNTNR EMPTY AVAIL OVER 5 DAY RPT FORMAT

FROM: MCT
TO: CDR 1ST TAMCA _____

SUBJ: Cntnr Empty Available Over 5 Day Report

ACTIVITY	CONTAINER OWNER	CONTAINER NUMBER	DATE CARRIER NOTIFIED
HE4497	LKYU	12345679	328

Use Origin MCE Code in Parameter Table to search for MCE Nme in Cgo MCE file. Then move that name to the report header after FROM:
IF: No records are found that meet the report criteria.
THEN: Print "NEGATIVE REPORT" under the report header info.

NOTE: Make this file available to the general message process.

THEN: Display, the message file name/dte time group on the screen: "(---12---) is your file name, press GO to exit".

NOTE: The users manual must instruct the user to copy down the file name so it can be used to access the report in the general message process.

;

```
UPDATES:
     Cntnr-Msg-File ;
EMPLOYS:
     CgoMCE-Tbl ,
     System-Parameter-Tbl ,
     CntnrMov-File ,
     MEvent-File ;
ADDS:          Empty-Aval-Over-5-Day-Rept-Upd TO Cntnr-Msg-File ;
REFERENCES:    Empty-Aval-5-Day-CgoMCE-Ref IN CgoMCE-Tbl ;
REFERENCES:    Empty-Aval-5-Day-Param-Ref IN System-Parameter-Tbl ;
REFERENCES:    Empty-Aval-5-Day-CntnrMov-Ref IN CntnrMov-File ;
REFERENCES:    Empty-Aval-5-Day-MEvent-Ref IN MEvent-File ;
CREATES:
     Empty-Aval-Over-5-Day-Rept-Upd ;
RESPONSIBLE PROBLEM DEFINER IS:
               'Valentine' ;
```

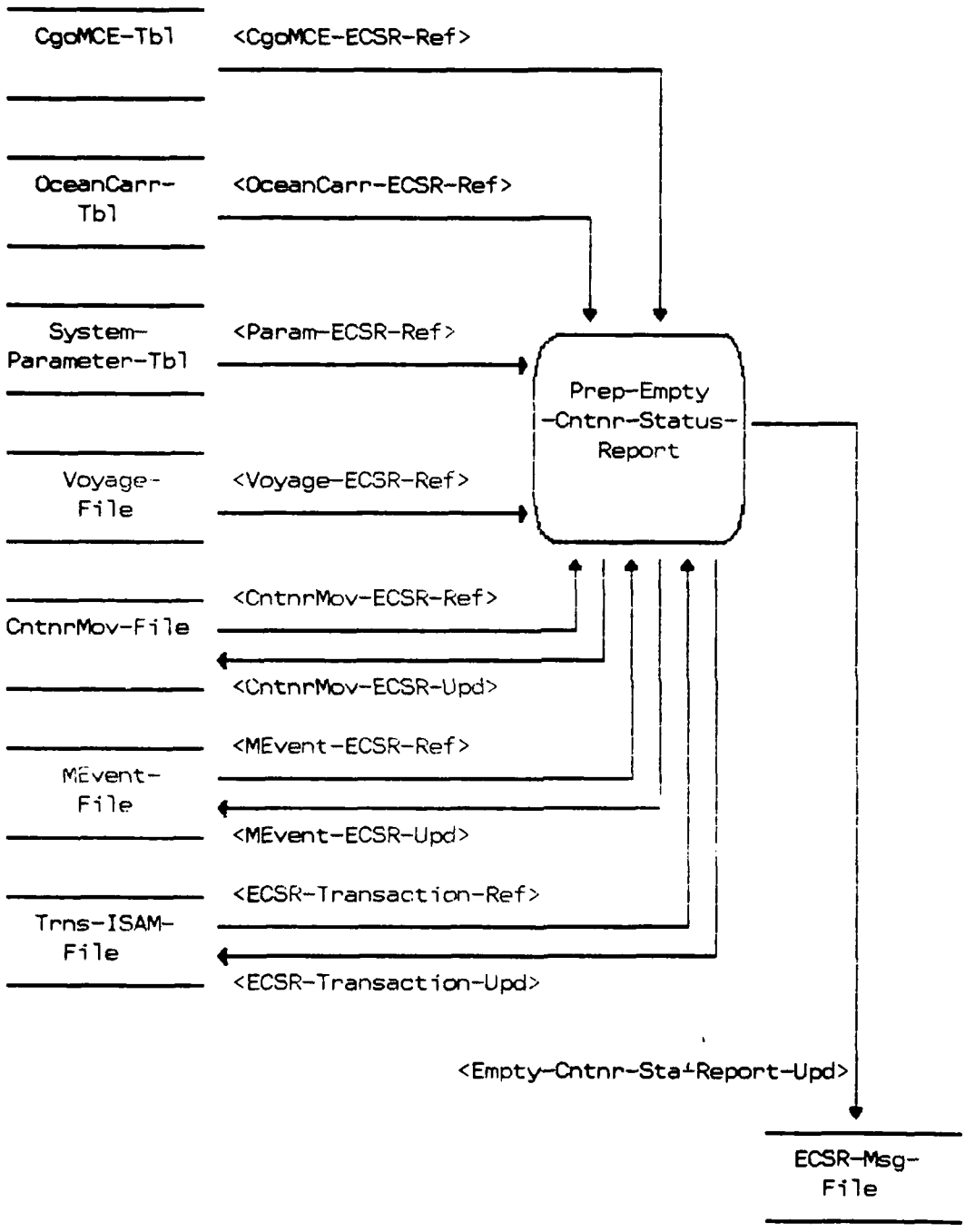

Figure 22. Prep-Empty-Cntnr-Status-Report

28 DEFINE PROCESS Prep-Empty-Cntnr-Status-Report ;
DESCRIPTION;
Prepare Empty Container Status Report
This process is performed on a daily basis by each MCT. The database will be screened to identify all containers which have been reported empty that day. This report is to be transmitted to the carrier, via TELEX, not earlier than the established close of business and NLT 2400 HRS the same day the containers are reported empty available. This process will, in addition to this report, create a TTB "D" DIC Transaction for transmission to CMM.
;
KEYWORD IS: 'Container' ,
'LOB' ;
SEE MEMO:
TCR-Empty-Cntnr-Status-Memo ;
PART OF: Prepare-Container-Reports ;
PROCEDURE;

SEARCH: The Cntnr database and identify Cntnr records that have a Ty Carr Cd value of "C" (commercial)

NOTE: The Ty Carr Cd for each Ocean Carr are located in the Ocean Carr Table.

THEN: When a Cntnr record has been identified as being a commercial carrier value "C" in TyCarrCd for the Ocean Carrier:

THEN: Search the MEvent file for all matching TTB "B" or "C" Evnt Ty records that do not have a matching "D" Evnt Ty record. (Use partial key lookup eg: Cntnr-Own Abbr, Cntnr No)

NOTE: The search for MEvent records will be to locate the family of MEvent records with the same Consignee. There may be several families of TTB records for any Cntnr Mov record with Multi Stop Consignees.

IF: The matching records do not have B or C MEvent records:

THEN: Read the next Cntnr Mov record

IF: The matching record(s) have Evnt Ty "B" or "C" and no "D".

THEN: Store the following data from the TTB "B" or "C" MEvent record.

Cntnr Own Abbr
Cntnr No

Consignee

THEN: Store the Cntnr No Prefix from the matching Cntnr Mov record.

THEN: Search the Voyage File for the matching Voyage record (use matching Cntnr Mov record VoyDocuNoFltNo, FKey) and store the VoyDocuNoFltNo and Ocean Carr Abbr from that record.

After all records have been read:

THEN: Sort the stored record data using Ocean Carr Abbr.

THEN: Sort the record(s) within each grouping of Ocean Carr Abbrs by VoyDocuNoFltNo.

THEN: Search the Ocean Carr Table for each Ocean Carr Abbr being stored and move the Ocean Carr Nme and it's matching stored Cntnr record data to a separate Message file for that Ocean Carrier. The stored data will be moved to the Message file in it's proper location (See Output Format).

THEN: When all records have been read, sorted and selected data moved to the separate carrier Message files: Read all Ocean Carr Abbrs in the Message file and then read all of the Ocean Carr Abbrs in the Voyage File and identify any Ocean Carr Abbrs that are in the Voyage file but not in the Message file.

THEN: Search the Ocean Carr table for the matching Ocean Carr Nme and move the names of the Ocean Carriers in the Voyage file that do not have Message files and create separate Message files for those carriers and hard code the words "Negative Report" under the carriers name.

THEN: Create a TTB "D" Evnt Ty MEvent record for each container that was reported in a Message file. Create the MEvent records as follows:

ELEMENT	FROM	TO
Event Date	Generate (Dte Curr)	MEvent
Event Type	Generate "D" Value	MEvent
Cntnr Own Abbr	MEvent (TTB "B" or "C")	MEvent
Cntnr No	MEvent (TTB "B" or "C")	MEvent
Consignee	MEvent (TTB "B" or "C")	MEvent
Mov Event Cd	Generate "TTB"	MEvent
Origin Code	Parameter Table	MEvent
Type Move No Cd	Type Mov No (TTB "B" OR "C" RECORD)	MEvent
Post Date	Generate (Dte Curr)	MEvent

THEN: For each MEvent record created: Update the matching Cntnr Mov record with a Dte Curr (Use System Calendar Function) in the Dte Lst Upd Cntnr field.

THEN: For each MEvent record created, search the ISAM file for a ZTB D record with 3 zeros following the D value in that record.

IF: A ZTB D record with 3 zeros is found.

THEN: Overlay the 3 zeros (Evnt Dte) with the last 3 digits of Dte Curr.

NOTE: Do not create a separate TTB D ISAM record.

IF: A ZTB D record with 3 zeros following the D value is not found.

THEN: Search the ISAM file for a TTB B or C ISAM record.

THEN: Update the TTB B or C ISAM record with a D value and last 3 digits of Dte Curr in the first available field in that ISAM record. (eg. D 171).

IF: No ZTB D ISAM record with 3 zeros or a TTB B or C ISAM record exists:

THEN: Create a TTB D ISAM record as follows:

ELEMENT	FROM	TO
DIC	Generate "TTB"	CC 1-3
Origin Code	Parameter Table	CC 4-6
Type Carrier Code	Cntnr Mov	CC 7
Mode Method Ship Cd	Cntnr Mov	CC 8
Type Move No Cd	MEvent (TTB "B" or "C")	CC 9
Movement Number	Generated (See Note)	CC 10-29
Consignee	MEvent (TTB "B" or "C")	CC 30-35
Voy Docu No	Cntnr Mov	CC 36-40
Evnt Ty	Generate "D" Value	CC 48
Evnt Dte	Generate "Dte Curr"	CC 49-51

NOTE: Movement Number is not in the Data Model. It is made from various data elements determined by the TyMovNoCd. e.g.,

IF: TyMovNoCd = C MoveNo = CntnrTCN CC 10-26
= M MoveNo = TMR = TMRPrefix, DestMCE- CC 10-29
Prefix, StpSeqNo, SpIntCd, ModeCd, TransPriCd, and the TIN.
= F MoveNo = FWT, TIN. CC 10-28
= V MoveNo = CntnrOwnAbbr, CntnrNo, CC 10-21
= D MoveNo = VoyDocuNoFltNo. CC 10-14

MOVE: The data elements listed from these file/records to the ISAM file record.

THEN: Fill in any blanks up to CC #29 with zeros

OUTPUT FORMAT (MESSAGE FILE)

FROM: C, MCT _____
TO: OCEAN CARRIER NAME
INFO: C MECOBO-NORTH BREMERHAVEN GERMANY//MCT-TOPS-TMN//

SUBJ: Empty Container Status Report

1. The following containers have been reported empty and available for carrier pick up:

Voyage Doc No	Cntnr Owner	Cntnr Number	DODAAC
XXXXX	XXXX	XXXXXXXX	XXXXXX

(OR)

NEGATIVE REPORT

THEN: Use the Origin MCE Prefix in the parameter table to search for the MCENme in the CgoMCE file.

THEN: Move the MCE Name to the message file in the field to the right of the "FROM CHIEF MCT" address header.

IF: No record data exists in a carrier's file (carriers identified as negative report carriers). Print negative report under the header as indicated above.

NOTE: Make the message files available to the general message process.

THEN: Display, the message file name/dte time group on the screen: "(---12---) is your file name, press GO to exit".

NOTE: The users manual must instruct the user to copy down the file name so it can be used to access the report in the general message process.

;

MAINTAINS:
CntnrMov-File ;
MAINTAINS:
MEvent-File ;
MAINTAINS:
Trns-ISAM-File ;
UPDATES:
ECSR-Msg-File ;
EMPLOYS:

```
     CgoMCE-Tbl ,
     OceanCarr-Tbl ,
     Voyage-File ,
     System-Parameter-Tbl ;
ADDS:          CntnrMov-ECSR-Upd TO CntnrMov-File ;
ADDS:          MEvent-ECSR-Upd TO MEvent-File ;
ADDS:          ECSR-Transaction-Upd TO Trns-ISAM-File ;
ADDS:          Empty-Cntnr-Sta-Report-Upd TO ECSR-Msg-File ;
MODIFIES:      CntnrMov-ECSR-Upd IN CntnrMov-File ;
MODIFIES:      ECSR-Transaction-Upd IN Trns-ISAM-File ;
REFERENCES:    CgoMCE-ECSR-Ref IN CgoMCE-Tbl ;
REFERENCES:    CntnrMov-ECSR-Ref IN CntnrMov-File ;
REFERENCES:    MEvent-ECSR-Ref IN MEvent-File ;
REFERENCES:    OceanCarr-ECSR-Ref IN OceanCarr-Tbl ;
REFERENCES:    ECSR-Transaction-Ref IN Trns-ISAM-File ;
REFERENCES:    Voyage-ECSR-Ref IN Voyage-File ;
REFERENCES:    Param-ECSR-Ref IN System-Parameter-Tbl ;
CREATES:
     CntnrMov ,
     MEvent ,
     Trns-ISAM-Data ,
     Empty-Cntnr-Sta-Report-Upd ;
RESPONSIBLE PROBLEM DEFINER IS:
               'Valentine' ;
```

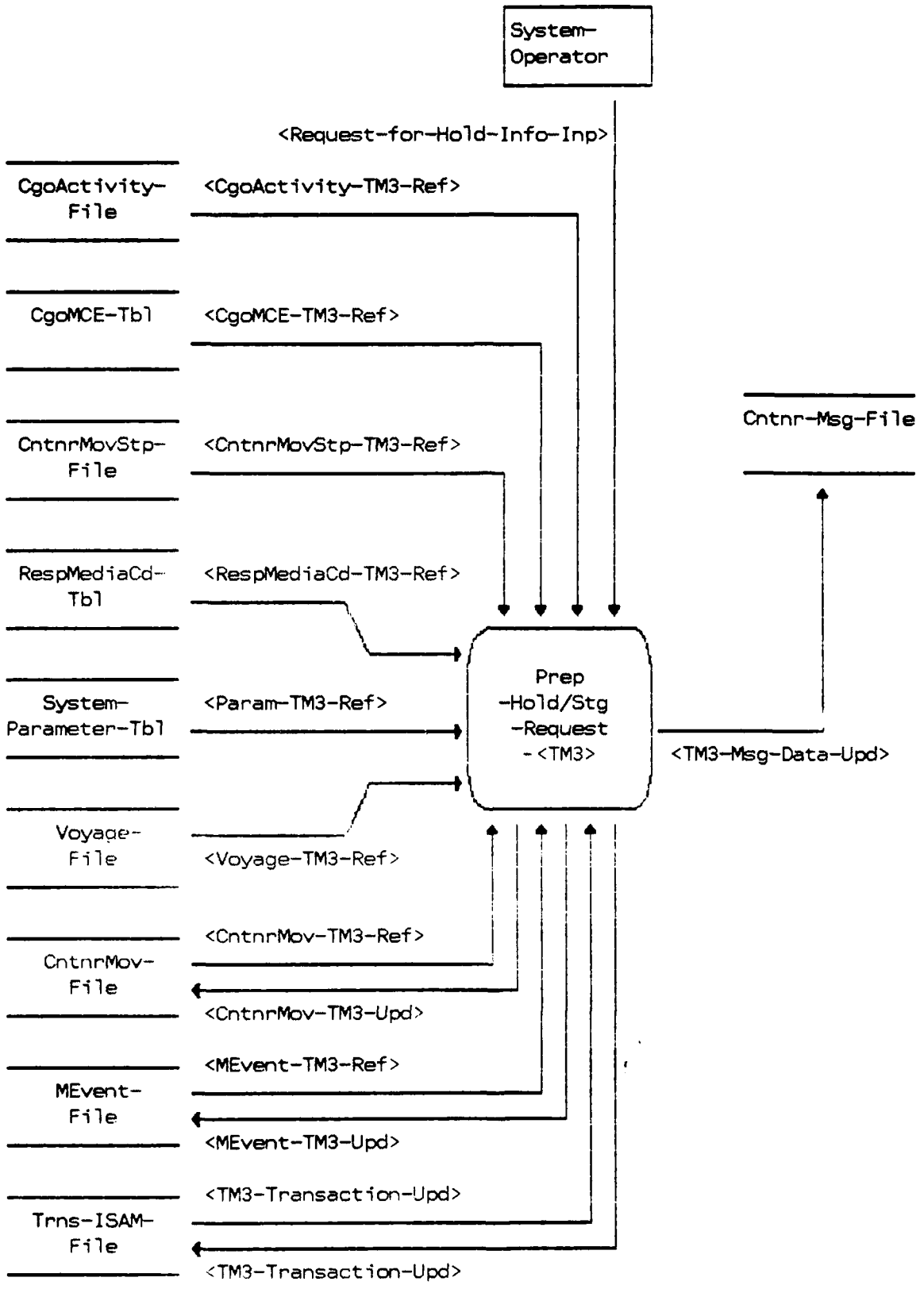

Figure 23. Prep-Hold/Stg-Request-<TM3>

```
29   DEFINE PROCESS                          Prep-Hold/Stg-Request-<TM3> ;
       DESCRIPTION;
   Prepare Hold/Stage Request <TM3>
   This process updates the container database with Hold/Stage Request
   information and a TM3 transaction is generated to request a hold on a
   container.
    ;
       KEYWORD IS:     'Container' ,
                       'LOB' ;
       SEE MEMO:
            TCR-for-TM3-Process-Memo ,
            Front-End-Process-Memo ;
       ATTRIBUTE IS:
            PROCESS-MODE    'INTERACTIVE' ,
            SEC-CLASS      'UNCLASSIFIED' ;
       RECEIVES:
            Request-for-Hold-Info-Inp ;
       PART OF:        Rec+Report-Cntnr-Mov-Events ;
       PROCEDURE;
```

Information is received from a customer requesting a container be held or staged. The system user (MCT) will select the Prepare Request for Hold/Stage (TM3) from a menu. The process will produce an MEvent record and on ISAM file TM3 formatted transaction which will be sent to 1st TMCA (CMM) in the DSSR. The process is performed when a customer requests the hold/stage because he can't receive and unload the container. If the container is held at the port, it is considered to be staged. The MCT will obtain the necessary process input information from the customer which will be entered into the system process.

The first screen that the user of this process will see is shown below:

```
-------------------------------------------------------------------------
|                          CONTAINER OPERATIONS                         |
|-----------------------------------------------------------------------|
|                                                                       |
|                  (ENTER ONE OF THE FOLLOWING OPTIONS)                 |
|                                                                       |
|                       TCN:                                            |
|                        OR                                             |
|          Container Number:                                            |
|           Container Owner:                                            |
|                        OR                                             |
|                 TMRPrefix:                                            |
|                        OR                                             |
|        Freight Warrant No:                                            |
|-----------------------------------------------------------------------|
```

```
1)
    If:
        User enters CntnrNo
        MATCH:
                CntnrNo from screen with CntnrNo in CntnrMovStp File
                IF:
                    NO MATCH:
                    DISPLAY:
                            "Container Number not valid, reenter or
                             exit process."

                ELSE:
                        Use CntnrNo to access CntnrMovStp.
                        DISPLAY:
                        "CntnrNo CntnrOwn Consignee MultiStpNo StpComp"
                          XXXXX    XXXX      XXXXXX        X

                         System will allow user to course through this
                         scrollable screen to the desired stop.  When the
                         stop is selected, the user will hit "GO" and
                         the first process screen will be displayed.
                    MOVE:
                          CntnrNoPrefix from CntnrMov to Container
                          Number on first process screen.
    DISPLAY:
              First Process Screen

2)
    IF:
        User enters CntnrNo + CntnrNoPrefix
    MATCH:
           CntnrNo from screen with CntnrNo in CntnrMovStp File
           IF:
               NO MATCH:
               DISPLAY:
                       "Container Number not valid, reenter or
                        exit process."
               EDIT:
                       System will edit CntnrNoPrefix
                       IF:
                            CntnrNoPrefix < > Alphanumeric
                            DISPLAY:
                                     Err Msg - "Container number must
                                               be alphanumeric."

           ELSE:
```

Use CntnrNo from screen to access CntnrMovStp.
DISPLAY:

"CntnrNo CntnrOwn Consignee MultiStpNo"
XXXXXXXX XXXX XXXXXX X

System will allow user to course through this scrollable screen to the desired stop. When the stop is selected, the user will hit "GO" and the first process screen will be displayed.

IF: CntnrNoPrefix in CntnrMov = 000
UPDATE: Screen entered CntnrNoPrefix to CntnrNoPrefix in CntnrMov.

MOVE: CntnrNoPrefix from CntnrMov to Container Number on First Process Screen.

DISPLAY:
First Process Screen

3) IF:
User enters FWTNo
MATCH:
FWTNo from screen with FWTNo in CntnrMov File
IF:
NO MATCH:
DISPLAY: Freight Warrant Number entered not valid. Reenter or exit the process.

ELSE:
Use CntnrNo and CntnrOwnAbbr found in the CntnrMov file to access CntnrMovStp
DISPLAY:
Cntnr Mov Stop data as follows:

CntnrNo	CntnrOwn	Consignee	MultiStpNo
XXXXX	XXXX	XXXXXX	X

System will allow user to course through this scrollable screen to the desired stop. When the stop is selected, the user will hit 'GO' and the first process screen will be displayed.
MOVE:
CntnrNoPrefix from CntnrMov to Container Number on first process screen.

DISPLAY:
First Process Screen

4) IF:
User enters TMRPrefix
MATCH:
TMRPrefix from screen with TMRPrefix in CntnrMov file
IF:
NO MATCH:
DISPLAY: TMRPrefix entered not valid. Reenter or exit the process.
ELSE:
Use CntnrNo and CntnrOwnAbbr found in the CntnrMov file to access CntnrMovStp
DISPLAY:
CntnrMovStp data as follows:

CntnrNo	CntnrOwn	Consignee	MultiStpNo
XXXXX	XXXX	XXXXXX	X

System will allow user to course through this scrollable screen to the desired stop. When the stop is selected, the user will hit 'GO' and the first process screen will be displayed
MOVE:
CntnrNoPrefix from CntnrMov to Container Number on first process screen.

DISPLAY:
First Process Screen

IF:
User enters CntnrTCN.
MATCH:
CntnrTCN from screen with CntnrTCN in CntnrMov.
IF:
No match.
DISPLAY:
"Container TCN not valid. Reenter or exit process."
ELSE:
Select CntnrNo, CntnrOwnAbbr from CntnrMov to access CntnrMovStp.
DISPLAY:
CntnrMovStp data as follows:

Cntnr No	CntnrOwnAbbr Abbr	Consignee	MultiStp No	Stp Comp
XXXXX	XXXX	XXXXXX	X	X

XXXXX XXXX XXXXXX X X

System will allow user to course through this scrollable screen to the desired stop. When the stop is selected, the user will hit [GO] and the first process screen will be displayed.

MOVE:

CntnrNoPrefix from CntnrMov to Container Number on the first process screen.

After the system has found the correct stop record the system will search the MEvent file for a TM3 (Move Event Code) record that has the same container owner, number and consignee (primary keys) of the stop record that was found during the initial record search. If a TM3 MEvent record exists the system will move the data elements listed below from that record to the TM3 format screen.

DATA ELEMENT	FROM	TO
Consignee	MEvent	Screen
Container Number	MEvent	Screen (4-8)
Cntnr No Prefix	Cntnr Mov	Screen (1-3)
Container Owner	MEvent	Screen
Voyage Number	Cntnr Mov (Voy Doc No)	Screen
Requestor	MEvent (AACCurr)	Screen
Disposition Activity	MEvent (DspoActv)	Screen
TCN of Request	MEvent (ShipUTCN)	Screen
If TCN not found in MEvent	Cntnr Mov (CntnrTCN)	Screen
NOTE:	Use key data elements to find Cntnr Mov record.	
Response Code	MEvent	Screen
POE	Voyage (POE)	Screen
If not in record leave blank		
Manager Code	MEvent	Screen
If not in record leave blank		
Consignor	Cntnr Mov	Screen
If not in record leave blank		
Date Depart Consignor	Cntnr Mov	Screen
If not in record leave blank		

Display (TOP OF SCREEN) "TM3 Movement Event is displayed" then, "Please press the desired function key" (If TM3 record exists) or "Create TM3 Movement Event here" (If no TM3 record exists).

REQUEST FOR STAGE/HOLD (TM3)

#1.	Container Number:	XXXXXXXX	#5.	TCN of Request:	XXXXXXXXXXX
#2.	Container Owner:	XXX	#6.	Requestor:	XXXXXX
#3.	Voyage Number:	XXXXX	#7.	Response Code:	X
#4.	Consignee:	XXXXXX	#8.	Dspo Activity:	XXXXXX

#9.	Manager Code:	XX
#10.	Consignor:	XXXXXX
#11.	Date Depart Consignor:	XXXXX (YYDDD)
#12.	POE:	XXX

The search for a match for an MEvent record will enable the user to confirm if an MEvent record exists or to change, or delete the record. The user can complete the MEvent record without pressing a function key.

If a TM3 MEvent record exists, display the function keys:

The function keys should be labeled to allow user selection for MODIFY, DELETE, or CLEAR SCREEN.

If the MODIFY function key is selected, the user can change data elements no. 5 through 12 if an ISAM record exists. The highlighter line will only stop on data elements that can be changed. Display "Modifications made at this point will be transmitted to 1st TMCA".

If no ISAM file record exists, and the user presses MODIFY, display, "To make corrections delete the record and create a new one".

If the ISAM record exists, the new data element(s) entered will be moved from the screen to the MEvent record and ISAM file. (OVERRIDE OLD DATA ELEMENTS).

After the data elements are entered and the (GO) function key is pressed, display "RECORD UPDATED."

In all cases when the record is updated the Cntnr Mov record (DATE LAST UPDATE) will be updated.

The selection of the delete function will trigger a caution display "Press GO to delete record, or CANCEL to deny", if an ISAM record exists

If the user presses the delete key, the MEvent record and ISAM file will be deleted from the file. Display "RECORD DELETED." If no ISAM record exists, and the delete key is pressed, display "Press GO to delete and notify 1st TMCA, or CANCEL to deny". If the GO key is pressed the TM3 MEvent record will be deleted. Display "RECORD DELETED, NOTIFY TMCA."

The selection of the clear function will bring the screen back to its initial format for the next container transaction to be posted.

If no matching TM3 MEvent record is located, the system will display the same full screen as above. Six or seven of the data elements will be displayed (filled in).

MOVE DATA ELEMENTS AS INDICATED BELOW

DATA ELEMENT	FROM	TO
#1. Container No. Prefix	Cntnr Mov	Screen
#1. Container Number	Cntnr Mov	Screen
#2. Container Owner	Cntnr Mov	Screen
#3. Voyage Number	Cntnr Mov	Screen
#4. Consignee	Cntnr Mov Stop	Screen
#5. TCN of Request	Cntnr Mov (Cntnr TCN)	Screen
#6. Requestor	Cntnr Mov Stop(Consignee)	Screen
#12. POE	Voyage (If in file)	Screen

NOTE: Use key data elements to find correct files.

Data elements number 1 through 4 can't be changed in this process. The user would then complete filling in the blank data elements #7 and #8, and optional 9 through 12.

The user may overtype data elements #5 and 6.

Data elements #5 through 8 are mandatory and must be completed. If all mandatory data elements are not entered correctly on the screen, display "ALL DATA ON THE TOP PORTION OF THE SCREEN MUST BE CORRECTLY ENTERED. ENTER MISSING DATA OR EXIT THIS PROCESS."

The system will process the data elements entered as follows:

#5. TCN of Request. The TCN of request displayed on the screen is the Container TCN. If the user wishes to enter another TCN such as the Ship Unit TCN, he may overtype the TCN displayed. An edit will insure

only 17 positions on the overtyped TCN are entered. Display "CntnrTCN is displayed, overtype shipment unit TCN if applicable".
If an invalid TCN is entered, display "Must be 17 position alpha-numeric field."

#6. Requestor. The data element displayed in the requestor field will be the consignee DODAAC. When the highlighted line is on that line display: "Enter the 6 position DODAAC of activity requesting Hold /Stage." The system will allow the overtype if the DODAAC that is overtyped passes the edit. Edit = 6 position alphanumeric. If an invalid DODAAC is entered, display "Must be 6 position alphanumeric field."

#7. Response Code. Display, "ENTER THE RESPONSE CODE, PRESS HELP FOR A LIST OF VALID CODES." The response code must be matched by Table Lookup to the Response Media Code file (Response Code Table) for a correct match. If the user does not know the correct code, he can press HELP and display a help screen (window) showing the correct response codes. If an invalid code is entered, display "Code not valid, press [HELP] for a list of valid codes."

ALPHABETICAL ---------->	Resp Cd. Descr	FORMAT Resp Cd

The user can place the cursor on the correct Resp Cd and select the proper function key (TBD) to move the selected code to the screen in the #7 field entry position. If the user can not find the correct code the system should display "Invalid Code."

#8. Disposition Activity. This data element must be only 6 positions in length. The six position DODAAC must be matched to the Cgo-Activity file. Display, "Enter DODAAC of the ORG AUTH to release container from Hold/Stage." If a match is not found, display "Must be 6 position alphanumeric field" or "DODAAC not on file, press GO to continue, cancel to deny."

Data elements #9 through 12 are optional and will be processed as follows:

#9. Manager Code:
Edit = 2 position alpha/numeric
Prompt = Enter the 2 position Manager Code if desired. If an invalid Mgr code is entered, display "Must be 2 position alpha-numeric field."

#10. Consignor: Edit = 6 position alpha/numeric
Prompt = Enter the 6 position DODAAC of the Consignor, if desired. If an invalid DODAAC is entered, display "Must be 6 position alpha-numeric field."

#11. Date Depart Consignor: Edit = 5 position numeric. The date numbers entered must not be greater in date sequence than the systems calender date. Last 3 positions must be between 1 and 366. Prompt "Enter 5 position Julian date the container departed the Consignor YYDDD format." If invalid, display "Must be less than today's date."

#12. POE:
If POE is in the Voyage file record, move POE to the screen. If POE is not in the Voyage file record, edit 3 position alpha/numeric. "Enter Port of Embarkation code, if desired." If an invalid code is entered, display "INVALID CODE."

THEN: Update the CNTNR Mov record (Dte Last Update) with DteCurr.

All edits/matches are performed after the data element is entered. Once the user completes entering the data elements, he will press the appropriate function key (TBD) to create the MEvent record and ISAM file.

The following format shows the movement of data elements that are necessary to complete the MEvent record and ISAM file.

ELEMENT NAME	FROM	TO	TO (80 COLUMN TXN FORMAT)
Container Owner Abbrev	Screen	MEvent (Cntnr Own Abbrev)	
Container Number	Screen	MEvent (Cntnr No, Last 5)	
Consignee	Screen	MEvent	
DIC Move TM3 to MEvent (Mov Event Code)			- ISAM (cc) 1-3
Consignor	Screen (If blank, bypass)	CntnrMov (Cnsgnr AAC)	- ISAM (cc) 4-9
Date Depart Consignor	Screen (If blank, bypass)	CntnrMov(DteDprtCnsgnr)	-ISAM(cc)10-12 (Last 3)

POE (Port Code)	Screen (If blank, bypass)		ISAM(cc)17-19
Requestor	Screen	MEvent (AACCurr)	- ISAM (cc)24-29
TCN of Request	Screen		- ISAM (cc)30-46

Note: The flow of data listed above is performed when the TCN entered matches the CNTNR TCN in the CNTNR Mov record.

TCN of Request	Screen	MEvent (ShipmentUTCN)	-ISAM (cc)30-46

Note: The flow of data listed above is performed when the TCN entered does not match the CNTNR TCN in the CNTNR Mov record and has been validated by the edit.

Voyage Document Number	Screen		- ISAM (cc)47-51
Manager Code	Screen (If blank, bypass)	MEvent (MgrCd)	- ISAM (cc)52-53
POD (Port Code)	Cntnr Mov		MEvent (Prt Cd) & ISAM (cc)55-57
Disposition Activity *DODAAC*	Screen	MEvent (DspoActv)	- ISAM (cc)62-67
Type Movement Code	N/A	Leave Blank	ISAM (cc)78
Response Code	Screen	MEvent (RespCd)	- ISAM (cc)80

The following data elements are to be machine generated.

Julian date: 5 characters — Update CntnrMov (Dte Last Upd Cntnr)
Update MEvent (Post Dte (Request))

DIC Move TM3 to MEvent (Mov Event Code) ISAM (cc) 1-3

Type Movement Code N/A ISAM (cc) 78 Leave Blank

The following data elements are moved from existing database records as indicated.

	FROM	TO
POD (Port Code)	CntnrMov	MEvent (Prt Cd) & ISAM (cc) 55-57

AD-A190 393 FUNCTIONAL DESCRIPTION FOR THE DEPARTMENT OF THE ARMY 5/9
MOVEMENT MANAGEMENT..(U) INTERNATIONAL BUSINESS
SERVICES INC PRINCE GEORGE VA DEFENSE S.. W ANCKAITIS
UNCLASSIFIED 31 DEC 87 DSDPG-375-049-87-3-VOL-1 F/G 12/7 NL

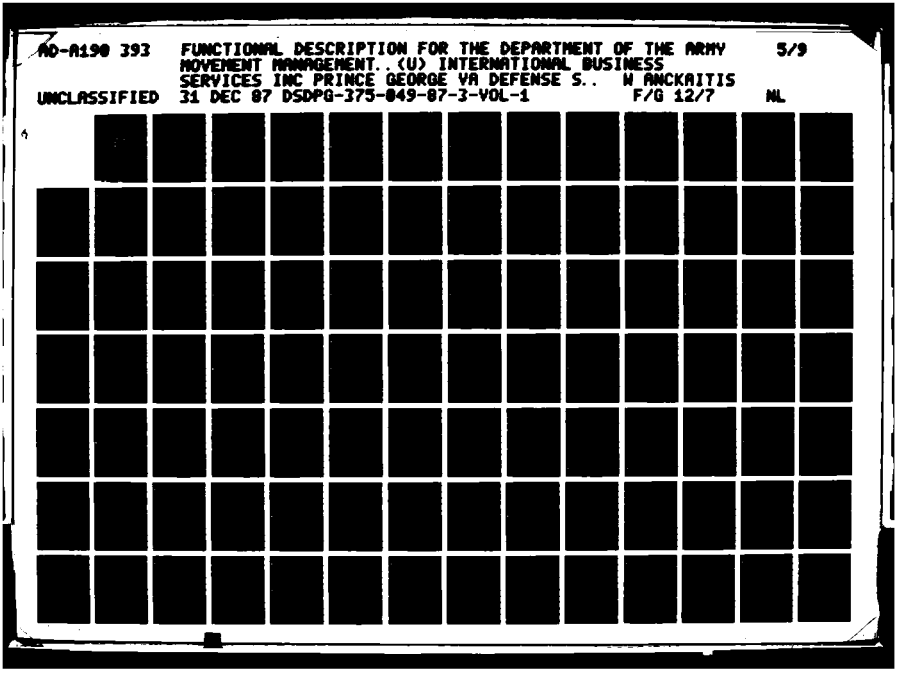

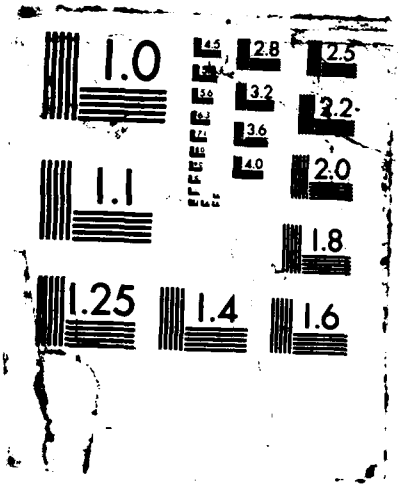
1.0
1.1
1.25
1.4
1.6
1.8
2.0
2.2
2.5
2.8
3.2
3.6
4.0
4.5

Following the entry of all mandatory and optional entries the operator will press the appropriate function key (GO) and the MEvent record and ISAM file will be created. The screen will display "RECORD ADDED TO FILE".

NOTE: If user presses RETURN on last field, cursor must return to top of screen.

Update CNTNR Mov (Dte Last Update).

THEN: Print the data elements listed below to the message file in the correct formatted location.

DATA ELEMENT	FROM	TO
Container Number	Screen	MSG File
Consignor	"	"
Day Depart Consignor	"	"
POE	"	"
Requestor	"	"
TCN of Request	"	"
Voyage Number	"	"
POD	"	"
Dspo Activity	"	"

NOTE: The message file will be made available to the General Message Process.
FOOTNOTE: On Demand

The message file will collect the selected TM3 data which will be sent to MECOBO by the General Message process. The file must allow for multiple record data collection while the user remains in the TM3 process session. If the user exits the process and later in the day returns to it to create new TM3 records, a new message file will be created for that session and any subsequent ones which must be transmitted to MECOBO thru the General Message Process.

Message File Format

FROM: C, MCT _____

TO:
INFO:

SUBJ: Hold/Stage Authorization Request (TM3)

1. Request the following container(s) be held/staged as indicated.

Container Number	Consignor	Date Departed Consignor	POE	Tracing Activity DODAAC	TCN
Voyage Document Number	POD	Disposition Activity DODAAC			
XXXXXXXX	XXXXXX	XXXXX	XXX	XXXXXX	XXXXXXXXXXXXXXX
XXXXX	XXX	XXXXXX			
XXXXXXXX	XXXXXX	XXXXX	XXX	XXXXXX	XXXXXXXXXXXXXXX
XXXXX	XXX	XXXXXX			

NOTE: Multiple request data will be separated by a line break. All TM3 requests created during a session will appear in that message file.

THEN: The report header information will be printed in the message file as shown above.

THEN: Use the Origin MCE Code in the parameter table to search for the MCENme in the CgoMCE file.

THEN: Move the MCENme to the message file in the field to the right of the "FROM: Chief MCT" address header.

THEN: Display, the message file name/dte time group on the screen: "(---12---) is your file name, press GO to exit".

NOTE: The users manual must instruct the user to copy down

the file name so it can be used to access the report in the general message process.

```
;
   MAINTAINS:
        CntnrMov-File ;
   MAINTAINS:
        MEvent-File ;
   MAINTAINS:
        Trns-ISAM-File ;
   UPDATES:
        Cntnr-Msg-File ;
   EMPLOYS:
        CgoActivity-File ,
        RespMediaCd-Tbl ,
        Voyage-File ,
        CntnrMovStp-File ,
        System-Parameter-Tbl ,
        CgoMCE-Tbl ;
   ADDS:          CntnrMov-TM3-Upd TO CntnrMov-File ;
   ADDS:          MEvent-TM3-Upd TO MEvent-File ;
   ADDS:          TM3-Transaction-Upd TO Trns-ISAM-File ;
   ADDS:          TM3-Msg-Data-Upd TO Cntnr-Msg-File ;
   MODIFIES:      CntnrMov-TM3-Upd IN CntnrMov-File ;
   MODIFIES:      MEvent-TM3-Upd IN MEvent-File ;
   MODIFIES:      TM3-Transaction-Upd IN Trns-ISAM-File ;
   REFERENCES:    CgoActivity-TM3-Ref IN CgoActivity-File ;
   REFERENCES:    RespMediaCd-TM3-Ref IN RespMediaCd-Tbl ;
   REFERENCES:    Voyage-TM3-Ref IN Voyage-File ;
   REFERENCES:    CntnrMov-TM3-Ref IN CntnrMov-File ;
   REFERENCES:    MEvent-TM3-Ref IN MEvent-File ;
   REFERENCES:    TM3-Transaction-Upd IN Trns-ISAM-File ;
   REFERENCES:    Param-TM3-Ref IN System-Parameter-Tbl ;
   REFERENCES:    CgoMCE-TM3-Ref IN CgoMCE-Tbl ;
   REFERENCES:    CntnrMovStp-Ref IN CntnrMovStp-File ;
   CREATES:
        CntnrMov ,
        MEvent ,
        Trns-ISAM-Data ,
        TM3-Msg-Data-Upd ;
   RESPONSIBLE PROBLEM DEFINER IS:
                  'Valentine' ;
```

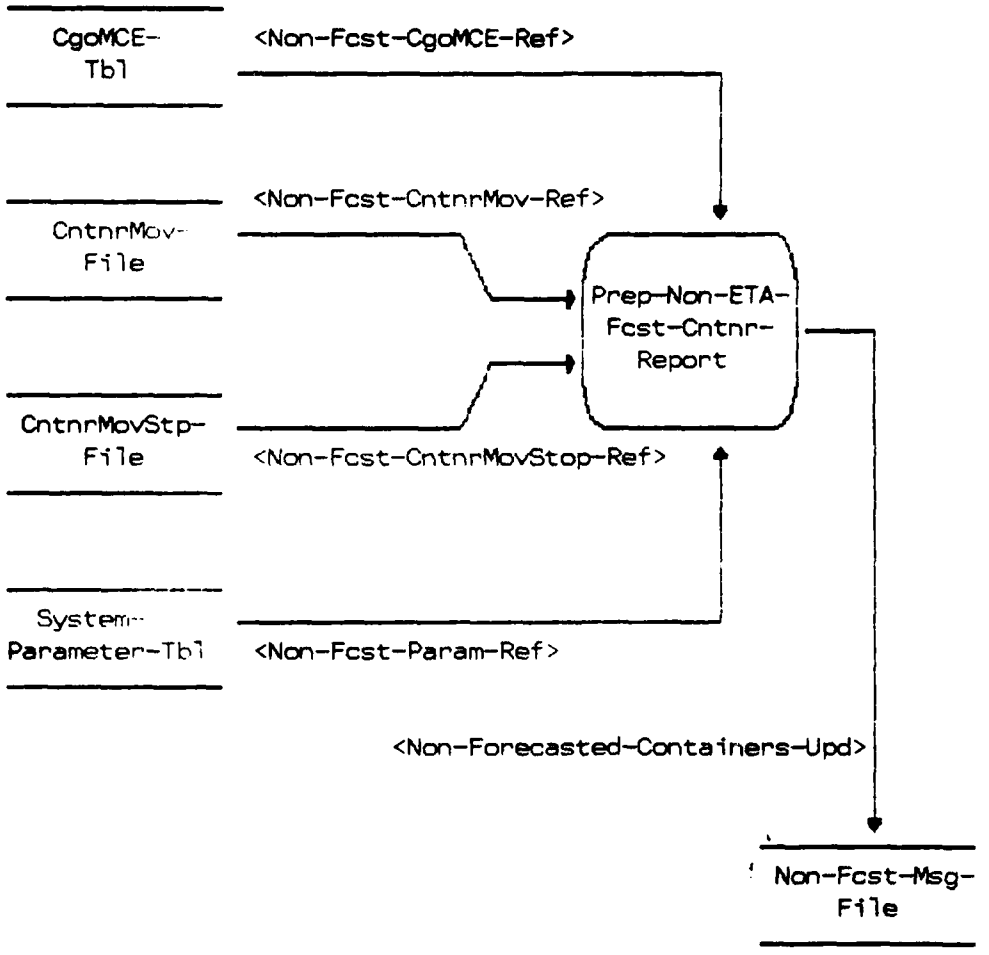

Figure 24. Prep-Non-ETA-Fcst-Cntnr-Report

30 DEFINE PROCESS Prep-Non-ETA-Fcst-Cntnr-Report ;
DESCRIPTION;
Prepare Non ETA Forecast Container Report
This process will create a Message/Print file containing non ETA forecast container data that is sent to 1st TMCA and MECOBO North each day. The report identifies containers that arrived in an MCT's area of responsibility but were not forecasted on the reformatted ETA forecast. The database records of the non forecasted containers are created at the MCT submitting the report (separate process). The system user (MCT) selects the prepare non ETA fcst cntnr rept process from the container master menu.

REMARKS:

1. Process will be run every day. If not, the system can not identify unforecasted records created that day.

2. The Create Non Forecast Cntnr Record process will place a "Y" value in the Stp Non Fcst data element field in the CntnrMovStp Record.

;
KEYWORD IS: 'Container' ,
'LOB' ;
SEE MEMO:
TCR-Non-ETA-Fcst-Cntnr-Memo ;
PART OF: Prepare-Container-Reports ;
PROCEDURE;

Read each record in the CntnrMovStp File
IF: The record has a "Y" in the Non Fcst Field and Dte Rec Create = Dte Curr, PRINT the following data elements from that record to the Message file:

CntnrMovStp File

CntnrOwnAbbr
CntnrNo
Consignee

THEN: Use key record data elements (CntnrOwnAbbr and Cntnr No) and search the matching CntnrMov record.
When a matching record is found, PRINT CntnrNoPrefix, VoyDocuNoFltNo, and POD from the matching record to the Message file in the correct formatted record data location.
If no records are found with a "Y" value in the Non Fcst field, PRINT: "NEGATIVE REPORT" in the Message file.

MESSAGE FILE FORMAT

FROM: C, MCT _____
TO: CDR 1st TMCA OBL GE//AEUTR-MCA-I//
INFO: CDR 1st TMCA OBL GE//AEUTR-MCA-CC//

SUBJ: Non-Forecasted Container(s)

Following container(s) received without forecast.

CNTNR OWNER	CNTNR NUMBER	VOYAGE NUMBER	POD	CONSIGNEE
XXXX	XXXXXXXX	XXXXX	XXX	XXXXXX

The report header address information will be printed in the Message file as shown above.

Then: Use the Origin MCE code in the parameter table to search for the MCEPrefix in the CgoMCE Table and find the MCENme.

Then move the MCENme to the Message file in the field to the right of the "FROM" address header.

NOTE: Make this file available to the general message process.

THEN: Display, the message file name/dte time group on the screen: "(---12---) is your file name, press GO to exit".

NOTE: The users manual must instruct the user to copy down the file name so it can be used to access the report in the general message process.

;

```
UPDATES:
     Non-Fcst-Msg-File ;
EMPLOYS:
     CntnrMov-File ,
     System-Parameter-Tbl ,
     CntnrMovStp-File ,
     CgoMCE-Tbl ;
ADDS:          Non-Forecasted-Containers-Upd TO Non-Fcst-Msg-File ;
REFERENCES:    Non-Fcst-CntnrMov-Ref IN CntnrMov-File ;
```

```
REFERENCES:     Non-Fcst-Param-Ref IN System-Parameter-Tbl ;
REFERENCES:     Non-Fcst-CntnrMovStop-Ref IN CntnrMovStp-File ;
REFERENCES:     Non-Fcst-CgoMCE-Ref IN CgoMCE-Tbl ;
CREATES:
     Non-Forecasted-Containers-Upd ;
RESPONSIBLE PROBLEM DEFINER IS:
                'Valentine' ;
```

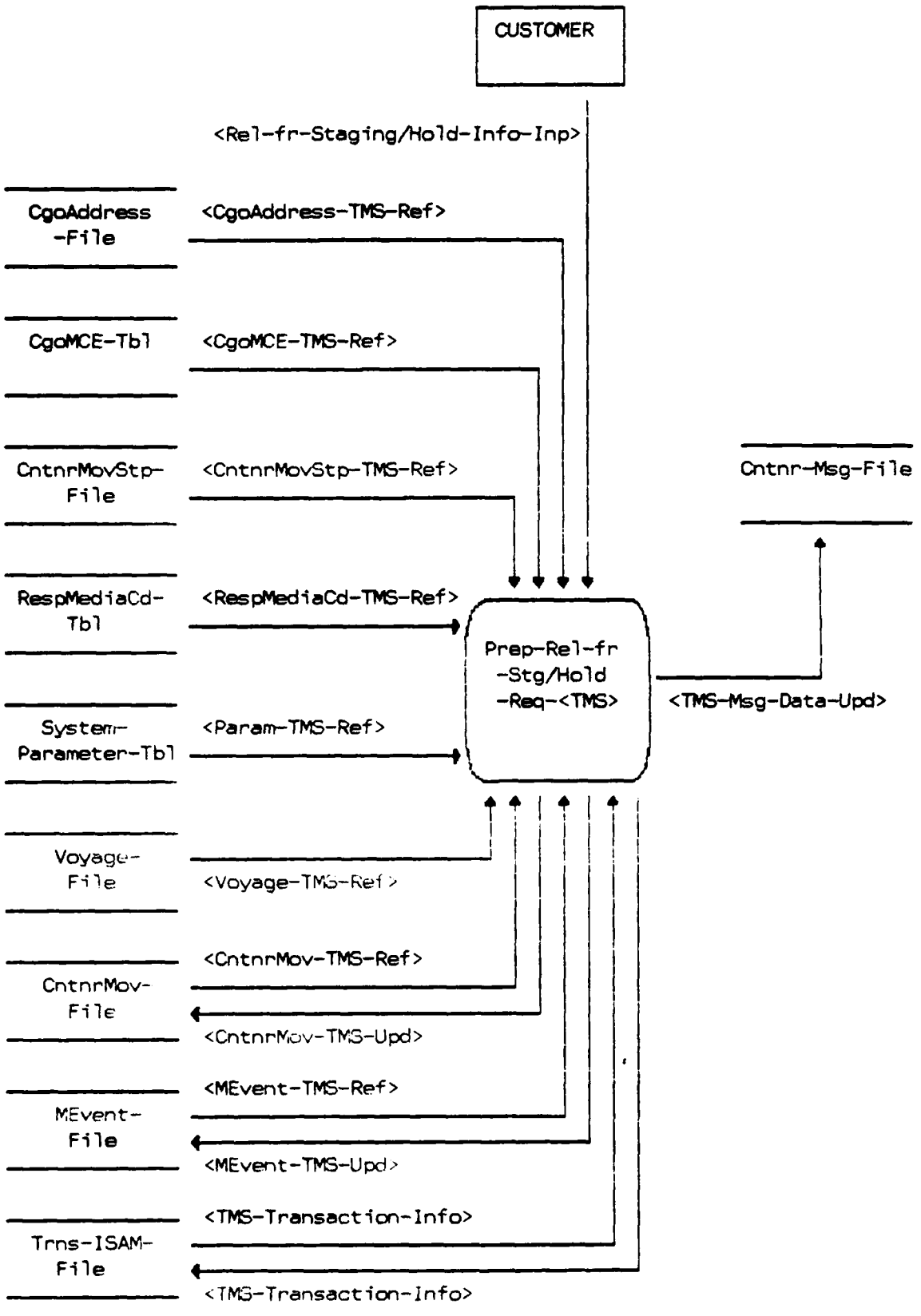

Figure 25. Prep-Rel-fr-Stg/Hold-Req-<TMS>

```
31   DEFINE PROCESS                          Prep-Rel-fr-Stg/Hold-Req-<TMS> ;
       DESCRIPTION;
   Prepare Release from Staging/Hold Request <TMS>
   This process updates the container database with staging/hold release
   information and a TMS transaction is generated to release the container
   from staging/hold.  This transaction is also be used to release the
   container from hold and to divert the container to a new consignee.
    ;
       KEYWORD IS:     'Container' ,
                       'LOB' ;
       SEE MEMO:
            TCR-for-TMS-Process-Memo ,
            Front-End-Process-Memo ;
       RECEIVES:
            Rel-fr-Staging/Hold-Info-Inp ;
       PART OF:        Rec+Report-Cntnr-Mov-Events ;
       PROCEDURE;
```

A customer will contact his supporting MCT requesting that a container which was previously placed on Hold/Stage be released for delivery. The system user (MCT) will record the necessary release information and when time permits, enter the information into the system to create a TMS Release from Stage/Hold request transaction. The system user will select the Release from Stage/Hold process from the menu. The process will produce an MEvent record and on ISAM file TMS formatted transaction which will be sent to 1st TAMCA (CMM) in the DSSR.

The first screen that the user of this process will see is shown below:

```
-------------------------------------------------------------------------
|                          CONTAINER OPERATIONS                          |
|-----------------------------------------------------------------------|
|                                                                        |
|                  (ENTER ONE OF THE FOLLOWING OPTIONS)                  |
|                                                                        |
|                       TCN:                                             |
|                        OR                                              |
|          Container Number:                                             |
|           Container Owner:                                             |
|                        OR                                              |
|                 TMRPrefix:                                             |
|                        OR                                              |
|        Freight Warrant No:                                             |
|-----------------------------------------------------------------------|
```

1)

```
If:
    User enters CntnrNo
    MATCH:
            CntnrNo from screen with CntnrNo in CntnrMovStp File
            IF:
                NO MATCH:
                DISPLAY:
                        "Container Number not valid, reenter or
                         exit process."

                ELSE:
                       Use CntnrNo to access CntnrMovStp.
                       DISPLAY:
                       "CntnrNo CntnrOwn Consignee MultiStpNo StpComp"
                         XXXXX   XXXX     XXXXXX       X

                        System will allow user to course through this
                        scrollable screen to the desired stop.  When the
                        stop is selected, the user will hit "GO" and
                        the first process screen will be displayed.
                    MOVE:
                          CntnrNoPrefix from CntnrMov to Container
                          Number on first process screen.
DISPLAY:
          First Process Screen
```

2)

```
IF:
    User enters CntnrNo + CntnrNoPrefix
MATCH:
       CntnrNo from screen with CntnrNo in CntnrMovStp File
       IF:
           NO MATCH:
           DISPLAY:
                    "Container Number not valid, reenter or
                     exit process."
           EDIT:
                   System will edit CntnrNoPrefix
                   IF:
                        CntnrNoPrefix < > Alphanumeric
                        DISPLAY:
                                 Err Msg - "Container number must
                                           be alphanumeric."

       ELSE:
              Use CntnrNo from screen to access CntnrMovStp.
              DISPLAY:
                        "CntnrNo  CntnrOwn Consignee MultiStpNo"
                         XXXXXXXX   XXXX     XXXXXX       X
```

System will allow user to course through this scrollable screen to the desired stop. When the stop is selected, the user will hit "GO" and the first process screen will be displayed.

IF: CntnrNoPrefix in CntnrMov = 000
UPDATE: Screen entered CntnrNoPrefix to CntnrNoPrefix in CntnrMov.

MOVE: CntnrNoPrefix from CntnrMov to Container Number on First Process Screen.

DISPLAY:
First Process Screen

3) IF:
User enters FWTNo
MATCH:
FWTNo from screen with FWTNo in CntnrMov File
IF:
NO MATCH:
DISPLAY: Freight Warrant Number entered not valid. Reenter or exit the process.
ELSE:
Use CntnrNo and CntnrOwnAbbr found in the CntnrMov file to access CntnrMovStp
DISPLAY:
Cntnr Mov Stop data as follows:

CntnrNo	CntnrOwn	Consignee	MultiStpNo
XXXXX	XXXX	XXXXXX	X

System will allow user to course through this scrollable screen to the desired stop. When the stop is selected, the user will hit 'GO' and the first process screen will be displayed.
MOVE:
CntnrNoPrefix from CntnrMov to Container Number on first process screen.

DISPLAY:
First Process Screen

4) IF:
User enters TMRPrefix
MATCH:
TMRPrefix from screen with TMRPrefix in CntnrMov file

IF:
NO MATCH:
DISPLAY: TMRPrefix entered not valid. Reenter or exit the process.
ELSE:
Use CntnrNo and CntnrOwnAbbr found in the CntnrMov file to access CntnrMovStp
DISPLAY:
CntnrMovStp data as follows:

CntnrNo	CntnrOwn	Consignee	MultiStpNo
XXXXX	XXXX	XXXXXX	X

System will allow user to course through this scrollable screen to the desired stop. When the stop is selected, the user will hit 'GO' and the first process screen will be displayed
MOVE:
CntnrNoPrefix from CntnrMov to Container Number on first process screen.

DISPLAY:
First Process Screen

IF:
User enters CntnrTCN.
MATCH:
CntnrTCN from screen with CntnrTCN in CntnrMov.
IF:
No match.
DISPLAY:
"Container TCN not valid. Reenter or exit process."
ELSE:
Select CntnrNo, CntnrOwnAbbr from CntnrMov to access CntnrMovStp.
DISPLAY:
CntnrMovStp data as follows:

Cntnr No	CntnrOwnAbbr Abbr	Consignee	MultiStp No	Stp Comp
XXXXX	XXXX	XXXXXX	X	X
XXXXX	XXXX	XXXXXX	X	X

System will allow user to course through

this scrollable screen to the desired stop. When the stop is selected, the user will hit [GO] and the first process screen will be displayed.

MOVE:

CntnrNoPrefix from CntnrMov to Container Number on the first process screen.

After the system has found the correct stop record the system will search the MEvent file for a TMS (Move Event code) record that has the same container owner, number and consignee (primary keys) of the stop record that was found during the initial record search. If a TMS MEvent record exists the system will move the data elements listed below from that record to the TMS format screen.

	TMS SCREEN DATA ELEMENT	FROM	TO
1.	Container Number	MEvent	Screen
2.	Container Owner	MEvent	Screen
3.	Voyage Number	CntnrMov	Screen
4.	Hold Activity DODAAC	MEvent (AACCurr)	Screen
5.	Disposition Activity	MEvent (DspoActv)	Screen
6.	Response Code	MEvent	Screen
7.	Consignor	CntnrMov	Screen
	IF NOT IN RECORD, LEAVE BLANK		
8.	Date Depart Consignor	CntnrMov	Screen
	IF NOT IN RECORD, LEAVE BLANK		
9.	Mgr Code	MEvent	Screen
	IF NOT IN RECORD, LEAVE BLANK		
10.	Trans Account Code	MEvent (NewTAC)	Screen
	IF NOT IN RECORD, LEAVE BLANK		
11.	New Consignee	MEvent (New Event Loc)	Screen
	IF NOT IN RECORD, LEAVE BLANK		

Display (TOP OF SCREEN) "TMS RECORD IS DISPLAYED" (If TMS record exists) or "CREATE THE TMS MOVEMENT EVENT HERE" (If no TMS record exists).

RELEASE FROM STAGE/HOLD (TMS)

1.	Container Number	_____
2.	Container Owner	____
3.	Voyage Number	_____
4.	Hold Activity DODAAC	_____
5.	Disposition Activity	_____

6. Response Code _

---

7. Consignor ______
8. Date Depart Consignor _____ (YYDDD)
9. Mgr Code ___

DIVERSION INFORMATION

10. Trans Account Code ____
11. New Consignee ______

If the TM3 record is found, the system user can complete the TMS, MEvent record, clear the screen or exit the process. A matching TM3 record must be found to complete the TMS release record. When a TM3 record is found (using key data element matches), move the data elements as indicated below:

ELEMENTS	FROM	TO	
Container Number	MEvent (TM3)	Screen	
Container Owner	MEvent (TM3)	Screen	
Voyage Number	CntnrMov	Screen	
Dspo Activity	MEvent (TM3)	Screen	(Dspo Actv)
Response Code	MEvent (TM3)	Screen	
AAC Current	MEvent (TM3)	Screen	(Hold Actv)
Consignor	CntnrMov	Screen	
	(IF NOT IN RECORD, LEAVE BLANK)		
Date Depart Consignor	CntnrMov	Screen	
	(IF NOT IN RECORD, LEAVE BLANK)		
Manager Code	MEvent (TM3)	Screen	
	(IF NOT IN RECORD, LEAVE BLANK)		

After the screen is displayed with the TM3 data elements filled in, the user can complete the TMS record by adding optional data elements number 7, 8, 9, and optional 10 and 11 if applicable. The user can only change data element no. 6 (response code).

When the user has entered all data he will press the (GO) function key to create a TMS and ISAM record.
Data elements #1 through 6 are mandatory.

If a matching TM3 record is not found display, "No TM3 record of hold on file."

If a TMS record exists display all function keys eg. MODIFY, DELETE, CLEAR SCREEN. Display: "Create TMS record here"

If the MODIFY function key is selected, the user can change data elements no. 6 through 11 if an ISAM record exists. The highlighter line will only stop on data elements that can be changed. If a change is made, display "Record updated." The database and ISAM records will be updated or overlayed with the new data from the screen.

If no ISAM file record exists, and the user presses MODIFY, display, "To make corrections delete the record and create a new one."

If the ISAM record exists, the new data element(s) entered will be moved from the screen to the MEvent, CntnrMov record and ISAM file. (OVERRIDE OLD DATA ELEMENTS).

After the data elements are entered and the (GO) function key is pressed, display "RECORD UPDATED."

In all cases when the record is updated the Cntnr Mov record (DATE LAST UPDATE) will be updated.

The selection of the delete function will trigger a caution display "Press GO to delete, or CANCEL to deny". If the user presses the delete key, the MEvent record and ISAM file (if it still exists) will be deleted from the file. Display "RECORD DELETED", if the ISAM exists. If no ISAM exists, display "RECORD DELETED, NOTIFY TAMCA".

The selection of the clear function will bring the screen back to its initial format for the next container transaction to be posted.

The data elements entered by the user on the screen are processed as follows: The highlighted line will begin on data element no. 5.

Response Code. Display "ENTER THE NEW RESPONSE CODE OR PRESS HELP FOR A LIST OF VALID CODES." The screen will have the response code from the TM3 MEvent record displayed. If the customer wants to use the same response code the user will leave the code as displayed and when finished entering data will press the (TBD) function key which will create the new TMS MEvent record with the data from the screen.

If the user wants to enter a new response code for the customer, the newly entered code will be matched by TABLE LOOKUP to the response media code file. (Response Code Table) for a correct match. If the user does not know the correct code he can press HELP to display a help screen (window) showing the correct response codes. Display "SELECT DESIRED ENTRY, THEN PRESS GO."

FORMAT
Resp Cd Descr Resp Cd

The user can place the cursor on the selected response cd and select the proper function key (TBD) to move the selected code to the screen in the #6 field position. If the user enters the wrong code, display "Code not valid, press [HELP] for a list of valid codes." Edit table match to response media code file (Response Code).

All edits/matches are performed after the data element is entered. Once the user completes entering the data elements, he will press the appropriate function key (GO) to create the MEvent record and ISAM file.

EDITS: Consignor - 6 position alphanumeric
Display, "ENTER 6 POSITION DODAAC OF THE CONSIGNOR, IF DESIRED."
If invalid, display "Must be 6 position alphanumeric field."

Date Depart Consignor - 5 position numeric
Display, "ENTER THE 5 POSITION DATE THE CNTNR DEPARTED THE CONSIGNOR IN YYDDD FORMAT."
If invalid, display "Must be 5 position number."

Mgr Code - 2 position alphanumeric
Display, "ENTER 2 POSITION MANAGER CODE, IF DESIRED."
IF NOT DISPLAY ("Must be 2 position alpha-numeric field")

Transportation Account Code. Edit to insure only four characters (Alpha/Numeric) are entered. Display: "ENTER THE 4 POSITION TRANS. ACCOUNT CODE THE ORGANIZATION FUNDING THE DIVERSION." If invalid, display "Must be 4 position alphanumeric field."

New Consignee DODAAC. Display "ENTER THE 6 POSITION CUSTOMER DODAAC WHO WILL RECEIVE THE DIVERTED CNTNR." Match 6 position DODAAC to CgoAddress file (ShipToAAC) to validate DODAAC. If no match is found display "DODAAC not on file."

When the user presses the (GO) function key to create the MEvent record, display "RECORD ADDED TO FILE."

NOTE: If the user presses return on the last field, the cursor must return to the FIRST DATA element that can be corrected.

The following format shows the movement of data elements that are necessary to complete the TMS, MEvent record and ISAM file.

ELEMENT NAME	FROM	TO	TO (80 COLUMN TXN FORMAT)
Container Owner	Screen	MEvent	
Container Number	Screen	MEvent	
Consignee	CntnrMovStp	MEvent	
DIC Move TMS to	MEvent(Move Event Cd)		ISAM (cc)1-3
Consignor	Screen - Cntnr Mov (If blank, bypass)		ISAM (cc)4-9
Date Depart Consignor	Screen - Cntnr Mov (If blank, bypass)		ISAM (cc)10-12 (Last 3)
POE	Voyage Match key data (Voy Doc No) (If blank, bypass)		ISAM (cc)17-19
Hold Activity DODAAC	Screen	MEvent (AACCurr)	ISAM (cc)24-29
TCN	MEvent(ShpmtUTCN) From TM3 MEvent Record (If there)	MEvent(ShpmtUTCN)	ISAM (cc)30-46
	CntnrMov (CntnrTCN) (If no TCN in MEvent(TM3) Record)		ISAM (cc)30-46
Voyage Document Number	Screen		ISAM (cc)47-51
Managers Code	Screen	MEvent (Mgr Cd) (If blank, bypass)	ISAM (cc)52-53
Date of Request	MEvent(Post Date) 5 position date		ISAM (cc)58-61 Last 4 Numbers
	CntnrMov(Dte Last Update)		
Disposition Activity DODAAC	Screen	MEvent(Dspo Actv)	ISAM (cc)62-67

Transportation Account Code	Screen	MEvent(NewTAC)	ISAM (cc)68-71
Note: FOR DIVERSION ONLY		Use key elements to find record	
New Consignee DODAAC	Screen		
Note: FOR DIVERSION ONLY		MEvent(New Event Location)	ISAM(cc)72-77
Response Code	Screen	MEvent(Resp Cd)	ISAM (cc) 80

The following data elements are moved from existing database records as indicated.

TCN	MEvent(ShpmtUTCN) From TM3 MEvent Record (If there)	MEvent(ShpmtUTCN)	ISAM (cc)30-46
	CntnrMov (CntnrTCN) (If no TCN in MEvent(TM3) Record)		ISAM (cc)30-46
POE	Voyage Match key data (Voy Doc No) (If blank, bypass)		ISAM (cc)17-19
WPOD	MEvent(PrtCd) From TM3 MEvent Record	MEvent(PrtCd)	ISAM (cc)55-57

The following data elements are machine generated.

DIC	Move TMS to	MEvent(Move Event Cd)	ISAM (cc)1-3
Date of Request	MEvent(Post Date) 5 position date		ISAM (cc)58-61 Last 4 Numbers
	CntnrMov(Dte Last Update)		

Following the entry of all mandatory and optional entries the operator will press the appropriate function key (TBD) and the MEvent record and ISAM file will be created. The screen will display "RECORD ADDED TO FILE," press (?) function key to create another record or press (?) to exit program to master menu.

Update Cntnr Mov (Dte Last Update).

THEN: Print the data elements listed below to the message file in the correct formatted location.

DATA ELEMENT	FROM	TO
Container Number	Screen	MSG File
Consignor	"	"
Day Depart Consignor	"	"
POE	"	"
Hold Activity DODAAC	"	"
TCN of Request	"	"
Voyage Number	"	"
POD	"	"
Dspo Activity	"	"
Trans Account Code	"	"
New Consignee	"	"

NOTE: The message file will be made available to the General Message Process.
FOOTNOTE: On Demand

The message file will collect the selected TMS data which will be sent to MECOBO by the General Message Process. The file must allow for multiple record data collection while the user remains in the TMS process session. If the user exits the process and later in the day returns to it to create new TMS records, a new message file will be created for that session and any subsequent ones which must be transmitted to MECOBO thru the General Message Process.

Message File Format

FROM: C, MCT _____
TO:
INFO:

SUBJ: Hold Disposition Instruction Release (TMS)

1. Request the following container(s) be released from Hold/Stage as indicated.

Container Number	Consignor	Date Departed Consignor	POE	Hold Activity DODAAC	TCN
Voyage Document Number	POD	Disposition Activity DODAAC	TAC	New Consignee DODAAC	
XXXXXXXX	XXXXXX	XXXXX	XXX	XXXXXX	XXXXXXXXXXXXXXXX
XXXXX	XXX	XXXXXX	XXXX	XXXXXX	
XXXXXXXX	XXXXXX	XXXXX	XXX	XXXXXX	XXXXXXXXXXXXXXXX
XXXXX	XXX	XXXXXX	XXXX	XXXXXX	

NOTE: Multiple request data will be separated by a line break. All TMS requests created during a session will appear in that message file.

THEN: The report header information will be printed in the message file as shown above.

THEN: Use the Origin MCE Code in the parameter table to search for the MCENme in the CgoMCE file.

THEN: Move the MCENme to the Message file in the field to the right of the "FROM: Chief MCT" address header.

THEN: Display, the message file name/dte time group on the screen: "(---12---) is your file name, press GO to exit".

NOTE: The users manual must instruct the user to copy down the file name so it can be used to access the report in the general message process.

;

MAINTAINS:
CntnrMov-File ;
MAINTAINS:
MEvent-File ;
MAINTAINS:
Trns-ISAM-File ;
UPDATES:
Cntnr-Msg-File ;
EMPLOYS:
CgoAddress-File ,

```
      RespMediaCd-Tbl ,
      Voyage-File ,
      CntnrMovStp-File ,
      System-Parameter-Tbl ,
      CgoMCE-Tbl ;
ADDS:           CntnrMov-TMS-Upd TO CntnrMov-File ;
ADDS:           MEvent-TMS-Upd TO MEvent-File ;
ADDS:           TMS-Msg-Data-Upd TO Cntnr-Msg-File ;
ADDS:           TMS-Transaction-Info TO Trns-ISAM-File ;
MODIFIES:       CntnrMov-TMS-Upd IN CntnrMov-File ;
MODIFIES:       MEvent-TMS-Upd IN MEvent-File ;
MODIFIES:       TMS-Transaction-Info IN Trns-ISAM-File ;
REFERENCES:     CgoAddress-TMS-Ref IN CgoAddress-File ;
REFERENCES:     RespMediaCd-TMS-Ref IN RespMediaCd-Tbl ;
REFERENCES:     Voyage-TMS-Ref IN Voyage-File ;
REFERENCES:     CntnrMov-TMS-Ref IN CntnrMov-File ;
REFERENCES:     MEvent-TMS-Ref IN MEvent-File ;
REFERENCES:     Param-TMS-Ref IN System-Parameter-Tbl ;
REFERENCES:     CgoMCE-TMS-Ref IN CgoMCE-Tbl ;
REFERENCES:     TMS-Transaction-Info IN Trns-ISAM-File ;
REFERENCES:     CntnrMovStp-Ref IN CntnrMovStp-File ;
CREATES:
      CntnrMov ,
      MEvent ,
      TMS-Msg-Data-Upd ,
      Trns-ISAM-Data ,
      TMS-Transaction-Info ;
RESPONSIBLE PROBLEM DEFINER IS:
                'Valentine' ;
```

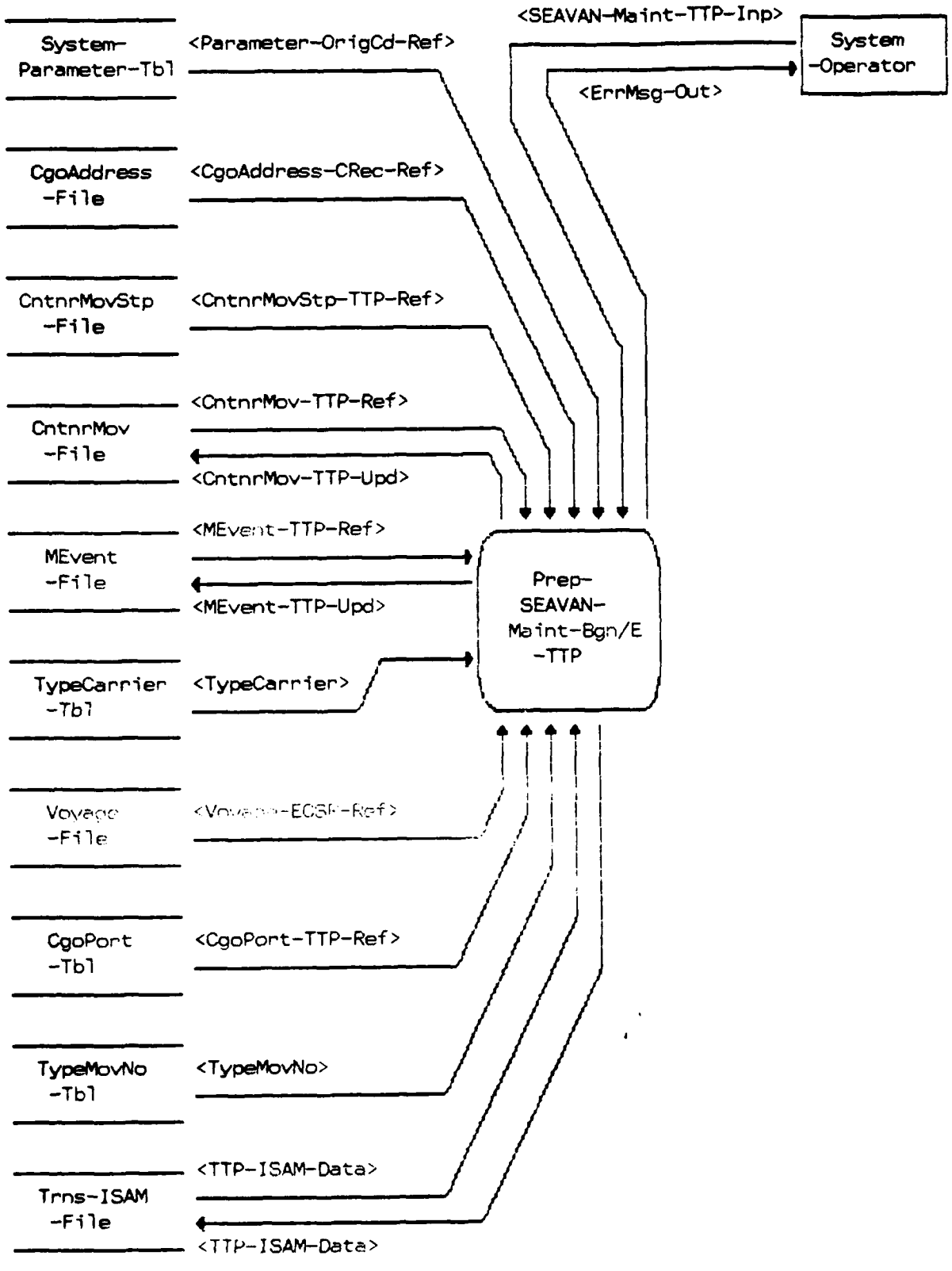

Figure 26. Prep-SEAVAN-Maint-Bgn/E-<TTP>

```
32   DEFINE PROCESS                          Prep-SEAVAN-Maint-Bgn/E-<TTP> ;
       DESCRIPTION;
   Prepare SEAVAN Maintenance Begin/End <TTP>
   This process updates the container database with Maintenance Begin/End
   information and a TTP transaction is generated to report a deviation
   from the normal power source (electric at the port, gas at the consig-
   nee) used by the port or the consignee.
    ;
       KEYWORD IS:     'Container' ,
                       'LOB' ;
       SEE MEMO:
            TCR-SEAVAN-Maint-Bgn/End<TTP> ,
            Front-End-Process-Memo ;
       GENERATES:
            ErrMsg-Out ;
       RECEIVES:
            SEAVAN-Maint-TTP-Inp ;
       PART OF:        Rec+Report-Cntnr-Mov-Events ;
       PROCEDURE;

   1)
        If:
            User enters CntnrNo
            MATCH:
                   CntnrNo from screen with CntnrNo in CntnrMovStp File
                   IF:
                       NO MATCH:
                       DISPLAY:
                              "Container Number not valid, reenter or
                               exit process."

                   ELSE:
                          Use CntnrNo to access CntnrMovStp.
                          DISPLAY:
                          "CntnrNo CntnrOwn Consignee MultiStpNo StpComp"
                            XXXXX    XXXX     XXXXXX        X

                           System will allow user to course through this
                           scrollable screen to the desired stop.  When the
                           stop is selected, the user will hit "GO" and
                           the first process screen will be displayed.
                       MOVE:
                             CntnrNoPrefix from CntnrMov to Container
                             Number on first process screen.
        DISPLAY:
                  First Process Screen

   2)
        IF:
```

```
        User enters CntnrNo + CntnrNoPrefix
    MATCH:
          CntnrNo from screen with CntnrNo in CntnrMovStp File
          IF:
              NO MATCH:
              DISPLAY:
                      "Container Number not valid, reenter or
                       exit process."
              EDIT:
                     System will edit CntnrNoPrefix
                     IF:
                          CntnrNoPrefix < > Alphanumeric
                          DISPLAY:
                                   Err Msg - "Container number must
                                             be alphanumeric."

          ELSE:
                 Use CntnrNo from screen to access CntnrMovStp.
                 DISPLAY:
                            "CntnrNo  CntnrOwn Consignee MultiStpNo"
                             XXXXXXXX   XXXX     XXXXXX      X

                    System will allow user to course through this
                    scrollable screen to the desired stop.  When the
                    stop is selected, the user will hit "GO" and the
                    first process screen will be displayed.
                 IF:  CntnrNoPrefix in CntnrMov = 000
                      UPDATE:  Screen entered CntnrNoPrefix to
                               CntnrNoPrefix in CntnrMov.

                      MOVE:  CntnrNoPrefix from CntnrMov to Container
                             Number on First Process Screen.
    DISPLAY:
              First Process Screen

3)  IF:
        User enters FWTNo
        MATCH:
               FWTNo from screen with FWTNo in CntnrMov File
               IF:
                    NO MATCH:
                    DISPLAY:  Freight Warrant Number entered not
                              valid.  Reenter or exit the process.
               ELSE:
                      Use CntnrNo and CntnrOwnAbbr found in the
                      CntnrMov file to access CntnrMovStp
                      DISPLAY:
                                Cntnr Mov Stop data as follows:
```

CntnrNo	CntnrOwn	Consignee	MultiStpNo
XXXXX	XXXX	XXXXXX	X

System will allow user to course through this scrollable screen to the desired stop. When the stop is selected, the user will hit 'GO' and the first process screen will be displayed.
MOVE:
CntnrNoPrefix from CntnrMov to Container Number on first process screen.

DISPLAY:
First Process Screen

4) IF:
User enters TMRPrefix
MATCH:
TMRPrefix from screen with TMRPrefix in CntnrMov file
IF:
NO MATCH:
DISPLAY: TMRPrefix entered not valid. Reenter or exit the process.
ELSE:
Use CntnrNo and CntnrOwnAbbr found in the CntnrMov file to access CntnrMovStp
DISPLAY:
CntnrMovStp data as follows:

CntnrNo	CntnrOwn	Consignee	MultiStpNo
XXXXX	XXXX	XXXXXX	X

System will allow user to course through this scrollable screen to the desired stop. When the stop is selected, the user will hit 'GO' and the first process screen will be displayed
MOVE:
CntnrNoPrefix from CntnrMov to Container Number on first process screen.

DISPLAY:
First Process Screen

IF:
User enters CntnrTCN.

MATCH:
CntnrTCN from screen with CntnrTCN in CntnrMov.
IF:
No match.
DISPLAY:
"Container TCN not valid. Reenter or exit process."
ELSE:
Select CntnrNo, CntnrOwnAbbr from CntnrMov to access CntnrMovStp.
DISPLAY:
CntnrMovStp data as follows:

Cntnr No	CntnrOwnAbbr Abbr	Consignee	MultiStp No	Stp Comp
XXXXX	XXXX	XXXXXX	X	X
XXXXX	XXXX	XXXXXX	X	X

System will allow user to course through this scrollable screen to the desired stop. When the stop is selected, the user will hit [GO] and the first process screen will be displayed.

MOVE:
CntnrNoPrefix from CntnrMov to Container Number on the first process screen.

5) DISPLAY:
First Process Screen
MOVE:
CntnrNo CntnrMov file
CntnrOwnAbbr,CntnrMov file
VoyDocuFltNo,CntnrMov file
POD, CntnrMov file
TyCarrCd , CntnrMov file
CntnrTCN , CntnrMov file
TO:
CONTAINER NUMBER on the screen
CONTAINER OWNER on the screen
VOYAGE NUMBER on the screen
POD on the screen
TYPE CARRIER CODE on the screen
TCN on the screen

MOVE:

OceanCarrAbbr from Voyage file.

TO:

OCEAN CARRIER on the screen.

MOVE:

Consignee, CntnrMovStp file.

TO:

CONSIGNEE on the screen.
EVENT LOCATION on the screen.

MOVE:

OrigCd, System Parameter Table.

TO:

ORIGIN CODE on the screen.

DISPLAY:

```
|                                                                      |
|                    CONTAINER MAINTENANCE <TTP>                       |
|----------------------------------------------------------------------|
|  CONTAINER NUMBER: XXXXXXXX                TYPE POWER CODE: X        |
|  CONTAINER OWNER : XXXX                    MANAGER CODE   : XX       |
|  VOYAGE NUMBER   : XXXXX                 TYPE CARRIER CODE: X        |
|  POD             : XXX                   TYPE MOV NO CODE : X        |
|  OCEAN CARRIER   : XXXX                                              |
|  TCN             : XXXXXXXXXXXXXXXXX                                 |
|  CONSIGNEE       : XXXXXX                EVENT LOCATION: XXXXXX      |
|  ORIGIN CODE     : XXX                                               |
|----------------------------------------------------------------------|
|       A.  DATE ON: XXXXX              B.  DATE OFF: XXXXX            |
|       C.  DATE ON: XXXXX              D.  DATE OFF: XXXXX            |
|----------------------------------------------------------------------|
```

At this time the cursor will be on Type Power Code

6) IF:

HELP:

System will display a window with the type power codes

DISPLAY:

```
|      ENTER:                |
|----------------------------|
|                            |
|    G for Gas               |
|    E for Electric          |
|----------------------------|
```

The user will select the desired code by moving the

highlight up or down. User will press GO when the desired code is highlighted. Code will be placed by the system in the Type Power Code field on the main screen (see above).

ELSE:

KEYBOARD ENTRY:

THEN:

IF:

TYPE POWER CODE not equal to "G" or "E".
DISPLAY:
"INVALID TYPE POWER CODE, PRESS [HELP] FOR A LIST OF VALID CODES."

ELSE:

MATCH:

TyPwrCd from screen and TyPwrCd in MEvent file.

7) IF:

Match is found

MOVE:

MgrCd MEvent

TO:

MANAGER CODE on screen

MOVE:

TyMovNoCd MEvent

TO:

TYPE MOV NO CODE on screen

MOVE:

NewEvntLoc MEvent

TO:

EVENT LOCATION on screen

IF:

EvntTy equals A and TyPwrCd equals E in MEvent

MOVE:

EvntDte MEvent

TO:

A. DATE ON: on screen

IF:

EvntTy equals B and TyPwrCd equals E in MEvent

MOVE:

EvntDte MEvent

TO:

B. DATE OFF: on screen

IF:

IF:
EvntTy equals C and TyPwrCd equals E in MEvent
MOVE:
EvntDte MEvent
TO:
C. DATE ON

IF:
EvntTy equals D and TyPwrCd equals E in MEvent
MOVE:
EvntDte MEvent
TO:
D. DATE OFF: on screen

IF:
EvntTy equals A and TyPwrCd equals G in MEvent
MOVE:
EvntDte MEvent
TO:
A. DATE ON: on screen

IF:
EvntTy equals B and TyPwrCd equals G in MEvent
MOVE:
EvntDte MEvent
TO:
B. DATE OFF: on screen

IF:
EvntTy equals C and TyPwrCd equals G in MEvent
MOVE:
EvntDte MEvent
TO:
C. DATE ON: on screen

IF:
EvntTy equals D and TyPwrCd equals G in MEvent
MOVE:
EvntDte MEvent
TO:
D. DATE OFF: on screen

IF:
EvntTy equals A and TyPwrCd equals G in MEvent
MOVE:
EvntDte MEvent
TO:
A. DATE ON: on screen

IF:

EvntTy equals B and TyPwrCd equals G in MEvent

MOVE:

EvntDte MEvent

TO:

B. DATE OFF: on screen

IF:

EvntTy equals C and TyPwrCd equals E in MEvent

MOVE:

EvntDte MEvent

TO:

C. DATE ON: on screen

IF:

EvntTy equals D and TyPwrCd equals E in MEvent

MOVE:

EvntDte MEvent

TO:

D. DATE OFF: on screen

IF:

EvntTy equals A and TyPwrCd equals E in MEvent

MOVE:

EvntDte MEvent

TO:

A. DATE ON: on screen

IF:

EvntTy equals B and TyPwrCd equals E in MEvent

MOVE:

EvntDte MEvent

TO:

B. DATE OFF: on screen

IF:

EvntTy equals C and TyPwrCd equals G in MEvent

MOVE:

EvntDte MEvent

TO:

C. DATE ON: on screen

IF:

EvntTy equals D and TyPwrCd equals G in MEvent

MOVE:

EvntDte MEvent

TO:

D. DATE OFF: on screen

THEN:
DISPLAY:

```
|-----------------------------------------------------------------------|
|                    CONTAINER MAINTENANCE <TTP>                        |
|-----------------------------------------------------------------------|
| CONTAINER NUMBER: XXXXXXXX                TYPE POWER CODE: X          |
| CONTAINER OWNER : XXXX                    MANAGER CODE   : XX         |
| VOYAGE NUMBER   : XXXXX                 TYPE CARRIER CODE: X          |
| POD             : XXX                   TYPE MOV NO CODE : X          |
| OCEAN CARRIER   : XXXX                                                |
| TCN             : XXXXXXXXXXXXXXXXX                                   |
| CONSIGNEE       : XXXXXX                EVENT LOCATION: XXXXXX        |
| ORIGIN CODE     : XXX                                                 |
|-----------------------------------------------------------------------|
|      A.  DATE ON: XXXXX              B.  DATE OFF: XXXXX              |
|      C.  DATE ON: XXXXX              D.  DATE OFF: XXXXX              |
|-----------------------------------------------------------------------|
```

```
|CLEAR   |      |ADD   |      | MODIFY |      |      | DELETE |        |
|SCREEN  |      |DATE  |      |        |      |      |        |        |
|________|______|______|_____|________|_____|______|________|________|
```

At this point the user will be able to Modify, Add date or Delete the existing MEvent as follows:

IF:
MODIFY:
System will do a search for an existing CMMISAM record.

IF:
Match is found.

THEN:
Cursor will be placed at Manager Code.
The user will be able to change the following elements:
MANAGER CODE,
TYPE CARRIER CODE,
TYPE MOV NO CODE,
A. DATE ON:
B. DATE OFF:
C. DATE ON:
D. DATE OFF:

ELSE:
DISPLAY:
"RECORD SENT TO CMM, SUBMIT A ZTB [RETURN] TO CONTINUE."

IF:
DELETE:
The system will delete the existing MEvent and the CMMISAM record.

IF:
CLEAR SCREEN:
System will return you to Open door process.

IF:
ADD DATE:
System will place cursor at next available empty date field.
DISPLAY:
"ENTER DATE OR [HELP] FOR TODAYS DATE. PRESS [GO] OR [FINISH]

IF:
HELP:
System will insert Current Julian Date.

ELSE:
Keyboard entry.

THEN:
Perform Date Validation,
Date must be less than or equal to today's date,
B. DATE OFF GREATER THAN OR EQUAL TO A. DATE ON,
C. DATE ON GREATER THAN OR EQUAL TO B. DATE OFF,
D. DATE OFF GREATER THAN OR EQUAL TO C. DATE ON,

ELSE:
MATCH:
System will search the Trns-ISAM-File to see if there has been a ZTP with zeros posted on the date fields.

IF:
MATCH FOUND:
DISPLAY:
"ZTP EXIST, YOU MUST ENTER THE ZTP PROCESS TO CHANGE ANY DATES"
Place cursor on Manager Code. Screen will appear without the Function Keys.

8) IF:
MANAGER CODE not equal to alpha/numeric

DISPLAY:
"MUST BE A 2 DIGIT ALPHA/NUMERIC CODE."

ELSE:
Move to TYPE CARRIER CODE.

IF:
HELP:
System will scroll the contents of the TypeCarr table in a window. The user will select the code desired by moving the highlight up or down. User will press GO when the desired code is highlighted. Code will be placed by the system in the appropriate place on the main screen.

ELSE:
Keyboard Entry:
Perform Table Validation

IF:
No Match

DISPLAY:
"INVALID CODE PRESS [HELP] FOR A LIST OF VALID CODES."

ELSE:
Move cursor to TyMovNo

9) IF:
HELP:
System will scroll the contents of the TypeMovNo table in a window. The user will select the code desired by moving the highlight up or down. User will hit GO when the desired code is highlighted. Code will be placed by the system in the appropriate place on the main screen. Cursor will then move to EVENT LOCATION.

IF:
Keyboard Entry:
Perform Table Validation

IF:
No Match is found

DISPLAY:
"INVALID CODE, PRESS [HELP] FOR A LIST OF VALID CODES."

IF:

```
          TyMovNoCd is equal to "C"
     THEN:
          IF:
               CntnrTCN in CntnrMov File is blank.

          DISPLAY:
                    "TCN NOT FOUND, INVALID TYPE MOV NO CD,
                     REENTER OR EXIT PROCESS."
     IF:
          TyMovNoCd is equal to "F"
     THEN:
          IF:
               FWTNo in CntnrMov file is blank.
          DISPLAY:
                    "FWTNo and TIN NOT AVAILABLE SELECT ANOTHER
                     CODE."
     IF:
          TyMovNoCd is equal to "M"
     THEN:
          IF:
               TMRPrefix in CntnrMov file is blank.
          DISPLAY:
                    "TMRPrefix and TIN NOT AVAILABLE SELECT
                     ANOTHER CODE."

ELSE:
     Move cursor to EVENT LOCATION:
          System will allow this data element to be overlayed.

10)  IF:
     Keyboard Entry:
                    User will enter the 6 position DODAAC.

     THEN:
          Perform Table Validation against:
                    CgoAddress File.

     IF:
          No match is found
     DISPLAY:
               "CONSIGNEE NOT ON FILE PRESS [CANCEL] TO
                CONTINUE."

     IF:
          Keyboard Entry:
                         User will enter 3 position PORT code.

     THEN:
          Perform Table Validation against
```

CgoPort Table

IF:
No Match is found

DISPLAY:
"PORT CODE NOT ON FILE. MUST ENTER VALID PORT CODE"

ELSE:
Move to A. DATE ON

11) DISPLAY:
Current Julian Date.
User will have the ability to overwrite the julian date on the screen.

IF:
Keyboard entry

THEN:
Perform date validation against system calendar.
A. DATE ON is equal to or less than today's date.

IF:
No Match
DISPLAY:
"DATE MUST BE EQUAL TO OR LESS THAN TODAY'S DATE"

ELSE:
Move to B. DATE OFF

DISPLAY:
"ENTER JULIAN DATE, PRESS [RETURN] OR [HELP] FOR TODAY'S DATE."

IF:
HELP:
System will insert Current Julian Date in B. DATE OFF.

ELSE:
Keyboard entry.
THEN:
Perform Date Validation, B. DATE OFF must be greater than or equal to A. DATE ON

IF:
No Match
DISPLAY:

"BDATE MUST BE EQUAL TO OR GREATER THAN A. DATE."

ELSE:
Perform Date Validation against system calendar date.

IF:
No Match
DISPLAY:
"B. DATE MUST BE EQUAL TO OR LESS THAN TODAY'S DATE."

ELSE:
Move to C. DATE ON

DISPLAY:
"ENTER JULIAN DATE, PRESS [RETURN] OR [HELP] FOR TODAY'S DATE."

IF:
HELP:
System will insert Current Julian Date in C. DATE ON.

ELSE:
Keyboard entry.

ELSE:
Perform Date Validation, C. DATE ON must be greater than or equal to B. DATE OFF

IF:
No Match
DISPLAY:
"CDATE MUST BE EQUAL TO OR GREATER THAN B. DATE."

THEN:
Perform Date Validation against system calendar date.

IF:
No Match
DISPLAY:
"CDATE MUST BE EQUAL TO OR LESS THAN TODAY'S DATE."

ELSE:
Move to D. DATE OFF

DISPLAY:
"ENTER JULIAN DATE, PRESS [RETURN] OR [HELP] FOR TODAY'S DATE.

IF:
HELP:
System will insert Current Julian Date in D. DATE OFF.

ELSE:
Keyboard entry.

THEN:
Perform Date Validation, D. DATE OFF must be greater than or equal to C. DATE ON

IF:
No Match
DISPLAY:
"DDATE MUST BE EQUAL TO OR GREATER THAN C. DATE."

ELSE:
Perform Date Validation against system calendar date.

IF:
No Match
DISPLAY:
"DDATE OFF MUST BE EQUAL TO OR LESS THAN TODAY'S DATE."

The user will retry and after all validations have been complete, then.

12) IF:
[RETURN]:
Cursor will be placed at the first screen entered element for review.

ELSE:
[GO]:
The system will search for an existing matching record in the ISAM file.

13) IF:
Match is found overlay corresponding dates from the TTP onto the existing ISAM record.

The following updates will be accomplished by this process.

DSSR (CMMISAM)

ELEMENT	FROM	TO
DIC	GENERATED	CC 1-3
OrigCd	SCREEN	CC 4-6
TyCarrCd	SCREEN	CC 7
BLANK	BLANK	CC 8
TyMovNo	SCREEN	CC 9
Movement Number	SEE BELOW	CC 10-29
IF TYPE MOV NO EQUALS "C"		
CntnrTCN	CntnrMov	CC 10-26
BLANK	BLANK	CC 27-29
OR		
IF TYPE MOV NO EQUALS "V"		
CntnrOwnAbbr	CntnrMov	CC 10-13
CntnrNo	CntnrMov	CC 14-21
BLANK	BLANK	CC 22-29
EVENT LOCATION	SEE BELOW	CC 30-35
NewEvntLoc	MEvent	CC 30-35
OR		
BLANK	BLANK	CC 30-32
POD	CntnrMov	CC 33-35
OceanCarrAbbr	CntnrMov	CC 36-39
TyPwrCd	Screen	CC 40
BLANK	BLANK	CC 41-43
EvntTy	*A. DATE ON(generated as a 1)	CC 44
EvntDte	*A. DATE ON	CC 45-47
EvntTy	*B. DATE OFF(generated as a 2)	CC 48
EvntDte	*B. DATE OFF	CC 49-51

EvntTy	*C. DATE ON(generated as a 1)	CC	52
EvntDte	*C. DATE ON	CC	53-55
EvntTy	*D. DATE OFF(generated as a 2)	CC	56
EvntDte	*D. DATE OFF	CC	57-59
BLANK	BLANK	CC	60-75
VoyDocuNoFltNo	CntnrMov	CC	76-80

MEvent

ELEMENT	FROM	TO
CntnrOwnAbbr	CntnrMov	CntnrOwnAbbr,MEvent
CntnrNo	CntnrMov	CntnrNo,MEvent
TyPwrCd	Screen	TyPwrCd,MEvent
MgrCd	Screen	MgrCd,MEvent
TyMovNoCd	Screen	TyMovNoCd,MEvent
NewEvntLoc	Screen	NewEvntLoc,MEvent
MovEvntCd	Generated	MovEvntCd,MEvent
EvntTy	Screen	EvntTy,MEvent
EvntDte	Screen	EvntDte,MEvent
OrigCd	Generated	OrigCd,MEvent
PstDte	Generated	PstDte,MEvent

CntnrMov

ELEMENT	FROM	TO
DteLstUpdCntnr	Generated	DteLstUpdCntnr,CntnrMov

```
;
    MAINTAINS:
         CntnrMov-File ;
    MAINTAINS:
         MEvent-File ;
    MAINTAINS:
         Trns-ISAM-File ;
    EMPLOYS:
         CntnrMovStp-File ,
         Voyage-File ,
         CgoAddress-File ,
         TypeCarrier-Tbl ,
         TypeMovNo-Tbl ,
         CgoPort-Tbl ,
         System-Parameter-Tbl ;
    ADDS:          TTP-ISAM-Data TO Trns-ISAM-File ;
    MODIFIES:      CntnrMov-TTP-Upd IN CntnrMov-File ;
    MODIFIES:      MEvent-TTP-Upd IN MEvent-File ;
```

```
MODIFIES:       TTP-ISAM-Data IN Trns-ISAM-File ;
REFERENCES:     CntnrMov-TTP-Ref IN CntnrMov-File ;
REFERENCES:     MEvent-TTP-Ref IN MEvent-File ;
REFERENCES:     Voyage-ECSR-Ref IN Voyage-File ;
REFERENCES:     CgoAddress-CRec-Ref IN CgoAddress-File ;
REFERENCES:     TypeCarrier IN TypeCarrier-Tbl ;
REFERENCES:     TypeMovNo IN TypeMovNo-Tbl ;
REFERENCES:     CgoPort-TTP-Ref IN CgoPort-Tbl ;
REFERENCES:     TTP-ISAM-Data IN Trns-ISAM-File ;
REFERENCES:     CntnrMovStp-Ref IN CntnrMovStp-File ;
REFERENCES:     Parameter-OrigCd-Ref IN System-Parameter-Tbl ;
CREATES:
     Trns-ISAM-Data ;
RESPONSIBLE PROBLEM DEFINER IS:
                'Ocasio' ;
```

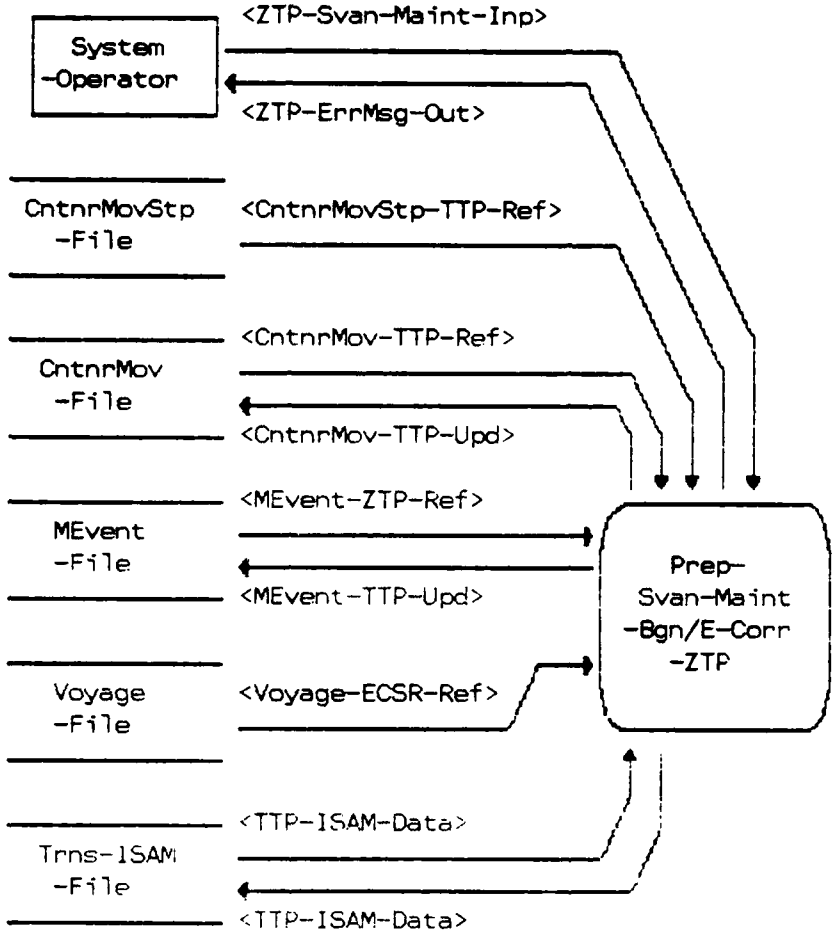

Figure 27. Prep-Svan-Maint-Bgn/E-Corr-ZTP

33 DEFINE PROCESS Prep-Svan-Maint-Bgn/E-Corr-ZTP ;
DESCRIPTION;
Prepare SEAVAN Maint Begin/End Correction <ZTP>
This process receives SEAVAN maintenance correction information and the ZTP information received is used to update the container database.
;
KEYWORD IS: 'Container' ,
'LOB' ;
SEE MEMO:
TCR-Svan-Maint-Bgn/E-Corr-ZTP ;
GENERATES:
ZTP-ErrMsg-Out ;
RECEIVES:
ZTP-Svan-Maint-Inp ;
PART OF: Rec+Report-Cntnr-Mov-Events ;
PROCEDURE;

After the record selection process has been completed, the system will display a screen comprised of the elements indicated, and assemble the appropriate data elements to create a ZTP transaction.

```
**************************************************************************
*                    SEAVAN MAINTENANCE CORRECTION                       *
**************************************************************************
*     CONTAINER NUMBER : _ _ _ _ _ _ _ _ _                               *
*                                                                        *
*     CONTAINER OWNER  : _ _ _ _        OCEAN CARRIER  : _ _ _ _         *
*                                                                        *
*       VOYAGE NUMBER  : _ _ _ _ _       MANAGER CODE  : _ _             *
*                                                                        *
*                 POD  : _ _ _         TYPE CARRIER CODE : _             *
*                                                                        *
*            CONSIGNEE : _ _ _ _ _ _   TYPE MOV NO CODE : _             *
*                                                                        *
*          ORIGIN CODE : _ _ _                                           *
*                                                                        *
*   TRANS CNTRL NUMBER : _ _ _ _ _ _ _ _ _ _ _ _ _ _ _ _ _               *
*                                                                        *
*       TYPE POWER CODE: _     CONTAINER LOCATION : _ _ _ _ _ _          *
*                                                                        *
*            A. DATE ON: _ _ _ _ _     B. DATE OFF: _ _ _ _ _            *
*                                                                        *
*            C. DATE ON: _ _ _ _ _     D. DATE OFF: _ _ _ _ _            *
*                                                                        *
**************************************************************************
```

In creating this screen, the system will display data contained in CntnrMov and CntnrMovStp into the corresponding data element lines on

the screen. At the same time, the system will perform a search for an MEvent record with MovEvntCd TTP, and the same CntnrNo and Consignee selected (on the screen). If an MEvent record(s) exist, based on this search, the information required on the screen, and resident in MEvent, will be posted from MEvent to the corresponding screened data element lines.
If, however, an existing record is not found in MEvent, the system will provide a prompt informing the user "A TTP IS REQUIRED TO COMPLETE THIS TRANSACTION, EXIT AND INITIATE TTP", and at that point the user must go back to the menu and enter a TTP.
(NOTE: The CntnrNo displayed is to be comprised of elements CntnrNo and CntnrNoPrefix in CntnrMov.)
If an MEvent record is found, and the data is posted to the screen, the cursor will go to the first data element line, which is A.DATE ON. If the user wishes, the cursor may be moved to or from any of the date fields, i.e. A to D, or C to B etc, but the user will be allowed to change only the dates, which, when changed on the screen, will be posted by the system as follows:

A. DATE ON- the last three digits will post to CC's 45-47 on the ISAM, and to the MEvent record with EvntTy A.
B. DATE OFF- the last three digits will post to CC's 49-51 on the ISAM, and to the MEvent record with EvntTy B.
C. DATE ON- the last three digits will post to CC's 53-55 on the ISAM, and to the MEvent record with EvntTy C.
D. DATE OFF- the last three digits will post to CC's 57-59 on the ISAM, and to the MEvent record with EvntTy D.

Once again, the user may not change any other fields with this process. Dates entered during this process will be edited as follows:

a) A. date must be equal to or less than B. date
b) B. date must be equal to or greater than A. date and equal to or less than C. date
c) C. date must be equal to or greater than B. date and equal to or less than D. date
d) D. date must be equal to or greater than C. date

If the user changes only one of the dates, the edit criteria above will apply.

During the output process, even though the user changed only a date or dates, the system will assemble the entire range of data required for the ISAM (this is in addition to those newly entered dates).

After the user has made the entries or corrections to those entries, GO is pressed, and after that changes may be made on the screen until the ISAM is sent. Then, no more changes.

In creating this transaction the system will, in addition to the ISAM, copy (overlay) to the corresponding MEvent record, the information changed via the ZTP (ie B. DATE OFF will post to an MEvent record with EvntTy B, D. DATE OFF will post to an MEvent record with EvntTy D etc.) Once the information is posted to both the CMMISAM and the MEvent record (the MovEvntCd ZTP is not stored or saved, but is only used to access and overlay the old MEvent and as the DIC for CMM).

The following outputs will be created:

ELEMENT	FROM	TO
DIC	GENERATED	CC 1-3
ORIGIN CODE (CntnrOrigCd)	SCREEN	CC 4-6
TYPE CARRIER CODE (TyCarrCd)	SCREEN	CC 7
BLANK		CC 8
TYPE MOV NUMBER CODE (TyMovNoCd)	MEVENT	CC 9
MOVEMENT NUMBER**	MEVENT	CC 10-29
** NOTE - If "C" is entered in Type Movement Number Code, then movement number is the TCN from CntnrMov in		CC 10-26
and filler in.....		CC 27-29
- If "V" is entered in Type Movement Number Code, then movement number is the CntnrOwnAbbr and 8 digit Cntnr number from CntnrMov in.....		CC 10-21
and filler in.....		CC 22-29
CONTAINER LOCATION (NewEvntLoc)	MEVENT	CC 30-35
OCEAN CARRIER (OceanCarrAbbr)	CNTNRMOV	CC 36-39
TYPE POWER CODE (TyPwrCd)	MEVENT	CC 40
FILLER		CC 41-43
EVENT TYPE A (EvntTy)	GENERATED (as a 1 to)	CC 44
EVENT DATE A (EvntDTE)	SCREEN	CC 45-47
EVENT TYPE B (EvntTy)	GENERATED (as a 2 to)	CC 48
EVENT DATE B (EvntDte)	SCREEN	CC 49-51
EVENT TYPE C	GENERATED (as a 1 to)	CC 52

(EvntTy)		
EVENT DATE C	SCREEN	CC 53-55
(EvntDte)		
EVENT TYPE D	GENERATED (as a 2 to)	CC 56
(EvntTy)		
EVENT DATE D	SCREEN	CC 57-59
(EvntDte)		
FILLER		CC 60-75
VOYAGE NUMBER	CNTNRMOV	CC 76-80
(VoyDocuNoFltNo)		

ELEMENT	FROM	TO
CONTAINER NUMBER	MOVSTP	MEVENT- CntnrNo
CONTAINER OWNER	MOVSTP	MEVENT- CntnrOwnAbbr
CONSIGNEE	MOVSTP	MEVENT- Consignee
TYPE CARRIER CODE	SCREEN	MEVENT- TyCarrCd
TYPE MVMNT NO CODE	SCREEN	MEVENT- TyMovNoCd
ORIGIN CODE	SCREEN	MEVENT- OrigCd
CONTAINER LOCATION	SCREEN	MEVENT- NewEvntLoc
TYPE POWER CODE	SCREEN	MEVENT- TyPwrCd
A. DATE ON	SCREEN	MEVENT- EvntTy (A)
		- EvntDte
B. DATE OFF	SCREEN	MEVENT- EvntTy (B)
		- EvntDte
C. DATE ON	SCREEN	MEVENT- EvntTy (C)
		- EvntDte
D. DATE OFF	SCREEN	MEVENT- EvntTy (D)
		- EvntDte
MANAGER CODE	SCREEN	MEVENT- MgrCd
DTELSTUPDCNTNR	GENERATED	CNTNRMOV-DteLstUpdCntnr

;

```
    MAINTAINS:
         CntnrMov-File ;
    MAINTAINS:
         MEvent-File ;
    MAINTAINS:
         Trns-ISAM-File ;
    EMPLOYS:
         CntnrMovStp-File ,
         Voyage-File ;
    MODIFIES:      CntnrMov-TTP-Upd IN CntnrMov-File ;
    MODIFIES:      MEvent-TTP-Upd IN MEvent-File ;
    MODIFIES:      TTP-ISAM-Data IN Trns-ISAM-File ;
    REFERENCES:    CntnrMov-TTP-Ref IN CntnrMov-File ;
```

```
REFERENCES:     Voyage-ECSR-Ref IN Voyage-File ;
REFERENCES:     MEvent-ZTP-Ref IN MEvent-File ;
REFERENCES:     TTP-ISAM-Data IN Trns-ISAM-File ;
REFERENCES:     CntnrMovStp-Ref IN CntnrMovStp-File ;
RESPONSIBLE PROBLEM DEFINER IS:
                'Woods' ;
```

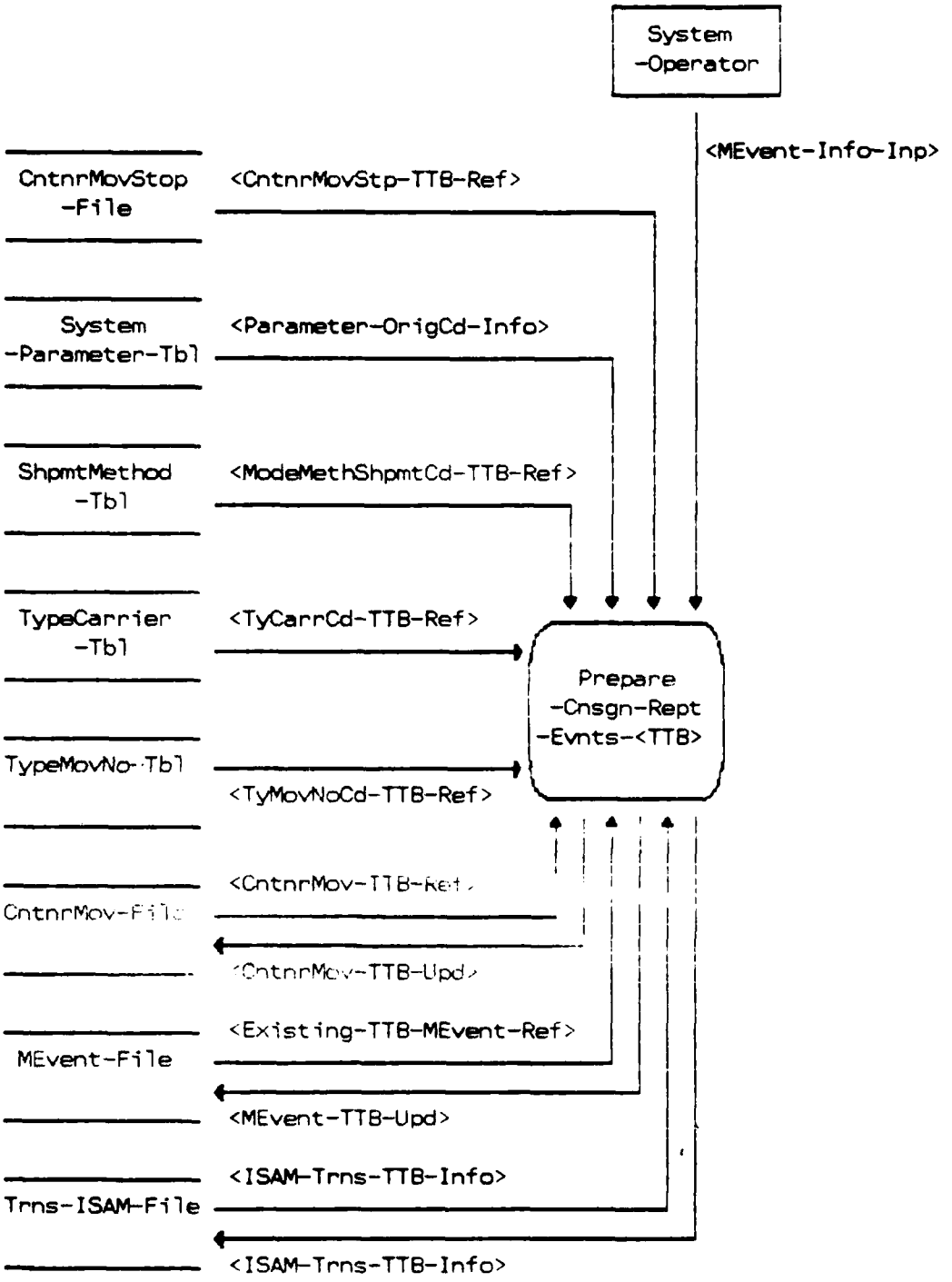

Figure 28. Prepare-Cnsgn-Rept-Evnts-<TTB>

34 DEFINE PROCESS Prepare-Cnsgn-Rept-Evnts-<TTB> ;
DESCRIPTION;
This process updates the container database with information concerning a subsequent container movement event. This subsequent container movement event may be of several types:
1) Conveyance arrival
2) Contents discharged without discrepancies
3) Contents discharged with discrepancies
4) Carrier notified to pick up container
5) Conveyance departed with container
After the container database is updated, the information is moved to an ISAM file in TTB CMM format.
;
KEYWORD IS: 'Container' ,
'LOB' ;
SEE MEMO:
Front-End-Process-Memo ,
TCR-TTB-Process-Memo ,
TTB-Integration-Memo ,
TTB-ISAM-Deletion-Memo ;
RECEIVES:
MEvent-Info-Inp ;
PART OF: Rec+Report-Cntnr-Mov-Events ;
PROCEDURE;

TTB Detailed Description

1. User receives notification of a subsequent movement event via a phone call, TELEX, or walk-in, as may be the case at a given MCT.

2. The customer provides the following information to the user:
- Cntnr No
- Cntnr Own Abbr
- Ship to AAC (Event Location)
- Event Date (or Event Dates if Multiple Events)
- Event Type (or Event Types if Multiple Events)
- Mode Method Shipment Code
- Type Carrier Code
- Origin Code
- Voyage Document No

3. The user captures this information and documents it on the Container Daily Worksheet.

1)
If:
User enters CntnrNo
MATCH:
CntnrNo from screen with CntnrNo in CntnrMovStp File

```
                IF:
                    NO MATCH:
                    DISPLAY:
                            "Container Number not valid, reenter or
                             exit process."

                ELSE:
                       Use CntnrNo to access CntnrMovStp.
                       DISPLAY:
                       "CntnrNo CntnrOwn Consignee MultiStpNo StpComp"
                         XXXXX   XXXX     XXXXXX       X

                        System will allow user to course through this
                        scrollable screen to the desired stop.  When the
                        stop is selected, the user will hit "GO" and
                        the first process screen will be displayed.
                    MOVE:
                          CntnrNoPrefix from CntnrMov to Container
                          Number on first process screen.
    DISPLAY:
              First Process Screen

2)
    IF:
        User enters CntnrNo + CntnrNoPrefix
    MATCH:
           CntnrNo from screen with CntnrNo in CntnrMovStp File
           IF:
               NO MATCH:
               DISPLAY:
                       "Container Number not valid, reenter or
                        exit process."
               EDIT:
                       System will edit CntnrNoPrefix
                       IF:
                            CntnrNoPrefix < > Alphanumeric
                            DISPLAY:
                                     Err Msg - "Container number must
                                               be alphanumeric."

           ELSE:
                  Use CntnrNo from screen to access CntnrMovStp.
                  DISPLAY:
                            "CntnrNo  CntnrOwn Consignee MultiStpNo"
                             XXXXXXXX   XXXX     XXXXXX       X

                     System will allow user to course through this
                     scrollable screen to the desired stop.  When the
                     stop is selected, the user will hit "GO" and the
```

first process screen will be displayed.
IF: CntnrNoPrefix in CntnrMov = 000
UPDATE: Screen entered CntnrNoPrefix to CntnrNoPrefix in CntnrMov.

MOVE: CntnrNoPrefix from CntnrMov to Container Number on First Process Screen.

DISPLAY:
First Process Screen

3) IF:
User enters FWTNo
MATCH:
FWTNo from screen with FWTNo in CntnrMov File
IF:
NO MATCH:
DISPLAY: Freight Warrant Number entered not valid. Reenter or exit the process.
ELSE:
Use CntnrNo and CntnrOwnAbbr found in the CntnrMov file to access CntnrMovStp
DISPLAY:
Cntnr Mov Stop data as follows:

CntnrNo	CntnrOwn	Consignee	MultiStpNo
XXXXX	XXXX	XXXXXX	X

System will allow user to course through this scrollable screen to the desired stop. When the stop is selected, the user will hit 'GO' and the first process screen will be displayed.
MOVE:
CntnrNoPrefix from CntnrMov to Container Number on first process screen.

DISPLAY:
First Process Screen

4) IF:
User enters TMRPrefix
MATCH:
TMRPrefix from screen with TMRPrefix in CntnrMov file
IF:
NO MATCH:
DISPLAY: TMRPrefix entered not valid. Reenter or exit the process.

ELSE:

Use CntnrNo and CntnrOwnAbbr found in the CntnrMov file to access CntnrMovStp
DISPLAY:

CntnrMovStp data as follows:

CntnrNo	CntnrOwn	Consignee	MultiStpNo
XXXXX	XXXX	XXXXXX	X

System will allow user to course through this scrollable screen to the desired stop. When the stop is selected, the user will hit 'GO' and the first process screen will be displayed
MOVE:

CntnrNoPrefix from CntnrMov to Container Number on first process screen.

DISPLAY:

First Process Screen

IF:

User enters CntnrTCN.
MATCH:

CntnrTCN from screen with CntnrTCN in CntnrMov.
IF:

No match.
DISPLAY:

"Container TCN not valid. Reenter or exit process."
ELSE:

Select CntnrNo, CntnrOwnAbbr from CntnrMov to access CntnrMovStp.
DISPLAY:

CntnrMovStp data as follows:

Cntnr No	CntnrOwnAbbr Abbr	Consignee	MultiStp No	Stp Comp
XXXXX	XXXX	XXXXXX	X	X
XXXXX	XXXX	XXXXXX	X	X

System will allow user to course through this scrollable screen to the desired stop. When the stop is selected, the user will hit [GO] and the first process screen will be displayed.

MOVE:

CntnrNoPrefix from CntnrMov to Container Number on the first process screen.

MATCH:

The system will then use the 4 elements selected in the search process to search MEvent for an existing TTB record.

IF:
MATCH - The system will get all MEvents found with the key being equal and display them as follows:
PROMPT: "Please press the desired function key."

CONSIGNEE REPORTED EVENTS (TTB)

```
          CONTAINER NUMBER:  XXXXXXXX
           CONTAINER OWNER:  XXXX
             VOYAGE NUMBER:  XXXXX
                 CONSIGNEE:  XXXXXX
              ORIGIN CODE:   X
TYPE MOVEMENT NO CODE:       X
          MODE METHOD CODE:  X
        TYPE CARRIER CODE:   X


EVENT TYPES:     A      B      C      D      E
EVENT DATES:   XXXXX  _____  _____  _____  _____
```

The system will display elements of all TTB events found. For example, The MEvent found above, was that of TTB-A. If a TTB-B was found as well, the date entered for it would appear next to the A-Date.

At this time, the user will be given the option of changing elements of the most recent event found, deleting an event, adding an event or clearing the screen and returning to the beginning of the process.

IF:

MODIFY.

The system will search the existing ISAM record to see if an ISAM record for that event exists.

IF:

ISAM EXISTS.

The system will move the cursor to the date found, or code appropriate as follows:

IF: An A date exists on the ISAM, the cursor will be placed on TyMovNoCd. At this time, the user may enter a new TyMovNoCd. The system will then move the cursor to the following elements on the screen: ModeMethShpmtCd, TyCarrCd, EventDate. The user may change any one of these. Normal edits/validations will be accomplished. Cursor will only advance to dates that were on the ISAM, not to blank dates.

PROMT: "Enter data in selected field - Press [RETURN] or [HELP]/[CANCEL]."

CONSIGNEE REPORTED EVENTS (TTB)

```
CONTAINER NUMBER:   XXXXXXXX
  CONTAINER OWNER:  XXXX
    VOYAGE NUMBER:  XXXXX
        CONSIGNEE:  XXXXXX
     ORIGIN CODE:   XXX
TYPE MOVEMENT NO CODE:  X
    MODE METHOD CODE:   X
  TYPE CARRIER CODE:    X

 EVENT TYPES     A     B     C     D     E
 EVENT DATES   XXXXX XXXXX _____ _____ _____
```

IF: An Event date other than A exists in the ISAM, ONLY the dates of the Event existing in the ISAM may be changed. The user will then enter the corrected date. If there is more than 1 date in the ISAM found, the cursor will be placed on the earliest date found i.e. If a B and E date are present, the cursor will be placed on the B date. The user will have to manually enter the corrected date for the event that needs to be changed.

The user may then change the date (except D date) to any date he/she wishes, so long as the normal event relationships and edits are met. The user may also use the delete key to delete a date out and enter another. However, the user may not delete the date and exit the process.

IF:
A date is deleted, and user presses [GO] or [RETURN]
DISPLAY:
"Cannot modify A date to blanks."

IF:
B date is deleted, and user presses [GO] or [RETURN]
DISPLAY:
"Cannot modify B date to blanks."

IF:
C date is deleted, and user presses [GO] or [RETURN]
DISPLAY:
"Cannot modify C date to blanks."

IF:
E date is deleted, and user presses [GO] or [RETURN]
DISPLAY:
"Cannot modify E date to blanks."

PROMPT: "Enter different date."

PERFORM: Event-Type-Event-Date-Routine

ELSE:
NO MATCH of ISAM.
PROMPT: "TTB record sent to CMM. Press [RETURN] to continue."

IF DELETE:
The system will search the existing ISAM record for that container.

IF:
MATCH:
The ISAM exists. The system will delete the ISAM and the MEvent in the following manner. The MEvent matching the ISAM found will be displayed on the screen as follows:
PROMPT: "Press [GO] to Delete. [CANCEL] to deny."

CONSIGNEE REPORTED EVENTS

```
          CONTAINER NUMBER:  XXXXXXXX
           CONTAINER OWNER:  XXXX
             VOYAGE NUMBER:  XXXXX
                 CONSIGNEE:  XXXXXX
             ORIGIN CODE:    XXX
    TYPE MOVEMENT NO CODE:   X
         MODE METHOD CODE:   X
        TYPE CARRIER CODE:   X

        EVENT TYPES:      A     B     C     D     E
                        XXXX  XXXX        XXXX
```

In this case, the ISAM record found had 2 dates on it: B + D. Both of these may now be deleted. If the delete is still desired both have to be deleted, not just 1 or the other. When the delete occurs, both the MEvents found and the ISAM will be deleted. If the user wishes to delete only 1 of the two, both would be deleted and the user would reenter the date(s) he did not wish to delete.

IF: [GO]
DELETE ISAM record + MEvent = ISAM record.
IF:
E date is present, turn StpCompFlag off. Check to see if MovCompFlag = positive. If it is, turn it off.
ELSE:
[CANCEL]
System will go back to initial screen.

ELSE:
NO MATCH:
DISPLAY:
PROMPT: "TTB record sent to CMM. Press [RETURN] to continue."

ELSE:
ADD:
The system will position the cursor in the next available date to be entered as follows:
PROMPT: "Use existing date or change date. Press [RETURN]/[GO] or [FINISH]/[CANCEL]."

CONDITION PLACEMENT OF CURSOR

A DATE PRESENT	B DATE WITH ADVANCE ALLOWED TO C DATE
	E DATE (IF RecngnCfmNoncfm = C IN CntnrMovStp)
B DATE PRESENT	E DATE
C DATE PRESENT	E DATE
D DATE PRESENT	E DATE

At this time the help key will be used to generate today's date in the date field where the cursor is positioned. Additionally, the user may enter the date from the keyboard if he/she wishes. The user will then select 1 of 2 methods and enter the date. For the 'A' date, today's julian date will be placed by the system in the date field. The user may overtype from the keyboard a different date if necessary. In the case of any existing MEvent, the cursor will be at the next date, and will not allow a date to be entered unless a required preceeding date is entered first.

PERFORM:
Event-Type-Event-Date Routine.

ELSE:
NO MATCH of MEvent.

MATCH:
System will use the CntnrNo, CntnrOwnAbbr, Consignee, of the container being processed and MovEvntCd = ZTB to search the ISAM file for a Match, where the EvntTy being entered in the TTB transaction = to the EvntTy on the ZTB with a date value of 000.
IF:
Match of TTB transaction EvntType and ZTB Event Type = 000
THEN:
Overlay the 000 in the ZTB ISAM with the value of the TTB EventType, and create an MEvent, TTB, with the Event Type being processed.

ELSE:

DISPLAY:
The system will then display a screen that will accept movement data so that this event is the

first subsequent event to be reported as follows.

MOVE:

OrigCd from Parameter Table to screen.
PROMPT: "Enter data in selected field - Press [RETURN] or [HELP]/[CANCEL]."

CONSIGNEE REPORTED EVENTS (TTB)

```
        CONTAINER NUMBER:  XXXXXXXX
         CONTAINER OWNER:  XXXX
           VOYAGE NUMBER:  XXXXX
               CONSIGNEE:  XXXXXX
             ORIGIN CODE:  XXX
TYPE MOVEMENT NO CODE:
     MODE METHOD CODE:
    TYPE CARRIER CODE:


EVENT TYPES:    A     B     C     D     E
EVENT DATES:  XXXXX
              ----- ----- ----- ----- -----
```

Since no MEvent was found, the user will have to enter the TyMovNoCd, Mode Method Code, Type Carrier Code, Event Type and Event Date. The Event Date for the 1st event will be generated by the system (today's date), or may be entered from the keyboard. The cursor will then advance to the "B" date. The user may either enter today's date by the [HELP] key, entering it from the keyboard, or advancing the cursor to the "C" date. In any event, the date entered will be processed by the Date-Validation-Routine and Event-Type-Event-Date-Routine.

ACCEPT:

Type Movement No Code.
Mode-Meth-Shpmt-Cd from terminal.
Type Carrier Code from terminal.
EvntDte from terminal.

TyMovNoCd IF:

HELP:

System will scroll the contents of the TypeMovNo Table in a window. The user will select the code desired by moving the highlight up or down. User will hit 'GO' when the desired code is highlighted. Code will be placed by the system in the appropriate place on the main screen.

IF: Keyboard Entry.
Perform Table Validation.
ERR MSG: "Invalid code. Press [HELP] for list of valid codes."

IF:
Type Movement Number Code and Movement Number in Container Mov (either TCN, VanOwner, VanNo, Voyage Document No, or TMR) is not present.

PROMPT: "Not available. Select another code."

ELSE:
Put Movement Number found into CC 10-29 ISAM file during output build as follows:

TyMovNoCd	ISAM CC
V	10 - 13 CntnrOwnAbbr 000 - 21 CntnrNoPrefixCntnrNo 29

CntnrOwnAbbr will be entered in CC 10-13. CntnrNoPrefix and CntnrNo will be entered so that the last digit is on CC 21. Any blanks between the CntnrOwnAbbr and CntnrNo-Prefix will be filled with zeros. CC 22-29 will be left blank.

C	10 CntnrTCN ---------- 26 29

CntnrTCN will be entered in CC 10-26. CC 27-29 will be left blank.

M	10 TMRPrefix,DestMCEPrefix,StpSeqNo, SpIntCd, ModeCd, TransPriCd ----------21 000 --- TIN 29

TMR group will be entered in CC 10-21. The last number of

the TIN will be on CC 29. Any blank spaces between the TMR group and the TIN will be zero filled.

```
                    10 ----------------------20 000     28
F
```

The FWTNo will be entered in CC 10-20. The TIN will be entered so that the last digit is on CC 28. CC 29 will be left blank. Any blank spaces between the FWTNo and the TIN will be zero filled.

D. No VoyageDocuNoFltNo will be entered in CC 10-29. CC 36-40 container VoyageDocuNoFltNo.

ModeMethShpmtCd

PROMPT: "Enter data in selected field - Press [RETURN] or [HELP]/ [CANCEL]."

IF:

HELP:

System will scroll the contents of the ShpmtMethod Table in a window. The user will select the code desired by moving the highlight up or down. User will hit 'GO' when the desired code is highlighted. Code will be placed by the system in the appropriate place on the main screen.

IF: Keyboard Entry.

ERR MSG: "Invalid Code. Press [HELP] for a list of valid codes."

Perform Table Validation.

TyCarrCd

PROMPT: "Enter data in selected field - Press [RETURN] or [HELP]/[CANCEL]."

IF:

HELP:

System will scroll the contents of the Type Carrier File in a window. The user will select the code desired by moving the highlight up or down. User will hit 'GO' when the desired code is highlighted. Code will be placed by the

system in the appropriate place on the main screen.

IF: Keyboard Entry.
Perform Table Validation.
ERR MSG: "Invalid Code. Press [RETURN] or [HELP]/[CANCEL]."

EvntDte/EvntTy

PERFORM:
Event-Type-Event-Date-Routine

The following outputs will be created by this process:

I

ISAM

ELEMENT		FROM	TO
DIC		Generate	CC 1-3
Origin Code		Parameter Table	CC 4-6
Type Carrier Code	*	Type Carrier	CC 7
Mode Method Shipment Code	*	ShpmtMethod	CC 8
Type Movement No Code	*	TypeMovNo	CC 9
Movement No		Generated	CC 10-29
Consignee		CntnrMovStp	CC 30-35
Voyage Document No		CntnrMov	CC 36-40
Type Event		Screen	CC 48
Date Event		Screen	CC 49-51
Type Event		Screen	CC 52
Date Event		Screen	CC 53-55
Type Event		Screen	CC 60
Date Event		Screen	CC 61-63

II

MEvent Record

ELEMENT		FROM	TO
Event Date		Screen	MEvent
Event Type		Screen	MEvent
Cntnr Own Abbr		CntnrMovStp	MEvent
Container No	*	CntnrMov	MEvent

Consignee		CntnrMovStp	MEvent
Mov Event Code		Generated	MEvent
Origin Code		Parameter Table	MEvent
Type Mov No Code	*	TypeMovNo/Previous MEvent	MEvent
Post Date		Generated	PstDte

III

Container Move

ELEMENT		FROM	TO
Date Last Update Cntnr		Generated	Cntnr Mov
Type Carrier Code	*	Type Carrier	Cntnr Mov
Mode Method Shipment Code	*	ShpmtMethod	Cntnr Mov (o)
CntnrNoPrefix		Screen	Cntnr Mov (o)

ELSE:
NO MATCH OF CONTAINER NO AND CONTAINER IN DATABASE.
DISPLAY:
Message "CONTAINER NOT FOUND, PLEASE ENTER AGAIN, OR ENTER DIFFERENT NUMBER."

****

Event-Type-Event-Date-Routine

1. IF:
Event is A.
PROMPT: "Use existing date or change date. Press [RETURN]/[GO] or [FINISH/[CANCEL]."
Perform: Date-Validation-Routine
IF:
<RETURN> and RecngnCfmNoncfm < > C, place cursor in Event B, and allow the user to advance to C. Depending on which date is entered, perform the appropriate routine (B or C).

IF:
<RETURN> and RecngnCfmNoncfm = C
Advance cursor to E date

IF:

[GO] system updates files and creates ISAM.

2. IF:
Event is B.
PROMPT: "Press [HELP] for today's date, or enter date from keyboard."
Perform: Date-Validation-Routine
IF:
A > B
DISPLAY: "The B date has to be greater than or equal to the A date."

IF:
CANCEL:
Return to main screen.
ELSE:
IF:
A < B, User presses
_
[RETURN], system places cursor in Event E. Perform E Date Routine.
IF:
[GO] system updates files and creates ISAM.

3. IF:
Event is C.
PROMPT: "Press [HELP] for today's date or enter date from keyboard."
PERFORM: Date-Validation-Routine
IF:
A > C
DISPLAY: "The C date must be greater than or equal to the A date. Please enter corrected date or cancel this transaction."
IF:
CANCEL:
Return to main screen.
ELSE:
IF:
A < C, User presses,
_
[RETURN], system places cursor in Event E. Perform E Date Routine.
IF:
[GO] system updates files and creates ISAM.

4. IF:
Event is E.
PROMPT: "Press [HELP] for today's date or enter dates from

```
                keyboard."
        PERFORM:
                Date-Validation-Routine
        IF:
            D > E
            DISPLAY:
                    "The E date must be greater than or equal to the
                     D date.  Please enter corrected date or cancel
                     this transaction."
            IF:
                Cancel.
                Return to main screen.
        ELSE:
               User presses [GO] and updates files and creates ISAM.

      ***************************************************************


                    Date Validation Routine

  1.  IF:
          Date is greater than 366
          DISPLAY:
                  "Day not valid in Julian Date."
  2.  IF:
          Date is not numeric
          DISPLAY:
                  "Must be a five position number."
  3.  IF:
          Date > System Date
          DISPLAY: "Date must be equal to or less than today's
                    date."
;
MAINTAINS:
     CntnrMov-File ;
MAINTAINS:
     MEvent-File ;
MAINTAINS:
     Trns-ISAM-File ;
EMPLOYS:
     ShpmtMethod-Tbl ,
     TypeCarrier-Tbl ,
     TypeMovNo-Tbl ,
     System-Parameter-Tbl ,
     CntnrMovStp-File ;
ADDS:          ISAM-Trns-TTB-Info TO Trns-ISAM-File ;
MODIFIES:      CntnrMov-TTB-Upd IN CntnrMov-File ;
```

```
MODIFIES:       MEvent-TTB-Upd IN MEvent-File ;
MODIFIES:       ISAM-Trns-TTB-Info IN Trns-ISAM-File ;
REFERENCES:     ModeMethShpmtCd-TTB-Ref IN ShpmtMethod-Tbl ;
REFERENCES:     TyCarrCd-TTB-Ref IN TypeCarrier-Tbl ;
REFERENCES:     TyMovNoCd-TTB-Ref IN TypeMovNo-Tbl ;
REFERENCES:     CntnrMov-TTB-Ref IN CntnrMov-File ;
REFERENCES:     Existing-TTB-MEvent-Ref IN MEvent-File ;
REFERENCES:     ISAM-Trns-TTB-Info IN Trns-ISAM-File ;
REFERENCES:     CntnrMovStp-Ref IN CntnrMovStp-File ;
REFERENCES:     Parameter-OrigCd-Ref IN System-Parameter-Tbl ;
CREATES:
     ISAM-Trns-TTB-Info ;
RESPONSIBLE PROBLEM DEFINER IS:
                'Mitchem' ;
```

```
35   DEFINE PROCESS                              Prepare-Container-Reports ;
       KEYWORD IS:     'Container' ,
                       'LOB' ;
       SUBPART IS:     Prep-Daily-SEAVAN-Status-Rept ,
                       Prep-Empty-Cntnr-Status-Report ,
                       Prep-Cntnr-O/H-Over-5-Day-Rept ,
                       Prep-Dam-Deadlined-Cntnr-Rept ,
                       Prep-Del-60-Day-Old-Cntnr-Rept ,
                       Inquiry/Rept-on-Specific-Cntnr ,
                       Maintain-Cntnr-History-Records ,
                       Prep-Non-ETA-Fcst-Cntnr-Report ,
                       Prepare-Delayed-Delivery-Rept ,
                       Prep-Empty-Aval-Over-5-Day-Rpt ;
       PART OF:        Manage-Container-Operations ;
```

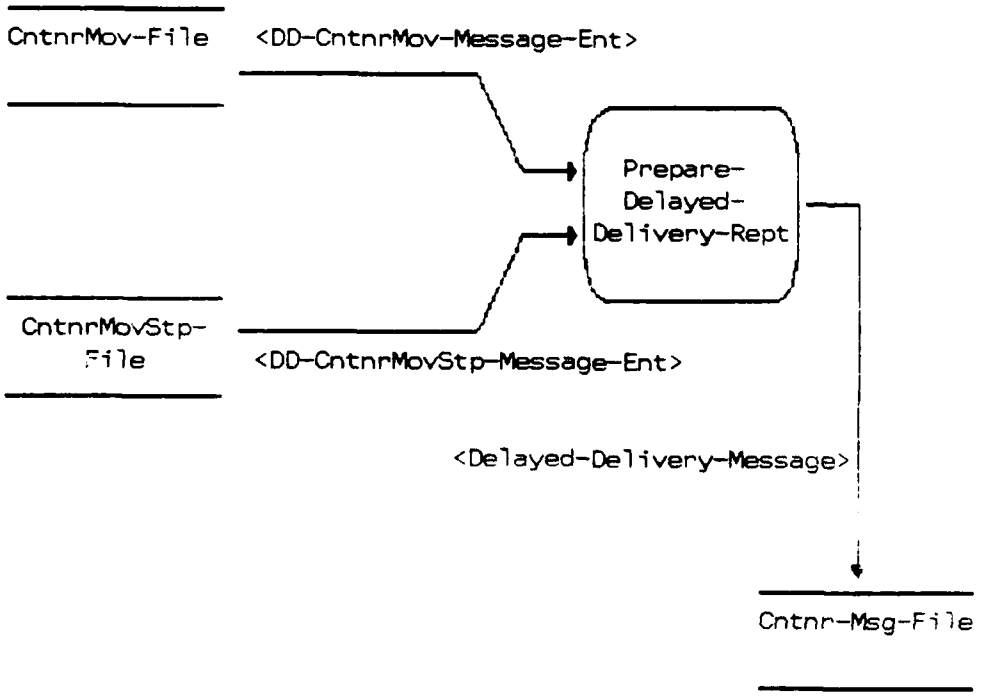

Figure 29. Prepare-Delayed-Delivery-Rept

36 DEFINE PROCESS Prepare-Delayed-Delivery-Rept ;
DESCRIPTION;
Prepare Delayed Delivery Report
This process is initiated by the MCE as one of the final tasks of the duty day. The process is menu driven and selects all those containers that have at least had a delayed delivery event initiated. Additionally, should a container have a delayed delivery event initiated, as well as the subsequent events of the release and actual arrival at the consignee occur, it will also be selected. Those containers so selected will have items of information pertaining to the delayed delivery initiation reported to TMCA in a pre-established format. This process will occur once per day.
;
KEYWORD IS: 'Container' ;
SEE MEMO:
TCR-Prepare-DD-Report-Memo ;
PART OF: Prepare-Container-Reports ;
PROCEDURE;

User will select the process via a menu, and begin the process by the act of selection.

DISPLAY:
"Creating Delayed Delivery Report..."
READ:
System will read the parameter table for the value of MCE Code.

IF:
The code is not found
DISPLAY:
"MCE Code not found, contact System Administrator"
ELSE:
MATCH:
The system will use the MCE Code found in the parameter table to match existing codes in the CgoMCE table.
IF:
NO MATCH:
DISPLAY:
"MCE Code not found, update table ... try again."
ELSE:
READ:
MCE Name in CgoMCE file and move it to the report.
IF:
MCE Name is not there:
DISPLAY:
"MCE Name not found, update table ... try again."
ELSE:

```
System will read all CntnrMovStp records.
IF:
     DD Post Dte = Dte Current
     MOVE:
          CntnrNo, CntnrOwnAbbr, DDLoc, and Consignee from the
          CntnrMovStp record to the output report line.
MATCH:
       System will match CntnrMov with the CntnrMovStp key.
MOVE:
      CntnrNoPrefix, CntnrTCN, and VoyDocuNoFltNo to the output
      report line.
ELSE:
      Read next record until the last record in the database is read.
DISPLAY:
         "Del Dlv [Sys Raw Date Time] is the report file name.
          Press [CANCEL] to exit."
IF:
     [CANCEL]
     System will move report to the General Message Process and place
     the report in a holding file.
ENDIF.

 ;
    UPDATES:
         Cntnr-Msg-File ;
    EMPLOYS:
         CntnrMov-File ,
         CntnrMovStp-File ;
    ADDS:          Delayed-Delivery-Message TO Cntnr-Msg-File ;
    REFERENCES:    DD-CntnrMov-Message-Ent IN CntnrMov-File ;
    REFERENCES:    DD-CntnrMovStp-Message-Ent IN CntnrMovStp-File ;
    CREATES:
         Delayed-Delivery-Message ;
    RESPONSIBLE PROBLEM DEFINER IS:
                   'Mitchem' ;
```

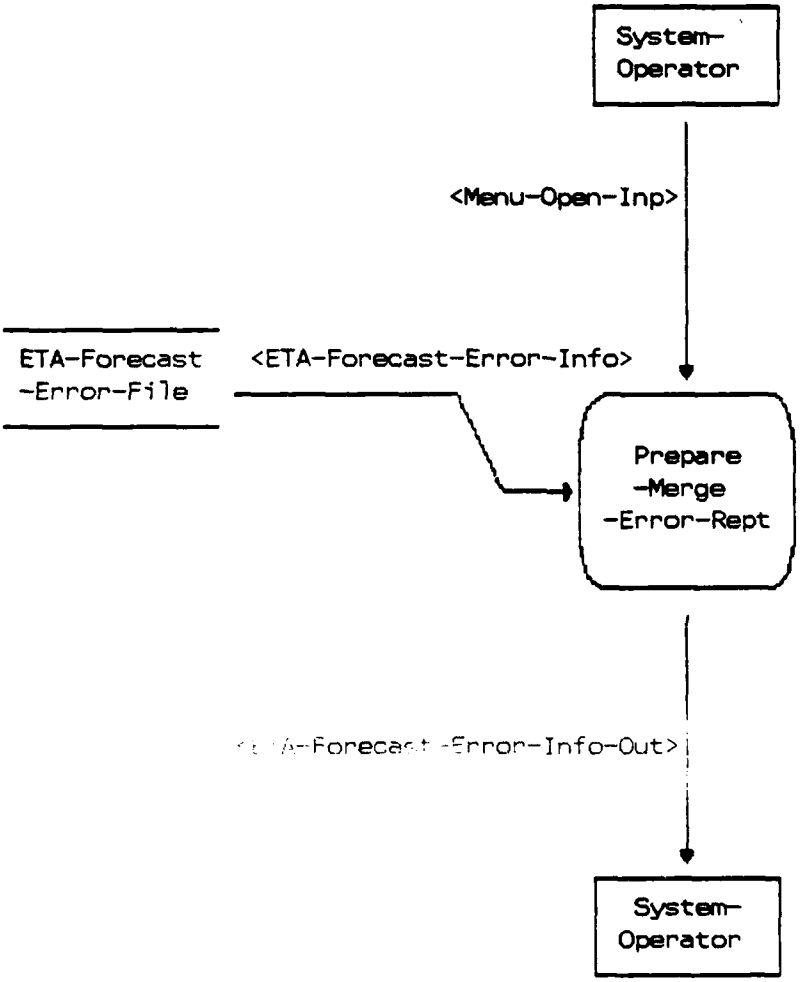

Figure 30. Prepare-Merge-Error-Rep

37 DEFINE PROCESS Prepare-Merge-Error-Rept ;
DESCRIPTION;
Prepare Merge Error Report
This process prepares a hardcopy report of all records which exist in the Reformatted ETA Forecast Error File. The report will be produced in two separate categories (1) Transactions Added to Database (2) Transactions Not Added to Database.
;
KEYWORD IS: 'Container' ;
SEE MEMO:
TCR-Prep-Merge-Error-Rept ;
ATTRIBUTE IS:
SEC-CLASS 'UNCLASSIFIED' ,
PROCESS-MODE 'INTERACTIVE BATCH' ;
GENERATES:
ETA-Forecast-Error-Info-Out ;
RECEIVES:
Menu-Open-Inp ;
PART OF: Process-ETA-Forecast ;
PROCEDURE;

IF: Prefix Code of Sequence Number is equal to "1"
THEN: Select record to be printed on Error Report for Transactions Added to Database
THEN: Print Report
IF: No records exist for Report
THEN: Print Negative Report

REFORMATTED ETA FORECAST ERROR REPORT
(Transactions Added to Database)

DATE: _____

Seq-No	Cntnr Owner Abbr	Cntnr Number	Consignee	Voyage Document Number	POD	Cntnr TCN

PAGE:_____

Ocean Carrier Abbr	Cmdty Code	Container Size	Date Sail POE	Total Stops	Multi Stop Number	Cntnr Number Prefix	POE

IF: Prefix Code of Sequence Number is equal to "0"
THEN: Select record to be printed on Error Report for Transactions Not Added to Database
THEN: Print Report
IF: No records exist for Report
THEN: Print Negative Report

REFORMATTED ETA FORECAST ERROR REPORT
(Transactions Not Added to Database)

DATE: _____

Sequence No	Cntnr Owner Abbr	Cntnr Number	Consignee	Voyage Document Number	POD	Cntnr TCN

PAGE:_____

Ocean Carrier Abbr	Cmdty Code	Container Size	Date Sail POE	Total Stops	Multi Stop Number	Cntnr Number Prefix	POE

;
EMPLOYS:
ETA-Forecast-Error-File ;
REFERENCES: ETA-Forecast-Error-Info IN ETA-Forecast-Error-File ;
RESPONSIBLE PROBLEM DEFINER IS:
'Cope' ;

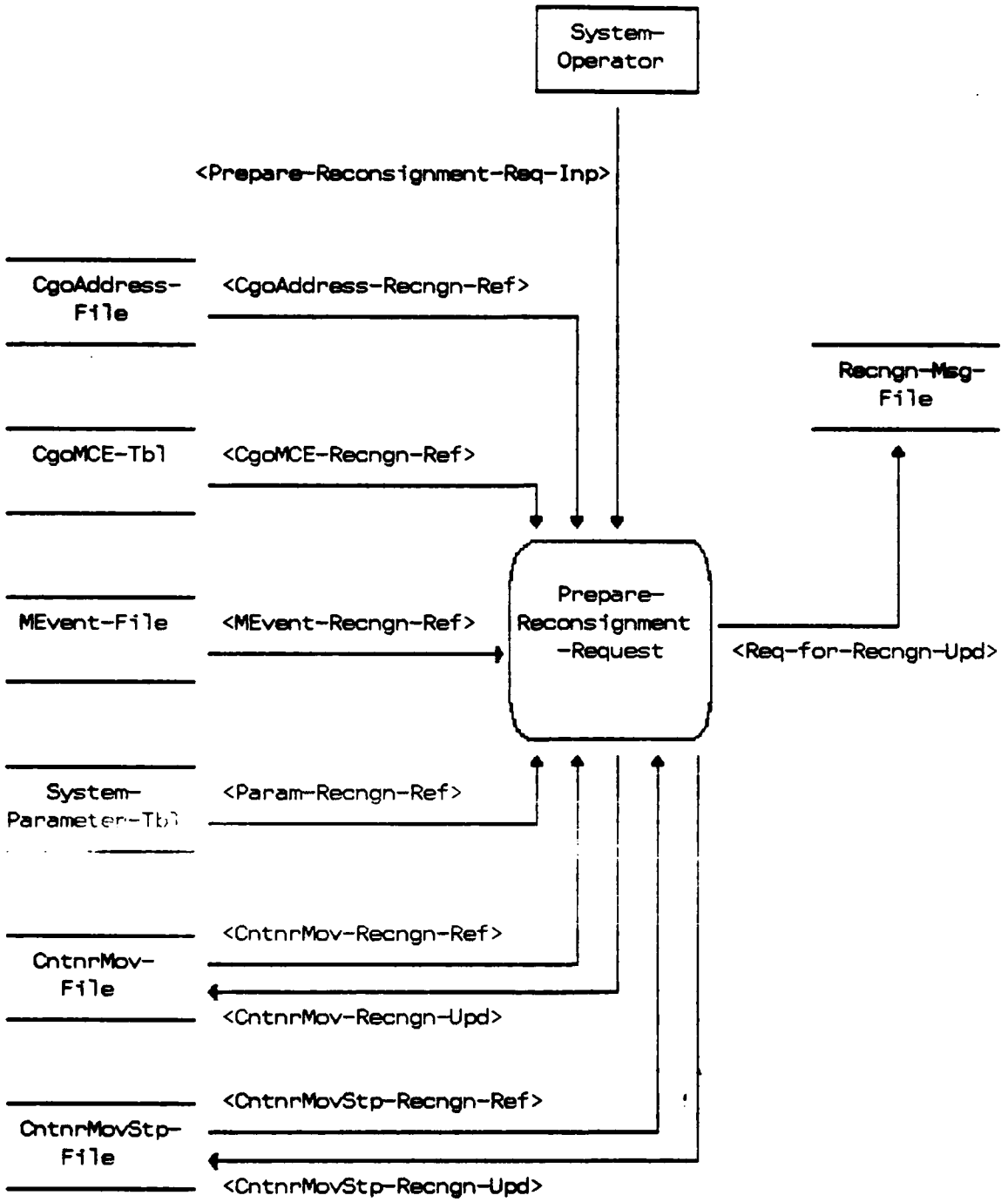

Figure 31. Prepare-Reconsignment-Request

```
38   DEFINE PROCESS                          Prepare-Reconsignment-Request ;
       DESCRIPTION;
    Prepare Reconsignment Request
    This process receives a request for the movement of a container from
    the original consignee to another consignee.  The request is submitted
    to 1st TMCA Container Branch for approval.  Upon departure of the con-
    tainer from the original consignee, the MCT reports the event in DAMMS
    DIC transaction TTB format.
     ;
       KEYWORD IS:     'Container' ,
                       'LOB' ;
       SEE MEMO:
            TCR-for-Reconsignment-Req-Memo ,
            Front-End-Process-Memo ;
       RECEIVES:
            Prepare-Reconsignment-Req-Inp ;
       PART OF:        Rec+Report-Cntnr-Mov-Events ;
       PROCEDURE;
```

The first screen that the user of this process will see is shown below:

```
-------------------------------------------------------------------------
|                          CONTAINER OPERATIONS                          |
|-----------------------------------------------------------------------|
|                                                                        |
|                  (ENTER ONE OF THE FOLLOWING OPTIONS)                  |
|                                                                        |
|                       TCN:                                             |
|                        OR                                              |
|          Container Number:                                             |
|           Container Owner:                                             |
|                        OR                                              |
|                 TMRPrefix:                                             |
|                        OR                                              |
|        Freight Warrant No:                                             |
|-----------------------------------------------------------------------|
```

```
1)
     If:
         User enters CntnrNo
         MATCH:
                CntnrNo from screen with CntnrNo in CntnrMovStp File
                IF:
                    NO MATCH:
                    DISPLAY:
                            "Container Number not valid, reenter or
                             exit process."
```

```
                ELSE:
                        Use CntnrNo to access CntnrMovStp.
                        DISPLAY:
                        "CntnrNo CntnrOwn Consignee MultiStpNo StpComp"
                          XXXXX   XXXX     XXXXXX       X

                         System will allow user to course through this
                         scrollable screen to the desired stop.  When the
                         stop is selected, the user will hit "GO" and
                         the first process screen will be displayed.
                    MOVE:
                          CntnrNoPrefix from CntnrMov to Container
                          Number on first process screen.
        DISPLAY:
                  First Process Screen

2)
        IF:
            User enters CntnrNo + CntnrNoPrefix
        MATCH:
                CntnrNo from screen with CntnrNo in CntnrMovStp File
                IF:
                    NO MATCH:
                    DISPLAY:
                            "Container Number not valid, reenter or
                             exit process."
                    EDIT:
                            System will edit CntnrNoPrefix
                            IF:
                                 CntnrNoPrefix < > Alphanumeric
                                 DISPLAY:
                                          Err Msg - "Container number must
                                                     be alphanumeric."

                ELSE:
                        Use CntnrNo from screen to access CntnrMovStp.
                        DISPLAY:
                                   "CntnrNo  CntnrOwn Consignee MultiStpNo"
                                    XXXXXXXX   XXXX     XXXXXX       X

                           System will allow user to course through this
                           scrollable screen to the desired stop.  When the
                           stop is selected, the user will hit "GO" and the
                           first process screen will be displayed.
                        IF:  CntnrNoPrefix in CntnrMov = 000
                             UPDATE:  Screen entered CntnrNoPrefix to
                                      CntnrNoPrefix in CntnrMov.
```

MOVE: CntnrNoPrefix from CntnrMov to Container Number on First Process Screen.

DISPLAY:
First Process Screen

3) IF:
User enters FWTNo
MATCH:
FWTNo from screen with FWTNo in CntnrMov File
IF:
NO MATCH:
DISPLAY: Freight Warrant Number entered not valid. Reenter or exit the process.
ELSE:
Use CntnrNo and CntnrOwnAbbr found in the CntnrMov file to access CntnrMovStp
DISPLAY:
Cntnr Mov Stop data as follows:

CntnrNo	CntnrOwn	Consignee	MultiStpNo
XXXXX	XXXX	XXXXXX	X

System will allow user to course through this scrollable screen to the desired stop. When the stop is selected, the user will hit 'GO' and the first process screen will be displayed.
MOVE:
CntnrNoPrefix from CntnrMov to Container Number on first process screen.

DISPLAY:
First Process Screen

4) IF:
User enters TMRPrefix
MATCH:
TMRPrefix from screen with TMRPrefix in CntnrMov file
IF:
NO MATCH:
DISPLAY: TMRPrefix entered not valid. Reenter or exit the process.
ELSE:
Use CntnrNo and CntnrOwnAbbr found in the CntnrMov file to access CntnrMovStp
DISPLAY:
CntnrMovStp data as follows:

CntnrNo	CntnrOwn	Consignee	MultiStpNo
XXXXX	XXXX	XXXXXX	X

System will allow user to course through this scrollable screen to the desired stop. When the stop is selected, the user will hit 'GO' and the first process screen will be displayed
MOVE:
CntnrNoPrefix from CntnrMov to Container Number on first process screen.

DISPLAY:
First Process Screen

IF:
User enters CntnrTCN.
MATCH:
CntnrTCN from screen with CntnrTCN in CntnrMov.
IF:
No match.
DISPLAY:
"Container TCN not valid. Reenter or exit process."
ELSE:
Select CntnrNo, CntnrOwnAbbr from CntnrMov to access CntnrMovStp.
DISPLAY:
CntnrMovStp data as follows:

Cntnr No	CntnrOwnAbbr Abbr	Consignee	MultiStp No	Stp Comp
XXXXX	XXXX	XXXXXX	X	X
XXXXX	XXXX	XXXXXX	X	X

System will allow user to course through this scrollable screen to the desired stop. When the stop is selected, the user will hit [GO] and the first process screen will be displayed.

MOVE:
CntnrNoPrefix from CntnrMov to Container Number on the first process screen.

After the record selection process (FRONT END) has been completed, the system will do a search based on the Container Number and Consignee selected, and display a screen comprised of the elements indicated.

Request for Reconsignment

1. Request the following container be reconsigned as indicated:

Cntnr Owner:XXXX Cntnr Number:XXXXXXXX Voy.No.:XXXXX POD:XXX

From:XXXXXX Arr Date:XXXXX ITC Address:_____/
_____/_____/_____/__

To:XXXXXX ITC Address:_____/_____/
_____/_____/__

2. Requested by: a. XXXXXX b._____

c. XXXXXXXXXXXXXXXXXXX

3. Justification: _____

_____

4. AE Form 68B will be prepared by the appropriate Transportation Officer or Agent.

5. Date Reconsignment Requested:XXXXX

When the user identifies the container that a customer wants reconsigned in the Front End Screen:

THEN: The system will search (using key data elements) the Cntnr File/Records indicated below and move the data elements to the blank field to the right of the screen name as specified.

Cntnr Mov File

DATA ELEMENT NAME	SCREEN NAME
Cntnr Own Abbr	Cntnr Owner (XXXX)

Cntnr No Prefix/Cntnr No — Cntnr Number (XXXXXXX)
VoyDocuNoFltNo — Voy. No. (XXXXX)
POD — POD (XXX)

Cntnr Mov Stp

Consignee — FROM (XXXXXX)
(FROM THE FRONT END SCREEN SELECTION)

M Event File

Evnt Dte — Arr Date (XXXXX)
(FROM MATCHING TTB A (EvntTy) RECORD)

IF: No TTB A record is found:

THEN: The highlighter line will be positioned in the Arr Dte field.

IF: A TTB A record is found the highlighter line will be positioned on the first portion of the ITC Address first.

Cgo Address

THEN: USE FROM: (Consignee) and search the Cgo Address file for the matching Cgo Address record: (Match Consignee to Ship To AAC in Cgo Address Record)

THEN: Move the data specified to the right of the field
ITC Address: IF: Blanks in record, blank on screen.

		ITC ADDRESS =
F St	(25)	Max Field Length Between /
F Bldg No	(10)	"
F Brks Ksrn	(25)	"

F City Rgn (25) "
F Cntry (2) "

After the screen is displayed with the database data filled in the highlighter line will be positioned on the field to the right of Arr Date: (If no TTB A Record were found). Or in the first field to the right of the ITC Address: (If a TTB A Record is found and the Evnt Dte moved to the screen.)

NOTE: All user entered data elements are mandatory. If the user attempts to bypass any element, the system must display, "Field Required".

IF: The highlighter is on the Arr Date field, the user must enter a 5 position date.

PROMPT = "Enter the 5 pos date the cntnr arrived at the Consignee"

THEN: Edit 5 pos. A/N not to exceed the System Calendar Date.

IF: Invalid date, display "Invalid date, must be 5 pos. A/N".

THEN: The highlight line will move to the first field to the right of ITC Address after the user presses return. The user may enter or overtype any data in the fields of the ITC Address.

THEN: Display the following prompts for each portion of the ITC Address: (See Cgo Address File for ITC Element Sequence)

NOTE: All elements mandatory. If user attempts to bypass an open field, display "Field Required".

F St "Enter the Street Address or NA"
F Bldg No. "Enter the Bldg No. or NA"
F Brks Ksrn "Enter the Barracks/Kasern Name or NA"
F City Rgn "Enter the City or Region Name or NA"
F Cntry "Enter the Country Name or NA"

NOTE: The entries changes made to any portion of the ITC Address will not change the Cgo Address record data. The screen data will be moved to the message file when the request is complete.

THEN: The highlighter will move to the next field of the ITC Address (Separated by /) after the return key is pressed. The user may enter or overtype the data if desired. Edit will be performed to insure 2 characters are present for each field.

THEN: The user may change any portion of the elements that make up the ITC Address, or press return to bypass them if data is in the field.

THEN: After the user enters, changes or bypasses existing (From Database) ITC Address elements, the highlighter line will be positioned on the field to the right of To:

THEN: Display prompt, "Enter the 6 pos. DODAAC of the new Consignee"

THEN: Perform table edit match to the Cgo Address File. (Match To: Consignee to Cgo Address Ship To AAC)

IF: MATCH

THEN: Move the data from the matching Cgo Address record to the screen in the field positions specified above for the From:

NOTE: The same breakdown of data elements for the From ITC Address pertains to the To: Address.

IF: No matching Consignee DODAAC/Ship To AAC is found in the Cgo Address file:

THEN: Display, Consignee DODAAC not on file, reenter or exit process.

THEN: After the user enters a valid To: (Consignee) and presses return:

THEN: The system will move the same data elements that were used in the From ITC Address From the Matching To: (Consignee DODAAC/Ship To AAC) in the Cgo Address file, to the right of the To: ITC Address: And sequence them in the same order.

IF: No Cgo Address record exists, the prompts will instruct the user how to fill in the fields.

NOTE: The user may overtype or enter the data for any portion of the ITC Address data or press return to move to the next portion of the address data. The same edits will be performed as the From ITC Address elements and any corrections made will not over-type data in the Cgo Address File/Record.

THEN: After the user enters, bypasses existing (From Database) or corrects the ITC Address info data and presses return after the last

ITC element:

THEN: The highlighter line will be positioned to the right of requested by: a.

THEN: Display, "Enter the DODAAC of the Requestor"

THEN: Edit 6 pos. A/N (Mandatory Entry)

IF: Invalid Entry

THEN: Display, "Invalid Entry, must be 6 pos. A/N DODAAC"

THEN: After the user presses return the highlighter line will be positioned to the right of b.

THEN: Display, "Enter the name of the person requesting the reconsignment"

NOTE: Must be 2 pos. (Mandatory Entry)

THEN: After the user enters the name and presses return the highlighter line will be positioned to the right of c.

THEN: Display, "Enter the phone no. of the person in b."

NOTE: Must be 2 pos. (Mandatory Entry)

THEN: After the user enters the phone no and presses return, the highlighter line will be positioned to the right of justification:

THEN: Display "Enter the justification for this reconsignment or NA".

NOTE: Must be 2 pos. (Mandatory Entry)

THEN: After the user enters a free form justification and presses return, the highlighter line will be positioned to the right of date reconsignment requested:

THEN: Display, "Enter 5 digit Julian Date reconsignment is/was requested", then press GO.

THEN: Edit 5 pos. numeric. Date not to exceed System Calendar Date. (Mandatory Entry)

IF: Invalid Date

THEN: Display, "Invalid date, must be 5 pos. numeric date."

THEN: After the user enters the date (Last Entry) DISPLAY, "Press GO to create Msg, or CANCEL to deny or RETURN to modify.

IF: The user presses return the highlighter will return to the first user entered element on the screen.

IF: The user presses GO, display "Record Created", the system will create a duplicate of the screen except para. 5 date reconsignment requested, and move all the data to a message file. (Header and para. 1-4) display "Message created, transmit in message process".

IF: The user presses CANCEL, the data on the screen will be destroyed and the open door screen will appear.

Message File Record Format

From: C, MCT _____
TO: Cdr, 1st TMCA, Oberursel Ge /AEUTR-MCA-CC/
Info:
Subj: Request for Reconsignment

Request for Reconsignment

1. Request the following container be reconsigned as indicated:

Cntnr Owner:XXXX Cntnr Number:XXXXXXXX Voy.No.:XXXXX POD:XXX

From:XXXXXX Arr Date:XXXXX ITC Address:_____/
_____/_____/_____/__

To:XXXXXX ITC Address:_____/_____/
_____/_____/__

2. Requested by: a. XXXXXX b._____

c. XXXXXXXXXXXXXXXXXXX

3. Justification: _____

_____

4. AE Form 68B will be prepared by the appropriate Transportation Officer or Agent.

NOTE: Make the file available to the General Message Process. (One file will be created for each Reconsignment Request)

FOOTNOTE: On Demand

THEN: When the file is being created from the screen

MOVE: Date reconsignment requested from the screen to (Dte Recngn Req) in the matching Cntnr Mov Stp record

MOVE: New Consignee from the screen to DivrsnRecngn-Cnsgn in the matching Cntnr Mov Stp record.

THEN: Update the matching Cntnr Mov record (Dte Lst Upd Cntnr) with the 5 pos. System Calendar Dte (Dte Curr).

THEN: Use the Origin MCE Code in the parameter table to search for the MCENme in the Cgo MCE file.

THEN: Move the MCENme to the message file in the field to the right of the "FROM" Address Header.

THEN: Display, the message file name/dte time group on the screen: "(---12---) is your file name, press GO to exit".

NOTE: The users manual must instruct the user to copy down the file name so it can be used to access the report in the general message process.

NOTE: The HELP function key will display the same prompts specified for each data element followed by, "or press GO to continue".

;

MAINTAINS:
CntnrMov-File ;
MAINTAINS:
CntnrMovStp-File ;
UPDATES:
Recngn-Msg-File ;
EMPLOYS:
MEvent-File ,
CgoAddress-File ,
System-Parameter-Tbl ,

```
     CgoMCE-Tbl ;
ADDS:          CntnrMov-Recngn-Upd TO CntnrMov-File ;
ADDS:          CntnrMovStp-Recngn-Upd TO CntnrMovStp-File ;
ADDS:          Req-for-Recngn-Upd TO Recngn-Msg-File ;
MODIFIES:      CntnrMov-Recngn-Upd IN CntnrMov-File ;
REFERENCES:    CntnrMov-Recngn-Ref IN CntnrMov-File ;
REFERENCES:    MEvent-Recngn-Ref IN MEvent-File ;
REFERENCES:    CgoAddress-Recngn-Ref IN CgoAddress-File ;
REFERENCES:    Param-Recngn-Ref IN System-Parameter-Tbl ;
REFERENCES:    CgoMCE-Recngn-Ref IN CgoMCE-Tbl ;
REFERENCES:    CntnrMovStp-Ref IN CntnrMovStp-File ;
CREATES:
     CntnrMov ,
     CntnrMovStp ,
     Req-for-Recngn-Upd ;
RESPONSIBLE PROBLEM DEFINER IS:
               'Valentine' ;
```

This page intentionally left blank.

```
39   DEFINE PROCESS                          Process-ETA-Forecast ;
       KEYWORD IS:     'Container' ,
                       'LOB' ;
       SUBPART IS:     Merge-Reformatted-ETA-Forecast ,
                       Correct-Merge-ETA-Forecast-Err ,
                       Prepare-Merge-Error-Rept ;
       PART OF:        Manage-Container-Operations ;
```

This page intentionally left blank.

```
40   DEFINE PROCESS                          Rec+Report-Cntnr-Mov-Events ;
       DESCRIPTION;
   Record and Report Container Movement Events
   This process receives customer requested container movement actions/
   events and updates the container records.
    ;
       KEYWORD IS:      'Container' ,
                        'LOB' ;
       SUBPART IS:      Prep-Rel-fr-Stg/Hold-Req-<TMS> ,
                        Prep-Diversion-Request-<TM2> ,
                        Prep-Hold/Stg-Request-<TM3> ,
                        Prep-Convey-Change-Notif-<TTU> ,
                        Prep-SEAVAN-Maint-Bgn/E-<TTP> ,
                        Prep-Svan-Maint-Bgn/E-Corr-ZTP ,
                        Prep-Cgo-Dischg/Non-Del-<TTW> ,
                        Prep-Cgo-Non-Dlvr-Corr-<ZTW> ,
                        Prepare-Reconsignment-Request ,
                        Prepare-Cnsgn-Rept-Evnts-<TTB> ,
                        Prep-Cnsgn-Rept-Evnts-Corr-ZTB ,
                        Prep-Delayed-Delivery-Event ,
                        Maintain-Stops ;
       PART OF:         Maintain-Container-Database ;
       RESPONSIBLE PROBLEM DEFINER IS:
                        'CWG' ;
```

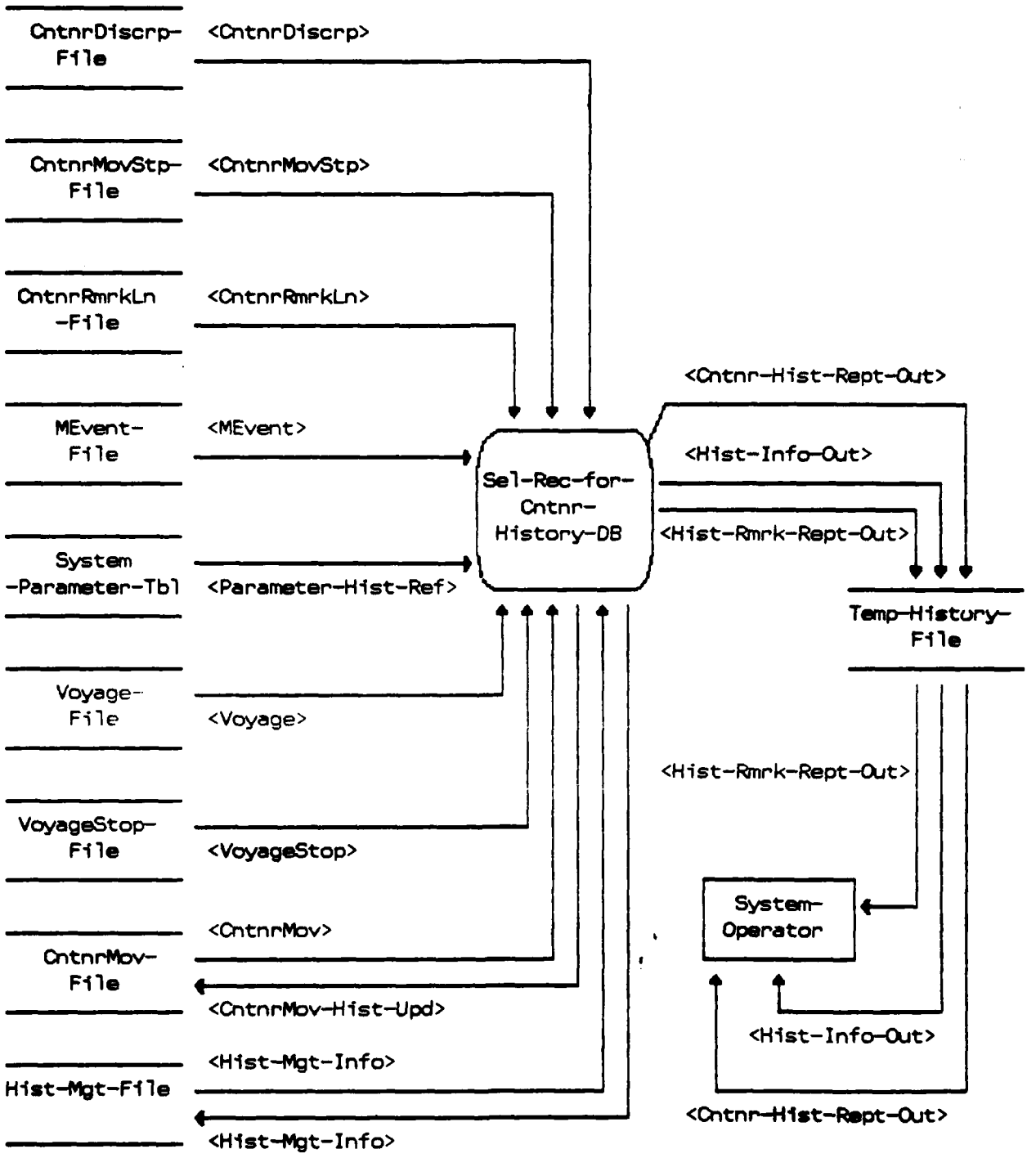

Figure 32. Sel-Rec-for-Cntnr-History-DB

41 DEFINE PROCESS Sel-Rec-for-Cntnr-History-DB ;
DESCRIPTION;
Select Record for Container History Database
This process receives records from the active container log that have move completed information posted and has been closed out for a user defined number of days. History record information is moved from the active file records to the history file media where they are maintained for one year. The process will produce a history report and container remarks report.
;
KEYWORD IS: 'Container' ,
'LOB' ;
SEE MEMO:
TCR-Sel-Rec-Cntnr-Hist-Memo ;
GENERATES:
Hist-Rmrk-Rept-Out ,
Cntnr-Hist-Rept-Out ,
Hist-Info-Out ;
PART OF: Maintain-Cntnr-History-Records ;
PROCEDURE;

When the process is selected by the user from the menu, display: Press GO if this is the master station, else press FINISH.

NOTE: This process must be run on the systems master station.

After the user presses GO:

THEN: Display:
"If backup hasn't been completed today, press FINISH, else press GO."

NOTE: A database backup must be performed prior to running this process to insure the data is not lost in the event the process malfunctions, or the system goes down during it's operation. The users manual must instruct the user the details to perform the backup procedures process prior to using the history process.

THEN: After the user has performed the system backup and has pressed GO, THEN: Display "Ensure that the printer is ready to print, then press GO".

THEN: Display: "Please wait, select records for history process is running".

IF: No records are found that meet the selection criteria to be moved to history:

THEN: Print, "Negative Report" under the header data

in the container history report. (Report format shown later in procedures)

STEP 1. Read: Each record in the CntnrMov file.

IF: The MovCompFlag in a record is not turned on

THEN: Proceed to STEP 2

IF: The MovCompFlag is turned on

THEN: Read the records DteLstUpdCntnr and compute the difference between the DteLstUpdCntnr and today's date (use system calendar function), and compare that number to the value (select record for container history) in the Parameter table.

IF: The difference in the computation is less than the value in select record for container history in the Parameter table

THEN: Read next CntnrMov record (STEP 1)

IF: The difference in the computation is equal to or greater than the value in select record for container history

THEN: Proceed to STEP 4

STEP 2. IF: The Mov Comp Flag is not turned on

THEN: Search to see if the Del Flag in that record is turned on.

IF: The Del Flag is not turned on

THEN: Proceed to STEP 3

IF: The Del Flag is turned on.

THEN: Read the DteLstUpdCntnr in that record and the system's DteCurr and compute the difference.

IF: The computation value is less than the value in (select record for container history) in the parameter table.

THEN: Read next CntnrMov record (STEP 1)

IF: The computation value is equal to or greater than the value in (select record for container history) in the parameter table.

THEN: Proceed to STEP 4.

STEP 3. IF: The Mov Comp Flag and the Del Flag in a Cntnr Mov record is not turned on

THEN: Search for the matching Cntnr Mov Stp record (use key elements)

IF: Stp Comp Flag in any matching Cntnr Mov Stp record is not turned on

THEN: Read next Cntnr Mov record (STEP 1)

IF: Stp Comp Flag is turned on

THEN: Search the Cntnr Mov Stp file for all other matching records with the same key data

IF: Any of the Cntnr Mov Stp records found do not have the Stp Comp Flags turned on

THEN: Read next Cntnr Mov record (STEP 1)

IF: All of the Cntnr Mov Stp records have the Stp Comp Flag turned on

THEN: Search for the matching Cntnr Mov record (use key elements). Update that record by turning on the Mov Comp Flag.

THEN: Update the Cntnr Mov record Dte Lst Upd Cntnr with the Dte Curr from the System Calendar function.

THEN: Read next Cntnr Mov Record (STEP 1)

STEP 4. THEN: Move the data elements from the selected records to the systems temporary history file/record storage as indicated below:

NOTE: Use key data elements to search for matching file records that meet the selection criteria.

NOTE: The format/location of data in the history file records is indicated by the CC #.

NOTE: If data elements listed below are not in a record, continue to the next data element and leave blanks in the history record field.

NOTE: The History Record names indicated will be utilized to access the History Record field data in the AD HOC Process.

CntnrMovStp File

NOTE: After the CntnrMov record has been selected to go to History, then select all matching Cntnr Move Stp records and begin creating separate History records for each stop location. Begin by moving the data elements in the Cntnr Mov Stp record(s) indicated below:

DATA ELEMENT	HISTORY RECORD NAME	FIELD LENGTH	CC#
Consignee	(SAME AS NAME ON LEFT)	6	18-23
DupeStpIndex	"	1	24
DestMCEPrefix	"	1	53
StpSeqNo	"	1	54
MultiStpNo	"	1	101
DteRecngnReq	"	5	102-106
*RecngnCfmNoncfm	"	1	107
DteRecngnCfmNoncfm	"	5	108-112
DivrsnRecngnCnsgn	(RecngnCnsgn)	6	113-118
* NOTE: ONLY MOVE IF	(RecngnCfmNoncfm)	VALUE = C	
DDDteCarrNotif	(SAME AS NAME ON LEFT)	5	119-123
DDActlSptDte	"	5	124-128
DDDteCnsgnReqRelDte	"	5	129-133
DDDteRel	"	5	134-138
DDLoc	"	25	139-163
DivrsnIndic	"	1	164
*DivrsnDte	"	5	165-169

DivrsnRecngnCnsgn	(DivrsnCnsgn)	6	170-175
* NOTE: ONLY MOVE IF	(DivrsnDte) HAS VALUE IN IT.		
DteHoldStart	(SAME AS NAME ON LEFT)	5	176-180
DteHoldStop	"	5	181-185
HoldLoc	"	25	186-210
StpNonFcst	"	1	211

CntnrMov File

DATA ELEMENT	HISTORY RECORD NAME	FIELD LENGTH	CC#
DteRecCreate	(SAME AS NAME ON LEFT)	5	1-5
CntnrNoPrefix	"	3	6-8
CntnrNo	"	5	9-13
CntnrOwnAbbr	"	4	14-17
CntnrTCN	"	17	25-41
VoyDocuNoFltNo	"	5	42-46
OriginMCEPrefix	"	1	47
MthCd	"	1	48
SerNo	"	4	49-52
SpIntCd	"	2	55-56
ModeCd	"	1	57
TransPriCd	"	1	58
FWTNo	"	12	59-70
TIN	"	8	71-78
POD	"	3	79-81
TotStp	"	2	82-83
CntnrSz	"	2	84-85
CmdtyCd	"	3	86-88
ModeMethShpmtCd	"	1	89
DteStageStart	"	5	90-94
DteStageStop	"	5	95-99
CntnrDam	"	1	100

NOTE: Duplicate CntnrMov record data elements indicated above to all matching CntnrMovStp records being created.

MEvent File

NOTE: Use key data elements from the CntnrMovStp record to search for any matching MEvnt records. Matching MEvnt records data will only be posted to the matching MovStp History record.

Read MEvent file for matching records and move data to history as indicated below:

TTB

Selection Criteria: IF: MovEvntCd = TTB and EvntTy = Criteria in left column, move data elements indicated below:

CRITERIA	DATA ELEMENT	HISTORY RECORD NAME	FIELD LENGTH	CC#
A	EvntDte	Arrival Dte	(5)	212-216
B	"	Unload Dte	(5)	217-221
C	"	Unload Discrp Dte	(5)	222-226
D	"	Notif Carr Dte	(5)	227-231
E	"	Carr P/U Dte	(5)	232-236

TM2

Selection Criteria: IF: MovEvntCd = TM2 move data as indicated below:

DATA ELEMENT	HISTORY RECORD NAME	FIELD LENGTH	CC#
EvntDte	TM2 EvntDte	(5)	237-241
AACCurr	TM2 Requestor	(6)	242-247
NewEvntLoc	TM2 NewEvntLoc	(6)	248-253
RsnDenyCd	TM2 RsnDeny	(2)	254-255

TM3

Selection Criteria: IF: MovEvntCd = TM3 move the data as indicated below:

DATA ELEMENT	HISTORY RECORD NAME	FIELD LENGTH	CC#
EvntDte	TM3 EvntDte	(5)	256-260
AACCurr	TM3 Requestor	(6)	261-266
DspoActv	TM3 Releasor	(6)	267-272
RsnDenyCd	TM3 RsnDeny	(2)	273-274

TMS

Selection Criteria: IF: MovEvntCd = TMS move the data as indicated below:

DATA ELEMENT	HISTORY RECORD NAME	FIELD LENGTH	CC#
EvntDte	TMS EvntDte	(5)	275-279

TTP

Selection Criteria: IF: MovEvntCd - TTP and additional selection criteria listed in left column exist, move the data elements indicated:

SELECTION CRITERIA	DATA ELEMENT	HISTORY RECORD NAME	FIELD LENGTH	CC#
EvntTy = A TyPwrCd = E	EvntDte	First Elec On Dte	(5)	280-284
EvntTy = B TyPwrCd = E				

AD-A190 393 FUNCTIONAL DESCRIPTION FOR THE DEPARTMENT OF THE ARMY 6/9
MOVEMENT MANAGEMENT..(U) INTERNATIONAL BUSINESS
SERVICES INC PRINCE GEORGE VA DEFENSE S.. W ANCKAITIS
UNCLASSIFIED 31 DEC 87 DSDPG-375-049-87-3-VOL-1 F/G 12/7 NL

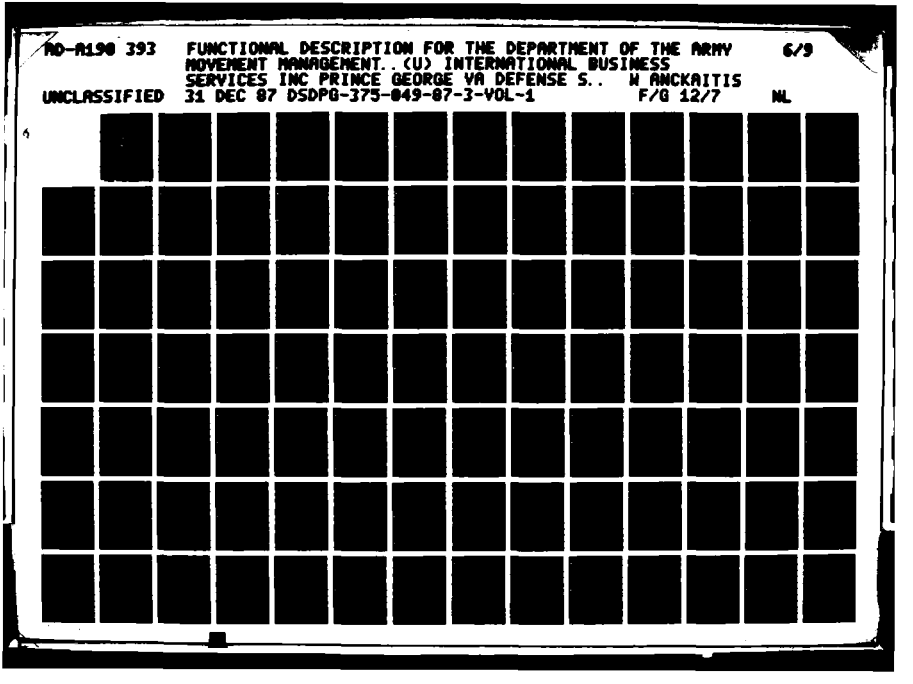

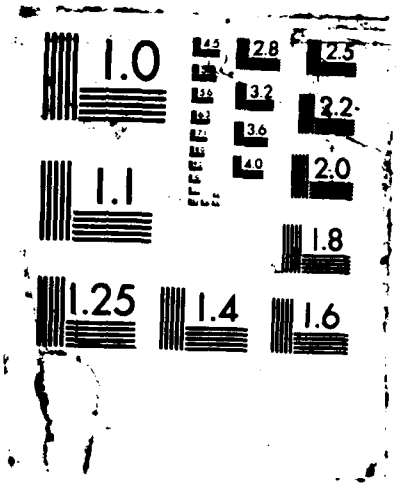
1.0
1.1
1.25
1.4
1.6
1.8
2.0
2.2
2.5
2.8
3.2
3.6
4.0
4.5

	EvntDte	First Elec Off Dte	(5)	285-289
EvntTy = C TyPwrCd = E	EvntDte	Second Elec On Dte	(5)	290-294
EvntTy = D TyPwrCd = E	EvntDte	Second Elec Off Dte	(5)	295-299
EvntTy = A TyPwrCd = G	EvntDte	First Gas On Dte	(5)	300-304
EvntTy = B TyPwrCd = G	EvntDte	First Gas Off Dte	(5)	305-309
EvntTy = C TyPwrCd = G	EvntDte	Second Gas On Dte	(5)	310-314
EvntTy = D TyPwrCd = G	EvntDte	Second Gas Off Dte	(5)	315-319

TTW

Selection Criteria: IF: MovEvntCd = TTW move the data elements indicated:

DATA ELEMENT	HISTORY RECORD NAME	FIELD LENGTH	CC#
EvntDte	TTW EvntDte	(5)	320-324

TTU

Selection Criteria: IF: MovEvntCd = TTU move the data elements indicated:

DATA ELEMENT	HISTORY RECORD NAME	FIELD LENGTH	CC#

EvntDte	(SAME AS NAME ON LEFT)	(5)	325-329
NewMovNo	"	(20)	330-349

Voyage File

DATA ELEMENT	HISTORY RECORD NAME	FIELD LENGTH	CC#
OceanCarrAbbr	(SAME AS NAME ON LEFT)	(4)	350-353

CntnrRmrkLn

If a matching CntnrRmrkLn record exists, the database history remark record data will be temporarily stored in the systems temp history storage area, to be printed after all history record data is moved to the temporary history storage file.

The following data elements will be used to create remark records in the Remark History file.

Dte Rec Create (From Cntnr Mov record)
Cntnr No Prefix (From Cntnr Mov record)
Cntnr No
Cntnr Own Abbr
Consignee
Dupe Stp Index (Used as key only)
Cntnr Rmrk Ln No (01-05 records = 50 characters per line)

print separate line number (01-05) record remark data on a separate line. Do not repeat printing cntnr ID data as depicted in format below.

THEN: Sort all Cntnr Rmrk History records by Dte Rec Create and Cntnr No sequence within the Dte Rec Create group of records.

THEN: Print all the Cntnr Rmrk record data to the report (by Dte Rec Create month group) and leave a line space between each record in the month group.

THEN: Page break between each Dte Rec Create group of records and repeat the header data.

THEN: Post the Dte Rec Create date of the group of records after "For Month of" report header.

THEN: Post the Dte Curr after "Report Date" in the report header.

THEN: Create and print the report format with header data shown below, and display prompt, "Formatting of History Reports is in progress":

EXAMPLE FORMAT

CONTAINER HISTORY REMARKS

Report Date: XXXXX
For Month of: XXX

Cntnr	Owner	Consignee	Remarks
XXXXXXXX	XXXX	XXXXXX	X-----(Line 01 Rmrks)------X(50)
			X-----(Line 02 Rmrks)------X(50)
			X-----(Line 03 Rmrks)------X(50)
XXXXXXXX	XXXX	XXXXXX	X-----(Line 01 Rmrks)------X(50)
			X-----(Line 02 Rmrks)------X(50)

NOTE: This will be a hard copy output report only.

THEN: The following record data elements that were moved to the systems temp history storage will be moved to a Cntnr History report file which will be printed.

CntnrNoPrefix
Cntnr Number
Cntnr Owner Abbr
Consignee
VoyDocuNoFltNo
DteRecCreate

THEN: Sequence records in Dte Rec Create Seq. and Cntnr No Seq.

THEN: Page break between each Dte Rec Create date (month) group of records and repeat header data.

THEN: Move the selected record data to the report in the format shown below:

THEN: Print the report immediately after the container remark report.

THEN: Post the Dte Rec Create date of the group of records after "For Month of" report header.

THEN: Post the Dte Curr after "Report Date" in the report header. Continue to display, "Formatting of History Reports is in progress".

Cntnr History Report Format

PCN PG NO

Report Date:

Container History Report

For Month of:

The following containers were posted to the history file.

CntnrNo	CntnrOwner	Consignee	Voyage No	DteRecCreate
XXXXXXXX	XXXX	XXXXXX	XXXXX	XXXXX
XXXXXXXX	XXXX	XXXXXX	XXXXX	XXXXX

NOTE: This is a hard copy output report

THEN: After all history record data has been transferred to the system temp history storage

THEN: The system will delete the CntnrMov, CntnrMovStp, all MEvent, CntnrDiscrp and CntnrRmrkLn and Cntnr History Report file records (after printing) that

were used to create the history records.

NOTE: Hold key elements for other record searches.

THEN: The system will search for matching Voyage record using the records foreign key (VoyDocuNoFltNo).

IF: The VoyDocuNoFltNo used in the search is the same as any other record in the CntnrMov file

THEN: The Voyage record will not be deleted.

IF: The VoyDocuNoFltNo used in the search does not match any other records in the CntnrMov file,

THEN: Delete the Voyage record from the database.

THEN: The system will search for a matching VoyStp record using the foreign key (VoyDocuNoFltNo) and POD.

IF: The key data elements used in the search are the same as any other records in the CntnrMov file

THEN: The VoyStp record will not be deleted

IF: The key data elements do not match any other records in the CntnrMov file

THEN: Delete the VoyStp record

THEN: The system must provide instructions to the user to move the history record data in the systems temp history storage to floppy disks. The system user procedures are to store history records by calendar month (using the Dte Rec Create dates). The system must convert Dte Rec Create dates to calendar months for prompt displays. Floppy disks will only contain records with the same calendar month. The following procedures will be used to move record data to floppy disks and inform the user of the transfer procedures.

THEN: The system must provide a history management file (Hist-Mgt-File) that will retain storage disk media data generated by the processes operation. The file must retain floppy disk usage data: The calendar month and year of records sent to history (using record Dte Rec Create dates), the number of floppy disks used to store a calendar months records, and the number of records contained on a month(s) disks. The process will post the disk record data to the file as disks are used

in the process to store the history records. The file will keep cumulative totals for the number of disks and number of records on disks for each calendar month as new records with the same Dte Rec Create (months) are added to history.

IF: The Dte Rec Create year of records being moved from the systems temp history file to the history disks do not match the same year/month data in the hist mgt file, proceed as follows:

1. The Hist-Mgt-File contains Jan 87 data and the records in temp history storage are for Jan 88 (no match).

NOTE: Regulations require that history records be maintained for a period of one calendar year.

THEN: The system will delete the earlier years file disk record data in the Hist-Mgt-File and create new disk record data.

THEN: Display, "Load blank formatted disk into the system, then press GO".

NOTE: The users manual should remind system users that the system will delete hist mgt file records over one year old and that the user should remove/delete the history storage disks over one year old I.A.W. regulations from his storage file.

THEN: Proceed with creating Hist-Mgt-File data record as indicated below. (No data for the month is in the Hist-Mgt-File)

2. The Hist-Mgt-File does not contain data with the same month/year.

THEN: The system must instruct the user to load a blank formatted disk to transfer the records in the systems temp history storage to the tape disk media. Display, "Load blank formatted diskette in drive, then press GO".

THEN: After the (months) history record data is moved to the disk, the system will add the value one (1) for the month/year of the disk in the hist mgt file. The hist mgt file will create data records for each calendar month in the year, and update the month/year data with the value of one (1) for each floppy disk used to store that months records. The system will also update the total number of records contained on the disks for any month/year.

THEN: The system will instruct the user to remove and label the blank formatted disk. Example: "Remove and label diskette No 1 for Jan", (The first disk being used for the month/year).

IF: The systems temp history file contains more records with the same month as the records moved to the disk that became full:

THEN: Display, "Load blank formatted diskette into drive, press GO".

THEN: The system instruction prompts must change to inform the user to remove and label all subsequent disks being used to store records for the same month/year. (Multiple disks used for the same month/year). The system must add the value one to the value of the no of disks in the hist mgt file for each new blank disk used to store the same month/year records. Example, if 2 disks are used to store the same months records, display, "Remove and label disk Jan 87 No 2" after the data has been transferred.

IF: The user incorrectly puts an unformatted disk or one that has the wrong history month data on it into the system, the system must display an error message to inform the user that he has not inserted the correct disk into the system. This prompt will change depending on the nature of the error.

THEN: After the correctly formatted blank disk is inserted into the system and GO function key pressed,

MOVE: The records contained in the systems temp history storage with the last 3 digits of the Dte Rec Create equalling the same month on the screen to the disk media.

THEN: Update the Hist Mgt File with the updated disk data after the records are transferred from the systems temp history storage to the disk. Example: Jan 87 Hist Mgt File record = (No. of disks = 2 and no of records on the 2 disks = 321)

THEN: Instruct the user to load a blank formatted disk into the system and press GO. (Only if more records in the systems temp history file remain to be transferred to disks)

NOTE: The procedures and prompts for loading and labeling disks to transfer the data from the system history storage to the disk media will continue until all records (by month) have been transferred to the separate corresponding disk media, and the Hist-Mgt-File updated. Prompts must inform user to load blank disks and label the disks with the month and number of the disk used for the month.

THEN: The procedures for loading and labeling disks will continue as explained above for all other months records in the temp history file that must be transferred to floppy disks.

IF: The same month/year record is stored in the hist mgt file:

THEN: The system will read the data in the matching hist mgt file record and will read the value in disk number and instruct the user to load that disk number into the system. Example: "Load diskette no 2 for Jan, then press GO".

NOTE: In the case where disks have already been used to store history records, the system must instruct the user to use the last disk used if it was not filled with history record data.

THEN: The system will add new records to the disk media until it is full.

IF: The disk becomes full and more data for the same month is in temp history storage:

THEN: Display, "Diskette is full, remove diskette and press GO".

THEN: The system will display, "Load a blank formatted diskette into the drive, then press GO".

EXAMPLE: The hist mgt file contains data on Jan 88 as follows: month/year = Jan 88 and 2 disks have been used to date, to store history records with Dte Rec Create dates equalling Jan 87. Also there are 432 records on the 2 Jan 87 disks.

THEN: The system will add the value one to the value 2 (disks) to total value = 3 (in Hist-Mgt-File), and after the dat is transferred to the disk, display, "Remove and label the disk "Jan 88 no 3".

THEN: The system will continue to provide prompts to instruct the user to load the last disk used for a month, or to label and load new blank formatted disks as required.

THEN: After all history record data stored in the systems temp history storage has been moved to floppy disks:

THEN: Delete the temp history file in the database that stored the history data.

THEN: Display, "Process Complete"

THEN: The process will automatically return the user to the menu.

```
;
   MAINTAINS:
        CntnrMov-File ;
   MAINTAINS:
        Hist-Mgt-File ;
   EMPLOYS:
        CntnrDiscrp-File ,
        CntnrMovStp-File ,
        MEvent-File ,
        System-Parameter-Tbl ,
        Voyage-File ,
        VoyageStop-File ,
        CntnrRmrkLn-File ;
   MODIFIES:       CntnrMov-Hist-Upd IN CntnrMov-File ;
   MODIFIES:       Hist-Mgt-Info IN Hist-Mgt-File ;
   REFERENCES:     CntnrDiscrp IN CntnrDiscrp-File ;
   REFERENCES:     CntnrMovStp IN CntnrMovStp-File ;
   REFERENCES:     CntnrMov IN CntnrMov-File ;
   REFERENCES:     MEvent IN MEvent-File ;
   REFERENCES:     Parameter-Hist-Ref IN System-Parameter-Tbl ;
   REFERENCES:     Voyage IN Voyage-File ;
   REFERENCES:     VoyageStop IN VoyageStop-File ;
   REFERENCES:     CntnrRmrkLn IN CntnrRmrkLn-File ;
   REFERENCES:     Hist-Mgt-Info IN Hist-Mgt-File ;
   REMOVES:        CntnrDiscrp FROM CntnrDiscrp-File ;
   REMOVES:        CntnrMovStp FROM CntnrMovStp-File ;
   REMOVES:        CntnrMov FROM CntnrMov-File ;
   REMOVES:        MEvent FROM MEvent-File ;
   REMOVES:        Parameter-Hist-Ref FROM System-Parameter-Tbl ;
   REMOVES:        Voyage FROM Voyage-File ;
   REMOVES:        VoyageStop FROM VoyageStop-File ;
   REMOVES:        CntnrRmrkLn FROM CntnrRmrkLn-File ;
   DESTROYS:
        CntnrDiscrp ,
        CntnrMovStp ,
        CntnrMov ,
        MEvent ,
        Parameter-Hist-Ref ,
        Voyage ,
        VoyageStop ,
        CntnrRmrkLn ;
   RESPONSIBLE PROBLEM DEFINER IS:
                  'Valentine' ;
```

```
42   DEFINE PROCESS                          System-Calendar-Function ;
       DESCRIPTION;
     This function is a system utility function that generates the
     various required forms of calendar and time.
      ;
        KEYWORD IS:     'TMAS' ,
                        'SYSTEM' ,
                        'Freight' ,
                        'Container' ;
        SOURCE IS:      'TACCS-LOB FD/RD' ;
        ATTRIBUTE IS:
             SEC-CLASS       'UNCLASSIFIED' ,
             PROCESS-MODE     'INTERACTIVE' ;
        RESPONSIBLE PROBLEM DEFINER IS:
                        'TACCS-LOB' ;
        TRACE KEY IS:   'SYSTEM UTILITY' ;
```

43 DEFINE PROCESS System-Uniques ;
PART OF: System-Utilities ;

```
44   DEFINE PROCESS                              System-Utilities ;
       SUBPART IS:     General-Message-Process ,
                       AdHoc-Query ,
                       System-Uniques ,
                       Table-Maintenance ,
                       Maintain-Parameter-Tbl ;
       PART OF:        Manage-Container-Operations ;
```

45 DEFINE PROCESS Table-Maintenance ;
PART OF: System-Utilities ;

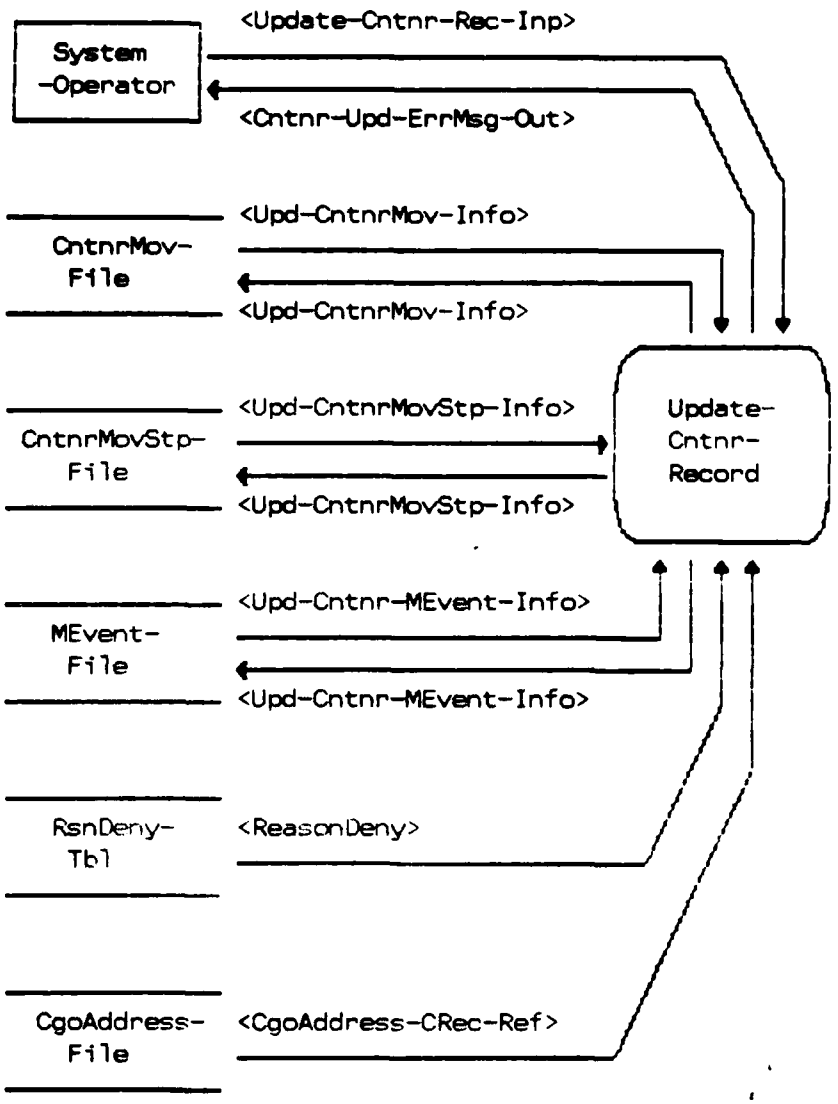

Figure 33. Update-Cntnr-Record

```
46   DEFINE PROCESS                          Update-Cntnr-Record ;
       DESCRIPTION;
    Update Container Record
    This process allows information to be posted to the container move and
    container move stop files that is not posted in the other process
    routines.

    Additionally, selected information for other files concerning a part-
    icular container may be entered.
     ;
        KEYWORD IS:     'Container' ,
                        'LOB' ;
        SEE MEMO:
             Front-End-Process-Memo ,
             TCR-Update-Cntnr-Record-Memo ;
        GENERATES:
             Cntnr-Upd-ErrMsg-Out ;
        RECEIVES:
             Update-Cntnr-Rec-Inp ;
        PART OF:        Maintain-Container-Database ;
        PROCEDURE;

    1)
         If:
             User enters CntnrNo
             MATCH:
                    CntnrNo from screen with CntnrNo in CntnrMovStp File
                    IF:
                        NO MATCH:
                        DISPLAY:
                                "Container Number not valid, reenter or
                                 exit process."

                    ELSE:
                           Use CntnrNo to access CntnrMovStp.
                           DISPLAY:
                           "CntnrNo CntnrOwn Consignee MultiStpNo StpComp"
                             XXXXX   XXXX     XXXXXX       X

                            System will allow user to course through this
                            scrollable screen to the desired stop.  When the
                            stop is selected, the user will hit "GO" and
                            the first process screen will be displayed.
                        MOVE:
                              CntnrNoPrefix from CntnrMov to Container
                              Number on first process screen.
         DISPLAY:
                    First Process Screen
```

```
2)
    IF:
        User enters CntnrNo + CntnrNoPrefix
    MATCH:
          CntnrNo from screen with CntnrNo in CntnrMovStp File
          IF:
              NO MATCH:
              DISPLAY:
                       "Container Number not valid, reenter or
                        exit process."
              EDIT:
                      System will edit CntnrNoPrefix
                      IF:
                           CntnrNoPrefix < > Alphanumeric
                           DISPLAY:
                                    Err Msg - "Container number must
                                              be alphanumeric."

          ELSE:
                 Use CntnrNo from screen to access CntnrMovStp.
                 DISPLAY:
                           "CntnrNo  CntnrOwn Consignee MultiStpNo"
                            XXXXXXXX   XXXX     XXXXXX      X

                    System will allow user to course through this
                    scrollable screen to the desired stop.  When the
                    stop is selected, the user will hit "GO" and the
                    first process screen will be displayed.
                 IF:  CntnrNoPrefix in CntnrMov = 000
                      UPDATE:  Screen entered CntnrNoPrefix to
                               CntnrNoPrefix in CntnrMov.

                      MOVE:  CntnrNoPrefix from CntnrMov to Container
                             Number on First Process Screen.
    DISPLAY:
              First Process Screen

3)  IF:
        User enters FWTNo
        MATCH:
              FWTNo from screen with FWTNo in CntnrMov File
              IF:
                   NO MATCH:
                   DISPLAY:  Freight Warrant Number entered not
                             valid.  Reenter or exit the process.
              ELSE:
                     Use CntnrNo and CntnrOwnAbbr found in the
                     CntnrMov file to access CntnrMovStp
                     DISPLAY:
```

Cntnr Mov Stop data as follows:

CntnrNo	CntnrOwn	Consignee	MultiStpNo
XXXXX	XXXX	XXXXXX	X

System will allow user to course through this scrollable screen to the desired stop. When the stop is selected, the user will hit 'GO' and the first process screen will be displayed.
MOVE:
CntnrNoPrefix from CntnrMov to Container Number on first process screen.

DISPLAY:
First Process Screen

4) IF:
User enters TMRPrefix
MATCH:
TMRPrefix from screen with TMRPrefix in CntnrMov file
IF:
NO MATCH:
DISPLAY: TMRPrefix entered not valid. Reenter or exit the process.
ELSE:
Use CntnrNo and CntnrOwnAbbr found in the CntnrMov file to access CntnrMovStp
DISPLAY:

CntnrMovStp data as follows:

CntnrNo	CntnrOwn	Consignee	MultiStpNo
XXXXX	XXXX	XXXXXX	X

System will allow user to course through this scrollable screen to the desired stop. When the stop is selected, the user will hit 'GO' and the first process screen will be displayed
MOVE:
CntnrNoPrefix from CntnrMov to Container Number on first process screen.

DISPLAY:
First Process Screen

IF:
User enters CntnrTCN.
MATCH:
CntnrTCN from screen with CntnrTCN in CntnrMov.
IF:
No match.
DISPLAY:
"Container TCN not valid. Reenter or exit process."
ELSE:
Select CntnrNo, CntnrOwnAbbr from CntnrMov to access CntnrMovStp.
DISPLAY:
CntnrMovStp data as follows:

Cntnr No	CntnrOwnAbbr Abbr	Consignee	MultiStp No	Stp Comp
XXXXX	XXXX	XXXXXX	X	X
XXXXX	XXXX	XXXXXX	X	X

System will allow user to course through this scrollable screen to the desired stop. When the stop is selected, the user will hit [GO] and the first process screen will be displayed.

MOVE:
CntnrNoPrefix from CntnrMov to Container Number on the first process screen.

DISPLAY:
First Process Screen
System will then display first screen with a prompt stating "Use arrow key to highlight choice, press <GO> or <FINISH>".

POST ADVICE INFORMATION

Container Number	XXXXXXXX	Voyage Number	XXXXX
Container Owner	XXXX	Consignee	XXXXXX

HOLD

DIVERSION
STAGE
RECONSIGNMENT

NOTE: The highlighter at this point will be on HOLD. The user will highlight the desired subject using the down and up Direction Arrow keys or <RETURN> key.

5. Selecting a subject for updating.

   a. IF: A subject area is chosen and the <GO> key is pressed.

      THEN: The upper part of the screen (Container Header Data) will remain, and the bottom portion (Menu) will be replaced by the corresponding data elements applicable to the subject chosen.

   b. IF: The <FINISH> key is pressed.

      THEN: The system will return to the "Open Door" screens.

6. Update HOLD.

   a. IF: Hold is highlighted and the <GO> key is pressed.

      THEN: The system will check the MovEvntCd and EvntTy in MEvent for a TTB-A transaction.

      (1). IF: The system does not find a TTB-A transaction.

         THEN: The system will check the MovEvntCd in MEvent record for a TM3 transaction.

         ELSE: The system will display a prompt stating, "Container has arrived at consignee. Reason denied must be entered".

      (2). IF: The system finds a TM3 transaction.

         THEN: The system will review the CntnrMovStp and MEvent record and display applicable HOLD data assigned to the container selected.

         ELSE: The system will display a prompt stating, "Hold

request not posted".

(3). IF: The system does not find any HOLD data.

THEN: Display the screen below with the data fields blank.

ELSE: Move DteHoldStart, HoldLoc and DteHoldStop values from CntnrMovStp or RsnDenyCd value from MEvent to the screen and display the function keys Clear Screen, Modify, and Delete.

DISPLAY: The system will then display the screen below with the cursor on the "Date Hold Started" and a prompt stating "Enter data and <RETURN> or press <HELP>, <CANCEL> or <FINISH>".

Date Hold Started	--(5)--
Hold Location	----------(25)----------
Date Hold Stopped	--(5)--
Reason Denied Code	-(2)-

NOTE: The cursor can be placed on the "Reason Denied Code" field by pressing the <RETURN> key.

b. IF: The HOLD data field(s) are blank and the user desires to enter data.

THEN: The system will allow the entry of the data and display a prompt stating "Enter data and <RETURN>/<GO> or press <HELP>, <CANCEL> or <FINISH>".

ELSE: The user will press the <CANCEL> key which will display the "Post Advice Information" menu screen or press the <FINISH> key which will display the "Open Door" screen.

(1). IF: The HOLD request has been confirmed.

THEN: The user will ensure that the cursor is located in the blank data field adjacent to the "Date Hold Started" and enter the five position Julian date or press the <HELP> key to enter the current Julian

date.

ELSE: The user presses the <CANCEL> key to return to the "Post Advice Information" menu screen.

IF: The user presses the <RETURN> key without entering a date.

THEN: The cursor will move to the "Reason Denied Code" field.

IF: The user presses the <RETURN> key a second time without entering a "Reason Denied Code".

THEN: The cursor will loop to the "Date Hold Started" field.

IF: The user enters a date in the "Date Hold Started" field and presses the <RETURN> key.

THEN: The system will validate the entered date to insure that it is a valid Julian date and is not greater than the current date.

IF: The Julian date entered is valid.

THEN: The system will accept the entered date and the cursor will advance to the "Hold Location".

ELSE: The system will display one of the following applicable prompts: "Day not valid in Julian Date", "Date cannot be greater than today's date", or "Must be a 5 position number".

(2). IF: The user desires to enter the "Hold Location" which is not a mandatory entry.

THEN: The user will ensure that the cursor is located in the blank data field adjacent to the "Hold Location" and will enter up to 25 spaces of free text data.

IF: The user presses <RETURN> key after entering the location.

THEN: The system will accept the entered location and the cursor will advance to "Date Hold Stopped". (Note: Normally the "Date Hold Stopped" will not be entered during the initial update of HOLD infor-

mation in the CntnrMovStp record. Therefore, to update the database with the HOLD start and location information, the user must press the <GO> key.)

IF: The user presses the <GO> key after entering the "Date Hold Started" and "Hold Location" with the cursor on "Hold Location".

THEN: The system will update CntnrMovStp (DteHoldStart) and (HoldLoc) with the values from the screen and the CntnrMov (DteLstUpdCntnr) with the current date. The system will display a prompt momentarily stating, "Hold advice added" and the "Post Advice Information" menu screen will be displayed.

ELSE: The cursor will advance from "Date Hold Started" to "Hold Location" when the <GO> key is pressed. (Note: The cursor must either be on "Hold Location" or "Date Hold Stopped" in order to update the database when the <GO> key is pressed.)

(3). IF: The user desires to enter "Date Hold Stopped" at the same time that "Date Hold Started" is entered. (Note: To add the "Date Hold Stopped" after the "Date Hold Started" and "Hold Location" have been updated in the database, the user must use the modify or change specifications discussed in paragraph 6c, below).

THEN: The user will insure that the cursor is located in the blank data field adjacent to the "Date Hold Stopped" and enter the five position Julian date or press the <HELP> key to enter the current date.

IF: The <RETURN> key is pressed.

THEN: The system will check the MovEvntCd in MEvent record for a TMS transaction and will validate the entered date to insure that is is a valid Julian date and is greater than or equal to the "Date Hold Started", but not greater than the current date.

ELSE: The system will display a prompt stating, "Hold release (TMS) not posted" or "Date Hold Stopped cannot be before Date Hold Started". Other date prompts which could appear are: "Must be a 5 position number" or "Day not valid in Julian date".

IF: The Julian date entered is valid.

THEN: The system will accept the entered date and the cursor will loop to "Date Hold Started".

IF: The user presses the <GO> key after entering the "Date Hold Stopped".

THEN: The system will update CntnrMovStp (DteHoldStart), (HoldLoc), and (DteHoldStop) with the values from the screen and the CntnrMov (DteLstUpdCntnr) with the current date. The system will display a prompt momentarily stating, "Hold advice added" and it will then display the "Post Advice Information" menu screen.

(4). IF: The HOLD request has been denied.

THEN: The user will press the <RETURN> key to place the cursor in the blank data field adjacent to the "Reason Denied Code" and will then enter the two position code. This code will be validated against the Reason Deny Table.

IF: The Reason Denied Code entered is valid.

THEN: The system will accept the code and the cursor will remain on the "Reason Denied Code" field when the <RETURN> key is pressed.

ELSE: The system will display a prompt stating "Code not valid, press <HELP> for a list of valid codes".

IF: The user presses the <HELP> key.

THEN: The system will display the Reason Deny Table on a scrollable screen and a prompt stating, "Select desired entry, then press <GO>/<FINISH>/<CANCEL>".

IF: The user highlights the desired code on the HELP screen and presses the <GO> key.

THEN: The system will assign the highlighted code value to the HOLD screen and will display a prompt stating, "Enter data and <RETURN>/<GO> or press <HELP>,

<CANCEL> or <FINISH>".

IF: The <GO> key is pressed.

THEN: The system will update (RsnDenyCd) in MEvent with the value from the screen and assign the Current Date to (DteLst-UpdCntnr) in CntnrMov. The system will display a prompt momentarily stating, "Hold advice added" and it will then display the "Post Advice Information" menu screen.

ELSE: The user can press the <CANCEL> key and display the "Post Advice Information" menu screen or press the <FINISH> key and display the "Open Door" screen.

c. IF: HOLD data exists when a record is selected.

MOVE: DteHoldStart, HoldLoc, and DteHoldStop from CntnrMovStp or RsnDenyCd from MEvent to the screen.

ELSE: Display the screen below with the data fields and function keys blank.

DISPLAY: The system will display the HOLD screen below with the applicable data fields filled and the function keys Clear Screen, Modify, and Delete depicted at the bottom of the screen. The system will also display a prompt stating, "Please press the desired function key".

Date Hold Started	xx(5)xx
Hold Location	xxxxxxxxxx(25)xxxxxxxxxxxx
Date Hold Stopped	xx(5)xx
Reason Denied Code	x(2)x

Clear Screen		Modify		Delete

IF: The user desires to add, change or modify the HOLD data.

THEN: The user will press the function key <MODIFY> which will allow the displayed data to be changed. A prompt will

also be displayed stating "Enter data and <RETURN> or press <HELP>, <CANCEL> or <FINISH>".

ELSE: The user presses the <Clear Screen> function key which will display the "Post Advice Information" menu screen.

(1). IF: The user desires to change the "Date Hold Started".

THEN: The user will ensure that the cursor is located in the data field adjacent to the "Date Hold Started" and over type the existing five position Julian date with the new date or press <HELP> and enter the current Julian date.

ELSE: The user will press the <CANCEL> key which will display the "Post Advice Information" menu screen or press the <FINISH> key which will display the "Open Door" screen.

IF: The <RETURN> key is pressed.

THEN: The system will validate the entered date to insure that it is a valid Julian date and is not greater than the current date.

ELSE: The system will display one of the following applicable prompts: "Day not valid in Julian Date", "Date cannot be greater than today's date", or "Must be a 5 position number".

IF: The Julian date entered is valid.

THEN: The system will accept the entered date and the cursor will advance to the "Hold Location".

IF: No other changes are required to the HOLD data.

THEN: The user can press the <GO> key which will update the CntnrMovStp record (DteHoldStart) with the new value from the screen and CntnrMov (DteLst-UpdCntnr) with the current date. The system will also display a prompt momentarily stating, "Hold advice modified", and the "Post Advice Information" menu screen will be displayed.

(2). IF: The user desires to change the "Hold Location" which is not a mandatory entry.

THEN: The user will ensure that the cursor is located on

the "Hold Location" and over type the existing data with up to 25 spaces of free text data.

ELSE: The user will press the <CANCEL> key which will display the "Post Advice Information" menu screen or press the <FINISH> key which will display the "Open Door" screen.

IF: The user presses <RETURN> key after entering the new location.

THEN: The system will accept the entered location and the cursor will advance to "Date Hold Stopped".

IF: No other changes are required to the HOLD data.

THEN: The user can press the <GO> key which will update the CntnrMovStp record (HoldLoc) with the new value from the screen and CntnrMov (DteLstUpdCntnr) with the current date. The system will also display a prompt momentarily stating, "Hold advice modified", and the "Post Advice Information" menu screen will be displayed.

(3). IF: The user desires to enter a new "Date Hold Stopped" or change the existing date.

THEN: The user will insure that the cursor is located on the "Date Hold Stopped" and enter a new Julian date or over type the existing Julian date or press <HELP> and enter the current date.

ELSE: The user will press the <CANCEL> key which will display the "Post Advice Information" menu screen or press the <FINISH> key which will display the "Open Door" screen.

IF: The <RETURN> key is pressed.

THEN: The system will check the MovEvntCd in MEvent record for a TMS transaction and will validate the entered date to insure that it is a valid Julian date and is greater than or equal to the "Date Hold Started", but not greater than the current date.

ELSE: The system will display a prompt stating, "Hold release (TMS) not posted" or "Date Hold Stopped cannot be before Date Hold Started". Other date

prompts which could appear are: "Must be a 5 position number" or "Day not valid in Julian date".

IF: The Julian date entered is valid.

THEN: The system will accept the entered date and the cursor will loop to "Date Hold Started".

IF: The user presses the <GO> key after entering the "Date Hold Stopped".

THEN: The system will update CntnrMovStp (DteHoldStop) with the value from the screen and the CntnrMov (DteLstUpdCntnr) with the current date. The system will display a prompt momentarily stating, "Hold advice modified" and it will then display the "Post Advice Information" menu screen.

(4). IF: The user desires to change the "Reason Denied Code".

THEN: The user will press the <RETURN> key to move the cursor to the "Reason Denied Code" and over type the existing two position code with the new code.

IF: The user presses the <RETURN> key after entering the new code.

THEN: The system will validate the new code against the Reason Deny Table.

IF: The Reason Denied Code entered is valid.

THEN: The system will accept the code and the cursor will remain on the "Reason Denied Code" field when the <RETURN> key is pressed.

ELSE: The system will display a prompt stating "Code not valid, press <HELP> for a list of valid codes".

IF: The user presses the <HELP> key.

THEN: The system will display the Reason Deny Table on a scrollable screen and a prompt stating, "Select desired entry, then press <GO>/<FINISH>/<CANCEL>".

IF: The user highlights the desired code on the

HELP screen and presses the <GO> key.

THEN: The system will assign the highlighted code value to the HOLD screen and will display a prompt stating, "Enter data and <RETURN>/<GO> or press <HELP>, <CANCEL> or <FINISH>".

IF: The <GO> key is pressed.

THEN: The system will update (RsnDenyCd) in MEvent with the value from the screen and assign the Current Date to (DteLstUpdCntnr) in CntnrMov. The system will also display a prompt momentarily stating, "Hold advice modified" and then depict the "Post Advice Information" menu screen.

(5). IF: The user desires to delete the HOLD data.

THEN: The user will press the function key <DELETE> which will display a prompt stating "Press <GO> to delete, or <CANCEL> to deny".

IF: The <GO> key is pressed.

THEN: The system will delete all of the displayed data and update the CntnrMovStp record (DteHoldStart, HoldLoc, and DteHoldStop) or MEvent record (RsnDenyCd) with blank fields and assign the current date to (DateLstUpdCntnr) in CntnrMov. The system will also display a prompt momentarily stating, "Hold advice deleted" and then depict the "Post Advice Information" menu screen.

ELSE: The user presses the <CANCEL> key and the displayed HOLD data will not be deleted and will remain as is in the database. The system will then display the "Post Advice Information" menu screen.

7. Update DIVERSION.

a. IF: DIVERSION is highlighted and the <GO> key is pressed.

THEN: The system will check the MovEvntCd and EvntTy in MEvent for a TTB-A transaction.

(1). IF: The system does not find a TTB-A transaction.

THEN: The system will check the DteRecngnReq in CntnrMov-Stp for a Reconsignment Request.

(2). IF: The system does not find a Reconsignment Request.

THEN: The system will check the MovEvntCd in MEvent record for a TM2 transactiion.

ELSE: The system finds a TTB-A or Reconsignment Request will display a prompt stating, "Container has arrived at consignee. Reason Denied must be entered".

(3). IF: The system does not find a TM2 transaction.

THEN: The system will check the MovEvntCd and NewEvntLoc in MEvent record for a TMS transaction and a new location, respectively.

ELSE: The system will display a prompt momentarily stating, "Diversion request (TM2) not posted".

(4). IF: The system finds a TM2 transaction or a TMS with data in the NewEvntLoc field.

THEN: The system will review the CntnrMovStp record and display any DIVERSION data.

(5). IF: The system does not find DIVERSION data.

THEN: Display the screen below with NewEvntLoc in MEvent displayed in "Diversion Location" and the other fields blank.

ELSE: Move DivrsnDte and DivrsnRecngnCnsgn from Cntnr-MovStp or RsnDenyCd from MEvent to the screen and display the function keys Clear Screen, Modify, and Delete.

DISPLAY: The system will then display the screen below with the cursor on the "Diversion Date" and a prompt stating, "Enter data and <RETURN> or press <HELP>, <CANCEL> or <FINISH>".

```
Diversion Date              --(5)--
Diversion Location          xxx(6)xxx
```

Reason Denied Code -(2)-

NOTE: The cursor can be placed on the "Reason Denied Code" field by pressing the <RETURN> key.

b. IF: The DIVERSION date and deny code fields are blank and the user desires to enter data.

THEN: The system will allow the entry of the data and display a prompt stating "Enter data and <RETURN>/<GO> or press <HELP>, <CANCEL> or <FINISH>".

ELSE: The user will press the <CANCEL> key which will display the "Post Advice Information" menu screen or press the <FINISH> key which will display the "Open Door" screen.

(1). IF: The DIVERSION request has been confirmed.

THEN: The user will ensure the cursor is located in the blank data field adjacent to the "Diversion Date" and enter the five position Julian date or press the <HELP> key to enter the current Julian date.

ELSE: The user presses the <CANCEL> key to return to the "Post Advice Information" menu screen.

IF: The user presses the <RETURN> key without entering a date.

THEN: The cursor will move to the "Reason Denied Code" field and the displayed "Diversion Location" value will be deleted from the screen.

IF: The user presses the <RETURN> key a second time without entering a "Reason Denied Code".

THEN: The cursor will loop to the "Diversion Date" field and presses the <RETURN> key.

IF: The user enters a date in the "Diversion Date" field and presses the <RETURN> key.

THEN: The system will validate the entered date to insure that it is a valid Julian date and is less than or equal to the current date, but greater than or

equal to the DteDprtCnsgnr in CntnrMov.

IF: The Julian date entered is valid.

THEN: The system will accept the entered date and the cursor will advance to the "Diversion Location".

ELSE: The system will display one of the following applicable prompts: "Day not valid in Julian Date", "Date cannot be greater than today's date", or "Must be a 5 position number".

(2). IF: The user desires to enter a different "Diversion Location". (Note: The cursor cannot be placed on the "Diversion Location" unless a "Diversion Date" is entered).

THEN: The user will insure that the cursor is located on the data field adjacent to the "Diversion Location" and will enter a six position DODAAC by over typing the displayed (NewEvntLoc) DODAAC.

IF: The user blanks out the field and presses the <RETURN> key.

THEN: The system will display a prompt stating, "Required Element. Must enter".

IF: The user enters a DODAAC and presses the <RETURN> key.

THEN: The system will validate the DODAAC entered against the ShipToAAC in Cargo Address file. (Note: If the user presses the <HELP> key, the system will display a prompt stating, "No Help available".)

IF: The DODAAC entered is valid.

THEN: The cursor will remain on "Diversion Location". (Note: The database is not updated until the <GO> key is pressed.)

ELSE: The system will display a prompt stating, "DODAAC not valid".

IF: The user presses the <GO> key.

THEN: The system will update CntnrMovStp record (Divrsn-

Dte) and (DivrsnRecngnCnsgn) with the values on the screen and (DivrsnIndic) and (StpCompFlag) with value "ON", and the CntnrMov (DteLstUpdCntnr) with the current date. The system will display a prompt momentarily stating, "Diversion advice added" and the "Post Advice Information" menu screen will be displayed.

(3). IF: The DIVERSION request has been denied.

THEN: The user will press the <RETURN> key to place the cursor in the blank data field adjacent to the "Reason Denied Code" and will then enter the two position code. This code will be validated against the Reason Deny Table.

IF: The Reason Denied Code entered is valid.

THEN: The system will accept the code and the cursor will remain on the "Reason Denied Code" field when the <RETURN> key is pressed.

ELSE: The system will display a prompt stating "Code not valid, press <HELP> for a list of valid codes".

IF: The user presses the <HELP> key.

THEN: The system will display the Reason Deny Table on a scrollable screen and a prompt stating, "Select desired entry, then press <GO>/ <FINISH>/<CANCEL>".

IF: The user highlights the desired code on the HELP screen and presses the <GO> key.

THEN: The system will assign the highlighted code value to the DIVERSION screen and will display a prompt stating, "Enter data and <RETURN>/<GO> or press <HELP>, <CANCEL> or <FINISH>".

IF: THe <GO> key is pressed.

THEN: The system will update (RsnDenyCd) in MEvent with the value from the screen and assign the Current Date to (DteLst-UpdCntnr) in CntnrMov. The system will display a prompt momentarily stating,

"Diversion advice added" and the "Post Advice Information" menu screen will be displayed.

ELSE: The user can press the <CANCEL> key and return to the "Post Advice Information" menu screen or press the <FINISH> key and return to the "Open Door" screen.

c. IF: DIVERSION data exists when a record is selected.

MOVE: DivrsnDte and DivrsnRecngnCnsgn from CntnrMovStp or RsnDenyCd from MEvent to the screen.

ELSE: Display the screen below with the data fields and function keys blank.

DISPLAY: The system will display the DIVERSION screen below with the applicable data fields filled and the function keys Clear Screen, Modify, and Delete depicted at the bottom of the screen. The system will also display a prompt stating, "Please press the desired function key".

Diversion Date	xx(5)xx
Diversion Location	xxx(6)xxx
Reason Denied Code	x(2)x

Clear Screen		Modify		Delete

IF: The user desires to change or modify the DIVERSION data.

THEN: The user will press the function key <MODIFY> which will allow the displayed data to be changed. A prompt will also be displayed stating "Enter data and <RETURN> or press <HELP>, <CANCEL> or <FINISH>".

ELSE: The user presses the <Clear Screen> function key which will display the "Post Advice Information" menu screen.

(1). IF: The user desires to change the "Diversion Date".

THEN: The user will ensure the cursor is located in the data field adjacent to the "Diversion Date" and over type the existing five position Julian

date or press the <HELP> key to enter the current Julian date.

ELSE: The user presses the <CANCEL> key which will display the "Post Advice Information" menu screen or press the <FINISH> key which will display the "Open Door" screen.

IF: The user presses the <RETURN> key after entering the date.

THEN: The system will validate the entered date to insure that it is a valid Julian date and is less than or equal to the current date, but greater than or equal to the DteDprtCnsgnr in CntnrMov.

IF: The Julian date entered is valid.

THEN: The system will accept the entered date and the cursor will advance to the "Diversion Location".

ELSE: The system will display one of the following applicable prompts: "Day not valid in Julian Date", "Date cannot be greater than today's date", or "Must be a 5 position number".

IF: No other changes are required to the DIVERSION data.

THEN: The user can press the <GO> key which will update CntnrMovStp (DivrsnDte) with the new value, check to ensure that the (DivrsnIndic) and (StpCompFlag) values are "ON", and assign the current date to (DteLstUpdCntnr) in CntnrMov. The system will also display a prompt momentarily stating, "Diversion advice modified" and the "Post Advice Information" menu screen will be displayed.

(2). IF: The user desires to change "Diversion Location".

THEN: The user will ensure that the cursor is located on the "Diversion Location" and over type the existing DODAC with the new DODAAC.

ELSE: The user presses the <CANCEL> key which will display the "Post Advice Information" menu screen or press the <FINISH> key which will display the "Open Door" screen.

IF: The user presses the <RETURN> key after entering

the new location.

THEN: The system will check that a "Diversion Date" has been entered and validate the DODAAC entered against the ShipToAAC in Cargo Address file. (Note: If the user presses the <HELP> key, the system will display a prompt stating, "No Help available".)

IF: The DODAAC entered is valid

THEN: The cursor will loop to the "Diversion Date". (Note: The database is not updated until the <GO> key is pressed. For this to occur, the cursor must be located on the "Diversion Location" or "Reason Denied Code" fields when the <GO> key is pressed.)

IF: The <GO> key is pressed with the cursor on "Diversion Date".

THEN: The system will react as though the <RETURN> key was pressed and will advance to the "Diversion Location" field.

IF: The user presses the <GO> key with the cursor on "Diversion Location".

THEN: The system will update the CntnrMovStp record (DivrsnRecngnCnsgn) with the new value on the screen, check to ensure that the (DivrsnIndic) and (StpCompFlag) values are "ON", and assign the current date to (DteLstUpdCntnr) in CntnrMov. The system will also display a prompt momentarily stating, "Diversion advice modified" and the "Post Advice Information" menu screen will be displayed.

ELSE: The system will display a prompt stating, "DODAAC not valid".

(3). IF: The user desires to change the "Reason Denied Code".

THEN: The user will press the <RETURN> key to place the cursor on the "Reason Denied Code" and over type the existing two position code with the new code.

IF: The user presses the <RETURN> key after entering the new code.

THEN: The system will validate the new code against the Reason Deny Table.

IF: The Reason Denied Code entered is valid.

THEN: The system will accept the code and the cursor will remain on the "Reason Denied Code" field when the <RETURN> key is pressed.

ELSE: The system will display a prompt stating "Code not valid, press <HELP> for a list of valid codes".

IF: The user presses the <HELP> key.

THEN: The system will display the Reason Deny Table on a scrollable screen and a prompt stating, "Select desired entry, then press <GO>/ <FINISH>/<CANCEL>".

IF: The user highlights the desired code on the HELP screen and presses the <GO> key.

THEN: The system will assign the highlighted code value to the DIVERSION screen and will display a prompt stating, "Enter data and <RETURN>/<GO> or press <HELP>, <CANCEL> or <FINISH>".

IF: The <GO> key is pressed.

THEN: The system will update (RsnDenyCd) in MEvent with the value from the screen and assign the Current Date to (DteLstUpd-Cntnr) in CntnrMov. The sytem will display a prompt momentarily stating, "Diversion advice modified" and the "Post Advice Information" menu screen will be displayed.

ELSE: The user can press the <CANCEL> key and return to the "Post Advice Information" menu screen or press the <FINISH> key and return to the "Open Door" screen.

(4). IF: The user desires to delete the DIVERSION data.

THEN: The user will press the function key <DELETE> which will display a prompt stating "Press <GO> to delete, or <CANCEL> to deny".

IF: The <GO> key is pressed.

THEN: The system will delete all of the displayed data and update the CntnrMovStp record (DivrsnDte, DivrsnRecngnCnsgn, StpCompFlag and DivrsnIndic) or MEvent record (RsnDenyCd) with blank fields. The system will also check the (MovCompFlag) in CntnrMov to insure that it is turned "OFF" and will enter the current date in (DteLstUpdCntnr). Lastly, the system will display a prompt momentarily stating, "Diversion advice deleted" and then depict the "Post Advice Information" menu screen.

ELSE: The user presses the <CANCEL> key and the displayed DIVERSION data will not be deleted and will remain as is in the database. The system will then display the "Post Advice Information" menu screen.

8. Update STAGE.

a. IF: STAGE is highlighted and the <GO> key is pressed.

THEN: The system will check the MovEvntCd and EvntTy in MEvent for a TTB-A transaction.

(1). IF: The system does not find a TTB-A transaction.

THEN: The system will review the CntnrMov and MEvent record and display applicable STAGE data assigned to the container selected.

ELSE: The system will display a prompt momentarily stating, "Container has arrived at consignee" and the system will then display the "Post Advice Information" menu screen.

(2). IF: The system does not find any STAGE data.

THEN: Display the screen below with the data fields blank.

ELSE: Move DteStageStart and DteStageStop from CntnrMov to the screen and display the function keys Clear Screen, Modify, and Delete.

DISPLAY: The system will then display the screen below

with the cursor on the "Date Stage Started" and a prompt stating, "Enter data and <RETURN>/<GO> or press <HELP>, <CANCEL> or <FINISH>".

Date Stage Started --(5)--
Date Stage Stopped --(5)--

---

b. IF: The STAGE data field(s) are blank and the user attempts to move the cursor from "Date Stage Started" to "Date Stage Stopped" by pressing the <RETURN> key.

THEN: The system will display a prompt stating, "Required Element. Must enter".

ELSE: The user will press the <CANCEL> key which will display the "Post Advice Information" menu screen or press the <FINISH> key which will display the "Open Door" screen.

(1). IF: The user desires to enter the "Date Stage Started".

THEN: The user will insure that the cursor is located in the blank data field adjacent to the "Date Stage Started" and enter the five position Julian date or press the <HELP> key to enter the current Julian date.

ELSE: The user presses the <CANCEL> key to return to return to the "Post Advice Information" menu screen.

IF: The user presses the <RETURN> key after entering the date.

THEN: The system will validate the entered date to insure that it is a valid Julian date and is not greater than the current date.

IF: The Julian date entered is valid.

THEN: The system will accept the entered date and the cursor will advance to the "Date Stage Stopped".

ELSE: The system will display one of the following

applicable prompts: "Day not valid in Julian Date", "Date cannot be greater than today's date", or "Must be a 5 position number".

IF: The user presses the <GO> key after entering the "Date Stage Started".

THEN: The system will update CntnrMov (DteStageStart) with the value from the screen, (StgIndic) with the value "ON", and (DteLstUpdCntnr) with the current date. The system will display a prompt momentarily stating, "Stage advice added" and the "Post Advice Information" menu screen will be displayed.

(2). IF: The user desires to enter "Date Stage Stopped". (Note: To add the "Date Stage Stopped" after the "Date Stage Started" has been updated in the database, the user must use the modify or change specifications discussed in paragraph 8c, below.)

THEN: The user will ensure that the cursor is located in the blank data field adjacent to the "Date Stage Stopped" and enter the five position Julian date or press the <HELP> key to enter the current date.

IF: The <RETURN> key is pressed.

THEN: The system will validate the entered date to insure that it is a valid Julian date and is greater than or equal to the "Date Stage Started" but not greater than the current date.

ELSE: The system will display a prompt stating, "Date Stage Stopped cannot be before Date Stage Started". Other date prompts which could appear are: "Must be a 5 position number", "Day not valid in Julian Date", or "Date cannot be greater than today's date".

IF: The Julian date entered is valid.

THEN: The system will accept the entered date and the cursor will loop to "Date Stage Started".

IF: The user presses the <GO> key after entering the "Date Hold Stopped".

THEN: The system will update CntnrMov (DteStageStop) with the value from the screen, (DteLstUpd-Cntnr) with the current date, and check (StgIndic) to ensure that the value is "ON". the system will display a prompt momentarily stating, "Stage advice added" and it will then display the "Post Advice Information" menu screen.

c. IF: STAGE data exists when a record is selected.

MOVE: DteStageStart and DteStageStop from CntnrMov to the screen.

ELSE: Display the screen below with the data fields and function keys blank.

DISPLAY: The system will display the STAGE screen below with the applicable data fields filled and function keys Clear Screen, Modify, and Delete depicted at the bottom of the screen. The system will also display a prompt stating, "Please press the desired function key".

Date Stage Started xx(5)xx
Date Stage Stopped xx(5)xx

Clear Screen		Modify		Delete

IF: The user desires to add, change or modify the STAGE data.

THEN: The user will press the function key <MODIFY> which will allow the displayed data to be changed. A prompt will also be displayed stating "Enter data and <RETURN> or press <HELP>, <CANCEL> or <FINISH>".

ELSE: The user will press the <Clear Screen> functiion key which will display the "Post Advice Information" menu screen.

(1). IF: The user desires to change the "Date Stage Started".

THEN: The user will ensure that the cursor is located on

the "Date Stage Started" and over type the existing five position Julian date with the new date or press <HELP> and enter the current Julian date.

ELSE: The user will press the <CANCEL> key which will display the "Post Advice Information" menu screen or press the <FINISH> key which will display the "Open Door" screen.

IF: The <RETURN> key is pressed.

THEN: The system will validate the entered date to insure that it is a valid Julian date and is not greater than the current date.

ELSE: The system will display one of the following applicable prompts: "Day not valid in Julian Date", "Date cannot be greater than today's date", or "Must be a 5 position number".

IF: The Julian date entered is valid.

THEN: The system will accept the entered date and the cursor will advance to the "Date Stage Stopped".

IF: No other changes are required to the STAGE data.

THEN: The user can press the <GO> key which will update the CntnrMov record (DteStageStart) with the new value from the screen, (DteLstUpdCntnr) with the current date, and check (StgIndic) to ensure the value is "ON". The system will also display a prompt momentarily stating, "Stage advice modified" and the "Post Advice Information" menu screen will be displayed.

(2). IF: The user desires to enter a new "Date Stage Stopped" or change the existing date.

THEN: The user will ensure that the cursor is located on the "Date Stage Stopped" and enter a new Julian date or press <HELP> and enter the current date.

ELSE: The user will press the <CANCEL> key which will display the "Post Advice Information" menu screen or press the <FINISH> key which will display the "Open Door" screen.

IF: The <RETURN> key is pressed.

THEN: The system will validate the entered date to insure that it is a valid Julian date and is greater than or equal to the "Date Stage Started", but not greater than the current date.

ELSE: The system will display a prompt stating, "Date Stage Stopped cannot be before Date Stage Started". Other prompts which could appear are: "Must be a 5 position number", "Day not valid in Julian Date", or "Date cannot be greater than today's date".

IF: The Julian date entered is valid

THEN: The system will accept the entered date and the cursor will loop to "Date Stage Started".

IF: The user presses the <GO> key after entering the "Date Stage Stopped".

THEN: The system will update CntnrMov (DteStageStop) with the value from the screen, (DteLstUpdCntnr) with the current date, and check (StgIndic) to ensure that the value is "ON". The system will also display a prompt momentarily stating, "Stage advice modified" and it will then display the "Post Advice Information" menu screen.

(3). IF: The user desires to delete the STAGE data.

THEN: The user will press the function key <DELETE> which will display a prompt stating "Press <GO> to delete, or <CANCEL> to deny".

IF: The <GO> key is pressed.

THEN: The system will delete all of the displayed data and update the CntnrMov record (DteStageStart, DteStageStop, and StgIndic) with blank fields. The system will assign the current date to (DteLstUpdCntnr) in CntnrMov. The system will also display a prompt momentarily stating, "Stage advice deleted" and then depict the "Post Advice Information" menu screen.

ELSE: The user presses the <CANCEL> key and the displayed STAGE data will not be deleted and will remain

as is in the database. The system will then display the "Post Advice Information" menu screen.

9. Update RECONSIGNMENT.

a. IF: RECONSIGNMENT is highlighted and the <GO> key is pressed.

THEN: The system will check the DteRecngnReq in CntnrMovStp record.

IF: The system finds a date in DteRecngnReq.

THEN: Display the screen below with DivrsnRecngnCnsgn in CntnrMovStp displayed in "Reconsignment Location" and the other data fields blank.

ELSE: The system will display a prompt momentarily stating, "Reconsignment request not posted". The system will then display the "Post Advice Information" menu screen.

DISPLAY: The system will then display the screen below with the cursor on the "Reconsignment Confirmed or Nonconfirmed" and a prompt stating "Enter data and <RETURN> or press <HELP>, <CANCEL> or <FINISH>".

Reconsignment Confirmed or Nonconfirmed	-(1)- (Enter C or N)
Date Reconsignment Confirmed or Nonconfirmed	--(5)--
Reconsignment Location	xxx(6)xx

---

b. IF: The RECONSIGNMENT confirmed/nonconfirmed and date confirmed/nonconfirmed data fields are blank and the user desires to enter data.

THEN: The system will allow the entry of the data.

ELSE: The user will press the <CANCEL> key which will display the "Post Advice Information" menu screen or press the <FINISH> key which will display the "Open Door" screen.

(1). IF: The RECONSIGNMENT request has been either confirmed or nonconfirmed.

THEN: The user will ensure the cursor is located in the

blank data field adjacent to the "Reconsignment Confirmed or Nonconfirmed" and enter the one position code (e.g. "C" for Confirmed or "N" for Nonconfirmed).

IF: The code entered is a "C" and the <RETURN> key is pressed.

THEN: The system will check the DivrsnIndic in CntnrMov-Stp.

ELSE: The system will display a prompt stating "Must enter C or N".

IF: The system does not find the DivrsnIndic flag "ON".

THEN: The system will check the MovEvntCd and EvntTy in MEvent for a TTB-A transaction.

ELSE: The system will display a prompt stating, "Diversion already posted".

IF: The system finds a TTB-A transaction.

THEN: The system will check the MovEvntCd and EvntTy in MEvent for a TTB-B or C transaction.

ELSE: The system will display a prompt stating, "Container must arrive before confirmation can be posted".

IF: The system does not find a TTB-B or C transaction or the value entered was an "N" for Nonconfirmed.

THEN: The system will accept the entered value and the cursor will advance to the "Date Reconsignment Confirmed or Nonconfirmed".

ELSE: The system will display a prompt stating, "Container has been discharged at consignee".

(2). IF: The user desires to enter the "Date Reconsignment Confirmed or Nonconfirmed".

THEN: The user will ensure that the cursor is located in the blank data field adjacent to the "Date Reconsignment Confirmed or Nonconfirmed" and enter the five position Julian date or press the <HELP> key to enter the current Julian date.

ELSE: The user presses the <CANCEL> key to return to the "Post Advice Information" menu screen or presses the <FINISH> key which will display the "Open Door" screen.

IF: The date field is blank when the <RETURN> key is pressed.

THEN: The system will display a prompt stating, "Required Element. Must Enter".

IF: The user enters a date and presses the <RETURN> key. (Note: The database is not updated until the <GO> key is pressed.)

THEN: The system will validate the entered date to ensure that it is a valid Julian date and is not greater than the current date.

IF: The Julian date entered is valid.

THEN: The system will accept the entered date and the cursor will advance to the "Reconsignment Location". (Note: The system will not allow the cursor to advance to "Reconsignment Location" unless the values "C" has been entered in the "Reconsignment Confirmed or Nonconfirmed" data field.)

ELSE: The system will display one of the following applicable prompts: "Day not valid in Julian Date", "Date cannot be greater than today's date", or "Must be a 5 position number".

IF: The <GO> key is pressed with the cursor on the "Reconsignment Date" when a "C" has been entered in the "Reconsignment Confirmed or Nonconfirmed" field.

THEN: The system will react as though the <RETURN> key was pressed and will advance to the "Reconsignment Location" field. (NOTE: This process is not intended to be used to add a location, because the "Reconsignment Location" is added to the database in the "Reconsignment Request" process. However, this process is designed to enable the user to change the "Reconsignment Location". Specifications to change the "Reconsignment

Location" are included in paragraph 9c(3), below).

IF: The user presses the <GO> key with the cursor on "Reconsignment Location" and a "C" value in the "Reconsignment Confirmed or Nonconfirmed" field, or the user presses the <GO> key with the cursor on "Reconsignment Date" and a "N" value in the "Reconsignment Confirmed or Nonconfirmed" field.

THEN: The system will update CntnrMovStp Record (RecngnCfmNoncfm) and (DteRecngnCfmNoncfm) with the value from the screen and CntnrMov (DteLstUpdCntnr) with the current date. The system will display a prompt momentarily stating, "Reconsignment advice added" and the "Post Advice Information" menu screen will be displayed.

c. IF: RECONSIGNMENT data exists when a record is selected.

MOVE: RecngnCfmNoncfm, DteRecngnCfmNoncfm, and DivrsnRecngnCnsgn from CntnrMovStp to the screen and display the function keys Clear Screen, Modify, and Delete.

DISPLAY: The system will then display the RECONSIGNMENT screen below with the applicable data fields filled and the function keys Clear Screen, Modify, and Delete depicted at the bottom of the screen. The system will also display a prompt stating, "Please press the desired function key".

Reconsignment Confirmed or Nonconfirmed	x(1)x (Enter C or N)
Date Reconsignment Confirmed or Nonconfirmed	xx(5)xx
Reconsignment Location	xxx(6)xx

Clear Screen		Modify		Delete

IF: The user desires to change or modify the RECONSIGNMENT data.

THEN: The user will press the function key <MODIFY> which will allow the displayed data to be changed. A prompt will also be displayed stating "Enter data and <RETURN> or press <HELP>, <CANCEL> or <FINISH>".

ELSE: The user presses the <Clear Screen> function key which will display the "Post Advice Information" menu screen.

(1). IF: The user desires to change the "Reconsignment Confirmed or Nonconfirmed".

THEN: The user will ensure the cursor is located in the data field adjacent to the "Reconsignment Confirmed or Nonconfirmed" and over type the existing one position code (e.g. "C" for Confirmed and "N" for Nonconfirmed) with the new code and press the <RETURN> key.

ELSE: The user presses the <CANCEL> key which will display the "Post Advice Information" menu screen or press the <FINISH> key which will display the "Open Door" screen.

IF: The change is from Confirmed "C" to Nonconfirmed "N".

THEN: The system will validate the code and check the MovEvntCd and EvntTy in MEvent for a TTB-E transaction.

ELSE: The system will display a prompt stating, "Must enter C or N".

IF: The code is valid and the system does not find a TTB-E transaction.

THEN: The system will accept the entered data and the cursor will advance to the "Date Reconsignment Confirmed or Nonconfirmed".

ELSE: The system will display a prompt stating, "Container has departed consignee".

(2). IF: The user desires to change the "Date Reconsignment Confirmed or Nonconfirmed".

THEN: The user will ensure that the cursor is located on the "Date Reconsignment Confirmed or Nonconfirmed" and will over type the existing five position Julian date with the new date or press the <HELP> key to enter the current date.

IF: The user presses the <RETURN> key.

THEN: The system will validate the entered date to ensure that it is a valid Julian date and is not greater than the current date.

IF: The Julian date entered is valid.

THEN: The system will accept the entered data and the cursor will advance to the "Reconsignment Location". (Note: The system will not allow the cursor to advance to "Reconsignment Location" unless the value "C" has been entered in the "Reconsignment Confirmed or Nonconfirmed" data field.

ELSE: The system will display one of the following applicable prompts: "Day not valid in Julian Date", "Date cannot be greater than today's date", or "Must be a 5 position number".

IF: The <GO> key is pressed with the cursor on the "Reconsignment Date" when a "C" has been entered in the "Reconsignment Confirmed or Nonconfirmed" field.

THEN: The system will react as though the <RETURN> key was pressed and will advance to the "Reconsignment Location" field.

IF: The user presses the <GO> key with the cursor on "Reconsignment Location" and a "C" value in the "Reconsignment Confirmed or Nonconfirmed" field, or the user presses the <GO> key with the cursor on "Reconsignment Date" and a "N" value in the "Reconsignment Confirmed or Nonconfirmed" field.

THEN: The system will update CntnrMovStp record (RecngnCfmNoncfm) and (DteRecngnCfmNoncfm) with the value from the screen and CntnrMov (DteLstUpdCntnr) with the current date. The system will display a prompt momentarily stating, "Reconsignment advice modified" and the "Post Advice Information" menu screen will be displayed.

(3). IF: The user desires to change the "Reconsignment Location" and the value "C" has been entered in the "Reconsignment Confirmed or Nonconfirmed" field.

THEN: The user will ensure that the cursor is located on the "Reconsignment Location" and over type

the existing DODAAC with the new DODAAC.

ELSE: The user presses the <CANCEL> key which will display the "Post Advice Information" menu screen or press the <FINISH> key which will display the "Open Door" screen.

IF: The user presses the <RETURN> key after entering the new location.

THEN: The system will validate the DODAAC entered against the ShipToAAC in the Cargo Address file.

ELSE: The system will display a prompt stating, "DODAAC not valid". (Note: If the user presses the <HELP> key, the system will display a prompt stating, "No Help available".)

IF: The request is confirmed, the DODAAC entered is valid, and the <GO> key is pressed. (Note: The database is not updated until the <GO> key is pressed.)

THEN: The system will update CntnrMovStp record (DivrsnRecngnCnsgn) with the new DODAAC on the screen and the CntnrMov (DteLstUpdCntnr) with the current date. The system will also display a prompt momentarily stating, "Reconsignment advice modified" and the "Post Advice Information" menu screen will be displayed.

(4). IF: The user desires to delete the RECONSIGNMENT data.

THEN: The user will press the function key <DELETE> which will display a prompt stating "Press <GO> to delete, or <CANCEL> to deny".

IF: The <GO> key is pressed.

THEN: The system will delete all of the displayed data and update the CntnrMovStp record (RecngnCfmNoncfm, DteRecngnCfmNoncfm, and DivrsnRecngnCnsgn) with blank fields. The system will display a prompt momentarily stating, "Reconsignment advice deleted" and will then depict the "Post Advice Information" menu screen.

ELSE: The user presses the <CANCEL> key and the displayed RECONSIGNMENT data will not be deleted and will

remain as is in the database. The system will then display the "Post Advice Information" menu screen.

```
;
    MAINTAINS:
         CntnrMov-File ;
    MAINTAINS:
         CntnrMovStp-File ;
    MAINTAINS:
         MEvent-File ;
    EMPLOYS:
         ReasonDeny-Tbl ,
         CgoAddress-File ;
    MODIFIES:       Upd-CntnrMov-Info IN CntnrMov-File ;
    MODIFIES:       Upd-CntnrMovStp-Info IN CntnrMovStp-File ;
    MODIFIES:       Upd-Cntnr-MEvent-Info IN MEvent-File ;
    REFERENCES:     Upd-CntnrMov-Info IN CntnrMov-File ;
    REFERENCES:     Upd-CntnrMovStp-Info IN CntnrMovStp-File ;
    REFERENCES:     Upd-Cntnr-MEvent-Info IN MEvent-File ;
    REFERENCES:     ReasonDeny IN ReasonDeny-Tbl ;
    REFERENCES:     CgoAddress-CRec-Ref IN CgoAddress-File ;
    RESPONSIBLE PROBLEM DEFINER IS:
                    'Morris' ;

EOF EOF EOF EOF EOF
```

PARAGRAPH	INPUT OBJECTS	PAGE
1	Cargo-Dischg/Non-Dlvr-Corr-Inp .	III-435
2	Cargo-Dischg/Non-Dlvr-Info-Inp .	III-436
3	Cntnr-History-Info-Inp	III-437
4	Conveyance-Ch-Notif-Info-Inp ...	III-439
5	Create-CRec-Inp	III-440
6	Create-Cntnr-Rmrk-Inp	III-441
7	Dam-Deadlined-Cntnr-Info-Inp ...	III-443
8	Delayed-Delivery-Event-Inp	III-444
9	ETA-Correction-Info-Inp	III-445
10	Inq/Rept-on-Specific-Cntnr-Inp .	III-446
11	MEvent-Info-Inp	III-446
12	Maintain-Parameter-Tbl-Inp	III-447
13	Menu-Open-Inp	III-447
14	Movement-Event-Corr-Info-Inp ...	III-448
15	Movement-Event-Info-Inp	III-448
16	Prepare-Reconsignment-Req-Inp ..	III-449
17	Reform-ETA-Inp	III-450
18	Rel-fr-Staging/Hold-Info-Inp ...	III-451
19	Request-for-Diversion-Info-Inp .	III-452
20	Request-for-Hold-Info-Inp	III-453
21	SEAVAN-Maint-TTP-Inp	III-454
22	TMR-Inp	III-455
23	Update-Cntnr-Rec-Inp	III-456
24	ZTP-Svan-Maint-Inp	III-457

```
1    DEFINE INPUT                          Cargo-Dischg/Non-Dlvr-Corr-Inp ;
       DESCRIPTION;
Cargo Discharge/Non-Delivery-Correction-Input
This is cargo discharge/non-delivery correction information received
by the MCT to correct the appropriate record in the container database.
This input is received by the Prepare-Cargo-Discharge/Non-Delivery-
Correction-(ZTW) process.
 ;
    KEYWORD IS:     'Container' ,
                    'LOB' ;
    GENERATED:      BY System-Operator ;
    RECEIVED:       BY Prep-Cgo-Non-Dlvr-Corr-<ZTW> ;
    CONSISTS OF:
         CntnrNo ,
         CntnrNoPrefix ,
         FWTNo ,
         TMRPrefix ,
         CntnrTCN ,
         EvntTy ,
         DiscrpCd ,
         DiscrpDte ,
         DiscrpPc ,
         EvntDte ;
    RESPONSIBLE PROBLEM DEFINER IS:
                    'Mitchem' ;
```

```
2    DEFINE INPUT                                  Cargo-Dischg/Non-Dlvr-Info-Inp ;
       DESCRIPTION;
   Cargo Discharge/Non Delivery Information Input
   This is cargo discharge/non-delivery information received by the MCT
   from the customer.  This input is received by the Prepare Cargo Dis-
   charge/Non-Delivery process.
    ;
       KEYWORD IS:     'Container' ,
                       'LOB' ;
       GENERATED:      BY System-Operator ;
       RECEIVED:       BY Prep-Cgo-Dischg/Non-Del-<TTW> ;
       CONSISTS OF:
            CntnrOwnAbbr ,
            CntnrNo ,
            CntnrNoPrefix ,
            Consignee ,
            CntnrTCN ,
            FWTNo ,
            TMRPrefix ,
            EvntTy ,
            EvntDte ,
            ShpmtUTCN ,
            ActlPcCnt ,
            Cntnr-Origin-Code ,
            DiscrpCd ;
       RESPONSIBLE PROBLEM DEFINER IS:
                       'Mitchem' ;
```

```
3    DEFINE INPUT                              Cntnr-History-Info-Inp ;
       DESCRIPTION;
    Container History Information Input
    This is the container history file record information that was extracted
    from active database records that were closed out.  This historical
    container information is used by the system user to perform management
    information inquiries.
     ;
        KEYWORD IS:     'Container' ;
        GENERATED:      BY System-Operator ;
        RECEIVED:       BY History-File-Retrieval ;
        CONSISTS OF:
             DestMCEPrefix ,
             StpSeqNo ,
             DupeStpIndex ,
             Consignee ,
             MultiStpNo ,
             DteRecngnReq ,
             RecngnCfmNoncfm ,
             DteRecngnCfmNoncfm ,
             DivrsnRecngnCnsgn ,
             DDDteCarrNotif ,
             DDActlSptDte ,
             DDDteCnsgnReqRelDte ,
             DDDteRel ,
             DDLoc ,
             DivrsnIndic ,
             DivrsnDte ,
             DteHoldStart ,
             DteHoldStop ,
             HoldLoc ,
             StpNonFcst ,
             DteRecCreat ,
             CntnrOwnAbbr ,
             CntnrNoPrefix ,
             CntnrNo ,
             CntnrTCN ,
             VoyDocuNoFltNo ,
             TMRPrefix ,
             SpIntCd ,
             ModeCd ,
             TransPriCd ,
             FWTNo ,
             TIN ,
             POD ,
             TotStp ,
             CntnrSz ,
             CmdtyCd ,
             ModeMethShpmtCd ,
```

```
        DteStageStart ,
        DteStageStop ,
        CntnrDam ,
        EvntDte ,
        NewEvntLoc ,
        AACCurr ,
        DspoActv ,
        RsnDenyCd ,
        NewMovNo ,
        OceanCarrAbbr ,
        DteCurr ;
IDENTIFIED BY:
        DteCurr ,
        CntnrNo ,
        Consignee ,
        CntnrNoPrefix ,
        DupeStpIndex ;
RESPONSIBLE PROBLEM DEFINER IS:
                'Valentine' ;
```

```
4    DEFINE INPUT                              Conveyance-Ch-Notif-Info-Inp ;
       DESCRIPTION;
Conveyance Change Notification Information Input
This is information received by the MCT pertaining to the conveyance
change.  This input is received by the Prepare Conveyance Change
Notification process.
 ;
     KEYWORD IS:      'Container' ,
                      'LOB' ;
     GENERATED:       BY System-Operator ;
     RECEIVED:        BY Prep-Convey-Change-Notif-<TTU> ;
     CONSISTS OF:
          EvntDte ,
          EvntTy ,
          TyMovNoCd ,
          CntnrNo ,
          FWTNo ,
          TMRPrefix ,
          CntnrTCN ,
          CntnrSz ,
          CntnrNoPrefix ,
          TIN ,
          MovEvntCd ;
     USED BY:         Prep-Convey-Change-Notif-<TTU>
                       TO DERIVE EvntDte ;
     USED BY:         Prep-Convey-Change-Notif-<TTU>
                       TO DERIVE NewMovNo ;
     USED BY:         Prep-Convey-Change-Notif-<TTU>
                       TO DERIVE PstDte ;
     USED BY:         Prep-Convey-Change-Notif-<TTU>
                       TO DERIVE Err-Msg ;
     USED BY:         Prep-Convey-Change-Notif-<TTU>
                       TO DERIVE Err-Diag ;
     USED BY:         Prep-Convey-Change-Notif-<TTU>
                       TO DERIVE NewTyCarrCd ;
     USED BY:         Prep-Convey-Change-Notif-<TTU>
                       TO DERIVE NewModeMethShpmtCd ;
     USED BY:         Prep-Convey-Change-Notif-<TTU>
                       TO DERIVE NewTyMovNoCd ;
     USED BY:         Prep-Convey-Change-Notif-<TTU>
                       TO DERIVE MEvent-TTU-Upd ;
     USED BY:         Prep-Convey-Change-Notif-<TTU>
                       TO DERIVE TTU-DSSR-Info ;
     RESPONSIBLE PROBLEM DEFINER IS:
                      'Zacot' ;
```

```
5    DEFINE INPUT                                  Create-CRec-Inp ;
       DESCRIPTION;
   Create Container Record Input
   This is information reported for the container arrival event that
   could not be posted to the container database because a container re-
   cord did not exist.  The container arrival information is subsequently
   used to create either a container move record, a container move stop
   record, or both.
    ;
       KEYWORD IS:      'Container' ,
                        'LOB' ;
       GENERATED:       BY System-Operator ;
       RECEIVED:        BY Create-Non-Fcst-Container-Rec ;
       CONSISTS OF:
            CmdtyCd ,
            CntnrSz ,
            DteSailWPOE ,
            Consignee ,
            TotStp ,
            MultiStpNo ,
            OceanCarrAbbr ,
            TCN ,
            CntnrNo ,
            CntnrNoPrefix ,
            CntnrOwnAbbr ,
            VoyDocuNoFltNo ,
            WPOD ,
            WPOE ;
       RESPONSIBLE PROBLEM DEFINER IS:
                        'Mitchem' ;
```

6 DEFINE INPUT Create-Cntnr-Rmrk-Inp ;
DESCRIPTION;
Create Container Remark Input
This is information used to identify a specific container and describes characteristics of that container or stop in a free text format.
;
KEYWORD IS: 'Container' ;
GENERATED: BY System-Operator ;
RECEIVED: BY Create-Container-Remarks ;
LAYOUT;

SELECTION SCREEN:

CONTAINER OPERATIONS

(Enter one of the following options)

TCN:

OR

Container Number:

OR

TMR Prefix:

OR

Freight Warrant Nbr:

INPUT DATA SCREEN:

Enter remarks, press [GO] to create remarks.

```
_____________________________________________AKMIYFD______
                    CREATE CONTAINER REMARKS
_____________________________________________________________

                 Container Number:  ______________
                  Container Owner:  ______________
                        Consignee:  ______________
                    Voyage Number:  ______________
                              POD:  ______________

          ____________________________________________

          ____________________________________________

          ____________________________________________

          ____________________________________________

          ____________________________________________

_____________________________________________________________

;
   CONSISTS OF:
        CntnrNo ,
        CntnrNoPrefix ,
        FWTNo ,
        TMRPrefix ,
        CntnrRmrk ,
        CntnrTCN ;
   RESPONSIBLE PROBLEM DEFINER IS:
                  'Blake' ;
```

```
7   DEFINE INPUT                                Dam-Deadlined-Cntnr-Info-Inp ;
      DESCRIPTION;
Damaged Deadlined Container Information Input
This is damaged deadlined container or chassis information reported by
the customer to the MCT.  This input is received by the Prepare Report
Damaged Deadlined Container process.
 ;
    KEYWORD IS:     'Container' ,
                    'LOB' ;
    GENERATED:      BY System-Operator ;
    RECEIVED:       BY Prep-Dam-Deadlined-Cntnr-Rept ;
    CONSISTS OF:
         Assistance-Required-Other ,
         Assistance-Rqr-Carr-Maint-Team ,
         Asst-Rqr-Carr-Claims-Invest ,
         CntnrTCN ,
         Current-Container-Location ,
         DTG-Damage-Deadline-Occurred ,
         Description-of-Damage ,
         Driver-Name ,
         Extent-of-Damage-Cargo ,
         Extent-of-Damage-Chassis ,
         Extent-of-Damage-Container ,
         Extent-of-Damage-Tractor ,
         Loc-Damaged/Deadline-Occurred ,
         Damaged/Deadlined-Remarks ,
         Report-Submitted-by-Name ,
         Report-Submitted-by-Rank ,
         Report-Submitted-by-Unit ,
         Report-Submitted-by-Unit-Phone ,
         Time-Damaged/Deadline-Occurred ,
         Van-Number ,
         CntnrOwnAbbr ,
         VoyDocuNoFltNo ,
         CntnrNo ,
         Consignee ,
         MultiStpNo ,
         StpCompFlag ,
         CntnrNoPrefix ,
         TMRPrefix ,
         MCENme ;
    RESPONSIBLE PROBLEM DEFINER IS:
                    'Morris' ;
```

```
8    DEFINE INPUT                                Delayed-Delivery-Event-Inp ;
       DESCRIPTION;
   Delayed Delivery Event Input
   This is information that a user enters to first select a container for
   processing and then to add information concerning the delayed delivery
   event.
    ;
       KEYWORD IS:     'Container' ;
       GENERATED:      BY System-Operator ;
       RECEIVED:       BY Prep-Delayed-Delivery-Event ;
       CONSISTS OF:
            CntnrNo ,
            FWTNo ,
            TMRPrefix ,
            CntnrTCN ,
            DDCarrPOCNotif ,
            DDDteCarrNotif ,
            DDCnsgnPOCNotif ,
            DDDteCnsgnNotif ,
            DDDteCnsgnReqRelDte ,
            DDCarrPOCNotifRel ,
            DDDteRel ,
            DDLoc ,
            DDPostDte ,
            DDActlSptDte ;
       RESPONSIBLE PROBLEM DEFINER IS:
                       'Mitchem' ;
```

```
9    DEFINE INPUT                                ETA-Correction-Info-Inp ;
       DESCRIPTION;
    ETA Correction Information Input
    This is ETA forecast information provided to the MCT by TMCA, DAMMS
    ETA Forecast or from this information is generally a repeating of
    container record information that was garbled during transmission
    from TMCA to an MCT.  This information is used to create or update
    MCT database records in the Correct Merge ETA Forecast Errors process.
     ;
       KEYWORD IS:     'Container' ;
       GENERATED:      BY System-Operator ;
       RECEIVED:       BY Correct-Merge-ETA-Forecast-Err ;
       CONSISTS OF:
            Seq-No ,
            CmdtyCd ,
            CntnrSz ,
            DteDprtWPOE ,
            Consignee ,
            TotStp ,
            MultiStpNo ,
            CntnrOwnAbbr ,
            CntnrNoPrefix ,
            CntnrNo ,
            CntnrTCN ,
            VoyDocuNoFltNo ,
            POD ,
            POE ,
            OceanCarrAbbr ;
       RESPONSIBLE PROBLEM DEFINER IS:
                       'Cope' ;
```

```
10   DEFINE INPUT                                  Inq/Rept-on-Specific-Cntnr-Inp ;
       DESCRIPTION;
   Inquiry/Report on Specific Container Input
   This is information that an operator enters to access specified data
   elements and values contained in the active container database.  Data which
   has been stored in the container history file is not accessible via this
   input.
       KEYWORD IS:     'Container' ;
       GENERATED:      BY System-Operator ;
       RECEIVED:       BY Inquiry/Rept-on-Specific-Cntnr ;
       CONSISTS OF:
            CntnrNo ,
            CntnrOwnAbbr ,
            CntnrTCN ,
            VoyDocuNoFltNo ,
            POD ;
       RESPONSIBLE PROBLEM DEFINER IS:
                       'Morris' ;

11   DEFINE INPUT                                  MEvent-Info-Inp ;
       KEYWORD IS:     'Container' ;
       GENERATED:      BY System-Operator ;
       RECEIVED:       BY Prepare-Cnsgn-Rept-Evnts-<TTB> ;
       CONSISTS OF:
            TyCarrCd ,
            ModeMethShpmtCd ,
            CntnrNo ,
            CntnrTCN ,
            FWTNo ,
            TMRPrefix ,
            CntnrNoPrefix ,
            EvntDte ,
            TyMovNoCd ;
       RESPONSIBLE PROBLEM DEFINER IS:
                       'Mitchem' ;
```

```
12   DEFINE INPUT                                  Maintain-Parameter-Tbl-Inp ;
       DESCRIPTION;
     Maintain Parameter Table Input
     This is information that a System Administrator enters to access the
     System Parameter Table in order to change and/or print the parameter
     values associated with the Container and Freight subsystems of DAMMS-R.
      ;
        KEYWORD IS:     'Container' ;
        RECEIVED:       BY Maintain-Parameter-Tbl ;
        CONSISTS OF:
             Cntnr-History-Sel-Criteria ,
             Cntnr-Deletion-Criteria ,
             Cntnr-On-Hand-Over-X-Criteria ,
             Cntnr-Origin-Code ,
             Origin-MCE-Prefix ,
             Origin-DODAAC ,
             Freight-History-Sel-Criteria ,
             Label-Print-Flag ,
             Commitment-Print-Flag ,
             Freight-Origin-Code ,
             Number-463L-Pallet-Criteria ,
             Cntnr-Deletion-Notification ;
        USED BY:        Maintain-Parameter-Tbl
                         TO DERIVE Maint-Param-Tbl-Print-Rept-Out ;
        USED BY:        Maintain-Parameter-Tbl
                         TO DERIVE Maint-Parameter-Tbl-Disp-Out ;
        RESPONSIBLE PROBLEM DEFINER IS:
                        'Morris' ;

13   DEFINE INPUT                                  Menu-Open-Inp ;
       DESCRIPTION;
     This is the Container record information needed to access the
     desired record in the database.
      ;
        KEYWORD IS:     'Container' ;
        GENERATED:      BY System-Operator ;
        RECEIVED:       BY Prepare-Merge-Error-Rept ;
        RECEIVED:       BY Maintain-Stops ;
        CONSISTS OF:
             CntnrNo ,
             CntnrTCN ,
             FWTNo ,
             TMRPrefix ;
        RESPONSIBLE PROBLEM DEFINER IS:
                        'Cope' ;
```

```
14   DEFINE INPUT                                Movement-Event-Corr-Info-Inp ;
       DESCRIPTION;
   Movement Event Correction Information Input
   This is movement event correction information reported by the customer
   to the MCT.  This input is received by the Prepare-Consignee-Reported-
   Events-Correction-(ZTB) process.
    ;
       KEYWORD IS:     'Container' ,
                       'LOB' ;
       GENERATED:      BY System-Operator ;
       RECEIVED:       BY Prep-Cnsgn-Rept-Evnts-Corr-ZTB ;
       CONSISTS OF:
            EvntDte ,
            CntnrNo ,
            CntnrNoPrefix ,
            TMRPrefix ,
            CntnrTCN ,
            FWTNo ,
            ModeMethShpmtCd ;
       RESPONSIBLE PROBLEM DEFINER IS:
                       'Mitchem' ;

15   DEFINE INPUT                                Movement-Event-Info-Inp ;
       DESCRIPTION;
   Movement Event Information Input
   This is movement event information reported by the customer to the
   MCT.  This input is received by the Prepare Consignee Reported Events
   process.
    ;
       KEYWORD IS:     'Container' ,
                       'LOB' ;
       CONSISTS OF:
            CntnrNo ,
            DteLstUpdCntnr ,
            EvntLoc ;
       RESPONSIBLE PROBLEM DEFINER IS:
                       'Mitchem' ;
```

```
16   DEFINE INPUT                          Prepare-Reconsignment-Req-Inp ;
       DESCRIPTION;
     Prepare Reconsignment Request Input
     This is information provided to initiate a reconsignment request
     message to TMCA.  This information is subsequently used to update
     CntnrMov and CntnrMovStp records.
      ;
        KEYWORD IS:     'Container' ;
        GENERATED:      BY System-Operator ;
        RECEIVED:       BY Prepare-Reconsignment-Request ;
        CONSISTS OF:
             CntnrNo ,
             CntnrNoPrefix ,
             Consignee ,
             TMRPrefix ,
             DivrsnRecngnCnsgn ,
             CntnrOwnAbbr ,
             DteRecngnReq ,
             EvntDte ,
             TCN ,
             FWTNo ,
             TAC ;
        RESPONSIBLE PROBLEM DEFINER IS:
                        'Valentine' ;
```

```
17   DEFINE INPUT                                Reform-ETA-Inp ;
       DESCRIPTION;
   Reformatted ETA Input
   This is the reformatted ETA forecast information that is received by
   MCTs from TMCA.  The ETA forecast information is merged into MCT data-
   bases to create records of forecasted inbound containers.
    ;
       KEYWORD IS:     'Container' ;
       SOURCE IS:      'TACCS LOB/CMM INTERFACE' ;
       ATTRIBUTE IS:
            MEDIA           'DISK' ,
            SEC-CLASS       'UNCLASSIFIED' ;
       GENERATED:      BY System-Operator ;
       RECEIVED:       BY Merge-Reformatted-ETA-Forecast ;
       COLLECTED:      IN ETA-Forecast-Inbound-File ;
       CONSISTS OF:
            CmdtyCd ,
            CntnrSz ,
            DteDprtWPOE ,
            Consignee ,
            TotStp ,
            MultiStpNo ,
            CntnrOwnAbbr ,
            CntnrNoPrefix ,
            CntnrNo ,
            CntnrTCN ,
            VoyDocuNoFltNo ,
            POD ,
            POE ,
            OceanCarrAbbr ;
       RESPONSIBLE PROBLEM DEFINER IS:
                       'Cope' ;
```

```
18   DEFINE INPUT                          Rel-fr-Staging/Hold-Info-Inp ;
       DESCRIPTION;
Release from Staging/Hold Information Input
This is a telephonic request from the customer to release a container
from staging/hold.  This input is received by the Prepare Release from
Staging/Hold process.

NOTE:  The container identification data is obtained from the requestor
       and input on the front end screen/process. (*)

       CntnrOwnAbbr    (*)
       CntnrNoPrefix   (*)
       CntnrNo         (*)
       VoyDocuNoFltNo  (*)
       Consignee       (*)
  ;
    KEYWORD IS:     'Container' ,
                    'LOB' ;
    GENERATED:      BY Customer ;
    RECEIVED:       BY Prep-Rel-fr-Stg/Hold-Req-<TMS> ;
    CONSISTS OF:
         CntnrOwnAbbr ,
         CntnrNoPrefix ,
         CntnrNo ,
         VoyDocuNoFltNo ,
         Consignee ,
         CnsgnrAAC ,
         DteDprtCnsgnr ,
         NewEvntLoc ,
         RespCd ,
         TAC ,
         MgrCd ,
         TCN ,
         TMRPrefix ,
         FWTNo ;
    RESPONSIBLE PROBLEM DEFINER IS:
                    'Valentine' ;
```

```
19   DEFINE INPUT                          Request-for-Diversion-Info-Inp ;
       DESCRIPTION;
   Request for Diversion Information Input
   This is a telephonic request from the customer to divert a container.
   This input is received by the Prepare Diversion Request process.
    ;
       KEYWORD IS:     'Container' ,
                       'LOB' ;
       GENERATED:      BY System-Operator ;
       RECEIVED:       BY Prep-Diversion-Request-<TM2> ;
       CONSISTS OF:
            CnsgnrAAC ,
            DteDprtCnsgnr ,
            NewEvntLoc ,
            Consignee ,
            POE ,
            RespCd ,
            AACCurr ,
            TAC ,
            CntnrNo ,
            CntnrNoPrefix ,
            FWTNo ,
            CntnrTCN ,
            MgrCd ,
            ShpmtUTCN ;
       RESPONSIBLE PROBLEM DEFINER IS:
                       'Woods' ;
```

```
20   DEFINE INPUT                              Request-for-Hold-Info-Inp ;
       DESCRIPTION;
Request for Hold Information Input
This is a telephonic request from the customer to hold or stage a
container.  This input is received by the Prepare Hold/Stage Request
process.

NOTE:  The container identification data is obtained from the requestor
       and input on the front end screen/process. (*)

       CntnrOwnAbbr    (*)
       CntnrNoPrefix   (*)
       CntnrNo         (*)
       VoyDocuNoFltNo  (*)
       Consignee       (*)
  ;
    KEYWORD IS:     'Container' ,
                    'LOB' ;
    GENERATED:      BY System-Operator ;
    RECEIVED:       BY Prep-Hold/Stg-Request-<TM3> ;
    CONSISTS OF:
         CntnrOwnAbbr ,
         CntnrNoPrefix ,
         CntnrNo ,
         VoyDocuNoFltNo ,
         Consignee ,
         CnsgnrAAC ,
         DteDprtCnsgnr ,
         DspoActv ,
         POE ,
         RespCd ,
         AACCurr ,
         ShpmtUTCN ,
         MgrCd ,
         TCN ,
         TMRPrefix ,
         FWTNo ;
    RESPONSIBLE PROBLEM DEFINER IS:
                    'Valentine' ;
```

```
21   DEFINE INPUT                                SEAVAN-Maint-TTP-Inp ;
       DESCRIPTION;
   SEAVAN Maintenance Begin/End TTP Input
   This input identifies all data elements that are inputed into the input
   screen of the TTP process by the user.
    ;
       KEYWORD IS:     'Container' ;
       ATTRIBUTE IS:
            SEC-CLASS       'UNCLASSIFIED' ,
            PROCESS-MODE     'INTERACTIVE BATCH' ;
       GENERATED:      BY System-Operator ;
       RECEIVED:       BY Prep-SEAVAN-Maint-Bgn/E-<TTP> ;
       CONSISTS OF:
            CntnrNo ,
            TyPwrCd ,
            MgrCd ,
            TyCarrCd ,
            TyMovNoCd ,
            NewEvntLoc ,
            EvntTy ,
            EvntDte ,
            FWTNo ,
            CntnrTCN ,
            TMRPrefix ,
            CntnrNoPrefix ,
            MovEvntCd ;
       RESPONSIBLE PROBLEM DEFINER IS:
                       'Ocasio' ;
```

```
22   DEFINE INPUT                                TMR-Inp ;
       DESCRIPTION;
TMR Input
The TMR Input is used by the MCT to update the container database with a
valid 12 position TMR number which will be used to monitor the movement
of a commercial container being drayed via military highway.
 ;
    KEYWORD IS:     'Container' ;
    GENERATED:      BY System-Operator ;
    RECEIVED:       BY Capture-TMR ;
    CONSISTS OF:
         CntnrNo ,
         Consignee ,
         OriginMCEPrefix ,
         MthCd ,
         SerNo ,
         SpIntCd ,
         ModeCd ,
         TransPriCd ,
         TMRPrefix ,
         FWTNo ,
         CntnrNoPrefix ,
         TIN ,
         CntnrTCN ;
    USED BY:        Capture-TMR
                     TO DERIVE CntnrMov-TMR-Info ;
    USED BY:        Capture-TMR
                     TO DERIVE TMR-ErrMsg-Out ;
    RESPONSIBLE PROBLEM DEFINER IS:
                    'Zacot' ;
```

```
23   DEFINE INPUT                                Update-Cntnr-Rec-Inp ;
       DESCRIPTION;
   Update Container Record Input
   This is information that is entered into the database to identify a
   specific container record and update it with information that further
   describes a transaction earlier posted.
    ;
      KEYWORD IS:     'Container' ;
      GENERATED:      BY System-Operator ;
      RECEIVED:       BY Update-Cntnr-Record ;
      CONSISTS OF:
           CntnrNo ,
           FWTNo ,
           TMRPrefix ,
           CntnrNoPrefix ,
           CntnrTCN ,
           StgIndic ,
           HoldLoc ,
           DivrsnDte ,
           DivrsnRecngnCnsgn ,
           RecngnCfmNoncfm ,
           DteRecngnCfmNoncfm ,
           DteHoldStart ,
           DteHoldStop ,
           RsnDenyCd ,
           DteRecngnReq ,
           DteStageStart ,
           DteStageStop ;
      RESPONSIBLE PROBLEM DEFINER IS:
                      'Morris' ;
```

```
24   DEFINE INPUT                              ZTP-Svan-Maint-Inp ;
       DESCRIPTION;
     SEAVAN Maintenance Correction Information Input
     This is information received by the MCT to correct SEAVAN maintenance
     information in the container database.  This input is received by the
     Prepare-SEAVAN-Maintenance-Begin/End-Correction-(ZTP) process.
      ;
        KEYWORD IS:     'Container' ,
                        'LOB' ;
        GENERATED:      BY System-Operator ;
        RECEIVED:       BY Prep-Svan-Maint-Bgn/E-Corr-ZTP ;
        CONSISTS OF:
             CntnrNo ,
             FWTNo ,
             TMRPrefix ,
             CntnrNoPrefix ,
             CntnrTCN ,
             MovEvntCd ,
             TyPwrCd ,
             EvntTy ,
             EvntDte ;
        RESPONSIBLE PROBLEM DEFINER IS:
                        'Ocasio' ;

   EOF EOF EOF EOF EOF
```

PARAGRAPH	OUTPUT OBJECTS	PAGE
1	Cntnr-Hist-Rept-Out	III-461
2	Cntnr-Upd-ErrMsg-Out	III-461
3	Daily-Container-Worksheet-Out ..	III-462
4	ETA-Forecast-Error-Info-Out	III-463
5	ErrMsg-Out	III-464
6	Hist-Info-Out	III-465
7	Hist-Rmrk-Rept-Out	III-466
8	Inbound-Container-Report	III-467
9	Inq/Rept-Disp-Out	III-468
10	Maint-Param-Tbl-Print-Rept-Out .	III-469
11	Maint-Parameter-Tbl-Disp-Out ...	III-471
12	Notify-Consignee-Info-Out	III-473
13	TMR-ErrMsg-Out	III-474
14	ZTP-ErrMsg-Out	III-474



```
1    DEFINE OUTPUT                              Cntnr-Hist-Rept-Out ;
       DESCRIPTION;
     Container History Report Output
     This is container history report data that identifies all container
     history records that were transferred to the history storage file. The
     report is produced in a hard copy and is used to identify container
     records that are stored on floppy disks.
      ;
        KEYWORD IS:     'Container' ;
        GENERATED:      BY Sel-Rec-for-Cntnr-History-DB ;
        RECEIVED:       BY System-Operator ;
        COLLECTED:      IN Temp-History-File ;
        CONSISTS OF:
             DteCurr ,
             Record-Month-of-Hist-Disk ,
             CntnrNo ,
             CntnrOwnAbbr ,
             Consignee ,
             VoyDocuNoFltNo ,
             DteRecCreat ;
        RESPONSIBLE PROBLEM DEFINER IS:
                        'Valentine' ;
```



```
2    DEFINE OUTPUT                              Cntnr-Upd-ErrMsg-Out ;
       DESCRIPTION;
     Container Update Error Message Output
     This output consists of a series of screen prompts which alerts the
     operator that the data entered or attempted to be entered has failed an
     edit or validation check.
      ;
        KEYWORD IS:     'Container' ;
        GENERATED:      BY Update-Cntnr-Record ;
        RECEIVED:       BY System-Operator ;
        CONSISTS OF:
             CntnrNoPrefix ,
             DteHoldStart ,
             RsnDenyCd ,
             MovEvntCd ,
             EvntTy ,
             DivrsnDte ,
             DivrsnRecngnCnsgn ,
             DteStageStart ,
             DteStageStop ,
             RecngnCfmNoncfm ,
             DteRecngnCfmNoncfm ;
        RESPONSIBLE PROBLEM DEFINER IS:
                        'Morris' ;
```



3 DEFINE OUTPUT Daily-Container-Worksheet-Out ;
DESCRIPTION;
Daily Container Worksheet Output
The Daily Container Worksheet Output is a report used by the MCT to record routine container information reported by consignees on an as needed basis.
;
KEYWORD IS: 'Container' ,
'LOB' ;
GENERATED: BY Prep-Daily-Container-Worksheet ;
RECEIVED: BY System-Operator ;
LAYOUT;

FORMAT:

Consignee WK4FUG

Multi Stop No 3

VAN NUMBER	VAN OWNER	VOYAGE NUMBER	A	B/C	D	E	STATUS
36148231	USLX	A2001					H
9248320	SEAU	A1996	87201	87202	87202		
72389991	USLX	A1986	87202				
78784926	SEAU	A2003	87202	87202		87202	
83618724	SEAU	A2003	8200	87202	87202	87202	
89524834	USLX	A2004					
89736234	USLX	A2004					
89938242	DAVE	A1986	87202				DD
96218444	ECLU	A2000					D
98376241	APSU	A1979					

```
      ;
         CONSISTS OF:
              Consignee ,
              CntnrNo ,
              ModeMethShpmtCd ,
              CntnrNoPrefix ,
              CntnrOwnAbbr ,
              VoyDocuNoFltNo ,
              EvntDte ,
              DivrsnIndic ,
              RecngnCfmNoncfm ,
              MultiStpNo ;
         RESPONSIBLE PROBLEM DEFINER IS:
                        'Mitchem' ;

  4    DEFINE OUTPUT                          ETA-Forecast-Error-Info-Out ;
         DESCRIPTION;
    ETA Forecast Error Information Output
    This entity represents rejected and partially correct ETA Container
    Forecast transactions, with appropriate error code and messages.
     ;
         KEYWORD IS:     'Container' ;
         GENERATED:      BY Prepare-Merge-Error-Rept ;
         RECEIVED:       BY System-Operator ;
         CONSISTS OF:
              Seq-No ,
              CntnrOwnAbbr ,
              CntnrNo ,
              Consignee ,
              CmdtyCd ,
              CntnrSz ,
              DteDprtWPOE ,
              TotStp ,
              MultiStpNo ,
              CntnrNoPrefix ,
              CntnrTCN ,
              VoyDocuNoFltNo ,
              POD ,
              POE ,
              OceanCarrAbbr ,
              Error-Cd ,
              Err-Msg ;
         RESPONSIBLE PROBLEM DEFINER IS:
                        'Cope' ;
```

```
5    DEFINE OUTPUT                              ErrMsg-Out ;
       DESCRIPTION;
   Error Message Output
   This output is generated by table validations.
    ;
       KEYWORD IS:     'Container' ;
       ATTRIBUTE IS:
            SEC-CLASS       'UNCLASSIFIED' ,
            PROCESS-MODE     'INTERACTIVE BATCH' ;
       GENERATED:      BY Prep-Diversion-Request-<TM2> ;
       GENERATED:      BY Prep-SEAVAN-Maint-Bgn/E-<TTP> ;
       RECEIVED:       BY System-Operator ;
       CONSISTS OF:
            Err-Msg ,
            CntnrNo ,
            TyCarrCd ,
            TyMovNoCd ,
            CntnrTCN ,
            NewEvntLoc ,
            POD ,
            TyPwrCd ,
            EvntTy ,
            EvntDte ,
            MgrCd ;
       RESPONSIBLE PROBLEM DEFINER IS:
                       'Ocasio' ;
```

```
6    DEFINE OUTPUT                              Hist-Info-Out ;
       DESCRIPTION;
    History Information Output
    This is the container history record data that is stored on floppy disks
    and used to create history record reports.
     ;
       KEYWORD IS:     'Container' ;
       ATTRIBUTE IS:
            MEDIA           'FLOPPY DISK' ;
       GENERATED:      BY Sel-Rec-for-Cntnr-History-DB ;
       RECEIVED:       BY System-Operator ;
       COLLECTED:      IN Temp-History-File ;
       CONSISTS OF:
            Consignee ,
            DupeStpIndex ,
            DestMCEPrefix ,
            StpSeqNo ,
            MultiStpNo ,
            DteRecngnReq ,
            RecngnCfmNoncfm ,
            DivrsnRecngnCnsgn ,
            DDDteCarrNotif ,
            DDActlSptDte ,
            DDDteCnsgnReqRelDte ,
            DDDteRel ,
            DDLoc ,
            DivrsnIndic ,
            DivrsnDte ,
            DteHoldStart ,
            DteHoldStop ,
            HoldLoc ,
            StpNonFcst ,
            DteRecCreat ,
            CntnrNoPrefix ,
            CntnrNo ,
            CntnrOwnAbbr ,
            CntnrTCN ,
            VoyDocuNoFltNo ,
            OriginMCEPrefix ,
            MthCd ,
            SerNo ,
            SpIntCd ,
            ModeCd ,
            TransPriCd ,
            FWTNo ,
            TIN ,
            POD ,
            TotStp ,
            CntnrSz ,
```

```
          CmdtyCd ,
          ModeMethShpmtCd ,
          DteStageStart ,
          DteStageStop ,
          CntnrDam ,
          EvntDte ,
          AACCurr ,
          NewEvntLoc ,
          RsnDenyCd ,
          DspoActv ,
          EvntTy ,
          TyPwrCd ,
          NewMovNo ,
          OceanCarrAbbr ;
     RESPONSIBLE PROBLEM DEFINER IS:
                    'Valentine' ;

7    DEFINE OUTPUT                              Hist-Rmrk-Rept-Out ;
       DESCRIPTION;
   History Information Output
   This is the history file record information that is taken from database
   records and stored in the temp history file.  The report information is
   transferred to floppy disks which are maintained for a period of one
   year.
    ;
       KEYWORD IS:     'Container' ;
       GENERATED:      BY Sel-Rec-for-Cntnr-History-DB ;
       RECEIVED:       BY System-Operator ;
       COLLECTED:      IN Temp-History-File ;
       CONSISTS OF:
            CntnrNo ,
            CntnrOwnAbbr ,
            Consignee ,
            DupeStpIndex ,
            DteCurr ,
            DteRecCreat ,
            CntnrNoPrefix ,
            CntnrRmrkLnNo ,
            CntnrRmrk ;
       RESPONSIBLE PROBLEM DEFINER IS:
                    'Valentine' ;
```

```
8    DEFINE OUTPUT                          Inbound-Container-Report ;
       DESCRIPTION;
Inbound Container Report
This output is produced by the Correct Merge ETA Forecast.  The report will
be produced when records with key errors are corrected and a record created
on the database.
 ;
    KEYWORD IS:     'Container' ;
    GENERATED:      BY Correct-Merge-ETA-Forecast-Err ;
    RECEIVED:       BY System-Operator ;
    COLLECTED:      IN InbCntnr-Report-Hold-File ;
    CONSISTS OF:
         CntnrTCN ,
         POE ,
         POD ,
         OceanCarrAbbr ,
         DteSailWPOE ,
         CmdtyCd ,
         MultiStpNo ,
         TotStp ,
         CntnrOwnAbbr ,
         CntnrNoPrefix ,
         CntnrNo ,
         CntnrSz ,
         VoyDocuNoFltNo ,
         Consignee ,
         DteRecCreat ,
         MCENme ;
    RESPONSIBLE PROBLEM DEFINER IS:
                   'Cope' ;
```

```
9    DEFINE OUTPUT                              Inq/Rept-Disp-Out ;
       DESCRIPTION;
   Inquiry/Report Display Output
   This output displays a series of screens containing specified data elements
   and values existing in the active container database.  Hard copy reports
   are created by copying those screens containing the desired information.
    ;
       KEYWORD IS:     'Container' ;
       GENERATED:      BY Inquiry/Rept-on-Specific-Cntnr ;
       RECEIVED:       BY System-Operator ;
       CONSISTS OF:
            VoyDocuNoFltNo ,
            OceanCarrAbbr ,
            MovEvntCd ,
            EvntTy ,
            EvntDte ,
            ShipToAAC ,
            Consignee ,
            CntnrOwnAbbr ,
            CntnrNo ,
            MultiStpNo ,
            DestMCEPrefix ,
            StpSeqNo ,
            DivrsnIndic ,
            RecngnCfmNoncfm ,
            DivrsnRecngnCnsgn ,
            DDActlSptDte ,
            DteHoldStart ,
            DteHoldStop ,
            POD ,
            CntnrNoPrefix ,
            ModeCd ,
            CntnrSz ,
            UltmCnsgn ,
            TotStp ,
            StgIndic ,
            CmdtyCd ,
            DteLstUpdCntnr ,
            TMRPrefix ,
            SpIntCd ,
            TransPriCd ,
            CntnrDam ,
            DteStageStart ,
            DteStageStop ;
       RESPONSIBLE PROBLEM DEFINER IS:
                       'Morris' ;
```

10 DEFINE OUTPUT Maint-Param-Tbl-Print-Rept-Out ;
DESCRIPTION;
Maintain Parameter Table Print Report Out
This is a printed report of all parameters and values contained in the System Parameter Table.
;
KEYWORD IS: 'Container' ;
GENERATED: BY Maintain-Parameter-Tbl ;
LAYOUT;

Output Format

==========

SYSTEM PARAMETER REPORT

DATE XX/XX/XX PAGE X

PARAMETER NAME	PARAMETER VALUE
Select Record for Container History	45
60 Days Old Deletion Process	55
Containers On Hand Over "X" Days	5
Container Origin Code	F1G
Notification from TMCA of Container Deletion	4
Origin MCE Code	M
Origin DODAAC	WK4FHA
Select Record for Freight History	45
Print Labels	N
Print Commitment	N
Freight Origin Code	AIG
Number of 463L Pallets	25

==========

;
CONSISTS OF:
Cntnr-History-Sel-Criteria ,
Cntnr-Deletion-Criteria ,
Cntnr-On-Hand-Over-X-Criteria ,
Cntnr-Origin-Code ,
Origin-MCE-Prefix ,
Origin-DODAAC ,
Freight-History-Sel-Criteria ,
Label-Print-Flag ,
Commitment-Print-Flag ,
Freight-Origin-Code ,
Number-463L-Pallet-Criteria ,
Cntnr-Deletion-Notification ;

```
DERIVED:          BY  Maintain-Parameter-Tbl
                  USING Maintain-Parameter-Tbl-Inp ;
DERIVED:          BY  Maintain-Parameter-Tbl
                  USING Maint-Param-Sys-Param-Ref ;
DERIVED:          BY  Maintain-Parameter-Tbl
                  USING Maint-Param-CgoMCE-Ref ;
DERIVED:          BY  Maintain-Parameter-Tbl
                  USING Maint-Param-CgoActivity-Ref ;
RESPONSIBLE PROBLEM DEFINER IS:
                 'Morris' ;
```

11 DEFINE OUTPUT Maint-Parameter-Tbl-Disp-Out ;
DESCRIPTION;
Maintain Parameter Table Display Out
This is a screen display of the parameters and values associated with the Container and Freight subsystems of DAMMS-R.
;
KEYWORD IS: 'Container' ;
GENERATED: BY Maintain-Parameter-Tbl ;
LAYOUT;

Screen Display For Container

SYSTEM PARAMETERS

NAME	VALUE
Select Record for Container History	45
60 Days Old Deletion Process	55
Containers On Hand Over "X" Days	5
Container Origin Code	F1G
Notification from TMCA of Cntnr Deletion	4
Origin MCE Code	M
Origin DODAAC	WK4FHA

Screen Display for Freight

SYSTEM PARAMETERS

NAME	VALUE
Origin MCE Code	M
Origin DODAAC	WK4FHA
Select Record for Freight History	45
Print Labels	N
Print Commitment	N
Freight Origin Code	AIG
Number of 463L Pallets	25

Screen Display of All Parameters

SYSTEM PARAMETERS

NAME	VALUE
Select Record for Container History	45
60 Days Old Deletion Process	55
Containers On Hand Over "X" Days	5
Container Origin Code	F1G
Notification from TMCA of Container Deletion	4
Origin MCE Code	M
Origin DODAAC	WK4FHA
Select Record for Freight History	45
Print Labels	N
Print Commitment	N
Freight Origin Code	AIG
Number of 463L Pallets	25

```
;
   CONSISTS OF:
        Cntnr-History-Sel-Criteria ,
        Cntnr-Deletion-Criteria ,
        Cntnr-On-Hand-Over-X-Criteria ,
        Cntnr-Origin-Code ,
        Origin-MCE-Prefix ,
        Origin-DODAAC ,
        Freight-History-Sel-Criteria ,
        Label-Print-Flag ,
        Commitment-Print-Flag ,
        Freight-Origin-Code ,
        Number-463L-Pallet-Criteria ,
        Cntnr-Deletion-Notification ;
   DERIVED:          BY  Maintain-Parameter-Tbl
                     USING Maintain-Parameter-Tbl-Inp ;
   DERIVED:          BY  Maintain-Parameter-Tbl
                     USING Maint-Param-Sys-Param-Ref ;
   DERIVED:          BY  Maintain-Parameter-Tbl
                     USING Maint-Param-CgoMCE-Ref ;
   DERIVED:          BY  Maintain-Parameter-Tbl
                     USING Maint-Param-CgoActivity-Ref ;
   RESPONSIBLE PROBLEM DEFINER IS:
```

```
                    'Morris' ;

12   DEFINE OUTPUT                          Notify-Consignee-Info-Out ;
       DESCRIPTION;
   Notify Consignee Information Output
   This is the notify consignee report which contains container ETA
   forecast information that is transmitted to customers.
    ;
      KEYWORD IS:     'Container' ;
      GENERATED:      BY Notify-Cnsgn-of-Inbound-Cntnr ;
      RECEIVED:       BY System-Operator ;
      CONSISTS OF:
           Consignee ,
           CntnrOwnAbbr ,
           CntnrNoPrefix ,
           CntnrNo ,
           VoyDocuNoFltNo ,
           MultiStpNo ,
           TotStp ,
           CntnrTCN ,
           POE ,
           OceanCarrAbbr ,
           DteSailWPOE ,
           CmdtyCd ,
           CntnrSz ,
           POD ,
           MCENme ;
      RESPONSIBLE PROBLEM DEFINER IS:
                    'Blake' ;
```

```
13   DEFINE OUTPUT                              TMR-ErrMsg-Out ;
       DESCRIPTION;
   TMR Error Message Output
   This is a series of messages that are prompted by invalid data entered when
   the elements listed below are requested.
    ;
       KEYWORD IS:     'Container' ;
       GENERATED:      BY Capture-TMR ;
       RECEIVED:       BY System-Operator ;
       CONSISTS OF:
            TMRPrefix ,
            OriginMCEPrefix ,
            MthCd ,
            SerNo ,
            SpIntCd ,
            ModeCd ,
            TransPriCd ,
            TIN ,
            FWTNo ,
            Err-Msg ,
            Err-Diag ;
       DERIVED:          BY  Capture-TMR
                         USING TMR-Inp ;
       DERIVED:          BY  Capture-TMR
                         USING Err-Msg ;
       DERIVED:          BY  Capture-TMR
                         USING Err-Diag ;
       DERIVED:          BY  Capture-TMR
                         USING CntnrMov-TMR-Info ;
       RESPONSIBLE PROBLEM DEFINER IS:
                        'Zacot' ;

14   DEFINE OUTPUT                                ZTP-ErrMsg-Out ;
       KEYWORD IS:     'Container' ;
       GENERATED:      BY Prep-Svan-Maint-Bgn/E-Corr-ZTP ;
       RECEIVED:       BY System-Operator ;
       CONSISTS OF:
            CntnrNo ,
            CntnrOwnAbbr ,
            EvntTy ,
            EvntDte ,
            TyPwrCd ,
            Err-Msg ;
       RESPONSIBLE PROBLEM DEFINER IS:
                        'Ocasio' ;

   EOF EOF EOF EOF EOF
```

PARAGRAPH	ENTITY OBJECTS	PAGE
1	CMovStp-CRec-Ref	III-481
2	CgoActivity	III-482
3	CgoActivity-TM3-Ref	III-484
4	CgoAddress	III-485
5	CgoAddress-CRec-Ref	III-487
6	CgoAddress-ETA-Fcst-Ref	III-488
7	CgoAddress-Inq/Rept-Info-Ref	III-488
8	CgoAddress-Recngn-Ref	III-489
9	CgoAddress-TMS-Ref	III-489
10	CgoMCE	III-490
11	CgoMCE-Dam-DL-Ref	III-491
12	CgoMCE-ECSR-Ref	III-492
13	CgoMCE-InbCntnr-Ref	III-492
14	CgoMCE-Recngn-Ref	III-493
15	CgoMCE-TM3-Ref	III-493
16	CgoMCE-TMS-Ref	III-494
17	CgoPort	III-495
18	CgoPort-Ref	III-496
19	CgoPort-TTP-Ref	III-497
20	Cntnr-History-Info-Upd	III-498
21	CntnrDiscrp	III-500
22	CntnrMov	III-502
23	CntnrMov-CRec-Ref	III-505
24	CntnrMov-CRec-Upd	III-506
25	CntnrMov-Dam-DL-Ref	III-506
26	CntnrMov-Dam-DL-Upd	III-507
27	CntnrMov-ECSR-Ref	III-507
28	CntnrMov-ECSR-Upd	III-508
29	CntnrMov-ETA-Fcst-Info	III-509
30	CntnrMov-Hist-Upd	III-510
31	CntnrMov-InbCntnr-Ref	III-510
32	CntnrMov-Inq/Rept-Info-Ref	III-511
33	CntnrMov-MtnStp-Info	III-512
34	CntnrMov-Recngn-Ref	III-512
35	CntnrMov-Recngn-Upd	III-513
36	CntnrMov-TM2-Info	III-514
37	CntnrMov-TM3-Ref	III-515
38	CntnrMov-TM3-Upd	III-516
39	CntnrMov-TMR-Info	III-517
40	CntnrMov-TMS-Ref	III-518
41	CntnrMov-TMS-Upd	III-518
42	CntnrMov-TTB-Ref	III-519
43	CntnrMov-TTB-Upd	III-519
44	CntnrMov-TTP-Ref	III-520
45	CntnrMov-TTP-Upd	III-521
46	CntnrMov-TTU-Ref	III-522
47	CntnrMov-ZTB-Ref	III-523

PARAGRAPH	ENTITY OBJECTS	PAGE
48	CntnrMov-ZTB-Upd	III-523
49	CntnrMovRmrk-Ref	III-524
50	CntnrMovStp	III-525
51	CntnrMovStp-CRec-Upd	III-527
52	CntnrMovStp-Dam-DL-Ref	III-528
53	CntnrMovStp-ETA-Fcst-Info	III-529
54	CntnrMovStp-InbCntnr-Ref	III-530
55	CntnrMovStp-Inq/Rept-Info-Ref	III-531
56	CntnrMovStp-MtnStp-Info	III-531
57	CntnrMovStp-Recngn-Upd	III-532
58	CntnrMovStp-Ref	III-533
59	CntnrMovStp-TMR-Upd	III-535
60	CntnrMovStp-ZTB-Upd	III-535
61	CntnrMovStpRmrk-Ref	III-536
62	CntnrOwn-CRec-Ref	III-536
63	CntnrOwn-Inq-Ref	III-536
64	CntnrOwnTy	III-537
65	CntnrOwner	III-538
66	CntnrOwner-Ref	III-539
67	CntnrRmrkLn	III-540
68	CntnrSize	III-542
69	CntnrSize-Ref	III-543
70	CntnrSize-TTU-Ref	III-543
71	CntnrSz-CRec-Ref	III-543
72	Comm-CRec-Ref	III-544
73	Commodity	III-545
74	Commodity-Ref	III-546
75	Container-O/H-5-Days-Rept-Upd	III-547
76	Corr-TTW-MEvent-ZTW-Info	III-548
77	DD-CntnrMov-Message-Ent	III-549
78	DD-CntnrMov-Ref	III-550
79	DD-CntnrMov-Upd	III-550
80	DD-CntnrMovStp-Message-Ent	III-551
81	DD-CntnrMovStp-Ref	III-551
82	DD-CntnrMovStp-Upd	III-552
83	DD-TTB-MEvent-Ref	III-553
84	DSSR-Info	III-554
85	Daily-Cntnr-CntnrMov-Ref-Ent	III-555
86	Daily-Cntnr-CntnrMovStp-Ref	III-555
87	Daily-Cntnr-MEvent-Ref-Ent	III-556
88	Daily-SEAVAN-Sta-Message	III-557
89	Daily-SEAVAN-Status-Info-Ent	III-560
90	Dam-Deadlined-Cntnr-Report	III-561
91	Delayed-Delivery-Message	III-562
92	Dele-60-Day-Old-Cntnr-Rept-Upd	III-564
93	DiscrpType	III-566
94	DiscrpType-Ref	III-567

PARAGRAPH	ENTITY OBJECTS	PAGE
95	ECSR-Transaction-Ref	III-567
96	ECSR-Transaction-Upd	III-568
97	ETA-Forecast-Error-Info	III-569
98	Empty-Aval-5-Day-CgoMCE-Ref	III-570
99	Empty-Aval-5-Day-CntnrMov-Ref ..	III-570
100	Empty-Aval-5-Day-MEvent-Ref	III-571
101	Empty-Aval-5-Day-Param-Ref	III-571
102	Empty-Aval-Over-5-Day-Rept-Upd .	III-572
103	Empty-Cntnr-Sta-Report-Upd	III-573
104	Existing-TTB-MEvent-Ref	III-574
105	Existing-TTW-CntnrDiscrp-Ref ...	III-575
106	Hist-Mgt-Info	III-576
107	ISAM-Trns-TTB-Info	III-577
108	ISAM-Trns-ZTW-Info	III-578
109	MEvent	III-579
110	MEvent-ECSR-Ref	III-582
111	MEvent-ECSR-Upd	III-583
112	MEvent-Inq/Rept-Info-Ref	III-584
113	MEvent-Recngn-Ref	III-585
114	MEvent-Ref	III-586
115	MEvent-TM2-Info	III-587
116	MEvent-TM3-Ref	III-588
117	MEvent-TM3-Upd	III-589
118	MEvent-TMS-Ref	III-590
119	MEvent-TMS-Upd	III-591
120	MEvent-TTB-Upd	III-592
121	MEvent-TTP-Ref	III-593
122	MEvent-TTP-Upd	III-594
123	MEvent-TTU-Ref	III-595
124	MEvent-TTU-Upd	III-596
125	MEvent-ZTB-Ref	III-597
126	MEvent-ZTB-Upd	III-597
127	MEvent-ZTP-Ref	III-598
128	MEventType	III-599
129	MEventType-TTU-Ref	III-600
130	Maint-Param-CgoActivity-Ref	III-600
131	Maint-Param-CgoMCE-Ref	III-601
132	Maint-Param-Sys-Param-Ref	III-602
133	Maint-Param-Sys-Param-Upd	III-603
134	Maintain-Stops-Info-Ent	III-604
135	ModeMethShpmtCd-TTB-Ref	III-604
136	Month	III-605
137	MovModeCode	III-607
138	MovModeCode-Ref	III-608
139	Non-Fcst-CgoMCE-Ref	III-608
140	Non-Fcst-CntnrMov-Ref	III-609
141	Non-Fcst-CntnrMovStop-Ref	III-609

PARAGRAPH	ENTITY OBJECTS	PAGE
142	Non-Fcst-Param-Ref	III-610
143	Non-Forecasted-Containers-Upd ..	III-611
144	ORICO	III-613
145	ORICOTy	III-614
146	OceanCarr	III-615
147	OceanCarr-ECSR-Ref	III-616
148	OceanCarr-ETA-Fcst-Ref	III-616
149	OceanCarr-Ref	III-617
150	Param-ECSR-Ref	III-617
151	Param-Recngn-Ref	III-618
152	Param-TM3-Ref	III-618
153	Param-TMS-Ref	III-618
154	Parameter-Hist-Ref	III-619
155	Parameter-OrigCd-Ref	III-620
156	ReasonDeny	III-621
157	Req-for-Recngn-Upd	III-622
158	RespMediaCd	III-623
159	RespMediaCd-TM3-Ref	III-624
160	RespMediaCd-TMS-Ref	III-624
161	Search-Cntnr-O/H-CgoMCE-Ref	III-625
162	Search-Cntnr-O/H-MEvent-Ref	III-626
163	Search-Cntnr-O/H-Mov-Ref	III-627
164	Search-Cntnr-O/H-Param-Ref	III-627
165	ShpmtMethod	III-628
166	Sixty-Day-Cntnr-Ref	III-629
167	Sixty-Day-Cntnr-Upd	III-630
168	Sixty-Day-MCE-Ref	III-630
169	Sixty-Day-Parameter-Ref	III-631
170	SpecialInt	III-632
171	SpecialInt-Ref	III-633
172	Sys-Date-Cal-Yr-Day-Yr	III-633
173	Sys-Parameter-Ref	III-633
174	System-Parameter-Record	III-634
175	TM3-ISAM-Data	III-634
176	TM3-Msg-Data-Upd	III-635
177	TM3-Transaction-Upd	III-636
178	TMS-Msg-Data-Upd	III-637
179	TMS-Transaction-Info	III-638
180	TTP-ISAM-Data	III-639
181	TTU-DSSR-Info	III-640
182	TTW-CntnrMov-Ref	III-641
183	TTW-CntnrMov-Upd	III-642
184	TTW-EventType-Ref	III-642
185	TTW-ISAM-Info	III-643
186	TTW-MEvent-Upd	III-643
187	TransPri	III-644
188	TransPri-Ref	III-645

PARAGRAPH	ENTITY OBJECTS	PAGE
189	Trns-ISAM-Data	III-646
190	TyCarrCd-TTB-Ref	III-647
191	TyMovNo-TTU-Ref	III-647
192	TyMovNoCd-TTB-Ref	III-648
193	TypeCarrier	III-649
194	TypeMovNo	III-651
195	TypeMove	III-652
196	Upd-Cntnr-MEvent-Info	III-653
197	Upd-CntnrMov-Info	III-654
198	Upd-CntnrMovStp-Info	III-655
199	Voyage	III-656
200	Voyage-ECSR-Ref	III-658
201	Voyage-Inq/Rept-Info-Ref	III-658
202	Voyage-TM3-Ref	III-659
203	Voyage-TMS-Ref	III-659
204	VoyageStop	III-660

```
1    DEFINE ENTITY                              CMovStp-CRec-Ref ;
       KEYWORD IS:     'Container' ;
       CONSISTS OF:
            Consignee ,
            MultiStpNo ,
            CntnrNo ,
            CntnrOwnAbbr ;
       IDENTIFIED BY:
            Consignee ,
            CntnrNo ,
            CntnrOwnAbbr ;
       REFERENCED:
             IN              CntnrMovStp-File
             BY              Create-Non-Fcst-Container-Rec ;
       RESPONSIBLE PROBLEM DEFINER IS:
                      'Mitchem' ;
```

```
2    DEFINE ENTITY                              CgoActivity ;
       DESCRIPTION;
Cargo Activity.
This entity is an occurrence of information about a consignor or con-
signee for cargo or containers, including the military address, DDN
information, etc.  This is the master file record for the CgoActiv-
ity-File.
 ;
     KEYWORD IS:     'LOB' ,
                     'Data Model' ,
                     'Container' ,
                     'Freight' ;
     SEE MEMO:
          FCityCd-Memo ;
     SOURCE IS:      'CNTNR/FRT DATA MODEL' ;
     ATTRIBUTE IS:
          volatility      'DYNAMIC' ,
          TYPE            'AN' ,
          PICTURE         'X(229)' ,
          FIELD-LENGTH     '229' ,
          RETENTION       'PERMANENT' ,
          SEC-CLASS       'UNCLASSIFIED' ;
     LAYOUT;

   LOGICAL DATABASE DESIGN:

        AACCurr                          6     P
        MBldgNo                          10
        MCntry                           2
        MUDsg                            35    S
        MStPOBox                         25
        MPostCd                          6
        MCityRgn                         25
        MAttn                            20
        MUDsgCont                        35
        MAPOlst5                         5
        MAPOLst4                         4
        DteLstUpdCgoActv                 5
        DDNHostCd                        12
        DDNUserId                        12
        TELEX                            20
        DSSALOCCd                        1     S
        ShipToAAC                        6     F


   FREIGHT DATA MODEL:

        CgoActivity:CgoAddress, Mand Many:Mand 1
        CgoActivity:FreightMov, Opt 1:Opt Many (Requesting Unit)
```

AD-A190 393 FUNCTIONAL DESCRIPTION FOR THE DEPARTMENT OF THE ARMY 7/9
MOVEMENT MANAGEMENT..(U) INTERNATIONAL BUSINESS
SERVICES INC PRINCE GEORGE VA DEFENSE S.. W ANCKAITIS
UNCLASSIFIED 31 DEC 87 DSDPG-375-049-87-3-VOL-1 F/G 12/7 NL

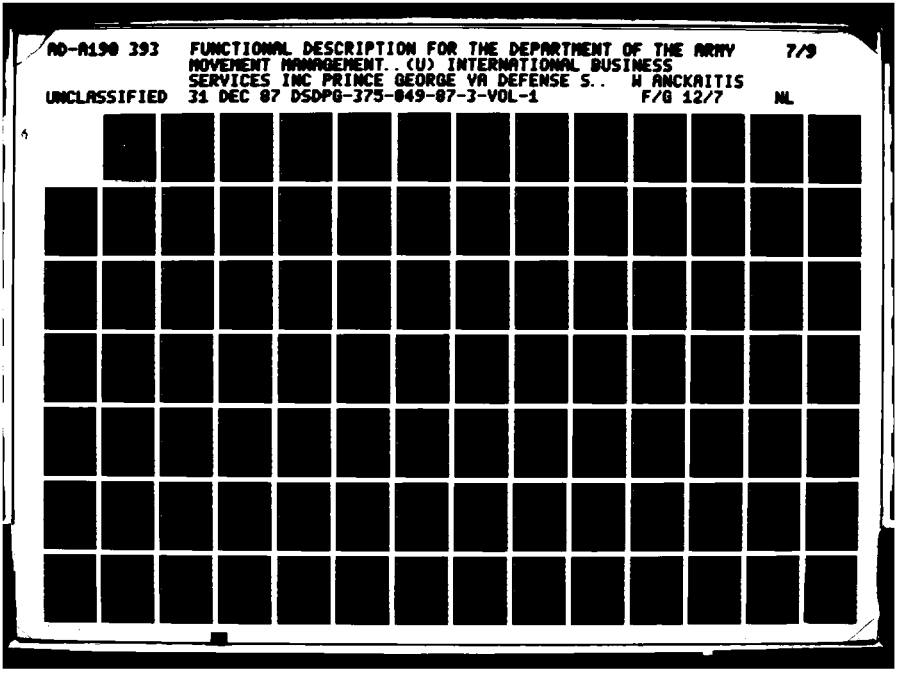

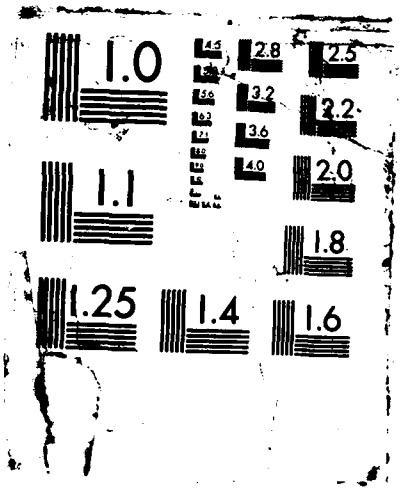
1.0
1.1
1.25
1.4
1.6
1.8
2.0
2.2
2.5
2.8
3.2
3.6
4.0

```
FREIGHT PARTITION:

     CgoActivity                          CRD
        CgoAddress                        R


CONTAINER DATA MODEL:

     CgoActivity:CgoAddress, Mand Many:Mand 1
     CgoActivity:MEvent, Opt 1:Opt Many


CONTAINER PARTITION:

      CgoActivity                         CRD
         CgoAddress                       R;
     COLLECTED:      IN CgoActivity-File ;
     CONSISTS OF:
          AACCurr ,
          MBldgNo ,
          MCntry ,
          MUDsg ,
          MStPOBox ,
          MPostCd ,
          MCityRgn ,
          MAttn ,
          MUDsgCont ,
          MAPO1st5 ,
          MAPOLst4 ,
          DteLstUpdCgoActv ,
          DDNHostCd ,
          DDNUserId ,
          TELEX ,
          DSSALOCCd ,
          ShipToAAC ;
     IDENTIFIED BY:
          AACCurr ;
     CARDINALITY IS:
                    10000 ;
     RESPONSIBLE PROBLEM DEFINER IS:
                    'TACCS-LOB CNTNR/FRT GROUP' ;
```

```
3    DEFINE ENTITY                              CgoActivity-TM3-Ref ;
       DESCRIPTION;
   Cargo Activity TM3 Reference
   This is the CgoActivity reference that verifies if the DspoActv entered
   on the screen is on file.
    ;
       KEYWORD IS:     'Container' ;
       ATTRIBUTE IS:
            SEC-CLASS       'UNCLASSIFIED' ;
       CONSISTS OF:
            AACCurr ;
       IDENTIFIED BY:
            AACCurr ;
       REFERENCED:
             IN             CgoActivity-File
             BY             Prep-Hold/Stg-Request-<TM3> ;
       RESPONSIBLE PROBLEM DEFINER IS:
                      'Valentine' ;
```

```
4    DEFINE ENTITY                              CgoAddress ;
       DESCRIPTION;
Freight Address.
This entity is the occurrence of information relating to organizations
that can receive cargo shipments. This record is the master file record
of the Cargo Address File.
 ;
    KEYWORD IS:     'Freight' ,
                    'Container' ,
                    'LOB' ,
                    'Data Model' ;
    SOURCE IS:      'CONTAINER DATA MODEL' ,
                    'FREIGHT DATA MODEL' ;
    ATTRIBUTE IS:
         SEC-CLASS       'UNCLASSIFIED' ,
         TYPE            'AN' ,
         volatility      'DYNAMIC' ,
         PICTURE         'X(300)' ,
         FIELD-LENGTH     '300' ,
         EST-VOLUME      '6,000-8,000 RECORDS' ;
    LAYOUT;

LOGICAL DATABASE DESIGN:

     ShipToAAC                          6     P
     DteLstUpdCgoAdrs                   5     S
     FSt                                25
     FBldgNo                            10
     FBrksKsrn                          25
     FCityRgn                           25
       FCityCd                          5     S
       FCityRgnLst20                    20
     FCntry                             2
     FPostCd                            6
     FAttn                              20
     FMCTCivTel                         25
     FMCTMilTel                         15
     FMCTPOC                            25
     FAPO1st5                           5
     FAPOLst4                           4
     FUDsgCont                          35
     FUDsg                              35    S
     CityGpCd                           2     S
     TTPCd                              1     S
     TcrTml                             7
     BASATel                            20
     MCECd                              2     F
        MCEPrefix                       1     F
        MCESuffix                       1     F
```

FREIGHT DATA MODEL:

```
CgoAddress:FreightMov, Opt 1:Opt Many (Consignor)
CgoAddress:Pallet463L, Mand 1:Opt 1
CgoAddress:VehStopPt, Opt 1:Opt Many (Consignee)
CgoAddress:CgoActivity, Mand 1:Mand Many
CgoAddress:CgoMCE, Opt Many:Mand 1
CgoAddress:FrtMEvent, Mand 1:Opt Many
```

NOTE: Relationship to FreightMov and VehStopPt are optional on side of CgoAddress for the time being. Consignor and Consignee are mandatory fields, but if DODAAC is not in CgoAddress, operator must be able to override and continue to process a movement.

FREIGHT PARTITION:

```
CgoAddress                          CRUD
   CgoActivity                      R
   CgoMCE                           R
```

CONTAINER DATA MODEL:

```
CgoAddress:CgoMCE, Opt Many:Mand 1
CgoAddress:CntnrMovStp, Mand 1:Opt Many (Consignee)
CgoAddress:CgoActivity, Mand 1:Mand Many
```

CONTAINER PARTITION:

```
CgoAddress                          CRUD
   CgoMCE                           R
   CgoActivity                      R;
COLLECTED:     IN CgoAddress-File ;
CONSISTS OF:
     ShipToAAC ,
     DteLstUpdCgoAdrs ,
     FSt ,
     FBldgNo ,
     FBrksKsrn ,
     FCityRgn ,
     FCityCd ,
     FCityRgnLst20 ,
     FCntry ,
     FPostCd ,
     FAttn ,
```

```
            FMCTCivTel ,
            FMCTMilTel ,
            FMCTPOC ,
            FAPO1st5 ,
            FAPOLst4 ,
            FUDsgCont ,
            FUDsg ,
            CityGpCd ,
            TTPCd ,
            TcrTml ,
            BASATel ,
            MCECd ,
            MCEPrefix ,
            MCESuffix ;
      IDENTIFIED BY:
            ShipToAAC ;
      CARDINALITY IS:
                  8000 ;
      RESPONSIBLE PROBLEM DEFINER IS:
                  'TACCS-LOB CNTNR/FRT GROUP' ;

5   DEFINE ENTITY                              CgoAddress-CRec-Ref ;
      DESCRIPTION;
This entity is used to validate location elements in a process.
 ;
      KEYWORD IS:    'Container' ;
      CONSISTS OF:
            ShipToAAC ;
      REFERENCED:
            IN             CgoAddress-File
            BY             Create-Non-Fcst-Container-Rec ;
      REFERENCED:
            IN             CgoAddress-File
            BY             Prep-Diversion-Request-<TM2> ;
      REFERENCED:
            IN             CgoAddress-File
            BY             Prep-SEAVAN-Maint-Bgn/E-<TTP> ;
      REFERENCED:
            IN             CgoAddress-File
            BY             Update-Cntnr-Record ;
      RESPONSIBLE PROBLEM DEFINER IS:
                  'Mitchem' ;
```

```
6    DEFINE ENTITY                          CgoAddress-ETA-Fcst-Ref ;
       DESCRIPTION;
   Cargo Address ETA Forecast Reference
   This entity is used to validate Consignee when it is input to the system.
    ;
       KEYWORD IS:     'Container' ;
       COLLECTED:      IN CgoAddress-File ;
       CONSISTS OF:
            MCECd ,
            MCEPrefix ,
            MCESuffix ,
            ShipToAAC ;
       REFERENCED:
             IN              CgoAddress-File
             BY              Correct-Merge-ETA-Forecast-Err ;
       REFERENCED:
             IN              CgoAddress-File
             BY              Merge-Reformatted-ETA-Forecast ;
       REFERENCED:
             IN              CgoAddress-File
             BY              Capture-TMR ;
       RESPONSIBLE PROBLEM DEFINER IS:
                       'Cope' ;

7    DEFINE ENTITY                          CgoAddress-Inq/Rept-Info-Ref ;
       DESCRIPTION;
   Cargo Address Inquiry/Report Information Reference
   This entity consists of the data elements and values from the CgoAddress
   file which are referenced and displayed by the Inquiry/Rept-on-Specific-
   Cntnr process.
    ;
       KEYWORD IS:     'Container' ;
       COLLECTED:      IN CgoAddress-File ;
       CONSISTS OF:
            ShipToAAC ,
            FUDsg ;
       REFERENCED:
             IN              CgoAddress-File
             BY              Inquiry/Rept-on-Specific-Cntnr ;
       RESPONSIBLE PROBLEM DEFINER IS:
                       'Morris' ;
```

```
8    DEFINE ENTITY                              CgoAddress-Recngn-Ref ;
       DESCRIPTION;
Cargo Address Reconsignment Reference
This is CgoAddress record information used in preparing the request for
reconsignment.
 ;
       KEYWORD IS:     'Container' ;
       CONSISTS OF:
            ShipToAAC ,
            FSt ,
            FBldgNo ,
            FBrksKsrn ,
            FCityRgn ,
            FCntry ;
       IDENTIFIED BY:
            ShipToAAC ;
       REFERENCED:
             IN              CgoAddress-File
             BY              Prepare-Reconsignment-Request ;
       RESPONSIBLE PROBLEM DEFINER IS:
                       'Valentine' ;

9    DEFINE ENTITY                              CgoAddress-TMS-Ref ;
       DESCRIPTION;
Cargo Address TMS Reference
This is the CgoAddress reference that verifies if the new consignee for
a diversion is on file.
 ;
       KEYWORD IS:     'Container' ;
       CONSISTS OF:
            ShipToAAC ;
       IDENTIFIED BY:
            ShipToAAC ;
       REFERENCED:
             IN              CgoAddress-File
             BY              Prep-Rel-fr-Stg/Hold-Req-<TMS> ;
       RESPONSIBLE PROBLEM DEFINER IS:
                       'Valentine' ;
```

```
10   DEFINE ENTITY                              CgoMCE ;
       DESCRIPTION;
     Cargo Movement Control Element
     This entity is an occurrence of a specific Movement Control Element
     Code, MCE Type Code, and MCE name.  This is the master record for the
     cargo Movement Control Element Table.
      ;
        KEYWORD IS:     'LOB' ,
                        'Freight' ,
                        'Container' ,
                        'Data Model' ;
        SOURCE IS:      'CONTAINER DATA MODEL' ,
                        'FREIGHT DATA MODEL' ;
        ATTRIBUTE IS:
             SEC-CLASS       'UNCLASSIFIED' ,
             TYPE            'AN' ,
             PICTURE         'X(44)' ,
             FIELD-LENGTH     '44' ,
             RETENTION       'PERMANENT' ,
             volatility      'STATIC' ;
        LAYOUT;
```

LOGICAL DATABASE DESIGN:

MCECd	2	P
MCEPrefix	1	S
MCESuffix	1	
MCETyCd	1	S
MCENme	35	S
AACBnMCCMCC	6	S

FREIGHT DATA MODEL:

CgoMCE:FreightMov, Mand 1:Opt Many (Origin MCT)
CgoMCE:FreightMov, Opt 1:Opt Many (Origin BMCT)
CgoMCE:VehStopPt, Opt 1:Opt Many (Destination)
CgoMCE:CgoAddress, Mand 1:Opt Many

NOTE: Relationships to FreightMov and VehStopPt are optional on side of CgoMCE because MCECd is normally obtained through CgoAddress.

FREIGHT PARTITION:

CgoMCE	CRD
CgoAddress	R

CONTAINER DATA MODEL:

```
     CgoMCE:CntnrMov, Mand 1:Opt Many (Origin, TMR)
     CgoMCE:CntnrMovStp, Mand 1:Opt Many (Destination)
     CgoMCE:CgoAddress, Mand 1:Opt Many
```

CONTAINER PARTITION:

```
     CgoMCE                                    CRD;
     COLLECTED:      IN CgoMCE-Tbl ;
     CONSISTS OF:
          MCECd ,
          MCEPrefix ,
          MCESuffix ,
          MCETyCd ,
          MCENme ,
          AACBnMCCMCC ;
     IDENTIFIED BY:
          MCECd ;
     CARDINALITY IS:
                    70 ;
     RESPONSIBLE PROBLEM DEFINER IS:
                    'TACCS-LOB CNTNR/FRT GROUP' ;

11   DEFINE ENTITY                              CgoMCE-Dam-DL-Ref ;
       DESCRIPTION;
Cargo Movement Control Element Damaged Deadlined Reference
This entity consists of the data element values from the CgoMCE table which
are assigned by the system to identify the MCT preparing the Damaged/Dead-
lined Report.
 ;
     KEYWORD IS:     'Container' ;
     COLLECTED:      IN CgoMCE-Tbl ;
     CONSISTS OF:
          MCENme ,
          MCEPrefix ;
     REFERENCED:
           IN              CgoMCE-Tbl
           BY              Prep-Dam-Deadlined-Cntnr-Rept ;
     RESPONSIBLE PROBLEM DEFINER IS:
                    'Morris' ;
```

```
12   DEFINE ENTITY                              CgoMCE-ECSR-Ref ;
       DESCRIPTION;
   Cargo MCE Empty Container Status Report Reference
   This is CgoMCE record data used to create the Trns ISAM and ECSR Msg
   file records.
    ;
       KEYWORD IS:     'Container' ;
       CONSISTS OF:
            MCEPrefix ,
            MCENme ;
       IDENTIFIED BY:
            MCEPrefix ;
       REFERENCED:
             IN              CgoMCE-Tbl
             BY              Prep-Empty-Cntnr-Status-Report ;
       RESPONSIBLE PROBLEM DEFINER IS:
                       'Valentine' ;

13   DEFINE ENTITY                              CgoMCE-InbCntnr-Ref ;
       DESCRIPTION;
   Cargo MCE Inbound Container Reference
   This is the Cargo MCE record data used to identify the Movement Control
   Element on the Inbound Container Report.
    ;
       KEYWORD IS:     'Container' ;
       COLLECTED:      IN CgoMCE-Tbl ;
       CONSISTS OF:
            MCENme ,
            MCECd ,
            MCEPrefix ,
            MCESuffix ;
       REFERENCED:
             IN              CgoMCE-Tbl
             BY              Correct-Merge-ETA-Forecast-Err ;
       REFERENCED:
             IN              CgoMCE-Tbl
             BY              Notify-Cnsgn-of-Inbound-Cntnr ;
       REFERENCED:
             IN              CgoMCE-Tbl
             BY              Capture-TMR ;
       RESPONSIBLE PROBLEM DEFINER IS:
                       'Blake' ;
```

```
14   DEFINE ENTITY                              CgoMCE-Recngn-Ref ;
       DESCRIPTION;
     Cargo MCE Reconsignment Reference
     This is CgoMCE file information used in the prepare reconsignment
     request process.
      ;
        KEYWORD IS:     'Container' ;
        CONSISTS OF:
             MCEPrefix ,
             MCENme ;
        IDENTIFIED BY:
             MCEPrefix ;
        REFERENCED:
              IN              CgoMCE-Tbl
              BY              Prepare-Reconsignment-Request ;
        RESPONSIBLE PROBLEM DEFINER IS:
                        'Valentine' ;

15   DEFINE ENTITY                              CgoMCE-TM3-Ref ;
       DESCRIPTION;
     Cargo Movement Control Element TM3 Reference
     This is CgoMCE file information used in the TM3 process.
      ;
        KEYWORD IS:     'Container' ;
        CONSISTS OF:
             MCEPrefix ,
             MCENme ;
        IDENTIFIED BY:
             MCEPrefix ;
        REFERENCED:
              IN              CgoMCE-Tbl
              BY              Prep-Hold/Stg-Request-<TM3> ;
        RESPONSIBLE PROBLEM DEFINER IS:
                        'Valentine' ;
```

```
16   DEFINE ENTITY                                CgoMCE-TMS-Ref ;
       DESCRIPTION;
   Cargo Movement Control Element TMS Reference
   This is CgoMCE file information used in the TMS process.
    ;
       KEYWORD IS:     'Container' ;
       CONSISTS OF:
            MCEPrefix ,
            MCENme ;
       IDENTIFIED BY:
            MCEPrefix ;
       REFERENCED:
             IN              CgoMCE-Tbl
             BY              Prep-Rel-fr-Stg/Hold-Req-<TMS> ;
       RESPONSIBLE PROBLEM DEFINER IS:
                       'Valentine' ;
```



```
17   DEFINE ENTITY                              CgoPort ;
       DESCRIPTION;
     Cargo Port.
     This entity is an occurrence of a specific MILSTAMP Port Code, Port Type
     and Port Name. This is the master record for the Cargo Port Table.
      ;
        KEYWORD IS:     'Freight' ,
                        'Container' ,
                        'Data Model' ,
                        'LOB' ;
        SEE MEMO:
             Port-Memo ;
        SOURCE IS:      'CONTAINER DATA MODEL' ,
                        'FREIGHT DATA MODEL' ;
        ATTRIBUTE IS:
             FIELD-LENGTH     '29' ,
             TYPE             'AN' ,
             PICTURE          'X(29)' ,
             SEC-CLASS        'UNCLASSIFIED' ,
             RETENTION        'PERMANENT' ,
             volatility       'STATIC' ;
        LAYOUT;
```



```
     FREIGHT DATA MODEL:

          CgoPort:AirIdentNo, Opt 1:Opt Many

     FREIGHT LOGICAL DATABASE DESIGN:

          PrtCd                                  3     P
          PrtTyCd                                1
          PrtNme                                25

     FREIGHT PARTITION:

          CgoPort                               CRD

     CONTAINER DATA MODEL:

          CgoPort:MEvent, Opt 1:Opt Many
          CgpPort:VoyageStop, Mand 1:Opt Many (POD)

     CONTAINER LOGICAL DATABASE DESIGN:

          PrtCd                                 3     P
          PrtTyCd                               1
          PrtNme                               25
```



```
     CONTAINER PARTITION:
```

```
      CgoPort                                    CRD
   ;
      COLLECTED:      IN CgoPort-Tbl ;
      CONSISTS OF:
           PrtCd ,
           PrtTyCd ,
           PrtNme ;
      IDENTIFIED BY:
           PrtCd ;
      CARDINALITY IS:
                      332 ;
      RESPONSIBLE PROBLEM DEFINER IS:
                      'TACCS-LOB CNTNR/FRT GROUP' ;

18    DEFINE ENTITY                              CgoPort-Ref ;
      DESCRIPTION;
   Cargo Port Reference
   This entity is used to validate Port codes when it is input to the system.
    ;
      KEYWORD IS:     'Container' ,
                      'LOB' ;
      ATTRIBUTE IS:
           FIELD-LENGTH     '3' ,
           TYPE             'AN' ,
           PICTURE          'X(3)' ,
           SEC-CLASS        'UNCLASSIFIED' ,
           RETENTION        'PERMANENT' ,
           volatility       'STATIC' ;
      COLLECTED:      IN CgoPort-Tbl ;
      CONSISTS OF:
           PrtCd ;
      IDENTIFIED BY:
           PrtCd ;
      REFERENCED:
            IN              CgoPort-Tbl
            BY              Correct-Merge-ETA-Forecast-Err ;
      REFERENCED:
            IN              CgoPort-Tbl
            BY              Create-Non-Fcst-Container-Rec ;
      REFERENCED:
            IN              CgoPort-Tbl
            BY              Merge-Reformatted-ETA-Forecast ;
      RESPONSIBLE PROBLEM DEFINER IS:
                      'Mitchem' ;
```

```
19   DEFINE ENTITY                              CgoPort-TTP-Ref ;
       DESCRIPTION;
    Cargo Port TTP Reference
    This entity is used to validate data elements inputed into the input
    screen of the TTP process.
     ;
        KEYWORD IS:     'Container' ;
        ATTRIBUTE IS:
             SEC-CLASS       'UNCLASSIFIED' ,
             PROCESS-MODE     'INTERACTIVE BATCH' ;
        COLLECTED:      IN CgoPort-Tbl ;
        CONSISTS OF:
             PrtCd ;
        REFERENCED:
              IN              CgoPort-Tbl
              BY              Prep-SEAVAN-Maint-Bgn/E-<TTP> ;
        RESPONSIBLE PROBLEM DEFINER IS:
                        'Ocasio' ;
```

```
20   DEFINE ENTITY                          Cntnr-History-Info-Upd ;
       KEYWORD IS:     'Container' ;
       COLLECTED:      IN Temp-History-File ;
       CONSISTS OF:
            DestMCEPrefix ,
            StpSeqNo ,
            DupeStpIndex ,
            Consignee ,
            MultiStpNo ,
            DteRecngnReq ,
            RecngnCfmNoncfm ,
            DteRecngnCfmNoncfm ,
            DivrsnRecngnCnsgn ,
            DDDteCarrNotif ,
            DDActlSptDte ,
            DDDteCnsgnReqRelDte ,
            DDDteRel ,
            DDLoc ,
            DivrsnIndic ,
            DivrsnDte ,
            DteHoldStart ,
            DteHoldStop ,
            HoldLoc ,
            StpNonFcst ,
            DteRecCreat ,
            CntnrOwnAbbr ,
            CntnrNoPrefix ,
            CntnrNo ,
            CntnrTCN ,
            VoyDocuNoFltNo ,
            TMRPrefix ,
            SpIntCd ,
            ModeCd ,
            TransPriCd ,
            FWTNo ,
            TIN ,
            POD ,
            TotStp ,
            CntnrSz ,
            CmdtyCd ,
            ModeMethShpmtCd ,
            DteStageStart ,
            DteStageStop ,
            CntnrDam ,
            EvntDte ,
            NewEvntLoc ,
            AACCurr ,
            DspoActv ,
            RsnDenyCd ,
```

```
     NewMovNo ,
     OceanCarrAbbr ,
     DteCurr ;
IDENTIFIED BY:
     DteCurr ,
     CntnrNo ,
     Consignee ,
     CntnrNoPrefix ,
     DupeStpIndex ;
ADDED:
      TO              Temp-History-File
      BY              History-File-Retrieval ;
CREATED:        BY History-File-Retrieval ;
RESPONSIBLE PROBLEM DEFINER IS:
                'Valentine' ;
```

```
21   DEFINE ENTITY                              CntnrDiscrp ;
       DESCRIPTION;
   An incident of improper condition of cargo, container or conveyance.
   It is considered to be associated with a movement event.
    ;
       KEYWORD IS:     'LOB' ,
                       'Data Model' ,
                       'Container' ;
       SOURCE IS:      'CONTAINER DATA MODEL' ;
       ATTRIBUTE IS:
            volatility      'DYNAMIC' ,
            TYPE            'AN' ,
            SEC-CLASS       'UNCLASSIFIED' ,
            PICTURE         'X(49)' ,
            FIELD-LENGTH     '49' ;
       LAYOUT;
   DATA MODEL:

        CntnrDiscrp:MEvent, Opt Many:Mand 1
        CntnrDiscrp:DiscrpType, Opt Many:Mand 1


   LOGICAL DATABASE DESIGN:

        CntnrOwnAbbr                          4   P/F
        CntnrNo                               5   P/F
        Consignee                             6   P/F
        DupeStpIndex                          1   P/F
        MovEvntCd                             3   P/F
        EvntTy                                1   P/F
        TyPwrCd                               1   P/F
        DiscrpTCN                             17  P
        DiscrpPc                              4
        DiscrpDte                             5
        DiscrpCd                              2   F

   PARTITION:

        None.;
       COLLECTED:      IN CntnrDiscrp-File ;
       CONSISTS OF:
            CntnrOwnAbbr ,
            CntnrNo ,
            Consignee ,
            DupeStpIndex ,
            MovEvntCd ,
            EvntTy ,
            TyPwrCd ,
            DiscrpTCN ,
```

```
      DiscrpPc ,
      DiscrpDte ,
      DiscrpCd ;
IDENTIFIED BY:
      CntnrOwnAbbr ,
      CntnrNo ,
      Consignee ,
      DupeStpIndex ,
      MovEvntCd ,
      EvntTy ,
      TyPwrCd ,
      DiscrpTCN ;
ADDED:
       TO              CntnrDiscrp-File
       BY              Prep-Cgo-Dischg/Non-Del-<TTW> ;
MODIFIED:
       IN              CntnrDiscrp-File
       BY              Prep-Cgo-Dischg/Non-Del-<TTW> ;
MODIFIED:
       IN              CntnrDiscrp-File
       BY              Prep-Cgo-Non-Dlvr-Corr-<ZTW> ;
REFERENCED:
       IN              CntnrDiscrp-File
       BY              Prep-Cgo-Dischg/Non-Del-<TTW> ;
REFERENCED:
       IN              CntnrDiscrp-File
       BY              Prep-Cgo-Non-Dlvr-Corr-<ZTW> ;
REFERENCED:
       IN              CntnrDiscrp-File
       BY              Sel-Rec-for-Cntnr-History-DB ;
REMOVED:
       FROM            CntnrDiscrp-File
       BY              Sel-Rec-for-Cntnr-History-DB ;
CREATED:        BY Prep-Cgo-Dischg/Non-Del-<TTW> ;
DESTROYED:      BY Sel-Rec-for-Cntnr-History-DB ;
RESPONSIBLE PROBLEM DEFINER IS:
                'TACCS-LOB CONTAINER GROUP' ;
```

```
22   DEFINE ENTITY                              CntnrMov ;
       DESCRIPTION;
   Container Movement
   This entity is an occurrence of the basic container movement information
   for a given container currently moving from origin to destination.  This
   record is the master file record for the CntnrMov-File.
    ;
       KEYWORD IS:     'LOB' ,
                       'Data Model' ,
                       'Container' ;
       SOURCE IS:      'CONTAINER DATA MODEL' ;
       ATTRIBUTE IS:
            volatility      'DYNAMIC' ,
            RETENTION       '60 DAYS' ,
            SEC-CLASS       'UNCLASSIFIED' ,
            TYPE            'AN' ,
            PICTURE         'X(133)' ,
            FIELD-LENGTH     '133' ;
       LAYOUT;

   DATA MODEL:

        CntnrMov:ShpmtMethod, Opt Many:Mand 1
        CntnrMov:MovModeCode, Opt Many:Mand 1 (TIPS)
        CntnrMov:VoyageStop, Mand Many:Opt 1
        CntnrMov:MEvent, Mand 1:Opt Many (Port)
        CntnrMov:Commodity, Opt Many:Mand 1
        CntnrMov:CntnrMovStp, Mand 1:Mand Many
        CntnrMov:Month, Opt Many:Mand 1
        CntnrMov:CgoMCE, Opt Many:Mand 1 (Origin,TMR)
        CntnrMov:TransPri, Opt Many:Opt 1
        CntnrMov:CntnrOwner, Opt Many:Mand 1 (Cntnr Owner)
        CntnrMov:CntnrSize, Opt Many:Mand 1
        CntnrMov:SpecialInt, Opt Many:Opt 1
        CntnrMov:TypeCarrier, Opt Many:Mand 1
        CntnrMov:CgoActivity, Opt Many:Opt 1


   LOGICAL DATABASE DESIGN:

        CntnrOwnAbbr                    4   P/F
        CntnrNo                         5   P/F
        CntnrTCN                       17   S
        DteLstUpdCntnr                  5   S
        DteRecCreat                     5   S
        FWTNo                          11   S
        TMRPrefix                       6   S
           OriginMCEPrefix              1   F
           MthCd                        1   F
```

```
      SerNo                    4
   CnsgnrAAC                   6
   DteDprtCnsgnr               5
   UltmCnsgn                   6
   StgIndic                    1    S
   DteStageStart               5
   DteStageStop                5
   TotStp                      2
   CntnrDam                    1    S
   CntnrNoPrefix               3
   TAC                         4
   DelFlag                     1    S
   MovCompFlag                 1    S
   TIN                         8    S
   TyCarrCd                    1    F
   ModeMethShpmtCd             1    F
   POD                         3    F
   CntnrTyCd                   1    F
   CntnrSz                     2    F
   CmdtyCd                     3    F
   SpIntCd                     2    F
   ModeCd                      1    F
   TransPriCd                  1    F
   VoyDocuNoFltNo              5    F
   ReqAAC                      6    F

PARTITION:

   CntnrMov                    CRUD
      CntnrSize                R
      Month                    R
      Commodity                R
      SpecialInt               R
      TypeCarr                 R
      TransPri                 R
      MovModeCode              R
      CntnrMovStp              CRUD
         CgoAddress            R
         CntnrRmrkLn           CRUD
      CgoMCE                   R
      CgoActivity              R
      MEvent                   RD
         CntnrDiscrp           RD
      VoyageStop               CRD
         CgoPort               R
         Voyage                CRD
            OceanCarr          R
      CntnrOwner               R
      ShpmtMethod              R;
```

```
COLLECTED:      IN CntnrMov-File ;
CONSISTS OF:
      CntnrOwnAbbr ,
      CntnrNo ,
      CntnrTCN ,
      DteLstUpdCntnr ,
      DteRecCreat ,
      FWTNo ,
      TMRPrefix ,
      OriginMCEPrefix ,
      MthCd ,
      SerNo ,
      CnsgnrAAC ,
      DteDprtCnsgnr ,
      UltmCnsgn ,
      StgIndic ,
      DteStageStart ,
      DteStageStop ,
      TotStp ,
      CntnrDam ,
      CntnrNoPrefix ,
      TAC ,
      DelFlag ,
      MovCompFlag ,
      TIN ,
      TyCarrCd ,
      ModeMethShpmtCd ,
      POD ,
      CntnrTyCd ,
      CntnrSz ,
      CmdtyCd ,
      SpIntCd ,
      ModeCd ,
      TransPriCd ,
      VoyDocuNoFltNo ,
      ReqAAC ;
IDENTIFIED BY:
      CntnrOwnAbbr ,
      CntnrNo ;
REFERENCED:
       IN             CntnrMov-File
       BY             Sel-Rec-for-Cntnr-History-DB ;
REMOVED:
       FROM           CntnrMov-File
       BY             Sel-Rec-for-Cntnr-History-DB ;
CREATED:        BY Correct-Merge-ETA-Forecast-Err ;
CREATED:        BY Create-Non-Fcst-Container-Rec ;
CREATED:        BY Merge-Reformatted-ETA-Forecast ;
CREATED:        BY Prep-Cgo-Dischg/Non-Del-<TTW> ;
```



```
        CREATED:        BY Prep-Del-60-Day-Old-Cntnr-Rept ;
        CREATED:        BY Prep-Empty-Cntnr-Status-Report ;
        CREATED:        BY Prep-Hold/Stg-Request-<TM3> ;
        CREATED:        BY Prep-Rel-fr-Stg/Hold-Req-<TM5> ;
        CREATED:        BY Prepare-Reconsignment-Request ;
        CREATED:        BY Capture-TMR ;
        DESTROYED:      BY Sel-Rec-for-Cntnr-History-DB ;
        CARDINALITY IS:
                        5000 ;
        RESPONSIBLE PROBLEM DEFINER IS:
                        'TACCS-LOB CONTAINER GROUP' ;

23  DEFINE ENTITY                                   CntnrMov-CRec-Ref ;
      KEYWORD IS:     'Container' ;
      CONSISTS OF:
           CmdtyCd ,
           CntnrSz ,
           TotStp ,
           CntnrTCN ,
           CntnrNo ,
           CntnrOwnAbbr ,
           VoyDocuNoFltNo ,
           POD ;
      IDENTIFIED BY:
           CntnrNo ,
           CntnrOwnAbbr ;
      REFERENCED:
            IN              CntnrMov-File
            BY              Create-Non-Fcst-Container-Rec ;
      RESPONSIBLE PROBLEM DEFINER IS:
                      'Mitchem' ;
```





```
24   DEFINE ENTITY                              CntnrMov-CRec-Upd ;
       KEYWORD IS:     'Container' ;
       CONSISTS OF:
            UltmCnsgn ,
            CntnrNoPrefix ,
            CntnrNo ,
            CntnrOwnAbbr ,
            VoyDocuNoFltNo ,
            POD ,
            TyCarrCd ,
            DteRecCreat ,
            DteLstUpdCntnr ;
       ADDED:
             TO              CntnrMov-File
             BY              Create-Non-Fcst-Container-Rec ;
       RESPONSIBLE PROBLEM DEFINER IS:
                       'Mitchem' ;

25   DEFINE ENTITY                              CntnrMov-Dam-DL-Ref ;
       DESCRIPTION;
   Container Movement Damaged Deadlined Reference
   This entity consists of the data element values from the CntnrMov file
   which are assigned by the system to the Damaged/Deadlined Report.
    ;
       KEYWORD IS:     'Container' ;
       COLLECTED:      IN CntnrMov-File ;
       CONSISTS OF:
            CntnrNo ,
            CntnrNoPrefix ,
            FWTNo ,
            CntnrOwnAbbr ,
            TMRPrefix ,
            VoyDocuNoFltNo ,
            CntnrTCN ;
       REFERENCED:
             IN              CntnrMov-File
             BY              Prep-Dam-Deadlined-Cntnr-Rept ;
       RESPONSIBLE PROBLEM DEFINER IS:
                       'Morris' ;
```

```
26   DEFINE ENTITY                              CntnrMov-Dam-DL-Upd ;
       DESCRIPTION;
    Container Movement Damaged Deadlined Update
    This entity consists of the data element values which are assigned to the
    appropriate data elements in the CntnrMov file.
     ;
        KEYWORD IS:     'Container' ;
        COLLECTED:      IN CntnrMov-File ;
        CONSISTS OF:
             CntnrNo ,
             CntnrNoPrefix ,
             FWTNo ,
             CntnrOwnAbbr ,
             TMRPrefix ,
             VoyDocuNoFltNo ,
             CntnrTCN ,
             DteLstUpdCntnr ,
             CntnrDam ;
        MODIFIED:
              IN              CntnrMov-File
              BY              Prep-Dam-Deadlined-Cntnr-Rept ;
        RESPONSIBLE PROBLEM DEFINER IS:
                        'Morris' ;

27   DEFINE ENTITY                              CntnrMov-ECSR-Ref ;
       DESCRIPTION;
    Container Movement Empty Container Status Report Reference
    This is container record information that is used by the prepare empty
    container status report process.
     ;
        KEYWORD IS:     'Container' ;
        CONSISTS OF:
             CntnrOwnAbbr ,
             CntnrNo ,
             CntnrNoPrefix ,
             VoyDocuNoFltNo ;
        IDENTIFIED BY:
             CntnrOwnAbbr ,
             CntnrNo ;
        REFERENCED:
              IN              CntnrMov-File
              BY              Prep-Empty-Cntnr-Status-Report ;
        RESPONSIBLE PROBLEM DEFINER IS:
                        'Valentine' ;
```

```
28   DEFINE ENTITY                              CntnrMov-ECSR-Upd ;
       DESCRIPTION;
   Container Movement Empty Container Status Report Update
   This is CntnrMov record data used to update the CntnrMov record
    ;
       KEYWORD IS:     'Container' ;
       CONSISTS OF:
            CntnrOwnAbbr ,
            CntnrNo ,
            DteLstUpdCntnr ;
       IDENTIFIED BY:
            CntnrOwnAbbr ,
            CntnrNo ;
       ADDED:
             TO              CntnrMov-File
             BY              Prep-Empty-Cntnr-Status-Report ;
       MODIFIED:
             IN              CntnrMov-File
             BY              Prep-Empty-Cntnr-Status-Report ;
       RESPONSIBLE PROBLEM DEFINER IS:
                     'Valentine' ;
```

```
29   DEFINE ENTITY                          CntnrMov-ETA-Fcst-Info ;
       DESCRIPTION;
    Container Movement ETA Forecast Information
    This entity validates the existance of a CntnrMov record.
     ;
        KEYWORD IS:     'Container' ;
        COLLECTED:      IN CntnrMov-File ;
        CONSISTS OF:
             CntnrOwnAbbr ,
             CntnrNo ,
             VoyDocuNoFltNo ,
             POD ,
             CntnrNoPrefix ,
             TotStp ,
             CntnrTCN ,
             CmdtyCd ,
             CntnrSz ,
             UltmCnsgn ,
             DteRecCreat ;
        ADDED:
              TO              CntnrMov-File
              BY              Correct-Merge-ETA-Forecast-Err ;
        ADDED:
              TO              CntnrMov-File
              BY              Merge-Reformatted-ETA-Forecast ;
        MODIFIED:
              IN              CntnrMov-File
              BY              Correct-Merge-ETA-Forecast-Err ;
        MODIFIED:
              IN              CntnrMov-File
              BY              Merge-Reformatted-ETA-Forecast ;
        REFERENCED:
              IN              CntnrMov-File
              BY              Correct-Merge-ETA-Forecast-Err ;
        REFERENCED:
              IN              CntnrMov-File
              BY              Merge-Reformatted-ETA-Forecast ;
        RESPONSIBLE PROBLEM DEFINER IS:
                        'Cope' ;
```

```
30   DEFINE ENTITY                              CntnrMov-Hist-Upd ;
       DESCRIPTION;
   Container Movement History Update
   This is the CntnrMov record update info that is used to identify records
   that meet the deletion selection criteria, but do not meet the inactive
   status timeframe parameter to be moved to history storage disks.  This
   update is used as a key to delete the record after it meets the inactive
   timeframe criteria.
    ;
      KEYWORD IS:     'Container' ;
      CONSISTS OF:
           CntnrOwnAbbr ,
           CntnrNo ,
           DteLstUpdCntnr ,
           MovCompFlag ;
      IDENTIFIED BY:
           CntnrOwnAbbr ,
           CntnrNo ;
      MODIFIED:
            IN              CntnrMov-File
            BY              Sel-Rec-for-Cntnr-History-DB ;
      RESPONSIBLE PROBLEM DEFINER IS:
                      'Valentine' ;

31   DEFINE ENTITY                              CntnrMov-InbCntnr-Ref ;
       DESCRIPTION;
   Container Movement Inbound Container Reference
   This is the Container Movement record used to identify the movement data
   for a container on the Inbound Container Report.
    ;
      KEYWORD IS:     'Container' ;
      COLLECTED:      IN CntnrMov-File ;
      CONSISTS OF:
           CntnrOwnAbbr ,
           CntnrNo ,
           CntnrNoPrefix ,
           CntnrTCN ,
           VoyDocuNoFltNo ,
           TotStp ,
           POD ,
           CntnrSz ,
           CmdtyCd ,
           DteRecCreat ;
      REFERENCED:
            IN              CntnrMov-File
            BY              Notify-Cnsgn-of-Inbound-Cntnr ;
      RESPONSIBLE PROBLEM DEFINER IS:
                      'Blake' ;
```

```
32   DEFINE ENTITY                          CntnrMov-Inq/Rept-Info-Ref ;
       DESCRIPTION;
Container Movement Inquiry/Report Information Reference
This entity consists of the data elements and values in the CntnrMov file
which are referenced and displayed in the Inquiry/Rept-on-Specific-Cntnr
process.
 ;
    KEYWORD IS:     'Container' ;
    COLLECTED:      IN CntnrMov-File ;
    CONSISTS OF:
         CntnrOwnAbbr ,
         CntnrNo ,
         CntnrTCN ,
         VoyDocuNoFltNo ,
         POD ,
         CntnrNoPrefix ,
         ModeCd ,
         CntnrSz ,
         UltmCnsgn ,
         TotStp ,
         StgIndic ,
         CmdtyCd ,
         DteLstUpdCntnr ,
         TMRPrefix ,
         SpIntCd ,
         TransPriCd ,
         CntnrDam ,
         DteStageStart ,
         DteStageStop ;
    REFERENCED:
          IN             CntnrMov-File
          BY             Inquiry/Rept-on-Specific-Cntnr ;
    RESPONSIBLE PROBLEM DEFINER IS:
                   'Morris' ;
```

```
33   DEFINE ENTITY                              CntnrMov-MtnStp-Info ;
       DESCRIPTION;
   This is the CntnrMov record information that is referenced to
   identify the record to be updated in the process.
    ;
       KEYWORD IS:     'Container' ;
       COLLECTED:      IN CntnrMov-File ;
       CONSISTS OF:
            CntnrNo ,
            FWTNo ,
            TMRPrefix ,
            CntnrNoPrefix ,
            CntnrOwnAbbr ,
            DteLstUpdCntnr ,
            MovCompFlag ;
       RESPONSIBLE PROBLEM DEFINER IS:
                       'Valentine' ;

34   DEFINE ENTITY                              CntnrMov-Recngn-Ref ;
       DESCRIPTION;
   Container Movement Reconsignment Reference
   This is CntnrMov record information that is used in preparing the
   request for reconsignment.
    ;
       KEYWORD IS:     'Container' ;
       CONSISTS OF:
            CntnrOwnAbbr ,
            CntnrNo ,
            CntnrNoPrefix ,
            VoyDocuNoFltNo ,
            POD ,
            TAC ;
       IDENTIFIED BY:
            CntnrOwnAbbr ,
            CntnrNo ;
       REFERENCED:
             IN              CntnrMov-File
             BY              Prepare-Reconsignment-Request ;
       RESPONSIBLE PROBLEM DEFINER IS:
                       'Valentine' ;
```

```
35   DEFINE ENTITY                          CntnrMov-Recngn-Upd ;
       DESCRIPTION;
    Container Movement Reconsignment Update
    This is CntnrMov record update information used in the reconsignment
    request process.
     ;
       KEYWORD IS:     'Container' ;
       CONSISTS OF:
            CntnrOwnAbbr ,
            CntnrNo ,
            DteLstUpdCntnr ;
       IDENTIFIED BY:
            CntnrOwnAbbr ,
            CntnrNo ;
       ADDED:
             TO             CntnrMov-File
             BY             Prepare-Reconsignment-Request ;
       MODIFIED:
             IN             CntnrMov-File
             BY             Prepare-Reconsignment-Request ;
       RESPONSIBLE PROBLEM DEFINER IS:
                     'Valentine' ;
```

```
36   DEFINE ENTITY                          CntnrMov-TM2-Info ;
       DESCRIPTION;
   Container Movement TM2 Information
   This entity consists of the data elements and values from the CntnrMov file
   which are referenced and updated by the Prep-Diversion-Request-<TM2>
   process.
    ;
       KEYWORD IS:     'Container' ;
       COLLECTED:      IN CntnrMov-File ;
       CONSISTS OF:
            CntnrNoPrefix ,
            CntnrNo ,
            CntnrOwnAbbr ,
            FWTNo ,
            TMRPrefix ,
            VoyDocuNoFitNo ,
            TAC ,
            CntnrTCN ,
            CnsgnrAAC ,
            POD ,
            DteDprtCnsgnr ,
            DteLstUpdCntnr ;
       MODIFIED:
             IN              CntnrMov-File
             BY              Prep-Diversion-Request-<TM2> ;
       REFERENCED:
             IN              CntnrMov-File
             BY              Prep-Diversion-Request-<TM2> ;
       RESPONSIBLE PROBLEM DEFINER IS:
                      'Morris' ;
```

```
37   DEFINE ENTITY                              CntnrMov-TM3-Ref ;
       DESCRIPTION;
   Container Movement TM3 Reference
   This is the CntnrMov reference data that is used to verify the correct
   record to be used in creating the TM3 from the front end screen.
    ;
       KEYWORD IS:     'Container' ;
       ATTRIBUTE IS:
            SEC-CLASS       'UNCLASSIFIED' ;
       CONSISTS OF:
            CntnrOwnAbbr ,
            CntnrNo ,
            CntnrNoPrefix ,
            CntnrTCN ,
            VoyDocuNoFltNo ,
            CnsgnrAAC ,
            DteDprtCnsgnr ;
       IDENTIFIED BY:
            CntnrOwnAbbr ,
            CntnrNo ;
       REFERENCED:
             IN              CntnrMov-File
             BY              Prep-Hold/Stg-Request-<TM3> ;
       RESPONSIBLE PROBLEM DEFINER IS:
                     'Valentine' ;
```

```
38   DEFINE ENTITY                              CntnrMov-TM3-Upd ;
       DESCRIPTION;
     Container Movement TM3 Update
     This is the CntnrMov update information used to update the record.
      ;
        KEYWORD IS:     'Container' ;
        ATTRIBUTE IS:
             SEC-CLASS       'UNCLASSIFIED' ;
        CONSISTS OF:
             CntnrOwnAbbr ,
             CntnrNo ,
             DteLstUpdCntnr ,
             CnsgnrAAC ,
             DteDprtCnsgnr ;
        IDENTIFIED BY:
             CntnrOwnAbbr ,
             CntnrNo ;
        ADDED:
              TO             CntnrMov-File
              BY             Prep-Hold/Stg-Request-<TM3> ;
        MODIFIED:
              IN             CntnrMov-File
              BY             Prep-Hold/Stg-Request-<TM3> ;
        RESPONSIBLE PROBLEM DEFINER IS:
                       'Valentine' ;
```

```
39   DEFINE ENTITY                              CntnrMov-TMR-Info ;
       KEYWORD IS:     'Container' ;
       CONSISTS OF:
            TMRPrefix ,
            OriginMCEPrefix ,
            MthCd ,
            SerNo ,
            SpIntCd ,
            ModeCd ,
            TransPriCd ,
            TIN ,
            CntnrTCN ,
            FWTNo ,
            CntnrNo ,
            CntnrNoPrefix ,
            CntnrOwnAbbr ,
            DteLstUpdCntnr ;
       IDENTIFIED BY:
            CntnrNo ,
            CntnrOwnAbbr ,
            TMRPrefix ;
       DERIVED:          BY  Capture-TMR
                         USING DteLstUpdCntnr ;
       DERIVED:          BY  Capture-TMR
                         USING TMR-Inp ;
       USED BY:         Capture-TMR
                         TO DERIVE TMR-ErrMsg-Out ;
       USED BY:         Capture-TMR
                         TO MAINTAIN CntnrMov-File ;
       ADDED:
            TO               CntnrMov-File
            BY               Capture-TMR ;
       MODIFIED:
            IN               CntnrMov-File
            BY               Capture-TMR ;
       REFERENCED:
            IN               CntnrMov-File
            BY               Capture-TMR ;
       RESPONSIBLE PROBLEM DEFINER IS:
                        'Zacot' ;
```

```
40   DEFINE ENTITY                              CntnrMov-TMS-Ref ;
       DESCRIPTION;
   Container Movement TMS Reference
   This is the CntnrMov reference data that is used to verify the correct
   record to be used in creating the TMS from the front end screen.
    ;
       KEYWORD IS:     'Container' ;
       CONSISTS OF:
            CntnrOwnAbbr ,
            CntnrNo ,
            CntnrNoPrefix ,
            CntnrTCN ,
            CnsgnrAAC ,
            DteDprtCnsgnr ,
            VoyDocuNoFltNo ;
       IDENTIFIED BY:
            CntnrOwnAbbr ,
            CntnrNo ;
       REFERENCED:
             IN              CntnrMov-File
             BY              Prep-Rel-fr-Stg/Hold-Req-<TMS> ;
       RESPONSIBLE PROBLEM DEFINER IS:
                       'Valentine' ;

41   DEFINE ENTITY                              CntnrMov-TMS-Upd ;
       DESCRIPTION;
   Container Movement TMS Update
   This is the CntnrMov update info used to update the record.
    ;
       KEYWORD IS:     'Container' ;
       CONSISTS OF:
            CntnrOwnAbbr ,
            CntnrNo ,
            DteLstUpdCntnr ,
            CnsgnrAAC ,
            DteDprtCnsgnr ;
       IDENTIFIED BY:
            CntnrOwnAbbr ,
            CntnrNo ;
       ADDED:
             TO              CntnrMov-File
             BY              Prep-Rel-fr-Stg/Hold-Req-<TMS> ;
       MODIFIED:
             IN              CntnrMov-File
             BY              Prep-Rel-fr-Stg/Hold-Req-<TMS> ;
       RESPONSIBLE PROBLEM DEFINER IS:
                       'Valentine' ;
```

```
42   DEFINE ENTITY                              CntnrMov-TTB-Ref ;
       DESCRIPTION;
     Container Movement TTB Reference
     This information may be referenced by the process in order to utilize
     current data for the generation of specified report information.
      ;
        KEYWORD IS:     'Container' ;
        COLLECTED:      IN CntnrMov-File ;
        CONSISTS OF:
             CntnrNo ,
             CntnrTCN ,
             FWTNo ,
             TMRPrefix ,
             CntnrNoPrefix ,
             CntnrOwnAbbr ;
        REFERENCED:
              IN              CntnrMov-File
              BY              Prepare-Cnsgn-Rept-Evnts-<TTB> ;
        RESPONSIBLE PROBLEM DEFINER IS:
                        'Mitchem' ;

43   DEFINE ENTITY                              CntnrMov-TTB-Upd ;
       DESCRIPTION;
     Container Movement TTB Updated Reference
     This is information that is generated as a result of the process occur-
     ring and is applicable to the container move as a whole.
      ;
        KEYWORD IS:     'Container' ;
        COLLECTED:      IN CntnrMov-File ;
        CONSISTS OF:
             TyCarrCd ,
             ModeMethShpmtCd ,
             CntnrNoPrefix ,
             DteLstUpdCntnr ;
        IDENTIFIED BY:
             CntnrOwnAbbr ,
             CntnrNo ;
        MODIFIED:
              IN              CntnrMov-File
              BY              Prepare-Cnsgn-Rept-Evnts-<TTB> ;
        RESPONSIBLE PROBLEM DEFINER IS:
                        'Mitchem' ;
```

```
44   DEFINE ENTITY                              CntnrMov-TTP-Ref ;
       DESCRIPTION;
   Container Movement TTP Reference
   These are the data elements that are being copied from the CntnrMov file
   to the TTP input screen.
    ;
       KEYWORD IS:     'Container' ;
       ATTRIBUTE IS:
            SEC-CLASS       'UNCLASSIFIED' ,
            PROCESS-MODE     'INTERACTIVE BATCH' ;
       COLLECTED:      IN CntnrMov-File ;
       CONSISTS OF:
            CntnrOwnAbbr ,
            CntnrNo ,
            VoyDocuNoFltNo ,
            POD ,
            CntnrTCN ,
            TMRPrefix ,
            FWTNo ,
            TyCarrCd ,
            CntnrNoPrefix ;
       IDENTIFIED BY:
            CntnrNo ,
            CntnrOwnAbbr ;
       REFERENCED:
             IN              CntnrMov-File
             BY              Prep-SEAVAN-Maint-Bgn/E-<TTP> ;
       REFERENCED:
             IN              CntnrMov-File
             BY              Prep-Svan-Maint-Bgn/E-Corr-ZTP ;
       RESPONSIBLE PROBLEM DEFINER IS:
                      'Ocasio' ;
```

```
45   DEFINE ENTITY                              CntnrMov-TTP-Upd ;
       DESCRIPTION;
     Container Movement TTP Update
     This entity updates the CntnrMov file with the date that the container
     record was last updated.
      ;
        KEYWORD IS:     'Container' ;
        ATTRIBUTE IS:
             SEC-CLASS       'UNCLASSIFIED' ,
             PROCESS-MODE     'INTERACTIVE BATCH' ;
        COLLECTED:      IN CntnrMov-File ;
        CONSISTS OF:
             DteLstUpdCntnr ,
             CntnrNo ,
             CntnrOwnAbbr ;
        MODIFIED:
              IN              CntnrMov-File
              BY              Prep-SEAVAN-Maint-Bgn/E-<TTP> ;
        MODIFIED:
              IN              CntnrMov-File
              BY              Prep-Svan-Maint-Bgn/E-Corr-ZTP ;
        RESPONSIBLE PROBLEM DEFINER IS:
                        'Ocasio' ;
```

```
46   DEFINE ENTITY                              CntnrMov-TTU-Ref ;
       DESCRIPTION;
   Container Movement TTU Reference
   This entity defines those data elements that are being copied from the
   CntnrMov File to the TTU input screen.
    ;
       KEYWORD IS:     'Container' ;
       ATTRIBUTE IS:
            SEC-CLASS       'UNCLASSIFIED' ,
            PROCESS-MODE     'INTERACTIVE BATCH' ;
       CONSISTS OF:
            CntnrOwnAbbr ,
            CntnrNo ,
            VoyDocuNoFltNo ,
            ModeMethShpmtCd ,
            TyCarrCd ,
            CntnrSz ,
            TMRPrefix .
            FWTNo ,
            TIN ,
            SpIntCd ,
            ModeCd ,
            TransPriCd ;
       IDENTIFIED BY:
            CntnrOwnAbbr ,
            CntnrNo ;
       USED BY:        Prep-Convey-Change-Notif-<TTU>
                        TO DERIVE EvntDte ;
       USED BY:        Prep-Convey-Change-Notif-<TTU>
                        TO DERIVE NewMovNo ;
       USED BY:        Prep-Convey-Change-Notif-<TTU>
                        TO DERIVE PstDte ;
       USED BY:        Prep-Convey-Change-Notif-<TTU>
                        TO DERIVE Err-Msg ;
       USED BY:        Prep-Convey-Change-Notif-<TTU>
                        TO DERIVE Err-Diag ;
       USED BY:        Prep-Convey-Change-Notif-<TTU>
                        TO DERIVE NewTyCarrCd ;
       USED BY:        Prep-Convey-Change-Notif-<TTU>
                        TO DERIVE NewModeMethShpmtCd ;
       USED BY:        Prep-Convey-Change-Notif-<TTU>
                        TO DERIVE NewTyMovNoCd ;
       USED BY:        Prep-Convey-Change-Notif-<TTU>
                        TO DERIVE MEvent-TTU-Upd ;
       USED BY:        Prep-Convey-Change-Notif-<TTU>
                        TO DERIVE TTU-DSSR-Info ;
       REFERENCED:
             IN             CntnrMov-File
             BY             Prep-Convey-Change-Notif-<TTU> ;
```

```
        RESPONSIBLE PROBLEM DEFINER IS:
                        'Zacot' ;

47    DEFINE ENTITY                                  CntnrMov-ZTB-Ref ;
        DESCRIPTION;
      Container Movement ZTB Reference
      This entity is composed of values that were entered by the original TTB
      transaction, and are displayed so that the user may change one of them
      (ModeMethShpmtCd).
       ;
          KEYWORD IS:     'Container' ;
          COLLECTED:      IN CntnrMov-File ;
          CONSISTS OF:
               CntnrNoPrefix ,
               FWTNo ,
               CntnrOwnAbbr ,
               TMRPrefix ,
               VoyDocuNoFltNo ,
               ModeMethShpmtCd ,
               TyCarrCd ,
               CntnrTCN ;
          REFERENCED:
                IN              CntnrMov-File
                BY              Prep-Cnsgn-Rept-Evnts-Corr-ZTB ;
          RESPONSIBLE PROBLEM DEFINER IS:
                        'Mitchem' ;

48    DEFINE ENTITY                                  CntnrMov-ZTB-Upd ;
        DESCRIPTION;
      Container Movement ZTB Update
      This entity details values of Container Move that are changed from the
      original TTB entries, to those entered via the ZTB process.
       ;
          KEYWORD IS:     'Container' ;
          COLLECTED:      IN CntnrMov-File ;
          CONSISTS OF:
               CntnrOwnAbbr ,
               VoyDocuNoFltNo ,
               ModeMethShpmtCd ,
               TyCarrCd ,
               CntnrNo ,
               DteLstUpdCntnr ;
          MODIFIED:
                IN              CntnrMov-File
                BY              Prep-Cnsgn-Rept-Evnts-Corr-ZTB ;
          RESPONSIBLE PROBLEM DEFINER IS:
                        'Mitchem' ;
```

```
49   DEFINE ENTITY                              CntnrMovRmrk-Ref ;
       DESCRIPTION;
   Container Movement Remark Reference.
   This entity is data used to identify the container that remarks data is
   being posted to for a container movement.
    ;
      KEYWORD IS:     'Container' ,
                      'LOB' ;
      CONSISTS OF:
           CntnrNo ,
           CntnrNoPrefix ,
           CntnrOwnAbbr ,
           FWTNo ,
           TMRPrefix ,
           VoyDocuNoFltNo ,
           POD ;
      REFERENCED:
            IN              CntnrMov-File
            BY              Create-Container-Remarks ;
      RESPONSIBLE PROBLEM DEFINER IS:
                     'Blake' ;
```

```
50   DEFINE ENTITY                                  CntnrMovStp ;
       DESCRIPTION;
    Container Movement Stop
    This entity is an occurrence of the information about a multi stop
    action for a given container movement.  This is the master file record
    for the CntnrMovStp-File.
     ;
        KEYWORD IS:     'LOB' ,
                        'Data Model' ,
                        'Container' ;
        SOURCE IS:      'CONTAINER DATA MODEL' ;
        ATTRIBUTE IS:
             volatility      'DYNAMIC' ,
             RETENTION       '60 DAYS' ,
             SEC-CLASS       'UNCLASSIFIED' ,
             TYPE            'AN' ,
             PICTURE         'X(215)' ,
             FIELD-LENGTH     '215' ;
        LAYOUT;

    DATA MODEL:

         CntnrMovStp:CntnrMov, Mand Many:Mand 1
         CntnrMovStp:CntnrRmrkLn, Mand 1:Opt Many
         CntnrMovStp:MEvent, Mand 1:Opt Many (Stop)
         CntnrMovStp:CgoAddress, Opt Many:Mand 1 (Consignee)
         CntnrMovStp:CgoMCE, Opt Many:Mand 1 (Destination)


    LOGICAL DATABASE DESIGN:

         CntnrOwnAbbr                        4   P/F
         CntnrNo                             5   P/F
         Consignee                           6   P/F
         DupeStpIndex                        1   P
         MultiStpNo                          1   S
         DteRecngnReq                        5   S
         DDDteCarrNotif                      5   S
         DDActlSptDte                        5
         DivrsnIndic                         1
         DteCnsgnNotif                       5
         RecngnCfmNoncfm                     1
         DteRecngnCfmNoncfm                  5
         DDDteRel                            5
         DDCarrPOCNotif                     25
         DDDteCnsgnNotif                     5
         DDCnsgnPOCNotif                    25
         DDDteCnsgnReqRelDte                 5
         DDCarrPOCNotifRel                  25
```

DDLoc	25	
StpSeqNo	1	S
StpCompFlag	1	S
DivrsnDte	5	
DteHoldStart	5	
DteHoldStop	5	
HoldLoc	25	
DivrsnRecngnCnsgn	6	
StpNonFcst	1	S
DDPostDte	5	S
DestMCEPrefix	1	F
DestMCESuffix	1	S

PARTITION:

None.

;

COLLECTED: IN CntnrMovStp-File ;
CONSISTS OF:
CntnrOwnAbbr ,
CntnrNo ,
Consignee ,
DupeStpIndex ,
MultiStpNo ,
DteRecngnReq ,
DDDteCarrNotif ,
DDActlSptDte ,
DivrsnIndic ,
DteCnsgnNotif ,
RecngnCfmNoncfm ,
DteRecngnCfmNoncfm ,
DDDteRel ,
DDCarrPOCNotif ,
DDDteCnsgnNotif ,
DDCnsgnPOCNotif ,
DDDteCnsgnReqRelDte ,
DDCarrPOCNotifRel ,
DDLoc ,
StpSeqNo ,
StpCompFlag ,
DivrsnDte ,
DteHoldStart ,
DteHoldStop ,
HoldLoc ,
DivrsnRecngnCnsgn ,
StpNonFcst ,
DDPostDte ,
DestMCEPrefix ,

```
        DestMCESuffix ;
    IDENTIFIED BY:
        CntnrOwnAbbr ,
        CntnrNo ,
        Consignee ,
        DupeStpIndex ;
    REFERENCED:
          IN              CntnrMovStp-File
          BY              Sel-Rec-for-Cntnr-History-DB ;
    REMOVED:
          FROM            CntnrMovStp-File
          BY              Sel-Rec-for-Cntnr-History-DB ;
    CREATED:          BY Correct-Merge-ETA-Forecast-Err ;
    CREATED:          BY Create-Non-Fcst-Container-Rec ;
    CREATED:          BY Merge-Reformatted-ETA-Forecast ;
    CREATED:          BY Prepare-Reconsignment-Request ;
    CREATED:          BY Capture-TMR ;
    DESTROYED:        BY Sel-Rec-for-Cntnr-History-DB ;
    CARDINALITY IS:
                      5000 ;
    RESPONSIBLE PROBLEM DEFINER IS:
                      'TACCS-LOB CONTAINER GROUP' ;

51  DEFINE ENTITY                              CntnrMovStp-CRec-Upd ;
      KEYWORD IS:     'Container' ;
      CONSISTS OF:
          MultiStpNo ,
          CntnrOwnAbbr ,
          CntnrNo ,
          Consignee ,
          StpNonFcst ;
      ADDED:
          TO              CntnrMovStp-File
          BY              Create-Non-Fcst-Container-Rec ;
      RESPONSIBLE PROBLEM DEFINER IS:
                      'Mitchem' ;
```

```
52   DEFINE ENTITY                          CntnrMovStp-Dam-DL-Ref ;
       DESCRIPTION;
   Container Movement Stop Damaged Deadlined Reference
   This entity consists of the data element(s) values(s) from the CntnrMovStp
   file which are assigned by the system to the Damaged/Deadlined Report.
    ;
       KEYWORD IS:     'Container' ;
       COLLECTED:      IN CntnrMovStp-File ;
       CONSISTS OF:
            CntnrNo ,
            CntnrOwnAbbr ,
            Consignee ,
            MultiStpNo ,
            StpCompFlag ;
       REFERENCED:
             IN              CntnrMovStp-File
             BY              Prep-Dam-Deadlined-Cntnr-Rept ;
       RESPONSIBLE PROBLEM DEFINER IS:
                     'Morris' ;
```



```
53   DEFINE ENTITY                          CntnrMovStp-ETA-Fcst-Info ;
       DESCRIPTION;
    Container Movement Stop ETA Forecast Information
    This entity determines if a stop record exists in the database, and if so,
    sends it to an error file.  If it does not exist, it creates a CntnrMovStp
    record.
     ;
        KEYWORD IS:     'Container' ;
        COLLECTED:      IN CntnrMovStp-File ;
        CONSISTS OF:
             CntnrOwnAbbr ,
             CntnrNo ,
             Consignee ,
             MultiStpNo ,
             DupeStpIndex ,
             DestMCEPrefix ,
             DestMCESuffix ;
        ADDED:
              TO              CntnrMovStp-File
              BY              Correct-Merge-ETA-Forecast-Err ;
        ADDED:
              TO              CntnrMovStp-File
              BY              Merge-Reformatted-ETA-Forecast ;
        MODIFIED:
              IN              CntnrMovStp-File
              BY              Correct-Merge-ETA-Forecast-Err ;
        MODIFIED:
              IN              CntnrMovStp-File
              BY              Merge-Reformatted-ETA-Forecast ;
        REFERENCED:
              IN              CntnrMovStp-File
              BY              Correct-Merge-ETA-Forecast-Err ;
        REFERENCED:
              IN              CntnrMovStp-File
              BY              Merge-Reformatted-ETA-Forecast ;
        RESPONSIBLE PROBLEM DEFINER IS:
                        'Cope' ;
```



```
54   DEFINE ENTITY                          CntnrMovStp-InbCntnr-Ref ;
       DESCRIPTION;
   Container Movement Stop Inbound Container Reference
   This is the Container Stop record used to identify the movement data for a
   specific stop of a container on the Inbound Container Report.
    ;
       KEYWORD IS:     'Container' ;
       COLLECTED:      IN CntnrMovStp-File ;
       CONSISTS OF:
            StpNonFcst ,
            CntnrNo ,
            CntnrOwnAbbr ,
            MultiStpNo ,
            Consignee ,
            DestMCEPrefix ,
            DestMCESuffix ;
       REFERENCED:
             IN             CntnrMovStp-File
             BY             Notify-Cnsgn-of-Inbound-Cntnr ;
       RESPONSIBLE PROBLEM DEFINER IS:
                    'Blake' ;
```

```
55   DEFINE ENTITY                          CntnrMovStp-Inq/Rept-Info-Ref ;
       DESCRIPTION;
   Container Movement Stop Inquiry/Report Information Reference
   This entity consists of the data elements and values from the CntnrMovStp
   file which are referenced and displayed by the Inquiry/Rept-on-Specific-
   Cntnr process.
    ;
       KEYWORD IS:     'Container' ;
       COLLECTED:      IN CntnrMovStp-File ;
       CONSISTS OF:
            Consignee ,
            CntnrOwnAbbr ,
            CntnrNo ,
            MultiStpNo ,
            DestMCEPrefix ,
            StpSeqNo ,
            DivrsnIndic ,
            RecngnCfmNoncfm ,
            DivrsnRecngnCnsgn ,
            DDActlSptDte ,
            DteHoldStart ,
            DteHoldStop ;
       REFERENCED:
             IN              CntnrMovStp-File
             BY              Inquiry/Rept-on-Specific-Cntnr ;
       RESPONSIBLE PROBLEM DEFINER IS:
                       'Morris' ;

56   DEFINE ENTITY                          CntnrMovStp-MtnStp-Info ;
       DESCRIPTION;
   This is the CntnrMovStp record information that is referenced
   to identity the record to be updated in the process.
    ;
       KEYWORD IS:     'Container' ;
       COLLECTED:      IN CntnrMovStp-File ;
       CONSISTS OF:
            CntnrNo ,
            CntnrOwnAbbr ,
            Consignee ,
            MultiStpNo ,
            StpCompFlag ,
            StpNonFcst ,
            DivrsnIndic ;
       RESPONSIBLE PROBLEM DEFINER IS:
                       'Valentine' ;
```

```
57   DEFINE ENTITY                          CntnrMovStp-Recngn-Upd ;
       DESCRIPTION;
   Container Movement Stop Reconsignment Update
   This is the CntnrMovStp record update information received from the
   requestor which is required on the reconsignment request.
    ;
      KEYWORD IS:     'Container' ;
      CONSISTS OF:
           CntnrOwnAbbr ,
           CntnrNo ,
           Consignee ,
           DupeStpIndex ,
           DteRecngnReq ,
           DivrsnRecngnCnsgn ;
      IDENTIFIED BY:
           CntnrOwnAbbr ,
           CntnrNo ,
           Consignee ,
           DupeStpIndex ;
      ADDED:
            TO              CntnrMovStp-File
            BY              Prepare-Reconsignment-Request ;
      RESPONSIBLE PROBLEM DEFINER IS:
                     'Valentine' ;
```

```
58   DEFINE ENTITY                              CntnrMovStp-Ref ;
       DESCRIPTION;
    Container Movement Stop Reference
    This is the CntnrMovStp reference data that is used to identify and
    validate the correct record to be used in creating the below referenced
    processes from the front end screen input.
     ;
       KEYWORD IS:     'Container' ;
       ATTRIBUTE IS:
            SEC-CLASS       'UNCLASSIFIED' ,
            PROCESS-MODE     'INTERACTIVE BATCH' ;
       COLLECTED:      IN CntnrMovStp-File ;
       CONSISTS OF:
            Consignee ,
            DupeStpIndex ,
            CntnrNo ,
            CntnrOwnAbbr ,
            MultiStpNo ,
            StpCompFlag ,
            DestMCEPrefix ,
            StpSeqNo ;
       IDENTIFIED BY:
            CntnrOwnAbbr ,
            CntnrNo ,
            Consignee ,
            DupeStpIndex ;
       USED BY:        Capture-TMR
                        TO DERIVE CntnrMovStp-TMR-Upd ;
       USED BY:        Prep-Convey-Change-Notif-<TTU>
                        TO DERIVE TTU-DSSR-Info ;
       USED BY:        Capture-TMR
                        TO MAINTAIN CntnrMovStp-File ;
       MODIFIED:
             IN             CntnrMovStp-File
             BY             Prep-Cgo-Non-Dlvr-Corr-<ZTW> ;
       REFERENCED:
             IN             CntnrMovStp-File
             BY             Prep-Hold/Stg-Request-<TM3> ;
       REFERENCED:
             IN             CntnrMovStp-File
             BY             Prep-Rel-fr-Stg/Hold-Req-<TMS> ;
       REFERENCED:
             IN             CntnrMovStp-File
             BY             Prep-Diversion-Request-<TM2> ;
       REFERENCED:
             IN             CntnrMovStp-File
             BY             Prepare-Cnsgn-Rept-Evnts-<TTB> ;
       REFERENCED:
             IN             CntnrMovStp-File
```

```
      BY              Capture-TMR ;
REFERENCED:
      IN              CntnrMovStp-File
      BY              Prep-SEAVAN-Maint-Bgn/E-<TTP> ;
REFERENCED:
      IN              CntnrMovStp-File
      BY              Prep-Svan-Maint-Bgn/E-Corr-ZTP ;
REFERENCED:
      IN              CntnrMovStp-File
      BY              Prep-Cnsgn-Rept-Evnts-Corr-ZTB ;
REFERENCED:
      IN              CntnrMovStp-File
      BY              Prepare-Reconsignment-Request ;
REFERENCED:
      IN              CntnrMovStp-File
      BY              Prep-Cgo-Dischg/Non-Del-<TTW> ;
REFERENCED:
      IN              CntnrMovStp-File
      BY              Prep-Cgo-Non-Dlvr-Corr-<ZTW> ;
REFERENCED:
      IN              CntnrMovStp-File
      BY              Prep-Convey-Change-Notif-<TTU> ;
RESPONSIBLE PROBLEM DEFINER IS:
            'Mitchem' ;
```

```
59   DEFINE ENTITY                                  CntnrMovStp-TMR-Upd ;
       KEYWORD IS:     'Container' ;
       CONSISTS OF:
            CntnrNo ,
            CntnrOwnAbbr ,
            StpSeqNo ,
            DestMCEPrefix ;
       DERIVED:          BY  Capture-TMR
                         USING MultiStpNo ;
       DERIVED:          BY  Capture-TMR
                         USING StpSeqNo ;
       DERIVED:          BY  Capture-TMR
                         USING DestMCEPrefix ;
       DERIVED:          BY  Capture-TMR
                         USING CntnrMovStp-Ref ;
       USED BY:         Capture-TMR
                         TO MAINTAIN CntnrMovStp-File ;
       ADDED:
             TO              CntnrMovStp-File
             BY              Capture-TMR ;
       MODIFIED:
             IN              CntnrMovStp-File
             BY              Capture-TMR ;
       RESPONSIBLE PROBLEM DEFINER IS:
                       'Zacot' ;

60   DEFINE ENTITY                                  CntnrMovStp-ZTB-Upd ;
       DESCRIPTION;
    Container Movement Stop ZTB Update
    This is information that updates the stop record with a negative value for
    StpCompFlag.  This condition occurs when EventTy = E = 00000 is encounter-
    ed.
     ;
       KEYWORD IS:     'Container' ;
       COLLECTED:      IN CntnrMovStp-File ;
       CONSISTS OF:
            CntnrNo ,
            CntnrOwnAbbr ,
            Consignee ,
            StpCompFlag ;
       MODIFIED:
             IN              CntnrMovStp-File
             BY              Prep-Cnsgn-Rept-Evnts-Corr-ZTB ;
       RESPONSIBLE PROBLEM DEFINER IS:
                       'Mitchem' ;
```

```
61   DEFINE ENTITY                                CntnrMovStpRmrk-Ref ;
       DESCRIPTION;
   Container Movement Stop Remark Reference.
   This entity is data from Container Move Stop File used to identify a
   specific stop that remarks are to be posted against for a container
   movement.
    ;
      KEYWORD IS:     'Container' ,
                      'LOB' ;
      CONSISTS OF:
           CntnrOwnAbbr ,
           CntnrNo ,
           Consignee ,
           DupeStpIndex ,
           MultiStpNo ;
      REFERENCED:
            IN              CntnrMovStp-File
            BY              Create-Container-Remarks ;
      RESPONSIBLE PROBLEM DEFINER IS:
                      'Blake' ;

62   DEFINE ENTITY                                CntnrOwn-CRec-Ref ;
      KEYWORD IS:     'Container' ;
      CONSISTS OF:
           CntnrOwnAbbr ;
      REFERENCED:
            IN              CntnrOwner-Tbl
            BY              Create-Non-Fcst-Container-Rec ;
      RESPONSIBLE PROBLEM DEFINER IS:
                      'Mitchem' ;

63   DEFINE ENTITY                                CntnrOwn-Inq-Ref ;
       DESCRIPTION;
   Container Owner Inquiry Reference
   This entity consists of the data elements and values from the CntnrOwner
   table which are referenced and displayed by the Inquiry/Rept-on-Specific-
   Cntnr process.
    ;
      KEYWORD IS:     'Container' ;
      CONSISTS OF:
           CntnrOwnAbbr ,
           CntnrOwnNme ;
      REFERENCED:
            IN              CntnrOwner-Tbl
            BY              Inquiry/Rept-on-Specific-Cntnr ;
      RESPONSIBLE PROBLEM DEFINER IS:
                      'Morris' ;
```

64 DEFINE ENTITY CntnrOwnTy ;
DESCRIPTION;
Container Owner Type
A code which identifies either a commercial-owned or government-owned container, i.e., C-commercial, M-military.
;
KEYWORD IS: 'LOB' ,
'Data Model' ,
'Container' ;
SOURCE IS: 'CONTAINER DATA MODEL' ;
ATTRIBUTE IS:
volatility 'STATIC' ,
TYPE 'AN' ,
FIELD-LENGTH '26' ,
PICTURE 'X(26)' ,
SEC-CLASS 'UNCLASSIFIED' ;
LAYOUT;

DATA MODEL:

CntnrOwnTy:CntnrOwner, Mand 1:Opt Many

LOGICAL DATABASE DESIGN:

CntnrOwnTyCd	1	P
CntnrOwnTyDescr	25	

PARTITION:

CntnrOwnTy CRD;
COLLECTED: IN CntnrOwnTy-Tbl ;
CONSISTS OF:
CntnrOwnTyCd ,
CntnrOwnTyDescr ;
IDENTIFIED BY:
CntnrOwnTyCd ;
CARDINALITY IS:
2 ;
RESPONSIBLE PROBLEM DEFINER IS:
'TACCS-LOB CONTAINER GROUP' ;

```
65   DEFINE ENTITY                                  CntnrOwner ;
       DESCRIPTION;
     Container Owner
     The organization that physically owns the container in a given move,
     regardless of ocean, highway, or rail carrier, i.e. Sealand Van Lines.
      ;
        KEYWORD IS:     'LOB' ,
                        'Data Model' ,
                        'Container' ;
        SOURCE IS:      'CONTAINER DATA MODEL' ;
        ATTRIBUTE IS:
             volatility      'STATIC' ,
             TYPE            'AN' ,
             FIELD-LENGTH     '30' ,
             PICTURE         'X(30)' ,
             SEC-CLASS       'UNCLASSIFIED' ;
        LAYOUT;

     DATA MODEL:

          CntnrOwner:CntnrMov, Mand 1:Opt Many (Cntnr Owner)
          CntnrOwner:CntnrOwnTy, Opt Many:Mand 1


     LOGICAL DATABASE DESIGN:

          CntnrOwnAbbr                          4   P
          CntnrOwnNme                          25
          CntnrOwnTyCd                          1   F


     PARTITION:

          CntnrOwner                           CRD;
        COLLECTED:      IN CntnrOwner-Tbl ;
        CONSISTS OF:
             CntnrOwnAbbr ,
             CntnrOwnNme ,
             CntnrOwnTyCd ;
        IDENTIFIED BY:
             CntnrOwnAbbr ;
        CARDINALITY IS:
                        83 ;
        RESPONSIBLE PROBLEM DEFINER IS:
                        'TACCS-LOB CONTAINER GROUP' ;
```

```
66   DEFINE ENTITY                              CntnrOwner-Ref ;
       DESCRIPTION;
    Container Owner Reference
    This entity is used to validate Container Owner code when it is input to
    the system.
     ;
        KEYWORD IS:     'Container' ;
        COLLECTED:      IN CntnrOwner-Tbl ;
        CONSISTS OF:
             CntnrOwnAbbr ;
        REFERENCED:
              IN              CntnrOwner-Tbl
              BY              Correct-Merge-ETA-Forecast-Err ;
        REFERENCED:
              IN              CntnrOwner-Tbl
              BY              Merge-Reformatted-ETA-Forecast ;
        RESPONSIBLE PROBLEM DEFINER IS:
                        'Cope' ;
```

```
67   DEFINE ENTITY                              CntnrRmrkLn ;
       DESCRIPTION;
   Container Remark Line
   A unique line of information not provided for in the other container
   subsystem attributes that is deemed essential for clarification.
   There may be any number of container remark lines for a given container
   move or stop.
    ;
       KEYWORD IS:     'Data Model' ,
                       'Container' ,
                       'LOB' ;
       SOURCE IS:      'CONTAINER DATA MODEL' ;
       ATTRIBUTE IS:
            volatility      'DYNAMIC' ,
            TYPE            'AN' ,
            SEC-CLASS       'UNCLASSIFIED' ,
            FIELD-LENGTH     '68' ,
            PICTURE         'X(68)' ;
       LAYOUT;

   DATA MODEL:

        CntnrRmrkLn:CntnrMovStp, Opt Many:Mand 1


   LOGICAL DATABASE DESIGN:

        CntnrOwnAbbr                        4   P/F
        CntnrNo                             5   P/F
        Consignee                           6   P/F
        DupeStpIndex                        1   P/F
        CntnrRmrkLnNo                       2   P
        CntnrRmrk                          50


   PARTITION:

        CntnrRmrkLn                        CRUD
        CntnrMovStp                        R;
       COLLECTED:      IN CntnrRmrkLn-File ;
       CONSISTS OF:
            CntnrOwnAbbr ,
            CntnrNo ,
            Consignee ,
            DupeStpIndex ,
            CntnrRmrkLnNo ,
            CntnrRmrk ;
       IDENTIFIED BY:
            CntnrOwnAbbr ,
```

```
      CntnrNo ,
      Consignee ,
      DupeStpIndex ,
      CntnrRmrkLnNo ;
ADDED:
      TO              CntnrRmrkLn-File
      BY              Create-Container-Remarks ;
MODIFIED:
      IN              CntnrRmrkLn-File
      BY              Create-Container-Remarks ;
REFERENCED:
      IN              CntnrRmrkLn-File
      BY              Create-Container-Remarks ;
REFERENCED:
      IN              CntnrRmrkLn-File
      BY              Sel-Rec-for-Cntnr-History-DB ;
REMOVED:
      FROM            CntnrRmrkLn-File
      BY              Create-Container-Remarks ;
REMOVED:
      FROM            CntnrRmrkLn-File
      BY              Sel-Rec-for-Cntnr-History-DB ;
CREATED:        BY Create-Container-Remarks ;
DESTROYED:      BY Create-Container-Remarks ;
DESTROYED:      BY Sel-Rec-for-Cntnr-History-DB ;
RESPONSIBLE PROBLEM DEFINER IS:
                'TACCS-LOB CONTAINER GROUP' ;
```

```
68   DEFINE ENTITY                              CntnrSize ;
       DESCRIPTION;
   Container Size
   The physical size of container associated with a given Van TCMD, e.g.,
   flat bed, refrigerated, dry cargo.
    ;
       KEYWORD IS:     'LOB' ,
                       'Data Model' ,
                       'Container' ;
       SOURCE IS:      'CONTAINER DATA MODEL' ,
                       'CMM DFSR, P. C-487' ;
       ATTRIBUTE IS:
            volatility      'STATIC' ,
            TYPE            'AN' ,
            FIELD-LENGTH     '27' ,
            PICTURE         'X(27)' ,
            SEC-CLASS       'UNCLASSIFIED' ;
       LAYOUT;

   DATA MODEL:

        CntnrSize:CntnrMov, Mand 1:Opt Many


   LOGICAL DATABASE DESIGN:

        CntnrSz                              2   P
        CntnrSzDescr                        25


   PARTITION:

        CntnrSize                           CRD;
       COLLECTED:      IN CntnrSize-Tbl ;
       CONSISTS OF:
            CntnrSz ,
            CntnrSzDescr ;
       IDENTIFIED BY:
            CntnrSz ;
       RESPONSIBLE PROBLEM DEFINER IS:
                       'TACCS-LOB CONTAINER GROUP' ;
```

```
69   DEFINE ENTITY                              CntnrSize-Ref ;
       DESCRIPTION;
     Container Size Reference
     This entity is used to validate Container Size when it is input to the
     system.
      ;
        KEYWORD IS:     'Container' ;
        COLLECTED:      IN CntnrSize-Tbl ;
        CONSISTS OF:
             CntnrSz ;
        REFERENCED:
              IN              CntnrSize-Tbl
              BY              Correct-Merge-ETA-Forecast-Err ;
        REFERENCED:
              IN              CntnrSize-Tbl
              BY              Merge-Reformatted-ETA-Forecast ;
        RESPONSIBLE PROBLEM DEFINER IS:
                        'Cope' ;

70   DEFINE ENTITY                              CntnrSize-TTU-Ref ;
       DESCRIPTION;
     Container Size TTU Reference
     This entity validates container size.
      ;
        KEYWORD IS:     'Container' ;
        CONSISTS OF:
             CntnrSz ;
        IDENTIFIED BY:
             CntnrSz ;
        REFERENCED:
              IN              CntnrSize-Tbl
              BY              Prep-Convey-Change-Notif-<TTU> ;
        RESPONSIBLE PROBLEM DEFINER IS:
                        'Zacot' ;

71   DEFINE ENTITY                              CntnrSz-CRec-Ref ;
        KEYWORD IS:     'Container' ;
        CONSISTS OF:
             CntnrSz ;
        REFERENCED:
              IN              CntnrSize-Tbl
              BY              Create-Non-Fcst-Container-Rec ;
        RESPONSIBLE PROBLEM DEFINER IS:
                        'Mitchem' ;
```

```
72   DEFINE ENTITY                                  Comm-CRec-Ref ;
       KEYWORD IS:     'Container' ;
       CONSISTS OF:
            CmdtyCd ;
       REFERENCED:
             IN              Commodity-Tbl
             BY              Create-Non-Fcst-Container-Rec ;
       RESPONSIBLE PROBLEM DEFINER IS:
                       'Mitchem' ;
```

```
73   DEFINE ENTITY                              Commodity ;
       DESCRIPTION;
     Commodity.
     This entity is an occurrence of a specific MILSTAMP Commodity Code and
     its description.  This is the master record for the Commodity Table.
      ;
        KEYWORD IS:     'LOB' ,
                        'Freight' ,
                        'Container' ,
                        'Data Model' ;
        SOURCE IS:      'CNTNR/FRT DATA MODEL' ,
                        'MILSTAMP APP B, P. B-8' ;
        ATTRIBUTE IS:
             SEC-CLASS       'UNCLASSIFIED' ,
             TYPE            'AN' ,
             PICTURE         'X(23)' ,
             FIELD-LENGTH     '23' ,
             RETENTION       'PERMANENT' ,
             volatility      'STATIC' ;
        LAYOUT;

     LOGICAL DATABASE DESIGN:

          CmdtyCd                              3     P
          CmdtyCdDescr                         20


     FREIGHT DATA MODEL:

        Commodity:VehStopPt, Mand 1:Opt Many


     FREIGHT PARTITION:

          Commodity                            CRD


     CONTAINER DATA MODEL:

          Commodity:CntnrMov, Mand 1:Opt Many


     CONTAINER PARTITION:

          Commodity                            CRD;
        COLLECTED:      IN Commodity-Tbl ;
        CONSISTS OF:
             CmdtyCd ,
             CmdtyCdDescr ;
```

```
      IDENTIFIED BY:
           CmdtyCd ;
      CARDINALITY IS:
                      410 ;
      RESPONSIBLE PROBLEM DEFINER IS:
                      'TACCS-LOB CNTNR/FRT GROUP' ;

74    DEFINE ENTITY                                  Commodity-Ref ;
        DESCRIPTION;
     Commodity Reference
     This entity is used to validate Commodity codes input to the system.
      ;
        KEYWORD IS:     'Container' ;
        COLLECTED:      IN Commodity-Tbl ;
        CONSISTS OF:
             CmdtyCd ;
        REFERENCED:
              IN              Commodity-Tbl
              BY              Correct-Merge-ETA-Forecast-Err ;
        REFERENCED:
              IN              Commodity-Tbl
              BY              Merge-Reformatted-ETA-Forecast ;
        RESPONSIBLE PROBLEM DEFINER IS:
                      'Cope' ;
```

75 DEFINE ENTITY Container-O/H-5-Days-Rept-Upd ;
DESCRIPTION;
Container On-Hand 5 Days Report Update
This is the containers on hand over "X" days report information that is stored in a message file, and sent to TMCA daily. The report lists all containers that were reported arrived at a consignee but were not reported unloaded for a period of "X" (user defined) days. The report period can be changed in the parameter table.
;
KEYWORD IS: 'Container' ,
'LOB' ;
LAYOUT;

OUTPUT MESSAGE FILE FORMAT

FROM: C, MCT
TO: CDR, 1st TMCA, ATTN: AEUTR-MCA-C
AEUTR-MCA-CC

SUBJECT: Containers On Hand Loaded Over Five Day Report
The following containers have been on hand loaded at the activity indicated in excess of 5 days.

ACTIVITY	CNTNR OWNER	CNTNR NUMBER	DATE ARRIVED
HE4497	LYKU	00202072	328

NOTE: The reported container data is sequenced by Consignee.

The report header address information will be printed in the message file as shown above.

Then: Use the Origin MCE Prefix in the parameter table to search for the MCENme in the CgoMCE File.

Then move the MCENme to the message file in the field to the right of the "FROM" address header.

If: No records are found that meet the criteria for printing, print "NEGATIVE REPORT" under the header information.

NOTE: Make this file available to the General Message Process.
;
COLLECTED: IN Cntnr-Msg-File ;
CONSISTS OF:
Consignee ,

```
        CntnrOwnAbbr ,
        CntnrNoPrefix ,
        CntnrNo ,
        EvntDte ,
        MCENme ;
    ADDED:
          TO              Cntnr-Msg-File
          BY              Prep-Cntnr-O/H-Over-5-Day-Rept ;
    CREATED:          BY Prep-Cntnr-O/H-Over-5-Day-Rept ;
    RESPONSIBLE PROBLEM DEFINER IS:
                    'Valentine' ;

76  DEFINE ENTITY                                Corr-TTW-MEvent-ZTW-Info ;
      KEYWORD IS:     'Container' ;
      COLLECTED:      IN MEvent-File ;
      CONSISTS OF:
        CntnrOwnAbbr ,
        CntnrNo ,
        Consignee ,
        MovEvntCd ,
        EvntTy ,
        PstDte ,
        EvntDte ;
      MODIFIED:
          IN              MEvent-File
          BY              Prep-Cgo-Non-Dlvr-Corr-<ZTW> ;
      REFERENCED:
          IN              MEvent-File
          BY              Prep-Cgo-Non-Dlvr-Corr-<ZTW> ;
      RESPONSIBLE PROBLEM DEFINER IS:
                    'Mitchem' ;
```

```
77   DEFINE ENTITY                              DD-CntnrMov-Message-Ent ;
       DESCRIPTION;
     Delayed Delivery Container Movement Message Entity
     This is information provided by the CntnrMov file for use by the
     process.  The process uses CntnrTCN and VoyDocuNoFltNo to complete
     the message-out.
      ;
        KEYWORD IS:     'Container' ;
        COLLECTED:      IN CntnrMov-File ;
        CONSISTS OF:
             CntnrNo ,
             CntnrOwnAbbr ,
             CntnrNoPrefix ,
             VoyDocuNoFltNo ,
             CntnrTCN ;
        IDENTIFIED BY:
             CntnrNo ,
             CntnrOwnAbbr ;
        REFERENCED:
              IN             CntnrMov-File
              BY             Prepare-Delayed-Delivery-Rept ;
        RESPONSIBLE PROBLEM DEFINER IS:
                       'Mitchem' ;
```

```
78   DEFINE ENTITY                              DD-CntnrMov-Ref ;
       DESCRIPTION;
   Delayed Delivery Container Movement Reference Entity
   This is information that is used in different ways.  Voyage Docu No is
   used to identify further the Container being used.  If FWTNo, TMRPrefix,
   or CntnrTCN is used to access the Container, CntnrNo and CntnrOwnAbbr is
   taken from CntnrMov to access CntnrMovStp.
    ;
       KEYWORD IS:     'Container' ;
       CONSISTS OF:
            CntnrNo ,
            CntnrOwnAbbr ,
            CntnrNoPrefix ,
            VoyDocuNoFltNo ,
            CntnrTCN ,
            FWTNo ,
            TMRPrefix ;
       IDENTIFIED BY:
            CntnrNo ,
            CntnrOwnAbbr ;
       REFERENCED:
             IN              CntnrMov-File
             BY              Prep-Delayed-Delivery-Event ;
       RESPONSIBLE PROBLEM DEFINER IS:
                       'Mitchem' ;

79   DEFINE ENTITY                              DD-CntnrMov-Upd ;
       DESCRIPTION;
   Delayed Delivery Container Movement Update Entity
   This is information that the system generates to indicate that a
   container has had activity posted against it.
    ;
       KEYWORD IS:     'Container' ;
       CONSISTS OF:
            CntnrNo ,
            CntnrOwnAbbr ,
            DteLstUpdCntnr ;
       IDENTIFIED BY:
            CntnrNo ,
            CntnrOwnAbbr ;
       MODIFIED:
             IN              CntnrMov-File
             BY              Prep-Delayed-Delivery-Event ;
       RESPONSIBLE PROBLEM DEFINER IS:
                       'Mitchem' ;
```

```
80   DEFINE ENTITY                              DD-CntnrMovStp-Message-Ent ;
       KEYWORD IS:     'Container' ;
       COLLECTED:      IN CntnrMovStp-File ;
       CONSISTS OF:
            DDDteCarrNotif ,
            DDDteCnsgnReqRelDte ,
            DDLoc ,
            Consignee ,
            CntnrOwnAbbr ,
            CntnrNo ,
            DupeStpIndex ;
       REFERENCED:
             IN              CntnrMovStp-File
             BY              Prepare-Delayed-Delivery-Rept ;
       RESPONSIBLE PROBLEM DEFINER IS:
                       'Mitchem' ;

81   DEFINE ENTITY                              DD-CntnrMovStp-Ref ;
       DESCRIPTION;
   Delayed Delivery Container Movement Stop Entity
   This entity provides the Consignee to the process and further aids the
   user in selecting the container, and the stop with which to work.
    ;
       KEYWORD IS:     'Container' ;
       CONSISTS OF:
            CntnrNo ,
            CntnrOwnAbbr ,
            Consignee ,
            MultiStpNo ,
            StpCompFlag ,
            DupeStpIndex ;
       IDENTIFIED BY:
            CntnrNo ,
            CntnrOwnAbbr ,
            Consignee ,
            DupeStpIndex ;
       REFERENCED:
             IN              CntnrMovStp-File
             BY              Prep-Delayed-Delivery-Event ;
       RESPONSIBLE PROBLEM DEFINER IS:
                       'Mitchem' ;
```

```
82  DEFINE ENTITY                          DD-CntnrMovStp-Upd ;
      DESCRIPTION;
   Delayed Delivery Container Movement Stop Update
   This is information that reflects the essence of the Delayed Delivery
   process.  It details who, what, when, where, and how the DD occurred.
   It is posted in separate actions:  The set-up of the DD, and the release
   of the DD.  It provides the date and the authority for the DD release.
   This process captures the date the container was spotted at the
   consignee.
    ;
      KEYWORD IS:    'Container' ;
      CONSISTS OF:
           DupeStpIndex ,
           CntnrNo ,
           CntnrOwnAbbr ,
           Consignee ,
           DDCarrPOCNotif ,
           DDDteCarrNotif ,
           DDCnsgnPOCNotif ,
           DDDteCnsgnNotif ,
           DDDteCnsgnReqRelDte ,
           DDLoc ,
           DDCarrPOCNotifRel ,
           DDDteRel ,
           DDActlSptDte ;
      IDENTIFIED BY:
           DupeStpIndex ,
           CntnrNo ,
           CntnrOwnAbbr ,
           Consignee ;
      MODIFIED:
            IN             CntnrMovStp-File
            BY             Prep-Delayed-Delivery-Event ;
      RESPONSIBLE PROBLEM DEFINER IS:
                     'Mitchem' ;
```

```
83   DEFINE ENTITY                              DD-TTB-MEvent-Ref ;
       DESCRIPTION;
     Delayed Delivery TTB Movement Event Reference
     This is information provided to the DD process that indicates whether or
     not a TTB event had been posted.
      ;
        KEYWORD IS:     'Container' ;
        CONSISTS OF:
             MovEvntCd ,
             EvntTy ,
             CntnrNo ,
             CntnrOwnAbbr ,
             DupeStpIndex ,
             Consignee ;
        RESPONSIBLE PROBLEM DEFINER IS:
                        'Mitchem' ;
```

```
84   DEFINE ENTITY                              DSSR-Info ;
       DESCRIPTION;
   Daily SEAVAN Status Report Information
   This entity consists of the data elements and values from the Trns ISAM and
   CntnrMsg files which are referenced and updated by the Prep-Diversion-
   Request-<TM2> process.
    ;
       KEYWORD IS:     'Container' ;
       COLLECTED:      IN Cntnr-Msg-File ;
       COLLECTED:      IN Trns-ISAM-File ;
       CONSISTS OF:
            CntnrNoPrefix ,
            CntnrTCN ,
            ShpmtUTCN ,
            CntnrNo ,
            CnsgnrAAC ,
            DteDprtCnsgnr ,
            POE ,
            AACCurr ,
            VoyDocuNoFltNo ,
            POD ,
            Consignee ,
            TAC ,
            NewEvntLoc ;
       ADDED:
             TO              Trns-ISAM-File
             BY              Prep-Diversion-Request-<TM2> ;
       MODIFIED:
             IN              Trns-ISAM-File
             BY              Prep-Diversion-Request-<TM2> ;
       MODIFIED:
             IN              Cntnr-Msg-File
             BY              Prep-Diversion-Request-<TM2> ;
       REFERENCED:
             IN              Trns-ISAM-File
             BY              Prep-Diversion-Request-<TM2> ;
       REFERENCED:
             IN              Cntnr-Msg-File
             BY              Prep-Diversion-Request-<TM2> ;
       CREATED:         BY Prep-Diversion-Request-<TM2> ;
       RESPONSIBLE PROBLEM DEFINER IS:
                        'Morris' ;
```

```
85   DEFINE ENTITY                                  Daily-Cntnr-CntnrMov-Ref-Ent ;
       KEYWORD IS:     'Container' ;
       CONSISTS OF:
            CntnrNoPrefix ,
            CntnrOwnAbbr ,
            CntnrNo ,
            ModeMethShpmtCd ,
            TotStp ,
            VoyDocuNoFltNo ,
            CntnrTCN ,
            DelFlag ,
            CntnrDam ,
            StgIndic ;
       REFERENCED:
             IN              CntnrMov-File
             BY              Prep-Daily-Container-Worksheet ;
       RESPONSIBLE PROBLEM DEFINER IS:
                       'Mitchem' ;

86   DEFINE ENTITY                                  Daily-Cntnr-CntnrMovStp-Ref ;
       KEYWORD IS:     'Container' ;
       CONSISTS OF:
            Consignee ,
            CntnrOwnAbbr ,
            CntnrNo ,
            StpCompFlag ,
            MultiStpNo ,
            DivrsnIndic ,
            RecngnCfmNoncfm ;
       REFERENCED:
             IN              CntnrMovStp-File
             BY              Prep-Daily-Container-Worksheet ;
       RESPONSIBLE PROBLEM DEFINER IS:
                       'Mitchem' ;
```

```
87   DEFINE ENTITY                          Daily-Cntnr-MEvent-Ref-Ent ;
       KEYWORD IS:     'Container' ;
       CONSISTS OF:
            Consignee ,
            CntnrOwnAbbr ,
            CntnrNo ,
            MovEvntCd ,
            EvntTy ,
            EvntDte ;
       REFERENCED:
             IN              MEvent-File
             BY              Prep-Daily-Container-Worksheet ;
       RESPONSIBLE PROBLEM DEFINER IS:
                       'Mitchem' ;
```

88 DEFINE ENTITY Daily-SEAVAN-Sta-Message ;
DESCRIPTION;
Daily SEAVAN Status Message
This is a message format of daily container operations that lists all movement events reported that day in DIC format. This output is generated by the Prepare Daily SEAVAN Status Report process.
This may also be a hard copy that lists all movement event transactions for a particular container, and provides totals and subtotals of those transactions.
;
KEYWORD IS: 'Container' ,
'LOB' ;
LAYOUT;

FM: MCT
TO: CDR 1ST TMCA ATTN: MID/COD-CC MSG NO
INFO: (Appropriate MCT)
SUBJ: DAILY SEAVAN STATUS REPORT
ttbc3ccwcw25n144920v081km2 wk4fvea6423 a204b204d204e204 seau00123456
ttbc4dcwcw64n236291v192km3 wk4ffea6391 a205
tm2

---

ztwc3c w25n144839u9371mm2wk3f29b0030 k206

TOTALS

TTB	4
TM3	2
TMS	1
TTU	2
TTW	3
ZTB	1
ZTW	1

There were 14 transactions for this transmission.

This message was approved for dispatch by:

```
;
   CONSISTS OF:
        Consignee ,
        EvntDte ,
        DiscrpCd ,
        CnsgnrAAC ,
        DteDprtCnsgnr ,
        DspoActv ,
        MovEvntCd ,
        ModeCd ,
        StpSeqNo ,
        TMRPrefix ,
        FWTNo ,
        TIN ,
        CntnrTCN ,
        CntnrNo ,
        CntnrNoPrefix ,
        SpIntCd ,
        TransPriCd ,
        DestMCEPrefix ,
        EvntTy ,
        MgrCd ,
        ModeMethShpmtCd ,
        NewEvntLoc ,
        NewModeMethShpmtCd ,
        NewTyCarrCd ,
        NewTyMovNoCd ,
        OceanCarrAbbr ,
        OrigCd ,
        DiscrpPc ,
        POD ,
        POE ,
        RespCd ,
        DiscrpTCN ,
        TAC ,
        TyCarrCd ,
        TyMovCd ,
        TyMovNoCd ,
        TyPwrCd ,
        CntnrOwnAbbr ,
        VoyDocuNoFltNo ;
   ADDED:
         TO              Commo-Proc-Hold-File
```

```
      BY              Prep-Daily-SEAVAN-Status-Rept ;
CREATED:        BY Prep-Daily-SEAVAN-Status-Rept ;
RESPONSIBLE PROBLEM DEFINER IS:
                'Mitchem' ;
```

```
89   DEFINE ENTITY                          Daily-SEAVAN-Status-Info-Ent ;
       DESCRIPTION;
   Daily SEAVAN Status Information Entity
   This is the container record information of a MEvent nature
   (specifically DIC) reported to CMM.
   ;
       KEYWORD IS:    'Container' ;
       CONSISTS OF:
            Consignee ,
            CnsgnrAAC ,
            EvntTy ,
            DteDprtCnsgnr ,
            DiscrpCd ,
            DspoActv ,
            MovEvntCd ,
            ModeCd ,
            StpSeqNo ,
            TMRPrefix ,
            FWTNo ,
            TIN ,
            CntnrTCN ,
            CntnrNo ,
            CntnrNoPrefix ,
            SpIntCd ,
            TransPriCd ,
            DestMCEPrefix ,
            MgrCd ,
            ModeMethShpmtCd ,
            NewEvntLoc ,
            NewModeMethShpmtCd ,
            NewTyCarrCd ,
            NewTyMovNoCd ,
            OceanCarrAbbr ,
            OrigCd ,
            DiscrpPc ,
            POD ,
            POE ,
            RespCd ,
            DiscrpTCN ,
            TAC ,
            TyCarrCd ,
            TyMovCd ,
            TyMovNoCd ,
            TyPwrCd ,
            CntnrOwnAbbr ,
            VoyDocuNoFltNo ,
            EvntDte ;
       REFERENCED:
             IN              Trns-ISAM-File
```

```
        BY              Prep-Daily-SEAVAN-Status-Rept ;
    RESPONSIBLE PROBLEM DEFINER IS:
                    'Mitchem' ;

90  DEFINE ENTITY                                   Dam-Deadlined-Cntnr-Report ;
      DESCRIPTION;
Damaged Deadlined Container Report
This is a hard copy of the Damaged Deadlined Container Report listing
the damaged container or chassis information.  This output is generated
by the Prepare Report Damaged Deadlined Container report.
 ;
    KEYWORD IS:     'Container' ,
                    'LOB' ;
    CONSISTS OF:
         Assistance-Required-Other ,
         Assistance-Rqr-Carr-Maint-Team ,
         Asst-Rqr-Carr-Claims-Invest ,
         Description-of-Damage ,
         CntnrTCN ,
         Current-Container-Location ,
         DTG-Damage-Deadline-Occurred ,
         Extent-of-Damage-Cargo ,
         Extent-of-Damage-Chassis ,
         Extent-of-Damage-Container ,
         Extent-of-Damage-Tractor ,
         Loc-Damaged/Deadline-Occurred ,
         Damaged/Deadlined-Remarks ,
         Report-Submitted-by-Name ,
         Report-Submitted-by-Rank ,
         Report-Submitted-by-Unit-Phone ,
         Report-Submitted-by-Unit ,
         Time-Damaged/Deadline-Occurred ,
         Van-Number ,
         CntnrOwnAbbr ,
         VoyDocuNoFltNo ,
         MCENme ,
         File-No ;
    ADDED:
          TO            Cntnr-Msg-File
          BY            Prep-Dam-Deadlined-Cntnr-Rept ;
    CREATED:        BY Prep-Dam-Deadlined-Cntnr-Rept ;
    RESPONSIBLE PROBLEM DEFINER IS:
                    'Morris' ;
```

91 DEFINE ENTITY Delayed-Delivery-Message ;
DESCRIPTION;
Delayed Delivery Message Output
This is information composed of header data, and container data, that describes important facets of the Delayed Delivery event(s) of specific containers.

A hard copy of this message is sent to MECOBO-N, TMCA, and the carrier involved.
;
KEYWORD IS: 'Container' ;
LAYOUT;

FROM: C, MCT _____

TO: CDR 1st TMCA OBERURSEL GE/AEUTR-MCA-CC/

INFO: MECOBO-N
CARRIER

SUBJ: Delayed Delivery Notice

1. The following container(s) are to have their deliveries delayed as follows:

TCN	CNTNR OWNER	CNTNR NUMBER	VOYAGE DOC NUMBER	DELAY DATE	REQ REL DATE	CURRENT LOCATION	CONSIGNEE
XXXXXXXXXXXXXXXX	XXXX	XXXXXXXX	XXXXX	XXX	XXX	XXXXXX	XXXXXX
XXXXXXXXXXXXXXXX	XXXX	XXXXXX	XXXXX	XXX	XXX	XXXXXX	XXXXXX

;
CONSISTS OF:
CntnrNo ,
CntnrNoPrefix ,
CntnrTCN ,
CntnrOwnAbbr ,
VoyDocuNoFltNo ,
DDDteCnsgnReqRelDte ,
DDLoc ,
Consignee ,
DDDteCarrNotif ;

```
ADDED:
      TO              Cntnr-Msg-File
      BY              Prepare-Delayed-Delivery-Rept ;
CREATED:        BY Prepare-Delayed-Delivery-Rept ;
RESPONSIBLE PROBLEM DEFINER IS:
                'Mitchem' ;
```

92 DEFINE ENTITY Dele-60-Day-Old-Cntnr-Rept-Upd ;
DESCRIPTION;
Delete 60 Day Old Container Report Update
This is the delete 60 day old container report which lists those containers that didn't arrive in the MCT area of responsibility. The report is periodically sent to TMCA to inform them that the Cntnr records will be deleted from the database.
;
KEYWORD IS: 'Container' ;
LAYOUT;
THE FOLLOWING FORMAT WILL BE USED IN THE MESSAGE FILE:

FORMAT: Delete 60 Day Old Container Report

FROM: C, MCT _____
TO: CDR, 1st TMCA AEUTR- MCA IS
AEUTR- MCA- CC

SUBJECT: DELETION OF 60 DAY OLD CONTAINERS.
1. THE FOLLOWING CONTAINERS WERE FORECASTED TO THIS MCT BUT HAVE NOT ARRIVED IN 60 DAYS AND ARE BEING DELETED ON _____ DATE.

CNTNR OWNER CNTNR NUMBER VOYAGE DOCUMENT POD

Else:
IF: DteLstUpdCntnr in a record has a value.
Then: Search for ____ A value "Y" in the Del Flag field.
IF: No value "Y" is found
Then: Read next record
IF: Value "Y" is found
Then: Compare the DteLstUpdCntnr with the DteCurr (same day).
IF: They are different
Then: Read next record
IF: They are equal
Then: Move the record data to the message file.

The header information will be added to the message file as shown above.

Then: The date the record will be deleted (as of date) will be created by reading the parameter table (NOTIFICATION FROM TMCA OF CNTNR DELETION) value and adding it to the present date (DteCurrr) from the system calendar

```
            function.
        Then:  Print the date in headers blank field (____) date area
               to the right of "DELETED ON" in the message file.
        Then:  Read the parameter table (Origin MCE Prefix) and search
               the CgoMCE file for (MCENme)
        Then:  PRINT that name on the header to the blank field area
               to the right of "FROM" in the message file.

    If:  No records meet the criteria to be printed in the
         message file for transmission to TMCA.

         Then: Print "Negative Report" under the message format
               lines in the message file.

    NOTE:  Make this file available to the General Message Process.
;
  COLLECTED:      IN Sixty-Day-Msg-File ;
  CONSISTS OF:
       CntnrOwnAbbr ,
       CntnrNoPrefix ,
       CntnrNo ,
       VoyDocuNoFltNo ,
       POD ,
       MCENme ;
  ADDED:
        TO              Sixty-Day-Msg-File
        BY              Prep-Del-60-Day-Old-Cntnr-Rept ;
  CREATED:        BY Prep-Del-60-Day-Old-Cntnr-Rept ;
  RESPONSIBLE PROBLEM DEFINER IS:
                  'Valentine' ;
```

```
93   DEFINE ENTITY                              DiscrpType ;
       DESCRIPTION;
   Discrepancy Type.
   This entity is the occurrence of a specific Discrepancy Code and
   Discrepancy Code description. This is the master record for the
   Discrepancy Type Table.
    ;
       KEYWORD IS:     'LOB' ,
                       'Freight' ,
                       'Container' ,
                       'Data Model' ;
       SOURCE IS:      'CNTNR/FRT DATA MODEL' ,
                       'AR 55-38' ;
       ATTRIBUTE IS:
            SEC-CLASS       'UNCLASSIFIED' ,
            TYPE            'AN' ,
            PICTURE         'X(42)' ,
            FIELD-LENGTH     '42' ,
            RETENTION       'PERMANENT' ,
            volatility      'STATIC' ;
       LAYOUT;

   LOGICAL DATABASE DESIGN:

        DiscrpCd                            2     P
        DiscrpCdDescr                       40


   FREIGHT DATA MODEL:

       DiscrpType:FrtDiscrp, Mand 1:Opt Many


   FREIGHT PARTITION:

        DiscrpType                          CRD


   CONTAINER DATA MODEL:

        DiscrpType:CntnrDiscrp, Mand 1:Opt Many


   CONTAINER PARTITION:

        DiscrpType                          CRD;
       COLLECTED:      IN DiscrpType-Tbl ;
       CONSISTS OF:
            DiscrpCd ,
```

```
        DiscrpCdDescr ;
    IDENTIFIED BY:
        DiscrpCd ;
    REFERENCED:
        IN              DiscrpType-Tbl
        BY              Prep-Cgo-Dischg/Non-Del-<TTW> ;
    CARDINALITY IS:
                    33 ;
    RESPONSIBLE PROBLEM DEFINER IS:
                    'TACCS-LOB CNTNR/FRT GROUP' ;

94  DEFINE ENTITY                               DiscrpType-Ref ;
    KEYWORD IS:     'Container' ;
    COLLECTED:      IN DiscrpType-Tbl ;
    CONSISTS OF:
        DiscrpCd ;
    REFERENCED:
        IN              DiscrpType-Tbl
        BY              Prep-Cgo-Non-Dlvr-Corr-<ZTW> ;
    RESPONSIBLE PROBLEM DEFINER IS:
                    'Mitchem' ;

95  DEFINE ENTITY                               ECSR-Transaction-Ref ;
    DESCRIPTION;
Empty Container Status Report Transaction Reference
This is Trns ISAM file data used in the Empty Container Status Report
process.
 ;
    KEYWORD IS:     'Container' ;
    CONSISTS OF:
        CntnrOwnAbbr ,
        CntnrNo ,
        Consignee ,
        MovEvntCd ,
        EvntTy ,
        EvntDte ;
    IDENTIFIED BY:
        CntnrOwnAbbr ,
        CntnrNo ,
        Consignee ,
        MovEvntCd ,
        EvntTy ;
    REFERENCED:
        IN              Trns-ISAM-File
        BY              Prep-Empty-Cntnr-Status-Report ;
    RESPONSIBLE PROBLEM DEFINER IS:
                    'Valentine' ;
```

```
96   DEFINE ENTITY                              ECSR-Transaction-Upd ;
       DESCRIPTION;
   Empty Container Status Report Transaction Update
   This is Trns ISAM file record update data which posts the TTB D info.
    ;
      KEYWORD IS:     'Container' ;
      CONSISTS OF:
           CntnrOwnAbbr ,
           CntnrNo ,
           Consignee ,
           MovEvntCd ,
           EvntTy ,
           EvntDte ;
      IDENTIFIED BY:
           CntnrOwnAbbr ,
           CntnrNo ,
           Consignee ,
           MovEvntCd ,
           EvntTy ;
      ADDED:
            TO              Trns-ISAM-File
            BY              Prep-Empty-Cntnr-Status-Report ;
      MODIFIED:
            IN              Trns-ISAM-File
            BY              Prep-Empty-Cntnr-Status-Report ;
      RESPONSIBLE PROBLEM DEFINER IS:
                     'Valentine' ;
```

```
97   DEFINE ENTITY                          ETA-Forecast-Error-Info ;
       DESCRIPTION;
     ETA Forecast Error Information
     This entity represents rejected and partially correct ETA container
     forecast transactions, with appropriate error codes and messages,
     produced by the merge ETA forecast process.
      ;
        KEYWORD IS:     'Container' ;
        SOURCE IS:      'TACCS LOB DFD' ;
        ATTRIBUTE IS:
             SEC-CLASS       'UNCLASSIFIED' ;
        CONSISTS OF:
             Seq-No ,
             CntnrOwnAbbr ,
             CntnrNo ,
             Consignee ,
             CmdtyCd ,
             CntnrSz ,
             DteDprtWPOE ,
             TotStp ,
             MultiStpNo ,
             CntnrNoPrefix ,
             CntnrTCN ,
             VoyDocuNoFltNo ,
             POD ,
             POE ,
             OceanCarrAbbr ,
             Error-Cd ,
             Err-Msg ;
        ADDED:
              TO             ETA-Forecast-Error-File
              BY             Correct-Merge-ETA-Forecast-Err ;
        ADDED:
              TO             ETA-Forecast-Error-File
              BY             Merge-Reformatted-ETA-Forecast ;
        MODIFIED:
              IN             ETA-Forecast-Error-File
              BY             Correct-Merge-ETA-Forecast-Err ;
        REFERENCED:
              IN             ETA-Forecast-Error-File
              BY             Correct-Merge-ETA-Forecast-Err ;
        REFERENCED:
              IN             ETA-Forecast-Error-File
              BY             Prepare-Merge-Error-Rept ;
        REMOVED:
              FROM           ETA-Forecast-Error-File
              BY             Correct-Merge-ETA-Forecast-Err ;
        CREATED:        BY Correct-Merge-ETA-Forecast-Err ;
        CREATED:        BY Merge-Reformatted-ETA-Forecast ;
```

```
    DESTROYED:      BY Correct-Merge-ETA-Forecast-Err ;
    RESPONSIBLE PROBLEM DEFINER IS:
                    'Cope' ;

98  DEFINE ENTITY                              Empty-Aval-5-Day-CgoMCE-Ref ;
    DESCRIPTION;
Empty Available Over 5 Days Cargo MCE Reference
This is CgoMCE file information used in the empty available over 5 day
report process.
 ;
    KEYWORD IS:     'Container' ;
    CONSISTS OF:
         MCEPrefix ,
         MCENme ;
    IDENTIFIED BY:
         MCEPrefix ;
    REFERENCED:
          IN              CgoMCE-Tbl
          BY              Prep-Empty-Aval-Over-5-Day-Rpt ;
    RESPONSIBLE PROBLEM DEFINER IS:
                    'Valentine' ;

99  DEFINE ENTITY                              Empty-Aval-5-Day-CntnrMov-Ref ;
    DESCRIPTION;
Empty Available Over 5 Days Container Movement Reference
This is CntnrMov file information used in the empty available over 5
day report process.
 ;
    KEYWORD IS:     'Container' ;
    CONSISTS OF:
         CntnrOwnAbbr ,
         CntnrNo ,
         CntnrNoPrefix ;
    IDENTIFIED BY:
         CntnrOwnAbbr ,
         CntnrNo ;
    REFERENCED:
          IN              CntnrMov-File
          BY              Prep-Empty-Aval-Over-5-Day-Rpt ;
    RESPONSIBLE PROBLEM DEFINER IS:
                    'Valentine' ;
```

```
100  DEFINE ENTITY                              Empty-Aval-5-Day-MEvent-Ref ;
       DESCRIPTION;
     Empty Available Over 5 Days Movement Event Reference
     This is a query to the MEvent file to identify containers that meet the
     process selection criteria for the empty available over 5 day report.
      ;
        KEYWORD IS:     'Container' ;
        CONSISTS OF:
             CntnrOwnAbbr ,
             CntnrNo ,
             Consignee ,
             DupeStpIndex ,
             MovEvntCd ,
             EvntTy ,
             TyPwrCd ,
             EvntDte ;
        IDENTIFIED BY:
             CntnrOwnAbbr ,
             CntnrNo ,
             Consignee ,
             DupeStpIndex ,
             MovEvntCd ,
             EvntTy ,
             TyPwrCd ;
        REFERENCED:
              IN              MEvent-File
              BY              Prep-Empty-Aval-Over-5-Day-Rpt ;
        RESPONSIBLE PROBLEM DEFINER IS:
                        'Valentine' ;

101  DEFINE ENTITY                              Empty-Aval-5-Day-Param-Ref ;
       DESCRIPTION;
     Empty Available Over 5 Days Parameter Reference
     This is parameter table information used in the empty available over 5
     day report process.
      ;
        KEYWORD IS:     'Container' ;
        CONSISTS OF:
             Origin-MCE-Prefix ;
        IDENTIFIED BY:
             Origin-MCE-Prefix ;
        REFERENCED:
              IN              System-Parameter-Tbl
              BY              Prep-Empty-Aval-Over-5-Day-Rpt ;
        RESPONSIBLE PROBLEM DEFINER IS:
                        'Valentine' ;
```

```
102  DEFINE ENTITY                          Empty-Aval-Over-5-Day-Rept-Upd ;
       DESCRIPTION;
   Empty Available Over 5 Days Report Update
   This is the empty available over 5 day report information that is stored
   in the message file, and sent to TMCA daily.
    ;
       KEYWORD IS:     'Container' ;
       CONSISTS OF:
            CntnrOwnAbbr ,
            CntnrNo ,
            CntnrNoPrefix ,
            Consignee ,
            EvntDte ,
            MCENme ;
       ADDED:
             TO              Cntnr-Msg-File
             BY              Prep-Empty-Aval-Over-5-Day-Rpt ;
       CREATED:        BY Prep-Empty-Aval-Over-5-Day-Rpt ;
       RESPONSIBLE PROBLEM DEFINER IS:
                       'Valentine' ;
```

103 DEFINE ENTITY Empty-Cntnr-Sta-Report-Upd ;
DESCRIPTION;
Empty Container Status Report Update
This is the empty container status report information that is printed and used to send daily messages to each commercial carriers port and barge terminal offices. The report information is also sent to MECOBO-North and MCT-TOPS-TMN.
;
KEYWORD IS: 'Container' ,
'LOB' ;
LAYOUT;

OUTPUT FORMAT (MESSAGE FILE)

FROM: C, MCT _____
TO: OCEAN CARRIER NAME
INFO: C MECOBO-NORTH BREMERHAVEN GERMANY//MCT-TOPS-TMN//

SUBJ: Empty Container Status Report

1. The following containers have been reported empty and available for carrier pick up:

Voyage Doc No	Cntnr Owner	Cntnr Number	DODAAC
XXXXX	XXXX	XXXXXXXX	XXXXXX

(OR)

NEGATIVE REPORT

THEN: Use the Origin MCE Prefix in the parameter table to search for the MCENme in the CgoMCE file.

THEN: Move the MCE Name to the message file in the field to the right of the "FROM CHIEF MCT" address header.

IF: No record data exists in a carrier's file (carriers identified as negative report carriers). Print Negative Report under the header as indicated above.

NOTE: Make the message files available to the General Message

Process.

```
    ;
       COLLECTED:      IN ECSR-Msg-File ;
       CONSISTS OF:
            CntnrOwnAbbr ,
            CntnrNo ,
            CntnrNoPrefix ,
            VoyDocuNoFltNo ,
            Consignee ,
            MCENme ,
            OceanCarrNme ;
       ADDED:
             TO              ECSR-Msg-File
             BY              Prep-Empty-Cntnr-Status-Report ;
       CREATED:        BY Prep-Empty-Cntnr-Status-Report ;
       RESPONSIBLE PROBLEM DEFINER IS:
                       'Valentine' ;

104  DEFINE ENTITY                                Existing-TTB-MEvent-Ref ;
       DESCRIPTION;
   Existing TTB Movement Event Information
   This is information that is resident in an existing MEvent and is dis-
   played on the screen for an MEvent CHANGE, DELETE, or ADD, and is
   further used to create another MEvent + ISAM.
    ;
       KEYWORD IS:     'Container' ;
       COLLECTED:      IN MEvent-File ;
       CONSISTS OF:
            Cntnr-Origin-Code ,
            TyMovNoCd ,
            CntnrOwnAbbr ,
            CntnrNo ,
            Consignee ,
            MovEvntCd ;
       IDENTIFIED BY:
            CntnrOwnAbbr ,
            CntnrNo ,
            Consignee ,
            MovEvntCd ;
       REFERENCED:
             IN              MEvent-File
             BY              Prepare-Cnsgn-Rept-Evnts-<TTB> ;
       RESPONSIBLE PROBLEM DEFINER IS:
                       'Mitchem' ;
```

```
105  DEFINE ENTITY                          Existing-TTW-CntnrDiscrp-Ref ;
       DESCRIPTION;
     Existing TTW Container Discrepancy Reference
     This is information that is used by the system to display to the user
     the existing data in a TTW transaction.  This information is displayed
     on the screen and the user may overlay it (with the MODIFY option) or
     delete it (with the DELETE option).
      ;
        KEYWORD IS:    'Container' ;
        CONSISTS OF:
             CntnrOwnAbbr ,
             CntnrNo ,
             Consignee ,
             DupeStpIndex ,
             MovEvntCd ,
             EvntTy ,
             DiscrpTCN ,
             DiscrpCd ,
             DiscrpPc ,
             DiscrpDte ;
        RESPONSIBLE PROBLEM DEFINER IS:
                        'Mitchem' ;
```

```
106  DEFINE ENTITY                              Hist-Mgt-Info ;
       DESCRIPTION;
     History Management Information
     This is the system generated cntnr history floppy disk loading data that
     is referenced from and used to update the Hist-Mgt-File.  The data is
     used to create process prompts that instruct the user how to load his
     cntnr history storage media floppy disks.  It contains the number of
     cntnr history disks used to store each calendar months history records
     and the number of records on a months disk(s).
      ;
        KEYWORD IS:     'Container' ,
                        'LOB' ;
        CONSISTS OF:
             No-Hist-Disks-Per-Month ,
             Record-Month-of-Hist-Disk ,
             Record-Year-of-Hist-Disk ,
             No-Records-on-Month-Disks ,
             File-Name ,
             DB-Name ,
             DteRecCreat ;
        IDENTIFIED BY:
             Record-Year-of-Hist-Disk ,
             File-Name ,
             DB-Name ;
        MODIFIED:
              IN              Hist-Mgt-File
              BY              Sel-Rec-for-Cntnr-History-DB ;
        REFERENCED:
              IN              Hist-Mgt-File
              BY              History-File-Retrieval ;
        REFERENCED:
              IN              Hist-Mgt-File
              BY              Sel-Rec-for-Cntnr-History-DB ;
        RESPONSIBLE PROBLEM DEFINER IS:
                        'Valentine' ;
```

```
107  DEFINE ENTITY                              ISAM-Trns-TTB-Info ;
       DESCRIPTION;
    ISAM Transaction TTB Reference
    This is information that is generated for further reporting to CMM, and
    that the TTB and ZTB processes change in an existing TTB ISAM file.
    The user may change the data by selecting the MODIFY option of the TTB
    process, or by using the ZTB process.
    ;
        KEYWORD IS:     'Container' ;
        COLLECTED:      IN Trns-ISAM-File ;
        CONSISTS OF:
             Cntnr-Origin-Code ,
             TyMovNoCd ,
             VoyDocuNoFltNo ,
             EvntDte ,
             EvntTy ,
             MovEvntCd ,
             ModeMethShpmtCd ,
             TyCarrCd ,
             Movement-Number ,
             Consignee ;
        IDENTIFIED BY:
             MovEvntCd ,
             EvntTy ;
        ADDED:
              TO              Trns-ISAM-File
              BY              Prepare-Cnsgn-Rept-Evnts-<TTB> ;
        ADDED:
              TO              Trns-ISAM-File
              BY              Prep-Cnsgn-Rept-Evnts-Corr-ZTB ;
        MODIFIED:
              IN              Trns-ISAM-File
              BY              Prepare-Cnsgn-Rept-Evnts-<TTB> ;
        MODIFIED:
              IN              Trns-ISAM-File
              BY              Prep-Cnsgn-Rept-Evnts-Corr-ZTB ;
        REFERENCED:
              IN              Trns-ISAM-File
              BY              Prepare-Cnsgn-Rept-Evnts-<TTB> ;
        REFERENCED:
              IN              Trns-ISAM-File
              BY              Prep-Cnsgn-Rept-Evnts-Corr-ZTB ;
        CREATED:        BY Prepare-Cnsgn-Rept-Evnts-<TTB> ;
        RESPONSIBLE PROBLEM DEFINER IS:
                        'Mitchem' ;
```

```
108  DEFINE ENTITY                              ISAM-Trns-ZTW-Info ;
       KEYWORD IS:     'Container' ;
       COLLECTED:      IN Trns-ISAM-File ;
       CONSISTS OF:
            EvntTy ,
            DiscrpCd ,
            ShpmtUTCN ,
            CntnrNo ,
            CntnrOwnAbbr ,
            Consignee ,
            MovEvntCd ,
            OrigCd ,
            DiscrpPc ,
            EvntDte ;
       ADDED:
             TO              Trns-ISAM-File
             BY              Prep-Cgo-Non-Dlvr-Corr-<ZTW> ;
       MODIFIED:
             IN              Trns-ISAM-File
             BY              Prep-Cgo-Non-Dlvr-Corr-<ZTW> ;
       REFERENCED:
             IN              Trns-ISAM-File
             BY              Prep-Cgo-Non-Dlvr-Corr-<ZTW> ;
       RESPONSIBLE PROBLEM DEFINER IS:
                     'Mitchem' ;
```

AD-A190 393 FUNCTIONAL DESCRIPTION FOR THE DEPARTMENT OF THE ARMY 8/9
MOVEMENT MANAGEMENT..(U) INTERNATIONAL BUSINESS
SERVICES INC PRINCE GEORGE VA DEFENSE S.. W ANCKAITIS
UNCLASSIFIED 31 DEC 87 DSDPG-375-049-87-3-VOL-1 F/G 12/7 NL

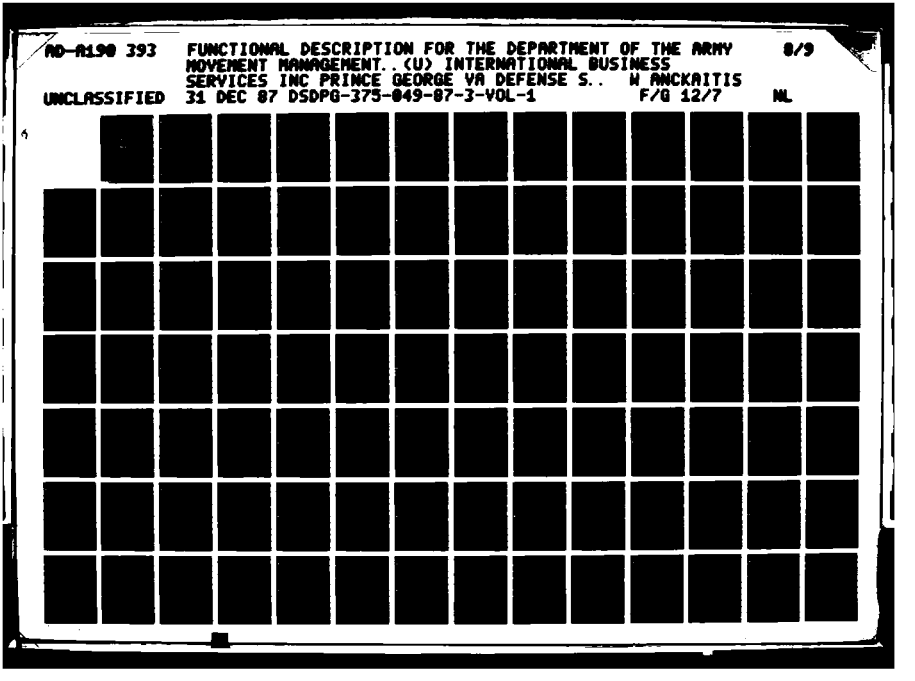

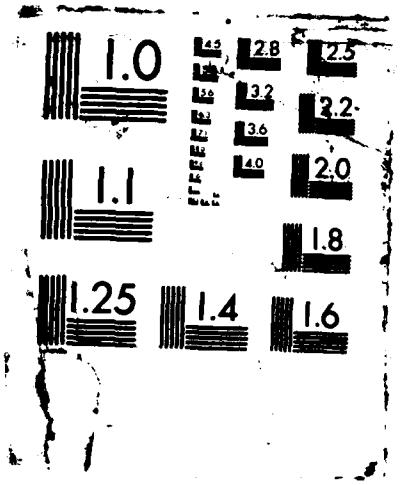
1.0
1.1
1.25
1.4
1.6
1.8
2.0
2.2
2.5
2.8
3.2
3.6
4.0

```
109  DEFINE ENTITY                                MEvent ;
       DESCRIPTION;
Movement Event.
This entity is an occurrence of a movement event for a given container
move that changes the status of that move.  Movement events are
associated with and reported at movement stops.  However, some events
occur and are reported at other event locations (current DODAAC).
This is the master file record for the MEvent-File.
 ;
    KEYWORD IS:     'LOB' ,
                    'Data Model' ,
                    'Container' ;
    SOURCE IS:      'CONTAINER DATA MODEL' ;
    ATTRIBUTE IS:
         volatility      'DYNAMIC' ,
         RETENTION       '60 DAYS' ,
         SEC-CLASS       'UNCLASSIFIED' ,
         TYPE            'AN' ,
         PICTURE         'X(130)' ,
         FIELD-LENGTH     '130' ;
    LAYOUT;

DATA MODEL:

     MEvent:ShpmtMethod, Opt Many:Opt 1 (MILSTAMP)
     MEvent:ReasonDeny, Opt Many:Opt 1
     MEvent:MEventType, Opt Many:Mand 1
     MEvent:CgoActivity, Opt Many:Opt 1
     MEvent:CntnrDiscrp, Mand 1:Opt Many
     MEvent:CntnrMovStp, Opt Many:Mand 1 (Stop)
     MEvent:CntnrMov, Opt Many:Mand 1 (Port)
     MEvent:CgoPort, Opt Many:Opt 1
     MEvent:TypeMovNo, Opt Many:Mand 1
     MEvent:RespMediaCd, Opt Many:Opt 1
     MEvent:TypeMove, Opt Many:Opt 1
     MEvent:ORICO, Opt Many:Opt 1

LOGICAL DATABASE DESIGN:

     CntnrOwnAbbr                          4   P/F
     CntnrNo                               5   P/F
     Consignee                             6   P/F
     DupeStpIndex                          1   P/F
     MovEvntCd                             3   P/F
     EvntTy                                1   P/F
     TyPwrCd                               1   P/F
     PstDte (Request)                      5   S
     EvntDte (Start)                       5   S
     SeqNo                                 1
```

NewTyCarrCd	1	
NewEvntLoc	6	
NewTyMovNoCd	1	
NewMovNo	20	
ActlPcCnt	4	
DspoActv	6	
NewTAC	4	
MgrCd	2	
ShpmtUTCN	17	F
TyMovCd	1	F
NewModeMethShpmtCd	1	F
TyMovNoCd (C,M,F,V,D)	1	F
PrtCd	3	F
AACCurr (Req)	6	F
RespCd	1	F
RsnDenyCd	2	F
OrigCdTy	1	F
OrigCd	3	F

PARTITION:

MEvent	CRUD
CgoPort	R
VoyageStop	R
Voyage	R
ReasonDeny	R
TypeMovNo	R
RespMediaCd	R
ORICO	R
TypeMove	R
CgoActivity	R
CntnrDiscrp	CRUD
DiscrpType	R
CntnrMov	RU
CntnrMovStp	RU
CntnrRmrkLn	CRU
CgoMCE	R
ShpmtMethod	R;

COLLECTED: IN MEvent-File ;
CONSISTS OF:
CntnrOwnAbbr ,
CntnrNo ,
Consignee ,
DupeStpIndex ,
MovEvntCd ,
EvntTy ,
TyPwrCd ,
PstDte ,

```
      EvntDte ,
      SeqNo ,
      NewTyCarrCd ,
      NewEvntLoc ,
      NewTyMovNoCd ,
      NewMovNo ,
      ActlPcCnt ,
      DspoActv ,
      NewTAC ,
      MgrCd ,
      ShpmtUTCN ,
      TyMovCd ,
      NewModeMethShpmtCd ,
      TyMovNoCd ,
      PrtCd ,
      AACCurr ,
      RespCd ,
      RsnDenyCd ,
      OrigCdTy ,
      OrigCd ;
IDENTIFIED BY:
      CntnrOwnAbbr ,
      CntnrNo ,
      Consignee ,
      DupeStpIndex ,
      MovEvntCd ,
      EvntTy ,
      TyPwrCd ;
REFERENCED:
       IN              MEvent-File
       BY              Sel-Rec-for-Cntnr-History-DB ;
REMOVED:
       FROM            MEvent-File
       BY              Sel-Rec-for-Cntnr-History-DB ;
CREATED:         BY Prep-Cgo-Dischg/Non-Del-<TTW> ;
CREATED:         BY Prep-Empty-Cntnr-Status-Report ;
CREATED:         BY Prep-Hold/Stg-Request-<TM3> ;
CREATED:         BY Prep-Rel-fr-Stg/Hold-Req-<TMS> ;
CREATED:         BY Prep-Convey-Change-Notif-<TTU> ;
DESTROYED:       BY Sel-Rec-for-Cntnr-History-DB ;
CARDINALITY IS:
                 60000 ;
RESPONSIBLE PROBLEM DEFINER IS:
                 'TACCS-LOB CONTAINER GROUP' ;
```

```
110  DEFINE ENTITY                              MEvent-ECSR-Ref ;
       DESCRIPTION;
   Movement Event Empty Container Status Report Reference
   This is container record information pertaining to containers that
   have been reported empty that day.  It is used by the Prepare-Empty-
   Container-Status-Report process.
    ;
      KEYWORD IS:     'Container' ,
                      'LOB' ;
      CONSISTS OF:
           CntnrOwnAbbr ,
           CntnrNo ,
           Consignee ,
           DupeStpIndex ,
           MovEvntCd ,
           EvntTy ,
           TyPwrCd ,
           OrigCd ,
           TyMovNoCd ;
      IDENTIFIED BY:
           CntnrOwnAbbr ,
           CntnrNo ,
           Consignee ,
           DupeStpIndex ,
           MovEvntCd ,
           EvntTy ,
           TyPwrCd ;
      REFERENCED:
            IN              MEvent-File
            BY              Prep-Empty-Cntnr-Status-Report ;
      RESPONSIBLE PROBLEM DEFINER IS:
                     'Valentine' ;
```

```
111  DEFINE ENTITY                              MEvent-ECSR-Upd ;
       DESCRIPTION;
     Movement Event Empty Container Status Report Update
     This is the MEvent record data necessary to create a TTB D record.
      ;
        KEYWORD IS:     'Container' ;
        CONSISTS OF:
             CntnrOwnAbbr ,
             CntnrNo ,
             Consignee ,
             DupeStpIndex ,
             MovEvntCd ,
             OrigCd ,
             TyMovNoCd ,
             PstDte ,
             EvntTy ,
             TyPwrCd ,
             EvntDte ;
        IDENTIFIED BY:
             CntnrOwnAbbr ,
             CntnrNo ,
             Consignee ,
             DupeStpIndex ,
             MovEvntCd ,
             EvntTy ,
             TyPwrCd ;
        ADDED:
              TO              MEvent-File
              BY              Prep-Empty-Cntnr-Status-Report ;
        RESPONSIBLE PROBLEM DEFINER IS:
                        'Valentine' ;
```

```
112  DEFINE ENTITY                              MEvent-Inq/Rept-Info-Ref ;
       DESCRIPTION;
   Movement Event Inquiry/Report Information Reference
   This entity consists of the data elements and values from the MEvent file
   which are referenced and displayed by the Inquiry/Rept-on-Specific-Cntnr
   process.
    ;
       KEYWORD IS:     'Container' ;
       COLLECTED:      IN MEvent-File ;
       CONSISTS OF:
            MovEvntCd ,
            EvntTy ,
            EvntDte ,
            CntnrNo ,
            CntnrOwnAbbr ,
            Consignee ;
       REFERENCED:
             IN              MEvent-File
             BY              Inquiry/Rept-on-Specific-Cntnr ;
       RESPONSIBLE PROBLEM DEFINER IS:
                       'Morris' ;
```

```
113  DEFINE ENTITY                              MEvent-Recngn-Ref ;
       DESCRIPTION;
    Movement Event Reconsignment Reference
    This is MEvent record information used in preparing the request for
    reconsignment.
     ;
        KEYWORD IS:    'Container' ;
        CONSISTS OF:
             CntnrOwnAbbr ,
             CntnrNo ,
             Consignee ,
             DupeStpIndex ,
             MovEvntCd ,
             EvntTy ,
             TyPwrCd ,
             EvntDte ;
        IDENTIFIED BY:
             CntnrOwnAbbr ,
             CntnrNo ,
             Consignee ,
             DupeStpIndex ,
             MovEvntCd ,
             EvntTy ,
             TyPwrCd ;
        REFERENCED:
              IN             MEvent-File
              BY             Prepare-Reconsignment-Request ;
        RESPONSIBLE PROBLEM DEFINER IS:
                       'Valentine' ;
```

```
114  DEFINE ENTITY                              MEvent-Ref ;
       DESCRIPTION;
   This is the MEvent record information that is referenced to
   determine if the update of the CntnrMovStp record can be performed.
    ;
       KEYWORD IS:     'Container' ,
                       'LOB' ;
       ATTRIBUTE IS:
            FIELD-LENGTH     '4' ,
            TYPE             'AN' ,
            PICTURE          'X(4)' ,
            SEC-CLASS        'UNCLASSIFIED' ;
       COLLECTED:      IN MEvent-File ;
       CONSISTS OF:
            MovEvntCd ,
            EvntTy ,
            CntnrOwnAbbr ,
            CntnrNo ,
            Consignee ;
       REFERENCED:
             IN              MEvent-File
             BY              Create-Non-Fcst-Container-Rec ;
       REFERENCED:
             IN              MEvent-File
             BY              Prep-Delayed-Delivery-Event ;
       RESPONSIBLE PROBLEM DEFINER IS:
                       'Mitchem' ;
```

```
115  DEFINE ENTITY                              MEvent-TM2-Info ;
       DESCRIPTION;
     Movement Event TM2 Information
     This entity consists of the data elements and values from the MEvent file
     which are referenced and updated by the Prep-Diversion-Request-<TM2>
     process.
      ;
        KEYWORD IS:     'Container' ;
        COLLECTED:      IN MEvent-File ;
        CONSISTS OF:
             MovEvntCd ,
             CntnrOwnAbbr ,
             CntnrNo ,
             Consignee ,
             ShpmtUTCN ,
             NewTAC ,
             NewEvntLoc ,
             RespCd ,
             MgrCd ,
             PstDte ,
             AACCurr ;
        ADDED:
              TO              MEvent-File
              BY              Prep-Diversion-Request-<TM2> ;
        MODIFIED:
              IN              MEvent-File
              BY              Prep-Diversion-Request-<TM2> ;
        REFERENCED:
              IN              MEvent-File
              BY              Prep-Diversion-Request-<TM2> ;
        CREATED:        BY Prep-Diversion-Request-<TM2> ;
        RESPONSIBLE PROBLEM DEFINER IS:
                        'Morris' ;
```

```
116  DEFINE ENTITY                              MEvent-TM3-Ref ;
       DESCRIPTION;
     Movement Event TM3 Reference
     This is MEvent reference information used in the TM3 process.
      ;
        KEYWORD IS:    'Container' ;
        CONSISTS OF:
             CntnrOwnAbbr ,
             CntnrNo ,
             Consignee ,
             DupeStpIndex ,
             MovEvntCd ,
             EvntTy ,
             TyPwrCd ,
             AACCurr ,
             DspoActv ,
             ShpmtUTCN ,
             RespCd ,
             MgrCd ;
        IDENTIFIED BY:
             CntnrOwnAbbr ,
             CntnrNo ,
             Consignee ,
             DupeStpIndex ,
             MovEvntCd ,
             EvntTy ,
             TyPwrCd ;
        REFERENCED:
              IN            MEvent-File
              BY            Prep-Hold/Stg-Request-<TM3> ;
        RESPONSIBLE PROBLEM DEFINER IS:
                      'Valentine' ;
```

```
117  DEFINE ENTITY                              MEvent-TM3-Upd ;
       DESCRIPTION;
    Movement Event TM3 Update
    This is the MEvent update information used by the TM3 process to create
    an MEvent record.
     ;
        KEYWORD IS:     'Container' ;
        ATTRIBUTE IS:
             SEC-CLASS       'UNCLASSIFIED' ;
        CONSISTS OF:
             CntnrOwnAbbr ,
             CntnrNo ,
             Consignee ,
             DupeStpIndex ,
             MovEvntCd ,
             EvntTy ,
             TyPwrCd ,
             PrtCd ,
             PstDte ,
             RespCd ,
             DspoActv ,
             MgrCd ,
             AACCurr ,
             ShpmtUTCN ;
        IDENTIFIED BY:
             CntnrOwnAbbr ,
             CntnrNo ,
             Consignee ,
             DupeStpIndex ,
             MovEvntCd ,
             EvntTy ,
             TyPwrCd ;
        ADDED:
              TO              MEvent-File
              BY              Prep-Hold/Stg-Request-<TM3> ;
        MODIFIED:
              IN              MEvent-File
              BY              Prep-Hold/Stg-Request-<TM3> ;
        RESPONSIBLE PROBLEM DEFINER IS:
                        'Valentine' ;
```

```
118  DEFINE ENTITY                              MEvent-TMS-Ref ;
       DESCRIPTION;
   Movement Event TMS Reference
   This is MEvent reference info used in the TMS process.
    ;
       KEYWORD IS:    'Container' ;
       CONSISTS OF:
            CntnrOwnAbbr ,
            CntnrNo ,
            Consignee ,
            DupeStpIndex ,
            MovEvntCd ,
            EvntTy ,
            TyPwrCd ,
            AACCurr ,
            DspoActv ,
            ShpmtUTCN ,
            RespCd ,
            MgrCd ,
            NewTAC ,
            NewEvntLoc ;
       IDENTIFIED BY:
            CntnrOwnAbbr ,
            CntnrNo ,
            Consignee ,
            DupeStpIndex ,
            MovEvntCd ,
            EvntTy ,
            TyPwrCd ;
       REFERENCED:
             IN             MEvent-File
             BY             Prep-Rel-fr-Stg/Hold-Req-<TMS> ;
       RESPONSIBLE PROBLEM DEFINER IS:
                    'Valentine' ;
```

```
119  DEFINE ENTITY                                    MEvent-TMS-Upd ;
       DESCRIPTION;
     Movement Event TMS Update
     This is MEvent update info used by the TMS process to create an MEvent
     record.
      ;
        KEYWORD IS:     'Container' ;
        CONSISTS OF:
             CntnrOwnAbbr ,
             CntnrNo ,
             Consignee ,
             DupeStpIndex ,
             MovEvntCd ,
             EvntTy ,
             TyPwrCd ,
             PrtCd ,
             PstDte ,
             ShpmtUTCN ,
             RespCd ,
             NewEvntLoc ,
             NewTAC ,
             AACCurr ,
             DspoActv ,
             MgrCd ;
        IDENTIFIED BY:
             CntnrOwnAbbr ,
             CntnrNo ,
             Consignee ,
             DupeStpIndex ,
             MovEvntCd ,
             EvntTy ,
             TyPwrCd ;
        ADDED:
              TO              MEvent-File
              BY              Prep-Rel-fr-Stg/Hold-Req-<TMS> ;
        MODIFIED:
              IN              MEvent-File
              BY              Prep-Rel-fr-Stg/Hold-Req-<TMS> ;
        RESPONSIBLE PROBLEM DEFINER IS:
                        'Valentine' ;
```

```
120  DEFINE ENTITY                              MEvent-TTB-Upd ;
       DESCRIPTION;
   New Movement Event TTB Reference
   This is information resulting in the creation of a new MEvent.
   This is information that the TTB changes in an existing TTB MEvent.  The
   user may change the data by selecting the MODIFY option of the process.
    ;
       KEYWORD IS:     'Container' ;
       COLLECTED:      IN MEvent-File ;
       CONSISTS OF:
            Cntnr-Origin-Code ,
            TyMovNoCd ,
            CntnrOwnAbbr ,
            CntnrNo ,
            TMRPrefix ,
            Consignee ,
            MovEvntCd ,
            EvntDte ,
            EvntTy ;
       IDENTIFIED BY:
            EvntTy ,
            CntnrOwnAbbr ,
            CntnrNo ,
            Consignee ,
            MovEvntCd ;
       MODIFIED:
             IN              MEvent-File
             BY              Prepare-Cnsgn-Rept-Evnts-<TTB> ;
       RESPONSIBLE PROBLEM DEFINER IS:
                     'Mitchem' ;
```

```
121  DEFINE ENTITY                              MEvent-TTP-Ref ;
       DESCRIPTION;
     Movement Event TTP Reference
     This entity consist of data elements that are copied from the MEvent
     file to the TTP input screen.
      ;
        KEYWORD IS:     'Container' ;
        ATTRIBUTE IS:
             SEC-CLASS       'UNCLASSIFIED' ,
             PROCESS-MODE     'INTERACTIVE BATCH' ;
        COLLECTED:      IN MEvent-File ;
        CONSISTS OF:
             TyPwrCd ,
             MgrCd ,
             TyMovNoCd ,
             NewEvntLoc ,
             MovEvntCd ,
             EvntTy ,
             EvntDte ,
             CntnrNo ,
             CntnrOwnAbbr ,
             Consignee ,
             OrigCd ;
        IDENTIFIED BY:
             TyPwrCd ,
             CntnrNo ,
             CntnrOwnAbbr ,
             EvntTy ,
             MovEvntCd ,
             Consignee ;
        REFERENCED:
              IN              MEvent-File
              BY              Prep-SEAVAN-Maint-Bgn/E-<TTP> ;
        RESPONSIBLE PROBLEM DEFINER IS:
                        'Ocasio' ;
```

```
122  DEFINE ENTITY                              MEvent-TTP-Upd ;
       DESCRIPTION;
   Movement Event TTP Update
   This update consist of data elements that are inputed to the TTP input
   screen as well as generated in the TTP process, which will be posted to
   the MEvent file.
    ;
       KEYWORD IS:     'Container' ;
       ATTRIBUTE IS:
            SEC-CLASS       'UNCLASSIFIED' ,
            PROCESS-MODE     'INTERACTIVE BATCH' ;
       COLLECTED:      IN MEvent-File ;
       CONSISTS OF:
            CntnrOwnAbbr ,
            CntnrNo ,
            POD ,
            Consignee ,
            TyPwrCd ,
            MgrCd ,
            TyMovNoCd ,
            NewEvntLoc ,
            MovEvntCd ,
            EvntTy ,
            EvntDte ,
            OrigCd ,
            PstDte ;
       MODIFIED:
             IN              MEvent-File
             BY              Prep-SEAVAN-Maint-Bgn/E-<TTP> ;
       MODIFIED:
             IN              MEvent-File
             BY              Prep-Svan-Maint-Bgn/E-Corr-ZTP ;
       RESPONSIBLE PROBLEM DEFINER IS:
                     'Ocasio' ;
```

```
123  DEFINE ENTITY                              MEvent-TTU-Ref ;
       DESCRIPTION;
     Movement Event TTU Reference
     This entity consist of data elements that are copied from the MEvent
     file to the TTU input screen.  This entity is prompted by user entered data
     to generate TTU information necessary to generate a DSSR.
     ;
         KEYWORD IS:     'Container' ;
         ATTRIBUTE IS:
              SEC-CLASS       'UNCLASSIFIED' ,
              PROCESS-MODE     'INTERACTIVE BATCH' ;
         CONSISTS OF:
              MovEvntCd ,
              EvntTy ;
         IDENTIFIED BY:
              EvntTy ,
              MovEvntCd ;
         USED BY:        Prep-Convey-Change-Notif-<TTU>
                          TO DERIVE EvntDte ;
         USED BY:        Prep-Convey-Change-Notif-<TTU>
                          TO DERIVE NewMovNo ;
         USED BY:        Prep-Convey-Change-Notif-<TTU>
                          TO DERIVE PstDte ;
         USED BY:        Prep-Convey-Change-Notif-<TTU>
                          TO DERIVE Err-Msg ;
         USED BY:        Prep-Convey-Change-Notif-<TTU>
                          TO DERIVE Err-Diag ;
         USED BY:        Prep-Convey-Change-Notif-<TTU>
                          TO DERIVE NewTyCarrCd ;
         USED BY:        Prep-Convey-Change-Notif-<TTU>
                          TO DERIVE NewModeMethShpmtCd ;
         USED BY:        Prep-Convey-Change-Notif-<TTU>
                          TO DERIVE NewTyMovNoCd ;
         USED BY:        Prep-Convey-Change-Notif-<TTU>
                          TO DERIVE MEvent-TTU-Upd ;
         USED BY:        Prep-Convey-Change-Notif-<TTU>
                          TO DERIVE TTU-DSSR-Info ;
         REFERENCED:
               IN              MEvent-File
               BY              Prep-Convey-Change-Notif-<TTU> ;
         RESPONSIBLE PROBLEM DEFINER IS:
                         'Zacot' ;
```

```
124  DEFINE ENTITY                              MEvent-TTU-Upd ;
       DESCRIPTION;
   Movement Event TTU Update
   This update consist of data elements that are input to the TTU input
   screen as well as generated in the TTU process, which will be posted to
   the MEvent file.
   ;
       KEYWORD IS:     'Container' ;
       ATTRIBUTE IS:
            SEC-CLASS       'UNCLASSIFIED' ,
            PROCESS-MODE     'INTERACTIVE BATCH' ;
       CONSISTS OF:
            CntnrOwnAbbr ,
            CntnrNo ,
            Consignee ,
            TyMovNoCd ,
            NewModeMethShpmtCd ,
            NewTyMovNoCd ,
            NewTyCarrCd ,
            MovEvntCd ,
            EvntTy ,
            EvntDte ,
            OrigCd ,
            PstDte ,
            NewMovNo ;
       DERIVED:          BY  Prep-Convey-Change-Notif-<TTU>
                         USING Conveyance-Ch-Notif-Info-Inp ;
       DERIVED:          BY  Prep-Convey-Change-Notif-<TTU>
                         USING CntnrMov-TTU-Ref ;
       DERIVED:          BY  Prep-Convey-Change-Notif-<TTU>
                         USING MEvent-TTU-Ref ;
       DERIVED:          BY  Prep-Convey-Change-Notif-<TTU>
                         USING EvntDte ;
       DERIVED:          BY  Prep-Convey-Change-Notif-<TTU>
                         USING NewMovNo ;
       DERIVED:          BY  Prep-Convey-Change-Notif-<TTU>
                         USING PstDte ;
       DERIVED:          BY  Prep-Convey-Change-Notif-<TTU>
                         USING NewTyCarrCd ;
       DERIVED:          BY  Prep-Convey-Change-Notif-<TTU>
                         USING NewModeMethShpmtCd ;
       DERIVED:          BY  Prep-Convey-Change-Notif-<TTU>
                         USING NewTyMovNoCd ;
       ADDED:
             TO              MEvent-File
             BY              Prep-Convey-Change-Notif-<TTU> ;
       RESPONSIBLE PROBLEM DEFINER IS:
                       'Zacot' ;
```

```
125  DEFINE ENTITY                                MEvent-ZTB-Ref ;
       DESCRIPTION;
    Movement Event ZTB Reference
    This is information that was entered by the original TTB transaction. The
    ZTB process can change the values of two elements....EvntTy, and EvntDte.
     ;
       KEYWORD IS:     'Container' ;
       COLLECTED:      IN MEvent-File ;
       CONSISTS OF:
            CntnrNo ,
            CntnrOwnAbbr ,
            Consignee ,
            OrigCd ,
            TyMovNoCd ,
            EvntTy ,
            EvntDte ,
            MovEvntCd ;
       REFERENCED:
             IN              MEvent-File
             BY              Prep-Cnsgn-Rept-Evnts-Corr-ZTB ;
       RESPONSIBLE PROBLEM DEFINER IS:
                       'Mitchem' ;

126  DEFINE ENTITY                                MEvent-ZTB-Upd ;
       DESCRIPTION;
    Movement Event ZTB Update
    This is information that reflects the MEvent record after the ZTB process
    has occurred.  Two values can be changed by the user, EvntTy and EvntDte.
     ;
       KEYWORD IS:     'Container' ;
       COLLECTED:      IN MEvent-File ;
       CONSISTS OF:
            CntnrNo ,
            CntnrOwnAbbr ,
            Consignee ,
            OrigCd ,
            TyMovNoCd ,
            EvntTy ,
            EvntDte ,
            PstDte ,
            MovEvntCd ;
       MODIFIED:
             IN              MEvent-File
             BY              Prep-Cnsgn-Rept-Evnts-Corr-ZTB ;
       RESPONSIBLE PROBLEM DEFINER IS:
                       'Mitchem' ;
```

```
127  DEFINE ENTITY                              MEvent-ZTP-Ref ;
       DESCRIPTION;
   Movement Event ZTP Reference
   This is SEAVAN maintenance correction information that is used to alter an
   existing TTP SEAVAN Maintenance begin and end date.
    ;
       KEYWORD IS:     'Container' ;
       CONSISTS OF:
            CntnrNo ,
            CntnrOwnAbbr ,
            Consignee ,
            TyPwrCd ,
            MovEvntCd ,
            EvntTy ,
            EvntDte ,
            MgrCd ,
            TyMovNoCd ,
            NewEvntLoc ,
            OrigCd ;
       REFERENCED:
             IN              MEvent-File
             BY              Prep-Svan-Maint-Bgn/E-Corr-ZTP ;
       RESPONSIBLE PROBLEM DEFINER IS:
                     'Ocasio' ;
```



```
128  DEFINE ENTITY                              MEventType ;
       DESCRIPTION;
     Movement Event Type.
     This entity is the occurrence of information related to type movement
     events. This record is the master record of the MEventType Table.
      ;
        KEYWORD IS:     'LOB' ,
                        'Freight' ,
                        'Data Model' ,
                        'Container' ;
        SOURCE IS:      'CONTAINER DATA MODEL' ,
                        'FREIGHT DATA MODEL' ;
        ATTRIBUTE IS:
             SEC-CLASS       'UNCLASSIFIED' ,
             TYPE            'AN' ,
             PICTURE         'X(19)' ,
             FIELD-LENGTH     '19' ,
             volatility      'STATIC' ;
        LAYOUT;

     LOGICAL DATABASE DESIGN:

          MovEvntCd                          3      P
          EvntTy                             1      P
          MovEvntDescr                       15
```



```
     FREIGHT DATA MODEL:

         MEventType:FrtMEvent, Mand 1:Opt Many


     FREIGHT PARTITION:

          MEventType                         CRD


     CONTAINER DATA MODEL:

          MEventType:MEvent, Mand 1:Opt Many


     CONTAINER PARTITION:

          MEventType                         CRD;
        COLLECTED:      IN MEventType-Tbl ;
        CONSISTS OF:
             MovEvntCd ,
             EvntTy ,
```



```
          MovEvntDescr ;
       IDENTIFIED BY:
          MovEvntCd ,
          EvntTy ;
       CARDINALITY IS:
                    10 ;
       RESPONSIBLE PROBLEM DEFINER IS:
                    'TACCS-LOB CNTNR/FRT GROUPS' ;

129  DEFINE ENTITY                              MEventType-TTU-Ref ;
       DESCRIPTION;
   Movement Event Type TTU Reference
   This entity validates the event type TTU.
    ;
       KEYWORD IS:     'Container' ;
       CONSISTS OF:
          EvntTy ,
          MovEvntCd ;
       IDENTIFIED BY:
          EvntTy ;
       REFERENCED:
            IN              MEventType-Tbl
            BY              Prep-Convey-Change-Notif-<TTU> ;
       RESPONSIBLE PROBLEM DEFINER IS:
                    'Zacot' ;

130  DEFINE ENTITY                              Maint-Param-CgoActivity-Ref ;
       DESCRIPTION;
   Maintain Parameter Cargo Activity Reference
   This entity is used to validate that the Origin DODAAC parameter value
   exists in the Cargo Activity File.
    ;
       KEYWORD IS:     'Container' ;
       CONSISTS OF:
          Origin-DODAAC ;
       IDENTIFIED BY:
          AACCurr ;
       USED BY:        Maintain-Parameter-Tbl
                        TO DERIVE Maint-Param-Tbl-Print-Rept-Out ;
       USED BY:        Maintain-Parameter-Tbl
                        TO DERIVE Maint-Parameter-Tbl-Disp-Out ;
       REFERENCED:
            IN              CgoActivity-File
            BY              Maintain-Parameter-Tbl ;
       RESPONSIBLE PROBLEM DEFINER IS:
                    'Morris' ;
```

```
131  DEFINE ENTITY                              Maint-Param-CgoMCE-Ref ;
       DESCRIPTION;
   Maintain Parameter Cargo Movement Control Element Reference
   This entity is used to validate that the Origin-MCE-Prefix parameter
   value exists in the Cargo MCE Table.
    ;
       KEYWORD IS:     'Container' ;
       CONSISTS OF:
            Origin-MCE-Prefix ;
       IDENTIFIED BY:
            MCEPrefix ;
       USED BY:        Maintain-Parameter-Tbl
                        TO DERIVE Maint-Param-Tbl-Print-Rept-Out ;
       USED BY:        Maintain-Parameter-Tbl
                        TO DERIVE Maint-Parameter-Tbl-Disp-Out ;
       REFERENCED:
             IN              CgoMCE-Tbl
             BY              Maintain-Parameter-Tbl ;
       RESPONSIBLE PROBLEM DEFINER IS:
                       'Morris' ;
```

```
132  DEFINE ENTITY                              Maint-Param-Sys-Param-Ref ;
       DESCRIPTION;
   Maintain Parameter System Parameter Reference
   This entity represents the "master record" of all system parameters in
   the System-Parameter-Tbl.
    ;
       KEYWORD IS:     'Freight' ,
                       'Container' ,
                       'LOB' ,
                       'NOT IN DATA MODEL' ;
       COLLECTED:      IN System-Parameter-Tbl ;
       CONSISTS OF:
            Cntnr-History-Sel-Criteria ,
            Cntnr-Deletion-Criteria ,
            Cntnr-On-Hand-Over-X-Criteria ,
            Cntnr-Origin-Code ,
            Origin-MCE-Prefix ,
            Origin-DODAAC ,
            Freight-History-Sel-Criteria ,
            Label-Print-Flag ,
            Commitment-Print-Flag ,
            Freight-Origin-Code ,
            Number-463L-Pallet-Criteria ,
            Cntnr-Deletion-Notification ;
       USED BY:        Maintain-Parameter-Tbl
                        TO DERIVE Maint-Param-Tbl-Print-Rept-Out ;
       USED BY:        Maintain-Parameter-Tbl
                        TO DERIVE Maint-Parameter-Tbl-Disp-Out ;
       RESPONSIBLE PROBLEM DEFINER IS:
                       'Morris' ;
```

```
133  DEFINE ENTITY                          Maint-Param-Sys-Param-Upd ;
       DESCRIPTION;
     Maintain Parameter System Parameter Update
     This entity represents value changes to system parameters in the System-
     Parameter-Tbl.
      ;
        KEYWORD IS:     'Freight' ,
                        'Container' ,
                        'LOB' ,
                        'NOT IN DATA MODEL' ;
        CONSISTS OF:
             Cntnr-History-Sel-Criteria ,
             Cntnr-Deletion-Criteria ,
             Cntnr-On-Hand-Over-X-Criteria ,
             Cntnr-Origin-Code ,
             Cntnr-Deletion-Notification ,
             Origin-MCE-Prefix ,
             Origin-DODAAC ,
             Freight-History-Sel-Criteria ,
             Label-Print-Flag ,
             Commitment-Print-Flag ,
             Freight-Origin-Code ,
             Number-463L-Pallet-Criteria ;
        UPDATED:        BY  Maintain-Parameter-Tbl
                        USING Cntnr-History-Sel-Criteria ;
        UPDATED:        BY  Maintain-Parameter-Tbl
                        USING Cntnr-Deletion-Criteria ;
        UPDATED:        BY  Maintain-Parameter-Tbl
                        USING Cntnr-On-Hand-Over-X-Criteria ;
        UPDATED:        BY  Maintain-Parameter-Tbl
                        USING Cntnr-Origin-Code ;
        UPDATED:        BY  Maintain-Parameter-Tbl
                        USING Cntnr-Deletion-Notification ;
        UPDATED:        BY  Maintain-Parameter-Tbl
                        USING Origin-MCE-Prefix ;
        UPDATED:        BY  Maintain-Parameter-Tbl
                        USING Origin-DODAAC ;
        UPDATED:        BY  Maintain-Parameter-Tbl
                        USING Freight-History-Sel-Criteria ;
        UPDATED:        BY  Maintain-Parameter-Tbl
                        USING Label-Print-Flag ;
        UPDATED:        BY  Maintain-Parameter-Tbl
                        USING Commitment-Print-Flag ;
        UPDATED:        BY  Maintain-Parameter-Tbl
                        USING Freight-Origin-Code ;
        UPDATED:        BY  Maintain-Parameter-Tbl
                        USING Number-463L-Pallet-Criteria ;
        ADDED:
              TO            System-Parameter-Tbl
```

```
        BY              Maintain-Parameter-Tbl ;
    RESPONSIBLE PROBLEM DEFINER IS:
                    'Morris' ;

134 DEFINE ENTITY                               Maintain-Stops-Info-Ent ;
      KEYWORD IS:     'Container' ;
      DERIVED:         BY  Maintain-Stops ;
      RESPONSIBLE PROBLEM DEFINER IS:
                    'Valentine' ;

135 DEFINE ENTITY                               ModeMethShpmtCd-TTB-Ref ;
      DESCRIPTION;
   Mode Method Shipment Code TTB Reference
   This is information used to validate the entry by the user of the Mode
   Method Shipment Code into the system, and the provision of the code
   descriptions (help screen).
    ;
      KEYWORD IS:     'Container' ;
      COLLECTED:      IN ShpmtMethod-Tbl ;
      CONSISTS OF:
           ModeMethShpmtCd ;
      IDENTIFIED BY:
           ModeMethShpmtCd ;
      REFERENCED:
            IN              ShpmtMethod-Tbl
            BY              Prep-Cnsgn-Rept-Evnts-Corr-ZTB ;
      REFERENCED:
            IN              ShpmtMethod-Tbl
            BY              Prepare-Cnsgn-Rept-Evnts-<TTB> ;
      RESPONSIBLE PROBLEM DEFINER IS:
                    'Mitchem' ;
```

```
136  DEFINE ENTITY                              Month ;
       DESCRIPTION;
     Month.
     This entity is an occurrence of a specific Month Code and Month Code
     description. This is the master record for the Month Table.
      ;
        KEYWORD IS:     'LOB' ,
                        'Freight' ,
                        'Data Model' ,
                        'Container' ;
        SOURCE IS:      'CONTAINER DATA MODEL' ,
                        'FREIGHT DATA MODEL' ;
        ATTRIBUTE IS:
             SEC-CLASS       'UNCLASSIFIED' ,
             TYPE            'AN' ,
             PICTURE         'X(04)' ,
             FIELD-LENGTH     '04' ,
             RETENTION       'PERMANENT' ,
             volatility      'STATIC' ;
        LAYOUT;

     LOGICAL DATABASE DESIGN:

          MthCd                                 1      P
          MthCdDescr                            3


     FREIGHT DATA MODEL:

        Month:FreightMov, Opt 1:Opt Many (BMCT)
        Month:FreightMov, Mand 1:Opt Many (MCT)


     FREIGHT PARTITION:

          Month                                 CRD


     CONTAINER DATA MODEL:

          Month:CntnrMov, Mand 1:Opt Many


     CONTAINER PARTITION:

          Month                                 CRD;
        COLLECTED:      IN Month-Tbl ;
        CONSISTS OF:
             MthCd ,
```

```
     MthCdDescr ;
IDENTIFIED BY:
     MthCd ;
REFERENCED:
       IN              Month-Tbl
       BY              Capture-TMR ;
CARDINALITY IS:
                12 ;
RESPONSIBLE PROBLEM DEFINER IS:
                'TACCS-LOB CNTNR/FRT GROUP' ;
```

```
137  DEFINE ENTITY                              MovModeCode ;
       DESCRIPTION;
     Movement Mode Code.
     This entity is an occurrence of a specific Mode Code, Mode Code
     description and Type Carrier Code. This is the master record for the Mov
     Mode Code Table.
      ;
        KEYWORD IS:     'LOB' ,
                        'Freight' ,
                        'Container' ,
                        'Data Model' ;
        SOURCE IS:      'CONTAINER DATA MODEL' ,
                        'FREIGHT DATA MODEL' ;
        ATTRIBUTE IS:
             SEC-CLASS       'UNCLASSIFIED' ,
             TYPE            'AN' ,
             RETENTION       'PERMANENT' ,
             volatility      'STATIC' ,
             PICTURE         'X(26)' ,
             FIELD-LENGTH     '26' ;
        LAYOUT;


     LOGICAL DATABASE DESIGN:

          ModeCd                                1     P
          ModeCdDescr                           25

     FREIGHT DATA MODEL:

         MovModeCode:FreightMov, Mand 1:Opt Many


     FREIGHT PARTITION:

          MovModeCode                           CRD


     CONTAINER DATA MODEL:

          MovModeCode:CntnrMov, Mand 1:Opt Many (TIPS)


     CONTAINER PARTITION:

          MovModeCode                           CRD;
         COLLECTED:      IN MovModeCode-Tbl ;
         CONSISTS OF:
             ModeCd ,
```

```
        ModeCdDescr ;
      IDENTIFIED BY:
        ModeCd ;
      REFERENCED:
          IN              MovModeCode-Tbl
          BY              Capture-TMR ;
      CARDINALITY IS:
                  9 ;
      RESPONSIBLE PROBLEM DEFINER IS:
                  'TACCS-LOB CNTNR/FRT GROUPS' ;

138  DEFINE ENTITY                          MovModeCode-Ref ;
      KEYWORD IS:    'Container' ;
      CONSISTS OF:
        ModeCd ;
      RESPONSIBLE PROBLEM DEFINER IS:
                  'Zacot' ;

139  DEFINE ENTITY                          Non-Fcst-CgoMCE-Ref ;
      DESCRIPTION;
   Non Forecast Cargo Movement Control Element Reference
   This is the CgoMCE table data that is used on the report to identify the
   sending MCT.
    ;
      KEYWORD IS:    'Container' ;
      CONSISTS OF:
        MCEPrefix ,
        MCENme ;
      IDENTIFIED BY:
        MCEPrefix ;
      REFERENCED:
          IN              CgoMCE-Tbl
          BY              Prep-Non-ETA-Fcst-Cntnr-Report ;
      RESPONSIBLE PROBLEM DEFINER IS:
                  'Valentine' ;
```

```
140  DEFINE ENTITY                              Non-Fcst-CntnrMov-Ref ;
       DESCRIPTION;
     Non Forecast Container Movement Reference
     This is the cntnr move record data for the non forecasted container that
     is required on the report.
      ;
        KEYWORD IS:    'Container' ;
        CONSISTS OF:
             DteRecCreat ,
             CntnrOwnAbbr ,
             CntnrNo ,
             CntnrNoPrefix ,
             VoyDocuNoFltNo ,
             POD ;
        IDENTIFIED BY:
             CntnrOwnAbbr ,
             CntnrNo ;
        REFERENCED:
              IN             CntnrMov-File
              BY             Prep-Non-ETA-Fcst-Cntnr-Report ;
        RESPONSIBLE PROBLEM DEFINER IS:
                       'Valentine' ;

141  DEFINE ENTITY                              Non-Fcst-CntnrMovStop-Ref ;
       DESCRIPTION;
     Non Forecast Container Movement Stop Reference
     This is the Cntnr Mov Stp record data that is required on the report.
      ;
        KEYWORD IS:    'Container' ;
        CONSISTS OF:
             StpNonFcst ,
             DupeStpIndex ,
             CntnrOwnAbbr ,
             CntnrNo ,
             Consignee ;
        IDENTIFIED BY:
             CntnrOwnAbbr ,
             CntnrNo ,
             Consignee ,
             DupeStpIndex ;
        REFERENCED:
              IN             CntnrMovStp-File
              BY             Prep-Non-ETA-Fcst-Cntnr-Report ;
        RESPONSIBLE PROBLEM DEFINER IS:
                       'Valentine' ;
```

```
142  DEFINE ENTITY                              Non-Fcst-Param-Ref ;
       DESCRIPTION;
   Non Forecast Parameter Reference
   This is the parameter table reference data used to identify the system
   users MCENme from the CgoMCE table for the report.
    ;
       KEYWORD IS:     'Container' ;
       CONSISTS OF:
            Origin-MCE-Prefix ;
       IDENTIFIED BY:
            Origin-MCE-Prefix ;
       REFERENCED:
             IN              System-Parameter-Tbl
             BY              Prep-Non-ETA-Fcst-Cntnr-Report ;
       RESPONSIBLE PROBLEM DEFINER IS:
                       'Valentine' ;
```

143 DEFINE ENTITY Non-Forecasted-Containers-Upd ;
DESCRIPTION;
Non Forecasted Containers Update
This is the non forecasted container report information that is sent to 1st TMCA daily. The report lists all containers that arrived in an MCT's area of responsibility, but were not forecasted on the reformatted ETA forecast.
;
KEYWORD IS: 'Container' ;
LAYOUT;

MESSAGE FILE FORMAT

FROM: C, MCT _____
TO: CDR 1st TMCA OBL GE//AEUTR-MCA-I//
INFO: CDR 1st TMCA OBL GE//AEUTR-MCA-CC//

SUBJ: Non-Forecasted Container(s)

Following container(s) received without forecast.

CNTNR OWNER	CNTNR NUMBER	VOYAGE NUMBER	POD	CONSIGNEE
XXXX	XXXXXXXX	XXXXX	XXX	XXXXXX

The report header address information will be printed in the Message file as shown above.

Then: Use the Origin MCE code in the parameter table to search for the MCEPrefix in the CgoMCE Table and find the MCENme.

Then move the MCENme to the Message file in the field to the right of the "FROM" address header.

NOTE: Make this file available to the General Message Process.
;
COLLECTED: IN Non-Fcst-Msg-File ;
CONSISTS OF:
MCENme ,
CntnrOwnAbbr ,
CntnrNoPrefix ,
CntnrNo ,

```
      VoyDocuNoFltNo ,
      POD ,
      Consignee ;
ADDED:
       TO              Non-Fcst-Msg-File
       BY              Prep-Non-ETA-Fcst-Cntnr-Report ;
CREATED:         BY Prep-Non-ETA-Fcst-Cntnr-Report ;
RESPONSIBLE PROBLEM DEFINER IS:
                 'Valentine' ;
```

```
144  DEFINE ENTITY                                ORICO ;
       DESCRIPTION;
     Origin Code.
     This entitity is an occurrence of a specific Origin Code, Origin Code
     Type, and Origin Code Description.  This is the master record for the
     ORICO Table.
      ;
        KEYWORD IS:     'Container' ,
                        'Data Model' ,
                        'LOB' ;
        SOURCE IS:      'CONTAINER DATA MODEL' ;
        ATTRIBUTE IS:
             SEC-CLASS       'UNCLASSIFIED' ,
             TYPE            'AN' ,
             PICTURE         'X(29)' ,
             FIELD-LENGTH     '29' ,
             RETENTION       'PERMANENT' ,
             volatility      'STATIC' ;
        LAYOUT;

     DATA MODEL:

          ORICO:MEvent, Opt1:Opt Many
          ORICO:ORICOTy, Opt Many:Mand 1

     LOGICAL DATABASE DESIGN:

          OrigCdTy                          1    P/F
          OrigCd                            3    P
          OrigCdDescr                      25

     PARTITION:

          ORICO                            CRUD
             ORICOTy                       R;
        COLLECTED:      IN ORICO-Tbl ;
        CONSISTS OF:
             OrigCdTy ,
             OrigCd ,
             OrigCdDescr ;
        IDENTIFIED BY:
             OrigCdTy ,
             OrigCd ;
        CARDINALITY IS:
                        294 ;
        RESPONSIBLE PROBLEM DEFINER IS:
                        'TACCS-LOB CONTAINER GROUP' ;
```

```
145  DEFINE ENTITY                                   ORICOTy ;
       DESCRIPTION;
   Origin Code Type.
   Identifies the classification of origin code, i.e. container or freight
   (breakbulk).
    ;
       KEYWORD IS:     'Container' ,
                       'LOB' ,
                       'Data Model' ;
       SOURCE IS:      'CONTAINER DATA MODEL' ;
       ATTRIBUTE IS:
            FIELD-LENGTH     '26' ,
            TYPE             'AN' ,
            PICTURE          'X(26)' ,
            SEC-CLASS        'UNCLASSIFIED' ,
            volatility       'STATIC' ,
            RETENTION        'PERMANENT' ;
       LAYOUT;

   DATA MODEL:

        ORICOTy:ORICO, Mand1:Opt Many

   LOGICAL DATABASE DESIGN:

        OrigCdTy                                    1    P
        OrigCdTyDescr                              25

   PARTITION:

        ORICOTy                                    CRU;
       COLLECTED:      IN ORICOTy-Tbl ;
       CONSISTS OF:
            OrigCdTy ,
            OrigCdTyDescr ;
       IDENTIFIED BY:
            OrigCdTy ;
       CARDINALITY IS:
                       2 ;
       RESPONSIBLE PROBLEM DEFINER IS:
                       'TACCS-LOB CONTAINER GROUP' ;
```

```
146  DEFINE ENTITY                              OceanCarr ;
       DESCRIPTION;
     Ocean Carrier.
     This entity is the occurence of a specific ocean carrier abbreviation
     and in-the-clear name.  This is the master record for the OceanCarr
     Table.
      ;
        KEYWORD IS:     'Container' ,
                        'Data Model' ,
                        'LOB' ;
        SOURCE IS:      'CONTAINER DATA MODEL' ,
                        'MILSTAMP PARA B-47' ;
        ATTRIBUTE IS:
             SEC-CLASS       'UNCLASSIFIED' ,
             TYPE            'AN' ,
             PICTURE         'X(30)' ,
             FIELD-LENGTH     '30' ,
             volatility      'STATIC' ;
        LAYOUT;

     DATA MODEL:

        OceanCarr:Voyage, Opt 1:Opt Many
        OceanCarr:TypeCarrier, Opt Many:Mand 1

     LOGICAL DATABASE DESIGN:

        TyCarrCd                                1  F
        OceanCarrAbbr                           4  P
        OceanCarrNme                            25

     PARTITION:

        OceanCarr                               CRD

     NOTE:  Relationship to Voyage is optional on OceanCarr side since ocean
            carrier information may not be available.
      ;
        COLLECTED:      IN OceanCarr-Tbl ;
        CONSISTS OF:
             TyCarrCd ,
             OceanCarrAbbr ,
             OceanCarrNme ;
        IDENTIFIED BY:
             OceanCarrAbbr ;
        CARDINALITY IS:
                        40 ;
        RESPONSIBLE PROBLEM DEFINER IS:
                        'TACCS-LOB CONTAINER GROUP' ;
```

```
147  DEFINE ENTITY                              OceanCarr-ECSR-Ref ;
       DESCRIPTION;
   Ocean Carrier Empty Container Status Report Reference
   This is Ocean Carrier info used in the Empty Container Status Report.
    ;
       KEYWORD IS:     'Container' ;
       CONSISTS OF:
            OceanCarrAbbr ,
            OceanCarrNme ;
       IDENTIFIED BY:
            OceanCarrAbbr ;
       REFERENCED:
             IN              OceanCarr-Tbl
             BY              Prep-Empty-Cntnr-Status-Report ;
       RESPONSIBLE PROBLEM DEFINER IS:
                       'Valentine' ;

148  DEFINE ENTITY                              OceanCarr-ETA-Fcst-Ref ;
       DESCRIPTION;
   Ocean Carrier ETA Forecast Reference
   Reference is used to validate input of an Ocean Carrier Abbreviation
   (OceanCarrAbbr) received in the Reformatted ETA Forecast.
    ;
       KEYWORD IS:     'Container' ;
       ATTRIBUTE IS:
            SEC-CLASS       'UNCLASSIFIED' ,
            PROCESS-MODE     'INTERACTIVE BATCH' ;
       CONSISTS OF:
            OceanCarrAbbr ;
       REFERENCED:
             IN              OceanCarr-Tbl
             BY              Create-Non-Fcst-Container-Rec ;
       RESPONSIBLE PROBLEM DEFINER IS:
                       'Cope' ;
```

```
149  DEFINE ENTITY                              OceanCarr-Ref ;
       DESCRIPTION;
     Ocean Carrier Reference
     This reference is used to validate input of Ocean Carrier
     Abbreviation.
      ;
        KEYWORD IS:     'Container' ;
        COLLECTED:      IN OceanCarr-Tbl ;
        CONSISTS OF:
             OceanCarrAbbr ;
        REFERENCED:
              IN              OceanCarr-Tbl
              BY              Correct-Merge-ETA-Forecast-Err ;
        REFERENCED:
              IN              OceanCarr-Tbl
              BY              Merge-Reformatted-ETA-Forecast ;
        RESPONSIBLE PROBLEM DEFINER IS:
                        'Cope' ;

150  DEFINE ENTITY                              Param-ECSR-Ref ;
       DESCRIPTION;
     Parameter Empty Container Status Report Reference
     This is parameter table data used in the Empty Container Status Report
     process.
      ;
        KEYWORD IS:     'Container' ;
        CONSISTS OF:
             Origin-MCE-Prefix ;
        IDENTIFIED BY:
             Origin-MCE-Prefix ;
        REFERENCED:
              IN              System-Parameter-Tbl
              BY              Prep-Empty-Cntnr-Status-Report ;
        RESPONSIBLE PROBLEM DEFINER IS:
                        'Valentine' ;
```

```
151  DEFINE ENTITY                                  Param-Recngn-Ref ;
       DESCRIPTION;
   Parameter Reconsignment Reference
   This is parameter table information used in the prepare reconsignment
   request process.
    ;
       KEYWORD IS:     'Container' ;
       CONSISTS OF:
            Origin-MCE-Prefix ;
       IDENTIFIED BY:
            Origin-MCE-Prefix ;
       REFERENCED:
             IN              System-Parameter-Tbl
             BY              Prepare-Reconsignment-Request ;
       RESPONSIBLE PROBLEM DEFINER IS:
                       'Valentine' ;

152  DEFINE ENTITY                                  Param-TM3-Ref ;
       DESCRIPTION;
   Parameter TM3 Reference
   This is paramater table information used in the TM3 process.
    ;
       KEYWORD IS:     'Container' ;
       CONSISTS OF:
            Origin-MCE-Prefix ;
       IDENTIFIED BY:
            Origin-MCE-Prefix ;
       REFERENCED:
             IN              System-Parameter-Tbl
             BY              Prep-Hold/Stg-Request-<TM3> ;
       RESPONSIBLE PROBLEM DEFINER IS:
                       'Valentine' ;

153  DEFINE ENTITY                                  Param-TMS-Ref ;
       DESCRIPTION;
   Parameter TMS Reference
   This is parameter table information used in the TMS process.
    ;
       KEYWORD IS:     'Container' ;
       CONSISTS OF:
            Origin-MCE-Prefix ;
       IDENTIFIED BY:
            Origin-MCE-Prefix ;
       REFERENCED:
             IN              System-Parameter-Tbl
             BY              Prep-Rel-fr-Stg/Hold-Req-<TMS> ;
       RESPONSIBLE PROBLEM DEFINER IS:
                       'Valentine' ;
```

```
154  DEFINE ENTITY                              Parameter-Hist-Ref ;
       DESCRIPTION;
   Parameter History Reference
   This is parameter table reference data used to establish history
   record selection criteria.
    ;
      KEYWORD IS:     'Container' ;
      CONSISTS OF:
           Cntnr-History-Sel-Criteria ;
      REFERENCED:
            IN              System-Parameter-Tbl
            BY              Sel-Rec-for-Cntnr-History-DB ;
      REMOVED:
            FROM            System-Parameter-Tbl
            BY              Sel-Rec-for-Cntnr-History-DB ;
      DESTROYED:      BY Sel-Rec-for-Cntnr-History-DB ;
      RESPONSIBLE PROBLEM DEFINER IS:
                      'Valentine' ;
```

```
155  DEFINE ENTITY                              Parameter-OrigCd-Ref ;
       DESCRIPTION;
     Parameter Origin Code Reference
     This entity is used to originate the origin code from the System
     Parameter Table.
      ;
         KEYWORD IS:     'Container' ;
         ATTRIBUTE IS:
              SEC-CLASS       'UNCLASSIFIED' ,
              PROCESS-MODE     'INTERACTIVE BATCH' ;
         COLLECTED:      IN System-Parameter-Tbl ;
         CONSISTS OF:
              OrigCd ;
         USED BY:        Prep-Convey-Change-Notif-<TTU>
                          TO DERIVE TTU-DSSR-Info ;
         REFERENCED:
               IN              System-Parameter-Tbl
               BY              Prep-Cnsgn-Rept-Evnts-Corr-ZTB ;
         REFERENCED:
               IN              System-Parameter-Tbl
               BY              Prepare-Cnsgn-Rept-Evnts-<TTB> ;
         REFERENCED:
               IN              System-Parameter-Tbl
               BY              Prep-SEAVAN-Maint-Bgn/E-<TTP> ;
         REFERENCED:
               IN              System-Parameter-Tbl
               BY              Prep-Cgo-Dischg/Non-Del-<TTW> ;
         REFERENCED:
               IN              System-Parameter-Tbl
               BY              Prep-Cgo-Non-Dlvr-Corr-<ZTW> ;
         REFERENCED:
               IN              System-Parameter-Tbl
               BY              Prep-Convey-Change-Notif-<TTU> ;
         RESPONSIBLE PROBLEM DEFINER IS:
                        'Mitchem' ;
```

```
156  DEFINE ENTITY                              ReasonDeny ;
       DESCRIPTION;
   This entity is the occurrence of a specific Reason Denied Code and code
   description.  This is the master record for the Reason Denied Table.
    ;
      KEYWORD IS:     'Data Model' ,
                      'LOB' ,
                      'Container' ;
      SOURCE IS:      'CONTAINER DATA MODEL' ;
      ATTRIBUTE IS:
           volatility      'STATIC' ,
           TYPE            'AN' ,
           FIELD-LENGTH     '27' ,
           PICTURE         'X(27)' ,
           SEC-CLASS       'UNCLASSIFIED' ;
      LAYOUT;

   DATA MODEL:

        ReasonDeny:MEvent, Opt 1:Opt Many


   LOGICAL DATABASE DESIGN:

        RsnDenyCd                          2    P
        RsnDenyCdDescr                    25


   PARTITION:

        ReasonDeny                         CRD
    ;
      COLLECTED:      IN ReasonDeny-Tbl ;
      CONSISTS OF:
           RsnDenyCd ,
           RsnDenyCdDescr ;
      IDENTIFIED BY:
           RsnDenyCd ;
      REFERENCED:
            IN             ReasonDeny-Tbl
            BY             Update-Cntnr-Record ;
      CARDINALITY IS:
                     10 ;
      RESPONSIBLE PROBLEM DEFINER IS:
                     'TACCS-LOB CONTAINER GROUP' ;
```

```
157  DEFINE ENTITY                              Req-for-Recngn-Upd ;
       DESCRIPTION;
     Request for Reconsignment Update
     This is information which is sent to TMCA requesting approval for a
     container to be reconsigned from one consignee to another.
      ;
        KEYWORD IS:     'Container' ;
        COLLECTED:      IN Recngn-Msg-File ;
        CONSISTS OF:
             CntnrNo ,
             CntnrNoPrefix ,
             TMRPrefix ,
             Consignee ,
             CntnrOwnAbbr ,
             TAC ,
             DivrsnRecngnCnsgn ,
             VoyDocuNoFltNo ,
             DteRecngnReq ,
             POD ,
             EvntDte ,
             MCENme ,
             FSt ,
             FBldgNo ,
             FBrksKsrn ,
             FCityRgn ,
             FCntry ;
        ADDED:
              TO              Recngn-Msg-File
              BY              Prepare-Reconsignment-Request ;
        CREATED:        BY Prepare-Reconsignment-Request ;
        RESPONSIBLE PROBLEM DEFINER IS:
                        'Valentine' ;
```

158 DEFINE ENTITY RespMediaCd ;
DESCRIPTION;
Response Media Code
This entity is an occurrence of a specific Response Code and Response Code description. This is the master record for the Response Media Code Table.
;
KEYWORD IS: 'Freight' ,
'LOB' ,
'Data Model' ,
'Container' ;
SOURCE IS: 'CONTAINER DATA MODEL' ,
'FREIGHT DATA MODEL' ;
ATTRIBUTE IS:
volatility 'STATIC' ,
RETENTION 'PERMANENT' ,
TYPE 'AN' ,
PICTURE 'X(11)' ,
FIELD-LENGTH '11' ,
SEC-CLASS 'UNCLASSIFIED' ;
LAYOUT;

LOGICAL DATABASE DESIGN:

RespCd 1 P
RespCdDescr 10

FREIGHT DATA MODEL:

TBD

FREIGHT PARTITION:

None

CONTAINER DATA MODEL:

RespMediaCd:MEvent, Opt 1:Opt Many

CONTAINER PARTITION:

RespMediaCd CRD;
COLLECTED: IN RespMediaCd-Tbl ;
CONSISTS OF:
RespCd ,

```
          RespCdDescr ;
       IDENTIFIED BY:
          RespCd ;
       REFERENCED:
            IN              RespMediaCd-Tbl
            BY              Prep-Diversion-Request-<TM2> ;
       CARDINALITY IS:
                    5 ;
       RESPONSIBLE PROBLEM DEFINER IS:
                    'TACCS-LOB CNTNR/FRT GROUPS' ;

159  DEFINE ENTITY                              RespMediaCd-TM3-Ref ;
       DESCRIPTION;
   Response Media Code TM3 Reference
   This is the response media code reference that is used to verify the
   code entered or selected on the screen.
    ;
       KEYWORD IS:     'Container' ;
       ATTRIBUTE IS:
          SEC-CLASS       'UNCLASSIFIED' ;
       CONSISTS OF:
          RespCd ,
          RespCdDescr ;
       IDENTIFIED BY:
          RespCd ;
       REFERENCED:
            IN              RespMediaCd-Tbl
            BY              Prep-Hold/Stg-Request-<TM3> ;
       RESPONSIBLE PROBLEM DEFINER IS:
                    'Valentine' ;

160  DEFINE ENTITY                              RespMediaCd-TMS-Ref ;
       DESCRIPTION;
   Response Media Code TMS Reference
   This is the response media code reference that is used to verify the
   code entered or selected on the screen.
    ;
       KEYWORD IS:     'Container' ;
       CONSISTS OF:
          RespCd ,
          RespCdDescr ;
       IDENTIFIED BY:
          RespCd ;
       REFERENCED:
            IN              RespMediaCd-Tbl
            BY              Prep-Rel-fr-Stg/Hold-Req-<TMS> ;
       RESPONSIBLE PROBLEM DEFINER IS:
                    'Valentine' ;
```

```
161  DEFINE ENTITY                          Search-Cntnr-O/H-CgoMCE-Ref ;
       DESCRIPTION;
     Search Container On Hand Cargo MCE Reference
     This is CgoMCE file information used in the prepare Cntnr O/H over 5 day
     report process.
      ;
        KEYWORD IS:     'Container' ;
        CONSISTS OF:
             MCEPrefix ,
             MCENme ;
        IDENTIFIED BY:
             MCEPrefix ;
        REFERENCED:
              IN              CgoMCE-Tbl
              BY              Prep-Cntnr-O/H-Over-5-Day-Rept ;
        RESPONSIBLE PROBLEM DEFINER IS:
                        'Valentine' ;
```

```
162  DEFINE ENTITY                          Search-Cntnr-O/H-MEvent-Ref ;
       DESCRIPTION;
   Search Container On Hand Movement Event Reference
   This is a query to the container database to identify containers that
   have not been reported unstuffed for a period of five (5) days from
   the arrival date.  It is derived by Prepare-Container-O/H-Over-5-Days-
   Report process.
    ;
       KEYWORD IS:     'Container' ,
                       'LOB' ;
       CONSISTS OF:
            MovEvntCd ,
            EvntTy ,
            Consignee ,
            CntnrOwnAbbr ,
            CntnrNo ,
            DupeStpIndex ,
            TyPwrCd ,
            EvntDte ;
       IDENTIFIED BY:
            MovEvntCd ,
            EvntTy ,
            Consignee ,
            CntnrOwnAbbr ,
            CntnrNo ,
            DupeStpIndex ,
            TyPwrCd ;
       REFERENCED:
             IN              MEvent-File
             BY              Prep-Cntnr-O/H-Over-5-Day-Rept ;
       RESPONSIBLE PROBLEM DEFINER IS:
                     'Valentine' ;
```

```
163  DEFINE ENTITY                              Search-Cntnr-O/H-Mov-Ref ;
       DESCRIPTION;
     Search Container On Hand Movement Reference
     This is Cntnr Move file information used in the prepare Cntnr O/H over 5
     day report process.
      ;
        KEYWORD IS:    'Container' ;
        CONSISTS OF:
             CntnrOwnAbbr ,
             CntnrNo ,
             CntnrNoPrefix ;
        IDENTIFIED BY:
             CntnrOwnAbbr ,
             CntnrNo ;
        REFERENCED:
              IN             CntnrMov-File
              BY             Prep-Cntnr-O/H-Over-5-Day-Rept ;
        RESPONSIBLE PROBLEM DEFINER IS:
                       'Valentine' ;

164  DEFINE ENTITY                              Search-Cntnr-O/H-Param-Ref ;
       DESCRIPTION;
     Search Container On Hand Parameter Reference
     This is parameter table information used in the prepare Cntnr O/H over 5
     day report process.
      ;
        KEYWORD IS:    'Container' ;
        CONSISTS OF:
             Origin-MCE-Prefix ;
        IDENTIFIED BY:
             Origin-MCE-Prefix ;
        REFERENCED:
              IN             System-Parameter-Tbl
              BY             Prep-Cntnr-O/H-Over-5-Day-Rept ;
        RESPONSIBLE PROBLEM DEFINER IS:
                       'Valentine' ;
```

```
165  DEFINE ENTITY                              ShpmtMethod ;
       SYNONYM IS:     Shipment-Method ;
       DESCRIPTION;
   Shipment Method.
   This entity is the occurrence of the mode of shipment associated with a
   given move. This is the master record for the Shipment Method Table.
    ;
       KEYWORD IS:     'Freight' ,
                       'Container' ,
                       'LOB' ,
                       'Data Model' ;
       SOURCE IS:      'CNTNR/FRT DATA MODELS' ;
       ATTRIBUTE IS:
            SEC-CLASS       'UNCLASSIFIED' ,
            TYPE            'AN' ,
            PICTURE         'X(26)' ,
            FIELD-LENGTH     '26' ,
            RETENTION       'PERMANENT' ,
            volatility      'DYNAMIC' ;
       LAYOUT;

   LOGICAL DATABASE DESIGN:

        ModeMethShpmtCd                    1    P
        ModeMethShpmtCdDescr               25


   FREIGHT DATA MODEL:

        ShpmtMethod:FreightMov, Opt 1:Opt Many


   FREIGHT PARTITION:

        ShpmtMethod                        CRD


   CONTAINER DATA MODEL:

        ShpmtMethod:MEvent, Opt 1:Opt Many (MILSTAMP)
        ShpmtMethod:CntnrMov, Mand 1:Opt Many


   CONTAINER PARTITION:

        ShpmtMethod                        CRD;
       COLLECTED:      IN ShpmtMethod-Tbl ;
       CONSISTS OF:
            ModeMethShpmtCd ,
```

```
          ModeMethShpmtCdDescr ;
     IDENTIFIED BY:
          ModeMethShpmtCd ;
     CARDINALITY IS:
                    34 ;
     RESPONSIBLE PROBLEM DEFINER IS:
                    'TACCS-LOB CNTNR/FRT GROUPS' ;

166  DEFINE ENTITY                              Sixty-Day-Cntnr-Ref ;
       DESCRIPTION;
    Sixty Day Container Reference
    This is the Cntnr Move File record information that is referenced in
    order to select records for the delete 60 day report output.
     ;
       KEYWORD IS:     'Container' ;
       CONSISTS OF:
            DelFlag ,
            DteLstUpdCntnr ,
            DteRecCreat ,
            CntnrOwnAbbr ,
            CntnrNoPrefix ,
            CntnrNo ,
            VoyDocuNoFltNo ,
            POD ;
       IDENTIFIED BY:
            CntnrOwnAbbr ,
            CntnrNo ;
       REFERENCED:
             IN             CntnrMov-File
             BY             Prep-Del-60-Day-Old-Cntnr-Rept ;
       RESPONSIBLE PROBLEM DEFINER IS:
                    'Valentine' ;
```

```
167  DEFINE ENTITY                              Sixty-Day-Cntnr-Upd ;
       DESCRIPTION;
   Sixty Day Container Update
   This is the Cntnr Mov File record update information that is posted to a
   Container record that is 55 days old and no movement events have been
   recorded.
    ;
       KEYWORD IS:     'Container' ;
       CONSISTS OF:
            CntnrOwnAbbr ,
            CntnrNo ,
            DelFlag ,
            DteLstUpdCntnr ;
       IDENTIFIED BY:
            CntnrOwnAbbr ,
            CntnrNo ;
       ADDED:
             TO              CntnrMov-File
             BY              Prep-Del-60-Day-Old-Cntnr-Rept ;
       RESPONSIBLE PROBLEM DEFINER IS:
                       'Valentine' ;

168  DEFINE ENTITY                              Sixty-Day-MCE-Ref ;
       DESCRIPTION;
   Sixty Day MCE Reference
   This is the CgoMCE table information that is used in the prepare 60 day
   old cntnr report.
    ;
       KEYWORD IS:     'Container' ;
       CONSISTS OF:
            MCENme ,
            MCEPrefix ;
       IDENTIFIED BY:
            MCEPrefix ;
       REFERENCED:
             IN              CgoMCE-Tbl
             BY              Prep-Del-60-Day-Old-Cntnr-Rept ;
       RESPONSIBLE PROBLEM DEFINER IS:
                       'Valentine' ;
```



```
169  DEFINE ENTITY                              Sixty-Day-Parameter-Ref ;
       DESCRIPTION;
     Sixty Day Parameter Reference
     This is the parameter table information that is used in the prepare 60
     day old cntnr process.  The parameter file information is not part of
     the database but will be accessed to perform the process.  This process
     uses the following data elements and stored values from the parameter
     table:
             1.  60DaysOldDeletionProcess
             2.  NotiffromTMCAofCntnrDeletion
             3.  Origin-MCE-Prefix
     ;
        KEYWORD IS:     'Container' ;
        CONSISTS OF:
             Origin-MCE-Prefix ;
        IDENTIFIED BY:
             Origin-MCE-Prefix ;
        REFERENCED:
              IN              System-Parameter-Tbl
              BY              Prep-Dam-Deadlined-Cntnr-Rept ;
        REFERENCED:
              IN              System-Parameter-Tbl
              BY              Prep-Del-60-Day-Old-Cntnr-Rept ;
        RESPONSIBLE PROBLEM DEFINER IS:
                        'Valentine' ;
```





```
170  DEFINE ENTITY                              SpecialInt ;
       DESCRIPTION;
   Special Interest.
   This entity is an occurrence of a specific Special Interest Code and
   Special Interest Code description. This is the master record for the
   Special Interest Table.
    ;
       KEYWORD IS:     'LOB' ,
                       'Freight' ,
                       'Data Model' ,
                       'Container' ;
       SOURCE IS:      'CNTNR/FRT DATA MODELS' ;
       ATTRIBUTE IS:
            SEC-CLASS       'UNCLASSIFIED' ,
            TYPE            'A' ,
            PICTURE         'A(27)' ,
            FIELD-LENGTH     '27' ,
            RETENTION       'PERMANENT' ,
            volatility      'STATIC' ;
       LAYOUT;

   LOGICAL DATABASE DESIGN:

        SpIntCd                              2     P
        SpIntCdDescr                         25


   FREIGHT DATA MODEL:

       SpecialInt:VehStopPt, Mand 1:Opt Many


   FREIGHT PARTITION:

        SpecialInt                           CRD


   CONTAINER DATA MODEL:

        SpecialInt:CntnrMov, Opt 1:Opt Many


   CONTAINER PARTITION:

        SpecialInt                           CRD;
       COLLECTED:      IN SpecialInt-Tbl ;
       CONSISTS OF:
            SpIntCd ,
            SpIntCdDescr ;
```

```
        IDENTIFIED BY:
             SpIntCd ;
        REFERENCED:
              IN              SpecialInt-Tbl
              BY              Capture-TMR ;
        CARDINALITY IS:
                        60 ;
        RESPONSIBLE PROBLEM DEFINER IS:
                        'TACCS-LOB CNTNR/FRT GROUPS' ;

171     DEFINE ENTITY                                   SpecialInt-Ref ;
        KEYWORD IS:     'Container' ;
        CONSISTS OF:
             SpIntCd ;
        RESPONSIBLE PROBLEM DEFINER IS:
                        'Zacot' ;

172     DEFINE ENTITY                                   Sys-Date-Cal-Yr-Day-Yr ;
        KEYWORD IS:     'Container' ;
        ATTRIBUTE IS:
             SEC-CLASS       'UNCLASSIFIED' ;

173     DEFINE ENTITY                                   Sys-Parameter-Ref ;
        DESCRIPTION;
    System Parameter Reference
    This entity is used to validate that the record be input to the system
    belongs to the MCT making the input.
     ;
        KEYWORD IS:     'Container' ;
        COLLECTED:      IN System-Parameter-Tbl ;
        CONSISTS OF:
             MCECd ,
             MCEPrefix ,
             MCESuffix ;
        REFERENCED:
              IN              System-Parameter-Tbl
              BY              Correct-Merge-ETA-Forecast-Err ;
        REFERENCED:
              IN              System-Parameter-Tbl
              BY              Merge-Reformatted-ETA-Forecast ;
        RESPONSIBLE PROBLEM DEFINER IS:
                        'Cope' ;
```

```
174  DEFINE ENTITY                              System-Parameter-Record ;
       DESCRIPTION;
     System Parameter Record.
     This entity represents the master record of system parameters collected
     in the System Parameter Table at the Movement Control Team (MCT) level.
      ;
        KEYWORD IS:     'Freight' ,
                        'Container' ,
                        'LOB' ,
                        'NOT IN DATA MODEL' ;
        SOURCE IS:      'TACCS-LOB CNTNR/FRT DFD' ;
        ATTRIBUTE IS:
             SEC-CLASS       'UNCLASSIFIED' ,
             TYPE            'AN' ,
             volatility      'DYNAMIC' ;
        COLLECTED:      IN System-Parameter-Tbl ;
        CONSISTS OF:
             Cntnr-History-Sel-Criteria ,
             Cntnr-Deletion-Criteria ,
             Cntnr-On-Hand-Over-X-Criteria ,
             Cntnr-Origin-Code ,
             Cntnr-Deletion-Notification ,
             Origin-MCE-Prefix ,
             Origin-DODAAC ,
             Freight-History-Sel-Criteria ,
             Label-Print-Flag ,
             Commitment-Print-Flag ,
             Freight-Origin-Code ,
             Number-463L-Pallet-Criteria ;
        RESPONSIBLE PROBLEM DEFINER IS:
                        'TACCS-LOB DATA ADMIN' ;

175  DEFINE ENTITY                              TM3-ISAM-Data ;
        ATTRIBUTE IS:
             SEC-CLASS       'UNCLASSIFIED' ;
        COLLECTED:      IN Trns-ISAM-File ;
```

```
176  DEFINE ENTITY                              TM3-Msg-Data-Upd ;
       DESCRIPTION;
     TM3 Message Data Update
     This is the request for stage/hold information that goes to the cntnr
     msg file and is transitted to MECOBO.
      ;
        KEYWORD IS:     'Container' ;
        COLLECTED:      IN Cntnr-Msg-File ;
        CONSISTS OF:
             CntnrNo ,
             CntnrNoPrefix ,
             CnsgnrAAC ,
             DteDprtCnsgnr ,
             POE ,
             AACCurr ,
             CntnrTCN ,
             ShpmtUTCN ,
             VoyDocuNoFltNo ,
             POD ,
             DspoActv ,
             MCENme ;
        ADDED:
              TO              Cntnr-Msg-File
              BY              Prep-Hold/Stg-Request-<TM3> ;
        CREATED:        BY Prep-Hold/Stg-Request-<TM3> ;
        RESPONSIBLE PROBLEM DEFINER IS:
                        'Valentine' ;
```

```
177  DEFINE ENTITY                              TM3-Transaction-Upd ;
       DESCRIPTION;
   TM3 Transaction Update
   This is request information to stage/hold a container which is used to
   update the appropriate container record in the container database.
   It is derived by the Prepare-Hold/Stage-Request-(TM3) process.
    ;
       KEYWORD IS:     'Container' ,
                       'LOB' ;
       CONSISTS OF:
            CnsgnrAAC ,
            DteDprtCnsgnr ,
            DspoActv ,
            MovEvntCd ,
            POD ,
            POE ,
            RespCd ,
            VoyDocuNoFltNo ,
            CntnrTCN ,
            ShpmtUTCN ,
            AACCurr ,
            MgrCd ;
       ADDED:
             TO              Trns-ISAM-File
             BY              Prep-Hold/Stg-Request-<TM3> ;
       MODIFIED:
             IN              Trns-ISAM-File
             BY              Prep-Hold/Stg-Request-<TM3> ;
       REFERENCED:
             IN              Trns-ISAM-File
             BY              Prep-Hold/Stg-Request-<TM3> ;
       RESPONSIBLE PROBLEM DEFINER IS:
                       'Valentine' ;
```

```
178  DEFINE ENTITY                                TMS-Msg-Data-Upd ;
       DESCRIPTION;
     TMS Message Data Update
     This is the release from stage/hold information that goes to the cntnr
     msg file and is transmitted to MECOBO.
      ;
        KEYWORD IS:     'Container' ;
        COLLECTED:      IN Cntnr-Msg-File ;
        CONSISTS OF:
             CntnrNo ,
             CntnrNoPrefix ,
             CnsgnrAAC ,
             DteDprtCnsgnr ,
             POE ,
             AACCurr ,
             CntnrTCN ,
             ShpmtUTCN ,
             VoyDocuNoFltNo ,
             POD ,
             DspoActv ,
             NewTAC ,
             NewEvntLoc ,
             MCENme ;
        ADDED:
              TO              Cntnr-Msg-File
              BY              Prep-Rel-fr-Stg/Hold-Req-<TMS> ;
        CREATED:        BY Prep-Rel-fr-Stg/Hold-Req-<TMS> ;
        RESPONSIBLE PROBLEM DEFINER IS:
                        'Valentine' ;
```

```
179  DEFINE ENTITY                              TMS-Transaction-Info ;
       DESCRIPTION;
   TMS Transaction Update
   This is request information to release a container from staging/hold
   which is used to update the appropriate container record in the con-
   tainer database.  It is derived by Prepare-Release-from-Staging/Hold-
   (TMS) process.
    ;
      KEYWORD IS:     'Container' ,
                      'LOB' ;
      CONSISTS OF:
           CnsgnrAAC ,
           DteDprtCnsgnr ,
           DspoActv ,
           PstDte ,
           MgrCd ,
           MovEvntCd ,
           AACCurr ,
           NewEvntLoc ,
           PrtCd ,
           POE ,
           RespCd ,
           NewTAC ,
           CntnrTCN ,
           ShpmtUTCN ,
           VoyDocuNoFltNo ;
      ADDED:
            TO              Trns-ISAM-File
            BY              Prep-Rel-fr-Stg/Hold-Req-<TMS> ;
      MODIFIED:
            IN              Trns-ISAM-File
            BY              Prep-Rel-fr-Stg/Hold-Req-<TMS> ;
      REFERENCED:
            IN              Trns-ISAM-File
            BY              Prep-Rel-fr-Stg/Hold-Req-<TMS> ;
      CREATED:        BY Prep-Rel-fr-Stg/Hold-Req-<TMS> ;
      RESPONSIBLE PROBLEM DEFINER IS:
                      'Valentine' ;
```

```
180  DEFINE ENTITY                              TTP-ISAM-Data ;
       DESCRIPTION;
     This is SEAVAN Maintenance correction information that is used to
     correct the appropriate container record in the container database.
     It is derived by the Prepare-SEAVAN-Maintenance-Begin/End-Correction-
     (ZTP) process.
      ;
        KEYWORD IS:     'Container' ;
        CONSISTS OF:
             MovEvntCd ,
             OrigCd ,
             TyCarrCd ,
             TyMovNoCd ,
             Movement-Number ,
             CntnrTCN ,
             CntnrOwnAbbr ,
             CntnrNo ,
             EvntLoc ,
             NewEvntLoc ,
             POD ,
             OceanCarrAbbr ,
             TyPwrCd ,
             EvntTy ,
             EvntDte ,
             VoyDocuNoFltNo ;
        ADDED:
              TO              Trns-ISAM-File
              BY              Prep-SEAVAN-Maint-Bgn/E-<TTP> ;
        MODIFIED:
              IN              Trns-ISAM-File
              BY              Prep-SEAVAN-Maint-Bgn/E-<TTP> ;
        MODIFIED:
              IN              Trns-ISAM-File
              BY              Prep-Svan-Maint-Bgn/E-Corr-ZTP ;
        REFERENCED:
              IN              Trns-ISAM-File
              BY              Prep-SEAVAN-Maint-Bgn/E-<TTP> ;
        REFERENCED:
              IN              Trns-ISAM-File
              BY              Prep-Svan-Maint-Bgn/E-Corr-ZTP ;
        RESPONSIBLE PROBLEM DEFINER IS:
                        'Ocasio' ;
```

```
181  DEFINE ENTITY                              TTU-DSSR-Info ;
       DESCRIPTION;
   TTU Daily SEAVAN Status Report Information
   This data is the notification of a conveyance change held in the Trns-
   ISAM file until sent to CMM.
   ;
       KEYWORD IS:     'Container' ,
                       'LOB' ;
       CONSISTS OF:
            MovEvntCd ,
            OrigCd ,
            TyCarrCd ,
            ModeMethShpmtCd ,
            TyMovNoCd ,
            Movement-Number ,
            Consignee ,
            NewTyCarrCd ,
            NewModeMethShpmtCd ,
            NewTyMovNoCd ,
            CntnrSz ,
            EvntTy ,
            EvntDte ,
            VoyDocuNoFltNo ,
            NewMovNo ,
            CntnrOwnAbbr ,
            CntnrNo ,
            FWTNo ,
            TIN ,
            TMR ;
       DERIVED:          BY  Prep-Convey-Change-Notif-<TTU>
                         USING Conveyance-Ch-Notif-Info-Inp ;
       DERIVED:          BY  Prep-Convey-Change-Notif-<TTU>
                         USING CntnrMov-TTU-Ref ;
       DERIVED:          BY  Prep-Convey-Change-Notif-<TTU>
                         USING CntnrMovStp-Ref ;
       DERIVED:          BY  Prep-Convey-Change-Notif-<TTU>
                         USING MEvent-TTU-Ref ;
       DERIVED:          BY  Prep-Convey-Change-Notif-<TTU>
                         USING Parameter-OrigCd-Ref ;
       DERIVED:          BY  Prep-Convey-Change-Notif-<TTU>
                         USING NewMovNo ;
       DERIVED:          BY  Prep-Convey-Change-Notif-<TTU>
                         USING NewTyCarrCd ;
       DERIVED:          BY  Prep-Convey-Change-Notif-<TTU>
                         USING NewTyMovNoCd ;
       DERIVED:          BY  Prep-Convey-Change-Notif-<TTU>
                         USING NewModeMethShpmtCd ;
       ADDED:
             TO              Trns-ISAM-File
```

```
            BY              Prep-Convey-Change-Notif-<TTU> ;
        MODIFIED:
            IN              Trns-ISAM-File
            BY              Prep-Convey-Change-Notif-<TTU> ;
        REFERENCED:
            IN              Trns-ISAM-File
            BY              Prep-Convey-Change-Notif-<TTU> ;
        CREATED:        BY Prep-Convey-Change-Notif-<TTU> ;
        RESPONSIBLE PROBLEM DEFINER IS:
                        'Zacot' ;

182  DEFINE ENTITY                                  TTW-CntnrMov-Ref ;
        DESCRIPTION;
    TTW Container Movement Reference
    This is information passed to the referenced process(s) from the front end
    process.  It also is used to validate an entered CntnrTCN, CntnrNo, FWTNo,
    and TMRPrefix.
     ;
        KEYWORD IS:     'Container' ;
        CONSISTS OF:
             CntnrOwnAbbr ,
             CntnrNo ,
             CntnrNoPrefix ,
             FWTNo ,
             TMRPrefix ;
        REFERENCED:
            IN              CntnrMov-File
            BY              Prep-Cgo-Dischg/Non-Del-<TTW> ;
        REFERENCED:
            IN              CntnrMov-File
            BY              Prep-Cgo-Non-Dlvr-Corr-<ZTW> ;
        RESPONSIBLE PROBLEM DEFINER IS:
                        'Mitchem' ;
```

```
183  DEFINE ENTITY                                TTW-CntnrMov-Upd ;
       DESCRIPTION;
     TTW Container Movement Update
     This is an update to CntnrMov to increase the value of DteLstUpdCntnr after
     the TTW process updates a container.
      ;
        KEYWORD IS:     'Container' ;
        CONSISTS OF:
             DteLstUpdCntnr ,
             CntnrOwnAbbr ,
             CntnrNo ;
        ADDED:
              TO              CntnrMov-File
              BY              Prep-Cgo-Dischg/Non-Del-<TTW> ;
        MODIFIED:
              IN              CntnrMov-File
              BY              Prep-Cgo-Dischg/Non-Del-<TTW> ;
        MODIFIED:
              IN              CntnrMov-File
              BY              Prep-Cgo-Non-Dlvr-Corr-<ZTW> ;
        RESPONSIBLE PROBLEM DEFINER IS:
                        'Mitchem' ;

184  DEFINE ENTITY                                TTW-EventType-Ref ;
       DESCRIPTION;
     TTW Event Type Reference
     This is information that both the TTW and ZTW process use to: 1) Validate a
     keyboard entry of EventTy and, 2) Display a [HELP] screen of valid TTW/ZTW
     Event Types.
      ;
        KEYWORD IS:     'Container' ;
        CONSISTS OF:
             EvntTy ,
             MovEvntCd ;
        IDENTIFIED BY:
             EvntTy ,
             MovEvntCd ;
        REFERENCED:
              IN              MEventType-Tbl
              BY              Prep-Cgo-Dischg/Non-Del-<TTW> ;
        REFERENCED:
              IN              MEventType-Tbl
              BY              Prep-Cgo-Non-Dlvr-Corr-<ZTW> ;
        RESPONSIBLE PROBLEM DEFINER IS:
                        'Mitchem' ;
```

```
185  DEFINE ENTITY                              TTW-ISAM-Info ;
       DESCRIPTION;
     TTW ISAM Information
     This is information that is sent to update CMM.  It can be modified or
     deleted before sending it to CMM.
      ;
        KEYWORD IS:     'Container' ;
        CONSISTS OF:
             MovEvntCd ,
             OrigCd ,
             DiscrpTCN ,
             Consignee ,
             DiscrpCd ,
             DiscrpPc ,
             EvntTy ,
             EvntDte ;
        ADDED:
              TO              Trns-ISAM-File
              BY              Prep-Cgo-Dischg/Non-Del-<TTW> ;
        MODIFIED:
              IN              Trns-ISAM-File
              BY              Prep-Cgo-Dischg/Non-Del-<TTW> ;
        REFERENCED:
              IN              Trns-ISAM-File
              BY              Prep-Cgo-Dischg/Non-Del-<TTW> ;
        RESPONSIBLE PROBLEM DEFINER IS:
                        'Mitchem' ;

186  DEFINE ENTITY                              TTW-MEvent-Upd ;
        KEYWORD IS:     'Container' ;
        CONSISTS OF:
             CntnrOwnAbbr ,
             CntnrNo ,
             Consignee ,
             MovEvntCd ,
             EvntTy ,
             PstDte ,
             EvntDte ,
             OrigCd ,
             ShpmtUTCN ;
        ADDED:
              TO              MEvent-File
              BY              Prep-Cgo-Dischg/Non-Del-<TTW> ;
        RESPONSIBLE PROBLEM DEFINER IS:
                        'Mitchem' ;
```

```
187  DEFINE ENTITY                              TransPri ;
       DESCRIPTION;
   Transportation Priority.
   A code and description which identifies the length of time in days in
   which a movement must be completed.
    ;
       KEYWORD IS:     'LOB' ,
                       'Freight' ,
                       'Data Model' ,
                       'Container' ;
       SOURCE IS:      'CNTNR/FRT DATA MODELS' ;
       ATTRIBUTE IS:
            SEC-CLASS       'UNCLASSIFIED' ,
            TYPE            'AN' ,
            PICTURE         'X(36)' ,
            FIELD-LENGTH     '36' ,
            RETENTION       'PERMANENT' ,
            volatility      'STATIC' ;
       LAYOUT;

   LOGICAL DATABASE DESIGN:

        TransPriCd                          1      P
        TransPriDescr                       35


   FREIGHT DATA MODEL:

       TransPri:VehStopPt, Mand 1:Opt Many


   FREIGHT PARTITION:

        TransPri                            CRD


   CONTAINER DATA MODEL:

        TransPri:CntnrMov, Opt 1:Opt Many


   CONTAINER PARTITION:

        TransPri                            CRD;
       COLLECTED:      IN TransPri-Tbl ;
       CONSISTS OF:
            TransPriCd ,
            TransPriDescr ;
       IDENTIFIED BY:
```

```
          TransPriCd ;
        REFERENCED:
             IN              TransPri-Tbl
             BY              Capture-TMR ;
        CARDINALITY IS:
                        5 ;
        RESPONSIBLE PROBLEM DEFINER IS:
                        'TACCS-LOB CNTNR/FRT GROUPS' ;

188   DEFINE ENTITY                                  TransPri-Ref ;
        KEYWORD IS:     'Container' ;
        CONSISTS OF:
             TransPriCd ;
        RESPONSIBLE PROBLEM DEFINER IS:
                        'Zacot' ;
```

```
189  DEFINE ENTITY                              Trns-ISAM-Data ;
       DESCRIPTION;
   Transaction ISAM Data Update
   This update consist of data elements that are sent to the ISAM file for
   the creation of the DSSR.
    ;
       KEYWORD IS:     'Container' ;
       ATTRIBUTE IS:
            SEC-CLASS       'UNCLASSIFIED' ,
            PROCESS-MODE     'INTERACTIVE BATCH' ;
       COLLECTED:      IN Trns-ISAM-File ;
       CONSISTS OF:
            OrigCd ,
            TyCarrCd ,
            TyMovNoCd ,
            CntnrTCN ,
            CntnrOwnAbbr ,
            CntnrNo ,
            FWTNo ,
            TMRPrefix ,
            NewEvntLoc ,
            POD ,
            OceanCarrAbbr ,
            TyPwrCd ,
            EvntTy ,
            EvntDte ,
            VoyDocuNoFltNo ,
            MovEvntCd ;
       CREATED:        BY Prep-Cgo-Dischg/Non-Del-<TTW> ;
       CREATED:        BY Prep-Cgo-Non-Dlvr-Corr-<ZTW> ;
       CREATED:        BY Prep-Cnsgn-Rept-Evnts-Corr-ZTB ;
       CREATED:        BY Prep-Empty-Cntnr-Status-Report ;
       CREATED:        BY Prep-Hold/Stg-Request-<TM3> ;
       CREATED:        BY Prep-Rel-fr-Stg/Hold-Req-<TMS> ;
       CREATED:        BY Prep-SEAVAN-Maint-Bgn/E-<TTP> ;
       RESPONSIBLE PROBLEM DEFINER IS:
                       'Ocasio' ;
```

```
190  DEFINE ENTITY                                TyCarrCd-TTB-Ref ;
       DESCRIPTION;
     Type Carrier Code TTB Reference
     This is information used to validate the entry by the user of the Type
     Carrier Code into the system.  Also used for a help screen.
      ;
        KEYWORD IS:     'Container' ;
        COLLECTED:      IN TypeCarrier-Tbl ;
        CONSISTS OF:
             TyCarrCd ;
        IDENTIFIED BY:
             TyCarrCd ;
        REFERENCED:
              IN              TypeCarrier-Tbl
              BY              Prepare-Cnsgn-Rept-Evnts-<TTB> ;
        RESPONSIBLE PROBLEM DEFINER IS:
                        'Mitchem' ;

191  DEFINE ENTITY                                TyMovNo-TTU-Ref ;
       DESCRIPTION;
     Type Movement Number Reference
     This entity validates the type move number.
      ;
        KEYWORD IS:     'Container' ;
        CONSISTS OF:
             TyMovNoCd ;
        IDENTIFIED BY:
             TyMovNoCd ;
        REFERENCED:
              IN              TypeMovNo-Tbl
              BY              Prep-Convey-Change-Notif-<TTU> ;
        RESPONSIBLE PROBLEM DEFINER IS:
                        'Zacot' ;
```

```
192  DEFINE ENTITY                                TyMovNoCd-TTB-Ref ;
       DESCRIPTION;
   Type Movement Number Code TTB Reference
   This is information that is presented on the screen for the user to
   select a Type Movement Number Code from.  Also used for a help screen.
    ;
       KEYWORD IS:     'Container' ;
       COLLECTED:      IN TypeMovNo-Tbl ;
       CONSISTS OF:
            TyMovNoCd ;
       IDENTIFIED BY:
            TyMovNoCd ;
       REFERENCED:
             IN              TypeMovNo-Tbl
             BY              Prepare-Cnsgn-Rept-Evnts-<TTB> ;
       RESPONSIBLE PROBLEM DEFINER IS:
                       'Mitchem' ;
```



```
193  DEFINE ENTITY                              TypeCarrier ;
       DESCRIPTION;
     Type Carrier
     A code and a description of the code that identifies the type carrier or
     organization responsible for accomplishing the transport of cargo to
     its destination.
      ;
        KEYWORD IS:     'Container' ,
                        'LOB' ,
                        'Data Model' ,
                        'Freight' ;
        SOURCE IS:      'CONTAINER DATA MODEL' ,
                        'Freight Data Model' ;
        ATTRIBUTE IS:
             volatility      'STATIC' ,
             TYPE            'AN' ,
             FIELD-LENGTH     '26' ,
             PICTURE         'X(26)' ,
             SEC-CLASS       'UNCLASSIFIED' ;
        LAYOUT;

     LOGICAL DATABASE DESIGN:


          TyCarrCd                                    1   P
          TyCarrCdDescr                              25


     PARTITION:

          TypeCarrier                                 CRD

     FREIGHT DATA MODEL:

          TypeCarrier:FreightMov, Opt 1:Opt Many

     CONTAINER DATA MODEL:

          TypeCarrier:CntnrMov, Mand 1:Opt Many
          TypeCarrier:OceanCarr, Mand 1:Opt Many;
        COLLECTED:      IN TypeCarrier-Tbl ;
        CONSISTS OF:
             TyCarrCd ,
             TyCarrCdDescr ;
        IDENTIFIED BY:
             TyCarrCd ;
        REFERENCED:
              IN              TypeCarrier-Tbl
              BY              Prep-SEAVAN-Maint-Bgn/E-<TTP> ;
        CARDINALITY IS:
```



```
                4 ;
RESPONSIBLE PROBLEM DEFINER IS:
                'TACCS-LOB CONTAINER GROUP' ;
```



```
194  DEFINE ENTITY                                TypeMovNo ;
       DESCRIPTION;
    Type Movement Number.
    This entity is an occurrence of a type movement number code and
    description.  This is the master file record for the Type Movement
    Number Table.
     ;
       KEYWORD IS:     'LOB' ,
                       'Data Model' ,
                       'Container' ;
       SOURCE IS:      'CONTAINER DATA MODEL' ;
       ATTRIBUTE IS:
            SEC-CLASS        'UNCLASSIFIED' ,
            TYPE             'AN' ,
            PICTURE          'X(26)' ,
            FIELD-LENGTH      '26' ,
            volatility       'STATIC' ;
       LAYOUT;

    DATA MODEL:

        TyMovNo:MEvent, Mand 1:Opt Many
```



```
    LOGICAL DATABASE DESIGN:

        TyMovNoCd                              1   P
        TyMovNoCdDescr                        25


    PARTITION:

        TyMovNo                               CRD;
       COLLECTED:      IN TypeMovNo-Tbl ;
       CONSISTS OF:
            TyMovNoCd ,
            TyMovNoCdDescr ;
       IDENTIFIED BY:
            TyMovNoCd ;
       REFERENCED:
             IN              TypeMovNo-Tbl
             BY              Prep-SEAVAN-Maint-Bgn/E-<TTP> ;
       CARDINALITY IS:
                       5 ;
       RESPONSIBLE PROBLEM DEFINER IS:
                       'TACCS-LOB CONTAINER GROUP' ;
```



```
195  DEFINE ENTITY                                TypeMove ;
       DESCRIPTION;
   Type Movement.
   is the master record for the Type Movement Table.
    ;
       KEYWORD IS:     'Container' ,
                       'Data Model' ,
                       'LOB' ,
                       'Freight' ;
       SOURCE IS:      'CONTAINER DATA MODEL' ,
                       'FREIGHT DATA MODEL' ;
       ATTRIBUTE IS:
            volatility      'STATIC' ,
            TYPE            'AN' ,
            FIELD-LENGTH     '26' ,
            PICTURE         'X(26)' ,
            SEC-CLASS       'UNCLASSIFIED' ;
       LAYOUT;

   LOGICAL DATABASE DESIGN:

        TyMovCd                          1    P
        TyMovCdDescr                    25


   PARTITION:

        TypeMove                         CRD


   CONTAINER DATA MODEL:

        TypeMove:MEvent, Opt 1:Opt Many


   FREIGHT DATA MODEL:

        TypeMove:FreightMov, Mand 1:Opt Many
    ;
       COLLECTED:      IN TypeMove-Tbl ;
       CONSISTS OF:
            TyMovCd ,
            TyMovCdDescr ;
       IDENTIFIED BY:
            TyMovCd ;
       CARDINALITY IS:
                       3 ;
       RESPONSIBLE PROBLEM DEFINER IS:
                       'TACCS-LOB CONTAINER GROUP' ;
```

```
196  DEFINE ENTITY                          Upd-Cntnr-MEvent-Info ;
       DESCRIPTION;
    Update Container Movement Event Information
    This entity consists of the data elements and values from the MEvent file
    which are referenced and updated by the Update-Cntnr-Record process.
     ;
        KEYWORD IS:     'Container' ;
        CONSISTS OF:
             CntnrOwnAbbr ,
             CntnrNo ,
             Consignee ,
             MovEvntCd ,
             EvntTy ,
             RsnDenyCd ,
             NewEvntLoc ;
        MODIFIED:
              IN              MEvent-File
              BY              Update-Cntnr-Record ;
        REFERENCED:
              IN              MEvent-File
              BY              Update-Cntnr-Record ;
        RESPONSIBLE PROBLEM DEFINER IS:
                        'Morris' ;
```

```
197  DEFINE ENTITY                          Upd-CntnrMov-Info ;
       DESCRIPTION;
     Update Container Movement Information
     This entity consists of the data elements and values from the CntnrMov file
     which are referenced and updated by the Update-Cntnr-Record process.
      ;
        KEYWORD IS:     'Container' ;
        CONSISTS OF:
             CntnrNo ,
             CntnrNoPrefix ,
             FWTNo ,
             CntnrOwnAbbr ,
             TMRPrefix ,
             VoyDocuNoFltNo ,
             DteDprtCnsgnr ,
             MovCompFlag ,
             DteStageStart ,
             DteStageStop ,
             StgIndic ,
             DteLstUpdCntnr ;
        MODIFIED:
              IN              CntnrMov-File
              BY              Update-Cntnr-Record ;
        REFERENCED:
              IN              CntnrMov-File
              BY              Update-Cntnr-Record ;
        RESPONSIBLE PROBLEM DEFINER IS:
                        'Morris' ;
```

```
198  DEFINE ENTITY                          Upd-CntnrMovStp-Info ;
       DESCRIPTION;
     Update Container Movement Stop Information
     This entity consists of the data elements and values from the CntnrMovStp
     file which are referenced and updated by the Update-Cntnr-Record process.
      ;
        KEYWORD IS:    'Container' ;
        CONSISTS OF:
             CntnrNo ,
             Consignee ,
             CntnrOwnAbbr ,
             MultiStpNo ,
             StpCompFlag ,
             DteHoldStart ,
             DteHoldStop ,
             HoldLoc ,
             DteRecngnReq ,
             DivrsnDte ,
             DivrsnRecngnCnsgn ,
             DivrsnIndic ,
             RecngnCfmNoncfm ,
             DteRecngnCfmNoncfm ;
        MODIFIED:
              IN             CntnrMovStp-File
              BY             Update-Cntnr-Record ;
        REFERENCED:
              IN             CntnrMovStp-File
              BY             Update-Cntnr-Record ;
        RESPONSIBLE PROBLEM DEFINER IS:
                       'Morris' ;
```

```
199  DEFINE ENTITY                              Voyage ;
       DESCRIPTION;
   Voyage.
   This entity is an occurrence of the information for a given voyage,
   whether sea or air, from POE to POD.  This is the master record
   format for the Voyage-File.
    ;
       KEYWORD IS:     'LOB' ,
                       'Data Model' ,
                       'Container' ;
       SOURCE IS:      'CONTAINER DATA MODEL' ;
       ATTRIBUTE IS:
            volatility      'DYNAMIC' ,
            RETENTION       '60 DAYS' ,
            SEC-CLASS       'UNCLASSIFIED' ,
            TYPE            'AN' ,
            PICTURE         'X(17)' ,
            FIELD-LENGTH     '17' ;
       LAYOUT;

   DATA MODEL:

        Voyage:VoyageStop, Mand 1:Mand Many
        Voyage:OceanCarr, Opt Many:Opt 1

   LOGICAL DATABASE DESIGN:

        VoyDocuNoFltNo                      5   P
        DteSailWPOE                         5
        POE                                 3
        OceanCarrAbbr                       4   F

   PARTITION:

        None.;
       COLLECTED:      IN Voyage-File ;
       CONSISTS OF:
            VoyDocuNoFltNo ,
            DteSailWPOE ,
            POE ,
            OceanCarrAbbr ;
       IDENTIFIED BY:
            VoyDocuNoFltNo ;
       ADDED:
             TO              Voyage-File
             BY              Correct-Merge-ETA-Forecast-Err ;
       ADDED:
             TO              Voyage-File
             BY              Create-Non-Fcst-Container-Rec ;
```

```
ADDED:
      TO              Voyage-File
      BY              Merge-Reformatted-ETA-Forecast ;
MODIFIED:
      IN              Voyage-File
      BY              Correct-Merge-ETA-Forecast-Err ;
MODIFIED:
      IN              Voyage-File
      BY              Merge-Reformatted-ETA-Forecast ;
REFERENCED:
      IN              Voyage-File
      BY              Correct-Merge-ETA-Forecast-Err ;
REFERENCED:
      IN              Voyage-File
      BY              Create-Non-Fcst-Container-Rec ;
REFERENCED:
      IN              Voyage-File
      BY              Merge-Reformatted-ETA-Forecast ;
REFERENCED:
      IN              Voyage-File
      BY              Notify-Cnsgn-of-Inbound-Cntnr ;
REFERENCED:
      IN              Voyage-File
      BY              Sel-Rec-for-Cntnr-History-DB ;
REMOVED:
      FROM            Voyage-File
      BY              Sel-Rec-for-Cntnr-History-DB ;
CREATED:        BY Correct-Merge-ETA-Forecast-Err ;
CREATED:        BY Create-Non-Fcst-Container-Rec ;
CREATED:        BY Merge-Reformatted-ETA-Forecast ;
DESTROYED:      BY Sel-Rec-for-Cntnr-History-DB ;
CARDINALITY IS:
                20 ;
RESPONSIBLE PROBLEM DEFINER IS:
                'TACCS-LOB CONTAINER GROUP' ;
```

```
200  DEFINE ENTITY                              Voyage-ECSR-Ref ;
       DESCRIPTION;
   Voyage Empty Container Status Report Reference
   This is Voyage file data used in the Empty Container Status Report
   process.

   This entity consist of data elements which will be copied from the
   Voyage file to the TTP input screen and the TTP process.
    ;
       KEYWORD IS:     'Container' ;
       CONSISTS OF:
            VoyDocuNoFltNo ,
            OceanCarrAbbr ;
       IDENTIFIED BY:
            VoyDocuNoFltNo ,
            OceanCarrAbbr ;
       REFERENCED:
             IN              Voyage-File
             BY              Prep-Empty-Cntnr-Status-Report ;
       REFERENCED:
             IN              Voyage-File
             BY              Prep-SEAVAN-Maint-Bgn/E-<TTP> ;
       REFERENCED:
             IN              Voyage-File
             BY              Prep-Svan-Maint-Bgn/E-Corr-ZTP ;
       RESPONSIBLE PROBLEM DEFINER IS:
                       'Valentine' ;

201  DEFINE ENTITY                              Voyage-Inq/Rept-Info-Ref ;
       DESCRIPTION;
   Voyage Inquiry/Report Information Reference
   This entity consists of the data elements and values from the Voyage file
   which are referenced and displayed by the Inquiry/Rept-on-Specific-Cntnr
   process.
    ;
       KEYWORD IS:     'Container' ;
       COLLECTED:      IN Voyage-File ;
       CONSISTS OF:
            VoyDocuNoFltNo ,
            OceanCarrAbbr ;
       REFERENCED:
             IN              Voyage-File
             BY              Inquiry/Rept-on-Specific-Cntnr ;
       RESPONSIBLE PROBLEM DEFINER IS:
                       'Morris' ;
```

```
202  DEFINE ENTITY                              Voyage-TM3-Ref ;
       DESCRIPTION;
   Voyage TM3 Reference
   This is the voyage file reference that is used to obtain the POE for the
   Trans ISAM file.
    ;
      KEYWORD IS:     'Container' ;
      ATTRIBUTE IS:
           SEC-CLASS       'UNCLASSIFIED' ;
      CONSISTS OF:
           VoyDocuNoFltNo ,
           POE ;
      IDENTIFIED BY:
           VoyDocuNoFltNo ;
      REFERENCED:
            IN             Voyage-File
            BY             Prep-Diversion-Request-<TM2> ;
      REFERENCED:
            IN             Voyage-File
            BY             Prep-Hold/Stg-Request-<TM3> ;
      RESPONSIBLE PROBLEM DEFINER IS:
                     'Valentine' ;

203  DEFINE ENTITY                              Voyage-TMS-Ref ;
       DESCRIPTION;
   Voyage TMS Reference
   This is the voyage file reference that is used to obtain the POE for the
   Trns ISAM file.
    ;
      KEYWORD IS:     'Container' ;
      CONSISTS OF:
           VoyDocuNoFltNo ,
           POE ;
      IDENTIFIED BY:
           VoyDocuNoFltNo ;
      REFERENCED:
            IN             Voyage-File
            BY             Prep-Rel-fr-Stg/Hold-Req-<TMS> ;
      RESPONSIBLE PROBLEM DEFINER IS:
                     'Valentine' ;
```

```
204  DEFINE ENTITY                              VoyageStop ;
       DESCRIPTION;
   Voyage Stop.
   Information that uniquely identifies a particular stop of a given
   voyage.
    ;
       KEYWORD IS:     'LOB' ,
                       'Data Model' ,
                       'Container' ;
       SOURCE IS:      'CONTAINER DATA MODEL' ;
       ATTRIBUTE IS:
            volatility      'DYNAMIC' ,
            TYPE            'AN' ,
            FIELD-LENGTH     '8' ,
            PICTURE         'X(08)' ,
            SEC-CLASS       'UNCLASSIFIED' ;
       LAYOUT;

   DATA MODEL:

        VoyageStop:Voyage, Mand Many:Mand 1
        VoyageStop:CgoPort, Opt Many:Mand 1 (POD)
        VoyageStop:CntnrMov, Opt 1:Mand Many


   LOGICAL DATABASE DESIGN:

        VoyDocuNoFltNo                      5     P/F
        POD (Port Code)                     3     P/F


   PARTITION:

        None.;
       COLLECTED:      IN VoyageStop-File ;
       CONSISTS OF:
            VoyDocuNoFltNo ,
            POD ;
       IDENTIFIED BY:
            VoyDocuNoFltNo ,
            POD ;
       ADDED:
             TO             VoyageStop-File
             BY             Correct-Merge-ETA-Forecast-Err ;
       ADDED:
             TO             VoyageStop-File
             BY             Create-Non-Fcst-Container-Rec ;
       ADDED:
             TO             VoyageStop-File
```

```
            BY              Merge-Reformatted-ETA-Forecast ;
      MODIFIED:
            IN              VoyageStop-File
            BY              Correct-Merge-ETA-Forecast-Err ;
      MODIFIED:
            IN              VoyageStop-File
            BY              Merge-Reformatted-ETA-Forecast ;
      REFERENCED:
            IN              VoyageStop-File
            BY              Correct-Merge-ETA-Forecast-Err ;
      REFERENCED:
            IN              VoyageStop-File
            BY              Create-Non-Fcst-Container-Rec ;
      REFERENCED:
            IN              VoyageStop-File
            BY              Merge-Reformatted-ETA-Forecast ;
      REFERENCED:
            IN              VoyageStop-File
            BY              Sel-Rec-for-Cntnr-History-DB ;
      REMOVED:
            FROM            VoyageStop-File
            BY              Sel-Rec-for-Cntnr-History-DB ;
      CREATED:        BY Correct-Merge-ETA-Forecast-Err ;
      CREATED:        BY Create-Non-Fcst-Container-Rec ;
      CREATED:        BY Merge-Reformatted-ETA-Forecast ;
      DESTROYED:      BY Sel-Rec-for-Cntnr-History-DB ;
      CARDINALITY IS:
                      15 ;
      RESPONSIBLE PROBLEM DEFINER IS:
                      'TACCS-LOB CONTAINER GROUP' ;

EOF EOF EOF EOF EOF
```

PARAGRAPH	SET OBJECTS	PAGE
1	CgoActivity-File	III-665
2	CgoAddress-File	III-666
3	CgoMCE-Tbl	III-668
4	CgoPort-Tbl	III-670
5	Cntnr-Msg-File	III-671
6	CntnrDiscrp-File	III-672
7	CntnrMov-File	III-673
8	CntnrMovStp-File	III-677
9	CntnrOwnTy-Tbl	III-680
10	CntnrOwner-Tbl	III-681
11	CntnrRmrkLn-File	III-682
12	CntnrSize-Tbl	III-683
13	Commo-Proc-Hold-File	III-683
14	Commodity-Tbl	III-684
15	DiscrpType-Tbl	III-685
16	ECSR-Msg-File	III-686
17	ETA-Forecast-Error-File	III-686
18	ETA-Forecast-Inbound-File	III-687
19	Hist-Mgt-File	III-687
20	InbCntnr-Report-Hold-File	III-688
21	MEvent-File	III-689
22	MEventType-Tbl	III-692
23	Month-Tbl	III-693
24	MovModeCode-Tbl	III-694
25	Non-Fcst-Msg-File	III-695
26	ORICO-Tbl	III-695
27	ORICOTy-Tbl	III-696
28	OceanCarr-Tbl	III-697
29	ReasonDeny-Tbl	III-698
30	Recngn-Msg-File	III-698
31	RespMediaCd-Tbl	III-699
32	ShpmtMethod-Tbl	III-700
33	Sixty-Day-Msg-File	III-701
34	SpecialInt-Tbl	III-701
35	System-Parameter-Tbl	III-702
36	Temp-History-File	III-704
37	TransPri-Tbl	III-705
38	Trns-ISAM-File	III-706
39	TypeCarrier-Tbl	III-708
40	TypeMovNo-Tbl	III-709
41	TypeMove-Tbl	III-710
42	Voyage-File	III-711
43	VoyageStop-File	III-713

```
1    DEFINE SET                                    CgoActivity-File ;
       DESCRIPTION;
Cargo Activity File.
This file is a collection of mailing address and related information for
all DODAAC and pseudo-DODAAC in the theater. It is a subset of the
information found in the Activity File in the Transportation Movements
Address System (TMAS).
 ;
     KEYWORD IS:      'Freight' ,
                      'Container' ,
                      'Data Model' ,
                      'LOB' ,
                      'TACCS' ;
     SEE MEMO:
          FCityCd-Memo ;
     SOURCE IS:       'CNTNR/FRT DATA MODEL' ;
     ATTRIBUTE IS:
          SEC-CLASS        'UNCLASSIFIED' ,
          volatility       'DYNAMIC' ,
          EST-SIZE         '229 CHAR RECORDS' ,
          EST-VOLUME       '10,000 RECORDS' ,
          TABLE-FORM       'COMMAND' ,
          MEDIA            'DISK' ,
          REGULATION       'USAREUR REG 55-5' ,
          RETENTION        'PERMANENT' ,
          UPDATE-FREQUENCY
                           'AS PER CHANGE' ,
          UPDATE-METHOD     'INTERACTIVE-BATCH' ;
     SUBSET OF:       Container-Contact-Files ,
                      Freight-Contact-Files ;
     COLLECTION OF:
          CgoActivity ;
     EMPLOYED:        BY Maintain-Parameter-Tbl ;
     EMPLOYED:        BY Prep-Hold/Stg-Request-<TM3> ;
     HAS: Maint-Param-CgoActivity-Ref
           REFERENCED BY Maintain-Parameter-Tbl ;
     HAS: CgoActivity-TM3-Ref
           REFERENCED BY Prep-Hold/Stg-Request-<TM3> ;
     RESPONSIBLE PROBLEM DEFINER IS:
                      'TACCS-LOB CNTNR/FRT GROUP' ;
```

```
2    DEFINE SET                                  CgoAddress-File ;
       DESCRIPTION;
   Cargo Address.
   This file is a collection of cargo address information for shipping and
   receiving activities.  It is a subset of the information found in the
   Freight Address File in the Transportation Movements Address System
   (TMAS).
    ;
       KEYWORD IS:     'Freight' ,
                       'Container' ,
                       'LOB' ,
                       'TACCS' ,
                       'Data Model' ;
       SOURCE IS:      'CONTAINER DATA MODEL' ,
                       'FREIGHT DATA MODEL' ;
       ATTRIBUTE IS:
            MEDIA            'DISK' ,
            SEC-CLASS        'UNCLASSIFIED' ,
            RETENTION        'PERMANENT' ,
            UPDATE-FREQUENCY
                             'DAILY' ,
            UPDATE-METHOD      'INTERACTIVE-BATCH' ,
            TABLE-FORM       'COMMAND' ,
            EST-SIZE         '300 CHAR RECORDS' ,
            volatility       'DYNAMIC' ;
       SUBSET OF:      Container-Contact-Files ,
                       Freight-Contact-Files ;
       COLLECTION OF:
            CgoAddress ,
            CgoAddress-ETA-Fcst-Ref ,
            CgoAddress-Inq/Rept-Info-Ref ;
       EMPLOYED:       BY Correct-Merge-ETA-Forecast-Err ;
       EMPLOYED:       BY Create-Non-Fcst-Container-Rec ;
       EMPLOYED:       BY Inquiry/Rept-on-Specific-Cntnr ;
       EMPLOYED:       BY Merge-Reformatted-ETA-Forecast ;
       EMPLOYED:       BY Prep-Diversion-Request-<TM2> ;
       EMPLOYED:       BY Prep-Rel-fr-Stg/Hold-Req-<TMS> ;
       EMPLOYED:       BY Prep-SEAVAN-Maint-Bgn/E-<TTP> ;
       EMPLOYED:       BY Prepare-Reconsignment-Request ;
       EMPLOYED:       BY Update-Cntnr-Record ;
       EMPLOYED:       BY Capture-TMR ;
       HAS: CgoAddress-ETA-Fcst-Ref
             REFERENCED BY Correct-Merge-ETA-Forecast-Err ;
       HAS: CgoAddress-CRec-Ref
             REFERENCED BY Create-Non-Fcst-Container-Rec ;
       HAS: CgoAddress-Inq/Rept-Info-Ref
             REFERENCED BY Inquiry/Rept-on-Specific-Cntnr ;
       HAS: CgoAddress-ETA-Fcst-Ref
             REFERENCED BY Merge-Reformatted-ETA-Forecast ;
```

```
HAS: CgoAddress-CRec-Ref
      REFERENCED BY Prep-Diversion-Request-<TM2> ;
HAS: CgoAddress-TMS-Ref
      REFERENCED BY Prep-Rel-fr-Stg/Hold-Req-<TMS> ;
HAS: CgoAddress-CRec-Ref
      REFERENCED BY Prep-SEAVAN-Maint-Bgn/E-<TTP> ;
HAS: CgoAddress-Recngn-Ref
      REFERENCED BY Prepare-Reconsignment-Request ;
HAS: CgoAddress-CRec-Ref
      REFERENCED BY Update-Cntnr-Record ;
HAS: CgoAddress-ETA-Fcst-Ref
      REFERENCED BY Capture-TMR ;
RESPONSIBLE PROBLEM DEFINER IS:
                'TACCS-LOB CNTNR/FRT GROUP' ;
```

```
3    DEFINE SET                                    CgoMCE-Tbl ;
       DESCRIPTION;
   Cargo Movement Control Element Table.
   This table is a collection of Movement Control Element Code records.
   It is a subset of the Movement Control Element Table in the
   Transportation Movements Address System (TMAS).
    ;
       KEYWORD IS:     'Freight' ,
                       'Container' ,
                       'LOB' ,
                       'TACCS' ,
                       'Data Model' ;
       SEE MEMO:
            Code-Tbl-Validation-Memo ;
       SOURCE IS:      'CNTNR/FRT DATA MODEL' ;
       ATTRIBUTE IS:
            MEDIA           'DISK' ,
            SEC-CLASS       'UNCLASSIFIED' ,
            RETENTION       'PERMANENT' ,
            UPDATE-FREQUENCY
                            'PER CODE CHANGE' ,
            UPDATE-METHOD     'BATCH' ,
            TABLE-FORM      'COMMAND' ,
            EST-VOLUME      '70' ,
            EST-SIZE        '44' ,
            volatility      'STATIC' ;
       SUBSET OF:      Cntnr-System-Unique-Tables ,
                       Freight-System-Unique-Tables ;
       COLLECTION OF:
            CgoMCE ,
            CgoMCE-Dam-DL-Ref ,
            CgoMCE-InbCntnr-Ref ;
       EMPLOYED:       BY Correct-Merge-ETA-Forecast-Err ;
       EMPLOYED:       BY Maintain-Parameter-Tbl ;
       EMPLOYED:       BY Notify-Cnsgn-of-Inbound-Cntnr ;
       EMPLOYED:       BY Prep-Cntnr-O/H-Over-5-Day-Rept ;
       EMPLOYED:       BY Prep-Dam-Deadlined-Cntnr-Rept ;
       EMPLOYED:       BY Prep-Del-60-Day-Old-Cntnr-Rept ;
       EMPLOYED:       BY Prep-Empty-Aval-Over-5-Day-Rpt ;
       EMPLOYED:       BY Prep-Empty-Cntnr-Status-Report ;
       EMPLOYED:       BY Prep-Hold/Stg-Request-<TM3> ;
       EMPLOYED:       BY Prep-Non-ETA-Fcst-Cntnr-Report ;
       EMPLOYED:       BY Prep-Rel-fr-Stg/Hold-Req-<TMS> ;
       EMPLOYED:       BY Prepare-Reconsignment-Request ;
       EMPLOYED:       BY Capture-TMR ;
       HAS: CgoMCE-InbCntnr-Ref
             REFERENCED BY Correct-Merge-ETA-Forecast-Err ;
       HAS: Maint-Param-CgoMCE-Ref
             REFERENCED BY Maintain-Parameter-Tbl ;
```

```
HAS: CgoMCE-InbCntnr-Ref
      REFERENCED BY Notify-Cnsgn-of-Inbound-Cntnr ;
HAS: Search-Cntnr-O/H-CgoMCE-Ref
      REFERENCED BY Prep-Cntnr-O/H-Over-5-Day-Rept ;
HAS: CgoMCE-Dam-DL-Ref
      REFERENCED BY Prep-Dam-Deadlined-Cntnr-Rept ;
HAS: Sixty-Day-MCE-Ref
      REFERENCED BY Prep-Del-60-Day-Old-Cntnr-Rept ;
HAS: Empty-Aval-5-Day-CgoMCE-Ref
      REFERENCED BY Prep-Empty-Aval-Over-5-Day-Rpt ;
HAS: CgoMCE-ECSR-Ref
      REFERENCED BY Prep-Empty-Cntnr-Status-Report ;
HAS: CgoMCE-TM3-Ref
      REFERENCED BY Prep-Hold/Stg-Request-<TM3> ;
HAS: Non-Fcst-CgoMCE-Ref
      REFERENCED BY Prep-Non-ETA-Fcst-Cntnr-Report ;
HAS: CgoMCE-TMS-Ref
      REFERENCED BY Prep-Rel-fr-Stg/Hold-Req-<TMS> ;
HAS: CgoMCE-Recngn-Ref
      REFERENCED BY Prepare-Reconsignment-Request ;
HAS: CgoMCE-InbCntnr-Ref
      REFERENCED BY Capture-TMR ;
RESPONSIBLE PROBLEM DEFINER IS:
              'TACCS-LOB CNTNR/FRT GROUP' ;
```

```
4    DEFINE SET                                    CgoPort-Tbl ;
       DESCRIPTION;
   Cargo Port Table.
   This table contains MILSTAMP Port Codes and their descriptions.
    ;
       KEYWORD IS:      'Container' ,
                        'Freight' ,
                        'Data Model' ,
                        'TACCS' ;
       SEE MEMO:
            Port-Memo ,
            Code-Tbl-Validation-Memo ;
       SOURCE IS:       'CONTAINER DATA MODEL' ,
                        'FREIGHT DATA MODEL' ;
       ATTRIBUTE IS:
            MEDIA             'DISK' ,
            SEC-CLASS         'UNCLASSIFIED' ,
            volatility        'STATIC' ,
            UPDATE-METHOD      'INTERACTIVE' ,
            UPDATE-FREQUENCY
                              'PER CODE CHANGE' ,
            RETENTION         'PERMANENT' ,
            TABLE-FORM        'COMMAND' ,
            EST-SIZE          '29 CHAR RECORDS' ,
            EST-VOLUME        '332 RECORDS' ;
       SUBSET OF:       Cntnr-System-Unique-Tables ,
                        Freight-System-Unique-Tables ;
       COLLECTION OF:
            CgoPort ,
            CgoPort-TTP-Ref ,
            CgoPort-Ref ;
       EMPLOYED:        BY Correct-Merge-ETA-Forecast-Err ;
       EMPLOYED:        BY Create-Non-Fcst-Container-Rec ;
       EMPLOYED:        BY Merge-Reformatted-ETA-Forecast ;
       EMPLOYED:        BY Prep-SEAVAN-Maint-Bgn/E-<TTP> ;
       HAS: CgoPort-Ref
             REFERENCED BY Correct-Merge-ETA-Forecast-Err ;
       HAS: CgoPort-Ref
             REFERENCED BY Create-Non-Fcst-Container-Rec ;
       HAS: CgoPort-Ref
             REFERENCED BY Merge-Reformatted-ETA-Forecast ;
       HAS: CgoPort-TTP-Ref
             REFERENCED BY Prep-SEAVAN-Maint-Bgn/E-<TTP> ;
       RESPONSIBLE PROBLEM DEFINER IS:
                        'TACCS-LOB CNTNR/FRT GROUPS' ;
```

```
5    DEFINE SET                                  Cntnr-Msg-File ;
       DESCRIPTION;
    Cntnr Message File
    This is the request for stage/hold information that is sent to MECOBO.
     ;
        KEYWORD IS:     'Container' ;
        COLLECTION OF:
             Container-O/H-5-Days-Rept-Upd ,
             TM3-Msg-Data-Upd ,
             TMS-Msg-Data-Upd ,
             DSSR-Info ;
        MAINTAINED:      BY  Prep-Diversion-Request-<TM2> ;
        UPDATED:         BY  Prep-Cntnr-O/H-Over-5-Day-Rept ;
        UPDATED:         BY  Prepare-Delayed-Delivery-Rept ;
        UPDATED:         BY  Prep-Empty-Aval-Over-5-Day-Rpt ;
        UPDATED:         BY  Prep-Rel-fr-Stg/Hold-Req-<TMS> ;
        UPDATED:         BY  Prep-Hold/Stg-Request-<TM3> ;
        UPDATED:         BY  Prep-Dam-Deadlined-Cntnr-Rept ;
        HAS: Container-O/H-5-Days-Rept-Upd
              ADDED BY       Prep-Cntnr-O/H-Over-5-Day-Rept ;
        HAS: Dam-Deadlined-Cntnr-Report
              ADDED BY       Prep-Dam-Deadlined-Cntnr-Rept ;
        HAS: Empty-Aval-Over-5-Day-Rept-Upd
              ADDED BY       Prep-Empty-Aval-Over-5-Day-Rpt ;
        HAS: TM3-Msg-Data-Upd
              ADDED BY       Prep-Hold/Stg-Request-<TM3> ;
        HAS: TMS-Msg-Data-Upd
              ADDED BY       Prep-Rel-fr-Stg/Hold-Req-<TMS> ;
        HAS: Delayed-Delivery-Message
              ADDED BY       Prepare-Delayed-Delivery-Rept ;
        HAS: DSSR-Info
              MODIFIED BY    Prep-Diversion-Request-<TM2> ;
        HAS: DSSR-Info
              REFERENCED BY Prep-Diversion-Request-<TM2> ;
        RESPONSIBLE PROBLEM DEFINER IS:
                       'Valentine' ;
```

```
6    DEFINE SET                                  CntnrDiscrp-File ;
       DESCRIPTION;
   Container Discrepancy File.
   This file contains data on discrepancies pertaining to a Shipment
   Unit TCN.
    ;
       KEYWORD IS:     'Freight' ,
                       'Data Model' ,
                       'LOB' ,
                       'TACCS' ,
                       'Container' ;
       SOURCE IS:      'CONTAINER DATA MODEL' ;
       ATTRIBUTE IS:
            MEDIA              'DISK' ,
            SEC-CLASS          'UNCLASSIFIED' ,
            UPDATE-FREQUENCY
                               'DAILY' ,
            UPDATE-METHOD       'INTERACTIVE/BATCH' ,
            TABLE-FORM         'LOCAL' ,
            volatility         'DYNAMIC' ,
            EST-SIZE           '49 CHAR RECORDS' ;
       SUBSET OF:      Container-Movements-Files ;
       COLLECTION OF:
            CntnrDiscrp ;
       MAINTAINED:      BY  Prep-Cgo-Dischg/Non-Del-<TTW> ;
       MAINTAINED:      BY  Prep-Cgo-Non-Dlvr-Corr-<ZTW> ;
       EMPLOYED:       BY Sel-Rec-for-Cntnr-History-DB ;
       HAS: CntnrDiscrp
             ADDED BY          Prep-Cgo-Dischg/Non-Del-<TTW> ;
       HAS: CntnrDiscrp
             MODIFIED BY       Prep-Cgo-Dischg/Non-Del-<TTW> ;
       HAS: CntnrDiscrp
             MODIFIED BY       Prep-Cgo-Non-Dlvr-Corr-<ZTW> ;
       HAS: CntnrDiscrp
             REFERENCED BY Prep-Cgo-Dischg/Non-Del-<TTW> ;
       HAS: CntnrDiscrp
             REFERENCED BY Prep-Cgo-Non-Dlvr-Corr-<ZTW> ;
       HAS: CntnrDiscrp
             REFERENCED BY Sel-Rec-for-Cntnr-History-DB ;
       HAS: CntnrDiscrp
             REMOVED BY        Sel-Rec-for-Cntnr-History-DB ;
       RESPONSIBLE PROBLEM DEFINER IS:
                       'TACCS-LOB CONTAINER GROUP' ;
```

```
7    DEFINE SET                                  CntnrMov-File ;
       DESCRIPTION;
Container Movement File.
This file is a collection of basic movement information for given
containers currently moving from origin to destination.
 ;
    KEYWORD IS:     'Data Model' ,
                    'LOB' ,
                    'TACCS' ,
                    'Container' ;
    SOURCE IS:      'CONTAINER DATA MODEL' ;
    ATTRIBUTE IS:
         volatility      'DYNAMIC' ,
         EST-VOLUME      '5,000 RECORDS' ,
         MEDIA           'DISK' ,
         REGULATION      'DAMMS-R O & O PLAN' ,
         RETENTION       '60 DAYS' ,
         SEC-CLASS       'UNCLASSIFIED' ,
         UPDATE-FREQUENCY
                         'DAILY' ,
         UPDATE-METHOD     'INTERACTIVE/BATCH' ,
         TABLE-FORM      'LOCAL' ,
         EST-SIZE        '133 CHAR RECORDS' ;
    SUBSET OF:      Container-Movements-Files ;
    COLLECTION OF:
         CntnrMov ,
         CntnrMov-TTP-Ref ,
         CntnrMov-TTP-Upd ,
         DD-CntnrMov-Message-Ent ,
         CntnrMov-TTB-Upd ,
         CntnrMov-TTB-Ref ,
         CntnrMov-ZTB-Ref ,
         CntnrMov-ZTB-Upd ,
         CntnrMov-ETA-Fcst-Info ,
         CntnrMov-Dam-DL-Upd ,
         CntnrMov-Dam-DL-Ref ,
         CntnrMov-InbCntnr-Ref ,
         CntnrMov-Inq/Rept-Info-Ref ,
         CntnrMov-TM2-Info ,
         CntnrMov-MtnStp-Info ;
    MAINTAINED:      BY  Prepare-Reconsignment-Request ;
    MAINTAINED:      BY  Prep-Rel-fr-Stg/Hold-Req-<TMS> ;
    MAINTAINED:      BY  Prep-Empty-Cntnr-Status-Report ;
    MAINTAINED:      BY  Prep-Del-60-Day-Old-Cntnr-Rept ;
    MAINTAINED:      BY  Prep-Hold/Stg-Request-<TM3> ;
    MAINTAINED:      BY  Sel-Rec-for-Cntnr-History-DB ;
    MAINTAINED:      BY  Prepare-Cnsgn-Rept-Evnts-<TTB> ;
    MAINTAINED:      BY  Prep-Delayed-Delivery-Event ;
    MAINTAINED:      BY  Create-Non-Fcst-Container-Rec ;
```

```
MAINTAINED:      BY  Prep-Cgo-Dischg/Non-Del-<TTW> ;
MAINTAINED:      BY  Prep-Cgo-Non-Dlvr-Corr-<ZTW> ;
MAINTAINED:      BY  Prep-Cnsgn-Rept-Evnts-Corr-ZTB ;
MAINTAINED:      BY  Merge-Reformatted-ETA-Forecast ;
MAINTAINED:      BY  Correct-Merge-ETA-Forecast-Err ;
MAINTAINED:      BY  Prep-Dam-Deadlined-Cntnr-Rept ;
MAINTAINED:      BY  Prep-Diversion-Request-<TM2> ;
MAINTAINED:      BY  Update-Cntnr-Record ;
MAINTAINED:      BY  Prep-SEAVAN-Maint-Bgn/E-<TTP> ;
MAINTAINED:      BY  Prep-Svan-Maint-Bgn/E-Corr-ZTP ;
MAINTAINED:      BY  Capture-TMR
                     USING CntnrMov-TMR-Info ;
EMPLOYED:       BY Create-Container-Remarks ;
EMPLOYED:       BY Inquiry/Rept-on-Specific-Cntnr ;
EMPLOYED:       BY Notify-Cnsgn-of-Inbound-Cntnr ;
EMPLOYED:       BY Prep-Cntnr-O/H-Over-5-Day-Rept ;
EMPLOYED:       BY Prep-Daily-Container-Worksheet ;
EMPLOYED:       BY Prep-Empty-Aval-Over-5-Day-Rpt ;
EMPLOYED:       BY Prep-Non-ETA-Fcst-Cntnr-Report ;
EMPLOYED:       BY Prepare-Delayed-Delivery-Rept ;
HAS: CntnrMov-ETA-Fcst-Info
       ADDED BY       Correct-Merge-ETA-Forecast-Err ;
HAS: CntnrMov-CRec-Upd
       ADDED BY       Create-Non-Fcst-Container-Rec ;
HAS: CntnrMov-ETA-Fcst-Info
       ADDED BY       Merge-Reformatted-ETA-Forecast ;
HAS: TTW-CntnrMov-Upd
       ADDED BY       Prep-Cgo-Dischg/Non-Del-<TTW> ;
HAS: Sixty-Day-Cntnr-Upd
       ADDED BY       Prep-Del-60-Day-Old-Cntnr-Rept ;
HAS: CntnrMov-ECSR-Upd
       ADDED BY       Prep-Empty-Cntnr-Status-Report ;
HAS: CntnrMov-TM3-Upd
       ADDED BY       Prep-Hold/Stg-Request-<TM3> ;
HAS: CntnrMov-TMS-Upd
       ADDED BY       Prep-Rel-fr-Stg/Hold-Req-<TMS> ;
HAS: CntnrMov-Recngn-Upd
       ADDED BY       Prepare-Reconsignment-Request ;
HAS: CntnrMov-TMR-Info
       ADDED BY       Capture-TMR ;
HAS: CntnrMov-ETA-Fcst-Info
       MODIFIED BY    Correct-Merge-ETA-Forecast-Err ;
HAS: CntnrMov-ETA-Fcst-Info
       MODIFIED BY    Merge-Reformatted-ETA-Forecast ;
HAS: TTW-CntnrMov-Upd
       MODIFIED BY    Prep-Cgo-Dischg/Non-Del-<TTW> ;
HAS: TTW-CntnrMov-Upd
       MODIFIED BY    Prep-Cgo-Non-Dlvr-Corr-<ZTW> ;
HAS: CntnrMov-ZTB-Upd
```

```
      MODIFIED BY   Prep-Cnsgn-Rept-Evnts-Corr-ZTB ;
HAS: CntnrMov-Dam-DL-Upd
      MODIFIED BY   Prep-Dam-Deadlined-Cntnr-Rept ;
HAS: DD-CntnrMov-Upd
      MODIFIED BY   Prep-Delayed-Delivery-Event ;
HAS: CntnrMov-TM2-Info
      MODIFIED BY   Prep-Diversion-Request-<TM2> ;
HAS: CntnrMov-ECSR-Upd
      MODIFIED BY   Prep-Empty-Cntnr-Status-Report ;
HAS: CntnrMov-TM3-Upd
      MODIFIED BY   Prep-Hold/Stg-Request-<TM3> ;
HAS: CntnrMov-TMS-Upd
      MODIFIED BY   Prep-Rel-fr-Stg/Hold-Req-<TMS> ;
HAS: CntnrMov-TTP-Upd
      MODIFIED BY   Prep-SEAVAN-Maint-Bgn/E-<TTP> ;
HAS: CntnrMov-TTP-Upd
      MODIFIED BY   Prep-Svan-Maint-Bgn/E-Corr-ZTP ;
HAS: CntnrMov-TTB-Upd
      MODIFIED BY   Prepare-Cnsgn-Rept-Evnts-<TTB> ;
HAS: CntnrMov-Recngn-Upd
      MODIFIED BY   Prepare-Reconsignment-Request ;
HAS: CntnrMov-Hist-Upd
      MODIFIED BY   Sel-Rec-for-Cntnr-History-DB ;
HAS: Upd-CntnrMov-Info
      MODIFIED BY   Update-Cntnr-Record ;
HAS: CntnrMov-TMR-Info
      MODIFIED BY   Capture-TMR ;
HAS: CntnrMov-ETA-Fcst-Info
      REFERENCED BY Correct-Merge-ETA-Forecast-Err ;
HAS: CntnrMovRmrk-Ref
      REFERENCED BY Create-Container-Remarks ;
HAS: CntnrMov-CRec-Ref
      REFERENCED BY Create-Non-Fcst-Container-Rec ;
HAS: CntnrMov-Inq/Rept-Info-Ref
      REFERENCED BY Inquiry/Rept-on-Specific-Cntnr ;
HAS: CntnrMov-ETA-Fcst-Info
      REFERENCED BY Merge-Reformatted-ETA-Forecast ;
HAS: CntnrMov-InbCntnr-Ref
      REFERENCED BY Notify-Cnsgn-of-Inbound-Cntnr ;
HAS: TTW-CntnrMov-Ref
      REFERENCED BY Prep-Cgo-Dischg/Non-Del-<TTW> ;
HAS: TTW-CntnrMov-Ref
      REFERENCED BY Prep-Cgo-Non-Dlvr-Corr-<ZTW> ;
HAS: CntnrMov-ZTB-Ref
      REFERENCED BY Prep-Cnsgn-Rept-Evnts-Corr-ZTB ;
HAS: Search-Cntnr-O/H-Mov-Ref
      REFERENCED BY Prep-Cntnr-O/H-Over-5-Day-Rept ;
HAS: Daily-Cntnr-CntnrMov-Ref-Ent
      REFERENCED BY Prep-Daily-Container-Worksheet ;
```

```
HAS: CntnrMov-Dam-DL-Ref
      REFERENCED BY Prep-Dam-Deadlined-Cntnr-Rept ;
HAS: Sixty-Day-Cntnr-Ref
      REFERENCED BY Prep-Del-60-Day-Old-Cntnr-Rept ;
HAS: DD-CntnrMov-Ref
      REFERENCED BY Prep-Delayed-Delivery-Event ;
HAS: CntnrMov-TM2-Info
      REFERENCED BY Prep-Diversion-Request-<TM2> ;
HAS: Empty-Aval-5-Day-CntnrMov-Ref
      REFERENCED BY Prep-Empty-Aval-Over-5-Day-Rpt ;
HAS: CntnrMov-ECSR-Ref
      REFERENCED BY Prep-Empty-Cntnr-Status-Report ;
HAS: CntnrMov-TM3-Ref
      REFERENCED BY Prep-Hold/Stg-Request-<TM3> ;
HAS: Non-Fcst-CntnrMov-Ref
      REFERENCED BY Prep-Non-ETA-Fcst-Cntnr-Report ;
HAS: CntnrMov-TMS-Ref
      REFERENCED BY Prep-Rel-fr-Stg/Hold-Req-<TMS> ;
HAS: CntnrMov-TTP-Ref
      REFERENCED BY Prep-SEAVAN-Maint-Bgn/E-<TTP> ;
HAS: CntnrMov-TTP-Ref
      REFERENCED BY Prep-Svan-Maint-Bgn/E-Corr-ZTP ;
HAS: CntnrMov-TTB-Ref
      REFERENCED BY Prepare-Cnsgn-Rept-Evnts-<TTB> ;
HAS: DD-CntnrMov-Message-Ent
      REFERENCED BY Prepare-Delayed-Delivery-Rept ;
HAS: CntnrMov-Recngn-Ref
      REFERENCED BY Prepare-Reconsignment-Request ;
HAS: CntnrMov
      REFERENCED BY Sel-Rec-for-Cntnr-History-DB ;
HAS: Upd-CntnrMov-Info
      REFERENCED BY Update-Cntnr-Record ;
HAS: CntnrMov-TMR-Info
      REFERENCED BY Capture-TMR ;
HAS: CntnrMov-TTU-Ref
      REFERENCED BY Prep-Convey-Change-Notif-<TTU> ;
HAS: CntnrMov
      REMOVED BY    Sel-Rec-for-Cntnr-History-DB ;
RESPONSIBLE PROBLEM DEFINER IS:
                'TACCS-LOB CONTAINER GROUP' ;
```

AD-A190 393 FUNCTIONAL DESCRIPTION FOR THE DEPARTMENT OF THE ARMY 9/9
MOVEMENT MANAGEMENT..(U) INTERNATIONAL BUSINESS
SERVICES INC PRINCE GEORGE VA DEFENSE S.. W ANCKAITIS
UNCLASSIFIED 31 DEC 87 DSDPG-375-049-87-3-VOL-1 F/G 12/7 NL

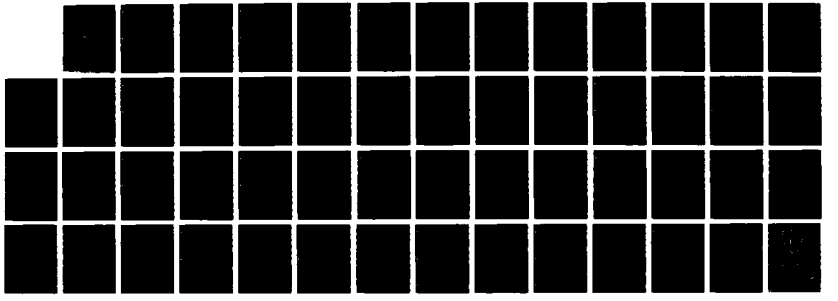

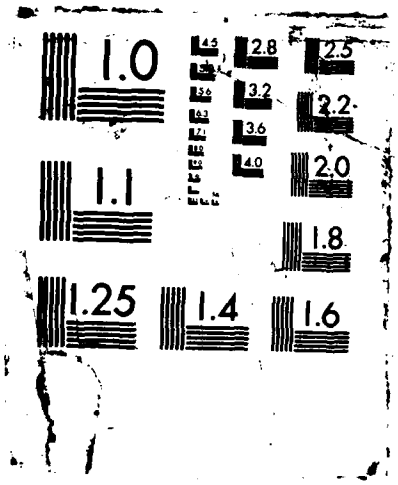
1.0
1.1
1.25
1.4
1.6
1.8
2.0
2.2
2.5
2.8
3.2
3.6
4.0
4.5

```
8    DEFINE SET                                    CntnrMovStp-File ;
       DESCRIPTION;
Container Movement Stop File.
This file is a collection of information about given container
movements for multi-stop transactions.
 ;
     KEYWORD IS:      'Data Model' ,
                      'LOB' ,
                      'TACCS' ,
                      'Container' ;
     SOURCE IS:       'CONTAINER DATA MODEL' ;
     ATTRIBUTE IS:
          volatility       'DYNAMIC' ,
          EST-VOLUME       '5,000 RECORDS' ,
          MEDIA            'DISK' ,
          REGULATION       'DAMMS-R O & O PLAN' ,
          RETENTION        '60 DAYS' ,
          SEC-CLASS        'UNCLASSIFIED' ,
          UPDATE-FREQUENCY
                           'DAILY' ,
          TABLE-FORM       'LOCAL' ,
          UPDATE-METHOD      'INTERACTIVE/BATCH' ,
          EST-SIZE         '215 CHAR RECORDS' ;
     SUBSET OF:       Container-Movements-Files ;
     COLLECTION OF:
          CntnrMovStp ,
          DD-CntnrMovStp-Message-Ent ,
          CntnrMovStp-ZTB-Upd ,
          CntnrMovStp-ETA-Fcst-Info ,
          CntnrMovStp-Dam-DL-Ref ,
          CntnrMovStp-InbCntnr-Ref ,
          CntnrMovStp-Inq/Rept-Info-Ref ,
          CntnrMovStp-MtnStp-Info ,
          CntnrMovStp-Ref ;
     MAINTAINED:       BY  Prepare-Reconsignment-Request ;
     MAINTAINED:       BY  Prep-Delayed-Delivery-Event ;
     MAINTAINED:       BY  Create-Non-Fcst-Container-Rec ;
     MAINTAINED:       BY  Prep-Cgo-Non-Dlvr-Corr-<ZTW> ;
     MAINTAINED:       BY  Prep-Cnsgn-Rept-Evnts-Corr-ZTB ;
     MAINTAINED:       BY  Merge-Reformatted-ETA-Forecast ;
     MAINTAINED:       BY  Correct-Merge-ETA-Forecast-Err ;
     MAINTAINED:       BY  Update-Cntnr-Record ;
     MAINTAINED:       BY  Capture-TMR
                       USING CntnrMovStp-TMR-Upd ;
     MAINTAINED:       BY  Capture-TMR
                       USING CntnrMovStp-Ref ;
     EMPLOYED:        BY Create-Container-Remarks ;
     EMPLOYED:        BY Inquiry/Rept-on-Specific-Cntnr ;
     EMPLOYED:        BY Notify-Cnsgn-of-Inbound-Cntnr ;
```

```
EMPLOYED:       BY Prep-Cgo-Dischg/Non-Del-<TTW> ;
EMPLOYED:       BY Prep-Daily-Container-Worksheet ;
EMPLOYED:       BY Prep-Dam-Deadlined-Cntnr-Rept ;
EMPLOYED:       BY Prep-Diversion-Request-<TM2> ;
EMPLOYED:       BY Prep-Hold/Stg-Request-<TM3> ;
EMPLOYED:       BY Prep-Non-ETA-Fcst-Cntnr-Report ;
EMPLOYED:       BY Prep-Rel-fr-Stg/Hold-Req-<TMS> ;
EMPLOYED:       BY Prep-SEAVAN-Maint-Bgn/E-<TTP> ;
EMPLOYED:       BY Prep-Svan-Maint-Bgn/E-Corr-ZTP ;
EMPLOYED:       BY Prepare-Cnsgn-Rept-Evnts-<TTB> ;
EMPLOYED:       BY Prepare-Delayed-Delivery-Rept ;
EMPLOYED:       BY Sel-Rec-for-Cntnr-History-DB ;
HAS: CntnrMovStp-ETA-Fcst-Info
       ADDED BY       Correct-Merge-ETA-Forecast-Err ;
HAS: CntnrMovStp-CRec-Upd
       ADDED BY       Create-Non-Fcst-Container-Rec ;
HAS: CntnrMovStp-ETA-Fcst-Info
       ADDED BY       Merge-Reformatted-ETA-Forecast ;
HAS: CntnrMovStp-Recngn-Upd
       ADDED BY       Prepare-Reconsignment-Request ;
HAS: CntnrMovStp-TMR-Upd
       ADDED BY       Capture-TMR ;
HAS: CntnrMovStp-ETA-Fcst-Info
       MODIFIED BY    Correct-Merge-ETA-Forecast-Err ;
HAS: CntnrMovStp-ETA-Fcst-Info
       MODIFIED BY    Merge-Reformatted-ETA-Forecast ;
HAS: CntnrMovStp-ZTB-Upd
       MODIFIED BY    Prep-Cnsgn-Rept-Evnts-Corr-ZTB ;
HAS: DD-CntnrMovStp-Upd
       MODIFIED BY    Prep-Delayed-Delivery-Event ;
HAS: Upd-CntnrMovStp-Info
       MODIFIED BY    Update-Cntnr-Record ;
HAS: CntnrMovStp-TMR-Upd
       MODIFIED BY    Capture-TMR ;
HAS: CntnrMovStp-Ref
       MODIFIED BY    Prep-Cgo-Non-Dlvr-Corr-<ZTW> ;
HAS: CntnrMovStp-ETA-Fcst-Info
       REFERENCED BY Correct-Merge-ETA-Forecast-Err ;
HAS: CntnrMovStpRmrk-Ref
       REFERENCED BY Create-Container-Remarks ;
HAS: CMovStp-CRec-Ref
       REFERENCED BY Create-Non-Fcst-Container-Rec ;
HAS: CntnrMovStp-Inq/Rept-Info-Ref
       REFERENCED BY Inquiry/Rept-on-Specific-Cntnr ;
HAS: CntnrMovStp-ETA-Fcst-Info
       REFERENCED BY Merge-Reformatted-ETA-Forecast ;
HAS: CntnrMovStp-InbCntnr-Ref
       REFERENCED BY Notify-Cnsgn-of-Inbound-Cntnr ;
HAS: Daily-Cntnr-CntnrMovStp-Ref
```

```
      REFERENCED BY Prep-Daily-Container-Worksheet ;
HAS: CntnrMovStp-Dam-DL-Ref
      REFERENCED BY Prep-Dam-Deadlined-Cntnr-Rept ;
HAS: DD-CntnrMovStp-Ref
      REFERENCED BY Prep-Delayed-Delivery-Event ;
HAS: Non-Fcst-CntnrMovStop-Ref
      REFERENCED BY Prep-Non-ETA-Fcst-Cntnr-Report ;
HAS: DD-CntnrMovStp-Message-Ent
      REFERENCED BY Prepare-Delayed-Delivery-Rept ;
HAS: CntnrMovStp
      REFERENCED BY Sel-Rec-for-Cntnr-History-DB ;
HAS: Upd-CntnrMovStp-Info
      REFERENCED BY Update-Cntnr-Record ;
HAS: CntnrMovStp-Ref
      REFERENCED BY Prep-Hold/Stg-Request-<TM3> ;
HAS: CntnrMovStp-Ref
      REFERENCED BY Prep-Rel-fr-Stg/Hold-Req-<TMS> ;
HAS: CntnrMovStp-Ref
      REFERENCED BY Prep-Diversion-Request-<TM2> ;
HAS: CntnrMovStp-Ref
      REFERENCED BY Prepare-Cnsgn-Rept-Evnts-<TTB> ;
HAS: CntnrMovStp-Ref
      REFERENCED BY Capture-TMR ;
HAS: CntnrMovStp-Ref
      REFERENCED BY Prep-SEAVAN-Maint-Bgn/E-<TTP> ;
HAS: CntnrMovStp-Ref
      REFERENCED BY Prep-Svan-Maint-Bgn/E-Corr-ZTP ;
HAS: CntnrMovStp-Ref
      REFERENCED BY Prep-Cnsgn-Rept-Evnts-Corr-ZTB ;
HAS: CntnrMovStp-Ref
      REFERENCED BY Prepare-Reconsignment-Request ;
HAS: CntnrMovStp-Ref
      REFERENCED BY Prep-Cgo-Dischg/Non-Del-<TTW> ;
HAS: CntnrMovStp-Ref
      REFERENCED BY Prep-Cgo-Non-Dlvr-Corr-<ZTW> ;
HAS: CntnrMovStp-Ref
      REFERENCED BY Prep-Convey-Change-Notif-<TTU> ;
HAS: CntnrMovStp
      REMOVED BY    Sel-Rec-for-Cntnr-History-DB ;
RESPONSIBLE PROBLEM DEFINER IS:
               'TACCS-LOB CONTAINER GROUP' ;
```

```
9    DEFINE SET                                  CntnrOwnTy-Tbl ;
       DESCRIPTION;
   Container Owner Type Table.
   This table contains Container Owner Type Codes and their descriptions.
    ;
       KEYWORD IS:     'Data Model' ,
                       'LOB' ,
                       'TACCS' ,
                       'Container' ;
       SEE MEMO:
            Code-Tbl-Validation-Memo ;
       SOURCE IS:      'CONTAINER DATA MODEL' ;
       ATTRIBUTE IS:
            SEC-CLASS        'UNCLASSIFIED' ,
            TABLE-FORM       'COMMAND' ,
            volatility       'STATIC' ,
            MEDIA            'DISK' ,
            UPDATE-METHOD     'BATCH' ,
            UPDATE-FREQUENCY
                             'PER CODE CHANGE' ,
            RETENTION        'PERMANENT' ,
            EST-SIZE         '26 CHAR RECORDS' ,
            EST-VOLUME       '2 RECORDS' ;
       SUBSET OF:      Cntnr-System-Unique-Tables ;
       COLLECTION OF:
            CntnrOwnTy ;
       RESPONSIBLE PROBLEM DEFINER IS:
                       'TACCS-LOB CONTAINER GROUP' ;
```

```
10   DEFINE SET                                  CntnrOwner-Tbl ;
       DESCRIPTION;
   Container Owner Table.
   This table contains Container Owner Abbreviations and their meanings.
    ;
       KEYWORD IS:     'Data Model' ,
                       'LOB' ,
                       'TACCS' ,
                       'Container' ;
       SEE MEMO:
            Code-Tbl-Validation-Memo ;
       SOURCE IS:      'CONTAINER DATA MODEL' ;
       ATTRIBUTE IS:
            SEC-CLASS        'UNCLASSIFIED' ,
            TABLE-FORM       'COMMAND' ,
            volatility       'STATIC' ,
            MEDIA            'DISK' ,
            UPDATE-METHOD     'BATCH' ,
            UPDATE-FREQUENCY
                             'PER CODE CHANGE' ,
            RETENTION        'PERMANENT' ,
            EST-SIZE         '29 CHAR RECORDS' ,
            EST-VOLUME       '83 RECORDS' ;
       SUBSET OF:      Cntnr-System-Unique-Tables ;
       COLLECTION OF:
            CntnrOwner ,
            CntnrOwner-Ref ;
       EMPLOYED:       BY Correct-Merge-ETA-Forecast-Err ;
       EMPLOYED:       BY Create-Non-Fcst-Container-Rec ;
       EMPLOYED:       BY Inquiry/Rept-on-Specific-Cntnr ;
       EMPLOYED:       BY Merge-Reformatted-ETA-Forecast ;
       HAS: CntnrOwner-Ref
             REFERENCED BY Correct-Merge-ETA-Forecast-Err ;
       HAS: CntnrOwn-CRec-Ref
             REFERENCED BY Create-Non-Fcst-Container-Rec ;
       HAS: CntnrOwn-Inq-Ref
             REFERENCED BY Inquiry/Rept-on-Specific-Cntnr ;
       HAS: CntnrOwner-Ref
             REFERENCED BY Merge-Reformatted-ETA-Forecast ;
       RESPONSIBLE PROBLEM DEFINER IS:
                       'TACCS-LOB CONTAINER GROUP' ;
```

```
11   DEFINE SET                                  CntnrRmrkLn-File ;
       DESCRIPTION;
   Container Remark Line File.
   This file contains remarks pertaining to a particular container movement
   and stop.
    ;
       KEYWORD IS:     'Data Model' ,
                       'LOB' ,
                       'TACCS' ,
                       'Container' ;
       SOURCE IS:      'CONTAINER DATA MODEL' ;
       ATTRIBUTE IS:
            MEDIA              'DISK' ,
            SEC-CLASS          'UNCLASSIFIED' ,
            UPDATE-FREQUENCY
                               'DAILY' ,
            UPDATE-METHOD       'INTERACTIVE/BATCH' ,
            TABLE-FORM         'LOCAL' ,
            volatility         'DYNAMIC' ,
            EST-SIZE           '68 CHAR RECORDS' ;
       SUBSET OF:      Container-Movements-Files ;
       COLLECTION OF:
            CntnrRmrkLn ;
       MAINTAINED:      BY  Create-Container-Remarks ;
       EMPLOYED:       BY Sel-Rec-for-Cntnr-History-DB ;
       HAS: CntnrRmrkLn
             ADDED BY       Create-Container-Remarks ;
       HAS: CntnrRmrkLn
             MODIFIED BY    Create-Container-Remarks ;
       HAS: CntnrRmrkLn
             REFERENCED BY Create-Container-Remarks ;
       HAS: CntnrRmrkLn
             REFERENCED BY Sel-Rec-for-Cntnr-History-DB ;
       HAS: CntnrRmrkLn
             REMOVED BY     Create-Container-Remarks ;
       HAS: CntnrRmrkLn
             REMOVED BY     Sel-Rec-for-Cntnr-History-DB ;
       RESPONSIBLE PROBLEM DEFINER IS:
                       'TACCS-LOB CONTAINER GROUP' ;
```

```
12   DEFINE SET                                    CntnrSize-Tbl ;
       DESCRIPTION;
   Container Size Table.
   This table contains standard container sizes and pertinent descriptive
   materiel.
    ;
       KEYWORD IS:     'Data Model' ,
                       'LOB' ,
                       'TACCS' ,
                       'Container' ;
       SEE MEMO:
            Code-Tbl-Validation-Memo ;
       SOURCE IS:      'CONTAINER DATA MODEL' ;
       ATTRIBUTE IS:
            SEC-CLASS          'UNCLASSIFIED' ,
            TABLE-FORM         'COMMAND' ,
            volatility         'STATIC' ,
            MEDIA              'DISK' ,
            UPDATE-METHOD       'BATCH' ,
            UPDATE-FREQUENCY
                               'PER CODE CHANGE' ,
            RETENTION          'PERMANENT' ,
            EST-SIZE           '27 CHAR RECORDS' ;
       SUBSET OF:      Cntnr-System-Unique-Tables ;
       COLLECTION OF:
            CntnrSize ,
            CntnrSize-Ref ;
       EMPLOYED:       BY Correct-Merge-ETA-Forecast-Err ;
       EMPLOYED:       BY Create-Non-Fcst-Container-Rec ;
       EMPLOYED:       BY Merge-Reformatted-ETA-Forecast ;
       HAS: CntnrSize-Ref
             REFERENCED BY Correct-Merge-ETA-Forecast-Err ;
       HAS: CntnrSz-CRec-Ref
             REFERENCED BY Create-Non-Fcst-Container-Rec ;
       HAS: CntnrSize-Ref
             REFERENCED BY Merge-Reformatted-ETA-Forecast ;
       HAS: CntnrSize-TTU-Ref
             REFERENCED BY Prep-Convey-Change-Notif-<TTU> ;
       RESPONSIBLE PROBLEM DEFINER IS:
                       'TACCS-LOB CONTAINER GROUP' ;

13   DEFINE SET                                    Commo-Proc-Hold-File ;
       UPDATED:          BY  Prep-Daily-SEAVAN-Status-Rept ;
       HAS: Daily-SEAVAN-Sta-Message
             ADDED BY       Prep-Daily-SEAVAN-Status-Rept ;
```

```
14   DEFINE SET                                    Commodity-Tbl ;
       DESCRIPTION;
   Commodity Table.
   This table contains MILSTAMP Commodity Codes and their meanings.
    ;
       KEYWORD IS:      'Freight' ,
                        'Container' ,
                        'LOB' ,
                        'TACCS' ,
                        'Data Model' ;
       SEE MEMO:
            Code-Tbl-Validation-Memo ;
       SOURCE IS:       'FREIGHT DATA MODEL' ,
                        'CONTAINER DATA MODEL' ;
       ATTRIBUTE IS:
            MEDIA              'DISK' ,
            SEC-CLASS          'UNCLASSIFIED' ,
            RETENTION          'PERMANENT' ,
            UPDATE-FREQUENCY
                               'PER CODE CHANGE' ,
            UPDATE-METHOD        'BATCH' ,
            TABLE-FORM         'COMMAND' ,
            EST-SIZE           '23 CHAR RECORDS' ,
            REGULATION         'MILSTAMP' ,
            volatility         'STATIC' ,
            EST-VOLUME         '410 RECORDS' ;
       SUBSET OF:       Cntnr-System-Unique-Tables ,
                        Freight-System-Unique-Tables ;
       COLLECTION OF:
            Commodity ,
            Commodity-Ref ;
       EMPLOYED:        BY Correct-Merge-ETA-Forecast-Err ;
       EMPLOYED:        BY Create-Non-Fcst-Container-Rec ;
       EMPLOYED:        BY Merge-Reformatted-ETA-Forecast ;
       HAS: Commodity-Ref
             REFERENCED BY Correct-Merge-ETA-Forecast-Err ;
       HAS: Comm-CRec-Ref
             REFERENCED BY Create-Non-Fcst-Container-Rec ;
       HAS: Commodity-Ref
             REFERENCED BY Merge-Reformatted-ETA-Forecast ;
       RESPONSIBLE PROBLEM DEFINER IS:
                        'TACCS-LOB FREIGHT GROUP' ;
```

```
15   DEFINE SET                                  DiscrpType-Tbl ;
       DESCRIPTION;
   Discrepancy Type Table.
   This table contains AR 55-38 Discrepancy Codes and their descriptions.
    ;
       KEYWORD IS:     'Freight' ,
                       'Data Model' ,
                       'LOB' ,
                       'TACCS' ,
                       'Container' ;
       SEE MEMO:
            Code-Tbl-Validation-Memo ;
       SOURCE IS:      'FREIGHT DATA MODEL' ,
                       'CONTAINER DATA MODEL' ,
                       'AR 55-38' ;
       ATTRIBUTE IS:
            MEDIA           'DISK' ,
            SEC-CLASS       'UNCLASSIFIED' ,
            RETENTION       'PERMANENT' ,
            UPDATE-FREQUENCY
                            'PER CODE CHANGE' ,
            UPDATE-METHOD     'BATCH' ,
            TABLE-FORM      'COMMAND' ,
            EST-SIZE        '42 CHAR RECORDS' ,
            volatility      'STATIC' ,
            EST-VOLUME      '33 RECORDS' ;
       SUBSET OF:      Cntnr-System-Unique-Tables ,
                       Freight-System-Unique-Tables ;
       COLLECTION OF:
            DiscrpType ,
            DiscrpType-Ref ;
       EMPLOYED:       BY Prep-Cgo-Dischg/Non-Del-<TTW> ;
       EMPLOYED:       BY Prep-Cgo-Non-Dlvr-Corr-<ZTW> ;
       HAS: DiscrpType
             REFERENCED BY Prep-Cgo-Dischg/Non-Del-<TTW> ;
       HAS: DiscrpType-Ref
             REFERENCED BY Prep-Cgo-Non-Dlvr-Corr-<ZTW> ;
       RESPONSIBLE PROBLEM DEFINER IS:
                       'TACCS-LOB FREIGHT GROUP' ;
```

```
16   DEFINE SET                                    ECSR-Msg-File ;
       KEYWORD IS:     'Container' ;
       COLLECTION OF:
            Empty-Cntnr-Sta-Report-Upd ;
       UPDATED:          BY  Prep-Empty-Cntnr-Status-Report ;
       HAS: Empty-Cntnr-Sta-Report-Upd
             ADDED BY       Prep-Empty-Cntnr-Status-Report ;
       RESPONSIBLE PROBLEM DEFINER IS:
                      'Valentine' ;

17   DEFINE SET                                    ETA-Forecast-Error-File ;
       DESCRIPTION;
   ETA Forecast Error File
   This set consists of all records which were identified in the Merge ETA
   Forecast process as having errors.
    ;
       KEYWORD IS:     'Container' ;
       MAINTAINED:      BY  Correct-Merge-ETA-Forecast-Err ;
       UPDATED:         BY  Merge-Reformatted-ETA-Forecast ;
       EMPLOYED:       BY Prepare-Merge-Error-Rept ;
       HAS: ETA-Forecast-Error-Info
             ADDED BY       Correct-Merge-ETA-Forecast-Err ;
       HAS: ETA-Forecast-Error-Info
             ADDED BY       Merge-Reformatted-ETA-Forecast ;
       HAS: ETA-Forecast-Error-Info
             MODIFIED BY    Correct-Merge-ETA-Forecast-Err ;
       HAS: ETA-Forecast-Error-Info
             REFERENCED BY Correct-Merge-ETA-Forecast-Err ;
       HAS: ETA-Forecast-Error-Info
             REFERENCED BY Prepare-Merge-Error-Rept ;
       HAS: ETA-Forecast-Error-Info
             REMOVED BY     Correct-Merge-ETA-Forecast-Err ;
       RESPONSIBLE PROBLEM DEFINER IS:
                      'Cope' ;
```

```
18   DEFINE SET                                  ETA-Forecast-Inbound-File ;
       DESCRIPTION;
A temporary file used to hold the container ETA forecast input records
until processed by the merge ETA forecast process.
 ;
       KEYWORD IS:     'Container' ,
                       'NOT IN DATA MODEL' ;
       SOURCE IS:      'TACCS-LOB DFD' ;
       ATTRIBUTE IS:
            MEDIA              'DISK' ,
            SEC-CLASS          'UNCLASSIFIED' ,
            volatility         'DYNAMIC' ,
            UPDATE-FREQUENCY
                               'PER ETA FORECAST' ;
       COLLECTION OF:
            Reform-ETA-Inp ;
       RESPONSIBLE PROBLEM DEFINER IS:
                       'Cope' ;

19   DEFINE SET                                  Hist-Mgt-File ;
       DESCRIPTION;
History Management File
This file contains cntnr floppy disk storage identification data that
is utilized to instruct the system user how to load and download data
from the cntnr history disks to and from the system.  The file contains
the number of cntnr history floppy disks created for each calendar
month, year, and the number of records on a months disk(s).
 ;
       KEYWORD IS:     'Container' ,
                       'LOB' ;
       MAINTAINED:      BY  Sel-Rec-for-Cntnr-History-DB ;
       EMPLOYED:       BY History-File-Retrieval ;
       HAS: Hist-Mgt-Info
             MODIFIED BY   Sel-Rec-for-Cntnr-History-DB ;
       HAS: Hist-Mgt-Info
             REFERENCED BY History-File-Retrieval ;
       HAS: Hist-Mgt-Info
             REFERENCED BY Sel-Rec-for-Cntnr-History-DB ;
       RESPONSIBLE PROBLEM DEFINER IS:
                       'Valentine' ;
```

```
20   DEFINE SET                                  InbCntnr-Report-Hold-File ;
       DESCRIPTION;
   Inbound Container Report Hold File
   This is a batch file that receives correct and complete inbound
   container report records ready to be printed in hardcopy reports
   at request.
    ;
      KEYWORD IS:     'Container' ;
      COLLECTION OF:
           Inbound-Container-Report ;
      RESPONSIBLE PROBLEM DEFINER IS:
                      'Cope' ;
```

```
21   DEFINE SET                                    MEvent-File ;
       DESCRIPTION;
     Movement Event File.
     This file is a collection of information that results from
     significant movement events occuring in a shipment of a container
     from origin to destination.
      ;
        KEYWORD IS:     'Data Model' ,
                        'LOB' ,
                        'TACCS' ,
                        'Container' ;
        SOURCE IS:      'CONTAINER DATA MODEL' ;
        ATTRIBUTE IS:
             volatility      'DYNAMIC' ,
             EST-VOLUME      '60,000 RECORDS' ,
             MEDIA           'DISK' ,
             REGULATION      'DAMMS-R O & O PLAN' ,
             RETENTION       '60 DAYS' ,
             SEC-CLASS       'UNCLASSIFIED' ,
             UPDATE-METHOD     'INTERACTIVE' ,
             TABLE-FORM      'LOCAL' ,
             EST-SIZE        '112 CHAR RECORDS' ;
        SUBSET OF:      Container-Movements-Files ;
        COLLECTION OF:
             MEvent ,
             MEvent-TTP-Ref ,
             MEvent-TTP-Upd ,
             MEvent-Ref ,
             MEvent-TTB-Upd ,
             Existing-TTB-MEvent-Ref ,
             Corr-TTW-MEvent-ZTW-Info ,
             MEvent-ZTB-Ref ,
             MEvent-ZTB-Upd ,
             MEvent-Inq/Rept-Info-Ref ,
             MEvent-TM2-Info ;
        MAINTAINED:      BY  Prep-Rel-fr-Stg/Hold-Req-<TMS> ;
        MAINTAINED:      BY  Prep-Empty-Cntnr-Status-Report ;
        MAINTAINED:      BY  Prep-Hold/Stg-Request-<TM3> ;
        MAINTAINED:      BY  Prepare-Cnsgn-Rept-Evnts-<TTB> ;
        MAINTAINED:      BY  Prep-Cgo-Non-Dlvr-Corr-<ZTW> ;
        MAINTAINED:      BY  Prep-Cnsgn-Rept-Evnts-Corr-ZTB ;
        MAINTAINED:      BY  Prep-Diversion-Request-<TM2> ;
        MAINTAINED:      BY  Update-Cntnr-Record ;
        MAINTAINED:      BY  Prep-SEAVAN-Maint-Bgn/E-<TTP> ;
        MAINTAINED:      BY  Prep-Svan-Maint-Bgn/E-Corr-ZTP ;
        UPDATED:         BY  Prep-Cgo-Dischg/Non-Del-<TTW> ;
        EMPLOYED:       BY Create-Non-Fcst-Container-Rec ;
        EMPLOYED:       BY Inquiry/Rept-on-Specific-Cntnr ;
        EMPLOYED:       BY Prep-Cntnr-O/H-Over-5-Day-Rept ;
```

```
EMPLOYED:       BY Prep-Daily-Container-Worksheet ;
EMPLOYED:       BY Prep-Delayed-Delivery-Event ;
EMPLOYED:       BY Prep-Empty-Aval-Over-5-Day-Rpt ;
EMPLOYED:       BY Prepare-Reconsignment-Request ;
EMPLOYED:       BY Sel-Rec-for-Cntnr-History-DB ;
HAS: TTW-MEvent-Upd
      ADDED BY      Prep-Cgo-Dischg/Non-Del-<TTW> ;
HAS: MEvent-TM2-Info
      ADDED BY      Prep-Diversion-Request-<TM2> ;
HAS: MEvent-ECSR-Upd
      ADDED BY      Prep-Empty-Cntnr-Status-Report ;
HAS: MEvent-TM3-Upd
      ADDED BY      Prep-Hold/Stg-Request-<TM3> ;
HAS: MEvent-TMS-Upd
      ADDED BY      Prep-Rel-fr-Stg/Hold-Req-<TMS> ;
HAS: MEvent-TTU-Upd
      ADDED BY      Prep-Convey-Change-Notif-<TTU> ;
HAS: Corr-TTW-MEvent-ZTW-Info
      MODIFIED BY   Prep-Cgo-Non-Dlvr-Corr-<ZTW> ;
HAS: MEvent-ZTB-Upd
      MODIFIED BY   Prep-Cnsgn-Rept-Evnts-Corr-ZTB ;
HAS: MEvent-TM2-Info
      MODIFIED BY   Prep-Diversion-Request-<TM2> ;
HAS: MEvent-TM3-Upd
      MODIFIED BY   Prep-Hold/Stg-Request-<TM3> ;
HAS: MEvent-TMS-Upd
      MODIFIED BY   Prep-Rel-fr-Stg/Hold-Req-<TMS> ;
HAS: MEvent-TTP-Upd
      MODIFIED BY   Prep-SEAVAN-Maint-Bgn/E-<TTP> ;
HAS: MEvent-TTP-Upd
      MODIFIED BY   Prep-Svan-Maint-Bgn/E-Corr-ZTP ;
HAS: MEvent-TTB-Upd
      MODIFIED BY   Prepare-Cnsgn-Rept-Evnts-<TTB> ;
HAS: Upd-Cntnr-MEvent-Info
      MODIFIED BY   Update-Cntnr-Record ;
HAS: MEvent-Ref
      REFERENCED BY Create-Non-Fcst-Container-Rec ;
HAS: MEvent-Inq/Rept-Info-Ref
      REFERENCED BY Inquiry/Rept-on-Specific-Cntnr ;
HAS: Corr-TTW-MEvent-ZTW-Info
      REFERENCED BY Prep-Cgo-Non-Dlvr-Corr-<ZTW> ;
HAS: MEvent-ZTB-Ref
      REFERENCED BY Prep-Cnsgn-Rept-Evnts-Corr-ZTB ;
HAS: Search-Cntnr-O/H-MEvent-Ref
      REFERENCED BY Prep-Cntnr-O/H-Over-5-Day-Rept ;
HAS: Daily-Cntnr-MEvent-Ref-Ent
      REFERENCED BY Prep-Daily-Container-Worksheet ;
HAS: MEvent-Ref
      REFERENCED BY Prep-Delayed-Delivery-Event ;
```

```
HAS: MEvent-TM2-Info
       REFERENCED BY Prep-Diversion-Request-<TM2> ;
HAS: Empty-Aval-5-Day-MEvent-Ref
       REFERENCED BY Prep-Empty-Aval-Over-5-Day-Rpt ;
HAS: MEvent-ECSR-Ref
       REFERENCED BY Prep-Empty-Cntnr-Status-Report ;
HAS: MEvent-TM3-Ref
       REFERENCED BY Prep-Hold/Stg-Request-<TM3> ;
HAS: MEvent-TMS-Ref
       REFERENCED BY Prep-Rel-fr-Stg/Hold-Req-<TMS> ;
HAS: MEvent-TTP-Ref
       REFERENCED BY Prep-SEAVAN-Maint-Bgn/E-<TTP> ;
HAS: MEvent-ZTP-Ref
       REFERENCED BY Prep-Svan-Maint-Bgn/E-Corr-ZTP ;
HAS: Existing-TTB-MEvent-Ref
       REFERENCED BY Prepare-Cnsgn-Rept-Evnts-<TTB> ;
HAS: MEvent-Recngn-Ref
       REFERENCED BY Prepare-Reconsignment-Request ;
HAS: MEvent
       REFERENCED BY Sel-Rec-for-Cntnr-History-DB ;
HAS: Upd-Cntnr-MEvent-Info
       REFERENCED BY Update-Cntnr-Record ;
HAS: MEvent-TTU-Ref
       REFERENCED BY Prep-Convey-Change-Notif-<TTU> ;
HAS: MEvent
       REMOVED BY    Sel-Rec-for-Cntnr-History-DB ;
RESPONSIBLE PROBLEM DEFINER IS:
                'TACCS-LOB CONTAINER GROUP' ;
```

```
22   DEFINE SET                                    MEventType-Tbl ;
       DESCRIPTION;
   Movement Event Type Table.
   This table is a collection of movement event codes and descriptions.
    ;
       KEYWORD IS:      'Freight' ,
                        'Data Model' ,
                        'LOB' ,
                        'TACCS' ,
                        'Container' ;
       SEE MEMO:
            Code-Tbl-Validation-Memo ;
       SOURCE IS:       'FREIGHT DATA MODEL' ,
                        'CONTAINER DATA MODEL' ;
       ATTRIBUTE IS:
            MEDIA               'DISK' ,
            SEC-CLASS           'UNCLASSIFIED' ,
            RETENTION           'PERMANENT' ,
            UPDATE-FREQUENCY
                                'PER CODE CHANGES' ,
            UPDATE-METHOD         'INTERACTIVE-BATCH' ,
            TABLE-FORM          'COMMAND' ,
            EST-SIZE            '19 CHAR RECORDS' ,
            volatility          'STATIC' ,
            EST-VOLUME          '10 RECORDS' ;
       SUBSET OF:       Cntnr-System-Unique-Tables ,
                        Freight-System-Unique-Tables ;
       COLLECTION OF:
            MEventType ;
       EMPLOYED:        BY Prep-Cgo-Dischg/Non-Del-<TTW> ;
       EMPLOYED:        BY Prep-Cgo-Non-Dlvr-Corr-<ZTW> ;
       HAS: TTW-EventType-Ref
             REFERENCED BY Prep-Cgo-Dischg/Non-Del-<TTW> ;
       HAS: TTW-EventType-Ref
             REFERENCED BY Prep-Cgo-Non-Dlvr-Corr-<ZTW> ;
       HAS: MEventType-TTU-Ref
             REFERENCED BY Prep-Convey-Change-Notif-<TTU> ;
       RESPONSIBLE PROBLEM DEFINER IS:
                        'TACCS-LOB FREIGHT GROUP' ;
```

```
23   DEFINE SET                                    Month-Tbl ;
       DESCRIPTION;
     Month Table.
     This table contains Month Codes and their descriptions.
      ;
        KEYWORD IS:      'Freight' ,
                         'Data Model' ,
                         'LOB' ,
                         'TACCS' ,
                         'Container' ;
        SOURCE IS:       'FREIGHT DATA MODEL' ,
                         'CONTAINER DATA MODEL' ;
        ATTRIBUTE IS:
             MEDIA              'DISK' ,
             SEC-CLASS          'UNCLASSIFIED' ,
             RETENTION          'PERMANENT' ,
             UPDATE-FREQUENCY
                                'PER CODE CHANGE' ,
             UPDATE-METHOD        'BATCH' ,
             TABLE-FORM         'COMMAND' ,
             EST-VOLUME         '12 RECORDS' ,
             EST-SIZE           '4 CHAR RECORDS' ,
             volatility         'STATIC' ;
        SUBSET OF:         Cntnr-System-Unique-Tables ,
                           Freight-System-Unique-Tables ;
        COLLECTION OF:
             Month ;
        EMPLOYED:          BY Capture-TMR ;
        HAS: Month
              REFERENCED BY Capture-TMR ;
        RESPONSIBLE PROBLEM DEFINER IS:
                           'TACCS-LOB CNTNR/FRT GROUP' ;
```

```
24   DEFINE SET                                    MovModeCode-Tbl ;
       DESCRIPTION;
   Movement Mode Code Table.
   This table contains Mode Codes, Type Carrier Codes, and Mode Code
   Descriptions.
    ;
       KEYWORD IS:     'Freight' ,
                       'Data Model' ,
                       'LOB' ,
                       'TACCS' ,
                       'Container' ;
       SEE MEMO:
            Code-Tbl-Validation-Memo ;
       SOURCE IS:      'FREIGHT DATA MODEL' ,
                       'CONTAINER DATA MODEL' ;
       ATTRIBUTE IS:
            MEDIA           'DISK' ,
            SEC-CLASS       'UNCLASSIFIED' ,
            RETENTION       'PERMANENT' ,
            UPDATE-FREQUENCY
                            'PER CODE CHANGE' ,
            UPDATE-METHOD     'INTERACTIVE-BATCH' ,
            TABLE-FORM      'COMMAND' ,
            volatility      'STATIC' ,
            EST-VOLUME      '9 RECORDS' ,
            EST-SIZE        '26 CHAR RECORDS' ;
       SUBSET OF:      Cntnr-System-Unique-Tables ,
                       Freight-System-Unique-Tables ;
       COLLECTION OF:
            MovModeCode ;
       EMPLOYED:       BY Capture-TMR ;
       HAS: MovModeCode
             REFERENCED BY Capture-TMR ;
       RESPONSIBLE PROBLEM DEFINER IS:
                       'TACCS-LOB CNTNR/FRT GROUP' ;
```

```
25   DEFINE SET                                    Non-Fcst-Msg-File ;
       DESCRIPTION;
   Non Forecast Message File
   This is the non forecast cntnr report data derived from the selected
   database records.
    ;
       KEYWORD IS:     'Container' ;
       COLLECTION OF:
            Non-Forecasted-Containers-Upd ;
       UPDATED:          BY  Prep-Non-ETA-Fcst-Cntnr-Report ;
       HAS: Non-Forecasted-Containers-Upd
             ADDED BY      Prep-Non-ETA-Fcst-Cntnr-Report ;
       RESPONSIBLE PROBLEM DEFINER IS:
                     'Valentine' ;

26   DEFINE SET                                    ORICO-Tbl ;
       DESCRIPTION;
   Origin Code Table.
   This table contains origin code values, their type (container or
   freight), and their descriptions.
    ;
       KEYWORD IS:     'Container' ,
                       'Data Model' ,
                       'LOB' ,
                       'TACCS' ;
       SEE MEMO:
            Code-Tbl-Validation-Memo ;
       SOURCE IS:      'CONTAINER DATA MODEL' ;
       ATTRIBUTE IS:
            MEDIA              'DISK' ,
            SEC-CLASS          'UNCLASSIFIED' ,
            RETENTION          'PERMANENT' ,
            UPDATE-FREQUENCY
                               'PER CODE CHANGE' ,
            UPDATE-METHOD       'BATCH' ,
            TABLE-FORM         'COMMAND' ,
            EST-VOLUME         '294 RECORDS' ,
            EST-SIZE           '29 CHAR RECORDS' ,
            volatility         'STATIC' ;
       SUBSET OF:      Cntnr-System-Unique-Tables ;
       COLLECTION OF:
            ORICO ;
       RESPONSIBLE PROBLEM DEFINER IS:
                     'TACCS-LOB CONTAINER GROUP' ;
```

```
27   DEFINE SET                                    ORICOTy-Tbl ;
       DESCRIPTION;
   Origin Code Type Table.
   This table contains origin code types and their descriptions.
    ;
       KEYWORD IS:      'Container' ,
                        'Data Model' ,
                        'LOB' ,
                        'TACCS' ;
       SOURCE IS:       'CONTAINER DATA MODEL' ;
       ATTRIBUTE IS:
            MEDIA              'DISK' ,
            SEC-CLASS          'UNCLASSIFIED' ,
            RETENTION          'PERMANENT' ,
            volatility         'STATIC' ,
            UPDATE-FREQUENCY
                               'PER CODE CHANGE' ,
            UPDATE-METHOD       'BATCH/INTERACTIVE' ,
            TABLE-FORM         'COMMAND' ,
            EST-VOLUME         '2 RECORDS' ,
            EST-SIZE           '26 CHAR RECORDS' ;
       SUBSET OF:       Cntnr-System-Unique-Tables ;
       COLLECTION OF:
            ORICOTy ;
       RESPONSIBLE PROBLEM DEFINER IS:
                        'TACCS-LOB CONTAINER GROUP' ;
```

```
28   DEFINE SET                                    OceanCarr-Tbl ;
       DESCRIPTION;
     Ocean Carrier Table.
     This table contains ocean carrier type code, ocean carrier
     abbreviations, and their full names.
      ;
        KEYWORD IS:     'Container' ,
                        'Data Model' ,
                        'LOB' ,
                        'TACCS' ;
        SEE MEMO:
             Code-Tbl-Validation-Memo ;
        SOURCE IS:      'CONTAINER DATA MODEL' ,
                        'MILSTAMP PARA B-47' ;
        ATTRIBUTE IS:
             MEDIA              'DISK' ,
             SEC-CLASS          'UNCLASSIFIED' ,
             RETENTION          'PERMANENT' ,
             UPDATE-FREQUENCY
                                'PER CODE CHANGE' ,
             TABLE-FORM         'COMMAND' ,
             EST-VOLUME         '40 RECORDS' ,
             EST-SIZE           '30 CHAR RECORDS' ,
             volatility         'STATIC' ;
        SUBSET OF:      Cntnr-System-Unique-Tables ;
        COLLECTION OF:
             OceanCarr ,
             OceanCarr-Ref ;
        EMPLOYED:       BY Correct-Merge-ETA-Forecast-Err ;
        EMPLOYED:       BY Create-Non-Fcst-Container-Rec ;
        EMPLOYED:       BY Merge-Reformatted-ETA-Forecast ;
        EMPLOYED:       BY Prep-Empty-Cntnr-Status-Report ;
        HAS: OceanCarr-Ref
              REFERENCED BY Correct-Merge-ETA-Forecast-Err ;
        HAS: OceanCarr-ETA-Fcst-Ref
              REFERENCED BY Create-Non-Fcst-Container-Rec ;
        HAS: OceanCarr-Ref
              REFERENCED BY Merge-Reformatted-ETA-Forecast ;
        HAS: OceanCarr-ECSR-Ref
              REFERENCED BY Prep-Empty-Cntnr-Status-Report ;
        RESPONSIBLE PROBLEM DEFINER IS:
                        'TACCS-LOB CONTAINER GROUP' ;
```

```
29   DEFINE SET                                    ReasonDeny-Tbl ;
       DESCRIPTION;
   Reason Denied Table.
   This table contains Reason Denied Codes for container hold or diversion
   requests, and their meanings.
    ;
       KEYWORD IS:     'Container' ,
                       'LOB' ,
                       'TACCS' ,
                       'Data Model' ;
       SEE MEMO:
            Code-Tbl-Validation-Memo ;
       SOURCE IS:      'CONTAINER DATA MODEL' ;
       ATTRIBUTE IS:
            SEC-CLASS        'UNCLASSIFIED' ,
            TABLE-FORM       'COMMAND' ,
            volatility       'STATIC' ,
            MEDIA            'DISK' ,
            UPDATE-METHOD     'BATCH' ,
            UPDATE-FREQUENCY
                             'PER CODE CHANGE' ,
            RETENTION        'PERMANENT' ,
            EST-SIZE         '27 CHAR RECORDS' ,
            EST-VOLUME       '10 RECORDS' ;
       SUBSET OF:      Cntnr-System-Unique-Tables ;
       COLLECTION OF:
            ReasonDeny ;
       EMPLOYED:       BY Update-Cntnr-Record ;
       HAS: ReasonDeny
             REFERENCED BY Update-Cntnr-Record ;
       RESPONSIBLE PROBLEM DEFINER IS:
                       'TACCS-LOB CONTAINER GROUP' ;

30   DEFINE SET                                    Recngn-Msg-File ;
       DESCRIPTION;
   Reconsignment Message File
   This is the reconsignment request information that is stored in the
   processes message file and is transmitted to TMCA.
    ;
       KEYWORD IS:     'Container' ;
       COLLECTION OF:
            Req-for-Recngn-Upd ;
       UPDATED:         BY  Prepare-Reconsignment-Request ;
       HAS: Req-for-Recngn-Upd
             ADDED BY       Prepare-Reconsignment-Request ;
       RESPONSIBLE PROBLEM DEFINER IS:
                       'Valentine' ;
```

```
31   DEFINE SET                                    RespMediaCd-Tbl ;
       DESCRIPTION;
     Response Media Code Table.
     A table of codes and their descriptions that identify the type of
     media to be used in responding to a movement transaction.
      ;
        KEYWORD IS:      'Freight' ,
                         'Data Model' ,
                         'LOB' ,
                         'TACCS' ,
                         'Container' ;
        SEE MEMO:
             Code-Tbl-Validation-Memo ;
        SOURCE IS:       'FREIGHT DATA MODEL' ,
                         'CONTAINER DATA MODEL' ;
        ATTRIBUTE IS:
             volatility       'PERPETUAL' ,
             EST-SIZE         '11 CHAR RECORDS' ,
             EST-VOLUME       '5 RECORDS' ,
             MEDIA            'DISK' ,
             REGULATION       'DAMMS-CMM DFSR TM 38-2Z1-2-1-C' ,
             RETENTION        'PERMANENT' ,
             TABLE-FORM       'COMMAND' ,
             SEC-CLASS        'UNCLASSIFIED' ,
             UPDATE-FREQUENCY
                              'AS PER RESP MEDIA CODE CHANGE' ,
             UPDATE-METHOD     'INTERACTIVE' ;
        SUBSET OF:       Cntnr-System-Unique-Tables ,
                         Freight-System-Unique-Tables ;
        COLLECTION OF:
             RespMediaCd ;
        EMPLOYED:        BY Prep-Diversion-Request-<TM2> ;
        EMPLOYED:        BY Prep-Hold/Stg-Request-<TM3> ;
        EMPLOYED:        BY Prep-Rel-fr-Stg/Hold-Req-<TMS> ;
        HAS: RespMediaCd
              REFERENCED BY Prep-Diversion-Request-<TM2> ;
        HAS: RespMediaCd-TM3-Ref
              REFERENCED BY Prep-Hold/Stg-Request-<TM3> ;
        HAS: RespMediaCd-TMS-Ref
              REFERENCED BY Prep-Rel-fr-Stg/Hold-Req-<TMS> ;
        RESPONSIBLE PROBLEM DEFINER IS:
                         'TACCS-LOB CNTNR/FRT GROUP' ;
```

```
32   DEFINE SET                                    ShpmtMethod-Tbl ;
       DESCRIPTION;
   Shipment Method Table.
   This table contains Mode/Method of Shipment Codes and their
   descriptions.
    ;
      KEYWORD IS:      'Freight' ,
                       'Data Model' ,
                       'LOB' ,
                       'TACCS' ,
                       'Container' ;
      SEE MEMO:
           Code-Tbl-Validation-Memo ;
      SOURCE IS:       'FREIGHT DATA MODEL' ,
                       'CONTAINER DATA MODEL' ;
      ATTRIBUTE IS:
           MEDIA            'DISK' ,
           SEC-CLASS        'UNCLASSIFIED' ,
           RETENTION        'PERMANENT' ,
           UPDATE-FREQUENCY
                            'PER CODE CHANGE' ,
           UPDATE-METHOD      'BATCH' ,
           TABLE-FORM       'COMMAND' ,
           EST-SIZE         '26 CHAR RECORDS' ,
           volatility       'STATIC' ,
           EST-VOLUME       '34 RECORDS' ;
      SUBSET OF:       Cntnr-System-Unique-Tables ,
                       Freight-System-Unique-Tables ;
      COLLECTION OF:
           ShpmtMethod ,
           ModeMethShpmtCd-TTB-Ref ;
      EMPLOYED:        BY Prep-Cnsgn-Rept-Evnts-Corr-ZTB ;
      EMPLOYED:        BY Prepare-Cnsgn-Rept-Evnts-<TTB> ;
      HAS: ModeMethShpmtCd-TTB-Ref
            REFERENCED BY Prep-Cnsgn-Rept-Evnts-Corr-ZTB ;
      HAS: ModeMethShpmtCd-TTB-Ref
            REFERENCED BY Prepare-Cnsgn-Rept-Evnts-<TTB> ;
      RESPONSIBLE PROBLEM DEFINER IS:
                       'TACCS-LOB FREIGHT GROUP' ;
```

```
33   DEFINE SET                                  Sixty-Day-Msg-File ;
       DESCRIPTION;
     Sixty Day Message File
     This is data from container records that have been identified for
     deletion from the database.
      ;
        KEYWORD IS:     'Container' ;
        COLLECTION OF:
             Dele-60-Day-Old-Cntnr-Rept-Upd ;
        UPDATED:          BY  Prep-Del-60-Day-Old-Cntnr-Rept ;
        HAS: Dele-60-Day-Old-Cntnr-Rept-Upd
              ADDED BY      Prep-Del-60-Day-Old-Cntnr-Rept ;
        RESPONSIBLE PROBLEM DEFINER IS:
                        'Valentine' ;

34   DEFINE SET                                  SpecialInt-Tbl ;
       SEE MEMO:
             Code-Tbl-Validation-Memo ;
       SUBSET OF:      Cntnr-System-Unique-Tables ;
       COLLECTION OF:
             SpecialInt ;
       EMPLOYED:       BY Capture-TMR ;
       HAS: SpecialInt
             REFERENCED BY Capture-TMR ;
```

```
35   DEFINE SET                                  System-Parameter-Tbl ;
       DESCRIPTION;
     System Parameter Table
     This table represents the collection of various system parameters used
     on the TACCS machines at the Movement Control Team (MCT) level.
      ;
        KEYWORD IS:     'Freight' ,
                        'Container' ,
                        'LOB' ,
                        'TACCS' ,
                        'NOT IN DATA MODEL' ;
        ATTRIBUTE IS:
             MEDIA              'DISK' ,
             SEC-CLASS          'UNCLASSIFIED' ,
             volatility         'DYNAMIC' ,
             UPDATE-METHOD        'INTERACTIVE' ,
             TABLE-FORM         'COMMAND' ;
        SUBSET OF:          Container-Database ,
                            Freight-Database ;
        COLLECTION OF:
             Maint-Param-Sys-Param-Ref ,
             System-Parameter-Record ,
             Sys-Parameter-Ref ,
             Parameter-OrigCd-Ref ;
        MAINTAINED:          BY  Maintain-Parameter-Tbl ;
        EMPLOYED:           BY Correct-Merge-ETA-Forecast-Err ;
        EMPLOYED:           BY Maintain-Parameter-Tbl ;
        EMPLOYED:           BY Merge-Reformatted-ETA-Forecast ;
        EMPLOYED:           BY Prep-Cgo-Dischg/Non-Del-<TTW> ;
        EMPLOYED:           BY Prep-Cgo-Non-Dlvr-Corr-<ZTW> ;
        EMPLOYED:           BY Prep-Cnsgn-Rept-Evnts-Corr-ZTB ;
        EMPLOYED:           BY Prep-Cntnr-O/H-Over-5-Day-Rept ;
        EMPLOYED:           BY Prep-Dam-Deadlined-Cntnr-Rept ;
        EMPLOYED:           BY Prep-Del-60-Day-Old-Cntnr-Rept ;
        EMPLOYED:           BY Prep-Empty-Aval-Over-5-Day-Rpt ;
        EMPLOYED:           BY Prep-Empty-Cntnr-Status-Report ;
        EMPLOYED:           BY Prep-Hold/Stg-Request-<TM3> ;
        EMPLOYED:           BY Prep-Non-ETA-Fcst-Cntnr-Report ;
        EMPLOYED:           BY Prep-Rel-fr-Stg/Hold-Req-<TMS> ;
        EMPLOYED:           BY Prep-SEAVAN-Maint-Bgn/E-<TTP> ;
        EMPLOYED:           BY Prepare-Cnsgn-Rept-Evnts-<TTB> ;
        EMPLOYED:           BY Prepare-Reconsignment-Request ;
        EMPLOYED:           BY Sel-Rec-for-Cntnr-History-DB ;
        HAS: Maint-Param-Sys-Param-Upd
              ADDED BY      Maintain-Parameter-Tbl ;
        HAS: Sys-Parameter-Ref
              REFERENCED BY Correct-Merge-ETA-Forecast-Err ;
        HAS: Sys-Parameter-Ref
              REFERENCED BY Merge-Reformatted-ETA-Forecast ;
```

```
HAS: Search-Cntnr-O/H-Param-Ref
       REFERENCED BY Prep-Cntnr-O/H-Over-5-Day-Rept ;
HAS: Sixty-Day-Parameter-Ref
       REFERENCED BY Prep-Dam-Deadlined-Cntnr-Rept ;
HAS: Sixty-Day-Parameter-Ref
       REFERENCED BY Prep-Del-60-Day-Old-Cntnr-Rept ;
HAS: Empty-Aval-5-Day-Param-Ref
       REFERENCED BY Prep-Empty-Aval-Over-5-Day-Rpt ;
HAS: Param-ECSR-Ref
       REFERENCED BY Prep-Empty-Cntnr-Status-Report ;
HAS: Param-TM3-Ref
       REFERENCED BY Prep-Hold/Stg-Request-<TM3> ;
HAS: Non-Fcst-Param-Ref
       REFERENCED BY Prep-Non-ETA-Fcst-Cntnr-Report ;
HAS: Param-TMS-Ref
       REFERENCED BY Prep-Rel-fr-Stg/Hold-Req-<TMS> ;
HAS: Param-Recngn-Ref
       REFERENCED BY Prepare-Reconsignment-Request ;
HAS: Parameter-Hist-Ref
       REFERENCED BY Sel-Rec-for-Cntnr-History-DB ;
HAS: Parameter-OrigCd-Ref
       REFERENCED BY Prep-Cnsgn-Rept-Evnts-Corr-ZTB ;
HAS: Parameter-OrigCd-Ref
       REFERENCED BY Prepare-Cnsgn-Rept-Evnts-<TTB> ;
HAS: Parameter-OrigCd-Ref
       REFERENCED BY Prep-SEAVAN-Maint-Bgn/E-<TTP> ;
HAS: Parameter-OrigCd-Ref
       REFERENCED BY Prep-Cgo-Dischg/Non-Del-<TTW> ;
HAS: Parameter-OrigCd-Ref
       REFERENCED BY Prep-Cgo-Non-Dlvr-Corr-<ZTW> ;
HAS: Parameter-OrigCd-Ref
       REFERENCED BY Prep-Convey-Change-Notif-<TTU> ;
HAS: Parameter-Hist-Ref
       REMOVED BY    Sel-Rec-for-Cntnr-History-DB ;
RESPONSIBLE PROBLEM DEFINER IS:
                'TACCS-LOB DATA ADMIN' ;
```

```
36   DEFINE SET                                  Temp-History-File ;
       DESCRIPTION;
   Temporary History File
   This is the container record data that is temporarily stored in the
   systems temporary history file before being transferred to floppy disks
   and reports.
    ;
       KEYWORD IS:    'Container' ;
       COLLECTION OF:
            Cntnr-History-Info-Upd ,
            Hist-Rmrk-Rept-Out ,
            Cntnr-Hist-Rept-Out ,
            Hist-Info-Out ;
       UPDATED:         BY  History-File-Retrieval ;
       HAS: Cntnr-History-Info-Upd
             ADDED BY      History-File-Retrieval ;
       RESPONSIBLE PROBLEM DEFINER IS:
                     'Valentine' ;
```

```
37   DEFINE SET                                    TransPri-Tbl ;
       DESCRIPTION;
     Transportation Priority Table.
     This table contains Transportation Priority Codes and their
     descriptions.
      ;
        KEYWORD IS:      'Freight' ,
                         'Data Model' ,
                         'LOB' ,
                         'TACCS' ;
        SEE MEMO:
             Code-Tbl-Validation-Memo ;
        SOURCE IS:       'FREIGHT DATA MODEL' ,
                         'CONTAINER DATA MODEL' ;
        ATTRIBUTE IS:
             MEDIA              'DISK' ,
             SEC-CLASS          'UNCLASSIFIED' ,
             RETENTION          'PERMANENT' ,
             UPDATE-FREQUENCY
                                'PER CODE CHANGE' ,
             UPDATE-METHOD        'BATCH' ,
             TABLE-FORM         'COMMAND' ,
             EST-VOLUME         '5 RECORDS' ,
             EST-SIZE           '36 CHAR RECORDS' ,
             volatility         'STATIC' ;
        SUBSET OF:       Cntnr-System-Unique-Tables ,
                         Freight-System-Unique-Tables ;
        COLLECTION OF:
             TransPri ;
        EMPLOYED:        BY Capture-TMR ;
        HAS: TransPri
              REFERENCED BY Capture-TMR ;
        RESPONSIBLE PROBLEM DEFINER IS:
                         'TACCS-LOB FREIGHT GROUP' ;
```

```
38   DEFINE SET                                  Trns-ISAM-File ;
       DESCRIPTION;
   Transaction ISAM File.
   This file is a collection of movement event records for use by CMM
   to reflect the change in status of containers and shipments from origin
   to final delivery to consignee.
    ;
       KEYWORD IS:     'CMM' ,
                       'Container' ;
       SOURCE IS:      'TACCS-LOB CNTNR DFD' ;
       ATTRIBUTE IS:
            volatility      'TEMPORARY' ,
            EST-SIZE        '80 CHAR RECORDS' ,
            EST-VOLUME      '350 RECORDS' ,
            MEDIA           'DISK' ,
            REGULATION      'TM 38-LZ1-2-1-C' ,
            RETENTION       '60 DAYS' ,
            SEC-CLASS       'UNCLASSIFIED' ,
            UPDATE-FREQUENCY
                            'DAILY' ,
            UPDATE-METHOD     'INTERACTIVE' ;
       COLLECTION OF:
            TM3-ISAM-Data ,
            Trns-ISAM-Data ,
            ISAM-Trns-ZTW-Info ,
            ISAM-Trns-TTB-Info ,
            DSSR-Info ;
       MAINTAINED:       BY  Prep-Rel-fr-Stg/Hold-Req-<TMS> ;
       MAINTAINED:       BY  Prep-Empty-Cntnr-Status-Report ;
       MAINTAINED:       BY  Prep-Hold/Stg-Request-<TM3> ;
       MAINTAINED:       BY  Prepare-Cnsgn-Rept-Evnts-<TTB> ;
       MAINTAINED:       BY  Prep-Cgo-Dischg/Non-Del-<TTW> ;
       MAINTAINED:       BY  Prep-Cgo-Non-Dlvr-Corr-<ZTW> ;
       MAINTAINED:       BY  Prep-Cnsgn-Rept-Evnts-Corr-ZTB ;
       MAINTAINED:       BY  Prep-Diversion-Request-<TM2> ;
       MAINTAINED:       BY  Prep-SEAVAN-Maint-Bgn/E-<TTP> ;
       MAINTAINED:       BY  Prep-Svan-Maint-Bgn/E-Corr-ZTP ;
       EMPLOYED:       BY Prep-Daily-SEAVAN-Status-Rept ;
       HAS: TTW-ISAM-Info
             ADDED BY      Prep-Cgo-Dischg/Non-Del-<TTW> ;
       HAS: ISAM-Trns-ZTW-Info
             ADDED BY      Prep-Cgo-Non-Dlvr-Corr-<ZTW> ;
       HAS: ISAM-Trns-TTB-Info
             ADDED BY      Prep-Cnsgn-Rept-Evnts-Corr-ZTB ;
       HAS: DSSR-Info
             ADDED BY      Prep-Diversion-Request-<TM2> ;
       HAS: ECSR-Transaction-Upd
             ADDED BY      Prep-Empty-Cntnr-Status-Report ;
       HAS: TM3-Transaction-Upd
```

```
        ADDED BY      Prep-Hold/Stg-Request-<TM3> ;
HAS: TMS-Transaction-Info
        ADDED BY      Prep-Rel-fr-Stg/Hold-Req-<TMS> ;
HAS: TTP-ISAM-Data
        ADDED BY      Prep-SEAVAN-Maint-Bgn/E-<TTP> ;
HAS: ISAM-Trns-TTB-Info
        ADDED BY      Prepare-Cnsgn-Rept-Evnts-<TTB> ;
HAS: TTU-DSSR-Info
        ADDED BY      Prep-Convey-Change-Notif-<TTU> ;
HAS: TTW-ISAM-Info
        MODIFIED BY   Prep-Cgo-Dischg/Non-Del-<TTW> ;
HAS: ISAM-Trns-ZTW-Info
        MODIFIED BY   Prep-Cgo-Non-Dlvr-Corr-<ZTW> ;
HAS: ISAM-Trns-TTB-Info
        MODIFIED BY   Prep-Cnsgn-Rept-Evnts-Corr-ZTB ;
HAS: DSSR-Info
        MODIFIED BY   Prep-Diversion-Request-<TM2> ;
HAS: ECSR-Transaction-Upd
        MODIFIED BY   Prep-Empty-Cntnr-Status-Report ;
HAS: TM3-Transaction-Upd
        MODIFIED BY   Prep-Hold/Stg-Request-<TM3> ;
HAS: TMS-Transaction-Info
        MODIFIED BY   Prep-Rel-fr-Stg/Hold-Req-<TMS> ;
HAS: TTP-ISAM-Data
        MODIFIED BY   Prep-SEAVAN-Maint-Bgn/E-<TTP> ;
HAS: TTP-ISAM-Data
        MODIFIED BY   Prep-Svan-Maint-Bgn/E-Corr-ZTP ;
HAS: ISAM-Trns-TTB-Info
        MODIFIED BY   Prepare-Cnsgn-Rept-Evnts-<TTB> ;
HAS: TTU-DSSR-Info
        MODIFIED BY   Prep-Convey-Change-Notif-<TTU> ;
HAS: TTW-ISAM-Info
        REFERENCED BY Prep-Cgo-Dischg/Non-Del-<TTW> ;
HAS: ISAM-Trns-ZTW-Info
        REFERENCED BY Prep-Cgo-Non-Dlvr-Corr-<ZTW> ;
HAS: ISAM-Trns-TTB-Info
        REFERENCED BY Prep-Cnsgn-Rept-Evnts-Corr-ZTB ;
HAS: Daily-SEAVAN-Status-Info-Ent
        REFERENCED BY Prep-Daily-SEAVAN-Status-Rept ;
HAS: DSSR-Info
        REFERENCED BY Prep-Diversion-Request-<TM2> ;
HAS: ECSR-Transaction-Ref
        REFERENCED BY Prep-Empty-Cntnr-Status-Report ;
HAS: TM3-Transaction-Upd
        REFERENCED BY Prep-Hold/Stg-Request-<TM3> ;
HAS: TMS-Transaction-Info
        REFERENCED BY Prep-Rel-fr-Stg/Hold-Req-<TMS> ;
HAS: TTP-ISAM-Data
        REFERENCED BY Prep-SEAVAN-Maint-Bgn/E-<TTP> ;
```

```
      HAS: TTP-ISAM-Data
            REFERENCED BY Prep-Svan-Maint-Bgn/E-Corr-ZTP ;
      HAS: ISAM-Trns-TTB-Info
            REFERENCED BY Prepare-Cnsgn-Rept-Evnts-<TTB> ;
      HAS: TTU-DSSR-Info
            REFERENCED BY Prep-Convey-Change-Notif-<TTU> ;
      RESPONSIBLE PROBLEM DEFINER IS:
                  'TACCS-LOB CNTNR WORK GROUP' ;

39   DEFINE SET                                  TypeCarrier-Tbl ;
      DESCRIPTION;
   Type Carrier Table.
   This table contains Type Carrier Codes and their descriptions.
    ;
      KEYWORD IS:     'Container' ,
                      'LOB' ,
                      'TACCS' ,
                      'Data Model' ,
                      'Freight' ;
      SEE MEMO:
           Code-Tbl-Validation-Memo ;
      SOURCE IS:      'CONTAINER DATA MODEL' ,
                      'FREIGHT DATA MODEL' ;
      ATTRIBUTE IS:
           SEC-CLASS        'UNCLASSIFIED' ,
           TABLE-FORM       'COMMAND' ,
           volatility       'STATIC' ,
           MEDIA            'DISK' ,
           UPDATE-METHOD     'BATCH' ,
           UPDATE-FREQUENCY
                            'PER CODE CHANGE' ,
           RETENTION        'PERMANENT' ,
           EST-SIZE         '26 CHAR RECORDS' ,
           EST-VOLUME       '4 RECORDS' ;
      SUBSET OF:      Cntnr-System-Unique-Tables ,
                      Freight-System-Unique-Tables ;
      COLLECTION OF:
           TypeCarrier ,
           TyCarrCd-TTB-Ref ;
      EMPLOYED:       BY Prep-SEAVAN-Maint-Bgn/E-<TTP> ;
      EMPLOYED:       BY Prepare-Cnsgn-Rept-Evnts-<TTB> ;
      HAS: TypeCarrier
            REFERENCED BY Prep-SEAVAN-Maint-Bgn/E-<TTP> ;
      HAS: TyCarrCd-TTB-Ref
            REFERENCED BY Prepare-Cnsgn-Rept-Evnts-<TTB> ;
      RESPONSIBLE PROBLEM DEFINER IS:
                  'TACCS-LOB CONTAINER GROUP' ;
```

```
40   DEFINE SET                                    TypeMovNo-Tbl ;
       DESCRIPTION;
     Type Movement Number Table.
     A table which contains the codes and descriptions that identify
     the type movement number being used to track a container to its
     destination.
      ;
        KEYWORD IS:      'Container' ,
                         'Data Model' ,
                         'LOB' ,
                         'TACCS' ;
        SEE MEMO:
             Code-Tbl-Validation-Memo ;
        SOURCE IS:       'CONTAINER DATA MODEL' ;
        ATTRIBUTE IS:
             MEDIA              'DISK' ,
             REGULATION         'TM 38-LZ1-2-1-C' ,
             EST-VOLUME         '5 RECORDS' ,
             EST-SIZE           '26 CHAR RECORDS' ,
             SEC-CLASS          'UNCLASSIFIED' ,
             TABLE-FORM         'COMMAND' ,
             volatility         'STATIC' ,
             UPDATE-METHOD       'BATCH' ,
             UPDATE-FREQUENCY
                                'PER CODE CHANGE' ,
             RETENTION          'PERMANENT' ;
        SUBSET OF:       Cntnr-System-Unique-Tables ;
        COLLECTION OF:
             TypeMovNo ,
             TyMovNoCd-TTB-Ref ;
        EMPLOYED:        BY Prep-SEAVAN-Maint-Bgn/E-<TTP> ;
        EMPLOYED:        BY Prepare-Cnsgn-Rept-Evnts-<TTB> ;
        HAS: TypeMovNo
              REFERENCED BY Prep-SEAVAN-Maint-Bgn/E-<TTP> ;
        HAS: TyMovNoCd-TTB-Ref
              REFERENCED BY Prepare-Cnsgn-Rept-Evnts-<TTB> ;
        HAS: TyMovNo-TTU-Ref
              REFERENCED BY Prep-Convey-Change-Notif-<TTU> ;
        RESPONSIBLE PROBLEM DEFINER IS:
                         'TACCS-LOB CONTAINER GROUP' ;
```

```
41   DEFINE SET                                    TypeMove-Tbl ;
       DESCRIPTION;
   Type Movement Table.
   This table contains Type Movement Codes and their descriptions.
    ;
       KEYWORD IS:     'Container' ,
                       'LOB' ,
                       'TACCS' ,
                       'Data Model' ,
                       'Freight' ;
       SEE MEMO:
            Code-Tbl-Validation-Memo ;
       SOURCE IS:      'CONTAINER DATA MODEL' ,
                       'FREIGHT DATA MODEL' ;
       ATTRIBUTE IS:
            SEC-CLASS        'UNCLASSIFIED' ,
            TABLE-FORM       'COMMAND' ,
            volatility       'STATIC' ,
            MEDIA            'DISK' ,
            UPDATE-METHOD     'BATCH' ,
            UPDATE-FREQUENCY
                             'PER CODE CHANGE' ,
            RETENTION        'PERMANENT' ,
            EST-SIZE         '26 CHAR RECORDS' ,
            EST-VOLUME       '3 RECORDS' ;
       SUBSET OF:      Cntnr-System-Unique-Tables ,
                       Freight-System-Unique-Tables ;
       COLLECTION OF:
            TypeMove ;
       RESPONSIBLE PROBLEM DEFINER IS:
                       'TACCS-LOB CONTAINER GROUP' ;
```

```
42   DEFINE SET                                    Voyage-File ;
       DESCRIPTION;
     Voyage File.
     This file contains data relating a Voyage Number to its date sailed, its
     vessel, and its Port of Embarkation (POE).
      ;
        KEYWORD IS:     'Data Model' ,
                        'LOB' ,
                        'TACCS' ,
                        'Container' ;
        SOURCE IS:      'CONTAINER DATA MODEL' ;
        ATTRIBUTE IS:
             volatility      'PERPETUAL' ,
             EST-SIZE        '17 CHAR RECORDS' ,
             EST-VOLUME      '20 RECORDS' ,
             MEDIA           'DISK' ,
             RETENTION       '60 DAYS' ,
             SEC-CLASS       'UNCLASSIFIED' ,
             UPDATE-FREQUENCY
                             'AS PER VOYAGE' ,
             UPDATE-METHOD     'INTERACTIVE/BATCH' ;
        SUBSET OF:      Container-Movements-Files ;
        COLLECTION OF:
             Voyage ,
             Voyage-Inq/Rept-Info-Ref ;
        MAINTAINED:       BY  Create-Non-Fcst-Container-Rec ;
        MAINTAINED:       BY  Merge-Reformatted-ETA-Forecast ;
        MAINTAINED:       BY  Correct-Merge-ETA-Forecast-Err ;
        EMPLOYED:        BY Inquiry/Rept-on-Specific-Cntnr ;
        EMPLOYED:        BY Notify-Cnsgn-of-Inbound-Cntnr ;
        EMPLOYED:        BY Prep-Diversion-Request-<TM2> ;
        EMPLOYED:        BY Prep-Empty-Cntnr-Status-Report ;
        EMPLOYED:        BY Prep-Hold/Stg-Request-<TM3> ;
        EMPLOYED:        BY Prep-Rel-fr-Stg/Hold-Req-<TMS> ;
        EMPLOYED:        BY Prep-SEAVAN-Maint-Bgn/E-<TTP> ;
        EMPLOYED:        BY Prep-Svan-Maint-Bgn/E-Corr-ZTP ;
        EMPLOYED:        BY Sel-Rec-for-Cntnr-History-DB ;
        HAS: Voyage  ADDED BY Correct-Merge-ETA-Forecast-Err ;
        HAS: Voyage  ADDED BY Create-Non-Fcst-Container-Rec ;
        HAS: Voyage  ADDED BY Merge-Reformatted-ETA-Forecast ;
        HAS: Voyage
              MODIFIED BY   Correct-Merge-ETA-Forecast-Err ;
        HAS: Voyage
              MODIFIED BY   Merge-Reformatted-ETA-Forecast ;
        HAS: Voyage
              REFERENCED BY Correct-Merge-ETA-Forecast-Err ;
        HAS: Voyage
              REFERENCED BY Create-Non-Fcst-Container-Rec ;
        HAS: Voyage-Inq/Rept-Info-Ref
```

```
      REFERENCED BY Inquiry/Rept-on-Specific-Cntnr ;
HAS: Voyage
      REFERENCED BY Merge-Reformatted-ETA-Forecast ;
HAS: Voyage
      REFERENCED BY Notify-Cnsgn-of-Inbound-Cntnr ;
HAS: Voyage-TM3-Ref
      REFERENCED BY Prep-Diversion-Request-<TM2> ;
HAS: Voyage-ECSR-Ref
      REFERENCED BY Prep-Empty-Cntnr-Status-Report ;
HAS: Voyage-TM3-Ref
      REFERENCED BY Prep-Hold/Stg-Request-<TM3> ;
HAS: Voyage-TMS-Ref
      REFERENCED BY Prep-Rel-fr-Stg/Hold-Req-<TMS> ;
HAS: Voyage-ECSR-Ref
      REFERENCED BY Prep-SEAVAN-Maint-Bgn/E-<TTP> ;
HAS: Voyage-ECSR-Ref
      REFERENCED BY Prep-Svan-Maint-Bgn/E-Corr-ZTP ;
HAS: Voyage
      REFERENCED BY Sel-Rec-for-Cntnr-History-DB ;
HAS: Voyage
      REMOVED BY    Sel-Rec-for-Cntnr-History-DB ;
RESPONSIBLE PROBLEM DEFINER IS:
                'TACCS-LOB CONTAINER GROUP' ;
```

```
43   DEFINE SET                                  VoyageStop-File ;
       DESCRIPTION;
    Voyage Stop File.
    This file contains data relating a Voyage Number to a Port of
    Debarkation (POD).
     ;
       KEYWORD IS:     'Data Model' ,
                       'LOB' ,
                       'TACCS' ,
                       'Container' ;
       SOURCE IS:      'CONTAINER DATA MODEL' ;
       ATTRIBUTE IS:
            MEDIA            'DISK' ,
            SEC-CLASS        'UNCLASSIFIED' ,
            EST-SIZE         '8 CHAR RECORDS' ,
            TABLE-FORM       'LOCAL' ,
            UPDATE-METHOD      'INTERACTIVE/BATCH' ,
            volatility       'DYNAMIC' ,
            UPDATE-FREQUENCY
                             'DAILY' ,
            EST-VOLUME       '15 RECORDS' ;
       SUBSET OF:      Container-Movements-Files ;
       COLLECTION OF:
            VoyageStop ;
       MAINTAINED:       BY  Create-Non-Fcst-Container-Rec ;
       MAINTAINED:       BY  Merge-Reformatted-ETA-Forecast ;
       MAINTAINED:       BY  Correct-Merge-ETA-Forecast-Err ;
       EMPLOYED:        BY Sel-Rec-for-Cntnr-History-DB ;
       HAS: VoyageStop
             ADDED BY        Correct-Merge-ETA-Forecast-Err ;
       HAS: VoyageStop
             ADDED BY        Create-Non-Fcst-Container-Rec ;
       HAS: VoyageStop
             ADDED BY        Merge-Reformatted-ETA-Forecast ;
       HAS: VoyageStop
             MODIFIED BY     Correct-Merge-ETA-Forecast-Err ;
       HAS: VoyageStop
             MODIFIED BY     Merge-Reformatted-ETA-Forecast ;
       HAS: VoyageStop
             REFERENCED BY Correct-Merge-ETA-Forecast-Err ;
       HAS: VoyageStop
             REFERENCED BY Create-Non-Fcst-Container-Rec ;
       HAS: VoyageStop
             REFERENCED BY Merge-Reformatted-ETA-Forecast ;
       HAS: VoyageStop
             REFERENCED BY Sel-Rec-for-Cntnr-History-DB ;
       HAS: VoyageStop
             REMOVED BY    Sel-Rec-for-Cntnr-History-DB ;
       RESPONSIBLE PROBLEM DEFINER IS:
```

'TACCS-LOB CONTAINER GROUP' ;

EOF EOF EOF EOF EOF

PARAGRAPH	MEMO OBJECTS	PAGE
1	Code-Tbl-Validation-Memo	III-717
2	FCityCd-Memo	III-719
3	Front-End-Process-Memo	III-720
4	ModeCd-Memo	III-724
5	Multi-Stop-No-Memo	III-724
6	Port-Memo	III-724
7	TotStp-Memo	III-725
8	ZTB-Integration-Memo	III-726
9	ZTW-Integration-Memo	III-728

```
1    DEFINE MEMO                                Code-Tbl-Validation-Memo ;
       DESCRIPTION;
Code Table Validation Memo.

This procedure is used to validate codes against the values contained
in their code tables.  It should be used in conjunction with the Data
Accountability Worksheet to determine which data elements are validated
against which tables.

User may enter the data element from the keyboard, or by pressing
'HELP', display a scrollable list of valid codes.

If HELP screen is used, user may select from the screen by highlighting
the desired code and pressing 'GO'.  This will transfer the selected
value from the 'HELP' screen to the data entry screen.

If data element is entered from the keyboard, it will be validated
against its code table to see if a code exists for the value entered by
the user.

If it does not pass the table edit:

    DISPLAY:  "Invalid (Name) Code, please re-enter', press 'HELP', or
    cancel this transaction.

    IF:  'HELP' is chosen, the scrollable screen will be proveded as
    above.

    ELSE:  System will allow user to re-enter the code or cancel the
    transaction.
 ;
    KEYWORD IS:     'Freight' ,
                    'Container' ,
                    'TMAS' ,
                    'LOB' ;
    APPLIES TO:     CityGpCd ;
    APPLIES TO:     CntnrOwnTyCd ;
    APPLIES TO:     CntnrSz ;
    APPLIES TO:     DSSALOCCd ;
    APPLIES TO:     DiscrpCd ;
    APPLIES TO:     EvntTy ;
    APPLIES TO:     MCECd ;
    APPLIES TO:     MCETyCd ;
    APPLIES TO:     ModeCd ;
    APPLIES TO:     ModeMethShpmtCd ;
    APPLIES TO:     MovEvntCd ;
    APPLIES TO:     MthCd ;
    APPLIES TO:     NewModeMethShpmtCd ;
    APPLIES TO:     NewTyCarrCd ;
```

```
APPLIES TO:     OceanCarrAbbr ;
APPLIES TO:     OriginMCEPrefix ;
APPLIES TO:     POD ;
APPLIES TO:     PrtCd ;
APPLIES TO:     PrtTyCd ;
APPLIES TO:     RespCd ;
APPLIES TO:     RsnDenyCd ;
APPLIES TO:     SpIntCd ;
APPLIES TO:     TransPriCd ;
APPLIES TO:     TyCarrCd ;
APPLIES TO:     TyMovCd ;
APPLIES TO:     TyMovNoCd ;
APPLIES TO:     CntnrOwner-Tbl ;
APPLIES TO:     CntnrOwnTy-Tbl ;
APPLIES TO:     CntnrSize-Tbl ;
APPLIES TO:     Commodity-Tbl ;
APPLIES TO:     DiscrpType-Tbl ;
APPLIES TO:     MEventType-Tbl ;
APPLIES TO:     MovModeCode-Tbl ;
APPLIES TO:     ReasonDeny-Tbl ;
APPLIES TO:     RespMediaCd-Tbl ;
APPLIES TO:     SpecialInt-Tbl ;
APPLIES TO:     TransPri-Tbl ;
APPLIES TO:     TypeCarrier-Tbl ;
APPLIES TO:     TypeMovNo-Tbl ;
APPLIES TO:     TypeMove-Tbl ;
APPLIES TO:     ORICO-Tbl ;
APPLIES TO:     CgoPort-Tbl ;
APPLIES TO:     CmdtyCd ;
APPLIES TO:     ShpmtMethod-Tbl ;
APPLIES TO:     CntnrOwnAbbr ;
APPLIES TO:     CgoMCE-Tbl ;
APPLIES TO:     TTPCd ;
APPLIES TO:     OceanCarr-Tbl ;
RESPONSIBLE PROBLEM DEFINER IS:
                'TACCS-LOB' ;
```

```
2    DEFINE MEMO                                    FCityCd-Memo ;
       DESCRIPTION;
Freight City Code Memo.
The data element FCityCd is not in the TMAS Phase I Activity Entity.  It
must be provided in TMAS Phase II - i.e., DAMMS-R-1.;
       KEYWORD IS:     'Freight' ,
                       'Container' ,
                       'TMAS' ,
                       'LOB' ,
                       'Data Model' ;
       APPLIES TO:     CgoActivity ;
       APPLIES TO:     CgoActivity-File ;
       RESPONSIBLE PROBLEM DEFINER IS:
                       'TACCS-LOB FREIGHT GROUP' ;
```

```
3    DEFINE MEMO                                Front-End-Process-Memo ;
       DESCRIPTION;

   1)
        If:
            User enters CntnrNo
            MATCH:
                    CntnrNo from screen with CntnrNo in CntnrMovStp File
                    IF:
                        NO MATCH:
                        DISPLAY:
                                "Container Number not valid, reenter or
                                 exit process."

                    ELSE:
                           Use CntnrNo to access CntnrMovStp.
                           DISPLAY:
                           "CntnrNo CntnrOwn Consignee MultiStpNo StpComp"
                             XXXXX   XXXX     XXXXXX        X

                            System will allow user to course through this
                            scrollable screen to the desired stop.  When the
                            stop is selected, the user will hit "GO" and
                            the first process screen will be displayed.
                        MOVE:
                              CntnrNoPrefix from CntnrMov to Container
                              Number on first process screen.
        DISPLAY:
                  First Process Screen

   2)
        IF:
            User enters CntnrNo + CntnrNoPrefix
        MATCH:
               CntnrNo from screen with CntnrNo in CntnrMovStp File
               IF:
                   NO MATCH:
                   DISPLAY:
                            "Container Number not valid, reenter or
                             exit process."
                   EDIT:
                           System will edit CntnrNoPrefix
                           IF:
                                CntnrNoPrefix < > Alphanumeric
                                DISPLAY:
                                          Err Msg - "Container number must
                                                     be alphanumeric."

               ELSE:
```

Use CntnrNo from screen to access CntnrMovStp.
DISPLAY:

"CntnrNo CntnrOwn Consignee MultiStpNo"
XXXXXXXX XXXX XXXXXX X

System will allow user to course through this scrollable screen to the desired stop. When the stop is selected, the user will hit "GO" and the first process screen will be displayed.

IF: CntnrNoPrefix in CntnrMov = 000
UPDATE: Screen entered CntnrNoPrefix to CntnrNoPrefix in CntnrMov.

MOVE: CntnrNoPrefix from CntnrMov to Container Number on First Process Screen.

DISPLAY:
First Process Screen

3) IF:
User enters FWTNo
MATCH:
FWTNo from screen with FWTNo in CntnrMov File
IF:
NO MATCH:
DISPLAY: Freight Warrant Number entered not valid. Reenter or exit the process.

ELSE:
Use CntnrNo and CntnrOwnAbbr found in the CntnrMov file to access CntnrMovStp
DISPLAY:
Cntnr Mov Stop data as follows:

CntnrNo	CntnrOwn	Consignee	MultiStpNo
XXXXX	XXXX	XXXXXX	X

System will allow user to course through this scrollable screen to the desired stop. When the stop is selected, the user will hit 'GO' and the first process screen will be displayed.
MOVE:
CntnrNoPrefix from CntnrMov to Container Number on first process screen.

DISPLAY:
First Process Screen

4) IF:
User enters TMRPrefix
MATCH:
TMRPrefix from screen with TMRPrefix in CntnrMov file
IF:
NO MATCH:
DISPLAY: TMRPrefix entered not valid. Reenter or exit the process.
ELSE:
Use CntnrNo and CntnrOwnAbbr found in the CntnrMov file to access CntnrMovStp
DISPLAY:
CntnrMovStp data as follows:

CntnrNo	CntnrOwn	Consignee	MultiStpNo
XXXXX	XXXX	XXXXXX	X

System will allow user to course through this scrollable screen to the desired stop. When the stop is selected, the user will hit 'GO' and the first process screen will be displayed
MOVE:
CntnrNoPrefix from CntnrMov to Container Number on first process screen.

DISPLAY:
First Process Screen

IF:
User enters CntnrTCN.
MATCH:
CntnrTCN from screen with CntnrTCN in CntnrMov.
IF:
No match.
DISPLAY:
"Container TCN not valid. Reenter or exit process."
ELSE:
Select CntnrNo, CntnrOwnAbbr from CntnrMov to access CntnrMovStp.
DISPLAY:
CntnrMovStp data as follows:

Cntnr No	CntnrOwnAbbr Abbr	Consignee	MultiStp No	Stp Comp
XXXXX	XXXX	XXXXXX	X	X

XXXXX XXXX XXXXXX X X

System will allow user to course through this scrollable screen to the desired stop. When the stop is selected, the user will hit [GO] and the first process screen will be displayed.

MOVE:
CntnrNoPrefix from CntnrMov to Container Number on the first process screen.

;
KEYWORD IS: 'Container' ;
APPLIES TO: Capture-TMR ;
APPLIES TO: Maintain-Stops ;
APPLIES TO: Prep-Cgo-Dischg/Non-Del-<TTW> ;
APPLIES TO: Prep-Cgo-Non-Dlvr-Corr-<ZTW> ;
APPLIES TO: Prep-Cnsgn-Rept-Evnts-Corr-ZTB ;
APPLIES TO: Prep-Convey-Change-Notif-<TTU> ;
APPLIES TO: Prep-Dam-Deadlined-Cntnr-Rept ;
APPLIES TO: Prep-Delayed-Delivery-Event ;
APPLIES TO: Prep-Diversion-Request-<TM2> ;
APPLIES TO: Prep-Hold/Stg-Request-<TM3> ;
APPLIES TO: Prep-Rel-fr-Stg/Hold-Req-<TMS> ;
APPLIES TO: Prep-SEAVAN-Maint-Bgn/E-<TTP> ;
APPLIES TO: Prepare-Cnsgn-Rept-Evnts-<TTB> ;
APPLIES TO: Prepare-Reconsignment-Request ;
APPLIES TO: Update-Cntnr-Record ;
RESPONSIBLE PROBLEM DEFINER IS:
'Mitchem' ;

```
4    DEFINE MEMO                                    ModeCd-Memo ;
       DESCRIPTION;
   Mode Code Memo.
   Mode codes are used in TACCS-LOB area as a subset of MILSTAMP Mode of
   Shipment Codes with "European modifications". Refer to App C of data
   elements of CMM, page 287. This is also referenced in MILSTAMP, page
   B-91 and TIPS 4, TMR/STMR format.;
       KEYWORD IS:     'Freight' ,
                       'Container' ,
                       'LOB' ,
                       'Data Model' ;
       APPLIES TO:     ModeCd ;
       APPLIES TO:     ModeCdDescr ;
       APPLIES TO:     ModeMethShpmtCd ;
       RESPONSIBLE PROBLEM DEFINER IS:
                       'TACCS-LOB CNTNR/FRT GROUP' ;

5    DEFINE MEMO                                    Multi-Stop-No-Memo ;
       DESCRIPTION;
   Multi Stop No

   The system will allow the user to create up to 10 stops (1-9 and Z).

   IF:  It is not 1-9 or Z.,
        DISPLAY:  'Invalid stop number, please enter 1-9 or Z or cancel
                  this TXN'.  System will allow the user to reenter the
                  number or cancel the transaction.
   IF:  It is Z, update Ultimate Consignee with the consignee whose stop
        number = Z.
    ;
       KEYWORD IS:     'Container' ;
       APPLIES TO:     Create-Non-Fcst-Container-Rec ;
       RESPONSIBLE PROBLEM DEFINER IS:
                       'Mitchem' ;

6    DEFINE MEMO                                    Port-Memo ;
       DESCRIPTION;
   The entities Port and CgoPort are distinguished on the basis fof their
   differing key structures.
    ;
       KEYWORD IS:     'Container' ,
                       'Freight' ,
                       'TMAS' ,
                       'LOB' ;
       APPLIES TO:     CgoPort ;
       APPLIES TO:     CgoPort-Tbl ;
       RESPONSIBLE PROBLEM DEFINER IS:
                       'TACCS-LOB WORK GROUPS' ;
```

```
7    DEFINE MEMO                                  TotStp-Memo ;
       DESCRIPTION;
     Total Stop

     Stop Indicator must be 01-10

     IF:  It is 02-10 compare it to Multi Stop No.
          IF:  The Multi Stop No is blank.
               DISPLAY:  'This is a single stop container,  you must enter
                         01.  System will allow user to reenter or cancel
                         transaction.

     IF:  It is 01, compare it to Multi Stop No.
          IF:  Multi Stop No = 2-Z
               DISPLAY:  'This is a Multi Stop Container, you must enter
                         02-10.  System will allow user to reenter or cancel
                         the transaction.
      ;
        KEYWORD IS:     'Container' ;
        APPLIES TO:     Create-Non-Fcst-Container-Rec ;
        RESPONSIBLE PROBLEM DEFINER IS:
                        'Mitchem' ;
```

8 DEFINE MEMO ZTB-Integration-Memo ;
DESCRIPTION;

TTB

IF:
A ZTB ISAM exists for a certain container and event type, and that ZTB has 00000 in the date/event field (indicating a delete action to CMM)

THEN:
If a TTB is submitted for that same container and event the same day, it must overlay the ZTB.
---- ----

SO: TTB events, when submitted must look for DIC ZTB on the ISAM
---- ----
with the same event type.

Prep-Empty-Cntnr-Status-Report

IF:
The MEvent-File for a container has a TTB - B date, and no TTB - D date.

THEN:
The system will look for a ZTB - D ISAM for that event and that container with 000 in the event field

IF:
It finds one, it will overlay the 000 in the ZTB - D ISAM with today's date, and create a TTB - D event

ELSE:
The system will add the TTB - D ISAM date to the existing TTB - B ISAM, and create an MEvent TTB - D record.

TTB

IF:
A ZTB ISAM is submitted for EventType = E with 000, the Stp-CompFlag for that consignee must be reset to N.

AND
IF:
The MovCompFlag was positive for that container, and the

stop had the E date deleted, then the MovCompFlag needs to be reset to N also.

;

```
KEYWORD IS:     'Container' ;
APPLIES TO:     Prep-Cnsgn-Rept-Evnts-Corr-ZTB ;
RESPONSIBLE PROBLEM DEFINER IS:
                'Mitchem' ;
```

9 DEFINE MEMO ZTW-Integration-Memo ;
DESCRIPTION;

TTW

IF:
TTW was entered, with all ShipmentUTCNs being code L (Non-Deliverable), and a ZTW is entered, changing the TTW code to J, K, T, or U. The StpCompFlag must be reset to 'N', before a TTB for that stop can be posted.

WHEN: ZTW process is engaged, it must check for the existence of a TTW ISAM for that Container, Stop, Event Type, ShipmentTCN, and Discrepancy code.

IF:
It finds one, it must discontinue processing since the original TTW has not yet been sent.

TTB

IF:
TTW was entered, with all ShipmentUTCNs being code L (Non-Deliverable), and a ZTW is entered, changing the TTW code to J, K, T, or U. The StpcompFlag must be reset to 'N', before a TTB for that stop can be posted.

TTW

IF:
A ZTW ISAM exists for a certain container and event type, and that ZTW has 00000 in the date/event field (indicating a delete action to CMM)

THEN:
If a TTW is submitted for that same container and event the same day, it must overlay the ZTW and not create a TTW ISAM.

SO:
TTW events, when submitted must look for DIC ZTW on the ISAM with the same event type.

;
KEYWORD IS: 'Container' ;
APPLIES TO: Prep-Cgo-Non-Dlvr-Corr-<ZTW> ;
RESPONSIBLE PROBLEM DEFINER IS:

```
                        'Mitchem' ;

    EOF EOF EOF EOF EOF
```

This page intentionally left blank.

END

DATE

FILMED

4-88

DTIC