AD-A149 779 A 50-KW ELECTRIC-DISCHARGE CO2 LASER(U) MATERIALS RESEARCH LABS ASCOT VALE (AUSTRALIA) R E WHITCHER ET AL. JUL 84 MRL-R-933 1/1

UNCLASSIFIED F/G 20/5 NL

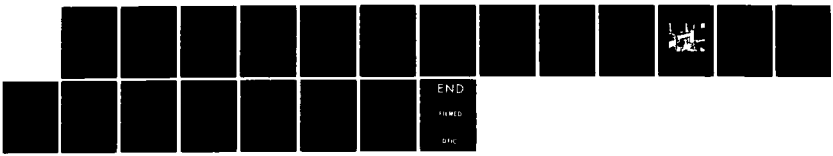

MRL-R-933

AR-003-916

DEPARTMENT OF DEFENCE

DEFENCE SCIENCE AND TECHNOLOGY ORGANISATION

MATERIALS RESEARCH LABORATORIES

MELBOURNE, VICTORIA

AD-A149 779

REPORT

MRL-R-933

A 50-kW ELECTRIC-DISCHARGE CO_2 LASER

R.E. Whitcher and R. McLeary

THE UNITED STATES NATIONAL TECHNICAL INFORMATION SERVICE IS AUTHORISED TO REPRODUCE AND SELL THIS REPORT

JAN 29 1985

A

Approved for Public Release

DTIC FILE COPY

© Commonwealth of Australia

JULY, 1984

85 01 22 031

REPRODUCED AT GOVERNMENT EXPENSE

DEPARTMENT OF DEFENCE
MATERIALS RESEARCH LABORATORIES

REPORT

MRL-R-933

A 50-kW ELECTRIC-DISCHARGE CO_2 LASER

R.E. Whitcher and R. McLeary

ABSTRACT

This report describes an electric-discharge CO_2 mixing laser which has been designed and constructed at MRL. The laser, which utilises a plasma injection stabilised discharge in atmospheric-pressure nitrogen, delivers an output power of 50 kW for reservoir-limited durations of 3 seconds at an overall efficiency of 7%.

Approved for Public Release

COPY INSPECTED

POSTAL ADDRESS: Director, Materials Research Laboratories
P.O. Box 50, Ascot Vale, Victoria 3032, Australia

SECURITY CLASSIFICATION OF THIS PAGE UNCLASSIFIED

DOCUMENT CONTROL DATA SHEET

REPORT NO.	AR NO.	REPORT SECURITY CLASSIFICATION
MRL-R-933	AR-003-916	Unclassified

TITLE

A 50-kW electric-discharge CO_2 laser

AUTHOR(S)

R.E. Whitcher & R. McLeary

CORPORATE AUTHOR

Materials Research Laboratories
P.O. Box 50,
Ascot Vale, Victoria 3032

REPORT DATE	TASK NO.	SPONSOR
July, 1984	DST 83/038	DSTO

CLASSIFICATION/LIMITATION REVIEW DATE

CLASSIFICATION/RELEASE AUTHORITY
Superintendent, MRL
Physics Division

SECONDARY DISTRIBUTION

Approved for Public Release

ANNOUNCEMENT

Announcement of this report is unlimited

KEYWORDS

Carbon dioxide lasers
Electric discharge lasers
Continuous wave lasers
High power
Preionisation
High pressure discharge
Mixing

COSATI GROUPS 2005

ABSTRACT

This report describes an electric-discharge CO_2 mixing laser which has been designed and constructed at MRL. The laser, which utilises a plasma injection stabilised discharge in atmospheric-pressure nitrogen, delivers an output power of 50 kW for reservoir-limited durations of 3 seconds at an overall efficiency of 7%.

SECURITY CLASSIFICATION OF THIS PAGE

UNCLASSIFIED

CONTENTS

		Page No.
1.	INTRODUCTION	1
2.	THE LASER	2
	2.1 Main-Discharge Region	2
	2.2 Resonator/Mixing Region	3
3.	ANCILLARY SYSTEMS	3
	3.1 Gas Supply	3
	3.2 Electrical Power Supplies	4
	3.3 Pumping Facility	4
	3.4 Control Panel and Monitoring	4
4.	LASER PERFORMANCE	5
5.	CONCLUSION	5
6.	ACKNOWLEDGEMENT	5
7.	REFERENCES	6

A 50-kW ELECTRIC-DISCHARGE CO_2 LASER

1. INTRODUCTION

Electric-discharge CO_2 laser systems are capable of high continuous output-power levels and have high efficiency, but tend to become complex and expensive at multi-kilowatt output-power levels. The difficulties which must be overcome include those of stabilising a high-power electric discharge against arcing, of cooling the discharge, and of maintaining the resonator region of the device at a pressure sufficiently low to allow efficient operation. Cooling can be accomplished by convection, although very high gas-flow rates are required and a large pumping facility becomes necessary. The tendency for the discharge to contract into an arc can be counteracted by pre-ionising the discharge gas by external means. Electron-beam guns are often used for this purpose, although they have some disadvantages such as the need for very high voltages and for windows which are both transparent to electrons and durable.

An alternative, and simpler, method of stabilising high-pressure discharges has previously been developed at MRL [1-4]. This method, which involves the pre-ionisation of the gas flow by passing it through an array of subsidiary arc discharges, allows stable discharges to be operated at pressures above 100 kPa (one atmosphere), and at specific discharge energies (electrical energy per unit mass flow of gas) of above 200 J/g. Two multi-kilowatt lasers making use of this technique have previously been constructed at these laboratories [2,6]. The device described in this report is an upgraded version of an earlier mixing laser [6], with modifications to the discharge geometry and power supply to enable operation at increased specific input energy. Output powers in excess of 50 kW have been achieved in the new laser with run times limited to about three seconds by the gas reservoir volumes.

This report describes constructional details of the laser, and its ancillary equipment. The performance of the laser is also discussed.

2. THE LASER

The laser is of the convectively-cooled, mixing type in which flowing N_2 at a pressure of 120 kPa is electrically excited before passing through a restriction into a region of low pressure (20 kPa), where it is mixed with CO_2. A small quantity of He is added to depopulate the lower laser level and the optical power is extracted by means of a resonator situated downstream of the mixing system. The laser is operated in a "blow-down" mode in which the gases are initially stored in pressure vessels and subsequently flow through the laser into a vacuum tank. A photograph of the laser is shown in Fig. 1 and a schematic diagram of the laser together with its ancillary systems is shown in Fig. 2.

The laser (Fig. 3) is essentially a flat rectangular box containing electric-discharge and resonator regions separated by a transitional region consisting of a flow restriction and a row of slotted tubes. Vibrational energy is deposited in the N_2 by the electric discharge and stored until transferred by molecular collisions to CO_2 injected (along with He) through the tubes. The advantage of this mixing system is that it allows the discharge and resonator regions to be separately optimised with respect to both pressure and gas composition. The optimum discharge gas is pure N_2 and maximum discharge power density is obtained at a pressure of around 120 kPa [3]. The addition of CO_2 reduces the maximum discharge power density at any pressure by a factor of at least 2. The extraction of power however requires the presence of CO_2 in the resonator volume, and is most efficient at pressures below about 20 kPa. At low pressure the lifetime of the excited CO_2 is long and the gas flow velocity is high, thus less energy is lost by collisional depopulation of the upper laser level as the mixture flows from the mixing system into the resonator.

2.1 Main-Discharge Region

The main-discharge region is subdivided by 972 borosilicate glass tubes with inside diameters of 9 mm and lengths of 60 mm. Each tube is fed with ionised nitrogen through a 1.7-mm diameter pin hole. The arrangement of electrodes and relevant dimensions are shown in Fig. 4.

In operation a small arc discharge is struck between each copper pin and the perforated aluminium plate. Nitrogen passing through the 972 holes associated with the pin electrodes is ionised and enters the discharge tubes. With a nitrogen flow rate of 1.3 g/s per pin hole, a 120-mA pin current produces an impedance of approximately 700 kΩ in each tube. Stable power, up to 300 W can be deposited in each discharge formed between the mesh and aluminium electrodes. This gives a maximum main-discharge input power of 300 kW for the whole device as shown in the voltage-current curve in Fig. 5. The specific input power in this individual tube arrangement is 230 J/g which is about 1.5 times that achieved in the earlier open-discharge device [6].

2.2 Resonator/Mixing Region

Excited nitrogen flows into the mixing region through a restricting array formed by gaps 40 mm high and 3 mm wide between vertical borosilicate glass rods. This maintains the discharge pressure at 120 kPa at a mass flow of 1.3 kg/s. The pressure in the resonator region depends on vacuum-tank pressure and exhaust-system impedance, and for low initial tank pressures (< 10 kPa) the present configuration results in a resonator pressure of about 20 kPa. The mixing system consists of a row of 143 metal tubes 4 mm OD by 40 mm high, each having 10 slots 250 μm wide facing downstream. The power output of the laser can be controlled by the quantity and proportions of the CO_2-He mixture injected by this array. The maximum power of 54 kW is extracted with a flow of 0.4 kg/s of a 25% CO_2, 75% He mixture.

The resonator has a fully reflecting concave copper mirror (radius of curvature 5 m) and a slotted copper flat output mirror. This mirror has three vertical reflecting bars 5 mm wide separated by 5.5-mm slots. In order to avoid the use of a transmitting window, the system shown in Fig. 6 is used for coupling the power out of the laser. The beam emerging through the slots is focussed through a nozzle which is fed with nitrogen from an annular slot. This flow of nitrogen is sufficient to prevent entrance of air into the laser when the nozzle flap is open. The flap actuator and the nozzle are supplied from the laser gas system and the operation is therefore automatic and synchronised.

3. ANCILLARY SYSTEMS

3.1 Gas Supply

The laser requires large mass-flow rates of N_2 and a gas mixture containing CO_2 and He. It is necessary to ensure that contaminant gases, especially O_2 and water vapour, are excluded from the system as these have a deleterious effect on the main discharge. Commercial high-purity (99.99%) gases have been found to be suitable for the mixture. A schematic diagram of the gas system is shown in Fig. 7.

Pressure vessels are used to provide the gas flows into the laser since the run time is already limited by the capacity of the vacuum tank. The N_2 tank has a volume of 2.8 m^3 and is usually filled to a pressure of 450 kPa and the CO_2/He tank has a volume of 0.6 m^3 and is filled to a pressure of 500 kPa. Gas is supplied to the tanks from banks of conventional high-pressure (15-MPa) cylinders manifolded together. Carbon dioxide and helium flow via conventional gas regulators, through separate flow-tubes, into the 0.6 m^3 pressure vessel. Control valves on the flow-tubes allow adjustment of the flow rates of the CO_2 and He to give any desired mixture. Nitrogen flows directly into the 2.8-m^3 pressure vessel from a dome-controlled regulator which can supply greater flow rates than conventional regulators thus minimising the filling time of the larger vessel. The gases flow from the pressure vessels into the laser through fast-opening gate valves which are activated by a pneumatic cylinder. Constant flow rates are maintained by

servo-controlled butterfly valves in the gas lines. The nitrogen, required for the operation of the nozzle output system shown in Fig. 6, is tapped from the plenum upstream of the copper pins (Fig. 3). The flow required for the nozzle orifice of 18-mm diameter is 70 g/s which is only about 5% of the nitrogen flow in the laser.

3.2 Electrical power Supplies

Both the pre-ionising discharges and the main discharges are electrically excited by dc supplies utilising three-phase transformers with full-wave rectification. Each of the pre-ionising discharges is stabilised by means of an oil-cooled ballast resistor. Since the main discharges have a positive slope resistance no ballast resistors are required for stability, although a set of resistors is used to vary the discharge power. Schematic diagrams of the power supplies are shown in Fig. 8.

Power for the main discharges is obtained from three oil-filled transformers, rated at 30 kVA (continuous), feeding twelve bridge-rectifier panels. Each panel feeds three mesh electrodes via current control resistors. A maximum power of 440 kW can be delivered by this system for durations of three seconds without degradation.

Power for the pre-ionising discharges is derived in a similar manner from eighteen 5.5-kVA oil filled transformers. Each ballast resistor has a value of 11 kΩ and a rating of 10 W and is mounted in a module connected directly to the copper pins by spring contacts. Insulation and cooling is provided by oil circulation through the module. These transformers are switched directly-on-line before the gas pressure in the laser has risen to its operating value, so facilitating the striking of the pre-ionising discharges. The power input to the pre-ionising discharges is 144 kW at a voltage of 1.2 kV and a current of 120 A.

3.3 Pumping Facility

Very large mechanical vacuum pumps are required for continuous pumping at mass-flow rates of 1.3 kg/s at a pressure of 20 kPa. For intermittent operation these rates can be achieved by the use of a vacuum "dump" tank. In the present facility a dump tank with a volume of 28 m^3 is used. This volume limits the maximum operating time to about 3 s, which is adequate for the experiments envisaged. A 0.1-m^3/s rotary vacuum pump exhausts the dump tank between operations.

3.4 Control Panel and Monitoring

The control panel houses gas and electrical controls, a data-recording system, flow-tubes and pressure gauges. The pressure vessels are filled manually prior to laser operation. Gas and electrical supplies to the laser are actuated by a motor-driven sequential switch, and are turned off automatically at the end of a pre-set run time. The control panel is shown

in Fig. 1, and a schematic diagram of the control sequence in Fig. 9.

The data-recording system is used to log diagnostic information on each laser operation and consists of a 32-channel digital data logger with a 32 kilobit memory. Information stored in the memory during a laser run can be displayed on an oscilloscope or chart recorder. During each run 18 voltages, 2 currents, 6 pressures and the main discharge power are recorded.

An optical-fibre isolated over-current sensor is incorporated in the high voltage leads of each of 36 main-discharge circuits. If any of these currents exceeds the pre-set value the run is automatically terminated. This fault condition can occur if excessive impurities are present in the nitrogen supply.

4. LASER PERFORMANCE

The maximum output power achieved is 54 kW. The stability over the reservoir-limited three second run is ± 5%. Conventional efficiency based on power into the discharge including pre-ionising power is 13%. The 'wall-plug' efficiency which includes power supply and ballast losses is estimated at 7%. Optimisation of the power supply could increase this figure. The beam profile has four intense regions due to the hole-coupled output mirror employed (Fig. 6). A beam integrator is used to provide a quasi-uniform power distribution in experiments [5] using this laser. Higher output powers and more desirable beam profiles may be possible with a partially transmitting output mirror but, from previous experience [6], the durability of currently available materials at this power level is inadequate.

5. CONCLUSION

The principal features of a multi-kilowatt CO_2 mixing laser constructed at MRL have been described. The use of a high-pressure discharge stabilised by plasma pre-ionisation, in conjunction with optical power extraction at reduced pressure, has allowed a high-power, compact, and relatively simple device to be constructed. No limitations to the scaling of this type of laser to considerably higher powers have been observed.

6. ACKNOWLEDGEMENT

The authors are grateful for the excellent technical assistance of J.D. Wilson, J. McBeath, D. Szklarczyk and G. Sprott.

7. REFERENCES

1. McLeary, R., Beckwith, P.J. and Gibbs, W.E.K. (1974). "Uniform Continuous Discharges and CO_2 Laser Action at Atmospheric Pressure by Plasma Injection". *IEEE J. Quantum Electron.*, QE-10, (9), 649-651.

2. Whitcher, R.E. and McLeary, R. (1976). "The Design of a High-Pressure Multi-Kilowatt CO_2 Laser". *Report 646*, Materials Research Laboratories, Melbourne, Victoria.

3. McLeary, R. and Beckwith, P.J. (1977). "High-Pressure Discharge for CO_2 Lasers". *Report MRL-R-687*, Materials Research Laboratories, Melbourne, Victoria.

4. McLeary, R. and Beckwith, P.J. (1984). "Characteristics of a Plasma-Injection-Controlled Discharge for CO_2 Mixing Lasers". *Report MRL-R-922*, Materials Research Laboratories, Melbourne, Victoria.

5. McLachlan, A.D. and Whitbourn, L.B. (1982). "The coupling of continuous-wave laser radiation into painted aluminium-alloy plates". *J. Appl. Phys.* 53 (6), 4038-4045.

6. McLeary, R., Whitcher, R.E. and Beckwith, P.J. (1979). "A 30-kW CO_2 Mixing Laser". *Report MRL-R-751*, Materials Research Laboratories, Melbourne, Victoria.

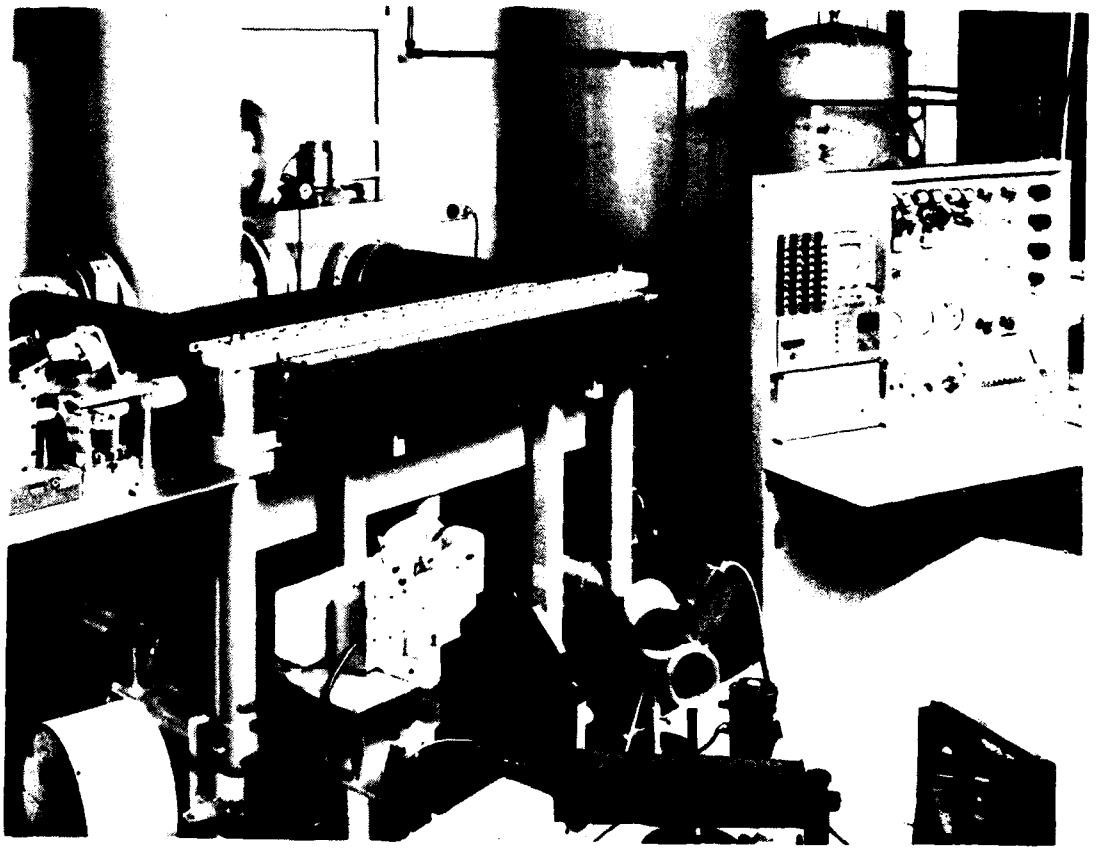

FIG. 1 - 50 kW Laser

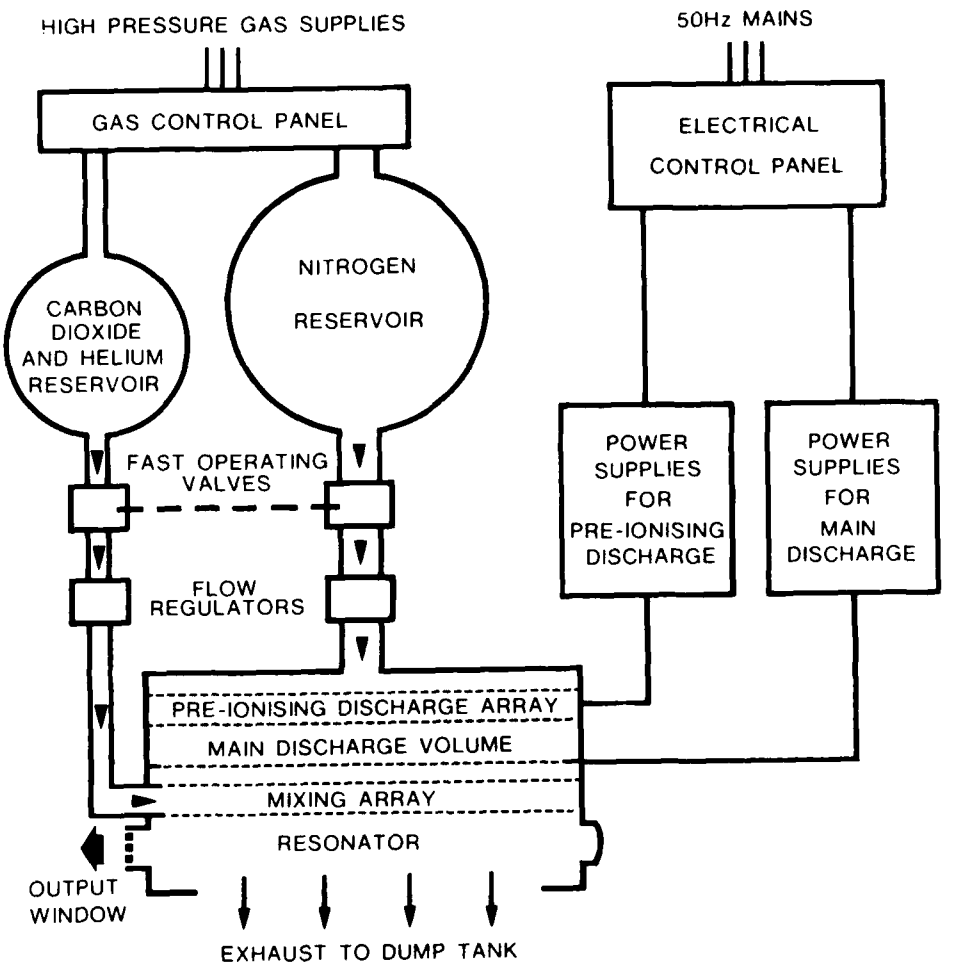

FIG. 2 - Schematic plan of Laser and Ancillary Systems

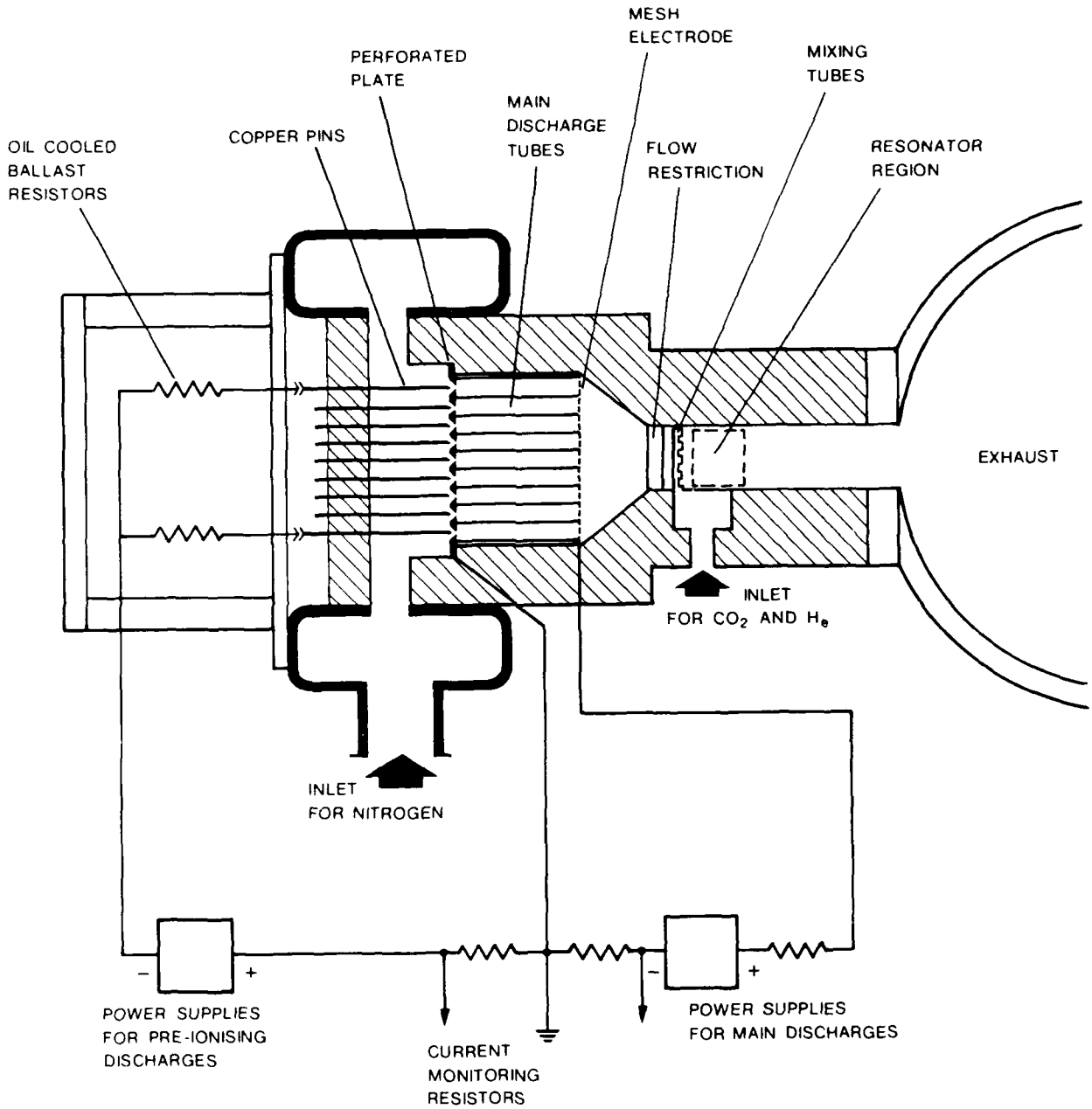

FIG. 3 - Diagrammatic cross section of the Laser

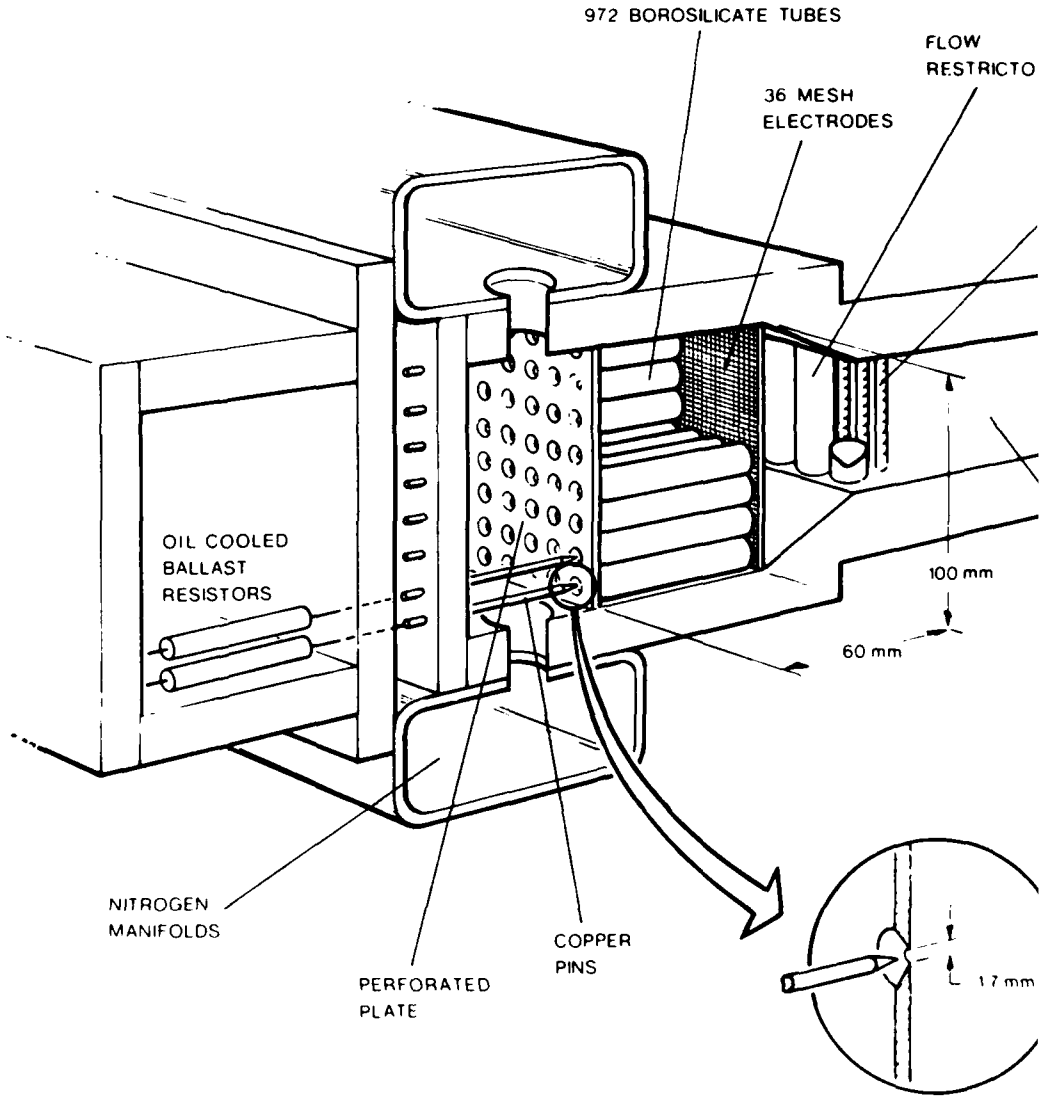

FIG. 4 - Arrangement of Electrodes and Relevant Dimensions

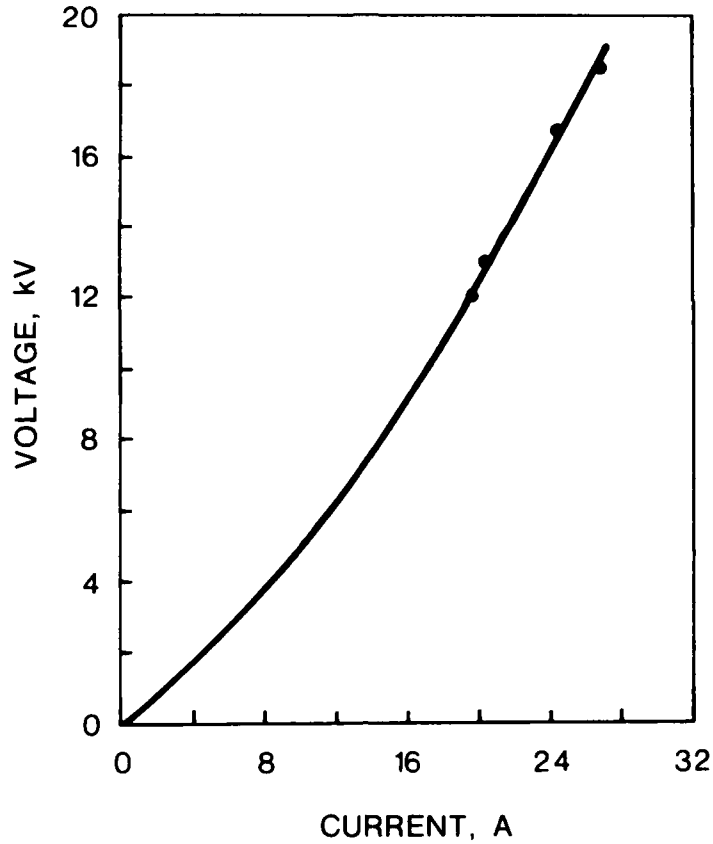

FIG. 5 - Main Discharge Characteristics

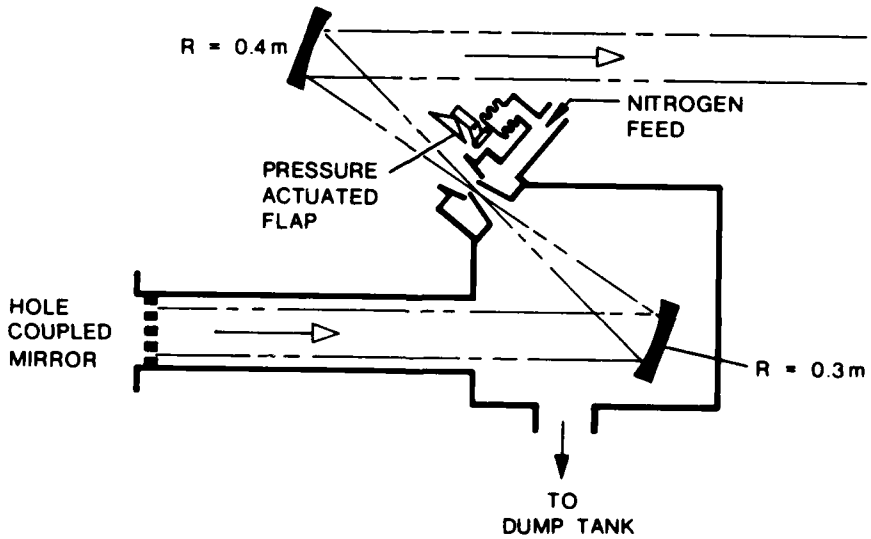

FIG. 6 - System used to couple power from the Laser

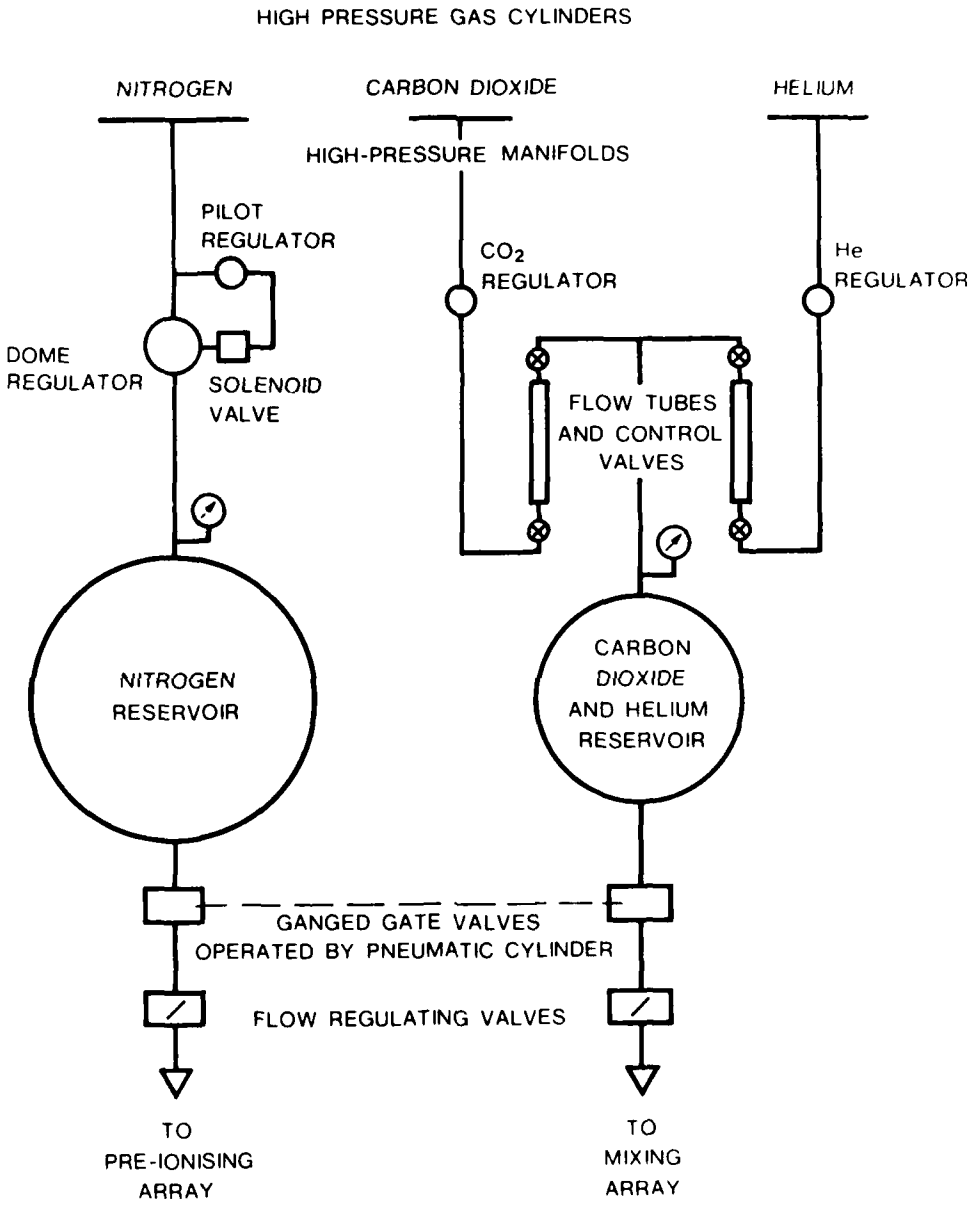

FIG. 7 - Schematic Diagram of Gas System

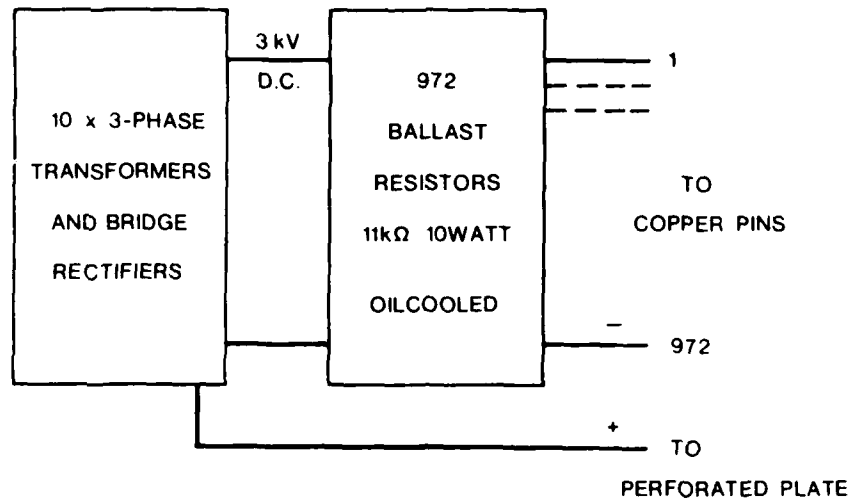

POWER SUPPLIES FOR PRE-IONISING DISCHARGES.

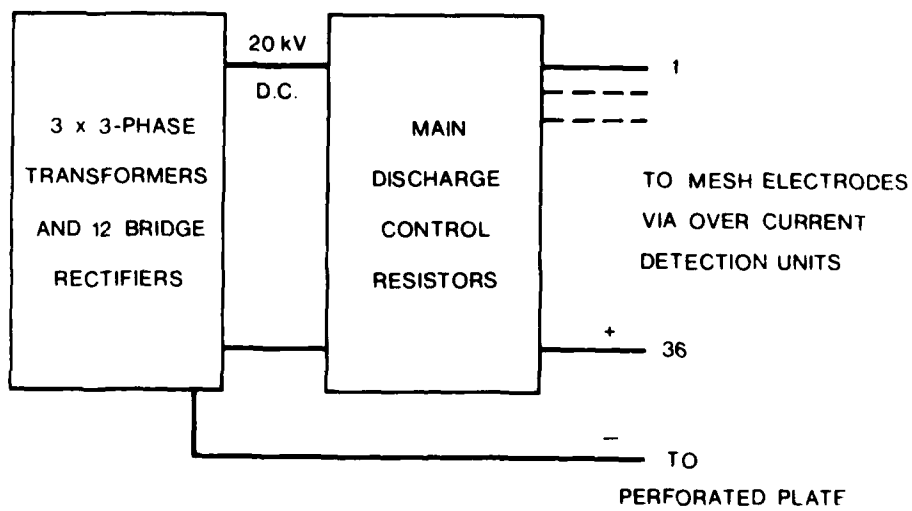

POWER SUPPLIES MAIN DISCHARGES

FIG. 8 - Schematic Diagram of Power Supplies

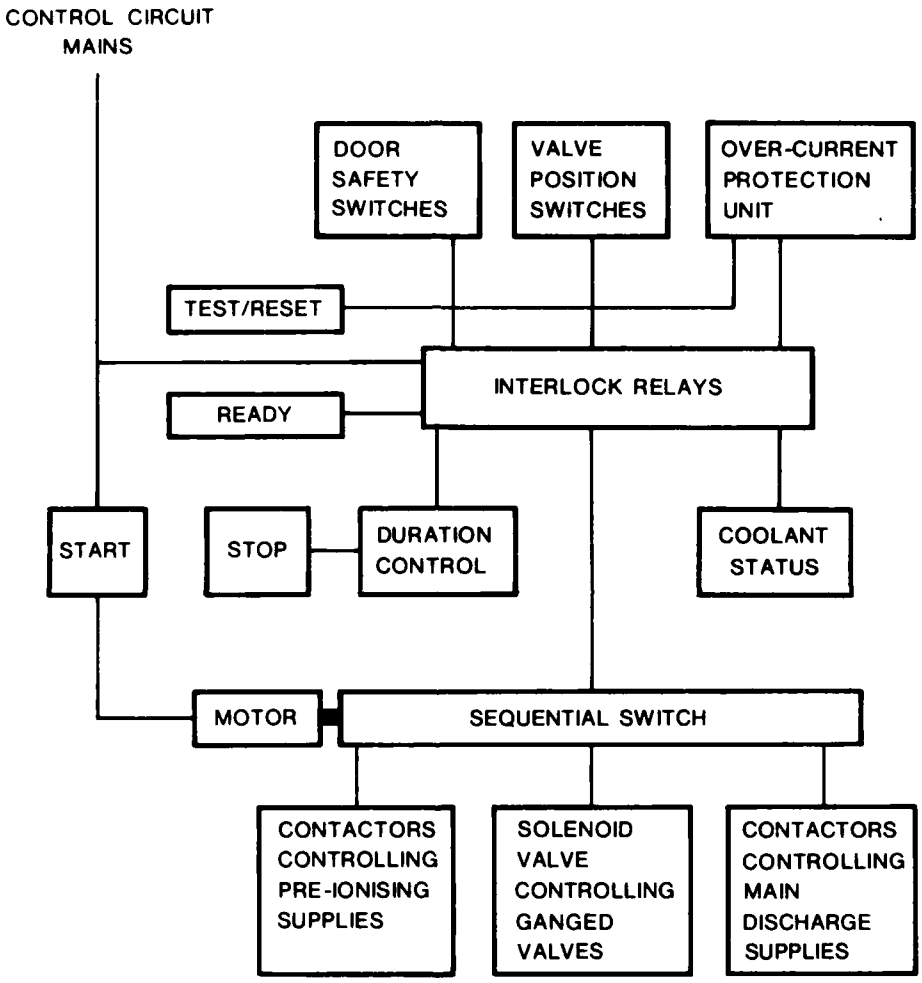

FIG. 9 - Schematic Diagram of Control Sequence

(MRL-R-933)

DISTRIBUTION LIST

MATERIALS RESEARCH LABORATORIES

Director
Superintendent, Physics Division
Head, Laser Research Group
Library (2 copies)
R.E. Whitcher
Dr R.C. McLeary
Dr A.D. McLachlan

DEPARTMENT OF DEFENCE

Chief Defence Scientist (for CDS/DCDS/CERPAS) (1 copy)
Army Scientific Adviser
Air Force Scientific Adviser
Navy Scientific Adviser
Officer-in-Charge, Document Exchange Centre (18 copies)
Technical Reports Centre, Defence Central Library
Director of Quality Assurance Support (DQAS)
Assistant Director, Defence Scientific and Technical Intelligence, Joint Intelligence Organisation
Librarian, Bridges Library
Librarian, Engineering Development Establishment
Defence Science Adviser, Australia High Commission, London (Summary Sheets Only)
Counsellor Defence Science, Washington, D.C. (Summary Sheets Only)
Librarian, (Through: Officer-in-Charge), Materials Testing Laboratories, Alexandria, NSW
Senior Librarian, Aeronautical Research Laboratories
Senior Librarian, Defence Research Centre Salisbury, SA

DEPARTMENT OF DEFENCE SUPPORT

Deputy Secretary, DDS
Head of Staff, British Defence Research & Supply Staff (Aust.)

OTHER FEDERAL AND STATE DEPARTMENTS AND INSTRUMENTALITIES

NASA Canberra Office, Woden, ACT
The Chief Librarian, Central Library, CSIRO
Library, Australian Atomic Energy Commission Research Establishment
Dr K.C. Crane, Division of Applied Physics, CSIRO, Lindfield, NSW

MISCELLANEOUS - AUSTRALIA

Librarian, State Library of NSW, Sydney NSW
University of Tasmania, Morris Miller Lib., Hobart, Tas.
Professor J. Piper, Macquarie University, NSW

DISTRIBUTION LIST
(Continued)

MISCELLANEOUS

Library - Exchange Desk, National Bureau of Standards, USA
UK/USA/CAN/NZ ABCA Armies Standardisation Representative (4 copies)
Director, Defence Research Centre, Kuala Lumpur, Malaysia
Exchange Section, British Library, UK
Periodicals Recording Section, Science Reference Library, British Library, UK
Library, Chemical Abstracts Service
INSPEC: Acquisition Section, Institute of Electrical Engineers, UK
Engineering Societies Library, USA
Aeromedical Library, Brooks Air Force Base, Texas, USA
Documents Librarian, The Centre for Research Libraries, Chicago, Ill.
Defense Attache, Australian Embassy, Bangkok, Thailand

END

FILMED

2-85

DTIC